WESTERN RESERVE UNIVERSITY

ANNUAL STATUS REPORT

NASA GRANT NsG-655

MARCH 1, 1966-FEBRUARY 28, 1967

FACILITY FORM 602

N67-28761 (ACCESSION NUMBER)

(THRU)

93 (PAGES)

1 (CODE)

CR-84812 (NASA CR OR TMX OR AD NUMBER)

09 (CATEGORY)

CLEVELAND, OHIO

Annual Status Report

for the period September 1, 1966 to February 28, 1967

NASA Grant NsG-655/36-013-002

Principal Investigator: Karl J. Casper

Summary

The work described in this status report covers the period September 1, 1966 to February 28, 1967. Research carried out during the period March 1, 1966 to August 31, 1966 has been covered in the semi-annual status report issued for this period and in a separate report entitled The Internal Compton Effect issued on August 10, 1966.

The research reported here is divided into three sections:

1. Silicon and germanium lithium drifting apparatus.
2. Computer program for gamma ray photopeak fitting.
3. Determination of response of large volume silicon detectors.

Silicon Lithium Drifting Apparatus

In a paper published by us[1] on fabrication of lithium drifted silicon detectors, little mention was made of the actual drift process and associated equipment. More attention was paid to procedures before and after the drift which appeared to be of considerably more importance for successful fabrication of lithium drifted silicon detectors. At that time two drifting controllers were being used, one designed by Miller, et al,[2] and the other by Goulding and Hansen.[3] However, drifting with these controllers has lead to some difficulties which have been encountered as more detectors have been fabricated.

The controller designed by Miller, et al, pulses the voltage applied to the diode and is coupled with an immersion heater so that the drift proceeds at constant power. Miller points out that, initially, the current through the diode is quite low so that the power dissipated by the diode is small and usually not as high as the drift power desired. Consequently, the heater is used to increase the temperature of the bath until the desired drift power is achieved. As the drift continues, more power is dissipated by the diode and less heater power is required. A fluorocarbon (FC-43) bath with a boiling point of 170°C carries away heat at a sufficiently high rate that, along with the voltage pulsing network, thermal runaway does not occur. Unfortunately, particularly at early stages of the drift, the drift temperature of the diode may be considerably in excess of 170°C, even with very modest drift power.

The lithium drift process is, in principle, quite simple. The silicon is heated, after lithium diffusion into one face, and a reverse bias is applied. The lithium ions become quite mobile at elevated temperatures and can drift

readily through the silicon under the influence of the electric field. During the drift, the lithium ions find themselves passing near enough in space to the boron impurity dopant atoms that they are attracted by the Coulomb field and move into interstitial compensating sites. Unless the temperature becomes too high, these ions will not move out of the compensating sites.

Two problems can arise. If the temperature is too high, the lithium may be unable to stay in the compensating sites, move away, and the drift will not accomplish its purpose. Even below this temperature, the number of thermally generated charge carriers within the silicon increases with temperature. These carriers can mask the Coulomb field of the impurity atoms and prevent the lithium ions from reaching the compensating sites. The temperature where this prevents exact compensation is a function of the resistivity of the starting material and is not easily established theoretically. An experimental study of this effect is now under way.

The Goulding-Hansen drifter uses a power transistor as a heating element and the drift is carried out in air. A drifter of this type was constructed, but it was found difficult to maintain drift temperatures over 110°C. Furthermore, a rather high quality selection process for the power transistor heater was required. The secondary breakdown voltage for a transistor does have some temperature dependence and none of the power transistors lasted more than two weeks in operation. Finally, the low drift temperature unreasonably increased the drift time for devices having depths greater than 2 or 3 mm.

Three parameters determine the drift, the drift voltage, the temperature of the drift and the drift current. Only two of these can be fixed; the third must be free. At first thought it would appear to be best to fix the voltage and the drift temperature since these two parameters determine the drift rate.

However, if the current is not controlled, runaway can occur producing improper compensation and if the drift reaches the other face of the wafer before the drift is stopped, the current will increase rapidly, the drift will continue, and overcompensation will occur. Moreover, bath temperature is not the temperature of the diode junction and may lag considerably behind junction temperature so that the drift time cannot be accurately predicted. Control of the drift current and temperature leaves the drift voltage free to vary over a very wide range and makes drift rates completely unpredictable. Control of the drift voltage and current has proved to be the most reliable method. In actual practice, the temperature is usually constant to within a few degrees and the current can be changed to maintain further this temperature stability. The drift controller which will be described has several other important features. Not only is the current controlled but current limiting is employed so that thermal runaway is impossible. As the drift reaches the other face of the wafer, the current starts to increase, but this increase causes a reduction of the bath temperature and the drift current remains quite constant as the bath is cooled to room temperature. The time for this cooling is several hours and the completion of the drift is determined by routine checks of the apparatus. The problem of overcompensation by continued high temperature drift is thus solved. Furthermore, in the apparatus described, the bath temperature never exceeds 150°C, and is easily kept below this temperature.

The circuit diagrams for the silicon drifting apparatus are shown on pages 7-12. The heater element consists of 12 ft. of #16 Kanthal wire wrapped in a tight spiral as shown in Fig. 1. The total resistance of this wire is 3.9 ohms. Four power supplies are needed: the DC logic circuitry

uses +16 and -24 volt power supplies; the heater is supplied from a 13 volt, 3.5 amp supply; the drift voltage is maintained at 200 volts with current limiting at 35 ma. These power supplies are shown in schematic drawings on pages 7 to 9. Only the heater supply is not regulated; the other supplies use conventional series regulation.

Transistors T14 and T15 comprise the current limiting section of the 200 volt supply. The supply is ungrounded up to the input of this section and only grounded at the output. The current limiting action is achieved by starving the pass transistor T14 of base drive current when the maximum current is reached. In this case, at 35 ma, the voltage drop across the 200 ohm resistor between the base and emitter of T15 becomes sufficiently large to turn T15 on. Current through the 15K resistor is then diverted through T15 instead of supplying base drive for T14 and the output current does not exceed 35 ma. The output impedance of the supply increases from the normal value of 200 ohms to more than 10K ohms in the current limiting region.

The basic control unit is shown on page 11. A DC differential comparator consisting of transistors T1 and T2 is switched whenever current stops flowing in one of the 1N4005 diodes and begins flowing in the other diode. The crossover point occurs when the diode drift current equals the current in the current demand switch resistor. The driver stages, T3 and T4, provide power gain for T8 which has as its load the Kanthal heater. The collector of T4 also drives T5 and T6 which are lamp drivers indicating whether the heater is on or off. The 4 volt lamps are shunted by 6 volt Zener diodes which conduct if the lamps burn out. Additional visual indication that the temperature has dropped below 100°C is provided using the circuit shown on

page 12. A thermistor is used to indicate this state turning on a lamp when the temperature falls below 100°C.

As shown in Fig. 1, the power transistor T8 is mounted near the drift bath to minimize power loss in the wires to the heating element. The entire apparatus is contained within a battery jar and loss of FC-43 to the atmosphere is reduced by a Viton gasket seal between the jar and top plate. Details of the holder showing the arrangement of the thermistor are shown in Fig. 2 Thermal insulation of the jar has not been found necessary, but can be used to provide temperatures approximately 20°C higher.

The operation of this drifter is nearly automatic. At various times during the drift, it is usually necessary to increase the current in order to maintain a desired drift bath temperature, but this is the only adjustment possible. The drift is stopped quite satisfactorily at breakthrough and overcompensation of the silicon does not occur.

Silicon Drifter (POWER SUPPLIES)

1. Heater power (for nichrome heaters)

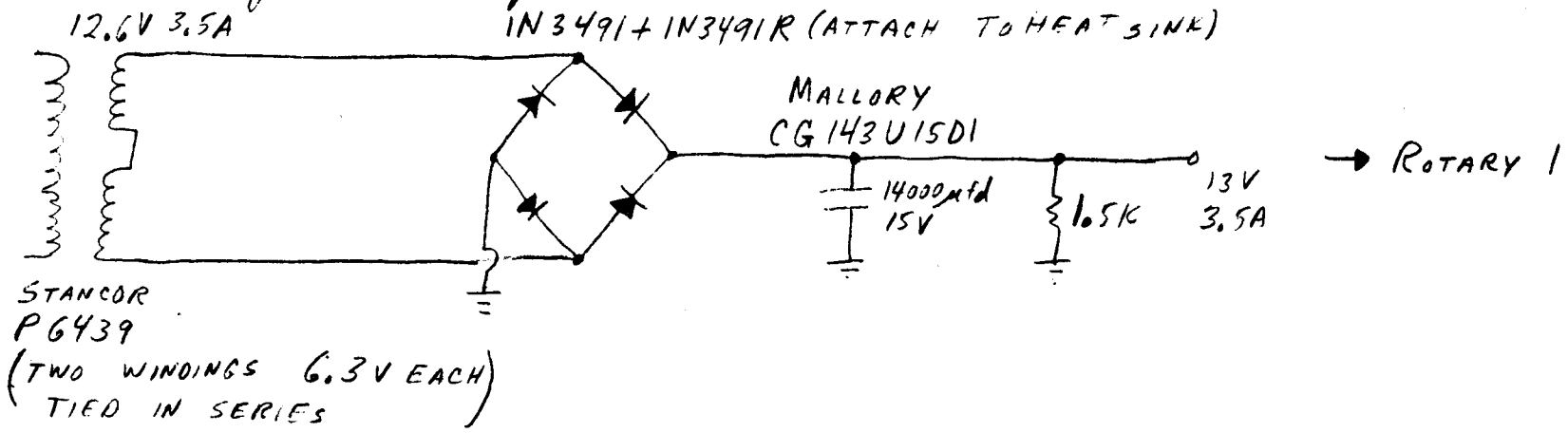

2. −24V

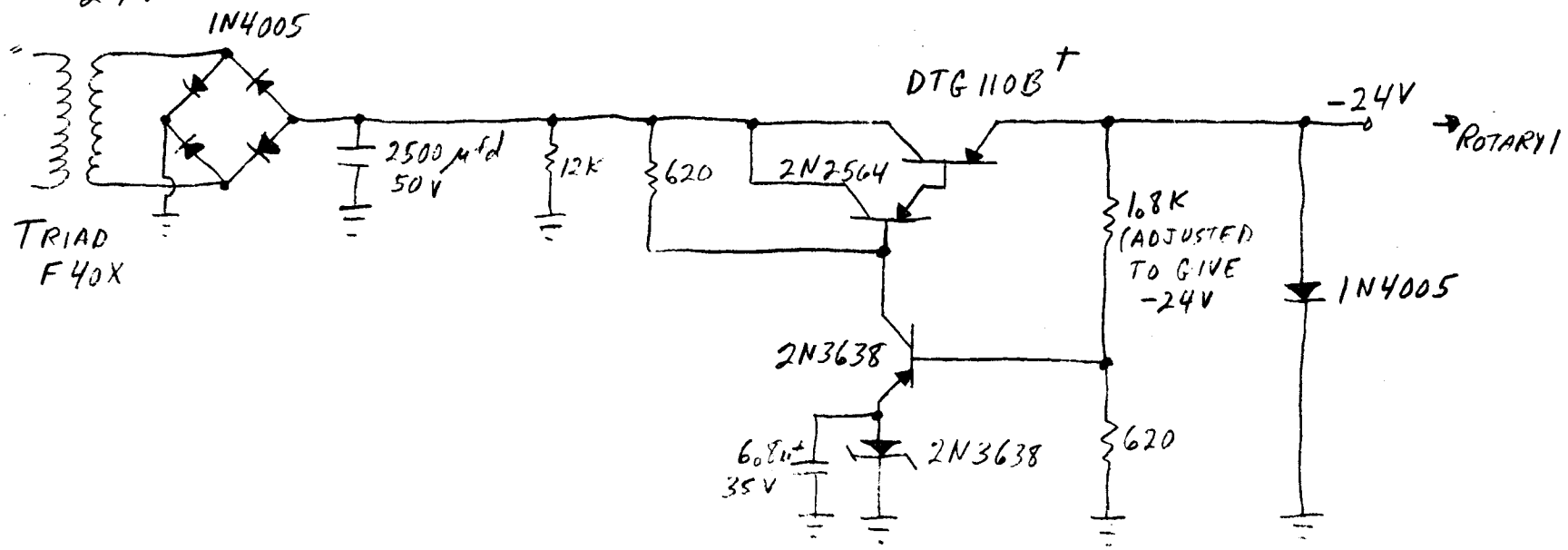

Silicon Drifter (POWER SUPPLIES)

3. +16V

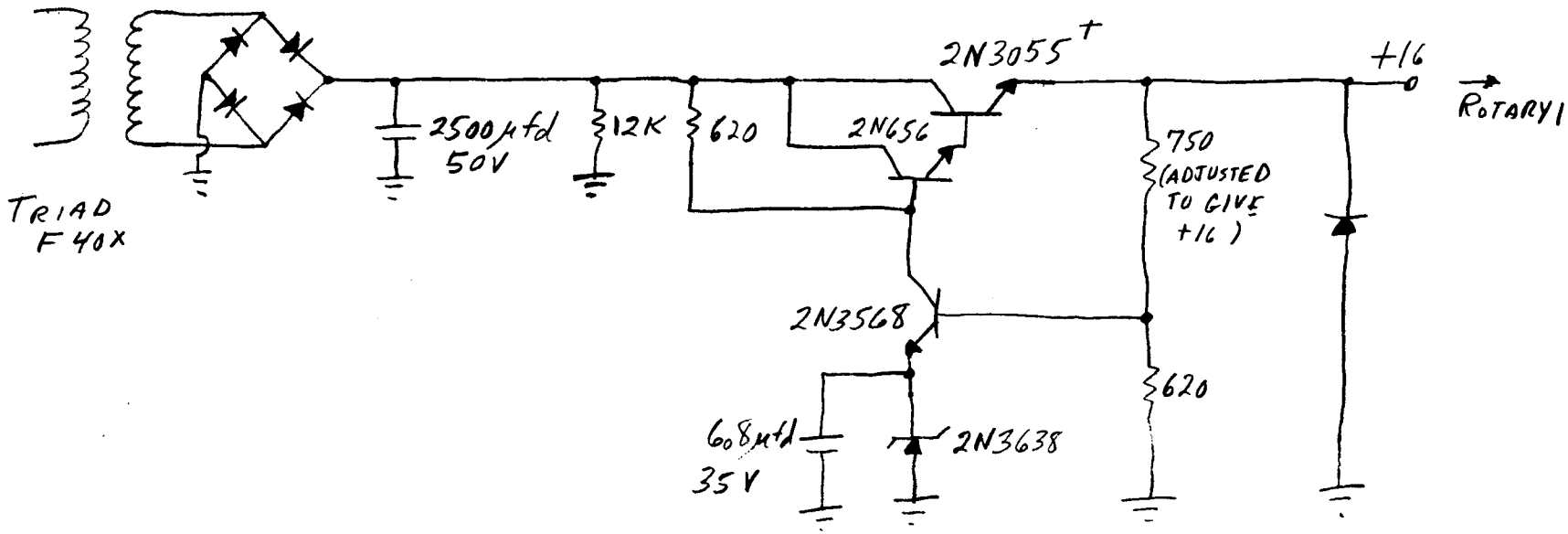

Silicon Drifter (POWER SUPPLIES)

4. +200V WITH CURRENT LIMITER (35 MA)

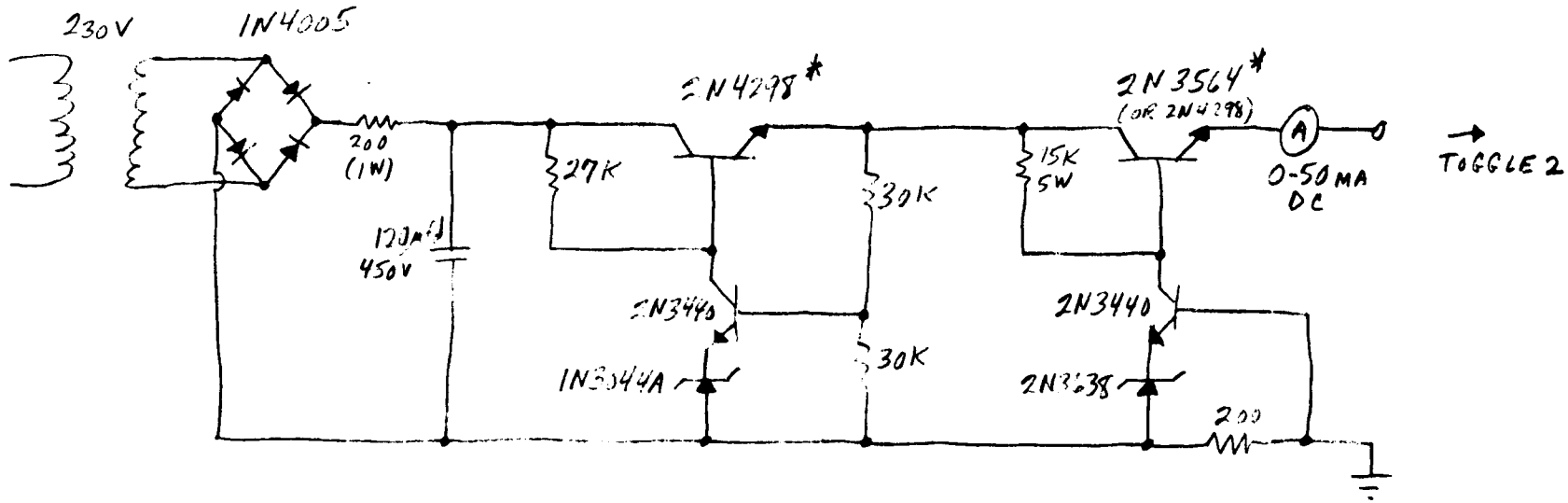

Schematic Drafter (POWER SUPPLIES)

POWER SUPPLY NOTES

1. Starred transistors are mounted on insulated heat sinks(similar to Delco 7281366).
2. Daggered transistors are mounted on chassis(with mica insulators).
3. Zener diodes marked 2N3638 use the base-emitter junction of this transistor.

Silicon Drifters (CONTROL UNIT)

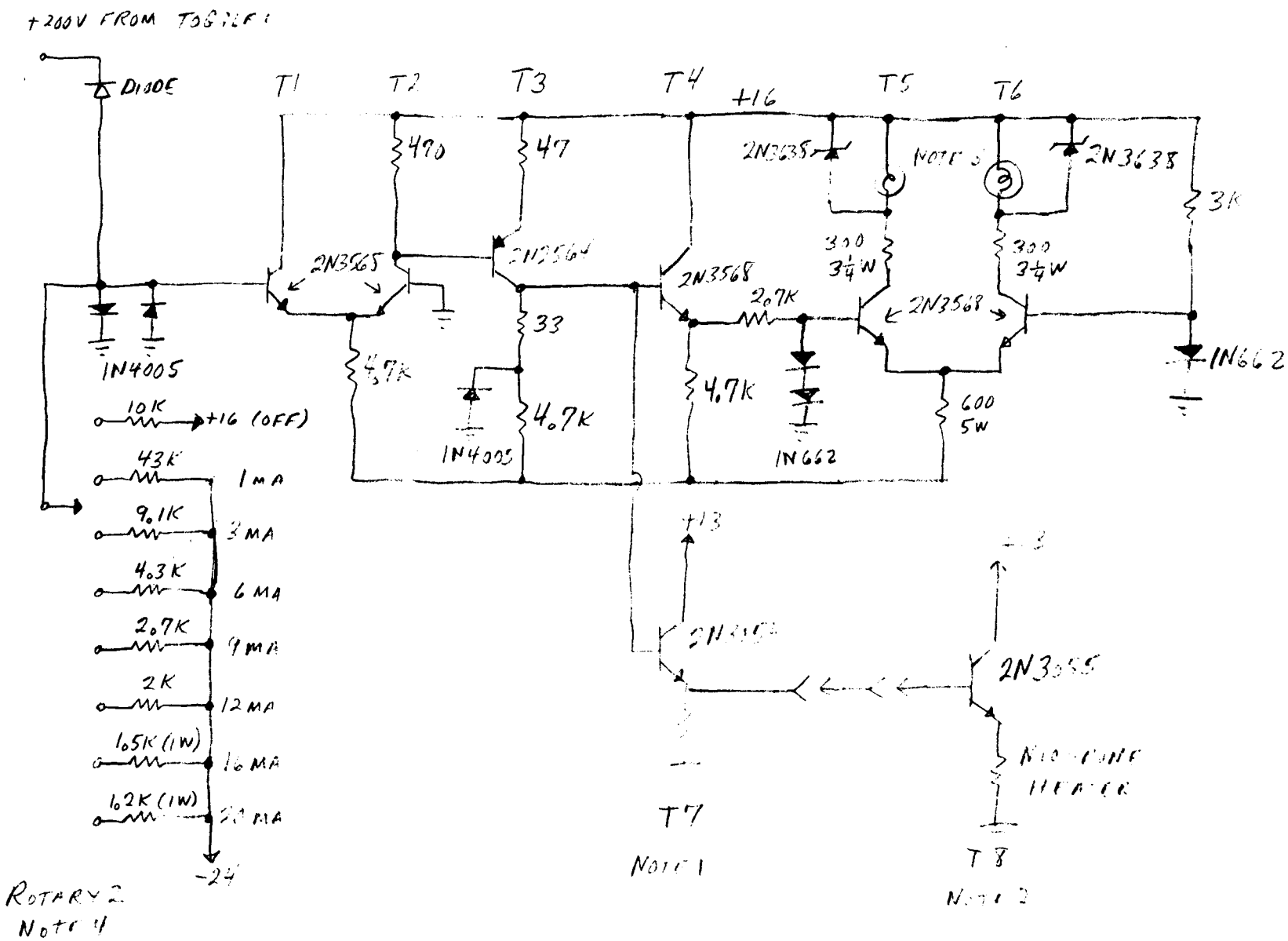

Silicon Drifter (LOW TEMPERATURE INDICATOR)

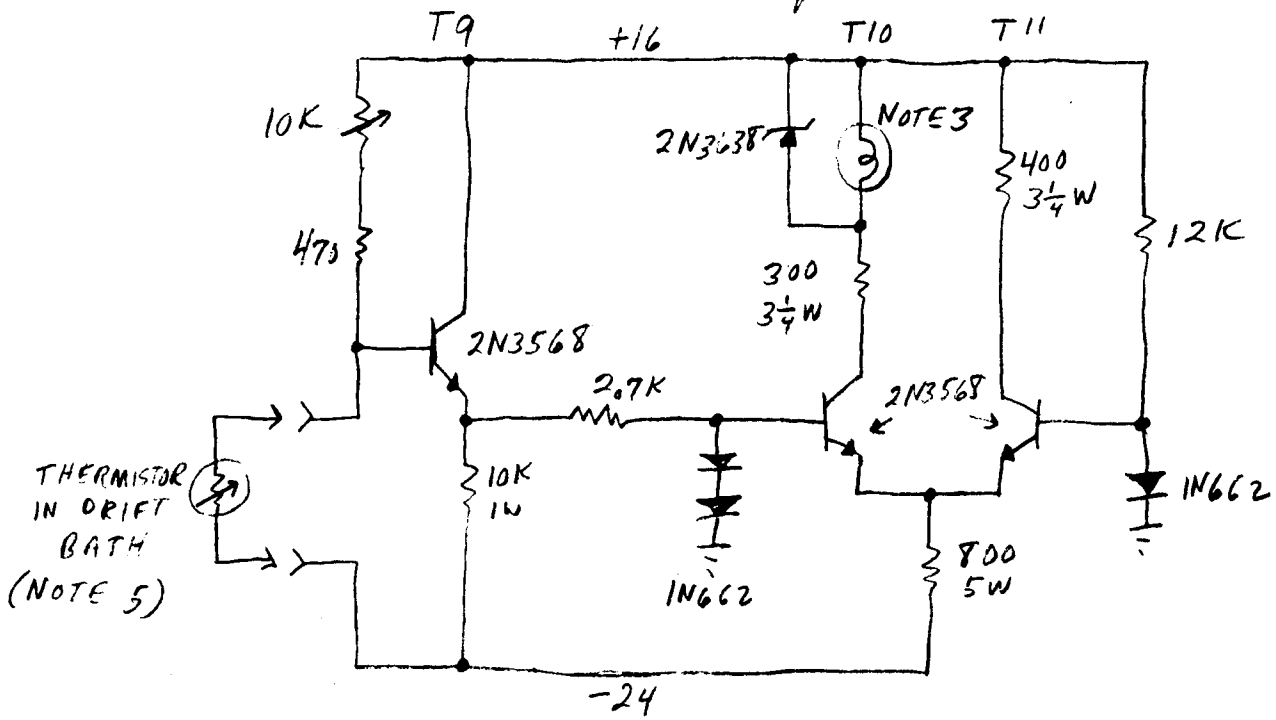

Figure 1. Lithium drifting apparatus showing arrangement of jar, power transistor and thermocouple lead.

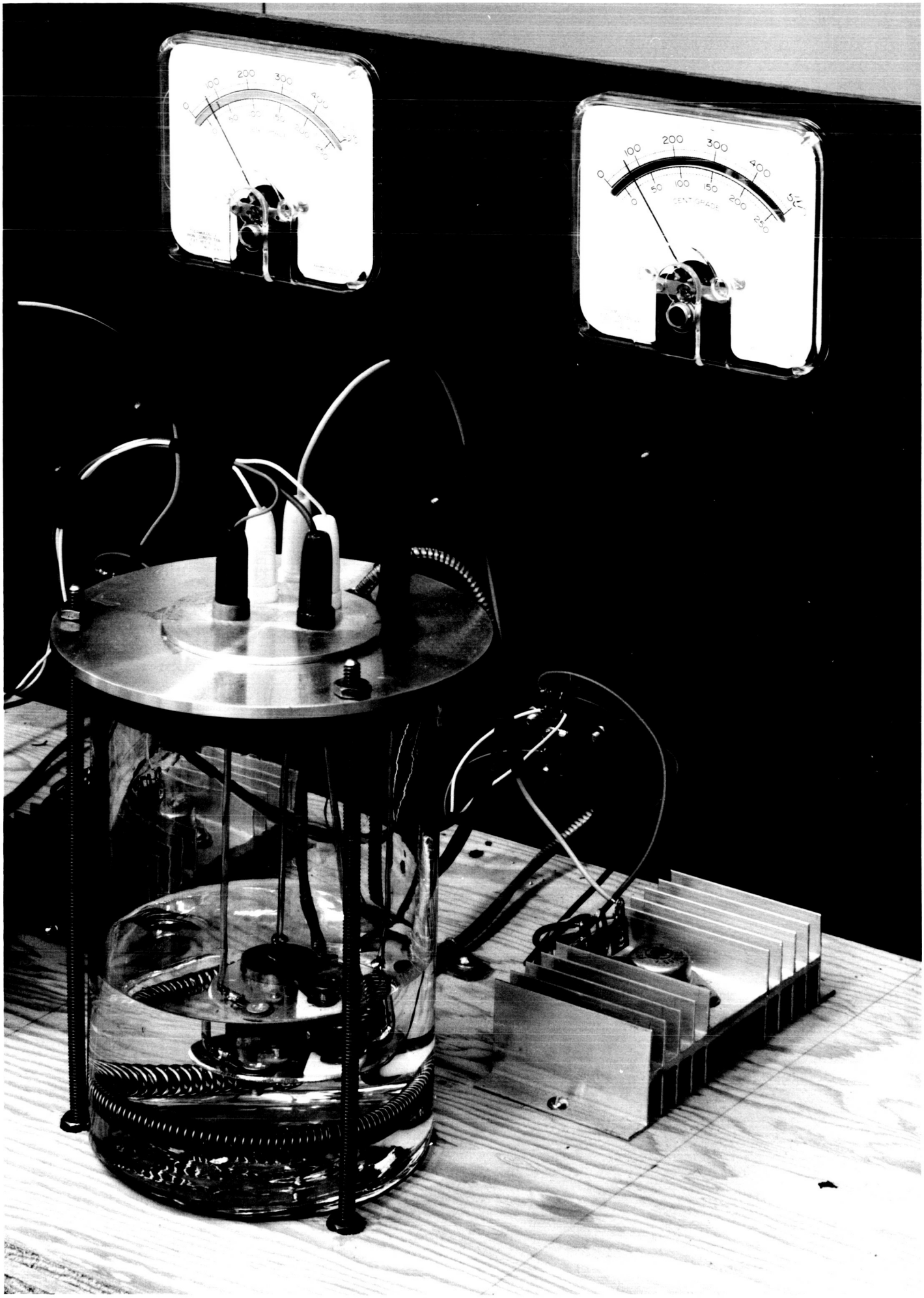
0
100
200
300
400
0
50
100
150
200
250
CENT GRADE

Figure 2. Diode holder for lithium drifting apparatus showing mounting of silicon diode and position of thermistor.

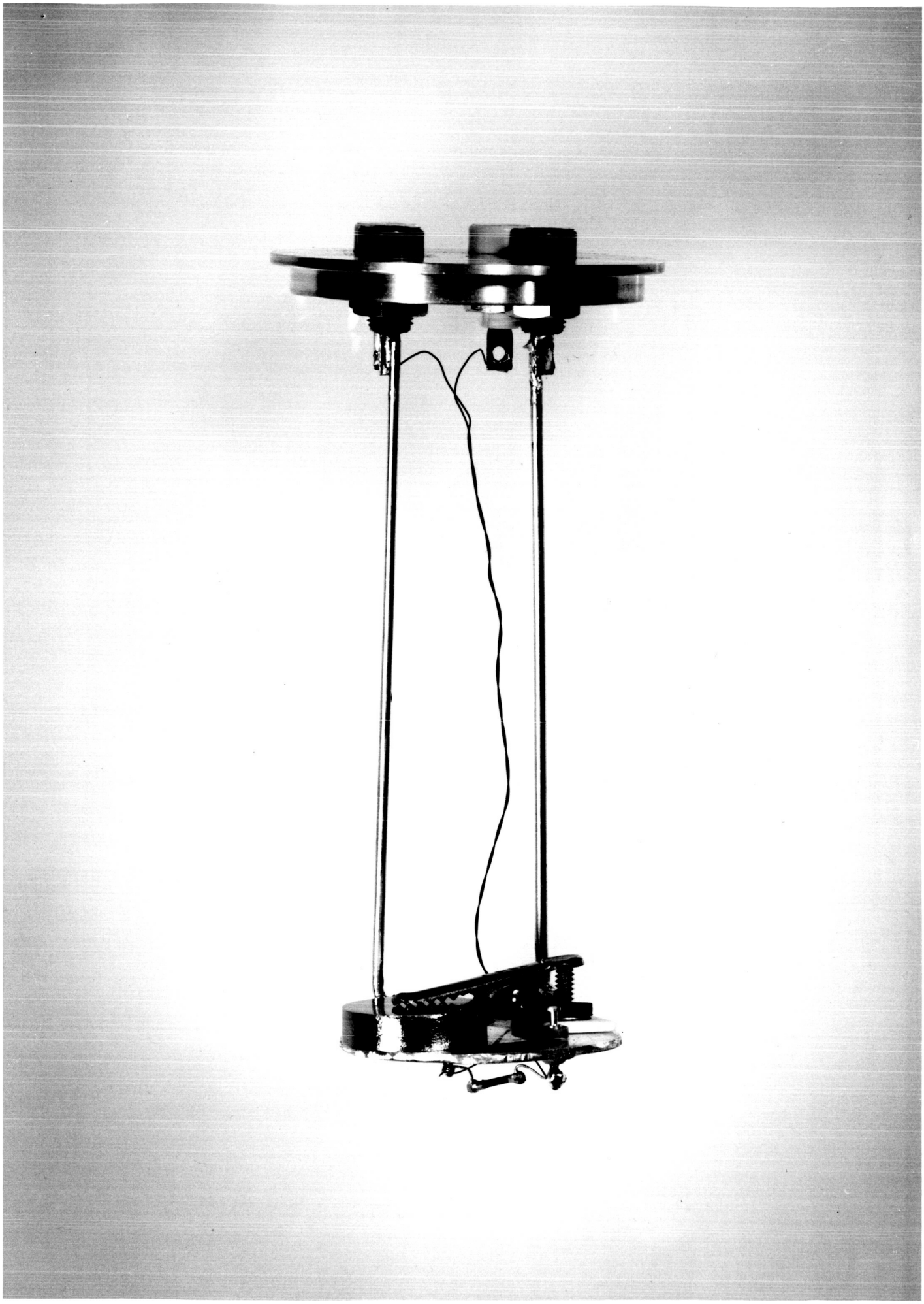

Germanium Drifting Apparatus

Germanium drifting requires a simpler apparatus than silicon drifting. The drift is never carried to completion, i.e., to the point that breakthrough occurs. Rather the drift is stopped at various times, the depletion depth is checked and the drift continued until the desired thickness is obtained. As a result a very simple power supply is used with current limiting achieved by the use of 100 watt light bulbs in series and parallel.

The circuit is shown in Fig. 3. Three 90 volt, 3.5 amp transformers available from John Meshna, Allerton, Mass., are stacked in series to that a maximum of 270 volts is available. The autotransformer at the input is used to adjust the output voltage, and a bridge rectifier and capacitor provide adequate filtering. Light bulbs have proved to be effective current limiters. The voltage drop across the bulbs is current dependent so that at low currents, most of the voltage is applied to the load. Selection of the voltage and light bulbs permits current limiting at any current up to 2 amperes.

In drifting, the drift temperature is selected by selecting different fluorocarbon baths. Usually the diode will drift at a relatively high power and the temperature will be the boiling point of the bath. Where the diode does not heat the bath sufficiently to reach this point, a hot plate is used to provide supplemental heating. In general, however, such supplemental heating is only required in the initial stages of the drift.

Figure 3. Germanium lithium drift apparatus DC power control unit.

GERMANIUM DRIFTER POWER SUPPLY

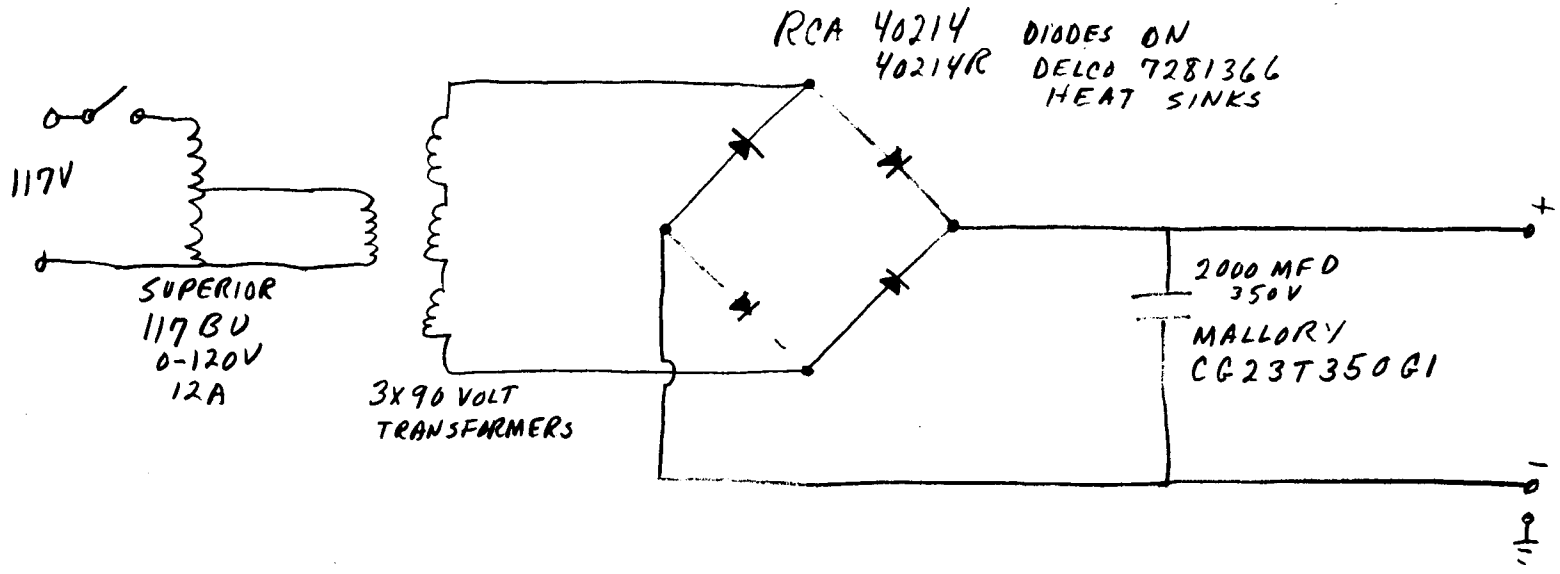

LIGHT BULB CURRENT LIMITER

ONE SECTION ONLY SHOWN - ALL BULBS 100 WATT

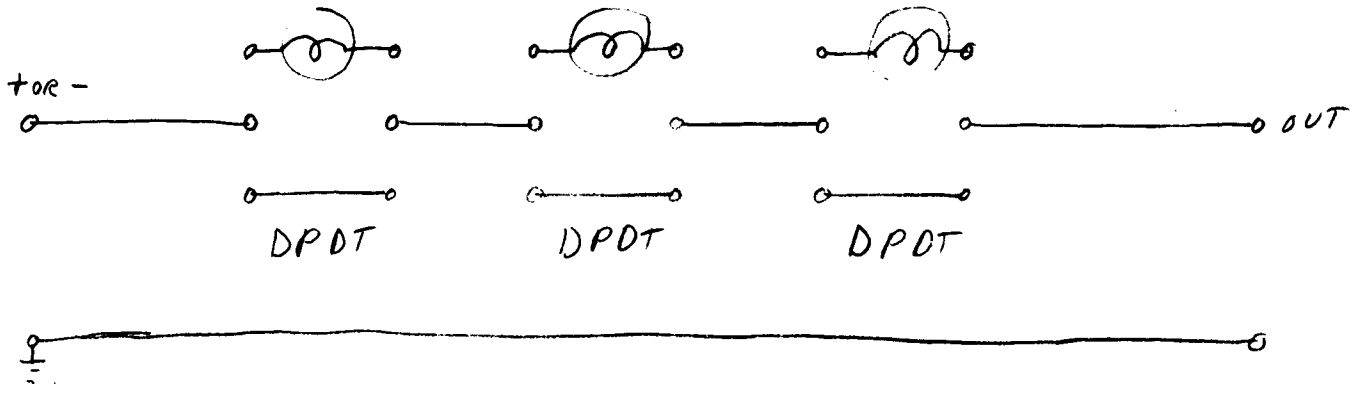

REFERENCES

1. H. M. Murray, J. W. Harpster and K. J. Casper, Nucl. Inst. and Meth. 40, 330 (1966).

2. G. L. Miller, B. D. Pate and S. Wagner, IEEE Trans. Nucl. Sci. NS-10, no. 1, 220 (1963).

3. F. S. Goulding and W. L. Hansen, IEEE Trans. Nucl. Sci. NS-11, no. 3, 286, (1964).

2. Computer Program for Determining the Energy of Gamma Rays with Ge(Li) Detectors.

The following report describes in detail a computer program suitable for the analysis of gamma ray spectra recorded with high resolution Ge(Li) detectors.

ABSTRACT

This computer program has been written to aid in the analysis of gamma-ray spectra measured with lithium-drifted germanium detectors. The program determines the position, height, full-width at half-maximum, and area of the photopeaks and the parameters of a linear equation representing the spectral distribution underlying the photopeaks. The program can analyze complex peaks containing as many as five components. Estimates of the standard deviations of all the parameters are computed. The results of the program are used to determine the energies and intensities of the gamma rays. The program contains provisions for both energy calibration and determination. From the positions of the photopeaks of accurately known energy, a second-degree equation relating the photopeak energy to position is calculated by least-squares. Estimates of the standard deviations of all computed quantites are available.

I - INTRODUCTION

The program GRPPFP (gamma-ray photopeak fitting program) has been developed for use in the analysis of gamma-ray spectra obtained with Ge(Li) detectors. The program determines the parameters of a Gaussian which provides the best least-squares fit to the data of a photopeak associated with a single gamma ray. Complex photopeaks consisting of up to five components are reduced to individual photopeaks and estimates are made for the standard deviations of the computed parameters. The method presented here is very similar to that developed by R. L. Heath, et al.[1-3]

The photopeaks are represented by a Gaussian of the form

$$\bar{y}\ (x) = A_{exp}\ [-4\ln 2\ (x-\mu)^2/\omega^2\ ]$$

The parameters ω , the full-width in channels at half-maximum, μ , the position of the center of the photopeak in channels, and A , the height of the photopeak, are calculated using a conventional nonlinear least-squares fitting procedure.[4] The parameters are determined by minimizing the quantity

$$S^2 = \Sigma_i\ w_i\ (y_i - \bar{y}_i)^2$$

where y_i is the experimental datum for the i-th channel, w_i is the weight associated with y_i, $\bar{y}_i$ is the calculated datum and the summation is over all the data points in the fit.

In order to meet various experimental needs, several options are available. The options presently available include:

1. Choice of weighting functions.
2. Channels to be used in the fit.
3. Number of photopeaks to which the fit is to be made.
4. Determination of energy calibration parameters.
5. Determination of photopeak energies.

Future plans call for the addition of options to fit the photopeaks in spectra obtained by scintillation spectrometry, to calculate relative intensity ratios and to provide a graphic record of the fitting results with a CalComp 565 precision plotter.

II - THE NONLINEAR LEAST-SQUARES METHOD

1. Basic Theory of the Method. The purpose of a least-squares fit is to find the values of the parameters $\vec{\alpha}$ which minimize the function

$$S^2 = \Sigma_i \, w_i \, [y_i - \bar{y}_i \, (\vec{\alpha})]^2 \; . \tag{1}$$

A necessary and sufficient condition for S^2 to be a minimum as a function of $\vec{\alpha}$ is that

$$(\partial/\partial\vec{\alpha}) \; S^2 = 0 \; . \tag{2}$$

If $\bar{y}_i$ is a linear function of $\vec{\alpha}$, equation (2) can be solved explicitly for $\vec{\alpha}$. In the nonlinear case, no such solution exists and some method of approximate linearization must be used.

One such method is that due to Gauss.[4] It consists in linearizing the function with respect to $\vec{\alpha}$ through the use of a truncated Taylor series. If $\vec{\alpha}_o$ is an initial estimate of $\vec{\alpha}$, then

$$\bar{y}_i \; (\vec{\alpha}) \cong \bar{y}_i \; (\vec{\alpha}_o) + (\partial/\partial\vec{\alpha}_o) \; \bar{y}_i \; (\vec{\alpha}_o) \cdot \delta\vec{\alpha}_o \tag{3}$$

and

$$S^2 \cong \Sigma_i \, w_i \, [y_i - \bar{y}_i \, (\vec{\alpha}_o) - (\partial/\partial\vec{\alpha}_o) \, \bar{y}_i \, (\vec{\alpha}_o) \cdot \delta\vec{\alpha}_o]^2 \quad . \tag{4}$$

The parameters $\delta\vec{\alpha}_o$ are then computed from the condition

$$[\partial/\partial \, (\delta\vec{\alpha}_o)] \, S^2 = 0 \quad . \tag{5}$$

Since the higher order terms have been neglected in equation (3), this is only an approximate solution of equation (2). Therefore, equation (5) is solved again with $\vec{\alpha}_o$ replaced by $\vec{\alpha}_o + \delta\vec{\alpha}_o$. The iterative process is continued until some predetermined convergence condition for $\delta\vec{\alpha}_o$ is satisfied.

A complete exposition of this method may be found in reference 4.

2. Nonlinear Least-Squares Fit to a Channel-Integrated Gaussian. In this program, it is desired to fit the experimental data to the equation

$$\bar{y}_i = \Sigma_j \, A_j \int_{x_i-1/2}^{x_i+1/2} \exp\,[-4\ln 2(x-\mu_j)^2/\omega^2] \, dx + B(x_i - x_1) + C \tag{6}$$

The subscript j identifies the Gaussian ($j \leq 5$), and B and C are the parameters of the linear background. All photopeaks are assumed to have the same full-width. With multichannel analyzers of a moderate number of channels, e.g. 400 or 512 channels, and Ge(Li) detectors, the energy resolution of the analyzer can be an appreciable fraction of the detector resolution. A good fit to the data by integration across the channel width. This modification of the normal procedure adds only a few statements to the computer program.

Substituting equation (6) into equation (3), the linearized function is, for J photopeaks, given by

$$\bar{y}_i = y_i\ (\vec{\alpha}_o) + \delta C + (x_i - x_1)\ \delta B + (8\ln 2/\omega)\ \Sigma_{j=1}^{J}\ A_j\ I_{ij}^{2}\ \delta\omega$$

$$+ (8\ln 2/\omega)\ \Sigma_{j=1}^{J}\ A_j\ I_{ij}^{1}\ \delta_{\mu j} + \Sigma_{j=1}^{J}\ I_{ij}^{o}\ A_j \tag{7}$$

where

$$I_{ij}^{k} = \int_{x_i-1/2}^{x_i+1/2} [(x-\mu_j)/\omega]\ \exp\ [-4\ln 2\ (x-\mu_j)^2/\omega^2]\ dx \tag{8}$$

and

$$\vec{\alpha}_o = (C_1\ B,\ \omega,\ \mu_1,\ \mu_2, \ldots,\ \mu_J,\ A_1,\ A_2, \ldots, A_J)\quad .$$

Defining the matrix A and the vector B as

$$A_{ij} = \Sigma_k\ \omega_k\ [(\partial/\partial\alpha_i)\ \bar{y}_k\ (\vec{\alpha}_o)]\ [(\partial/\partial\alpha_j)\ \bar{y}_k\ (\vec{\alpha}_o)]\ , \tag{9}$$

$$B_i = \Sigma_k\ \omega_k\ [y_k - \bar{y}_k\ (\vec{\alpha}_o)]\ (\partial/\partial\alpha_i)\ \bar{y}_k\ (\vec{\alpha}_o)\quad , \tag{10}$$

the solution to equation (3) can be written as

$$\delta\vec{\alpha}_o = A^{-1}\ B\quad . \tag{11}$$

The solution for $\delta\vec{\alpha}_o$ is iterated until the convergence criterion is satisfied.

3. Calculated Quantities. After the final values of the parameters have been determined, the estimated variances anc covariances are calculated according to

$$\text{var}\ (\alpha_i) = [S_{min}^{2}/(n-m)]\ A_{ii}^{-1} \tag{12}$$

and

$$\text{covar}\ (\alpha_i, \alpha_j) = \text{covar}\ (\alpha_j, \alpha_i) = [S_{min}^{2}/(n-m)]\ A_{ij}^{-1} \tag{13}$$

where s_{min}^2 is the value of S^2 for the final parameters, A^{-1} is the matrix inverse to A for the iteration during which convergence occurred, n is the number of data points considered, and m is the number of parameters determined. Equations (12) and (13) only give estimates of the true variances and covariances since it is not strictly true that S_{min}^2 is chi-squared distributed with $(n-m)$ degrees of freedom.[5] However, they provide estimates of these quantities, and $S_{min}^2/(n-m)$ is a qualitative indication of the goodness of the fit.

The photopeak areas and the variances are determined from the following equations:

$$a_j = \frac{1}{2}\sqrt{\pi/\ln 2}\ \omega A_j \tag{14}$$

and

$$\mathrm{var}\ (a_j) = (\omega/4\ln 2)\ [A_j^2\ \mathrm{var}\ (\omega) + \omega^2\ \mathrm{var}\ (A_j) + 2\omega\ A_j\ \mathrm{covar}\ (\omega, A_j)] \quad . \tag{15}$$

III - DESCRIPTION OF THE PROGRAM

1. General Description. The program consists of the main program, i.e. GRPPFP, and three external subroutines: GAUSS, ENERGY, and MATEQU. The program is under the control of GRPPFP. Its responsibilities are to read and check the data cards, calculate the weights to be used, save the parameters needed for energy calibration and call the various subroutines in proper sequence. Subroutine GAUSS performs the nonlinear least-squares fit described in II.2 above. ENERGY carries out the energy calibration and determination. Subroutine MATEQU is a matrix inversion subroutine used for solving the matrix

equation $A\vec{x} = \vec{b}$. A listing of the source language (FORTRAN IV) code for the entire program may be found in Appendix I.

2. The Main Program - GRPPFP. The primary function of GRPPFP is that of control since it calculates no quantities other than the weights and various control parameters. The data deck for the program may be quite long and complex, and errors in the order of the cards are probable. For this reason, the program checks the order of the data cards as it reads them by checking to see if they begin with the proper mnemonic name, e.g. SPC, DPC, etc. These functions are handled in cards 28 through 83. If the expected data card is not found, an appropriate error message is printed, fitting of the current spectrum is terminated and the program attempts to find the data for the next spectrum to be analyzed.

After the data cards for the current spectral fit and the photopeaks in that fit have been read, the weights are calculated for the channels used in the fit in cards 89 to 100. There are three weighting options that may be used:

1. $\omega_i = 1/y_i$

2. $\omega_i = 1$

3. $$\omega_i = \begin{cases} 1/y_{min} & \text{for } y_i < y_{min} \\ 1/y_i & \text{for } y_{min} \leq y_i \leq y_{max} \\ 1/y_{max} & \text{for } y_{max} < y_i \end{cases}$$

The weighting option is local to each fit. Following the calculation of the weighting data, the values of the control and initial fitting parameters are printed.

Following the calculation of the parameters by GAUSS, if energy calibration is to be performed for the current spectrum, the names of the isotopes and the photopeak positions and energies along with their standard deviations are saved in EDATA for use by the subroutine ENERGY. Control is transferred to card 61 and the next fit in the spectrum is begun. Upon encountering an end-of-spectrum (ENDSPC) card, the energy calibration is performed and the program begins on the next spectrum. If any errors occur during any fit of a spectrum, the energy calibration option will be overridden for that spectrum, i.e. no energy calibration will be performed.

3. Subroutine GAUSS. The function of this subroutine is to perform the nonlinear least-squares fit of the sum of channel-integrated Gaussians and the linear background to the data using the weights generated in GRPPFP. The least-squares procedure employed makes use of a design matrix and an observation vector as described by Archer *et al.*[6] The iterations of the fit begin with card 44. The elements of the design matrix and observation vector are calculated through card 59 and from these the matrix A and the vector B ; given by equations (9) and 10), are determined. After $\delta\vec{\alpha}$ is found, the new value of $\vec{\alpha}_o$ is compared with the upper and lower limits imposed on the various parameters. These limits are necessary to insure that the final values of the parameters are physically reasonable. If either the upper or lower limit criterion is not satisfied, the parameter is set equal to the appropriate limit and a diagnostic message is printed. The value of $\delta\vec{\alpha}_o$ is also compared with the convergence limits and if all these criteria are satisfied, control is transferred to card 102. If the maximum number of iterations has been taken without convergence, an error message and the

current values of $\vec{\alpha}_o$ and $\delta\vec{\alpha}_o$ are printed, the fit is terminated and control is returned to GRPPFP. However, the program does not restore to the next spectrum, but continues fitting in the current spectrum.

In cards 102 through 130, the goodness-of-fit parameter, the photopeak areas and the standard deviations of all the parameters are calculated, and a summary of the results of the fit is printed. Control is returned to the main program unless a more complete printout is desired in which case a complete channel listing of the input data and the calculated data is provided.

The internal function GSQUAD (cards 203 to 213) calculates the value of the integral I_{ij}^k (see equation 8) by a five point Legendre-Gauss procedure.[7]

4. Subroutine ENERGY. This subroutine performs a linear least-squares fit of the photopeak energies and positions to the equation

$$E_i = a + bx_i + cx_i^2 \tag{16}$$

where E_i is the energy of the i-th photopeak in keV and x_i the associated photopeak position in channels. Using the normal weighting procedure, i.e. $\omega_i = 1/\sigma_{E_i}^2$, where $\sigma_{E_i}^2$ is the variance of E_i, is an improper approach since it implies that x_i is known precisely. A better estimate of the weight to be associated with E_i is given by

$$\omega_i = 1/(\sigma_{E_i} + b\sigma_{x_i})^2 \tag{17}$$

where $\sigma_{x_i}^2$ is the variance of x_i. The initial estimate of b is found from the two extreme calibration photopeaks in card 19 and the fit is iterated twice,

the value of b from the first iteration being used to calculate better estimates of the weights for the second iteration.

After the second iteration of the fit, the values of the goodness of fit indicator and the standard deviations of the energy parameters are calculated in cards 49 to 59, and these parameters are then printed. Cards 63 through 73 compare the calculated values of the energies with the accepted values and print out the results of the comparison. Cards 78 through 85 determine the energy of the unknown photopeaks.

5.1 Subroutine MATEQU. Given the elements of the matrix A and the vector $\vec{b}$, this subroutine determines the vector $\vec{x}$, where $A\vec{x} = \vec{b}$, and the inverse matrix A^{-1}. The method used is the Gauss-Jordan elimination procedure modified for maximum pivot element selection.[8] This method was chosen in spite of its greater complexity because of the accuracy it affords.[9]

The matrix equation $A\vec{x} = \vec{b}$ where A is an n-dimensional square matrix and $\vec{b}$ and $\vec{x}$ are n-dimensional vectors may be represented as a set of n equations relating n unknowns:

$$\begin{aligned} a_{11}x_1 + a_{12}x_2 + \cdots + a_{1n}x_n &= b_1 \\ a_{21}x_1 + a_{22}x_2 + \cdots + a_{2n}x_n &= b_2 \\ \vdots \qquad\quad \vdots \qquad\qquad\quad \vdots \\ a_{n1}x_1 + a_{n2}x_2 + \cdots + a_{nn}x_n &= b_n \quad . \end{aligned} \tag{18}$$

The regular Gauss elimination procedure[10] consists of n steps: in the kth step, the kth equation is solved for x_k and the result used to eliminate x_k from all the succeeding equations. After n such eliminations, the coefficient array has been reduced to upper triangular form. The solution is completed by working backward from the last equation to obtain successively $x_n, x_{n-1}, \ldots, x_1$.

In the Gauss-Jordan method[11], the kth equation is used in the kth step to eliminate x_k from the preceding equations as well as the following ones. The resultant coefficient array is diagonal and no back substitution is necessary to obtain the solution vector $\vec{x}$. In the kth step, the element a_{kk} is called the pivot element and the kth row the pivot row.

If the array A is written as an augmented array of n rows and n + 1 columns by appending the vector $\vec{b}$ to the original array of coefficients, the Gauss-Jordan algorithm may be written as:

```
for k = 1, 2, ..., n
      for i = 1, 2, . . ., k-1, k +1, ..., n
            for j = 1, 2, ..., n, n+1
                  a'ij = akk aij - aik akj ,
```

where k designates the pivot row, i is the row being reduced and j is the element being reduced. This algorithm has two serious deficiencies:
(1) Since the elements are computed by multiplication, the numbers may rapidly exceed the limits of the computer either by becoming too large or too small.
(2) The assumption, implicitly made above, that the pivot element is non-zero is not always valid. After the first reduction, the available pivot elements are not the original elements and it is entirely possible that some of these may vanish.

The scaling difficulties can be remedied by dividing the pivot row by its diagonal element, i.e. the pivot element, before reducing the other rows. The algorithm is then

```
for k = 1, 2, ..., n
      for i = 1, 2, ..., k-1, k+1, ..., n
            for j = 1, 2, ..., n, n 1
                  a'ij = aij - aik akj .
```

Division as performed by a computer is an approximate process since the continuing digits of the quotient are truncated. This round-off error may be minimized in the reduction process by selecting at each step that element with the greatest magnitude for use as the pivot element. This will also eliminate the second difficulty mentioned above. The resulting matrix will not be diagonal, but will have only one unit element in any row or column. The algorithm must designate the rows and columns that have been used in the reduction process since once a row or column has been selected, it cannot again be used. After completion of the elimination process, the rows must be reordered so that the solution vector will appear in normal form. If at any point in the elimination all the available pivot elements are zero, the set of equations is singular and no solution exists.

The inverse of the transformation $A\vec{x} = \vec{b}$ is given by $A^{-1}\vec{b} = \vec{x}$ which may be represented as

$$\begin{aligned}
\tilde{A}_{11}b_1 + \tilde{A}_{21}b_2 + \cdots + \tilde{A}_{n1}b_n &= x_1 \\
\tilde{A}_{12}b_1 + \tilde{A}_{22}b_2 + \cdots + \tilde{A}_{n2}b_n &= x_2 \\
\vdots \qquad\quad \vdots \qquad\qquad\quad \vdots \\
\tilde{A}_{1n}b_1 + \tilde{A}_{2n}b_2 + \cdots + \tilde{A}_{nn}b_n &= x_n
\end{aligned} \tag{19}$$

where $\tilde{A}_{ij}$ is the reduced cofactor of a_{ij}.[9] It follows that the kth column of A^{-1} is the solution of the original equations obtained by setting b_k equal to unity and all other b's equal to zero. The array A^{-1} may thus be determined by n applications of the Gauss-Jordan reduction with appropriate choices for the vector $\vec{b}$. However, once an element of the coefficient array has been used as a pivot element, the elements in the column containing that element vanish and are not modified in any subsequent

reductions. Therefore the columns of the inverse array may be calculated simultaneously with the solution vector by replacing the pivot column elements with the appropriate vector $\vec{b}$ before reduction. Since the pivot elements are not necessarily diagonal elements, the columns must be reordered to obtain the proper inverse matrix.

5.2 Description of the Source Language Code. Two linear arrays are used in the program to keep track of the order of inclusion of the rows and columns in the reduction process. They are initially set equal to the integers in their natural order. During reduction, the number of the first pivot row will be stored as the first element of the row array and, similarly, the number of the first pivot column will be stored as the first element of the column array. The numbers of the second pivot row and column will be stored in the second elements of the arrays, etc. After completion of the kth step of the reduction, the first k elements of these arrays will be the numbers of the pivot rows and columns already used in the order of their use and the remaining $n-k$ elements will be the numbers of the rows and columns which are still available for use.

The arguments of the subroutine are A, B, IDIM, X, AINV, IFLAG, and NDIM where A is the array of coefficients, B the vector on the right side of the matrix equation, X is the solution vector, AINV is the inverse matrix of A , IFLAG is an error indicator, and NDIM gives dimensioning information from the calling program, i.e. it is necessary that A and AINV are dimensioned to be NDIM-by-NDIM square arrays and that B and X are NDIM-dimensional linear arrays in the calling program. The results of the subroutine are returned to the calling program through X and AINV.

Since the original elements of A and B are modified during the reduction process, they are saved by transferring them immediately into AINV and X in cards 20 through 26 and performing all operations on these latter arrays. This section also initializes the auxiliary row and column arrays, M and N respectively.

Cards 32 through 42 search the elements of the coefficient array which are available for use as pivot elements for the maximum element. Once it is found, its coordinates are saved as KI and KJ . KM and KN are the locations in the row and column arrays which contain KI and KJ respectively. Cards 48 to 51 interchange the elements in the row and column arrays so that KI and KJ occupy the Kth positions and the original K^{th} elements are moved to the KM^{th} and KN^{th} positions.

The pivot element is saved as PIV and according to the procedure for determining the inverse matrix, the pivot element is then set equal to unity. The absolute value of PIV is compared with COEFF1 to check for matrix singularities and for gross round-off errors. The following DO-loop scales the pivot row and the corresponding element of the solution vector by the pivot element.

Cards 67 to 78 reduce the other rows of the array as well as the elements of the solution vector. The element of the row being reduced which is in the pivot column is saved as FAC and the original element is set to zero as required for the computation of the elements of the inverse matrix. After completion of the row reductions, control is returned to card 32 and the next step in the reduction takes place.

In the reduction process, round-off errors can be annoying if not fatal. Since all the digits carried by the computer are not significant, a

reduced array element which should vanish may not do so. The purpose of cards 72 to 74 is to set array elements equal to zero which are less than a given faction of the original element. This faction is determined by the number of significant digits carried by the computer. This is a distinct advantage over the method which simply compares the new element with some predetermined constant, the value of which can only be properly determined if all the elements of the matrix are known, an impossibility in this program.

After the DO-loop ending with card 78 has been satisfied, reduction is completed and reordering of the rows and columns takes place. All the information needed for the rearrangements is contained in the two auxiliary arrays. In the Kth stage of reduction, row M_K was the pivot row and N_K was the pivot column, i.e. the $M_K{}^{th}$ equation was solved for the $N_K{}^{th}$ unknown (see equations 18). In order that the N_Kth unknown be the $N_K{}^{th}$ element of the solution vector X, row M_K should be interchanged with row N_K. Reference to the discussion following equations (19) will show that the elements in column N_K are the elements of column M_K of the inverse matrix since the $N_K{}^{th}$ column of the array was replaced by the column vector $\vec{c}$ where c_{M_K} was equal to unity with all the other elements of $\vec{c}$ equal to zero. Thus column N_K whould be interchanged with column M_K. The reordering may be summarized as follows:

	Original Position	Correct Position
Rows:	M_K	N_K
Columns:	N_K	M_K

Since the reordering is done entirely within the arrays AINV and X, the procedure is complicated by the fact that a row or column may occupy several

different positions in the array before completion of the rearrangement. The auxiliary row and column arrays are altered as the reordering progresses to keep track of the current positions of the rows and columns.

The reordering is carried out in two steps. First the rows of the augmented matrix are rearranged and then the columns of the inverse matrix are reordered. The row rearrangements are made in cards 89 through 97. Starting with $K = 1$, the Kth element of the row array is compared with the Kth element of the column array. If $M_K = N_K$, the $M_K{}^{th}$ row of the augmented matrix is already in its proper place and no interchange of rows is necessary. If the elements are unequal, the $M_K{}^{th}$ row is interchanged with the $N_K{}^{th}$ row of the augmented matrix. The actual interchange of elements takes place in cards 48 to 54.

After the interchange has been effected, the row array is searched forward from the Kth element until that element is found which equals N_k, e.g. $M_I = N_K$. To correspond to the interchange of rows M_K and N_K, M_I is replaced by M_K. Due to the rearrangement, the $N_K{}^{th}$ row of the augmented matrix now contains the proper elements according to the considerations discussed above and will be involved in no further interchanges. In order to preserve the information needed for the column reordering, the Kth element of the row array is replaced not by M_I, but by the value of the subscript I. Were it replaced by M_I, after the row rearrangements were completed, the row and column arrays would be identical and the proper column reordering could not be made. By preserving the subscript of the position in the row array in which the row array element equal to N_K was found, the information that the Ith element of the row array was interchanged with the Kth element is preserved. This will prove sufficient to reorder the columns properly. When

the DO-loop ending with card 107 is satisfied, the rows are in proper order.

The column rearrangements begin with card 113. Starting with the last element of the row array, the value of the Kth element is compared with the value of its subscript. If they are equal, no rearrangement is necessary. If M_K is not equal to K, the $N_K{}^{th}$ column is interchanged with column N_{M_K}. To record this move, N_{M_K} is interchanged with N_K. This procedure is repeated for all the elements of the row array. The overall result is that the column interchanges are just the row interchanges performed in reverse order.

IV - DESCRIPTION OF THE INPUT DATA

1. Ordering of the Data Deck. The data cards are read and checked for proper order by the main program. If the cards are found not to be in the proper order, the program terminates fitting in the current spectrum and attempts to find the data cards for the next spectrum after having printed an error message. The order of the data cards is shown on page 44. A printed listing of the data cards in a sample data deck is given in Appendix II. A printout of the results of the program with this set of data is shown in Appendix III.

2. Description of the Cards (SPC). This must be the first of the data cards for each spectrum. The information on this card is global for all fitting in the spectrum. However, if errors occur in any of the fits, JENGY will be set equal to 1.

Card Columns	Mnemonic Name	Format	Meaning
1-3	"SPC"	A6	Mnemonic name checked by program
11-16	SPEC	A6	Alphanumeric spectrum identification label
21	JENGY	I1	Energy calibration option: 0 - energy calibration to be performed 1 - no energy calibration

2.2. Data Parameter Card (DPC). One data parameter card must appear for each segment of input spectral data and must be followed by at least one Spectral Data Card.

Card Columns	Mnemonic Name	Format	Meaning
1-3	"DPC"	A6	Mnemonic name checked by program
11-13	ICH1	13	Channel number of first spectral datum
21-23	ICH2	13	Channel number of last spectral datum

2.3. Spectral Data Cards. These cards contain the spectral data specified by the preceding Data Parameter Card. The cards are numbered serially beginning with Ø1. A maximum of seven channels of data is allowed per card.

Card Columns	Mnemonic Name	Format	Meaning
1-2	ICK	12	Serial number
11-20	DATAIN(1)	F10.0	First spectral datum
21-30	DATAIN(2)	F10.0	Second spectral datum
...	.....	...	.....
71-80	DATAIN(7)	F10.0	Seventh spectral datum

2.4. ENDATA Card. This card indicates to the program that all the spectral data has been read. It contains the mnemonic "ENDATA" in card columns 1 to 6 and is read under an A6 format specification.

2.5. Fitting Parameter Cards (FPC). These are four cards containing control information for the fit. There must be one set of FPC cards for each fit. Note that they all have the same mnemonic name so that the program checks to see that there are four FPC cards but does not check their order.

Card Columns	Mnemonic Name	Format	Meaning
First fitting parameter card:			
1-3	"FPC"	A6	Mnemonic name checked by program
11-13	NCH1	I3	First channel of data to be used in the fit
21-23	NCH2	I3	Last channel of data to be used in the fit
31	ITRMAX	I1	Maximum number of iterations to be performed
41	JPRINT	I1	Printout option: 0 - summary form only 1 - summary and channel listing forms
51	JWT	I1	Weighting option: 0 - $\omega_i = 1/Y_i$ 1 - $\omega_i = 1$ 2 - $\omega_i = \begin{cases} 1/Y_{MZN} & \text{if } Y_i < Y_{MZN} \\ 1/Y_i & \text{if } Y_{MZN} \leq Y_i \leq Y_{MAX} \\ 1/Y_{MAX} & \text{if } Y_{MAX} < Y_i \end{cases}$
61-70	YMIN	F10.0	Used if JWT = 3
71-80	YMAX	F10.0	Used if JWT = 3
Second fitting parameter card:			
1-3	"FPC"	A6	Mnemonic name checked by program
11-20	BKG(1)	F10.0	Initial estimate for background intercept parameter
21-30	BKGMIN(1)	F10.0	Lower limit for background intercept parameter

Card Columns	Mnemonic Name	Format	Meaning
31-40	BKGMAX(1)	F10.0	Upper limit for background intercept parameter
41-50	BKGCON(1)	F10.0	Convergence criterion for background intercept parameter

Third fitting parameter card:

1-3	"FPC"	A6	Mnemonic name checked by program
11-20	BKG(2)	F10.0	Initial estimate for background slope parameter
21-30	BKGMIN(2)	F10.0	Lower limit for background slope parameter
31-40	BKGMAX(2)	F10.0	Upper limit for background slope parameter
41-50	BKGCON(2)	F10.0	Convergence criterion for background slope parameter

Fourth fitting parameter card:

1-3	"FPC"	A6	Mnemonic name checked by program
11-20	WØ	F10.0	Initial estimate for photopeak width parameter
21-30	WØMIN	F10.0	Lower limit for photopeak width parameter
31-40	WØMAX	F10.0	Upper limit for photopeak width parameter
41-50	WØCON	F10.0	Convergence criterion for photopeak width parameter

2.6. Peak Parameter Cards (PPC). These are three cards containing control information for each peak in the fit. There must be one set of PPC cards for each peak. Note that they all have the same mnemonic name so that the program checks to see that there are three cards but does not check their order.

Card Columns	Mnemonic Name	Format	Meaning

First peak parameter card:

1-3	"PPC"	A6	Mnemonic name checked by program
11-16	ISTP	A6	Alphanumeric isotope name

Card Columns	Mnemonic Name	Format	Meaning
21	ITYPE	I1	Photopeak type indicator: 1 - calibration photopeak 2 - uncalibrated photopeak 3 - other
31-40	ENGY(1)	F10.0	Accepted energy of photopeak
41-50	ENGY(2)	F10.0	Standard deviation of the accepted photopeak energy for ITYPE photopeaks

Second peak parameter card:

1-3	"PPC"	A6	Mnemonic name checked by program
11-20	XØ	F10.0	Initial estimate for photopeak center parameter
21-30	XØMIN	F10.0	Lower limit for photopeak center parameter
31-40	XØMAX	F10.0	Upper limit for photopeak center parameter
41-50	XØCON	F10.0	Convergence criterion for photopeak center parameter

Third peak parameter card:

1-3	"PPC"	A6	Mnemonic name checked by program
11-20	AØ	F10.0	Initial estimate for photopeak height parameter
21-30	AØMIN	F10.0	Lower limit for photopeak height parameter
31-40	AØMAX	F10.0	Upper limit for photopeak height parameter
41-50	AØCON	F10.0	Convergence criterion for photopeak height parameter

2.7. ENDFIT Card. This card signals the end of data for the current fit. Upon encountering this card, the program stops reading the data deck and performs the fit, and if the fit is completed normally, begins reading data for the next fit.

2.8. ENDSPC Card. This card indicates the end of data for the current spectrum. Upon encountering this card, the program does the energy

calibration and determination if JENGY = Ø and then begins reading data for the next spectrum.

2.9. ENDPRB Card. This card indicates the end of the data deck and must be the last card of the deck.

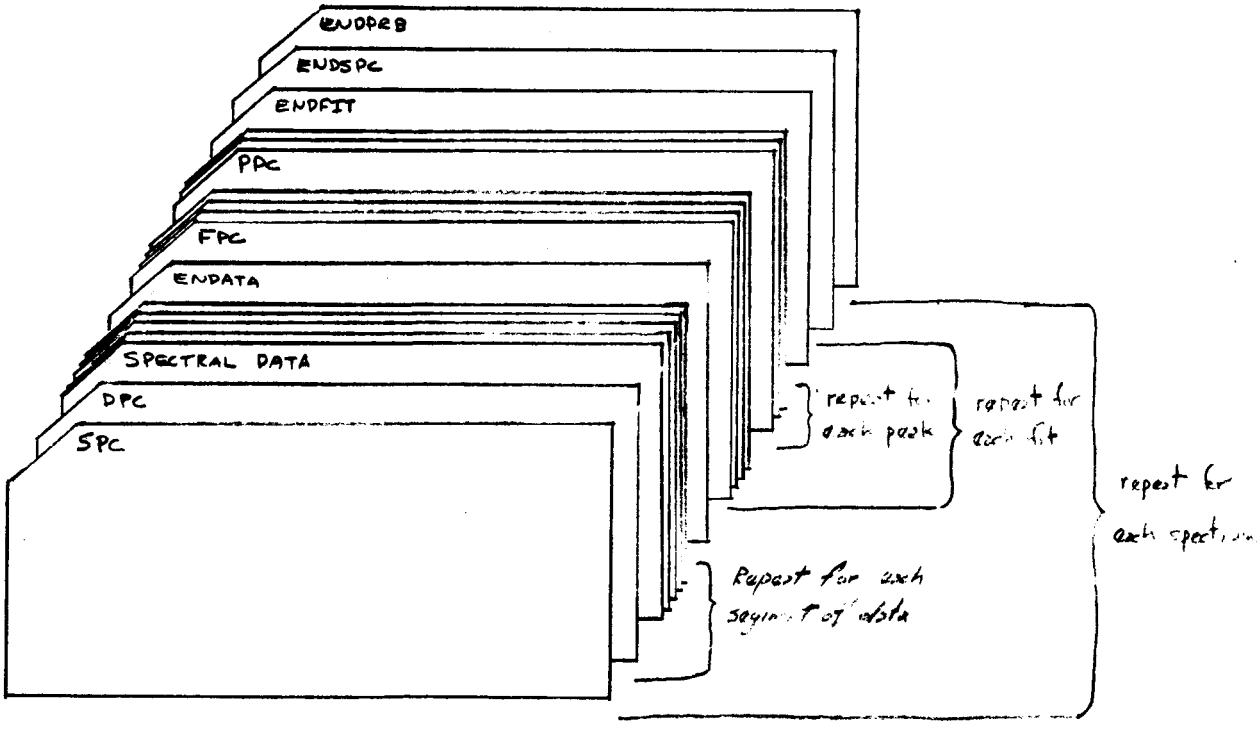

Ordering of Data Cards

APPENDIX I

```
@ LST
C              *** GRPPFP -- GAMMA-RAY PHOTOPEAK FITTING PROGRAM ***
C              * WRITTEN BY J. M. ARNOLD FOR CASE TECH UNIVAC 1107 *
C
C     NONLINEAR LEAST-SQUARES ANALYSIS OF GAMMA-RAY SPECTRA INCLUDING
C     OPTION FOR ENERGY CALIBRATION.
C
C     SUBROUTINES REQUIRED:  GAUSS,ENERGY,MATEQU(VERSION II).
C
C     UPDATED VERSION OF 27 MARCH 1967.
C
      COMMON/DATA1/YDATA(512),WDATA(512)
      COMMON/PARAM/BKG(2),W0,X0(5),A0(5),BKGMIN(2),W0MIN,X0MIN(5),
     2             A0MIN(5),BKGMAX(2),W0MAX,X0MAX(5),A0MAX(5),BKGCON(2),
     3             W0CON,X0CON(5),A0CON(5)
      DIMENSION SDVX0(5)
      EQUIVALENCE (X0MIN(1),SDVX0(1))
      REAL ISTP
      COMMON/CONTRL/SPEC,NPKS,NCH1,NCH2,ITRMAX,JPRINT,ISTP(5),ITYPE(5),
     2              ENGY(5,2)
      COMMON/ENRGY/SPECT,IDX(2),EDATA(10,2,5)
      DIMENSION DATAIN(7)
      INTEGER CHK,SPC,DPC,FPC,PPC,ENDATA,ENDFIT,ENDSPC,ENDPRB
      DATA SPC,DPC,FPC,PPC,ENDATA,ENDFIT,ENDSPC,ENDPRB/3HSPC,3HDPC,
     2     3HFPC,3HPPC,6HENDATA,6HENDFIT,6HENDSPC,6HENDPRB/
C
C     READ SPECTRUM PARAMETER CARD.
C
    1 READ 100, CHK,SPEC,JENGY
      IF (CHK.EQ.ENDPRB) GO TO 30
      IF (CHK.NE.SPC) GO TO 23
      SPECT=SPEC
C
C     READ DATA PARAMETER CARD.
C
    2 READ 200, CHK,ICH1,ICH2
      IF (CHK.EQ.ENDATA) GO TO 4
      IF (CHK.NE.DPC) GO TO 24
C
C     READ SPECTRAL DATA.
C
      IDATS=(ICH2-ICH1)/7+1
      ICH=ICH1-1
      DO 3  IDAT=1,IDATS
      READ 300, ICK,(DATAIN(I),I=1,7)
      IF (ICK.NE.IDAT) GO TO 25
      DO 3  I=1,7
      ICH=ICH+1
      IF (ICH.GT.ICH2) GO TO 2
    3 YDATA(ICH)=DATAIN(I)
      GO TO 2
C
C     INITIALIZE INDEX ARRAY.
```

```
C
    4   IDX(1)=0
        IDX(2)=0
C
C       BEGIN DATA READIN FOR CURRENT FITTING PROBLEM.
C
C       READ FITTING PARAMETER CARDS.
C
    5   READ 400, CHK,NCH1,NCH2,ITRMAX,JPRINT,JWT,YMIN,YMAX
        IF (CHK.EQ.ENDSPC) GO TO 22
        IF (CHK.NE.FPC) GO TO 26
        DO 6  I=1,2
        READ 500, CHK,BKG(I),BKGMIN(I),BKGMAX(I),BKGCON(I)
        IF (CHK.NE.FPC) GO TO 26
    6   CONTINUE
        READ 500, CHK,W0,W0MIN,W0MAX,W0CON
        IF (CHK.NE.FPC) GO TO 26
C
C       READ PEAK PARAMETER CARDS.
C
        NPK=1
    7   READ 600, CHK,ISTP(NPK),ITYPE(NPK),(ENGY(NPK,I),I=1,2)
        IF (CHK.EQ.ENDFIT) GO TO 8
        IF (CHK.NE.PPC) GO TO 27
        READ 500, CHK,X0(NPK),X0MIN(NPK),X0MAX(NPK),X0CON(NPK)
        IF (CHK.NE.PPC) GO TO 27
        READ 500, CHK,A0(NPK),A0MIN(NPK),A0MAX(NPK),A0CON(NPK)
        IF (CHK.NE.PPC) GO TO 27
        NPK=NPK+1
        GO TO 7
    8   NPKS=NPK-1
C
C       DATA READIN COMPLETED FOR CURRENT FITTING PROBLEM.
C
C       CALCULATED WEIGHTING DATA.
C
        DO 13  NCH=NCH1,NCH2
        IF (JWT-1) 9,10,11
    9   WDATA(NCH)=1.0/YDATA(NCH)
        GO TO 13
   10   WDATA(NCH)=1.0
        GO TO 13
   11   IF (YDATA(NCH).GT.YMIN) GO TO 12
        WDATA(NCH)=1.0/YMIN
        GO TO 13
   12   IF (YDATA(NCH).LT.YMAX) GO TO 9
        WDATA(NCH)=1.0/YMAX
   13   CONTINUE
C
C       PRINTOUT CONTROL PARAMETERS.
C
        PRINT 1000, NCH1,NCH2,SPEC,NPKS
        IF (JWT-1) 14,15,16
   14   PRINT 2000
```

```
      GO TO 17
   15 PRINT 3000
      GO TO 17
   16 PRINT 4000, YMIN,YMAX
   17 PRINT 5000, ITRMAX
      IF (JPRINT) 18,18,19
   18 PRINT 6000
      GO TO 20
   19 PRINT 7000
   20 PRINT 8000, (BKG(I),BKGMIN(I),BKGMAX(I),BKGCON(I),I=1,2),W0,W0MIN,
     2            W0MAX,W0CON,(ISTP(NPK),X0(NPK),X0MIN(NPK),X0MAX(NPK),
     3            X0CON(NPK),A0(NPK),A0MIN(NPK),A0MAX(NPK),A0CON(NPK),
     4            NPK=1,NPKS)
C
C     COMPUTE FITTING PARAMETERS.
C
      IFLAG=0
      CALL GAUSS(IFLAG)
      IF (IFLAG.EQ.1) JENGY=1
      IF (JENGY.EQ.1) GO TO 5
C
C     STORE DATA FOR ENERGY CALIBRATION.
C
      DO 21 NPK=1,NPKS
      IF (ITYPE(NPK).GE.3) GO TO 21
      J=ITYPE(NPK)
      IDX(J)=IDX(J)+1
      I=IDX(J)
      EDATA(I,J,1)=ISTP(NPK)
      EDATA(I,J,2)=X0(NPK)
      EDATA(I,J,3)=SDVX0(NPK)
      EDATA(I,J,4)=ENGY(NPK,1)
      EDATA(I,J,5)=ENGY(NPK,2)
   21 CONTINUE
      GO TO 5
C
C     CALCULATE ENERGY PARAMETERS AND PHOTOPEAK ENERGIES.
C
   22 IF (JENGY.EQ.0) CALL ENERGY
      GO TO 1
C
C     DATA ERROR CONTROL STATEMENTS.
C
   23 PRINT 9000
      GO TO 28
   24 PRINT 9100, SPEC
      GO TO 28
   25 PRINT 9200, NCH1,NCH2,SPEC
      GO TO 28
   26 PRINT 9300, SPEC
      GO TO 28
   27 PRINT 9400, NPK,SPEC
   28 PRINT 9500
C
```

```
C     ATTEMPT TO RESTORE TO NEXT SPECTRUM.
C
   29 READ 700, CHK
      IF (CHK.EQ.ENDPRA) GO TO 30
      IF (CHK.EQ.ENDSPC) GO TO 1
      GO TO 29
   30 PRINT 9600
C
  100 FORMAT (2(A6,4X),I1)
  200 FORMAT (A6,4X,2(I3,7X))
  300 FORMAT (I2,8X,7F10.0)
  400 FORMAT (A6,4X,2(I3,7X),3(I1,9X),2F10.0)
  500 FORMAT (A6,4X,4F10.0)
  600 FORMAT (2(A6,4X),I1,9X,2F10.0)
  700 FORMAT (A6)
 1000 FORMAT (1H1,34X,31HCONTROL PARAMETERS FOR CHANNELS,I4,3H TO,I4,
     2        13H IN SPECTRUM ,A6//41X,17HNUMBER OF PEAKS =,I2,12X,
     3        14HWEIGHT OPTION:)
 2000 FORMAT (1H+,47X,17HWDATA = 1.0/YDATA)
 3000 FORMAT (1H+,47X,22HWDATA = CONSTANT = 1.0)
 4000 FORMAT (1H+,47X,10HWDATA = F(,F5.0,1H,,F5.0,1H))
 5000 FORMAT (28X,30HMAXIMUM NUMBER OF ITERATIONS =,I2,10X,
     2        15HPRINTOUT OPTION:)
 6000 FORMAT (1H+,47X,12HREGULAR FORM)
 7000 FORMAT (1H+,47X,9HLONG FORM)
 8000 FORMAT (/22X,9HPARAMETER,10X,13HINITIAL VALUE,5X,11HLOWER LIMIT,
     2        5X,11HUPPER LIMIT,5X,17HCONVERGENCE LIMIT//16X,
     3        20HBACKGROUND INTERCEPT,F16.2,F17.2,F16.2,F17.2/18X,
     4        15HBACKGROUND SLOPE,F16.2,F17.2,F16.2,F17.2//19X,
     5        15HPHOTOPEAK WIDTH,F16.2,F17.2,F16.2,F17.2//(20X,A6,
     6        7H CENTER,F19.2,F17.2,F16.2,F17.2/27X,6HHEIGHT,F19.2,
     7        F17.2,F16.2,F17.2/1X))
 9000 FORMAT (1H1,37X,5(1H*),36HDATA ERROR--SPECTRUM PARAMETER CARD ,
     2        9HNOT FOUND,5(1H*))
 9100 FORMAT (1H1,29X,5(1H*),36HDATA ERROR--DATA PARAMETER CARD NOT ,
     2        19HFOUND FOR SPECTRUM ,A6,5(1H*))
 9200 FORMAT (1H1,15X,5(1H*),33HDATA ERROR--DATA DECK IMPROPERLY ,
     2        24HORDERED BETWEEN CHANNELS,I4,4H AND,I4,
     3        14H FOR SPECTRUM ,A6,5(1H*))
 9300 FORMAT (1H1,22X,5(1H*),36HDATA ERROR--FITTING PARAMETER CARDS ,
     2        18HNOT FOUND FOR PEAK,I2,13H IN SPECTRUM ,A6,5(1H*))
 9400 FORMAT (1H1,23X,5(1H*),33HDATA ERROR--PEAK PARAMETER CARDS ,
     2        18HNOT FOUND FOR PEAK,I2,13H IN SPECTRUM ,A6,5(1H*))
 9500 FORMAT (//18X,5(1H*),35HFITTING FOR THIS SPECTRUM HAS BEEN ,
     2        50HTERMINATED.  PROGRAM WILL RESTORE TO NEXT SPECTRUM,
     3        5(1H*))
 9600 FORMAT (1H1//////////44X,5(1H*),23HEND OF DATA -- PROBLEM ,
     2        9HCOMPLETED,5(1H*)//////////)
      END
Δ FIN
```

```
Δ LST
C     DETERMINATION OF PARAMETERS IN NONLINEAR LEAST-SQUARES FIT OF
C     CHANNEL-INTEGRATED GAUSSIAN TO THE DATA.
C
C     UPDATED VERSION OF 27 MARCH 1967.
C
      SUBROUTINE GAUSS(IFLAG)
C
      COMMON/DATA1/YDATA(512),ADATA(512)
      COMMON/PARAM/BKG(2),W0,X0(5),A0(5),BKGMIN(2),W0MIN,X0MIN(5),
     2             A0MIN(5),BKGMAX(2),W0MAX,X0MAX(5),A0MAX(5),BKGCON(2),
     3             W0CON,X0CON(5),A0CON(5)
      DIMENSION PARA(13),PARMIN(13),PARMAX(13),PARCON(13),SDVPAR(13),
     2          SDVBKG(2),SDVX0(5),SDVA0(5),AREA(5),SDVAR(5)
      EQUIVALENCE (BKG(1),PARA(1)),(BKGMIN(1),PARMIN(1),SDVPAR(1),
     2            SDVBKG(1)),(SDVPAR(3),SDVW0),(SDVPAR(4),SDVX0(1)),
     3            (SDVPAR(9),SDVA0(1)),(A0MAX(1),PARMAX(9),AREA(1)),
     4            (A0CON(1),PARCON(9),SDVAR(1))
      REAL ISTP
      COMMON/CONTRL/SPEC,NPKS,NCH1,NCH2,ITRMAX,JPRINT,ISTP(5),ITYPE(5),
     2              ENGY(5,2)
      COMMON/DATA2/IX(50),Y(50,13)
      DIMENSION INDEX(13),OBS(50),A(13,13),B(13),DELPAR(13),
     2          VARPAR(13,13)
C
C     INITIALIZE CONTROL CONSTANTS.
C
      NDFS=3+2*NPKS
      NCH=NCH1-1
      ICHS=NCH2-NCH
C
C     LOAD INDEX ARRAY AND CONSTANT ELEMENTS OF DESIGN MATRIX.
C
      I=5-NPKS
      J=4+NPKS
      DO 1  NDF=1,NDFS
      K=NDF/J
    1 INDEX(NDF)=NDF+I*K
      DO 2  ICH=1,ICHS
      Y(ICH,1)=1.0
    2 Y(ICH,2)=ICH-1.0
C
C     BEGIN ITERATIONS.
C
      DO 10  ITR=1,ITRMAX
      ITER=ITR
C
C     CALCULATE ELEMENTS OF DESIGN MATRIX AND OBSERVATION VECTOR.
C
      P=5.5451774/W0
      DO 3  ICH=1,ICHS
      Y(ICH,3)=0.0
      OBS(ICH)=YDATA(ICH+NCH)-BKG(1)-BKG(2)*Y(ICH,2)
```

```
      DO 3  NPK=1,NPKS
      IPK=NPK+3
      Q=P*A0(NPK)
      Y(ICH,3)=Y(ICH,3)+Q*GSQUAD(ICH,NPK,2)
      Y(ICH,IPK)=Q*GSQUAD(ICH,NPK,1)
      Y(ICH,IPK+NPKS)=GSQUAD(ICH,NPK,0)
    3 OBS(ICH)=OBS(ICH)-A0(NPK)*Y(ICH,IPK+NPKS)
C
C     CALCULATE ELEMENTS OF LEAST-SQUARES MATRIX EQUATIONS.
C
      DO 6  I=1,NDFS
      DO 5  J=I,NDFS
      A(I,J)=0.0
      DO 4  ICH=1,ICHS
    4 A(I,J)=A(I,J)+WDATA(ICH+NCH)*Y(ICH,I)*Y(ICH,J)
    5 A(J,I)=A(I,J)
      B(I)=0.0
      DO 6  ICH=1,ICHS
    6 B(I)=B(I)+WDATA(ICH+NCH)*OBS(ICH)*Y(ICH,I)
C
C     DETERMINE FITTING PARAMETERS.
C
      CALL MATEQU(A,B,NDFS,DELPAR,VARPAR,IFLAG,13)
      IF (IFLAG.EQ.1) GO TO 19
C
C     CHECK UPPER AND LOWER LIMITS AND FOR CONVERGENCE.
C
      JITR=0
      DO 9  NDF=1,NDFS
      I=INDEX(NDF)
      PARA(I)=PARA(I)+DELPAR(NDF)
      IF (PARA(I).GT.PARMIN(I)) GO TO 7
      PARA(I)=PARMIN(I)
      PRINT 1000, NDF,ITER
      GO TO 8
    7 IF (PARA(I).LT.PARMAX(I)) GO TO 8
      PARA(I)=PARMAX(I)
      PRINT 2000, NDF,ITER
    8 IF (ABS(DELPAR(NDF)).GT.PARCON(I)) JITR=1
    9 CONTINUE
C
C     END ITERATIONS IF CONVERGENCE HAS TAKEN PLACE.
C
      IF (JITR.EQ.0) GO TO 11
   10 CONTINUE
      IF (JITR.EQ.1) GO TO 22
C
C     CALCULATE GOODNESS OF FIT, VARIANCES AND COVARIANCES.
C
   11 CHISQ=0.0
      DO 13  ICH=1,ICHS
      YCALC=BKG(1)+BKG(2)*(ICH-1.0)
      DO 12  NPK=1,NPKS
   12 YCALC=YCALC+A0(NPK)*GSQUAD(ICH,NPK,0)
```

```
   13 CHISQ=CHISQ+WDATA(ICH+NCH)*(YDATA(ICH+NCH)-YCALC)**2
      CHISQ=CHISQ*(1.D/(ICHS-NDFS))
      DO 15  I=1,NDFS
      DO 14  J=I,NDFS
      VARPAR(I,J)=CHISQ*VARPAR(I,J)
   14 VARPAR(J,I)=VARPAR(I,J)
      K=INDEX(I)
   15 SDVPAR(K)=SQRT(VARPAR(I,I))
C
C     CALCULATE PHOTOPEAK AREAS.
C
      DO 16  NPK=1,NPKS
      I=3+NPK+NPKS
      AREA(NPK)=1.0644670*W0*A0(NPK)
   16 SDVAR(NPK)=1.0644670*SQRT(W0**2*VARPAR(I,I)+A0(NPK)**2*VARPAR(3,3)
     2            +2.0*W0*A0(NPK)*VARPAR(3,I))
C
C     PRINTOUT SUMMARY RESULTS OF FIT.
C
      PRINT 3000, NCH1,NCH2,SPEC,BKG(1),SDVBKG(1),ITER,BKG(2),SDVBKG(2),
     2            CHISQ,W0,SDVW0,(ISTP(NPK),ENGY(NPK,1),ITYPE(NPK),
     3            X0(NPK),SDVX0(NPK),A0(NPK),SDVA0(NPK),AREA(NPK),
     4            SDVAR(NPK),NPK=1,NPKS)
      IF (JPRINT.EQ.0) RETURN
C
C     PRINTOUT COMPLETE RESULTS OF FIT.
C
      PRINT 4000, NCH1,NCH2,SPEC
      DO 18  ICH=1,ICHS
      IX(ICH)=ICH+NCH
      Y(ICH,2)=0.0
      Y(ICH,3)=BKG(1)+BKG(2)*(ICH-1.0)
      DO 17  NPK=1,NPKS
      Y(ICH,NPK+3)=A0(NPK)*GSQUAD(ICH,NPK,0)
   17 Y(ICH,2)=Y(ICH,2)+Y(ICH,NPK+3)
      Y(ICH,1)=Y(ICH,2)+Y(ICH,3)
      Y(ICH,9)=YDATA(ICH+NCH)-Y(ICH,1)
      Y(ICH,10)=ABS(Y(ICH,9))*SQRT(WDATA(ICH+NCH))
   18 PRINT 5000, IX(ICH),YDATA(ICH+NCH),Y(ICH,1),Y(ICH,9),Y(ICH,10),
     2            Y(ICH,3),(Y(ICH,NPK+3),NPK=1,NPKS)
      RETURN
C
C     ERROR CONTROL STATEMENTS.
C
   19 PRINT 6000, ITER
      DO 20  I=1,NDFS
   20 PRINT 6500, (A(I,J),J=1,NDFS)
      PRINT 7000
      DO 21  NDF=1,NDFS
      I=INDEX(NDF)
   21 PRINT 7500, NDF,A(NDF),PARA(I)
      RETURN
   22 IFLAG=1
      PRINT 8000
```

```
      DO 23  NDF=1,NDFS
      I=INDEX(NDF)
   23 PRINT 8500, NDF,PARA(I),DELPAR(I),PARCON(I)
      RETURN
C
 1000 FORMAT (//15X,5(1H*),39HDIAGNOSTIC MESSAGE--MINIMUM VALUE TEST ,
     2         13HFOR PARAMETER,I3,34H GAVE NEGATIVE RESULT ON ITERATION,
     3         I2,5(1H*))
 2000 FORMAT (//15X,5(1H*),39HDIAGNOSTIC MESSAGE--MAXIMUM VALUE TEST ,
     2         13HFOR PARAMETER,I3,34H GAVE NEGATIVE RESULT ON ITERATION,
     3         I2,5(1H*))
 3000 FORMAT (//40X,20HANALYSIS OF CHANNELS,I4,3H TO,I4,12H IN SPECTRUM,
     2         1X,A6//17X,22HBACKGROUND INTERCEPT =,E11.5,2H (,E7.3,1H),
     3         10X,22HNUMBER OF ITERATIONS =,I3/21X,16HBACKGROUND SLOPE,
     4         2H =,E11.5,2H (,E7.3,1H),10X,17HGOODNESS OF FIT =,F6.2/
     5         48X,21HWIDTH OF PHOTOPEAKS =,F6.3,2H (,F4.3,1H)//18X,
     6         7HISOTOPE,6X,6HENERGY,6X,4HTYPE,10X,6HCENTER,10X,6HHEIGHT,
     7         22X,4HAREA//(18X,A6,F14.3,I8,F14.3,2H (,F4.3,1H),2(E16.6,
     8         2H (,E8.4,1H))/1X))
 4000 FORMAT (1H1,34X,30HPHOTOPEAK ANALYSIS OF CHANNELS,I4,3H TO,I4,1X,
     2         12HIN SPECTRUM ,A6//3X,7HCHANNEL,5X,12HEXPERIMENTAL,5X,
     3         10HCALCULATED,5X,8HRESIDUAL,5X,9HDEVIATION,5X,
     4         10HBACKGROUND,13X,20HINDIVIDUAL PHOTOPEAK/19X,4HDATA,12X,
     5         4HDATA,38X,4HDATA,24X,4HDATA/1X)
 5000 FORMAT (1X,I7,F17.0,F15.0,F12.0,F14.2,F15.0,5X,5(F8.0))
 6000 FORMAT (//13X,5(1H*),41HFITTING PROCEDURE TERMINATED ON ITERATION,
     2         I2,45H DUE TO MATRIX SINGULARITY.  DIAGNOSTIC DUMP ,
     3         7HFOLLOWS,5(1H*)//58X,15HSINGULAR MATRIX/1X)
 6500 FORMAT (7X,13E9.3)
 7000 FORMAT (//38X,16HPARAMETER NUMBER,5X,10H'B' VECTOR,10X,
     2         13H'PARA' VECTOR/1X)
 7500 FORMAT (45X,I2,E22.3,E21.3)
 8000 FORMAT (//33X,5(1H*),35HMAXIMUM NUMBER OF ITERATIONS TAKEN ,
     2         19HWITHOUT CONVERGENCE,5(1H*)//30X,16HPARAMETER NUMBER,
     3         5X,13HCURRENT VALUE,5X,10HCORRECTION,5X,12HCONVERGENCE ,
     4         5HLIMIT/1X)
 8500 FORMAT (38X,I2,F23.3,F15.4,F17.2)
C
C     CALCULATION OF INTEGRALS BY FIVE POINT GAUSSIAN QUADRATURE.
C
C     UPDATED VERSION OF 21 MARCH 1967.
C
      FUNCTION GSQUAD(ICH,NPK,K)
      DIMENSION COEFF1(5),COEFF2(5)
      DATA (COEFF1(I),I=1,5)/-0.45308992,-0.26923466,0.0,0.26923466,
     2      0.45308992/,(COEFF2(I),I=1,5)/0.11846344,0.23931434,
     3      0.28444444,0.23931434,0.11846344/
      GSQUAD=0.0
      DO 1  IG=1,5
      PG=(ICH+NCH-X0(NPK)+COEFF1(IG))/W0
      XPG=EXP(-2.7725887*PG**2)
    1 GSQUAD=GSQUAD+COEFF2(IG)*PG**K*XPG
      RETURN
      END
```

```
A LST
C     LINEAR LEAST-SQUARES DETERMINATION OF ENERGY PARAMETERS AND
C     PHOTOPEAK ENERGIES.  FIT IS TO SECOND-DEGREE EQUATION.
C
C     UPDATED VERSION OF 27 MARCH 1967.
C
      SUBROUTINE ENERGY
C
      COMMON/ENRGY/SPECT,IDX(2),EDATA(10,2,5)
      REAL ISTP
      DIMENSION ISTP(10,2),XO(10,2),SDVXO(10,2),ENGY(10,2),SDVEGY(10)
      EQUIVALENCE (EDATA(1,1,1),ISTP(1,1)),(EDATA(1,1,2),XO(1,1)),
     2            (EDATA(1,1,3),SDVXO(1,1)),(EDATA(1,1,4),ENGY(1,1)),
     3            (EDATA(1,1,5),SDVEGY(1))
      DIMENSION W(10),E(3),SDVE(3),A(3,3),B(3),VARE(3,3)
C
C     BEGIN CALCULATION OF ENERGY PARAMETERS.
C
      L=IDX(1)
      E(2)=(ENGY(L,1)-ENGY(1,1))/(XO(L,1)-XO(1,1))
      DO 6  ITR=1,2
C
C     CALCULATE WEIGHTS.
C
      DO 1  K=1,L
    1 W(K)=1.0/(SDVEGY(K)+E(2)*SDVXO(K,1))**2
C
C     CALCULATE ELEMENTS OF LEAST-SQUARES MATRIX EQUATION.
C
      DO 4  I=1,3
      DO 3  J=1,3
      A(I,J)=0.0
      M=I+J-2
      DO 2  K=1,L
    2 A(I,J)=A(I,J)+W(K)*XO(K,1)**M
    3 A(J,I)=A(I,J)
      B(I)=0.0
      M=I-1
      DO 4  K=1,L
    4 B(I)=B(I)+W(K)*XO(K,1)**M*ENGY(K,1)
C
C     DETERMINE ENERGY PARAMETERS.
C
      CALL MATEQU(A,B,3,E,VARE,IFLAG,3)
      IF (IFLAG.EQ.1) GO TO 12
    6 CONTINUE
C
C     CALCULATE GOODNESS OF FIT, VARIANCES AND COVARIANCES.
C
      CHISQ=0.0
      DO 7  K=1,L
      ECALC=E(1)+E(2)*XO(K,1)+E(3)*XO(K,1)**2
    7 CHISQ=CHISQ+W(K)*(ENGY(K,1)-ECALC)**2
```

```
      CHISQ=CHISQ*(1.0/(L-3.0))
      DO 9  I=1,3
      DO 8  J=1,3
      VARE(I,J)=CHISQ*VARE(I,J)
    8 VARE(J,I)=VARE(I,J)
    9 SDVE(I)=SQRT(VARE(I,I))
      PRINT 1000, SPECT,(E(I),SDVE(I),I=1,3),CHISQ
C
C     COMPARE RESULTS OF FIT WITH CALIBRATION ENERGIES.
C
      DO 10  K=1,L
      XOSQ=XO(K,1)**2
      ECALC=E(1)+E(2)*XO(K,1)+E(3)*XOSQ
      SDCALC=SQRT(((E(2)+2.0*E(3)*XO(K,1))*SDVXO(K,1))**2+VARE(1,1)
     2        +XOSQ*(VARE(2,2)+XOSQ*VARE(3,3))+2.0*XO(K,1)
     3        *(VARE(1,2)+XO(K,1)*(VARE(1,3)+XO(K,1)*VARE(2,3))))
      TOTDEV=1.0/SQRT(W(K))
      RES=ENGY(K,1)-ECALC
      DEV=ABS(RES)/TOTDEV
   10 PRINT 2000, ISTP(K,1),XO(K,1),SDVXO(K,1),ENGY(K,1),SDVEGY(K),
     2            TOTDEV,ECALC,SDCALC,RES,DEV
      PRINT 3000, SPECT
C
C     BEGIN CALCULATION OF PHOTOPEAK ENERGIES.
C
      L=IDX(2)
      DO 11  K=1,L
      XOSQ=XO(K,2)**2
      ECALC=E(1)+E(2)*XO(K,2)+E(3)*XOSQ
      SDCALC=SQRT(((E(2)+2.0*E(3)*XO(K,2))*SDVXO(K,2))**2+VARE(1,1)
     2        +XOSQ*(VARE(2,2)+XOSQ*VARE(3,3))+2.0*XO(K,2)
     3        *(VARE(1,2)+XO(K,2)*(VARE(1,3)+XO(K,2)*VARE(2,3))))
   11 PRINT 4000, ISTP(K,2),XO(K,2),SDVXO(K,2),ECALC,SDCALC
      RETURN
C
C     ERROR CONTROL STATEMENTS.
C
   12 PRINT 5000, ((A(I,J),J=1,3),B(I),I=1,3)
      RETURN
C
 1000 FORMAT (1H1,38X,38HENERGY CALIBRATION FROM PHOTOPEAKS IN ,
     2        9HSPECTRUM ,A6//33X,18HENERGY PARAMETERS:,11X,
     3        11HINTERCEPT =,E12.6,2H (,E9.5,1H)/66X,7HSLOPE =,E12.6,
     4        2H (,E9.5,1H)/61X,12HCORRECTION =,E12.6,2H (,E9.5,1H)//
     5        54X,17HGOODNESS OF FIT =,F6.2///10X,7HISOTOPE,6X,6HCENTER,
     6        8H CHANNEL,5X,15HACCEPTED ENERGY,7X,5HTOTAL,7X,
     7        17HCALCULATED ENERGY,5X,5HRESIDUAL,5X,9HDEVIATION/62X,
     8        9HDEVIATION/1X)
 2000 FORMAT (11X,A6,2(F13.3,2H (,F4.3,1H)),F12.3,F15.3,2H (,F4.3,1H),
     2        F12.3,F14.2/1X)
 3000 FORMAT (////39X,38HENERGY DETERMINATION OF PHOTOPEAKS IN ,
     2        9HSPECTRUM ,A6//41X,7HISOTOPE,6X,14HCENTER CHANNEL,5X,
     3        17HCALCULATED ENERGY/1X)
 4000 FORMAT (42X,A6,2(F13.3,2H (,F4.3,1H))/1X)
```

```
 5000 FORMAT (1H1,32X,5(1H*),34HENERGY CALIBRATION TERMINATED DUE ,
     2        47HTO MATRIX SINGULARITY.  DIAGNOSTIC DUMP FOLLOWS,5(1H*)/
     3        /48X,15HSINGULAR MATRIX,17X,10H'B' VECTOR//1X,5(59X,
     4        3E10.4,10X,E10.4/1X))
      END
Δ FIN
```

```
$ LST
C     SOLUTION OF MATRIX EQUATION A X = B USING GUASS-JORDAN ELIMINATION
C     METHOD WITH MAXIMUM PIVOT ELEMENT SELCTION.  AINV IS CALCULATED
C     IN PLACE.  IFLAG IS SINGULARITY INDICATOR.
C
C     IMPORTANT:  DET IS NOT CALCULATED IN THIS SUBROUTINE.
C
C     VERSION II OF MATEQU.
C
C     VERSION OF 15 MARCH 1967.
C
      SUBROUTINE MATEQU(A,B,IDIM,X,AINV,IFLAG,NDIM)
C
      DIMENSION A(NDIM,NDIM),B(NDIM),X(NDIM),AINV(NDIM,NDIM),M(13),N(13)
      DATA COEFF1,COEFF2/1.0E-20,1.0E-7/
C
C     INITIALIZE IFLAG AND ROW AND COLUMN ARRAYS.  LOAD AINV AND X FROM
C     ARRAYS A AND B.
C
      IFLAG=0
      DO 1  I=1,IDIM
      M(I)=I
      N(I)=I
      X(I)=B(I)
      DO 1  J=I,IDIM
      AINV(I,J)=A(I,J)
    1 AINV(J,I)=A(J,I)
      DO 5  K=1,IDIM
      PIVMAX=0.0
C
C     SEARCH FOR MAXIMUM AVAILABLE PIVOT ELEMENT.
C
      DO 2  I=K,IDIM
      MI=M(I)
      DO 2  J=K,IDIM
      NJ=N(J)
      IF (ABS(AINV(MI,NJ)).LT.PIVMAX) GO TO 2
      PIVMAX=ABS(AINV(MI,NJ))
      KI=MI
      KJ=NJ
      KM=I
      KN=J
    2 CONTINUE
C
C     MAXIMUM AVAILABLE PIVOT ELEMENT IS AINV(KI,KJ).
C
C     UPDATE ROW AND COLUMN ARRAYS FOR CURRENT PIVOT ELEMENT.
C
      M(KM)=M(K)
      M(K)=KI
      N(KN)=N(K)
      N(K)=KJ
      PIV=AINV(KI,KJ)
```

```
C
C     CHECK FOR MATRIX SINGULARITY.
C
      IF (ABS(PIV).LT.COEFF1) GO TO 12
C
C     SCALE PIVOT ROW.
C
      AINV(KI,KJ)=1.0
      DO 3  J=1,IDIM
    3 AINV(KI,J)=AINV(KI,J)/PIV
      X(KI)=X(KI)/PIV
C
C     REDUCE MATRIX.
C
      DO 5  I=1,IDIM
      IF (I.EQ.KI) GO TO 5
      FAC=AINV(I,KJ)
      DO 4  J=1,IDIM
      IF (J.EQ.KJ) GO TO 4
      C=1.0
      SAVE=AINV(I,J)-FAC*AINV(KI,J)
      IF (ABS(SAVE).LT.COEFF2*ABS(AINV(I,J))) C=0.0
    4 AINV(I,J)=C*SAVE
      AINV(I,KJ)=-FAC*AINV(KI,KJ)
      X(I)=X(I)-FAC*X(KI)
    5 CONTINUE
C
C     MATRIX REDUCTION IS COMPLETED.
C
C     BEGIN ROW REARRANGEMENTS.
C
      DO 9  K=1,IDIM
      IF (M(K).EQ.N(K)) GO TO 7
C
C     INTERCHANGE ROWS M(K) AND N(K).
C
      MK=M(K)
      NK=N(K)
      DO 6  J=1,IDIM
      SAVE=AINV(MK,J)
      AINV(MK,J)=AINV(NK,J)
    6 AINV(NK,J)=SAVE
      SAVE=X(MK)
      X(MK)=X(NK)
      X(NK)=SAVE
C
C     UPDATE ROW ARRAY.
C
    7 DO 8  I=K,IDIM
      IF (M(I).NE.N(K)) GO TO 8
      M(I)=M(K)
      M(K)=I
      GO TO 9
    8 CONTINUE
```

```
    9  CONTINUE
C
C      ROW REARRANGEMENTS COMPLETED.
C
C      BEGIN COLUMN REARRANGEMENTS.
C
       DO 11  K=IDIM,1,-1
       IF (M(K).EQ.K) GO TO 11
C
C      INTERCHANGE COLUMNS N(K) AND N(M(K)).
C
       MK=M(K)
       NK=N(K)
       NMK=N(MK)
       DO 10  I=1,IDIM
       SAVE=AINV(I,NK)
       AINV(I,NK)=AINV(I,NMK)
   10  AINV(I,NMK)=SAVE
C
C      UPDATE COLUMN ARRAY.
C
       N(MK)=NK
       N(K)=NMK
   11  CONTINUE
C
C      COLUMN REARRANGEMENTS COMPLETED.
C
       RETURN
C
C      SET IFLAG TO INDICATE SINGULARITY CONDITION.
C
   12  IFLAG=1
       RETURN
       END
Δ FIN
```

APPENDIX II

Δ LST

SPC	546806	0					
DPC	001	511					
01	0.	0.	0.	2574.	33929.	43305.	76545.
02	76045.	69858.	64997.	61035.	57434.	55161.	52750.
03	51759.	50142.	49556.	48907.	48080.	47651.	47632.
04	47509.	47313.	47548.	47109.	47343.	47860.	47443.
05	47743.	47489.	47507.	47405.	47475.	47520.	47503.
06	47128.	47110.	47209.	46492.	46444.	46372.	45870.
07	45115.	44838.	43716.	43106.	42732.	42020.	41133.
08	40910.	40061.	39471.	39742.	40287.	39531.	39696.
09	39342.	39159.	39457.	39039.	39152.	39124.	39570.
10	40117.	41365.	45711.	56048.	83183.	141516.	239047.
11	348828.	414117.	382924.	277575.	159984.	79722.	43050.
12	31096.	27706.	27215.	26556.	27114.	27047.	27435.
13	28040.	29976.	35191.	49907.	79059.	125357.	175831.
14	201710.	153015.	130714.	77204.	42946.	27553.	22414.
15	21654.	21400.	20959.	21034.	20969.	21063.	20785.
16	20757.	20805.	21031.	21907.	24012.	28088.	34297.
17	40393.	42804.	39274.	32564.	25907.	21527.	20133.
18	20024.	20776.	23118.	25931.	28175.	27995.	26952.
19	26500.	29083.	34415.	39942.	39551.	34164.	26599.
20	20857.	18196.	19069.	22995.	33816.	50369.	70203.
21	81828.	77520.	58131.	37362.	22955.	15127.	14025.
22	13245.	13142.	13226.	12971.	12884.	13068.	12772.
23	12974.	12589.	12588.	12785.	12907.	12712.	12885.
24	12862.	12709.	12527.	12586.	12565.	12602.	12600.
25	12573.	12551.	12495.	12757.	12363.	12323.	11849.
26	11641.	11655.	11473.	11372.	11226.	11121.	11257.
27	11074.	10971.	11137.	11130.	11161.	10868.	10964.
28	10927.	11109.	10901.	10537.	10999.	10567.	10902.
29	10652.	10881.	10838.	10774.	10844.	10554.	10850.
30	10697.	10821.	10745.	10594.	10711.	10507.	10695.
31	10830.	10929.	10770.	10949.	11014.	10954.	11240.
32	11215.	11191.	11014.	10912.	11023.	10575.	10914.
33	10777.	10677.	10718.	10903.	10625.	10593.	10723.
34	10810.	11002.	10765.	10597.	10513.	10570.	10319.
35	10488.	10199.	10048.	9788.	9577.	9822.	9421.
36	10307.	11822.	16426.	26516.	45204.	69522.	89590.
37	92305.	74121.	47244.	25025.	12709.	8054.	6689.
38	6328.	6309.	6063.	6225.	6119.	5992.	5856.
39	5901.	5744.	5838.	5808.	5834.	6057.	6044.
40	6126.	5925.	5824.	5603.	5718.	5503.	5372.
41	5338.	5313.	5309.	5115.	5110.	5025.	4986.
42	4949.	4789.	4731.	4714.	4767.	4683.	4577.
43	4656.	4520.	4495.	4455.	4324.	4356.	4355.
44	4251.	4222.	4192.	4298.	4265.	4157.	4114.
45	4031.	4014.	1094.	4105.	4005.	3992.	4017.
46	4111.	3869.	3937.	3895.	3840.	3893.	3777.
47	3847.	3579.	3750.	3785.	3784.	3854.	3794.
48	3837.	3805.	3712.	3797.	3819.	3879.	4548.
49	5750.	8590.	14268.	22522.	31295.	35227.	31599.
50	22238.	13093.	7042.	4257.	3192.	3035.	2859.

51	2851.	2564.	2874.	2752.	2322.	2919.	2751.
52	2895.	3003.	3241.	3555.	4055.	4521.	4851.
53	4347.	3905.	3398.	3049.	2963.	2975.	2917.
54	2807.	2762.	2555.	2575.	2456.	2525.	2552.
55	2595.	2582.	2580.	2439.	2598.	2557.	2595.
56	2578.	2567.	2570.	2494.	2578.	2741.	2834.
57	3423.	4066.	5302.	7191.	9450.	11203.	12243.
58	11595.	9485.	7389.	5292.	3783.	3050.	2539.
59	2363.	2279.	2321.	2251.	2243.	2193.	2269.
60	2236.	2254.	2220.	2207.	2201.	2242.	2165.
61	2147.	2224.	2203.	2189.	2174.	2132.	2158.
62	2188.	2203.	2253.	2137.	2198.	2153.	2138.
63	2294.	2166.	2177.	2119.	2163.	2253.	2147.
64	2156.	2183.	2174.	2257.	2170.	2252.	2137.
65	2204.	2128.	2001.	2201.	2142.	2144.	2217.
66	2210.	2193.	2141.	2115.	2216.	2170.	2184.
67	2221.	2162.	2236.	2156.	2143.	2179.	2350.
68	2479.	2873.	3732.	5995.	10337.	16502.	22941.
69	26233.	24350.	18404.	11035.	5987.	3352.	2240.
70	1813.	1812.	1811.	1821.	1749.	1753.	1737.
71	1808.	1715.	1792.	1716.	1785.	1793.	1902.
72	2194.	2464.	3051.	3537.	3871.	3814.	3209.
73	2543.	2113.	1872.	1817.	1728.	1751.	1683.
ENDATA							
FPC	069	076	5	1	0	0.0	0.0
FPC	50000.	40000.	60000.	1.0			
FPC	-3500.	-4500.	-2500.	1.0			
FPC	4.4	4.0	5.5	0.01			
PPC	SE 75	2	264.4				
PPC	72.2	71.0	73.0	0.01			
PPC	380000.	300000.	500000.	10.0			
ENDFIT							
FPC	089	098	5	1	0	0.0	0.0
FPC	35000.	20000.	45000.	1.0			
FPC	-1500.	-3000.	-500.	1.0			
FPC	4.3	4.0	5.5	0.01			
PPC	SE 75	2	279.4				
PPC	92.1	91.0	93.0	0.01			
PPC	150000.	100000.	300000.	10.0			
ENDFIT							
FPC	110	118	5	1	0	0.0	0.0
FPC	20000.	10000.	30000.	1.0			
FPC	-250.	-500.	-100.	1.0			
FPC	4.5	4.0	6.0	0.01			
PPC	IR 192	1	295.938	0.009			
PPC	113.9	113.0	115.0	0.01			
PPC	25000.	15000.	35000.	10.0			
ENDFIT							
FPC	121	134	5	1	0	0.0	0.0
FPC	20000.	10000.	30000.	1.0			
FPC	-200.	-400.	-100.	1.0			
FPC	4.5	3.0	5.5	0.01			
PPC	SE 75	2	303.5				
PPC	124.5	122.0	127.0	0.01			

```
PPC        10000.     5000.      20000.     10.0
PPC        IR 192     1          303.429    0.01
PPC        130.6      129.0      132.0      0.01
PPC        25000.     15000.     35000.     10.0
ENDFIT
FPC        249        256        5          1          0          0.0        0.0
FPC        10000.     5000.      20000.     1.0
FPC        -1000.     -2000.     -500.      1.0
FPC        4.5        4.0        5.5        0.01
PPC         SE 75     2          400.7
PPC        252.6      251.0      254.0      0.01
PPC        85000.     50000.     150000.    10.0
ENDFIT
FPC        339        346        5          1          0          0.0        0.0
FPC        5000.      3000.      7500.      1.0
FPC        -300.      -500.      -100.      1.0
FPC        4.5        4.0        5.5        0.01
PPC        IR 192     1          468.053    0.014
PPC        342.0      341.0      343.0      0.01
PPC        30000.     15000.     45000.     10.0
ENDFIT
FPC        393        405        5          1          0          0.0        0.0
FPC        3000.      2000.      4000.      1.0
FPC        -40.       -100.      0.0        1.0
FPC        5.8        5.0        7.0        0.01
PPC         NA 22     1          511.006    0.002
PPC        399.1      398.0      400.0      0.01
PPC        10000.     5000.      20000.     10.0
ENDFIT
FPC        474        481        5          1          0          0.0        0.0
FPC        3500.      2000.      5000.      1.0
FPC        -200.      -400.      0.0        1.0
FPC        4.7        4.0        6.5        0.01
PPC        81 207     1          569.62     0.06
PPC        477.2      476.0      478.0      0.01
PPC        25000.     15000.     35000.     10.0
ENDFIT
FPC        499        506        5          1          0          0.0        0.0
FPC        1900.      1500.      3000.      1.0
FPC        -20.       -50.       0.0        1.0
FPC        4.7        4.0        6.5        0.01
PPC        IR 192     1          588.557    0.017
PPC        502.2      501.0      504.0      0.01
PPC        2000.      1500.      3000.      10.0
ENDFIT
ENDSPC
ENDPRB
Δ FIN
```

APPENDIX III

CONTROL PARAMETERS FOR CHANNELS 69 TO 76 IN SPECTRUM S46R06

NUMBER OF PEAKS = 1 WEIGHT OPTION: WDATA = 1.0/YDATA
MAXIMUM NUMBER OF ITERATIONS = 5 PRINTOUT OPTION: LONG FORM

PARAMETER	INITIAL VALUE	LOWER LIMIT	UPPER LIMIT	CONVERGENCE LIMIT
BACKGROUND INTERCEPT	50000.00	40000.00	60000.00	1.00
BACKGROUND SLOPE	-3500.00	-4500.00	-2500.00	1.00
PHOTOPEAK WIDTH	4.40	4.00	5.50	.01
SE 75 CENTER	72.20	71.00	73.00	.01
HEIGHT	380000.00	300000.00	500000.00	10.00

ANALYSIS OF CHANNELS 69 TO 76 IN SPECTRUM S46R06

BACKGROUND INTERCEPT = .52004+05 (.259+04) NUMBER OF ITERATIONS = 3
BACKGROUND SLOPE = -.35900+04 (.243+03) GOODNESS OF FIT = 2.98
WIDTH OF PHOTOPEAKS = 4.437 (.028)

ISOTOPE	ENERGY	TYPE	CENTER	HEIGHT	AREA
SE 75	264.400	2	72.225 (.007)	.379473+06 (.1769+04)	.179208+07 (.1873+05)

PHOTOPEAK ANALYSIS OF CHANNELS 69 TO 76 IN SPECTRUM S46R06

CHANNEL	EXPERIMENTAL DATA	CALCULATED DATA	RESIDUAL	DEVIATION	BACKGROUND DATA	INDIVIDUAL PHOTOPEAK DATA
69	141516.	141682.	-166.	.44	52004.	89679.
70	239047.	238247.	800.	1.64	48414.	189833.
71	348828.	349961.	-1133.	1.92	44824.	305137.
72	414117.	413705.	412.	.64	41234.	372471.
73	382924.	382931.	-7.	.01	37644.	345288.
74	277575.	277137.	438.	.83	34054.	243084.
75	159984.	160417.	-433.	1.08	30464.	129953.
76	79722.	79624.	98.	.35	26874.	52751.

CONTROL PARAMETERS FOR CHANNELS 89 TO 98 IN SPECTRUM S46R06

NUMBER OF PEAKS = 1 WEIGHT OPTION: WDATA = 1.0/YDATA
MAXIMUM NUMBER OF ITERATIONS = 5 PRINTOUT OPTION: LONG FORM

PARAMETER	INITIAL VALUE	LOWER LIMIT	UPPER LIMIT	CONVERGENCE LIMIT
BACKGROUND INTERCEPT	35000.00	20000.00	45000.00	1.00
BACKGROUND SLOPE	-1500.00	-3000.00	-500.00	1.00
PHOTOPEAK WIDTH	4.30	4.00	5.50	.01
SE 75 CENTER	92.10	91.00	93.00	.01
HEIGHT	150000.00	100000.00	300000.00	10.00

ANALYSIS OF CHANNELS 89 TO 98 IN SPECTRUM S46R06

BACKGROUND INTERCEPT = .36095+05 (.325+04) NUMBER OF ITERATIONS = 4
BACKGROUND SLOPE = -.16972+04 (.349+03) GOODNESS OF FIT = 10.16
WIDTH OF PHOTOPEAKS = 4.335 (.061)

ISOTOPE	ENERGY	TYPE	CENTER	HEIGHT	AREA
SE 75	279.400	2	92.103 (.020)	.173879+06 (.2061+04)	.802374+06 (.1938+05)

PHOTOPEAK ANALYSIS OF CHANNELS 89 TO 98 IN SPECTRUM S46R06

CHANNEL	EXPERIMENTAL DATA	CALCULATED DATA	RESIDUAL	DEVIATION	BACKGROUND DATA	INDIVIDUAL PHOTOPEAK DATA
89	79059.	79044.	15.	.05	36095.	42949.
90	126357.	125276.	1081.	3.04	34798.	90879.
91	175631.	176875.	-1244.	2.97	32701.	144175.
92	201710.	202506.	-796.	1.77	31003.	171503.
93	183015.	182283.	732.	1.71	29306.	152977.
94	130714.	129925.	789.	2.18	27609.	102316.
95	77204.	77220.	-16.	.06	25912.	51308.
96	42946.	43503.	-557.	2.69	24215.	19288.
97	27553.	27952.	-399.	2.40	22518.	5435.
98	22414.	21968.	446.	2.98	20821.	1147.

CONTROL PARAMETERS FOR CHANNELS 110 TO 118 IN SPECTRUM S46R06

NUMBER OF PEAKS = 1 WEIGHT OPTION: WDATA = 1.0/YDATA
MAXIMUM NUMBER OF ITERATIONS = 5 PRINTOUT OPTION: LONG FORM

PARAMETER	INITIAL VALUE	LOWER LIMIT	UPPER LIMIT	CONVERGENCE LIMIT
BACKGROUND INTERCEPT	20000.00	10000.00	30000.00	1.00
BACKGROUND SLOPE	-250.00	-500.00	-100.00	1.00
PHOTOPEAK WIDTH	4.50	4.00	6.00	.01
IR 192 CENTER	113.90	113.00	115.00	.01
HEIGHT	25000.00	15000.00	35000.00	10.00

ANALYSIS OF CHANNELS 110 TO 118 IN SPECTRUM S46R06

BACKGROUND INTERCEPT = .21104+05 (.167+03) NUMBER OF ITERATIONS = 3
BACKGROUND SLOPE = -.26515+03 (.174+02) GOODNESS OF FIT = .25
WIDTH OF PHOTOPEAKS = 4.545 (.038)

ISOTOPE	ENERGY	TYPE	CENTER	HEIGHT	AREA
IR 192	295.938	1	113.952 (.010)	.229143+05 (.1295+03)	.110862+06 (.1429+04)

PHOTOPEAK ANALYSIS OF CHANNELS 110 TO 118 IN SPECTRUM S46R06

CHANNEL	EXPERIMENTAL DATA	CALCULATED DATA	RESIDUAL	DEVIATION	BACKGROUND DATA	INDIVIDUAL PHOTOPEAK DATA
110	24012.	24022.	-10.	.06	21104.	2917.
111	28088.	28060.	28.	.17	20839.	7221.
112	34297.	34318.	-21.	.11	20574.	13744.
113	40393.	40429.	-36.	.18	20309.	20120.
114	42804.	42698.	106.	.51	20044.	22654.
115	39274.	39397.	-123.	.62	19779.	19618.
116	32664.	32580.	84.	.46	19514.	13067.
117	25907.	25942.	-35.	.22	19248.	6693.
118	21627.	21620.	7.	.05	18983.	2637.

CONTROL PARAMETERS FOR CHANNELS 121 TO 134 IN SPECTRUM S46R06

NUMBER OF PEAKS = 2 WEIGHT OPTION: WDATA = 1.0/WDATA
MAXIMUM NUMBER OF ITERATIONS = 5 PRINTOUT OPTION: LONG FORM

PARAMETER	INITIAL VALUE	LOWER LIMIT	UPPER LIMIT	CONVERGENCE LIMIT
BACKGROUND INTERCEPT	20000.00	10000.00	30000.00	1.00
BACKGROUND SLOPE	-200.00	-400.00	-100.00	1.00
PHOTOPEAK WIDTH	4.50	3.00	5.50	.01
SE 75 CENTER	124.50	122.00	127.00	.01
HEIGHT	10000.00	5000.00	20000.00	10.00
IR 192 CENTER	130.60	129.00	132.00	.01
HEIGHT	25000.00	15000.00	35000.00	10.00

ANALYSIS OF CHANNELS 121 TO 134 IN SPECTRUM S46R06

BACKGROUND INTERCEPT = .19018+05 (.358+03) NUMBER OF ITERATIONS = 3
BACKGROUND SLOPE = -.21934+03 (.341+02) GOODNESS OF FIT = 1.78
WIDTH OF PHOTOPEAKS = 4.467 (.081)

ISOTOPE	ENERGY	TYPE	CENTER	HEIGHT	AREA
SE 75	303.500	2	124.534 (.056)	.101806+05 (.3574+03)	.484131+05 (.2381+04)
IR 192	308.429	1	130.551 (.026)	.236009+05 (.4202+03)	.112242+06 (.3730+04)

PHOTOPEAK ANALYSIS OF CHANNELS 121 TO 134 IN SPECTRUM S46R06

CHANNEL	EXPERIMENTAL DATA	CALCULATED DATA	RESIDUAL	DEVIATION	BACKGROUND DATA		INDIVIDUAL PHOTOPEAK DATA
121	20776.	20865.	-89.	.62	19018.	1847.	0.
122	23118.	23010.	108.	.71	18799.	4210.	1.
123	25931.	25902.	29.	.18	18580.	7312.	10.
124	28175.	28111.	64.	.38	18360.	9682.	69.
125	27995.	28268.	-273.	1.63	18141.	9772.	356.
126	26952.	26841.	111.	.67	17922.	7517.	1402.
127	26500.	26324.	176.	1.08	17702.	4408.	4213.
128	29083.	29100.	-17.	.10	17483.	1970.	9647.
129	34415.	34769.	-354.	1.91	17264.	671.	16835.
130	39942.	39610.	332.	1.66	17044.	174.	22392.
131	39551.	39561.	-10.	.05	16825.	34.	22702.
132	34164.	34155.	9.	.05	16606.	5.	17544.
133	26599.	26721.	-122.	.75	16386.	1.	10334.
134	20857.	20807.	50.	.35	16167.	0.	4640.

CONTROL PARAMETERS FOR CHANNELS 249 TO 256 IN SPECTRUM S46R06

NUMBER OF PEAKS = 1 WEIGHT OPTION: WDATA = 1.0/YDATA
MAXIMUM NUMBER OF ITERATIONS = 5 PRINTOUT OPTION: LONG FORM

PARAMETER	INITIAL VALUE	LOWER LIMIT	UPPER LIMIT	CONVERGENCE LIMIT
BACKGROUND INTERCEPT	10000.00	5000.00	20000.00	1.00
BACKGROUND SLOPE	-1000.00	-2000.00	-500.00	1.00
PHOTOPEAK WIDTH	4.50	4.00	5.50	.01
SE 75 CENTER	252.60	251.00	254.00	.01
HEIGHT	85000.00	50000.00	150000.00	10.00

ANALYSIS OF CHANNELS 249 TO 256 IN SPECTRUM S46R06

BACKGROUND INTERCEPT = .11721+05 (.806+03) NUMBER OF ITERATIONS = 3
BACKGROUND SLOPE = -.83766+03 (.864+02) GOODNESS OF FIT = 2.03
WIDTH OF PHOTOPEAKS = 4.535 (.052)

ISOTOPE	ENERGY	TYPE	CENTER	HEIGHT	AREA
SE 75	400.700	2	252.636 (.012)	.859943+05 (.7154+03)	.415092+06 (.7871+04)

PHOTOPEAK ANALYSIS OF CHANNELS 249 TO 256 IN SPECTRUM S46R06

CHANNEL	EXPERIMENTAL DATA	CALCULATED DATA	RESIDUAL	DEVIATION	BACKGROUND DATA	INDIVIDUAL PHOTOPEAK DATA
249	26516.	26594.	-78.	.48	11721.	14873.
250	45204.	44896.	308.	1.45	10883.	34013.
251	69522.	69791.	-269.	1.02	10045.	59746.
252	89590.	89827.	-237.	.79	9208.	80619.
253	92305.	91940.	365.	1.20	8370.	83570.
254	74121.	74082.	39.	.14	7532.	66550.
255	47244.	47406.	-162.	.74	6695.	40711.
256	25026.	24987.	39.	.25	5857.	19130.

CONTROL PARAMETERS FOR CHANNELS 339 TO 346 IN SPECTRUM S46R06

NUMBER OF PEAKS = 1 WEIGHT OPTION: WDATA = 1.0/YDATA
MAXIMUM NUMBER OF ITERATIONS = 5 PRINTOUT OPTION: LONG FORM

PARAMETER	INITIAL VALUE	LOWER LIMIT	UPPER LIMIT	CONVERGENCE LIMIT
BACKGROUND INTERCEPT	5000.00	3000.00	7500.00	1.00
BACKGROUND SLOPE	-300.00	-500.00	-100.00	1.00
PHOTOPEAK WIDTH	4.50	4.00	5.50	.01
IR 192 CENTER	342.00	341.00	343.00	.01
HEIGHT	30000.00	15000.00	45000.00	10.00

*****DIAGNOSTIC MESSAGE--MAXIMUM VALUE TEST FOR PARAMETER 1 GAVE NEGATIVE RESULT ON ITERATION 1*****

*****DIAGNOSTIC MESSAGE--MINIMUM VALUE TEST FOR PARAMETER 2 GAVE NEGATIVE RESULT ON ITERATION 1*****

*****DIAGNOSTIC MESSAGE--MINIMUM VALUE TEST FOR PARAMETER 3 GAVE NEGATIVE RESULT ON ITERATION 1*****

ANALYSIS OF CHANNELS 339 TO 346 IN SPECTRUM S46R06

BACKGROUND INTERCEPT = .53523+04 (.503+03) NUMBER OF ITERATIONS = 5
BACKGROUND SLOPE = -.30085+03 (.493+02) GOODNESS OF FIT = .82
WIDTH OF PHOTOPEAKS = 4.500 (.058)

ISOTOPE	ENERGY	TYPE	CENTER	HEIGHT	AREA
IR 192	468.053	1	342.042 (.015)	.311941+05 (.3346+03)	.149424+06 (.3396+04)

PHOTOPEAK ANALYSIS OF CHANNELS 339 TO 346 IN SPECTRUM S46R06

CHANNEL	EXPERIMENTAL DATA	CALCULATED DATA	RESIDUAL	DEVIATION	BACKGROUND DATA	INDIVIDUAL PHOTOPEAK DATA
339	14268.	14293.	-25.	.21	5352.	8941.
340	22822.	22707.	115.	.76	5051.	17655.
341	31295.	31424.	-129.	.73	4751.	26673.
342	35227.	35284.	-57.	.31	4450.	30835.
343	31599.	31424.	175.	.99	4149.	27275.
344	22238.	22309.	-71.	.47	3848.	18460.
345	13093.	13107.	-14.	.12	3547.	9560.
346	7042.	7034.	8.	.10	3246.	3787.

CONTROL PARAMETERS FOR CHANNELS 393 TO 405 IN SPECTRUM S46R06

NUMBER OF PEAKS = 1 WEIGHT OPTION: WDATA = 1.0/YDATA
MAXIMUM NUMBER OF ITERATIONS = 5 PRINTOUT OPTION: LONG FORM

PARAMETER	INITIAL VALUE	LOWER LIMIT	UPPER LIMIT	CONVERGENCE LIMIT
BACKGROUND INTERCEPT	3000.00	2000.00	4000.00	1.00
BACKGROUND SLOPE	-40.00	-100.00	.00	1.00
PHOTOPEAK WIDTH	5.80	5.00	7.00	.01
NA 22 CENTER	399.10	398.00	400.00	.01
HEIGHT	10000.00	5000.00	20000.00	10.00

ANALYSIS OF CHANNELS 393 TO 405 IN SPECTRUM S46R06

BACKGROUND INTERCEPT = .29770+04 (.736+02) NUMBER OF ITERATIONS = 2
BACKGROUND SLOPE = -.37975+02 (.659+01) GOODNESS OF FIT = .98
WIDTH OF PHOTOPEAKS = 5.768 (.067)

ISOTOPE	ENERGY	TYPE	CENTER	HEIGHT	AREA
NA 22	511.006	1	399.082 (.021)	.948265+04 (.7126+02)	.582218+05 (.8804+03)

PHOTOPEAK ANALYSIS OF CHANNELS 393 TO 405 IN SPECTRUM S46R06

CHANNEL	EXPERIMENTAL DATA	CALCULATED DATA	RESIDUAL	DEVIATION	BACKGROUND DATA	INDIVIDUAL PHOTOPEAK DATA
393	3423.	3427.	-4.	.07	2977.	450.
394	4066.	4066.	-0.	.00	2939.	1127.
395	5302.	5295.	7.	.10	2901.	2394.
396	7191.	7177.	14.	.17	2863.	4314.
397	9450.	9419.	31.	.31	2825.	6594.
398	11203.	11340.	-137.	1.30	2787.	8553.
399	12243.	12161.	82.	.74	2749.	9412.
400	11595.	11498.	97.	.90	2711.	8787.
401	9486.	9634.	-148.	1.52	2673.	6961.
402	7389.	7313.	76.	.88	2635.	4678.
403	5292.	5264.	28.	.38	2597.	2667.
404	3783.	3849.	-66.	1.08	2559.	1290.
405	3080.	3051.	29.	.53	2521.	529.

CONTROL PARAMETERS FOR CHANNELS 474 TO 481 IN SPECTRUM S46R06

NUMBER OF PEAKS = 1
MAXIMUM NUMBER OF ITERATIONS = 5

WEIGHT OPTION: WDATA = 1.0/YDATA
PRINTOUT OPTION: LONG FORM

PARAMETER	INITIAL VALUE	LOWER LIMIT	UPPER LIMIT	CONVERGENCE LIMIT
BACKGROUND INTERCEPT	3500.00	2000.00	5000.00	1.00
BACKGROUND SLOPE	-200.00	-400.00	.00	1.00
PHOTOPEAK WIDTH	4.70	4.00	6.50	.01
BI 207 CENTER	477.20	476.00	478.00	.01
HEIGHT	25000.00	15000.00	35000.00	10.00

ANALYSIS OF CHANNELS 474 TO 481 IN SPECTRUM S46R06

BACKGROUND INTERCEPT = .34625+04 (.614+03)
BACKGROUND SLOPE = -.22160+03 (.538+02)

NUMBER OF ITERATIONS = 3
GOODNESS OF FIT = 1.49

WIDTH OF PHOTOPEAKS = 4.730 (.102)

ISOTOPE	ENERGY	TYPE	CENTER	HEIGHT	AREA
BI 207	569.620	1	477.187 (.024)	.238722+05 (.4312+03)	.120203+06 (.4627+04)

PHOTOPEAK ANALYSIS OF CHANNELS 474 TO 481 IN SPECTRUM S46R06

CHANNEL	EXPERIMENTAL DATA	CALCULATED DATA	RESIDUAL	DEVIATION	BACKGROUND DATA	INDIVIDUAL PHOTOPEAK DATA
474	10337.	10348.	-11.	.11	3462.	6886.
475	16502.	16462.	40.	.31	3241.	13221.
476	22941.	22933.	8.	.06	3019.	19913.
477	26233.	26325.	-92.	.57	2798.	23528.
478	24360.	24383.	-23.	.15	2576.	21807.
479	18404.	18210.	194.	1.43	2354.	15856.
480	11035.	11176.	-141.	1.34	2133.	9043.
481	5987.	5957.	30.	.39	1911.	4046.

CONTROL PARAMETERS FOR CHANNELS 499 TO 506 IN SPECTRUM S46R06

NUMBER OF PEAKS = 1 WEIGHT OPTION: WDATA = 1.0/YDATA
MAXIMUM NUMBER OF ITERATIONS = 5 PRINTOUT OPTION: LONG FORM

PARAMETER	INITIAL VALUE	LOWER LIMIT	UPPER LIMIT	CONVERGENCE LIMIT
BACKGROUND INTERCEPT	1900.00	1500.00	3000.00	1.00
BACKGROUND SLOPE	-20.00	-50.00	.00	1.00
PHOTOPEAK WIDTH	4.70	4.00	6.50	.01
IR 192 CENTER	502.20	501.00	504.00	.01
HEIGHT	2000.00	1500.00	3000.00	10.00

ANALYSIS OF CHANNELS 499 TO 506 IN SPECTRUM S46R06

BACKGROUND INTERCEPT = .18780+04 (.196+03) NUMBER OF ITERATIONS = 3
BACKGROUND SLOPE = -.20735+02 (.174+02) GOODNESS OF FIT = .79
WIDTH OF PHOTOPEAKS = 4.713 (.765)

ISOTOPE	ENERGY	TYPE	CENTER	HEIGHT	AREA
IR 192	588.557	1	502.216 (.083)	.213665+04 (.1434+03)	.107194+05 (.1509+04)

PHOTOPEAK ANALYSIS OF CHANNELS 499 TO 506 IN SPECTRUM S46R06

CHANNEL	EXPERIMENTAL DATA	CALCULATED DATA	RESIDUAL	DEVIATION	BACKGROUND DATA	INDIVIDUAL PHOTOPEAK DATA
499	2464.	2475.	-11.	.22	1878.	597.
500	3051.	3017.	34.	.61	1857.	1160.
501	3587.	3601.	-14.	.24	1836.	1765.
502	3871.	3918.	-47.	.76	1816.	2103.
503	3814.	3757.	57.	.93	1795.	1962.
504	3209.	3207.	2.	.03	1774.	1433.
505	2543.	2573.	-30.	.60	1754.	820.
506	2113.	2100.	13.	.28	1733.	367.

ENERGY CALIBRATION FROM PHOTOPEAKS IN SPECTRUM S46R06

ENERGY PARAMETERS:

INTERCEPT = .200674+03 (.85710-01)
SLOPE = .757655-00 (.86819-03)
CORRECTION = -.654525-05 (.16559-05)

GOODNESS OF FIT = 1.72

ISOTOPE	CENTER CHANNEL	ACCEPTED ENERGY	TOTAL DEVIATION	CALCULATED ENERGY	RESIDUAL	DEVIATION
IR 192	113.952 (.010)	295.938 (.009)	.016	295.925 (.021)	.013	.77
IR 192	130.551 (.026)	308.429 (.010)	.030	308.475 (.027)	-.046	1.54
IR 192	342.042 (.015)	468.053 (.014)	.026	468.058 (.028)	-.005	.19
NA 22	399.082 (.021)	511.006 (.002)	.018	510.998 (.025)	.008	.44
BI 207	477.187 (.024)	569.620 (.060)	.078	569.727 (.056)	-.107	1.36
IR 192	502.216 (.083)	588.557 (.017)	.080	588.530 (.094)	.027	.34

ENERGY DETERMINATION OF PHOTOPEAKS IN SPECTRUM S46R06

ISOTOPE	CENTER CHANNEL	CALCULATED ENERGY
SE 75	72.225 (.007)	264.761 (.036)
SE 75	92.103 (.020)	279.401 (.030)
SE 75	124.534 (.056)	303.026 (.046)
SE 75	252.636 (.012)	400.667 (.035)

REFERENCES

1. R. G. Helmer, R. L. Heath, D. D. Metcalf, and G. A. Cazier, IDO-17015 (1964).
2. M. Putnam, D. H. Gipson, R. G. Helmer, and R. L. Heath, IDO-17016 (1965).
3. R. L. Heath, R. G. Helmer, L. A. Schmittroth, and G. A. Cazier, IDO-17017 (1965).
4. R. H. Moore and R. K. Zeigler, LA-2367 (1960).
5. R. H. Moore, NAS-NS 3107 (1963), p. 305.
6. N. P. Archer, W. V. Prestwich, and G. L. Keech, Nucl. Instr. and Methods 44, 114 (1966).
7. F. B. Hildebrand, Introduction to Numerical Analysis (McGraw-Hill Book Company, Inc., New York, 1956), chap. 8.
8. B. W. Arden, An Introduction to Digital Computing (Addison-Wesley Publishing Company, Inc., Reading, 1963), chap. 14.
9. M. H. Lietzke, NAS-NS 3107 (1963), p. 1.
10. F. B. Hildebrand, op. cit., chap. 10.
11. B. W. Arden, op. cit.

3. Testing of Large Volume Silicon Detectors.

During the period covered by this report, further experiments were conducted testing the response of very large volume lithium drifted silicon detectors to high energy protons. Two detectors were constructed; one of them had dimensions 1 cm deep by 1.5 cm wide by 12 cm long and the other was 1 cm deep by 2.5 cm wide by 12 cm long. Each of the detectors was set up so that high energy protons were incident parallel to the length and could be stopped within the detector volume. Preliminary experiments had been carried out with the first detector. An asymmetric peak with a high amplitude low energy tail was observed, an effect which could not be convincingly ascribed to a particular cause. Since it was felt, however, that multiple scattering could be a significant effect, the second detector was drifted, yielding a device of somewhat larger volume.

Furthermore, experiments were carried out with 22 MeV protons at the Oak Ridge Isochronous Cyclotron. A considerable amount of data was taken with both detectors and each one showed essentially the same response. A typical spectrum of 22 MeV protons scattered from a carbon target is shown in Fig. 5. The elastic scattering peak is quite symmetric and no high amplitude tail is observable. The effect observed at higher energies is therefore not caused by trapping within the detector volume, poor charge collection near the edge of the detector or a dead layer at the edge of the detector. If any of these were the cause, the effect would also be observable at 22 MeV and would most likely be worse.

As a result of these experiments, further work was performed using 160 MeV protons from the Harvard cyclotron. Both detectors were used and both yielded identical response. At this point it was decided to check the

Figure 5. Spectrum of 22 MeV protons after scattering from a carbon target as measured with one of the large volume lithium drifted silicon detectors.

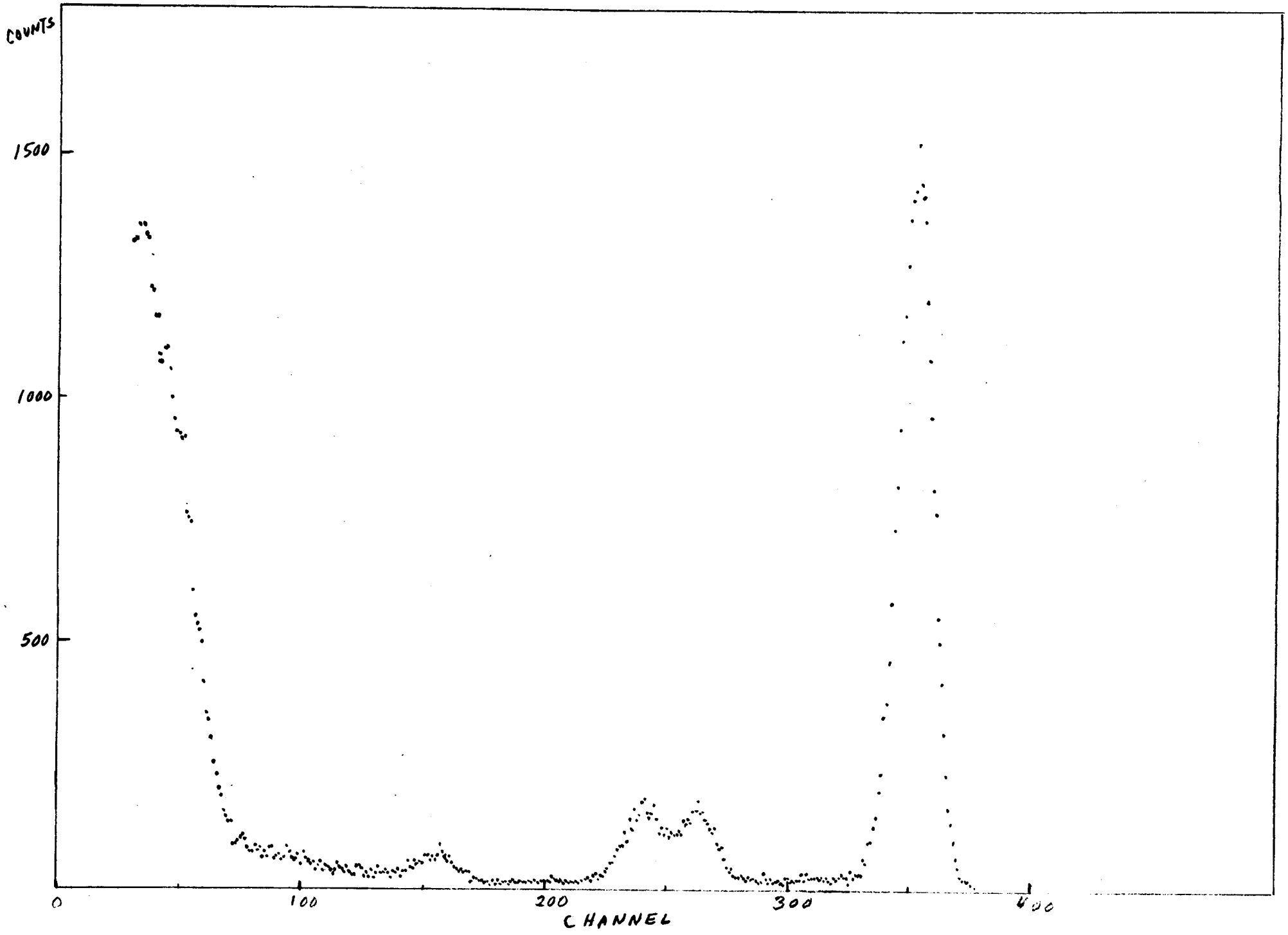
COUNTS
1500
1000
500
0
100
200
300
400
CHANNEL

alignment of the crystal. Changes in the horizontal alignment of the crystal proved to have little effect. Neither changing the entrance angle of the protons or moving the detector perpendicular to the beam altered the response over a fairly broad range.

However, changes in the vertical alignment proved to be extremely critical. The detector was tilted by 1° and the change in the response can be seen in Fig. 6. The peak became much more asymmetric and the detector was then raised and lowered 1/16" with respect to a 1/4" collimator confining the beam. The result is shown in Fig. 7.

The conclusion of these experiments was quite clear. The asymmetric peak and low energy tail is the result of small angle multiple scattering of the incident protons within the detector as they lose energy. The primary mechanism for energy loss is by production of ion pairs through Coulomb collisions. Each of these collisions scatters the proton through a very small angle. Statistically, most of the protons stay within the sensitive volume of the detector and lose all of their energy. However, the total scattering angle as a result of these collisions may be sufficiently large that a significant fraction leave the detector before losing all of their energy. The observed peak will then be asymmetric and reduced in amplitude relative to the background. The effect becomes more pronounced if the protons are not incident at the exact center of the sensitive area and this is clearly shown in Fig. 7.

The conclusion of this experiment is that it is not feasible to use silicon detectors for detection of protons above 100 MeV in energy if good resolution is needed. Germanium detectors are more useful for this work since their length is somewhat shorter for detecting the same energy particle and the effect of multiple scattering is reduced.

Figure 6. Two photographs showing the response of the silicon detector when the vertical alignment is altered. In the bottom photograph the detector has been tilted by 1°, with a corresponding increase in the asymmetry of the peak and of reduction in its amplitude relative to the low energy background.
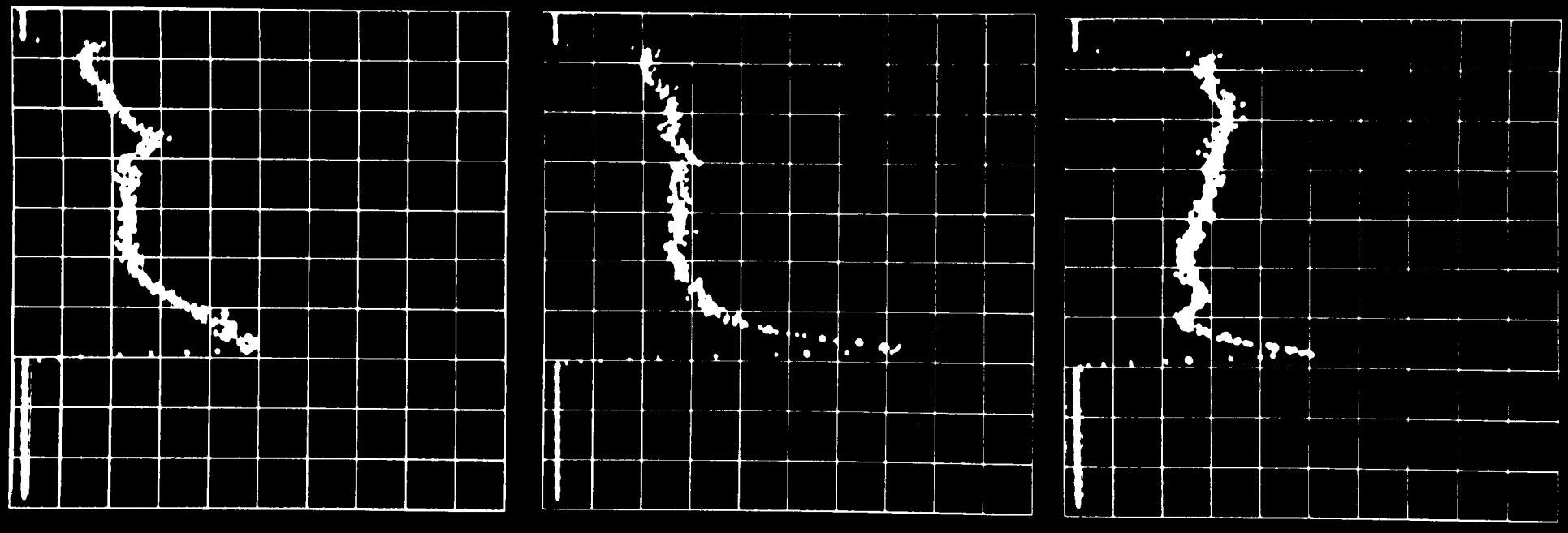
Figure 7. Three photographs showing the effect of adjusting the vertical height of the silicon detector. The beam collimator is kept fixed in position and the detector tilted as in Fig. 5 has been raised 1/16" in the top photograph and lowered 1/16" in the bottom photograph relative to the position in the middle photograph.