PURDUE UNIVERSITY
SCHOOL OF ELECTRICAL ENGINEERING

ON THE DESIGN
OF
SPECIFIC OPTIMAL CONTROLLERS

by

V. B. Haas
S. Murtuza

Supported by
NASA Institutional Grant
NGR 15-005-021

TABLE OF CONTENTS

Page

LIST OF TABLES v

LIST OF FIGURES. vi

ABSTRACT vii

CHAPTER I INTRODUCTION. 1

1.1 Motivation 1
1.2 State of the Art of Control System Design and Synthesis. . 2
1.3 Organization of the Thesis 5

CHAPTER II OPTIMAL CONTROL PROBLEM. 7

2.1 Problem Statement. 7
2.2 Solution to the Optimal Control Problem. 8
2.3 Linear Optimal Control Problem 8
2.4 Choice of the Performance Index. 10
2.5 Instrumentation of the Optimal Control 11

CHAPTER III SPECIFIC OPTIMAL CONTROL PROBLEM. 12

3.1 Introduction 12
3.2 Review of Recent Work on SOC 12
3.3 Statement of SOC Problem 19
3.4 Additional Comments on References [9] and [10] 20
3.5 Observations 21

CHAPTER IV LINEAR SPECIFIC OPTIMAL CONTROL PROBLEM. 23

4.1 Problem Statement. 23
4.2 Some Simplifications 24
4.3 Stability Consideration. 25
4.4 Secondary Performance Index. 28
4.5 Basic Computational Problem. 36

CHAPTER V COMPUTATIONAL ALGORITHM AND APPLICATIONS. 37

5.1 Development of the Computational Method. 37
5.2 Geometric Interpretation 40
5.3 Global Maximum 42
5.4 Determination of the Largest Eigenvalue of a Symmetric Matrix 44

TABLE OF CONTENTS (continued)

Page

5.5 Minimization in the Control Parameter Space 48
5.6 Plant with Inaccessible States 50
5.7 SOC for a Non-autonomous System 51
5.8 Application 52
5.9 Comments on the Problems in Computation 52
5.10 SOC Design Procedure 66

CHAPTER VI CONCLUSIONS AND RECOMMENDATIONS 68

6.1 Summary and Conclusions 68
6.2 Recommendations for Further Research 70
6.3 Closing Remarks 71

BIBLIOGRAPHY 72

VITA 74

LIST OF TABLES

Table		Page
5.1	Numerical Data for the Examples	54

LIST OF FIGURES

Figure		Page
1.1	Flow Graph of Design Process	4
3.1	A Linear Plant with a Specific Controller	16
4.1	Block Diagram of an SOC System	26
5.1	Geometric Interpretation of Quadratic Forms	41
5.2	Block Diagram for the System in Example 1	53
5.3	Comparison of the Optimal and the Specific Optimal Solutions (Example 1, without Noise or Disturbance)	56
5.4	Comparison of the Optimal and the Specific Optimal Solutions (Example 1, with Load Disturbance)	57
5.5	Comparison of the Optimal and the Specific Optimal Solutions (Example 1, with Measurement Noise)	58
5.6	Comparison of the Optimal and the Specific Optimal Solutions (Example 2)	59
5.7	Comparison of the Optimal and the Specific Optimal Solutions (Example 3a)	60
5.8	Comparison of the Optimal and the Specific Optimal Solutions (Example 3b)	61
5.9	Comparison of the Optimal and the Specific Optimal Solutions (Example 6a)	62
5.10	Comparison of the Optimal and the Specific Optimal Solutions (Example 6b)	63
5.11	Flow Graph of SOC Design Process	67

ABSTRACT

Murtuza, Syed, Ph.D., Purdue University, June, 1967. On the Design of Specific Optimal Controllers. Major Professor: Violet B. Haas.

This thesis contributes to the philosophy and to the state-of-the-art of control system design. The design of controllers using optimal control theory requires knowledge of all the state variables of the system. In addition if the plant is time-varying and/or if the performance index is defined over a finite interval then the controller coefficients are time functions. Because of these undesirable features of optimal controllers, optimal control theory has not found its way into practice.

An alternate approach is to pre-specify the controller configuration and determine its unknown coefficients in some optimal fashion. In this thesis the design of linear constant coefficient specific optimal controllers for linear, multivariable and time-variant systems with inaccessible states is presented. The performance index chosen (to be minimized) is a quadratic functional of both state and control variables. For time-invariant cases it is shown that when the coefficients of the specific controller are properly chosen, the resulting system is guaranteed to be stable (even if only one state is accessible). Since the optimal values of the control parameters for a fixed configuration controller depend on the initial states of the system, the approach taken is to determine the best value of the parameters for the most unfavorable initial states. This is accomplished by finding x_o and K such that

$$J_o^* = \min_K \max_{x_o} \frac{J_2(K, x_o)}{J_1^*(x_o)}$$

where x_o is the initial states vector and K the control parameter vector. J_1^* and J_2 are the values of the performance index corresponding to the optimal and the specific optimal controllers respectively.

A computational method is developed whereby the global maximum of the above ratio with respect to x_o is found. Minimization with respect to K is performed using a simple gradient method. The convergence properties of the computational algorithm are investigated and the limitations on the 'step size' for convergence are given.

The computational algorithm is applied to several examples to test the theory and to demonstrate the improvement in the results when compared to other methods. One of the examples consists of a time-varying system. The time-varying nature of the problem does not cause any additional difficulties.

CHAPTER I

INTRODUCTION

1.1 Motivation

A decade ago when Newton, Gould and Kaiser [1] popularized the concept of optimal control theory† by designing control systems so as to minimize the integral square error, they had every reason to believe that the control systems of the future would be designed almost exclusively by those techniques. Today the theory is much more sophisticated and far advanced. Yet, strangely enough, a large majority of the practicing control engineers are skeptical about its power and usefulness. Modern control theory, as it is called today, has found its way into a very limited number of applications and only when the classical frequency domain methods are rendered useless. Evidently there are three basic reasons for the insignificant interest of the practicing control engineers in modern control theory as a control system synthesis toal:

1) Lack of direct methods for translating the system's performance specifications into a single mathematical index of performance.
2) Computational difficulties involved in finding feedback solutions.
3) Difficulties encountered in instrumentation of the optimal control law, when it can be found.

†Strictly speaking, the credit goes to N. Wiener. However Newton et al. were first to devote an entire book on this topic with the practicing control engineers in mind.

This study is an effort to carefully analyze the above difficulties, and to amalgamate the merits of the classical and modern control theories in order to develop a new approach to the design of a class of linear, time-varying control systems.

1.2 State of the Art of Control System Design and Synthesis

The design of an automatic control system starts with a mathematical description of the plant or the process to be controlled, performance specifications, constraints and limitations on system components and the input-output variables. In some cases the solution of the problem may be unique, in other cases compromises may lead to several adequate solutions.

A distinction is made between design and synthesis. This has been clearly brought forth by Tou [2]. Design is the process of finding a solution which satisfies the statement of the problem. In general the procedure is not straightforward, but requires engineering judgement and skill. Synthesis, on the other hand, is the more ideal situation where there is a clear way, usually entirely mathematical, for going from the problem statement to the solution.

The existing approaches to design and synthesis of control systems may be classified into three categories. The first is the well-known approach based upon transform methods. This is often referred to as the trial-and-error design procedure. The designer is given more or less arbitrary specifications in time domain and/or frequency domain, and possibly a system configuration. The designer seeks to satisfy the specifications by gain adjustment or equalizer compensation. The second approach, which has been referred to as analytical design [1], uses an infinite-time integral of squared-system error, or a mean-square error as

a measure of the performance. The design procedure yields a compensation network for a linear, time-invariant system configuration upon application of classical variational methods to minimize the performance measure. The form of the compensator is more or less fixed apriori and as such is usually not the optimal. Moreover this approach is not sufficiently adept to handle systems of moderate complexity.

Both of the above approaches of control system design are confronted by severe limitations and difficulties when applied to the design of multivariable and time varying systems. The third approach, based on optimal control theory, is a broad generalization of the second and has developed in many different ways. It starts out with an index of performance that as adequately as possible incorporates all the factors that add to the cost of performance. Usually the index of performance is a functional of plant and control variables. The control law which is an expression of the control variables as functions of the plant variables is found by minimizing the performance index subject to the plant dynamics. Philosophically, optimal control theory is an attempt to provide a means of system synthesis as opposed to system design as discussed above. In a majority of cases in practice, however, it falls short of that objective.

Figure 1.1 shows the flow-diagram representation of the three methods of design. The idea of flow-graph representation is borrowed from Elgerd [3]. Note that methods two and three also involve some degree of "trial and errorness". But this is at a different place. So depending on where it is, how easy it is to manipulate and the time it takes, other factors being equal, one method would be superior to the other. Apart from the fact that the analytical design is not optimal, the type of performance

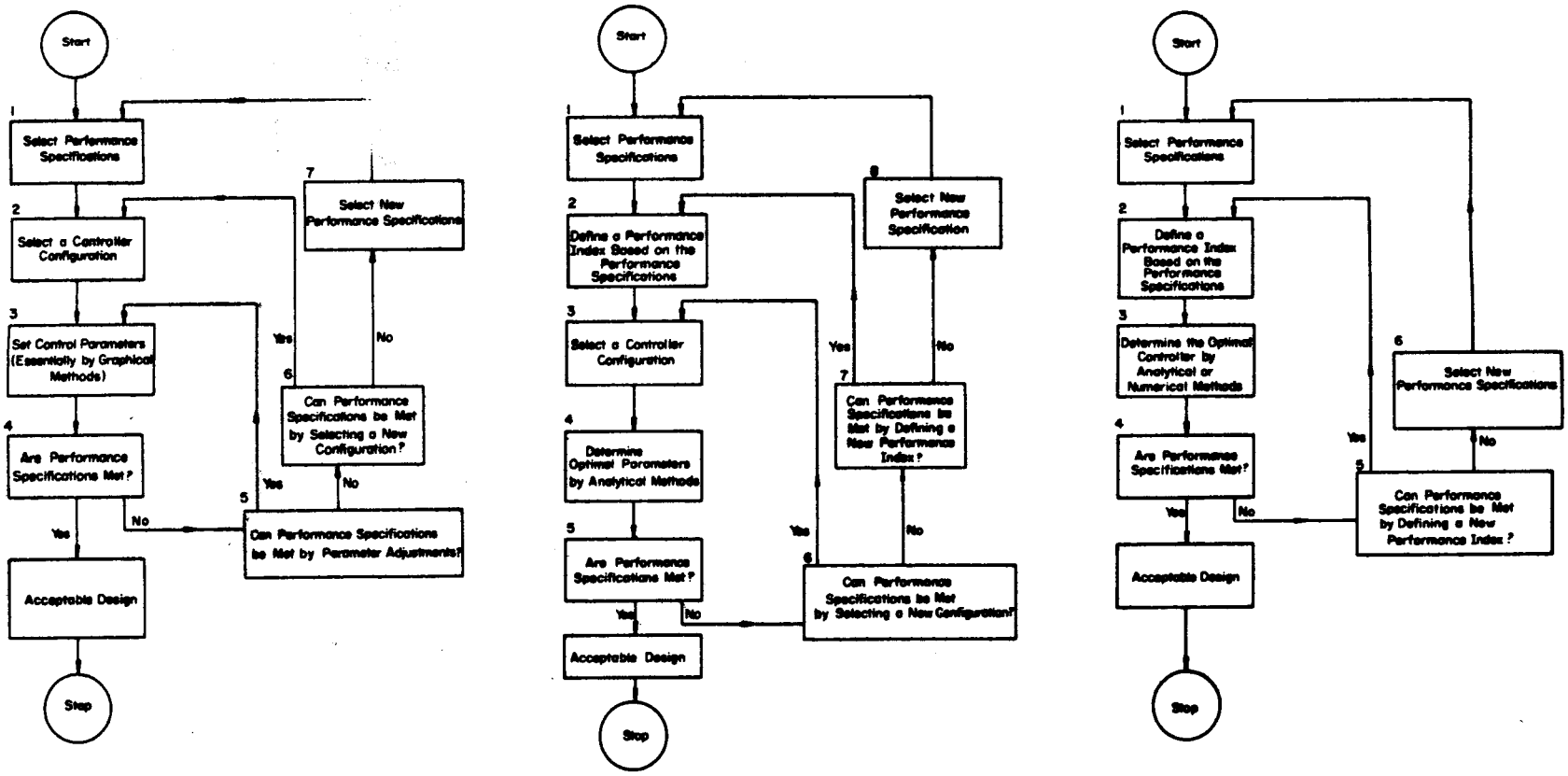

(a) TRIAL-AND-ERROR DESIGN

(b) ANALYTICAL DESIGN

(c) OPTIMAL CONTROL DESIGN

FIG. 1.1 FLOW GRAPH OF DESIGN PROCESS

indices considered for analytical design are essentially limited to the integral of the square of the system error. Where as in the case of optimal control design, the performance index can be a more general functional and as such is more likely to incorporate the performance specifications.

1.3 Organization of the Thesis

Since for a solution to a specific optimal control (SOC) problem, a solution to the corresponding optimal control problem is required, essential results in optimal control theory are presented in chapter II. A discussion on the choice of performance indices is also included here. In Chapter III a general SOC problem is stated. A review of recent work in this area is given and the limitations of the existing solutions pointed out. Chapter IV is devoted to an analysis of linear SOC problem. A general configuration of the specific optimal controller which guarantees the stability of the resulting system, is suggested. It is shown that the secondary performance index (J_2) for such a system is a ratio of two quadratic forms.

A major contribution of this thesis is the computational algorithm for finding the global maximum of J_2 with respect to the initial state of the system, and the minimum with respect to the SOC parameters. This is presented in Chapter V. The results are applicable to the design of specific optimal controllers for linear, multivariable, autonomous and time varying systems. A heuristic solution to the controller design for systems with non-zero forcing function is also discussed. A few examples are considered to show the feasibility of the computational algorithms and to illustrate the improvement in the results when compared to solutions

obtained by other methods. Chapter VI concludes the thesis with a discussion of the findings and suggestions for future work.

CHAPTER II

OPTIMAL CONTROL PROBLEM

2.1 Problem Statement

An optimal control problem can be stated in several different ways based on what is desired of the control system. From the point of view of designing a continuous feed-back controller, the problem may be stated as follows.

Suppose the plant to be controlled is described by the differential equation

$$\dot{x} = \psi(x, u, v, t) \tag{2.1a}$$

$$x(t_o) = x_o \tag{2.1b}$$

where x is an n-vector of the state variables of the plant, u is an m-vector of the control variables, v is an r-vector of known inputs to the plant, ψ is a vector function of x, u, v and t. "$\cdot$" represents derivative with respect t, time. Let the initial time t_o, final time T and initial state x_o are fixed, and final state x(T) is free. The optimal control problem is to find a control law $u = u(x(t), t)$ such that a scalar functional J_1 is minimized. In its general form

$$J_1 = \int_{t_o}^{T} \varphi(x(t), u(t), t)\, dt + \Phi(x(T), T) \tag{2.2}$$

If J_1^* is the optimal value of J_1, then

$$J_1^* = \min_{u(x(t))} \left[\int_{t_o}^{T} \varphi(x(t),u(t),t)dt + \Phi(x(T),T) \right] \tag{2.3}$$

For reasons that will become obvious later, J_1 will be referred to as the primary performance index.

2.2 Solution to the Optimal Control Problem

Extensive research has been reported on techniques of finding the solution to the problem stated in Section 2.1. From a mathematical point of view far-reaching progress is made in the right direction. However these results are not adequate from the designer's point of view. Fortunately for a large class of (linear and/or time varying) control systems the optimal control problem with quadratic performance index can be solved and the optimal control law for an arbitrary initial state obtained. Since the solution of the specific optimal control problem requires the solution to the optimal control problem, a linear optimal control problem is considered in the next section.

2.3 Linear Optimal Control Problem

Consider a plant which satisfies the differential equation

$$\dot{x} = A(t)x + B(t)u + C(t)v \tag{2.4a}$$

$$x(t_o) = x_o \tag{2.4b}$$

where, A is an nxn matrix, B an nxm matrix, C an nxr matrix and x, u and v are the same as defined in Section 2.1. [A,B] is completely controllable and completely observable for all time. [A,C] is completely observable, also for all time. A linear optimal control problem is to find a control law $u^* = u(x(t),t)$ which minimizes a quadratic functional

of state and control variables given by

$$J_1 = \int_{t_o}^{T} (x'Q_1(t)x + u'u)dt + x'(T)Q_2x(T) \tag{2.5}$$

where Q_1 and Q_2 are nxn positive and at least semi-definite matrices.

The solution to this problem is well known in the literature [4]. The optimal value of the performance index is given by

$$J_1^* = x'(t_o)\, P(t_o)\, x(t_o) + g'(t_o)\, x(t_o) + f(t_o) \tag{2.6}$$

and the optimal control law is found to be

$$u^*(x^*(t),t) = -B'P(t)x^*(t) - B'g(t) \tag{2.7}$$

"$*$" indicates the optimal solution. The nxn matrix P(t), n-vector g(t) and the scalar function f(t) in (2.6) and (2.7) satisfy the following set of differential equations.

$$\dot{P} = PBB'P - A'P - PA - Q_1 \tag{2.8}$$

$$\dot{g} = PBB'g - Ag - 2PCv \tag{2.9}$$

$$\dot{f} = \frac{1}{4}\, g'BB'g - g'Cv \tag{2.10}$$

$$P(T) = Q_2 \tag{2.11a}$$

$$g(T) = 0 \tag{2.11b}$$

$$f(T) = 0 \tag{2.11c}$$

We note here that the optimal control law is a linear time varying function of the state variables. The vector function g(t) in the control law does not depend on the initial state of the system, but only on the input v(t). Analytic solution to equations (2.8), (2.9) and (2.10) is usually not possible. However a computer solution can easily be obtained by integration, in backward time, starting at t = T.

The infinite time regulator problem for time-invariant plants is a

special case of the above, where, matrices A, B and Q_1 are constant, and $C \equiv [0]$; $Q_2 \equiv [0]$ and $T \to \infty$. Solution to the infinite time regulator problem is given by

$$J_1^* = x^{*\prime}(t_o)Px^*(t_o) \tag{2.12}$$

$$u^* = -B'Px^*(t) \tag{2.13}$$

where P satisfies the matrix Riccati equation [5]

$$PBB'P - A'P - PA - Q_1 = [0] \tag{2.14}$$

Equation (2.14) can be solved by spectral factorization or backwards integration with $P(\infty) = [0]$, till P reaches a steady state.

2.4 Choice of the Performance Index

From the design point of view, the choice of the performance index is a controversial issue in the theory of optimal control. In the ideal case, a control engineer would like to find a functional relationship between the plant and control parameters and classical performance specifications. In such a case the design objective of meeting the specification can be achieved directly by adjusting the control parameters. However this is too ambitious a goal to be achieved except possibly for second order time-invariant systems. A different but equally ambitious notion is to find an analytic relationship between the plant and the performance index matrices as defined in (2.4) and (2.5) and the performance specifications. If it were possible to accomplish any of these objectives, then optimal control theory would truly provide a synthesis tool. However since this is not the case, a control engineer's judgement and experience must continue to play an important role in the design procedure. A judicious choice of the performance index parameters can only give a good start to the design process.

Many control problems are characterized by the necessity of satisfying multiple performance requirements and constraints. In such cases a performance index of the type given by (2.5) would be very convenient to use. In a majority of cases Q_1 can be taken as constant. Then the designer's job is essentially to select the elements of Q_1 which are the magnitudes of the weighting factors. After the first arbitrary choice, the succeeding choices for Q_1 can be made in a logical fashion based on the resulting system response. Q_2 can be selected in a like manner. When frequency domain methods are used compromise between conflicting requirements could be a very difficult task.

It is hoped that as one gains experience in analyzing and designing control systems using optimal control theory, skepticism as to the meaning and worth of a quadratic performance index, or performance index in general, will be of minor concern.

2.5 Instrumentation of the Optimal Control

From equation (2.7) we note that for implementation of the optimal control law, in general, all the state variables of the system must be accessible for measurement. Also, the instrumentation calls for time varying feed-back gains, except for autonomous system with infinite time performance index. This, from a technical, economical and reliability point of view, is a severe requirement. In the next chapter the optimal control problem is reformulated so that the resulting controller is time-invariant and amenable to instrumentation even if all the states are not accessible.

CHAPTER III

SPECIFIC OPTIMAL CONTROL PROBLEM

3.1 Introduction

The choice of the performance index (2.5) is based on two important considerations. i) Incorporation of performance specifications in a compact form. ii) Mathematical tractability of solution to the optimal control problem. A third equally important consideration which is overlooked here is: Can the resulting controller be conveniently fabricated and put into practice? As it was remarked earlier, the optimal controller often does not satisfy the third consideration. This short-coming of optimal controllers has led to the investigation of so-called "specific optimal controllers" (SOC)†. The basic philosophy is to compromise between the convenience in computation and instrumentation of the controller and the degradation of the system performance when compared with the optimal.

3.2 Review of Recent Work on SOC

The concept of specific optimization is not new in the literature. Wiener's [6] design of specific optimal filters for communication networks is an example. The analytical design of feedback control by Newton, Gould and Kaiser [1] is along the same lines. The basic problem considered by

---

†SOC will be used interchangably for specific optimal control and specific optimal controller(s).

these authors is: Given the input and ideal output as transient functions of time and given the configuration of the control system find the values that the control parameters should have in order to minimize the integral-square error. Two different approaches for solving this problem are suggested. According to the first one starts with the Fourier Transforms of the input and ideal output signals, and evaluates the integral-square error as an analytic function of control parameters by means of Parseval's theorem. Then the parameters are determined by using standard minimization procedures.

According to the other approach the integral-square error is treated in the time domain by introducing autotranslation and cross-translation functions of the input and the ideal output. If $\theta_1(t)$ and $\theta_2(t)$ denote two arbitrary transient signals, then the autotranslation function $I_{11}(\tau)$ is defined as

$$I_{11}(\tau) \triangleq \int_{-\infty}^{+\infty} \theta_1(t)\ \theta_1(t+\tau)dt \tag{3.1}$$

and the cross-translation function is defined as

$$I_{12}(\tau) \triangleq \int_{-\infty}^{+\infty} \theta_1(t)\ \theta_2(t+\tau)dt \tag{3.2}$$

The principal reason for introducing the translation functions is to simplify the writing of expressions that involve definite integral of product of transient signals. For a system with weighting function (impulse response) $\omega(t)$, input $\theta_2(t)$, ideal output $\theta_1(t)$ and actual output $\theta_o(t)$. The error is given by

$$e(t) = \theta_1(t) - \theta_o(t) \tag{3.3a}$$

$$= \theta_1(t) - \int_{-\infty}^{+\infty} \omega(t_1)\ \theta_2(t-t_1)dt_1 \tag{3.3b}$$

It is shown in [1] that the integral of the squared error over infinite time is given by

$$I = I_{11}(o) - 2 \int_{-\infty}^{+\infty} \omega(t_1)\, I_{21}(t_1)\, dt_1$$

$$+ \int_{-\infty}^{+\infty} \left\{ \left[\int_{-\infty}^{+\infty} \omega(t_2)\, I_{22}(t_1-t_2) dt_2 \right] \omega(t_1) \right\} dt_1 \quad (3.4)$$

This is the desired result for the integral-square error evaluated in the time domain. By minimizing I, after simplification, with respect to the control parameters, their optimal values can be determined.

The two approaches for solution stated above are seemingly straightforward. However in practice the determination of the integral-square (error as a function of control parameters, except for a few simple) cases, is a very tedious task. The authors are aware of this difficulty.

Even though the method of analytical design is not computationally feasible, it did pave the way for variational method in the area of feed-back control theory, which by itself is of great value.

More recently Agarwal [7] has investigated an SOC problem that can be stated as follows.

Given the plant $\dot{x} = \psi(x,u)$ with initial state $x(o) = x_o$, and the controller configuration $u = h(y,b)$, determine b such that $\int_o^T \varphi(x,u)dt$ is minimized.

Here y is a p-dimensional vector whose components are known functions of x, $p \leq n$; b is a q-dimensional constant vector of unknown parameters and x, ψ, φ and u are as defined in Chapter II. It is assumed that i) $\varphi(x,u) \geq o$ for all values of its arguments in the domain of interest and (ii) ψ possesses piecewise continuous second partial derivatives with

respect to its arguments. Three different methods of solution to this problem are considered.

1) Parameters optimization

2) Transformation to a two-point boundary value problem

3) Method of differential approximation

The application of these methods is rather formal and without much consideration of their complexity and limitations. For instance, in one of the examples† considered, a transformation to a two-point boundary value problem is made to determine the unknown parameter vector b. The example is as follows.

Given the plant (figure 3.1)

$$\dot{x}_1 = x_2 \tag{3.5a}$$

$$\dot{x}_2 = -2x_1 - 3x_2 + u \tag{3.5b}$$

$$x_1(0) = 2. \tag{3.5c}$$

$$x_2(0) = 2. , \tag{3.5d}$$

performance index

$$I = \int_0^{1.0} (x_1^2 + x_2^2 + u^2)dt \tag{3.6}$$

and $$u(s) = (b_1 + \frac{b_2 s}{1+.05s})\, x_1(s) \tag{3.7}$$

or $$\dot{u} = -20u + (b_1+20b_2)\,\dot{x}_1 + 20b_1x_1 \tag{3.8}$$

find b_1 and b_2 such that I is minimized.

---

†Page 49, example 2.5, reference no. 5.

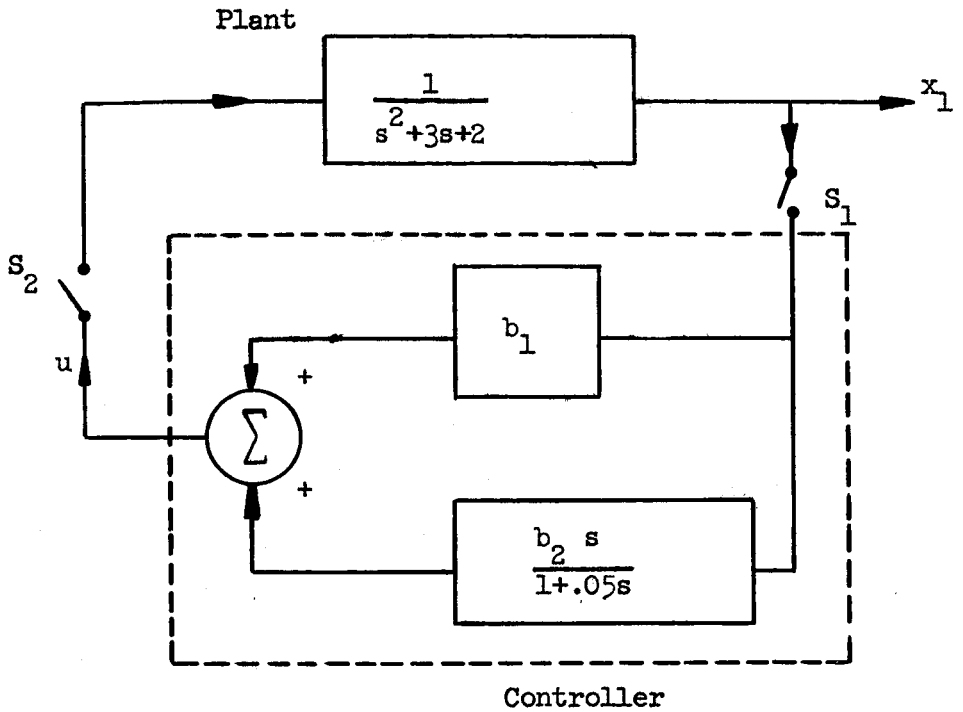

Figure 3.1 A Linear Plant with a Specific Controller.

In order to solve this problem two more differential equations i) $\dot{b}_1 = 0$, ii) $\dot{b}_2 = 0$ are added. This set of five differential equations is augmented by a set of five Lagrange multiplier equations

$$\dot{\lambda}_1 = -2x_1 + 2\lambda_2 - 20b_1\lambda_3 \tag{3.9a}$$

$$\dot{\lambda}_2 = -2x_2 - \lambda_1 + 3\lambda_2 - (b_1+20b_2)\lambda_3 \tag{3.9b}$$

$$\dot{\lambda}_3 = -2u - \lambda_2 + 20\lambda_3 \tag{3.9c}$$

$$\dot{\lambda}_4 = -20x_1\lambda_3 - x_2\lambda_3 \tag{3.9d}$$

$$\dot{\lambda}_5 = -20\lambda_3 x_2 \tag{3.9e}$$

with boundary conditions

$$\lambda_i(1) = 0, \quad i = 1,2..,5 \tag{3.10a}$$

$$\lambda_4(0) = \lambda_5(0) = 0 \tag{3.10b}$$

The ten differential equations in ten variables thus obtained are solved via the method of quasilinearization [8], and the solution is

$$b_1 = -0.0556 \tag{3.11a}$$

$$b_2 = -.226 \tag{3.11b}$$

$$u(0) = -.5811 \tag{3.11c}$$

Now u(t) depends entirely on x(t). By inspection of figure 3.1, it is possible to determine u(0) directly. However it depends on the sequence in which switches S_1 and S_2 are closed. If S_2 is closed permanently and S_1 is turned on at t = 0, then u(0) can be determined by application of the initial value theorem of Laplace transforms to equation (3.7). The result is

$$u(0) = (b_1 + \frac{b_2}{.05})\, x_1(0) \tag{3.12}$$

Using b_1 and b_2 in equation (3.11) one obtains

$$u(0) = -9.1512 \tag{3.13}$$

On the other hand if S_1 has been on for a long time and S_2 is closed at t = 0, then application of the final value theorem of Laplace transforms to equation (3.7) yields

$$u(0) = b_1\, x_1(0) \tag{3.14}$$

and again using b_1 as in equation (3.11)

$$u(0) = -.1112 \tag{3.15}$$

Both equations (3.13) and (3.15) are in gross contradiction with the value of u(0) in equation (3.11). Barring the possibility of computational error there are at least two reasons for this inconsistancy:

1) No consideration is given to the order in which switches S_1 and S_2 are closed.

2) The two point boundary value problem is nonlinear in nature and as such the solution is not necessarily unique.

Even if the correct values of the control parameter vector b can be obtained using the methods mentioned in [7], the values so determined depend upon the initial state x_o. If the same controller is used for a different set of initial conditions, then it is not possible to give an estimate of the deterioration of the resulting system, as compared to the optimal. In order to alleviate this problem Agarwal proposed that the worst initial condition be determined by maximizing

$$\int_0^T \varphi(x,u,y,b)dt \tag{3.16}$$

with respect to x_o. It was assumed that x_o lies in a compact subset of the state space. However the computational methods used to find the worst (maximizing) initial state yield only a local solution. As such the possibility that the system may perform worse than predicted still exists.

A comparison with the procedure outlined in Chapter V would illustrate the degree of complexity of the above method even if its other shortcomings are ignored.

Rekasius [9] and Koivuniemi [10] have restricted themselves to a linear time-invariant system and carried the SOC problem closer to a usable solution. A discussion on these references is postponed until a formal statement of the SOC problem is made later in this chapter.

A completely different approach to the problem of dealing with the inaccessible states, which in turn results in instrumentation difficulties, is to estimate these states in real time from the available data.

Extensive research has been performed on this topic [11, 12, 13, 14, 2] and various useful results obtained. In many practical applications nevertheless estimation of inaccessible states may not be desirable from a technical or an economical point of view, particularly if a simple technique can do almost the same job.

3.3 Statement of SOC Problem

For a meaningful comparison between specific optimal and optimal controllers, the primary performance index as defined in (2.2) needs to be modified.

Let the desired configuration of the control law be given by

$$u_s = h(\hat{x},k,t) \tag{3.17}$$

where u_s in an m-vector, $m \leq n$, $\hat{x}$ is a p-vector of the accessible states of the system as defined in (2.1), $p \leq n$. k is an unknown parameter vector. Define an <u>intermediate performance index</u>

$$J_2 = \int_{t_o}^{T} \varphi[x,h(\hat{x},k,t),t]dt + \Phi(x(T)) \tag{3.18}$$

The specific optimal control problem can now be stated as follows.

Given the plant (2.1) and the initial state $x(t_o) = x_o$, primary performance index J_1, intermediate performance index J_2, find the unknown parameter vector k such that

$$J_o^* = \min_{k \in S_k} \max_{x_o \in S_x} \frac{J_2}{J_1} \tag{3.19}$$

S_k is the admissible set of parameter vector k and S_x the admissible set of initial states x_o.

The <u>secondary performance index</u> J_o^* has the built-in feature of

comparison between the performance of the SOC system and the optimal system under worst circumstances, which is so important if the SOC problem is to be meaningful. For the solution to be meaningful however, a global maximization with respect to x_o is mandatory.

3.4 Additional Comments on References [9] and [10].

The problem formulation as given above with u_s a linear combination of the accessible states and $T = \infty$, is due to Rekasius [9]. Here a solution to a second order constant coefficient linear stable system with quadratic performance index and one accessible state variable for feedback, was presented. The approach used is not general enough to handle higher order systems with more than one feedback coefficient to be determined. Also if the second order system is not stable and cannot be stabilized by feeding back the accessible states, then a solution to the problem does not exist.

Koivuniemi's formulation [10] is a variation of Rekasius's. A major difference lies in the problem time which in this case is finite. The performance index (secondary) chosen is

$$\min_{k} \quad \max_{x_o \in S_x} \; (J_2 - J_1) \tag{3.20}$$

A computational algorithm is suggested for a linear time-varying system with quadratic performance index. A specific optimal solution is obtained by first moving in the positive gradient direction of (J_2-J_1) with respect to x_o, and then negative gradient direction with respect to k. Once again the maximum with respect to x_o obtained in this fashion is not necessarily global. This is a severe drawback of this approach. Although stability is not required because of the finite terminal time,

application of this approach to systems which cannot be stabilized by mere feedback of accessible states would result in a poor design. Two numberical examples are given in this reference. The solutions to these examples will be discussed in Chapter V.

It should be noted here that the performance index (3.20) is not as reasonable as (3.19). For instance consider the case when

$$J_1^*(\underline{x}^*) = 1.0 \tag{3.21a}$$

$$J_2(\underline{x}^*, \underline{k}^*) = 1.5 \tag{3.21b}$$

and

$$J_2 - J_1^* = 0.5 \tag{3.21c}$$

where $\underline{x}^*$ is the worst initial state and $\underline{k}^*$ the best value for the parameter vector. Now it is conceivable that for some other initial state $\tilde{x} \epsilon S_x$

$$J_1^*(\tilde{x}) = 0.5 \tag{3.22a}$$

$$J_2(\tilde{x}, \underline{k}^*) = 0.8 \tag{3.22b}$$

and

$$J_2 - J_1^* = 0.3 \tag{3.22c}$$

Since the difference in the second case is less then 0.5, this according to performance index (3.20) is acceptable. However we see that the normalized deterioration for the worst initial state is 50% and for an arbitrary initial state it is 60%!

3.5 Observations

Based on the study and evaluation of the past work on the SOC problem, the following important observations can be made.

1) For the appraisal of an SOC system, solution of the optimal system is necessary.

2) The unknown parameter vector k of the specific controller depends on the initial state of the system. A specific optimal controller would be acceptable from a design point of view only if the system performance under worst initial conditions for the chosen controller is acceptable.

3) It is highly desirable that the configuration of the specific controller be such that the resulting system is guaranteed to be stable.

4) Computational methods need to be developed to determine the worst initial state of the system, for a given controller configuration.

With these observations in mind, a linear specific optimal control problem is considered in detail in the next chapter.

CHAPTER IV

LINEAR SPECIFIC OPTIMAL CONTROL PROBLEM

4.1 Problem Statement

Consider the plant

$$\dot{x} = A(t)\ x(t) + B(t)\ u(t) + C(t)\ v(t) \tag{4.1a}$$

$$x(t_o) = x_o \tag{4.1b}$$

and the primary performance index

$$J_1 = \int_{t_o}^{T} [x'(t)Q_1(t)x(t) + u'(t)u(t)]dt + x'(T)Q_2x'(T) \tag{4.2}$$

where

- x: n-vector of state variables
- u: m-vector of control variables $m \leq n$
- v: r-vector of input variables $r \leq n$
- $A(t)$: nxn matrix
- $B(t)$: nxm matrix, pair $[A,B]$ is completely controllable and completely observable on the interval $[t_o,T]$
- $C(t)$: nxr matrix, pair $[A,C]$ is completely observable on the interval $[t_o,T]$
- $Q_1(t)$: nxn matrix, at least positive semi-definite on the interval $[t_o,T]$
- Q_2: nxn constant matrix, at least positive semi-definite

In addition let the desired configuration of the controller be

$$u = h(\hat{x},K,t) \tag{4.3}$$

where

$\hat{x}$: p-vector of the accessible states, $p \leq n$

K: mxn matrix of unknown control parameters

Then the intermediate performance index is given by

$$J_2 = \int_{t_o}^{T} [x'(t)Q_1(t)x(t)+h'(\hat{x},K,t)h(\hat{x},K,t)]dt+x'(T)Q_2x'(T) \tag{4.4}$$

The specific optimal control problem is to find the control parameter matrix K and initial state vector x_o such that

$$J_o^* = \min_{K\epsilon S_k} \max_{x_o \epsilon S_x} \frac{J_2}{J_1^*}$$

$$= \min_{K\epsilon S_k} \max_{x_o \epsilon S_x} \frac{\int_{t_o}^{T} [x'(t)Q_1(t)x(t)+h'(\hat{x},K,t)h(\hat{x},K,t)]dt+x'(T)Q_2x(T)}{\int_{t_o}^{T} [x^{*\prime}(t)Q_1(t)x^*(t)+u^{*\prime}u^*]dt + x^{*\prime}(T)\, Q_2x^*(T)} \tag{4.5}$$

where '*' on x(t), u(t) and J_1 indicates the optimal solution without any restrictions on the controller configuration. S_x and S_k are admissible sets of x_o and K respectively.

4.2 Some Simplifications

First we shall consider the case when u is a scalar, $v = 0$ and the plant is time-invariant and in phase variable form†. Later the results

†A plant $\dot{x} = Ax+Bu$ with u a scalar, is said to be in phase variable form if A and B are of the following form.

$$A = \begin{bmatrix} 0 & 1 & 0 & \cdots & 0 & 0 \\ 0 & 0 & 1 & \cdots & 0 & 0 \\ \vdots & \vdots & \vdots & & \vdots & \vdots \\ 0 & 0 & 0 & & 0 & 1 \\ a_{n1} & a_{n2} & a_{n3} & & a_{n,n-1} & a_{nn} \end{bmatrix} \qquad B = \begin{bmatrix} 0 \\ 0 \\ \vdots \\ 0 \\ 1 \end{bmatrix}$$

will be extended to the general case wherever possible. Here without loss of generality it can be assumed that $\hat{x}_i = x_i$, $i=1,2,\ldots,p$, and that $x_{p+1}, x_{p+2}, \ldots, x_n$ are inaccessible states. The following specific controller will be used.

$$u_s(s) = k_1x_1(s)+k_2x_2(s)+\ldots+k_{p-1}x_{p-1}(s) + \frac{(k_p+k_{p+1}s+\ldots\ldots+k_ns^{n-p})}{\alpha_1+\alpha_2s+\ldots+\alpha_{n-p-1}s^{n-p-1}+s^{n-p}}\,x_p(s) \qquad (4.6)$$

where 's' is the Laplace transform variable. For the time being α_i, $i=1,2,\ldots,n-p-1$ are arbitrary parameters.

Note that instead of merely feeding back the accessible states with constant coefficients, a dynamic equalizer is used, which hopefully will generate approximate higher derivatives of x_p, the inaccessible states. Since the above SOC is more general than the one considered in [9] or [10], an improvement in the performance should be expected. In addition if the parameters α_i and k_i are chosen carefully, the resulting system can be guaranteed to be stable. This is shown in the next section.

4.3 Stability Consideration

The plant differential equation (4.1) with the simplifications stated in section 4.2 can easily be Laplace transformed. If G(s) is the plant transfer function, then

$$G(s) = \frac{x_1(s)}{u(s)} = \frac{1}{s^n-a_{nn}s^{n-1}-\ldots-a_{n2}s-a_{n1}} \qquad (4.7)$$

If the plant can be stabilized using a controller of the type (4.6) with $p = 1$, then stability of a system with $p > 1$ follows automatically.

Consider now the case of one accessible state when the controller (4.6) reduces to

$$u_s(s) = -\frac{k_1+k_2s+\ldots+k_{n-1}s^{n-2}+k_ns^{n-1}}{\alpha_1+\alpha_2s+\ldots+\alpha_{n-1}s^{n-2}+s^{n-1}}\,x_1(s) \tag{4.8}$$

The additional negative sign in equation (4.8) is for the sake of convenience. It does not change the nature of the problem. The resulting system is shown diagramatically in fig. 4.1, where

$$H(s) = \frac{k_1+k_2s+\ldots+k_{n-1}s^{n-2}+k_ns^{n-1}}{\alpha_1+\alpha_2s+\ldots+\alpha_{n-1}s^{n-2}+s^{n-1}} \tag{4.9}$$

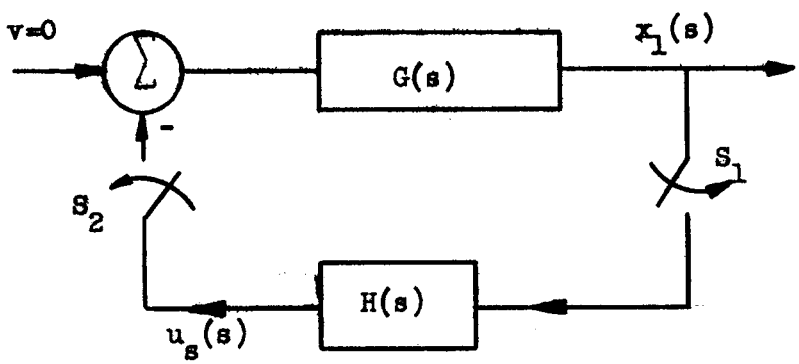

Figure 4.1. Block Diagram of an SOC System.

For the moment assume that both switches S_1 and S_2 are closed. The characteristic equation of the system is given by

$$1 + G(s)\,H(s) = 0 \tag{4.10}$$

If $G(s) = \frac{G_1(s)}{G_2(s)}$ and $H(s) = \frac{H_1(s)}{H_2(s)}$, where G_1, G_2, H_1 and H_2 are polynomials in s, then by rather obvious manipulations it can be shown that

$$G_2\,H_2 = f_os^{2n-1}+f_1s^{2n-2}+\ldots\ldots+f_js^{2n-1-j}+\ldots\ldots+f_{n-1}s^n+\phi(s) \tag{4.11}$$

where

$$\left.\begin{aligned}
f_o &= 1 \\
f_1 &= f_1(a_{nn},\alpha_{n-1}) \\
f_2 &= f_2(a_{nn},a_{n,n-1},\alpha_{n-1},\alpha_{n-2}) \\
&\vdots \\
f_j &= f_j(a_{nn},a_{n,n-1},\ldots,a_{n,n-j+1},\alpha_{n-1},\alpha_{n-2},\ldots,\alpha_{n-j}) \\
&\vdots \\
f_{n-1} &= f_{n-1}(a_{nn},a_{n,n-1},\ldots,a_{n1},\alpha_{n-1},\alpha_{n-2},\ldots,\alpha_1)
\end{aligned}\right\} \quad (4.12)$$

and

$$\phi(s) = \phi_1+\phi_2 s+\ldots+\phi_n s^{n-1} \tag{4.13}$$

where ϕ_j, j=1,n are known functions of $a_{n,i}$ and α_{n-i+1}, i=1,n. Hence the characteristic equation is reduced to

$$\sum_{i=o}^{n-1} f_i\, s^{2n-1-i} + \sum_{i=1}^{n} (\phi_{n+1-i}+k_{n+1-i})s^i = 0 \tag{4.14}$$

The terms in equation (4.14) are arranged in decreasing power of s. There are 2n terms in this equation with (2n-1) arbitrary parameters (n k_i's and n-1 α_i's). By inspection of (4.12) it is obvious that a choice of α_{n-i} affects only f_j, j=i,i+1,...,n-1. Therefore by choosing α_j, j = n-1,n-2,...,1, with j decreasing monotonically, $f_1,\ldots,f_{n-1}$ can be forced to take any desired set of values. This means that the coefficients of s^ℓ, ℓ=n,n+1,...,2n-2 in the characteristic equation can be chosen independently of each other. Once this is done ϕ_i, i=1,...,n are known numbers. But then the coefficients of s^ℓ, ℓ=0,1,...,n-1 are completely determined by $k_{\ell+1}$, ℓ=0,...,n-1 respectively. Therefore the

coefficient of each term (except the first) in (4.14) can be adjusted independently to force the characteristic equation to possess roots with negative real parts. Hence the system can be stabilized by a proper choice of the SOC parameters.

The above argument is equally valid for multivariable time-invariant systems. For time-varying systems no general theorems of stability are known at present, so not much can be said about the stability of time-varying plants with specific controllers.

The emphasis here is on the use of dynamic equalizers. There is no particular reason to restrict oneself to the specific configuration of (4.6) as long as the resulting system is stable. A control engineer well versed in classical control theory knows many different ways to choose an equalizer to meet certain specifications for a given problem. This experience can be exploited advantageously to design by the approach presented in this thesis. After a selection of the controller configuration, the direct computational method introduced in the next chapter can be used to determine the unknown parameters, especially if the usual graphical methods turn out to be very tedious.

4.4 Secondary Performance Index

In this section the secondary performance index (4.5) for a multivariable time-varying system is reduced to a convenient form. To start with it will be assumed that all the states are accessible and $v = 0$. Later these assumptions will be relaxed.

If all the states are accessible, the specific controller can be taken as

$$u_s(x) = Kx \tag{4.15}$$

where K is an (mxn) matrix of constants. Substituting equation (4.15), into equation (4.1), with v = 0, we get

$$\dot{x}(t) = (A+BK)\, x(t) \tag{4.16a}$$

$$x(t_o) = x_o \tag{4.16b}$$

and

$$J_2 = \int_{t_o}^{T} x'(t)[Q_1(t) + K'K]\, x(t)dt + x'(T)Q_2 x(T) \tag{4.17}$$

Since (4.16) is a linear autonomous differential equation and J_2 a quadratic functional. J_2 can be written as

$$J_2 = x'(t_o)R(t_o)x(t_o) \tag{4.18}$$

where R is an (nxn) symmetric matrix which is the solution to

$$\dot{R} + (A+BK)'R + R(A+BK) = -\,[Q_1(t) + K'K] \tag{4.19a}$$

$$R(T) = Q_2 \tag{4.19b}$$

From the results of Chapter II we know that

$$J_1 = x_o'P(t_o)x(t_o) \tag{4.20}$$

where P satisfies the matrix Riccati differential equation (2.8) with boundary conditions $P(T) = Q_2$. Hence

$$J_o^* = \min_{K \epsilon S_k} \max_{x_o \epsilon S_x} \frac{J_1}{J_2}$$

$$= \min_{K \epsilon S_k} \max_{x_o \epsilon S_x} \frac{x_o'R(t_o,K)x_o}{x_o'P(t_o)x_o} \tag{4.21}$$

If the input $v \neq 0$, then J_2 will be a more general quadratic function of x, namely,

$$J_2 = x'(t_o)R(K,t_o)x(t_o)+\tilde{g}'x(t_o)+\tilde{f}(t_o) \tag{4.22}$$

where R is as defined before, the n-vector $\tilde{g}$ and scalar $\tilde{f}$ are solutions to

$$\frac{d}{dt}(\tilde{g}) + (A+BK)'\tilde{g}+2RCv = 0 \tag{4.23}$$

$$\frac{d}{dt}(\tilde{f}) + v'c'\tilde{g} = 0 \tag{4.24}$$

with $\tilde{g}(T) = 0,\ \tilde{f}(T) = 0.$ (4.25)

Equations (4.23) and (4.24) are determined by differentiating (4.17) and (4.18), with t_o replaced by t, and equating the coefficients of like terms. Again from equation (2.6)

$$J_1^* = x'(t_o)P(t_o)x(t_o) + g'(t_o)x(t_o) + f(t_o)$$

where P, g and f satisfy (2.8), (2.9) and (2.10) respectively. Therefore

$$J_o^* = \min_{K\epsilon S_k} \max_{x_o\epsilon S_x} \frac{x'Rx + \tilde{g}'x + \tilde{f}}{x'Px + g'x + f} \tag{4.26}$$

When all the states for the plant are not accessible, the secondary performance index can still be shown to have the same form as (4.21) or (4.26). Once again suppose the plant is in phase variable form, u is a scalar and there is only one accessible state. Let $u_s(x(t))$ satisfy the following differential equation.

$$u_s + \tau_1 \frac{du_s}{dt} + \tau_2 \frac{d^2u_s}{dt^2} + \ldots + \tau_{n-1} \frac{d^{n-1}u_s}{dt^{n-1}} = k_1x_1 + k_2 \frac{dx_1}{dt} + \ldots$$

$$\ldots + k_n \frac{dx_1^{n-1}}{dt^{n-1}} \tag{4.27}$$

Taking the Laplace transform of equation (4.27) with $t_o = 0$, yields

$$u_s(s) + \tau_1[su_s(s)-u_s(o)]+\tau_2[s^2u_s(o)-su_s(o) - \frac{du_s}{dt}(o)]$$

$$+ \tau_3[s^3u_s(s)-s^2u_s(o)-s\frac{du_s}{dt}(o) - \frac{d^2u_s}{dt^2}(o)]+\ldots\ldots\ldots$$

$$+ \tau_{n-1}[s^{n-1}u_s(s)-s^{n-2}u_s(o)-s^{n-3}\frac{du_s}{dt}(o)-\ldots\ldots-s\frac{du_s^{n-3}}{dt^{n-3}}(o) - \frac{du_s^{n-2}}{dt^{n-2}}(o)$$

$$= k_1x_1(s)+k_2[sx_1-x_1(o)]+k_3[s^2x_1(s)-sx_1(o) - \frac{dx_1}{dt}(o)] +\ldots\ldots$$

$$+ k_n[s^{n-1}x_1(s)-s^{n-2}x_1(o)-s^{n-3}\frac{dx_1}{dt}(o)-\ldots\ldots-s\frac{dx_1^{n-3}}{dt^{n-3}}(o) - \frac{dx_1^{n-2}}{dt^{n-2}}(o)] \tag{4.28}$$

Let

$$y_1 = u_s$$

$$y_2 = \frac{d}{dt}u_s$$

$$\vdots$$

$$y_n = \frac{d^{n-1}}{dt^{n-1}}(u_s)$$

Then (4.28) can be written as

$$y_1 + \tau_1[y_2(s)-y_1(o)]+\tau_2[y_3(s)-sy_1(o)-y_2(o)]$$

$$+ \tau_3[y_4(s)-s^2y_1(o)-sy_2(o)-y_3(o)] +\ldots\ldots$$

$$\tau_{n-1}[y_n(s)-s^{n-2}y_1(o)-s^{n-3}y_2(o)-\ldots\ldots-sy^{n-2}(o)-y^{n-1}(o)]$$

$$= k_1x_1(s)+k_2[x_2(s)-x_1(o)]+k_3[x_3(s)-sx_1(o)-x_2(o)]$$

$$+ k_4[x_4(s)-s^2x_1(o)-sx_2(o)-x_3(o)] +\ldots\ldots$$

$$+ k_n[x_n(s)-s^{n-2}x_1(o)-s^{n-3}x_2(o)-\ldots\ldots-sx_{n-2}(o)-x_{n-1}(o)] \tag{4.29}$$

Equating the coefficients of like powers of s in equation (4.29), we get

$$\tau_{n-1}y_1(o) = k_n x_1(o)$$

$$\tau_{n-1}y_2(o) + \tau_{n-2}y_1(o) = k_n x_2(o) + k_{n-1}x_1(o)$$

$$\vdots$$

$$\tau_{n-1}y_j(o) + \tau_{n-2}y_{j-1}(o)+\ldots+\tau_{n-j+1}y_1(o) = k_n x_j(o)+k_{n-1}x_{j-1}(o) + \ldots\ldots\ldots + k_{n-j+2}x_1(o)$$

$$\vdots$$

$$\tau_{n-1}y_{n-1}(o)+\tau_{n-2}y_{n-2}(o)+\ldots+\tau_1 y_1(o) = k_n x_{n-1}(o)+ k_{n-1}x_{n-2}(o)+\ldots\ldots+k_2 x_1(o) \tag{4.30}$$

System (4.30) is linear in the $y_i(o)$ and $x_i(o)$, and the coefficient matrix of $y_i(o)$, $i=1,2,\ldots,n-1$ is an $(n-1)x(n-1)$ triangular matrix with all the major diagonal elements equal to τ_{n-1}. Hence each $y_i(o)$ can be determined as a linear combination of $x_j(o)$, $j=1,2,\ldots,(n-1)$. Let the solution is given by

$$y(o) = c'x(o) \tag{4.31}$$

If the initial conditions are ignored in equation (4.28), then

$$u_s(s) = \frac{k_1+k_2 s+\ldots\ldots+k_n s^{n-1}}{1+\tau_1 s+\ldots\ldots+\tau_{n-1}s^{n-1}}\, x_1(s) \tag{4.32}$$

The relationship between α_i and τ_i is obvious.

In the above discussion it is tacitly assumed that the plant and the controller are separate units, and the two are joined together at $t=0$. With reference to figure 4.1, this means that switch S_2 is on permanently and S_1 is closed at $t=0$. In a feedback control system however, the controller is an integral part of the system and hence permanently

coupled to the plant output. Figure 4.1 simulates this second mode of operation if we assume that switch s_1 is closed permanently and s_2 is turned on at t=0. Under this arrangement, initial values of u and its derivatives can be obtained by applying the final value theorem of Laplace transform to equation (4.32). This yields

$$u_s(o) = k_1 x_1(o) \tag{4.33a}$$

$$\frac{d^{\ell} u_s}{dt^{\ell}}(o) = 0, \quad \ell=1,\ldots,n-1 \tag{4.33b}$$

Using the same notation as above, c is in particular given by

$$c' = [k_1 \; 0 \ldots\ldots 0] \tag{4.34}$$

The following discussion is equally valid for the two modes of operation. For generality t=0 is being replaced by t_o.

The variables y_i i=1,...,n-1 satisfy the following set of differential equations.

$$\begin{aligned}
\dot{y}_1 &= y_2 \\
\dot{y}_2 &= y_3 \\
&\vdots \\
\dot{y}_{n-2} &= y_{n-1} \\
\dot{y}_{n-1} &= -\frac{1}{\tau_{n-1}} y_1 - \frac{\tau_1}{\tau_{n-1}} y_2 - \ldots - \frac{\tau_{n-2}}{\tau_{n-1}} y_{n-1} + \\
&\qquad \frac{k_1}{\tau_{n-1}} x_1 + \frac{k_2}{\tau_{n-1}} x_2 + \ldots + \frac{k_n}{\tau_{n-1}} x_n
\end{aligned} \tag{4.35}$$

Initial conditions on the y_i's are given by (4.31) or (4.34).

Define a (2n-1)-vector z to consists of n components of x and (n-1) components of y,

$$z = \begin{bmatrix} x \\ \cdots \\ y \end{bmatrix} \tag{4.36}$$

Then the system differential equation can be written as

$$\dot{z} = \left[\begin{array}{cccccc:cccccc}
0 & 1 & 0 & \cdots & 0 & 0 & 0 & 0 & \cdots & \cdots & \cdots & 0 \\
0 & 0 & 1 & \cdots & 0 & 0 & 0 & 0 & \cdots & \cdots & \cdots & 0 \\
\vdots & \vdots & \vdots & & \vdots & \vdots & \vdots & \vdots & & & & \vdots \\
0 & 0 & 0 & \cdots & 0 & 1 & 0 & 0 & \cdots & \cdots & \cdots & 0 \\
a_{n1} & a_{n2} & a_{n3} & \cdots & a_{n,n-1} & a_{nn} & 1 & 0 & \cdots & \cdots & \cdots & 0 \\
\hdashline
0 & 0 & 0 & \cdots & 0 & 0 & 0 & 1 & 0 & \cdots & \cdots & 0 \\
\vdots & \vdots & \vdots & & \vdots & \vdots & \vdots & 0 & 1 & \cdots & \cdots & 0 \\
\vdots & \vdots & \vdots & & \vdots & \vdots & \vdots & \vdots & \vdots & & & \vdots \\
0 & 0 & 0 & \cdots & 0 & 0 & 0 & 0 & 0 & \cdots & \cdots & 1 \\
\frac{k_1}{\tau_{n-1}} & \frac{k_2}{\tau_{n-1}} & \frac{k_3}{\tau_{n-3}} & \cdots & \frac{k_{n-1}}{\tau_{n-1}} & \frac{k_n}{\tau_{n-1}} & \frac{-1}{\tau_{n-1}} & \frac{-\tau_1}{\tau_{n-1}} & \frac{-\tau_2}{\tau_{n-1}} & \cdots & & \frac{-\tau_{n-2}}{\tau_{n-1}}
\end{array}\right] z \tag{4.37}$$

or

$$\dot{z} = \hat{A}\, z \tag{4.38}$$

The intermediate performance index J_2 becomes

$$J_2 = \int_{t_o}^{T} z'\hat{Q}_1 z dt + z'(T)\, \hat{Q}_2\, z(T) \tag{4.39}$$

where

$$\hat{Q}_1 = \left[\begin{array}{c:c}
Q_1 & [0] \\
\hdashline
[0] & \begin{array}{cccc} 1 & 0 & \cdots & 0 \\ 0 & 0 & \cdots & 0 \\ \vdots & \vdots & & \vdots \\ 0 & 0 & \cdots & 0 \end{array}
\end{array}\right] \tag{4.40}$$

and

$$\hat{Q}_2 = \left[\begin{array}{c:c}
Q_2 & [0] \\
\hdashline
[0] & [0]
\end{array}\right] \tag{4.41}$$

Equations (4.37) and (4.39) are similar to equations (4.16) and (4.17) respectively

$$J_2 = z'(t_o)\hat{R}(t_o)z(t_o) \tag{4.42}$$

where $\hat{R}$ is a (2n-1)x(2n-1) matrix. Let

$$\hat{R} = \begin{bmatrix} \hat{R}_{11} & \vdots & \hat{R}_{12} \\ \cdots & \cdots & \cdots \\ \hat{R}'_{12} & \vdots & \hat{R}_{22} \end{bmatrix} \tag{4.43}$$

Then

$$J_2 = \left[x'(t_o) \vdots y'(t_o)\right] \begin{bmatrix} \hat{R}_{11} & \vdots & \hat{R}_{12} \\ \cdots & \cdots & \cdots \\ \hat{R}'_{12} & \vdots & \hat{R}_{22} \end{bmatrix} \begin{bmatrix} x(t_o) \\ \cdots \\ y(t_o) \end{bmatrix} \tag{4.44}$$

$$= x'(t_o)\hat{R}_{11}x(t_o)+x'(t_o)\hat{R}_{12}y(t_o)+y'(t_o)\hat{R}'_{12}x(t_o)+y'(t_o)\hat{R}_{22}y(t_o)$$

But $\quad y(t_o) = c'x(t_o) \qquad (4.45)$

Therefore $\quad J_2 = x'(t_o)[\hat{R}_{11}+2\hat{R}_{12}c'+c'\hat{R}_{22}c]x(t_o) \qquad (4.46)$

Hence

$$J_o^* = \min_{K_i \epsilon S_k} \max_{x_o \epsilon S_x} \frac{x'(t_o)[\hat{R}_{11}+2\hat{R}_{12}c'+c'\hat{R}_{22}c]x(t_o)}{x'(t_o)\,Px(t_o)} \tag{4.47}$$

The approach used here to show the invariance of the form of the secondary performance index when a dynamic equalizer is used is also valid for the case when u is not a scalar and $v \neq 0$.

We note in passing that if the plant and the performance index are time invariant, with $Q_2 = [0]$ and $v = 0$, then $\dot{R}$ in equation (4.19) is equal to zero. Hence R must be determined from

$$(A+BK)'R + R(A+BK) = -[Q_1+K'K] \tag{4.48}$$

A solution to this equation exists only when

$$J_2 = \int_0^\infty x'(Q_1+K'K)x \, dt$$

is finite, which will be the case if the control parameters are chosen such that the resulting system is stable. So, for the type of specific controller used in this study, solution to (4.48) is guaranteed.

4.5 Basic Computational Problem

The solution to a linear specific optimal control problem is reduced to finding a saddle point of a ratio of two quadratic forms. The computational procedure is discussed in the next chapter.

CHAPTER V

COMPUTATIONAL ALGORITHM AND APPLICATIONS

5.1 Development of the Computational Method

The problem at hand is to find K and x_o such that

$$J_o^* = \min_{K \in S_K} \max_{x_o \in S_x} \frac{x_o' R(K,t_o) x_o}{x_o' P(t_o) x_o} \tag{5.1}$$

where P and R satisfy equations (2.8) and (4.19) respectively. In the ideal case one would like to determine the global maximum of

$$J_o(x_o,K) = \frac{x_o' R(K,t_o) x_o}{x_o' P(t_o) x_o} \tag{5.2}$$

with respect to x_o by finding the maximizing initial state as an analytic function of the control parameter matrix, say

$$x_o = \xi(K) . \tag{5.3}$$

If the global maximum thus found is $\tilde{J}_o$, then

$$\tilde{J}_o(K) = \frac{\xi'(K)\ R(K,t_o)\ \xi(K)}{\xi'(K)\ P(t_o)\ \xi(K)} \tag{5.4}$$

The next and the final step in finding J_o^* would be to determine the minimum, possibly global, of $\tilde{J}_o$ with respect to K. It should be emphasized here that the need for global maximum is much greater than the need for global minimum. If the minimum is not global it only implies that a better set of parameters could be found, which would improve the system

performance. However the lack of global maximum leaves open the possibility of drastically poor performance under some initial states.

Unfortunately any analytic solutions for the above problem, except for a few simple cases, are impossible. One must resort to numerical techniques as the only alternative. An obvious choice of a numerical technique would be a gradient method where one performs the operations of finding a minimum and a maximum successively. The computational steps may be described as follows.

1a. Guess an initial value of x_o and K

1b. Determine $\max_{x_o} J_o(x_o,K) = J_o^1(x_o^1,K)$

2. Determine $\min_{K} J_o^1(x_o^1,K) = J_o^2(x_o^1,K^1)$

3. Determine $\max_{x_o} J_o^2(x_o,K^1) = J_o^3(x_o^2,K^1)$

4. Repeat steps 2 and 3 till $J_o^n = J_o^{n+1}$

Since J_o is not concave in x_o and convex in K, it is very likely that $J_o^3 > J_o^1$. If the minimum and the maximum are to be computed sequentially, it is essential that the successive maxima decrease monotonically, in particular $J_o^3 \leq J_o^1$. In order to establish under what circumstances this can be achieved, consider the Taylor series expansion of $J_o^1(x_o^1 + \delta x, K + \delta K)$ about (x_o,K), where δx and δK are increments of order Δ, a small number, in x_o and K respectively.

$$J_o^1(x_o^1+\delta x,K+\delta K) = J_o^1(x_o^1,K)+\left(\frac{\partial J_o^1(x_o^1,K)}{\partial x_o}\right)'\delta x$$

$$+\left(\frac{\partial J_o^1(x_o^1,K)}{\partial K}\right)'\delta K+O(\Delta^2) \qquad (5.5)$$

where

$$\frac{\partial J_o^1}{\partial x_o} \triangleq \text{column}\left[\frac{\partial J_o^1}{\partial x_{o1}}, \frac{\partial J_o^1}{\partial x_{o2}}, \ldots, \frac{\partial J_o^1}{\partial x_{on}}\right] \tag{5.6}$$

$$\left(\frac{\partial J_o^1}{\partial x_o}\right)'\delta x \triangleq \sum_{i=1}^{n}\left(\left(\frac{\partial J_o^1}{\partial x_{oi}}\right)'\delta x_i\right) \tag{5.7}$$

$$\frac{\partial J_o^1}{\partial K} \triangleq \text{column}\left[\frac{\partial J_o^1}{\partial K_{11}}, \frac{\partial J_o^1}{\partial K_{12}}, \ldots, \frac{\partial J_o^1}{\partial K_{1n}}, \frac{\partial J_o^1}{\partial K_{21}}, \ldots, \frac{\partial J_o^1}{\partial K_{m,n-1}}, \frac{\partial J_o^1}{\partial K_{mn}}\right] \tag{5.8}$$

$$\left(\frac{\partial J_o^1}{\partial K}\right)'\delta K \triangleq \sum_{i=1}^{m}\sum_{j=1}^{n}\left(\frac{\partial J_o^1}{\partial K_{ij}}\delta K_{ij}\right) \tag{5.9}$$

If δK is chosen to minimize $J_o^1(x_o^1, K+\delta K)$ and δx to maximize $J_o^1(x_o^1+\delta x, K+\delta K)$, then δK must be in the direction opposite to $\partial J_o^1(x_o^1,K)/\partial K$ and δx_o in the same direction as $\partial J_o^1(x_o^1,K+\delta K)/\partial x_o$. Hence

$$\left(\frac{\partial J_o^1(x_o^1,K)}{\partial K}\right)'\delta K \leq o \tag{5.10}$$

and

$$\left(\frac{\partial J_o^1(x_o^1,K)}{\partial x_o}\right)'\delta x \geq o \tag{5.11}$$

In addition if

$$\left|\left(\frac{\partial J_o^1(x_o^1,K)}{\partial K}\right)'\delta K\right| \geq \left(\frac{\partial J_o^1(x_o^1,K)}{\partial x_o}\right)'\delta x + O(\Delta^2) \tag{5.12}$$

then

$$J_o^1(x_o^1+\delta x, K+\delta K) \leq J_o^1(x_o^1,K) \tag{5.13}$$

But $J_o^1(x_o^1,K)$ is the maximum of $J_o(x_o,K)$ with respect to x_o, which implies

that

$$\frac{\partial J_o^1(x_o^1,K)}{\partial x_o} = 0 \ . \tag{5.14}$$

Hence for a sufficiently small Δ, the inequalities (5.12) and (5.13) are true, unless $\partial J_o^1(x_o^1,K)/\partial K$ is also equal to zero, in which case (x_o^1,K) yields the desired solution.

Therefore if (5.1) is to be determined by performing a series of minimization and maximization operations, then in order for the process to converge, it is important that during each maximization operation the global (because of reasons stated earlier) maximum be found (which assures that the gradient of J_o with respect to x_o is zero) and during the minimization operation a modest change in K be made in the direction opposite to $\partial J_o/\partial K$.

5.2 Geometric Interpretation

In equation (5.1), for a given value of K, the numerator and the denominator, when equated to a constant, both represent ellipsoidal surfaces in an n-dimensional state space. Suppose

$$S_x = \left\{x_o \middle| x_o' \, P(t_o) x_o = 1\right\}. \tag{5.15a}$$

For a typical two dimensional case, the surfaces (ellipses) represented by

$$x_o' \, P(t_o) \, x_o = 1 \tag{5.15b}$$

and

$$x_o' \, R(K,t_o) \, x_o = \text{constant} \tag{5.16a}$$

are shown in figure 5.1. The dotted ellipse corresponds to (5.15b) and the ellipses drawn in solid lines represent

$$x_o' \, R(K,t_o) \, x_o = \lambda \tag{5.16b}$$

for various values of the constant $\lambda(\lambda_{i+1} > \lambda_i)$. Obviously the ellipse

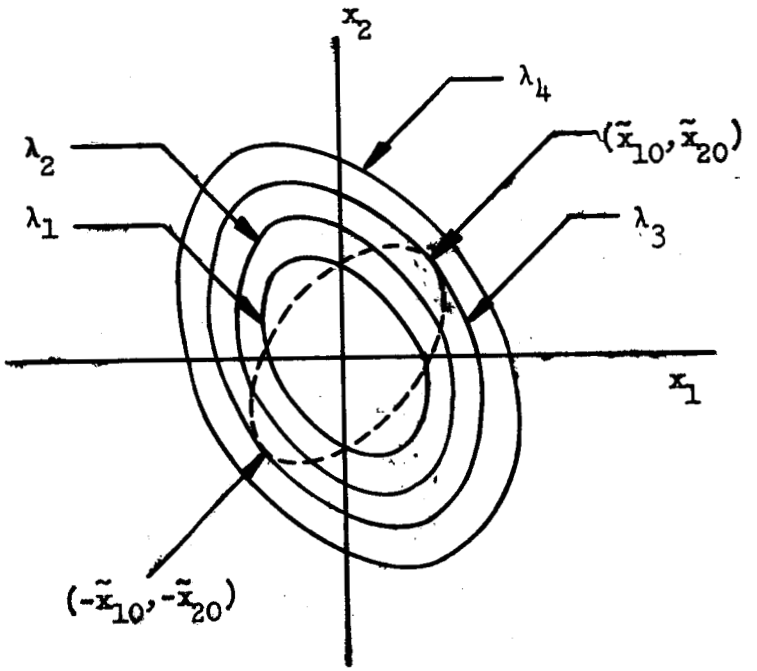

Figure 5.1 Geometric Interpretation of Quadratic Forms.

corresponding to $\lambda=\lambda_3$ is the largest that has a point in common with (5.15). Therefore for S_x defined by (5.15), λ_3 is the maximum value of J_o with respect to x_o. The points of tangency are the maximizing states $\pm\,\tilde{x}_o$. For a higher dimensional case it is conceivable that there are infinitely many points of tangency, which yield the same (global) maximum value of J_o. Of course if S_x is changed to

$$S_x = \left\{ x_o \,|\, x_o' \, P(t_o) x_o = \gamma \right\} \tag{5.17}$$

where γ is a constant, then the maximizing states are given by $\pm\sqrt{\gamma}\,\tilde{x}_o$. The global maximum of the ratio J_o, however, will remain the same. Therefore there is no loss of generality in assuming S_x to be constrained by

(5.15), even if it actually consists of the entire space E^n.

The geometric interpretation, though instructive, does not lead to a feasible method of computing the global maximum of J_o and the maximizing initial state. In the next section a simple method, based on the theory of quadratic forms, for computing the global maximum is presented.

5.3 Global Maximum

The matrix P in equation (5.2) is real, symmetric and positive definite. Therefore there exists an orthogonal matrix D_1 whose columns are the eigenvectors of P [15], such that

$$D_1' PD_1 = D_2 \tag{5.18}$$

and

$$D_1' = D_1^{-1} \tag{5.19}$$

where D_2 is a diagonal matrix whose diagonal elements (all positive) are the eigenvalues of P. If D_3 is a diagonal matrix such that

$$(D_3)^2 = D_2 \tag{5.20}$$

then

$$(D_1 D_3^{-1})' P(D_1 D_3^{-1}) = I \tag{5.21}$$

where I is the identity matrix. Note that D_3 is nonsingular since P is nonsingular. Let

$$D_1 D_3^{-1} = D_4 \tag{5.22}$$

and

$$x_o = D_4 y \tag{5.23}$$

Substituting (5.23) in (5.2) one gets

$$J_o(y,K) = \frac{y'Sy}{y'y} \tag{5.24}$$

and

$$\underset{x_o \epsilon S_x}{\text{Max}} \frac{x_o' R x_o}{x_o' P x_o} = \underset{y \epsilon S_y}{\text{Max}} \frac{y' S y}{y' y} \tag{5.25}$$

where

$$S = D_4' \, R \, D_4 \, . \tag{5.26}$$

With S_x defined in (5.15), S_y is given by

$$S_y = \{y \,|\, y'y = 1\} \, . \tag{5.27}$$

Now let D_5 be an orthogonal matrix whose columns are the eigenvectors of S, then

$$D_5' \, S D_5 = \Lambda, \text{ a diagonal matrix} \tag{5.28}$$

and

$$\underset{y \epsilon S_y}{\text{Max}} \frac{y' S y}{y' y} = \underset{z \epsilon S_z}{\text{Max}} (\lambda_1 z_1^2 + \lambda_2 z_2^2 + \ldots + \lambda_n z_n^2) \tag{5.29}$$

where

(i) $y = D_5 z$ (5.30a)

(ii) $S_z = \{z \,|\, z'z = 1\}$ (5.30b)

and

(iii) $\lambda_i, i = 1,2,\ldots,n$ are the diagonal elements of Λ and the eigenvalues of S.

If λ_m is the largest eigenvalue of S, then from equations (5.25) and (5.29) it is obvious that

$$\underset{x_o \epsilon S_x}{\text{Max}} \frac{x_o' R x_o}{x_o' P x_o} = \lambda_m . \tag{5.31}$$

And if $\tilde{x}_o$ is the maximizing vector, then

$$\tilde{x}_o = D_4 D_5 \tilde{z} \tag{5.32}$$

where

$$\tilde{z}_i = \delta_{im}, \; i = 1,2,\ldots,m,\ldots,n \; . \tag{5.33}$$

In other words

$$\tilde{x}_o = D_4 \, \tilde{y} \tag{5.34}$$

where $\tilde{y}$ is the eigenvector of S corresponding to its mth eigenvalue.

Thus the problem of finding the global maximum of J_o involves finding the eigenvalues and the eigenvectors of P and the largest eigenvalue and the corresponding eigenvector of S as defined in (5.26). Standard computer programs are available for computing the eigenvectors of a real symmetric matrix, so an algorithm for finding the transformation matrix D_4 as defined in (5.22) will not be discussed here. The same programs can be used to find the largest eigenvalue of S. However, as stipulated in section 5.1, this needs to be done repeatedly. Therefore it is desirable to have an algorithm which specifically finds only the largest eigenvalue and the corresponding eigenvector of a real symmetric matrix. Such an algorithm based on Faddeeva's [16] presentation is given below.

5.4 Determination of the Largest Eigenvalue of a Symmetric Matrix

Let $\lambda_1, \lambda_2, \ldots, \lambda_n$ be the eigenvalues, not necessarily all distinct, of the matrix S, arranged in the order of diminishing magnitude. Since S is symmetric, there exists a set of eigenvectors (normalized to unit length) $E_1, E_2, \ldots, E_n$, such that an arbitrary vector V_o can be expressed as a linear combination of E_i, $i=1,2,\ldots,n$. Let

$$V_o = \gamma_1 E_1 + \gamma_2 E_2 + \ldots + \gamma_n E_n \tag{5.35}$$

where the numbers γ_i are constants, some of them perhaps zero.

Form the sequence of vectors

$$\left.\begin{aligned} Y_1 &= SV_o \\ Y_2 &= S^2V_o \\ &\vdots \\ Y_\ell &= S^\ell V_o \\ &\vdots \end{aligned}\right\} \qquad (5.36)$$

Y_ℓ will be referred to as the ℓth iterate of vector V_o by the matrix S. Let

$$Y_\ell = \text{column}[y_{1\ell}, y_{2\ell}, \ldots, y_{i\ell}, \ldots, y_{n\ell}] \qquad (5.37)$$

and

$$E_j = \text{column}[e_{1j}, e_{2j}, \ldots, e_{ij}, \ldots, e_{nj}] . \qquad (5.38)$$

Since

$$SE_j = \lambda_j E_j , \qquad (5.39)$$

it follows that

$$S^\ell V_o = \gamma_1\lambda_1^\ell E_1 + \gamma_2\lambda_2^\ell E_2 + \ldots + \gamma_n\lambda_n^\ell E_n \qquad (5.40)$$

or

$$y_{i\ell} = \gamma_1 e_{i1}\lambda_1^\ell + \gamma_2 e_{i2}\lambda_2^\ell + \ldots + \gamma_n e_{in}\lambda_n^\ell . \qquad (5.41)$$

Thus any component of the ℓth iterate of V_o depends linearly on λ_1^ℓ, λ_2^ℓ, ..., λ_n^ℓ. In particular if $\gamma_1 \neq o$, then for at least one component of Y_ℓ, the coefficient of λ_1^ℓ in the equation (5.41) is nonzero. If $y_{k\ell}$ is such a component, then one can write

$$y_{k\ell} = c_{k1}\lambda_1^\ell + c_{k2}\lambda_2^\ell + \ldots + c_{kn}\lambda_n^\ell \qquad (5.42)$$

where

$$c_{kj} = \gamma_j e_{kj}, \; j=1,2,\ldots,n, \text{ and } c_{k1} \neq o . \qquad (5.43)$$

Note that the coefficient c_{kj} is not a function of the index ℓ.

Now consider the following two cases:

1. $\lambda_1 > \lambda_2$

2. $\lambda_1 = \lambda_2 = \ldots = \lambda_r,\ \lambda_r > \lambda_{r+1}$.

In the first case

$$\frac{y_{k,\ell+1}}{y_{k\ell}} = \frac{c_{k1}\lambda_1^{\ell+1}+c_{k2}\lambda_2^{\ell+2}+\ldots+c_{kn}\lambda_n^{\ell+1}}{c_{k1}\lambda_1^{\ell}+c_{k2}\lambda_2^{\ell}+\ldots+c_{kn}\lambda_n^{\ell}}$$

$$= \lambda_1 \frac{1+\left(\frac{c_{k2}}{c_{k1}}\right)\left(\frac{\lambda_2}{\lambda_1}\right)^{\ell+1}+\ldots+\left(\frac{c_{kn}}{c_{k1}}\right)\left(\frac{\lambda_n}{\lambda_1}\right)^{\ell+1}}{1+\left(\frac{c_{k2}}{c_{k1}}\right)\left(\frac{\lambda_2}{\lambda_1}\right)^{\ell}+\ldots+\left(\frac{c_{kn}}{c_{k1}}\right)\left(\frac{\lambda_n}{\lambda_1}\right)^{\ell}} \tag{5.44}$$

But $\left(\frac{\lambda_i}{\lambda_1}\right) < 1$, $i=2,3,\ldots,n$, therefore

$$\lim_{\ell\to\infty} \frac{y_{k,\ell+1}}{y_{k\ell}} = \lambda_1 \ . \tag{5.45}$$

If the largest eigenvalue is of multiplicity r, then from equation (5.42)

$$y_{k\ell} = (c_{k1}+c_{k2}+\ldots+c_{kr})\lambda_1^{\ell}+c_{k,r+1}\lambda_{r+1}^{\ell}+\ldots+c_{kn}\lambda_n^{\ell}. \tag{5.46}$$

Hence in this case also, the quotient $(y_{k,\ell+1})/(y_{k,\ell})$ approaches λ_1 as ℓ approaches ∞. Since S is a positive definite matrix, the possibility of λ_2 being equal to $(-\lambda_1)$ need not be considered here.

Above it is assumed that the initial guess V_o is such that $\gamma_1 \neq 0$. If $\gamma_1 = 0$, and $\gamma_2 \neq 0$, then at the first few steps of iteration the predominant term will be that dependent on λ_2. Then due to round off errors on the computer the term dependent on λ_1 will appear as a number which will grow at a rate dependent on the ratio (λ_1/λ_2). If the rate of convergence is very slow, it is advisable to change the initial guess on V_o. In practice, the probability of picking V_o such that $\gamma_1 = 0$, is very small.

The convergence of the iterative process can be examined very easily. It is highly probable that more than one component of E_1 are nonzero. In this case the ratio $(y_{j,\ell+1})/(y_{j\ell})$ can be compared for all j such that $e_{j1} \neq 0$. If the difference between any two values of λ_1 thus found is with in a pre-specified small number, then it is an indication of convergence. Obviously the last iterate $Y_{\ell+1}$ is the corresponding eigenvector.

The rate of convergence can be enhanced in two different ways. First by forming the sequence of iterates

$$SV_o,\ S^2V_o,\ S^4V_o,\ S^8V_o, \ldots \tag{5.47}$$

instead of the sequence (5.36), and then by forming the scalar product (Y_ℓ, Y_ℓ).

$$\begin{aligned}(Y_\ell, Y_\ell) &= (S^\ell V_o, S^\ell V_o) \\ &= (V_o, (S^\ell)' S^\ell V_o) \\ &= (V_o, S^{2\ell} V_o)\end{aligned} \tag{5.48}$$

From equations (5.35), (5.40) and (5.48) one gets

$$(V_o, S^{2\ell}V_o) = (\gamma_1 E_1 + \gamma_2 E_2 + \ldots + \gamma_n E_n, \gamma_1 \lambda_1^{2\ell} E_1 + \gamma_2 \lambda_2^{2\ell} E_2 + \ldots + \gamma_n \lambda_n^{2\ell} E_n) \tag{5.49}$$

Since the eigenvectors are orthogonal to each other, and normalized to unity in magnitude, therefore

$$(Y_\ell, Y_\ell) = \gamma_1 \lambda_1^{2\ell} + \gamma_2 \lambda_2^{2\ell} + \ldots + \gamma_n \lambda_n^{2\ell} \tag{5.50}$$

Similarly

$$(Y_{\ell+1}, Y_\ell) = \gamma_1 \lambda_1^{2\ell+1} + \gamma_2 \lambda_2^{2\ell+1} + \ldots + \gamma_n \lambda_n^{2\ell+1} \tag{5.51}$$

Therefore

$$\frac{(Y_{\ell+1}, Y_\ell)}{(Y_\ell, Y_\ell)} = \lambda_1 \left[\frac{1 + O\left(\frac{\lambda_2}{\lambda_1}\right)^{2\ell+1}}{1 + O\left(\frac{\lambda_2}{\lambda_1}\right)^{2\ell}} \right] \tag{5.52}$$

If two successive values of the ratio thus found differ by an amount less than a small prespecified number, then the convergence is accomplished.

The saving in the number of multiplications because of using (5.47) depends very much on the index 'ℓ' required for convergence. If ℓ is 16, then the saving is about 50%. For greater values of ℓ, the saving is much greater. The use of the concept of scalar product reduces the number of multiplications by an additional 50%.

During the computations, it is desirable to normalize the iterate $S^{\ell}V_o$ to avoid undesirable growth of its components.

5.5 Minimization in the Control Parameter Space

After the global maximum of $J_o(=J_o'(\tilde{x}_{o,k}))$ with respect to x_o is found, the next step is to move in the opposite direction of the gradient of J_o' with respect to K. Since $P(t_o)$ is not a function of K, $\partial J_o'/\partial K$ depends only on $\partial R(K,t_o)/\partial K$, or on $\partial \hat{R}(K,t_o)/\partial K$, when not all the states are accessible. Let

$$\frac{\partial R(K,t_o)}{\partial K} = \left[\frac{\partial r_{ij}}{\partial K}\right] \tag{5.53}$$

where r_{ij} is an element of R and $\frac{\partial r_{ij}}{\partial K}$ is defined in a manner analogous to $\frac{\partial J_o'}{\partial K}$ in (5.8).

First consider the case when all the states are accessible and T is finite. From equation (4.19)

$$\dot{R} + \tilde{A}'R + R\tilde{A} = Q \tag{5.54a}$$

$$R(T) = Q_2 \tag{5.54b}$$

where

$$\tilde{A} = (A+BK) \tag{5.55a}$$

and

$$Q = -[Q_1 + K'K] \tag{5.55b}$$

Since R is symmetric, there are only $n(n+1)/2$ elements to be determined. Rearrange these $n(n+1)/2$ elements of R and the corresponding elements of Q such that

$$\Gamma = \text{column}[r_{11}, r_{12}, \ldots, r_{1n}, r_{22}, r_{23}, \ldots, r_{2n}, \ldots, r_{n-1,n-1}, r_{n-1,n}, r_{nn}] \tag{5.56}$$

$$W = \text{column}[q_{11}, q_{12}, \ldots, q_{1n}, q_{22}, q_{23}, \ldots, q_{2n}, \ldots, q_{n-1,n-1}, q_{n-1,n}, q_{nn}] \tag{5.57}$$

then equation (5.54a) can be written as

$$\dot{\Gamma} + G\Gamma = W \tag{5.59}$$

where G is an $(\frac{n(n+1)}{2} \times \frac{n(n+1)}{2})$ matrix whose elements are functions of the elements of $\tilde{A}$. The boundary condition on $\Gamma(K,T)$ is obtained from (5.54b) in a similar fashion. Thus $\Gamma(K,t_o)$ can be found. Now from (5.59)

$$\frac{\partial\dot{\Gamma}}{\partial K} + G\frac{\partial\Gamma}{\partial K} + \frac{\partial G}{\partial K}\Gamma = \frac{\partial W}{\partial K} \tag{5.60}$$

or

$$\frac{\partial\dot{\Gamma}}{\partial K} + G\frac{\partial\Gamma}{\partial K} = \left(\frac{\partial W}{\partial K} - \frac{\partial G}{\partial K}\Gamma\right) \tag{5.61}$$

and from (5.54b) and (5.56)

$$\frac{\partial\Gamma(K,T)}{\partial K} = 0 \tag{5.62}$$

Equation (5.61) can be solved by integration backward in time. Rearranging the elements of $\partial\Gamma(K,t_o)/\partial K$, $\partial R(K,t_o)/\partial K$ is obtained. Thus $\partial J_o^{\dagger}/\partial K$ is determined.

If $T = \infty$ and $Q_2 = [0]$, R is a constant matrix in which case Γ and $\frac{\partial\Gamma}{\partial K}$ can be found by matrix inverstion. From equations (5.59) and (5.61) one gets

$$\Gamma = G^{-1}W \tag{5.63}$$

and

$$\frac{\partial \Gamma}{\partial K} = G^{-1}\left(\frac{\partial W}{\partial K} - \frac{\partial G}{\partial K}\Gamma\right) \tag{5.64}$$

If the SOC system is stable, then G is nonsingular. In general, G is a sparse matrix with only a few nonzero elements, and its inverse can be found rather fast and accurately on the digital computer.

5.6 Plant with Inaccessible States

It was mentioned earlier that the parameters τ_i(or α_i) appearing in the denominators of the transfer function of the SOC, when not all the states are accessible, will be chosen arbitrarily. Nevertheless their choice is not entirely arbitrary. If it were, for instance, one could pick all $\tau_i = 0$, then the problem of inaccessible states is solved by differentiating the accessible states. This, however, can not be done in practice without getting into some noise problems.

The basic criterion in choosing τ_i should be the stability of the system. But, very often, this consideration alone does not uniquely determine τ_i. As a secondary consideration one can look into the bandwidth requirements on the controller from the point of view of measurement noise or load disturbances in the system. Intuitively speaking if the τ_i are small the performance of the SOC system will be closer to the optimal in the noise free case. Instrumentation and noise considerations usually require a larger value for τ_i. Hence a compromise should be sought. Experience in designing control systems by classical methods would be of great help in selecting the τ_i.

Once the τ_i are chosen, $\partial J^1_o/\partial K$ can be determined from $\frac{\partial \hat{R}}{\partial K}$ in a similar fashion as discussed above.

5.7 SOC for a Non-autonomous System

In Chapter IV, for $v \neq 0$, and $p = n$, it was shown that

$$J_o = \frac{J_2}{J_1} = \frac{x_o'Rx_o + \tilde{g}'x_o + \tilde{f}}{x_o'Px_o + g'x_o + f} \tag{5.65}$$

The computational method for finding the global maximum discussed above does not apply to the maximization of J_o in (5.65). As a matter of fact, there seems to be no direct method of finding the global maximum in this case. Heuristically speaking one can take one of the following two points of view in the presence of forcing functions.

1. If the contribution to the performance indices (J_1 and J_2) due to the forcing function is small compared to that due to the initial conditions on x, neglect the forcing function in determining the worst initial state.
2. If on the contrary the forcing function predominates, assume the initial states are zero, and proceed with the minimization.

For minimization, as before, one would move in the negative direction of $\frac{\partial J_o}{\partial K}$. The gradient of J_o with respect to K depends not only on $\frac{\partial R}{\partial K}$, but also on $\frac{\partial \tilde{g}}{\partial K}$ and $\frac{\partial \tilde{f}}{\partial K}$, where $\frac{\partial \tilde{g}}{\partial K}$ and $\frac{\partial \tilde{f}}{\partial K}$ are defined in a manner similar to $\frac{\partial R}{\partial K}$, and can be obtained by integrating the following equations backward in time.

$$\frac{d}{dt}\left(\frac{\partial \tilde{g}}{\partial K}\right) + \frac{\partial}{\partial K}(A+BK)'\,\tilde{g} + (A+BK)'\,\frac{\partial \tilde{g}}{\partial K} + 2\,\frac{\partial R}{\partial K}\,Cv = 0 \tag{5.66}$$

$$\frac{d}{dt}\left(\frac{\partial \tilde{f}}{\partial K}\right) + v'C'\,\frac{\partial \tilde{g}}{\partial K} = 0 \tag{5.67}$$

$$\frac{\partial \tilde{g}}{\partial K} = 0 \quad , \quad \frac{\partial \tilde{f}}{\partial K} = 0 \tag{5.68}$$

The case when $p \neq n$, that is when not all the states are accessible, can be treated similarly.

5.8 Application

In order to illustrate the computational feasibility of the above numerical methods and to examine the nature of the resulting controller, a few examples are considered here. A different aspect is brought forth with each example. The pertinent numerical data with a commentary is tabulated on page 54. The graphs on pages 56 to 63 show the response under worst initial states.

Generally speaking for a time-invariant plant with infinite time performance index, the SOC parameters approach the optimal feedback coefficients as the time constants τ_i associated with the SOC approach zero. In the case of finite time performance index with all states accessible, the SOC parameters are approximately equal to the initial value of the optimal control parameters, when the problem time is much larger than the smallest time constant of the system. No general conclusions of this nature can be made for time-varying systems.

5.9 Comments on the Problems in Computation

The problems of initial guess and step size are characteristic of all gradient methods, whether used for minimization or maximization of a functional. As one would expect they become more serious in the min-max operation. A discussion of these and other problems of similar nature is made in this section.

Consider first the choice of initial guess. For maximization, the

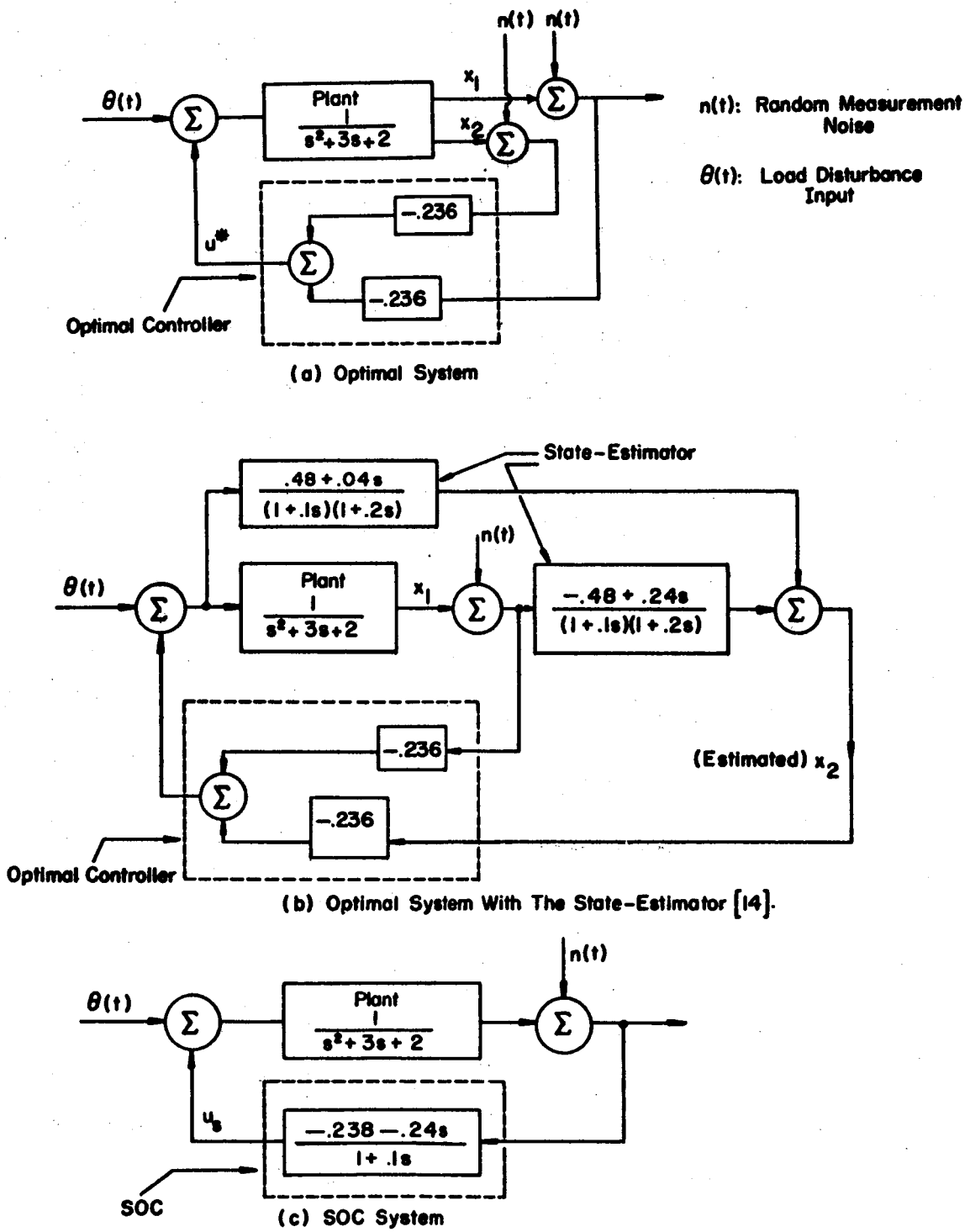

Figure 5.2 Block Diagram For The System In Example I.

TABLE 5.1 NUMERICAL DATA FOR THE EXAMPLES

Example	Plant	Performance Index (Primary)	$u^*(t)$	$u_s(s)$	J_o^*	S_x	Remarks
1	$\dot{x}_1=x_2$ $\dot{x}_2=-2x_1-3x_2+u$	$\int_0^\infty (x_1^2+x_2^2+u^2)dt$	$k_1^*x_1+k_2^*x_2$ $k_1^*=-.236$ $k_2^*=-.236$	$\frac{k_1+k_2s}{1+\tau_1 s}x_1$ $k_1=-.238$ $k_2=-.24$ $\tau_1=0.1$	1.0122	$x_o'P^*x_o=1$	This is one of the examples considered in White [14] to determine the state-estimator network. Figure 5.2 shows: i) Optimal system when both states are accessible, ii) Optimal system with state estimator to compute x_2 and (iii) SOC system. The simplicity of the SOC is obvious (see page 53). Figures 5.3, 5.4 and 5.5 respectively illustrate the response of the optimal and the specific optimal systems under worst initial conditions for the following three cases: i) No noise or disturbance, ii) Load disturbances (step input), iii) Measurement noise (gaussian with probability distribution $p(\theta)=\sqrt{\frac{1}{2\pi}}\,e^{\frac{-\theta^2}{2}}$, $\lvert\theta\rvert \le 2^{15}$). In all these cases, there is negligible difference between the optimal and the specific optimal solutions.
2	$\dot{x}_1=x_2$ $\dot{x}_2=-x_2+u$	$\int_0^\infty (x_1^2+x_2^2+u^2)dt$	$k_1^*x_1+k_2^*x_2$ $k_1^*=-1$ $k_2^*=-1$	$\frac{k_1+k_2s}{1+\tau_1 s}x_1$ $k_1=-.737$ $k_2=-.91$ $\tau_1=0.1$	1.0787	$x_o'P^*x_o=1$	Exceptionally close resemblance was observed between the optimal and specific optimal solutions with last example. This is by no means 'typical', as this example demonstrates (figure 5.6).
3a	$\dot{x}_1=x_2$ $\dot{x}_2=u$	$\int_0^5 (x_1^2+u^2)dt$	$k_1^*(t)x_1+k_2^*(t)x_2$ $k_1^*(o)=-.995$ $k_2^*(o)=-1.406$	$k_1x_1+k_2x_2$ $k_1=-.999$ $k_2=-1.406$	1.0051	$x_o'P^*(o)x_o=1$	$k_1^*(t)$, $k_2^*(t)$ indicate that the optimal feed-back coefficients are functions of time. k_1 and k_2 are almost equal to $k_1^*(o)$ and $k_2^*(o)$ respectively. This is because of the relatively large problem time (5 secs.). Figure 5.7 illustrates the optimal and the specific optimal solutions.
3b	Same as 3a	$\int_0^2 (x_1^2+u^2)dt$	$k_1^*(t)x_1+k_2^*(t)x_2$ $k_1^*(o)=-.996$ $k_2^*(o)=-1.207$	$k_1x_1+k_2x_2$ $k_1=-.2977$ $k_2=-.5791$	1.196	$x_o'P^*(o)x_o=1$	Here, in contrast to example 3a, the problem time is only 2 seconds. Note that the plant is open loop unstable. The response of the SOC system is vastly different from that of the optimal (figure 5.8). Evidently in this particular case it is not desirable to freeze the parameters.

Table 5.1 (cont'd.)

Example	Plant	Performance Index (Primary)	$u^*(t)$	$u_s(s)$	J_o^*	S_x	Remarks
4	$\dot{x}_1=x_2$ $\dot{x}_2=-2x_1-3x_2+u$	$\int_0^1 (x_1^2+x_2^2+u^2)dt$	$k_1^*(t)x_1+k_2^*(t)x_2$ $k_1^*=-.10495$ $k_2^*=-.18605$	$\frac{k_1+k_2 s}{1+\tau_1 s}x_1$ $k_1=-.0504$ $k_2=-.1784$ $\tau_1=0.05$	1.0051	$x_o'P^*(o)x_o=1$	This example which is taken from Agarwal [7] was discussed in Chapter III. The results are given here for comparison. Note the difference in the value of k_2 ($b_2=k_1+\tau k_2$ -- see page 15).
5	$\dot{x}_1=x_2$ $\dot{x}_2=-3x_1-x_2+u$	$\int_0^1 (x_1^2+x_2^2+u^2)dt$	$k_1^*(t)x_1+k_2^*(t)x_2$ $k_1^*(o)=-.162$ $k_2^*(o)=-.525$	$k_1x_1+k_2x_2$ $k_1=-.152$ $k_2=-.51$	1.0007 $J_2-J_1^*=.0025$ (corresponding to $x_o'x_o=4$)	$x'P^*(o)x=1$	A solution to this example is reported in Koivuniemi [10]. According to this solution, for $x_o'x_o=4$, the worst initial states are $x_1(o)=-1.71$, $x_2(o)=1.04$, and $k_1=-.69$, $k_2=-.76$, $J_o^*=1.065$ and $(J_2-J_1^*)=0.21$. Improvement in the results as given in the adjoining columns speaks for itself. The worst initial states corresponding to the improved solution are $x_1(o)=-1.043$ and $x_2(o)=-1.707$ (normalized to $x_o'x_o=4$).
6a	$\dot{x}_1=x_2$ $m(t)\dot{x}_2=u$ $m(t)=\frac{4.5-t}{4.5}$	$\int_0^3 (x_1^2+u^2)dt$	$k_1^*(t)x_1+k_2^*(t)x_2$ $k_1^*(o)=-.9046$ $k_2^*(o)=-1.18$	$k_1x_1+k_2x_2$ $k_1=-.855$ $k_2=-.96$	1.0237	$x_o'P^*x_o=4$	As a last example a time varying system is considered; m(t), which may be thought of as mass, is changing from 1 to 1/3 over a period of 3 seconds. System response under worst initial states is illustrated by figure 5.9.
6b	Same as above	Same as above	Same as above	$\frac{k_1+k_2 s}{1+\tau_1 s}x_1$ $k_1=-.7305$ $k_2=-1.081$ $\tau_1=0.05$	1.0563	$x_o'P^*x_o=4$	Here it is assumed that only one state is accessible. With $\tau_1=0.05$, the system performance is within 5.63% of the optimal. Corresponding trajectories are shown in figure 5.10. The time varying nature of the problem does not cause any difficulties in computations either here or in example 6a.

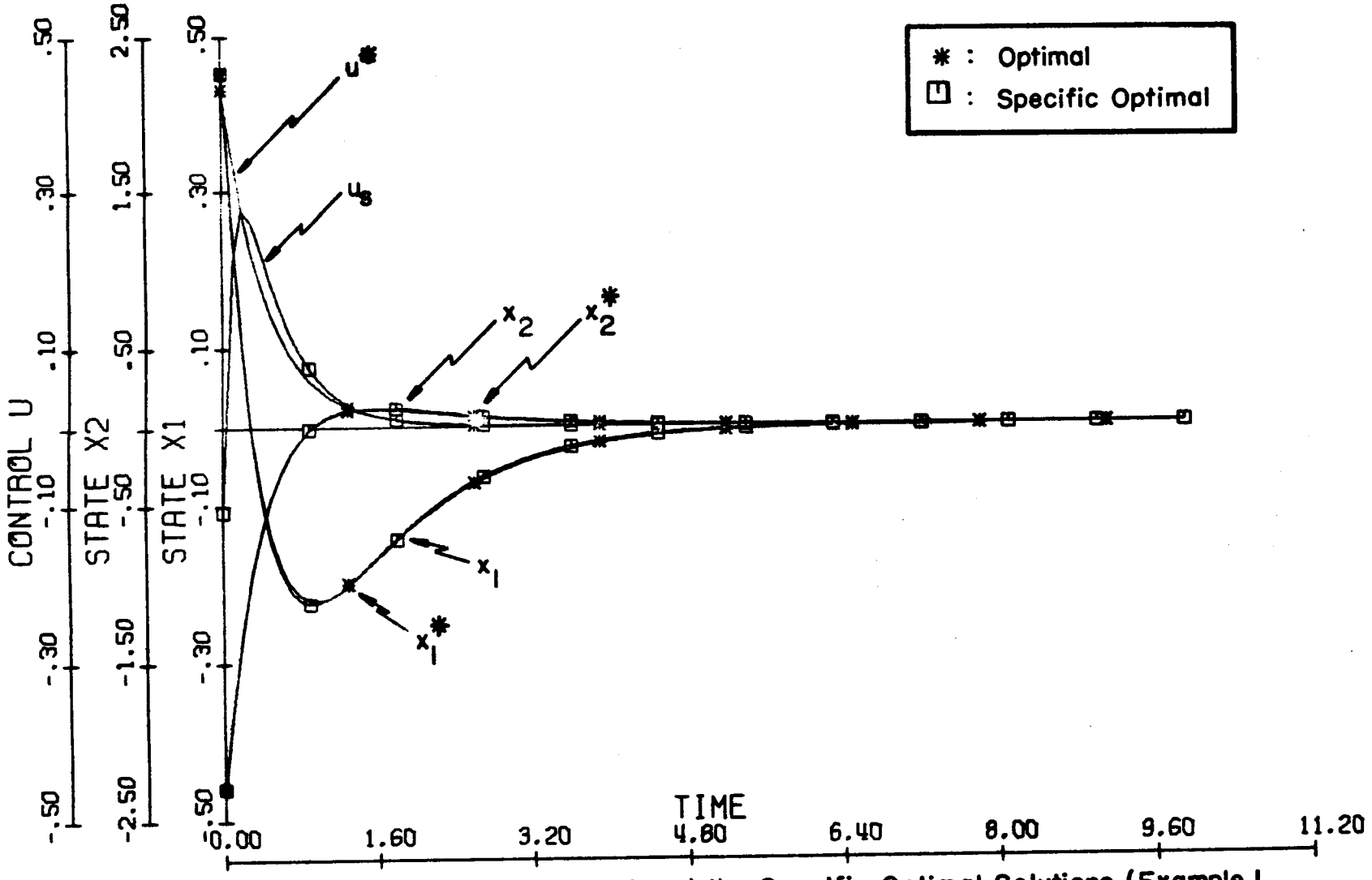

Figure 5.3 Comparison of the Optimal and the Specific Optimal Solutions (Example I, Without Noise or Disturbance).

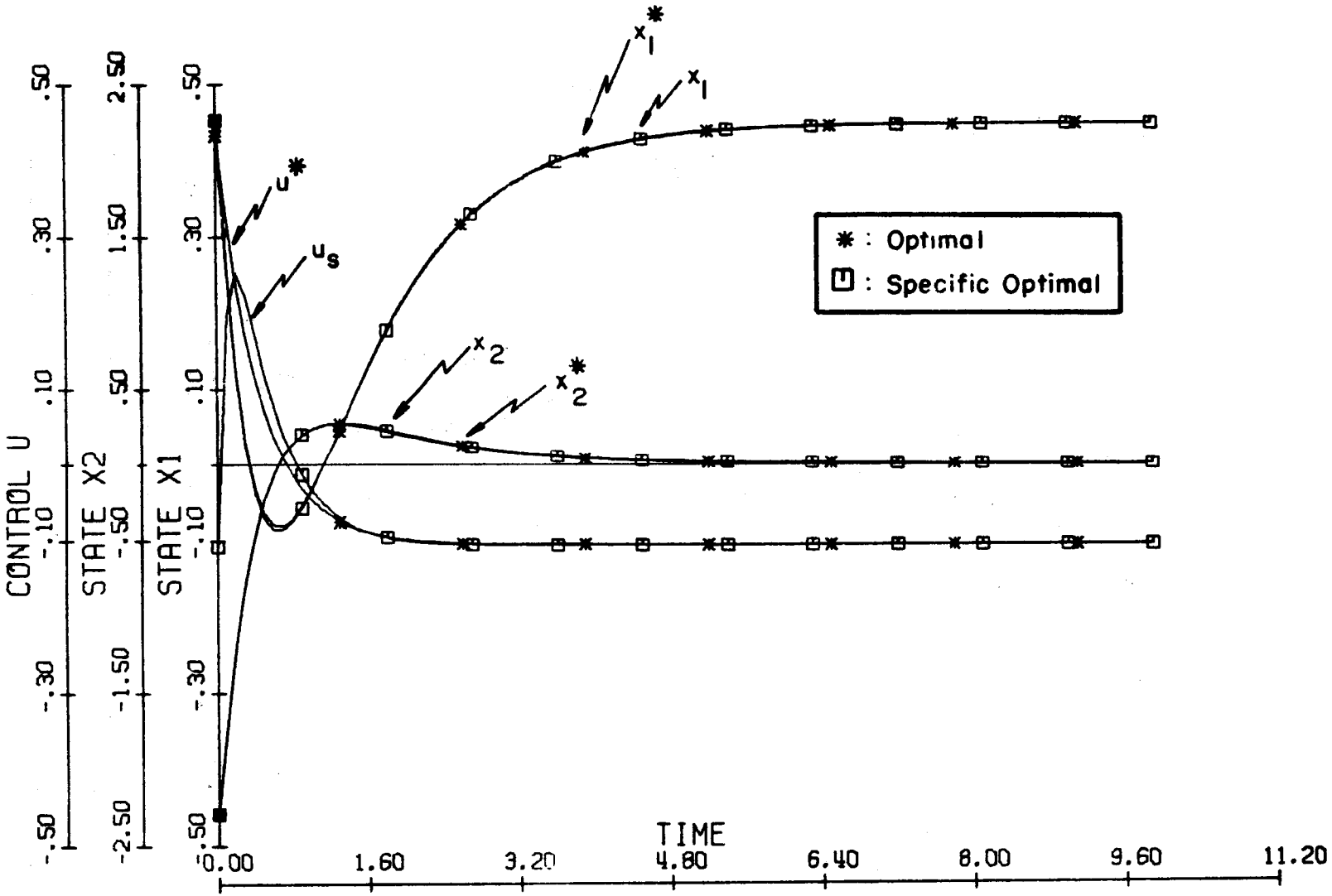

Figure 5.4 Comparison of the Optimal and the Specific Optimal Solutions (Example I, With Load Disturbance).

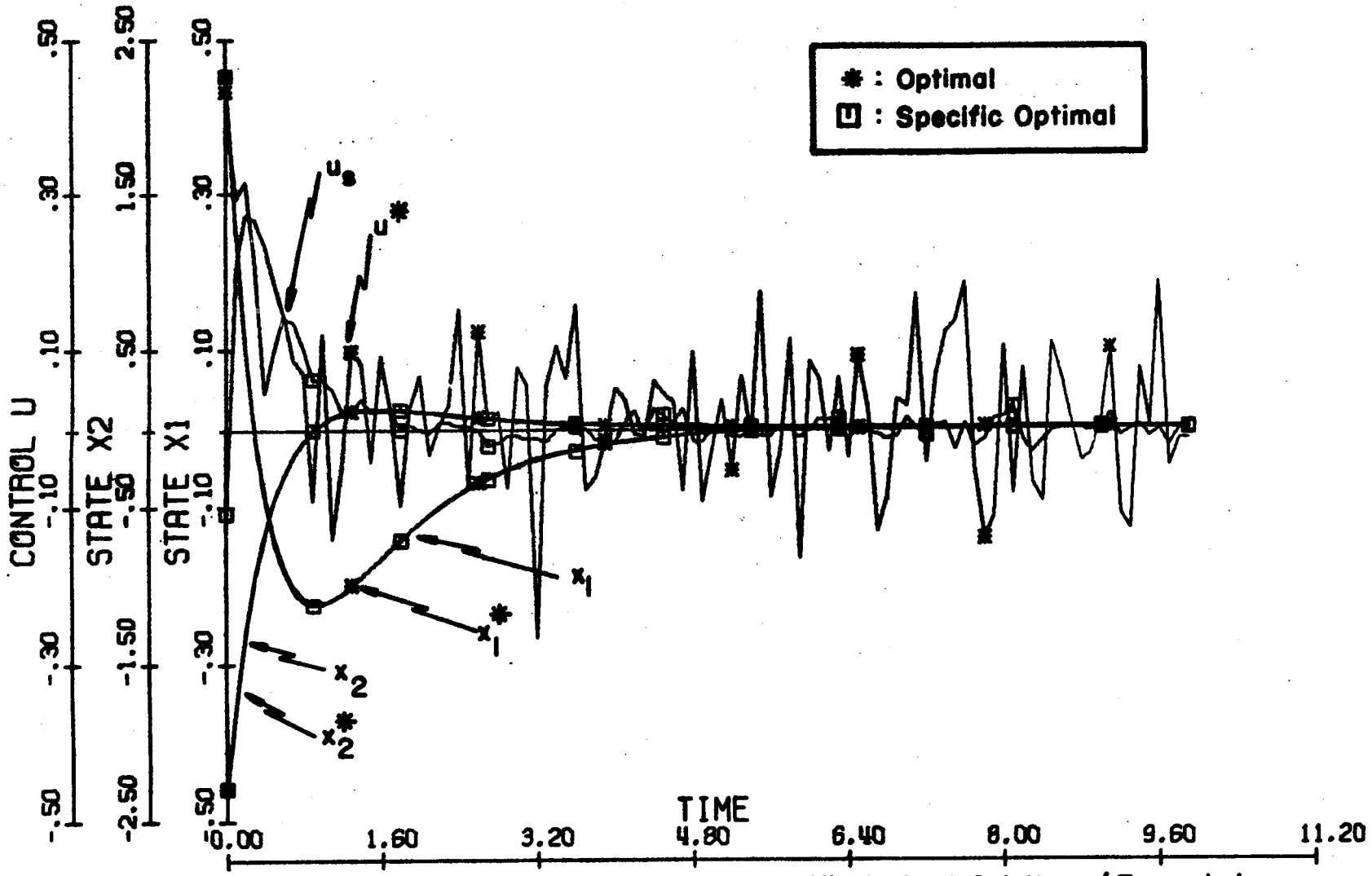

Figure 5.5 Comparison of the Optimal and the Specific Optimal Solutions (Example I, With Measurement Noise).

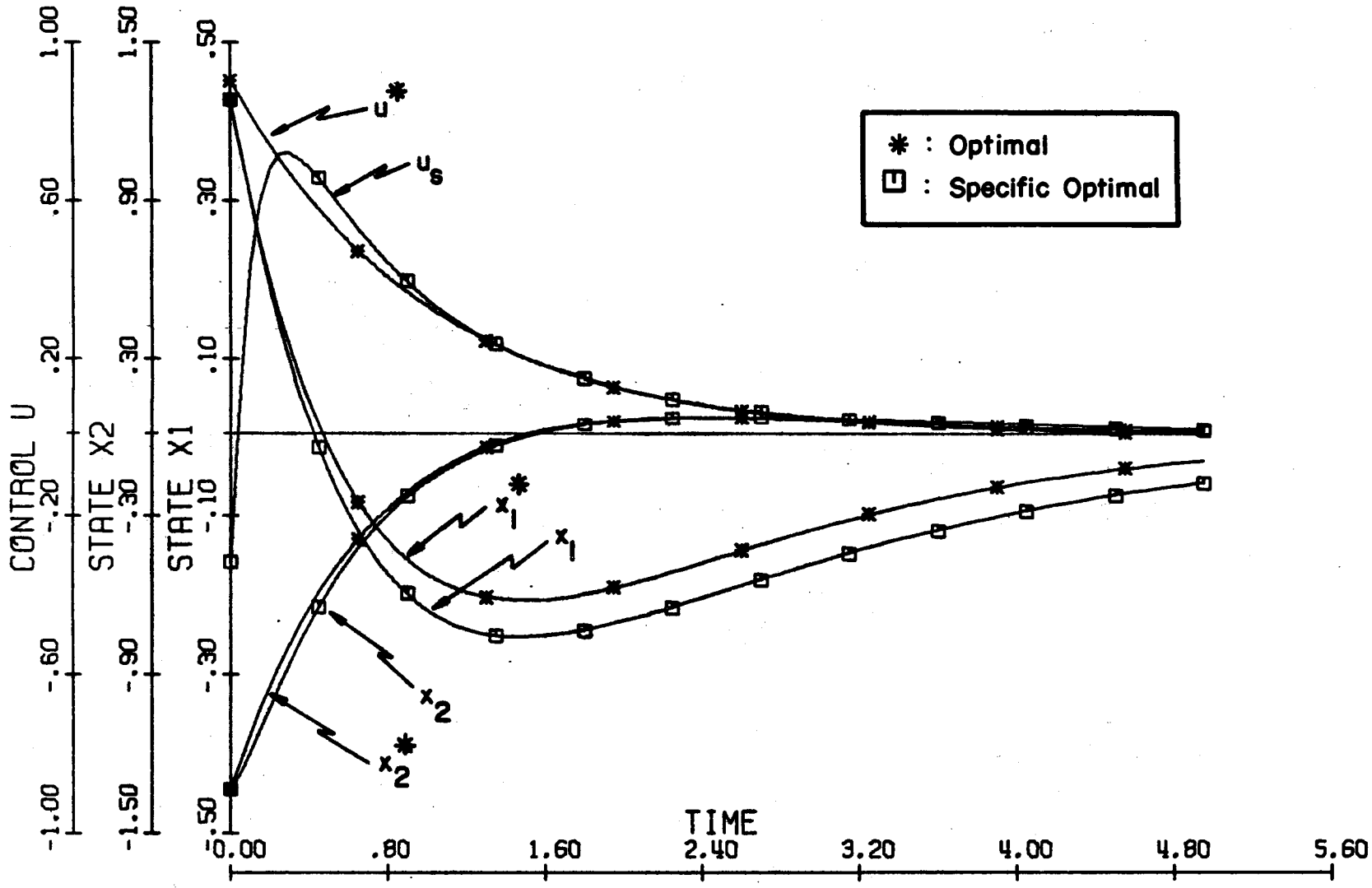

Figure 5.6 Comparison of the Optimal and the Specific Optimal Solutions (Example 2).

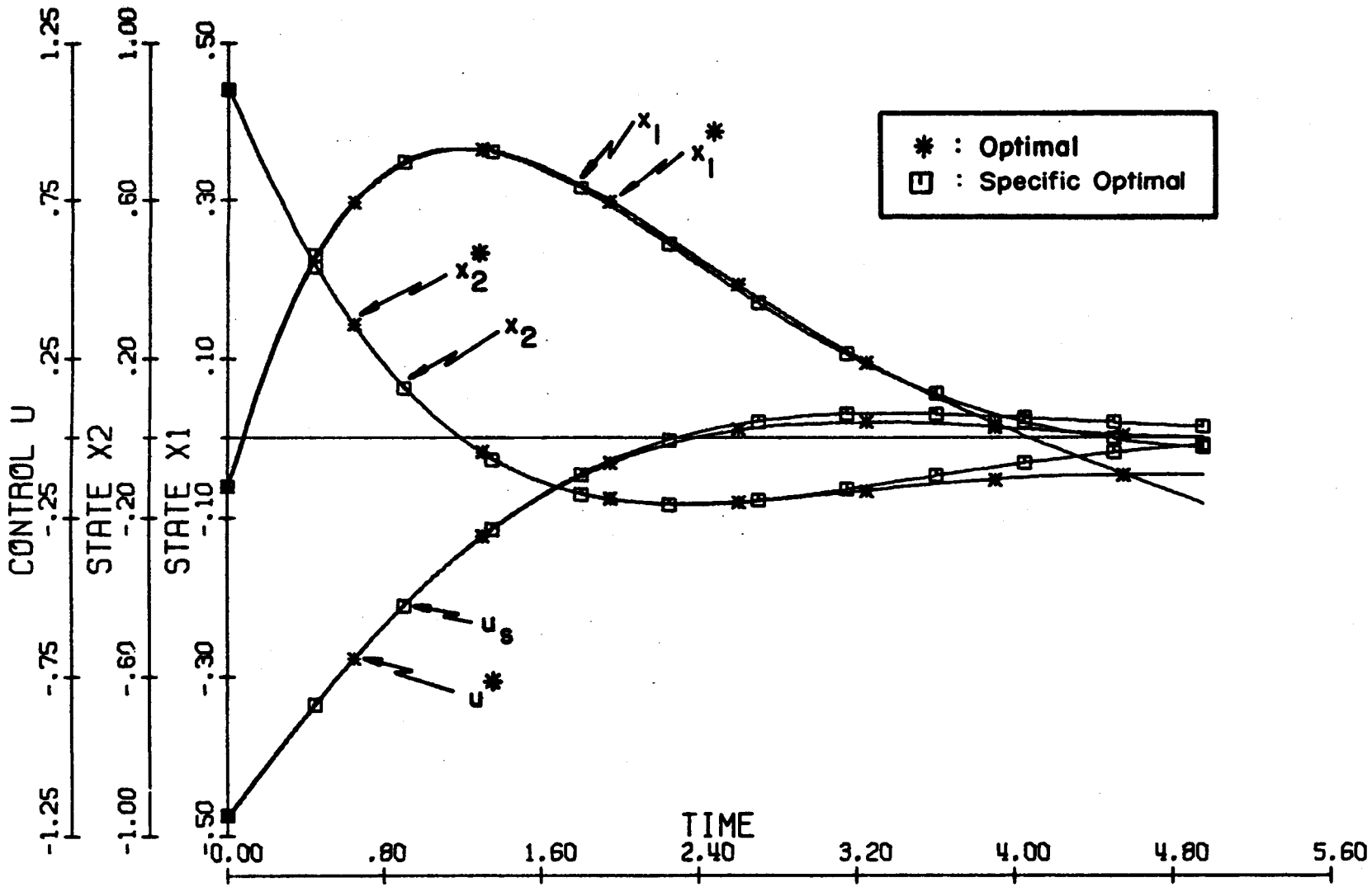

Figure 5.7 Comparison of the Optimal and the Specific Optimal Solutions (Example 3a).

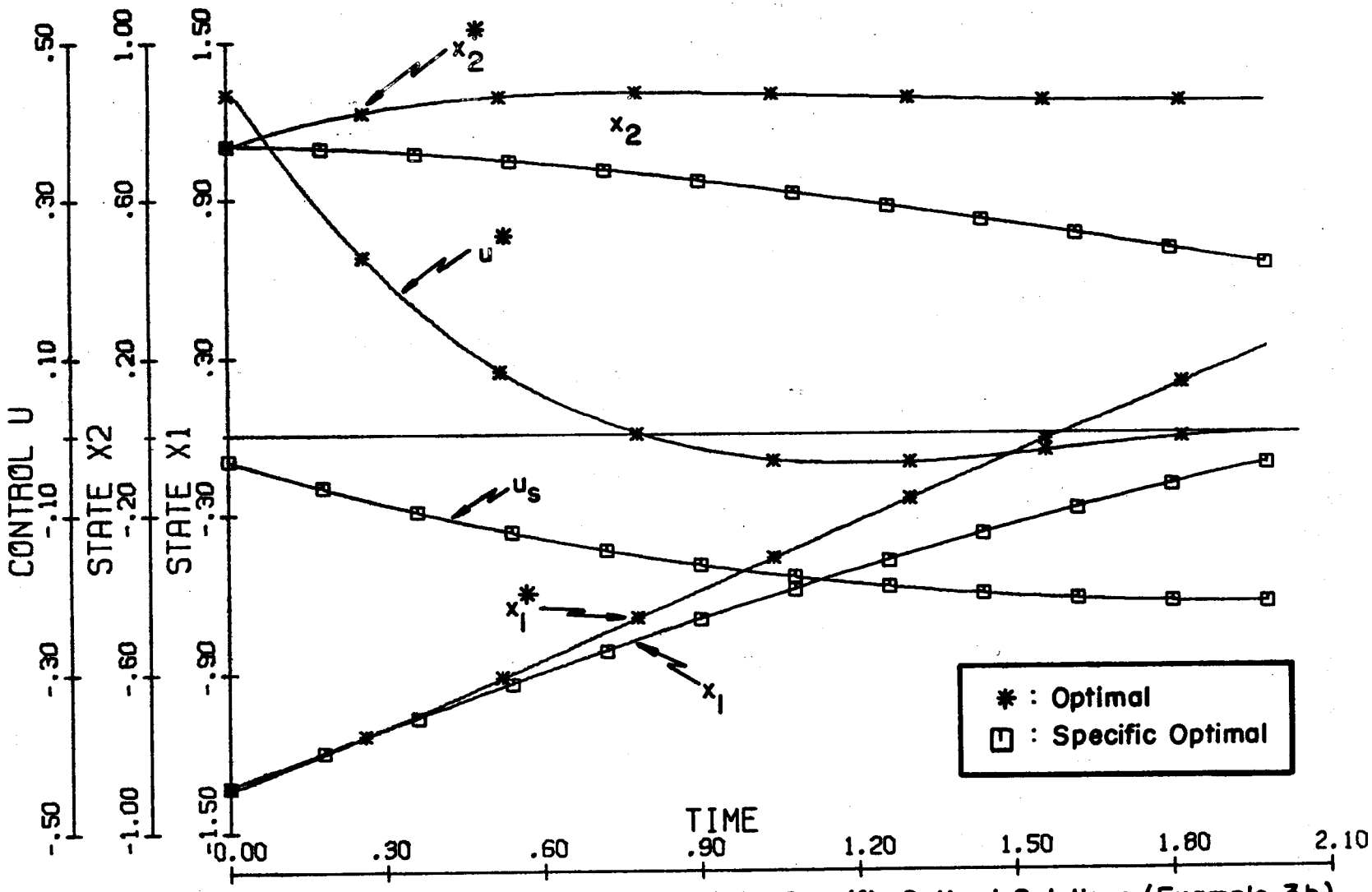

Figure 5.8 Comparison of the Optimal and the Specific Optimal Solutions (Example 3b).

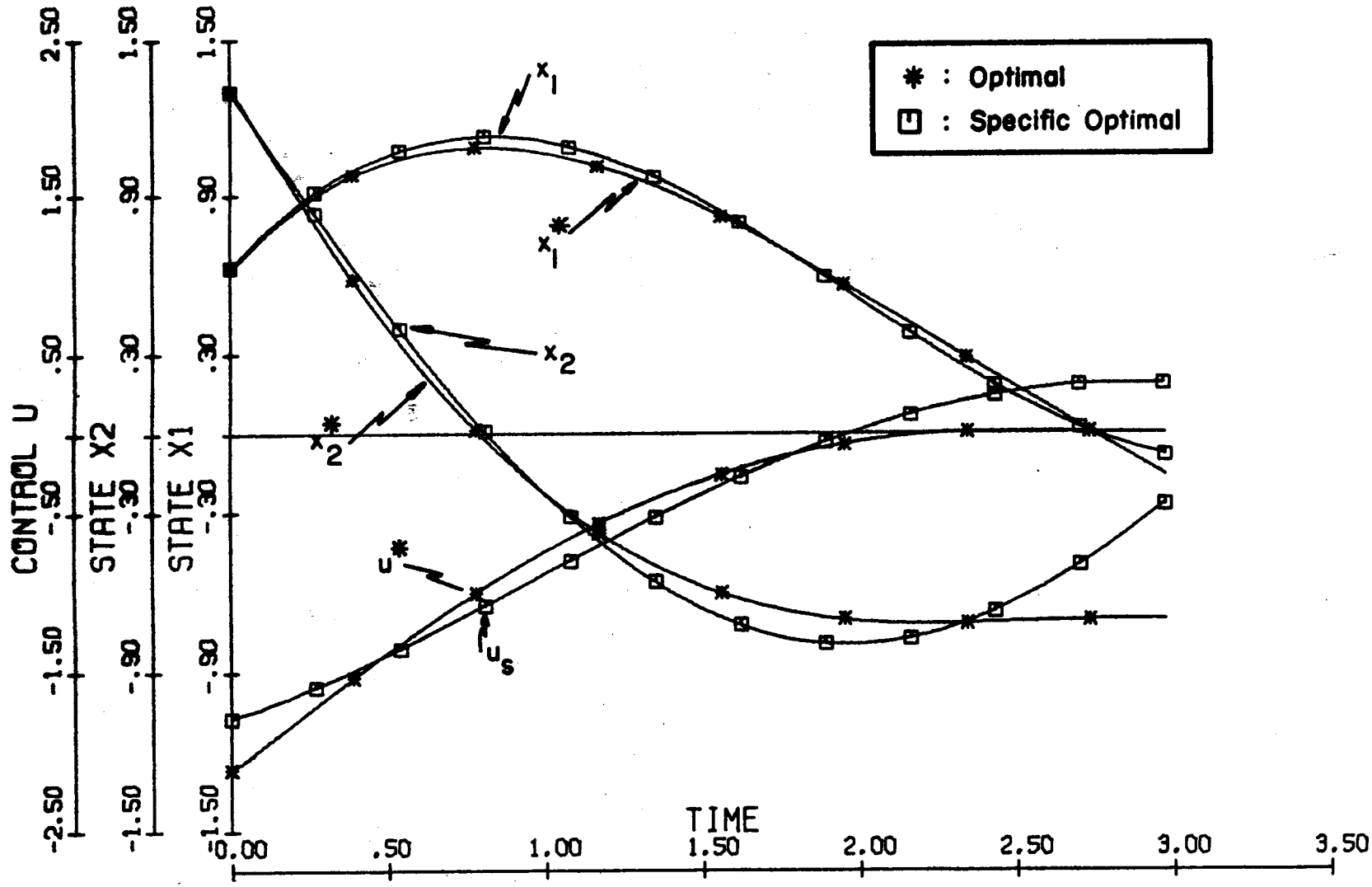

Figure 5.9 Comparison of the Optimal and the Specific Optimal Solutions (Example 6a).

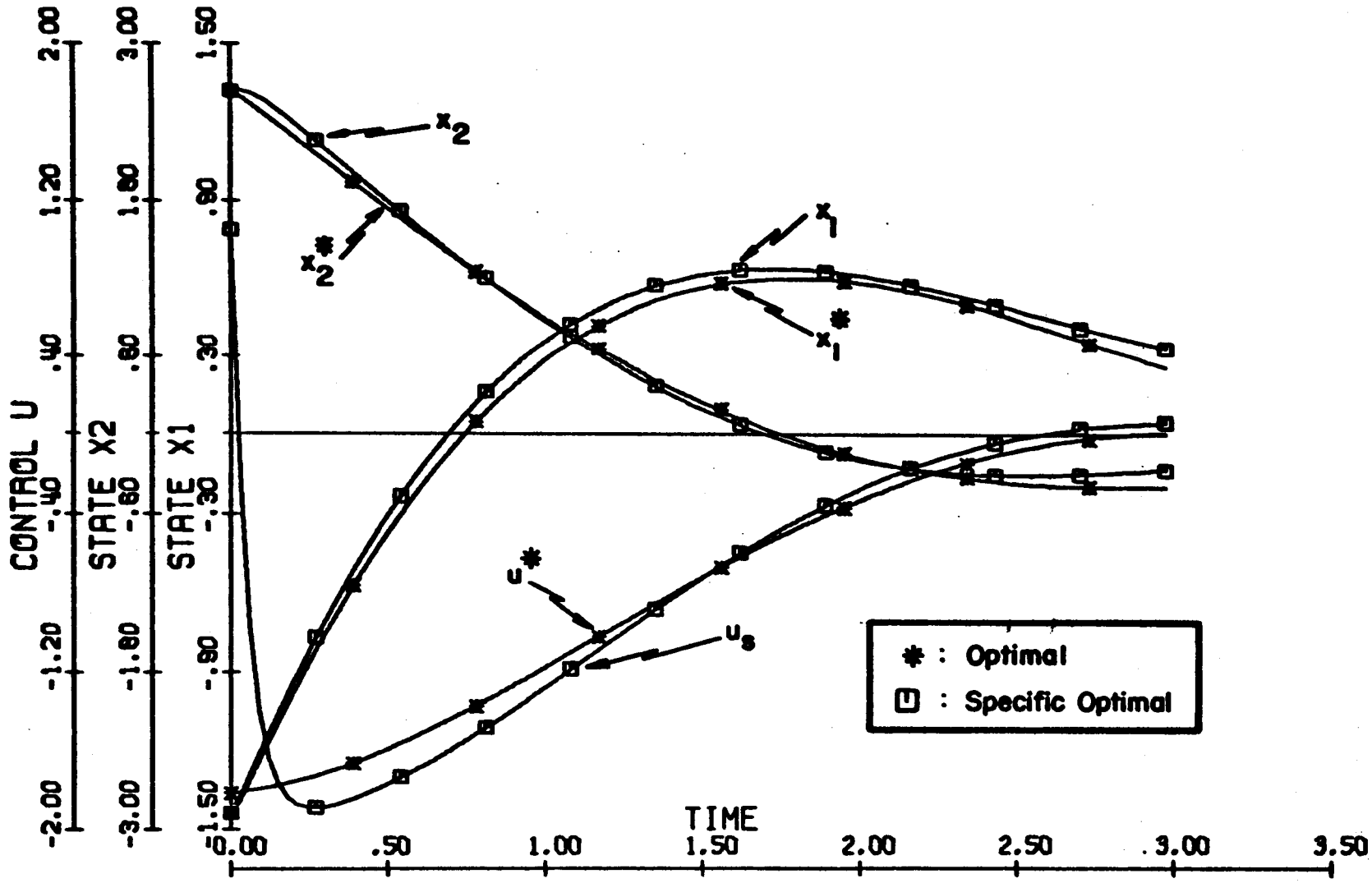

Figure 5.10 Comparison of the Optimal and the Specific Optimal Solutions (Example 6b).

initial guess is arbitrary in that the method yields the global maximum for the current value of K regardless of the guess. However this is not true for minimization. The general observations made in section 5.8 can be fruitfully utilized to make an intelligent initial guess. For the infinite time problem where the optimal feedback coefficients are constant, one can start with the optimal solution as the initial guess for the SOC, with all τ_i's very small (even if they have to be large). Since in this case the values of the SOC parameters are close to the optimal, there is a good chance that the solution is global. Next τ_i's should be increased by a small amount, and the process of finding the min-max repeated with the last set of SOC parameters as the initial guess. This operation can be iterated until the τ_i's are what they should be.

In the case of a finite time problem, first consider the situation when all the states are accessible. It was indicated earlier that if the problem time is large compared to the largest time constant of the system, then the SOC parameters are close to the optimal evaluated at $t=t_o$. Therefore for large T, the initial value of the optimal parameters are a good initial guess for the SOC parameters. If the problem time is small, then after finding a solution for some assumed large T one can reduce T by a small amount and repeat with the last set of SOC parameters as the initial guess. The process can be continued till a solution for the given value of T is found.

If not all the states are accessible, then the results obtained above can be used as the initial guess and the steps given for the infinite time problem repeated until a solution for a desired set of τ_i's is attained. This method of determining the initial guess has been found very effective

in practice. It not only gave better results, but also had a relatively fast convergence rate.

Like the initial guess, the problem of step size arises only in minimization. There are various ways of choosing a proper value of the step size for minimization [16,17]. But for the problem at hand one has to take into consideration the restrictions imposed by the fact that the basic problem is to find min-max and not just the minimum of a functional. Essentially one would like to keep the changes in all of the control parameters small so that the change in two successive maximizing initial states is also small and the corresponding maxima decrease monotonically with successive iterations. For the computations reported in this thesis, the step size Δ was chosen such that the maximum change in any of the control parameters was 2% or less. This method of finding the step size has been found very satisfactory in the majority of cases.

The convergence of the min-max algorithm as outlined in section 5.1 was based on the assumption that the variations in control variables for minimization and in state variables for maximization during one cycle of the min-max operation, are of the same order. Since the changes in x_o during maximization are not under the direct control of the programmer, δK and δx may not be of the same order of magnitude; δx may be much greater. When this happens no further improvement in J_o is possible even though $\frac{\partial J_o}{\partial K}$ is not equal or close to zero. In such a case, to be on the safe side, maximization should be the last operation performed.

The algorithm for minimization given in section 5.5 assumes the set of control parameters to be open and unbounded. Very often the control parameters are constrained due to physical considerations. Ho and

Brentani [17] have considered the problem of minimization of a functional with constrained variables. Using their approach, the algorithm for minimization presented in this thesis can easily be modified, if S_k is compact.

5.10 SOC Design Procedure

In the light of the SOC problem formulation as given in Chapter III and the computational methods presented in this chapter, the procedure for the design of a specific optimal control system can be readily outlined. This is illustrated in Figure 5.11 in the form of a flow graph.

At first sight it may appear that the design procedure advocated here is lengthy and complicated compared to the trial-and-error design procedure (see Figure 1.1) which is prevalent today among practicing control engineers. However one should realize that the SOC method of design is highly adept to the digital computer and as such the man-hours required to complete a design may actually be reduced by using this method. This is especially true in the case of multivariable and time varying systems.

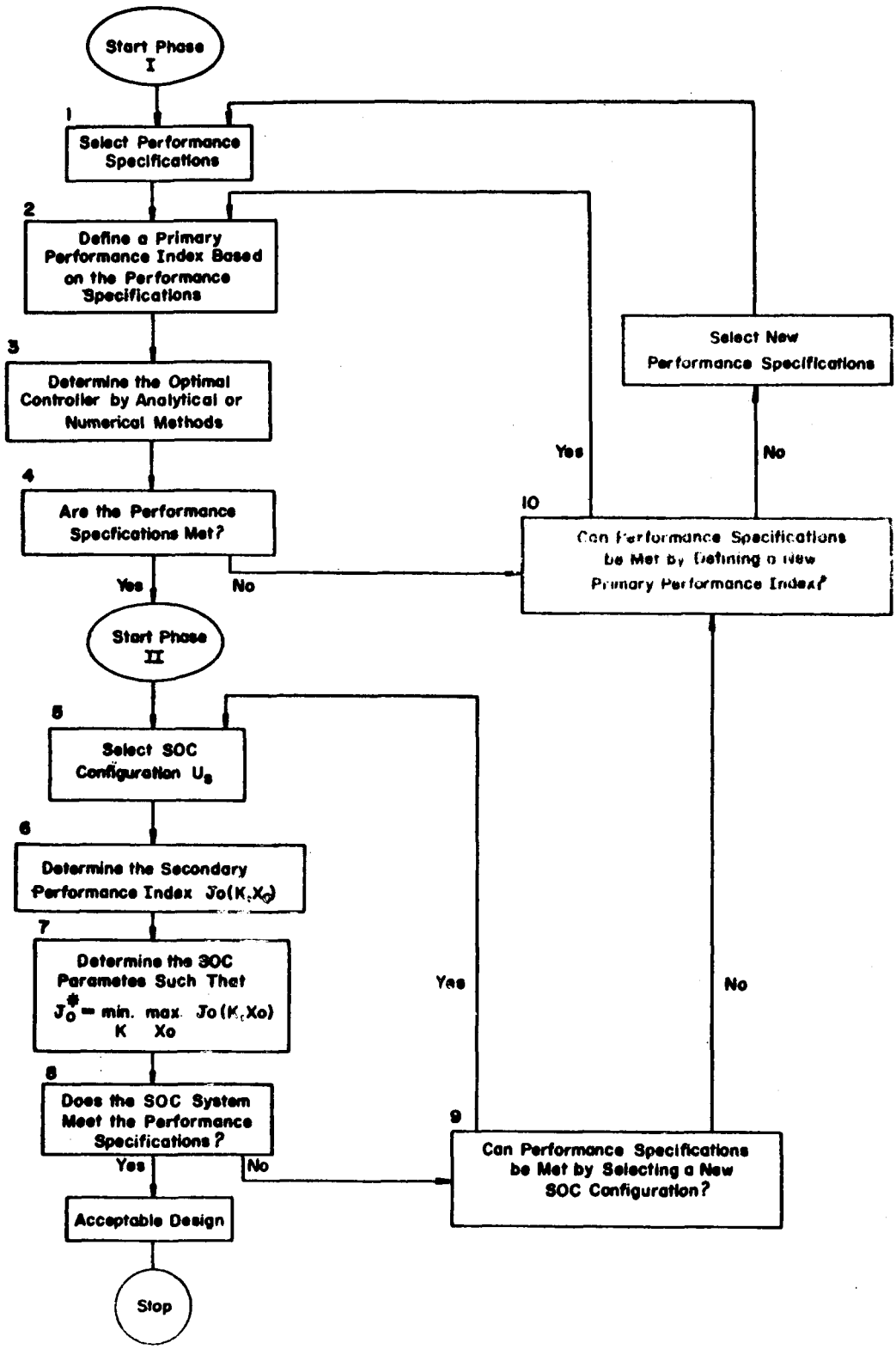

Figure 5.11 Flow Graph of SOC Design Process.

CHAPTER VI

CONCLUSIONS AND RECOMMENDATIONS

6.1 Summary and Conclusions

This research has been concerned with the application of modern control theory to the design of linear, multivariable and time-varying control systems. Lack of generalized methods for practically feasible design and the apparent versatility of modern control theory have been the major source of motivation.

The basic contribution of this thesis is the design procedure developed by amalgamation of conventional design practice and optimal control theory. This design procedure involves two distinct phases. Phase 1 consists of the determination of a quadratic (primary) performance index which incorporates the performance specification for the system, and the solution of the corresponding optimal control problem. Phase 2 calls for the selection of a practically feasible controller configuration and the determination of its parameters such that the system performance with the specific controller is as close as possible to the performance with the optimal controller.

In the preceeding chapters Phase 1 is discussed only briefly as the solution of the optimal control problem with quadratic performance index is very well known. In the author's opinion in a majority of cases, the choice of the primary performance index from the engineering point of

view is not a difficult task.

Execution of the second phase of the design, to start with, calls for the configuration of a practically feasible controller. One's experience in conventional design practice can be used advantageously at this stage. To be precise a particular configuration is considered in this thesis. It is shown that if the plant is time-invariant, the resulting system is guaranteed to be stable.

A computational method is given for the determination of the unknown parameters for the specific controller. The approach taken is to determine the best values of the parameters for the most unfavorable initial states, so that if the system is in any other initial state, the system performance will be better than the worst anticipated. This is achieved by forming a ratio of the performance indices of the SOC and the optimal systems. This ratio is maximized with respect to the initial states and minimized with respect to the control parameters.

Of major significance is the maximization procedure based on the theory of quadratic forms, which yields the global maximum. For minimization a simple gradient method is used which is specifically suited for linear plants with quadratic performance indices. This method has been found to be more efficient and less time consuming than those given in [1,4,7,10].

The computational methods developed are applied to several examples to test the theory and to demonstrate the improvement in the result when compared to other methods.

In conclusion it is sincerely hoped that this work will create a renewed interest among practicing control engineers, leading them to consider the use of optimal control theory, in particular for the design of

multivariable and time-varying control systems.

6.2 Recommendations for Further Research

Several aspects of the problem considered above remain to be investigated. These are enumerated below:

1) For the non-autonomous case it was shown that the secondary performance index is given by

$$J_o = \frac{x_o'Rx_o+\tilde{g}'x_o+\tilde{f}}{x_o'Px_o+g'x_o+f}$$

The method developed in Chapter V for finding the global maximum does not apply here. Apparently a linear transformation on the initial states is not of much help. Some other way of finding the global maximum of J_o with respect to x_o must be sought.

2) For a few special types of non-linear systems the optimal control law can be found. As a rule the primary or the intermediate performance indices (Liapunov Functions) are not quadratic for non-linear systems. Therefore a totally different computational method needs to be developed for such systems.

3) No consideration to the possibility of presence of noise or disturbance in the system is given. Extension of the results to the noisy systems would be desirable.

4) In section 5.9 it was indicated that if the order of magnitude of δx is much larger than that of δK, no further improvement is possible. For a better understanding of the problem and possible improvement in the computational algorithm, a detailed study of the nature of the function $J_o(x_o,K)$ in the neighborhood of such a point may be rewarding.

5) A large portion of this study is devoted to only one particular configuration of the controller. It is conceivable that in some cases such a controller would not be satisfactory. A natural question at this point is: how does one decide on another configuration (feedback or feedforward) which will do a better job? A precise answer to this question is open for investigation.

6) Investigation of the requirements on the controller configuration for stability of time-varying systems is another problem that needs attention.

6.3 Closing Remarks

It should be noted that in the design procedure outlined on page 4 or 67, the emphasis is on meeting the specifications and not on what the performance index or its numerical value is. A natural question at this point is what is 'optimal' or 'specific optimal' about such a system? The answer can only be negative. In a sense the term optimal controller (or SOC) is a misnomer. The adjective here is really for the method used to determine the controller and not for the controller itself.

BIBLIOGRAPHY

BIBLIOGRAPHY

1. Newton, G.C., L.A. Gould, and J.F. Kaiser, Analytical Design of Linear Feedback Controls, Wiley & Sons, Inc., New York, 1957.

2. Tou, J.T., Modern Control Theory, McGraw-Hill Book Co., New York, 1964.

3. Elgerd, O.I., Control Systems Theory, McGraw-Hill Book Co., New York, 1967.

4. Merriam, C.W., Optimization Theory and the Design of Feedback Control Systems, McGraw-Hill Book Co., New York, 1964.

5. Kalman, R.E., "Contributions to the Theory of Optimal Control", Bol. Soc. Mat. Mexicana, 1960, pp. 102-119.

6. Wiener, N., Extrapolation, Interpolation and Smoothing of Stationary Time Series, Technology Press, Cambridge Mass., 1949.

7. Agarwal, G.C., "Design of Specific Optimal Control Systems", Ph.D. Thesis, Purdue University, June, 1965.

8. Kalaba, R., "On Nonlinear Differential Equations, the Maximum Operation, and Monotone Convergence", J. Math. and Mech., Vol. 8, 1959, pp. 519-574.

9. Rekasius, Z.V., "Design of Optimal Linear Regulators with Incomplete State Feedback", Automatic Control Seminar, School of Electrical Engineering, Purdue University, March 15, 1966.

10. Koivuniemi, A.J., "A Computational Technique for the Design of a Specific Optimal Controller", Proceed. of the National Electronic Conference, Vol. 22, October 1966, pp. 687-691.

11. Kalman, R.E., "A New Approach to Linear Filtering and Prediction Problems", J. Basic Eng., Vol. 82, No. 1, March 1960, pp. 35-45.

12. Joseph, P.D., "Sub-Optimal Linear Filtering", Space Technology Labratories, Inc., Interoffice Memo No. 9321.4-653, December, 1963.

13. Luenberger, D.G., "Observing the State of a Linear System", Tran. IEEE, Vol. MIL-8, No. 2, April 1964, pp. 74-80.

14. White, S.A., "Theory and Design of Analog Linear Estimators for Automatic Control Systems", Ph.D. Thesis, Purdue University, June 1965.

15. Browne, E.T., The Theory of Determinants and Matrices, Univ. of North Carolina Press, Chapel Hill, 1958.

16. Faddeeva, V.N., Computational Methods of Linear Algebra, (Translation), Dover Publications, Inc., New York, 1959.

17. Bellman, R.E., and S.E. Dreyfus, Applied Dynamic Programming, Princeton Univ. Press, New Jersey, 1962.

18. Ho, Y.C., and P.B. Brentani, "On Computing Optimal Control with Inequality Constraints", J. SIAM Control, Ser. A, Vol. 1, No. 3, 1963.