Nasa CR 65582

LIBRARY COPY

FEB 13 1967

MANNED SPACECRAFT CENTER
HOUSTON, TEXAS

Thermal Analyzer Computer Program for the Solution of Fluid Storage and Pressurization Problems

CONTRACT NO. NAS 9-3349

Submitted to:

NASA MANNED SPACECRAFT CENTER
PRIMARY PROPULSION BRANCH
Houston, Texas

N67-30164
(ACCESSION NUMBER)
300
(PAGES)
CR-65582
(NASA CR OR TMX OR AD NUMBER)
(THRU)
1
(CODE)
33
(CATEGORY)
FACILITY FORM 602

FOREWORD

This report entitled "Thermal Analyzer Computer Program for the Solution of Fluid Storage and Pressurization Problems," LR 18903, was prepared by the Lockheed-California Company under NASA Contract NAS 9-3349. The computer program described herein was developed and utilized by Lockheed under this contract.

Other reports prepared under this contract are:

LR 18899	A Transient Heat Transfer and Thermodynamic Analysis of the Apollo Service Module Propulsion System - Final Report
LR 18990	A Transient Heat Transfer and Thermodynamic Analysis of the Apollo Service Module Propulsion System - Summary Report
LR 18901	An Introduction to Spacecraft Thermal Control
LR 18902	Thermal Analyzer Computer Program for the Solution of General Heat Transfer Problems
LR 18904	Computer Program for the Calculation of Incident Orbital Radiant Heat Flux
LR 18905	Computer Program for the Calculation of Three-Dimensional Configuration Factors.

This report was written by P.S. Hirasawa and I. Shuldiner of Lockheed's Thermodynamics Department, who developed the thermodynamic relationships and logic of the program, and Josephine Laue of the Computer Services Department, who was responsible for the programming. The contributions of R. B. David, J. A. Yingling, and T. F. Reveles, also of the Lockheed-California Company, to this report are greatfully acknowledged. Mr. David integrated the Fluid Storage and Pressurization Program into the basic Thermal Analyzer Program, which is described in LR 18902. Messrs. Yingling and Reveles programmed several of the subroutines.

TABLE OF CONTENTS

Section		Page
	SUMMARY	S-1
I	INTRODUCTION	1-1
	PROGRAM OBJECTIVE AND APPROACH	1-2
	ASSUMPTIONS	1-3
II	METHODS OF ANALYSIS	2-1
	GENERAL THERMODYNAMIC RELATIONSHIPS	2-1
	LOW-GRAVITY FLUID MECHANICS AND HEAT TRANSFER	2-5
	COMPUTER PROGRAM	2-9
III	PROGRAM FUNCTIONS	3-1
	THERMAL ANALYZER	3-3
	Method of Solution	3-5
	Calculation of Computing Interval	3-6
	NETWORK GENERATOR	3-7
	Tank Subdivision	3-8
	Node Location	3-11
	Node Identification	3-13
	Heat Transfer Area	3-16
	Tank Insulation Network	3-19
	External Network	3-19
	TANK FLUID GEOMETRY	3-36
	Subroutines GEOMNG and GEOMG	3-37
	Subroutine GEOMVG	3-49
	TANK FLUID MASS-ENERGY BALANCE	3-66
	TANK FLUID STRATIFICATION	3-82
	TANK WALL-LIQUID RADIATION EXCHANGE	3-94
	NETWORK ELEMENT PROPERTIES UPDATING	3-94
	Subroutine RESET	3-94
	Subroutine RECALC	3-96

TABLE OF CONTENTS (Continued)

Section		Page
	Subroutine SURF	3-100
	PRESSURANT SUPPLY TANK	3-100
	PROGRAM CONTROL SUBROUTINES	3-102
	Subroutine FUNCT	3-102
	Subroutine PRINT	3-103
	Subroutine SREAD	3-104
	Subroutine TIMEX	3-104
	Subroutine CHOP	3-104
IV	PROGRAM OPERATION	4-1
	SEQUENCE OF OPERATIONS	4-1
	PROGRAM INPUT	4-6
	PROGRAM OUTPUT	4-24
V	EXAMPLE PROBLEM	5-1
	PROBLEM DESCRIPTION	5-1
	EXAMPLE PROBLEM INPUT	5-2
	EXAMPLE BROBLEM OUTPUT	5-20
APPENDIX A - NOMENCLATURE		A-1
APPENDIX B - PROGRAM DECK ARRANGEMENT AND LISTING		B-1
REFERENCES		R-1

LIST OF FIGURES

Figure		Page
2-1	Tank Mass and Energy Balance Model	2-2
2-2	Thermodynamic "Open System"	2-1
2-3	Zero-g Meniscus Shape in an Annular Tank	2-7
3-1	Hemisphere Subdivision - Exploded View	3-14
3-2	Hemisphere Subdivision - Cutaway View	3-15
3-3	Cylinder Subdivision - Planview	3-17
3-4	Subroutine INSIDE (Network Generator)	3-20
3-5	Subroutine GEOMNG (Zero Gravity) and GEOMG (Gravity)	3-38
3-6	Schematic of Tank Inclined at an Angle Ψ	3-50
3-7	Subroutine GEOMVG (Variable Angle Geometry)	3-51
3-8	Subroutine CONTRL (Mass and Energy Balance)	3-73
3-9	Fluid Stratification Analytical Model	3-83
3-10	Subroutine STRAT (Stratification)	3-87
3-11	Subroutine RADIAT (Radiation)	3-95
3-12	Subroutine RESET	3-97
3-13	Subroutine SURF	3-101
4-1	Flow Diagram of Program Functions	4-2
B-1	FORTRAN Source Deck Setup for Fluid Storage and Pressurization Program	B-2

LIST OF TABLES

Table		Page
3-1	Thermodynamic Effect of Mass Transfer	3-67
4-1	Layout of Program in Core	4-4
4-2	Data Card Mnemonic Codes	4-9
4-3	Pressurization Data Input Layout Sheet	4-14
4-4	Pressurization Data Input Description	4-15
4-5	Specimen Curve Input Sheet	4-20
4-6	Order of Input Curves	4-21
4-7	Sample Output	4-26
4-8	Standard Output Items	4-28
5-1	Example Problem Input	5-3
5-2	Example Problem Input Description	5-16
5-3	Example Problem Output	5-22
B-1	Program Listing	B-4

SUMMARY

The Fluid Storage and Pressurization Program described in this report is a mathematical program providing digital computer solution of the thermodynamic behavior of storable or cryogenic fluid tankage systems.

Utilizing the IBM 7094 digital computer, this program is designed to provide pressure-time and temperature-time histories, fluid mass transfer rates, and pressurization requirements for fluid storage systems. Program input specifications are generalized to permit maximum applicability to current and projected aerospace and space vehicle systems.

This program solves the time-dependent differential equations describing the transient behavior of the fluid storage system under the influence of variables such as heat transfer through the vessel walls, mass and energy transfer across a gas-liquid interface, liquid drainage or replenishment, condensable or noncondensable gas pressurization and overpressure venting. Additionally, the influence of extended periods under zero-gravity conditions and switching from zero - to non-zero-gravity situations, including fluid thermal stratification effects, are approximated by mathematical models simulating the system fluid dynamics. The program can be used in conjunction with a thermal properties library containing 10 propellants, 2 pressurants, 2 simulated propellants, 10 structural materials and 8 insulations.

In the general case, a fluid system study requires the concurrent analysis of two interrelated, time-dependent phenomena resulting from system heat and mass transfer processes. Problem solution is obtained by computation of the overall system mass and energy balance based on separate, concurrent analyses of the two processes using lumped parameter techniques over discrete computational time intervals.

I - INTRODUCTION

In space vehicle design, where system optimization is critically dependent upon weight and performance, knowledge of component operations characteristics is of the utmost importance.

Design calculations for detailed steady-state and transient analysis of propellant storage containers are usually long and involved. The simplifying assumptions customarily employed to reduce computational effort such as a uniform fluid temperature or a single gas ullage region, for example, can result in a seriously distorted picture of system characteristics. It has been demonstrated by various experimenters that local temperature buildup due to fluid thermal stratification will cause a corresponding fluid vapor pressure increase. Results of comparison of the pressure rise in a liquid hydrogen dewar for homogeneous, normal-gravity quiescent and zero-gravity conditions (Ref. 1) indicate that the rate of pressure rise due to external heating for a normal-gravity quiescent test could be as much as 3.5 times the rate for a homogeneous test where the liquid was stirred by violent shaking.

The problem of fluid storage analysis is further complicated by the large number of variables encountered in an operational system such as the physical, thermal and transport properties of the fluids stored, the method of pressurization, fluid usage rate, tank geometry and orientation, and the system gravity environment.

The computer program described in the following sections presents an engineering approach toward solution of the problem of tankage system analysis. A mathematical model is described which depicts the thermodynamic behavior of a fluid storage tank system subjected to heating and transient body forces. In the computer representation of this model, the Lockheed Thermal Analyzer Program (Ref. 2) serves as the basic building block. A fixed resistance-capacitance network system is assumed, and system fluid properties are treated

as functions of time and of axial and radial distance. The tank volume and wall are divided into discrete volumetric elements with the state and properties of the material within each element uniform throughout the element. Stepwise, thermal network relaxation and finite-difference fluid-mass balance computations using digital computer techniques provide problem solution for tankage system variables as a function of time.

PROGRAM OBJECTIVE AND APPROACH

The aim of this computer program is to provide a tool for the detailed transient study of fluid storage systems under the influence of a variety of operational and environmental conditions from groundhold to interplanetary flight.

Because of the complexity of the overall problem of fluid storage systems analysis, the approach taken in the formulation of this program was one which permitted the analysis of a wide variety of cases of particular applicability to aerospace vehicle fluid storage systems. With this point of view, the program has been written to accommodate variations in the following parameters:

1. Either storable or cryogenic fluid storage systems may be analyzed. The only limitation is the availability of thermodynamic properties data.

2. The system may be pressurized by either a condensable gas (fluid's own vapor) or a noncondensable gas.

3. The fluid utilization rate may be allowed to vary during the mission.

4. Fluid may be added during the mission.

5. External heat sources may be varied independently.

6. Either spherical or cylindrical tanks with hemispherical ends may be analyzed.

7. A stratification model depicts fluid behavior during extended periods of in-flight heating under non-zero-g conditions.

8. The direction of net accelerational field may vary from a direction parallel to the longitudinal axis of the tank to 90° from this axis.

9. The program provides for zero-g analysis using a minimum energy surface analytical model to describe fluid behavior.

10. Problem size can be varied according to study requirements up to the maximum capacity of the thermal analyzer (compiled data cannot exceed 12,000 storages). However, only one tank may be examined at a time.

ASSUMPTIONS

In the formulation of the problem for computer study, the following mechanisms, processes, and assumptions were used to depict the thermodynamic behavior of a fluid storage system subjected to various thermal and physical forces:

1. The tank contains two phases - liquid and gas. The phases are separated by a continuous interface. The interface configuration is dependent upon the gravity vector. Under the influence of gravity the interface is planar and perpendicular to the net accelerating force vector. In zero gravity a centrally located spherical interface configuration is assumed. This configuration is the minimum energy one.

2. The liquid is a homogeneous fluid which does not exist in a superheated state. The gas may be a condensable gas comprised of liquid vapor, or a mixture of condensable gas and noncondensable pressurant. It is assumed that condensable gas does not exist in a subcooled state. Superheated liquid or subcooled condensable gas are metastable thermodynamic states; therefore, their existence would be for brief periods and are neglected. In a multicomponent gaseous system, mass concentration is assumed to be uniform throughout the vapor space (rapid diffusion relative to the time period studied).

3. Heat transfer occurs by radiation, convection, and conduction through the outer wall, the insulation. and the tank wall: by convection from the tank wall to the adjacent gas or liquid nodes, by conduction between adjacent gas or liquid nodes, and by radiation from that portion of the tank wall exposed to gas to the gas-liquid interface. Heat transfer between adjacent gas or liquid nodes by fluid transport is not considered under zero-g or for short periods under gravity. Thermally induced fluid transport between nodes during extended periods under a gravity condition is depicted by a mathematical model utilizing boundary-layer flow techniques.

4. Under zero-g, the pressure of the condensable gas is a function of either the maximum liquid temperature or the average vapor space temperature, whichever is greater. In the minimum energy zero-g configuration, it is assumed that evaporation is initiated at the heated surfaces, destroying stratification. Vaporization taking place at the wall causes the vapor bubbles to migrate toward the central gas space. This motion should be sufficient to cause mixing of the liquid phase. It is also assumed that condensation under zero-g occurs at the vapor-liquid interface, preserving stratification. Condensation, causing no interphase motion, preserves the existing stratification.

5. Since the mechanism or feasibility of fluid withdrawal under zero-g has not been firmly established, it is assumed in this program that whenever liquid is withdrawn from a tank either boiling, occurring at the heated surfaces, or liquid outflow effects will tend to create sufficient disturbance within the liquid region to destroy temperature stratification.

6. Evaporation or condensation under gravity conditions is assumed to occur only at the gas-liquid interface. Only liquid temperature changes occur as a result of mass transfer across the interface. This is because latent heat effects are much greater than any of the sensible heat effects due to the mass transfer. A uniform liquid surface temperature is assumed which is equal to the computed interface temperature between the hottest liquid node adjacent the interface and its attached gas node. Evaporation or condensation is assumed to affect the temperature of the liquid volume between the hottest node adjacent to the interface and the surface, maintaining a linear gradient between the surface and the node. If the surface temperature due to massive evaporation falls below the temperature of the adjacent liquid node, it is assumed that a temperature gradient in the liquid region ceases to exist. This is due to thermal convection currents caused by density gradients in the liquid.

7. Pressurant gas flows isothermally (isenthalpic) from the supply tank into the tank gas space. For the case of a propellant-pressurant heat exchanger an energy balance across the exchanger determines the pressurant supply temperature. The program contains the equation used for the Apollo analysis, and it can be altered to suit any particular case. Pressurant gas velocity is assumed to be sufficient to completely mix the pressurant with the gas in the tank, permitting use of effective mixed gas properties at an average temperature for the mixed gases.

8. Tank venting will be triggered by an overpressure signal. Gas will be removed from the vapor space isothermally (essentially a constant pressure process) as required to maintain system pressure. For a multigas system, it is assumed that the composition of the vented gases will be the same as the composition of the gases in the tank immediately prior to venting.

9. Liquid addition to the tank is assumed to affect only the liquid phase temperature in the tank, since the added liquid will have very limited intimate contact with the vapor. The gas temperature remains constant and pressure adjustments are made due to decreased gas volume. Whenever liquid is added, it is further assumed that liquid temperature equalization occurs; i.e., stratification is destroyed, due to mixing caused by the added liquid stream.

10. The internal energy of the gas and liquid within the tank is assumed to be a function of temperature and pressure only. Kinetic energy and momentum effects are neglected.

BLANK PAGE

II - METHODS OF ANALYSIS

This section presents detailed discussions of the concepts and methodology used in the formulation of the generalized computer program, including the derivation of the theoretical basis for problem solution, the results of studies into the effects of reduced gravity on system fluid mechanics and heat transfer, and the approach to computer solution of the actual problem.

GENERAL THERMODYNAMIC RELATIONSHIPS

Figures 2-1 depicts, schematically, the thermodynamic problem to be solved by this program. The system pictured does not lend itself readily to mathematical representation. It cannot be described by a constant volume process, a constant-pressure process, or a steadystate flow process. Due to the hybrid nature of this system, one might expect the equations describing this system to be somewhat unfamiliar in appearance.

The system does, however, fit the definition of a thermodynamic "open system." The phrase "open system" was first defined by Gillespie and Coe as "a system in which a net amount of mass crosses the boundaries during a process." First, consider the system illustrated in Figure 2-2.

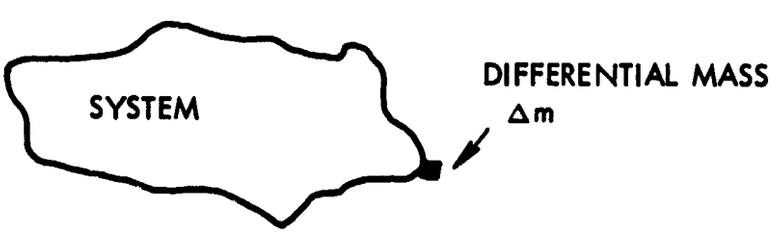

FIGURE 2-2 THERMODYNAMIC "OPEN SYSTEM"

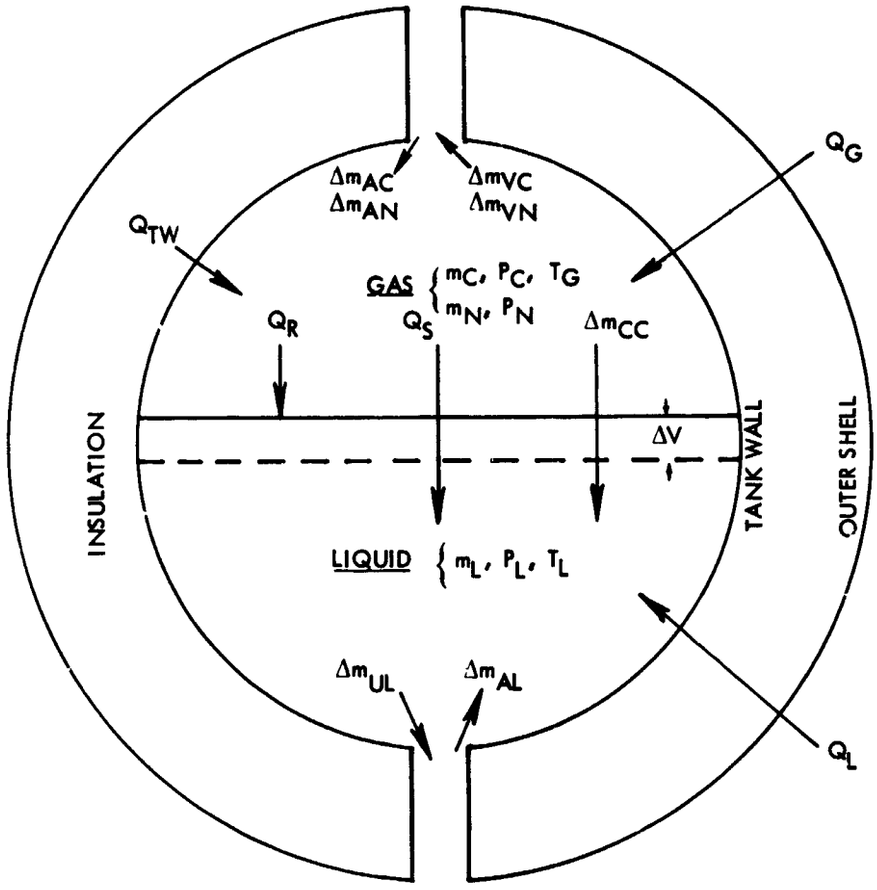

Δm_A = INCREMENTAL MASS ADDED
Δm_V = INCREMENTAL MASS VENTED
Δm_U = INCREMENTAL MASS WITHDRAWN
Δm_{CC} = INCREMENTAL MASS CONDENSED OR EVAPORATED
ΔV = CHANGE IN VOLUME OF THE GAS SPACE
Q_S = HEAT TRANSFERRED THROUGH INTERFACE
Q_G = HEAT TRANSFERRED THROUGH TANK WALL TO GAS
Q_L = HEAT TRANSFERRED THROUGH TANK WALL TO LIQUID
Q_R = HEAT TRANSFERRED THROUGH GAS TO LIQUID BY RADIATION
Q_{TW} = HEAT TRANSFERRED TO SYSTEM DUE TO HEAT CAPACITY OF TANK WALL
m = MASS
P = PRESSURE
T = TEMPERATURE

SUBSCRIPTS
C = CONDENSABLE GAS
L = LIQUID
N = NON-CONDENSABLE GAS
V = VAPOR PHASE

Figure 2-1. Tank Mass and Energy Balance Model

LOCKHEED
CALIFORNIA COMPANY

A small amount of mass Δm lies adjacent to the system boundary. If the mass moves across the boundary, then work is done. The amount of work done on the surroundings is $- \Delta mPV$

where P is the pressure of the surroundings

and V is the specific volume of mass Δm

The negative sign implies that the surroundings have decreased in energy.

Let the initial and final internal energies of the material within the boundary be represented by E_1 and E_2, respectively, and let the internal energy of mass Δm be represented by E. During the course of the process, an amount of heat Q enters the system through the boundary. Applying the first law of thermodynamics to the system after Δm has been introduced, one obtains

$$E_2 - (E_1 + \Delta mE) = Q - (- \Delta mPV)$$

which may be rearranged to the form

$$Q = E_2 - E_1 - \Delta m\ (E + PV) \qquad (2\text{-}1)$$

The term E + PV is simply the enthalpy of the mass Δm. Equation (2-1) may be generalized to include more streams and to allow for work done by motion of the boundary. The more general expression is given by

$$\Sigma Q = E_2 - E_1 - \Sigma \Delta mH + W \qquad (2\text{-}2)$$

where ΣQ is the sum of all the heat inputs

$\Sigma \Delta mH$ is the enthalpy of all the streams into the system,

and W is work done by the system on the surroundings due to boundary movement.

When equation (2-2) is applied to the gaseous system shown in Figure 2-1, the following equation is obtained:

$$Q_{TW} + Q_G - Q_S = m_{C2} E_{C2} + m_{N2}E_{N2} - m_{C1}E_{C2} - m_{N2}E_{N2} - (\Delta m_{AC} H_{AC} + \Delta m_{AN} H_{AN} - \Delta m_{VC} H_{VC} - \Delta m_{VN} H_{VN} - \Delta m_{cc} H_{SG}) \qquad (2\text{-}3)$$

LOCKHEED
CALIFORNIA COMPANY

If one applies the principle of the conservation of mass, the following equations result:

$$m_{C2} = m_{C1} + \Delta m_{AC} - \Delta m_C - \Delta m_{VC} \tag{2-4}$$

and

$$m_{N2} = m_{N1} + \Delta m_{AN} - \Delta m_{VN} \tag{2-5}$$

When equations (2-4) and (2-5) are substituted in (2-3), and the integral term is replaced by its approximation, the final energy relationship for the gas phase is obtained.

$$\begin{aligned} Q_{TW} + Q_G - Q_S = {} & m_{C1}(E_{C2} - E_{C1}) + m_{N1}(E_{N2} - E_{N1}) - \Delta m_{cc}(E_{C2} - H_{SG}) \\ & - \Delta m_{VC}(E_{C2} - H_{VC}) - \Delta m_{VN}(E_{N2} - H_{VN}) + \Delta m_{AN}(E_{N2} - H_{AN}) \\ & + \Delta m_{AC}(E_{C2} - H_{AC}) + \overline{P}\ \Delta V \end{aligned} \tag{2-6}$$

where $\overline{P}$ is the average pressure of the system during the time Δt, and is given by $(P_1 + P_2)/2$. P_1 and P_2 may be expressed in terms of the ideal gas law, utilizing compressibility factors

$$P_1 = \left[Z_C \frac{m_{C1}}{M_C} + Z_N \frac{m_{N1}}{M_N}\right] \frac{RT_1}{V_1} \tag{2-7}$$

$$P_2 = \left[Z_C \frac{m_{C2}}{M_C} + Z_N \frac{m_{N2}}{M_N}\right] \frac{RT_2}{V_2} \tag{2-8}$$

where

Z represents the corresponding compressibility factor,

M represents the corresponding molecular weight,

R is the universal gas constant.

By treating the liquid as an incompressible substance, the energy balance can be reduced to a simple enthalpy balance. The resulting equation has the form:

$$\text{(Average Mass) (Change in Enthalpy)} = \Sigma\ \text{(Heats Added)} \tag{2-9}$$

LOCKHEED
CALIFORNIA COMPANY

Applying equation (2-9) to the liquid system in Figure 2-1, one obtains the relation

$$\bar{m}\ (H_{2L} - H_{1L}) = Q_R + Q_S + Q_{TW} + Q_L - \Delta m_{AL}\ (H_{2L} - H_{LA})$$

$$- \Delta m_C\ (H_{2L} - H_{SG}) + \Delta m_{UL}\ (H_{L2} - H_{UL}) \qquad (2\text{-}10)$$

where $\bar{m}$ is the average liquid mass in the tank during time $\Delta\theta$.

The energy stored or given up by the wall due to heat capacity is given by the familiar relationship

$$Q_{TW} = m_{TW} \left[C_P\ (T_2 - T_1) \right]_{TW}$$

where m_{TW} is the mass of the tank wall, and C_P is the heat capacity of the wall. A Q_{TW} term is calculated for both the liquid and gaseous regions.

The radiation term, Q_R, is calculated by the expression

$$Q_R = \epsilon\, \sigma\, A_S\, F\, (T_{TW}^4 - T_S^4)\, \Delta\theta$$

where T_{TW} is taken to be the average temperature of that portion of the wall exposed to the gas.

The mass and energy balance equation over the gas and liquid regions shown above, together with the gaseous equation of state, provide the necessary mathematical relationships required for problem solution.

Using these equations and the assumptions and processes presented earlier, digital computer solution of the transient mass-energy balance problem can be obtained using lumped parameter solution of the differential equations over discrete time intervals.

LOW-GRAVITY FLUID MECHANICS AND HEAT TRANSFER

The program mathematical model under reduced gravity conditions is based upon certain assumptions relative to heat and mass transfer processes as specified in Section I. To evaluate the applicability of these assumptions, a low-gravity fluid mechanics and heat-transfer study was conducted by personnel at the Lockheed Missiles and Space Company. A

summary of the results of this study is presented in the following sections. A detailed report of the analytical methods used to study the effect of low gravity is included in the Apollo Heat Transfer Study FINAL REPORT (Ref. 3).

This study covers the investigation of the effects on heat and mass transfer pheonomena of internal tank hardware and relatively small changes in body forces in a system dominated by capillary forces. Analytical methods are described and the results of computations based on the Apollo Service Module Propellent Tankage presented for:

1. Determining the location and shape of the liquid region in storage tanks

2. Evaluating the effect of spacecraft maneuvers on the location and shape of the liquid region

3. Estimating the importance of mass diffusion as an energy transfer mechanism inside the tanks

The location and shape of the liquid-vapor interface can be determined from the Bond number, ($N_{Bo} = \frac{\rho g r^2}{\sigma}$) which is a dimensionless quantity showing the relationship between gravitational body forces and surface tension forces acting upon the liquid. Important considerations to be accounted for are the effect of internal hardware, the size of ullage and nongravitational vehicle accelerations.

By decreasing the critical Bond number, the effect of internal hardware is to reduce the level of acceleration causing the liquid to run from one end of the tank to the other.

When gravitationally induced body forces are negligible (low Bond numbers), and in the absence of tank internal hardware, the meniscus shape in a cylindrical tank would be essentially a hemisphere. The introduction of internal hardware, thus converting the tank into an annular tank, tends to reduce the meniscus rise along the tank wall, as shown for Case II in Figure 2-3.

The effect of sustained spacecraft accelerations, which are not of sufficient magnitude to cause the system Bond number to exceed the critical value for the system, is to cause some liquid circulation (convection) to

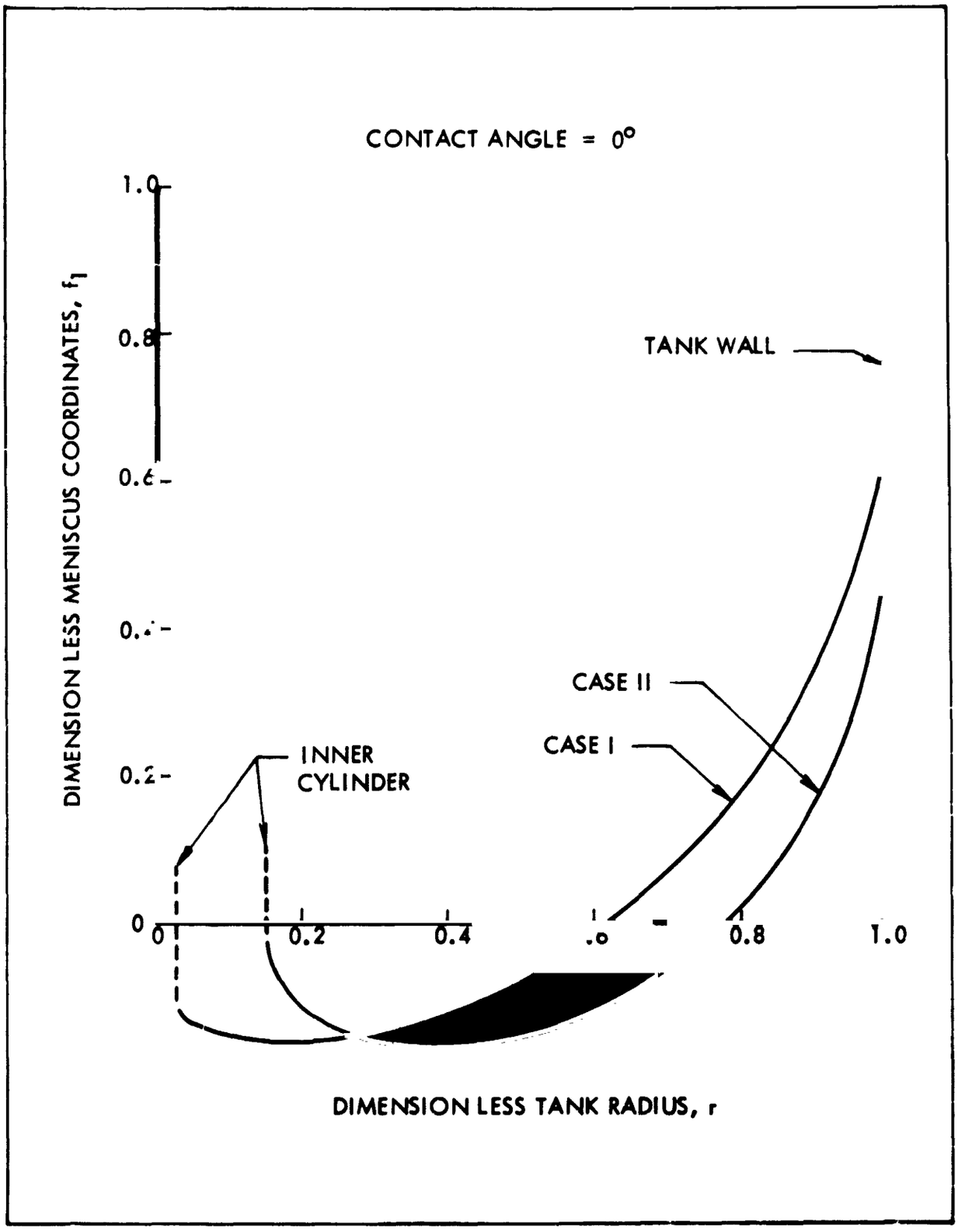

Figure 2-3. Zero-g Meniscus Shape in an Annular Tank

occur. This will be attended by increased heat transfer over that expected for a motionless liquid. The studies show that this heat transfer is a function of the system Rayleigh number and the angle between the heating vector and the net accelerating vector. The study recommends that the effect of natural convection be included in low gravity calculations by paralleling the conduction resistances with convective thermal resistances or by increasing the effective conductivity of the liquids to account for fluid motion. For example, the greatest long-term steady acceleration acting on a typical Apollo propellent tank during the translunar phase is that centripetal acceleration resulting from the two-revolutions-per-hour vehicle roll rate. This acceleration was found to cause a negligible change in the shape of the liquid meniscus in the Apollo tanks. The acceleration did cause heat transfer from the tank walls to the liquid to increase by a maximum of 10 to 20 times over that due to conduction alone.

Large impulsive accelerations acting on the liquid wherein the critical Bond number is exceeded, will cause standing waves to form in the tanks. Such liquid motion serves to mix the liquids in the tanks. Upon cessation of the acceleration, the liquids will reposition to the low-g configuration.

A study of the relative importance of mass diffusion as an energy transfer mechanism concludes that particular system parameters such as pressure, heating rate ullage volume, system physical dimension, etc., must be considered in order to assess the significance of mass diffusion. For a typical Apollo S/M propellent tank, during the translunar orbit, mass diffusion was determined to have only a slight effect on liquid oxidizer temperatures. The concentration of oxidizer vapor (expressed as the ratio of oxidizer vapor density to the sum of the oxidizer and helium vapor density) was found to have only a small gradient through the gaseous phase. Throughout the time period investigated the maximum difference between the maximum and minimum values of concentration was calculated to be only 0.03. This small gradient indicates a small amount of oxidizer vapor diffusing through the gas phase, and hence, minimal energy transfer by diffusion.

COMPUTER PROGRAM

Utilizing the basic concepts and methods developed in the preceding sections, a FORTRAN IV IBM 7094, digital computer program was formulated to solve steady-state and transient heat- and mass-transfer problems associated with the storage, pressurization and utilization of storable and cryogenic fluids.

In general, problem solution is achieved by computer analyses of two simultaneously occurring process:

1. A thermal balance of the system is performed as a function of time and mission parameters by means of an analogous resistance-capacitance network set up in the Thermal Analyzer Program.

2. A concurrent mass and energy balance is performed on the system, based on the results of thermal analysis by means of vapor-liquid thermodynamic relationships which are programmed as subroutines to the basic Thermal Analyzer Program.

The program consists of three major sections: (1) Thermal Analyzer, (2) Network Generator, and (3) Network Element Update. A detailed discussion of the elements comprising each is presented in Section III.

This program is built around the Lockheed Thermal Analyzer Program, which provides digital computer solutions for complex 3-dimensional transient and steady-state heat flow problems. Problem solution is obtained by means of a lumped parameter technique utilizing Kirchoff's Laws describing the behavior of an analogous resistance-capacitance network.

Using input data determined or obtained from the system characteristics and mission parameters associated with a particular problem as specified in Section III, the Network Generator constructs an analogous resistance-capacitance network to represent the physical system. The components such as liquid, vapor, tank wall, and insulation are divided into discrete volumetric elements with the state and properties of the material within each element assumed uniform throughout the element.

When used in conjunction with the thermal properties library (Ref. 4) the fluid thermodynamic and transport properties are treated as functions of time and of axial and radial distance.

In the Network Element Update section, programmed subroutines to the Thermal Analyzer determine the concurrent mass and energy changes in the system as a function of time-dependent parameters such as fluid utilization or replenishment, system pressurization or venting, maneuvers affecting fluid geometry, and conductive or convective fluid thermal stratification.

Certain additonal operations, available in the Thermal Analyzer, permit the user to readily override specific segments of the general network to accommodate thermal nonuniformities due to piping, structural support members, etc. The external network representing heat transfer between the tank and its surroundings is programmed by the user directly into the Thermal Analyzer, permitting considerable latitude in the application of this program. These thermal non-uniformities are handled in a similar manned to the external network with resistors and/or capacitors either replacing or being added to (in series or parallel) those quantities generated by the program.

III - PROGRAM FUNCTIONS

In this section, a brief description of the Thermal Analyzer is presented, followed by detailed descriptions of each of the associated subroutines. Section IV covers the sequence of operations in the Thermal Analyzer Program and the several subroutines.

A few of the subroutines perform functions which are common to more than one program operation Therefore, to simplify identification of the computer routines with specific program functions, these functions have been catergorized into nine basic groups:

- Thermal Analyzer
- Network Generator - subroutine INSIDE
- Tank Fluid Geometry - subroutines GEOMG, GEOMNG, and GEOMVG
- Tank Fluid Mass and Energy Balance - subroutines CONTRL and S5059
- Tank Fluid Stratification - subroutine STRAT
- Tank Wall - Liquid Radiation Heat Transfer - subroutine RADIAT
- Network Element Properties Updating - subroutines RESET, RECALC, and SURF
- Pressurant System Computations -subroutines CONTRL and FUNCT
- Program Control Subroutines - subroutines FUNCT, SREAD, TIMEX, CHOP, and PRINT

The computer routines described in this section pertain exclusively to the network of nodes making up the fluid storage tankage and the pressurant tankage systems. Thermal input to the system from the external environment is handled by an additional external network which is input by the user as described in Section IV and Reference 2.

The tankage resistance-capacitance (R-C) network is generated by subroutine INSIDE from system dimensions and geometry data. Networks may be generated for either spherical tanks or cylindrical tanks with hemispherical ends. The complete three-dimensional, R-C network is generated by the computer, simplifying the amount of input required. For maximum utilization of machine time the program has been designed to call only those routines required for problem solution during a particular computing interval. All other routines are bypassed until system changes as a result of mission variables require their use. For example, the subroutines which are necessary at every time-step are CONTRL, S5059, RESET, SURF, TIMEX, and RADIAT.

Subroutine RECALC is called whenever it is found that since the last timestep one of the following has occurred:

1. Change in the gravity (net acceleration) vector
2. Change in the angle between the longitudinal axis of the tank and the gravity vector
3. Significant change in the liquid volume
4. Significant change in the average gas temperature
5. Significant change in the average liquid temperature
6. Significant change in the total internal pressure

Three subroutines, GEOMG, GEOMVG, and GEOMNG, are used to determine the location of the fluid surface and identify vapor or liquid regions under gravity directed 0 or 90° from the tank longitudinal axis, under gravity directed between 0 and 90° from the tank longitudinal axis, and zero gravity, respectively. Subroutine CONTRL calls the correct geometry subroutine whenever a change is noted between computing intervals in any one of three conditions, which are:

1. Magnitude of the gravity vector
2. Liquid volume of the tank
3. Angle between the longitudinal axis of the tank and the gravity vector

LOCKHEED
CALIFORNIA COMPANY

Subroutine CONTRL performs thermodynamic mass and energy balance computations on the system as a result of heat input with time (computed by the Thermal Analyzer heat balance), and fluid volume changes resulting from utilization, pressurization, addition, and venting. The basic relationships used in this subroutine account for the accumulation and depletion of mass, and energy transfer between phases by conduction, evaporation, and condensation. Subroutine B5059 is a part of CONTRL, and performs evaporation and condensation calculations.

Subroutine RESET computes average temperatures and, under certain conditions, sets all fluid nodes in a particular phase equal to the average temperature of that phase or adds a Δ temperature to all existing gas node temperatures whenever necessary. RESET is a combination of five small but separate routines which were consolidated to save storage space.

Subroutine SURF locates the fluid surface nodes by comparing each of the nodes inside the tank with its neighboring nodes to determine which, if any, of the nodes are to be considered surface nodes.

Subroutine RADIAT computes the net heat exchange by radiation through the gas space between the inner surface of the tank walls and the liquid surface. This routine is bypassed under conditions of zero gravity when it is assumed that the inner tank wall is always covered by a liquid layer.

Program control functions covering use of options, running an extended mission problem in shorter time segments, and printing are performed by subroutines FUNCT, SREAD, TIMEX, CHOP, and PRINT.

THERMAL ANALYZER

The Thermal Analyzer Program in general is used to obtain detailed temperature distribution in complex three-dimensional structures. Combined with the pressurization program, it is used to perform a heat balance on the generated internal tank network and the external surrounding network. The program makes use of the electrical resistance-capacitance analogy. Solution is effected by converting the physical system into one consisting of lumped thermal capacities connected by thermal resistors, and then using the lumped-parameter, or finite-differences approach, to solve for the temperature history of a system.

The program permits direct solution of complex transient problems involving conduction, convection, radiation, and heat storage. Furthermore, since it is possible to specify any quantity as an arbitrary function of any other, it is also possible to solve such problems as change of state, variable thermodynamic properties, arbitrary variable boundary conditions, and other nonlinear effects.

In developing the Thermal Analyzer Program, a primary objective has been to maximize input flexibility, and thereby, to keep the program as general as possible. Input format has not been restricted to any particular geometry, but is such that resistors and capacitors can be connected in the same manner as the actual equipment components. Additions and other changes to the network can easily be made by adding or removing cards in the program input deck.

An outstanding feature of the program is its ability to accept various subroutines, or functions, as required by the particular problem. Currently available are various general-purpose and special functions which permit numerous mathematical operations beyond solution of the electrical analog network itself.

The program also accepts standard FORTRAN statements, allowing the user to add his subroutines as required. More important, this flexibility in handling subroutines allows new ones to be added as desired without altering the basic program. Consequently, the equations, tables, etc., required for analysis of the pressurization system can be made an integral part of the program and solved concurrently with the heat transfer analysis.

Another useful feature is the ability to run several cases consecutively, so that the results of the first are used as inputs to the second, the second to the third, and so on. This feature allows the lunar rendezvous mission to be accommodated as a series of separate computer cases for ascent, earth orbit, lunar orbit, etc. The temperatures at the end of each case are recorded on tape and used as the initial temperatures for the subsequent case. Between cases a minimum of additional input data is required to change the external environment.

Method of Solution

The Thermal Analyzer Program solves the analogous R-C network by the finite-difference, lumped-parameter technique, using standard network analysis equations. In this system, the heat flow q across resistor R, connecting two points at temperatures T_j and T_k, is given by the following equation (analogous to Ohm's electrical law):

$$q = \frac{T_j - T_k}{R}$$

At a given node point k, connected to several other nodes j by resistors R_j (the use of subscript j is not intended to suggest that T_j and R_j must have the same designation numbers), the solution is effected by applying Kirchoff's law at a point, or

$$\sum_j \frac{T_{j,\theta} - T_{k,\theta}}{R_j} + Q_k = C_k \frac{dT_k}{d\theta} \qquad (3\text{-}1)$$

where

$T_{j,\theta}$	= Temperature at time of any arbitrary node j connected to node k by a resistor R_j
R_j	= Resistor connecting nodes j and k
$T_{k,\theta}$	= Temperature of node k at time θ
$T_{k,\theta+\Delta\theta}$	= Temperature of node k after time increment $\Delta\theta$
C_k	= Capacity of node k
Q_k	= Arbitrary heat input into node k (can be positive or negative)

If it is assumed that the surrounding temperatures T_j remain constant over a time interval $\Delta\theta$, equation (3-1) can be integrated directly. However, when the same problem was run with different energy balance equations, it was found that a linearized form of equation (3-1) produced results which were less sensitive to $\Delta\theta$ and therefore more stable than those obtained with the

LOCKHEED
CALIFORNIA COMPANY

integrated equation. The linearized equation is obtained by making the following assumption:

$$\frac{dt_k}{d\theta} = \frac{T_{k,\theta + \Delta\theta} - T_{k,\theta}}{\Delta\theta} \tag{3-2}$$

and by solving equation (3-1) directly to obtain the following expression:

$$T_{k,\theta + \Delta\theta} = \frac{\Delta\theta}{C_k} \left[\sum_j \frac{T_{j,\theta} - T_{k,\theta}}{R_j} + Q_k \right] + T_{k,\theta} \tag{3-3}$$

If $C_k = 0$, e.g., in a steady-state case, $T_{k,\theta}$ in equation (3-1) is replaced with $T_{k,\theta + \Delta\theta}$ to give

$$T_{k,\theta + \Delta\theta} = \frac{\sum_j \frac{T_{j,\theta}}{R_j} + Q_k}{\sum_j 1/R_j} \tag{3-4}$$

If no capacitor is specified for node k, no heat balance is taken, and T_k remains unchanged. Two blocks of temperature values are maintained, one for time θ and one for time $\theta + \Delta\theta$. At the end of each time cycle, the temperatures at time $\theta + \Delta\theta$ are moved into the block for temperature at θ.

Calculation of Computing Interval

The time interval $\Delta\theta$ used to compute the heat balance is computed internally at each time cycle. At each node for which a non-zero capacitor is specified, a time constant, or RC product, is computed by the relation

$$(RC)_k = \frac{C_j}{\sum_j \frac{1}{R_j}}$$

To obtain $\Delta\theta$, the computer searches the network to find the minimum RC product, with a $\Delta\theta$ ordinarily taken as $\frac{(RC)_{min}}{4}$. Therefore, the time step

LOCKHEED
CALIFORNIA COMPANY

is always adjusted to the current circuit conditions and is consistent with stability criteria. Time is then incremented, and the computer proceeds timewise through the problem.

For additional details on Thermal Analyses operation and capabilities see Reference 2.

NETWORK GENERATOR

The Network Generator consists of a subroutine (INSIDE) which permits computer generation of the resistance capacitance (RC) network used to describe the system under investigation for the Thermal Analyzer. Input generated in the Network Generator is read into the Thermal Analyzer by subroutine COMPIL, an internal Thermal Analyzer subroutine.

Analogous R-C networks may be generated without additional programming for spherical tanks or cylindrical tanks with hemisphirical ends. Capability for generation of both the tank external wall network (insulations and thermal shield) and the tank internal network (fluid and tank wall) is provided in the program. By processes described in the following section and illustrated in Figures 3-1 through 3-3, the tank is sub-divided into discrete volumetric elements. For lumped-parameter computations, the thermodynamic properties in each volume are considered to be concentrated in a point at the center of mass of each volume (node). These nodes are interconnected by thermodynamic resistors forming the basic network which will be input to the Thermal Analyzer. Abnormal tank network parameters (insulation shorts, piping, internal baffling, and heat sources) and tank external network parameters (thermodynamic effects between the tank and external heat sources) are input by the user into the Thermal Analyzer function block in the normal manner. The number of nodes may be varied from 2 to N per quadrant per hemisphere or cylinder. The maximum number of nodes allowable is determined from the storage capacity of the Thermal Analyzer program, and is presently set as follows:

- Maximum number of nodes, including external network = 300
- Maximum number of resistors, including external network = 700

- Maximum number of internal nodes = 250
  (internal node is a node located inside the tank, in the tank wall, or in the insulation)

- Maximum number of internal resistors = 500
  (internal resistors must connect two internal nodes)

- Maximum number of curves (materials properties, external network) = 250

Figure 3-4 shows the sequence of computer operations and is followed by the programmed equations for computing the R-C network.

Tank Subdivision

Subdivision of the tank consists of a three-step process:

1. Division of the cylinder or hemisphere into concentric cylinders or hemispheres of equal cross-sectional area as shown in the following figure:

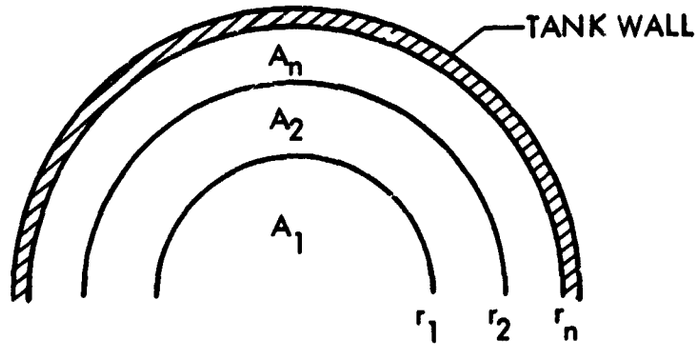

where:

$$A_1 = A_2 = A_n$$

Computation of a general solution for the area between two radii shows shows that:

$$r_i^2 = \frac{iR^2}{n}$$

$$o < i \leq n$$

LOCKHEED
CALIFORNIA COMPANY

2. Subdivision of the tank by axial divisions θ° apart:

CYLINDER

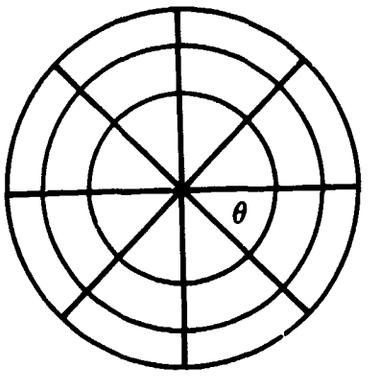

Subdivision of a cylinder in this manner produces equal cross-sectional area elements:

$$A_i = \frac{\theta}{2}\left(r_i^2 - r_{i-1}^2\right)$$

HEMISPHERE

In a hemisphere, axial sectioning produces a wedge-shaped figure:

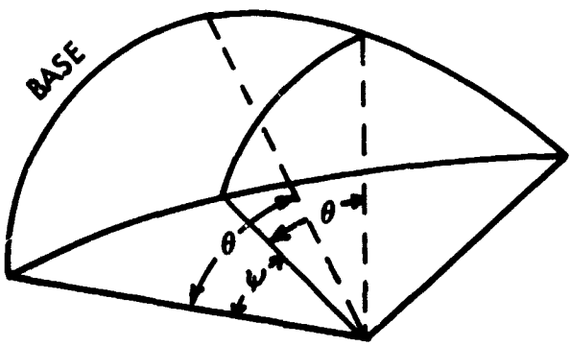

LOCKHEED
CALIFORNIA COMPANY

The cross-sectional area for this figure varies from an area equivalent to that for a corresponding cylinder at the base of the hemisphere to zero at the apex.

As the angle of elevation, ψ, from the base increases, the angle subtended by the radii, θ', is computed by the relationship:

$$\theta' = \theta \cos \psi$$

3. Completion of tank subdivision by sectioning along the axis.

CYLINDER

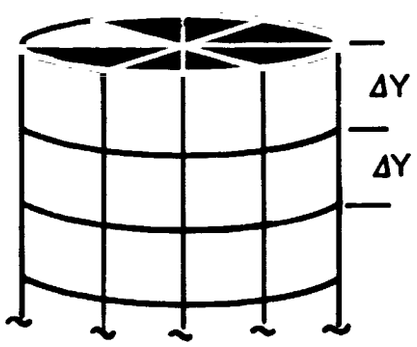

Final division results in an overall subdivision of the cylinder into equal volume elements, as shown above, where

$$\text{Vol/Element} = A_i \, \Delta Y'$$

HEMISPHERE

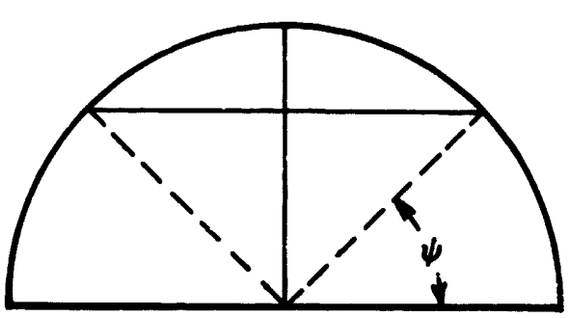

LOCKHEED
CALIFORNIA COMPANY

The hemisphere is divided into spherical sectors to complete subdivision into discrete elements. Element volume decreases as the elevation angle increases by the following relationship:

$$\int_{V_1}^{V_2} dv = \int_{\psi_1}^{\psi_2} 2/3\,\pi\, r^3 \cos\psi\, d\psi$$

For convenience, the increment of elevation angle, ψ is taken to be equal to the axial subdivision angle θ.

Node Location

The node in each element is assumed to be located at the centroid of the element.

1. Radius to Node I -

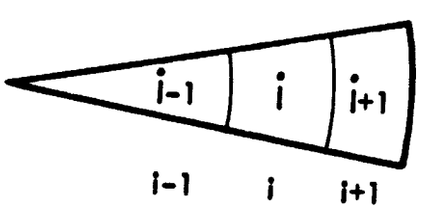

The radius to Node I is computed from the previous calculation of the radius to concentric divisions i as:

$$r_i^2 = \frac{iR^2}{n}$$

$$r_I^2 = \frac{R^2}{n}\left(i - \tfrac{1}{2}\right)$$

R = Total radius
N = No. of divisions

LOCKHEED
CALIFORNIA COMPANY

2. Angular Displacement J - The angular displacement ($\measuredangle$) of the node from a reference (j = 0) radius is determined by:

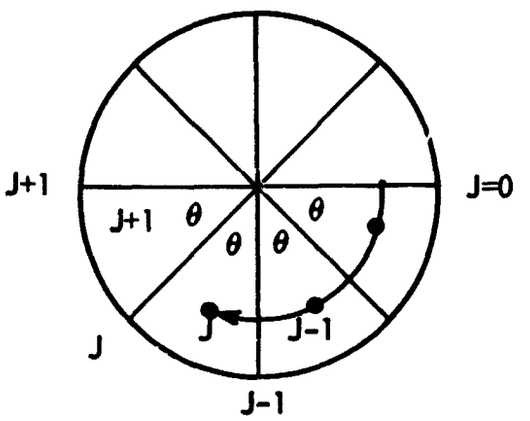

CYLINDER: $\measuredangle_{J_{NODE}} = \theta(J - \frac{1}{2})$

HEMISPHERE: $\measuredangle_{J_{NODE}} = \theta(J - \frac{1}{2})$

3. Vertical Displacement K -

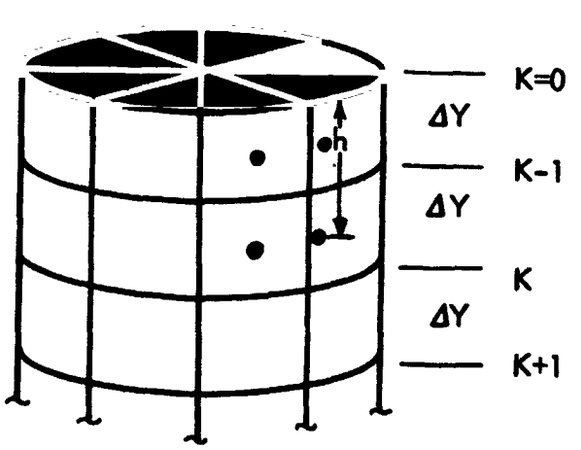

LOCKHEED
CALIFORNIA COMPANY

CYLINDER: $h_{K_{NODE}} = \Delta Y(K - \frac{1}{2})$

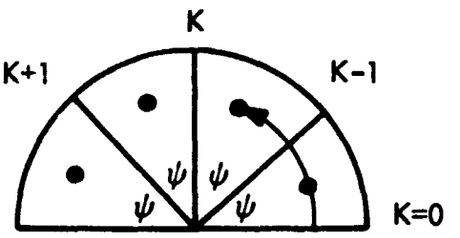

HEMISPHERE: $\measuredangle K_{NODE} = \psi(K - \frac{1}{2})$

Node Identification

Spherical tanks - Each hemisphere of the tank is subdivided separately, as shown in Figures 3-1 and 3-2. The base of the hemisphere is assumed to be a plane at an angle of 90° from the net acceleration vector. The elevation of the hemisphere is divided into circular segments by dropping radii from the surface at an angle of $\frac{2\pi}{n}$ between radii. Circumferentially, the hemisphere is divided into sectors by perpendicular slices at angles of $\frac{2\pi}{n}$ where n = 4 times the number of sectors per quadrant. Finally, the hemisphere is divided radially by division into concentric hemispheres.

Identification of nodes is accomplished by identification of a central element at the base of the hemisphere and numbering the element sequentially outward to the periphery of the tank (including the insulation and outer tank shell). The following sequence is started again at the central node in the adjacent row going clockwise around the hemisphere. The process is repeated at successive elevations until subdivision is complete for each hemisphere. The two hemispheres are then joined together by connecting mirror image nodes.

LOCKHEED
CALIFORNIA COMPANY

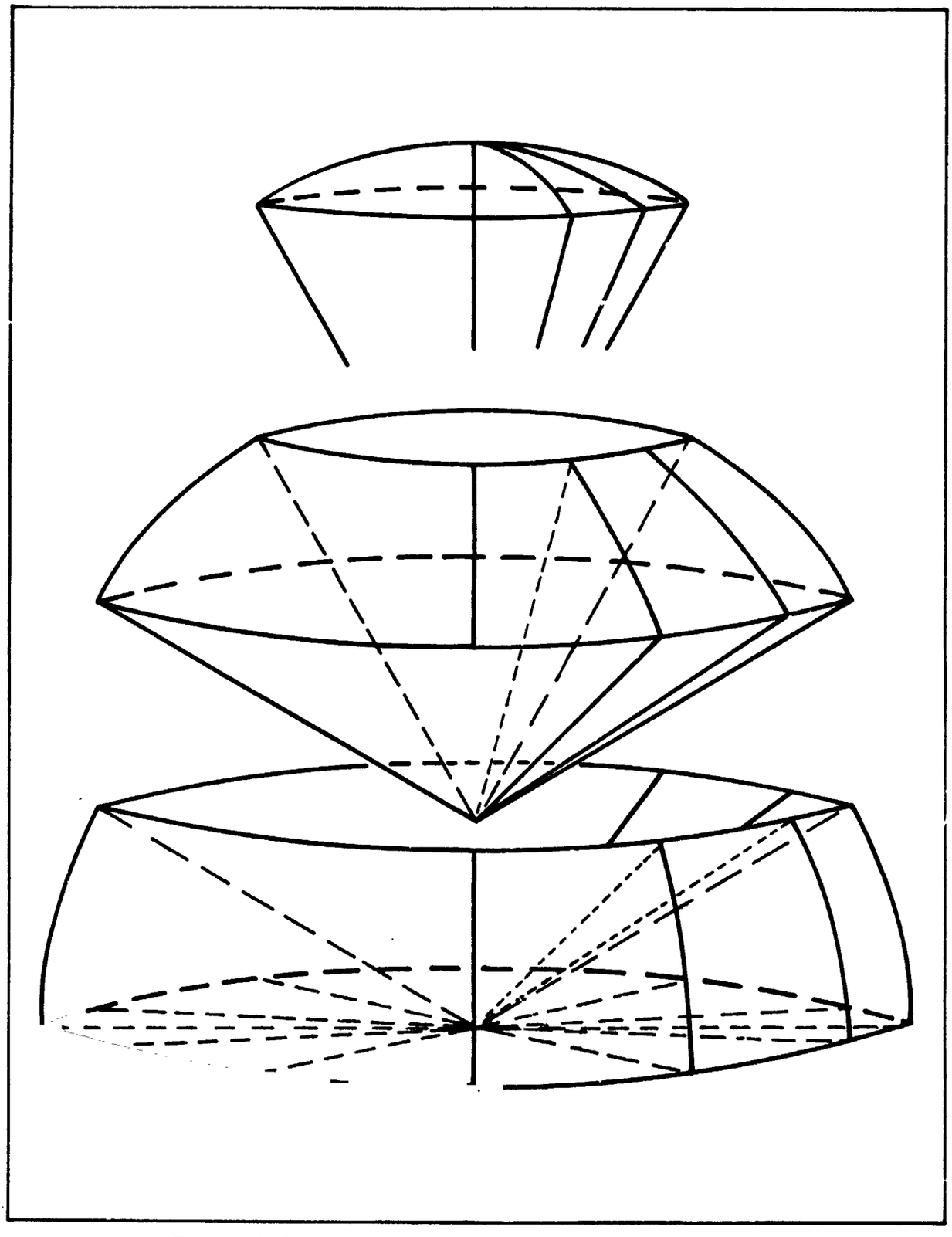

Figure 3-1. Hemisphere Subdivision - Exploded View

LOCKHEED
CALIFORNIA COMPANY

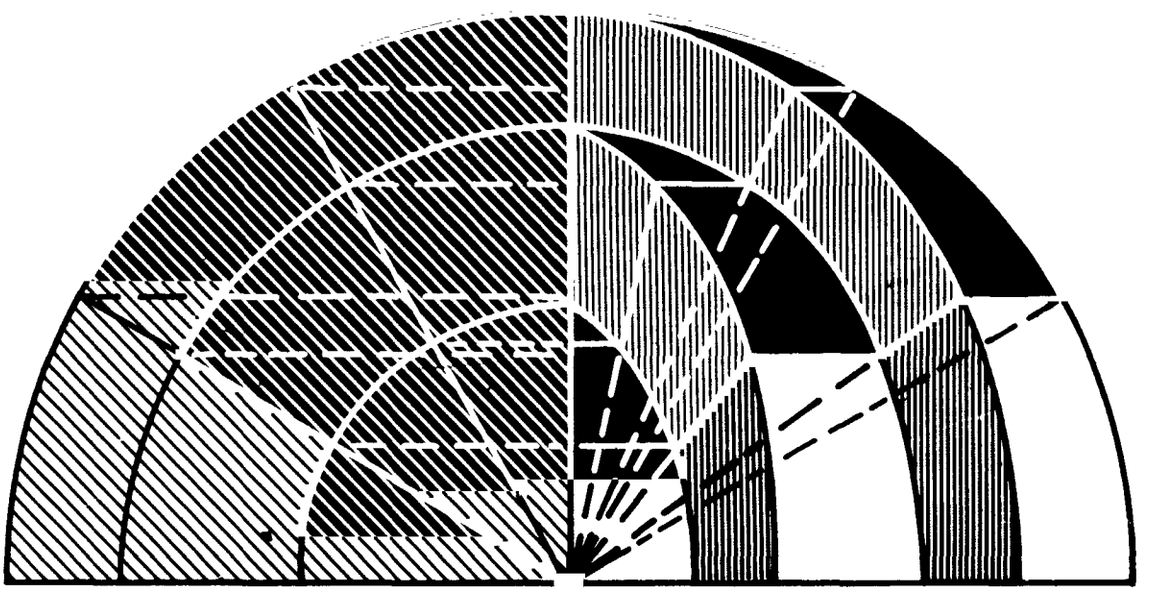

Figure 3-2. Hemisphere Subdivision - Cutaway View

LOCKHEED
CALIFORNIA COMPANY

Cylindrical Tanks - The cylinder is subdivided into concentric cylinders, as shown in Figure 3-3, having the same radii as the concentric hemispheres in the hemispherical ends. Circumferential division is similarly accomplished by extending the hemispherical sector angle of $\frac{2\pi}{n}$ where n = 4 times the number of sectors per quadrant. Cylinder subdivision is completed by radial slices equally spaced along the axis of the cylinder.

The identifying node for the cylinder is centrally located at the base of the cylinder which will be adjacent to the base of upper hemisphere. The nodes are numbered sequentially outward and around the tank at successive elevations until subdivision is complete. The two hemispherical ends are then joined to the cylinder by connecting mirror image nodes, forming the complete tanks.

The remainder of this subroutine is concerned with the calculation of heat transfer distances between adjacent nodes, the heat transfer area between adjacent nodes, and the volume of each element to complete the geometry input to the Thermal Analyzer. The materials properties loading subroutine conducts a search of material library tapes and reads in tables of gas, liquid, insulation, and tank material properties.

Heat Transfer Area

CYLINDER

The average heat transfer area between two nodes along a radius within a cylinder is determined by the following relationships:

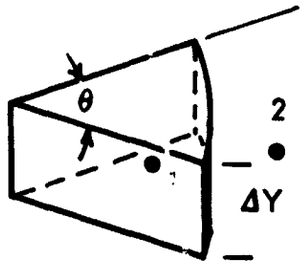

For heat transfer by conduction only:

$$q = kA\frac{dT}{dr} = k\Delta Y r\theta\frac{dT}{dr}$$

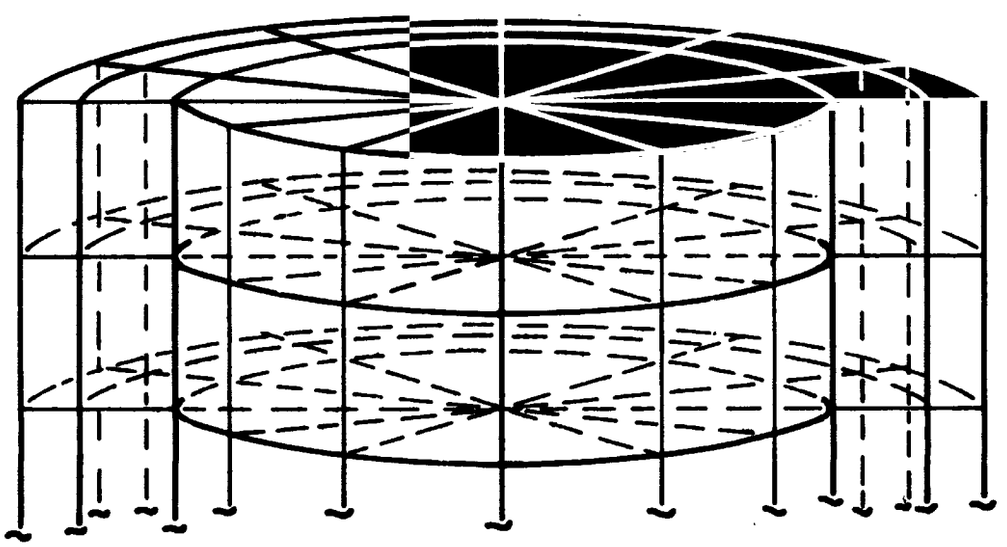

Figure 3-3. Cylinder Subdivision - Planview

Combining and separating variables

$$\int_{r_1}^{r2} \frac{dr}{r} = \int_{T_1}^{T2} \frac{k\Delta Y\,\theta\,dT}{q}$$

and

$$\ln \frac{r_2}{r_1} = \frac{k\Delta Y\theta}{q}(T_2-T_1)$$

Also

$$\int_{r_1}^{r_2} dr = \int_{T_1}^{T_2} \frac{kAdT}{q}$$

and

$$r_2 - r_1 = \frac{k\bar{A}(T_2-T_1)}{q}$$

Solving for $\bar{A}$

$$\bar{A}_{1-2} = \frac{\Delta Y\theta\,(r_2-r_1)}{\ln \frac{r_2}{r_1}}$$

Hemisphere

Similarly, the average heat transfer area between two nodes along a a radius in a hemisphere is:

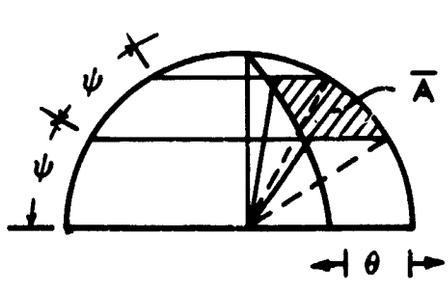

LOCKHEED
CALIFORNIA COMPANY

$$\bar{A}_{1-2} = \theta \sin \psi \Big]_{(k-1)\psi}^{k\psi} r_1 r_2$$

where

k = No. of elevation increments

θ = Increment of angular displacement

ψ = Increment of elevation

r_1 = Radius to Node I

r_2 = Radius to Node I + 1

Tank Insulation Network

In addition to the internal network the subroutine computes similar network parameters for the tank external wall. Network generation for o to n layers of insulation may be accomplished along with the internal network. One dimensional heat transfer through the insulation is assumed.

External Network

Certain operations, available in the Thermal Analyzer, permit the user to readily override specific portions of the general network generated in the Model Generator to accommodate thermal nonuniformities due to piping, support members, etc. The external network representing heat transfer between the tank and its surroundings is programmed by the user directly into the Thermal Analyzer, permitting considerable latitude in the application of this program.

LOCKHEED
CALIFORNIA COMPANY

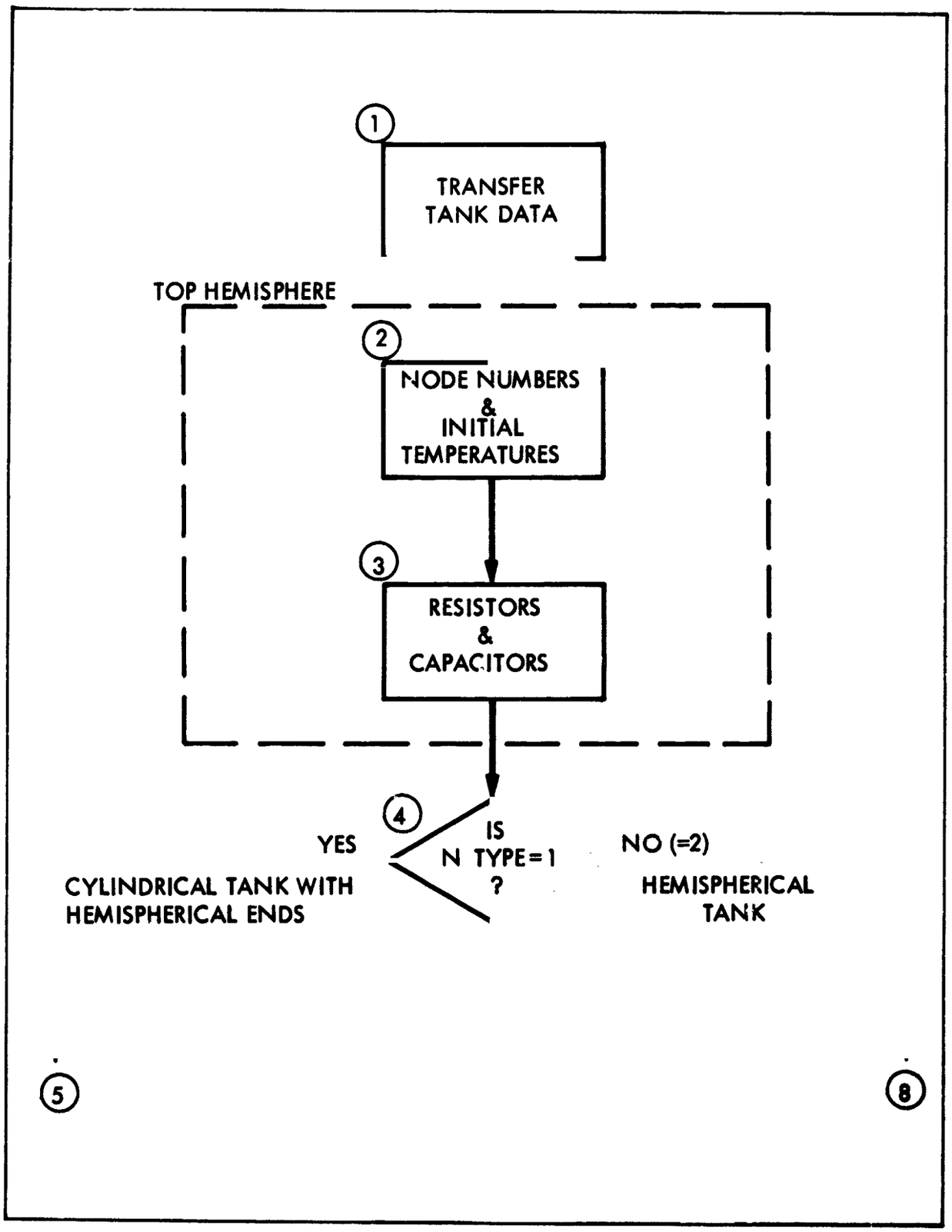

Figure 3-4. Subroutine INSIDE (Network Generator) (1 of 2)

LOCKHEED
CALIFORNIA COMPANY

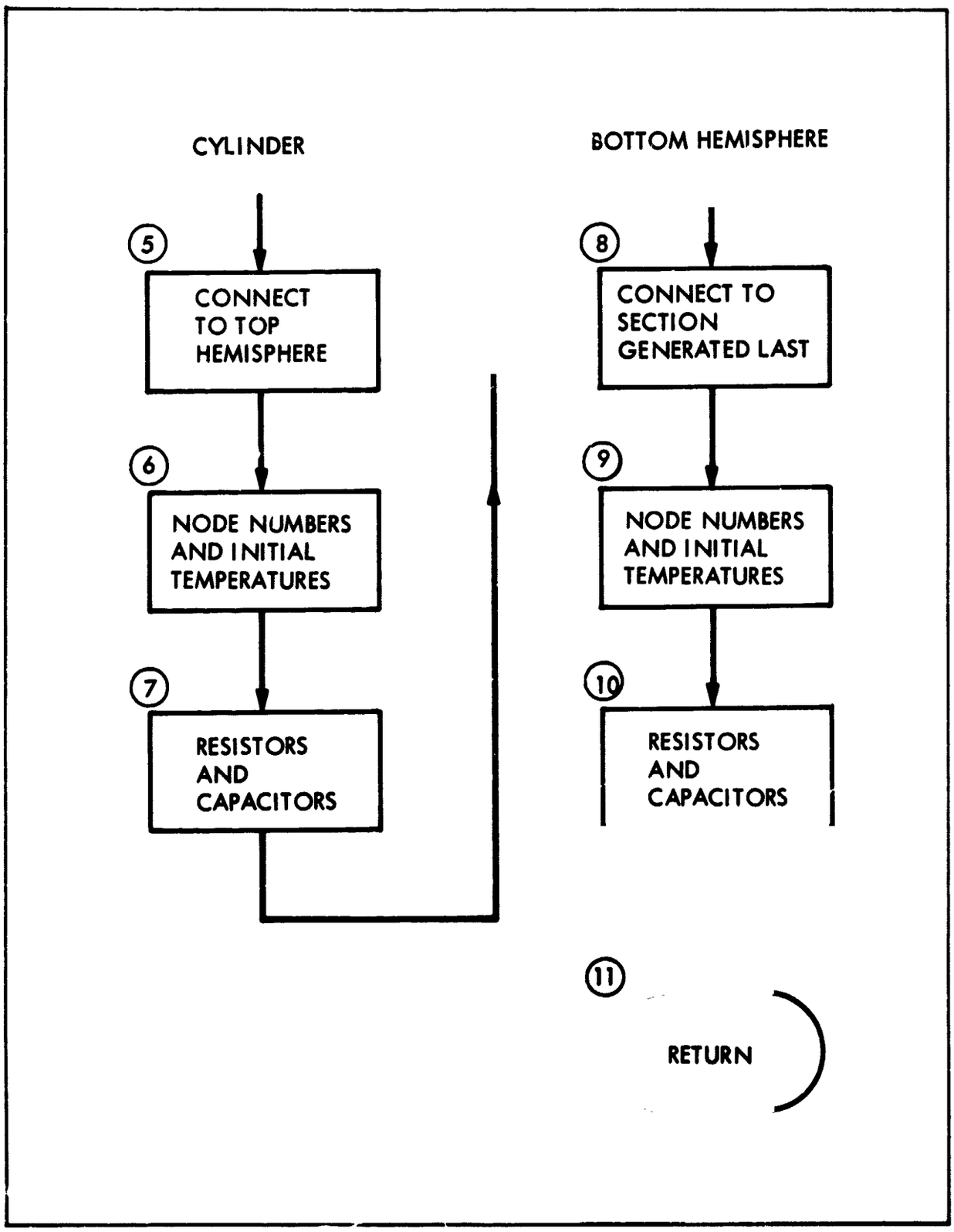

Figure 3-4. Subroutine INSIDE (Network Generator) (2 of 2)

LOCKHEED
CALIFORNIA COMPANY

FIGURE 3-4 LIST OF EQUATIONS
Subroutine INSIDE

UPPER HEMISPHERE

$$N_{NODE} = \frac{1}{4} N_J N_K (N_I + N_B + 1)$$

For: N_B = No. of Insulations

N_I = No. of Annular Sections

N_J = No. of Radial Sections

N_K = No. of Axial Sections

Radial Resistors

$I < N_I$

(1) $$A_{res} = \frac{2\pi}{N_J}\left(\frac{R_T^2}{(N_I)}(I^2 - \frac{1}{4})^{1/2}\right)\left[\sin\frac{2\pi(K+1)}{N_J} - \sin\frac{2\pi K}{N_J}\right]$$

(2) $$\ell_{res} = \frac{R_T}{(N_I)^{1/2}}\left((I + \frac{1}{2})^{1/2} - (I - \frac{1}{2})^{1/2}\right)$$

$I = N_I$

(3) $$A_{res} = \frac{2\pi}{N_J}\left(\frac{R^2}{(N_I)^{1/2}}(I - \frac{1}{2})^{1/2}\right)\left[\sin\frac{2\pi(K+1)}{N_J} - \sin\frac{2\pi K}{N_J}\right]$$

(4) $$\ell_{res} = \frac{R_T}{(N_I)^{1/2}}\left[N_I^{1/2} - (I - \frac{1}{2})^{1/2}\right]$$

$I > N_I$

(5) $$A_{res} = \frac{2\pi}{N_J}\left[R_T + \sum_{i=0}^{(I-N_I-1)} t_{B_i} + \frac{1}{2}t_{B(I-N_I)}\right]^2\left[\sin\frac{2\pi(K+1)}{N_J} - \sin\frac{2\pi K}{N_J}\right]$$

(6) $$\ell_{res} = t_{B(I-N_I)}$$

LOCKHEED
CALIFORNIA COMPANY

FIGURE 3-4 LIST OF EQUATIONS (Continued)

Subroutine INSIDE

Resistors Connect $Node_i$ to $Node_{(i+1)}$

where:

(7) $$NODE_i = I_0 + (I - 1) + J(N_I + N_B + 1) + K(N_J)(N_I + N_B + 1)$$

(8) $$NODE_{i-1} = I_0 + I + J(N_I + N_B + 1) + K(N_J)(N_I + N_B + 1)$$

and I_0 is the starting node number (input)

I varies from 1 to $(N_I + N_B)$

J varies from 0 to $(N_J - 1)$

K varies from 0 to $\left(\frac{N_J}{4} - 1\right)$

<u>Circumferential Resistors</u>

$I \leq N_I$

(9) $$A_{res} = \left(\frac{\pi}{N_J}\right)\left(\frac{R_T^2}{N_I}\right)$$

(10) $$\ell_{res} = \left(\frac{2\pi}{N_J}\right)\left(\frac{R_T}{(N_I)^{1/2}}\right)\left(I - \frac{1}{2}\right)\cos\left[\left(\frac{2\pi}{N_J}\right)\left(K + \frac{1}{2}\right)\right]$$

$I = (N_I + 1)$

(11) $$A_{res} = \frac{2\pi}{N_J} R_T \, t_{TW}$$

(12) $$\ell_{res} = \frac{2\pi}{N_J} R_T \cos\left[\frac{2\pi\left(K + \frac{1}{2}\right)}{N_J}\right]$$

LOCKHEED
CALIFORNIA COMPANY

FIGURE 3-4 LIST OF EQUATIONS (Continued)

Subroutine INSIDE

$$I = (N_I + N_B + 1)$$

(13) $$A_{res} = \frac{2\pi}{N_J}\left[R_T + \sum_{i=0}^{N_B} t_{B_i}\right] t_{TS}$$

(14) $$\ell_{res} = \frac{2\pi}{N_J}\left[R_T + \sum_{i=0}^{N_B} t_{B_i}\right] \cos\left[\frac{2\pi(K + \frac{1}{2})}{N_J}\right]$$

Resistors connect $NODE_{Ji}$ to $NODE_{(J+1)_i}$

where:

(15) $$NODE_{Ji} = I_C + (I - 1) + J(N_I + N_B + 1) + K(N_J)(N_I + N_B + 1)$$

(16) $$NODE_{(J+1)_i} = I_C + (I-1) + (J+1)(N_I + N_B + 1) + K(N_J)(N_I + N_B + 1)$$

and I_0 is the starting node number (input)

I varies from 1 to $(N_I + N_B + 1)$

J varies from 0 to (N_J-2)

K varies from 0 to $\left(\frac{N_J}{4}-1\right)$

To connect last row of radial nodes circularly to the first row of radial nodes ($NODE_{(N_J-1)_i}$ to $NODE_{(J=0)_i}$:

(17) $$NODE_{(N_J-1)_i} = I_0 + (I-1) + (N_J-1)(N_I + N_B + 1) + K(N_J)(N_I + N_B + 1)$$

(18) $$NODE_{(J=0)_i} = I_0 + (I-1) + K(N_J)(N_I + N_B + 1)$$

LOCKHEED
CALIFORNIA COMPANY

FIGURE 3-4 LIST OF EQUATIONS (Continued)
Subroutine INSIDE

Axial Resistors

$I \leq N_I$

(19) $$A_{res} = \frac{\pi R_T^2}{N_I N_J} \cos\left[\frac{2\pi(K+1)}{N_J}\right]$$

(20) $$\ell_{res} = \frac{2\pi R_T}{N_J}\left(\frac{I - \frac{1}{2}}{N_I}\right)^{1/2}$$

$I = (N_I + 1)$

(21) $$A_{res} = \frac{2\pi R_T t_{TW}}{N_J} \cos\left[\frac{2\pi(K+1)}{N_J}\right]$$

(22) $$\ell_{res} = \frac{2\pi R_T}{N_J}$$

$I = (N_I + N_B + 1)$

(23) $$A_{res} = \frac{2\pi t_{TS}}{N_J}\left(R_T + \sum_{i=0}^{N_B} t_{B_i}\right) \cos\left[\frac{2\pi(K+1)}{N_J}\right]$$

(24) $$\ell_{res} = \frac{2\pi}{N_J}\left(R_T + \sum_{i=0}^{N_B} t_{B_i}\right)$$

Resistors connect $NODE_{Ki}$ to $NODE_{(K+1)_i}$

where:

(25) $$NODE_{Ki} = I_0 + (I-1) + J(N_I + N_B + 1) + K(N_J)(N_I + N_B + 1)$$

(26) $$NODE_{(K+1)_i} = I_0 + (I-1) + J(N_I + N_B + 1) + (K+1)(N_J)(N_I + N_B + 1)$$

LOCKHEED
CALIFORNIA COMPANY

FIGURE 3-4 LIST OF EQUATIONS (Continued)
Subroutine INSIDE

and I_0 is the starting node number (input)

I varies from 1 to $(N_I + N_B)$

J varies from 0 to $(N_J - 1)$

K varies from 0 to $\left(\frac{N_J}{4} - 1\right)$

Capacitors

$I \leq N_I$

(27) $$V_{cap} = \frac{2\pi}{3} \frac{R_T^3}{N_J} \left[\left(\frac{I}{N_I}\right)^{3/2} - \left(\frac{I-1}{N_I}\right)^{3/2}\right] \left[\sin \frac{2\pi(K+1)}{N_J} - \sin \frac{2\pi K}{N_J}\right]$$

$I = (N_I + 1)$

(28) $$V_{cap} = \frac{2\pi R_T^2}{N_J} \left[t_{TW} + \frac{t_{B_1}}{2}\right] \left[\sin \frac{2\pi(K+1)}{N_J} - \sin \frac{2\pi K}{N_J}\right]$$

$(N_I + 1) < I < (N_I + N_B + 1)$

(29) $$V_{cap} = \frac{2\pi}{N_J} \left[R_T + \sum_{i=0}^{(I-N_I-1)} t_{B_i}\right]^2 \left[\frac{1}{2}\left(t_{B_{(I-N_I)}} + t_{B_{(I-N_I-1)}}\right)\right] \times \left[\sin \frac{2\pi(K+1)}{N_J} - \sin \frac{2\pi K}{N_J}\right]$$

$I = (N_I + N_B + 1)$

(30) $$V_{cap} = \frac{2\pi}{N_J} \left[R_T + \sum_{i=0}^{N_B} t_{B_i}\right]^2 \left[\frac{t_{B_{N_B}}}{2} + t_{TS}\right] \times \left[\sin \frac{2\pi(K+1)}{N_J} - \sin \frac{2\pi K}{N_J}\right]$$

LOCKHEED
CALIFORNIA COMPANY

FIGURE 3-4 LIST OF EQUATIONS (Continued)

Subroutine INSIDE

CYLINDER

$$N_{NODE} = N_J N_K (N_I + N_B + 1)$$

Radial Resistors

$I < N_I$

(31) $$A_{res} = \frac{2\pi L}{N_J N_K} \left[\frac{R_T}{(N_I)^{1/2} \; LOG_e \left(\frac{I + \frac{1}{2}}{I - \frac{1}{2}} \right)^{1/2}} \right]$$

(32) $$\ell_{res} = \frac{R_T}{(N_I)^{1/2}} \left[(I + \tfrac{1}{2})^{1/2} - (I - \tfrac{1}{2})^{1/2} \right]$$

$I = N_I$

(33) $$A_{res} = \frac{2\pi L}{N_J N_K} \left[\frac{R_T}{(N_I)^{1/2} \; 2 \; LOG_e \left(\frac{I}{I - \frac{1}{2}} \right)^{1/2}} \right]$$

(34) $$\ell_{res} = \frac{R_T}{(N_I)^{1/2}} \left[N_I^{1/2} - (I - \tfrac{1}{2})^{1/2} \right]$$

$(N_I + N_B) > I > N_I$

(35) $$A_{res} = \frac{2\pi L}{N_J N_K} \left[R_T \div \sum_{i=0}^{(I-N_I-1)} t_{B_i} + \frac{1}{2} t_{B_{(I-N_I)}} \right]$$

(36) $$\ell_{res} = t_{B_{(I-N_I)}}$$

LOCKHEED
CALIFORNIA COMPANY

FIGURE 3-4 LIST OF EQUATIONS (Continued)

Subroutine INSIDE

Resistors connect $NODE_i$ to $NODE_{(i+1)}$

where:

(37) $$NODE_i = I_0 + (I - 1) + J(N_I + N_B + 1) + K(N_J)(N_I + N_B + 1)$$

(38) $$NODE_{(i+1)} = I_0 + I + J(N_I + N_B + 1) + K(N_J)(N_I + N_B + 1)$$

and, I_0 is the starting node number - either input or computer determined as:

$$I_{0_{CYL}} = I_{0_{\substack{UPPER \\ HEMISPHERE}}} + \frac{1}{4} N_J N_K (N_I + N_B + 1)$$

I varies from 1 to $(N_I + N_B)$

J varies from 0 to $(N_J - 1)$

K varies from 0 to $(N_K - 1)$

<u>Circular Resistors</u>

$I \leq N_I$

(39) $$A_{res} = \frac{R_T L}{(N_I)^{1/2} N_K} \left[(I)^{1/2} - (I - 1)^{1/2} \right]$$

(40) $$\ell_{res} = \frac{2\pi R_T}{(N_I)^{1/2} N_J} (I - \tfrac{1}{2})^{1/2}$$

$I = (N_I + 1)$

(41) $$A_{res} = \left(\frac{L}{N_K}\right) t_{TW}$$

(42) $$\ell_{res} = \frac{2\pi R_T}{N_J}$$

LOCKHEED
CALIFORNIA COMPANY

FIGURE 3-4 LIST OF EQUATIONS (Continued)
Subroutine INSIDE

$I = (N_I + N_B + 1)$

(43) $$A_{res} = \left(\frac{L}{N_K}\right) t_{TS}$$

(44) $$\ell_{res} = \frac{2\pi}{N_J}\left[R_T + \sum_{i=0}^{(I-N_I-1)} t_{B_i}\right]$$

Resistors connect $NODE_{Ji}$ to $NODE_{(J+1)_i}$

where:

(45) $$NODE_{Ji} = I_0 + (I - 1) + J(N_I + N_B + 1) + K(N_J)(N_I + N_B + 1)$$

(46) $$NODE_{(J+1)_i} = I_0 + (I - 1) + (J + 1)(N_I + N_B + 1) + K(N_J)(N_I + N_B + 1)$$

I varies from 1 to $(N_I + N_B + 1)$

J varies from 0 to $(N_J - 2)$

K varies from 0 to $(N_K - 1)$

To connect last row of radial nodes circularly to the first row of radial nodes ($NODE_{(N_J-1)_i}$ to $NODE_{(J=0)_i}$):

(47) $$NODE_{(N_J-1)_i} = I_0 + (I - 1) + (N_J - 1)(N_I + N_B + 1) + K(N_J)(N_I + N_B + 1)$$

(48) $$NODE_{(N=0)_i} = I_0 + (I - 1) + K(N_J)(N_I + N_B + 1)$$

<u>Axial Resistors</u>

$I \leq N_I$

(49) $$A_{res} = \frac{\pi R_T^2}{N_J N_I}$$

(50) $$\ell_{res} = \frac{L}{N_K}$$

LOCKHEED
CALIFORNIA COMPANY

FIGURE 3-4 LIST OF EQUATIONS (Continued)

Subroutine INSIDE

$I = (N_I + 1)$

(51) $$A_{res} = t_{TW} \frac{2\pi R_T}{N_J}$$

(52) $$\ell_{res} = \frac{L}{N_K}$$

$I = (N_I + N_B + 1)$

(53) $$A_{res} = t_{TS} \frac{2\pi}{N_J} \left[R_T + \sum_{i=0}^{(I-N_I-1)} t_{B_i} \right]$$

(54) $$\ell_{res} = \frac{L}{N_K}$$

Resistors connect $NODE_{Ki}$ to $NODE_{(K+1)_i}$

where:

(55) $$NODE_{Ki} = I_0 + (I - 1) + J(N_I + N_B + 1) + K(N_J)(N_I + N_B + 1)$$

$$NODE_{(K+1)_i} = I_0 + (I - 1) + J(N_I + N_B + 1) + (K+1)(N_J)(N_I + N_B + 1)$$

I varies from 1 to $(N_I + N_B + 1)$

J varies from 0 to (N_J-1)

K varies from 0 to (N_K-1)

<u>Capacitors</u>

$I \leq N_I$

(57) $$V_{cap} = \frac{\pi R_T^2 L}{N_J N_I N_K}$$

LOCKHEED
CALIFORNIA COMPANY

FIGURE 3-4 LIST OF EQUATIONS (Continued)

Subroutine INSIDE

$I = (N_I + 1)$

(58) $$V_{cap} = \frac{2\pi R_T L}{N_J N_K}\left[t_{TW} + \frac{1}{2} t_{B_i}\right]$$

$(N_I + 1) < I < (N_I + N_B + 1)$

(59) $$V_{cap} = \frac{2\pi L}{N_J N_K}\left[R_T + \sum_{i=0}^{(I-N_I-1)} t_{B_i}\right]\left[\frac{1}{2} t_{B_{(I-N_I)}} + \frac{1}{2} t_{B_{(I-N_I-1)}}\right]$$

$I = (N_I + N_B + 1)$

(60) $$V_{cap} = \frac{2\pi L}{N_J N_K}\left[R_T + \sum_{i=0}^{N_B} t_{B_i}\right]\left[\frac{1}{2} t_{B_{N_B}} + t_{TS}\right]$$

LOWER HEMISPHERE

$$N_{NODE} = \frac{1}{4} N_J N_K (N_I + N_B + 1)$$

Resistor and capacitor calculations accomplished in the same manner as the upper hemisphere calculations. The starting node number, I_0 is either input or computer determined as:

$$I_{0_{\substack{\text{LOWER}\\\text{HEMISPHERE}}}} = I_{0_{\substack{\text{UPPER}\\\text{HEMISPHERE}}}} + \frac{1}{4} N_J N_K (N_I + N_B + 1) \qquad \text{SPHERICAL TANK}$$

or

$$I_{0_{\substack{\text{LOWER}\\\text{HEMISPHERE}}}} = I_{0_{\text{CYLINDER}}} + N_J N_K (N_I + N_B + 1) \qquad \text{CYLINDRICAL TANK}$$

LOCKHEED
CALIFORNIA COMPANY

FIGURE 3-4 LIST OF EQUATIONS (Continued)
Subroutine INSIDE

SPHERICAL TANK

Attachment of upper hemisphere to lower hemisphere

$I \leq N_I$

(61) $$A_{res} = \frac{\pi R_T^2}{N_J N_I}$$

(62) $$\ell_{res} = \frac{2\pi R_T}{N_J}\left(\frac{I - \frac{1}{2}}{N_I}\right)^{1/2}$$

$I = (N_I + 1)$

(63) $$A_{res} = \frac{2\pi R_T \, t_{TW}}{N_J}$$

(64) $$\ell_{res} = \frac{2\pi R_T}{N_J}$$

$I = (N_I + N_B + 1)$

(65) $$A_{res} = \frac{2\pi t_{TS}}{N_J}\left[R_T + \sum_{i=0}^{N_B} t_{B_i}\right]$$

(66) $$\ell_{res} = \frac{2\pi}{N_J}\left[R_T + \sum_{i=0}^{N_B} t_{B_i}\right]$$

LOCKHEED
CALIFORNIA COMPANY

FIGURE 3-4 LIST OF EQUATIONS (Continued)

Subroutine INSIDE

Resistors connect $NODE_{i_{\substack{UPPER \\ HEMISPHERE}}}$ to $NODE_{i_{\substack{LOWER \\ HEMISPHERE}}}$

where:

$$NODE_{i_{\substack{UPPER \\ HEMISPHERE}}} = I_0 + (I - 1) + J(N_I + N_B + 1)$$

(68) $$NODE_{i_{\substack{LOWER \\ HEMISPHER}}} = I_0' + (I - 1) + J(N_I + N_B + 1)$$

I_0 = Upper hemisphere starting node number (input)

I_0' = Lower hemisphere starting node number

J varies from 0 to (N_J-1)

CYLINDRICAL TANK

Attachment of upper hemisphere to cylinder

$I \leq N_I$

(69) $$A_{res} = \frac{\pi R_T^2}{N_J N_I}$$

(70) $$\ell_{res} = \frac{\pi R_T}{N_J}\left(\frac{I - \frac{1}{2}}{N_I}\right)^{1/2} + \frac{L}{2N_K}$$

$I = (N_I + 1)$

(71) $$A_{res} = \frac{2\pi R_T t_{TW}}{N_J}$$

(72) $$\ell_{res} = \frac{\pi R_T}{N_J} + \frac{L}{2N_K}$$

LOCKHEED
CALIFORNIA COMPANY

FIGURE 3-4 LIST OF EQUATIONS (Continued)

Subroutine INSIDE

$I = (N_I + N_B + 1)$

(73) $$A_{res} = \frac{2\pi t_{TS}}{N_J}\left[R_T + \sum_{i=0}^{N_B} t_{B_i}\right]$$

(74) $$\ell_{res} = \frac{\pi}{N_J}\left[R_T + \sum_{i=0}^{N_B} t_{B_i}\right] + \frac{L}{2N_k}$$

Resistors connect $NODE_{i_{\substack{UPPER\\HEMISPHERE}}}$ to $NODE_{i_{CYLINDER}}$

where:

(75) $$NODE_{i_{\substack{UPPER\\HEMISPHERE}}} = I_0 + (I - 1) + J(N_I + N_B + 1)$$

(76) $$NODE_{i_{CYLINDER}} = I''_0 + (I - 1) + J(N_I + N_B + 1)$$

I_0 = Upper hemisphere starting node number (input)

I''_0 = Cylinder starting node number

J varies from 0 to (N_J-1)

Attachment of cylinder to lower hemisphere

$I \leq N_I$

(77) $$A_{res} = \frac{\pi R_T^2}{N_J N_I}$$

(78) $$\ell_{res} = \frac{\pi R_T}{N_J}\left(\frac{I - \frac{1}{2}}{N_I}\right)^{1/2} + \frac{L}{2N_K}$$

LOCKHEED
CALIFORNIA COMPANY

FIGURE 3-4 LIST OF EQUATIONS (Continued)

Subroutine INSIDE

$I = (N_I + 1)$

(79) $$A_{res} = \frac{2\pi R_T t_{TW}}{N_J}$$

(80) $$\ell_{res} = \frac{\pi R_T}{N_J} + \frac{L}{2N_K}$$

$I = (N_I + N_B + 1)$

(81) $$A_{res} = \frac{2\pi t_{TS}}{N_J}\left[R_T + \sum_{i=0}^{N_B} t_{B_i}\right]$$

(82) $$\ell_{res} = \frac{\pi}{N_J}\left[R_T + \sum_{i=0}^{N_B} t_{B_i}\right] + \frac{L}{2N_K}$$

Resistors connect $NODE_{i_{CYLINDER}}$ to $NODE_{i_{LOWER\ HEMISPHERE}}$

where:

(83) $$NODE_{i_{CYLINDER}} = I_0'' + (I - 1) + N_J(N_K - 1)(N_I + N_B + 1) + J(N_I + N_B + 1)$$

(84) $$NODE_{i_{LOWER\ HEMISPHERE}} = I_0' + (I - 1) + J(N_I + N_B + 1)$$

I_0' = Lower hemisphere starting node number

I_0'' = Cylinder starting node number

J varies from 0 to $(N_J - 1)$

LOCKHEED
CALIFORNIA COMPANY

TANK FLUID GEOMETRY

Three subroutines, GEOMG, GEOMVG, and GEOMNG, are used to determine the state of individual nodes. The appropriate routine is called by subroutine CONTRL whenever a change is noted between computing intervals in any one of the three following parameters:

1. Magnitude of the gravity (net acceleration) vector
2. Tank liquid volume
3. Angle between the major axis of the tank and the direction of gravity vector (inclination angle)

The routines are used under the following conditions:

GEOMG - gravity, inclination angle 0° or 90°

GEOMVG - gravity, inclination angle between 0° and 90°

GEOMNG - zero gravity

Utilizing basic tank geometry input information and the current liquid volume in the tank, coefficients are determined for the equations used to define and locate the gas-liquid interface. Programmed trigonometric relationships are used to identify internal tank nodes as either liquid or gas nodes.

Under zero-gravity conditions, the gas-liquid interface is considered to assume a minimum energy (spherical) configuration with the vapor surrounded by the liquid. It is assumed that all of the liquids used will wet the tank wall materials and therefore, under a zero gravity condition, the tank walls will always be covered by a liquid layer. The program further assumes that if the center of mass of a network element is located at or within the liquid region, the element comprises a liquid node; and conversely, if the center of mass of the element is located within the gas region, the node is gaseous. The resistance to heat transfer across the interface, in the absence of forced convection heat transfer, is assumed to be predominantly gas region resistance. Therefore, all resistors which connect a liquid node to a gas node are considered equivalent to gas resistors.

The present routines permit interface location and gas-liquid node identification for both spherical tanks and cylindrical tanks with

hemispherical ends. The net acceleration vector may be oriented at an angle between 0° or 90° to the longitudinal axis of the tank.

Subroutines GEOMNG and GEOMG

The flow charts provided in Figure 3-5 show the sequence of computer operations performed in subroutines GEOMNG and GEOMG. Following is a list of associated nomenclature and equations pertaining to these subroutines.

Specifically, the computer proceeds as follows during a computation interval:

a. The magnitude of the gravity vector is checked to determine the nature of the gas-liquid interface. If gravity is not zero, the surface is determined to be perpendicular to the gravity vector. For a zero-gravity condition, the gas space assumes the shape of a bubble located in the center of the tank.

b. For a spherical tank, the radius of the gas bubble is computed using equation (4) from the known volume of vapor in the tank. Then each node is checked in steps (5) through (9) to see whether it lies within the gas bubble or in the liquid region.

c. If the tank is cylindrical (with hemispherical ends), the radius of the bubble is compared with that of the tank (step (11)). If the radius of the tank is greater than that of the bubble, the nodes within the cylinder are checked to see if they are within the gas or liquid region (steps (13) through (17)). If the radius of the bubble is greater than half of the cylinder length, then the nodes within the hemispherical ends are checked for gas or liquid location in steps 18 through 23. For a bubble radius greater than that of the tank, the bubble assumes a cylindrical shape with hemispherical ends and a radius equal to that of the tank. The nodes are then determined to be either within the gas or liquid region (steps (24) through (43)).

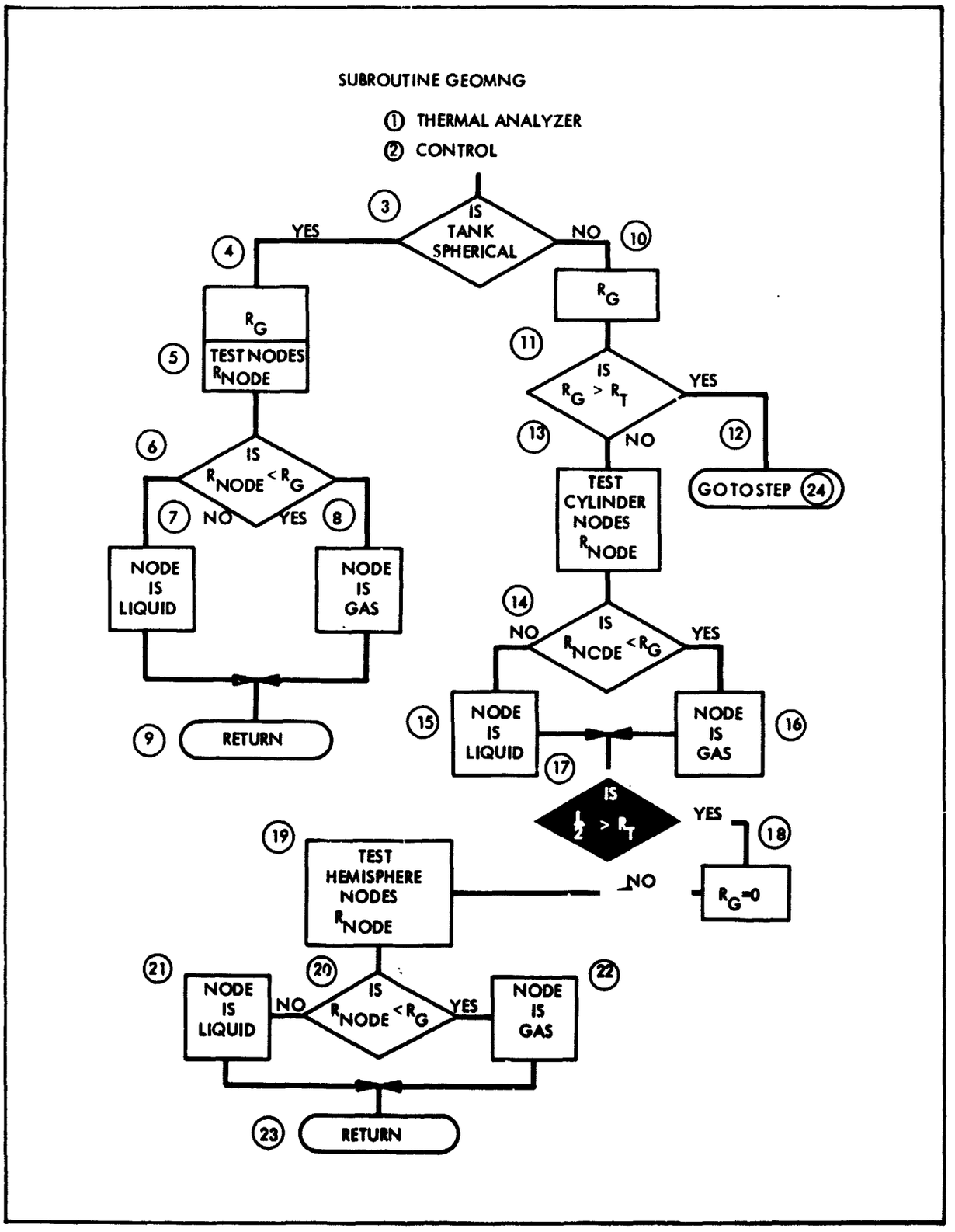

Figure 3-5. Subroutine GEOMNG (Zero Gravity) and GEOMG (Gravity) (1 of 6)

LOCKHEED
CALIFORNIA COMPANY

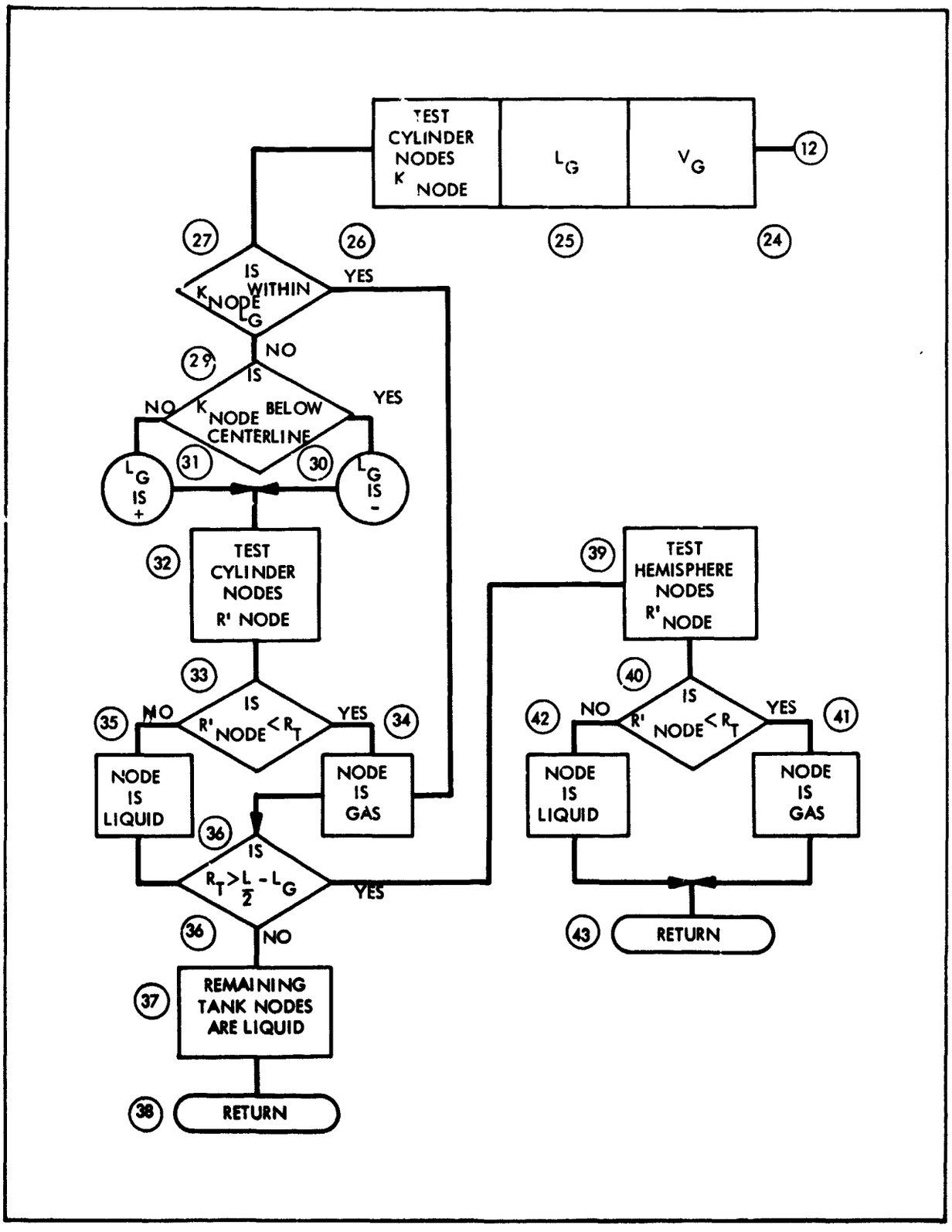

Figure 3-5. Subroutine GEOMNG (Zero Gravity) and GEOMG (Gravity) (2 of 6)

LOCKHEED
CALIFORNIA COMPANY

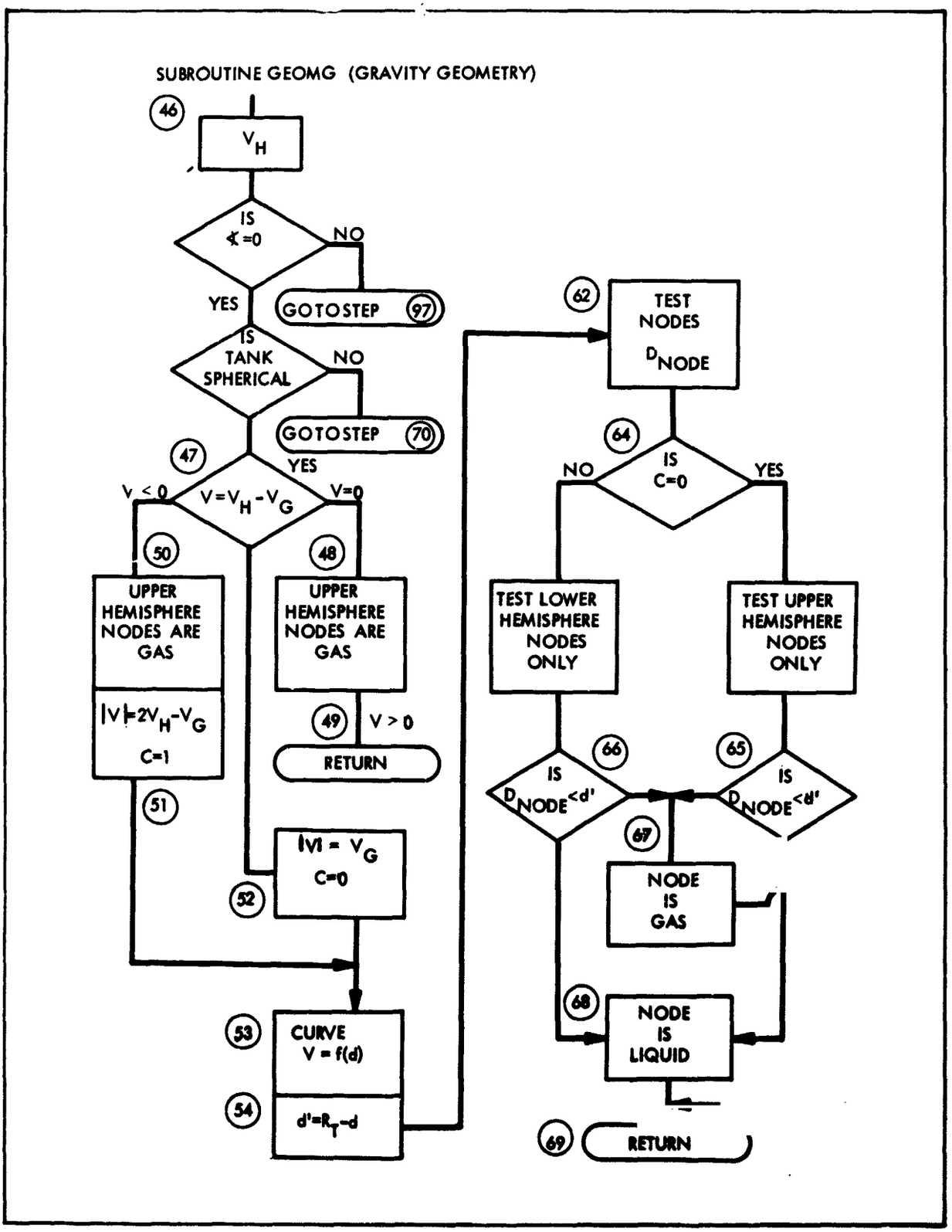

Figure 3-5. Subroutine GEOMNG (Zero Gravity) and GEOMG (Gravity) (3 of 6)

LOCKHEED
CALIFORNIA COMPANY

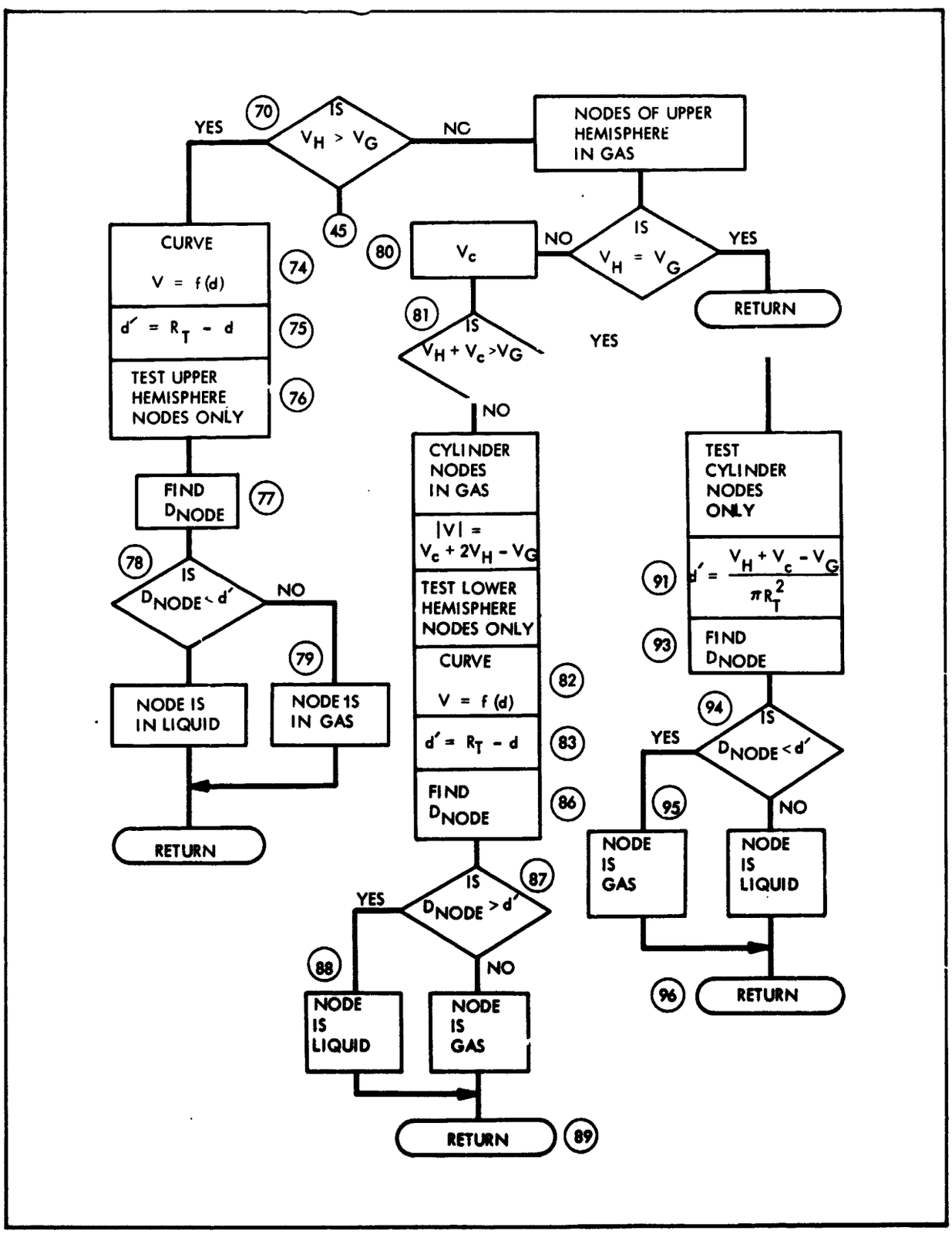

Figure 3-5. Subroutine GEOMNG(Zero Gravity) and GEOMG (Gravity) (4 of 6)

LOCKHEED
CALIFORNIA COMPANY

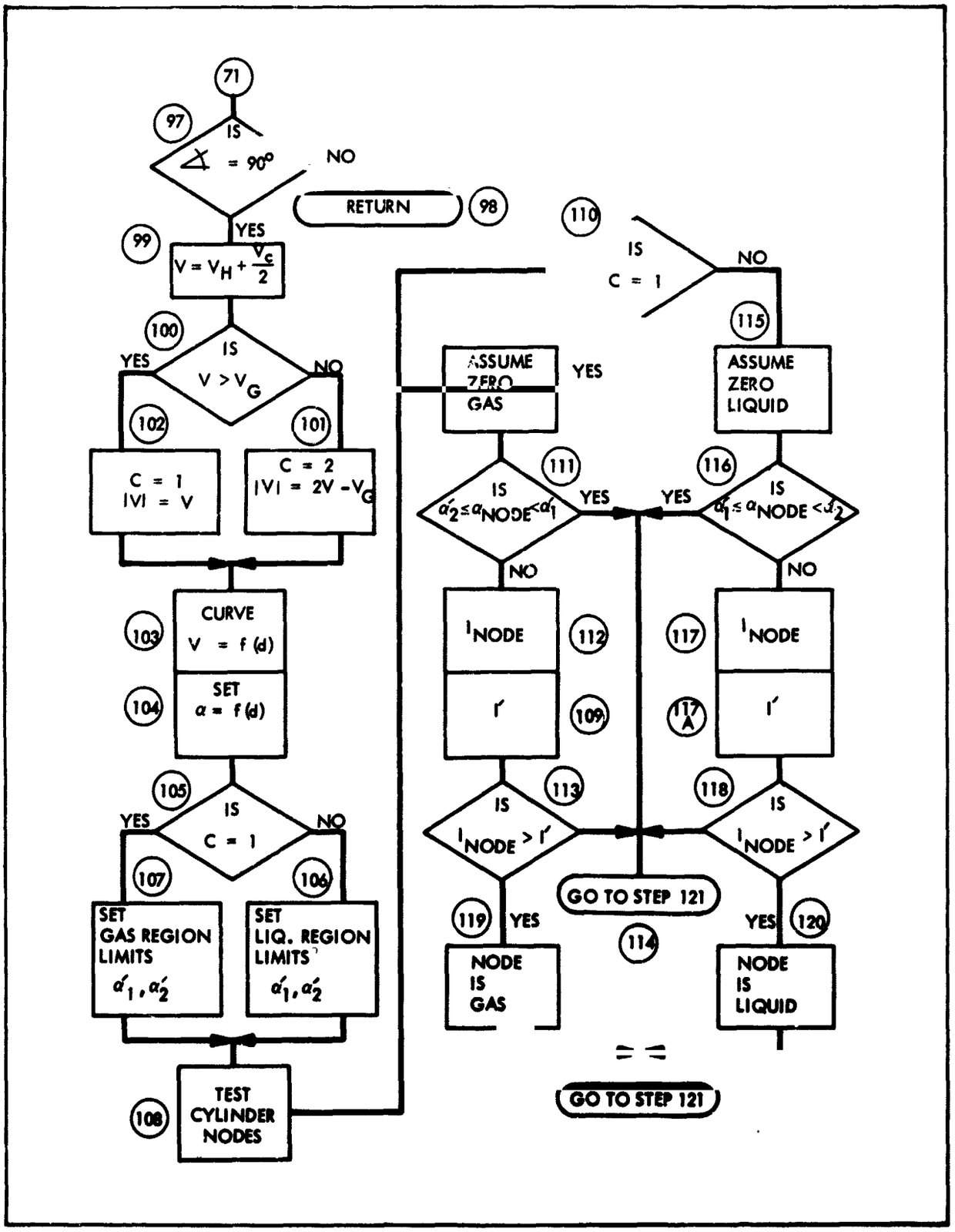

Figure 3-5. Subroutine GEOMNG (Zero Gravity) and GEOMG (Gravity) (5 of 6)

LOCKHEED
CALIFORNIA COMPANY

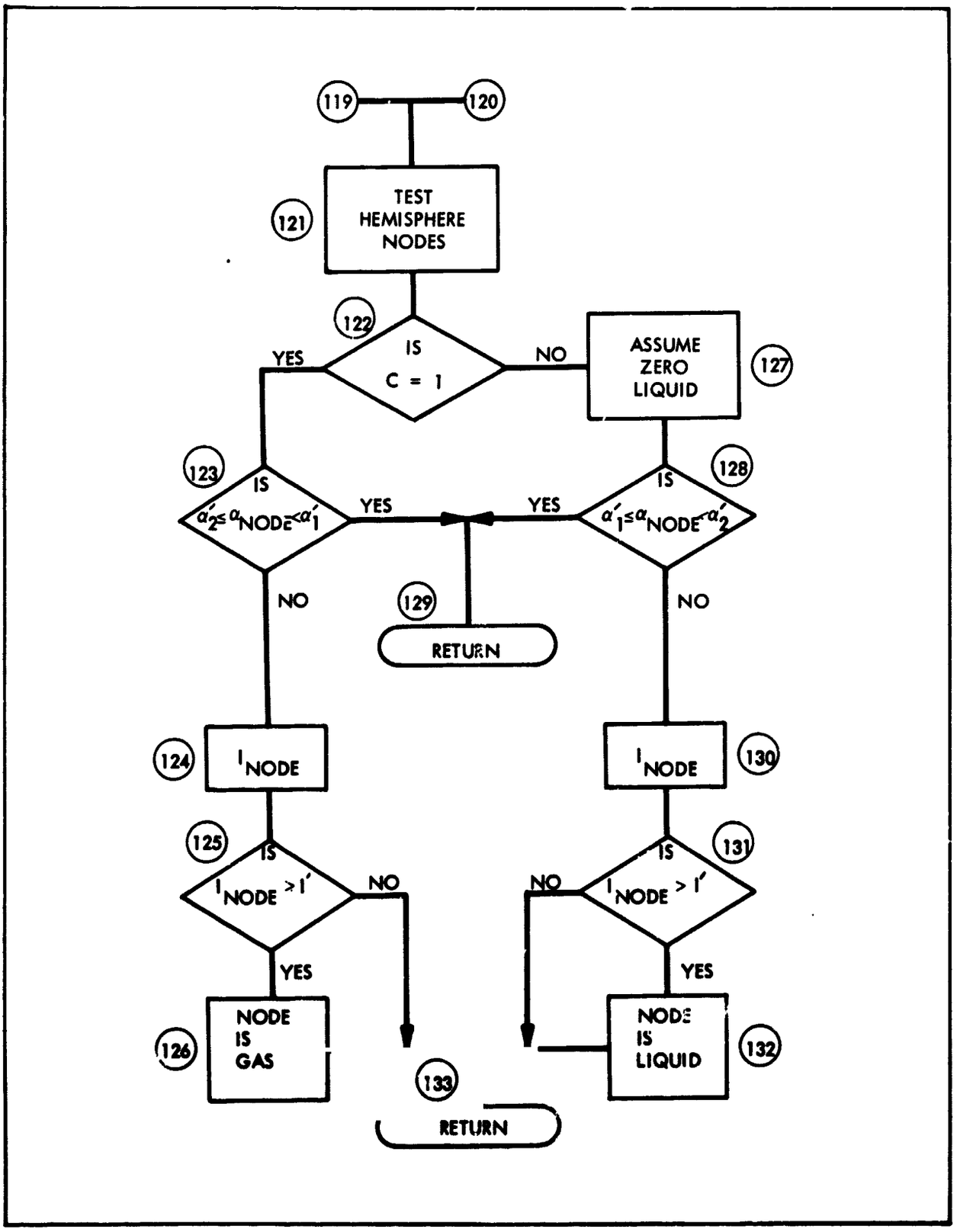

Figure 3-5. Subroutine GEOMNG(Zero Gravity) and GEOMG (Gravity) (6 of 6)

LOCKHEED CALIFORNIA COMPANY

FIGURE 3-5 LIST OF EQUATIONS

Subroutine GEOMNG and GEOMG

(4) $R_G = \left(\frac{3V_G}{4\pi}\right)^{1/3}$

(6) $R_{NODE} = \left(\frac{I - \frac{1}{2}}{N_I}\right)^{\frac{1}{2}} R_T$

(10) R_G = Same as (4)

(13) $R_{NODE} = \left[\left(\frac{I-\frac{1}{2}}{N_I}\right) R_T^2 + \left(\frac{L}{2} - \frac{L(K+\frac{1}{2})}{N_K}\right)^2\right]^{\frac{1}{2}}$

(19) $R_{NODE} = \left[\left(\frac{L}{2}\right)^2 + \left(\frac{I-\frac{1}{2}}{N_I}\right) R_T^2 - 2\,\frac{L}{2}\left(\frac{I-\frac{1}{2}}{N_I}\right)^{\frac{1}{2}} R_T \cos\left(\frac{\pi}{2} + \frac{2\pi(K+\frac{1}{2})}{N_K}\right)\right]^{\frac{1}{2}}$

(24) $V_G = 4/3\,\pi R_T^3$

(25) $L_G = \frac{V - V_G}{2\pi R_T^2}$

(27) $K_{NODE} = \frac{L}{N_K}(K+\frac{1}{2})$

(32) $R'_{NODE} = \left[\left(\frac{I-\frac{1}{2}}{N_I}\right) R_T^2 + \left(\frac{L}{2} - \frac{L}{N_K}(K+\frac{1}{2}) - L_G\right)^2\right]^{\frac{1}{2}}$

(39) $R'_{NODE} = \left[\left(\frac{L}{2} - L_G\right)^2 + \left(\frac{I-\frac{1}{2}}{N_I}\right) R_T^2 - 2\left(\frac{L}{2} - L_G\right)\left(\frac{I-\frac{1}{2}}{N_I}\right)^{\frac{1}{2}} R_T \cos\left(\frac{\pi}{2} + \frac{2\pi(K+\frac{1}{2})}{N_J}\right)\right]^{\frac{1}{2}}$

FIGURE 3-5 LIST OF EQUATIONS (Continued)

(46)	V_H	$= 2/3\ \pi R_T^3$
(47) a.	V_G	$= M_G/\rho_G$
b.	V_L	$= M_L/\rho_L$
(53)	V	$= \pi/3\ d^2\ (3R_T - d)$
(54)	d'	$= R_T - d$ Where $d = f\ (\lvert V \rvert)$
(62)	D_{NODE}	$= \left(\frac{I-\frac{1}{2}}{N_I}\right)^{\frac{1}{2}} R_T \sin \frac{2\pi}{N_J} (K+\frac{1}{2})$
(63)	D_{NODE}	$= \left(\frac{I-\frac{1}{2}}{N_I}\right)^{\frac{1}{2}} R_T \sin \frac{2\pi}{N_J} (J+\frac{1}{2})$
(72)	V_H	= Same as (46)
(74)	V	= Same as (53)
(75)	d'	= Same as (54)
(77)	D_{NODE}	= Same as (62)
(80)	V_c	$= \pi R_T^2\ L$
(82)	V	= Same as (53)
(83)	d'	= Same as (54)
(86)	D_{NODE}	= Same as (62)
(91)	d'	$= \frac{V_H + V_c - V_G}{\pi R_T^2}$

LOCKHEED
CALIFORNIA COMPANY

FIGURE 3-5 LIST OF EQUATIONS (Continued)

(93) $D_{NODE} = \frac{L}{N_K}(K+\frac{1}{2})$

(99) $V = V_H + \frac{V_c}{2}$

(101) WHEN C $= 2;\ V_L > \frac{V_T}{2}$

(102) WHEN C $= 1;\ V_L < \frac{V_T}{2}$

(103) $V = \frac{\pi d^2}{3}(3R_T - d)$

$$+ L\left(\frac{\pi R_T^2}{2} - \left((R_T-d)\sqrt{R_T^2-(R_T-d)^2} + R_T^2 \sin^{-1}\left(\frac{R_T-d}{R_T}\right)\right)\right)$$

(104) $\alpha = 2\cos^{-1}\left(\frac{R_T - d}{R_T}\right)$

(106) $\alpha_1' = \frac{\alpha}{2};\ \alpha_2' = 2\pi - \frac{\alpha}{2} \quad (C = 2)$

(107) $\alpha_1' = \pi - \frac{\alpha}{2};\ \alpha_2' = \pi + \frac{\alpha}{2} \quad (C = 1)$

(109) $I' = R_T\left[\frac{(\cos\alpha)}{2}\left[\sec\left(\left|\pi - \frac{2\pi(J+\frac{1}{2})}{N_J}\right|\right)\right]\right]$

(111) $\alpha_{NODE} = \frac{2\pi}{N_J}(J+\frac{1}{2})$

LOCKHEED
CALIFORNIA COMPANY

FIGURE 3-5 LIST OF EQUATIONS (Continued)

(112) $I_{NODE} = \left(\frac{I - \frac{1}{2}}{N_J}\right)^{\frac{1}{2}} R_T$

(116) α_{NODE} = Same as (111)

(117) I_{NODE} = Same as (112)

(117A) $I' = R_T \left[(\cos \frac{\alpha}{2}) \left[\sec \left(\left| 2\pi (J+\frac{1}{2}) / N_J \right| \right) \right] \right]$

(123) a. α_1', α_2' = Same as (107)

b. α_{NODE} = Same as (111)

(124) I_{NODE} = Same as (112)

(125) $I' = R_T \left[(\cos \frac{\alpha}{2}) \left[\sec \left(\frac{2\pi}{N_K} (K+\frac{1}{2}) \right) \right] \left[\sec \left(\left| \pi - \frac{2\pi}{N_J} (J + \frac{1}{2}) \right| \right) \right] \right]$

(128) a. α_1', α_2' = Same as (106)

b. α_{NODE} = Same as (111)

(130) I_{NODE} = Same as (112)

(131) $I' = R_T \left[(\cos \frac{\alpha}{2}) \left[\sec \left(\frac{2\pi}{N_K} (K+\frac{1}{2}) \right) \right] \left[\sec \left(\left| \frac{2\pi}{N_J} (J+\frac{1}{2}) \right| \right) \right] \right]$

LOCKHEED
CALIFORNIA COMPANY

d. Under gravity conditions, the liquid level is computed as a function of tank geometry and liquid volume remaining. For a spherical tank, the depth of liquid is determined in the lower hemisphere, or the depth of gas in the upper hemisphere. The nodes are then located in the correct fluid region, as determined from the liquid surface and the angle between the gravity vector and the axis of the tank (steps (46) through (69)). The angle is checked to determine whether GEOMG or GEOMVG should be used.

e. For a cylindrical tank with the angle equal to zero, i.e., the main axis of the tank aligned with the gravity vector, the section in which the interface is located is determined. Then the nodes in that particular section (upper or lower hemisphere, cylinder) are checked as to phase region (steps (70) through (96)).

f. With a cylindrical tank and an angle of 90°, i.e., the main axis of the tank is perpendicular to the gravity vector, the surface will pass through all sections of the tank. The liquid height is computed and the node location is determined as a function of the angle subtended by the wetted surface of the cylinder. The nodes are defined to be either in the gas or liquid region (steps (97) through (133)).

Subroutine GEOMVG

This subroutine is called whenever the angle of inclination of the tank is between 0.1° and 89.9° from the direction of the net acceleration (gravity) vector, as shown schematically in Figure 3-6.

Figure 3-7 shows the sequence of computer operations, and is followed by a list of the programmed equations. Referring to the tank in Figure 3-6 when the inclination angle is between 0° and 90°, the program determines d, the height of the surface of the liquid above the apparent bottom of the tank when tilted at angle ψ. Also, it tests each node to determine whether it is above or below d. Any quantity referred to as height will be measured along the local vertical (gravity vector).

The liquid surface may lie in one of four regions: (1) in the upper or lower hemisphere exclusively, (2) in the cylinder and the upper or lower hemisphere, (3) in the cylinder and the upper and lower hemispheres, and (4) in the cylinder, exclusively. GEOMVG first determines into which of these four regions the surface falls, then uses an iterative procedure to determine the value of d. An iterative procedure is needed here, since d cannot be solved in closed form for a given gas volume V_G.

A detailed description of the computer procedure follows. (See Fig. 3-6 for a definition of terms.)

If the tank is full, $V_G = 0$, set all nodes positive. If the tank is empty, $V_G = V_T$, set all nodes negative. For these two cases, set surface area (SAREA) = (-) = 0 and return.

In the following determination of d, let $\psi = |\psi|$. Compute V_L (equation (1)).

a. Case I - (KASE = 1), where either V_L or V_G is less than V_{III} (equation (2)).

If $V_L < V_{III}$, let $V = V_L$.

If $V_G < V_{III}$, let $V = V_G$.

V is then contained entirely by the upper or lower hemispherical segment.

Use the iterative routine (EACL) to solve equation (3) for a, using as a starting guess $a = G_1$ (step (4)).

LOCKHEED CALIFORNIA COMPANY

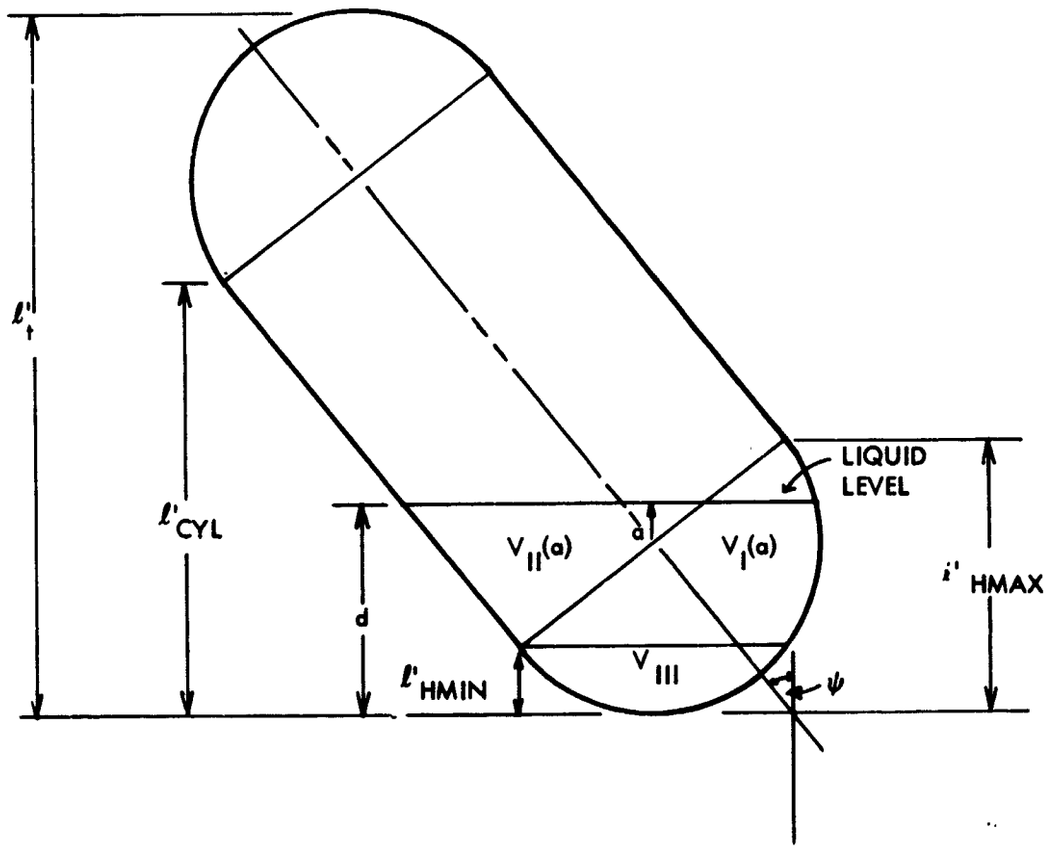

Figure 3-6. Schematic of Tank Inclined at an Angle ψ

LOCKHEED
CALIFORNIA COMPANY

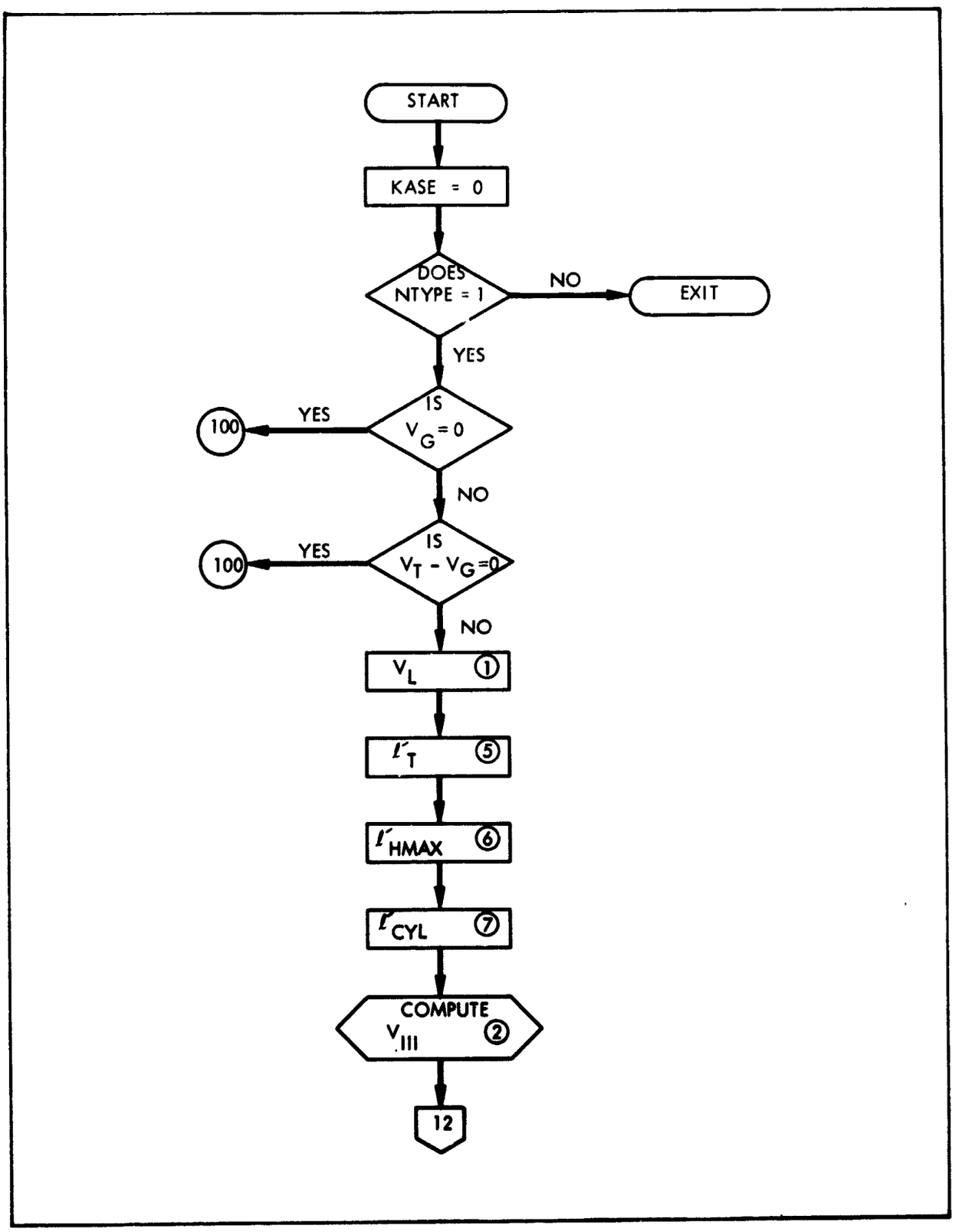

Figure 3-7. Subroutine GEOMVG (Variable Angle Geometry) (1 of 8)

LOCKHEED
CALIFORNIA COMPANY

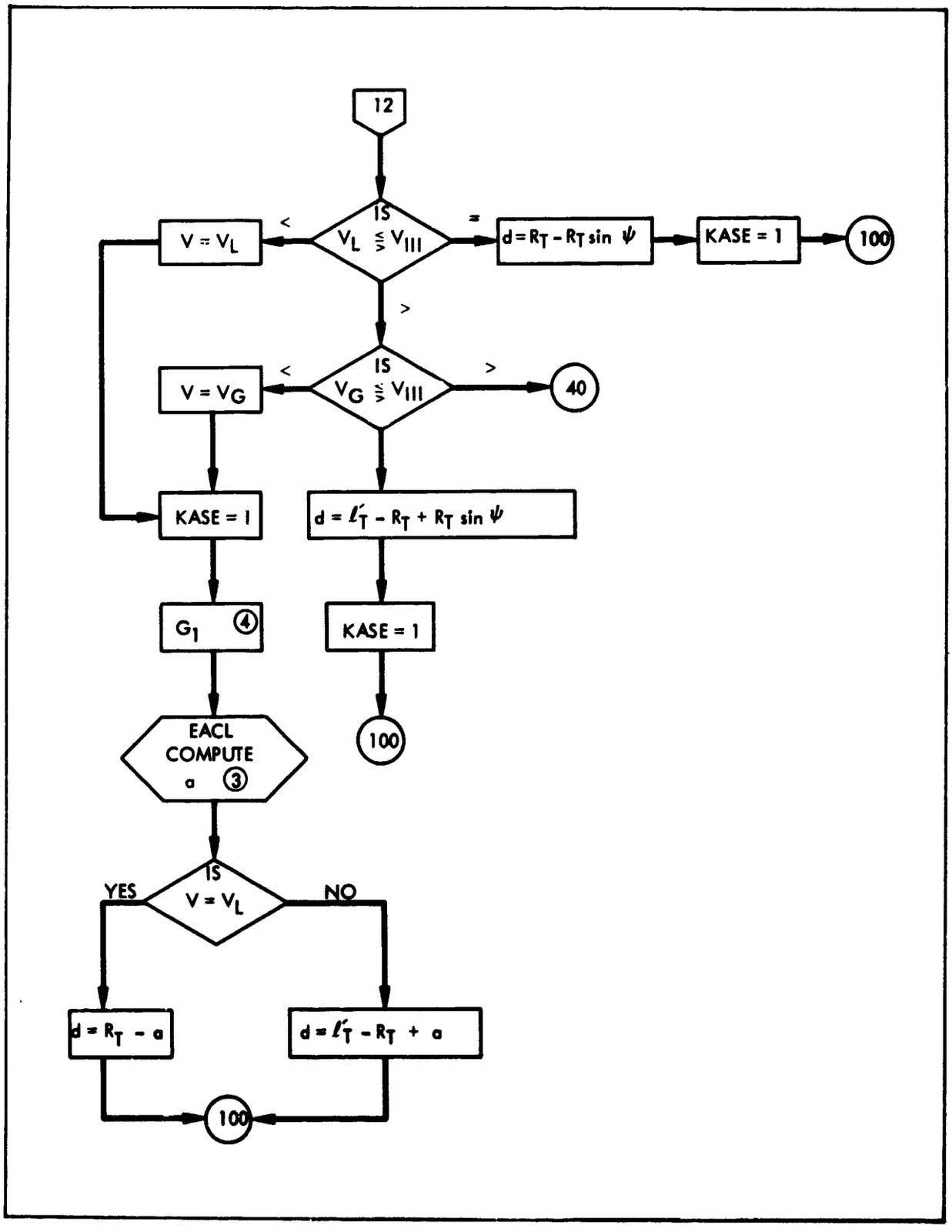

Figure 3-7. Subroutine GEOMVG (Variable Angle Geometry) (2 of 8)

LOCKHEED
CALIFORNIA COMPANY

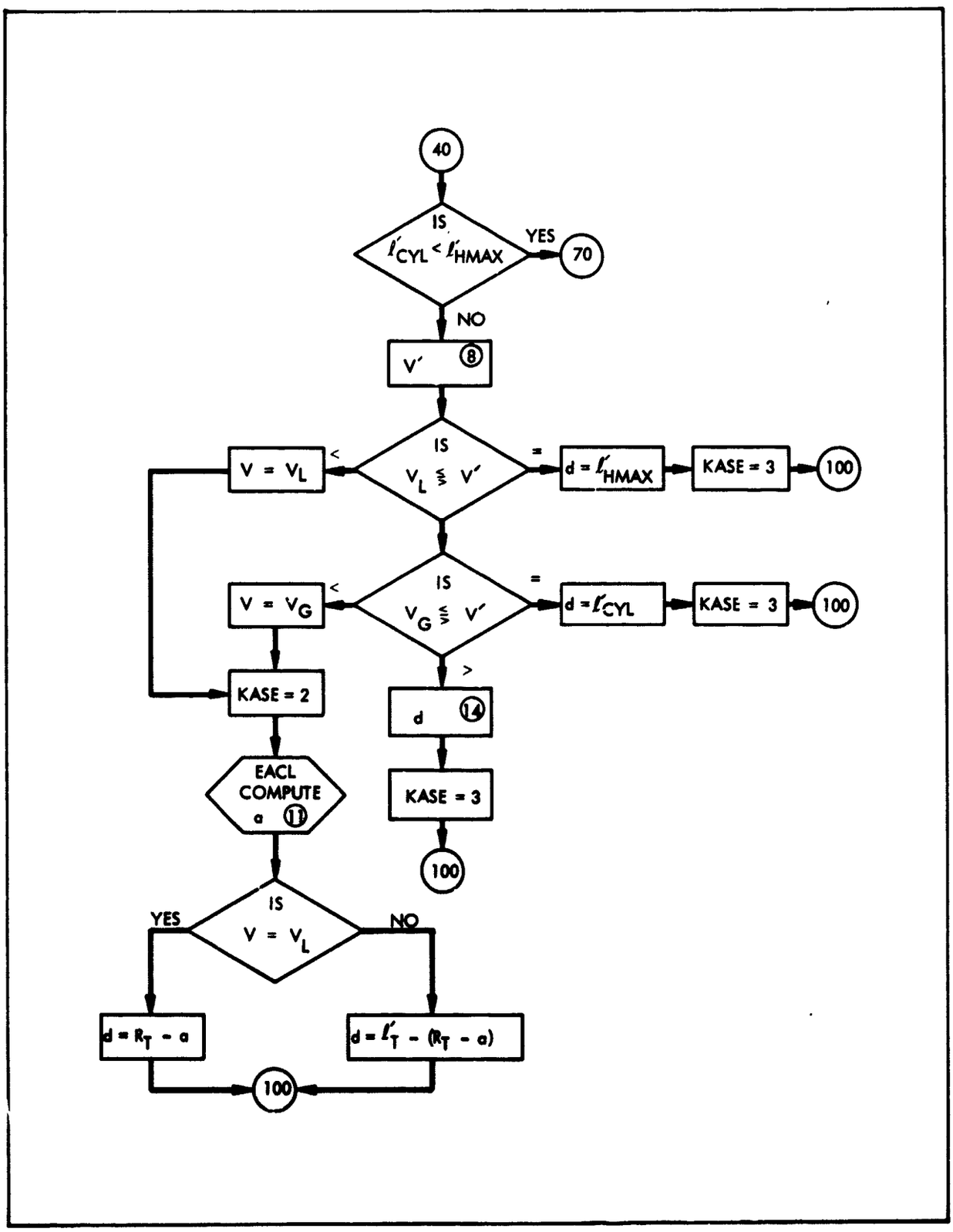

Figure 3-7. Subroutine GEOMVG (Variable Angle Geometry) (3 of 8)

LOCKHEED
CALIFORNIA COMPANY

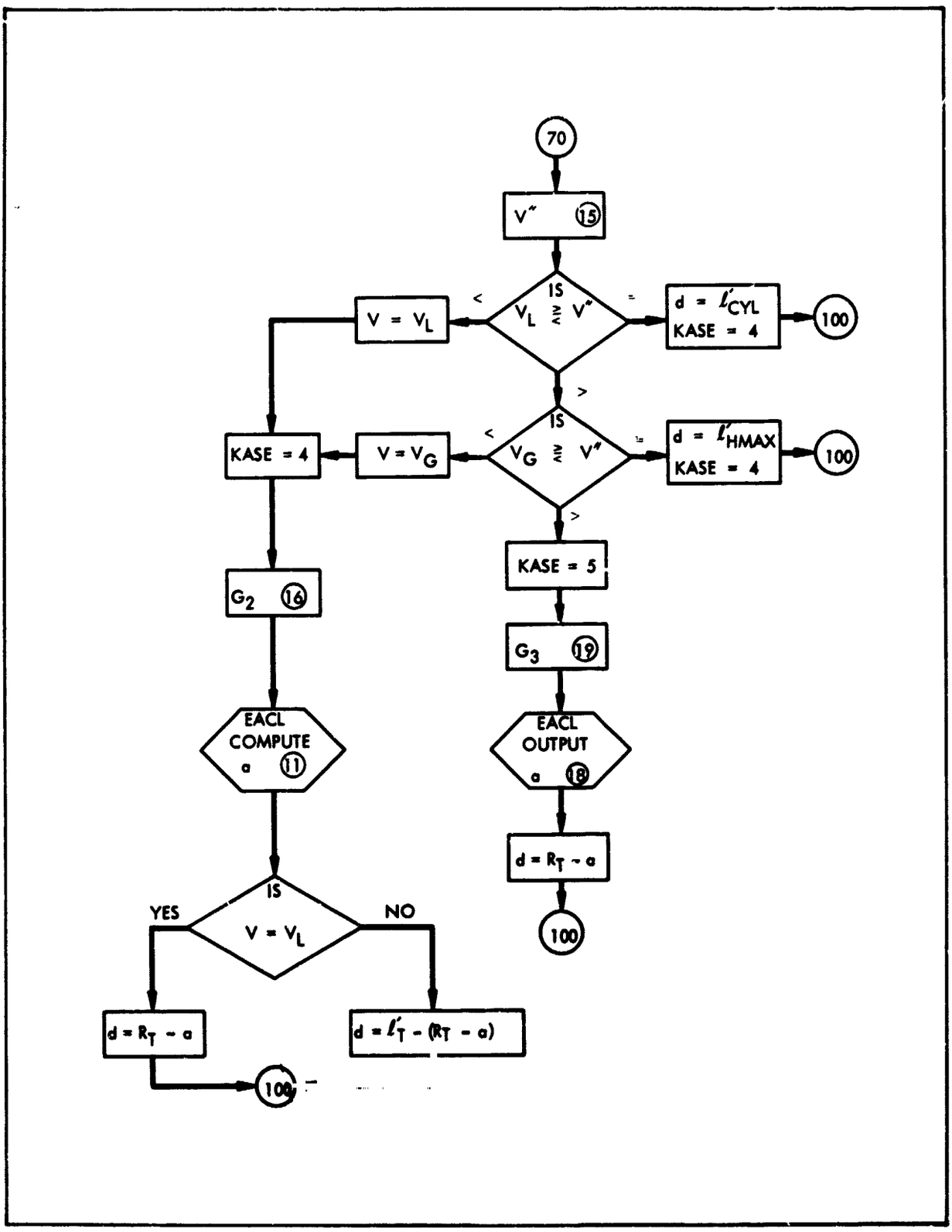

Figure 3-7. Subroutine GEOMVG (Variable Angle Geometry) (4 of 8)

LOCKHEED
CALIFORNIA COMPANY

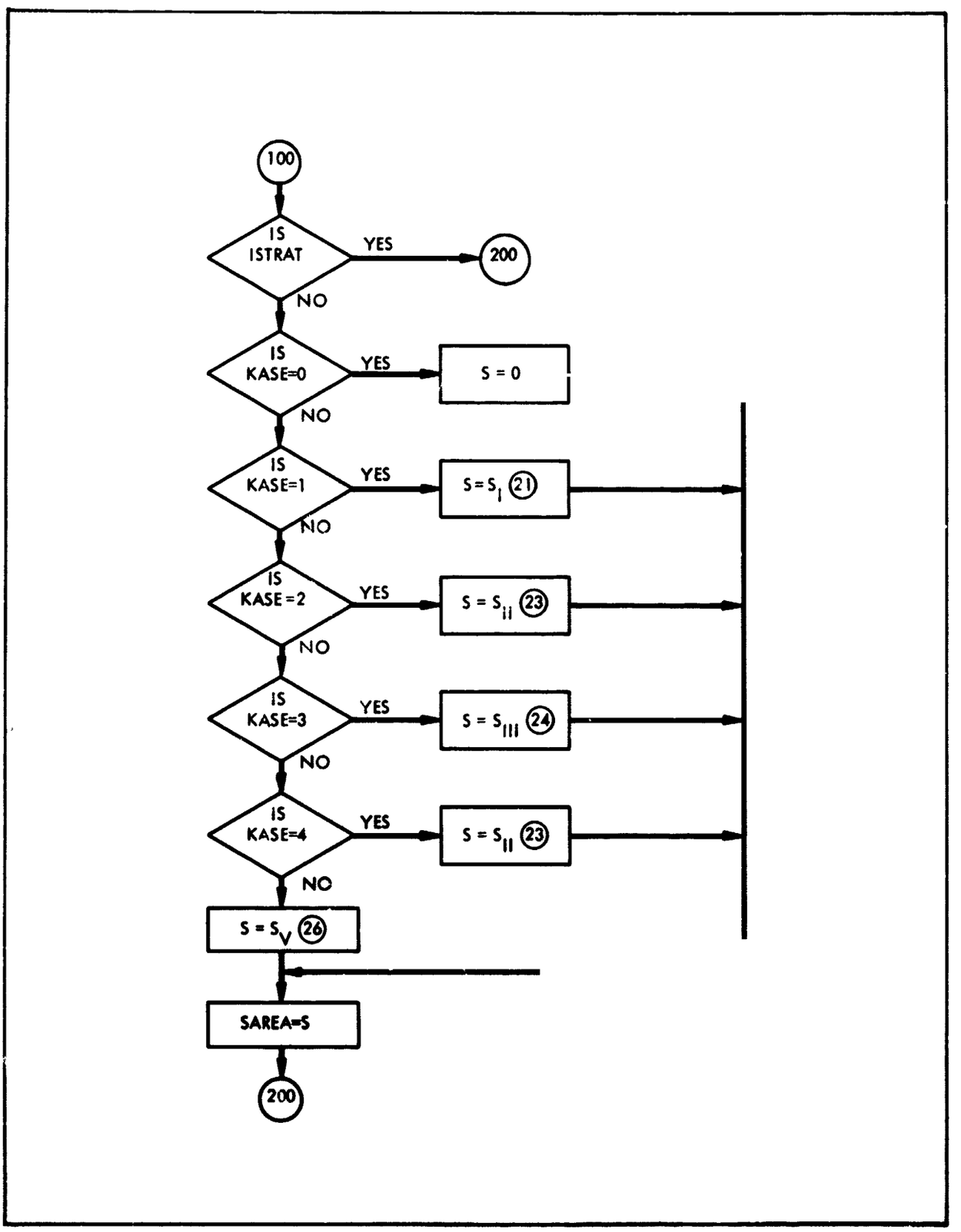

Figure 3-7. Subroutine GEOMVG (Variable Angle Geometry) (5 of 8)

LOCKHEED CALIFORNIA COMPANY

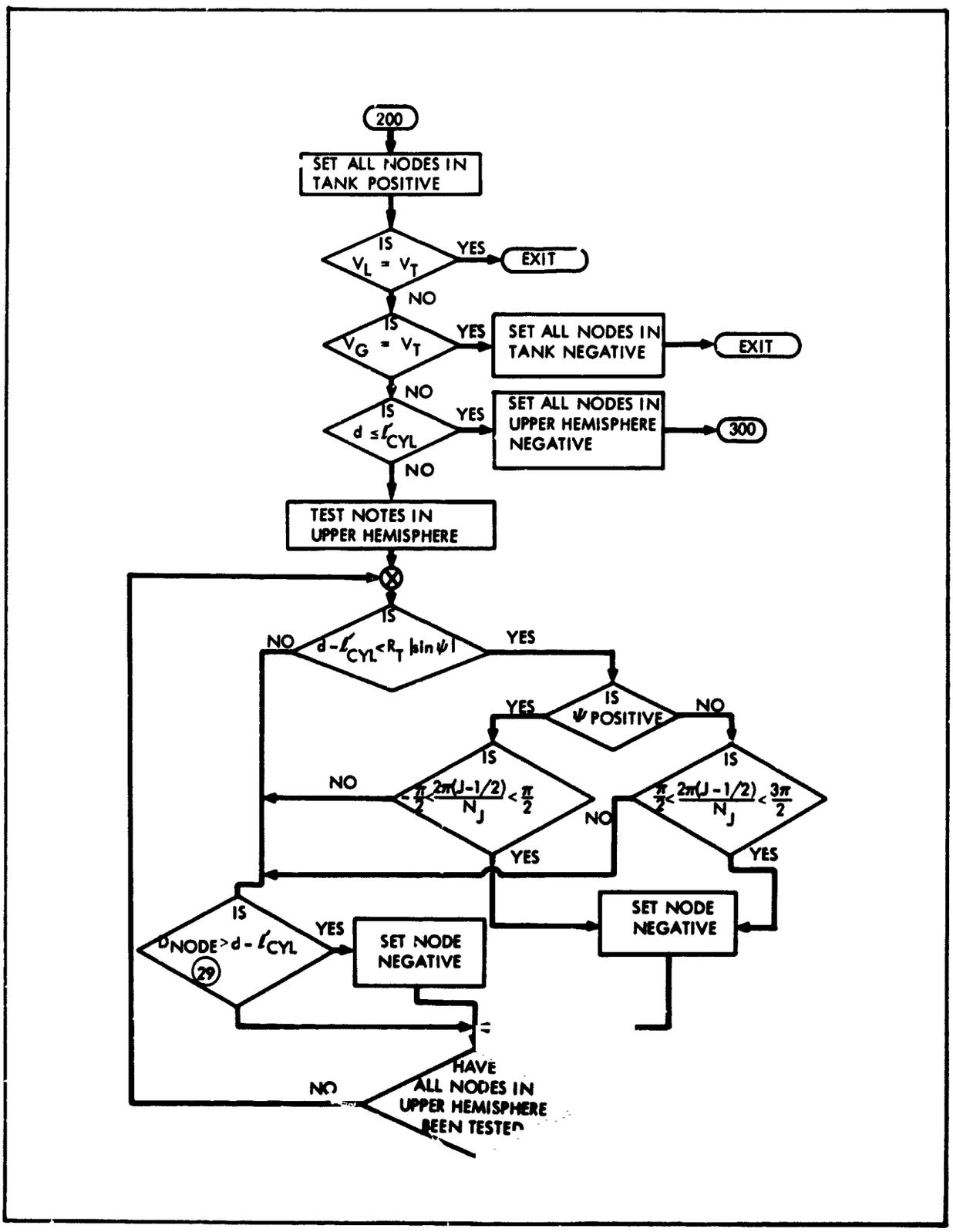

Figure 3-7. Subroutine GEOMVG (Variable Angle Geometry) (6 of 8)

LOCKHEED
CALIFORNIA COMPANY

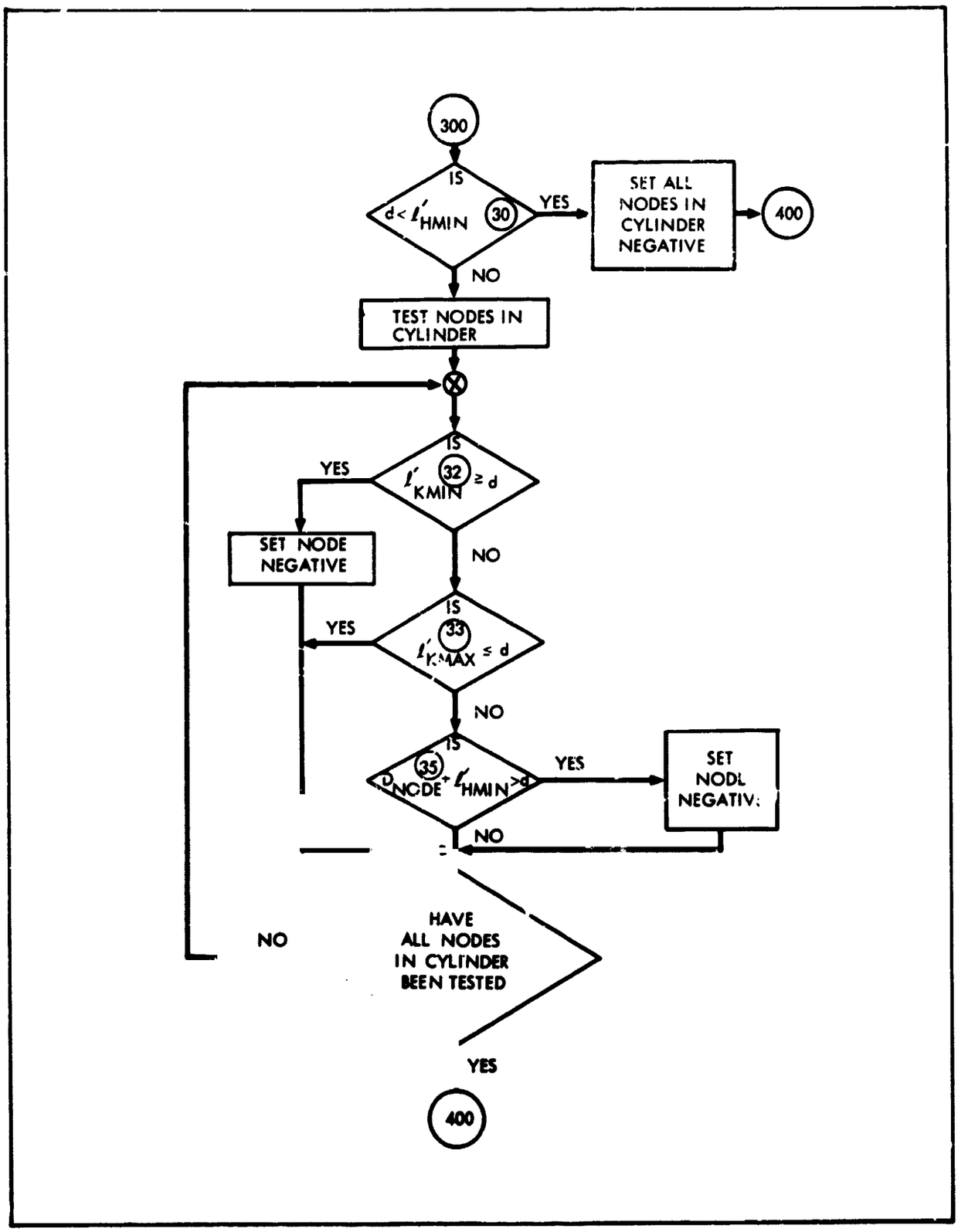

Figure 3-7. Subroutine GEOMVG (Variable Angle Geometry) (7 of 8)

LOCKHEED CALIFORNIA COMPANY

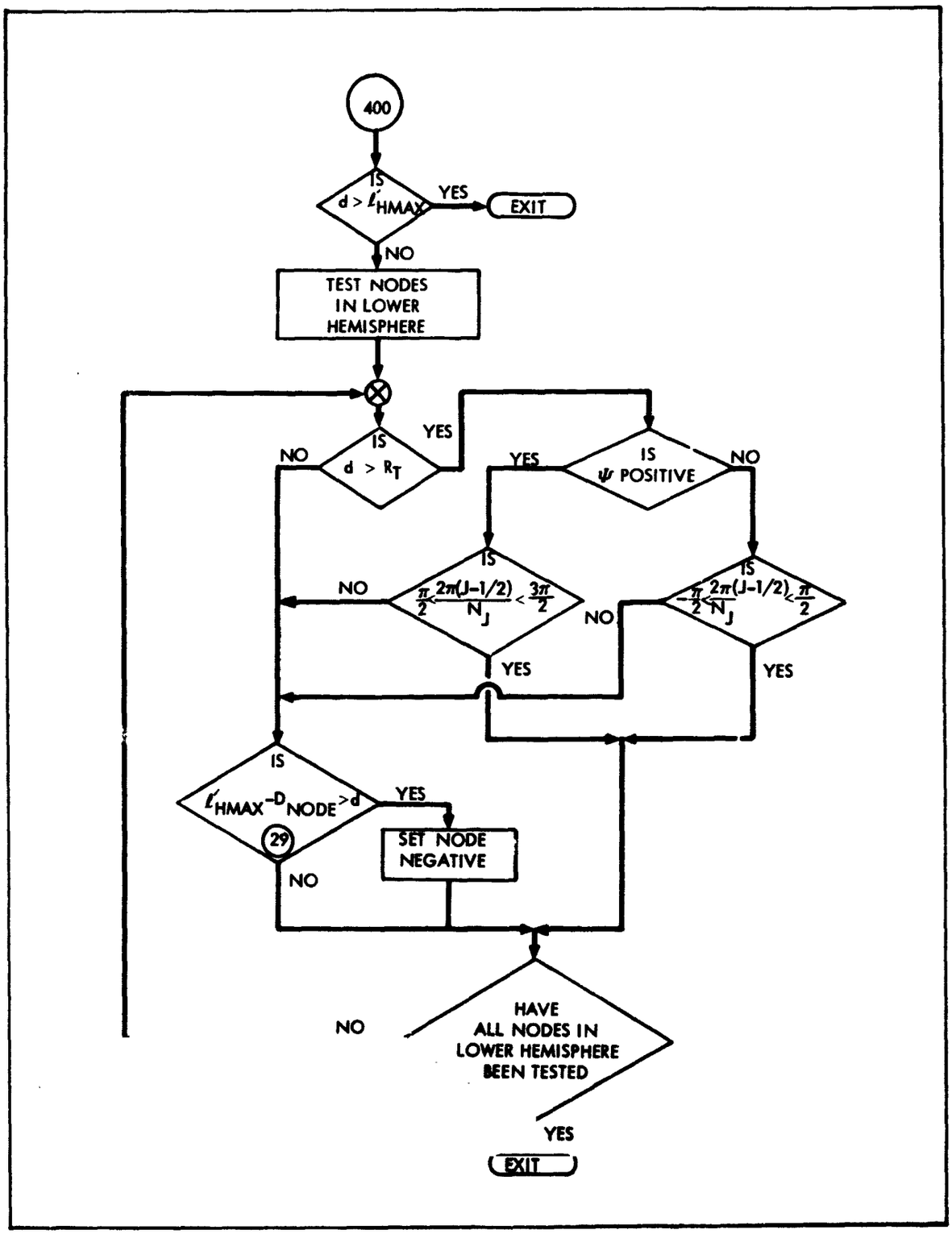

Figure 3-7. Subroutine GEOMVG (Variable Angle Geometry) (8 of 8)

LOCKHEED
CALIFORNIA COMPANY

FIGURE 3-7 LIST OF EQUATIONS

Subroutine GEOMVG

(1) $V_L = V_T - V_G$

(2) $V_{III} = \pi \frac{R_T^3}{3} \left[(1 - \sin\psi)^2 \, (3 - (1 - \sin\psi)) \right]$

(3) $V = \frac{1}{3}\pi (R_T - a)^2 \, (2R_T + a)$

(4) $G_1 = \frac{1}{2} \, (R_T + R_T \sin\psi)$

(5) $\ell'_T = 2R_T + L \cos\psi$

(6) $\ell'_{HMAX} = R_T + R_T \sin\psi$

(7) $\ell'_{CYL} = L \cos\psi + R_T - R_T \sin\psi$

(8) $V' = \frac{2}{3}\pi R_T^3 + \pi R_T^3 \tan\psi$

(9) $$V_I(a) = \pi \frac{R_T^3}{3} \left(\sin\psi (3 - \sin^2\psi) - \frac{1}{2}\right) - \left[\frac{R_T^2}{6} \cos\psi + \frac{a^2}{3} \frac{\cos\psi}{\sin^2\psi}\right] \sqrt{R_T^2 \sin^2\psi - a^2} - \left[\frac{\pi}{2} + \sin^{-1}\left(\frac{a \cot\psi}{\sqrt{R_T^2 - a^2}}\right)\right] \frac{a}{3} (3 R_T^2 - a^2) + \frac{R_T^3}{3} \sin^{-1}\left(\frac{2R_T^2 \cos 2\psi}{R_T^2 - a^2} - 1\right)$$

LOCKHEED
CALIFORNIA COMPANY

FIGURE 3-7 LIST OF EQUATIONS (Continued)

Subroutine GEOMVG

(10) $$V_{II}(a) = \tan\psi \left[R_T^2 \left(\frac{a}{\sin\psi} \sin^{-1}\left(\frac{a}{R_T \sin\psi}\right) + \sqrt{R_T^2 - \frac{a^2}{\sin^2\psi}} \right) - \frac{\pi R_T^2}{2 \sin\psi} - \frac{1}{3}\sqrt{\left(R_T^2 - \frac{a^2}{\sin^2\psi}\right)^3} \right]$$

(11) $$V = V_I(a) + V_{II}(a) + V_{III}$$

(12) $$V_K = V_{LIQ} - V'$$

(13) $$d' = V_K / \pi R_T^2$$

(14) $$d = \ell'_{HMAX} + d' \cos\psi$$

(15) $$V'' = V_I (R_T - \ell'_{CYL}) + V_{II} (R_T - \ell'_{CYL}) + V_{III}$$

(16) $$G_2 = R_T - \left(\frac{1}{2} \ell'_{CYL} + \frac{1}{2} (R_T - R_T \sin\psi)\right)$$

(17) $$a' = -(a + L \cos\psi)$$

(18) $$V = V_I(a) + V_{II}(a) - V_{II}(-a') + \frac{2}{3} \pi R_T^3 - V_I(a')$$

(19) $$G_3 = R_T - \frac{1}{2} \ell'_{HMAX} - \frac{1}{2} \ell'_{CYL}$$

(20) $$r = \sqrt{R_T^2 - a^2}$$

(21) $$S_I = \pi r^2$$

(22) $$R' = \sqrt{R_T^2 - a^2}$$

LOCKHEED
CALIFORNIA COMPANY

FIGURE 3-7 LIST OF EQUATIONS (Continued)

Subroutine GEOMVG

(23) $$S_{II} = \frac{\pi R'^2}{2} + \frac{a}{\tan\psi}\sqrt{R'^2 - \frac{a^2}{\tan^2\psi}} + R'^2 \sin^{-1}\left(\frac{a}{R' \tan\psi}\right)$$

$$+ \frac{1}{\cos\psi}\left[\frac{\pi R_T^2}{2} - \frac{a}{\sin\psi}\sqrt{R_T^2 - \frac{a^2}{\sin^2\psi}} - R_T^2 \sin^{-1}\left(\frac{a}{R_T \sin\psi}\right)\right]$$

(24) $$S_{III} = \frac{\pi R_T^2}{\cos\psi}$$

(25) $$R'' = \sqrt{R_T^2 - a'^2}$$

(26) $$S_V = -\frac{1}{\cos\psi}\left[\frac{a'}{\sin\psi}\sqrt{R_T^2 - \frac{a'^2}{\sin^2\psi}} + R_T^2 \sin^{-1}\left(\frac{a'}{R_T \sin\psi}\right)\right.$$

$$\left. + \frac{a}{\sin\psi}\sqrt{R_T^2 - \frac{a^2}{\sin^2\psi}} + R_T^2 \sin^{-1}\left(\frac{a}{R_T \sin\psi}\right)\right]$$

$$+ \frac{\pi R'^2}{2} + \frac{a}{\tan\psi}\sqrt{R'^2 - \frac{a^2}{\tan^2\psi}} + R'^2 \sin^{-1}\left(\frac{a}{R' \tan\psi}\right)$$

$$+ \frac{\pi R''^2}{2} + \frac{a'}{\tan\psi}\sqrt{R''^2 - \frac{a'^2}{\tan^2\psi}} + R''^2 \sin^{-1}\left(\frac{a'}{R'' \tan\psi}\right)$$

(27) $$K_{NODE} = \left(\frac{I - \frac{1}{2}}{N_I}\right)^{1/2} R_T \sin\left(\frac{2\pi}{N_J}\left(K - \frac{1}{2}\right)\right)$$

(28) $$R'_{NODE} = \left(\frac{I - \frac{1}{2}}{N_I}\right)^{1/2} R_T \cos\left(\frac{2\pi}{N_J}\left(K - \frac{1}{2}\right)\right) \cos\left(\frac{2\pi}{N_J}\left(J - \frac{1}{2}\right)\right)$$

(29) $$D_{NODE} = R_T \left|\sin\psi\right| + R'_{NODE} \sin\psi + K_{NODE} \cos\psi$$

LOCKHEED
CALIFORNIA COMPANY

FIGURE 3-7 LIST OF EQUATIONS (Continued)

Subroutine GEOMVG

(30) $\ell'_{HMIN} = R_T - R_T \left| \sin\psi \right|$

(31) $K_{NODE} = L - \frac{L}{N_K} \left(K - \frac{1}{2}\right)$

(32) $\ell'_{KMIN} = K_{NODE} \cos\psi + \ell'_{HMIN}$

(33) $\ell'_{KMAX} = K_{NODE} \cos\psi + 2R_T \left|\sin\psi\right| + \ell'_{HMIN}$

(34) $R'_{NODE} = \left(\frac{I - \frac{1}{2}}{N_I}\right)^{1/2} R_T \cos\left(\frac{2\pi}{N_J}\left(J - \frac{1}{2}\right)\right)$

(35) $D_{NODE} = K_{NODE} \cos\psi + R_T \left|\sin\psi\right| + R'_{NODE} \sin\psi$

(36) EACL - Built-in convergence routine based on Aitken's method (Iterative linear interpolation to solve for a.)

LOCKHEED
CALIFORNIA COMPANY

If $V = V_L$, then $d = R_T - a$.

If $V = V_G$, than $d = \ell'_T - R_T + a$.

where ℓ'_T is the apparent total height of the tilted tank (step (5)).

b. Case II - Where ℓ'_{HMAX} (step (6)) $< \ell'_{CYL}$, (step (7)), (ℓ'_{HMAX} is the height of the highest point in the lower hemisphere, and ℓ'_{CYL} is the height of the lowest point in the upper hemisphere), and either V_L or V_G is less than V' (step (8)). This means that the liquid surface is in the cylinder and the upper or lower hemisphere, but not both.

If $V_L < V'$, let $V = V_L$.

If $V_G < V'$, let $V = V_G$.

Use EACL to solve equation (11) for a. Use a = o for starting guess.

If $V = V_L$, then $d = R_T - a$.

If $V = V_G$, then $d = \ell'_T - (R_T - a)$.

c. Case III - Where $\ell'_{CYL} > \ell'_{HMAX}$, and $V_L > V'$ and $V_G > V'$, i.e., the liquid surface intersects the cylinder only. Compute d from equation (14); the iterative procedure is not needed.

d. Case IV - Where $\ell'_{CYL} < \ell'_{HMAX}$, and either V_L or V_G is less than V" (step (15)), the liquid surface is in the cylinder and upper or lower hemisphere. This condition is the same as CASE II, except that different limits must be set on the iteration scheme, since the position of the tank is such that the surface could fall into the upper and lower hemispheres concurrently.

If $V_L < V''$, let $V = V_L$.

If $V_G < V''$, let $V = V_G$.

LOCKHEED
CALIFORNIA COMPANY

Use EACL to solve equation (11) for a.

Use G_2, (step (16)) as a first guess for a.

If $V = V_L$, then $d = R_T - a$.

If $V = V_G$, then $d = \ell'_T - (R - a)$.

e. Case V - Where $\ell'_{CYL} < \ell'_{HMAX}$ and V_L and V_G are greater than V', i.e., the liquid surface is in the cylinder and the upper and lower hemispheres.

Use EACL to solve equation (18) for a, Use G_3, step (19), for a first guess for a. Then $d = R_T - a$.

f. Computation of vapor-liquid interface area - If surface area computation is desired, ISTRAT $\neq$ 0.

Cases I - V correspond to Cases I - V, preceding

Case I: $S = S_I$, step (21)

Case II: $S = S_{II}$, step (23)

Case III: $S = S_{III}$, step (24)

Case IV: $S = S_{II}$, step (23)

Case V: $S = S_V$, step (26)

g. Upper Hemisphere - Where $d \leq \ell'_{CYL}$ step (7), set all nodes in the upper hemisphere negative and go on to cylinder. (Node is used in this context to mean the capacitor value corresponding to the node being tested.)

If $d - \ell'_{CYL} < R_T \left| \sin\psi \right|$ and ψ is positive, then all nodes for which $\frac{\pi}{-2} < \frac{2\pi(J-\frac{1}{2})}{N_J} < \frac{\pi}{2}$ are gas nodes.

If $d - \ell'_{CYL} < R \left| \sin\psi \right|$ and ψ is negative, then nodes for which $\frac{\pi}{2} < \frac{2\pi(J-\frac{1}{2})}{N_J} < \frac{3\pi}{2}$ are gas nodes.

Otherwise, the height of the node above ℓ'_{CYL}, D_{NODE}, step (29) must be computed.

LOCKHEED
CALIFORNIA COMPANY

If $D_{NODE} \leq d - \ell'_{CYL}$, the node is in liquid.

If $D_{NODE} > d - \ell'_{CYL}$, the node is a gas node.

h. Cylinder - If $d < \ell'$ (step (30)), the lowest point in the cylinder, all nodes in the cylinder are gas nodes.

Also, if for any K, ℓ'_{KMIN} (step (32)) $\geq d$, all nodes for this K are in the gas region, and if ℓ'_{KMAX} (step (33)) $\leq d$, all nodes for this K are liquid nodes.

Otherwise the height of the node above ℓ'_{HMIN}, D_{NODE} (step (35)), is computed.

If $D_{NODE} + \ell'_{HMIN} > d$, the node is a gas node.

If $D_{NODE} + \ell'_{HMIN} \leq d$, the node is in the liquid region.

i. Lower Hemisphere - If $d > \ell'_{HMAX}$ (step (6)), all the nodes in the lower hemisphere are liquid nodes.

If $d > R_T$, and ψ is positive, all nodes such that $\frac{\pi}{2} < \frac{2\pi}{N_J}(J-1/2) < \frac{3\pi}{2}$ are in liquid. If $d > R_T$ and ψ is negative, all nodes such that $-\frac{\pi}{2} < \frac{2\pi}{N_J}(J-1/2) < \frac{\pi}{2}$ are in liquid.

Otherwise D_{NODE} (step (29)) must be computed for each node, where here D_{NODE} is the height of the node below ℓ_{HMAX}.

If $\ell'_{HMAX} - D_{NODE} > d$, the node is a gas node.

If $\ell'_{HMAX} - D_{NODE} \leq d$, the node is in the liquid region.

Any node found to be in gas (liquid) has had its corresponding capacitor value set negative (positive).

LOCKHEED CALIFORNIA COMPANY

TANK FLUID MASS - ENERGY BALANCE

This subroutine (CONTRL) performs thermodynamic mass and energy balance computations on the system as a result of heat input with time (computed by the Thermal Analyzer heat balance), and fluid volume changes resulting from utilization, pressurization, addition, and venting. The basic relationships used in this subroutine account for the accumulation and depletion of mass and energy transfer between phases by conduction, evaporation, and condensation.

Figure 3-8 contains flow charts which show the sequence of computer operations performed in this subroutine, and is followed by associated nomenclature and equations.

Specifically, the computer proceeds as follows during a computation interval:

a. If this is the first time that CONTRL is executed, initial conditions and storage locations are set up. (Fig 3-8, step (1)).

b. If this is the second time through CONTRL, subroutine GEOMG, GEOMNG or GEOMVG is called to determine which of the nodes are in gas and which are in liquid. Based on the results obtained here, capacitors and resistors associated with the contained fluid, the tank walls and insulation layers are computed in step (2).

c. Average gas space temperature and average temperature are computed.

d. Maximum surface node temperature is found.

e. Masses of condensable gas and non-condensable gas are found (step (3)). Using the average gas space temperature determined above, and the previous mass of condensable gas in the tank (equation (3a), the computer continues in the computation of the condensable gas partial pressure. If the fluid is under a gravity condition, the liquid surface temperature, T_S, is interpolated (equation (8)) between the hottest liquid node temperature and the gas node temperature directly coupled with this liquid node. The surface temperature, T_S, is then used in the computation of the condensable gas partial pressure, and the maximum liquid node temperature, $T_{I_{MAX}}$, is replaced by $\overline{T}_S$.

LOCKHEED
CALIFORNIA COMPANY

f. If the average gas region temperature, $\overline{T}_G$, determined from step 3 is less than or equal to $T_{L_{MAX}}$, the partial pressure of the condensable gas is determined from a curve of the liquid vapor pressure versus temperature. The new mass of condensable gas in the gas region is then computed from the gas law relationship (equation 12b)). If $\overline{T}_G$ is greater than $T_{L_{MAX}}$, the gas is considered to be super-heated, and its partial pressure is determined from the known previous mass and the gas law equation (equation (11)).

The change in mass of condensable gas, m_{cc}, in the system is then determined by difference.

g. The change in the system energy balance due to mass transfer is computed in subroutine S5059 if m_{cc} is greater than the allowed tolerance (set at 0.01 lb, ϵ_m, but can be changed in the program). The transport of mass across the interface occurs by condensation or evaporation. It is assumed that the net result of mass transport is an increase or decrease in the liquid region specific energy (i.e., only liquid region temperatures are affected).

h. The extent of the liquid region affected by condensation or evaporation is dependent upon the specific system circumstances at the time, and in some instances, magnitude of the rate of evaporation, as defined in the Table 3-1.

TABLE 3-1

THERMODYNAMIC EFFECT OF MASS TRANSFER

	Region Temperatures Affected by:	
System Condition	Condensation	Evaporation
zero-g, no flow[1]	liquid surface[2]	bulk liquid
zero-g, with flow	bulk liquid	bulk liquid
gravity, no flow	liquid surface	liquid surface[3] or bulk liquid
gravity, with flow	liquid surface	liquid surface or bulk liquid

LOCKHEED CALIFORNIA COMPANY

1/ Flow indicates liquid addition or depletion.

2/ Surface indicates liquid nodes adjacent to the gas-liquid interface.

3/ The effect of evaporation depends upon the magnitude of the process. Under the influence of gravity, it is assumed that when sufficient energy is removed by evaporation to reduce the gas-liquid interface temperature below the average temperature for the liquid node adjacent the interface, bulk liquid temperature equalization occurs.

Based on the assumption in paragraph (g), the energy associated with a particular mass change across the gas-liquid interface is accounted for as a change in temperature in the appropriate nodes in the liquid region by means of equation (5) if the average liquid temperature is changed, and equation (54) if the change is limited to the surface liquid temperatures.

i. The partial pressure of the noncondensable gas is calculated (steps (15-17)).

In a two-gas system, one of the gases is assumed to be a noncondensable pressurant. Using the average gas space temperature, $\bar{T}_C$, determined previously, and the mass of noncondensable gas in the system from the summation (equation (3b)), the partial pressure is computed using equation (17).

The total pressure in the system is then computed as a summation of the partial pressures of the component gases.

j. The amount of gas vented is calculated (steps (18-20)).

The resultant tank pressure from step (3) is compared with the desired tank pressure, P_{MAX}, obtained from input data. If the tank pressure is determined to be above an allowable over-pressure limit, $F_{MAX}\ P_{MAX}$, the tank is vented down to the operating pressure.

In this program the gas is removed from the vapor space isothermally, based on the assumption that the venting process is essentially a constant pressure process. For a multigas system, it is also

LOCKHEED
CALIFORNIA COMPANY

assumed that the composition of the gases vented is the same as the composition of the gases in the tank immediately prior to venting. The amounts of the gases vented, m_{NV}, and m_{CV}, are determined from equations (20a) and (20b).

The mass of the non-condensable gas vented, m_{NV}, is removed from the system (equation (3b)). The mass of the condensable gas removed from the gas space is also accounted for (equation 2a)).

The resultant change in energy due to evaporation is computed as before in steps (50-59).

k. The amount of pressurizing gas required is computed (steps (23-32)).

The resultant tank pressure from steps (3) or (4) is compared with the desired minimum tank pressure, P_{MIN}, obtained from input information. If the tank pressure is below the specified minimum, P_{MIN} P_{MIN}, pressurant is added to the system. The pressurant is assumed to expand isothermally (isenthalpic) within the tank (equations (24a, b, c)). The temperature of the incoming gas is computed either within CONTRL (equations (24c, 24.2)) in the Thermal Analyzer function block using equation (24.2)) as a function of pressurant storage temperature, storage tank expansion cooldown, and heat exchanger input. The incoming gas velocity is assumed to be high enough to result in complete mixing in the gas region, permitting the use of mixed gas properties at an average temperature for the mixed gases as determined in equation (28).

The average gas temperature, $\bar{T}_G$, after pressurization is checked against the liquid saturation temperature, T_{SAT}, at the system final partial pressure, P_{MIN}, which is obtained from liquid properties tables. If the average gas temperature is greater than T_{SAT}, the gas is considered to be superheated and no condensation occurs, but evaporation will be accounted for in the succeeding computation interval. If the gas space average temperature is less than or equal to T_{SAT}, the partial pressure of the condensable gas is determined from the liquid saturated vapor pressure at the

LOCKHEED
CALIFORNIA COMPANY

maximum liquid temperature, $T_{L_{MAX}}$, and the resultant mass of condensable gas in the vapor space, m_{c2}, is recomputed from gas law relationships (equation (31 b)).

The change in mass of condensable gas due to gas space temperature change, m_{cc}, is computed and the change in energy accounted for in steps (50-59).

l. The amount of liquid withdrawn or added is computed (steps (34-37)), from mission input information. It is assumed that either the withdrawal from or the addition of liquid to the tank creates sufficient disturbance within the liquid region to destroy thermal stratification.

The mass of liquid withdrawn is computed (equation 34a) as a product of the utilization rate input information and the computing interval. Similarly, the mass of liquid added is computed (equation (34b)) from addition rate data.

The change in liquid mass is computed by summing the changes in mass during the computing interval, and a new liquid mass is determined (equation (35a)). Using the assumption that thermal stratification is destroyed by addition or withdrawal of liquid, a new average liquid temperature is computed (equation (35b)) by averaging the sum of the thermal content of the liquid already in the tank and the liquid added, over the total liquid mass in the tank.

m. The computer then determines the change in volume of the gas space resulting from the change in liquid volume (equations (36a) and (36b)), using the algebraic sum of the masses of liquid added or withdrawn computed in the preceding step.

n. The difference in gas volumes between the present and previous timesteps are found (equation (38)).

o. If it is found that the gas volume (set at a tolerance of 0.001 ft^3, ϵ_G, which can be changed in the program) has changed significantly, or that there has been a change in either the gravity

LOCKHEED
CALIFORNIA COMPANY

vector or the angle between the tank's longitudinal axis and the gravity vector, it is determined which nodes are now in liquid and which are now in gas. Capacitors and resistors are recalculated on this basis (step (40)).

p. If there has been a change in the liquid volume or in the angle between the gravity vector and the longitudinal axis of the tank, all liquid node temperatures are set to the average liquid temperature (step (41)).

q. If there has been a change in the angle between the gravity vector and the longitudinal axis of the tank, all gas node temperatures are set to the average gas temperature (step (42)).

r. A new overall temperature is computed. If there has been a change in the gravity vector, all node temperatures are set equal to this new overall temperature (step (43)).

s. If pressurant is not being added during withdrawal of liquid, the change in gas space temperature during the computing interval is computed assuming the total gas region undergoes a reversible, adiabatic expansion from the initial volume to the final volume during the period (equation (36)). This change in average gas temperature is then added to each of the nodes in the gas region (step (45)). Heat transfer during this process is accounted for in the subsequent thermal balance.

If pressurant is being added during withdrawal of liquid, the program assumes complete mixing of the incoming pressurant with the gas in the tank. Energy of mixing is assumed to be a second order effect and is not considered in this program.

For mixed gases, the thermodynamic properties (partial pressure, specific volume, heat capacity) are considered additive and the transport properties (conductivity, viscosity) are taken to be the weighted average value based on the summation of the individual component values. The weighting factor being the concentration of each component in the mixture.

LOCKHEED
CALIFORNIA COMPANY

t. The effect of radiation upon the liquid surface nodes is computed and added to all liquid surface node temperatures (step (46)).

u. If a significant change in either average gas temperature, average liquid temperature, or total pressure has been found, resistors and capacitors are computed based on these new temperatures and new pressure, and new average gas and average liquid temperatures found (steps (47)-(48)).

v. An indicator is examined to determine whether the effect of fluid stratification is to be considered (step (49)).

w. If fluid stratification is considered, the effects of fluid stratification are added to the system only if all of the following are true:

1. non-zero gravity condition
2. no liquid usage
3. no liquid addition
4. volume of liquid in tank greater than EPSIVL

If all of the above conditions are satisfied, and if further it is found that any turbulence created by bottom wall heating does not destroy any existing stratification, the effect of fluid stratification upon all liquid layers is computed and added onto all liquid nodes (step 49.1)).

x. If time has reached a print-out time, output quantities, as specified in write instructions included near the end of CONTRL, are printed.

y. The quantities listed below are used as tolerances by CONTRL to determine how often to recompute fluid resistors and capacitors. Whenever these tolerances are exceeded, subroutine RECALC is called to update these elements. These tolerances are used as a machine timesaving device to prevent unnecessary calling of RECALC.

EPSIGT - Tolerance on average gas temperature

EPSILT - Tolerance on average liquid temperature

EPSIPR - Tolerance on total tank pressure.

EPSIVL - Tolerance on liquid phase existence (for stratification purposes only).

LOCKHEED
CALIFORNIA COMPANY

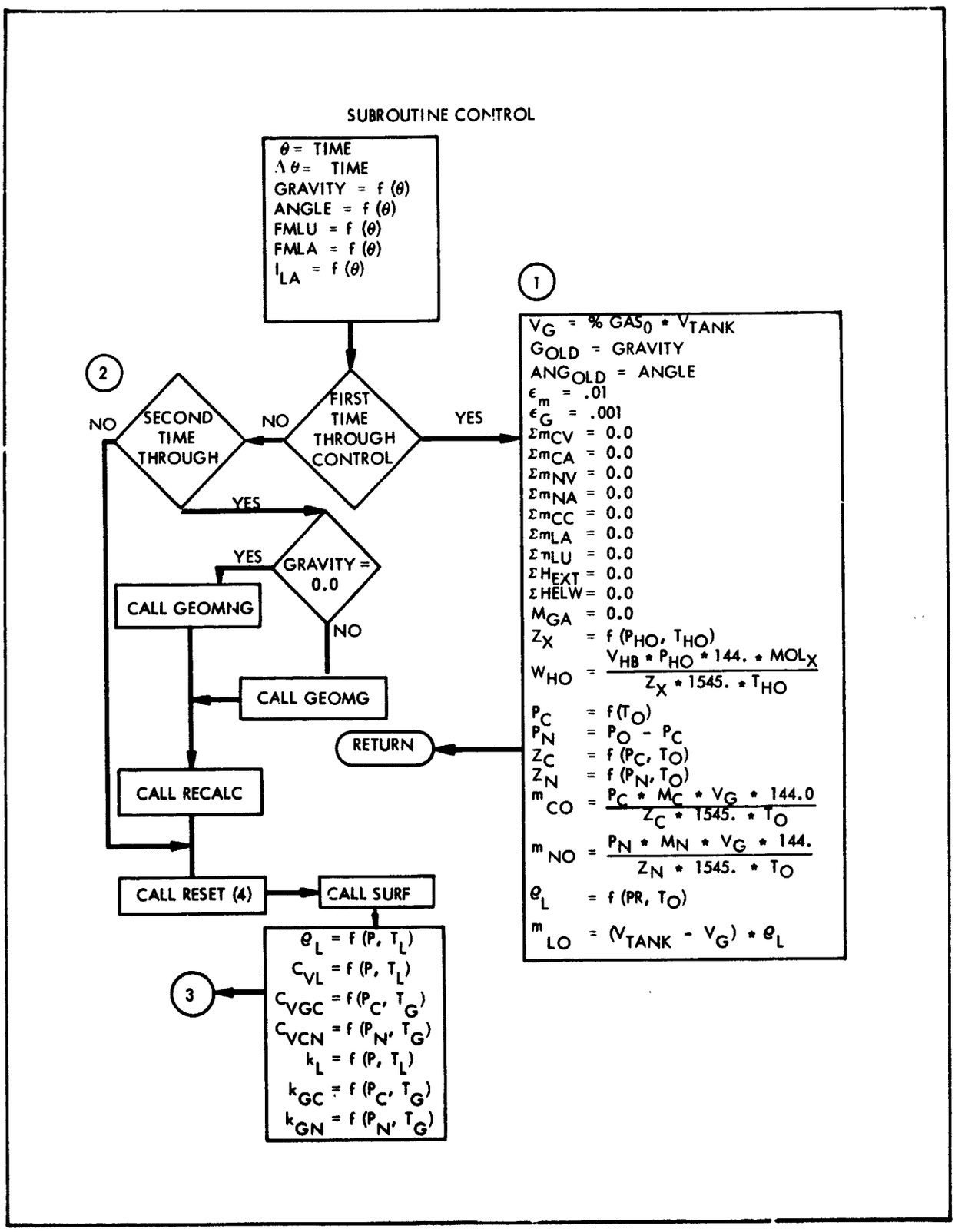

Figure 3-8. Subroutine CONTRL (Mass and Energy Balance) (1 of 5)

LOCKHEED
CALIFORNIA COMPANY

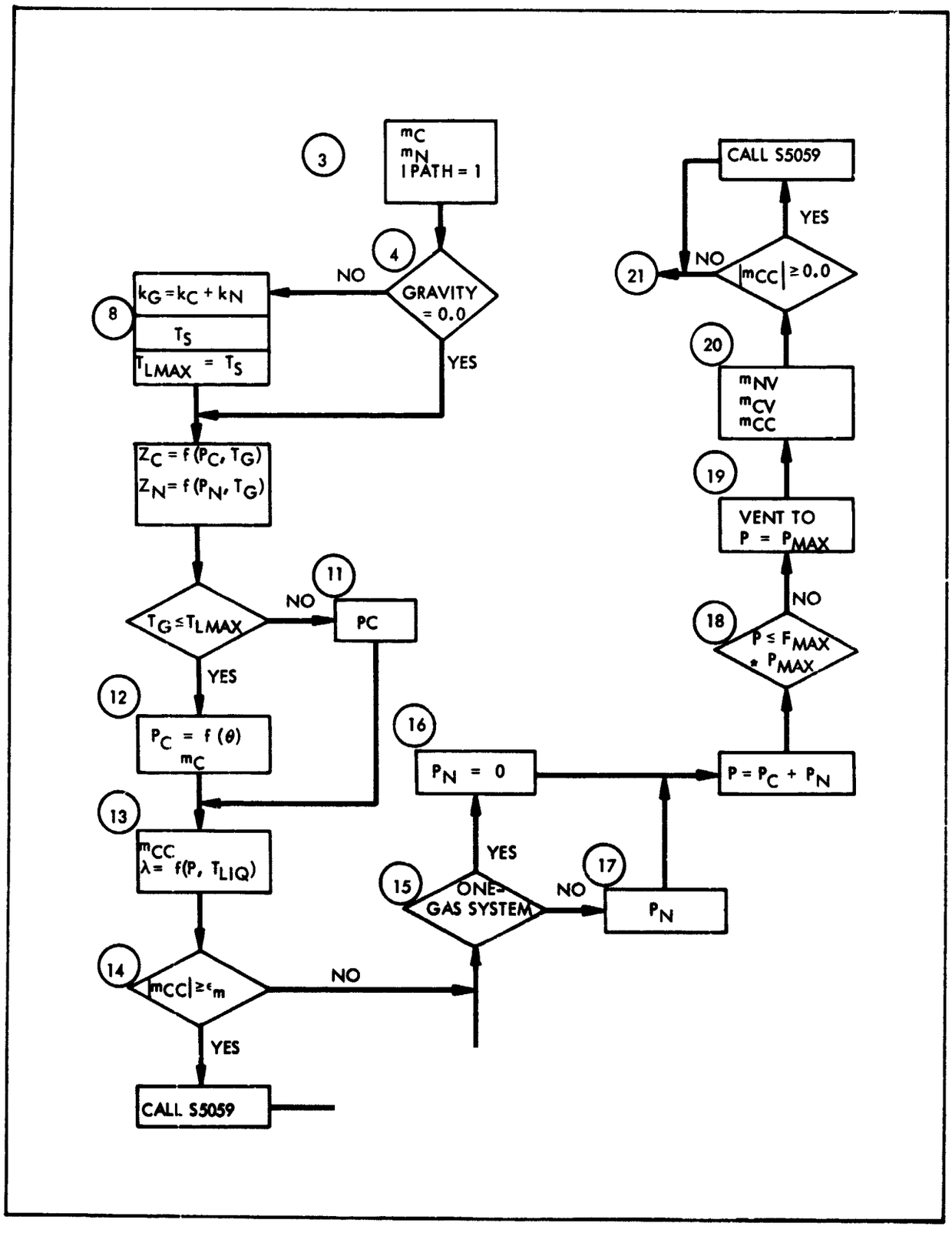

Figure 3-8. Subroutine CONTRL (Mass and Energy Balance) (2 of 5)

LOCKHEED
CALIFORNIA COMPANY

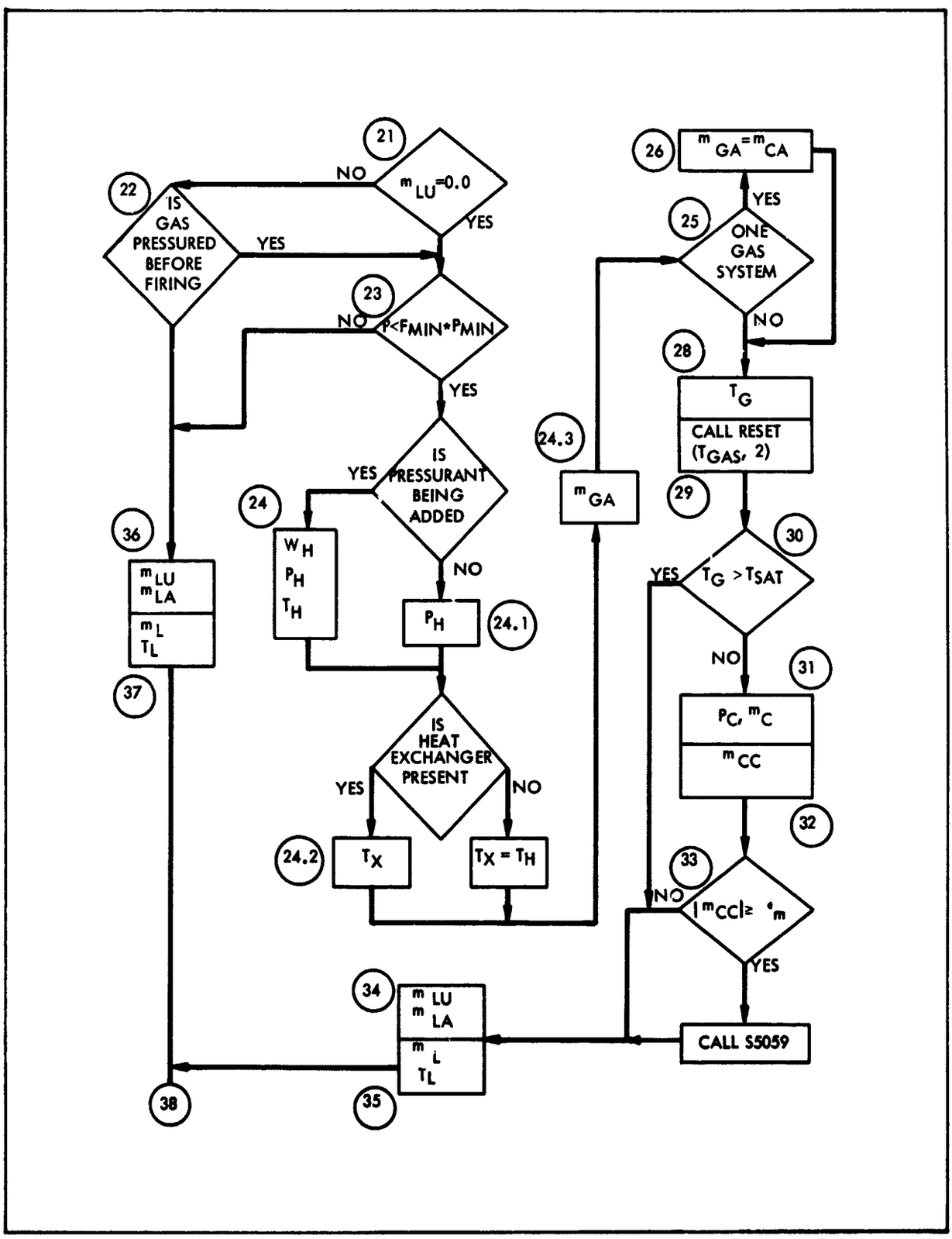

Figure 3-8. Subroutine CONTRL (Mass and Energy Balance) (3 of 5)

LOCKHEED
CALIFORNIA COMPANY

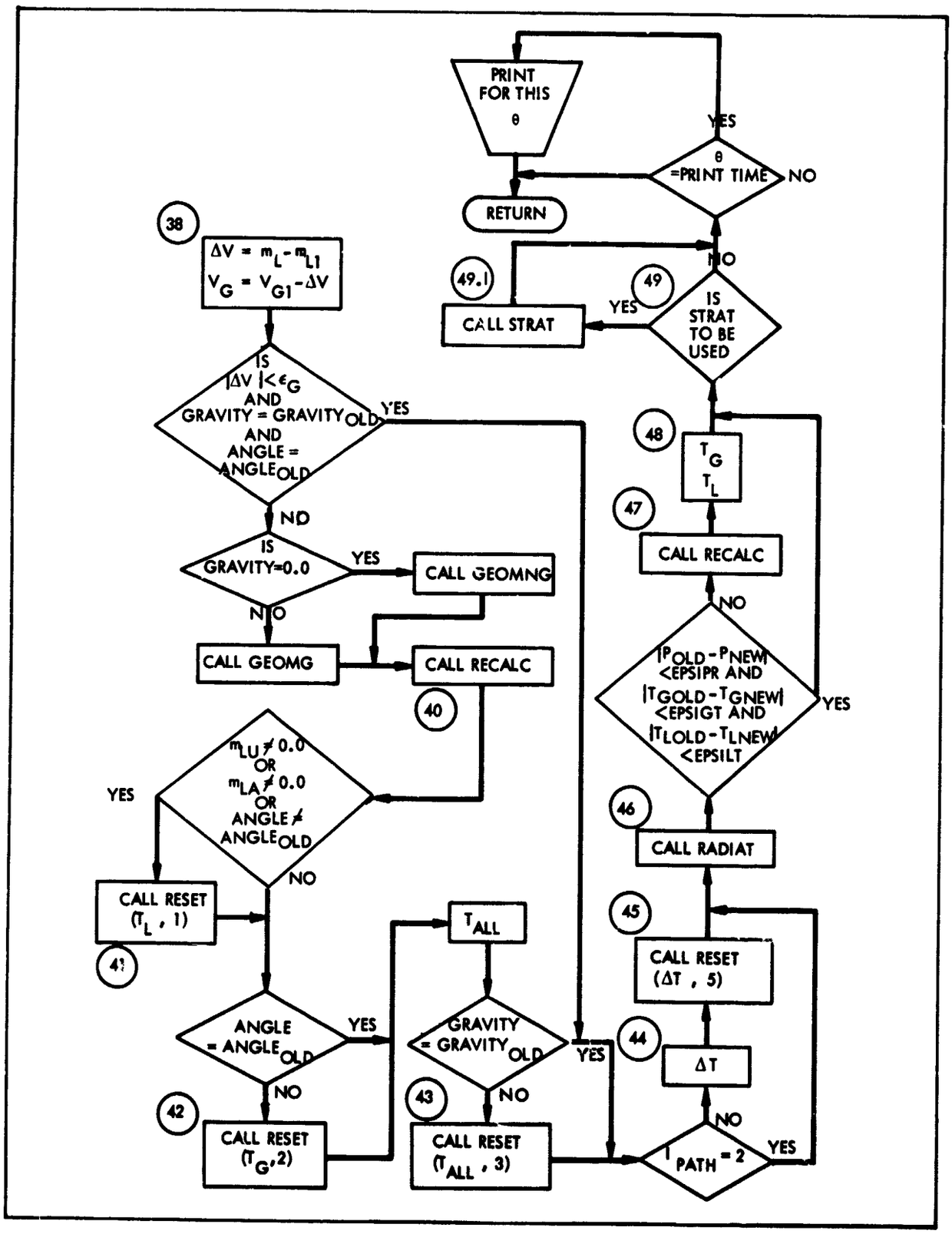

Figure 3-8. Subroutine CONTRL (Mass and Energy Balance) (4 of 5)

LOCKHEED
CALIFORNIA COMPANY

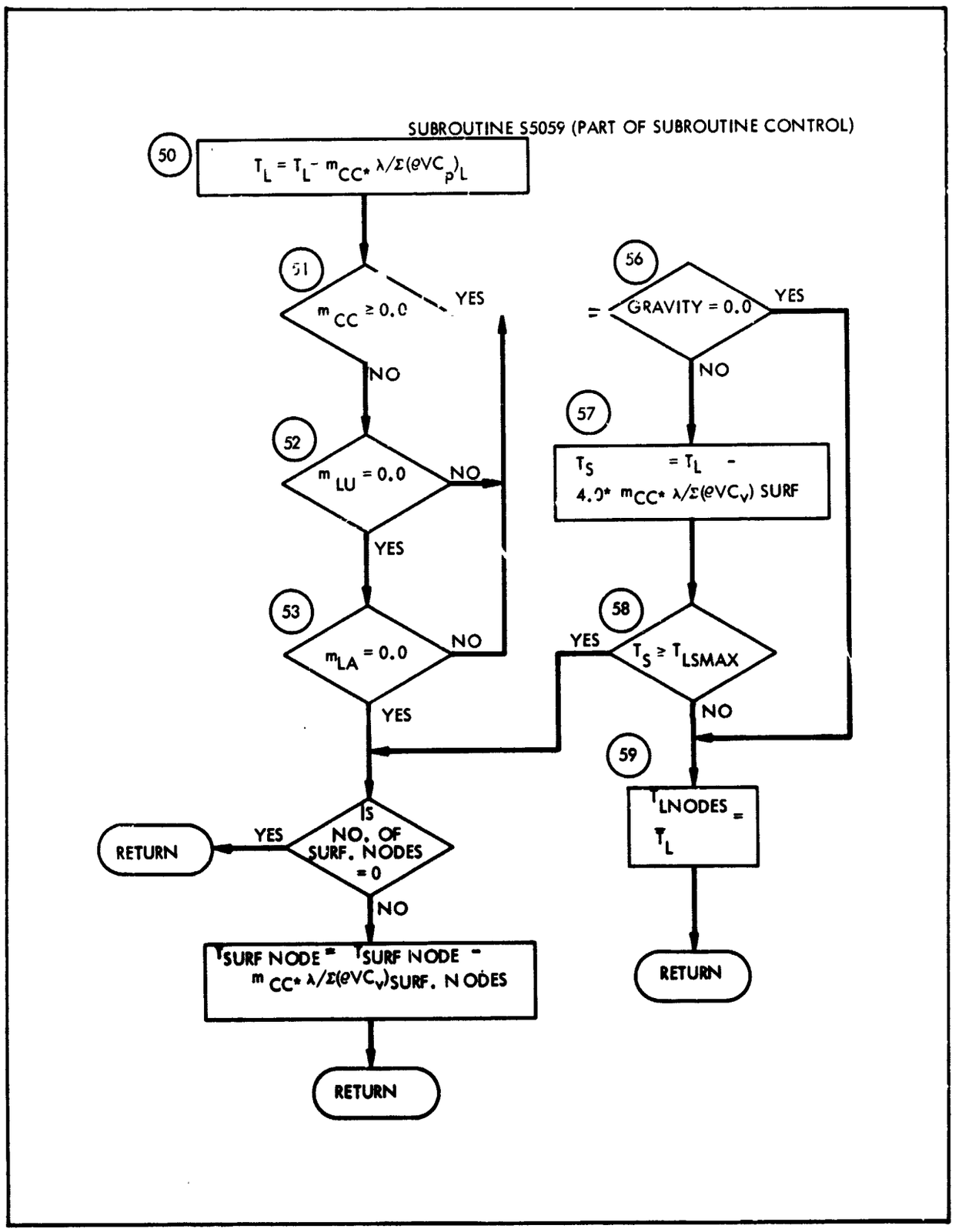

Figure 3-8. Subroutine CONTRL (Mass and Energy Balance) (5 of 5)

LOCKHEED
CALIFORNIA COMPANY

FIGURE 3-8 LIST OF EQUATIONS

Subroutine CONTRL

(2) $$\overline{T}_{GL} = \frac{\overline{T}_L \sum_{i=1}^{n} (\rho V C_V)_i + \overline{T}_G \sum_{i=1}^{m} (\rho V C_V)_i}{\sum_{i=1}^{n+m} (\rho V C_N)_i}$$

(3) a. $$m_C = m_{CO} - \sum m_{CV} + \sum m_{CC} + \sum m_{CA}$$

b. $$m_N = m_{NO} - \sum m_{NV} + \sum m_{NA}$$

(5) $\overline{T}_L, \overline{T}_G$ FROM UPDAT LAST ITERATION

$$T_S = T_{Y_{MAX}} + \frac{k_G(T_G - T_Y)}{k_L + k_G}$$

(9) Same as (5)

(11) $$p_C = \frac{m_C Z_C R\, \overline{T}_G}{M_C V_G} \times \frac{1}{144}$$

(12) a. $$p_C = f\left(T_{L_{MAX}}\right) \text{ (CURVE)}$$

b. $$m_C = \frac{p_C M_C V_G}{Z_C R\, T_{L_{MAX}}} \times 144$$

(13) $$m_{CC} = m_{C_2} - m_{C_1}$$

(16) $$P = p_C$$

(17) a. $$p_N = \frac{m_N Z_N R\, \overline{T}_G}{M_N V_G} \times \frac{1}{144}$$

b. $$P = p_N + p_C$$

LOCKHEED
CALIFORNIA COMPANY

FIGURE 3-8 LIST OF EQUATIONS (Continued)

Subroutine CONTRL

(19) $$m_{GV} = - m_{G_1} \left(\frac{1}{F_{MAX}} - 1 \right)$$

(20) a. $$m_{NV} = - m_{N_1} \left(\frac{1}{F_{MAX}} - 1 \right)$$

b. $$m_{CV} = - m_{C_1} \left(\frac{1}{F_{MAX}} - 1 \right)$$

c. $$m_{CC} = m_{CV}$$

(24) a. $$W_H = W_1 - m_{GA_1} \times H_F$$

b. $$P_H = P_{H1} \left[1.0 - \frac{m_{GA_1} \times H_F}{W_{HO} - \sum_{\theta = 1}^{N-1} m_{GA} \times H_F} \right]^{\gamma}$$

c. $$T_H = T_{H1} \left[1.0 - \frac{m_{GA_1} \times H_F}{W_{HO} - \sum_{\theta = 1}^{N-1} m_{GA} \times H_F} \right]^{\gamma - 1}$$

(24.1) $$P_H = \frac{P_{H1} + Z_X \times R \times W_H (T_1 - T)}{M_X \times V_{TANK} \times 144}$$

(24.2) $$T_X = .918 \times T_L + .082 \times T_H$$

(24.3) $$m_{GA} = \frac{M_X V_G (P_{MIN} - P) \times 144}{Z_X R \, T_X}$$

(28) $$\overline{T}_{G2} = \frac{T_X m_{GA} \, C_{VX} + \overline{T}_{G1} \sum_{i=1}^{n} (\rho V C_V)_i}{m_{GA} \, C_{VX} + \sum_{i=1}^{n} (\rho V C_V)_i}$$

LOCKHEED
CALIFORNIA COMPANY

FIGURE 3-8 LIST OF EQUATIONS (Continued)
Subroutine CONTRL

(31) a. $p_c = f(\overline{T}_G)$ (CURVE)

b. $$m_{C2} = \frac{m_{C1}\, p_{c2}\, \overline{T}_{G1} \times 144}{p_{C1}\, \overline{T}_{G2}}$$

(32) $m_{CC} = m_{C2} - m_{C1}$

(34) a. $m_{Lu} = \dot{m}_{Lu}\Delta\theta$

b. $m_{LA} = \dot{m}_{LA}\Delta\theta$

(35) a. $m_{L2} = m_{LO} - \Sigma m_{CC} - \Sigma \dot{m}_{Lu}\Delta\theta + \Sigma \dot{m}_{LA}\Delta\theta$

b. $$\overline{T}_{L2} = \frac{\overline{T}_{L1}(m_{L2} - \dot{m}_{LA}\Delta\theta) + m_{LA}\Delta\theta\, T_{LA}}{m_{L2}}$$

(36) Same as (34)

(37) Same as (35)

(38) a. $$\Delta V = \frac{m_{LA} - m_{Lu}}{\rho_L}$$

b. $V_{G2} = V_{G1} - \Delta V$

(39) $T_{G2} = T_{G1} + \Delta\overline{T}_G$

(44) $$\Delta\overline{T}_G = T_{G1}\left[\left(\frac{V_{G1}}{V_{G2}}\right)^{\gamma-1} - 1\right]$$

(50) $$\overline{T}_{L2} = \overline{T}_{L1} + \frac{m_{CC}\ \lambda}{\sum_{i=1}^{n} (\rho V C_V)_i}$$

LOCKHEED
CALIFORNIA COMPANY

FIGURE 3-8 LIST OF EQUATIONS (Continued)

Subroutine CONTRL

(54) $$T_{L2} = T_{L1} + \frac{m_{CC}\,\lambda}{\sum_{i=1}^{S} (\rho V C_V)_i}$$

(57) $$T_{S2} = T_{S1} - \left[\frac{4 m_{CC}\,\lambda}{\sum_{i=1}^{S} (\rho V C_V)_i}\right]$$

LOCKHEED
CALIFORNIA COMPANY

TANK FLUID STRATIFICATION

Subroutine STRAT evaluates fluid stratification due to convection processes. Energy transport by means of convective heat transfer, within a fluid phase, is assumed to exist whenever the system Rayleigh number (N_{Ra}) exceeds a prescribed limit. This limit is an input parameter and can be varied by the user. In a two-phase system the existence of a vapor region non-zero-g (absence of a vapor bubble) configuration is first confirmed by evaluating the liquid region Bond number (N_{Bo}). This program assumes that energy transfer from the tank wall to the fluid occurs by conduction only when the fluid is in a zero-g configuration. Recent studies reported in Section II, show that the error associated with the assumption of conduction only, in a low-gravity environment, i.e., $N_{Bo} \leq 1.0$, can be significant. During long term very low g, steady acceleration periods, such as that experienced during the slow rotation of a tank, gravity effects will cause heat transfer from the tank walls to the fluid to increase. This effect can be accounted for by the use of a greater fluid thermal conductivity, or, as is done in this program, by the addition of a convective component paralleling the conductive resistance.

Figure 3-9 is a schematic of a typical tank experiencing in-flight heating under non-zero-g conditions. In the computer model, energy input to the fluid during a computing interval is transfered from the tank wall to the boundary-layer fluid. The heated boundary-layer fluid is transported to the fluid surface by convection due to the temperature-induced density gradient in the boundary layer. Initially the energy from the boundary layer is to be distributed across the upper fluid layer, and the surface temperature is set equal to the maximum liquid temperature in the boundary layer. Energy is then transferred down through adjacent layers by fluid displacement, completing the cycle. A thermal balance is taken at the end of each computing interval to account for conductive heat transfer during the computing interval.

The system Bond number, relating accelerational forces to capillary forces, will be used to determine the fluid configuration; and the system Rayleigh number will determine:

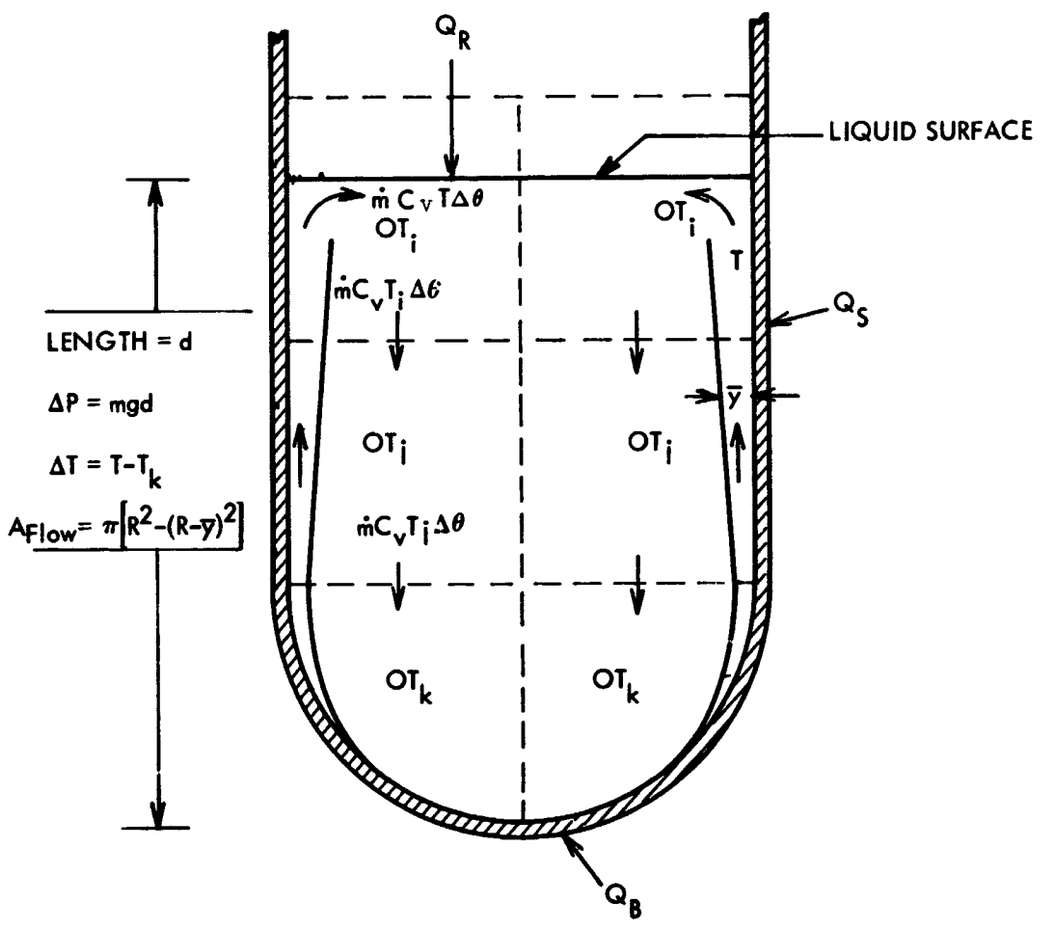

O	NODES	$\Delta\theta$	COMPUTING INTERVAL
---	STRATIFIED LAYER BOUNDARIES	$\dot{m}$	WEIGHT FLOW RATE
$\bar{y}$	BOUNDARY LAYER THICKNESS	Q_R	RADIATION HEAT FLUX
R	TANK RADIUS	Q_S	SIDEWALL HEAT FLUX
$T_{i,j,k}$	NODE TEMPERATURES	Q_B	BOTTOM HEAT FLUX
C_v	HEAT CAPACITY	m	MASS = w/g
		g_o	GRAVITATIONAL CONSTANT
		g	LOCAL GRAVITY VECTOR

Figure 3-9. Fluid Stratification Analytical Model

LOCKHEED
CALIFORNIA COMPANY

- Whether convection heat transfer is laminar or turbulent
- The average wall boundary layer thickness
- The fluid film heat transfer coefficient
- Whether bottom heating is great enough to destroy fluid stratification

Figure 3-10 is a block diagram of the subroutine STRAT. A list of associated equations follows. Computationally, the subroutine proceeds as follows:

a) The magnitude of the gravity vector is checked to see whether zero gravity prevails. If it does, this subroutine is not used. The relative gas and liquid volumes are determined to see whether a significant amount of liquid exists and is to be considered.

b) The main sidewall stratification parameters (N_{Bo}, N_{Ra}) are computed for the liquid (steps (3) and (4)).

c) The Bond number (N_{Bo}) is checked to determine the magnitude of the liquid surface forces (step (5)). If $N_{Bo} < 1$, then it is assumed that the gas forms a spherical bubble and no stratification will be considered.

d) The Rayleigh number (N_{Ra}) is computed (step (6)) based upon heating through the bottom of the vessel. If $N_{Ra} > 10^5$, the program considers that there is sufficient turbulence created by the bottom wall heating to destroy any existing stratification, and therefore, the fluid is fully mixed. This criterion is based on the estimated lower limit of validity of the laminar free connection heat transfer coefficient for horizontal circular disks (Ref. 5).

e) A check is made to see if this is the first time through the routine since stratification has been destroyed.

f) If this is the first time through, an iteration procedure is required to set up the limits of the thermal boundary layer.

LOCKHEED
CALIFORNIA COMPANY

g) At all other times the existing boundary layer is used for the computations of the fluid properties adjacent to the vessel walls.

h) Quantities such as pressure differentials, Reynolds number (N_{Re}), mass flow rate are computed (steps (28-32)).

i) The Rayleigh number, based upon the side wall of the tank (the projected fluid height), is then checked to see whether the boundary layer flow is laminar or turbulent (step (33)). New values of flow rate and film coefficients are then computed for the correct flow regime (steps (36)-(49)).

j) Heat transfer to the boundary layer is then computed (step (50)), based upon the new film coefficient and the temperature difference between the wall and the attached fluid nodes. The new maximum temperature of the boundary layer is calculated using the heat transferred, boundary layer flow rate and thermal capacity.

k) For stratification computations, the tank has been divided into a number of equal volume sections by taking slices through the tank perpendicular to the gravity vector. Each fluid node must now be associated with a particular layer. The following steps (56-66) account for the distribution of the energy from the boundary layer to the bulk fluid.

l) The average temperature of the lowest liquid layer containing any nodes is used as the minimum temperature of the boundary layer. The uppermost layer containing any liquid nodes is found and its average temperature determined.

m) The energy from the boundary layer is then added to the energy of the layer or layers between the liquid surface and the highest layer containing liquid nodes. The temperature change of this volume is computed.

n) Energy transfer from layer to layer is accomplished in a similar manner. The temperature change for each layer is then computed from the energy transferred into that layer. This is continued until the tank bottom is reached, completing the cycle.

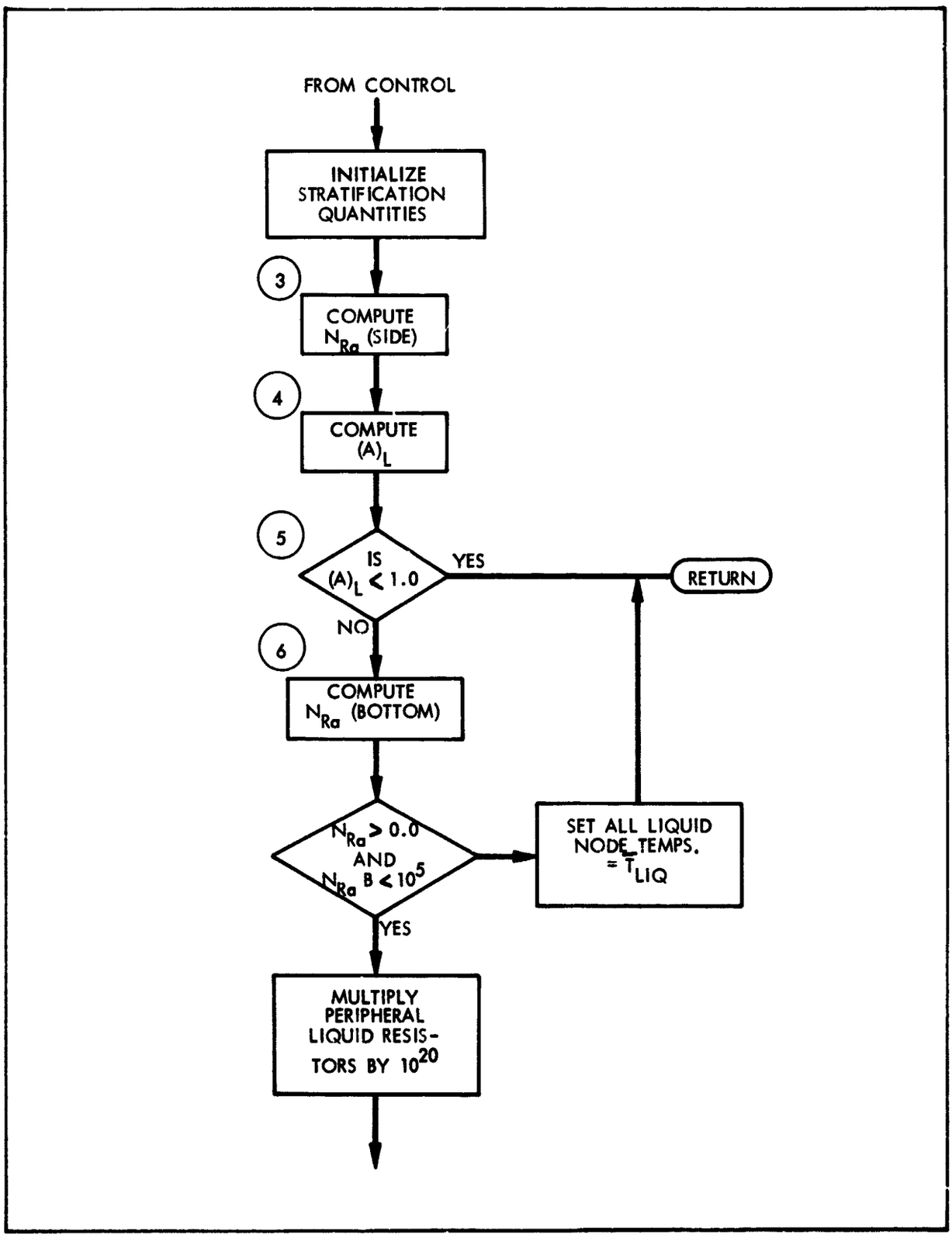

Figure 3-10. Subroutine STRAT (Stratification) (1 of 4)

LOCKHEED
CALIFORNIA COMPANY

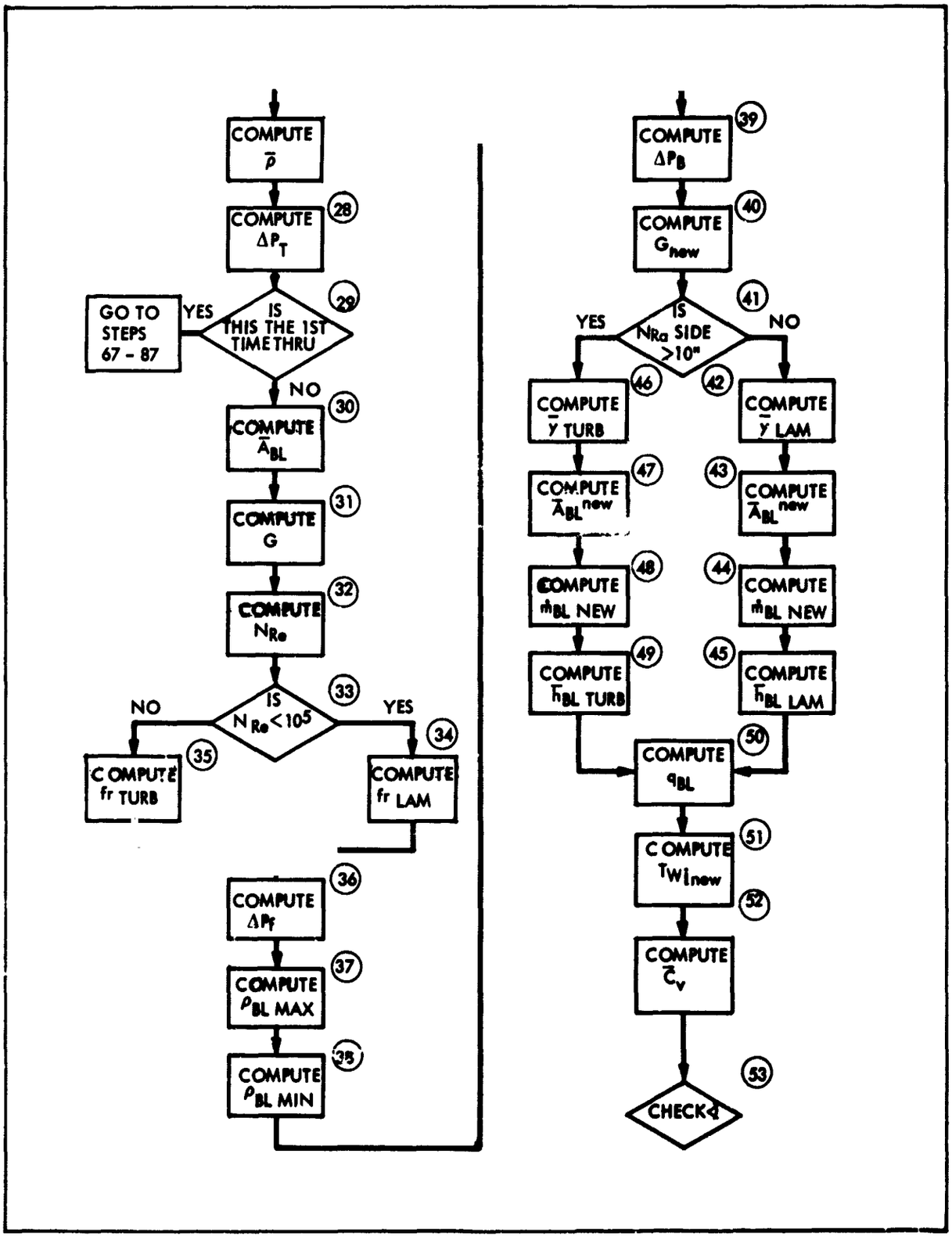

Figure 3-10. Subroutine STRAT (Stratification) (2 of 4)

LOCKHEED
CALIFORNIA COMPANY

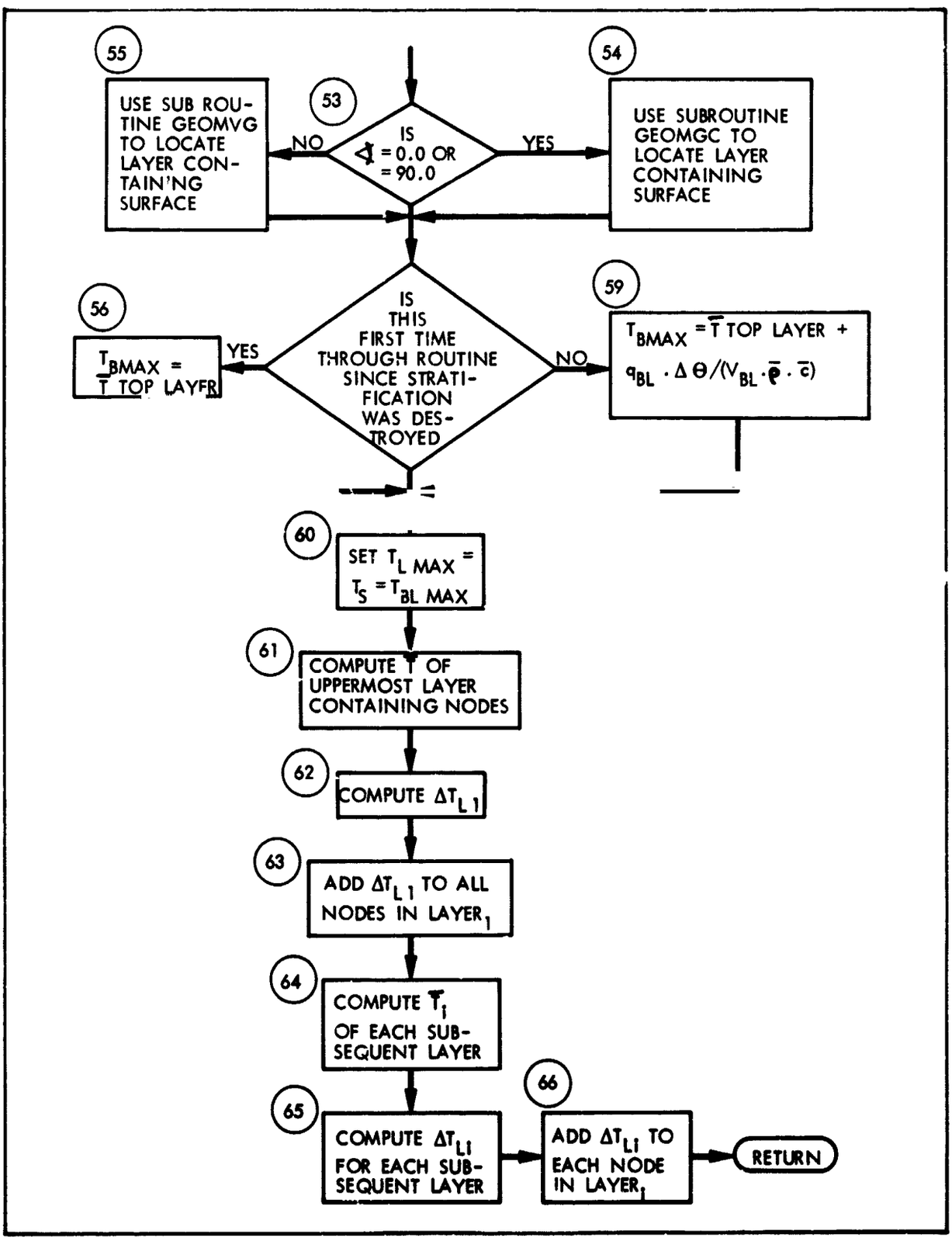

Figure 3-10. Subroutine STRAT (Stratification) (3 of 4)

LOCKHEED
CALIFORNIA COMPANY

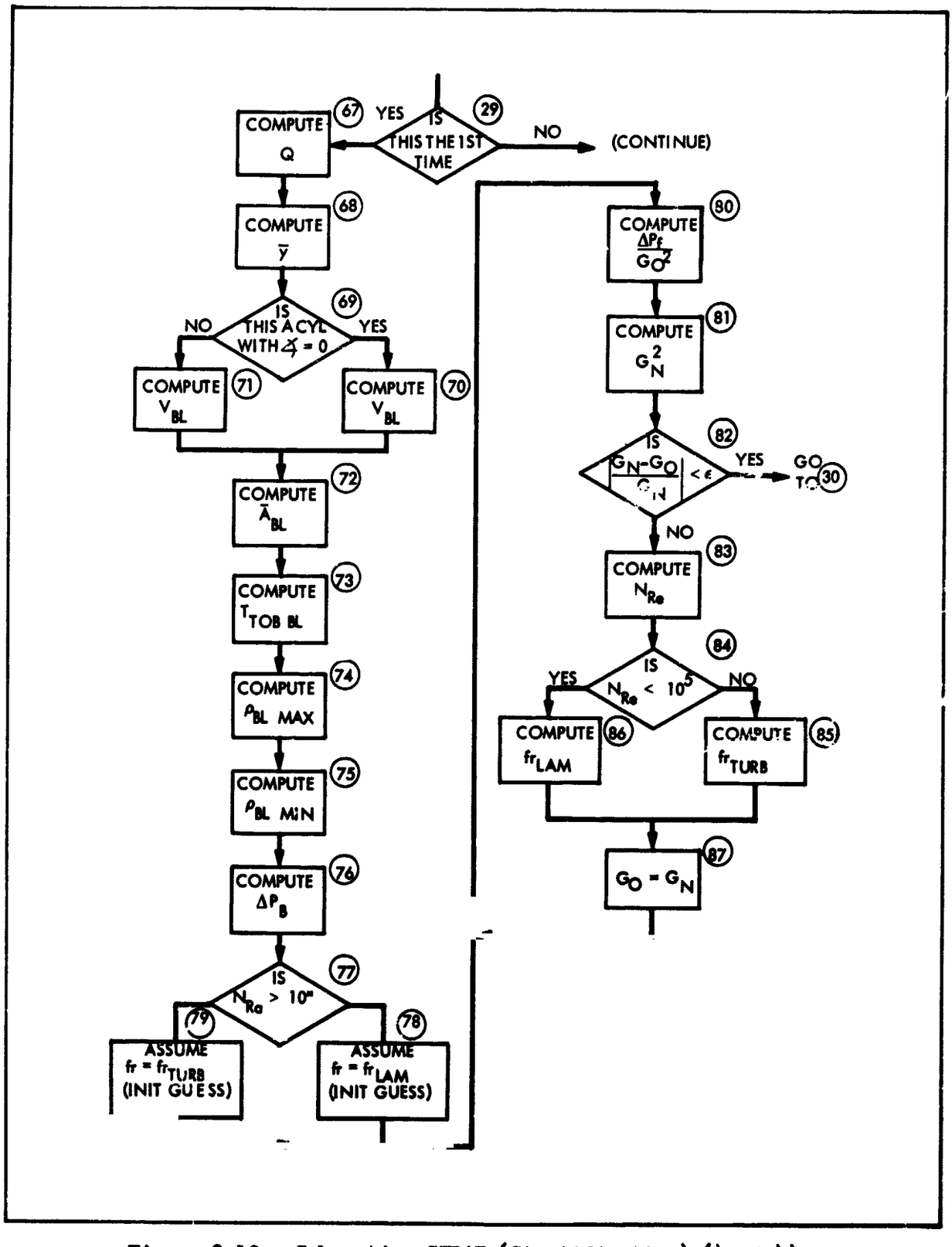

Figure 3-10. Subroutine STRAT (Stratification) (4 of 4)

LOCKHEED
CALIFORNIA COMPANY

FIGURE 3-10 LIST OF EQUATIONS

Subroutine STRAT

(3) $N_{Ra} = \left(\frac{C_P \mu}{k}\right)\left(\frac{g\beta(\Delta T)\, X^3 \rho^2}{\mu^2}\right)$ $N_{Ra} = N_{P_r} \times N_{Gr}$ X = fluid depth, ft

(4) $(A)_L = N_{Bo} = \left(\frac{\bar{\rho} R^2}{\bar{\sigma}} g\right)$

(6) N_{Ra} same as (3) where X = 0.9 x Tank diam.

(28) $\Delta P_T = \bar{\rho} \frac{g}{go} L$

(30) a) $\bar{A} = \pi \bar{y}(2R_T - \bar{y})$ cylinder with $\measuredangle = 0$

b) $\bar{A} = Ai\, \bar{y}\left(1 - \frac{\bar{y}}{R_T}\right) \Big/ X$ all other cases

(31) $W = \bar{A} \cdot G_{OLD}$ (G_{OLD} from previous time step)

(32) $N_{Re} = D\, G/\mu$ D = characteristic length

(34) $fr = 5.488/(N_{Re})^{.5}$

(35) $fr = 1.820/(\log N_{Re})^{2.58}$

(36) $\Delta P_f = fr \frac{L}{D} \frac{G^2}{2g_c \bar{\rho}}$

(37) $\rho_{BMAX} = f(T_{BOTBL})$

LOCKHEED
CALIFORNIA COMPANY

FIGURE 3-10 LIST OF EQUATIONS (Continued)

Subroutine STRAT

(38) $\rho_{BMIN} = f(T_{TOPBL})$

(39) $\Delta P_B = \frac{g}{go} \frac{(\rho_{BMAX} + \rho_{BMIN})}{2} L$

(40) $G_{NEW} = \left| \left(\frac{\Delta P_B - \Delta P_T}{\Delta P_f / G_{OLD}^2} \right) \right|^{1/2}$

(42) $\bar{y}_{LAM} = 3.93\, N_{Pr}^{-1/2} \left(.952 + N_{Pr}\right)^{1/4} \left(\frac{N_{Gr}}{d^3}\right)^{-1/4} (.41\, d)^{1/4}$ (Ref. 6)

(43) $\bar{A}$ same as (30)

(44) $\dot{W}_{NEW} = G\bar{A}_{NEW}$

(45) $\bar{h}_{LAM} = 2.667 \frac{k}{y_{LAM}} (.41)^{1/4}$ (Ref. 6)

(46) $\bar{y}_{TURB} = 0.565\, N_{Pr}^{-8/15} \left[1. + 0.494\, N_{Pr}^{2/3}\right]^{1/10} \left[\frac{N_{Gr}}{d^3}\right]^{-1/10} (0.466d)^{7/10}$ (Ref. 7)

(47) $\bar{A}$ same as (30)

(48) $\dot{W}_{NEW} = (G\bar{A})_{NEW}$

(49) $\bar{h}_{TURB} = .0246 \frac{k}{d} N_{Gr}^{2/5} \; N_{Pr}^{7/15} \left[1 + .494\, (N_{Pr})^{2/3}\right]^{-2/5}$ (Ref. 7)

(50) $q_{BL} = \sum_{i=1}^{d} \bar{h}A_i\, (\Delta T)_i$ d = no. of wall nodes in liq. reg.

(51) $T_{WiNEW} = T_{WiOLD} - \frac{(\bar{h}A\,\Delta T)_i \theta}{(\rho VC)_i}$

(52) $\bar{C} = f\left(\frac{T_{BMAX} + T_{BMIN}}{2}\right)$

LOCKHEED
CALIFORNIA COMPANY

FIGURE 3-10 LIST OF EQUATIONS (Continued)

Subroutine STRAT

(62) $$\Delta T_{L1} = \frac{(\dot{W}\theta)_{BL}\left[T_{B_{MAX}}\ \bar{C}_{P_{BL}} - \bar{T}_{L_1}\ C_{P_{L_1}}\right]}{\left(\sum_{L_1} \Delta V\ \bar{\rho}_L\ C_P\right)}$$

(65) ΔT_{L_i} same as (62)

(67) $$Q = \sum_{i=1}^{d} (mC_p)(\bar{T}_1 - \bar{T}_2)_i$$ d = no. of wall nodes in region

(68) $\bar{y}$ same as (42) or (46)

(70) $$V_{BL} = \pi X\ \bar{y}(2R_T - \bar{y})$$

(71) $$V_{BL} = A_i\bar{y}(1 - \bar{y}/R_T)$$

(72) $$\bar{A} = V_{BL/X}$$

(73) $$T_{TOBBL} = T_{BOTBL} + Q/V_{BL} \times \bar{\rho} \times \bar{C}_p$$

(74) $$\rho_{BMAX} = f(T_{BOTBL})$$

(75) $$\rho_{BMIN} = f(T_{TOPBL})$$

(76) $$\Delta P_B = \frac{g}{go}\left(\frac{\rho_{BMAX} + \rho_{BMIN}}{2}\right)L$$

(80) $$\frac{\Delta P_f}{G_{OLD}^{\ 2}} = fr\ \frac{L}{D} \times \frac{1}{2gc\ \bar{\rho}}$$

(81) $$G_{NEW} = \left|\left(\frac{\Delta P_B - \Delta P_T}{\Delta P_{f/G_o}{}^2}\right)\right|^{1/2}$$

(83) Same as (32)

LOCKHEED
CALIFORNIA COMPANY

TANK WALL - LIQUID RADIATION EXCHANGE

This subroutine (RADIAT) computes the net heat exchange by radiation between the inner surface of the tank walls and the liquid surface through the gas space. The gas is assumed not to absorb any of the radiant energy transmitted through it. The subroutine is bypassed under zero-gravity conditions because of the assumption that under zero-gravity, the tank walls are always covered with a liquid layer and therefore no bare metal surface is exposed. A constant view factor (input as 1.0) is assumed between the liquid surface and the exposed tank wall nodes. The temperatures used for the radiation equation are the average (T^4) of all the exposed wall nodes and of the liquid surface nodes. The heat transfer mechanism is between surfaces rather than through a radiation network. The net heat interchange is added to or removed from each of the liquid surface nodes, and the resultant temperature change is then balanced with the entire network in the Thermal Analyzer.

A block diagram for this subroutine is presented in Figure 3-11. Programmed equations follow.

NETWORK ELEMENT PROPERTIES UPDATING

The function of the subroutines RESET, RECALC and SURF covered in this section is to adjust or override system node temperatures to account for energy changes due to system mass transfer, adjust resistor and capacitor values to reflect changes in temperature, pressure and fluid phase, when applicable.

SUBROUTINE RESET

Subroutine RESET is used to compute the average temperature of the gas and liquid phase nodes and all the fluid nodes, the maximum liquid node temperature, as well as the total thermal capacities of each phase and of all the nodes. The subroutine also adjusts the Thermal Analyzer network node temperatures to accomodate the effect of system mass and energy changes resulting from changes in gravity vector, addition or depletion of liquid, addition of pressurant and gas space expansion.

LOCKHEED
CALIFORNIA COMPANY

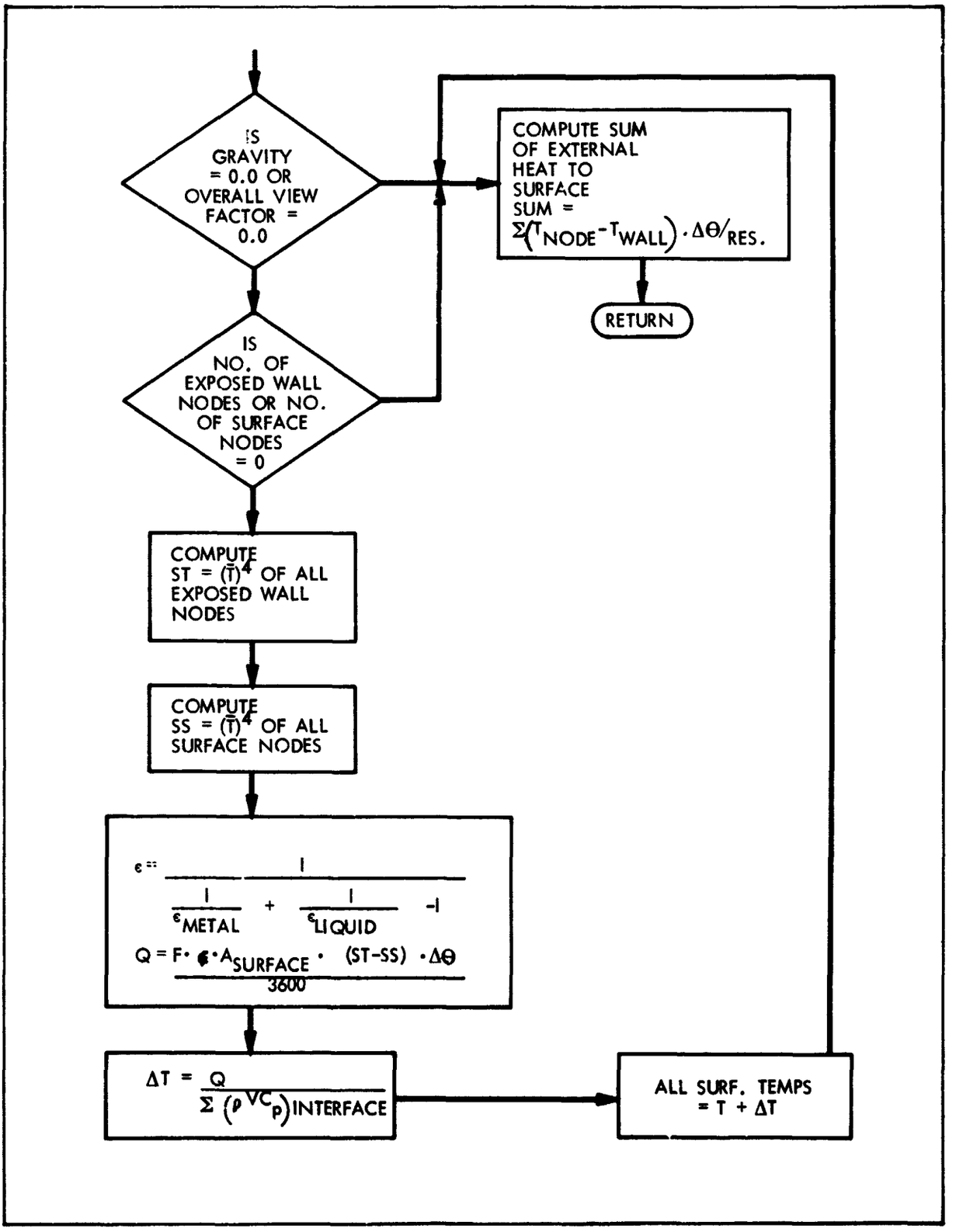

Figure 3-11. Subroutine RADIAT (Radiation)

LOCKHEED
CALIFORNIA COMPANY

The subroutine is a combination of five small but separate routines which were consolidated into one to save storage space. Whenever RESET is called by CONTRL, it is called with two arguments, the second one of which is a flag to denote which of the five routines is to be used.

RESET (T,1) sets all liquid node temperatures equal to temperature T. T is normally the average liquid temperature

RESET (T,2) sets all gas node temperatures equal to temperature T. T is normally the average gas temperature

RESET (T,3) sets temperatures of all nodes inside the tank equal to temperature T. T is normally the average temperature at all nodes.

RESET (T,4) computes the following quantities:

T_{LIQ}

T_{GAS}

T_{LMAX}

$\Sigma (\rho V C_p)_{LIQ}$

$\Sigma (\rho V C_p)_{GAS}$

$\Sigma (\rho V C_p)_{ALL}$

RESET (T,5) adds the temperature T to all gas node temperatures. T is normally a ΔT_{GAS}

Figure 3-12 contains a block diagram of the subroutine and describes the function of the various paths available.

Subroutine RECALC

Subroutine RECALC is called wherever it is determined that one of the following has occurred:

1. Change in the gravity (net acceleration) vector
2. Change in the angle between the major axis of the tank and the gravity vector
3. Change in liquid volume

LOCKHEED
CALIFORNIA COMPANY

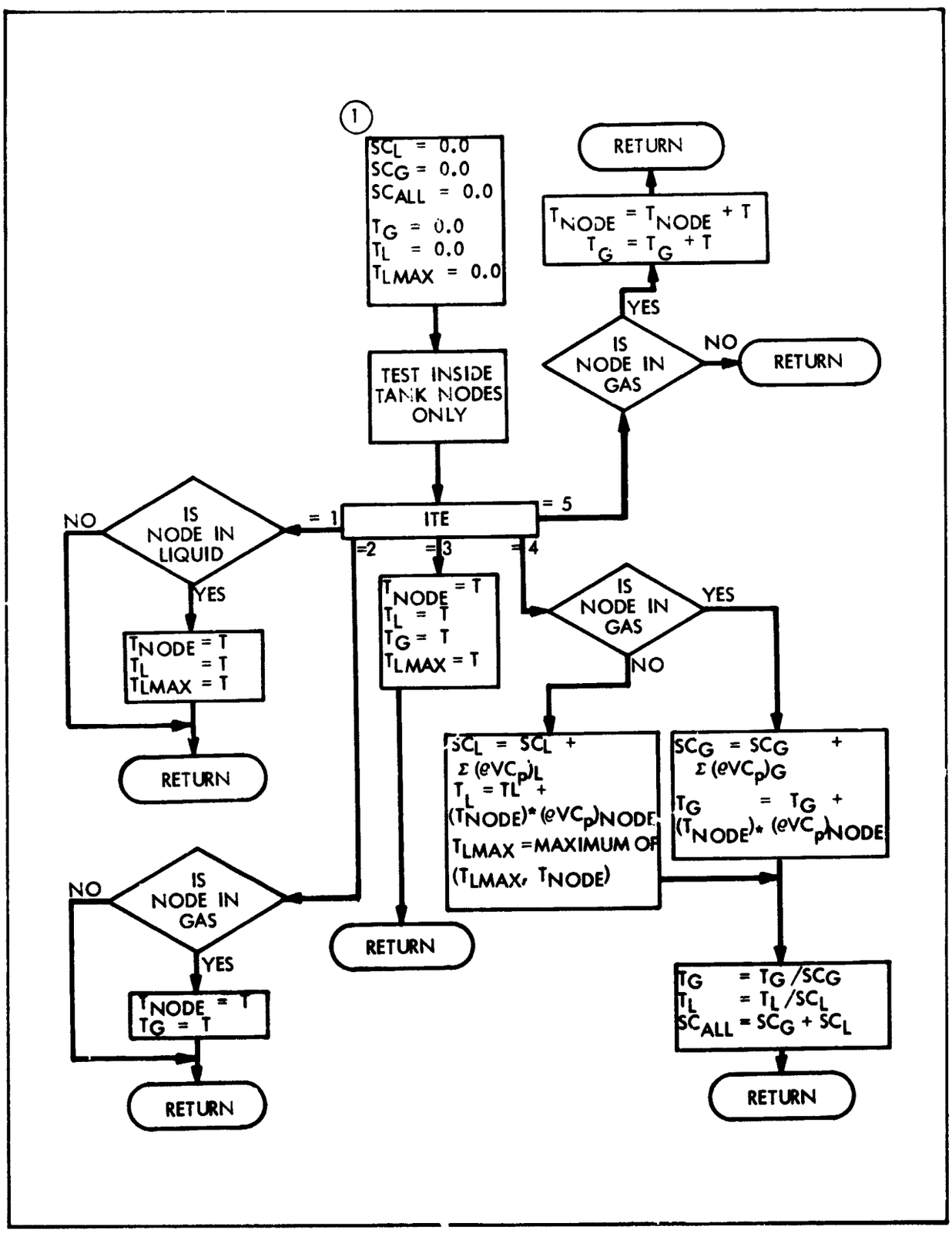

Figure 3-12. Subroutine RESET (1 of 2)

LOCKHEED
CALIFORNIA COMPANY

ITE = 1 SETS ALL LIQUID NODE TEMPERATURES TO THE TEMPERATURE T (BELOW) NORMALLY $T = \overline{T_L}$

= 2 SETS ALL GAS NODE TEMPERATURES TO THE TEMPERATURE T (BELOW) NORMALLY $T = \overline{T_G}$

= 3 SETS ALL NODES INSIDE THE TANK TO THE TEMPERATURE T (BELOW) NORMALLY $T = \overline{T_{ALL}}$

= 4 COMPUTES $\overline{T_L}$, $\overline{T_G}$, $\overline{T_{ALL}}$, $\overline{T_{LMAX}}$, $\Sigma(\rho VC_p)_L$, $\Sigma(\rho VC_p)_G$, $\Sigma(\rho VC_p)_{ALL}$

= 5 ADDS THE TEMPERATURE T (BELOW) TO ALL GAS NODE TEMPERATURES NORMALLY $T = \Delta T$

T = TEMPERATURE (°F) TO BE USED IN RESET AS DESCRIBED ABOVE

DEFINE

$$1 \left\{ \begin{array}{lcl} \overline{T_L} & = & T_L \\ \overline{T_{LMAX}} & = & T_{LMAX} \\ \overline{T_G} & = & T_G \\ \Sigma(\rho VC_p)_L & = & SC_L \\ \Sigma(\rho VC_p)_G & = & SC_G \\ \Sigma(\rho VC_p)_{ALL} & = & SC_{ALL} \end{array} \right.$$

Figure 3-12 Subroutine RESET (2 of 2)

LOCKHEED
CALIFORNIA COMPANY

4. Significant change in the average gas temperature has taken place since the last time the gas properties were evaluated
5. Significant change in the average liquid temperature has taken place since the last time the liquid properties were evaluated
6. Significant change in the total internal pressure has taken place since the last time the gas properties were evaluated

The subroutine is modeled after subroutine INSIDE which calculates the length, area and volume quantities used by RECALC to compute resistor (R) and capacitor (C) values.

Resistors are computed in the following manner:

1. R between 2 liquid nodes

$$R = \frac{3600. \times L}{A \times K_L}$$

2. R between 2 gas nodes

$$R = \frac{3600. \times L}{A \times (K_{GC} + K_{GN})}$$

3. R between a liquid and a gas node same as 2.
4. R between a gas node and a wall node same as 2.
5. R between a liquid node and a wall node same as 1.
6. R between 2 wall nodes

$$R = \frac{L \times 3600}{A \times K_{WALL}}$$

7. R between a wall node and an insulation node

$$R = \frac{L \times 3600}{A \times K_{INS}}$$

8. R between 2 insulation nodes same as 6.

Capacitors are computed in the following manner:

1. Gas Capacitor

$$C = \frac{V}{T_{NODE}} \left[C_{pc} \frac{p_c \times Mc}{Zc \times R} + C_{pn} \frac{p_n \times Mn}{Zn \times R} \right]$$

2. Liquid Capacitor

$$C = V_L \times C_{pL}$$

LOCKHEED
CALIFORNIA COMPANY

3. Metal Capacitor
$C = V\rho_{wall} \times Cp_{wall}$

4. 2-Insulation Capacitor
$$C = \frac{V}{L_1 + L_2}\left[(\rho C_p)_1 L_1 + (\rho C_p)_2 L_2\right]$$

L = length computed by INSIDE

A = area computed by INSIDE

V = volume computed by INSIDE

Subroutine SURF

Subroutine SURF compares each of the nodes inside the tank with its neighboring nodes to determine which, if any, of the nodes are to be considered surface nodes. A node is first compared with its neighbor in the radial direction, then its neighbor in the circular direction, and at last with its neighbor in the axial direction. If it is found that the node is a liquid node and its neighbor a gas node, or that a node is a gas node and its neighbor a liquid node, the liquid one of the two nodes is considered a surface node. SUBROUTINE SURF saves the node number of each surface node, and also computes the following three quantities:

TLSMAX - temperature of hottest surface node

TSGAS - temperature of the gas node attached to the hottest surface node

SCINT - sum of the capacitors $\Sigma(\rho VC_p)$ of the surface nodes

Figure 3-13 presents program details of this subroutine.

PRESSURANT SUPPLY TANK

The pressurant tanks are treated as two node systems with 1 node the tank and the other node the contained pressurant. The pressurant is assumed to be stored as a single phase fluid. Pressurant removal is determined by requirements in the main tank system. In propulsion systems, when only one of the propellants is currently being analyzed, the total flow is proportioned

LOCKHEED
CALIFORNIA COMPANY

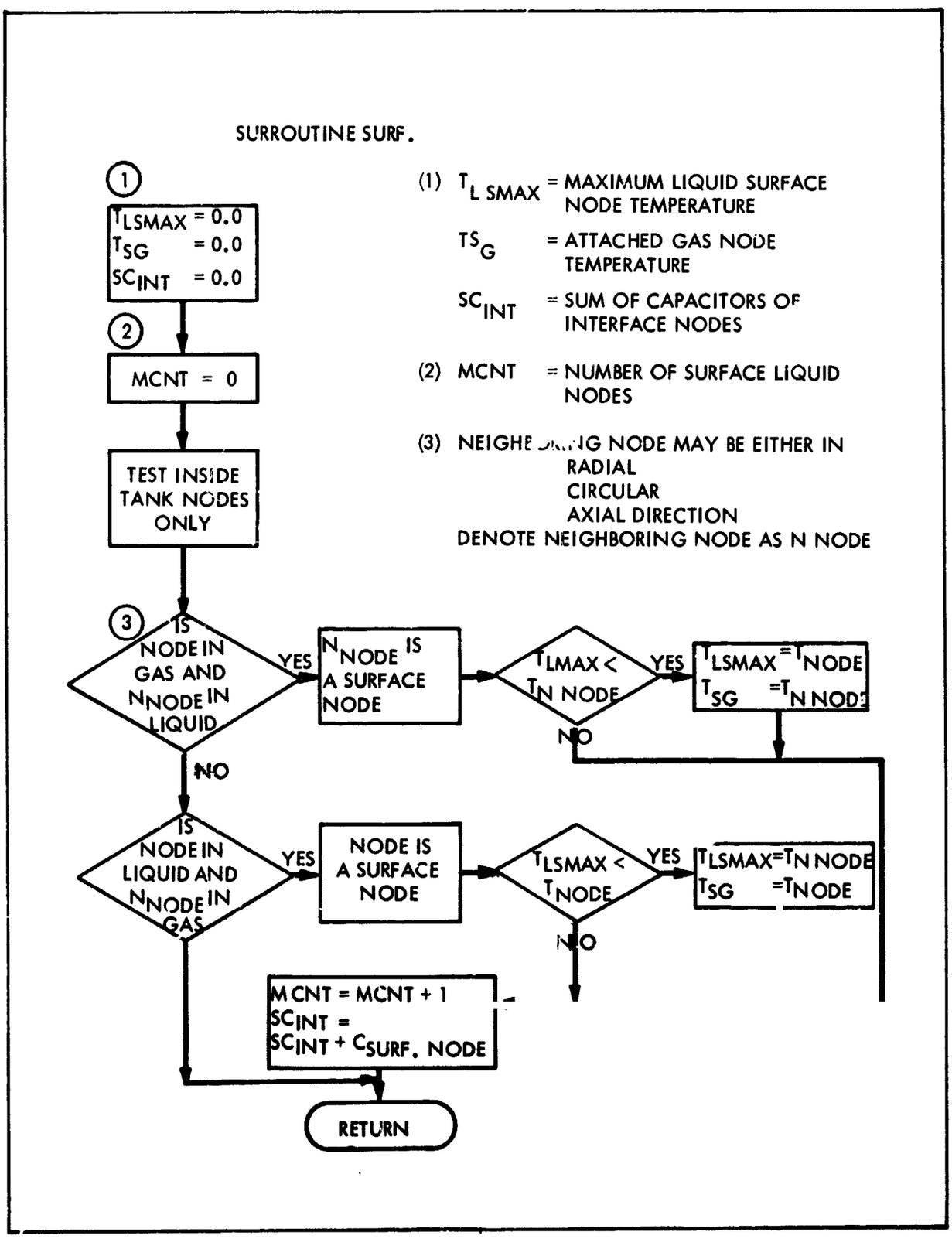

Figure 3-13. Subroutine SURF

LOCKHEED
CALIFORNIA COMPANY

correctly to either the fuel or oxidizer subsystems. When there is a multi-tank pressurant storage, if a similar thermal environment exists, and the tanks are connected in parallel, only one pressurant tank need be analyzed.

During flow periods the compute intervals are programmed to be short in comparison with the firing times, and the network will be balanced at the end of each time step, allowing for heat redistribution between the tank wall and the gas. The process in the tank approaches an adiabatic one and is so assumed during each compute interval. This part of the analysis is done in subroutine CONTRL.

During the major portion of a mission in which there is no flow, the thermodynamic process is a constant volume heat addition with heat transfer from the wall to the fluid by gaseous conduction. These computations are performed in the FUNCTION block of the Thermal Analyzer. Simulation of a pressurant-propellant heat exchanger is done by the use of an energy balance across the exchanger.

PROGRAM CONTROL SUBROUTINES

General operational subroutines used on controlling the performance of the program are described in this section. These subroutines, FUNCT, SREAD, TIMEX, CHOP and PRINT, provide instructions for the handling of the external thermal environment, the automatic determination of computation and print intervals, the reading of input data into the Thermal Analyzer, program segmentation and the program print out.

Subroutine FUNCT

Subroutine FUNCT is called from the heat balance and is used for the following four purposes:

1. To Call the subroutine TANKA, which references the curves listed in Table 4-4 to the pressurization program.

2. To overload the two quantities M(4) and M(7), if desired.

   M(4) contains the print interval, which is input initially and may be left constant throughout the whole run. If, however, it is desired to vary the print interval, it may be overloaded at any time.

LOCKHEED
CALIFORNIA COMPANY

In any run, there are likely to be some time intervals which are of more interest than others. A case in point would be a short firing period surrounded by long periods of non-firing. M(4) should be smaller during the firing time than during the non-firing time.

It should be remembered that the timestep taken by the Thermal Analyzer is normally equal to .25 times the current minimum R-C product, or the current time interval, whichever is smaller. For greater speed, and therefore, a significant computer time savings, it is possible to overload the .25 factor, located in M(7), by any number smaller than 1.0. .95 has been used successfully.

3. To update the following quantities associated with the pressurant bottle (if any), during non-flow conditions only:

   a. Capacitor of pressurant gas

   b. Capacitor of pressurant bottle wall

   c. Resistor between the above

   d. Pressure inside the pressurant bottle

4. To describe an external network, if any, which may surround the tank under analysis and its pressurant bottle (if any).

Subroutine PRINT

This subroutine is used only to print out the following quantities at every print interval, after a heat balance has been performed.

1. Individual node temperatures

2. Resistors between individual nodes

3. Capacitors of individual nodes (with signs-positive denotes liquid, wall, or insulation node, negative denotes gas node).

4. R-C products of individual nodes.

Printout of conditions particularly concerned with the pressurization program (pressures, average temperatures, etc.) is done in subroutine CONTRL.

Subroutine SREAD

Subroutine SREAD reads in that data which is particularly concerned with the pressurization program, such as those quantities used in generating the network, option quantities, tank geometry and initial conditions.

Subroutine TIMEX

This subroutine senses and records the current time of day. By calling TIMEX at various places in a program, it is possible to time any part of it. Since the pressurization program consumes large amounts of machine time, we may want to run a mission in several segments, which necessitates the saving of information at the end of any one of them. If, however, an estimate of machine time is given for a segment which is exceeded before the final segment time is reached, the computer would automatically cut off a run and no saving of information would take place. Use of subroutine TIMEX enables the program to save all restart information and exit before the computer has a chance to cut off a run.

Subroutine CHOP

Subroutine CHOP calls off and/or saves restart information from the special restart tape. After saving the restart information, it terminates the machine run.

IV - PROGRAM OPERATION

This program is a FORTRAN IV program developed for use with the IBM 7094 or 7094/7040 direct-coupled digital computer systems. This section presents details of the program operational characteristics including an overall layout of the program in core, the sequence of program operations, program input requirements and program output.

SEQUENCE OF OPERATION

Figure 4-1 presents an overall block diagram showing the operations performed in the program during problem solution. Sequentially, starting with input data relative to tankage configuration and dimensions, the Network Generator is called to generate the R-C network to be used in the Thermal Analyzer heat balance. The Network Generator is also called to search materials library tapes for property information in accordance with input system requirements. The network and materials information are then read into the Thermal Analyzer for subsequent operations.

Following network assembly, the program calls the function subroutines making up the Network Element Update section. This section determines the gas-liquid interface configuration and location as a function of the liquid volume and the net acceleration force vector. The identification of gas and liquid network elements is also made at this time.

The program then determines system mass and energy balances as a function of gas and liquid phase heating, system venting, system pressurization, or liquid addition or withdrawal. A detailed discussion of the assumptions and equations used to account for energy changes during the mission is presented in Section III.

Under extended operation in a gravity condition, the program would then adjust the liquid region temperatures for stratification due to convective fluid transport and/or surface heating through the vapor space. Details of the stratification model are also presented in Section III.

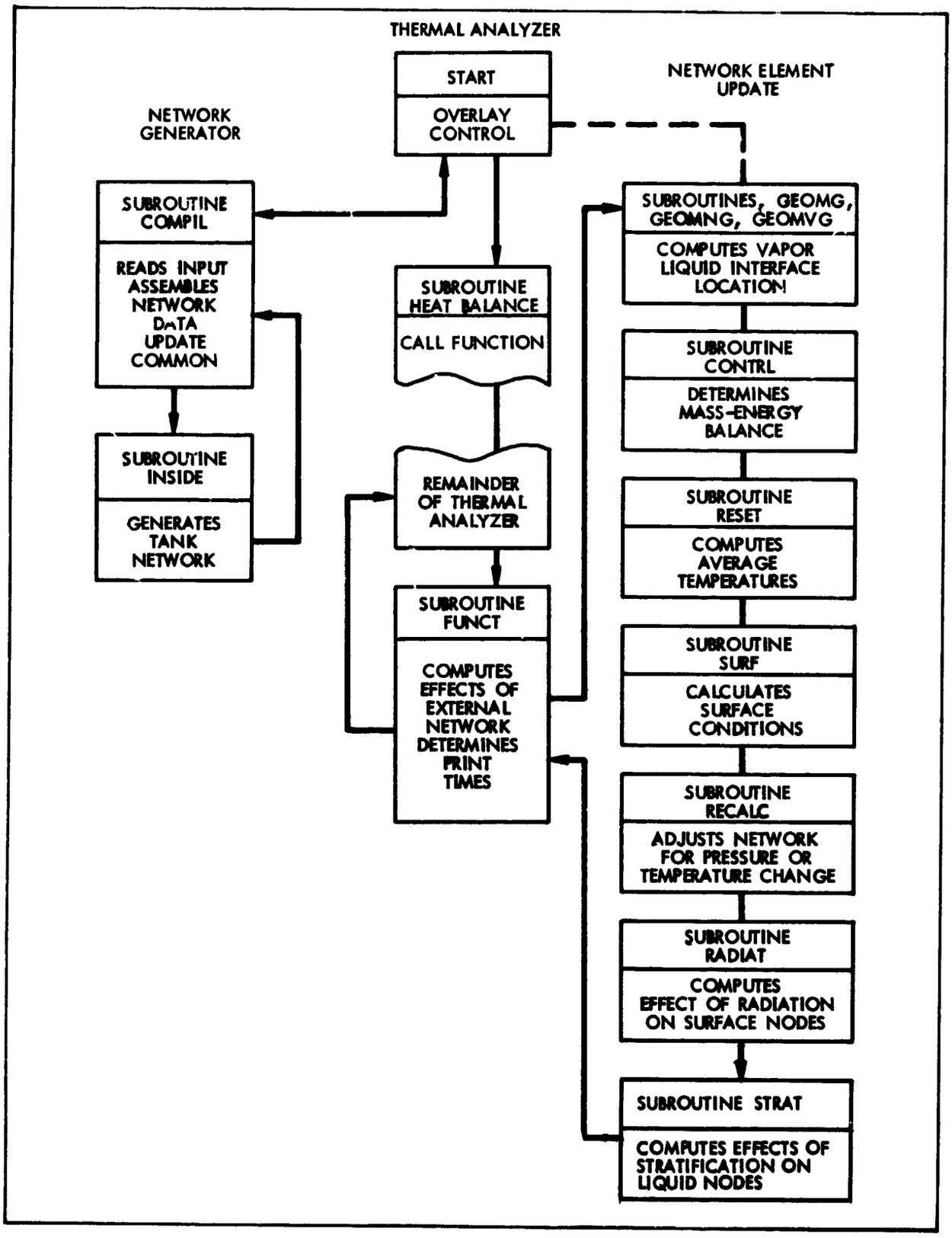

Figure 4-1. Flow Diagram of Program Functions

LOCKHEED
CALIFORNIA COMPANY

For zero gravity with relatively short periods of gravity operation, the effects of stratification due to fluid transport and surface heating are neglected since convective forces are assumed to be nonexistent and the walls are always covered with liquid under zero gravity.

The program then proceeds to update variable network elements, heat transfer coefficients, and thermodynamic factors for changes in pressure and temperature, and returns to the Thermal Analyzer where additional operations relative to the tank external thermal network are accomplished.

After completion of updating, input parameters for the succeeding computation are called, and a new heat balance is performed in the Thermal Analyzer.

For subsequent computation intervals, the program recalls the function subroutines and repeats the above processes to mission completion.

Because of the complexity and size of the problem, the use of overlays is required to enable processing of the overall program. The program to be executed is divided into one or more links. A link consists of one or more subroutines used by a program. The main one of these links remains in core storage throughout the execution of a job along with overlay control information and all tables and data storage required for problem execution. The other, dependent links, are loaded on an external file (either disc or magnetic tape storage) where each link remains until it is needed in the problem. It, therefore, occupies core storage only when necessary and can share the storage with other dependent links.

Overlaying is a time-consuming process, and great care has been taken to keep those routines which are used at every step of the time history in core at all times. Only those routines which are used occasionally are ever overlayed.

Table 4-1 presents in tabular form the overlay links which make up the program, showing the method and origin of the overlay links of the Thermal Analyzer Fluid Storage and Pressurization Program. Deck names are included in the boxes which constitute the various links. Link origins are shown to the left of the line forming the top of the box.

TABLE 4-1

LAYOUT OF PROGRAM IN CORE

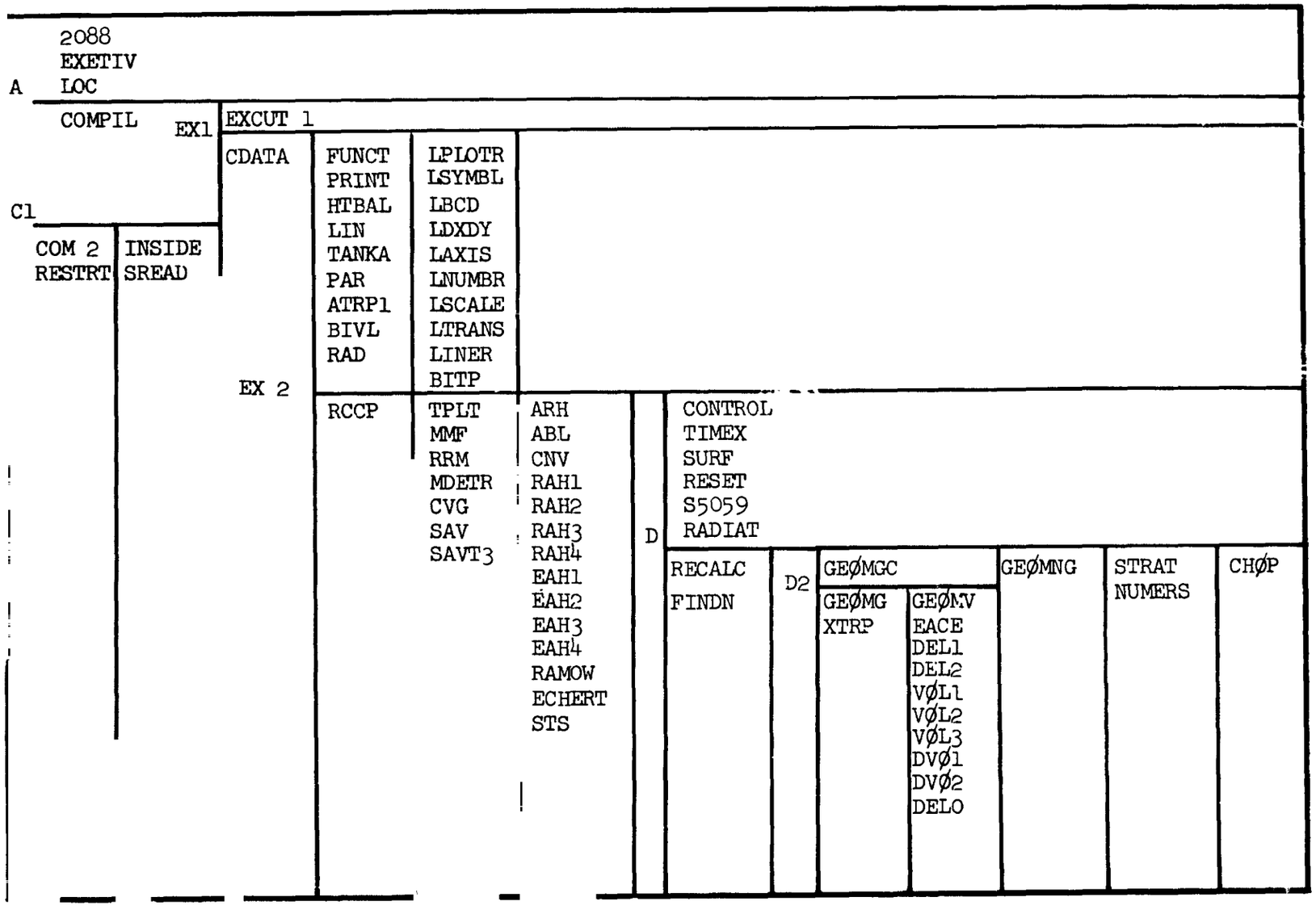

Experience with the program has shown that the machine time required to run this program can be considerable. Therefore, it is desirable to have an option which enables the user to cut a long mission into a number of segments. This is accomplished by inputing three numbers into the "PRESSURIZATION INPUT" block as follows:

1. IRSTRT option must be $\neq 0$
2. MTIME (minutes of machine time alloted for this segment)
3. KUT (mission time at which computer run should be cut, seconds)

NOTE: The computer run of the current segment will be terminated either when MTIME is about to be exceeded, or when KUT has been reached, whichever occurs first.

When segmentation is to be called, the following variations are considered for problem continuity:

1. If the current segment is the first segment of a mission, all parameters must be saved which must be available at the beginning of the next segment.
2. If the current segment is an intermediate segment of the mission, the computer must pick up the problem where the immediately preceding segment left off. At the end of the segment, all parameters required for the following segment are again saved.
3. When the current segment is the last segment of a mission only the regular output quantities are retained.

Segmentation of a problem is accomplished by a subroutine (CHOP). This subroutine may be called once, twice, or not at all during a machine run (depending upon the value of IRSTRT) and either restarts a segment from where the last segment left off, and/or saves the final conditions within a segment to be picked up by the next segment. The operations are accomplished on a magnetic tape which must be removed at the end of a run and remounted at the beginning of the next one. Nothing must change in the input data except the four quantities: IRSTRT, MTIME, KUT and the starting time in the time block.

A subroutine TIMEX, is used to sense the current "time of day" at the beginning of execution of a segment, and at every pass through CONTRL thereafter. If it is determined that the estimated machine time has been underestimated and is soon to be exceeded, the run is automatically terminated by the program, and final conditions are saved by subroutine CHOP.

It should be noted that there is a difference in the time limiting features depending upon whether the IBM 7094 or 7094/7040 direct-coupled machine is used. On the direct-coupled machine, the run can be terminated by either MTIME or KUT, whichever is the first executed, but on the other it can only be cut by KUT.

PROGRAM INPUT

The Thermal Analyzer Program requires that the physical problem be described as an equivalent network using resistance, capacity, and temperature to define the heat transfer problem.

The transformation of the physical problem into the equivalent thermal network is accomplished by dividing the actual system into discrete volume elements called "lumps." Each lump is connected to any other lump in the system by a network of resistors describing the thermal resistance of the system. The capacity of each lump is the thermal capacity of that portion of the physical problem which the lump represents.

The Fluid Storage and Pressurization Program has two unique, built-in features which greatly simplify the problem of program input. These are the capability of the program to generate its own lumped parameter, resistance-capacitance network, and the availability of materials data in the properties library tapes. This capability is, however, restricted to two geometrical configurations, a spherical tank or a cylindrical tank with hemispherical ends. The program method for division of the physical problem into lumps has been described in detail in Section III under "Network Generator."

Abnormal system network parameters, such as insulation shorts, piping, internal baffling and heat sources, and tank external network parameters describing the thermodynamic effects between the tank and external heat sources are input by the user into the Thermal Analyzer function block in the normal manner.

Problem size is presently limited to a total of 300 nodes and 700 resistors of which a maximum of 250 nodes and 500 resistors may be used for the internal network comprising the tank internals, the tank wall, insulation and thermal shield when applicable. Also not more than 250 curves, including materials properties and external network may be input.

For program operation, four categories of input are required:

1. General information descriptive of the system for network-generation purposes

2. Information relative to the particular mission under study, such as firing schedules, gravity and thermal environment histories and pressurization requirements.

3. Information on the tankage system external thermal environment, and print and computation intervals (Subroutine FUNCT)

4. Miscellaneous instructions used in controlling the performance of the program, such as reading in specific data (Subroutine SREAD), restart information, saving data at the termination of a run (Subroutines TIMEX and CHOP)

The following is a discussion of present program details covering the program input formats, a description of each of the input items required, and the standard pressurization problem input format with an explanation of the various blocks of data required.

The standard Thermal Analyzer input consists of five blocks of data containing, in order,

1. The initial temperatures of the external nodes

2. The values and node connection of the resistors

3. The value of each external capacitor

4. A set of tables or data blocks

5. A time block

Block 1 - Temperatures

COLUMN

→ 3 5	10	20	25	35	
DEC02	N1	T1.	N2	T2.	SEQUENCE

The first field (columns 1-3) contains a mnemonic code indicating the type of information on the card (see Table 4-2 for code description). The second field (columns 4 and 5) contains an integer equal to the number of items on the card. In this example, two temperatures, N1 and N2, are on the card; therefore columns 4 and 5 contain 02. The fields from column six on are in pairs; an integer field of five columns (6-10, 21-25, 36-40, 51-55) and a floating point field of ten columns (11 to 20, 26 to 35, 41 to 50, 56 to 65). The maximum number of items on a temperature card is four (four temperature numbers and four temperature values).

Block 2 - Resistors

COLUMN

→ 3 5	10	15	20	30	35	40	45	55
DEC02	NR1	I1	J1	R1.	NR2	I2	J2	R2.

The mnemonic code (DEC) and the number of items (02) have the same meaning as in block 1. The fields from column six on are in sets of four, three integer fields of five columns each and one floating point field of ten columns. NR is the number assigned to a resistor; I and J are the numbers of the temperatures connected to that resistor. The maximum number of items on a resistor card is two, as shown in the example.

Block 3 - Capacitors

COLUMN

→ 3 5	10	20	25	35	40	50
DEC03	NC1	C1.	NC2	C2.	NC3	C3.

LOCKHEED
CALIFORNIA COMPANY

TABLE 4-2

DATA CARD MNEMONIC CODES

DEC	Used to input decimal numbers, e.g., resistor numbers, connections, and values.
INC	Used to repeat the previous item with constant changes as specified.
PER	Used in the data blocks only to indicate periodic extension of a curve in both directions.
RES	Used in the resistor block only to specify geometric resistor input.
CAP	Used in the capacitor block only to specify geometric capacitor input.
CID	Used to identify the input and output.
NET	Used in the temperature block only to indicate pressurization program input following.
TAP	Used in the data block only to initiate a material properties library tape search for the specified curve.
COD	Used in the data block only to indicate type of derived data used in a data block.
NBK	Used to indicate the end of an input block or restart.

The mnemonic code (DEC) and the number of items (03) have the same meaning here as in the first two blocks. The fields from column six on are in pairs, one five-column integer field and one ten-column floating point field. There may be four such pairs on a card. The integer, NC_1, NC_2, NC_3, are capacitor numbers; the floating point numbers, $C_{1.}$, $C_{2.}$, and $C_{3.}$, are the corresponding capacitor values.

Block 4 - Data Blocks (Curves)

```
COLUMN
→        5         15        25        35        45
     DEC04
```

The Mnemonic code (DEC) has the same meaning as in the previous blocks. The number of items (04) in this case means the number of numbers on the card, maximum of six. The fields from column six on are six floating point fields of ten columns each.

Block Number (Table or Curve No.)

```
COLUMN
→        5    10
     DEC ^^    K
```

The first card of each data block or curve must be a designation number, K, as shown above. The mnemonic code (DEC) has the same meaning as in previous blocks. The number of items (^ ^) must be blank or zero. One five-column integer field (columns 6 to 10) exists, and contains an arbitrary integer assigned uniquely to the following block of data. K must be greater than zero and less than 4096.

End of Block

```
COLUMN
→        5    10
     DEC      -K
```


LOCKHEED
CALIFORNIA COMPANY

The last card of a data block, curve, or table must be the same as the first, described just above, except that the value of the arbitrary integer, K, must be negative.

Block 5 - Time Block

COLUMN

→ 5	15	25	35
DEC03	PI.	θf.	θi.

The time block contains three special numbers. The mnemonic code (DEC) and the number of items (03) have the same meaning as in the curve block. From column six on, there are three floating point fields of ten columns each. The first contains the printing interval, PI. The second contains the final problem time, θ_f. The third contains the initial or starting problem time, θ_i. This is automatically zero if left blank. These numbers can be entered as one item on each of three cards if desired, but must appear in the order listed.

Special Duty Cards

COLUMN

→ 1 4
NBK

Each of the five blocks of data - temperatures, resistors, capacitors, data blocks, and miscellaneous - must end with a card containing the mnemonic code NBK in columns 1 to 3. This is a flag to indicate the end of the block.

3
INC

The increment card, mnemonic code INC in columns 1 to 3, may be used to increment information on the previous card. In the temperature, resistor, and capacitor blocks, only the last item on a card may be incremented. The field specification from column six on depends on and is identical to the field specification for one item of that block, followed by one five-column integer field containing the number of times to increment, shown in the example as a 5.

LOCKHEED
CALIFORNIA COMPANY

Example:

```
COLUMN
→        5    10        20    25        35
     DECO2   N1        T1.   N2        T2.
     INC     1         10.   5
```

This example shows a temperature card followed by an increment card. The second item on this card (N2, T2.) will be incremented to produce N2+1, T2+10., N2+2, T2+20., . . . N2+5, T2+50. The same effect can be obtained with the following list.

```
COLUMN
→        5    10        20    25        35
     DECO2   N1        T1.   N2        T2.
     DECO2 N2+1     T2+10. N2+2     T2+20.
     DECO2 N2+3     T2+30. N2+4     T2+40.
     DECO1 N2+5     T2+50.
```

In the data block, the entire previous card may be incremented, except that designation numbers may not be incremented. In the time block no incrementing may occur.

```
COLUMN
→1    5
     NET
```

A single card with the mnemonic NET in columns 1 to 3 must appear immediately before the pressurization data input, described below. The NET card signals the program that pressurization input data follows and a subroutine is called which reads and stores that data and generates the network for the tanks described. This data must appear somewhere in the temperature block (usually at the beginning of the block) since the information generated will be used as input to the resistor and capacitor blocks.

COLUMN

→ 5 12

TAP XXXXXX

A library tape of material property curves exists. In lieu of inputing a material property curve, the TAP card may be used to signal the program to search the library tape and read the curve identified as XXXXXX from that tape. The TAP card must appear between data block designation number cards, and the curve XXXXXX must be available on the library tape.

These and certain other specialized card forms are discussed in detail in Ref. 2.

Table 4-3 shows the standard pressurization input format, and Table 4-4 describes each of the items appearing in the input. Program deck arrangement and order of input are detailed in Appendix A.

The input, in general, can be placed into five basic groups of quantities.

1. Control information and system specifications (card 03)
2. Problem dimensions from system geometry (cards 04 and 05)
3. Initial conditions (internal) (cards 06 and 07)
4. System radiation parameters (card 08)
5. Pressurant system and fluid stratification information (cards 09 and 10)

In addition to the standard input, specific inputs are required for a given mission such as the type or types of fluids, tank and insulation materials, type of pressurant, fluid use rate, gravity environment and system pressure requirements. Many of these input quantities are bivariate functions, such as material themodynamic and transport properties, while others exemplified by specific mission variables are functions of time.

LOCKHEED
CALIFORNIA COMPANY

"REPRODUCIBILITY OF THE ORIGINAL PAGE IS POOR"

TABLE 4-3

PRESSURIZATION DATA INPUT LAYOUT SHEET

FORM DX 7924-1

GENERAL PURPOSE DATA SHEET

SEQ.	1–5	6–10	11–15	16–20	21–25	26–30	31–35	36–40	41–45	46–50	51–55	56–60	61–65	66–70	71–72	73–76
001	CTID															
002	NET															
003	NTIN	NRAD	NUCT	NUSET	NTAN	NWALL	IDEC	RMES	KOUT	RSTR	DTILE	KATM	NTUBE	KUT		
004	TKRAD		TKLEN		TEMP2		TKWAL1		TKWAL2							
005	TKINS(1)		TKINS(2)		TKINS(3)		TKINS(4)		TKINS(5)							
006	PR		VGAS		TSAT		FMOLC		FMOLN		FMOLX		TX			
007	FMIN		FMAX		PMIN		PMAX									
008	RADIF		RADIO		ε1		ε2									
009	MHT		RHT				VHT		TOHT		HEXSW		POHT			
010	WNFHT		EPSIVL		EPSIGN		FRTURB		FRLAM		FNLD					

ID

PREPARED | CHECKED | NAME | DATE | TITLE | GROUP | PAGE | JOB NO.

LOCKHEED CALIFORNIA COMPANY

TABLE 4-4

PRESSURIZATION DATA INPUT DESCRIPTION

CARD NO.	INPUT QUANTITY	DESCRIPTION
Card 01	CID	Case Identification
Card 02	NET	Denotes pressurization program input following
Card 03	NTYPE	=1 If tank is cylindrical with hemispherical ends
		=2 If tank is spherical
	NRAD	= Number of radial segments into which tank is to be divided (Must be $\neq 0$, and =0 (MOD4))
	NCIR	= Number of circular segments into which tank is to be divided (Must be ≥ 1)
	NSECT	= Number of axial segments into which the cylindrical portion of the tank is to be divided (Must be ≥ 1; if NTYPE $\neq 1$, NSECT =0)
	NTNK	= Number of insulation layers around the tank ($0 \leq NTNK \leq 5$)
	INNOD	= Initial node number of tank, always =1
	IGC	=1 If case is a one-gas system
		=2 If case is a two-gas system (Assume one condensible, one noncondensible gas)
	IPRESS	=1 If tank is pressurized before firing
		=2 If tank is not pressurized before firing and is only under its own vapor pressure
	KOUT	Output Control Switch
		=1 For standard output
		=2 For standard + tracer output
	IRSTRT	=0 (Or blank) if no segmentation is desired

LOCKHEED
CALIFORNIA COMPANY

TABLE 4-4 (Continued)

CARD NO.	INPUT QUANTITY	DESCRIPTION
Card 03 (Cont)	IRSTRT	=1 If segmentation is desired and the current segment is to start computations from conditions at the end of a previous segment
		=2 If segmentation is desired and the conditions at the end of this segment are to be saved for possible starting values for the next segment
		=3 If segmentation is desired and both of the above are to be done
	IPTLIQ	=0 (Or blank) if no cards are to be punched to record TLIQ vs. time (Which may be used as input to another run)
		=1 If said cards are to be punched
	LIBTAP	=0 (Or blank) if no curves are to come from the materials library tape
		=1 If the materials properties are to be taken from the materials library tape
	MTIME	=0 (Or blank) if no segmentation is desired
		= Minutes of estimated machine time for the current segment (If this time is about to be exceeded during a computer run, the program will save final-time conditions and exit before the computer can cut off the run
	KUT	= Mission time at which current segment is to stop (seconds)
		NOTE: All card 03 quantities are in a fixed point format, i.e., none of the fields contains a decimal point, and each number appears in the right-most position of its field
Card 04	TKRAD	Radius of tank (ft)
	TKLEN	Length of the cylindrical portion of the tank (ft)

LOCKHEED
CALIFORNIA COMPANY

TABLE 4-4 (Continued)

CARD NO.	INPUT QUANTITY	DESCRIPTION
Card 04 (Cont)	TEMPZ	Original temperature of the system (°F). At time =0. All temperatures at internal tank nodes, tank wall nodes, and insulation nodes are set to TEMPZ
	TKWAL1	Thickness of tank wall (ft)
	TKWAL2	Thickness of wall around the insulation layers (feet) (TKWAL2=0. If there are no insulation layers)
Card 05	TKINS (I)	Thickness of insulation layer (I) (ft)
Card 06	PR	Pressure within tank at time =0.0 (psi)
	VGAS	Amount of gas in tank at time =0.0 (Fraction of total volume)
	TSAT	Saturation temperature at maximum operating pressure (°F)
	FMOLC	Molecular weight of condensible gas
	FMOLN	Molecular weight of noncondensible gas
	FMOLX	Molecular weight of pressurant gas
	TX	Temperature of pressurant gas at time =0.0 (°F)
Card 07	FMIN	Minimum allowable pressure factor
	FMAX	Maximum allowable pressure factor
	PMIN	Minimum allowable pressure (psi)
	PMAX	Maximum allowable pressure (psi)
Card 08	RADIF	Overall view factor of liquid to tank wall
	RADIO	Stefan-Boltzmann constant (Btu/hr ft^2 $°R^4$)
	E1	Emissivity of the liquid

LOCKHEED
CALIFORNIA COMPANY

TABLE 4-4 (Continued)

CARD NO.	INPUT QUANTITY	DESCRIPTION
Card 08 (Cont)	E2	Emissivity of the inside tank wall material
Card 09	MHT	Weight of pressurant bottle (lbs)
	RHT	Radius of pressurant bottle (ft)
	VHT	Volume of pressurant bottle (ft^3)
	TOHT	Initial temperature of pressurant gas (^oF)
	HEXSW	=0 If there is no heat exchanger present
		=1 If there is a heat exchanger present
	POHT	Initial pressure inside pressurant bottle (psi)
Card 10	WNFHT	Pressurant usage factor
	EPSIVL	Liquid phase existence tolerance for stratification purposes only (fraction of total volume)
	EPSIGN	G-iteration tolerance (fraction of iterated G-value)
	FRTURB	Friction factor (turbulent), initial guess
	FRLAM	Friction factor (laminar), initial guess
	FNLD	Number of layers into which tank is to be divided for stratification purposes only (125 maximum). If FNLD = 0.0, it is assumed that the effect of stratification is not to be considered for this run and none of the stratification input wuantities need to be given.

LOCKHEED
CALIFORNIA COMPANY

Table 4-5 presents examples (see Table 4-6 for curve description) of the input format showing the two ways that this above information may be called by this program.

1. Univariate or Bivariate curve input directly as program input
2. Curve is called from the materials library (reference 4), using the TAP card

Table 4-6 presents a complete tabulation of the curves required for program operation.

All of the indicated curves must be defined in the data block, (Block 4) not necessarily in ascending table number order. Failure to define any one of the curves requested by the program will result in the deletion of the entire run.

All those curves marked "ML" in the list below may be either requested from the materials library tape by their assigned code names or may be defined explicitly in the data block using the standard Thermal Analyzer curve input format. All other curves must be defined explicitly.

Each of the curves in the materials library tape has been assigned a six-character code name which must be used whenever any reference is made to the curve.

Curves 130, 131, 132 are curves of tolerances put on average gas and liquid temperatures, and total pressure. They are used to prevent excessive calling of subroutine RECALC, and thereby reduce machine time.

The curves listed in Table 4-6 must be referred to the pressurization part of the program. This referencing is done in subroutine TANKA. The argument, K, in the statement CALL TANKA (K) is a table designation number. In table K the curves needed in the pressurization part of the program are listed as floating point numbers. TANKA converts these numbers to integers and stores them in a region available to the pressurization part of the program. Each of the curves so listed must appear in some form in the data block section of the standard Thermal Analyzer output.

"REPRODUCIBILITY OF THE ORIGINAL PAGE IS POOR."

TABLE 4-5

SPECIMEN CURVE INPUT SHEET

FORM DX 7924-1

GENERAL PURPOSE DATA SHEET

LOCKHEED-CALIFORNIA COMPANY
A DIVISION OF LOCKHEED AIRCRAFT CORPORATION

PREPARED | NAME | DATE | TITLE | PAGE OF
CHECKED | WO | EWA | JOB NO. | GROUP

SEQ. | ID

```
EXAMPLE ØF SETUP ØF UNIVARIATE CURVE 107
DEC     107                                                    FMLU
DEC060.0        0.0        45000.0    0.0        45000.0    23.3
DEC0645012.0    23.3       45012.0    0.0        100000.0   0.0
DEC010.0
DEC    -107

EXAMPLE ØF SETUP ØF BIVARIATE CURVE 113
DEC     113                                                    GAMMA C
DEC043003.0     0.0        200.0      400.0
DEC040.0        1.66       1.66       1.66
DEC04200.0      1.66       1.66       1.66
DEC04400.0      1.66       1.66       1.66
DEC    -113

EXAMPLE ØF A REQUEST TØ TAKE A CURVE FRØM THE MATERIALS LIBRARY TAPE
DEC     114                                                    RHØ LIQ
TAP  NTØ-11
DEC    -114
```

TABLE 4-6

ORDER OF INPUT CURVES

MATERIALS LIBRARY TAPE OPTION	TABLE NO.	QUANTITY	SYMBOL	UNITS	INDEP. VARIABLE	LINEAR OR BIVARIATE
	101	Gravity	GAVITY	N.U.	Time	LIN
ML	102	Thermal Conductivity of Condensible Gas	FKGC	Btu/hr ft/°R	Press., Temp.	BIV
ML	103	Thermal Conductivity of Liquid	FKL	Btu/hr ft/°R	Temp.	LIN
ML	104	Compressibility Factor of Condensible Gas	ZC	N.U.	Pres., Temp.	BIV
ML	105	Vapor Press. of Liquid	PC	psi	Temp.	LIN
ML	106	Compressibility Factor of Noncondensible Gas	ZN	N.U.	Press., Temp.	BIV
	107	Mass Rate of Liquid used from Tank	FMLU	lb/sec	Time	LIN
	108	Mass Rate of Liquid added to Tank	FMLA	lb/sec	Time	LIN
ML	109	Heat of Vaporization	RLAM	Btu/lb	Temp.	LIN
ML	110	Compressibility Factor of Pressurant Gas	ZX	N.U.	Press., Temp.	BIV
ML	111	Heat Capacity of Pressurant Gas to be added	CPX	Btu/lb/°R	Press., Temp.	BIV
	112	Temperature of Liq. added to Tank	TLA	°F	Time	LIN
ML	113	Heat Capacity Ratio of Condensible Gas	GAMMAC	N.U.	Press., Temp.	BIV
ML	114	Density of Liquid	RHOL	lb/ft^3	Temp.	LIN
ML	116	Heat Capacity of Liquid	CPL	Btu/lb/°R	Temp.	LIN
ML	117	Heat Capacity of Condens. Gas	CPGi	Btu/lb/°R	Press., Temp.	BIV

LOCKHEED
CALIFORNIA COMPANY

TABLE 4-6 (Continued)

MATERIALS LIBRARY TAPE OPTION	TABLE NO.	QUANTITY	SYMBOL	UNITS	INDEP. VARIABLE	LINEAR OR BIVARIATE
ML	118	Thermal Conductivity of Inner Wall	FKWAL1	Btu/hr ft/°R	Temp.	LIN
ML	119	Heat Capacity Inner Wall	CPWAL1	Btu/lb/ °R	Temp.	LIN
ML	120	Density of Inner Wall	RHOWL1	lb/ft^3	Temp.	LIN
ML	124	Thermal Conductivity of Noncondensible Gas	FKGN	Btu/hr ft/°R	Press., Temp.	BIV
ML	126	Heat Capacity of Noncondensible Gas	CPG2	Btu/lb/ °R	Press., Temp.	BIV
ML	127	Thermal Conductivity of Outer Wall	FKWAL2	Btu/ hr ft/ °R	Temp.	LIN
ML	128	Heat Capacity of Outer Wall	CPWAL2	Btu/lb/ °R	Temp.	LIN
ML	129	Density of Outer Wall	RHOWL2	lb/ft^3	Temp.	LIN
	130	Epsilon Average Gas Temperature	EPSIGT	°F	Time	LIN
	131	Epsilon Average Liquid Temperature	EPSILT	°F	Time	LIN
	132	Epsilon Total Pressure	EPSIPR	psi	Time	LIN
	133	Angle of Tank	ANGLE	Deg.	Time	LIN
ML	134	Heat Capacity Ratio of Noncondensible Gas	GAMMAN	N.U.	Press., Temp.	Biv
ML	136	Heat Capacity of Pressurant Bottle Wall	CPHBWL	Btu/lb/ °R	Temp.	LIN
ML	141	Thermal Conductivity of Insulation Layer 1	FKINS1	Btu/hr ft/°R	Temp.	LIN
ML	142	Heat Capacity of Insulation Layer 1	CPINS1	Btu/lb/ °R	Temp.	LIN
ML	143	Density of Insulation Layer 1	RHOIN1	lb/ft^3	Temp.	LIN

LOCKHEED
CALIFORNIA COMPANY

TABLE 4-6 (Continued)

MATERIALS LIBRARY TAPE OPTION	TABLE	QUANTITY	SYMBOL	UNITS	INDEP. VARIABLE	LINEAR OR BIVARIATE
ML	144	Properties of Insulation Layers	FKINS2	Btu/hr ft/°R	Temp.	LIN
ML	145	(2-5) Assumed to be input as those of Insulation Layer 1	CPINS2	Btu/ lb/°R	Temp.	LIN
ML	146		RHOIN2	lb/ft^3	Temp.	LIN
ML	147		FKINS3	Btu/hr ft/°R	Temp.	LIN
ML	148		CPINS3	Btu/ lb/°R	Temp.	LIN
ML	149		RHOIN3	lb/ft^3	Temp.	LIN
ML	150		FKINS4	Btu/hr ft/°R	Temp.	LIN
ML	151		CPINS4	Btu/ lb/°R	Temp.	LIN
ML	152		RHOIN4	lb/ft^3	Temp.	LIN
ML	153		FKINS5	Btu/hr ft/°R	Temp.	LIN
ML	154		CPINS5	Btu/ lb/°R	Temp.	LIN
ML	155		RHOIN5	lb/ft^3	Temp.	LIN

LOCKHEED
CALIFORNIA COMPANY

PROGRAM OUTPUT

Program output consists of a printout of information specified in the print subroutine (as described in Section II and Reference 2), and the pressurization output as specified by write instructions in subroutine CONTRL.

The program as written provides a maximum output. Reduction in printout by deletion of specific output items is accomplished by reprogramming the PRINT subroutine for changes in Thermal Analyzer output (node temperatures, resistor and capacitor values, and R-C products), or the write instructions in subroutine CONTRL to adjust pressurization output (mass and energy balance parameters).

Program output is called at intervals determined by the print interval (Block 5, Thermal Analyzer input). All parameters specified as output are printed out at this time.

The standard program output consists, basically, of five groups of information covering the system thermal and mass balances:

Group 1 - This group lists results of system mass and energy balance computations accomplished by subroutine CONTRL during this mission, including the system average temperatures and pressure. Current time, computation interval, minimum R-C product, gravity vector information, and pressurant system parameters are included in this group.

Group 2 - Node temperatures are printed out in consecutive order from left to right unless otherwise specified in subroutine PRINT.

Group 3 - System resistor values are printed out in consecutive order unless otherwise specified in subroutine PRINT. Each resistor is identified as to terminal nodes in the printout of the program input quantities which immediately precedes the printout of computational output.

Group 4 and 5 - These groups consist of system capacity and resistance-capacity, product values, respectively, for each of the nodes in Group 2.

An optional "tracer" output is provided as a means of program checkout. Whether the standard or tracer output is printed is determined by the value assigned an input quantity, KOUT.

KOUT = 1 standard output is given

KOUT = 2 standard plus "tracer" output given

LOCKHEED
CALIFORNIA COMPANY

Temperatures, resistors, and capacitors associated with the system will be printed at every print time regardless of the value of KOUT. Capacitors are signed to designate the following:

- node is in gas region

+ node is liquid, wall, or insulation

The standard output shown in Table 4-7 for one time step includes lines 1-14 of the output listed in Table 4-8 plus the network temperatures, resistances and capacitances.

The "tracer" output option should be used only if there is reason to believe that the program is not performing the desired calculations in the correct sequence and/or manner. When using this output option, each time a subroutine is called from CONTRL, a comment is printed out showing all the pertinent data used in calling the subroutine. This is done during every computing interval, and therefore aids in tracing possible errors in the program. Since all this extra output will usually far exceed that normally printed out, the amount of machine time used will be quite large and the option should be used only on short runs.

At every print time of the time history two pages of quantities are printed out by the subroutines CONTRL and PRINT as shown in Table 4-7. Table 4-8 is a description of the output items.

TABLE 4-7 SAMPLE OUTPUT

```
PRESSURIZATION PROGRAM TEST CASE (NITROGEN TETROXIDE)   DATE

THETA= 0.8000000E 04 D THETA= 0.117E 02 RC MIN=.14033E 03 NODE  3. PREV. D THETA=.35082E 02 GRAVITY= 0.001 ANGLE= 0.

TOTAL PRESSURE      PARTIAL CONDENSIBLE PARTIAL NONCONDENS.
 0.64609E 02          0.48022E 02          0.16587E 02

TEMPERATURE AV GAS AVERAGE LIQUID       AVERAGE ALL          DELTA TEMP.
 0.57980E 03          0.57980E 03          0.57980E 03         -0.16416E-03

MAXIMUM LIQ. NODE   MAX LIQ SURF NODE    MAX SURF GAS NODE    T S
 0.57980E 03          0.57980E 03          0.57980E 03          0.57980E 03

VOLUME OF GAS       MASS CONDENSIBLE     MASS NONCONDENSIBLE SUM DELTA MASSES
 0.50610E-01          0.25748E-01          0.53922E-03          0.14811E-01

SUM MASS COND VENT  SUM MASS NONC VENT   SUM MASS COND ADDED SUM MASS NONC ADDED
 0.                   0.                   0.                   0.

MASS OF LIQUID      MASS LIQUID USED     MASS LIQUID ADDED    MASS GAS USED
 0.44291E 03          0.                   0.                   0.

SUM MASS LIQ USED   SUM MASS LIQ ADDED   DELTA VOLUME
 0.                   0.                  -0.44644E-07

SUM EXT HEAT
 0.17814E 04

FMGA                HEL BOT PRESSURE     HEL BOT TEMP.        T SUB X              HELIUM WEIGHT        PREVIOUS WEIGHT
 0.                   0.15071E 04          0.54255E 03          0.54000E 03          0.57789E 00          0.

SC GAS              SC LIQ               SC INT               SC ALL               T LA                 RHO LIQ
 0.                   0.17978E 03          0.                   0.17978E 03          0.46000E 03          0.85448E 02
CP GASC             CP GASN              CP LIQ               K GAS C              K GAS N              K LIQ
 0.19853E 01          0.74285E 00          0.41768E-00          0.87872E-01          0.91150E-01          0.67761E-01
Z C                 Z N                  Z X                  CP X                 R LAM                GAMMA
 0.69815E 00          0.10011E 01          0.10645E 01          0.                   0.16508E 03          0.13074E 01

H BAR               Y BAR                T TOP BL             RAYLEIGH NR.(SIDE)   BOND NR.             W
 0.14766E-02          0.27202E-01          0.60744E 03          0.83680E 11          0.85098E 03          0.36177E-00

LAYER TEMPS.(TOP TO BOTTOM)
 0.58273E 03          0.58228E 03          0.58195E 03          0.58119E 03          0.57989E 03          0.57815E 03
 0.57688E 03          0.57452E 03

TEMPERATURES
   0.58288E 03  0.58260E 03  0.58046E 03  0.58288E 03  0.58260E 03  0.58046E 03  0.58288E 03  0.58260E 03  0.58046E 03  0.58288E 03
   0.58260E 03  0.58046E 03  0.58239E 03  0.58216E 03  0.58148E 03  0.58239E 03  0.58216E 03  0.58148E 03  0.58239E 03  0.58216E 03
   0.58148E 03  0.58239E 03  0.58216E 03  0.58148E 03  0.58205E 03  0.58184E 03  0.58128E 03  0.58205E 03  0.58184E 03  0.58128E 03
   0.58205E 03  0.58184E 03  0.58128E 03  0.58205E 03  0.58184E 03  0.58128E 03  0.58125E 03  0.58111E 03  0.58073E 03  0.58125E 03
   0.58111E 03  0.58073E 03  0.58125E 03  0.58111E 03  0.58073E 03  0.58125E 03  0.58111E 03  0.58073E 03  0.57991E 03  0.57987E 03
   0.57982E 03  0.57991E 03  0.57987E 03  0.57982E 03  0.57991E 03  0.57987E 03  0.57982E 03  0.57991E 03  0.57987E 03  0.57982E 03
   0.57810E 03  0.57820E 03  0.57862E 03  0.57810E 03  0.57820E 03  0.57862E 03  0.57810E 03  0.57820E 03  0.57862E 03  0.57810E 03
   0.57820E 03  0.57862E 03  0.57678E 03  0.57699E 03  0.57771E 03  0.57678E 03  0.57699E 03  0.57771E 03  0.57678E 03  0.57699E 03
   0.57771E 03  0.57678E 03  0.57699E 03  0.57771E 03  0.57436E 03  0.57465E 03  0.57620E 03  0.57436E 03  0.57465E 03  0.57620E 03
   0.57436E 03  0.57465E 03  0.57620E 03  0.57436E 03  0.57465E 03  0.57620E 03  0.54255E 03  0.54271E 03
 EXTERNAL
   0.58000E 03  0.58000E 03  0.58000E 03  0.58000E 03
```

"REPRODUCIBILITY OF THE ORIGINAL PAGE IS POOR."

TABLE 4-7 (CONTINUED)

RESISTORS

0.1392E 05	0.2547E 04	0.1392E 05	0.2547E 04	0.1392E 05	0.2547E 04	0.1392E 05	0.2547E 04	0.2586E 05	0.7759E 05
0.5694E 05	0.2586E 05	0.7759E 05	0.5728E 05	0.2586E 05	0.7759E 05	0.5726E 05	0.2586E 05	0.7759E 05	0.5643E 05
0.5174E 04	0.1894E 04	0.5174E 04	0.1894E 04	0.5174E 04	0.1894E 04	0.5174E 04	0.1894E 04	0.5174E 04	0.1894E 04
0.5174E 04	0.1894E 04	0.5174E 04	0.1894E 04	0.5174E 04	0.1894E 04	0.5174E 04	0.1894E 04	0.5174E 04	0.1894E 04
0.5174E 04	0.1894E 04	0.5174E 04	0.1894E 04	0.5174E 04	0.1894E 04	0.5174E 04	0.1894E 04	0.5174E 04	0.1894E 04
0.5174E 04	0.1894E 04	0.5174E 04	0.1894E 04	0.5174E 04	0.1894E 04	0.5174E 04	0.1894E 04	0.5174E 04	0.1894E 04
0.5174E 04	0.1894E 04	0.5174E 04	0.1894E 04	0.5174E 04	0.1894E 04	0.5174E 04	0.1894E 04	0.3175E 05	0.1328E 06
0.1398E 06	0.3175E 05	0.1328E 06	0.1406E 06	0.3175E 05	0.1328E 06	0.1406E 06	0.3175E 05	0.1328E 06	0.1385E 06
0.3175E 05	0.1328E 06	0.1398E 06	0.3175E 05	0.1328E 06	0.1406E 06	0.3175E 05	0.1328E 06	0.1406E 06	0.3175E 05
0.1328E 06	0.1385E 06	0.3175E 05	0.1328E 06	0.1398E 06	0.3175E 05	0.1328E 06	0.1406E 06	0.3175E 05	0.1328E 06
0.1406E 06	0.3175E 05	0.1328E 06	0.1385E 06	0.3175E 05	0.1328E 06	0.1398E 06	0.3175E 05	0.1328E 06	0.1406E 06
0.3175E 05	0.1328E 06	0.1406E 06	0.3175E 05	0.1328E 06	0.1385E 06	0.3175E 05	0.1328E 06	0.1398E 06	0.3175E 05
0.1328E 06	0.1406E 06	0.3175E 05	0.1328E 06	0.1406E 06	0.3175E 05	0.1328E 06	0.1385E 06	0.3175E 05	0.1328E 06
0.1398E 06	0.3175E 05	0.1328E 06	0.1406E 06	0.3175E 05	0.1328E 06	0.1406E 06	0.3175E 05	0.1328E 06	0.1385E 06
0.3959E 05	0.5959E 05	0.4639E 05	0.5959E 05	0.5959E 05	0.4666E 05	0.5959E 05	0.5959E 05	0.4664E 05	0.5959E 05
0.5959E 05	0.4597E 05	0.5959E 05	0.5959E 05	0.4639E 05	0.5959E 05	0.5959E 05	0.4666E 05	0.5959E 05	0.5959E 05
0.4664E 05	0.5959E 05	0.5959E 05	0.4597E 05	0.5959E 05	0.5959E 05	0.4639E 05	0.5959E 05	0.5959E 05	0.4666E 05
0.5959E 05	0.5959E 05	0.4664E 05	0.5959E 05	0.5959E 05	0.4597E 05	0.5959E 05	0.5959E 05	0.4639E 05	0.5959E 05
0.5959E 05	0.4666E 05	0.5959E 05	0.5959E 05	0.4664E 05	0.5959E 05	0.5959E 05	0.4597E 05	0.5959E 05	0.5959E 05
0.4639E 05	0.5959E 05	0.5959E 05	0.4666E 05	0.5959E 05	0.5959E 05	0.4664E 05	0.5959E 05	0.5959E 05	0.4597E 05
0.5566E 05	0.7459E 05	0.6346E 05	0.5566E 05	0.7459E 05	0.6383E 05	0.5566E 05	0.7459E 05	0.6381E 05	0.5566E 05
0.7459E 05	0.6288E 05	0.1392E 05	0.2547E 04	0.1392E 05	0.2547E 04	0.1392E 05	0.2547E 04	0.1392E 05	0.2547E 04
0.2586E 05	0.7759E 05	0.5694E 05	0.2586E 05	0.7759E 05	0.5728E 05	0.2586E 05	0.7759E 05	0.5726E 05	0.2586E 05
0.7759E 05	0.5643E 05	0.2783E 05	0.3730E 05	0.6346E 05	0.2783E 05	0.3730E 05	0.6383E 05	0.2783E 05	0.3730E 05
0.6381E 05	0.2783E 05	0.3730E 05	0.6289E 05	0.1615E 04	0.1035E 04	0.	0.	0.	0.
0.1679E 05	0.1871E 05	0.1871E 05	0.1871E 05	0.1871E 05	0.1871E 05	0.1871E 05	0.1679E 05	0.	0.
0.2378E 05	0.2625E 05	0.2625E 05	0.2624E 05	0.2624E 05	0.2625E 05	0.2625E 05	0.2378E 05	0.	0.
0.2308E 05	0.2553E 05	0.2552E 05	0.2552E 05	0.2552E 05	0.2552E 05	0.2553E 05	0.2308E 05	0.	0.
0.1245E 05	0.1398E 05	0.1398E 05	0.1398E 05	0.1398E 05	0.1398E 05	0.1398E 05	0.1245E 05	0.	0.

CAPACITORS

0.2191E 01	0.4006E 01	0.1681E-00	0.2191E 01	0.4006E 01	0.1681E-00	0.2191E 01	0.4006E 01	0.1681E-00	0.2191E 01
0.4006E 01	0.1696E-00	0.4205E 01	0.4205E 01	0.1528E-00	0.4205E 01	0.4205E 01	0.1521E-00	0.4205E 01	0.4205E 01
0.1521E-00	0.4205E 01	0.4205E 01	0.1534E-00	0.4205E 01	0.4205E 01	0.1528E-00	0.4205E 01	0.4205E 01	0.1521E-00
0.4205E 01	0.4205E 01	0.1521E-00	0.4205E 01	0.4205E 01	0.1534E-00	0.4205E 01	0.4205E 01	0.1528E-00	0.4205E 01
0.4205E 01	0.1521E-00	0.4205E 01	0.4205E 01	0.1521E-00	0.4205E 01	0.4205E 01	0.1534E-00	0.4205E 01	0.4205E 01
0.1528E-00	0.4205E 01	0.4205E 01	0.1521E-00	0.4205E 01	0.4205E 01	0.1521E-00	0.4205E 01	0.4205E 01	0.1534E-00
0.4205E 01	0.4205E 01	0.1528E-00	0.4205E 01	0.4205E 01	0.1521E-00	0.4205E 01	0.4205E 01	0.1521E-00	0.4205E 01
0.4205E 01	0.1534E-00	0.4205E 01	0.4205E 01	0.1528E-00	0.4205E 01	0.4205E 01	0.1521E-00	0.4205E 01	0.4205E 01
0.1521E-00	0.4205E 01	0.4205E 01	0.1534E-00	0.2191E 01	0.4006E 01	0.1696E-00	0.2191E 01	0.4006E 01	0.1681E-00
0.2191E 01	0.4006E 01	0.1681E-00	0.2191E 01	0.4006E 01	0.1696E-00	0.4333E-00	0.6142E 01	0.	0.
0.	0.	0.	0.	0.	0.	0.	0.	0.	0.
0.	0.	0.	0.	0.	0.	0.	0.	0.	0.
0.	0.	0.	0.	0.	0.	0.	0.	0.	0.
0.	0.	0.	0.	0.	0.	0.	0.	0.	0.
0.	0.	0.	0.	0.	0.	0.	0.	0.	0.
0.	0.	0.	0.	0.	0.	0.	0.	0.	0.
0.	0.	0.	0.	0.	0.	0.	0.	0.	0.
0.	0.	0.	0.	0.	0.	0.	0.	0.	0.
0.	0.	0.	0.	0.	0.	0.	0.	0.	0.
0.	0.	0.	0.	0.	0.	0.	0.	0.	0.
0.	0.	0.	0.						

TABLE 4-8

STANDARD OUTPUT ITEMS

LINE NO.	OUTPUT QUANTITY	DESCRIPTION
Line 1		Heading
Line 2	THETA	Time (sec.)
	DTHETA	Time step (sec.)
	RC MIN	Minimum R-C product
	NODE NR.	Number of node which has RCMIN
	PREV D THETA	Previous time step (sec.)
	GRAVITY	Gravity at present time
	ANGLE	Angle between longitudinal axis of tank and gravity vector (deg.)
Line 3	TOTAL PRESSURE	Total gas pressure within tank (psi)
	PARTIAL COND.	Partial pressure in tank due to condensible gas (psi)
	PARTIAL NONC.	Partial pressure in tank due to non-condensible gas (psi)
Line 4	TEMP.AV. GAS	Average temperature within gas space (°R)
	TEMP.AV. LIQUID	Average temperature of liquid (°R)
	AVERAGE ALL	Average temperature of all internal nodes (°R)
	DELTA TEMP	Adiabatic temperature change (°R)
Line 5	MAX. LIQ. NODE	Temperature at hottest liquid node (°R) or, if GRAVITY $\neq$0.0, an interpolation between the hottest liquid surface node and its attached gas node

LOCKHEED
CALIFORNIA COMPANY

TABLE 4-8 (Continued)

LINE NO.	OUTPUT QUANTITY	DESCRIPTION
Line 5 (Cont)	MAX. LIQ SURF NODE	Temperature at hottest liquid surface node (°R)
	MAX. SURF GAS NODE	Temperature at gas node attached to hottest liquid surface node (°R)
	TS	Temperature at liquid surface (°R) under gravity conditions
Line 6	VOLUME OF GAS	Volume of gas within tank (ft^3)
	MASS CONDENSIBLE	Mass of condensible gas in tank (lb)
	MASS NONCONDENSIBLE	Mass of noncondensible gas in tank (lb)
	SUM DELTA MASSES	Sum of m_{cc} (over time o-present), where m_{cc} = change in mass of condensible gas due to evaporation and/or condensation (lbs)
Line 7	SUM MASS COND VENT	Amount of condensible gas vented to present time due to pressures > FMAXxPMAX
	SUM MASS NONC VENT	Amount of noncondensible gas vented as above
	SUM MASS COND ADDED	Amount of condensible gas added (lbs) (to present time)
	SUM MASS NONC ADDED	Amount of noncondensible gas added (lb) (to present time)
Line 8	MASS OF LIQUID	Amount of liquid in the tank (lb)
	MASS LIQUID USED	Rate of liquid usage at present time (lbs/sec.)
	MASS LIQUID ADDED	Rate of liquid addition at present time (lbs/sec.)

LOCKHEED
CALIFORNIA COMPANY

TABLE 4-8 (Cont)

LINE NO.	OUTPUT QUANTITY	DESCRIPTION
Line 8 (Cont)	MASS GAS USED	Amount of gas used up to present time (lb)
Line 9	SUM MASS LIQ USED	Amount of liquid used to present time (lb)
	SUM MASS LIQ ADDED	Amount of liquid added to present time (lb)
	DELTA VOLUME	Change in gas (or liquid) volume since last timestep (ft^3)
Line 10	SUM EXT HEAT	Net tank heat input (Btu)
Line 11	FMGA	Mass of gas added to the tank since the last timestep (lbs)
	HEL BOT PRESSURE	Pressure inside the pressurant bottle (psi)
	HEL BOT TEMP.	Temperature inside the pressurant bottle (°R)
	T SUB X	Temperature of the gas when entering the tank (°R)
	HELIUM WEIGHT	Amount of helium in pressurant bottle (lb)
	PREVIOUS WEIGHT	Amount of helium consumed up to previous time step (lb)
Line 12	SCGAS	Sum of capacitors of gas nodes (Btu/°R)
	SCLIQ	Sum of capacitors of liquid nodes (Btu/°R)
	SCINT	Sum of capacitors of surface nodes (Btu/°R)
	SCALL	Sum of capacitors of all internal nodes (Btu/°R)

LOCKHEED
CALIFORNIA COMPANY

TABLE 4-8 (Continued)

LINE NO.	OUTPUT QUANTITY	DESCRIPTION
Line 12 (Cont)	TLA	Temperature at which liquid is added (^{o}R)
	RHO LIQ	Density of liquid (lbs/ft^3)
Line 13	CP GAS C	Heat capacity of condensible gas (Btu/lb/^{o}R)
	CP GAS N	Heat capacity of noncondensible gas (Btu/lb/^{o}R)
	CP LIQ	Heat capacity of liquid (Btu/lb/^{o}R)
	K GAS C	Thermal conductivity of condensible gas (Btu/hr ft/^{o}R)
	K GAS N	Thermal conductivity of noncondensible gas (Btu/hr ft^{o}R)
	KLIQ	Thermal conductivity of liquid (Btu/hr ft/^{o}R)
Line 14	ZC	Compressibility factor of condensible gas
	ZN	Compressibility factor of noncondensible gas
	ZX	Compressibility factor of pressurant gas
	CPX	Heat capacity of pressurant gas (Btu/lb^{o}R)
	RLAM	Heat of vaporization (Btu/lb)
	GAMMA	Total heat capacity ratio
Line 15 (will be printed only if stratification is used)	H BAR	Film coefficient (Btu/sec ft^2 ^{o}F)
	Y BAR	Average boundary layer thickness (ft)
	T TOP BL	Average temperature of top boundary layer (^{o}R)
	RAYLEIGH NR.	System Rayleigh number (side) ($N_{GR} \cdot N_{PR}$), dimensionless
	BOND NR.	($g \rho L^2/\sigma$), dimensionless
	W	Mass flow ($lb._m$)

LOCKHEED
CALIFORNIA COMPANY

TABLE 4-8 (Continued)

LINE NO.	OUTPUT QUANTITY	DESCRIPTION
Lines 16, 17 (will be printed only if stratification is used)	LAYER TEMPS.	Average temperature of each layer containing fluid nodes (^{o}R). (Starting with uppermost layer) Temperatures are printed 6 per line.
Lines 18 and higher	TEMPERATURES	Temperatures of all system nodes (^{o}R)
	RESISTORS	Resistances between all system nodes (sec ^{o}R/Btu)
	CAPACITORS	Capacitances of all system nodes (Btu/^{o}R)
	R-C PRODUCTS	Resistance-capacitance product of each node and its attached resistors (sec.)

LOCKHEED
CALIFORNIA COMPANY

V - EXAMPLE PROBLEM

PROBLEM DESCRIPTION

The following problem is employed to illustrate the manner in which the pressurization program is used. This case contains two propellant tanks, with the oxidizer, nitrogen tetroxide, being specifically examined since there is a capability of analyzing only one tank at a time.

The tank is cylindrical with hemispherical ends, and it is divided into two radial segments, four circular segments and six axial segments (in the cylinder). The tank has no insulation and therefore no outer wall. Altogether there are 96 tank nodes and 244 tank resistors. This is a two-gas system, condensable vapor and noncondensable pressurant. The problem is expected to run not more than 30 minutes on the computer, at which time the 5050 second mission should be completed. If, for any reason, the 30-minute time estimate is inadequate, it is desired to cut off the run after 30 minutes on the computer and save the information for a possible continuation run.

The liquid used is nitrogen tetroxide (N_2O_4), the condensable gas is nitrogen dioxide (NO_2), and the noncondensable gas is helium (He).

The pressurant bottle, containing helium, is presented as a two-node system (nodes 97, 98), and its surroundings have been reduced to a single equivalent resistor and a constant temperature node (node 99). Surrounding the propellant tank is a network of four nodes (nodes 201-204), assumed to be constant temperature sources. Nodes 299 and 300 are dummy nodes, defined for the purpose of reserving 300 storage locations for the temperature region.

The resistor between the pressurant gas and the pressurant bottle wall varies with time and is computed in the FUNCTION block during non-flow periods and in CONTRL during flow periods. The resistor between the pressurant bottle wall and its external node is a conduction resistor of constant value

LOCKHEED
CALIFORNIA COMPANY

and is therefore defined completely in the resistor block. The four nodes external to the propellant tank are connected by a network of 32 radiation resistors, all of which are defined in the FUNCTION block. Resistor 700 is a dummy resistor, input only to reserve 700 storage locations in the resistor region.

Nodes 97 and 98 are to be included in the heat balance, but not nodes 99 and 201-204 since they are constant temperature sources. Nodes 97 and 98 are therefore listed in the capacitor block. Capacitors 299 and 300 are dummy capacitors, input only to reserve 300 locations in the capacitor region.

Some of the assumptions that are made for this case are:

1. The system is under a nongravity condition during all times except during liquid usage periods when a gravity condition exists.

2. The angle between the main axis of the tank and the gravity vector remains constant at 0°.

3. The tank is used in series with a fuel tank. The fuel has the properties of AEROZINE 50 and is used in a 1:2 mass ratio with the N_2O_4. Flow from the helium pressurant bottles is then proportioned to the different flow rates and liquid densities.

4. The effects of fluid stratification are to be ignored for this case-therefore no stratification data are given on the sample input sheets.

EXAMPLE PROBLEM INPUT

The input sheets for the example problem appear in Table 5-1. The input is prepared as shown in Table 5-2.

TABLE 5-1

EXAMPLE PROBLEM INPUT

```
$IBFTC FUNCT
      SUBRØUTINE FUNCT
      CØMMØN P(14000), M(16), MAXT,MAXR,MAXC
      CØMMØN /CPNET/ NTYPE,TKRAD,TKLEN,TEMPZ,NRAD,NCIR,NSECT,NTNK,
     1               TKTHK(5),TKWAL1,TKWAL2,INØDE,KØUT,FMCØ,FMNØ,FMØLC,
     2               VGAS,IGC,IPRESS,FMØLN,FMIN,FMAX,PMIN,PMAX,FMØLX,
     3               TSAT,ANGLE,TX,PR,TANKV,RADI(4),HELB(14),LLFLØW,
     4               HELT,HELP,HELW,ISTRAT,SAREA,IØPTSX(5),FMULTF(5),
     5               STRINP(20)
      C[illegible] /CPITM/ ITIME
      EQUIVALENCE (IØPTSX(1),IRSTRT),(IØPTSX(2),IPTLIQ),(IØPTSX(3),
     1            LIBTAP),(FMULTF(1),FLT),(NUMTAB(1),P(12526))
      [illegible] M
      [illegible] (97)
      [illegible] = 96
      [illegible] = 244
      [illegible] (1)
      [illegible] = [illegible]00.0
      [illegible] (THETA.GE.5000.0 .AND. THETA.LT.5010.0)  M(4) =  0.5
      [illegible] (THETA.GE.5010.0 .AND. THETA.LT.5050.0)  M(4) =  2.0
      [illegible] (7) = [illegible]5
      [illegible] (HELB(7).EQ.0.0)  GØ TØ 100
      [illegible] (LLF[illegible].NE.0)  GØ TØ 100
      [illegible]ELT = [illegible](TEMP+1) + 460.0
      [illegible]X = [illegible]IV(HELP,P(NTEMP+1),NUMTAB(10))
```

GENERAL PURPOSE DATA SHEET

LOCKHEED-CALIFORNIA COMPANY
A DIVISION OF LOCKHEED AIRCRAFT CORPORATION

PREPARED | NAME | DATE | TITLE | PAGE OF | JOB NO. | CHECKED | WO | EWA | GROUP | ID

TABLE 5-1

(CONTINUED)

FORM DX 7924.1

GENERAL PURPOSE DATA SHEET

LOCKHEED-CALIFORNIA COMPANY
A DIVISION OF LOCKHEED AIRCRAFT CORPORATION

PREPARED | NAME | DATE | TITLE | PAGE . OF
CHECKED | WO | EWA | JOB NO. | GROUP

```
SEQ.                                                                                                                  ID
025          IF(ITIME.EQ.1)HELW=(HELB(4)*HELB(7)/(ZX*1545.*HELB(5)))*144.*FMØLX
026          IF (IRSTRT.EQ.0 .ØR. IRSTRT.EQ.2)  GØ TØ 87
027          IF (ITIME.NE.1)  GØ TØ 87
028          REWIND 11
029          READ (11)  THETA, HELT, HELP, HELW
030          P(NTEMP+1) = HELT-460.0
031          REWIND 11
032    87    CØNTINUE
033          IX4 = 2*MAXT+NRES
034          P(IX4+1) = 3600.0/(BIV(HELP,P(NTEMP+1),NUMTAB(24))*HELB(2)*48.5)
035          HELP = ZX*1545.0*HELW*HELT/(HELB(4)*FMØLX*144.0)
036          IX5 = 2*MAXT+MAXR+NTEMP
037          P(IX5+1) = HELW *(BIV(HELP,P(NTEMP+1),NUMTAB(11))-FLT*ZX/FMØLX)
038          P(IX5+2) = HELB(1) * LIN(P(NTEMP+1),NUMTAB(36))
039    100   CØNTINUE
```

TABLE 5-1
(CONTINUED)

GENERAL PURPOSE DATA SHEET			LOCKHEED-CALIFORNIA COMPANY A DIVISION OF LOCKHEED AIRCRAFT CORPORATION	PAGE OF
PREPARED	NAME	DATE	TITLE	JOB NO.
CHECKED			WO EWA	GROUP

SEQ.	ID
040	DØ 102 I=1,4
041	NØDE = I+200
042	DØ 102 J=1,8
043	RFACT = 5.2E-5
044	IF (J.EQ.1 .ØR. J.EQ.8) RFACT = 5.8E-5
045	NØDE1 = (J-1)*12 + I*3
046	NR = 2*MAXT + 500 + (I-1)*10 + J
047	P(NR) = RAD(NØDE,NØDE1,RFACT)
048	102 CØNTINUE
049	RETURN
050	END

FORM DX 7924.1

LOCKHEED
CALIFORNIA COMPANY

TABLE 5-1

(CONTINUED)

FORM DX 7924-1

GENERAL PURPOSE DATA SHEET

LOCKHEED CALIFORNIA COMPANY

```
$IBFTC PRINT
      SUBRØUTINE PRINT
      CØMMØN P(14000),M(16),MAXT
C     PRINT ØNLY THØSE TEMPS. ,ETC... WHICH ARE USED --- SKIP THE ØTHERS
      DØ 100 I=1,MAXT
100   P(I) = P(I) + 460.0
      WRITE (6,10)
      WRITE (6,11)  (P(I),I=1,98)
      WRITE (6,12)
      WRITE (6,11)  (P(I),I=201,204)
      WRITE (6,13)
      WRITE (6,11)  (P(I),I=601,846)
      WRITE (6,12)
      WRITE (6,11)  (P(I),I=1101,1140)
      WRITE (6,14)
      WRITE (6,11)  (P(I),I=1301,1398)
```

TABLE 5-1

(CONTINUED)

FORM DX 7924-1

GENERAL PURPOSE DATA SHEET

LOCKHEED-CALIFORNIA COMPANY
A DIVISION OF LOCKHEED AIRCRAFT CORPORATION

SEQ.		
016		WRITE (6,12)
017		WRITE (6,11) (P(I),I=1501,1504)
018		WRITE (6,15)
019		WRITE (6,11) (P(I),I=1901,1998)
020		WRITE (6,12)
021		WRITE (6,11) (P(I),I=2101,2104)
022		DØ 102 I=1,MAXT
023	102	P(I) = P(I) - 460.0
024		RETURN
025	10	FØRMAT(13HOTEMPERATURES)
026	11	FØRMAT(2X,10E13.5)
027	12	FØRMAT(13H EXTERNAL)
028	13	FØRMAT(13HIRESISTØRS)
029	14	FØRMAT(13HOCAPACITØRS)
030	15	FØRMAT(13HOR-C PRØDUCTS)
031		END

ID

CHECKED | PREPARED | NAME | DATE | WO | TITLE | EWA | GROUP | JOB NO. | PAGE | OF

LR 18903

TABLE 5-1
(CONTINUED)

FORM: DX 7924.1

GENERAL PURPOSE DATA SHEET

LOCKHEED-CALIFORNIA COMPANY
A DIVISION OF LOCKHEED AIRCRAFT CORPORATION

PREPARED	NAME	DATE	TITLE	PAGE OF
CHECKED			WO EWA	JOB NO.
				GROUP

SEQ.	Data (columns 1–72)
001	CID PRESSURIZATION PRØGRAM TEST CASE DATE
002	NET
003	1 4 2 6 0 1 2 1 1 2 1 1 30 5050
004	.619 3.365 80.0 .0052 0.0 0.0
005	0.0 0.0 0.0 0.0 0.0
006	35.0 .01 133.0 46.01 4.0 4.0 80.0
007	1.05 1.05 30.0 62.0
008	1.0 0.1713E-08.50 .80
009	14.0 .5208 0.0 .594 80.0 0.0 1500.0
010	.245
011	DEC01 97 80.0
012	98 80.0
013	99 85.0
014	201 65.0
015	202 -45.0
016	203 -36.0
017	204 160.0
018	209 500.0
019	DEC01 300 500.0
020	NEK
021	DEC01 245 97 98 0.0
022	246 98 99 1035.0
023	501 201 3 0.0
024	502 201 15 0.0
025	DEC01 503 201 27 0.0

LOCKHEED
CALIFORNIA COMPANY

TABLE 5-1

(CONTINUED)

FORM DX 7924-1

SEQ.						ID
026	DEC01	504	201	39	0.0	
027		505	201	51	0.0	
028		506	201	63	0.0	
029		507	201	75	0.0	
030		508	201	87	0.0	
031		511	202	6	0.0	
032		512	202	18	0.0	
033		513	202	30	0.0	
034		514	202	42	0.0	
035		515	202	54	0.0	
036		516	202	66	0.0	
037		517	202	78	0.0	
038		518	202	90	0.0	
039		521	203	9	0.0	
040		522	203	21	0.0	
041		523	203	33	0.0	
042		524	203	45	0.0	
043		525	203	57	0.0	
044		526	203	69	0.0	
045		527	203	81	0.0	
046		528	203	93	0.0	
047		531	204	12	0.0	
048		532	204	24	0.0	
049		533	204	36	0.0	
050	DEC01	534	204	48	0.0	

GENERAL PURPOSE DATA SHEET

LOCKHEED-CALIFORNIA COMPANY
A DIVISION OF LOCKHEED AIRCRAFT CORPORATION

PREPARED | NAME | DATE | TITLE | PAGE OF
CHECKED | WO | EWA | GROUP | JOB NO.

LOCKHEED CALIFORNIA COMPANY

LR 18003

TABLE 5-1

(CONTINUED)

FORM DX 7924.1

GENERAL PURPOSE DATA SHEET — LOCKHEED-CALIFORNIA COMPANY, A DIVISION OF LOCKHEED AIRCRAFT CORPORATION

PREPARED | NAME | DATE | TITLE | PAGE OF | JOB NO. | CHECKED | WO | EWA | GROUP

SEQ.									ID
051	DEC01	535	204	60		0.0			
052	↓	536	204	72		0.0			
053	↓	537	204	84		0.0			
054	↓	538	204	96		0.0			
055	DEC01				1.0E10				
056	NBK								
057	DEC01	97		0.0					
058	↓	98		0.0					
059	↓	299		0.0					
060	DEC01	300		0.0					
061	NBK								
062	DEC	97							
063	DEC04		101.		102.		103.	104.	
064	↓		105.		106.		107.	108.	
065	↓		109.		110.		111.	112.	
066	↓		113.		114.		115.	116.	
067	↓		117.		118.		119.	120.	
068	↓		121.		122.		123.	124.	
069	↓		125.		126.		127.	128.	
070	↓		129.		130.		131.	132.	
071	↓		133.		134.		135.	136.	
072	↓		137.		138.		139.	140.	
073	↓		141.		142.		143.	144.	
074	↓		145.		146.		147.	148.	
075	DEC04		149.		150.		151.	152.	

LOCKHEED CALIFORNIA COMPANY

TABLE 5-1

(CONTINUED)

FORM DX 7924.1

GENERAL PURPOSE DATA SHEET

LOCKHEED-CALIFORNIA COMPANY
A DIVISION OF LOCKHEED AIRCRAFT CORPORATION

PREPARED | NAME | DATE | TITLE | CHECKED | WO | EWA | GROUP | JOB NO. | PAGE OF

SEQ.								ID
076	DEC04		153.	154.	155.	156.		
077			157.	158.	159.	160.		
078			161.	162.	163.	164.		
079			165.	166.	167.	168.		
080			169.	170.	171.	172.		
081			173.	174.	175.	176.		
082			177.	178.	179.	180.		
083			181.	182.	183.	184.		
084			185.	186.	187.	188.		
085			189.	190.	191.	192.		
086			193.	194.	195.	196.		
087	DEC04		197.	198.	199.	200.		
088	DEC	-97						
089	DEC	101					GRAVITY	
090	DEC04		0.0	0.0	5000.	0.0		
091	DEC04		5000.	1.0	5050.	1.0		
092	DEC04		5050.	0.0	1000000.			
093	DEC01		0.					
094	DEC	-101						
095	DEC	102					K GAS C	
096	TAP	NTØ-23						
097	DEC	-102						
098	DEC	103					K LIQUID	
099	TAP	NTØ-13						
100	DEC	-103						

TABLE 5-1
(CONTINUED)

FORM DX 7924.1

GENERAL PURPOSE DATA SHEET | LOCKHEED-CALIFORNIA COMPANY, A DIVISION OF LOCKHEED AIRCRAFT CORPORATION | PAGE OF

PREPARED | NAME | DATE | TITLE | JOB NO.

CHECKED | WO | EWA | GROUP

SEQ. (77–80)	1	5	10	15	20	25	30	35	40	45	50	55	60	65	70	ID (73–76)
101	DEC		104											Z C		
102	TAP	NTØ-28														
103	DEC		−104													
104	DEC		105											P C		
105	TAP	NTØ-14														
106	DEC		−105													
107	DEC		106											Z N		
108	TAP	HEL-28														
109	DEC		−106													
110	DEC		107											FMLU		
111	DEC04			0.0		0.0		5000.		0.0						
112	DEC04			5000.	2.8872			5050.		2 8872						
113	DEC04			5050.		0.0	1000000.			0 0						
114	DEC01			0.0												
115	DEC		−107													
116	DEC		108											FMLA		
117	DEC05			0.0		0.0	1000000.			0.0		0.0				
118	DEC		−108													
119	DEC		109											R LAMBDA		
120	TAP	NTØ-16														
121	DEC		−109													
122	DEC		110											Z X		
123	TAP	HEL-28														
124	DEC		−110													
125	DEC		111											CP X		

LOCKHEED
CALIFORNIA COMPANY

TABLE 5-1
(CONTINUED)

GENERAL PURPOSE DATA SHEET

LOCKHEED CALIFORNIA COMPANY — A DIVISION OF LOCKHEED AIRCRAFT CORPORATION

SEQ.	Op	Mod	Address	Field 1	Field 2	Field 3	Field 4	Field 5	Comment
126	TAP		HEL-22						
127	DEC		-111						
128	DEC		112						T L A
129	DEC	05		0.0	0.0	1000000.	0.0	0.0	
130	DEC		-112						
131	DEC		113						GAMMA C
132	DEC	04		3003.	0.0	200.0	400.0		
133				0.0	1.30	1.30	1.30		
134				2000.0	1.30	1.30	1.30		
135	DEC	04		6000.0	1.30	1.30	1.30		
136	DEC		-113						
137	DEC		114						RHØ LIQ
138	TAP		NTØ-11						
139	DEC		-114						
140	DEC		116						CP LIQ
141	TAP		NTØ-12						
142	DEC		-116						
143	DEC		117						CP GAS C
144	TAP		NTØ-22						
145	DEC		-117						
146	DEC		118						K WAL 1
147	TAP		T6AL-3						
148	DEC		-118						
149	DEC		119						CP WAL 1
150	TAP		T6AL-2						

FORM DX 7924.1

LOCKHEED CALIFORNIA COMPANY

TABLE 5-1
(CONTINUED)

GENERAL PURPOSE DATA SHEET

LOCKHEED-CALIFORNIA COMPANY
A DIVISION OF LOCKHEED AIRCRAFT CORPORATION

PREPARED	NAME	DATE	TITLE	PAGE OF
CHECKED			WO EAA	JOB NO. GROUP

FORM OX 7924.1

SEQ.	Code	Cols 5–12	Field 1	Field 2	Field 3	Field 4	Field 5	Field 6	Cols 65–72
151	DEC	-119							
152	DEC	120							RHΦ WAL I
153	TAP	TGAI-1							
154	DEC	-120							
155	DEC	124							K GAS N
156	TAP	HEL-23							
157	DEC	-124							
158	DEC	126							CP GAS N
159	TAP	HEL-22							
160	DEC	-126							
161	DEC	130							EPSI GT
162	DEC05		0.0	2.0	1000000.	2.0	0.0		
163	DEC	-130							
164	DEC	131							EPSI LT
165	DEC05		0.0	2.0	1000000.	2.0	0.0		
166	DEC	-131							
167	DEC	132							EPSI PR
168	DEC05		0.0	3.0	1000000	3.0	0.0		
169	DEC	-132							
170	DEC	133							ANGLE
171	DEC06		0.0	0.0	5100.	0.0	5100.	90.0	
172	DEC06	5160		90.0	5160.	0.0	1000000.	0.0	
173	DEC01		0.0						
174	DEC	-133							
175	DEC	134							GAMMA N

LOCKHEED
CALIFORNIA COMPANY

TABLE 5-1

(CONTINUED)

FORM DX 7924.1

GENERAL PURPOSE DATA SHEET

LOCKHEED-CALIFORNIA COMPANY
A DIVISION OF LOCKHEED AIRCRAFT CORPORATION

SEQ.								ID
176	DEC04		3003.	0.0	200.0	400.0		
177	DEC04		0.0	1.66	1.66	1.66		
178	DEC04		2000.0	1.66	1.66	1.66		
179	DEC04		6000.0	1.66	1.66	1.66		
180	DEC	-134						
181	DEC	136					CP HB WL	
182	TAP	TGAL-2						
183	DEC	-136						
184	DEC	141					K INS 1	
185	DEC05		-460.0	0.0	400.0	0.0	0.0	
186	DEC	-141						
187	DEC	142					CP INS 1	
188	DEC05		-460.0	0.0	400.0	0.0	0.0	
189	DEC	-142						
190	DEC	143					RHO INS1	
191	DEC05		-460.0	0.0	400.0	0.0	0.0	
192	DEC	-143						
193	NBK							
194	DEC01		1000.0				PRINT INTERVL	
195	DEC01		5050.0				FINAL TIME	
196	DEC01		0.0				INITIAL TIME	
197	NBK							
198	END							

CHECKED | PREPARED | NAME | DATE | TITLE | NO | EWA | GROUP | JOB NO. | PAGE OF

LR 18903

TABLE 5-2

EXAMPLE PROBLEM INPUT DESCRIPTION

CARD NO.	INPUT QUANTITY		DESCRIPTION
Card 01	CID		Case Identification
Card 02	NET		Pressurization program input following
Card 03	NTYPE	1	Cylindrical tank with hemispherical ends
	NRAD	4	Number of radial segments into which the tank is divided (arbitrary, but must be divisible by 4)
	NCIR	2	Number of circular segments into which the tank is divided (arbitrary, must be ≥ 1)
	NSECT	6	Number of axial segments into which the cylindrical section is divided (arbitrary, must be ≥ 1)
	NTNK	0	No insulation layers around the tank
	INNOD	1	First node number of tank (always 1)
	IGC	2	Two gas system (Helium plus condensable oxidizer vapor)
	IPRESS	1	Tank pressurized to operating pressure at all times
	KOUT	1	Standard Output to be printed
	IRSTRT	2	Final conditions saved for next segment (Table 4-4)
	IPTLIQ	1	Average liquid temperature vs. time to be punched on cards used as input to second tank in series
	LIBTAP	1	Materials properties to be taken from the materials library tape.
	MTIME	30	Estimated machine time for current segment (min)
	KUT	5050	Mission time at which current segment is to stop (sec)

LOCKHEED
CALIFORNIA COMPANY

TABLE 5-2 (Continued)

CARD NO.	INPUT QUANTITY	DESCRIPTION
Card 04	TKRAD .619	Radius of tank (ft)
	TKLEN 3.365	Length of cylindrical portion of tank (ft)
	TEMPZ 80.	Initial temperature of system (°F)
	TKWAL1 .0052	Thickness of tank wall (ft)
	TKWAL2 0.	No insulation layers around tank
Card 05	TKINS(1) 0	No insulation used, therefore all insulation layers of zero thickness
	TKINS(2) 0	
	TKINS(3) 0	
	TKINS(4) 0	
	TKINS(5) 0	
Card 06	PR 35.	Initial pressure in tank (psia)
	VGAS .01	Initial ullage space in tank (arbitrary or can be computed for a required liquid weight)
	TSAT 133°F	Saturation temperature at maximum operating pressure
	FMOLC 46.01	Molecular weight of NO_2 (since vapor is dissociated N_2O_4), condensable gas
	FMOLN 4.	Molecular weight of He, noncondensable gas
	FMOLX 4.	Molecular weight of He, pressurant gas
	TX 80.	Initial temperature of pressurant (°F)
Card 07	FMIN 1.05	Factor for minimum pressure. Pressurant is added at FMIN x PMIN
	FMAX 1.05	Factor for maximum pressure Tank vented at FMAX x PMAX

LOCKHEED
CALIFORNIA COMPANY

TABLE 5-2 (Continued)

CARD NO	INPUT QUANTITY		DESCRIPTION
Card 07 (Cont)	PMIN	30.	Minimum operating pressure (psia)
	PMAX	62.	Maximum operating pressure (psia)
Card 08	RADI F	1.	Overall view factor from liquid surface to exposed tank wall
	RADI σ	1.713 x 10^{-7}	Stefan-Boltzmann constant
	$\epsilon 1$	.50	Emissivity of liquid surface
	$\epsilon 2$	.80	Emissivity of tank wall
Card 09	MHT	74.	Weight of helium bottle (lb)
	RHT	.5208	Radius of helium bottle (ft)
	RESHT	0	
	VHT	.594	Volume of helium bottle (ft^3)
	TOHT	80.	Initial temperature of helium bottle (°F)
	HEXSW	0.	Propellant-pressurant heat exchanger not used
	POHT	1500.	Initial pressure inside helium bottle (psia)
Card 10	WNFHT	1.245	Helium usage factor

LOCKHEED
CALIFORNIA COMPANY

Only WNFHT, of the above quantities requires any computation. This factor is used to take into account the fact that oxidizer and fuel are flowing simultaneously, and that the pressurant system is a two-tank parallel arrangement. The subroutine CONTRL computes the required pressurant for a single propellant tank. The oxidizer flow rate is twice the fuel flow rate. Therefore assuming parallel flow from fuel and oxidizer tanks; if the fuel tank requires 1 lb. of He, then the oxidizer requires:

$$1 \text{ lb He} \times 2 \frac{\text{lb oxidizer}}{\text{lb fuel}} \times \frac{\rho_f}{\rho_o} \times \frac{(P_t - P_o)}{(P_t - P_f)} = .670 \text{ lbs at } 70°F$$

Total He required = 1 + .670 = 1.670 lbs

When flowing oxidizer:

$$W_p = \frac{1.670}{.670} \times \frac{1}{2_{\text{He tanks}}} \times W_{req}$$

$$W_p = 1.245 \times W_{req}$$

W_p = weight of pressurant removed from helium bottle

W_{req} = weight of helium required as computed in CONTRL.

The curves that are read in are described in Tables 4-6 and 5-2. Gravity is equal to one during firing times, otherwise a zero-gravity condition exists. Curves 102-106 are materials properties. Curve 107 is the oxidizer usage rate in lb/sec vs mission time. Curve 108 is zero since there is no replenishment of this tank, as is curve 112 since there is no liquid added. Curves 109-111, 113-129 are materials properties. Curves 130-132 are tolerances on updating fluid properties. They are set at 2°F, 2°F, 2 psi; changes in temperature and pressure less than this are considered not large enough to affect thermal properties significantly. Curve 133 gives the angle between the main axis of the tank and the direction of the gravity vector as a function of time. Curves 136-155 represent materials properties with 141-155 input as zero since there is no tank insulation.

Many of the time dependent curves have the maximum value of the independent variable set at 1,000,000; this is a convenient number that will usually be beyond the actual maximum value of this variable.

EXAMPLE PROBLEM OUTPUT

The results of running the program are presented in Table 5-3, which is the computer output for the example problem. The printout for each timestep is not presented since it is not necessary for illustrative purposes. Segments of the output are shown to illustrate several portions of the mission. All results are shown as a function of time. All of the output quantities are labeled except the temperatures, resistors, capacitors, and R-C products. These unlabeled quantities are listed for the particular nodes in consecutive order from left to right. The values for the external network are so noted.

The FUNCT and PRINT blocks are presented first, since they are usually recompiled for each run. Next is the main pressurization program input. Following are the external initial temperatures, internally generated and external resistor identification, and all initial capacitor values. The series of required curves (Table 4-6) is then printed out.

Time histories of the mission start at time zero. At this time several parameters and materials properties have infinitesimal values since they are not defined the first time through the program. Up to 5000 sec a non-flow period exists, and the change in temperature, pressure and the other variables can be noted. The compute interval for the machine is taken as $0.95 \times RC_{min}$; this information is printed at the top of the page for each print interval.

It should be noted that at the first printout after 5000 sec (the start of flow and change of gravity) all the fluid nodal temperatures are equalized. Also, the conditions in the helium bottle are one timestep behind the flow process.

The print intervals during the flow period vary from 0.5 to 2 sec, with the smaller value used at the start of the period. This is done to eliminate any problems that may arise due to expanding the ullage space too rapidly. It should be noted that not until the second print interval after the start of flow (5001 sec) does the tank pressure fall below the minimum

regulator pressure of 30 psia and helium starts flowing. The final printouts show the last two print intervals of the run.

At the end of many of the print intervals is a section labeled ENTERING RECALC. This was originally used in the debugging phase of program development and has been left in. RECALC is entered under the following conditions:

1. The average gas or liquid temperature changes by more than 2°F.
2. The total pressure changes by more than 2 psi.
3. The magnitude of the gravity vector changes.
4. Volume of gas changes more than .01 ft^3 (due to liquid outflow).

The quantities printed out are, from left to right, total tank pressure, average gas temperature, average liquid temperature, partial pressure of noncondensable gas, partial pressure of condensable gas.

TABLE 5-3 EXAMPLE PROBLEM OUTPUT

```
$IBFTC FUNCT
      SUBROUTINE FUNCT
      COMMON P(14000), M(16), MAXT,MAXR,MAXC
      COMMON /CPNET/ NTYPE,TKRAD,TKLEN,TEMPZ,NRAD,NCIR,NSECT,NTNK,
     1               TKTHK(5),TKWAL1,TKWAL2,INODE,KOUT,FMCO,FMNO,FMOLC,
     2               VGAS,IGC,IPRESS,FMOLN,FMIN,FMAX,PMIN,PMAX,FMOLX,
     3               TSAT,ANGLE,TX,PR,TANKV,RADI(4),HELB(14),LLFLOW,
     4               HELT,HELP,HELW,ISTRAT,SAREA,IOPTSX(5),FMULTF(5),
     5               STRINP(20),GSCLD (2),TTOPBL(2),DLIQ,NLSURF,ICALL
      COMMON /CPITM/ ITIME
      EQUIVALENCE(IOPTSX(1),IRSTRT),(IOPTSX(2),IPTLIQ),
     1           (IOPTSX(3),LIBTAP),(FMULTF(1),FLT),(NUMTAB(1),P(12526))
      REAL LIN, M
      CALL TANKA (97)
      NTEMP = 96
      NRES  = 244
      THETA = M(1)
      M(4) = 1000.0
      IF (THETA.GE.5000.0 .AND. THETA.LT.5010.0)  M(4) =  0.5
      IF (THETA.GE.5010.0 .AND. THETA.LT.5050.0)  M(4) =  2.0
      M(7) = .95
      IF (HELB(7).EQ.0.0)  GO TO 100
      IF (LLFLOW.NE.0)  GO TO 100
      HELT = P(NTEMP+1) + 460.0
      ZX = BIV(HELP,P(NTEMP+1),NUMTAB(10) )
      IF(ITIME.EQ.1)HELW=(HELB(4)*HELB(7)/(ZX*1545.*HELB(5)))*144.*FMOLX
      IF (IRSTRT.EQ.0 .OR. IRSTRT.EQ.2)  GO TO 87
      IF (ITIME.NE.1)  GO TO 87
      REWIND 11
      READ (11)  THETA, HELT, HELP, HELW
      P(NTEMP+1) = HELT-460.0
      REWIND 11
 87   CONTINUE
      IX4 = 2*MAXT+NRES
      P(IX4+1) = 3600.0/(BIV(HELP,P(NTEMP+1), NUMTAB(24))*HELB(2)*48.5)
      HELP = ZX*1545.0*HELW*HELT/(HELB(4)*FMOLX*144.0)
      IX5 = 2*MAXT+MAXR+NTEMP
      P(IX5+1) = HELW *(BIV(HELP,P(NTEMP+1),NUMTAB(11))-FLT*ZX/FMOLX)
      P(IX5+2) = HELB(1) * LIN(P(NTEMP+1),NUMTAB(36))
 100  CONTINUE
      DO 102 I=1,4
      NODE = I+200
      DO 102 J=1,8
      RFACT = 5.2E-5
      IF (J.EQ.1)                RFACT =50.0E-5
      IF (J.EQ.8)                RFACT = 5.0E-5
      NODE1 = (J-1)*12 + I*3
      NR = 2*MAXT + 500 + (I-1)*10 + J
      P(NR) = RAD(NODE,NODE1,RFACT)
 102  CONTINUE
      RETURN
      END
```

"REPRODUCIBILITY OF THE ORIGINAL PAGE IS POOR."

TABLE 5-3 (CONTINUED)

```
$IPFTC*PRINT
      SUBROUTINE PRINT                                                  2266001
      COMMON P(14000), M(16), MAXT                                      2266002
C     PRINT ONLY THOSE TEMPS. ,ETC... WHICH ARE USED --- SKIP THE OTHERS2266003
      DO 100 I=1,MAXT                                                   2266004
 100  P(I) = P(I) + 460.0                                               2266005
      WRITE (6,10)                                                      2266006
      WRITE (6,11)  (P(I),I=1,98)                                       2266007
      WRITE (6,12)                                                      2266008
      WRITE (6,11)  (P(I),I=201,204)                                    2266009
      WRITE (6,13)                                                      2266010
      WRITE (6,11)  (P(I),I=601,846)                                    2266011
      WRITE (6,12)                                                      2266012
      WRITE (6,11)  (P(I),I=1101,1140)                                  2266013
      WRITE (6,14)                                                      2266014
      WRITE (6,11)  (P(I),I=1301,1398)                                  2266015
      WRITE (6,12)                                                      2266016
      WRITE (6,11)  (P(I),I=1501,1504)                                  2266017
      WRITE (6,15)                                                      2266018
      WRITE (6,11)  (P(I),I=1901,1998)                                  2266019
      WRITE (6,12)                                                      2266020
      WRITE (6,11)  (P(I),I=2101,2104)                                  2266021
      DO 102 I=1,MAXT                                                   2266022
 102  P(I) = P(I) - 460.0                                               2266023
      RETURN                                                            2266024
 10   FORMAT(13H0TEMPERATURES)                                          2266025
 11   FORMAT(2X,10E13.5)                                                2266026
 12   FORMAT(13H  EXTERNAL    )                                         2266027
 13   FORMAT(13H1RESISTORS    )                                         2266028
 14   FORMAT(13H0CAPACITORS   )                                         2266029
 15   FORMAT(13H0R-C PRODUCTS)                                          2266030
      END                                                               2266031
```

TABLE 5-3 (CONTINUED)

```
        PRESSURIZATION PROGRAM TEST CASE (NITROGEN TETROXIDE)   DATE
   NET 0                                                                    22660

PRESSURIZATION PROGRAM INPUT

NTYPE     NRAD      NCIR      NSECT     NTNK      INODE     IGC       IPRESS
  1         4         2         6         0         1         2         1

TKRAD     TKLEN     TEMPZ     TKWAL 1   TKWAL 2
  0.619     3.365    80.000     0.005     0.

INSULATION THICKNESSES
  0.        0.        0.        0.        0.

 PR       V GAS     T SAT     MOL C     MOL N     MOL X     T X
 35.000    0.010   133.000    46.010     4.000     4.000    80.000

F MIN     F MAX     P MIN     P MAX
  1.050     1.050    30.000    62.000

RADI F    RADI S    RADI E1   RADI E2
  1.000   0.171E-08   0.500     0.800

HELIUM BOTTLE INPUT
   74.0     0.521     0.        0.594    80.000     0.      1500.000
 0.931
```

TABLE 5-3 (CONTINUED)

```
DEC 1   97      80.0                                                  22660
DEC 1   98      80.0                                                  22660
DEC 1   99      85.0                                                  22660
DEC 1  201      65.0                                                  22660
DEC 1  202     -45.0                                                  22660
DEC 1  203     -36.0                                                  22660
DEC 1  204     160.0                                                  22660
DEC 1  299     500.0                                                  22660
DEC 1  300     500.0                                                  22660
NBK 0                                                                 22660
DEC 1    1    1    2 0.
DEC 1    2    2    3 0.
DEC 1    3    4    5 0.
DEC 1    4    5    6 0.
DEC 1    5    7    8 0.
DEC 1    6    8    9 0.
DEC 1    7   10   11 0.
DEC 1    8   11   12 0.
DEC 1    9    1    4 0.
DEC 1   10    2    5 0.
DEC 1   11    3    6 0.
DEC 1   12    4    7 0.
DEC 1   13    5    8 0.
DEC 1   14    6    9 0.
DEC 1   15    7   10 0.
DEC 1   16    8   11 0.
DEC 1   17    9   12 0.
DEC 1   18   10    1 0.
DEC 1   19   11    2 0.
DEC 1   20   12    3 0.
DEC 1   21   13   14 0.
DEC 1   22   14   15 0.
DEC 1   23   16   17 0.
DEC 1   24   17   18 0.
DEC 1   25   19   20 0.
DEC 1   26   20   21 0.
DEC 1   27   22   23 0.
DEC 1   28   23   24 0.
DEC 1   29   25   26 0.
DEC 1   30   26   27 0.
DEC 1   31   28   29 0.
DEC 1   32   29   30 0.
DEC 1   33   31   32 0.
DEC 1   34   32   33 0.
DEC 1   35   34   35 0.
DEC 1   36   35   36 0.
DEC 1   37   37   38 0.
DEC 1   38   38   39 0.
DEC 1   39   40   41 0.
DEC 1   40   41   42 0.
DEC 1   41   43   44 0.
DEC 1   42   44   45 0.
DEC 1   43   46   47 0.
DEC 1   44   47   48 0.
DEC 1   45   49   50 0.
DEC 1   46   50   51 0.
DEC 1   47   52   53 0.
DEC 1   48   53   54 0.
```


LOCKHEED
CALIFORNIA COMPANY

TABLE 5-3 (CONTINUED)

PRESSURIZATION PROGRAM TEST CASE (NITROGEN TETROXIDE) DATE

DEC	1	49	55	56	0.
DEC	1	50	56	57	0.
DEC	1	51	58	59	0.
DEC	1	52	59	60	0.
DEC	1	53	61	62	0.
DEC	1	54	62	63	0.
DEC	1	55	64	65	0.
DEC	1	56	65	66	0.
DEC	1	57	67	68	0.
DEC	1	58	68	69	0.
DEC	1	59	70	71	0.
DEC	1	60	71	72	0.
DEC	1	61	73	74	0.
DEC	1	62	74	75	0.
DEC	1	63	76	77	0.
DEC	1	64	77	78	0.
DEC	1	65	79	80	0.
DEC	1	66	80	81	0.
DEC	1	67	82	83	0.
DEC	1	68	83	84	0.
DEC	1	69	13	16	0.
DEC	1	70	14	17	0.
DEC	1	71	15	18	0.
DEC	1	72	16	19	0.
DEC	1	73	17	20	0.
DEC	1	74	18	21	0.
DEC	1	75	19	22	0.
DEC	1	76	20	23	0.
DEC	1	77	21	24	0.
DEC	1	78	22	13	0.
DEC	1	79	23	14	0.
DEC	1	80	24	15	0.
DEC	1	81	25	28	0.
DEC	1	82	26	29	0.
DEC	1	83	27	30	0.
DEC	1	84	28	31	0.
DEC	1	85	29	32	0.
DEC	1	86	30	33	0.
DEC	1	87	31	34	0.
DEC	1	88	32	35	0.
DEC	1	89	33	36	0.
DEC	1	90	34	25	0.
DEC	1	91	35	26	0.
DEC	1	92	36	27	C.
DEC	1	93	37	40	0.
DEC	1	94	38	41	C.
DEC	1	95	39	42	0.
DEC	1	96	40	43	0.
DEC	1	97	41	44	0.
DEC	1	98	42	45	0.
DEC	1	99	43	46	0.
DEC	1	100	44	47	0.
DEC	1	101	45	48	0.
DEC	1	102	46	37	0.
DEC	1	103	47	38	0.
DEC	1	104	48	39	0.
DEC	1	105	49	52	0.
DEC	1	106	50	53	0.
DEC	1	107	51	54	0.

TABLE 5-3 (CONTINUED)

PRESSURIZATION PROGRAM TEST CASE (NITROGEN TETROXIDE) DATE

DEC	1	108	52	55	0.
DEC	1	109	53	56	0.
DEC	1	110	54	57	0.
DEC	1	111	55	58	0.
DEC	1	112	56	59	0.
DEC	1	113	57	60	0.
DEC	1	114	58	49	0.
DEC	1	115	59	50	0.
DEC	1	116	60	51	0.
DEC	1	117	61	64	0.
DEC	1	118	62	65	0.
DEC	1	119	63	66	0.
DEC	1	120	64	67	0.
DEC	1	121	65	68	0.
DEC	1	122	66	69	0.
DEC	1	123	67	70	0.
DEC	1	124	68	71	0.
DEC	1	125	69	72	0.
DEC	1	126	70	61	0.
DEC	1	127	71	62	0.
DEC	1	128	72	63	0.
DEC	1	129	73	76	0.
DEC	1	130	74	77	0.
DEC	1	131	75	78	0.
DEC	1	132	76	79	0.
DEC	1	133	77	80	0.
DEC	1	134	78	81	0.
DEC	1	135	79	82	0.
DEC	1	136	80	83	0.
DEC	1	137	81	84	0.
DEC	1	138	82	73	0.
DEC	1	139	83	74	0.
DEC	1	140	84	73	0.
DEC	1	141	13	25	0.
DEC	1	142	14	26	0.
DEC	1	143	15	27	0.
DEC	1	144	16	28	0.
DEC	1	145	17	29	0.
DEC	1	146	18	30	0.
DEC	1	147	19	31	0.
DEC	1	148	20	32	0.
DEC	1	149	21	33	0.
DEC	1	150	22	34	0.
DEC	1	151	23	35	0.
DEC	1	152	24	36	0.
DEC	1	153	25	37	0.
DEC	1	154	26	38	0.
DEC	1	155	27	39	0.
DEC	1	156	28	40	0.
DEC	1	157	29	41	0.
DEC	1	158	30	42	0.
DEC	1	159	31	43	0.
DEC	1	160	32	44	0.
DEC	1	161	33	45	0.
DEC	1	162	34	46	0.
DEC	1	163	35	47	0.
DEC	1	164	36	48	0.
DEC	1	165	37	49	0.
DEC	1	166	38	50	0.

LOCKHEED
CALIFORNIA COMPANY

TABLE 5-3 (CONTINUED)

PRESSURIZATION PROGRAM TEST CASE (NITROGEN TETROXIDE) DATE

```
DEC 1  167   39   51 0.
DEC 1  168   40   52 0.
DEC 1  169   41   53 0.
DEC 1  170   42   54 0.
DEC 1  171   43   55 0.
DEC 1  172   44   56 0.
DEC 1  173   45   57 0.
DEC 1  174   46   58 0.
DEC 1  175   47   59 0.
DEC 1  176   48   60 0.
DEC 1  177   49   61 0.
DEC 1  178   50   62 0.
DEC 1  179   51   63 0.
DEC 1  180   52   64 0.
DEC 1  181   53   65 0.
DEC 1  182   54   66 0.
DEC 1  183   55   67 0.
DEC 1  184   56   68 0.
DEC 1  185   57   69 0.
DEC 1  186   58   70 0.
DEC 1  187   59   71 0.
DEC 1  188   60   72 0.
DEC 1  189   61   73 0.
DEC 1  190   62   74 0.
DEC 1  191   63   75 0.
DEC 1  192   64   76 0.
DEC 1  193   65   77 0.
DEC 1  194   66   78 0.
DEC 1  195   67   79 0.
DEC 1  196   68   80 0.
DEC 1  197   69   81 0.
DEC 1  198   70   82 0.
DEC 1  199   71   83 0.
DEC 1  200   72   84 0.
DEC 1  201    1   13 0.
DEC 1  202    2   14 0.
DEC 1  203    3   15 0.
DEC 1  204    4   16 0.
DEC 1  205    5   17 0.
DEC 1  206    6   18 0.
DEC 1  207    7   19 0.
DEC 1  208    8   20 0.
DEC 1  209    9   21 0.
DEC 1  210   10   22 0.
DEC 1  211   11   23 0.
DEC 1  212   12   24 0.
DEC 1  213   85   86 0.
DEC 1  214   86   87 0.
DEC 1  215   88   89 0.
DEC 1  216   89   90 0.
DEC 1  217   91   92 0.
DEC 1  218   92   93 0.
DEC 1  219   94   95 0.
DEC 1  220   95   96 0.
DEC 1  221   85   88 0.
DEC 1  222   86   89 0.
DEC 1  223   87   90 0.
DEC 1  224   88   91 0.
DEC 1  225   89   92 0.
```

TABLE 5-3 (CONTINUED)

```
     PRESSURIZATION PROGRAM TEST CASE (NITROGEN TETROXIDE)   DATE
DEC 1  226   90   93 0.
DEC 1  227   91   94 0.
DEC 1  228   92   95 0.
DEC 1  229   93   96 0.
DEC 1  230   94   85 0.
DEC 1  231   95   86 0.
DEC 1  232   96   87 0.
DEC 1  233   73   85 0.
DEC 1  234   74   86 0.
DEC 1  235   75   87 0.
DEC 1  236   76   88 0.
DEC 1  237   77   89 0.
DEC 1  238   78   90 0.
DEC 1  239   79   91 0.
DEC 1  240   80   92 0.
DEC 1  241   81   93 0.
DEC 1  242   82   94 0.
DEC 1  243   83   95 0.
DEC 1  244   84   96 0.
DEC 1  245   97   98       0.0                                    22660
DEC 1  246   98   99    1035.0                                    22660
DEC 1  501  201    3       0.0                                    22660
DEC 1  502  201   15       0.0                                    22660
DEC 1  503  201   27       0.0                                    22660
DEC 1  504  201   39       0.0                                    22660
DEC 1  505  201   51       0.0                                    22660
DEC 1  506  201   63       0.0                                    22660
DEC 1  507  201   75       0.0                                    22660
DEC 1  508  201   87       0.0                                    22660
DEC 1  511  202    6       0.0                                    22660
DEC 1  512  202   18       0.0                                    22660
DEC 1  513  202   30       0.0                                    22660
DEC 1  514  202   42       0.0                                    22660
DEC 1  515  202   54       0.0                                    22660
DEC 1  516  202   66       0.0                                    22660
DEC 1  517  202   78       0.0                                    22660
DEC 1  518  202   90       0.0                                    22660
DEC 1  521  203    9       0.0                                    22660
DEC 1  522  203   21       0.0                                    22660
DEC 1  523  203   33       0.0                                    22660
DEC 1  524  203   45       0.0                                    22660
DEC 1  525  203   57       0.0                                    22660
DEC 1  526  203   69       0.0                                    22660
DEC 1  527  203   81       0.0                                    22660
DEC 1  528  203   93       0.0                                    22660
DEC 1  531  204   12       0.0                                    22660
DEC 1  532  204   24       0.0                                    22660
DEC 1  533  204   36       0.0                                    22660
DEC 1  534  204   48       0.0                                    22660
DEC 1  535  204   60       0.0                                    22660
DEC 1  536  204   72       0.0                                    22660
DEC 1  537  204   84       0.0                                    22660
DEC 1  538  204   96       0.0                                    22660
DEC 1  700  299  300    1.0E10                                    22660
ABK 0                                                             22660
DEC 1    1 0.
DEC 1    2 0.
DEC 1    3 0.
DEC 1    4 0.
```


LOCKHEED
CALIFORNIA COMPANY

TABLE 5-3 (CONTINUED)

PRESSURIZATION PROGRAM TEST CASE (NITROGEN TETROXIDE) DATE

DEC	1	5	0.
DEC	1	6	0.
DEC	1	7	0.
DEC	1	8	0.
DEC	1	9	0.
DEC	1	10	0.
DEC	1	11	0.
DEC	1	12	0.
DEC	1	13	0.
DEC	1	14	0.
DEC	1	15	0.
DEC	1	16	0.
DEC	1	17	0.
DEC	1	18	0.
DEC	1	19	0.
DEC	1	20	0.
DEC	1	21	0.
DEC	1	22	0.
DEC	1	23	0.
DEC	1	24	0.
DEC	1	25	0.
DEC	1	26	0.
DEC	1	27	0.
DEC	1	28	0.
DEC	1	29	0.
DEC	1	30	0.
DEC	1	31	0.
DEC	1	32	0.
DEC	1	33	0.
DEC	1	34	0.
DEC	1	35	0.
DEC	1	36	0.
DEC	1	37	0.
DEC	1	38	0.
DEC	1	39	0.
DEC	1	40	0.
DEC	1	41	0.
DEC	1	42	0.
DEC	1	43	0.
DEC	1	44	0.
DEC	1	45	0.
DEC	1	46	0.
DEC	1	47	0.
DEC	1	48	0.
DEC	1	49	0.
DEC	1	50	0.
DEC	1	51	0.
DEC	1	52	0.
DEC	1	53	0.
DEC	1	54	0.
DEC	1	55	0.
DEC	1	56	0.
DEC	1	57	0.
DEC	1	58	0.
DEC	1	59	0.
DEC	1	60	0.
DEC	1	61	0.
DEC	1	62	0.
DEC	1	63	0.

LOCKHEED
CALIFORNIA COMPANY

TABLE 5-3 (CONTINUED)

```
     PRESSURIZATION PROGRAM TEST CASE (NITROGEN TETROXIDE)    DATE
DEC 1    64 0.
DEC 1    65 0.
DEC 1    66 0.
DEC 1    67 0.
DEC 1    68 0.
DEC 1    69 0.
DEC 1    70 0.
DEC 1    71 0.
DEC 1    72 0.
DEC 1    73 0.
DEC 1    74 0.
DEC 1    75 0.
DEC 1    76 0.
DEC 1    77 0.
DEC 1    78 0.
DEC 1    79 0.
DEC 1    80 0.
DEC 1    81 0.
DEC 1    82 0.
DEC 1    83 0.
DEC 1    84 0.
DEC 1    85 0.
DEC 1    86 0.
DEC 1    87 0.
DEC 1    88 0.
DEC 1    89 0.
DEC 1    90 0.
DEC 1    91 0.
DEC 1    92 0.
DEC 1    93 0.
DEC 1    94 0.
DEC 1    95 0.
DEC 1    96 0.
DEC 1    97        0.0                                                22660
DEC 1    98        0.0                                                22660
DEC 1   300        0.0                                                22660
NBK 0                                                                 22660
DEC 0    97                                                           22660
DEC 4        101.      102.      103.      104.                      22660
DEC 4        105.      106.      107.      108.                      22660
DEC 4        109.      110.      111.      112.                      22660
DEC 4        113.      114.      115.      116.                      22660
DEC 4        117.      118.      119.      120.                      22660
DEC 4        121.      122.      123.      124.                      22660
DEC 4        125.      126.      127.      128.                      22660
DEC 4        129.      130.      131.      132.                      22660
DEC 4        133.      134.      135.      136.                      22660
DEC 4        137.      138.      139.      140.                      22660
DEC 4        141.      142.      143.      144.                      22660
DEC 4        145.      146.      147.      148.                      22660
DEC 4        149.      150.      151.      152.                      22660
DEC 4        153.      154.      155.      156.                      22660
DEC 4        157.      158.      159.      160.                      22660
DEC 4        161.      162.      163.      164.                      22660
DEC 4        165.      166.      167.      168.                      22660
DEC 4        169.      170.      171.      172.                      22660
DEC 4        173.      174.      175.      176.                      22660
DEC 4        177.      178.      179.      180.                      22660
DEC 4        181.      182.      183.      184.                      22660
```


LOCKHEED
CALIFORNIA COMPANY

TABLE 5-3 (CONTINUED)

```
     PRESSURIZATION PROGRAM TEST CASE (NITROGEN TETROXIDE)   DATE
DEC 4       185.      186.      187.      188.                          22660
DEC 4       189.      190.      191.      192.                          22660
DEC 4       193.      194.      195.      196.                          22660
DEC 4       197.      198.      199.      200.                          22660
DEC 0  -97                                                             22660
DEC 0  101                                                   GRAVITY 22660
DEC 4        0.0       0.0    5000.0       0.0                          22660
DEC 4     5000.0       1.0    5050.0       1.0                          22660
DEC 4     5050.        0.0  1000000.       0.0                          22660
DEC 1        0.0                                                       22660
DEC 0 -101                                                             22660
DEC 0  102                                                             22660
TAP ONTO-23                                                            22660
COD 0    5                                                        109022266
DEC 6   002005.       32.     70.07      118.      146.      220.  109032266
DEC 6       .01      -.04     -.063     -.088     -.086     -.035  109042266
DEC 6       300.     -.04     -.063     -.088     -.086     -.035  109052266
DEC 0 -102                                                             22660
DEC 0  103                                                   K LIQUID22660
TAP ONTO-13                                                            22660
COD 0    1                                                        103022266
DEC 6       11.8     .085      11C.      .070      145.      .062  103032266
DEC 6       160.     .056      220.     -.035     316.8     -.01   103042266
DEC 1        0.                                                    103052266
DEC 0 -103                                                             22661
DEC 0  104                                                     Z C    22661
TAP ONTO-28                                                            22661
COD 0   71                                                          110022266
DEC 6   014007.       32.       7C.      100.      130.      160.  110032266
DEC 2       190.     220.                                          110042266
DEC 6       4.85     -.52     -.59      -.66      -.75      -.86  110052266
DEC 2       -.94     -.97                                          110062266
DEC 6       14.7              .566       .64      .728       .83  110072266
DEC 2       .913     .957                                          110082266
DEC 6        20.                          .62      .698       .80  110092266
DEC 2       .889     .942                                          110102266
DEC 6        30.                         .594      .659      .755  110112266
DEC 2       .851     .917                                          110122266
DEC 6        40.                                  .632      .722  110132266
DEC 2       .821     .894                                          110142266
DEC 6        50.                                  .612      .695  110152266
DEC 2       .792     .872                                          110162266
DEC 6        6C.                                  .597      .673  110172266
DEC 2       .767     .855                                          110182266
DEC 6        80.                                            .637  110192266
DEC 2       .725     .824                                          110202266
DEC 6       100.                                            .609  110212266
DEC 2       .693     .797                                          110222266
DEC 6       125.                                                   110232266
DEC 2       .660     .768                                          110242266
DEC 6       15C.                                                   110252266
DEC 2       .632     .742                                          110262266
DEC 6       200.                                                   110272266
DEC 2                .696                                          110282266
DEC 6       250.                                                   110292266
DEC 2                .653                                          110302266
DEC 6       300.                                                   110312266
DEC 2                .608                                          110322266
DEC C -104                                                             22661
```


LOCKHEED
CALIFORNIA COMPANY

TABLE 5-3 (CONTINUED)

```
     PRESSURIZATION PROGRAM TEST CASE (NITROGEN TETROXIDE)   DATE
DEC 0  105                                                      P C      22661
TAP ONTO-14                                                              22661
COD 0    0                                                            104022266
DEC 6      11.8       2.7       14.       2.9       20.      3.45  104032266
DEC 6       30.       4.7       40.       6.4       50.       8.5  104042266
DEC 6       70.      14.8       80.      19.5      100.      30.7  104052266
DEC 6      120.      48.2      140.       74.      160.      111.  104062266
DEC 6      180.      164.      200.      236.      220.      330.  104072266
DEC 6      240.      460.      260.      630.      280.      860.  104082266
DEC 6      300.     1160.      310.     1330.     316.8     1470.  104092266
DEC 1        0.                                                   104102266
DEC 0 -105                                                               22661
DEC 0  106                                                      Z N      22661
TAP OHEL-28                                                              22661
COD 0   71                                                           220022266
DEC 6   008010.    -448.9    -447.1    -443.5     -440.     -425.  220032266
DEC 5     -400.    -300.     -200.        0.      600.            220042266
DEC 6       1.0      -1.       -1.       -1.       -1.       -1.  220052266
DEC 5       -1.      -1.       -1.       -1.       -1.            220062266
DEC 6      14.7     .879      .917      .956      .974      .996  220072266
DEC 5     1.001    1.001     1.001     1.001     1.001            220082266
DEC 6      43.1     .588      .747      .874      .926      .988  220092266
DEC 5     1.004    1.005     1.003     1.002     1.002            220102266
DEC 6      147.     .619      .608      .720      .835      .980  220112266
DEC 5     1.016    1.016     1.011     1.007     1.003            220122266
DEC 6      397.    1.368     1.229     1.074     1.017     1.037  220132266
DEC 5     1.062    1.043     1.030     1.019     1.008            220142266
DEC 6      882.    2.629     2.251     1.896     1.655     1.295  220152266
DEC 5     1.187    1.098     1.068     1.041     1.017            220162266
DEC 6     1470.    3.992     3.477     2.802     2.386     1.676  220172266
DEC 5     1.364    1.166     1.113     1.069     1.028            220182266
DEC 6     6000.                                            3.70  220192266
DEC 5      2.50    1.598     1.379     1.221     1.106            220202266
DEC 0 -106                                                               22661
DEC 0  107                                                      FMLU     22661
DEC 4       0.0      0.0    5000.0       0.0                             22661
DEC 4    5000.0   2.8872    5050.0    2.8872                             22661
DEC 4    5050.0      0.0   1000000.      0.0                             22661
DEC 1       0.0                                                          22661
DEC 0 -107                                                               22661
DEC 0  108                                                      FMLA     22661
DEC 5       0.0      0.0   1000000.      0.0       0.0                   22661
DEC 0 -108                                                               22661
DEC 0  109                                                      R LAMBDA22661
TAP ONTO-16                                                              22661
COD 0    2                                                           106022266
DEC 6      11.8      145.       25.     -165.       50.     -176.  106032266
DEC 6       70.      178.      100.     -173.      125.     -163.  106042266
DEC 5      150.     -147.     316.8        0.        0             106052266
DEC 0 -109                                                               22661
DEC 0  110                                                      Z X      22661
TAP OHEL-28                                                              22661
COD 0   71                                                           220022266
DEC 6   008010.    -448.9    -447.1    -443.5     -440.     -425.  220032266
DEC 5     -400.    -300.     -200.        0.      600.            220042266
DEC 6       1.0      -1.       -1.       -1.       -1.       -1.  220052266
DEC 5       -1.      -1.       -1.       -1.       -1.            220062266
DEC 6      14.7     .879      .917      .956      .974      .996  220072266
DEC 5     1.001    1.001     1.001     1.001     1.001            220082266
```


LOCKHEED
CALIFORNIA COMPANY

TABLE 5-3 (CONTINUED)

```
     PRESSURIZATION PROGRAM TEST CASE (NITROGEN TETROXIDE)   DATE
DEC 6       43.1      .588      .747      .874      .926     .988  220092266
DEC 5      1.004     1.005     1.003     1.002     1.002           220102266
DEC 6       147.      .615      .608      .720      .835     .980  220112266
DEC 5      1.016     1.016     1.011     1.007     1.003           220122266
DEC 6       397.     1.368     1.229     1.074     1.017    1.037  220132266
DEC 5      1.062     1.043     1.030     1.019     1.008           220142266
DEC 6       882.     2.629     2.251     1.896     1.655    1.295  220152266
DEC 5      1.187     1.098     1.068     1.041     1.017           220162266
DEC 6      1470.     3.992     3.477     2.802     2.386    1.676  220172266
DEC 5      1.364     1.166     1.113     1.069     1.028           220182266
DEC 6      6000.                                              3.70  220192266
DEC 5       2.50     1.598     1.379     1.221     1.106           220202266
                                                                        22661
DEC 0 -110                                                     CP X     22661
DEC 0  111                                                              22661
TAP OHEL-22                                                             218022266
COD 0   71
DEC 6   008011.    -448.9    -447.1    -443.5     -440.    -425.  218032266
DEC 6     -400.     -300.     -200.     -100.        0.     600.  218042266
DEC 6        1.     -1.31     -1.29     -1.27     -1.25   -1.24  218052266
DEC 6     -1.25     -1.24     -1.24     -1.24     -1.24   -1.24  218062266
DEC 6      14.7      1.42      1.37      1.31     1.285    1.26  218072266
DEC 6      1.25      1.24      1.24      1.24      1.24    1.24  218082266
DEC 6      43.1      2.06      1.87      1.49     1.386    1.28  218092266
DEC 6      1.26      1.24      1.24      1.24      1.24    1.24  218102266
DEC 6      147.      1.17      1.55      1.5      1.706    1.37  218112266
DEC 6      1.28      1.25      1.24      1.24      1.24    1.24  218122266
DEC 6      397.       .76       .89      1.24     1.443    1.45  218132266
DEC 6      1.33      1.26      1.25      1.24      1.24    1.24  218142266
DEC 6      882.       .60       .69       .96     1.123    1.35  218152266
DEC 6      1.35      1.27      1.25      1.25      1.24    1.24  218162266
DEC 6     1470.       .51       .60       .86     1.003    1.22  218172266
DEC 6      1.33      1.28      1.26      1.25      1.25    1.24  218182266
DEC 6     6000.                                                   218192266
DEC 6                          1.31      1.28      1.26    1.24  218202266
DEC 0 -111                                                              22661
DEC 0  112                                                     T L A    22661
DEC 5       0.0       0.0  1000000.       0.0       0.0                22661
DEC 0 -112                                                              22661
DEC 0  113                                                     GAMMA C 22661
DEC 4      3003.       0.0     200.0     400.0                         22661
DEC 4       0.0      1.30      1.30      1.30                         22661
DEC 4    2000.0      1.30      1.30      1.30                         22661
DEC 4    6000.0      1.30      1.30      1.30                         22661
DEC 0 -113                                                              22661
DEC 0  114                                                     RHO LIQ 22661
TAP ONTO-11                                                             22661
COD 0    0                                                              101022266
DEC 6       11.8     94.27      1?0.     80.53      240.   72.42  101032266
DEC 6       280.     63.05      300.     55.56      310.   48.07  101042266
DEC 5       316.     39.96     316.8     34.34        0.           101052266
DEC 0 -114                                                              22661
DEC 0  116                                                     CP LIQ   22661
TAP ONTO-12                                                             22661
COD 0    1                                                              102022266
DEC 6       11.8      .355       5C.      .361       85.    .377  102032266
DEC 6       110.      .402      120.      .418      130.    .438  102042266
DEC 5       180.      -.54     316.8   -1.0E20        0.           102052266
DEC 0 -116                                                              22661
DEC 0  117                                                     CP GAS C22661
```


LOCKHEED
CALIFORNIA COMPANY

TABLE 5-3 (CONTINUED)

```
     PRESSURIZATION PROGRAM TEST CASE (NITROGEN TETROXIDE)   DATE
TAP ONTO-22                                                          22661
COD 0   73                                                        108022266
DEC 6   006012.      32.      62.      70.      90.     105.  108032266
DEC 6      120.     135.     150.     170.     200.     230.  108042266
DEC 1      260.                                                  108052266
DEC 6      4.85     -.97     1.55     1.71     2.10      2.2  108062266
DEC 6      2.14     1.90     1.54     1.07      .60      .39  108072266
DEC 1       .28                                                  108082266
DEC 6     10.88              1.14     1.28     1.63     1.89  108092266
DEC 6      2.06     2.06     1.90     1.55      .95      .57  108102266
DEC 1       .36                                                  108112266
DEC 6     14.70                        1.13     1.46     1.71  108122266
DEC 6      1.94     2.02     1.97     1.70     1.11      .67  108132266
DEC 1       .44                                                  108142266
DEC 6       50.                                                  108152266
DEC 6     -1.20    -1.39    -1.56    -1.74    -1.42     -.86  108162266
DEC 1      -.52                                                  108172266
DEC 6      100.                                                  108182266
DEC 6                                -1.22    -1.50    -1.27  108192266
DEC 1      -.75                                                  108202266
DEC 6      300.                                                  108212266
DEC 6                                                   -.92  108222266
DEC 1     -1.13                                                  108232266
DEC 0 -117                                                           22661
DEC 0  118                                                   K WAL 1 22661
TAP OT6AL-3                                                          22661
COD 0    0                                                        333022266
DEC 6     -414.      .92    -360.      1.6    -312.     2.08  333032266
DEC 6     -180.       3.      50.       4.     500.      5.5  333042266
DEC 3     1600.     10.5       0.                                333052266
DEC 0 -118                                                           22661
DEC 0  119                                                  CP WAL 122661
TAP OT6AL-2                                                          22661
COD 0    0                                                        332022266
DEC 6     -440.   .00045    -435.   .00075    -430.    .0012  332032266
DEC 6     -424.     .002    -418.     .003    -410.     .005  332042266
DEC 6     -400.     .008    -380.     .018    -340.     .041  332052266
DEC 6     -300.     .062    -200.     .096    -100.     .114  332062266
DEC 6      100.     .130     800.     .153    1200.     .185  332072266
DEC 3     1600.     .234       0.                                332082266
DEC 0 -119                                                           22661
DEC 0  120                                                  RHO WAL122661
TAP OT6AL-1                                                          22661
COD 0    0                                                        331022266
DEC 5     -460.     278.    2800.     278.       0.             331032266
DEC 0 -120                                                           22661
DEC 0  124                                                  K GAS N 22661
TAP OHEL-23                                                          22661
COD 0    5                                                        219022266
DEC 6   002008.    -456.    -450.    -440.    -410.    -300.  219032266
DEC 3     -100.       0.     400.                                219042266
DEC 6        1.   -.0022   -.0063   -.0106   -.0186     -.04  219052266
DEC 3    -.0673   -.0792   -.1191                                219062266
DEC 6     6000.   -.0022   -.0063   -.0106   -.0186     -.04  219072266
DEC 3    -.0673   -.0792   -.1191                                219082266
DEC 0 -124                                                           22661
DEC 0  126                                                  CP GAS N22661
TAP OHEL-22                                                          22661
COD 0   71                                                        218022266
```

TABLE 5-3 (CONTINUED)

```
     PRESSURIZATION PROGRAM TEST CASE (NITROGEN TETROXIDE)   DATE
DEC 6   008011.    -448.9    -447.1    -443.5     -440.     -425.  218032266
DEC 6     -400.     -300.     -200.     -100.        0.      600.  218042266
DEC 6        1.     -1.31     -1.29     -1.27     -1.25    -1.24  218052266
DEC 6    -1.25     -1.24     -1.24     -1.24     -1.24    -1.24  218062266
DEC 6     14.7      1.42      1.37      1.31     1.265     1.26  218072266
DEC 6     1.25      1.24      1.24      1.24      1.24     1.24  218082266
DEC 6     43.1      2.06      1.87      1.49     1.386     1.28  218092266
DEC 6     1.26      1.24      1.24      1.24      1.24     1.24  218102266
DEC 6     147.      1.17      1.55      1.96     1.706     1.37  218112266
DEC 6     1.28      1.25      1.24      1.24      1.24     1.24  218122266
DEC 6     397.       .76       .89      1.24     1.443     1.45  218132266
DEC 6     1.33      1.26      1.25      1.24      1.24     1.24  218142266
DEC 6     882.       .60       .69       .96     1.123     1.35  218152266
DEC 6     1.35      1.27      1.25      1.25      1.24     1.24  218162266
DEC 6    1470.       .51       .60       .86     1.003     1.22  218172266
DEC 6     1.33      1.28      1.26      1.25      1.25     1.24  218182266
DEC 6    6000.                                                   218192266
DEC 6                        1.31      1.28      1.26     1.24  218202266
DEC 0 -126                                                            22661
DEC 0  130                                                   EPSI GT 22661
DEC 5      0.0       2.0  1000000.       2.0       0.0            22661
DEC 0 -130                                                            22661
DEC 0  131                                                   EPSI LT 22661
DEC 5      0.0       2.0  1000000.       2.0       0.0            22661
DEC 0 -131                                                            22661
DEC 0  132                                                   EPSI PR 22661
DEC 5      0.0       3.0  1000000.       3.0       0.0            22661
DEC 0 -132                                                            22661
DEC 0  133                                                     ANGLE 22661
DEC 6      0.0       0.0     5100.       0.0     5100.    90.0    22661
DEC 6     5160.     90.0     5160.       0.0  1000000.     0.0    22661
DEC 1      0.0                                                        22661
DEC 0 -133                                                            22661
DEC 0  134                                                   GAMMA N 22661
DEC 4     3003.       0.0     200.0     400.0                       22661
DEC 4       0.0      1.66      1.66      1.66                       22661
DEC 4    2000.0      1.66      1.66      1.66                       22661
DEC 4    6000.0      1.66      1.66      1.66                       22661
DEC 0 -134                                                            22661
DEC 0  136                                                   CP HB WL22661
TAP OT6AL-2                                                           22661
COD 0     0                                                       332022266
DEC 6     -440.   .00045     -435.   .00075     -430.   .0012  332032266
DEC 6     -424.     .002     -418.     .003     -410.    .005  332042266
DEC 6     -400.     .008     -380.     .018     -340.    .041  332052266
DEC 6     -300.     .062     -200.     .096     -100.    .114  332062266
DEC 6      100.     .130      800.     .153     1200.    .185  332072266
DEC 3     1600.     .234        0.                              332082266
DEC 0 -136                                                            22661
DEC 0  141                                                   K INS 1 22661
DEC 5    -460.0      0.0     400.0       0.0       0.0            22661
DEC 0 -141                                                            22661
DEC 0  142                                                   CP INS 122661
DEC 5    -460.0      0.0     400.0       0.0       0.0            22661
DEC 0 -142                                                            22661
DEC 0  143                                                   RHO INS122661
DEC 5    -460.0      0.0     400.0       0.0       0.0            22661
DEC 0 -143                                                            22661
NBK 0                                                                 22661
```


LOCKHEED
CALIFORNIA COMPANY

TABLE 5-3 (CONTINUED)

```
     PRESSURIZATION PROGRAM TEST CASE (NITROGEN TETROXIDE)    DATE
DEC 1     1000.0                                            PRINT INTERVL22661
DEC 1     -200.0                                            FINAL TIME    22661
DEC 1        0.0                                            INITIAL TIME 22661
NBK 0                                                                     22661
```

"REPRODUCIBILITY OF THE ORIGINAL PAGE IS POOR."

TABLE 5-3 (CONTINUED)

```
PRESSURIZATION PROGRAM TEST CASE (NITROGEN TETROXIDE)   DATE

THETA= 0.          D THETA= 0.        RC MIN=.37153E 03 NODE 36. PREV. D THETA=.          GRAVITY= 0.    ANGLE= 0.

TOTAL PRESSURE     PARTIAL CONDENSIBLE PARTIAL NONCONDENS.
 0.35000E 02        0.19500E 02         0.15500E 02

TEMPERATURE AV GAS AVERAGE LIQUID      AVERAGE ALL         DELTA TEMP.
-0.00000E-19        -0.00000E-19        -0.00000E-19        0.

MAXIMUM LIQ. NODE  MAX LIQ SURF NODE   MAX SURF GAS NODE   T S
-0.00000E-19        -0.00000E-19        -0.00000E-19        0.

VOLUME OF GAS      MASS CONDENSIBLE    MASS NONCONDENSIBLE SUM DELTA MASSES
 0.50643E-01        -0.00000E-19        -0.00000E-19        0.

SUM MASS COND VENT SUM MASS NONC VENT  SUM MASS COND ADDED SUM MASS NONC ADDED
 0.                  0.                  0.                  0.

MASS OF LIQUID     MASS LIQUID USED    MASS LIQUID ADDED   MASS GAS USED
 0.44293E 03         0.                  0.                  0.

SUM MASS LIQ USED  SUM MASS LIQ ADDED  DELTA VOLUME
 0.                  0.                  0.

SUM EXT HEAT
 0.

FMGA               MEL BOT PRESSURE    MEL BOT TEMP.       T SUB X             HELIUM WEIGHT       PREVIOUS WEIGHT
 0.                 -0.                  0.54000E 03         0.54000E 03         0.57789E 00         0.

SC GAS             SC LIQ              SC INT              SC ALL              T LA                RHO LIQ
-0.00000E-19        -0.00000E-19        -0.00000E-19        -0.00000E-19        0.46000E 03         0.88499E 02
CP GASC            CP GASM             CP LIQ              K GAS C             K GAS N             K LIQ
 0.00004E-26         0.18846E-36        -0.00000E-19        0.18846E-36         0.00004E-26        -0.00000E-19
Z C                Z N                 Z K                 CP X                R LAM               GAMMA
 0.71416E 00         0.10010E 01         0.10445E 01         0.                 -0.00000E-19        -0.00000E-19

TEMPERATURES
   0.54000E 03  0.54000E 03  0.54000E 03  0.54000E 03  0.54000E 03  0.54000E 03  0.54000E 03  0.54000E 03  0.54000E 03  0.54000E 03  0.54000E 03  0.54000E 03
   0.54000E 03  0.54000E 03  0.54000E 03  0.54000E 03  0.54000E 03  0.54000E 03  0.54000E 03  0.54000E 03  0.54000E 03  0.54000E 03  0.54000E 03  0.54000E 03
   0.54000E 03  0.54000E 03  0.54000E 03  0.54000E 03  0.54000E 03  0.54000E 03  0.54000E 03  0.54000E 03  0.54000E 03  0.54000E 03  0.54000E 03  0.54000E 03
   0.54000E 03  0.54000E 03  0.54000E 03  0.54000E 03  0.54000E 03  0.54000E 03  0.54000E 03  0.54000E 03  0.54000E 03  0.54000E 03  0.54000E 03  0.54000E 03
   0.54000E 03  0.54000E 03  0.54000E 03  0.54000E 03  0.54000E 03  0.54000E 03  0.54000E 03  0.54000E 03  0.54000E 03  0.54000E 03  0.54000E 03  0.54000E 03
   0.54000E 03  0.54000E 03  0.54000E 03  0.54000E 03  0.54000E 03  0.54000E 03  0.54000E 03  0.54000E 03  0.54000E 03  0.54000E 03  0.54000E 03  0.54000E 03
   0.54000E 03  0.54000E 03  0.54000E 03  0.54000E 03  0.54000E 03  0.54000E 03  0.54000E 03  0.54000E 03  0.54000E 03  0.54000E 03  0.54000E 03  0.54000E 03
   0.54000E 03  0.54000E 03  0.54000E 03  0.54000E 03  0.54000E 03  0.54000E 03  0.54000E 03  0.54000E 03  0.54000E 03  0.54000E 03  0.54000E 03  0.54000E 03
   0.54000E 03  0.54000E 03  0.54000E 03  0.54000E 03  0.54000E 03  0.54000E 03  0.54000E 03  0.54000E 03  0.54000E 03  0.54000E 03  0.54000E 03  0.54000E 03
   0.54000E 03  0.54000E 03  0.54000E 03  0.54000E 03  0.54000E 03  0.54000E 03  0.54000E 03  0.54000E 03  0.54000E 03  0.54000E 03  0.54000E 03  0.54000E 03
 EXTERNAL
   0.52500E 03  0.41500E 03  0.42500E 03  0.62000E 03
```

TABLE 5-3 (CONTINUED)

RESISTORS										
0.41963E 05	0.76797E 04	0.41963E 05	0.76797E 04	0.41963E 05	0.76797E 04	0.41963E 05	0.76797E 04	0.77979E 05	0.23394E 06	
0.11940E 06	0.77979E 05	0.23394E 06	0.11940E 06	0.77979E 05	0.23394E 06	0.11940E 06	0.77979E 05	0.23394E 06	0.11940E 06	
0.15579E 05	0.57025E 04	0.15579E 05	0.57025E 04	0.15579E 05	0.57025E 04	0.15579E 05	0.57025E 04	0.15579E 05	0.57025E 04	
0.15579E 05	0.57025E 04	0.15579E 05	0.57025E 04	0.15579E 05	0.57025E 04	0.15579E 05	0.57025E 04	0.15579E 05	0.57025E 04	
0.15579E 05	0.57025E 04	0.15579E 05	0.57025E 04	0.15579E 05	0.57025E 04	0.15579E 05	0.57025E 04	0.15579E 05	0.57025E 04	
0.15579E 05	0.57025E 04	0.15579E 05	0.57025E 04	0.15579E 05	0.57025E 04	0.15579E 05	0.57025E 04	0.15579E 05	0.57025E 04	
0.15579E 05	0.57025E 04	0.15579E 05	0.57025E 04	0.15579E 05	0.57025E 04	0.15579E 05	0.57025E 04	0.95595E 05	0.39974E 06	
0.29275E 06	0.95595E 05	0.39974E 06	0.29275E 06	0.95595E 05	0.39974E 06	0.29275E 06	0.95595E 05	0.39974E 06	0.29275E 06	
0.95595E 05	0.39974E 06	0.29275E 06	0.95595E 05	0.39974E 06	0.29275E 06	0.95595E 05	0.39974E 06	0.29275E 06	0.95595E 05	
0.39974E 06	0.29275E 06	0.95595E 05	0.39974E 06	0.29275E 06	0.95595E 05	0.39974E 06	0.29275E 06	0.95595E 05	0.39974E 06	
0.29275E 06	0.95595E 05	0.39974E 06	0.29275E 06	0.95595E 05	0.39974E 06	0.29275E 06	0.95595E 05	0.39974E 06	0.29275E 06	
0.95595E 05	0.39974E 06	0.29275E 06	0.95595E 05	0.39974E 06	0.29275E 06	0.95595E 05	0.39974E 06	0.29275E 06	0.95595E 05	
0.39974E 06	0.29275E 06	0.95595E 05	0.39974E 06	0.29275E 06	0.95595E 05	0.39974E 06	0.29275E 06	0.95595E 05	0.39974E 06	
0.29275E 06	0.95595E 05	0.39974E 06	0.29275E 06	0.95595E 05	0.39974E 06	0.29275E 06	0.95595E 05	0.39974E 06	0.29275E 06	
0.17991E 06	0.17991E 06	0.97395E 05	0.17991E 06	0.17991E 06	0.97395E 05	0.17991E 06	0.17991E 06	0.97395E 05	0.17991E 06	
0.17991E 06	0.97395E 05	0.17991E 06	0.17991E 06	0.97395E 05	0.17991E 06	0.97395E 05	0.17991E 06	0.17991E 06	0.97395E 05	
0.97395E 05	0.17991E 06	0.17991E 06	0.97395E 05	0.17991E 06	0.17991E 06	0.97395E 05	0.17991E 06	0.97395E 05	0.17991E 06	
0.17991E 06	0.17991E 06	0.97395E 05	0.17991E 06	0.17991E 06	0.97395E 05	0.17991E 06	0.17991E 06	0.97395E 05	0.17991E 06	
0.17991E 06	0.97395E 05	0.17991E 06	0.17991E 06	0.97395E 05	0.17991E 06	0.17991E 06	0.97395E 05	0.17991E 06	0.17991E 06	
0.97395E 05	0.17991E 06	0.17991E 06	0.97395E 05	0.17991E 06	0.17991E 06	0.97395E 05	0.17991E 06	0.97395E 05	0.17991E 06	
.16795E 06	0.22502E 06	0.13313E 06	0.16793E 06	0.22502E 06	0.13313E 06	0.16793E 06	0.22502E 06	0.13313E 06	0.16793E 06	
.22502E 06	0.13313E 06	0.41963E 05	0.76797E 04	0.41963E 05	0.76797E 04	0.41963E 05	0.76797E 04	0.41963E 05	0.76797E 04	
.77979E 05	0.23394E 06	0.11940E 06	0.77979E 05	0.23394E 06	0.11940E 06	0.77979E 05	0.23394E 06	0.11940E 06	0.77979E 05	
0.23394E 06	0.11940E 06	0.83967E 05	0.11251E 06	0.13313E 06	0.83967E 05	0.11251E 06	0.13313E 06	0.83967E 05	0.11251E 06	
0.13313E 06	0.83967E 05	0.11251E 06	0.13313E 06	0.63488E 04	0.10350E 04					
XTERNAL										
0.16659E 05	0.18626E 05	0.18626E 05	0.18626E 05	0.18626E 05	0.18626E 05	0.18626E 05	0.16659E 05	0.	0.	
0.22779E 05	0.25407E 05	0.25407E 05	0.25407E 05	0.25407E 05	0.25407E 05	0.25407E 05	0.22779E 05	0.	0.	
0.22205E 05	0.24767E 05	0.24767E 05	0.24767E 05	0.24767E 05	0.24767E 05	0.24767E 05	0.22205E 05	0.	0.	
0.12862E 05	0.14346E 05	0.14346E 05	0.14346E 05	0.14346E 05	0.14346E 05	0.14346E 05	0.12862E 05	0.	0.	
CAPACITORS										
0.14593E 01	0.26682E 01	0.11172E-00	0.14593E 01	0.26682E 01	0.11172E-00	0.14593E 01	0.26682E 01	0.11172E-00	0.14593E 01	
0.26682E 01	0.11172E-00	0.28047E 01	0.28047E 01	0.10122E-00	0.28047E 01	0.28047E 01	0.10122E-00	0.28047E 01	0.28047E 01	
0.10122E-00	0.28047E 01	0.28047E 01	0.10122E-00	0.28047E 01	0.28047E 01	0.10122E-00	0.28047E 01	0.28047E 01	0.10122E-00	
0.28047E 01	0.28047E 01	0.10122E-00	0.28047E 01	0.10122E-00	0.28047E 01	0.10122E-00	0.28047E 01	0.10122E-00	0.28047E 01	
0.28047E 01	0.10122E-00	0.28047E 01	0.28047E 01	0.10122E-00	0.28047E 01	0.28047E 01	0.10122E-00	0.28047E 01	0.28047E 01	
0.10122E-00	0.28047E 01	0.28047E 01	0.10122E-00	0.28047E 01	0.28047E 01	0.10122E-00	0.28047E 01	0.28047E 01	0.10122E-00	
0.28047E 01	0.10122E-00	0.28047E 01	0.10122E-00	0.28047E 01	0.28047E 01	0.10122E-00	0.28047E 01	0.28047E 01	0.10122E-00	
0.28047E 01	0.10122E-00	0.28047E 01	0.28047E 01	0.10122E-00	0.28047E 01	0.28047E 01	0.10122E-00	0.28047E 01	0.28047E 01	
0.10122E-00	0.28047E 01	0.28047E 01	0.10122E-00	0.14593E 01	0.26682E 01	0.11172E-00	0.14593E 01	0.26682E 01	0.11172E-00	
0.14593E 01	0.26682E 01	0.11172E-00	0.14593E 01	0.26682E 01	0.11172E-00	-0.84583E 01	0.95016E 01			
EXTERNAL										
0.	0.	0.	0.							
R-C MODULES										
0.26325E 05	0.15974E 05	0.52116E 03	0.26325E 05	0.15974E 05	0.46315E 03	0.26325E 05	0.15974E 05	0.55995E 03	0.26325E 05	
0.15974E 05	0.48107E 03	0.29028E 05	0.11018E 05	0.39903E 03	0.29028E 05	0.11018E 05	0.42292E 03	0.29028E 05	0.11018E 05	
0.42113E 03	0.29028E 05	0.11018E 05	0.37533E 03	0.29148E 05	0.10970E 05	0.39474E 03	0.29148E 05	0.10970E 05	0.48107E 03	
0.29148E 05	0.10970E 05	0.41635E 03	0.29148E 05	0.10970E 05	0.37153E 03	0.29148E 05	0.10970E 05	0.37153E 03	0.29148E 05	
0.10970E 05	0.41810E 03	0.29148E 05	0.10970E 05	0.41635E 03	0.29148E 05	0.10970E 05	0.41635E 03	0.29148E 05	0.10970E 05	
0.39474E 03	0.29148E 05	0.10970E 05	0.41810E 03	0.29148E 05	0.10970E 05	0.41635E 03	0.29148E 05	0.10970E 05	0.37153E 03	
0.29148E 05	0.10970E 05	0.39474E 03	0.29148E 05	0.10970E 05	0.41810E 03	0.29148E 05	0.10970E 05	0.41635E 03	0.29148E 05	
0.10970E 05	0.37153E 03	0.27343E 05	0.10829E 05	0.39903E 03	0.27343E 05	0.10829E 05	0.42292E 03	0.27343E 05	0.10829E 05	
0.42113E 03	0.27343E 05	0.10829E 05	0.37533E 03	0.23772E 05	0.15560E 05	0.52116E 03	0.23772E 05	0.15560E 05	0.46315E 03	
0.23772E 05	0.15560E 05	0.55995E 03	0.23772E 05	0.15560E 05	0.48107E 03	0.13028E 05	0.60218E 04			
EXTERNAL										
0.	0.	0.	0.							

ENTERING RECAL 35.000 -0.000 -0.000 15.500 19.500

ENTERING RECALC 35.000 540.000 540.000 15.500 19.500

TABLE 5-3 (CONTINUED)

```
PRESSURIZATION PROGRAM TEST CASE (NITROGEN TETROXIDE)   DATE

THETA= 0.10000000E 04 D THETA= 0.944E 02 RC MIN=.10503E 03 NODE 36. PREV. D THETA=.99808E 02 GRAVITY= 0.    ANGLE= 0.

TOTAL PRESSURE      PARTIAL CONDENSIBLE PARTIAL NONCONDENS.
 0.35918E 02          0.20435E 02         0.15483E 02

TEMPERATURE AV GAS AVERAGE LIQUID       AVERAGE ALL          DELTA TEMP.
 0.53981E 03          0.53981E 03         0.53981E 03         -0.12628E-00

MAXIMUM LIQ. NODE   MAX LIQ SURF NODE   MAX SURF GAS NODE    T S
 0.54167E 03          0.53981E 03         0.53981E 03          0.

VOLUME OF GAS       MASS CONDENSIBLE    MASS NONCONDENSIBLE SUM DELTA MASSES
 0.50478E-01          0.14272E-01         0.53922E-03          0.33344E-02

SUM MASS COND VENT  SUM MASS NONC VENT  SUM MASS COND ADDED SUM MASS NONC ADDED
 0.                   0.                  0.                   0.

MASS OF LIQUID      MASS LIQUID USED    MASS LIQUID ADDED    MASS GAS USED
 0.44292E 03          0.                  0.                   0.

SUM MASS LIQ USED   SUM MASS LIQ ADDED  DELTA VOLUME
 0.                   0.                  -0.37625E-04

SUM EXT HEAT
 0.45796E-03

FMGA                HEL BOT PRESSURE    HEL BOT TEMP.        T SUB X              HELIUM WEIGHT        PREVIOUS WEIGHT
 0.                   0.15000E 04         0.54001E 03          0.54000E 03          0.57789E 00          0.

SC GAS              SC LIQ              SC INT               SC ALL               T LA                 RHO LIQ
 0.                   0.16765E 03         0.                   0.16765E 03          0.46000E 03          0.88714E 02
CP GASC             CP GASN             CP LIQ               K GAS C              K GAS N              K LIQ
 0.10304E 01          0.74286E 00         0.37463E-00          0.68080E-01          0.87161E-01          0.37306E-00
Z C                 Z N                 Z X                  CP X                 R LAM                GAMMA
 0.57221E 00          0.10010E 01         0.10645E 01          0.                   0.17637E 03          0.13131E 01

TEMPERATURES
   0.53959E 03  0.53976E 03  0.53869E 03  0.53997E 03  0.53849E 03  0.53179E 03  0.53997E 03  0.53858E 03  0.53229E 03  0.54004E 03
   0.54167E 03  0.54899E 03  0.53999E 03  0.53978E 03  0.53896E 03  0.53995E 03  0.53862E 03  0.53359E 03  0.53996E 03  0.53870E 03
   0.53393E 03  0.54005E 03  0.54154E 03  0.54717E 03  0.53999E 03  0.53978E 03  0.53896E 03  0.53995E 03  0.53863E 03  0.53360E 03
   0.53996E 03  0.53870E 03  0.53393E 03  0.54005E 03  0.54153E 03  0.54716E 03  0.53999E 03  0.53978E 03  0.53876E 03  0.53995E 03
   0.53863E 03  0.53360E 03  0.53996E 03  0.53870E 03  0.53394E 03  0.54005E 03  0.54153E 03  0.54716E 03  0.53999E 03  0.53978E 03
   0.53896E 03  0.53995E 03  0.53863E 03  0.53360E 03  0.53996E 03  0.53870E 03  0.53394E 03  0.54005E 03  0.54153E 03  0.54716E 03
   0.53999E 03  0.53978E 03  0.53896E 03  0.53995E 03  0.53863E 03  0.53360E 03  0.53996E 03  0.53870E 03  0.53393E 03  0.54005E 03
   0.54153E 03  0.54716E 03  0.53999E 03  0.53978E 03  0.53896E 03  0.53995E 03  0.53862E 03  0.53359E 03  0.53996E 03  0.53870E 03
   0.53393E 03  0.54005E 03  0.54154E 03  0.54717E 03  0.53999E 03  0.53976E 03  0.53869E 03  0.53997E 03  0.53849E 03  0.53179E 03
   0.53997E 03  0.53858E 03  0.53229E 03  0.54004E 03  0.54167E 03  0.54899E 03  0.54001E 03  0.54048E 03
 EXTERNAL
   0.52500E 03  0.41500E 03  0.42400E 03  0.62000E 03
```

TABLE 5-3 (CONTINUED)

RESISTORS									
0.83926E 04	0.15359E 04	0.83926E 04	0.15359E 04	0.83926E 04	0.15359E 04	0.83926E 04	0.15359E 04	0.15596E 05	0.46787E 05
0.11968E 06	0.15596E 05	0.46787E 05	0.12111E 06	0.15596E 05	0.46787E 05	0.12102E 06	0.15596E 05	0.46787E 05	0.11752E 06
0.31159E 04	0.11405E 04	0.31159E 04	0.11405E 04	0.31159E 04	0.11405E 04	0.31159E 04	0.11405E 04	0.31159E 04	0.11405E 04
0.31159E 04	0.11405E 04	0.31159E 04	0.11405E 04	0.31159E 04	0.11405E 04	0.31159E 04	0.11405E 04	0.31159E 04	0.11405E 04
0.31159E 04	0.11405E 04	0.31159E 04	0.11405E 04	0.31159E 04	0.11405E 04	0.31159E 04	0.11405E 04	0.31159E 04	0.11405E 04
0.31159E 04	0.11405E 04	0.31159E 04	0.11405E 04	0.31159E 04	0.11405E 04	0.31159E 04	0.11405E 04	0.31159E 04	0.11405E 04
0.31159E 04	0.11405E 04	0.31159E 04	0.11405E 04	0.31159E 04	0.11405E 04	0.31159E 04	0.11405E 04	0.19119E 05	0.79947E 05
0.29342E 06	0.19119E 05	0.79947E 05	0.29689E 06	0.19119E 05	0.79947E 05	0.29669E 06	0.19119E 05	0.79947E 05	0.28819E 06
0.19119E 05	0.79947E 05	0.29342E 06	0.19119E 05	0.79947E 05	0.29689E 06	0.19119E 05	0.79947E 05	0.29669E 06	0.19119E 05
0.79947E 05	0.28819E 06	0.19119E 05	0.79947E 05	0.29342E 06	0.19119E 05	0.79947E 05	0.29689E 06	0.19119E 05	0.79947E 05
0.29669E 06	0.19119E 05	0.79947E 05	0.28819E 06	0.19119E 05	0.79947E 05	0.29342E 06	0.19119E 05	0.79947E 05	0.29689E 06
0.19119E 05	0.79947E 05	0.29669E 06	0.19119E 05	0.79947E 05	0.28819E 06	0.19119E 05	0.79947E 05	0.29342E 06	0.19119E 05
0.79947E 05	0.29689E 06	0.19119E 05	0.79947E 05	0.29669E 06	0.19119E 05	0.79947E 05	0.28819E 06	0.19119E 05	0.79947E 05
0.29342E 06	0.19119E 05	0.79947E 05	0.29689E 06	0.19119E 05	0.79947E 05	0.29669E 06	0.19119E 05	0.79947E 05	0.28819E 06
0.35982E 05	0.35982E 05	0.97618E 05	0.35982E 05	0.35982E 05	0.98773E 05	0.35982E 05	0.35982E 05	0.98706E 05	0.35982E 05
0.35982E 05	0.95880E 05	0.35982E 05	0.35982E 05	0.97618E 05	0.35982E 05	0.35982E 05	0.98773E 05	0.35982E 05	0.35982E 05
0.98706E 05	0.35982E 05	0.35982E 05	0.95880E 05	0.35982E 05	0.35982E 05	0.97618E 05	0.35982E 05	0.35982E 05	0.98773E 05
0.35982E 05	0.35982E 05	0.98706E 05	0.35982E 05	0.35982E 05	0.95880E 05	0.35982E 05	0.35982E 05	0.97618E 05	0.35982E 05
0.35982E 05	0.98773E 05	0.35982E 05	0.35982E 05	0.98706E 05	0.35982E 05	0.35982E 05	0.95880E 05	0.35982E 05	0.35982E 05
0.97618E 05	0.35982E 05	0.35982E 05	0.98773E 05	0.35982E 05	0.35982E 05	0.98706E 05	0.35982E 05	0.35982E 05	0.95880E 05
0.33587E 05	0.45004E 05	0.13343E 06	0.33587E 05	0.45004E 05	0.13503E 06	0.33587E 05	0.45004E 05	0.13494E 06	0.33587E 05
0.45004E 05	0.13103E 06	0.83926E 04	0.15359E 04	0.83926E 04	0.15359E 04	0.83926E 04	0.15359E 04	0.83926E 04	0.15359E 04
0.15596E 05	0.46787E 05	0.11968E 06	0.15596E 05	0.46787E 05	0.12111E 06	0.15596E 05	0.46787E 05	0.12102E 06	0.15596E 05
0.46787E 05	0.11752E 06	0.16793E 05	0.22502E 05	0.13343E 06	0.16793E 05	0.22502E 05	0.13501E 06	0.16793E 05	0.22502E 05
0.13492E 06	0.16793E 05	0.22502E 05	0.13105E 06	0.16348E 04	0.10350E 06				
EXTERNAL									
0.16753E 05	0.18679E 05	0.18679E 05	0.18679E 05	0.18679E 05	0.18679E 05	0.18679E 05	0.16753E 05	0.	0.
0.23337E 05	0.25950E 05	0.25950E 05	0.25950E 05	0.25950E 05	0.25950E 05	0.25950E 05	0.23337E 05	0.	0.
0.22708E 05	0.25260E 05	0.25261E 05	0.25261E 05	0.25261E 05	0.25261E 05	0.25260E 05	0.22709E 05	0.	0.
0.12618E 05	0.14103E 05	0.14103E 05	0.14103E 05	0.14103E 05	0.14103E 05	0.14103E 05	0.12618E 05	0.	0.
CAPACITORS									
0.14593E 01	0.26682E 01	0.11152E-00	0.14593E 01	0.26682E 01	0.11051E-00	0.14593E 01	0.26682E 01	0.11057E-00	0.14593E 01
0.26682E 01	0.11308E-00	0.28047E 01	0.28047E 01	0.10104E-00	0.28047E 01	0.28047E 01	0.10014E-00	0.28047E 01	0.28047E 01
0.10019E-00	0.28047E 01	0.28047E 01	0.10244E-00	0.28047E 01	0.28047E 01	0.10104E-00	0.28047E 01	0.28047E 01	0.10014E-00
0.28047E 01	0.28047E 01	0.10019E-00	0.28047E 01	0.28047E 01	0.10244E-00	0.28047E 01	0.28047E 01	0.10104E-00	0.28047E 01
0.28047E 01	0.10014E-00	0.28047E 01	0.28047E 01	0.10019E-00	0.28047E 01	0.28047E 01	0.10244E-00	0.28047E 01	0.28047E 01
0.10104E-00	0.28047E 01	0.28047E 01	0.10014E-00	0.28047E 01	0.28047E 01	0.10019E-00	0.28047E 01	0.28047E 01	0.10244E-00
0.28047E 01	0.28047E 01	0.10104E-00	0.28047E 01	0.28047E 01	0.10014E-00	0.28047E 01	0.28047E 01	0.10019E-00	0.28047E 01
0.28047E 01	0.10244E-00	0.28047E 01	0.28047E 01	0.10104E-00	0.28047E 01	0.28047E 01	0.10014E-00	0.28047E 01	0.28047E 01
0.10019E-00	0.28047E 01	0.28047E 01	0.10244E-00	0.14593E 01	0.26682E 01	0.11152E-00	0.14593E 01	0.26682E 01	0.11051E-00
0.14593E 01	0.26682E 01	0.11057E-00	0.14593E 01	0.26682E 01	0.11308E-00	-0.77367E 01	0.95017E 01		
EXTERNAL									
0.	0.	0.	0.						
B-C PRODUCTS									
0.52651E 04	0.31948E 04	0.15170E 03	0.52651E 04	0.31948E 04	0.15393E 03	0.52651E 04	0.31948E 04	0.15377E 03	0.52651E 04
0.31948E 04	0.14984E 03	0.58056E 04	0.22036E 04	0.10581E 03	0.58056E 04	0.22036E 04	0.10657E 03	0.58056E 04	0.22036E 04
0.10451E 03	0.58056E 04	0.22036E 04	0.10533E 03	0.58295E 04	0.21940E 04	0.10550E 03	0.58295E 04	0.21940E 04	0.10626E 03
0.58295E 04	0.21940E 04	0.10620E 03	0.58295E 04	0.21940E 04	0.10503E 03	0.58295E 04	0.21940E 04	0.10550E 03	0.58295E 04
0.21940E 04	0.10626E 03	0.58295E 04	0.21940E 04	0.10620E 03	0.58295E 04	0.21940E 04	0.10503E 03	0.58295E 04	0.21940E 04
0.10550E 03	0.58295E 04	0.21940E 04	0.10626E 03	0.58295E 04	0.21940E 04	0.10620E 03	0.58295E 04	0.21940E 04	0.10503E 03
0.58295E 04	0.21940E 04	0.10550E 03	0.58295E 04	0.21940E 04	0.10626E 03	0.58295E 04	0.21940E 04	0.10620E 03	0.58295E 04
0.21940E 04	0.10503E 03	0.54686E 04	0.21658E 04	0.10581E 03	0.54686E 04	0.21658E 04	0.10657E 03	0.54686E 04	0.21658E 04
0.10451E 03	0.54686E 04	0.21658E 04	0.10533E 03	0.47543E 04	0.31120E 04	0.15170E 03	0.47543E 04	0.31120E 04	0.15393E 03
0.47543E 04	0.31120E 04	0.15377E 03	0.47543E 04	0.31120E 04	0.14984E 03	0.12648E 05	0.60218E 04		
EXTERNAL									
0.	0.	0.	0.						

TABLE 5-3 (CONTINUED)

```
PRESSURIZATION PROGRAM TEST CASE (NITROGEN TETROXIDE)   DATE

THETA= 0.50000000E 04 D THETA= 1.000E 02 AC MIN=.50000E 00 NODE  0. PREV. D THETA=.99996E 02 GRAVITY= 0.    ANGLE= 0.

TOTAL PRESSURE        PARTIAL CONDENSIBLE PARTIAL NONCONDENS.
 0.39309E 02            0.23854E 02          0.15456E 02

TEMPERATURE AV GAS AVERAGE LIQUID          AVERAGE ALL          DELTA TEMP.
 0.53898E 03          0.53898E 03          0.53898E 03          -0.87319E-02

MAXIMUM LIQ. NODE     MAX LIQ SURF NODE    MAX SURF GAS NODE    T S
 0.54777E 03          0.53898E 03          0.53896E 03          0.

VOLUME OF GAS         MASS CONDENSIBLE     MASS NONCONDENSIBLE  SUM DELTA MASSES
 0.50490E-01          0.15318E-01          0.53922E-03          0.43807E-02

SUM MASS COND VENT    SUM MASS NONC VENT   SUM MASS COND ADDED  SUM MASS NONC ADDED
 0.                   0.                   0.                   0.

MASS OF LIQUID        MASS LIQUID USED     MASS LIQUID ADDED    MASS GAS USED
 0.44292E 03          0.                   0.                   0.

SUM MASS LIQ USED     SUM MASS LIQ ADDED   DELTA VOLUME
 0.                   0.                   -0.26212E-05

SUM EXT HEAT
 0.39123E-01

PHGA                  HEL BCT PRESSURE     HEL BCT TEMP.        T SUB X              HEL..IN WEIGHT       PREVIOUS WEIGHT
 0.                   0.15009E 04          0.54033E 03          0.54000E 03          0.57789E 00          0.

SC GAS                SC LIQ               SC ENT               SC ALL               T LA                 RHO LIQ
 0.                   0.16762E 03          0.                   0.16762E 03          0.46000E 03          0.88782E 02
CP GASC               CP GASN              CP LIQ               K GAS C              K GAS N              K LIQ
 0.87363E 00          0.74287E 00          0.37425E-00          0.67648E-01          0.87078E-01          0.37369E-00
Z C                   Z N                  Z X                  CP X                 R LAM                GAMMA
 0.61552E 00          0.10010E 01          0.10645E 01          0.                   0.17650E 03          0.13122E 01

TEMPERATURES
   0.53981E 03  0.53885E 03  0.53779E 03  0.53874E 03  0.53257E 03  0.52591E 03  0.53891E 03  0.53320E 03  0.52699E 03  0.54118E 03
   0.54777E 03  0.55509E 03  0.53978E 03  0.53904E 03  0.53826E 03  0.53854E 03  0.53395E 03  0.52917E 03  0.53867E 03  0.53435E 03
   0.52983E 03  0.54131E 03  0.54658E 03  0.55198E 03  0.53978E 03  0.53905E 03  0.53827E 03  0.53854E 03  0.53399E 03  0.52923E 03
   0.53868E 03  0.53439E 03  0.52989E 03  0.54151E 03  0.54655E 03  0.55193E 03  0.53978E 03  0.53905E 03  0.53927E 03  0.53854E 03
   0.53399E 03  0.52923E 03  0.53868E 03  0.53439E 03  0.52989E 03  0.54151E 03  0.54655E 03  0.55192E 03  0.53978E 03  0.53905E 03
   0.53827E 03  0.53854E 03  0.53399E 03  0.52923E 03  0.53868E 03  0.53439E 03  0.52989E 03  0.54151E 03  0.54655E 03  0.55192E 03
   0.53578E 03  0.53905E 03  0.53827E 03  0.53854E 03  0.53399E 03  0.52923E 03  0.53868E 03  0.53439E 03  0.52989E 03  0.54151E 03
   0.54655E 03  0.55193E 03  0.53978E 03  0.53904E 03  0.53826E 03  0.53854E 03  0.53393E 03  0.52915E 03  0.53867E 03  0.53434E 03
   0.52982E 03  0.54151E 03  0.54660E 03  0.55200E 03  0.53981E 03  0.53885E 03  0.53779E 03  0.53873E 03  0.53259E 03  0.52593E 03
   0.53890E 03  0.53321E 03  0.52700E 03  0.54119E 03  0.54776E 03  0.55507E 03  0.54034E 03  0.54177E 03
 EXTERNAL
   0.52500E 03  0.41500E 03  0.42400E 03  0.62000E 03
```

TABLE 5-3 (CONTINUED)

RESISTORS									
0.83911E 04	0.15334E 04	0.83827E 04	0.15201E 04	0.83837E 04	0.15213E 04	0.84025E 04	0.15533E 04	0.15593E 05	0.46711E 05
0.11958E 06	0.15577E 05	0.46304E 05	0.12058E 06	0.15579E 05	0.46341E 05	0.12049E 06	0.15614E 05	0.47314E 05	0.11816E 06
0.31152E 04	0.11389E 04	0.31115E 04	0.11306E 04	0.31118E 04	0.11312E 04	0.31206E 04	0.11516E 04	0.31152E 04	0.11389E 04
0.31115E 04	0.11306E 04	0.31118E 04	0.11312E 04	0.31206E 04	0.11516E 04	0.31152E 04	0.11389E 04	0.31115E 04	0.11306E 04
0.31118E 04	0.11312E 04	0.31206E 04	0.11516E 04	0.31152E 04	0.11389E 04	0.31115E 04	0.11306E 04	0.31118E 04	0.11312E 04
0.31206E 04	0.11516E 04	0.31152E 04	0.11389E 04	0.31115E 04	0.11306E 04	0.31118E 04	0.11312E 04	0.31206E 04	0.11516E 04
0.31152E 04	0.11389E 04	0.31115E 04	0.11306E 04	0.31118E 04	0.11312E 04	0.31206E 04	0.11516E 04	0.19115E 05	0.79835E 05
0.29310E 06	0.19092E 05	0.79253E 05	0.29495E 06	0.19094E 05	0.79295E 05	0.29482E 06	0.19148E 05	0.80726E 05	0.29034E 06
0.19115E 05	0.79836E 05	0.29310E 06	0.19092E 05	0.79256E 05	0.29494E 06	0.19094E 05	0.79298E 05	0.29481E 06	0.19148E 05
0.80722E 05	0.29035E 06	0.19115E 05	0.79836E 05	0.29310E 06	0.19092E 05	0.79256E 05	0.29494E 06	0.19094E 05	0.79298E 05
0.29481E 06	0.19148E 05	0.80722E 05	0.29035E 06	0.19115E 05	0.79836E 05	0.29310E 06	0.19092E 05	0.79256E 05	0.29494E 06
0.19094E 05	0.79298E 05	0.29481E 06	0.19148E 05	0.80722E 05	0.29035E 06	0.19115E 05	0.79836E 05	0.29310E 06	0.19092E 05
0.79256E 05	0.29494E 06	0.19094E 05	0.79298E 05	0.29481E 06	0.19148E 05	0.80722E 05	0.29035E 06	0.19115E 05	0.79835E 05
0.29310E 06	0.19092E 05	0.79252E 05	0.29495E 06	0.19094E 05	0.79294E 05	0.29482E 06	0.19148E 05	0.80727E 05	0.29034E 06
0.35974E 05	0.35932E 05	0.97513E 05	0.35931E 05	0.35670E 05	0.98128E 05	0.35935E 05	0.35689E 05	0.98086E 05	0.36037E 05
0.36333E 05	0.96596E 05	0.35974E 05	0.35932E 05	0.97512E 05	0.35931E 05	0.35671E 05	0.98125E 05	0.35935E 05	0.35690E 05
0.98083E 05	0.36037E 05	0.36331E 05	0.96599E 05	0.35974E 05	0.35932E 05	0.97512E 05	0.35931E 05	0.35671E 05	0.98125E 05
0.35935E 05	0.35690E 05	0.98083E 05	0.36037E 05	0.36331E 05	0.96599E 05	0.35974E 05	0.35932E 05	0.97512E 05	0.35931E 05
0.35671E 05	0.98125E 05	0.35935E 05	0.35690E 05	0.98083E 05	0.36037E 05	0.36331E 05	0.96599E 05	0.35974E 05	0.35932E 05
0.97512E 05	0.35931E 05	0.35671E 05	0.98125E 05	0.35935E 05	0.35690E 05	0.98083E 05	0.36037E 05	0.36331E 05	0.96599E 05
0.33581E 05	0.44930E 05	0.13333E 06	0.33547E 05	0.44539E 05	0.13444E 06	0.33551E 05	0.44574E 05	0.13435E 06	0.33627E 05
0.45511E 05	0.13174E 06	0.83911E 04	0.15335E 04	0.83826E 04	0.15201E 04	0.83837E 04	0.15213E 04	0.84025E 04	0.15532E 04
0.15593E 05	0.46711E 05	0.11958E 06	0.15577E 05	0.46305E 05	0.12058E 06	0.15579E 05	0.46341E 05	0.12049E 06	0.15614E 05
0.47314E 05	0.11816E 06	0.16790E 05	0.22470E 05	0.13329E 06	0.16770E 05	0.22306E 05	0.13413E 06	0.16771E 05	0.22318E 05
0.13407E 06	0.16819E 05	0.22721E 05	0.13203E 06	0.16342E 04	0.10350E 04				
EXTERNAL									
0.16803E 05	0.18717E 05	0.18717E 05	0.18717E 05	0.18717E 05	0.18717E 05	0.18717E 05	0.16803E 05	0.	0.
0.23885E 05	0.26350E 05	0.26344E 05	0.26344E 05	0.26344E 05	0.26344E 05	0.26351E 05	0.23884E 05	0.	0.
0.23184E 05	0.25615E 05	0.25611E 05	0.25611E 05	0.25611E 05	0.25611E 05	0.25616E 05	0.23183E 05	0.	0.
0.12397E 05	0.13933E 05	0.13935E 05	0.13935E 05	0.13935E 05	0.13935E 05	0.13932E 05	0.12397E 05	0.	0.
CAPACITORS									
0.14593E 01	0.26676E 01	0.11158E-00	0.14590E 01	0.26641E 01	0.11088E-00	0.14591E 01	0.26644E 01	0.11094E-00	0.14595E 01
0.26742E 01	0.11262E-00	0.28047E 01	0.28042E 01	0.10112E-00	0.28042E 01	0.28011E 01	0.10064E-00	0.28042E 01	0.28013E 01
0.10067E-00	0.28054E 01	0.28086E 01	0.10186E-00	0.28047E 01	0.28042E 01	0.10113E-00	0.28042E 01	0.28011E 01	0.10064E-00
0.28042E 01	0.28013E 01	0.10067E-00	0.28054E 01	0.28086E 01	0.10186E-00	0.28047E 01	0.28042E 01	0.10113E-00	0.28042E 01
0.28011E 01	0.10064E-00	0.28042E 01	0.28013E 01	0.10067E-00	0.28054E 01	0.28086E 01	0.10186E-00	0.28047E 01	0.28042E 01
0.10113E-00	0.28042E 01	0.28011E 01	0.10064E-00	0.28042E 01	0.28013E 01	0.10067E-00	0.28054E 01	0.28086E 01	0.10186E-00
0.28047E 01	0.28042E 01	0.10113E-00	0.28042E 01	0.28011E 01	0.10064E-00	0.28042E 01	0.28013E 01	0.10067E-00	0.28054E 01
0.28086E 01	0.10186E-00	0.28047E 01	0.28042E 01	0.10112E-00	0.28042E 01	0.28011E 01	0.10064E-00	0.28042E 01	0.28013E 01
0.10067E-00	0.28054E 01	0.28086E 01	0.10186E-00	0.14593E 01	0.26676E 01	0.11158E-00	0.14590E 01	0.26641E 01	0.11088E-00
0.14591E 01	0.26644E 01	0.11094E-00	0.14595E 01	0.26741E 01	0.11262E-00	-0.77367E 01	0.95035E 01		
EXTERNAL									
0.	0.	0.	0.						
R-C MODELS									
0.52694E 04	0.31905E 04	0.15162E 03	0.52591E 04	0.31617E 04	0.15319E 03	0.52585E 04	0.31635E 04	0.15312E 03	0.52695E 04
0.32316E 04	0.15039E 03	0.58053E 04	0.22010E 04	0.10577E 03	0.57970E 04	0.21858E 04	0.10628E 03	0.57969E 04	0.21867E 04
0.10625E 03	0.58138E 04	0.22232E 04	0.10556E 03	0.58292E 04	0.21914E 04	0.10547E 03	0.58208E 04	0.21764E 04	0.10598E 03
0.58207E 04	0.21773E 04	0.10595E 03	0.58379E 04	0.22134E 04	0.10526E 03	0.58232E 04	0.21914E 04	0.10547E 03	0.58208E 04
0.21764E 04	0.10598E 03	0.58207E 04	0.21773E 04	0.10595E 03	0.58379E 04	0.22134E 04	0.10526E 03	0.58292E 04	0.21914E 04
0.10547E 03	0.58208E 04	0.21764E 04	0.10598E 03	0.58207E 04	0.21773E 04	0.10595E 03	0.58379E 04	0.22134E 04	0.10526E 03
0.58292E 04	0.21914E 04	0.10547E 03	0.58208E 04	0.21764E 04	0.10598E 03	0.58207E 04	0.21773E 04	0.10595E 03	0.58379E 04
0.22134E 04	0.10526E 03	0.54682E 04	0.21632E 04	0.10577E 03	0.54604E 04	0.21482E 04	0.10628E 03	0.54603E 04	0.21492E 04
0.10625E 03	0.54765E 04	0.21851E 04	0.10557E 03	0.47547E 04	0.31078E 04	0.15162E 03	0.47487E 04	0.30800E 04	0.15319E 03
0.47482E 04	0.30817E 04	0.15312E 03	0.47589E 04	0.31477E 04	0.15039E 03	0.12644E 05	0.60222E 04		
EXTERNAL									
0.	0.	0.	0.						

ENTERING RECALC 34.476 538.980 538.980 15.456 19.021

ENTERING RECALC 34.476 452.203 538.980 15.456 19.021

TABLE 5-3 (CONTINUED)

```
PRESSURIZATION PROGRAM TEST CASE (NITROGEN TETROXIDE)   DATE

THETA= 0.90000000E 04 D THETA= 0.250E-01 RC MIN=.50000E 00 NODE  0. PREV. D THETA=.47500E-03 GRAVITY= 1.000 ANGLE= 0.

TOTAL PRESSURE      PARTIAL CONDENSIBLE PARTIAL NONCONDENS.
 0.50862E 02          0.39021E 02          0.11841E 02

TEMPERATURE AV GAS AVERAGE LIQUID        AVERAGE ALL          DELTA TEMP.
 0.53898E 03          0.53898E 03          0.53898E 03          -0.43389E 02

MAXIMUM LIQ. NODE   MAX LIQ SURF NODE    MAX SURF GAS NODE    T S
 0.53898E 03          0.53898E 03          0.53898E 03          0.53898E 03

VOLUME OF GAS       MASS CONDENSIBLE     MASS NONCONDENSIBLE  SUM DELTA MASSES
 0.66739E-01          0.14241E-01          0.33022E-03          0.33037E-02

SUM MASS COND HEAT  SUM MASS NONC VENT   SUM MASS COND ADDED  SUM MASS NONC ADDED
 0.                   0.                   0.                   0.

MASS OF LIQUID      MASS LIQUID USED     MASS LIQUID ADDED    MASS GAS USED
 0.41148E 03          0.28872E 01          0.                   0.

SUM MASS LIQ USED   SUM MASS LIQ ADDED   DELTA VOLUME
 0.14437E 01          0.                   -0.16249E-01

SUM EXT HEAT
 0.39124E-01

OMGA                HEL BOT PRESSURE     HEL BOT TEMP.        T SUB X              HELIUM HEIGHT        PREVIOUS HEIGHT
 0.                   0.15009E 04          0.54034E 03          0.54034E 03          0.57789E 00          0.

SC GAS              SC LIQ               SC INT               SC ALL               T LA                 RHO LIQ
 0.                   0.16760E 03          0.                   0.16760E 03          0.46000E 03          0.88782E 02
CP GASC             CP GASN              CP LIQ               K GAS C              K GAS N              K LIQ
 0.10681E 01          0.74287E 00          0.37425E-00          0.67648E-01          0.87078E-01          0.37369E-00
Z C                 Z N                  Z X                  CP X                 R LAM                GAMMA
 0.70835E 00          0.10010E 01          0.10016E 01          0.74260E 00          0.17650E 03          0.13150E 01

TEMPERATURES
   0.53898E 03  0.53898E 03  0.53779E 03  0.53898E 03  0.53898E 03  0.52591E 03  0.53898E 03  0.53898E 03  0.52699E 03  0.53898E 03
   0.53898E 03  0.55509E 03  0.53898E 03  0.53898E 03  0.53826E 03  0.53898E 03  0.53898E 03  0.52917E 03  0.53898E 03  0.53898E 03
   0.52983E 03  0.53898E 03  0.53898E 03  0.55198E 03  0.53898E 03  0.53898E 03  0.53827E 03  0.53898E 03  0.53898E 03  0.52923E 03
   0.53898E 03  0.53898E 03  0.52988E 03  0.53898E 03  0.53898E 03  0.55193E 03  0.53898E 03  0.53898E 03  0.53827E 03  0.53898E 03
   0.53898E 03  0.52923E 03  0.53898E 03  0.53898E 03  0.52989E 03  0.53898E 03  0.53898E 03  0.55193E 03  0.53898E 03  0.53898E 03
   0.53827E 03  0.53898E 03  0.53898E 03  0.52923E 03  0.53898E 03  0.53898E 03  0.52989E 03  0.53898E 03  0.53898E 03  0.55193E 03
   0.53898E 03  0.53898E 03  0.53827E 03  0.53898E 03  0.53898E 03  0.52923E 03  0.53898E 03  0.53898E 03  0.52988E 03  0.53898E 03
   0.53898E 03  0.55193E 03  0.53898E 03  0.53898E 03  0.53826E 03  0.53898E 03  0.53898E 03  0.52915E 03  0.53898E 03  0.53898E 03
   0.52902E 03  0.53898E 03  0.53898E 03  0.55200E 03  0.53898E 03  0.53898E 03  0.53779E 03  0.53898E 03  0.53898E 03  0.52593E 03
   0.53898E 03  0.53898E 03  0.52700E 03  0.53898E 03  0.53898E 03  0.55508E 03  0.54034E 03  0.54177E 03
 EXTERNAL
   0.52500E 03  0.41500E 03  0.42400E 03  0.62000E 03
```

TABLE 5-3 (CONTINUED)

RESISTORS									
0.41875E 05	0.76637E 04	0.41875E 05	0.76637E 04	0.41875E 05	0.76637E 04	0.41875E 05	0.76637E 04	0.77816E 05	0.23345E 06
0.11961E 06	0.77816E 05	0.23345E 06	0.12078E 06	0.77816E 05	0.23345E 06	0.12068E 06	0.77816E 05	0.23345E 06	0.11795E 06
0.15547E 05	0.56906E 04	0.15547E 05	0.56906E 04	0.15547E 05	0.56906E 04	0.15547E 05	0.56906E 04	0.15547E 05	0.56906E 04
0.15547E 05	0.56906E 04	0.15547E 05	0.56906E 04	0.15547E 05	0.56906E 04	0.15547E 05	0.56906E 04	0.15547E 05	0.56906E 04
0.15547E 05	0.56906E 04	0.15547E 05	0.56906E 04	0.15547E 05	0.56906E 04	0.15547E 05	0.56906E 04	0.15547E 05	0.56906E 04
0.15547E 05	0.56906E 04	0.15547E 05	0.56906E 04	0.15547E 05	0.56906E 04	0.15547E 05	0.56906E 04	0.15547E 05	0.56906E 04
0.15547E 05	0.56906E 04	0.15547E 05	0.56906E 04	0.15547E 05	0.56906E 04	0.15547E 05	0.56906E 04	0.95396E 05	0.39890E 06
0.29316E 06	0.95396E 05	0.39890E 06	0.29535E 06	0.95396E 05	0.39890E 06	0.29519E 06	0.95396E 05	0.39890E 06	0.28992E 06
0.95396E 05	0.39890E 06	0.29316E 06	0.95396E 05	0.39890E 06	0.29533E 06	0.95396E 05	0.39890E 06	0.29517E 06	0.95396E 05
0.39890E 06	0.28994E 06	0.95396E 05	0.39890E 06	0.29316E 06	0.95396E 05	0.39890E 06	0.29533E 06	0.95396E 05	0.39890E 06
0.29517E 06	0.95396E 05	0.39890E 06	0.28994E 06	0.95396E 05	0.39890E 06	0.29316E 06	0.95396E 05	0.39890E 06	0.29533E 06
0.95396E 05	0.39890E 06	0.29517E 06	0.95396E 05	0.39890E 06	0.28994E 06	0.95396E 05	0.39890E 06	0.29316E 06	0.95396E 05
0.39890E 06	0.29533E 06	0.95396E 05	0.39890E 06	0.29517E 06	0.95396E 05	0.39890E 06	0.28994E 06	0.95396E 05	0.39890E 06
0.29316E 06	0.95396E 05	0.39890E 06	0.29535E 06	0.95396E 05	0.39890E 06	0.29519E 06	0.95396E 05	0.39890E 06	0.28992E 06
0.17954E 06	0.17954E 06	0.97533E 05	0.17954E 06	0.17954E 06	0.98261E 05	0.17954E 06	0.17954E 06	0.98207E 05	0.17954E 06
0.17954E 06	0.96456E 05	0.17954E 06	0.17954E 06	0.97532E 05	0.17954E 06	0.17954E 06	0.98256E 05	0.17954E 06	0.17954E 06
0.98203E 05	0.17954E 06	0.17954E 06	0.96460E 05	0.17954E 06	0.17954E 06	0.97532E 05	0.17954E 06	0.17954E 06	0.98256E 05
0.17954E 06	0.17954E 06	0.98203E 05	0.17954E 06	0.17954E 06	0.96460E 05	0.17954E 06	0.17954E 06	0.97532E 05	0.17954E 06
0.17954E 06	0.98256E 05	0.17954E 06	0.17954E 06	0.98203E 05	0.17954E 06	0.17954E 06	0.96460E 05	0.17954E 06	0.17954E 06
0.97532E 05	0.17954E 06	0.17954E 06	0.98256E 05	0.17954E 06	0.17954E 06	0.98203E 05	0.17954E 06	0.17954E 06	0.96460E 05
0.16758E 06	0.22455E 06	0.13338E 06	0.16758E 06	0.22455E 06	0.13467E 06	0.16758E 06	0.22455E 06	0.13455E 06	0.16758E 06
0.22455E 06	0.13151E 06	0.41875E 05	0.76637E 04	0.41875E 05	0.76637E 04	0.41875E 05	0.76637E 04	0.41875E 05	0.76637E 04
0.77816E 05	0.23345E 06	0.11961E 06	0.77816E 05	0.23345E 06	0.12078E 06	0.77816E 05	0.23345E 06	0.12067E 06	0.77816E 05
0.23345E 06	0.11795E 06	0.83792E 05	0.11227E 06	0.13331E 06	0.83792E 05	0.11227E 06	0.13431E 06	0.83792E 05	0.11227E 06
0.13424E 06	0.83792E 05	0.11227E 06	0.13184E 06	0.16342E 04	0.10350E 04				
EXTERNAL									
0.16804E 05	0.18718E 05	0.18718E 05	0.18718E 05	0.18718E 05	0.18718E 05	0.18718E 05	0.16804E 05	0.	0.
0.23895E 05	0.26350E 05	0.26353E 05	0.26352E 05	0.26352E 05	0.26353E 05	0.26359E 05	0.23893E 05	0.	0.
0.23192E 05	0.25623E 05	0.25618E 05	0.25618E 05	0.25618E 05	0.25618E 05	0.25624E 05	0.23191E 05	0.	0.
0.12394E 05	0.13929E 05	0.13931E 05	0.13931E 05	0.13931E 05	0.13931E 05	0.13929E 05	0.12394E 05	0.	0.
CAPACITORS									
0.14589E 01	0.26674E 01	0.11156E-00	0.14589E 01	0.26674E 01	0.11074E-00	0.14589E 01	0.26674E 01	0.11081E-00	0.14589E 01
0.26674E 01	0.11277E-00	0.28039E 01	0.28039E 01	0.10111E-00	0.28039E 01	0.28039E 01	0.10053E-00	0.28039E 01	0.28039E 01
0.10058E-00	0.28039E 01	0.28039E 01	0.10197E-00	0.28039E 01	0.28039E 01	0.10111E-00	0.28039E 01	0.28039E 01	0.10054E-00
0.28039E 01	0.28039E 01	0.10054E-00	0.28039E 01	0.28039E 01	0.10197E-00	0.28039E 01	0.28039E 01	0.10111E-00	0.28039E 01
0.28039E 01	0.10054E-00	0.28039E 01	0.28039E 01	0.10058E-00	0.28039E 01	0.28039E 01	0.10197E-00	0.28039E 01	0.28039E 01
0.10111E-00	0.28039E 01	0.28039E 01	0.10054E-00	0.28039E 01	0.28039E 01	0.10058E-00	0.28039E 01	0.28039E 01	0.10197E-00
0.28039E 01	0.28039E 01	0.10111E-00	0.28039E 01	0.28039E 01	0.10054E-00	0.28039E 01	0.28039E 01	0.10058E-00	0.28039E 01
0.28039E 01	0.10197E-00	0.28039E 01	0.28039E 01	0.10111E-00	0.28039E 01	0.28039E 01	0.10053E-00	0.28039E 01	0.28039E 01
0.10058E-00	0.28039E 01	0.28039E 01	0.10197E-00	0.14589E 01	0.26674E 01	0.11156E-00	0.14589E 01	0.26674E 01	0.11074E-00
0.14589E 01	0.26674E 01	0.11081E-00	0.14589E 01	0.26674E 01	0.11277E-00	0.41612E-00	0.95036E 01		
EXTERNAL									
0.	0.	0.	0.						
Q-C PRODUCTS									
0.26262E 05	0.15936E 05	0.52052E 03	0.26262E 05	0.15936E 05	0.56382E 03	0.26262E 05	0.15936E 05	0.56078E 03	0.26262E 05
0.15936E 05	0.47875E 03	0.28959E 05	0.10992E 05	0.39843E 03	0.28959E 05	0.10992E 05	0.42230E 03	0.28959E 05	0.10992E 05
0.42057E 03	0.28959E 05	0.10992E 05	0.37445E 03	0.29078E 05	0.10944E 05	0.39416E 03	0.29078E 05	0.10944E 05	0.41747E 03
0.29078E 05	0.10944E 05	0.41579E 03	0.29078E 05	0.10944E 05	0.37069E 03	0.29078E 05	0.10944E 05	0.39416E 03	0.29078E 05
0.10944E 05	0.41747E 03	0.29078E 05	0.10944E 05	0.41579E 03	0.29078E 05	0.10944E 05	0.37069E 03	0.29078E 05	0.10944E 05
0.39416E 03	0.29078E 05	0.10944E 05	0.41747E 03	0.29078E 05	0.10944E 05	0.41579E 03	0.29078E 05	0.10944E 05	0.37069E 03
0.29078E 05	0.10944E 05	0.39416E 03	0.29078E 05	0.10944E 05	0.41747E 03	0.29078E 05	0.10944E 05	0.41579E 03	0.29078E 05
0.10944E 05	0.37069E 03	0.27278E 05	0.10803E 05	0.39843E 03	0.27278E 05	0.10803E 05	0.42226E 03	0.27278E 05	0.10803E 05
0.42056E 03	0.27278E 05	0.10803E 05	0.37448E 03	0.23715E 05	0.15523E 05	0.52051E 03	0.23715E 05	0.15523E 05	0.56377E 03
0.23715E 05	0.15523E 05	0.56073E 03	0.23715E 05	0.15523E 05	0.47879E 03	0.12643E 05	0.60222E 04		
EXTERNAL									
0.	0.	0.	0.						

ENTERING RECALC 30.711 538.980 538.980 11.690 19.021

TABLE 5-3 (CONTINUED)

```
PRESSURIZATION PROGRAM TEST CASE (NITROGEN TETROXIDE)   DATE

THETA= 0.50015000E 04 D THETA= 0.250E-01 RC MIN=.50000E 00 NODE  0. PREV. D THETA=.47500E-00 GRAVITY= 1.000 ANGLE= 0.

TOTAL PRESSURE      PARTIAL CONDENSIBLE PARTIAL NONCONDENS.
 0.28279E 02          0.19021E 02          0.92578E 01

TEMPERATURE AV GAS AVERAGE LIQUID       AVERAGE ALL          DELTA TEMP.
 0.53898E 03          0.53898E 03          0.53898E 03          0.

MAXIMUM LIQ. NODE   MAX LIQ SURF NODE    MAX SURF GAS NODE    T S
 0.53898E 03          0.53898E 03          0.53899E 03          0.53898E 03

VOLUME OF GAS       MASS CONDENSIBLE     MASS NONCONDENSIBLE SUM DELTA MASSES
 0.99340E-01          0.21282E-01          0.63023E-03          0.10344E-01

SUM MASS COND VENT SUM MASS NONC VENT   SUM MASS COND ADDED SUM   SS NONC ADDED
 0.                   0.                   0.                   0. 3805E-03

MASS OF LIQUID      MASS LIQUID USED     MASS LIQUID ADDED    MASS GAS USED
 0.43059E 03          0.28872E 01          0.                   0.

SUM MASS LIQ USED   SUM MASS LIQ ADDED   DELTA VOLUME
 0.43310E 01          0.                   -0.16301E-01

SUM EXT HEAT
 0.39127E-01

FDGA                HEL BOT PRESSURE     HEL BOT TEMP.        T SUB X              HELIUM WEIGHT        PREVIOUS WEIGHT
 0.12365E-03          0.15004E 04          0.54029E 03          0.54029E 03          0.57780E 00          0.84731E-04

SC GAS              SC LIQ               SC INT               SC ALL               T LA                 RHO LIQ
 0.79907E-01          0.15693E 03          0.17051E 02          0.15700E 03          0.46000E 03          0.88782E 02
CP GASC             CP GASN              CP LIQ               K GAS C              K GAS N              K LIQ
 0.10681E 01          0.74302E 00          0.37425E-00          0.67647E-01          0.87078E-01          0.37369E-00
Z C                 Z N                  Z K                  CP X                 R LAM                GAMMA
 0.70035E 00          0.10007E 01          0.10015E 01          0.74264E 00          0.17650E 03          0.13150E 01

TEMPERATURES
   0.53898E 03  0.53898E 03  0.53779E 03  0.53898E 03  0.53898E 03  0.52589E 03  0.53898E 03  0.53898E 03  0.52697E 03  0.53898E 03
   0.53898E 03  0.55511E 03  0.53898E 03  0.53898E 03  0.53826E 03  0.53898E 03  0.53898E 03  0.32914E 03  0.53898E 03  0.53898E 03
   0.52981E 03  0.53898E 03  0.53898E 03  0.55201E 03  0.53898E 03  0.53898E 03  0.53827E 03  0.53898E 03  0.53898E 03  0.52920E 03
   0.53898E 03  0.53898E 03  0.52986E 03  0.53898E 03  0.53898E 03  0.55195E 03  0.53898E 03  0.53898E 03  0.53827E 03  0.53898E 03
   0.53898E 03  0.52920E 03  0.53898E 03  0.53898E 03  0.52986E 03  0.53898E 03  0.53898E 03  0.55195E 03  0.53898E 03  0.53898E 03
   0.53827E 03  0.53898E 03  0.53898E 03  0.52920E 03  0.53898E 03  0.53898E 03  0.52986E 03  0.53898E 03  0.53898E 03  0.55195E 03
   0.53898E 03  0.53898E 03  0.53827E 03  0.53898E 03  0.53898E 03  0.52920E 03  0.53898E 03  0.53898E 03  0.52986E 03  0.53898E 03
   0.53898E 03  0.55195E 03  0.53898E 03  0.53898E 03  0.53826E 03  0.53898E 03  0.53898E 03  0.52913E 03  0.53898E 03  0.53898E 03
   0.52980E 03  0.53898E 03  0.53898E 03  0.55202E 03  0.53898E 03  0.53898E 03  0.53779E 03  0.53898E 03  0.53898E 03  0.52590E 03
   0.53898E 03  0.53898E 03  0.52648E 03  0.53898E 03  0.53898E 03  0.55510E 03  0.54029E 03  0.54177E 03
EXTERNAL
   0.52500E 03  0.41500E 03  0.42400E 03  0.62000E 03
```

TABLE 5-3 (CONTINUED)

RESISTORS										
0.41875E 05	0.76637E 04	0.41875E 05	0.76637E 04	0.41875E 05	0.76637E 04	0.41875E 05	0.76638E 04	0.77816E 05	0.23345E 06	
0.11961E 06	0.77816E 05	0.23345E 06	0.12078E 06	0.77816E 05	0.23345E 06	0.12068E 06	0.77816E 05	0.23345E 06	0.11795E 06	
0.15547E 05	0.56906E 04	0.15547E 05	0.56906E 04	0.15547E 05	0.56906E 04	0.15547E 05	0.56906E 04	0.15547E 05	0.56906E 04	
0.15547E 05	0.56906E 04	0.15547E 05	0.56906E 04	0.15547E 05	0.56906E 04	0.15547E 05	0.56906E 04	0.15547E 05	0.56906E 04	
0.15547E 05	0.56906E 04	0.15547E 05	0.56906E 04	0.15547E 05	0.56906E 04	0.15547E 05	0.56906E 04	0.15547E 05	0.56906E 04	
0.15547E 05	0.56906E 04	0.15547E 05	0.56906E 04	0.15547E 05	0.56906E 04	0.15547E 05	0.56906E 04	0.15547E 05	0.56906E 04	
0.15547E 05	0.56906E 04	0.15547E 05	0.56906E 04	0.15547E 05	0.56906E 04	0.15547E 05	0.56906E 04	0.15547E 05	0.56906E 04	
0.29316E 06	0.95396E 05	0.39890E 06	0.29535E 06	0.95396E 05	0.39890E 06	0.29519E 06	0.95396E 05	0.39890E 06	0.28992E 06	
0.95396E 05	0.39890E 06	0.29316E 06	0.95396E 05	0.39890E 06	0.29534E 06	0.95396E 05	0.39890E 06	0.29518E 05	0.95396E 05	
0.39890E 06	0.28993E 06	0.95396E 05	0.39890E 06	0.29316E 06	0.95396E 05	0.39890E 06	0.29534E 06	0.95396E 05	0.39890E 06	
0.29518E 06	0.95396E 05	0.39890E 06	0.28993E 06	0.95396E 05	0.39890E 06	0.29316E 06	0.95396E 05	0.39890E 06	0.29534E 06	
0.95396E 05	0.39890E 06	0.29518E 06	0.95396E 05	0.39890E 06	0.28993E 06	0.95396E 05	0.39890E 06	0.29316E 06	0.95396E 05	
0.39890E 06	0.29534E 06	0.95396E 05	0.39890E 06	0.29518E 06	0.95396E 05	0.39890E 06	0.28993E 06	0.95396E 05	0.39890E 06	
0.29316E 06	0.95396E 05	0.39890E 06	0.29535E 06	0.95396E 05	0.39890E 06	0.29519E 06	0.95396E 05	0.39890E 06	0.28992E 06	
0.17954E 06	0.17954E 06	0.97533E 05	0.17954E 06	0.17954E 06	0.98262E 05	0.17954E 06	0.17954E 06	0.98208E 05	0.17954E 06	
0.17954E 06	0.96455E 05	0.17954E 06	0.17954E 06	0.97533E 05	0.17954E 06	0.17954E 06	0.98257E 05	0.17954E 06	0.17954E 06	
0.98204E 05	0.17954E 06	0.17954E 06	0.96459E 05	0.17954E 06	0.17954E 06	0.97533E 05	0.17954E 06	0.17954E 06	0.98257E 05	
0.17954E 06	0.17954E 06	0.98204E 05	0.17954E 06	0.17954E 06	0.96459E 05	0.17954E 06	0.17954E 06	0.97533E 05	0.17954E 06	
0.17954E 06	0.98257E 05	0.17954E 06	0.17954E 06	0.98204E 05	0.17954E 06	0.17954E 06	0.96459E 05	0.17954E 06	0.17954E 06	
0.97533E 05	0.17954E 06	0.17954E 06	0.98257E 05	0.17954E 06	0.17954E 06	0.98204E 05	0.17954E 06	0.17954E 06	0.96459E 05	
0.16758E 06	0.22455E 06	0.13337E 06	0.16758E 06	0.22455E 06	0.13467E 06	0.16758E 06	0.22455E 06	0.13455E 06	0.16758E 06	
0.22455E 06	0.13151E 06	0.41875E 05	0.76637E 04	0.41875E 05	0.76637E 04	0.41875E 05	0.76637E 04	0.41875E 05	0.76638E 04	
0.77816E 05	0.23345E 06	0.11961E 06	0.77816E 05	0.23345E 06	0.12078E 06	0.77816E 05	0.23345E 06	0.12068E 06	0.77816E 05	
0.23345E 06	0.11795E 06	0.83792E 05	0.11227E 06	0.13331E 06	0.83792E 05	0.11227E 06	0.13431E 06	0.83792E 05	0.11227E 06	
0.13429E 06	0.83792E 05	0.11227E 06	0.13184E 06	0.16342E 04	0.10350E 04					
EXTERNAL										
0.16806E 05	0.18718E 05	0.18718E 05	0.18718E 05	0.18718E 05	0.18718E 05	0.18718E 05	0.16804E 05	0.	0.	
0.23896E 05	0.26359E 05	0.26354E 05	0.26354E 05	0.26354E 05	0.26354E 05	0.26361E 05	0.23894E 05	0.	0.	
0.23193E 05	0.25624E 05	0.25619E 05	0.25619E 05	0.25619E 05	0.25619E 05	0.25625E 05	0.23192E 05	0.	0.	
0.12393E 05	0.13929E 05	0.13931E 05	0.13931E 05	0.13931E 05	0.13931E 05	0.13929E 05	0.12394E 05	0.	0.	
CAPACITORS										
0.14589E 01	0.26674E 01	0.11156E-00	0.14589E 01	0.26674E 01	0.11073E-00	0.14589E 01	0.26674E 01	0.11081E-00	0.14589E 01	
0.26674E 01	0.11277E-00	0.28039E 01	0.28039E 01	0.10111E-00	0.28039E 01	0.28039E 01	0.10053E-00	0.28039E 01	0.28039E 01	
0.10058E-00	0.28039E 01	0.28039E 01	0.10197E-00	0.28039E 01	0.28039E 01	0.10111E-00	0.28039E 01	0.28039E 01	0.10054E-00	
0.28039E 01	0.28039E 01	0.10058E-00	0.28039E 01	0.28039E 01	0.10197E-00	0.28039E 01	0.28039E 01	0.10111E-00	0.28039E 01	
0.28039E 01	0.10054E-00	0.28039E 01	0.28039E 01	0.10058E-00	0.28039E 01	0.28039E 01	0.10197E-00	0.28039E 01	0.28039E 01	
0.10111E-00	0.28039E 01	0.28039E 01	0.10054E-00	0.28039E 01	0.28039E 01	0.10058E-00	0.28039E 01	0.28039E 01	0.10197E-00	
0.28039E 01	0.28039E 01	0.10111E-00	0.28039E 01	0.28039E 01	0.10054E-00	0.28039E 01	0.28039E 01	0.10058E-00	0.28039E 01	
0.28039E 01	0.10197E-00	0.28039E 01	0.28039E 01	0.10111E-00	0.28039E 01	0.28039E 01	0.10053E-00	0.28039E 01	0.28039E 01	
0.10058E-00	0.28039E 01	0.28039E 01	0.10198E-00	0.14589E 01	0.26674E 01	0.11156E-00	0.14589E 01	0.26674E 01	0.11074E-00	
0.14589E 01	0.26674E 01	0.11081E-00	0.14589E 01	0.26674E 01	0.11277E-00	0.41612E-00	0.95036E 01			
EXTERNAL										
0.	0.	0.	0.							
R-C MODELS										
0.26262E 05	0.15936E 05	0.52052E 03	0.26262E 05	0.15936E 05	0.56383E 03	0.26262E 05	0.15936E 05	0.56078E 03	0.26262E 05	
0.15936E 05	0.47875E 03	0.28959E 05	0.10992E 05	0.39843E 03	0.28959E 05	0.10992E 05	0.42230E 03	0.28959E 05	0.10992E 05	
0.28959E 05	0.28959E 05	0.10992E 05	0.37445E 03	0.29078E 05	0.10944E 05	0.39416E 03	0.29078E 05	0.10944E 05	0.41747E 03	
0.29078E 05	0.10944E 05	0.41579E 03	0.29078E 05	0.10944E 05	0.37069E 03	0.29078E 05	0.10944E 05	0.39416E 03	0.29078E 05	
0.10944E 05	0.41747E 03	0.29078E 05	0.10944E 05	0.41579E 03	0.29078E 05	0.10944E 05	0.37069E 03	0.29078E 05	0.10944E 05	
0.39416E 03	0.29078E 05	0.10944E 05	0.41747E 03	0.29078E 05	0.10944E 05	0.41579E 03	0.29078E 05	0.10944E 05	0.37069E 03	
0.29078E 05	0.10944E 05	0.39416E 03	0.29078E 05	0.10944E 05	0.41747E 03	0.29078E 05	0.10944E 05	0.41579E 03	0.29078E 05	
0.10944E 05	0.37069E 03	0.27278E 05	0.10803E 05	0.39843E 03	0.27278E 05	0.10803E 05	0.42226E 03	0.27278E 05	0.10803E 05	
0.28959E 05	0.27278E 05	0.10803E 05	0.37448E 03	0.23715E 05	0.15523E 05	0.52051E 03	0.23715E 05	0.15523E 05	0.56377E 03	
0.23715E 05	0.15523E 05	0.56079E 03	0.23715E 05	0.15523E 05	0.47879E 03	0.68002E 03	0.60222E 04			
EXTERNAL										
0.	0.	0.	0.							

ENTERING RECALC 29.885 540.292 538.980 10.864 19.021

TABLE 5-3 (CONTINUED)

PRESSURIZATION PROGRAM TEST CASE (NITROGEN TETROXIDE) DATE

THETA= 0.5001000E 04 D THETA= 0.250E-01 RC MIN=.50000E 00 NODE 0. PREV. D THETA=.47500E-00 GRAVITY= 1.000 ANGLE= 0.

TOTAL PRESSURE	PARTIAL CONDENSIBLE	PARTIAL NONCONDENS.
0.20513E 02	0.19021E 02	0.94924E 01

TEMPERATURE AV GAS	AVERAGE LIQUID	AVERAGE ALL	DELTA TEMP.
0.54034E 03	0.53090E 03	0.53094E 03	0.

MAXIMUM LIQ. NODE	MAX LIQ SURF NODE	MAX SURF GAS NODE	T S
0.53090E 03	0.53090E 03	0.53090E 03	0.53090E 03

VOLUME OF GAS	MASS CONDENSIBLE	MASS NONCONDENSIBLE	SUM DELTA MASSES
0.83039E-01	0.17715E-01	0.53922E-03	0.67777E-02

SUM MASS COND VENT	SUM MASS NONC VENT	SUM MASS COND ADDED	SUM MASS NONC ADDED
0.	0.	0.	0.84399E-04

MASS OF LIQUID	MASS LIQUID USED	MASS LIQUID ADDED	MASS GAS USED
0.44003E 03	0.26472E 01	0.	0.

SUM MASS LIQ USED	SUM MASS LIQ ADDED	DELTA VOLUME
0.20875E 01	0.	-0.16300E-01

SUM EXT HEAT
0.391250E-01

FMGA	HEL BOT PRESSURE	HEL BOT TEMP.	T SUB X	HELIUM WEIGHT	PREVIOUS WEIGHT
0.84399E-04	0.15017E 04	0.54034E 03	0.54034E 03	0.57789E 00	0.

SC GAS	SC LIQ	SC INT	SC ALL	T LA	RHO LIQ
0.	0.16760E 03	0.	0.16760E 03	0.44000E 03	0.88702E 02
CP GASC	CP GASN	CP LIQ	K GAS C	K GAS N	K LIQ
0.10881E 01	0.74299E 00	0.37425E-00	0.67640E-01	0.87078E-01	0.37369E-00
Z C	Z N	Z X	CP X	R LAM	GAMMA
0.70035E 00	0.10008E 01	0.10015E 01	0.74264E 00	0.17650E 03	0.13150E 01

TEMPERATURES

0.53090E 03	0.53090E 03	0.53779E 03	0.53090E 03	0.53090E 03	0.52590E 03	0.53090E 03	0.53090E 03	0.52690E 03	0.53090E 03
0.53090E 03	0.55510E 03	0.53090E 03	0.53090E 03	0.53826E 03	0.53090E 03	0.53090E 03	0.52915E 03	0.53090E 03	0.53090E 03
0.52982E 03	0.53090E 03	0.53090E 03	0.55200E 03	0.53090E 03	0.53090E 03	0.53827E 03	0.53090E 03	0.53090E 03	0.52921E 03
0.53090E 03	0.53090E 03	0.52987E 03	0.53090E 03	0.53090E 03	0.55194E 03	0.53090E 03	0.53090E 03	0.53827E 03	0.53090E 03
0.53090E 03	0.52922E 03	0.53090E 03	0.53090E 03	0.52987E 03	0.53090E 03	0.53090E 03	0.55194E 03	0.53090E 03	0.53090E 03
0.53827E 03	0.53090E 03	0.53090E 03	0.52922E 03	0.53826E 03	0.53090E 03	0.52987E 03	0.53090E 03	0.53090E 03	0.55194E 03
0.53090E 03	0.53090E 03	0.53827E 03	0.53090E 03	0.53090E 03	0.52921E 03	0.53090E 03	0.53090E 03	0.52987E 03	0.53090E 03
0.53090E 03	0.55194E 03	0.53090E 03	0.53090E 03	0.53826E 03	0.53090E 03	0.53090E 03	0.52914E 03	0.53090E 03	0.53090E 03
0.52981E 03	0.53090E 03	0.53090E 03	0.55201E 03	0.53090E 03	0.53090E 03	0.53779E 03	0.53090E 03	0.53090E 03	0.52592E 03
0.53090E 03	0.53090E 03	0.52699E 03	0.53090E 03	0.53090E 03	0.55509E 03	0.94034E 03	0.54177E 03		

EXTERNAL

0.52500E 03 0.41500E 03 0.42400E 03 0.62000E 03

TABLE 5-3 (CONTINUED)

RESISTORS										
0.20227E 05	0.37019E 04	0.20227E 05	0.37019E 04	0.20227E 05	0.37019E 04	0.20227E 05	0.37019E 04	0.77816E 05	0.11276E 06	
0.11961E 06	0.77816E 05	0.11276E 06	0.12078E 06	0.77816E 05	0.11276E 06	0.12068E 06	0.77816E 05	0.11276E 06	0.11795E 06	
0.15547E 05	0.56906E 04	0.15547E 05	0.56906E 04	0.15547E 05	0.56906E 04	0.15547E 05	0.56906E 04	0.15547E 05	0.56906E 04	
0.15547E 05	0.56906E 04	0.15547E 05	0.56906E 04	0.15547E 05	0.56906E 04	0.15547E 05	0.56906E 04	0.15547E 05	0.56906E 04	
0.15547E 05	0.56906E 04	0.15547E 05	0.56906E 04	0.15547E 05	0.56906E 04	0.15547E 05	0.56906E 04	0.15547E 05	0.56906E 04	
0.15547E 05	0.56906E 04	0.15547E 05	0.56906E 04	0.15547E 05	0.56906E 04	0.15547E 05	0.56906E 04	0.15547E 05	0.56906E 04	
0.15547E 05	0.56906E 04	0.15547E 05	0.56905 04	0.15547E 05	0.56906E 04	0.15547E 05	0.56906E 0	0.39890E 06		
0.29316E 06	0.95396E 05	0.39890E 06	0.29535E 06	0.95396E 05	0.39890E 06	0.29519E 06	0.95296E 05	0.39890E 06	0.28992E 06	
0.95396E 05	0.39890E 06	0.29316E 06	0.95396E 05	0.39890E 06	0.29534E 06	0.95396E 05	0.39890E 06	0.29518E 06	0.95396E 05	
0.39890E 06	0.28993E 06	0.95396E 05	0.39890E 06	0.29316E 06	0.95396E 05	0.39890E 06	0.29534E 06	0.95396E 05	0.39890E 06	
0.29518E 06	0.95396E 05	0.39890E 06	0.28993E 06	0.95396E 05	0.39890E 06	0.29316E 06	0.95396E 05	0.39890E 06	0.29534E 06	
0.95396E 05	0.39890E 06	0.29518E 06	0.95396E 05	0.39890E 06	0.28993E 06	0.95396E 05	0.39890E 06	0.29316E 06	0.95396E 05	
0.39890E 06	0.29534E 06	0.95396E 05	0.39890E 06	0.29518E 06	0.95396E 05	0.39890E 06	0.28993E 06	0.95396E 05	0.39890E 06	
0.29316E 06	0.95396E 05	0.39890E 06	0.29536E 06	0.95396E 05	0.39890E 06	0.29520E 06	0.95396E 05	0.39890E 06	0.28991E 06	
0.17954E 06	0.17954E 06	0.97534E 05	0.17954E 06	0.17954E 06	0.98263E 05	0.17954E 06	0.17954E 06	0.98209E 05	0.17954E 06	
0.17954E 06	0.96458E 05	0.17954E 06	0.17954E 06	0.97533E 05	0.17954E 06	0.17954E 06	0.98258E 05	0.17954E 06	0.17954E 06	
0.98205E 05	0.17954E 06	0.17954E 06	0.96458E 05	0.17954E 06	0.17954E 06	0.97535E 05	0.17954E 06	0.17954E 06	0.98258E 05	
0.17954E 06	0.17954E 06	0.98205E 05	0.17954E 06	0.17954E 06	0.96458E 05	0.17954E 06	0.17954E 06	0.97533E 05	0.17954E 06	
0.17954E 06	0.98258E 05	0.17954E 06	0.17954E 06	0.98205E 05	0.17954E 06	0.17954E 06	0.96458E 05	0.17954E 06	0.17954E 06	
0.97533E 05	0.17954E 06	0.17954E 06	0.98258E 05	0.17954E 06	0.17954E 06	0.98205E 05	0.17954E 06	0.17954E 06	0.96458E 05	
0.16758E 06	0.10847E 06	0.13337E 06	0.16758E 06	0.10847E 06	0.13467E 06	0.16758E 06	0.10847E 06	0.13455E 06	0.16758E 06	
0.10847E 06	0.13151E 06	0.41875E 05	0.76637E 04	0.41875E 05	0.76637E 04	0.41875E 05	0.76637E 04	0.41875E 05	0.76638E 04	
0.77816E 05	0.23345E 06	0.11961E 06	0.77816E 05	0.23345E 06	0.12078E 06	0.77816E 05	0.23345E 06	0.12068E 06	0.77816E 05	
0.23345E 06	0.11795E 06	0.83792E 05	0.11227E 06	0.13331E 06	0.83792E 05	0.11227E 06	0.13431E 06	0.83792E 05	0.11227E 06	
0.13629E 06	0.83792E 05	0.11227E 06	0.13184E 06	0.16343E 04	0.10350E 04					
EXTERNAL										
0.16[illegible] 05	0.18718E 05	0.18718E 05	0.18718E 05	0.18718E 05	0.18718E 05	0.18718E 05	0.16804E 05	0.	0.	
0.23497E 05	0.26360E 05	0.26355E 05	0.26355E 05	0.26355E 05	0.26355E 05	0.26362E 05	0.2[illegible]895E 05	0.	0.	
0.23194E [illegible]	0.25625E 05	0.25620E 05	0.25620E 05	0.25620E 05	0.25620E 05	0.25626E 05	0.23193E 05	0.	0.	
0.12393E 05	0.13929E 05	0.13931E 05	0.13931E 05	0.13931E 05	0.13931E 05	0.13928E 05	0.12393E 05	0.	0.	
CAPACITORS										
0.14589E 01	-0.18977E-01	0.11156E-00	0.14589E 01	-0.18977E-01	0.11073E-00	0.14589E 01	-0.18977E-01	0.11081E-00	0.14589E 01	
-0.18977E-01	0.11277E-00	0.28039E 01	0.28039E 01	0.10111E-00	0.28039E 01	0.28039E 01	0.10059E-00	0.28039E 01	0.28039E 01	
0.10058E-00	0.28039E 01	0.28039E 01	0.10198E-00	0.28039E 01	0.28039E 01	0.10111E-00	0.28039E 01	0.28039E 01	0.10054E-00	
0.28039E 01	0.28039E 01	0.10058E-00	0.28039E 01	0.28039E 01	0.10197E-00	0.28039E 01	0.28039E 01	0.10111E-00	0.28039E 01	
0.28039E 01	0.10054E-00	0.28039E 01	0.28039E 01	0.10058E-00	0.28039E 01	0.28039E 01	0.10197E-00	0.28039E 01	0.28039E 01	
0.10111E-00	0.28039E 01	0.28039E 01	0.10054E-00	0.28039E 01	0.28039E 01	0.10058E-00	0.28039E 01	0.28039E 01	0.10197E-00	
0.28039E 01	0.28039E 01	0.10111E-00	0.28039E 01	0.28039E 01	0.10054E-00	0.28039E 01	0.28039E 01	0.10058E-00	0.28039E 01	
0.28039E 01	0.10197E-00	0.28039E 01	0.28039E 01	0.10111E-00	0.28039E 01	0.28039E 01	0.10053E-00	0.28039E 01	0.28039E 01	
0.10058E-00	0.28039E 01	0.28039E 01	0.10198E-00	0.14589E 01	0.26674E 01	0.11156E-00	0.14589E 01	0.26674E 01	0.11073E-00	
0.14589E 01	0.26674E 01	0.11081E-00	0.14589E 01	0.26674E 01	0.11277E-00	0.41606E-00	0.95[illegible]33E 01			
EXTERNAL										
0.	0.	0.	0.							
A-C MOTORS										
0.17987E 05	0.54763E 02	0.[illegible]517E 03	0.17987E 05	0.54763E 02	0.32952E [illegible]	0.17987E 05	0.54763E 02	0.32857E 03	0.17987E 05	
0.54763E 02	0.30056E 03	0.28959E 05	0.10790E 05	0.39843E 03	0.28959E 05	0.10790E 05	0.42230E 03	0.28959E 05	0.10790E 05	
0.28957E 03	0.28959E 05	0.10790E 05	0.37445E 03	0.29078E 05	0.10944E 05	0.39416E 03	0.29078E 05	0.10944E 05	0.41747E 03	
0.29078E 05	0.10944E 05	0.41579E 03	0.39078E 05	0.10944E 05	0.37069E 03	0.29078E 05	0.10944E 05	0.39416E 03	0.29078E 05	
0.10944E 05	0.41747E 03	0.29078E 05	0.10944E 05	0.41579E 03	0.29078E 05	0.10944E 05	0.37069E 03	0.29078E 05	0.10944E 05	
0.39416E 03	0.29078E 05	0.10944E 05	0.41747E 03	0.29078E 05	0.10944E 05	0.41579E 03	0.29078E 05	0.10944E 05	0.37069E 03	
0.29078E 05	0.10944E 05	0.39416E 03	0.29078E 05	0.10944E 05	0.41747E 03	0.29078E 05	0.10944E 05	0.41579E 03	0.29078E 05	
0.10944E 05	0.37069E 03	0.27278E 05	0.10803E 05	0.39843E 03	0.27278E 05	0.10803E 05	0.42226E 03	0.27278E 05	0.10803E 05	
0.42056E 03	0.27278E 05	0.10803E 05	0.37640E 03	0.23715E 05	0.15523E 05	0.52051E 03	0.23715E 05	0.15523E 05	0.56377E 03	
0.23715E 05	0.15523E 05	0.56073E 03	0.23715E 05	0.15523E 05	0.47879E 03	0.67997E 03	0.60221E 04			
EXTERNAL										
0.	0.	0.	0.							

ENTERING RECALC 29.917 538.964 538.980 10.881 19.021

"REPRODUCIBILITY OF THE ORIGINAL PAGE IS POOR."

TABLE 5-3 (CONTINUED)

```
PRESSURIZATION PROGRAM TEST CASE (NITROGEN TETROXIDE)   DATE

THETA= 0.5048000E 04 D THETA= 0.100E-00 RC MIN=.20000E 01 NODE  0. PREV. D THETA=.19000E 01 GRAVITY= 1.000 ANGLE= 0.

TOTAL PRESSURE      PARTIAL CONDENSIBLE PARTIAL NONCONDENS.
 0.29498E 02          0.18854E 02          0.10677E 02

TEMPERATURE AV GAS AVERAGE LIQUID       AVERAGE ALL          DELTA TEMP.
 0.53849E 03          0.53860E 03          0.53860E 03          0.

MAXIMUM LIQ. NODE   MAX LIQ SURF NODE    MAX SURF GAS NODE    T S
 0.53860E 03          0.53863E 03          0.53852E 03          0.53855E 03

VOLUME OF GAS       MASS CONDENSIBLE     MASS NONCONDENSIBLE SUM DELTA MASSES
 0.16150E 01          0.34795E-00          0.11904E-01          0.33701E-00

SUM MASS COND VENT  SUM MASS NONC VENT   SUM MASS COND ADDED SUM MASS NONC ADDED
 0.                   0.                   0.                   0.11924E-01

MASS OF LIQUID      MASS LIQUID USED     MASS LIQUID ADDED    MASS GAS USED
 0.30400E 03          0.28872E 01          0.                   0.

SUM MASS LIQ USED   SUM MASS LIQ ADDED   DELTA VOLUME
 0.13859E 03          0.                  -0.65179E-01

SUM EXT HEAT
-0.94518E-02

FMGA                HEL HOT PRESSURE     HEL HOT TEMP.        T SUL X              HELIUM WEIGHT        PREVIOUS WEIGHT
 0.55971E-03          0.14548E 04          0.53409E 03          0.53409E 03          0.56731E 00          0.10580E-01

SC GAS              SC LIQ               SC INT               SC ALL               T LA                 RHO LIQ
 0.43639E-00          0.10622E 03          0.22429E 02          0.10665E 03          0.46000E 03          0.88813E 02
CP GASC             CP GASN              CP LIQ               K GAS C              K GAS N              K LIQ
 0.10678E 01          0.74301E 00          0.37409E-00          0.67396E-01          0.87030E-01          0.74792E-01
Z C                 Z N                  Z X                  CP X                 R LAM                GAMMA
 0.69537E 00          0.10[illegible]7E 01          0.10[illegible]15E 01          0.74262E 00          0.17657E 03          0.13150E 01

TEMPERATURES
   0.53849E 03  0.53849E 03  0.53801E 03  0.53849E 03  .53849E 03  0.52803E 03  0.53849E 03  0.53849E 03  0.52698E 03  0.53849E 03
   0.53849E 03  0.55243E 03  .53849E 03  0.53849E 03  .53836E 03  0.53849E 03  0.53849E 03  0.53055E 03  0.53849E 03  0.53849E 03
   0.53115E 03  .53849E 03  .53849E 03  [illegible]  0.53849E 03  0.53849E 03  0.53837E 03  0.53849E 03  0.53849E 03  0.53034E 03
   0.53849E 03  0.53849E 03  .53095E 03  [illegible]  0.53849E 03  0.55039E 03  0.53860E 03  0.53860E 03  0.53837E 03  0.53860E 03
   0.53850E 03  .53[illegible]31E 03  .53860E 03  [illegible]  .53092E 03  0.53860E 03  0.53860E 03  0.55044E 03  0.53860E 03  0.53860E 03
   0.53837E 03  0.53860E 03  .53860E 03  0.53[illegible]  0.53860E 03  0.53860E 03  0.53092E 03  0.53860E 03  0.53860E 03  0.55044E 03
   0.53850E 03  0.53860E 03  0.53837E 03  [illegible]  0.53860E 03  0.53030E 03  0.53860E 03  0.53860E 03  0.53092E 03  0.53860E 03
   0.53850E 03  .55044E 03  .53860E 03  [illegible]  0.53836E 03  0.53860E 03  0.53860E 03  0.53021E 03  0.53860E 03  0.53860E 03
   0.53[illegible]  .53860E 03  0.53860E 03  [illegible]  0.53860E 03  0.53860E 03  0.53799E 03  0.53860E 03  0.53860E 03  0.52750E 03
   0.53[illegible]  .53[illegible]  .52[illegible]  [illegible]  0.53860E 03  0.55315E 03  0.53409E 03  0.54177E 03
 EXTERNAL
   0.52[illegible]  .41[illegible]  .424[illegible]  [illegible]
```


LOCKHEED
CALIFORNIA COMPANY

"REPRODUCIBILITY OF THE ORIGINAL PAGE IS POOR."

TABLE 5-3 (CONTINUED)

RESISTORS										
0.26267E 05	0.37661E 05	0.26267E 05	0.37661E 05	0.26267E 05	0.37661E 05	0.26267E 05	0.37661E 05	0.26267E 05	0.37661E 05	0.11298E 06
0.11959E 06	0.37661E 05	0.11298E 06	0.26267E 05	0.37661E 05	0.11298E 06	0.37661E 05	0.11298E 06	0.12648E 06	0.37661E 05	0.11298E 06
0.75243E 04	0.27541E 04	0.75243E 04	0.27541E 04	0.75243E 04	0.27541E 04	0.75243E 04	0.27541E 04	0.75243E 04	0.27541E 04	0.75243E 04
0.75243E 04	0.27541E 04	0.75243E 04	0.27541E 04	0.75243E 04	0.27541E 04	0.75243E 04	0.27541E 04	0.15536E 05	0.56865E 04	0.15536E 05
0.15536E 05	0.56865E 04	0.15536E 05	0.56865E 04	0.15536E 05	0.56865E 04	0.15536E 05	0.56865E 04	0.15536E 05	0.56865E 04	0.15536E 05
0.15536E 05	0.56865E 04	0.15536E 05	0.56865E 04	0.15536E 05	0.56865E 04	0.15536E 05	0.56865E 04	0.15536E 05	0.56865E 04	0.15536E 05
0.15536E 05	0.56865E 04	0.15536E 05	0.56865E 04	0.15536E 05	0.56865E 04	0.15536E 05	0.56865E 04	0.15536E 05	0.56865E 04	0.46169E 05
0.29314E 06	0.46169E 05	0.19306E 06	0.29314E 06	0.29501E 06	0.46169E 05	0.19306E 06	0.29487E 06	0.46169E 05	0.19306E 06	0.29038E 06
0.46169E 05	0.19306E 06	0.29313E 06	0.46169E 05	0.19306E 06	0.29506E 06	0.46169E 05	0.19306E 06	0.29492E 06	0.46169E 05	0.19306E 06
0.19306E 06	0.29029E 06	0.95327E 05	0.39861E 06	0.29313E 06	0.95327E 05	0.39861E 06	0.29507E 06	0.95327E 05	0.39861E 06	0.29507E 06
0.29492E 06	0.95327E 05	0.39862E 06	0.29029E 06	0.95327E 05	0.39861E 06	0.29313E 06	0.95327E 05	0.39661E 06	0.29507E 06	0.95327E 05
0.95327E 05	0.39861E 06	0.29432E 06	0.95327E 05	0.39862E 06	0.29028E 06	0.9532 05	0.39861E 06	0.29313E 06	0.95327E 05	0.39861E 06
0.39861E 06	0.29507E 06	0.95327E 05	0.39861E 06	0.29492E 06	0.95327E 05	0.39862E 06	0.29028E 06	0.95327E 05	0.39861E 06	0.29026E 06
0.29314E 06	0.95327E 05	0.39861E 06	0.29506E 06	0.95327E 05	0.39861E 06	0.29494E 06	0.95327E 05	0.39862E 06	0.29026E 06	0.86891E 05
0.86891E 05	0.86891E 05	0.97525E 05	0.86891E 05	0.86891E 05	0.98149E 05	0.86891E 05	0.86891E 05	0.98101E 05	0.86891E 05	0.86891E 05
0.86891E 05	0.96607E 05	0.86891E 05	0.86891E 05	0.97524E 05	0.86891E 05	0.86891E 05	0.98167E 05	0.86891E 05	0.86891E 05	0.98169E 05
0.98117E 05	0.86891E 05	0.86891E 05	0.96579E 05	0.17941E 06	0.17941E 06	0.97524E 05	0.17941E 06	0.17941E 06	0.98169E 05	0.17941E 06
0.17941E 06	0.17941E 06	0.98119E 05	0.17941E 06	0.96576E 05	0.17941E 06	0.97524E 05	0.17941E 06	0.17941E 06	0.97524E 05	0.17941E 06
0.17941E 06	0.98169E 05	0.17941E 06	0.17941E 06	0.98119E 05	0.17941E 06	0.96576E 05	0.17941E 06	0.17941E 06	0.96576E 05	0.17941E 06
0.97524E 05	0.17941E 06	0.17941E 06	0.98169E 05	0.17941E 06	0.17941E 06	0.98119E 05	0.17941E 06	0.17941E 06	0.96576E 05	0.81106E 05
0.81106E 05	0.10868E 06	0.13334E 06	0.81106E 05	0.10868E 06	0.13443E 06	0.81106E 05	0.10868E 06	0.13433E 06	0.81106E 05	0.10868E 06
0.10868E 06	0.13179E 06	0.41845E 05	0.76582E 04	0.41845E 05	0.76582E 04	0.41845E 05	0.76582E 04	0.41845E 05	0.76582E 04	0.77760E 05
0.77760E 05	0.23328E 06	0.11959E 06	0.77760E 05	0.23328E 06	0.12062E 06	0.77760E 05	0.23328E 06	0.12053E 06	0.77760E 05	0.23328E 06
0.23328E 06	0.11814E 06	0.83732E 05	0.11219E 06	0.13330E 06	0.83732E 05	0.11219E 06	0.13419E 06	0.83732E 05	0.11219E 06	0.13412E 06
0.83732E 05	0.11219E 06	0.13200E 06	0.16460E 04	0.10350E 04						
EXTERNAL										
0.16794E 05	0.18713E 05	0.18712E 05	0.18712E 05	0.18712E 05	0.18712E 05	0.18713E 05	0.16795E 05	0.	0.	
0.23723E 05	0.26234E 05	0.26253E 05	0.26256E 05	0.26256E 05	0.26256E 05	0.26264E 05	0.23765E 05	0.	0.	
0.23038E 05	0.25539E 05	0.25527E 05	0.25529E 05	0.25529E 05	0.25529E 05	0.25536E 05	0.23075E 05	0.	0.	
0.12475E 05	0.13996E 05	0.13984E 05	0.13982E 05	0.13982E 05	0.13982E 05	0.13980E 05	0.12453E 05	0.	0.	
CAPACITORS										
-0.10374E-01	-0.18968E-01	0.11158E-00	-0.10374E-01	-0.18968E-01	0.11088E-00	-0.10374E-01	-0.18968E-01	0.11095E-00	-0.10374E-01	
-0.18968E-01	0.11258E-00	-0.19939E-01	-0.19939E-01	0.10111E-00	-0.19939E-01	-0.19939E-01	0.10062E-00	-0.19939E-01	-0.19939E-01	
0.10066E-00	-0.19939E-01	-0.19939E-01	0.10185E-00	-0.19939E-01	-0.19939E-01	0.10112E-00	-0.19939E-01	-0.19939E-01	0.10061E-00	
-0.19939E-01	-0.19939E-01	0.10065E-00	-0.19939E-01	-0.19939E-01	0.10187E-00	0.28036E 01	0.28036E 01	0.10112E-00	0.28036E 01	
0.28036E 01	0.10061E-00	0.28036E 01	0.28036E 01	0.10065E-00	0.28036E 01	0.28036E 01	0.10188E-00	0.28036E 01	0.28036E 01	
0.10112E-00	0.28036E 01	0.28036E 01	0.10061E-00	0.28036E 01	0.28036E 01	0.10065E-00	0.28036E 01	0.28036E 01	0.10188E-00	
0.28036E 01	0.28036E 01	0.10112E-00	0.28036E 01	0.28036E 01	0.10061E-00	0.28036E 01	0.28036E 01	0.10065E-00	0.28036E 01	
0.28036E 01	0.10188E-00	0.28036E 01	0.28036E 01	0.10111E-00	0.28036E 01	0.28036E 01	0.10060E-00	0.28036E 01	0.28036E 01	
0.10064E-00	0.28036E 01	0.28036E 01	0.10188E-00	0.14587E 01	0.26671E 01	0.11158E-00	0.14587E 01	0.26671E 01	0.11085E-00	
0.14587E 01	0.26671E 01	0.11092E-00	0.14587E 01	0.26671E 01	0.11263E-00	0.40873E-00	0.94666E 01			
EXTERNAL										
0.	0.	0.	0.							
R-C PRODUCTS										
0.90385E 02	0.54844E 02	0.31565E 03	0.90385E 02	0.54844E 02	0.33015E 03	0.90385E 02	0.54844E 02	0.32917E 03	0.90385E 02	
0.54844E 02	0.30092E 03	0.99665E 02	0.37830E 02	0.22921E 03	0.99665E 02	0.37830E 02	0.23640E 03	0.99665E 02	0.37830E 02	
0.23589E 03	0.99665E 02	0.37830E 02	0.22174E 03	0.10008E 03	0.37665E 02	0.22779E 03	0.10008E 03	0.37665E 02	0.23487E 03	
0.10008E 03	0.37665E 02	0.23437E 03	0.10008E 03	0.37665E 02	0.22043E 03	0.27371E 05	0.10688E 05	0.39397E 03	0.27371E 05	
0.10688E 05	0.41725E 03	0.27371E 05	0.10688E 05	0.41556E 03	0.27371E 05	0.10688E 05	0.37057E 03	0.29054E 05	0.10935E 05	
0.39397E 03	0.29054E 05	0.10935E 05	0.41725E 03	0.29054E 05	0.10935E 05	0.41556E 03	0.29054E 05	0.10935E 05	0.37057E 03	
0.29054E 05	0.10935E 05	0.39397E 03	0.29054E 05	0.10935E 05	0.41725E 03	0.29054E 05	0.10935E 05	0.41556E 03	0.29054E 05	
0.10935E 05	0.37057E 03	0.27255E 05	0.10794E 05	0.39823E 03	0.27255E 05	0.10794E 05	0.42204E 03	0.27255E 05	0.10794E 05	
0.42031E 03	0.27255E 05	0.10794E 05	0.37435E 03	0.23695E 05	0.15510E 05	0.52029E 03	0.23695E 05	0.15510E 05	0.56335E 03	
0.23695E 05	0.15510E 05	0.56029E 03	0.23695E 05	0.15510E 05	0.47883E 03	0.67275E 03	0.60154E 04			
EXTERNAL										
0.	0.	0.	0.							

ENTERING RECALC 30.094 538.474 538.605 11.1 - 18.845

"REPRODUCIBILITY OF THE ORIGINAL PAGE IS POOR."

TABLE 5-3 (CONTINUED)

```
PRESSURIZATION PROGRAM TEST CASE (NITROGEN TETROXIDE)   DATE

THETA= 0.5050000E 04 D THETA= 0.100E-00 RC MIN=.20000E 01 NODE  0. PREV. D THETA=.19000E 01 GRAVITY= 1.000 ANGLE= 0.

TOTAL PRESSURE      PARTIAL CONDENSIBLE PARTIAL NONCONDENS.
 0.29553E 02          0.18844E 02          0.10744E 02

TEMPERATURE AV GAS  AVERAGE LIQUID       AVERAGE ALL          DELTA TEMP.
 0.53847E 03          0.53858E 03          0.53858E 03          0.

MAXIMUM LIQ. NODE   MAX LIQ SURF NODE    MAX SURF GAS NODE    T S
 0.53858E 03          0.53860E 03          0.53850E 03          0.53853E 03

VOLUME OF GAS       MASS CONDENSIBLE     MASS NONCONDENSIBLE  SUM DELTA MASSES
 0.16802E 01          0.36200E-00          0.12464E-01          0.35106E-00

SUM MASS COND VEN.  SUM MASS NONC VENT   SUM MASS COND ADDED  SUM MASS NONC ADDED
 0.                   0.                   0.                   0.12442E-01

MASS OF LIQUID      MASS LIQUID USED     MASS LIQUID ADDED    MASS GAS USED
 0.29821E 03          0.28872E 01          0.                   0.

SUM MASS LIQ USED   SUM MASS LIQ ADDED   DELTA VOLUME
 0.14436E 03          0.                  -0.65177E-01

SUM EXT HEAT
-0.94470E-02

FMGA                HEL BOT PRESSURE     HEL BOT TEMP.        T SUB X              HELIUM WEIGHT        PREVIOUS WEIGHT
 0.51775E-03          0.14526E 04          0.53379E 03          0.53379E 03          0.56678E 00          0.11102E-01

SC GAS              SC LIQ               SC INT               SC ALL               T LA                 RHO LIQ
 0.43644E-00          0.10622E 03          0.22429E 02          0.10665E 03          0.46000E 03          0.88815E 02
CP GASC             CP GASN              CP LIQ               K GAS C              K GAS N              K LIQ
 0.10679E 01          0.74301E 00          0.37408E-00          0.67383E-01          0.87028E-01          0.74796E-01
Z C                 Z N                  Z X                  CP X                 R LAM                GAMMA
 0.69506E 00          0.10007E 01          0.10015E 01          0.74262E 00          0.17657E 03          0.13150E 01

TEMPERATURES
   0.53847E 03  0.53847E 03  0.53800E 03  0.53847E 03  0.53847E 03  0.52600E 03  0.53847E 03  0.53847E 03  0.52895E 03  0.53847E 03
   0.53847E 03  0.55246E 03  0.53847E 03  0.53847E 03  0.53835E 03  0.53847E 03  0.53847E 03  0.53052E 03  0.53847E 03  0.53847E 03
   0.53112E 03  0.53847E 03  0.53847E 03  0.55006E 03  0.53847E 03  0.53847E 03  0.53836E 03  0.53847E 03  0.53847E 03  0.53031E 03
   0.53847E 03  0.53847E 03  0.53092E 03  0.53847E 03  0.53847E 03  0.55040E 03  0.53858E 03  0.53858E 03  0.53836E 03  0.53858E 03
   0.53858E 03  0.53025E 03  0.53858E 03  0.53858E 03  0.53087E 03  0.53858E 03  0.53858E 03  0.55049E 03  0.53858E 03  0.53858E 03
   0.53836E 03  0.53858E 03  0.53858E 03  0.53025E 03  0.53858E 03  0.53858E 03  0.53087E 03  0.53858E 03  0.53858E 03  0.55049E 03
   0.53858E 03  0.53858E 03  0.53836E 03  0.53858E 03  0.53858E 03  0.53025E 03  0.53858E 03  0.53858E 03  0.53087E 03  0.53858E 03
   0.53858E 03  0.55057E 03  0.53858E 03  0.53858E 03  0.53835E 03  0.53858E 03  0.53858E 03  0.53015E 03  0.53858E 03  0.53858E 03
   0.53079E 03  0.53858E 03  0.53858E 03  0.55058E 03  0.53858E 03  0.53858E 03  0.53798E 03  0.53858E 03  0.53858E 03  0.52744E 03
   0.53858E 03  0.53858E 03  0.52844E 03  0.53858E 03  0.53858E 03  0.55321E 03  0.53379E 03  0.54177E 03
 EXTERNAL
   0.52500E 03  0.41500E 03  0.42400E 03  0.52000E 03
```


LOCKHEED
CALIFORNIA COMPANY

"REPRODUCIBILITY OF THE ORIGINAL PAGE IS POOR."

LOCKHEED
CALIFORNIA COMPANY

TABLE 5-3 (CONTINUED)

RESISTORS										
0.20269E 05	0.37094E 04	0.20269E 05	0.37094E 04	0.20269E 05	0.37094E 04	0.20269E 05	0.37094E 04	0.37665E 05	0.11299E 06	
0.11994E 06	0.37665E 05	0.11299E 06	0.11994E 06	0.37665E 05	0.11299E 06	0.12048E 06	0.37665E 05	0.11299E 06	0.11820E 06	
0.75251E 04	0.27544E 04	0.75251E 04	0.27544E 04	0.75251E 04	0.27544E 04	0.75251E 04	0.27544E 04	0.75251E 04	0.27544E 04	
0.75251E 04	0.27544E 04	0.75251E 04	0.27544E 04	0.75251E 04	0.27544E 04	0.15535E 05	0.56862E 04	0.15535E 05	0.56862E 04	
0.15535E 05	0.56862E 04	0.15535E 05	0.56862E 04	0.15535E 05	0.56862E 04	0.15535E 05	0.56862E 04	0.15535E 05	0.56862E 04	
0.15535E 05	0.56862E 04	0.15535E 05	0.56862E 04	0.15535E 05	0.56862E 04	0.15535E 05	0.56862E 04	0.15535E 05	0.56862E 04	
0.15535E 05	0.56862E 04	0.15535E 05	0.56862E 04	0.15535E 05	0.56862E 04	0.15535E 05	0.56862E 04	0.46174E 05	0.19308E 06	
0.29314E 06	0.46174E 05	0.19308E 06	0.29027E 06	0.46174E 05	0.19308E 06	0.29487E 06	0.46174E 05	0.19308E 06	0.29037E 06	
0.46174E 05	0.19308E 06	0.29314E 06	0.46174E 05	0.19308E 06	0.29507E 06	0.46174E 05	0.19308E 06	0.29492E 06	0.46174E 05	
0.19308E 06	0.29029E 06	0.95323E 05	0.39860E 06	0.29514E 06	0.95323E 05	0.39860E 06	0.29509E 06	0.95323E 05	0.39860E 06	
0.29494E 06	0.95323E 05	0.39860E 06	0.29027E 06	0.95323E 05	0.39860E 06	0.29314E 06	0.95323E 05	0.39860E 06	0.29509E 06	
0.95323E 05	0.39860E 06	0.29494E 06	0.95323E 05	0.39860E 06	0.29027E 06	0.95323E 05	0.39860E 06	0.29314E 06	0.95323E 05	
0.39860E 06	0.29509E 06	0.95323E 05	0.39860E 06	0.29494E 06	0.95323E 05	0.39860E 06	0.29027E 06	0.95323E 05	0.39860E 06	
0.29314E 06	0.95323E 05	0.39860E 06	0.29511E 06	0.95323E 05	0.39860E 06	0.29495E 06	0.95323E 05	0.39660E 06	0.29025E 06	
0.86899E 05	0.86899E 05	0.97526E 05	0.86899E 05	0.86899E 05	0.98152E 05	0.86899E 05	0.86899E 05	0.98103E 05	0.86899E 05	
0.86899E 05	0.86876E 05	0.86899E 05	0.86899E 05	0.97525E 05	0.86899E 05	0.86899E 05	0.98169E 05	0.86899E 05	0.86899E 05	
0.98119E 05	0.86899E 05	0.86899E 05	0.96579E 05	0.17940E 06	0.17940E 06	0.97525E 05	0.17940E 06	0.17940E 06	0.98173E 05	
0.17940E 06	0.17940E 06	0.98124E 05	0.17940E 06	0.17940E 06	0.96572E 05	0.17940E 06	0.17940E 06	0.97525E 05	0.17940E 06	
0.17940E 06	0.98173E 05	0.17940E 06	0.17940E 06	0.98124E 05	0.17940E 06	0.96572E 05	0.17940E 06	0.17940E 06	0.17940E 06	
0.97525E 05	0.17940E 06	0.17940E 06	0.98174E 05	0.17940E 06	0.17940E 06	0.98124E 05	0.17940E 06	0.17940E 06	0.96572E 05	
0.81114E 05	0.10869E 06	0.13334E 06	0.81114E 05	0.10869E 06	0.13444E 06	0.81114E 05	0.10869E 06	0.13433E 06	0.81114E 05	
0.10869E 06	0.13179E 06	0.41843E 05	0.76579E 04	0.41843E 05	0.76578E 04	0.41843E 05	0.76579E 04	0.41843E 05	0.76579E 04	
0.77756E 05	0.23327E 06	0.11960E 06	0.77756E 05	0.23327E 06	0.12063E 06	0.77756E 05	0.23327E 06	0.12053E 06	0.77756E 05	
0.23327E 06	0.11813E 06	0.83728E 05	0.11219E 06	0.13330E 06	0.83728E 05	0.11219E 06	0.13420E 06	0.83728E 05	0.11219E 06	
0.13413E 06	0.83728E 05	0.11219E 06	0.13199E 06	0.16465E 04	0.10350E 04					
EXTERNAL										
0.16794E 05	0.18713E 05	0.18713E 05	0.18713E 05	0.18713E 05	0.18713E 05	0.18714E 05	0.16795E 05	0.	0.	
0.23725E 05	0.26237E 05	0.26256E 05	0.26261E 05	0.26261E 05	0.26261E 05	0.26269E 05	0.23770E 05	0.	0.	
0.23040E 05	0.25512E 05	0.[illegible]529E 05	0.25533E 05	0.25533E 05	0.25534E 05	0.25540E 05	0.23079E 05	0.	0.	
0.12476E 05	0.13996E 05	0.[illegible]94E 05	0.13981E 05	0.13981E 05	0.13981E 05	0.13978E 05	0.12451E 05	0.	0.	
CAPACITORS										
-0.10375E-01	-0.18970E-01	0.11158E-00	-0.10375E-01	-0.18970E-01	0.11088E-00	-0.10375E-01	-0.18970E-01	0.11095E-00	-0.10375E-01	
-0.18970E-01	0.11258E-00	-0.19941E-01	-0.19941E-01	0.10111E-00	-0.19941E-01	-0.19941E-01	0.10062E-00	-0.19941E-01	-0.19941E-01	
0.10066E-00	-0.19941E-01	-0.19941E-01	0.10185E-00	-0.19941E-01	-0.19941E-01	0.10111E-00	-0.19941E-01	-0.19941E-01	0.10061E-00	
-0.19941E-01	-0.19941E-01	0.10065E-00	-0.19941E-01	-0.19941E-01	0.10187E-00	0.28036E 01	0.28036E 01	0.10111E-00	0.28036E 01	
0.28036E 01	0.10060E-00	0.28036E 01	0.28036E 01	0.10064E-00	0.28036E 01	0.28036E 01	0.10188E-00	0.28036E 01	0.28036E 01	
0.10111E-00	0.28036E 01	0.28036E 01	0.10060E-00	0.28036E 01	0.10064E-00	0.28036E 01	0.28036E 01	0.10188E-00	0.28036E 01	
0.28036E 01	0.28036E 01	0.10111E-00	0.28036E 01	0.28036E 01	0.10060E-00	0.28036E 01	0.28036E 01	0.10064E-00	0.28036E 01	
0.28036E 01	0.10188E-00	0.28036E 01	0.28036E 01	0.10111E-00	0.28036E 01	0.28036E 01	0.10060E-00	0.28036E 01	0.28036E 01	
0.10064E-00	0.28036E 01	0.28036E 01	0.10188E-00	0.14587E 01	0.26671E 01	0.11158E-00	0.14587E 01	0.26671E 01	0.11084E-00	
0.14587E 01	0.26671E 01	0.11091E-00	0.14587E 01	0.26671E 01	0.11263E-00	0.40836E-00	0.94649E 01			
EXTERNAL										
0.	0.	0.	0.							
R-C PRODUCTS										
0.90404E 02	0.54856E 02	0.31568E 03	0.90404E 02	0.54856E 02	0.33017E 03	0.90404E 02	0.54856E 02	0.32919E 03	0.90404E 02	
0.54856E 02	0.30094E 03	0.99686E 02	0.37838E 02	0.22923E 03	0.99686E 02	0.37838E 02	0.23642E 03	0.99686E 02	0.37838E 02	
0.23591E 03	0.99686E 02	0.37838E 02	0.22176E 03	0.10010E 03	0.37673E 02	0.22781E 03	0.10010E 03	0.37673E 02	0.23489E 03	
0.10010E 03	0.37673E 02	0.23439E 03	0.10010E 03	0.37673E 02	0.22045E 03	0.27370E 05	0.10687E 05	0.39395E 03	0.27370E 05	
0.10687E 05	0.41724E 03	0.27370E 05	0.10687E 05	0.41555E 03	0.27370E 05	0.10687E 05	0.37056E 03	0.29052E 05	0.10934E 05	
0.39395E 03	0.29052E 05	0.10934E 05	0.41724E 03	0.29052E 05	0.10934E 05	0.41555E 03	0.29052E 05	0.10934E 05	0.37056E 03	
0.29052E 05	0.10934E 05	0.39395E 03	0.29052E 05	0.10934E 05	0.41724E 03	0.29052E 05	0.10934E 05	0.41555E 03	0.29052E 05	
0.10934E 05	0.37056E 03	0.27254E 05	0.10794E 05	0.39822E 03	0.27254E 05	0.10794E 05	0.42202E 03	0.27254E 05	0.10794E 05	
0.42030E 03	0.27254E 05	0.10794E 05	0.37434E 03	0.23694E 05	0.15509E 05	0.52028E 03	0.23694E 05	0.15509E 05	0.56334E 03	
0.23694E 05	0.15509E 05	0.56028E 03	0.23694E 05	0.15509E 05	0.47881E 03	0.67237E 03	0.60151E 04			
EXTERNAL										
0.	0.	0.	0.							

ENTERING RECALC 30.095 538.449 538.563 11.167 18.835

BLANK PAGE

APPENDIX A

NOMENCLATURE

a	Distance from a fixed tank reference point to vapor-liquid interface, ft
A	Cross-sectional area, ft^2
C	A constant
C_p	Heat Capacity, (P = const.) Btu/lb_m, F
C_v	Heat Capacity, (V = const.) Btu/lb_m, F
d	Fluid depth, ft
d'	Check depth for comparison, ft
D	Vertical distance from reference plane, ft; Diffusivity, cm^2/sec;Diameter, ft
D_{NODE}	Node vertical distance from reference plane, ft
E	Internal energy, Btu/lb_m
EPSIGT	Tolerance on average gas temperature change between successive time-steps, ^oR
EPSILT	Tolerance on average liquid temperature change between succesive time-steps, ^oR
EPSIPR	Tolerance on pressure change between successive time-steps, psi
fr	Friction factor
f	Radiation shape factor
F	Multiplying factor
FMLU	Liquid use rate, lb_m/sec
FMLA	Liquid addition rate, lb_m/sec
g	Net acceleration vector, ft/sec^2; local gravity vector, ft/sec^2
g_o	Standard acceleration of gravity, ft/sec^2
G	Mass flow rate, lb_m/ft^2sec
G_1, G_2,G_3	Constants
GOLD	Magnitude of G at previous time step

LOCKHEED
CALIFORNIA COMPANY

ANGOLD	Angle of g at previous time step
h	Fluid film heat transfer coefficient, Btu/hr ft^2 °F
H	Enthalpy, Btu/lb_m
HEXT	Net heat leak into tank, Btu
HELW	Mass of gas in pressurant bottle, lb.
I	Radial node position parameter, ($I \geq 1$)
I'	Distance along radius to interface, ft
I_{NODE}	Node radius, ft
J	Circumferential node position parameter, ($J \geq 0$)
K	Thermal conductivity, Btu/hr ft °F
K	Axial node position parameter, ($K \geq 0$)
K_{NODE}	Node axial distance from reference plane, ft
l	Length, ft
ℓ'	Projected length, ft
L	Length, ft
m	Mass, lb_m
$\dot{m}$	Time rate of change of mass, lb_m/sec
M	Molecular weight, lb_m/lb mole
N	Number of specific parameter items
N_{B_o}	Bond number, $(g\rho L^2/\sigma)$, dimensionless
N_{Gr}	Grashof number, $(g\beta\Delta T\ L^3\rho^2/\mu^2)$, dimensionless
N_{Pr}	Prandtl number, $(C_p\mu/k)$, dimensionless
N_{Ra}	Rayleigh number, $(N_{Gr} \cdot N_{Pr})$, dimensionless
N_{Re}	Reynold's number, (LG/μ), dimensionless
p	Partial pressure, lb_f/in^2
OLD	Previous value
P	System pressure, lb_f/in^2
Q	Transferred thermal energy, Btu
R	Radius, ft.; Universal gas constant, 1545 ft-lb_f/lb mole, °R

LOCKHEED
CALIFORNIA COMPANY

R'_{NODE}	Radius to transposed node, ft
S	Surface area, ft^2
t	Thickness, ft
T	Temperature, °F
V	Volume, ft^3
V', V'', V'''	Check volumes for node depth computations, ft^3
W	Mass, lb_m
y	Boundary layer thickness, ft
Z	Compressibility factor

Greek alphabet

α	Angle subtended by the wetted surface of a cylinder when C = 1; and the corresponding angle subtended by the dry surface when C = 0.
α'	Translation of α for node position comparison
α'_1, α'_2	Limits of α'
α_{NODE}	Angle of node from the tank normal axis
β	Coefficient of Thermal expansion
γ	Specific heat ratio
Δ	Differential
ϵ	Emissivity; Tolerance
θ	Time, sec
λ	Latent heat of vaporization, Btu/lb_m
ρ	Density, lb_m/ft^3
σ	Stefan-Boltzmann constant $Btu/hr\ ft^2\ °R^4$; surface tension, lb_f/ft
ψ	Angle between net accelerating vector and the tank major axis

Symbolic

$\bar{a}$	Bar over letter denotes average value of the parameter

LOCKHEED
CALIFORNIA COMPANY

$\dot{m}$	Time rate of change of mass, lb_m/sec
$\sum_{i=1}^{n}$	Summation over the liquid region nodes
$\sum_{i=1}^{m}$	Summation over the gas region nodes
$\sum_{i=1}^{s}$	Summation over the liquid surface nodes

Subscripts

A	Added
ALL	All nodes
B	Insulation layers
BL	Boundary Layer
C	Condensable gas
cap	Capacitor
cc	Condensed or evaporated (- = condensed; + = evaporated)
CYL	Cylinder
f	Friction
G	Total gas (condensable and noncondensable)
H	Hemisphere of radius R_T or pressurant property
I	Annular segments inside the tank
INT	All interfacial nodes
J	Radial segments
K	Axial segments
L	Liquid
MAX	Maximum

LOCKHEED
CALIFORNIA COMPANY

MIN	Minimum
N	Noncondensable gas
P	Pressure
res	Resistor
R	Radiation
SAT	Saturated at P_{MAX}
S	Liquid-gas interface
T	Tank
TS	Thermal shield or outer tank shell
TW	Tank wall
U	Withdrawn
V	Vented
X	Pressurant parameters
Y	Liquid node adjacent liquid-gas interface
o	At beginning of problem ($\theta = 0$)
1	At beginning of computing interval $\Delta\theta$
2	At end of computing interval $\Delta\theta$
I, II, III	Regions as shown in Figure 4-8

BLANK PAGE

APPENDIX B

PROGRAM DECK ARRANGEMENT AND LISTING

The Program deck for Thermal Analyser Version C (including the Fluid Storage and Pressurization Program) consists of a program library tape editing program. The decks selected from the library tape are peculiar to the pressurization program. The most significant difference in the thermal analyzer programs is a change in data storage allocation to 12000 storages. (Versions A and B, without pressurization, have 16000 storage allocation.) In addition, certain subroutines available in versions A and B (described in Reference 2) are not avilable in version C. In addition, certain other modifications have been made in various subroutines to account for pressurization. Therefore, most deck names for Version C are different from the deck names for versions A and B. Version C deck names are four characters each ending in 4. For the convenience of the user, the function and print routines retain the same deck names, FUNCT and PRINT.

As shown in Figure B-1 the Function and Print subroutines are inserted between the two program deck cards:

```
$IEDIT        SYSIN1
$ENTRY        MAN4
```

The input data deck is inserted between the next two program deck cards:

```
$DATA
END
```

The order of the input data is:

1. CIDΛΛ case identification (card is optional)
2. NET (Flag indicating pressurization input follows)
3. cards containing pressurization input data

LOCKHEED
CALIFORNIA COMPANY

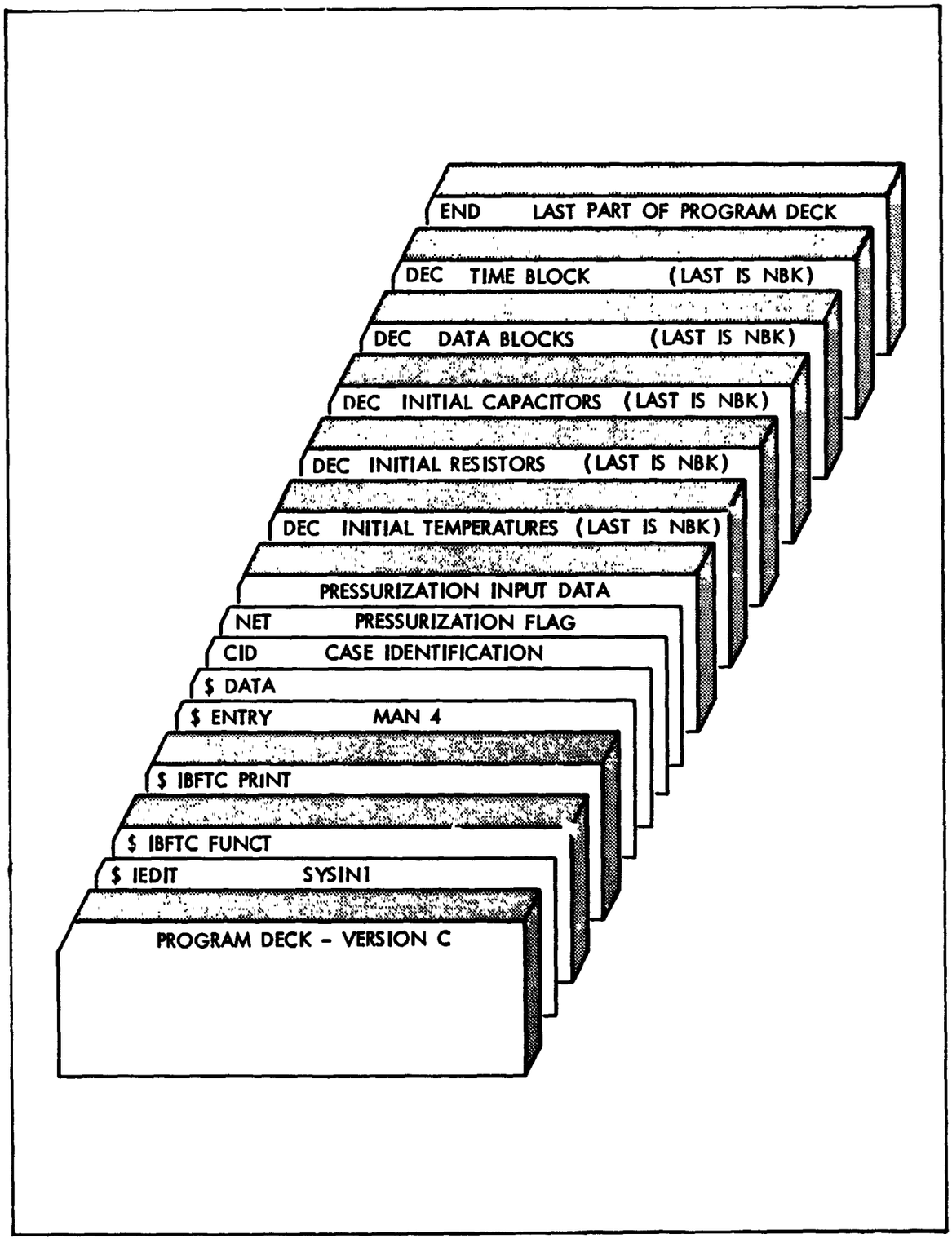

Figure B-1. FORTRAN Source Deck Setup for Fluid Storage and Pressurization Program

4. DECxx cards containing initial temperature numbers and values.

The NET card, followed immediately by the pressurization input data, may appear anywhere within the temperature block. For convenience it has been shown first here.

5. NBK (Flag indicating end of block.)

6. DECxx Cards containing resistor numbers, node connection, and resistor values.

7. NBK

8. DECxx Cards containing capacitor numbers and values.

9. NBK

10. DECΛΛ N Cards containing data block numbers, data blocks, and negative data block numbers.

11. NBK

12. DECxx Print interval, final time, initial time

13. NBK

14. ENDΛΛ Flag indicating end of cases.

15. Remainder of program deck

Table B-1 is a complete listing of the source program cards. The program decks can be set up for use with either the IBM 7094 or 7094/7040 direct-coupled digital computer, as discussed in Reference 2.

LOCKHEED
CALIFORNIA COMPANY

"REPRODUCIBILITY OF THE ORIGINAL PAGE IS POOR."

TABLE B-1 PROGRAM LISTING

```
$IBFTC EXETIV  REF                                                      EXETV001
      SUBROUTINE EXETIV (NLAG)                                          EXETV002
C     AS OF 6/30/65
      COMMON P(14000),M(16),MAXT,MAXR,MAXC,KSP,KST,KURV7,NCVG,NSTG,NFAB EXETV010
      COMMON NABL(10),NKSP,LMMF,NRMF,NREAD,CC(12)                       EXETV020
      COMMON NP,MAXP,MAXV,MAXS,MAXM                                     EXET 020
      COMMON /CP2/ ERROR,MAXMUM                                         EXET021
      COMMON /CPITM/ ITIMO                                              EXET006
      COMMON /CPNET/NTYPE,TKRAD,TKLEN,TEMPZ,NRAD,NCIR,NSECT,NTNK,
     1 TKTHK(5),TKWAL1,TKWAL2,INNOD,KOUT,
     2          FMCO,FMNO,FMOLC,VGAS,IGC,IPRESS,FMOLN,FMIN,FMAX,PMIN,
     3          PMAX,FMOLX,TSAT,ANGLE,TX,PR,TANKV,
     5          RADI(4),HELB(24),LLFLOW,HELT,HELP,HELW
     6          ,ISTRAT,SAREA,IOPTSX(5),FMULTF(5),STRINP(20)
     7           ,GSOLD (2),TTOPEL(2),DLIQ   ,NLSURF,ICALL
      EQUIVALENCE  (FMULTF(1), FLT),(FMULTF(2),FLRL)
      COMMON /CONTR/  TLIQ,SCLIQ,TGAS,SCGAS,SCALL,TLSMAX,SCINT,TGGAS,
     1COMUN(5),DMCC,TLMAX,TALL,FMLO,GAVITY,FKG,FKL,ZC,PC,ZN,FMLG,FMLA,
     2          ZX,CPX,TLA,GAMMA,RHOL,RHOG,CPL,CPG,RLAM,MCNT,PN,FMC,FMN,R
      COMMON/CHP/SMCV,SMCA,SMNV,SMNA,SDMCC,SMLAS,SMLUS,SUMEX,HELWS,GOLD,
     1           ANGOLD,FMG,FML,TS,DELTS,DELVS,FMGAS
      COMMON /CPPLT/NPLT,NEND,KSKIP
      COMMON /EXFLG/NTFLG,NSAV,NFLG                                     HTB 006
      COMMON /EXPLT/ NLFLG
C     THE FOLLOWING TABLES HAVE BEEN PACKED INTO THE END OF THE P
C     REGION.  THEY REACH DOWN TO P(12026).***************************
      DIMENSION VS(250),FLA(500),NUMTAB(100),NEXW(125),NSEX(125),MM(125)
      DIMENSION LNO(250),NLNNS(125),NGNNS(125)
      EQUIVALENCE (P(13251),VS),(P(13501),FLA)
     1,(P(12526),NUMTAB),(P(12626),NEXW),(P(12751),NSEX),(P(12876),MM)
      EQUIVALENCE(P(12276),LNO),(P(12151),NLNNS),(P(12026),NGNNS)
      MAXMUM=14000                                                      EXET007
      ITIMO = 1                                                         EXET0069
      NEND=0
      NPLT=1
      ERROR=0.                                                          EXET 025
      NTYPE=0                                                           EXET 025
      NTFLG=0                                                           EXET 026
    5 IR=NLAG                                                           EXETV030
    8 CALL COMPIL(IR)                                                   EXETV060
      NLAG=IR                                                           EXETV070
      IF (ERROR.EQ.0..AND.NEND.EQ.0) CALL EXCUT(NLAG)                   EXET072
      IF (ERROR.NE.0.) WRITE (6,100)                                    EXET074
  100 FORMAT(44HOERROR HAS OCCURRED SOMEWHERE IN ABOVE CASE.)           EXET076
      IF (LMMF.GT.2) CALL MFOUT                                         EXET077
      IF (NPLT.GT.1) NBIT=1                                             EXET0771
      IF (NBIT.GT.0) CALL BITAP
      IF (NEND.GT.0) RETURN                                             EXET0772
      IF (ERROR.GT.1.) ERROR=0.                                         EXET0773
      IF (1.EQ.1) GO TO 5                                               EXET078
      RETURN                                                            EXET079
      END                                                               EXET099
```


LOCKHEED
CALIFORNIA COMPANY

TABLE B-1 (CONTINUED)

```
$IBFTC INSIDE                                                          1911001
      SUBROUTINE INSIDE                                                1911002
C     AS OF 6/30/65
      COMMON P(14000)
      COMMON /CPNET/NTYPE,TKRAD,TKLEN,TEMPZ,NRAD,NCIR,NSECT,NTNK,
     1 TKTHK(5),TKWAL1,TKWAL2,INNOD,KOUT,
     2          FMCO,FMNO,FMOLC,VGAS,IGC,IPRESS,FMOLN,FMIN,FMAX,PMIN,
     3          PMAX,FMOLX,TSAT,ANGLE,TX,PR,TANKV,
     5          RADI(4),HELB(14),LLFLOW,HELT,HELP,HELW
     6          ,ISTRAT,SAREA,IOPTSX(5),FMULTF(5),STRINP(20)
     7           ,GSOLD (2),TTOPBL(2),DLIQ   ,NLSURF,ICALL
      EQUIVALENCE (FMULTF(1), FLT),(FMULTF(2),FLKL)
      DIMENSION VS(250),DUMMY(500)
     1  ,NUMTAB(100),NEXW(125),NSEX(125),MM(125)
      DIMENSION LNO(250),NLNNS(125),NGNNS(125)
      EQUIVALENCE (P(13251),VS),(P(13501),DUMMY)
     1,(P(12526),NUMTAB),(P(12626),NEXW),(P(12751),NSEX),(P(12876),MM)
      EQUIVALENCE(P(12276),LNO),(P(12151),NLNNS),(P(12026),NGNNS)
      REAL LEN                                                         1911007
      PI = 3.14159265                                                  1911004
      V=0.                                                             INSD
      FLA=0.                                                           INSD
      CALL SREAD                                                       1911005
      INODE=INNOD
      REWIND 9
      REWIND 10
C     TANKV = VOLUME OF TANK
      VOLX=PI*TKRAD**2                                                 INSD007
      IF (NTYPE.EQ.2) TANKV=1.33333*VOLX*TKRAD                         INSD0071
      IF (NTYPE.EQ.1) TANKV=VOLX*(1.33333*TKRAD+TKLEN)                 INSD0072
      ITIM= 1                                                          1911008
      SUM =0.0                                                         1911009
      DO 10 I=1,NTNK                                                   1911010
      SUM =SUM+ TKTHK(I)                                               1911011
   10 CONTINUE                                                         1911012
      FNRAD =NRAD                                                      1911013
      FNCIR =NCIR                                                      1911014
      FNSECT= NSECT                                                    1911015
      KEYNOD=  -1                                                      1911016
C     IF CYLINDER NTYPE=1 ,IF SPHERE  NTYPE=2                          1911017
      PI2= 3.14159265*2.0                                              1911018
      NRES =0                                                          1911019
C     COMPUTE  RADIAL RESISTORS FOR HEMISPHERE                         1911021
   15 KK = NRAD/4                                                      1911022
      M = 0                                                            1911023
      K1 = (NCIR+NTNK +1)                                              1911024
      JJ =  NRAD                                                       1911025
      J1 =  NCIR + NTNK +1                                             1911026
      II = NCIR +NTNK                                                  1911027
      DO   50  KI= 1,KK                                                1911028
      K = KI-1                                                         1911029
      DO   40  JI= 1,JJ                                                1911030
      J=JI -1                                                          1911031
      DO   30   I= 1,II,1                                              1911032
      M = M+1                                                          1911033
      NODE =   M-1    +INODE                                           1911034
   29 NRES =NRES+1                                                     1911056
      NODE1= NODE+1                                                    1911057
      WRITE(10,8002) NRES,NODE,NODE1,FLA                               1911058
 8002 FORMAT(5HDEC01,3I5,E10.3,50X)                                    INSD059
   30 CONTINUE                                                         1911060
```


LOCKHEED
CALIFORNIA COMPANY

TABLE B-1 (CONTINUED)

```
      M= M+1                                                          1911061
 40   CONTINUE                                                        1911062
 50   CONTINUE                                                        1911063
      M = 0                                                           1911064
      II =II+1                                                        1911065
      DO  80 KI =1,KK                                                 1911066
      K = KI-1                                                        1911067
      DO  70 JI =1,JJ                                                 1911068
      J = JI-1                                                        1911069
      DO  60 I  =1,II                                                 1911070
      M  =  M  +  1                                                   1911071
      NODE =          M +INODE - 1                                    1911072
      NODE1 = NODE +NCIR +NTNK+ 1                                     1911073
      IF(JI.EQ.JJ) NODE1 = NODE-(NRAD-1)*(NCIR+NTNK+1)                1911074
      IF(I.LE.NCIR+1) GO TO 59                                        INSD075
      IF(I.NE.II) GO TO 60                                            INSD085
 59   NRES = NRES + 1                                                 1911089
      WRITE(10,8002) NRES,NODE,NODE1,FLA                              1911090
 60   CONTINUE                                                        1911091
 70   CONTINUE                                                        1911092
 80   CONTINUE                                                        1911093
      M = 0                                                           1911094
      KK =KK-1                                                        1911095
      IF (KK*JJ*II.EQ.0)  GO TO 115
      DO 110 KI=1,KK                                                  1911096
      K = KI-1                                                        1911097
      DO 100 JI=1,JJ                                                  1911098
      J = JI-1                                                        1911099
      DO 90 I=1,II                                                    1911100
      M=M+1
      NODE =    M-1+INODE                                             1911101
      NODE1=    NODE +(NRAD)*(NCIR + NTNK + 1)                        1911102
      IF(I.LE.NCIR+1) GO TO 89                                        INSD103
      IF(I.NE.II) GO TO 90                                            INSD112
 89   NRES =  NRES + 1                                                1911116
      WRITE(10,8002) NRES,NODE,NODE1,FLA                              1911117
 90   CONTINUE                                                        1911118
 100  CONTINUE                                                        1911119
 110  CONTINUE                                                        1911120
C     CALCULATE  CONDENSOR BLOCK LIST FOR SPHERE                      1911121
 115  CONTINUE
      M =0                                                            1911122
      KK = NRAD/4                                                     1911123
      JJ = NRAD                                                       1911124
      II = NCIR + NTNK + 1                                            1911125
      DO  140  KI= 1,KK                                               1911126
      K =KI-1                                                         1911127
      CON =-SIN(FLOAT(K)*PI2/FNRAD) +SIN(FLOAT(K+1)*PI2/FNRAD)        1911128
      DO  130  JI= 1,JJ                                               1911129
      J = JI-1                                                        19111291
      DO  120  I =1,II                                                1911130
      M = M+1                                                         1911131
      NODE = M -1 +INODE                                              1911132
 119  WRITE(9,8003) NODE,V                                            1911147
 8003 FORMAT(5HDEC01,I5,E10.3,60X)                                    INSD148
 120  CONTINUE                                                        1911149
 130  CONTINUE                                                        1911150
 140  CONTINUE                                                        1911151
C     TEST  KEYNODE                                                   1911152
C                                                                     1911153
C                                                                     1911154
```


LOCKHEED
CALIFORNIA COMPANY

TABLE B-1 (CONTINUED)

```
C
      IF( KEYNOD.EQ.-1)GO TO 200
      JJ = NRAD
      II = NCIR +NTNK + 1
      M =0
C     CALCULATE CONNECTING RESISTORS SPHERE TO SPHERE AND SPHERE TO
C     CYLINDER
      DO 170 JI =1,JJ
      J= JI-1
      DO 160 I  =1,II
      M= M+1
      NODE = M-1 +KEYNOD
                  NODE1 = M-1 +INODE
      IF(I.LE.NCIR+1) GO TO 149
      IF(I.NE.II) GO TO 160
  149 NRES=NRES+1
      WRITE(10,8002) NRES,NODE,NODE1,FLA
  160 CONTINUE
  170 CONTINUE
  190 NEND =-1
      WRITE( 9,8002) NEND
      WRITE(10,8002) NEND
      END FILE  9
      END FILE  10
      REWIND 9
      REWIND 10
      RETURN
  200 IF(NTYPE.EQ.1) GO TO 201
      KEYNOD=  INODE
      INODE = (NCIR + NTNK+1)*NRAD**2/4 +INODE
      GO TO 15
  201 KEYNOD = INODE
      INODE = (NCIR + NTNK+1)*NRAD**2/4 + INODE
C     CALCULATE RESISTORS AND CONDENSORS OF CYLINDER BODY
      M = 0
      II = NCIR +NTNK
      JJ =  NRAD
      KK =  NSECT
      DO 230 KI =1,KK
      K = KI-1
      DO 220 JI =1,JJ
      J = JI-1
      DO 210 I  =1,II
      M = M +1
      NODE = M-1 +INODE
      NODE1= NODE +1
  209 NRES = NRES + 1
      WRITE(10,8002) NRES,NODE,NODE1,FLA
  210 CONTINUE
      M = M+1
  220 CONTINUE
  230 CONTINUE
      II =II+1
      M  = 0
      DO  270 KI =1,KK
      K = KI-1
      DO  260 JI =1,JJ
      J = JI-1
      DO  250  I =1,II
      M = M+1
      NODE = M-1 +INODE
```


LOCKHEED
CALIFORNIA COMPANY

TABLE B-1 (CONTINUED)

```
      NODE1=    NODE +NCIR +NTNK + 1                                1911248
 249  IF(JI.EQ.JJ) NODE1 = NODE1 -NRAD*(NCIR + NTNK+1)              1911264
      NRES =NRES +1                                                 1911265
      WRITE(10,8002) NRES,NODE,NODE1,FLA                            1911266
 250  CONTINUE                                                      1911267
 260  CONTINUE                                                      1911268
 270  CONTINUE                                                      1911269
      KK = KK-1                                                     1911270
      LEN =TKLEN /FNSECT                                            1911271
      M =0                                                          1911272
      IF (KK*JJ*II.EQ.0)  GO TO 305
      DO 300 KI =1,KK                                               1911273
      K = KI-1                                                      1911274
      DO 290 JI =1,JJ                                               1911275
      J=JI-1                                                        1911276
      DO 280 I  =1,II                                               1911277
      M=M+1
      NODE = M-1 +INODE                                             1911278
      NODE1 = NODE +(NRAD  )*(NCIR+NTNK+1)                          1911279
      IF(I.LE.NCIR+1) GO TO 279                                     INSD280
      IF(I.NE.II) GO TO 280                                         INSD287
 279  NRES = NRES +1                                                1911291
 ,    WRITE(10,8002) NRES,NODE,NODE1,FLA                            1911292
 280  CONTINUE                                                      1911293
 290  CONTINUE                                                      1911294
 300  CONTINUE                                                      1911295
C     CALCULATE CONDENSORS FOR CYLINDER                             1911296
 305  CONTINUE
      KK =KK+1                                                      1911297
      M = 0                                                         1911298
      DO 330 KI=1,KK                                                1911299
      K = KI-1                                                      1911300
      DO 320 JI=1,JJ                                                1911301
      J = JI-1                                                      1911302
      DO 310 I =1,II                                                1911303
      M =M+1                                                        1911304
      NODE = M -1 +INODE                                            1911305
 309  WRITE( 9,8003) NODE,V                                         1911319
 310  CONTINUE                                                      1911320
 320  CONTINUE                                                      1911321
 330  CONTINUE                                                      1911322
      II = NCIR + NTNK +1                                           1911323
      JJ = NRAD                                                     1911324
      M = 0                                                         1911325
      DO  350 JI =1,JJ                                              1911326
      J  = JI-1                                                     1911327
      DO  340 I =1,II                                               1911328
      M  = M+1                                                      1911329
      NODE  = M-1 +KEYNOD                                           1911330
      NODE1 = M-1 +INODE                                            1911331
      IF(I.LE.NCIR+1) GO TO 349                                     INSD332
      IF(I.NE.II) GO TO 340                                         INSD340
 349  NRES=NRES+1                                                   INSD344
      WRITE(10,8002) NRES ,NODE, NODE1,FLA                          1911345
 340  CONTINUE                                                      1911346
 350  CONTINUE                                                      1911347
      KEYNOD= INODE +(NCIR+NTNK+1)*NRAD *(NSECT-1)                  1911348
      INODE = INODE +(NCIR+NTNK+1)*NRAD *NSECT                      1911349
      GO  TO 15                                                     1911350
      END                                                           1911352
```


LOCKHEED
CALIFORNIA COMPANY

"REPRODUCIBILITY OF THE ORIGINAL PAGE IS POOR."

TABLE B-1 (CONTINUED)

```
$IBFTC SREAD                                                            2266000
      SUBROUTINE SREAD                                                  2266001
C     AS OF 6/30/65                                                     2266002
C     IF KOUT=1        --SOME AUXILIARY PRINT                           2266003
C     IF KOUT=2        --ALL  AUXILIARY PRINT                           2266004
      COMMON P(14000)                                                   2266005
      COMMON /CPNET/NTYPE,TKRAD,TKLEN,TEMPZ,NRAD,NCIR,NSECT,NTNK,       2266006
     1 TKTHK(5),TKWAL1,TKWAL2,INNOD,KOUT,                               2266007
     2          FMCO,FMNO,FMOLC,VGAS,IGC,IPRESS,FMOLN,FMIN,FMAX,PMIN,   2266008
     3          PMAX,FMOLX,TSAT,ANCLE,TX,PR,TANKV,                      2266009
     5          RADI(4),HELB(14),LLFLOW,HELT,HELP,HELW                  2266010
     6          ,ISTRAT,SAREA,IOPTSX(5),FMULTF(5),STRINP(20)            2266011
     7           ,GSOLD (2),TTOPPL(2),DLIQ  ,NLSURF,ICALL               2266012
      EQUIVALENCE  (FMULTF(1), FLT),(FMULTF(2),FLKL)                    2266013
      DIMENSION VS(250),FLA(500),NUMTAB(100),NEXW(125),NSEX(125),MM(125)2266014
      DIMENSION LNO(250),NLNNS(125),NGNNS(125)                          2266015
      EQUIVALENCE (P(13251),VS),(P(13501),FLA)                          2266016
     1,(P(125261),NUMTAB),(P(12626),NEXW),(P(12721),NSEX),(P(12876),MM) 2266017
      EQUIVALENCE(P(12276),LNO),(P(12151),NLNNS),(P(12026),NGNNS)       2266018
      EQUIVALENCE (IOPTSX(1),IRSTRT),(IOPTSX(2),IPTLIQ),                2266019
     1          (IOPTSX(3),LIBTAP),(IOPTSX(4),MTIME )                   2266020
     2          ,(IOPTSX(5),KUT    )                                    2266021
C     MTIME = MACHINE TIME FOR THIS SEGMENT (MINUTES) IF RUN IN SEGMENTS2266022
C     KUT   = TIME(IN SECONDS) AT WHICH CURRENT SEGMENT IS TO BE CUT    2266023
      READ(5,10)  NTYPE,NRAD,NCIR,NSECT,NTNK,INNOD,IGC,IPRESS,KOUT      2266024
     1          ,(IOPTSX(I),I=1,4),KUT1,KUT2,KUT3                       2266025
      KUT     = 1000000*KUT1 + 1000*KUT2 + KUT3                         2266026
      IF (NTYPE.LT.1.OR.NTYPE.GT.2)       GO TO 101                     2266027
      IF (NRAD.LE.0.OR.MOD(NRAD,4).NE.0) GO TO 102                      2266028
      IF (NCIR  .LT.1)                    GO TO 103                     2266029
      IF (NSECT .LT.1)                    GO TO 104                     2266030
      IF (NTNK  .LT.0.OR.NTNK.GT.5)       GO TO 105                     2266031
      IF (IGC   .LT. 1.OR.IGC   .GT.2)     GO TO 106                    2266032
      IF (IPRESS.LT. 1.OR.IPRESS.GT.2)     GO TO 107                    2266033
      READ(5,20)  TKRAD,TKLEN,TEMPZ,TKWAL1,TKWAL2                       2266034
      READ (5,20)  (TKTHK(I),I=1,5)                                     2266035
      READ (5, 20)  PR,VGAS,TSAT,FMOLC,FMOLN,FMOLX,TX                   2266036
      READ (5, 20)  FMIN,FMAX,PMIN,PMAX                                 2266037
      READ (5,20)  (RADI(I),I=1,4)                                      2266038
      READ(5,20)  (HELB(I),I=1,7)                                       2266039
      READ(5,20)   HELB(8),(STRINP(I),I=1,5)                            2266040
      WRITE (6,601)                                                     2266041
     1  NTYPE,NRAD,NCIR,NSECT,NTNK,INNOD,IGC,IPRESS,                    2266042
     2  TKRAD,TKLEN,TEMPZ,TKWAL1,TKWAL2,(TKTHK(I),I=1,5),               2266043
     3  PR,VGAS,TSAT,FMOLC,FMOLN,FMOLX,TX,                              2266044
     4  FMIN,FMAX,PMIN,PMAX,(RADI(I),I=1,4),                            2266045
     5  (HELB(I),I=1,8),(STRINP(I),I=1,5)                               2266046
      HELB(5) = HELB(5)+460.                                            2266047
      HELT = HELB(5)                                                    2266048
      HELP = HELB(7)                                                    2266049
      HELB(11) = HELT                                                   2266050
  601 FORMAT(29H0PRESSURIZATION PROGRAM INPUT  //                       2266051
     1 80H NTYPE    NRAD       NCIR       NSECT      NTNK       INODE     IG2266052
     2C        IPRESS     /1H ,I3,7I10/ 50H0TKRAD     TKLEN      TEMPZ     T2266053
     3KWAL 1    TKWAL 2    /XF7.3,4F10.3/23H0INSULATION THICKNESSES/      2266054
     4XF7.3,4F10.3/,                                                    2266055
     5 70H0 PR       V GAS        T SAT    MOL C      MOL N      MOL X    2266056
     6T X          /XF7.3,6F10.3/35H0F MIN     F MAX      P MIN      P MAX 2266057
     7/XF7.3,3F10.3/,                                                   2266058
     8 40H0RADI F    RADI S     RADI F1    RADI E2                      2266059
     9  /X F7.3,E11.3,2F10.3/                                           2266060
```


LOCKHEED
CALIFORNIA COMPANY

"REPRODUCIBILITY OF THE ORIGINAL PAGE IS POOR."

TABLE B-1 (CONTINUED)

```
      A49HOPRESSURANT BOTTLE AND STRATIFICATION INFORMATION/XF7.1,6F10.3/2266061
      B XF7.3,4F10.3,F 7.0/1H1)                                          2266062
       TSAT = TSAT+460.                                                  2266063
       TEMPZ = TEMPZ+460.                                                2266064
       TX = TX+460.                                                      2266065
       FMULTF(1) = 1.9865                                                2266066
       FMULTF(2) = 1.0                                                   2266067
       INNOD = 1                                                         2266068
       ISTRAT = 0                                                        2266069
       IF (STRINP(5).NE.0.0)  ISTRAT = 1                                 2266070
       IF (STRINP(5).GT.125.)  GO TO 108                                 2266071
       LLFLOW = 0                                                        2266072
       MTIME = MTIME *60                                                 2266073
       RETURN                                                            2266074
 10    FORMAT(24I3)                                                      2266075
 20    FORMAT(7F10.0)                                                    2266076
 101   WRITE (6,201)  NTYPE                                              2266077
       GO TO 200                                                         2266078
 102   WRITE (6,202)  NRAD                                               2266079
       GO TO 200                                                         2266080
 103   WRITE (6,203)  NCIR                                               2266081
       GO TO 200                                                         2266082
 104   WRITE (6,204)  NSECT                                              2266083
       GO TO 200                                                         2266084
 105   WRITE (6,205)  NTNK                                               2266085
       GO TO 200                                                         2266086
 106   WRITE (6,206)  IGC                                                2266087
       GO TO 200                                                         2266088
 107   WRITE (6,207)  IPRESS                                             2266089
       GO TO 200                                                         2266090
 108   WRITE (6,208)  STRINP(5)                                          2266091
       GO TO 200                                                         2266092
 200   WRITE (6,300)                                                     2266093
       CALL EXIT                                                         2266094
       RETURN                                                            2266095
 201   FORMAT (10H1NTYPE  OF,I5)                                         2266096
 202   FORMAT (10H1NRAD   OF,I5)                                         2266097
 203   FORMAT (10H1NCIR   OF,I5)                                         2266098
 204   FORMAT (10H1NSECT  OF,I5)                                         2266099
 205   FORMAT (10H1NTNK   OF,I5)                                         2266100
 206   FORMAT (10H1IGC    OF,I5)                                         2266101
 207   FORMAT (10H1IPRESS OF,I5)                                         2266102
 208   FORMAT(10H1FHLD    OF,F6.0)                                       2266103
 300   FORMAT (40H IS ILLEGAL.  INPUT ERROR. RUN DELETED.                2266104
       END                                                               2266105
```


LOCKHEED
CALIFORNIA COMPANY

TABLE B-1 (CONTINUED)

```
$IBFTC TANKA
      SUBROUTINE TANKA(N)
C     AS OF 6730765
      COMMON P(14000),M(16)
      COMMON /CPNET/NTYPE,TKRAD,TKLEN,TEMPZ,NRAD,NCIR,NSECT,NTNK,
     1 TKTHK(5),TKWAL1,TKWAL2,INNOD,KOUT,
     2          FMCO,FMNO,FMOLC,VGAS,IGC,IPRESS,FMOLN,FMIN,FMAX,PMIN,
     3          PMAX,FMOLX,TSAT,ANGLE,TX,PR,TANKV,
     5          RADI(4),HELB(14),LLFLOW,HELT,HELP,HELW
     6          ,ISTRAT,SAREA,IOPTSX(5),FMULTF(5),STRINP(20)
     7           ,GSOLD (2),TTOPBL(2),DLIQ  ,NLSURF,ICALL
      EQUIVALENCE  (FMULTF(1),FLT),(FMULTF(2),FLKL)
      COMMON /EXFLG/NTFLG,NSAV,NFLG                                    TANK009
      DIMENSION VS(250),FLA(500),NUMTAB(100),NEXW(125),NSEX(125),MM(125)
      EQUIVALENCE (P(13251),VS),(P(13501),FLA)
     1,(P(12526),NUMTAB),(P(12626),NEXW),(P(12751),NSEX),(P(12876),MM)
      REAL M
      IF (NTFLG.EQ.1) RETURN
      N1=LOC(N)
      DO 10 I=1,100
      N2=N1+I
      IF (P(N2).EQ.0.) GO TO 11
      NUMTAB(I)=P(N2)
 10   CONTINUE
 11   IF (NTFLG.EQ.0.AND.NTYPE.NE.0) CALL RCCPT
      NTFLG=1
      RETURN
      END
```


LOCKHEED
CALIFORNIA COMPANY

TABLE B-1 (CONTINUED)

```
$IBFTC BIVL                                                          BIVL000
      FUNCTION BIV (XV,XH,K,ERR  )                                   BIV6001
C     AS OF 06/12/65                                                 BIV6002
      COMMON P(14000),M(16)                                          BIVL003
      COMMON /CP2/ERROR                                              BIV6004
      DIMENSION KP(1)                                                BIV6005
      EQUIVALENCE (P(1),KP(1))                                       BIV6006
      REAL M                                                         BIV6006
      L=LOC(K)+1                                                     BIV6007
      KFLL=0                                                         BIV6008
      KOD=32765                                                      BIV6009
      IF (KOD.EQ.KP(L)) KOD=KP(L+1)                                  BIV6010
      IF (KOD.NE.32765)  L=L+2                                       BIV6011
      LV = P(L)/1000.+.1                                             BIV6012
      LH = AMOD(P(L),1000.)+.1                                       BIV6013
      IF (P(L+1).GT.P(L+2)) GO TO 20                                 BIV6014
      IF (XH.LT.P(L+1)) GO TO 50                                     BIV6015
      DO 15 J=2,LH                                                   BIV6016
      L1=L+J-1                                                       BIV6017
      IF(P(L1).GT.P(L1+1)) GO TO 50                                  BIV6018
      IF (XH.LE.P(L1+1)) GO TO 30                                    BIV6019
 15   CONTINUE                                                       BIV6020
 50   ERROR=2.                                                       BIV6021
      WRITE (6,90) K,XV,XH                                           BIV6022
      RETURN                                                         BIV6023
 20   IF (XH.GT.P(L+1)) GO TO 50                                     BIV6024
      DO 25 J=2,LH                                                   BIV6025
      L1=L+J-1                                                       BIV6026
      IF (P(L1).LT.P(L1+1)) GO TO 50                                 BIV6027
      IF (XH.GE.P(L1+1)) GO TO 30                                    BIV6028
 25   CONTINUE                                                       BIV6029
      GO TO 50                                                       BIV6030
 30   L2=L+LH+1                                                      BIV6031
      L3=L2+LH+1                                                     BIV6032
      IF (P(L2).GT. P(L3)) GO TO 40                                  BIV6033
      IF (XV.LT.P(L2)) GO TO 50                                      BIV6034
      DO 35 I=1,LV                                                   BIV6035
      L2= L+I*(LH+1)                                                 BIV6036
      L3= L2+LH+1                                                    BIV6037
      IF (P(L2).GT.P(L3)) GO TO 50                                   BIV6038
      IF (XV.LE.P(L3)) GO TO 60                                      BIV6039
 35   CONTINUE                                                       BIV6040
      GO TO 50                                                       BIV6041
 40   IF (XV.GT.P(L2)) GO TO 50                                      BIV6042
      DO 45 I=1,LV                                                   BIV6043
      L2= L+I*(LH+1)                                                 BIV6044
      L3= L2+LH+1                                                    BIV6045
      IF (P(L2).LT.P(L3)) GO TO 50                                   BIV6046
      IF (XV.GE.P(L3)) GO TO 60                                      BIV6047
 45   CONTINUE                                                       BIV6048
      GO TO 50                                                       BIV6049
 60   J1=L2+L1-L                                                     BIV6050
      J2=J1+1                                                        BIV6051
      J3=L3+L1-L                                                     BIV6052
      J4=J3+1                                                        BIV6053
      IF (KOD.EQ.32765.OR.KOD.EQ.0) GO TO 80                         BIV6054
 61   KFLG=0                                                         BIV6055
      IF (P(J1).EQ.0.)KFLG=KFLG+1                                    BIV6056
      IF (P(J2).EQ.0.)KFLG=KFLG+2                                    BIV6057
      IF (P(J3).EQ.0.)KFLG=KFLG+4                                    BIV6058
      IF (P(J4).EQ.0.)KFLG=KFLG+8                                    BIV6059
```


LOCKHEED
CALIFORNIA COMPANY

TABLE B-1 (CONTINUED)

```
      IF (KFLG.EQ.0) GO TO 70                                           BIV6060
      KFLL=KFLG                                                         BIV6061
      GO TO (62,64,66,62,62,50,62,64,50,64,64,68,62,64,50),KFLG         BIV6062
 62   J1=J1+1                                                           BIV6063
      J2=J2+1                                                           BIV6064
      J3=J3+1                                                           BIV6065
      J4=J4+1                                                           BIV6066
      L1=L1+1                                                           BIV6067
      GO TO 61                                                          BIV6068
 64   J1=J1-1                                                           BIV6069
      J2=J2-1                                                           BIV6070
      J3=J3-1                                                           BIV6071
      J4=J4-1                                                           BIV6072
      L1=L1-1                                                           BIV6073
      GO TO 61                                                          BIV6074
 66   J1=J1+LH+1                                                        BIV6075
      J2=J2+LH+1                                                        BIV6076
      J3=J3+LH+1                                                        BIV6077
      J4=J4+LH+1                                                        BIV6078
      L3=L3+LH+1                                                        BIV6079
      GO TO 61                                                          BIV6080
 68   J1=J1-(LH+1)                                                      BIV6081
      J2=J2-(LH+1)                                                      BIV6082
      J3=J3-(LH+1)                                                      BIV6083
      J4=J4-(LH+1)                                                      BIV6084
      L3=L3-(LH+1)                                                      BIV6085
      GO TO 61                                                          BIV6086
 70   Z1=ABS(P(J1))+(ABS(P(J2))-ABS(P(J1)))/(P(L1+1)-P(L1))             BIV6087
     1  *(XH-P(L1  ))                                                   BIV6088
      Z2=ABS(P(J3))+(ABS(P(J4))-ABS(P(J3)))/(P(L1+1)-P(L1))             BIV6089
     1  *(XH-P(L1  ))                                                   BIV6090
 75   L4=L3-LH-1                                                        BIV6091
      BIV= Z1+(Z2-Z1)/(P(L3)-P(L4))        *(XV-P(L4))                  BIV6092
      IF (KOD.EQ.0.OR.KOD.EQ.32765) GO TO 79                            BIV6093
      IF (TIME.EQ.M(1)) GO TO 76                                        BIV60931
      IF (TIME1.EQ.M(11)) GO TO 79                                      BIV60932
      TIME=M(1)                                                         BIV60933
 76   IF (TIME1.NE.M(11)) WRITE (6,92)                                  BIV60934
      TIME1=M(11)                                                       BIV60935
      WRITE (6,93) K,KOD,XH,XV,BIV                                      BIV60936
      IF (KFLL.NE.0) WRITE (6,91) K,KOD ,XV,XH,BIV                      BIV60937
 79   RETURN                                                            BIV6094
 80   Z1=    (P(J1))+(    (P(J2))-    (P(J1)))/(P(L1+1)-P(L1))         BIV6095
     1  *(XH-P(L1  ))                                                   BIV6096
      Z2=    (P(J3))+(    (P(J4))-    (P(J3)))/(P(L1+1)-P(L1))         BIV6097
     1  *(XH-P(L1  ))                                                   BIV6098
      GO TO 75                                                          BIV6099
 90   FORMAT (24H0OFF BIVARIATE CURVE NO. I5,16H. VERTICAL I.V.=E12.4,  BIV6100
     1 18H, HORIZONTAL I.V.=E12.4,1H.)                                  BIV6101
 91   FORMAT (29H0EXTRAPOLATION USED FOR CURVE I5, 7H, FLAG=I3,         BIV6102
     1 16H. VERTICAL I.V.=E12.4,18H, HORIZONTAL I.V.=E12.4,             BIV6103
     2 11H, DEP.VAR.=E12.4)                                             BIV6104
 92   FORMAT (47H0DERIVED VALUES USED IN THE FOLLOWING CURVES...  )     BIV6106
 93   FORMAT (20H BIVARIATE CURVE NO. I6,8H   COD = I6,                 BIV6107
     1 11H   X(HOR) = E12.4,12H   X(VERT) = E12.4,12H   Y VALUE =E12.4) BIV6108
      END                                                               BIV6109
```


LOCKHEED
CALIFORNIA COMPANY

TABLE B-1 (CONTINUED)

```
$IBFTC RCCP
      SUBROUTINE RCCPT                                                  RCC 002
C     AS OF 6/30/65
      COMMON P(14000),MT(16),MAXT,MAXR,MAXC                             RCC 003
      COMMON /CPNET/NTYPE,TKRAD,TKLEN,TEMPZ,NRAD,NCIR,NSECT,NTNK,
     1 TKTHK(5),TKWAL1,TKWAL2,INNOD,KOUT,
     2          FMCO,FMNO,FMOLC,VGAS,IGC,IPRESS,FMOLN,FMIN,FMAX,PMIN,
     3          PMAX,FMOLX,TSAT,ANGLE,TX,PR,TANKV,
     5          RADI(4),HELB(14),LLFLOW,HELT,HELP,HELW
     6          ,ISTRAT,SAREA,IOPTSX(5),FMULTF(5),STRINP(20)
     7           ,GSOLD (2),TTOPBL(2),DLIQ   ,NLSURF,ICALL
      EQUIVALENCE  (FMULTF(1), FLT),(FMULTF(2),FLKL)
      DIMENSION VS(250),DUMMY(500)
     1  ,NUMTAB(100),NEXW(125),NSEX(125),MM(125)
      DIMENSION LNO(250),NLNNS(125),NGNNS(125)
      EQUIVALENCE (P(13251),VS),(P(13501),DUMMY)
     1,(P(12526),NUMTAB),(P(12626),NEXW),(P(12751),NSEX),(P(12876),MM)
      EQUIVALENCE(P(12276),LNO),(P(12151),NLNNS),(P(12026),NGNNS)
      REAL LEN,MT,LIN                                                   RCC 007
      INODE=INNOD
      INSCVS = 41
C     INSCVS= WHERE INSULATION CURVES START
      REWIND 9
      REWIND 10
      PI = 3.14159265                                                   RCC 004
      SUM =0.0                                                          RCC 009
      ITIM= 1                                                           RCC 008
      TEMP = TEMPZ-460.                                                 RCC 008
      FRHO = LIN(   TEMP,NUMTAB(14),                                    RCC 0081
      FCP  = LIN(   TEMP,NUMTAB(16))                                    RCC 0081
      FK   = LIN(   TEMP,NUMTAB(3))                                     RCC 0081
      FKW  =LIN(TEMP,NUMTAB(18))                                        RCC 0081
      FCPW =LIN(TEMP,NUMTAB(19))                                        RCC 0081
      FRHOW=LIN(TEMP,NUMTAB(20))                                        RCC 0081
      IF (NTNK.EQ.0)  GO TO 12
      FKI  =LIN(TEMP,NUMTAB(INSCVS))
      FCPI =LIN(TEMP,NUMTAB(INSCVS+1))
      FRHOI=LIN(TEMP,NUMTAB(INSCVS+2))
      DO 10 I=1,NTNK                                                    RCC 010
      SUM =SUM+ TKTHK(I)                                                RCC 011
 10   CONTINUE                                                          RCC 012
 12   FNRAD =NRAD                                                       RCC 013
      FNCIR =NCIR                                                       RCC 014
      FNSECT= NSECT                                                     RCC 015
      KEYNOD=  -1                                                       RCC 016
C     IF CYLINDER NTYPE=1 ,IF SPHERE  NTYPE=2                           RCC 017
      PI2= 3.14159265*2.0                                               RCC 018
      NRES =0                                                           RCC 019
C     COMPUTE  RADIAL RESISTORS FOR HEMISPHERE                          RCC 021
 15   KK = NRAD/4                                                       RCC 022
      M = 0                                                             RCC 023
      K1 = (NCIR+NTNK +1)                                               RCC 024
      JJ =  NRAD                                                        RCC 025
      J1 =  NCIR + NTNK +1                                              RCC 026
      II = NCIR +NTNK                                                   RCC 027
      DO   50, KI= 1,KK                                                 RCC 028
      K = KI-1                                                          RCC 029
      DO   40  JI= 1,JJ                                                 RCC 030
      J=JI -1                                                           RCC 031
      DO   30   I= 1,II,1                                               RCC 032
      M = M+1                                                           RCC 033
```


LOCKHEED
CALIFORNIA COMPANY

TABLE B-1 (CONTINUED)

```
      NODE =    M-1    +INODE                                          RCC 034
      IF(I- NCIR) 23,25,27                                             RCC 035
 23   AREA =     PI2/FNRAD * TKRAD**2/FNCIR*SQRT((FLOAT(I**2)-.25)*(SIN( RCC 036
     1 FLOAT(K+1)*  PI2 /FNRAD ) - SIN(FLOAT(K)*PI2/FNRAD) )           RCC 037
      LEN = TKRAD/SQRT(FNCIR)*(SQRT(FLOAT(I)+.5)-SQRT(FLOAT(I)-.5))    RCC 038
      FLA  = LEN/AREA*3600.
      WRITE (9) FLA
      FLA = FLA/FK
      GO TO 29                                                         RCC 040
 25   AREA = PI2/FNRAD* TKRAD**2/SQRT(FNCIR) * SQRT(FLOAT(I)-.5)*( SIN( RCC 041
     1 PI2*FLOAT(K+1)/FNRAD)-SIN(FLOAT(K)*PI2/FNRAD) )                 RCC 042
      LEN  =TKRAD/(SQRT(FNCIR))*(SQRT(FNCIR)-SQRT(FLOAT(I)-.5))        RCC 043
      FLA  = LEN/AREA*3600.
      WRITE (9) FLA
      FLA = FLA/FK
      GO  TO 29                                                        RCC 045
 27   IT = I -NCIR-1                                                   RCC 046
      ST = 0.0                                                         RCC 047
      IF(IT.EQ.0)  GO TO 2711                                          RCC
      DO 271 NN=1,IT                                                   RCC 048
      ST = ST +TKTHK(NN)                                               RCC 049
 271  CONTINUE                                                         RCC 050
 2711 IT  = IT +1                                                      RCC 051
      AREA =PI2*(TKRAD +ST +.5*TKTHK(IT))**2*(SIN( FLOAT(K+1)*PI2/FNRAD)RCC 052
     1  -  SIN( FLOAT(K)*PI2/FNRAD) )                                  RCC 053
      LEN  = TKTHK(IT)                                                 RCC 054
      FLA =LEN / AREA*3600.
      WRITE (9) FLA
      FLA = FLA/FKI
 29   NRES =NRES+1                                                     RCC 056
      NODE1= NODE+1                                                    RCC 057
      JR=NRES+2*MAXT                                                   RCC 058
      P(JR)=FLA
 30   CONTINUE                                                         RCC 060
      M= M+1                                                           RCC 061
 40   CONTINUE                                                         RCC 062
 50   CONTINUE                                                         RCC 063
      M = 0                                                            RCC 064
      II =II+1                                                         RCC 065
      DO  80 KI =1,KK                                                  RCC 066
      K = KI-1                                                         RCC 067
      DO  70 JI =1,JJ                                                  RCC 068
      J = JI-1                                                         RCC 069
      DO  60 I  =1,II                                                  RCC 070
      M  =  M  +  1                                                    RCC 071
      NODE =          M +INODE - 1                                     RCC 072
      NODE1 = NODE +NCIR +NTNK+ 1                                      RCC 073
      IF(JI.EQ.JJ) NODE1 = NODE-(NRAD-1)*(NCIR+NTNK+1)                 RCC 074
      IF( I-(NCIR+1)) 53,55,57                                         RCC 075
 53   AREA = PI / FNRAD * TKRAD**2 / FNCIR                             RCC 076
      LEN  = PI2/ FNRAD / SQRT(FNCIR)*(FLOAT(I)-.5)*COS((FLOAT(K)+.5) * RCC 077
     1 PI2 /FNRAD)*TKRAD                                               RCC 078
      FLA = LEN / AREA*3600.
      WRITE (9) FLA
      FLA = FLA/FK
      GO TO 59                                                         RCC 080
 55   AREA =  PI2/FNRAD* TKRAD *TKWAL1                                 RCC 081
      LEN  =  PI2/FNRAD* TKRAD *COS((FLOAT(K)+.5)*PI2/FNRAD)           RCC 082
      FLA = LEN / AREA*3600.
      WRITE (9) FLA
      FLA = FLA/FKW
```


LOCKHEED
CALIFORNIA COMPANY

TABLE B-1 (CONTINUED)

```
      GO TO 59                                                          RCC 084
 57   IF(I.NE.II) GO TO 60                                              RCC 085
      AREA =  PI2 /FNRAD *(TKRAD + SUM)*TKWAL2                          RCC 086
      LEN  =  PI2 /FNRAD *(TKRAD + SUM)*COS((FLOAT(K)+.5)*PI2/FNRAD)    RCC 087
      FLA  = LEN / AREA*3600.
      WRITE (9) FLA
      FLA = FLA/FKI
 59   NRES = NRES + 1                                                   RCC 089
      JR=NRES+2*MAXT                                                    RCC 090
      P(JR)=FLA
 60   CONTINUE                                                          RCC 091
 70   CONTINUE                                                          RCC 092
 80   CONTINUE                                                          RCC 093
      M = 0                                                             RCC 094
      KK =KK-1                                                          RCC 095
      IF (KK*JJ*II.EQ.0)  GO TO 111
      DO 110 KI=1,KK                                                    RCC 096
      K = KI-1                                                          RCC 097
      DO 100 JI=1,JJ                                                    RCC 098
      J = JI-1                                                          RCC 099
      DO 90 I=1,II                                                      RCC 100
      M=M+1                                                             RCC
      NODE =   M-1+INODE                                                RCC 101
      NODE1=   NODE +(NRAD)*(NCIR + NTNK + 1)                           RCC 102
      IF(I-NCIR-1) 83,85,87                                             RCC 103
 83   AREA = PI /FNRAD * TKRAD**2 / FNCIR *COS( FLOAT(K+1)*PI2/FNRAD)   RCC 104
      LEN  = PI2/FNRAD * TKRAD/SQRT(FNCIR)*SQRT(FLOAT(I)-.5)            RCC 105
      FLA  =  LEN / AREA*3600.
      WRITE (9) FLA
      FLA = FLA/FK
      GO TO 89                                                          RCC 107
 85   AREA = PI2/FNRAD *COS(FLOAT(K+1)*PI2/FNRAD )*TKRAD*TKWAL1         RCC 108
      LEN  = PI2/FNRAD*TKRAD                                            RCC 109
      FLA  =  LEN / AREA *3600.
      WRITE (9) FLA
      FLA = FLA/FKW
      GO TO 89                                                          RCC 111
 87   IF(I.NE.II) GO TO 90                                              RCC 112
      AREA = COS(FLOAT(K+1)*PI2/FNRAD) * TKWAL2*(TKRAD + SUM)           RCC 113
      LEN  =  TKRAD +SUM                                                RCC 114
      FLA  =   LEN / AREA*3600.
      WRITE (9) FLA
      FLA = FLA/FKI
 89   NRES =  NRES + 1                                                  RCC 116
      JR=NRES+2*MAXT                                                    RCC 117
      P(JR)=FLA
 90   CONTINUE                                                          RCC 118
 100  CONTINUE                                                          RCC 119
 110  CONTINUE                                                          RCC 120
C     CALCULATE  CONDENSOR BLOCK LIST FOR SPHERE                        RCC 121
 111  CONTINUE
      M =0                                                              RCC 122
      KK = NRAD/4                                                       RCC 123
      JJ = NRAD                                                         RCC 124
      II = NCIR + NTNK + 1                                              RCC 125
      DO  140  KI= 1,KK                                                 RCC 126
      K =KI-1                                                           RCC 127
      CON =-SIN(FLOAT(K)*PI2/FNRAD) +SIN(FLOAT(K+1)*PI2/FNRAD)          RCC 128
      DO  130  JI= 1,JJ                                                 RCC 129
      J = JI-1                                                          RCC 1291
      DO  120  I =1,II                                                  RCC 130
```


LOCKHEED
CALIFORNIA COMPANY

TABLE B-1 (CONTINUED)

```
      M = M+1                                                           RCC 131
      NODE = M -1 +INODE                                                RCC 132
      IF(I - NCIR -1) 113,115,117                                       RCC 133
  113 V = PI2/3.0*TKRAD**3 /FNRAD *((FLOAT(I)/FNCIR)**1.5 -(FLOAT(I-1)/ RCC 134
     1 FNCIR)**1.5) * CON
      WRITE (10) V
      V = V*FCP*FRHO
      GO TO 119                                                         RCC 136
  115 V = PI2/FNRAD*TKRAD**2 *( TKWAL1 + TKTHK(1)/2.)*CON
      WRITE (10) V
      V = V*FCPW*FRHOW
      GO TO 119                                                         RCC 138
  117 SUMP = 0.0                                                        RCC 139
      NN =  I -NCIR
      DO 1171 N = 1,NN                                                  RCC 141
 1171 SUMP= SUMP +TKTHK(N)                                              RCC 142
      IF(I.EQ.II) GO TO 118                                             RCC 143
      V =  PI2 *(TKRAD +SUMP)**2 *(TKTHK(NN)+TKTHK(NN-1))/2.0 * CON     RCC 144
     1 /FNRAD
      WRITE (10) V
      V = V*FCPI*FRHOI
      GO TO 119                                                         RCC 145
  118 V =  PI2 *(TKRAD +SUM )**2 *( TKTHK(NTNK)/2.0 + TKWAL2) *CON      RCC 146
     1 /FNRAD
      WRITE (10) V
      V = V*FCPI*FRHOI
  119 JC=NODE+2*MAXT+MAXR                                               RCC 147
      P(JC)=V                                                           RCC 1471
C      STORE TEMPS IN DEG. F.
      P(NODE) = TEMPZ-460.                                              RCC 1472
      JT=NODE+MAXT                                                      RCC 1473
      P(JT)=TEMPZ-460.                                                  RCC 1474
 8003 FORMAT(5HDEC01,I5,E10.3,60X)                                      RCC 148
  120 CONTINUE                                                          RCC 149
  130 CONTINUE                                                          RCC 150
  140 CONTINUE                                                          RCC 151
C     TEST  KEYNODE                                                     RCC 152
C                                                                       RCC 153
C                                                                       RCC 154
C                                                                       RCC 155
      IF( KEYNOD.EQ.-1)GO TO 200                                        RCC 156
      JJ = NRAD                                                         RCC 157
      II = NCIR +NTNK + 1                                               RCC 158
      M =0                                                              RCC 159
C     CALCULATE CONNECTING RESISTORS SPHERE TO SPHERE AND SPHERE TO     RCC 160
C     CYLINDER                                                          RCC 161
      DO 170 JI =1,JJ                                                   RCC 162
      J= JI-1                                                           RCC 163
      DO 160 I  =1,II                                                   RCC 164
      M= M+1                                                            RCC 165
      NODE = M-1 +KEYNOD                                                RCC 166
                 NODE1 = M-1 +INODE                                     RCC 168
      IF (I-NCIR-1) 143,145,147                                         RCC 169
  143 AREA =  TKRAD**2 /FNCIR *PI2/FNRAD
      LEN  =  TKRAD /SQRT(FNCIR)*SQRT(FLOAT(I)-0.5)*PI2/FNRAD           RCC 171
      IF(NTYPE.EQ.1) LEN=LEN/2.+TKLEN /(2.0*FNSECT)                     RCC 172
      FLA = LEN/AREA*3600.
      WRITE (9) FLA
      FLA = FLA/FK
      GO TO 149                                                         RCC 173
  145 AREA = PI2/FNRAD*TKRAD*TKWAL1
```


LOCKHEED
CALIFORNIA COMPANY

TABLE B-1 (CONTINUED)

```
      LEN  = PI2/FNRAD*TKRAD                                          RCC 175
      IF(NTYPE.EQ.1)LEN =LEN/2.0+TKLEN /(2.0*FNSECT)                  RCC 176
      FLA = LEN/AREA*3600.
      WRITE (9) FLA
      FLA = FLA/FKW
      GO TO 149                                                       RCC 177
147   IF(I.NE.II) GO TO 160                                           RCC 178
      AREA = PI2/FNRAD * TKWAL2*(TKRAD + SUM)
      LEN  = PI2/FNRAD *(TKRAD +SUM)                                  RCC 180
      IF(NTYPE.EQ.1)LEN=LEN/2.+ TKLEN/(2.0*FNSECT)                    RCC 181
      FLA = LEN/AREA*3600.
      WRITE (9) FLA
      FLA = FLA/FKI
149   NRES  = NRES + 1
      JR=NRES+2*MAXT                                                  RCC 184
      P(JR)=FLA
160   CONTINUE                                                        RCC 185
170   CONTINUE                                                        RCC 186
190   NEND =-1                                                        RCC 187
      WRITE (10) NRES
      HELB(12)=(NCIR+NTNK+1)*(NRAD *(NSECT+2*NRAD/4))
      HELB(13) = NRES
      RETURN                                                          RCC 192
200   IF(NTYPE.EQ.1) GO TO 201                                        RCC 193
      KEYNOD=  INODE                                                  RCC 194
      INODE = (NCIR + NTNK+1)*NRAD**2/4 +INODE                        RCC 195
      GO TO 15                                                        RCC 196
201   KEYNOD = INODE                                                  RCC 197
      INODE = (NCIR + NTNK+1)*NRAD**2/4 + INODE
C     CALCULATE RESISTORS AND CONDENSORS OF CYLINDER BODY             RCC 199
      M = 0                                                           RCC 200
      II = NCIR +NTNK                                                 RCC 201
      JJ =  NRAD                                                      RCC 202
      KK =  NSECT                                                     RCC 203
      DO 230 KI =1,KK                                                 RCC 204
      K = KI-1                                                        RCC 205
      DO 220 JI =1,JJ                                                 RCC 206
      J = JI-1                                                        RCC 207
      DO 210 I  =1,II                                                 RCC 208
      M = M +1                                                        RCC 209
      NODE = M-1 +INODE                                               RCC 210
      NODE1= NODE +1                                                  RCC 211
      IF( I-NCIR) 203,205,207                                         RCC 212
203   AREA = PI2/FNRAD * TKLEN/FNSECT *(TKRAD/(SQRT(FNCIR)            RCC 213
     1  *ALOG((FLOAT(I)+.5)/(FLOAT(I)-.5))**.5))                      RCC 214
      LEN = TKRAD          *(SQRT(FLOAT(I)+.5) -SQRT(FLOAT(I)-0.5))   RCC 215
     1 /SQRT(FNCIR)                                                   RCC 2151
      FLA =  LEN  / AREA  *3600.
      WRITE (9) FLA
      FLA = FLA/FK
      GO TO  209                                                      RCC 217
205   LEN  =TKRAD/(SQRT(FNCIR))*(SQRT(FNCIR)-SQRT(FLOAT(I)-.5))       RCC 220
      FLA   =  LEN / AREA *3600.
      WRITE (9) FLA
      FLA = FLA/FK
      GO TO 209                                                       RCC 223
207   NN = I-NCIR-1                                                   RCC 224
      SUMP =0.0                                                       RCC 225
      IF (NN.EQ.0) GO TO 2072                                         RCC 226
      DO 2071 N =1,NN                                                 RCC 227
2071  SUMP = SUMP + TKTHK(N)                                          RCC 228
```


LOCKHEED
CALIFORNIA COMPANY

TABLE B-1 (CONTINUED)

```
2072 AREA =  PI2/FNRAD*TKLEN *FNSECT*( TKRAD +SUMP +TKTHK(NN+1)/2.0)   RCC 229
    1 **2                                                             RCC 230
     LEN = TKTHK(NN+1)                                                RCC 231
     FLA =  LEN / AREA *3600.
     WRITE (9) FLA
     FLA = FLA/FKI
209  NRES = NRES + 1                                                  RCC 233
     JR=NRES+2*MAXT                                                   RCC 234
     P(JR)=FLA
210  CONTINUE                                                         RCC 235
     M = M+1                                                          RCC 236
220  CONTINUE                                                         RCC 237
230  CONTINUE                                                         RCC 238
     II =II+1                                                         RCC 239
     M  = 0                                                           RCC 240
     DO  270 KI =1,KK                                                 RCC 241
     K =KI-1                                                          RCC 242
     DO  260 JI =1,JJ                                                 RCC 243
     J = JI-1                                                         RCC 244
     DO  250  I =1,II                                                 RCC 245
     M = M+1                                                          RCC 246
     NODE = M-1 +INODE                                                RCC 247
     NODE1=    NODE +NCIR +NTNK + 1                                   RCC 248
     IF( I -NCIR -1) 243,245,247                                      RCC 249
243  AREA = TKRAD/SQRT(FNCIR)*TKLEN / FNSECT *(SQRT(FLOAT(I)) -SQRT(  RCC 250
    1 FLOAT(I-1)) )                                                   RCC 251
     LEN = PI2 /FNRAD *TKRAD *SQRT((FLOAT(I)-0.5) /FNCIR)             RCC 252
     FLA =  LEN / AREA *3600.
     WRITE (9) FLA
     FLA = FLA/FK
     GO  TO 249                                                       RCC 254
245  AREA = TKWAL1 * TKLEN / FNSECT                                   RCC 255
     LEN  = PI2 /FNRAD* TKRAD                                         RCC 256
     FLA =  LEN / AREA *3600.
     WRITE (9) FLA
     FLA = FLA/FKW
     GO TO  249                                                       RCC 258
247  IF(I.NE.II) GO TO 250                                            RCC 259
     AREA = TKWAL2 * TKLEN / FNSECT                                   RCC 260
     NN    =  II -NCIR                                                RCC 261
     LEN  = PI2 /FNRAD *(TKRAD +SUM )                                 RCC 262
     FLA  = LEN / AREA *3600.
     WRITE (9) FLA
     FLA = FLA/FKI
249  IF(JI.EQ.JJ) NODE1 = NODE1 -NRAD*(NCIR + NTNK+1)                 RCC 264
     NRES =NRES +1                                                    RCC 265
     JR=NRES+2*MAXT                                                   RCC 266
     P(JR)=FLA
250  CONTINUE                                                         RCC 267
260  CONTINUE                                                         RCC 268
270  CONTINUE                                                         RCC 269
     IF (KK.EQ.1)  GO TO 301
     KK = KK-1                                                        RCC 270
     LEN =TKLEN /FNSECT                                               RCC 271
     M =0                                                             RCC 272
     DO 300 KI =1,KK                                                  RCC 273
     K = KI-1                                                         RCC 274
     DO 290 JI =1,JJ                                                  RCC 275
     J=JI-1                                                           RCC 276
     DO 280 I  =1,II                                                  RCC 277
     M=M+1                                                            RCC
```


LOCKHEED
CALIFORNIA COMPANY

TABLE B-1 (CONTINUED)

```
      NODE = M-1 +INODE                                                 RCC 278
      NODE1 = NODE +(NRAD  )*(NCIR+NTNK+1)                              RCC 279
      IF(I -NCIR-1) 273,275,277                                         RCC 280
  273 AREA = PI /FNRAD * TKRAD**2 /FNCIR                                RCC 281
      FLA  = LEN/ AREA  *3600.
      WRITE (9) FLA
      FLA = FLA/FK
      GO TO 279                                                         RCC 283
  275 AREA =  PI2*TKRAD/FNRAD *TKWAL1                                   RCC 284
      FLA  = LEN/ AREA  *3600.
      WRITE (9) FLA
      FLA = FLA/FKW
      GO TO 279                                                         RCC 286
  277 IF (I.NE.II) GO TO 290                                            RCC 287
      NN   = II -NCIR                                                   RCC 288
      AREA = TKWAL2 *PI2 /FNRAD*(TKRAD + SUM )                          RCC 289
      FLA  = LEN/ AREA  *3600.
      WRITE (9) FLA
      FLA = FLA/FKI
  279 NRES = NRES +1                                                    RCC 291
      JR=NRES+2*MAXT                                                    RCC 292
      P(JR)=FLA
  280 CONTINUE                                                          RCC 293
  290 CONTINUE                                                          RCC 294
  300 CONTINUE                                                          RCC 295
C     CALCULATE CONDENSORS FOR CYLINDER                                 RCC 296
      KK =KK+1
  301 M = 0                                                             RCC 298
      DO 330 KI=1,KK                                                    RCC 299
      K = KI-1                                                          RCC 300
      DO 320 JI=1,JJ                                                    RCC 301
      J = JI-1                                                          RCC 302
      DO 310 I =1,II                                                    RCC 303
      M =M+1                                                            RCC 304
      NODE = M -1 +INODE                                                RCC 305
      IF(I-NCIR-1) 303,305,307                                          RCC 306
  303 V = PI /FNRAD *TKRAD**2 /FNCIR*TKLEN/FNSEC T
      WRITE (10) V
      V = V*FCP*FRHO
      GO  TO 309                                                        RCC 308
  305 V = PI2/FNRAD*TKRAD*(TKWAL1+0.5*TKTHK(1))*TKLEN/FNSECT
      WRITE (10) V
      V = V*FCPW*FRHOW
      GO  TO 309                                                        RCC 310
  307 IF(I.EQ.II) GO TO 308                                             RCC 311
      NN = I-NCIR                                                       RCC 312
      SUMP =0.0                                                         RCC 313
      DO 3071 N=1,NN                                                    RCC 314
 3071 SUMP = SUMP +TKTHK(N)                                             RCC 315
      V = PI2/FNRAD*(TKRAD+SUMP)*0.5*(TKTHK(NN)+TKTHK(NN-1))            RCC 316
     1 *TKLEN/FNSECT
      WRITE (10) V
      V = V*FCPI*FRHOI
      GO TO 309                                                         RCC 317
  308 V =  PI2 /FNRAD*(TKRAD+SUM )*(TKTHK(NTNK)/2.0 +TKWAL2)            RCC 318
     1 *TKLEN/FNSECT
      WRITE (10) V
      V = V*FCPI*FRHOI
  309 JC=NODE+2*MAXT+MAXR                                               RCC 319
      P(JC)=V                                                           RCC 3191
C      STORE TEMPS IN DEG. F.
```


LOCKHEED
CALIFORNIA COMPANY

"REPRODUCILIBITY OF THE ORIGINAL PAGE IS POOR."

TABLE B-1 (CONTINUED)

```
      P(NODE) = TEMPZ-460.                                              RCC 3192
      JT=NODE+MAXT                                                      RCC 3193
      P(JT)=TEMPZ-460.                                                  RCC 3194
  310 CONTINUE                                                          RCC 320
  320 CONTINUE                                                          RCC 321
  330 CONTINUE                                                          RCC 322
      II = NCIR + NTNK +1                                               RCC 323
      JJ = NRAD                                                         RCC 324
      M = 0                                                             RCC 325
      DO  350 JI =1,JJ                                                  RCC 326
      J  = JI-1                                                         RCC 327
      DO  340 I =1,II                                                   RCC 328
      M  = M+1                                                          RCC 329
      NODE  = M-1 +KEYNOD                                               RCC 330
      NODE1 = M-1 +INODE                                                RCC 331
      IF(I- NCIR -1) 343,345,347                                        RCC 332
  343 AREA = PI  /FNRAD *TKRAD**2/FNCIR
      LEN =  PI  /FNRAD *TKRAD/SQRT(FNCIR)*SQRT(FLOAT(I)-0.5) +TKLEN/   RCC 334
     1 (2.0*FNSECT)                                                     RCC 335
      FLA = LEN/AREA*3600.
      WRITE (9) FLA
      FLA = FLA/FK
      GO TO 349                                                         RCC 336
  345 AREA = PI2/FNRAD *TKRAD*TKWAL1
      LEN  = PI /FNRAD *TKRAD  +TKLEN/FNSECT/2.0                        RCC 338
      FLA = LEN/AREA*3600.
      WRITE (9) FLA
      FLA = FLA/FKW
      GO TO 349                                                         RCC 339
  347 IF(I.NE.II)  GO TO 340                                            RCC 340
      AREA = PI2/FNRAD *TKWAL2*(TKRAD+SUM)
      LEN  =  PI/FNRAD *(TKRAD+SUM ) +TKLEN/FNSECT/2.0                  RCC 342
      FLA = LEN/AREA*3600.
      WRITE (9) FLA
      FLA = FLA/FKI
  349 NRES = NRES +1
      JR=NRES+2*MAXT                                                    RCC 345
      P(JR)=FLA
  340 CONTINUE                                                          RCC 346
  350 CONTINUE                                                          RCC 347
      KEYNOD= INODE +(NCIR+NTNK+1)*NRAD *(NSECT-1)                      RCC 348
      INODE = INODE +(NCIR+NTNK+1)*NRAD *NSECT                          RCC 349
      GO  TO 15                                                         RCC 350
      END
```


LOCKHEED
CALIFORNIA COMPANY

TABLE B-1 (CONTINUED)

```
$IBFTC CONTRL
      SUBROUTINE CONTRL(ITIME)
C     AS OF 10/1/65
C     ITIME = 1 FIRST TIME ROUTINE IS CALLED
C     ITIME .NE. 1 THEREAFTER
      COMMON P(14000), M(16), KKKK(23), CC(12)
      COMMON /CONTR/  TLIQ,SCLIQ,TGAS,SCGAS,SCALL,TLSMAX,SCINT,TSGAS,
     1COMUN(5),DMCC,TLMAX,TALL,FMLO,GAVITY,FKG,FKL,ZC,PC,ZN,FMLU,FMLA,
     2          ZX,CPX,TLA,GAMMA,RHOL,RHOG,CPL,CPG,RLAM,MCNT,PN,FMC,FMN,R
      COMMON /CPNET/NTYPE,TKRAD,TKLEN,TEMPZ,NRAD,NCIR,NSECT,NTNK,
     1 TKTHK(5),TKWAL1,TKWAL2,INODE,KOUT,
     2          FMCO,FMNO,FMOLC,VGAS,IGC,IPRESS,FMOLN,FMIN,FMAX,PMIN,
     3          PMAX,FMOLX,TSAT,ANGLE,TX,PR,TANKV,
     5          RADI(4),HELB(14),LLFLOW,HELT,HELP,HELW
     6          ,ISTRAT,SAREA,IOPTSX(5),FMULTF(5),STRINP(20)
     7           ,GSOLD (2),TTOPBL(2),DLIQ  ,NLSURF,ICALL
      COMMON /STR/  IDEST (1),BNO   (1),HBAR  (1),QBL   (1),YBAR  (1),
     1              TBOTBL(1),RNO   (1),RNOB  (1),W     (1),DELPT (1),
     2              Q     (1),VBL   (1),ABAR  (1),RHOBMX(1),RHOBMN(1),
     3              DELPB (1),FR    (1),DPFG20(1),GNEW  (1),REYNO (1),
     4              SUMARS(1),DELPF (1),CAPAVG(1),TUPPER(1),CAPBL (1),
     5              CAPTLI(1),DELTLI(1),CUPPER(1),SQUAN (1),NCLAY
      EQUIVALENCE  (FMULTF(1), FLT),(FMULTF(2),FLKL)
      COMMON/CHP/SMCV,SMCA,SMNV,SMNA,SDMCC,SMLAS,SMLUS,SUMEX,HELWS,GOLD,
     1           ANGOLD,FMG,FML,TS,DFLTS,DFLVS,FMGAS
      EQUIVALENCE (IOPTSX(1),IRSTRT),(IOPTSX(2),IPTLIQ),
     1            (IOPTSX(3),LIBTAP),(IOPTSX(4),MTIME )
     2           ,(IOPTSX(5),KUT    )
      DIMENSION VS(250),FLA(500),NUMTAB(100),NEXW(125),NSEX(125),MM(125)
      DIMENSION LNO(250),NLNNS(125),NGNNS(125)
      EQUIVALENCE (P(13251),VS),(P(13501),FLA)
     1,(P(12526),NUMTAB),(P(12626),NEXW),(P(12751),NSEX),(P(12876),MM)
      EQUIVALENCE(P(12276),LNO),(P(12151),NLNNS),(P(12026),NGNNS)
C     IRSTRT = 0 IF WANT NO RESTARTING
C     IRSTRT = 1 IF WANT TO RESTART ONLY
C     IRSTRT = 2 IF WANT TO SAVE    ONLY
C     IRSTRT = 3 IF WANT TO RESTART + SAVE
C     KUT    = TIME(IN SECONDS) AT WHICH CURRENT SEGMENT IS TO BE CUT
      REAL M
      REAL NGNNS
      REAL LIN
      MAXT = KKKK(1)
      MAXC = HELB(12)+.1
      MAXR = KKKK(2)
      NRES = HELB(13)+.1
      THETA =M(1)
      DTHETA=M(5)
      ANGLE = LIN(THETA,NUMTAB(33))
      IF (ANGLE.LE.-89.9)  ANGLE =-90.0
      IF (ANGLE.GE.89.9)   ANGLE =  90.0
      IF (ABS(ANGLE)-0.1.LE.0.0)  ANGLE = 0.0
      DO 5 I=1,MAXT
      II = MAXT+I
      P(I) = P(I)+460.
    5 P(II) = P(II) +460.
      GAVITY = LIN(THETA,NUMTAB( 1))
      IF (ISTRAT.NE.0 .AND. ITIME.EQ.3 .AND. BNO.LT.1.0)  GAVITY = 0.0
      FMLU = LIN(THETA,NUMTAB( 7))
      FMLA = LIN(THETA,NUMTAB( 8))
      TLA  = LIN(THETA,NUMTAB(12))+460.
      IF (ITIME.NE.1)  GO TO 1
      INIT = 1
      DTHETA = 0.
```


LOCKHEED
CALIFORNIA COMPANY

"REPRODUCILIBITY OF THE ORIGINAL PAGE IS POOR."

TABLE B-1 (CONTINUED)

```
      VGAS = VGAS*TANKV                                                 2266063
      GOLD = GAVITY                                                     2266064
      ANGOLD = ANGLE                                                    2266065
 6    MTIME1 = 0                                                        2266066
      MTIME2 = 0                                                        2266067
      CALL BULOVA (MTIME1)                                              2266068
      FKUT = KUT                                                        2266069
      R = 1545.                                                         2266070
      TEN20 = 1.0E20                                                    2266071
      EPS = .01                                                         2266072
      EPG = .010                                                        2266073
      SMCV = 0.                                                         2266074
      SMCA = 0.                                                         2266075
      SMNV = 0.                                                         2266076
      SMNA = 0.                                                         2266077
      SDMCC= 0.                                                         2266078
      SMLAS = 0.                                                        2266079
      SMLUS = 0.                                                        2266080
      DELTS = 0.                                                        2266081
      DELVS = 0.                                                        2266082
      SUMEX = 0.                                                        2266083
      HELWS = 0.                                                        2266084
      EMGA  =0.                                                         2266085
      EMGAS = 0.                                                        2266086
      TS = 0.                                                           2266087
      CPX= 0.                                                           2266088
      EMGIT = 0.                                                        2266089
      HELTF = HELP(5)-460.                                              2266090
      ZX = BIV(HELP,HELTF,NUMTAB(10))                                   2266091
      HELB(14) =(HELB(4)*HELB(7)/(ZX*R*HELB(5)))*144.*EMOLX             2266092
      HELW = HELP(14)                                                   2266093
      TEMPZF = TEMPZ-460.                                               2266094
      PC = LIN(TEMPZF,NUMTAB(5))                                        2266095
      PN = PR-PC                                                        2266096
      ZC = BIV(PC,TEMPZF,NUMTAB(4))                                     2266097
      ZN = BIV(PN,TEMPZF,NUMTAB(6))                                     2266098
      EMCO = PC*EMOLC*VGAS/(ZC*R*TEMPZ)*144.                            2266099
      EMNO = PN*EMOLN*VGAS/(ZN*R*TEMPZ)*144.                            2266100
      EMG = EMCO + EMNO                                                 2266101
      RHOL = LIN (  TEMPZF,NUMTAB(14))                                  2266102
      EMLO = (TANKV-VGAS)*RHOL                                          2266103
      EML = EMLO                                                        2266104
      IDEST(1) = 1                                                      2266105
      NCLAY = 1                                                         2266106
      IF (IRSTRT.EQ.1.OR.IRSTRT.EQ.3)   CALL CHOP(1)                    2266107
      CALL RECALC (ITIME)                                               2266108
      ITIME = 2                                                         2266109
      GO TO 2225                                                        2266110
 1    CONTINUE                                                          2266111
      IF (ITIME.NE.2)  GO TO 3                                          2266112
      IF (GAVITY.EQ.0.0)  CALL GEOMNG                                   2266113
      IF (GAVITY.NE.0.0)  CALL GEOMGC(ISTRAT)                           2266114
 11   CALL RECALC(ITIME)                                                2266115
      OLDPR = PR                                                        2266116
      OLDGT = TGAS                                                      2266117
      OLDLT = TLIQ                                                      2266118
 9    CALL RESET(TGAS,4)                                                2266119
      TGASF = TGAS-460.                                                 2266120
      TLIQF = TLIQ-460.                                                 2266121
      CALL SURF                                                         2266122
      IF (EML.EQ.0.)  EMLU = 0.                                         2266123
      RHOL = LIN(   TLIQF,NUMTAB(14))                                   2266124
      IF (EML.NE.0.0)  RHOLSV = RHOL                                    2266125
```


LOCKHEED
CALIFORNIA COMPANY

"REPRODUCIBILITY OF THE ORIGINAL PAGE IS POOR."

TABLE B-1 (CONTINUED)

```
      CPL   = LIN(   TLIQF,NUMTAB(16))                                  2266126
      ZC    = BIV(PC,TGASF,NUMTAB(4))                                   2266127
      ZN    = BIV(PN,TGASF,NUMTAB(6))                                   2266128
      CPG1  = BIV(PC,TGASF,NUMTAB(17))-(FLT*ZC)/FMOLC                   2266129
      CPG2  = BIV(PN,TGASF,NUMTAB(26))-FLT*ZN/FMOLN                     2266130
      IF (CPG1.LT.10.0E-5)  CPG1 = CPG2                                 2266131
      FKL   = LIN(   TLIQF,NUMTAB(3)) *FLKL                             2266132
      FKG1  = BIV(PC,TGASF,NUMTAB(7))                                   2266133
      FKG2  = BIV(PN,TGASF,NUMTAB(24))                                  2266134
 10   FMC = FMCO  - SMCV  + SDMCC  + SMCA                               2266135
      FMN = FMNO  - SMNV  + SMNA                                        2266136
      FMC1= FMC                                                         2266137
      FMN1= FMN                                                         2266138
      IPATH = 1                                                         2266139
      IF(GAVITY .EQ. 0.0 )   GO TO 50                                   2266140
      FKG = FKG1+FKG2                                                   2266141
      TS  =  TLSMAX  + FKG *(TSGAS - TLSMAX) / (FKL + FKG)              2266142
      TLMAX = TS                                                        2266143
 50   CONTINUE                                                          2266144
      IF( TGAS  .LE.  TLMAX )  GO TO 60                                 2266145
      PC  = FMC * ZC * R * TGAS / FMOLC /VGAS /144.0                    2266146
      GO  TO  65                                                        2266147
 60   TLMAXF = TLMAX-460.                                               2266148
      PC     = LIN(TLMAXF,NUMTAB(5))                                    2266149
      FMC  =  PC*FMOLC *VGAS /(ZC *R *TLMAX)*144.0                      2266150
 65   DMCC =  FMC -FMC1                                                 2266151
      SDMCC =  SDMCC   +  DMCC                                          2266152
      RLAM = LIN(   TLIQF,NUMTAB(9))                                    2266153
      IF( ABS( DMCC) .GT. EPS )  CALL SS059                             2266154
      TLIQF = TLIQ-460.                                                 2266155
C     IGC = 1 IF CONDENSIBLE GAS ,IGC =2  IF CONDENSIBLE + NONCONDENS.  2266156
      PN = 0.0                                                          2266157
      IF(IGC.EQ.2)  PN=FMN*ZN*R*TGAS/FMOLN/VGAS/144.0                   2266158
      PR= P C+PN                                                        2266159
      FPMAX = FMAX*PMAX                                                 2266160
      IF ( PR.LE .FPMAX      )  GO TO 80                                2266161
      FPMAX = 1.-FPMAX/PR                                               2266162
      FMNV  = FMN1 *  FPMAX                                             2266163
      FMCV  = FMC1 *  FPMAX                                             2266164
      SMCV  = FMCV +SMCV                                                2266165
      SMNV  = FMNV +SMNV                                                2266166
      SDMCC =  SDMCC + DMCC                                             2266167
      RLAM = LIN(   TLIQF,NUMTAB(9))                                    2266168
      IF( ABS( DMCC) .GT. EPS )  CALL SS059                             2266169
      TLIQF = TLIQ-460.                                                 2266170
      IF (FML .NE.0.0.OR.FMLU.EQ.0.0)  GO TO 80                         2266171
      FMGT = FMG                                                        2266172
      FMGU = FMLU*(FMC+FMN)/(RHOLSV*TANKV)                              2266173
      FMG = FMG - FMGU                                                  2266174
      PR = PR*FMG/FMGT                                                  2266175
 80   IF (FMLU.GT.0.0)  GO TO 100                                       2266176
C     IPRESS =1 IF PRESSURIZED BEFORE FIRING, =2 IF NOT                 2266177
      IF( IPRESS .EQ. 2)  GO TO 208                                     2266178
 100  CONTINUE                                                          2266179
      IF( PR.GE. PMIN*PMIN )  GO TO 208                                 2266180
      IPATH = 2                                                         2266181
      IF (HFLB(7).EQ.0.0)  GO TO 104                                    2266182
      LLFLOW = 1                                                        2266183
      HFLT = P(MAXC+1)                                                  2266184
      HFLTF = HFLT-460.                                                 2266185
      HFLWN = HFLB(8)*FMGA                                              2266186
      HFLW  = HFLW - HFLWN                                              2266187
      HELG  = BIV(HFLP,HELTF,NUMTAB(34))                                2266188
```


LOCKHEED
CALIFORNIA COMPANY

TABLE B-1 (CONTINUED)

```
C       COMPUTE NEW HELIUM TEMPERATURE,PRESSURE
        HELX=1.-HELWN/ (HELB(14)- HELWS)
        ZX = BIV(HELP,HELTF,NUMTAB(10))
        HELP = ZX*1545.*HELT*HELW/(HELB(4)*FMOLX*144.)
        HELT  = HELT * HELX**(HELG-1.)
        HELTF = HELT-460.
        HELWS = HELWS + HELWN
        HELWS =AMIN1(HELWS,HELB(14))
        P(MAXC+1)= HELT
        TX  = .918*TLIQ + .082*HELT
        IF (HELB( 6).EQ.0.0) TX = HELT
        IX4 = 2*MAXT+NRES
        P(IX4+1) = 3600./(BIV(HELP,HELTF,NUMTAB(24))*HELB(2)*48.5)
        IX4 = 2*MAXT+MAXR+MAXC
        P(IX4+1) =HELW*(BIV(HELP,HELTF,NUMTAB(11))-1.9865*ZX/FMOLX)
        P(IX4+2) = HELB(1)*LIN(HELTF,NUMTAB(36))
  104   TXF = TX-460.
        ZX    = BIV(PR,TXF  ,NUMTAB(10))
        FMGA = FMOLX *VGAS*(PMIN-PR)*144.0 /(ZX*R*TGAS)
        FMGA = AMAX1(FMGA,0.0)
        FMGAS = FMGAS+FMGA
        IF(IGC .EQ.1)  GO TO 105
        FMNA = FMGA
        SMNA = SMNA  + FMNA
        GO TO 110
  105   FMCA = FMGA
        SMCA = SMCA +FMCA
  110   TGAS1 = TGAS
        CPX   = BIV(PR,TXF  ,NUMTAB(11))-FLT*ZX/FMOLX
        TGAS  =  (TX *FMGA *CPX+ TGAS1*SCGAS)/(FMGA*CPX + SCGAS)
        IF (TGAS.EQ.0.0)  TGAS = TLIQ
        TGASF = TGAS-460.
        CALL RESET (TGAS, 2 )
        IF( TGAS .GT. TSAT ) GO TO 210
        PC1  = PC
        IF (TLIQ.NE.0.0) GO TO 112
        ZC = BIV(PC,TGASF,NUMTAB( 4) )
        PC = FMC*ZC*R*TGAS/(FMOLC*VGAS*144.)
        GO TO 114
  112   TEMPZF = TLSMAX-460.
        PC = LIN(TEMPZF,NUMTAB(5))
  114   FMC1 = FMC
        FMC = FMC1 *PC * TGAS1          /PC1 /TGAS
        DMCC =  FMC -FMC1
        SDMCC  =  SDMCC +DMCC
        RLAM = LIN(   TLIQF,NUMTAB(9))
        IF( ABS( DMCC) .GT. EPS )  CALL SSDSB
        TLIQF = TLIQ-460.
        GO TO 210
  208   LLFLOW = 0
  210   FMLUS  = DTHETA *FMLU
        FMLAS  = DTHETA *FMLA
        SMLAS  =  SMLAS + FMLAS
        SMLUS  =  SMLUS + FMLUS
        SMLUS = AMIN1(SMLUS,FMLO)
        FML1  = FML
        RHOL  = LIN(   TLIQF,NUMTAB(14))
        FML   = FMLO -SDMCC -SMLUS +SMLAS
        FML = AMAX1(FML,0.)
        TLIQ1 = TLIQ
        TLIQ  =  (TLIQ1*(FML -FMLAS) +FMLAS *TLA)/FML
        IF (TLIQ.EQ.0.0)  TLIQ = TGAS
        TLIQF = TLIQ-460.
```


LOCKHEED
CALIFORNIA COMPANY

TABLE B-1 (CONTINUED)

```
      DELV  =  (EML-EML1)/RHOL                                          2266252
      DELVS = DELVS+DELV                                                2266253
      VGAS1 =  VGAS                                                     2266254
      VGAS  =  VGAS1 -DELV                                              2266255
      VGAS = AMIN1(VGAS,TANKV)                                          2266256
      IF (ABS(DELV).LT.EPG.AND.GAVITY.EQ.GOLD.AND.ANGLE.EQ.ANGOLD)      2266257
     1   GO TO 2102                                                     2266258
      IF (GAVITY.EQ.0.0)  CALL GEOMNG                                   2266259
      IF (GAVITY.NE.0.0)  CALL GEOMGC(ISTRAT)                           2266260
      CALL RECALC (ITIME)                                               2266261
      OLDPR = PR                                                        2266262
      OLDGT = TGAS                                                      2266263
      OLDLT = TLIQ                                                      2266264
      IF (EMLU.NE.0.0.OR.EMLA.NE.0.0.OR.ANGLE.NE.ANGOLD)                2266265
     1   CALL RESET(TLIQ,1)                                             2266266
      IF (ANGLE.NE.ANGOLD)  CALL RESET(TGAS,2)                          2266267
      TGAS1 = TGAS                                                      2266268
      TLIQ1 = TLIQ                                                      2266269
      CALL RESET(TGAS,4)                                                2266270
      TGAS = TGAS1                                                      2266271
      TLIQ = TLIQ1                                                      2266272
      TALL =(TLIQ1*SCLIQ+TGAS1*SCGAS)/SCALL                             2266273
      IF (GAVITY.NE.GOLD)  CALL RESET(TALL,3)                           2266274
 2102 TGAS1 =  TGAS                                                     2266275
      IF( IPATH .EQ. 2)  GO TO 211                                      2266276
      GAMMAC= BIV(PR,TGASF,NUMTAB(13))                                  2266277
      GAMMAN = BIV(PR,TGASF,NUMTAB(34) )                                2266278
      GAMMA  = (GAMMAC*EMC + GAMMAN*EMN) / (EMC+EMN)                    2266279
      DELT  =  TGAS1 *( (VGAS1/VGAS )**(GAMMA-1.0)-1.0)                 2266280
      DELTS = DELTS+DELT                                                2266281
      TGAS  =  TGAS1 + DELT                                             2266282
      TGASF = TGAS-460.                                                 2266283
      CALL  RESET( DELT,5)                                              2266284
  211 CONTINUE                                                          2266285
      CALL RADIAT (SUM)                                                 2266286
      SUMEX = SUMEX+SUM                                                 2266287
      EPSIPR = LIN(THETA,NUMTAB(32))                                    2266288
      EPSIGT = LIN(THETA,NUMTAB(30))                                    2266289
      EPSILT = LIN(THETA,NUMTAB(31))                                    2266290
      TALL = (TLIQ*SCLIQ + TGAS*SCGAS)/SCALL                            2266291
      IF (ABS(OLDPR-PR).LT.EPSIPR.AND.ABS(OLDGT-TGAS).LT.EPSIGT.        2266292
     1  AND.ABS(OLDLT-TLIQ).LT.EPSILT)   GO TO 222                      2266293
      CALL RECALC (ITIME)                                               2266294
      OLDPR = PR                                                        2266295
      OLDGT = TGAS                                                      2266296
      OLDLT = TLIQ                                                      2266297
  222 CONTINUE                                                          2266298
      IF (ISTRAT.EQ.0)  GO TO 2221                                      2266299
      VLIQ = TANKV - VGAS                                               2266300
      IF (GAVITY.EQ.0.0.OR.EMLU.NE.0.0.OR.EMLA.NE.0.0                   2266301
     1                 .OR.VLIQ.LT.STRINP(1)*TANKV)  GO TO 2218         2266302
      CALL STRAT                                                        2266303
      IF (IDEST(1).EQ.0 .AND. ICALL.EQ.1)  GO TO 2219                   2266304
 2218 ITR = 2*MAXT + MAXR                                               2266305
      NEXT = COMUN(4)+.1                                                2266306
      DO 2220 J=1,NEXT                                                  2266307
      NRBUF = MOD(NSEX(J),1000)                                         2266308
      NCBUF =(NSEX(J)-NRBUF)/1000 + ITR                                 2266309
      NRBUF = NRBUF + 2*MAXT                                            2266310
      IF (P(NCBUF).GT.0.0 .AND. P(NRBUF).GE.TEN20)                      2266311
     1    P(NRBUF) = P(NRBUF)/TEN20                                     2266312
 2220 CONTINUE                                                          2266313
      GO TO 2221                                                        2266314
```


LOCKHEED
CALIFORNIA COMPANY

"REPRODUCILIBITY OF THE ORIGINAL PAGE IS POOR."

TABLE B-1 (CONTINUED)

```
 2219 SUMEX = SUMEX+QRL*M(5)                                            2266315
 2221 IF (ITIME.LE.2)  GO TO 2224                                       2266316
      IF (THETA.LT.M(11) )  GO TO 223                                   2266317
 2224 ITIME = 3                                                         2266318
 2225 WRITE (6,301)  (CC(I),I=1,12)                                     2266319
      WRITE (6,302) M(1), M(5), M(6), M(9), M(15), GAVITY,ANGLE         2266320
      WRITE (6,303) PR,PC,PN,TGAS,TLIQ,TALL,DELTS,TLMAX,TLSMAX,TSGAS,TS,2266321
     1              VGAS,EMC,EMN,SDMCC,SMCV,SMNV,SMCA,SMNA,             2266322
     2              EML,EMLU,EMLA, EMGU,SMLUS,SMLAS,DELVS,     SUMEX    2266323
      WRITE (6,308)EMGAS,HELP,HELT,TX,HELW,HELWS                        2266324
      IF (IPTLIQ.NE.0)  PUNCH 309,      THETA,TLIQF                     2266325
      DELTS = 0.                                                        2266326
      DELVS = 0.                                                        2266327
      EMGAS = 0.                                                        2266328
      WRITE (6,304) SCGAS,SCLIQ,SCINT,SCALL,TLA,RHOL,                   2266329
     1              CPG1,CPG2,CPL,EKG1,EKG2,EKL,                        2266330
     2              ZC,ZN,ZX,CPX,RLAM,GAMMA                             2266331
      IF (ISTRAT.NE.0)  WRITE(6,305)                                    2266332
     1              HBAR,YBAR,TTOPBL(1),RNO,BNO,W,                      2266333
     2              (NGNNS(I),I=1,NCLAY)                                2266334
 224  CONTINUE                                                          2266335
 301  FORMAT(1H1,12A6)                                                  2266336
 302  FORMAT(7H0THETA=F14.7,X8HO THETA=E10.3,X7HRC MIN=E10.5,X4HNODEF4.02266337
     1,X14HPREV. D THETA=E10.5,X8HGRAVITY=F6.3,X6HANGLE=F3.0/)          2266338
 304  FORMAT(7H0SC GAS13X6HSC LIQ14X6HSC INT14X6HSC ALL14X4HT LA16X7HRHO2266339
     1 LIQ/E13.5,5E20.5/8H CP GASC12X8HCP GASN 12X6HCP LIQ14X7HK GAS C132266340
     2X7HK GAS N13X5HK LIQ/E13.5,5E20.5/4H Z C16X3HZ N17X3HZ X17X4HCP X 2266341
     316X5HR LAM15X5HGAMMA/F13.5,5E20.5)                                2266342
 305  FORMAT                          (6H0H BAR14X5HY BAR15X8HT TOP BL12266343
     42X18HRAYLEIGH NR.(SIDE)2X8HBOND NR.12X1HW19X/E13.5,5E20.5/28H0LAYE2266344
     5R TEMPS.(TOP TO BOTTOM)/(F13.5,5E20.5))                           2266345
 308  FORMAT(5H0FMGA15X16HHEL BOT PRESSURE4X13HHEL BOT TEMP.7X7HT SUB X12266346
     13X13HHELIUM WEIGHT7X15HPREVIOUS WEIGHT/E13.5,5E20.5)              2266347
 303  FORMAT(15H0TOTAL PRESSURE5X19HPARTIAL CONDENSIBLEX19HPARTIAL NONCO2266348
     1NDENS./E13.5,2E20.5/19H0TEMPERATURE AV GASX14HAVERAGE LIQUID6X11HA2266349
     2VERAGE ALL9X,11HDELTA TEMP./E13.5,3E20.5/18H0MAXIMUM LIQ. NODE2X172266350
     3HMAX LIQ SURF NODE3X17HMAX SURF GAS NODE3X3HT S/E13.5,3E20.5/14H0V2266351
     40LUME OF GAS6X16HMASS CONDENSIBLE4X19HMASS NONCONDENSIBLEX16HSUM D2266352
     5ELTA MASSES/E13.5,3E20.5/38H0SUM MASS COND VENT SUM MASS NONC VENT2266353
     62X39HSUM MASS COND ADDED SUM MASS NONC ADDED/E13.5,3E20.5/15H0MASS2266354
     7 OF LIQUID5X16HMASS LIQUID USED4X17HMASS LIQUID ADDED3X13HMASS GAS2266355
     8 USED/E13.5,3E20.5/18H0SUM MASS LIQ USED2X18HSUM MASS LIQ ADDED2X12266356
     92HDELTA VOLUME/E13.5,2E20.5/13H0SUM EXT HEAT/E13.5)               2266357
 309  FORMAT(5HDEC02,2F10.3)                                            2266358
C     MUST RESTART DURING NON-HELIUM FLOW TIME                          2266359
C     ASSUME FINALT = FINAL TIME OF CURRENT SEGMENT                     2266360
C     USE TAPE 8 AS RESTART TAPE FOR CONTRL QUANTITIES                  2266361
C     USE TAPE 7 AS PUNCH   FOR TLIQ VS. THETA                          2266362
 294  IF (IRSTRT.LT.2)  GO TO 295                                       2266363
      CALL RULOVA (MTIME2)                                              2266364
      IF (THETA.GE.EKUT )                GO TO 290                      2266365
      IF (MTIME.EQ.0)  GO TO 295                                        2266366
      IF ( MTIME2-MTIME1.GT.MTIME-480)  GO TO 290                       2266367
      GO TO 295                                                         2266368
 290  CALL CHOP (2)                                                     2266369
 295  CONTINUE                                                          2266370
 223  GOLD = GAVITY                                                     2266371
      ANGOLD = ANGLE                                                    2266372
      DO 220 I=1,MAXT                                                   2266373
      II = MAXT+I                                                       2266374
      P(I) = P(I)-460.                                                  2266375
 220  P(II) = P(II)-460.                                                2266376
      RETURN                                                            2266377
      END                                                               2266378
```


LOCKHEED
CALIFORNIA COMPANY

TABLE B-1 (CONTINUED)

```
$IBFTC S5059                                                            1911101
      SUBROUTINE S5059                                                  1911102
C     AS OF 6/30/65
      COMMON P(14000),TM(16),MAXT,MAXR,MAXC,KSP,KST
      COMMON /CONTR/  TLIQ,SCLIQ,TGAS,SCGAS,SCALL,TLSMAX,SCINT,TSGAS,
     1COMUN(5),DMCC,TLMAX,TALL,FMLO,GAVITY,FKG,FKL,ZC,PC,ZN,FMLU,FMLA,
     2          ZX,CPX,TLA,GAMMA,RHOL,RHOG,CPL,CPG,RLAM,MCNT,PN,FMC,FMN,R
      COMMON /CPNET/NTYPE,TKRAD,TKLEN,TEMPZ,NRAD,NCIR,NSECT,NTNK,
     1 TKTHK(5),TKWAL1,TKWAL2,INODE,KOUT,
     2          FMCO,FMNO,FMOLC,VGAS,IGC,IPRESS,FMOLN,FMIN,FMAX,PMIN,
     3          PMAX,FMOLX,TSAT,ANGLE,TX,PR,TANKV,
     5          RADI(4),HELB(14),LLFLOW,HELT,HELP,HELW
     6          ,ISTRAT,SAREA,IOPTSX(5),FMULTF(5),STRINP(20)
     7           ,GSOLD (2),TTOPBL(2),DLIQ   ,NLSURF,ICALL
      EQUIVALENCE  (FMULTF(1), FLT),(FMULTF(2),FLKL)
      DIMENSION VS(250),FLA(500),NUMTAB(100),NEXW(125),NSEX(125),MM(125)
      DIMENSION LNO(250),NLNNS(125),NGNNS(125)
      EQUIVALENCE (P(13251),VS),(P(13501),FLA)
     1,(P(12526),NUMTAB),(P(12626),NEXW),(P(12751),NSEX),(P(12876),MM)
      EQUIVALENCE(P(12276),LNO),(P(12151),NLNNS),(P(12026),NGNNS)
      IX2 = MAXT
      TLIQ1 = TLIQ                                                      1911103
      TLIQ  = TLIQ1  - DMCC*RLAM /SCLIQ                                 1911104
      IF(DMCC .GE. 0.0)  GO TO 50                                       1911105
      IF(FMLU .NE. 0.0)  GO TO 50                                       1911106
      IF(FMLA .NE. 0.0)  GO TO 50                                       1911107
   30 IF (MCNT.EQ.0)  RETURN
      DO   35  I =1,MCNT
C     MM(I) I=1,NO. OF SURFACE NODES,NO. OF SURF NODES =MCNT            1911109
      MT = MM(I)                                                        1911110
   32 MTX2 = MT+IX2
      P(MT     ) = P(MT     )-DMCC*RLAM/SCINT                           1911111
   35 CONTINUE                                                          1911112
      RETURN                                                            1911113
   50 IF(GAVITY .EQ. 0.0) GO TO 60                                      1911114
      TLIQ1 = TLIQ
      TSURF  = TLIQ1  -4.0*DMCC*RLAM  /SCINT                            1911116
      IF (TSURF .GE. TLSMAX) GO TO 30                                   1911117
   60 CALL RESET(TLIQ,1)                                                1911118
      RETURN                                                            1911119
      END                                                               1911120
```


LOCKHEED
CALIFORNIA COMPANY

TABLE B-1 (CONTINUED)

```
$IBFTC SURF
      SUBROUTINE SURF
C     AS OF 6730765
      COMMON P(14000),TM(16),MAXT,MAXR,MAXC
      COMMON /CONTR/  TLIQ,SCLIQ,TGAS,SCGAS,SCALL,TLSMAX,SCINT,TSGAS,
     1COMUN(5),DMCC,TLMAX,TALL,FMLO,GAVITY,FKG,FKL,ZC,PC,ZN,FMLU,FMLA,
     2          ZX,CPX,TLA,GAMMA,RHOL,RHOG,CPL,CPG,RLAM,MCNT,PN,FMC,FMN,R
      COMMON /CPNET/NTYPE:TKRAD,TKLEN,TEMPZ,NRAD,NCIR,NSECT,NTNK,
     1 TKTHK(5),TKWAL1,TKWAL2,INODE,KOUT,
     2          FMCO,FMNO,FMOLC,VGAS,IGC,IPRESS,FMOLN,FMIN,FMAX,PMIN,
     3          PMAX,FMOLX,TSAT,ANGLE,TX,PR,TANKV,
     5          RADI(4),HELB(14),LLFLOW,HELT,HELP,HELW
     6          ,ISTRAT,SAREA,IOPTSX(5),FMULTF(5),STRINP(20)
     7           ,GSOLD (2),TTOPBL(2),DLIQ  ,NLSURF,ICALL
      EQUIVALENCE (FMULTF(1), FLT),(FMULTF(2),FLKL)
      DIMENSION VS(250),FLA(500),NUMTAB(100),NEXW(125),NSEX(125),MM(125)
      DIMENSION LNO(250),NLNNS(125),NGNNS(125)
      EQUIVALENCE (P(13251),VS),(P(13501),FLA)
     1,(P(12526),NUMTAB),(P(12626),NEXW),(P(12751),NSEX),(P(12876),MM)
      EQUIVALENCE(P(12276),LNO),(P(12151),NLNNS),(P(12026),NGNNS)
      IF (KOUT.GE.2)  WRITE (6,101)
  101 FORMAT(14HOENTERING SURF  )
      IX4 = 2*MAXT+MAXR
       MCNT = 0
      TLSMAX = 0.
      TSGAS = 0.
      SCINT = 0.
      K1 = 1
      K2 = 3
C     KRES = 1 RADIAL
C     KRES = 2 CIRCULAR
C     KRES = 3 AXIAL
      KEYNOD = -1
      ITIME = 0
      KKK = NRAD/4
      IINOD = INODE
   88 DO 60 KRES =K1,K2
      IF (KRES-2) 501,502,503
  501 II = NCIR+NTNK
      JJ = NRAD
      KK = KKK
      NDELT = 1
      GO TO 510
  502 II = NCIR+NTNK+1
      KK = KKK
      NDELT = NCIR+NTNK+1
      GO TO 510
  503 II = NCIR+NTNK+1
      KK = KKK-1
      IF (K1.EQ.3)  KK=1
      NDELT = (NCIR+NTNK+1)*NRAD
  510 M = 0
      IF (II*JJ*KK.EQ.0)  GO TO 60
      DO 50 K=1,KK
      DO 49 J=1,JJ
      DO 48 I=1,II
      M = M+1
      IF (KRES.EQ.1.AND.I.GE.NCIR)  GO TO 48
      IF (I.GT.NCIR)  GO TO 48
      NODE = M-1+IINOD
      NOD1 = NODE+NDELT
```


LOCKHEED
CALIFORNIA COMPANY

TABLE B-1 (CONTINUED)

```
      IF (KRES.EQ.2.AND.J.EQ.JJ)  NOD1 = NOD1-NRAD*(NCIR+NTNK+1)
      IF (K1.EQ.3) NOD1 = M-1+KEYNOD
      NODEX4 = NODE+IX4
      NOD1X4 = NOD1+IX4
      IF (P(NODEX4).LT.0.0.AND.P(NOD1X4).GT.0.0)  GO TO 41
      IF (P(NODEX4).GT.0.0.AND.P(NOD1X4).LT.0.0)  GO TO 42
      GO TO 48
 41   IF (TLSMAX.GE.P(NOD1))  GO TO 412
      TLSMAX = P(NOD1)
      TSGAS  = P(NODE)
 412  NODX = NOD1
      GO TO 424
 42   IF (TLSMAX.GE.P(NODE))  GO TO 422
      TLSMAX = P(NODE)
      TSGAS  = P(NOD1)
 422  NODX = NODE
 424  IF (MCNT.EQ.0)  GO TO 428
      DO 426 L=1,MCNT
      IF (NODX.EQ.MM(L))  GO TO 48
 426  CONTINUE
 428  MCNT = MCNT+1
      MM(MCNT) = NODX
      NODEX4= NODX+IX4
      SCINT = SCINT + P(NODEX4)
 48   CONTINUE
      IF (KRES.EQ.1)  M=M+1
 49   CONTINUE
 50   CONTINUE
 60   CONTINUE
      ITIME = ITIME+1
      IF (KEYNOD.EQ.-1)  GO TO 200
      IF (NTYPE.EQ.1)    GO TO 160
      IF (ITIME.GT.2)    GO TO 190
      K1 = 3
      K2 = 3
      GO TO 88
 160  IF (ITIME.NE.2)  GO  TO 170
      K1 = 3
      K2 = 3
      GO TO 88
 170  IF (ITIME.NE.3)  GO TO 180
      IINOD = INODE+(NCIR+NTNK+1)*NRAD*(NRAD/4+NSECT)
      KEYNOD = IINOD-(NCIR+NTNK+1)*NRAD
      KKK = NRAD/4
      K1 = 1
      K2 = 3
      GO TO 88
 180  IF (ITIME.NE.4)  GO TO 190
      K1 = 3
      K2 = 3
      GO TO 88
 190  CONTINUE
      IF (KOUT.GE.2)  WRITE (6,193)
 193  FORMAT(13H LEAVING SURF  )
      IF                        (TLSMAX.NE.0.0)  GO TO 194
      TUNK = TLIQ
      IF (TLIQ.EQ.0.0)  TUNK = TGAS
      TLSMAX = TUNK
      TSGAS  = TUNK
 194  RETURN
 200  IF (NTYPE.EQ.1)  GO TO 210
```


LOCKHEED
CALIFORNIA COMPANY

"REPRODUCILIBITY OF THE ORIGINAL PAGE IS POOR."

TABLE B-1 (CONTINUED)

```
      KEYNOD = INODE
      IINOD = (NCIR+NTNK+1)*NRAD**2/4 + INODE
      KKK = NRAD/4
      GO TO 88
210   KEYNOD = INODE
      IINOD = (NCIR+NTNK+1)*NRAD**2/4+INODE
      KKK = NSECT
      GO TO 88
      END
```


LOCKHEED
CALIFORNIA COMPANY

TABLE B-1 (CONTINUED)

```
$IBFTC RESET
      SUBROUTINE RESET(T,ITE )
C     AS OF 7/28/65
C     COMMON FOR RESET
      COMMON P(14000),TM(16),MAXT,MAXR,MAXC,KSP,KST
      COMMON /CONTR/  TLIQ,SCLIQ,TGAS,SCGAS,SCALL,TLSMAX,SCINT,TSGAS,
     1COMUN(5),DMCC,TLMAX,TALL,FMLO,GAVITY,FKG,FKL,ZC,PC,ZN,FMLU,FMLA,
     2          ZX,CPX,TLA,GAMMA,RHOL,RHOG,CPL,CPG,RLAM,MCNT,PN,FMC,FMN,R
      COMMON /CPNET/NTYPE,TKRAD,TKLEN,TEMPZ,NRAD,NCIR,NSECT,NTNK,
     1 TKTHK(5),TKWAL1,TKWAL2,INODE,KOUT,
     2          FMCO,FMNO,FMOLC,VGAS,IGC,IPRESS,FMOLN,FMIN,FMAX,PMIN,
     3          PMAX,FMOLX,TSAT,ANGLE,TX,PR,TANKV,
     5          RADI(4),HELP(14),LLFLOW,HELT,HELP,HELW
     6          ,ISTRAT,SAREA,IOPTSX(5),FMULTF(5),STRINP(20)
     7          ,GSOLD (2),TTOPBL(2),DLIQ  ,NLSURF,ICALL
      COMMON /STR/  IDEST (1)
      EQUIVALENCE  (FMULTF(1), FLT),(FMULTF(2),FLKL)
      DIMENSION VS(250),FLA(500),NUMTAB(100),NEXW(125),NSEX(125),MM(125)
      DIMENSION LNO(250),NLNNS(125),NGNNS(125)
      EQUIVALENCE (P(13251),VS),(P(13501),FLA)
     1,(P(12526),NUMTAB),(P(12626),NEXW),(P(12751),NSEX),(P(12876),MM)
      EQUIVALENCE(P(12276),LNO),(P(12151),NLNNS),(P(12026),NGNNS)
      IF (KOUT.GE.2)  WRITE (6,101) ITE
  101 FORMAT(17HCENTERING RESET( ,I1,1H)
      IX4 = 2*MAXT+MAXR
      IF (ITE.EQ.1 .OR. ITE.EQ.3)  IDEST(1) = 1
      IF (ITE.NE.4) GO TO 1
      SCLIQ = 0.
      SCGAS = 0.
      TGAS = 0.
      TLIQ = 0.
      TLMAX = 0.
    1 ITIME = 1
      II = NTNK +NCIR +1
      JJ = NRAD
      KK = NRAD / 4
      IINOD  = INODE
    6 M = 0
      DO 5  K=1,KK
      DO 4  J=1,JJ
      DO 3  I=1,II
      M = M+1
      IT =  M-1 +IINOD
      ITX4 = IT+IX4
      IF( I.GT. NCIR) GO TO 3
      GO TO (80,81,82,83,84),ITE
   80 IF(P(ITX4  ).GT.0.)    P(IT) =T
      GO TO 3
   81 IF(P(ITX4  ).LT.0.)    P(IT) =T
      GO TO 3
   82    P(IT) = T
      GO TO 3
   83 IF (P(ITX4).LT.0.)  GO TO 834
      SCLIQ = SCLIQ+P(ITX4)
      TLIQ = TLIQ+P(ITX4)*P(IT)
      TLMAX = AMAX1(TLMAX,P(IT))
      GO TO 3
  834 SCGAS = SCGAS-P(ITX4)
      TGAS = TGAS-P(ITX4)*P(IT)
      GO TO 3
   84 IF (P(ITX4).LT.0.0)  P(IT) = P(IT)+T
```


LOCKHEED
CALIFORNIA COMPANY

"REPRODUCILIBITY OF THE ORIGINAL PAGE IS POOR."

TABLE B-1 (CONTINUED)

```
3     CONTINUE
4     CONTINUE
5     CONTINUE
      IF( ITIME .GT. 1)  GO TO 18
      ITIME =  ITIME +1
      IINOD =  II*JJ*KK +1
      IF( NTYPE .EQ. 1)  KK = NSECT
      GO TO 6
18    IF( ITIME  .GT.2)  GO TO 19
      IF( NTYPE .NE. 1)  GO TO 19
      ITIME = ITIME  + 1
      IINOD =  II*JJ*(KK +NRAD/4) +1
      KK  = NRAD/4
      GO TO 6
19    GO TO ( 30,31,32,34,35),ITE
30    TLIQ =T
      TLMAX=T
      GO TO 40
31    TGAS =T
      GO TO 40
32    TLIQ = T
      TGAS = T
      TLMAX =  T
      GO TO 40
34    TGAS = TGAS/SCGAS
      TLIQ = TLIQ/SCLIQ
      SCALL = SCLIQ+SCGAS
      IF (TGAS.EQ.0.0)  TGAS = TLIQ
      IF (TLIQ.NE.0.0)  GO TO 40
      TLIQ = TGAS
      TLMAX= TGAS
      GO TO 40
35    TGAS = TGAS+T
40    IF (KOUT.GE.2)  WRITE (6,137) ITE
137   FORMAT(17H LEAVING  RESET(  ,I1,1H))
      RETURN
      END
```


LOCKHEED
CALIFORNIA COMPANY

TABLE B-1 (CONTINUED)

```
$IBFTC RADIAT
      SUBROUTINE RADIAT (SUM)
C     AS OF 7/28/65
C     ASSUME COMUN(1) CONTAINS INDICATOR OF WHICH SECTION CONTAINS SURF.
      COMMON P(14000), M(16), KKKK(23), CC(12)
      COMMON /CONTR/ TLIQ,SCLIQ,TGAS,SCGAS,SCALL,TLSMAX,SCINT,TSGAS,
     1COMUN(5),DMCC,TLMAX,TALL,FMLO,GAVITY,FKG,FKL,ZC,PC,ZN,FMLU,FMLA,
     2          ZX,CPX,TLA,GAMMA,RHOL,RHOG,CPL,CPG,RLAM,MCNT,PN,FMC,FMN,P
      COMMON /CPNET/NTYPE,TKRAD,TKLEN,TEMPZ,NRAD,NCIR,NSECT,NTNK,
     1 TKTHK(5),TKWAL1,TKWAL2,INODE,KOUT,
     2          FMCO,FMNO,FMOLC,VGAS,ICC,IPRESS,FMOLN,FMIN,FMAX,PMIN,
     3          PMAX,FMOLX,TSAT,ANGLE,TX,PR,TANKV,
     5          RADI(4),HELB(14),LLFLOW,HELT,HELP,HELW
     6          ,ISTRAT,SAREA,IOPTSX(5),FMULTF(3),STRINP(20)
     7           ,GSOLD (2),TTOPBL(2),DLIQ  ,NLSURF,ICALL
      DIMENSION VS(250),FLA(500),NUMTAB(100),NEXW(125),NSEX(125),MM(125)
      DIMENSION LNO(250),NLNNS(125),NGNNS(125)
      EQUIVALENCE (P(13251),VS),(P(13501),FLA)
     1,(P(12526),NUMTAB),(P(12626),NEXW),(P(12751),NSEX),(P(12876),MM)
      EQUIVALENCE(P(12276),LNO),(P(12151),NLNNS),(P(12026),NGNNS)
      EQUIVALENCE  (FMULTF(1), FLT),(FMULTF(2),FLKL)
C             COMUN(1)=1 IF SURF. IS IN TOP HEMIS. OR ANGLE =90. DEGREES
C                     =2 IF SURF IS IN CYLINDER (ILLEGAL FOR NTYPE=2)
C                     =3 IF SURF IS IN BOTTOM HEMISPHERE
C             COMUN(2) CONTAINS D(HEIGHT OF BOTTOM OR TOP CURVED SECTION)
C             COMUN(3) CONTAINS NR. OF EXPOSED WALL NODES
C     ASSUME COMUN(4) HAS NR. OF NODES ATTACHED TO WALL NODES
      REAL M
      IF (GAVITY.EQ.0.0.OR.RADI(1).EQ.0.0)  GO TO 70
   10 NEXP = COMUN(3)+.1
      IF (NEXP.EQ.0.OR.MCNT.EQ.0)  GO TO 70
   50 FMCNT = MCNT
      ST = 0.
      DO 52  I=1,NEXP
      II = NEXW(I)
   52 ST = ST + P(II)**4
      ST = ST/COMUN(3)
      SS = 0.
      DO 54  I=1,MCNT
      II = MM(I)
   54 SS = SS + P(II)**4
      SS = SS/FMCNT
      EPSI = 1./ (1./RADI(3)+ 1./RADI(4)- 1.)
      Q = RADI(1) * EPSI * SAREA * RADI(2) * (ST-SS) * M(5) / 3600.0
      DT = Q/SCINT
      DO 60 I=1,MCNT
      II = MM(I)
   60 P(II) = P(II)+DT
C     COMPUTE  SUM OF  (T NODE-T WALL)/RES
   70 II  = 2*KKKK(1)
      NEXT = COMUN(4)+.1
      SUM = 0.
      DO 80 I=1,NEXT
      NRES = MOD(NSEX(I),1000)
      NODE = (NSEX(I)-NRES)/1000
      NRES = NRES+II
   80 SUM = SUM +((P(NODE+1)-P(NODE))/ P(NRES))*M(5)
      RETURN
      END
```


LOCKHEED
CALIFORNIA COMPANY

TABLE B-1 (CONTINUED)

```
$IBFTC RECALC
      SUBROUTINE RECALC(ITIME)                                          RCC 002
C     AS OF 6/30/65
      COMMON P(14000),MT(16),MAXT,MAXR,MAXC                             RCC 003
      COMMON /CONTR/  TLIQ,SCLIQ,TGAS,SCGAS,SCALL,TLSMAX,SCINT,TSGAS,
     1COMON(5),DMCC,TLMAX,TALL,FMLO,GAVITY,FKG,FKL,ZC,PC,ZN,FMLU,FMLA,
     2          ZX,CPX,TLA,GAMMA,RHOL,RHOG,CPL,CPG,RLAM,MCNT,PN,FMC,FMN,R
      COMMON /CPNET/NTYPE,TKRAD,TKLEN,TEMPZ,NRAD,NCIR,NSECT,NTNK,
     1 TKTHK(5),TKWAL1,TKWAL2,INNOD,KOUT,
     2          FMCO,FMNO,FMOLC,VGAS,IGC,IPRESS,FMOLN,FMIN,FMAX,PMIN,
     3          PMAX,FMOLX,TSAT,ANGLE,TX,PR,TANKV,
     5          RADI(4),HELB(14),LLFLOW,HELT,HELP,HELW
     6          ,ISTRAT,SAREA,IOPTSX(5),FMULTF(5),STRINP(20)
     7           ,GSOLD (2),TTOPBL(2),DLIQ   ,NLSURF,ICALL
      EQUIVALENCE  (FMULTF(1), FLT),(FMULTF(2),FLKL)
      DIMENSION VS(250),FLA(500),NUMTAB(100),NEXW(125),NSEX(125),MM(125)
      EQUIVALENCE (P(13251),VS),(P(13501),FLA)
     1,(P(12526),NUMTAB),(P(12626),NEXW),(P(12751),NSEX),(P(12876),MM)
      EQUIVALENCE (IOPTSX(1),IRSTRT),(IOPTSX(2),IPTLIQ),
     1            (IOPTSX(3),LIBTAP)
      REAL LIN,MT,LIN                                                   RCC 007
      IF (ITIME.NE.1)  GO TO 1
      REWIND 9
      REWIND 10
      NTEMPS = HELB(12)+.1
      DO 45 I=1,NTEMPS
 45   READ (10) (VS(I))
      READ (10) NRES
      DO 46 I=1,NRES
 46   READ (9) (FLA(I))
      REWIND 9
      REWIND 10
      IF (KOUT.LT.2)  RETURN
      WRITE (6,3) (FLA(I),I=1,NRES)
      WRITE (6,4) (VS(I),I=1,NTEMPS)
      RETURN
 1    IX3 = 2*MAXT
      IX4 = IX3+MAXR
C     FLT = 0.0
C     FLKL = 1.0
C     IF (LIBTAP.EQ.0)  GO TO 4401
C     FLT = 1.9865
C     IF (GAVITY.EQ.0.0)  FLKL = 5.0
 4401 INODE= INNOD
      INSCVS = 41
      MAXNEX = 125
      NEXP = 0
      NEXT = 0
C     INSCVS=FIRST INSULATION CURVE NUMBER
      RCOND = R/144.
      RNONC = RCOND
 3    FORMAT(11HOL/A VALUES /(1X,10E13.5))
 4    FORMAT(8HOVOLUMES /(1X,10E13.5) )
      IF (KOUT.NE.0)  WRITE (6,44)PR,TGAS,TLIQ,PN,PC
 44   FORMAT(16HOENTERING RECALC ,5F10.3)
      PI = 3.14159265                                                   RCC 004
      ITIM= 1                                                           RCC 008
      SUM =0.0                                                          RCC 009
      DO 10 I=1,NTNK                                                    RCC 010
      SUM =SUM+ TKTHK(I)                                                RCC 011
 10   CONTINUE                                                          RCC 012
```


LOCKHEED
CALIFORNIA COMPANY

TABLE B-1 (CONTINUED)

```
      DO 11 I=1,MAXT
 11   P(I) = P(I) -460.
      FNRAD =NRAD                                                    RCC 013
      FNCIR =NCIR                                                    RCC 014
      FNSECT= NSECT                                                  RCC 015
      KEYNOD=  -1                                                    RCC 016
C     IF CYLINDER NTYPE=1 ,IF SPHERE  NTYPE=2                        RCC 017
      PI2= 3.14159265*2.0                                            RCC 018
      NRES =0                                                        RCC 019
C     COMPUTE  RADIAL RESISTORS FOR HEMISPHERE                       RCC 021
 15   KK = NRAD/4                                                    RCC 022
      M = 0                                                          RCC 023
      K1 = (NCIR+NTNK +1)                                            RCC 024
      JJ =  NRAD                                                     RCC 025
      JI =  NCIR + NTNK +1                                           RCC 026
      II = NCIR +NTNK                                                RCC 027
      DO   50  KI= 1,KK                                              RCC 028
      K = KI-1                                                       RCC 029
      DO   40  JI= 1,JJ                                              RCC 030
      J=JI -1                                                        RCC 031
      DO   30   I= 1,II,1                                            RCC 032
      M = M+1                                                        RCC 033
      NODE =   M-1   +INODE                                          RCC 034
      NODE1= NODE+1                                                  RCC 057
      IF(I- NCIR) 23,23,27                                           RCC 035
 23   CALL FINDN(NODE,NODE1,NODN)                                    2266036
      IF (NODN  .NE.0) GO TO 236                                     2266037
      FK = LIN(P(NODE),NUMTAB(3)) *FLKL
      GO TO 29                                                       2266039
 236  FK = BIV(PC,P(NODN  ),NUMTAB(2)) + BIV(PN,P(NODN  ),NUMTAB(24))  2266040
      IF (I.NE.NCIR)  GO TO 29
      NEXP = NEXP+1
      NEXW(NEXP) = NODE1
      GO TO 29                                                       2266041
 27   IT = (I-NCIR-1)*3+INSCVS                                       2266042
      FK = LIN(P(NODE),NUMTAB(IT))                                   2266043
 29   NRES = NRES+1                                                  2266044
      IF (I.NE.NCIR)  GOTO 292
      NEXT = NEXT+1
      NSEX(NEXT) = NRES + 1000*NODE
 292  JR = NRES+IX3                                                  2266045
      P(JR) = FLA(NRES)/FK                                           2266046
 30   CONTINUE                                                       RCC 060
      M= M+1                                                         RCC 061
 40   CONTINUE                                                       RCC 062
 50   CONTINUE                                                       RCC 063
C     CIRC. RES. HEMISPHERE
      M = 0                                                          RCC 064
      II =II+1                                                       RCC 065
      DO  80 KI =1,KK                                                RCC 066
      K = KI-1                                                       RCC 067
      DO  70 JI =1,JJ                                                RCC 068
      J = JI-1                                                       RCC 069
      DO  60 I  =1,II                                                RCC 070
      M  =  M  +  1                                                  RCC 071
      NODE =          M +INODE - 1                                   RCC 072
      NODE1 = NODE +NCIR +NTNK+ 1                                    RCC 073
      IF(JI.EQ.JJ) NODE1 = NODE-(NRAD-1)*(NCIR+NTNK+1)               RCC 074
      IF( I-(NCIR+1)) 53,55,57                                       RCC 075
 53   CALL FINDN(NODE,NODE1,NODN)                                    2266076
      IF (NODN.NE.C) GO TO 536                                       2266077
```


LOCKHEED
CALIFORNIA COMPANY

TABLE B-1 (CONTINUED)

```
      FK = LIN(P(NODE),NUMTAB(3)) *FLKL
      GO TO 59                                                          2266079
 536  FK = BIV(PC,P(NODN),NUMTAB(2))+ BIV(PN,P(NODN),NUMTAB(24))        2266080
      GO TO 59                                                          2266081
 55   FK = LIN(P(NODE),NUMTAB(18))                                      2266082
      GO TO 59                                                          2266083
 57   IF (I.NE.IT)  GO TO 60                                            2266084
      FK = LIN(P(NODE),NUMTAB(27))                                      2266085
 59   NRES = NRES+1                                                     2266086
      JR = NRES+IX3                                                     2266087
      P(JR) = FLA(NRES)/FK                                              2266088
 60   CONTINUE                                                          RCC 091
 70   CONTINUE                                                          RCC 092
 80   CONTINUE                                                          RCC 093
C     AXIAL RES. HEMISPHERE
      M = 0                                                             RCC 094
      KK =KK-1                                                          RCC 095
      IF (KK*JJ*II.EQ.0)  GO TO 111
      DO 110 KI=1,KK                                                    RCC 096
      K = KI-1                                                          RCC 097
      DO 100 JI=1,JJ                                                    RCC 098
      J = JI-1                                                          RCC 099
      DO 90 I=1,II                                                      RCC 100
      M=M+1                                                             RCC
      NODE =    M-1+INODE                                               RCC 101
      NODE1=    NODE +(NRAD)*(NCIR + NTNK + 1)                          RCC 102
      IF(I-NCIR-1) 83,85,87                                             RCC 103
 83   CALL FINDN(NODE,NODE1,NODN)                                       2266104
      IF (NODN.NE.0) GO TO 836                                          2266105
      FK = LIN(P(NODE),NUMTAB(3)) *FLKL
      GO TO 89                                                          2266108
 836  FK = BIV(PC,P(NODN),NUMTAB(2)) + BIV(PN,P(NODN),NUMTAB(24))       2266109
      GO TO 89                                                          2266110
 85   FK = LIN (P(NODE),NUMTAB(18))                                     2266111
      GO TO 89                                                          2266112
 87   IF (I.NE.II) GO TO 90                                             2266113
      FK = LIN (P(NODE),NUMTAB(27))                                     2266114
 89   NRES = NRES+1                                                     2266115
      JR = NRES+IX3                                                     2266116
      P(JR) = FLA(NRES)/FK                                              2266117
 90   CONTINUE                                                          RCC 118
 100  CONTINUE                                                          RCC 119
 110  CONTINUE                                                          RCC 120
C     CALCULATE  CONDENSOR BLOCK LIST FOR SPHERE                        RCC 121
 111  CONTINUE
      M =0                                                              RCC 122
      KK = NRAD/4                                                       RCC 123
      JJ = NRAD                                                         RCC 124
      II = NCIR + NTNK + 1                                              RCC 125
      DO  140  KI= 1,KK                                                 RCC 126
      K =KI-1                                                           RCC 127
      CON =-SIN(FLOAT(K)*PI2/FNRAD) +SIN(FLOAT(K+1)*PI2/FNRAD)          RCC 128
      DO  130  JI= 1,JJ                                                 RCC 129
      J = JI-1                                                          RCC 1291
      DO  120  I =1,II                                                  RCC 130
      M = M+1                                                           RCC 131
      NODE = M -1 +INODE                                                RCC 132
      NODEX4= NODE+IX4
      BUF = P(NODEX4)
      IF(I - NCIR -1) 113,115,117                                       RCC 133
 113  IF (BUF.GT.0.)  GO TO 1136
```


LOCKHEED
CALIFORNIA COMPANY

TABLE B-1 (CONTINUED)

```
      ZQ = BIV(PC,P(NODE),NUMTAB(4))
      ZR = BIV(PN,P(NODE),NUMTAB(6))
      CPC = BIV(PC,P(NODE),NUMTAB(17))
     1   -(FLT*ZQ)/FMOLC
      CPN = BIV(PN,P(NODE),NUMTAB(26))
     1   -(FLT*ZR)/FMOLN
      IF (CPC.LT.10.E-5)  CPC = CPN
      P(NODEX4)= VS(NODE)/(P(NODE)+460.)*((CPC*PC*FMOLC)/(ZQ*RCOND)
     1        +(CPN*PN*FMOLN)/(ZR*RNONC) )
      GO TO 120
 1136 P(NODEX4)= VS(NODE)* LIN(   P(NODE),NUMTAB(14))* LIN(   P(NODE),
     1              NUMTAB(16))
      GO TO 120
 115  P(NODEX4)= VS(NODE)* LIN(P(NODE),NUMTAB(19))* LIN(P(NODE),
     1              NUMTAB(20) )
      GO TO 120
 117  IF (I.EQ.II) GO TO 118
      IIS = I-NCIR-1
      IIC = (IIS-1)*3+INSCVS
      P(NODEX4)= VS(NODE)/(TKTHK(IIS)+TKTHK(IIS+1))* (
     1TKTHK(IIS)* LIN(P(NODE),NUMTAB(IIC+1))* LIN(P(NODE),NUMTAB(IIC+2))
     2+TKTHK(IIS+1)*LIN(P(NODE),NUMTAB(IIC+4))*LIN(P(NODE),NUMTAB(IIC+5)
     3  ))
      GO TO 120
 118  P(NODEX4) = VS(NODE)* LIN(P(NODE),NUMTAB(28))* LIN(P(NODE),
     1              NUMTAB(29))
 120  P(NODEX4)=SIGN(P(NODEX4),BUF)
 8003 FORMAT(5HDEC01,I5,E10.3,60X)                                  RCC 148
 130  CONTINUE                                                      RCC 150
 140  CONTINUE                                                      RCC 151
C     TEST  KEYNODE                                                 RCC 152
C                                                                   RCC 153
C                                                                   RCC 154
C                                                                   RCC 155
      IF( KEYNOD.EQ.-1)GO TO 200                                    RCC 156
      JJ = NRAD                                                     RCC 157
      II = NCIR +NTNK + 1                                           RCC 158
      M =0                                                          RCC 159
C     CALCULATE CONNECTING RESISTORS SPHERE TO SPHERE AND SPHERE TO RCC 160
C     CYLINDER                                                      RCC 161
      DO 170 JI =1,JJ                                               RCC 162
      J= JI -1                                                      RCC 163
      DO 16   I  =1,II                                              RCC 164
      M= M+1                                                        RCC 165
      NODE = M-1 +KEYNOD                                            RCC 166
                 NODE1 = M-1 +INODE                                 RCC 168
      IF (I-NCIR-1) 143,145,147                                     RCC 169
 143  CALL FINDN(NODE,NODE1,NODN)                                   2266169
      IF (NODN.NE.0) GO TO 1436                                     2266170
      FK = LIN(P(NODE),NUMTAB(3)) *FLKL
      GO TO 149                                                     2266172
 1436 FK = BIV(PC,P(NODN),NUMTAB(2)) + BIV(PN,P(NODN),NUMTAB(24))   2266173
      GO TO 149                                                     2266174
 145  FK = LIN(P(NODE),NUMTAB(18))                                  2266175
      GO TO 149                                                     2266176
 147  IF (I.NE.II)  GO TO 160
      FK = LIN(P(NODE),NUMTAB(27))                                  2266177
 149  NRES = NRES+1                                                 2266178
      JR = NRES+IX3                                                 2266179
      P(JR) = FLA(NRES)/FK                                          2266180
 160  CONTINUE                                                      RCC 185
```


LOCKHEED
CALIFORNIA COMPANY

TABLE B-1 (CONTINUED)

```
170   CONTINUE                                                    RCC 186
190   NEND =-1                                                    RCC 187
      DO 171 I=1,MAXT
171   P(I) = P(I)+460.
      IF (NEXP.LE.MAXNEX)  GO TO 172
      WRITE(6,174)  NEXP
      CALL EXIT
172   COMUN(3) = NEXP
      COMUN(4) = NEXT
      IF (KOUT.GE.2)  WRITE (6,173)
173   FORMAT(15H LEAVING RECALC  /(24I5) )
174   FORMAT(12HINEXP.GT.50=  ,I5)
      RETURN                                                      RCC 192
200   IF(NTYPE.EQ.1) GO TO 201                                    RCC 193
      KEYNOD=  INODE                                              RCC 194
      INODE = (NCIR + NTNK+1)*NRAD**2/4 +INODE                    RCC 195
      GO TO 15                                                    RCC 196
201   KEYNOD = INODE                                              RCC 197
      INODE = (NCIR + NTNK+1)*NRAD**2/4 + INODE
C     CALCULATE RESISTORS AND CONDENSORS OF CYLINDER BODY         RCC 199
      M = 0                                                       RCC 200
      II = NCIR +NTNK                                             RCC 201
      JJ =  NRAD                                                  RCC 202
      KK =  NSECT                                                 RCC 203
      DO 230 KI =1,KK                                             RCC 204
      K = KI-1                                                    RCC 205
      DO 220 JI =1,JJ                                             RCC 206
      J = JI-1                                                    RCC 207
      DO 210 I  =1,II                                             RCC 208
      M = M +1                                                    RCC 209
      NODE = M-1 +INODE                                           RCC 210
      NODE1= NODE +1                                              RCC 211
      IF( I-NCIR) 203,203,207                                     RCC 212
203   CALL FINDN(NODE,NODE1,NODN)                                 2266213
      IF (NODN.NE.0)  GO TO 2036                                  2266214
      FK = LIN(P(NODE),NUMTAB(3)) *FLKL
      GO TO 209                                                   2266216
2036  FK = BIV(PC,P(NODN),NUMTAB(2)) + BIV(PN,P(NODN),NUMTAB(24)) 2266217
      IF (I.NE.NCIR)  GO TO 209
      NEXP = NEXP+1
      NEXW(NEXP) = NODE1
      GO TO 209                                                   2266218
207   IT= (I-NCIR-1)*3+INSCVS                                     2266219
      FK = LIN(P(NODE),NUMTAB(IT))                                2266220
209   NRES = NRES+1                                               2266221
      IF (NCIR.NE.I)  GO TO 2092
      NEXT = NEXT+1
      NSEX(NEXT) = NRES + 1000*NODE
2092  JR = NRES+IX3                                               2266222
      P(JR) = FLA(NRES)/FK                                        2266223
210   CONTINUE                                                    RCC 235
      M = M+1                                                     RCC 236
220   CONTINUE                                                    RCC 237
230   CONTINUE                                                    RCC 238
      II =II+1                                                    RCC 239
      M  = 0                                                      RCC 240
      DO  270 KI =1,KK                                            RCC 241
      K = KI-1                                                    RCC 242
      DO  260 JI =1,JJ                                            RCC 243
      J = JI-1                                                    RCC 244
      DO  250  I =1,II                                            RCC 245
```

TABLE B-1 (CONTINUED)

```
      M = M+1                                                          RCC 246
      NODE = M-1 +INODE                                                RCC 247
      NODE1=     NODE +NCIR +NTNK + 1                                  RCC 248
      IF( I -NCIR -1) 243,245,247                                      RCC 249
 243  CALL FINDN(NODE,NODE1,NODN)                                      2266250
      IF (NODN.NE.0)  GO TO 2436                                       2266251
      FK = LIN(P(NODE),NUMTAB(3)) *FLKL
      GO TO 249                                                        2266253
 2436 FK = BIV(PC,P(NODN),NUMTAB(2)) + BIV(PN,P(NODN),NUMTAB(24))      2266254
      GO TO 249                                                        2266255
  45  FK = LIN(P(NODE),NUMTAB(18))                                     2266256
      GO TO 249                                                        2266257
 247  IF (I.NE.II)  GO TO 250
      FK = LIN (P(NODE),NUMTAB(27))                                    2266258
 249  NRES = NRES+1                                                    2266259
      JR = NRES+IX3                                                    2266260
      P(JR) = FLA(NRES)/FK                                             2266261
 250  CONTINUE                                                         RCC 267
 260  CONTINUE                                                         RCC 268
 270  CONTINUE                                                         RCC 269
      KK = KK-1                                                        RCC 270
      IF (KK.EQ.0)  GO TO 301
      LEN =TKLEN /FNSECT                                               RCC 271
      M =0                                                             RCC 272
      DO 300 KI =1,KK                                                  RCC 273
      K = KI-1                                                         RCC 274
      DO 290 JI =1,JJ                                                  RCC 275
      J=JI-1                                                           RCC 276
      DO 280 I  =1,II                                                  RCC 277
      M=M+1                                                            RCC
      NODE = M-1 +INODE                                                RCC 278
      NODE1 = NODE +(NRAD  )*(NCIR+NTNK+1)                             RCC 279
      IF(I -NCIR-1) 273,275,277                                        RCC 280
 273  CALL FINDN(NODE,NODE1,NODN)                                      2266281
      IF (NODN.NE.0) GO TO 2736                                        2266282
      FK = LIN(P(NODE),NUMTAB(3)) *FLKL
      GO TO 279                                                        2266284
 2736 FK = BIV(PC,P(NODN),NUMTAB(2)) + BIV(PN,P(NODN),NUMTAB(24))      2266285
      GO TO 279                                                        2266286
 275  FK = LIN(P(NODE),NUMTAB(18))                                     2266287
      GO TO 279                                                        2266288
 277  IF (I.NE.II)  GO TO 280                                          2266289
      FK = LIN(P(NODE),NUMTAB(27))                                     2266290
 279  NRES = NRES+1
      JR = NRES+IX3                                                    2266292
      P(JR) = FLA(NRES)/FK                                             2266293
 280  CONTINUE                                                         RCC 293
 290  CONTINUE                                                         RCC 294
 300  CONTINUE                                                         RCC 295
C     CALCULATE CONDENSORS FOR CYLINDER                                RCC 296
 301  KK =KK+1                                                         RCC 297
      M = 0                                                            RCC 298
      DO 330 KI=1,KK                                                   RCC 299
      K = KI-1                                                         RCC 300
      DO 320 JI=1,JJ                                                   RCC 301
      J = JI-1                                                         RCC 302
      DO 310 I =1,II                                                   RCC 303
      M =M+1                                                           RCC 304
      NODE = M -1 +INODE                                               RCC 305
      NODEX4= NODE+IX4
      BUF = P(NODEX4)
```


LOCKHEED
CALIFORNIA COMPANY

TABLE B-1 (CONTINUED)

```
      IF(I-NCIR-1) 303,305,307                                          RCC 306
303   IF (BUF.GT.0.)  GO TO 3036
      ZQ = BIV(PC,P(NODE),NUMTAB(4))
      ZR = BIV(PN,P(NODE),NUMTAB(6))
      CPC = BIV(PC,P(NODE),NUMTAB(17))
     1   -(FLT*ZQ)/FMOLC
      CPN = BIV(PN,P(NODE),NUMTAB(26))
     1   -(FLT*ZR)/FMOLN
      IF (CPC.LT.10.E-5)  CPC = CPN
      P(NODEX4)= VS(NODE)/(P(NODE)+460.)*((CPC*PC*FMOLC)/(ZQ*RCOND)
     1        +(CPN*PN*FMOLN)/(ZR*RNONC) )
      GO TO 310
3036  P(NODEX4)= VS(NODE)* LIN(   P(NODE),NUMTAB(14))* LIN(   P(NODE),
     1             NUMTAB(16))
      GO TO 310
305   P(NODEX4)= VS(NODE)* LIN(P(NODE),NUMTAB(19))* LIN(P(NODE),
     1              NUMTAB(20) )
      GO TO 310
307   IF (I.EQ.II) GO TO 308
      IIS = I-NCIR-1
      IIC = (IIS-1)*3+INSCVS
      P(NODEX4)= VS(NODE)/(TKTHK(IIS)+TKTHK(IIS+1))* (
     1TKTHK(IIS)* LIN(P(NODE),NUMTAB(IIC+1))* LIN(P(NODE),NUMTAB(IIC+2))
     2+TKTHK(IIS+1)*LIN(P(NODE),NUMTAB(IIC+4))*LIN(P(NODE),NUMTAB(IIC+5)
     3  ))
      GO TO 310
308   P(NODEX4) = VS(NODE)* LIN(P(NODE),NUMTAB(28))* LIN(P(NODE),
     1             NUMTAB(29))
310   P(NODEX4)=SIGN(P(NODEX4),BUF)
320   CONTINUE                                                          RCC 321
330   CONTINUE                                                          RCC 322
      II = NCIR + NTNK +1                                               RCC 323
      JJ = NRAD                                                         RCC 324
      M = 0                                                             RCC 325
      DO  350 JI =1,JJ                                                  RCC 326
      J  = JI-1                                                         RCC 327
      DO  340 I =1,II                                                   RCC 328
      M  = M+1                                                          RCC 329
      NODE  = M-1 +KEYNOD                                               RCC 330
      NODE1 = M-1 +INODE                                                RCC 331
      IF(I- NCIR -1) 343,345,347                                        RCC 332
343   CALL FINDN(NODE,NODE1,NODN)                                       2266333
      IF (NODN.NE.0)  GO TO 3436                                        2266334
      FK = LIN(P(NODE),NUMTAB(3)) *FLKL
      GO TO 349                                                         2266336
3436  FK = BIV(PC,P(NODE),NUMTAB(2)) + BIV(PN,P(NODE),NUMTAB(24))       2266337
      GO TO 349                                                         2266338
345   FK = LIN (P(NODE),NUMTAB(18))                                     2266339
      GO TO 349                                                         2266340
347   IF (I.NE.II)  GO TO 340                                           2266341
      FK = LIN(P(NODE),NUMTAB(27))                                      2266342
349   NRES = NRES+1                                                     2266343
      JR = NRES+IX3                                                     2266344
      P(JR) = FLA(NRES)/FK                                              2266345
340   CONTINUE                                                          RCC 346
350   CONTINUE                                                          RCC 347
      KEYNOD= INODE +(NCIR+NTNK+1)*NRAD *(NSECT-1)                      RCC 348
      INODE = INODE +(NCIR+NTNK+1)*NRAD *NSECT                          RCC 349
      GO  TO 15                                                         RCC 350
      END                                                               RCC 352
```


LOCKHEED
CALIFORNIA COMPANY

TABLE B-1 (CONTINUED)

```
$IBFTC FINDN                                                            2266000
      SUBROUTINE FINDN (NODE,NODE1,NODN)                                2266001
C     AS OF 05/10/65
      COMMON P(14000),MT(16),MAXT,MAXR,MAXC                             2266002
      IX4 = 2*MAXT+MAXR                                                 2266003
      N   = NODE+IX4                                                    2266004
      N1  = NODE1+IX4                                                   2266005
      NODN   = 0                                                        2266006
      IF (P(N).LT.0.) NODN   = NODE                                     2266007
      IF (P(N1).LT.0.)NODN   = NODE1                                    2266008
      RETURN                                                            2266009
      END
```


LOCKHEED
CALIFORNIA COMPANY

TABLE B-1 (CONTINUED)

```
$IBFTC GEOMGC                                                           2266000
      SUBROUTINE GEOMGC(LTEST)                                          2266001
C     AS OF 7/28/65                                                     2266002
C     IF LTEST IS NON-ZERO, THE TANK UNDER CONSIDERATION IS DIVIDED INTO 2266003
C     NLD LAYERS, AND THE NODES IN THE TANK ARE TESTED TO DETERMINE IN  2266004
C     WHICH LAYER EACH ONE LIES. THE LAYER NUMBER OF THE NODE IS STORED 2266005
C     IN TABLE LNO IN THE LOCATION CORRESPONDING TO THAT NODE.          2266006
C                                                                       2266007
C     GEOMVC CALLS GEOMVG OR GEOMG TO SET CAPACITOR  VALUES OF THE TANK 2266008
C     NODES TO POSITIVE IF THE NODE IS IN LIQUID OR NEGATIVE IF THE NODE 2266009
C     IS IN GAS.                                                        2266010
C                                                                       2266011
C     ALSO COMPUTED ARE THE SURFACE AREA OF THE LIQUID IN THE TANK      2266012
C     (SAREA) IF ISTRAT IS NON-ZERO, AND THE HEIGHT OF THE LIQUID SURFACE2266013
C     ABOVE THE LOWEST POINT IN THE TANK (DLIQ).                        2266014
C                                                                       2266015
      COMMON P(14000), M(16), KKKK(23), CC(12)                          2266016
      COMMON /CPNET/NTYPE,TKRAD,TKLEN,TEMPZ,NRAD,NCIR,NSECT,NTNK,       2266017
     1 TKTHK(5),TKWAL1,TKWAL2,INODE,KOUT,                               2266018
     2          FMCO,FMNO,FMOLC,VGAS,IGC,IPRESS,FMOLN,FMIN,FMAX,PMIN,   2266019
     3          PMAX,FMOLX,TSAT,ANGLE,TX,PR,TANKV,                      2266020
     5          RADI(4),HELB(14),LLFLOW,HELT,HELP,HELW                  2266021
     6          ,ISTRAT,SAREA,IOPTSX(5),FMULTF(5),STRINP(20)            2266022
     7           ,GSOLD (2),TTOPBL(2),DLIQ  ,NLSURF,ICALL               2266023
      DIMENSION VS(250),FLA(500),NUMTAB(100),NEXW(125),NSEX(125),MM(125)2266024
      DIMENSION LNO   (250),NLNNS (125),NGNNS (125)                     2266025
      EQUIVALENCE (P(13251),VS),(P(13501),FLA)                          2266026
     1,(P(12526),NUMTAB),(P(12626),NEXW),(P(1275)),NSEX),(P(12876),MM)  2266027
      EQUIVALENCE  (P(12276),LNO  ),(P(12151),NLNNS),(P(12026),NGNNS)   2266028
      NLD = STRINP(5) + .1                                              2266029
      LFLAG = LTEST                                                     2266030
      IF (LFLAG) 10,1000,10                                             2266031
C     IF LAYER NOS. ARE NOT TO BE COMPUTED, GO TO 1000.                 2266032
 10   N = HELB(12)                                                      2266033
      DO 20 I=1,N                                                       2266034
 20   LNO(I) = 0                                                        2266035
C     ZERO LAYER NUMBER TABLE                                           2266036
      SAVVOL = VGAS                                                     2266037
      ISAVE = ISTRAT                                                    2266038
      ISTRAT = 0                                                        2266039
C     ISTRAT SET TO 0 FOR LAYER NUMBER DETERMINATION.                   2266040
C                                                                       2266041
C     COMPUTE VOLUME OF LAYERS                                          2266042
      VOLLAY = TANKV/FLOAT(NLD)                                         2266043
C     COMPUTE LOCATION OF FIRST CAPACITOR VALUE IN TANK.                2266044
      NODE1 = 2*KKKK(1)+KKKK(2) +INODE-1                                2266045
C     DETERMINE LAYER NUMBERS.                                          2266046
      M1=NLD                                                            2266047
      DO 40 I=1,M1                                                      2266048
      VGAS= TANKV-FLOAT(I)*VOLLAY                                       2266049
      IF (VGAS.GT.TANKV) VGAS= TANKV                                    2266050
      IF (VGAS.LT.0.) VGAS = 0.                                         2266051
      IF (ANGLE.EQ.0.0.OR.ABS(ANGLE).GE.90.0) GO TO 30                  2266052
      SANGLE = ANGLE                                                    2266053
      ANGLE = ANGLE/57.29578                                            2266054
      CALL GEOMVG                                                       2266055
      ANGLE = SANGLE                                                    2266056
      GO TO 32                                                          2266057
 30   CALL GEOMG                                                        2266058
 32   K = HELB(12)                                                      2266059
```


LOCKHEED
CALIFORNIA COMPANY

TABLE B-1 (CONTINUED)

```
      DO 39 L=1,K                                                       2266060
      KLT = NODE1+L                                                     2266061
      IF (SIGN(1.0,P(KLT))) 39,33,33                                    2266062
   33 IF (LNO(L)) 34,34,39                                              2266063
   34 LNO(L)=I                                                          2266064
   39 CONTINUE                                                          2266065
   40 CONTINUE                                                          2266066
C    RESTORE VALUES OF VGAS AND ISTRAT                                  2266067
      VGAS = SAVVOL                                                     2266068
      ISTRAT = ISAVE                                                    2266069
      N = NSECT+2*NRAD/4                                                2266070
      M1 = NCIR+NTNK+1                                                  2266071
      KLT = 0                                                           2266072
      DO 200 I=1,N                                                      2266073
      DO 200 L=1,NRAD                                                   2266074
      DO 200 K=1,M1                                                     2266075
      KLT = KLT + 1                                                     2266076
      IF (K.LE.NCIR)  GO TO 200                                         2266077
      LNO(KLT) = 0                                                      2266078
  200 CONTINUE                                                          2266079
C    TEST FOR NODES IN LIQUID OR GAS                                    2266080
 1000 IF (ANGLE.EQ.0.0.OR.ABS(ANGLE).GE.90.0) GO TO 1005                2266081
      SANGLE = ANGLE                                                    2266082
      ANGLE = ANGLE/57.29578                                            2266083
      CALL GEOMVG                                                       2266084
      ANGLE = SANGLE                                                    2266085
      GO TO 1020                                                        2266086
 1005 CALL GEOMG                                                        2266087
 1020 CONTINUE                                                          2266088
      VLIQ = TANKV-VGAS                                                 2266089
      NLSURF = IFIX(VLIQ/(TANKV/FLOAT(NLD))) +1                         2266090
      IF (VGAS.LE.0.) NLSURF = NLD                                      2266091
      IF (VGAS.GE.TANKV) NLSURF = 1                                     2266092
      NLSURF = MINO(NLSURF,NLD)                                         2266093
      NLSURF = MAXO(NLSURF,1)                                           2266094
      RETURN                                                            2266095
      END                                                               2266096
```


LOCKHEED
CALIFORNIA COMPANY

TABLE B-1 (CONTINUED)

```
$IBFTC GEOMG
      SUBROUTINE GEOMG
C     AS OF 6/30/65
      COMMON P(14000),TM(16),MAXT,MAXR,MAXC,KSP,KST
      COMMON /CONTR/  TLIQ,SCLIQ,TGAS,SCGAS,SCALL,TLSMAX,SCINT,TSGAS,
     1COMON(5),DMCC,TLMAX,FALL,FMLO,GAVITY,FKG,FKL,ZC,PC,ZN,FMLU,FMLA,
     2          ZX,CPX,TLA,GAMMA,RHOL,RHOG,CPL,CPG,RLAM,MCNT,PN,FMC,FMN,R
      COMMON /CPNET/NTYPE,TKRAD,TKLEN,TEMPZ,NRAD,NCIR,NSECT,NTNK,
     1 TKTHK(5),TKWAL1,TKWAL2,INODE,KOUT,
     2          FMCO,FMNO,FMOLC,VGAS,IGC,IPRESS,FMOLN,FMIN,FMAX,PMIN,
     3          PMAX,FMOLX,TSAT,ANGLE,TX,PR,TANKV,
     5          RADI(4),HELB(14),LLFLOW,HELT,HELP,HELW
     6          ,ISTRAT,SAREA,IOPTSX(5),FMULTF(5),STRINP(20)
    -7           ,GSOLD (2),TTOPBL(2),DLIQ   ,NLSURF,ICALL
      EQUIVALENCE  (FMULTF(1), FLT),(FMULTF(2),FLKL)
C     SUBROUTINE TO DETERMINE WHETHER NODE IS IN LIQUID OR GAS PORTION  19110
C     OF TANK   NODE IS NEGATIVE(-) IF IN GAS     GRAVITY CASE ONLY     1911005
      EQUIVALENCE  (V,VGAS), (GAVITY,GAV)
      DIMENSION TH(65)
      DIMENSION VS(250),FLA(500),NUMTAB(100),NEXW(125),NSEX(125),MM(125)
      EQUIVALENCE (P(13251),VS),(P(13501),FLA)
     1,(P(12526),NUMTAB),(P(12626),NEXW),(P(12751),NSEX),(P(12876),MM)
      PI = 3.14159265
      IX1 = 0
      IX2 = MAXT
      IX3 = IX2+MAXT
      IX4 = IX3+MAXR
      IX5 = IX4+MAXC
      IX6 = IX5+MAXC
      EPSILN = .01
      LIQUID = 1
 9003 FORMAT(10E13.5)
 9004 FORMAT(10I13)
      DO 10 I=1,MAXC
      II = I+IX4
 10   P(II) = ABS(P(II))
      FNRAD = NRAD
      FNCIR = NCIR
      FNSECT= NSECT
      NT = 6
 8002 FORMAT(      1I7)
      VP = 2.0/3.0*PI *TKRAD**3                                        1911145
      IF (ANGLE.NE.0.0)  GO TO 500
      IF(NTYPE.EQ. 1) GO TO 300                                        1911146
      IF( VP.GT. V)   GO TO 230                                        1911147
      M =0                                                             1911148
      IINOD  =  INODE                                                  1911149
      II = NCIR + NTNK +1                                              1911150
      JJ = NRAD                                                        1911151
      KK = NRAD /4                                                     1911152
      DO 205K1=1,KK                                                    1911153
      DO 205J1=1,JJ                                                    1911154
      DO 205I =1,II                                                    19111541
      M =M+1                                                           1911155
      NODE = ( M-1 +IINOD )                                            1911156
      NODEX4 = NODE+IX4
      IF(I.GT.NCIR)  GO TO 205
      P(NODEX4  ) = -P(NODEX4  )
 205  CONTINUE                                                         1911158
      IF (V.NE.VP) GO TO 206                                           2266159
      DLIQ = TKRAD                                                     22661591
```


LOCKHEED
CALIFORNIA COMPANY

TABLE B-1 (CONTINUED)

```
      SAREA = PI*TKRAD**2                                               22661592
      GO TO 8000                                                        22661593
  206 CONTINUE                                                          22661594
      IC = 1                                                            1911160
      VT = 2.0*VP-        V
      IINOD  =  II*JJ*KK+1                                              1911161
      M =0                                                              1911162
      GO TO 210                                                         1911163
  230 IC= 0                                                             1911164
      M = 0                                                             1911165
      II = NCIR +NTNK +1                                                1911166
      JJ = NRAD                                                         1911167
      KK = NRAD/4                                                       1911168
      VT=V
      IINOD  = INODE                                                    1911169
C     SOLVE FOR HEIGHT OF SPHERE IN THE GAS                             1911170
  210 TH(1) =2.0
      TH(2)  =1.0
      TH(3)  =0.0
      TH(4)  =60.0
      D=0.0
      DX=  TKRAD/31.0
      DO 211 I=1,60,2
      D = D +DX
      TH(I+5)  =D
      TH(I+4) =PI*D**2*(3.0*TKRAD-D)/3.0
  211 CONTINUE
      CALL XTRP (VT,D,0.0,TH)
      COMUN (1) = 1.
      COMUN (2) = D
      H=  TKRAD-D
      DO 225 K1=1,KK                                                    1911172
      K = K1-1                                                          1911173
      DO 220 J1=1,JJ                                                    1911174
      J = J1-1                                                          1911175
      DO 215 I =1,II                                                    1911176
      M = M+1                                                           1911177
      IF(I .GT. NCIR) GO TO 215                                         1911178
      NODE = M-1 +IINOD +INODE -1                                       1911179
      NODEX4 = NODE+IX4
      IF ( IC .EQ.1) P(NODEX4  ) = -P(NODEX4  )
      FLOA=SQRT(FLOAT(I)-.5)/SQRT(FNCIR)*TKRAD
      FLO = FLOAT(K)+.5
      IF( H.LT. FLOA                 *SIN(2.0*PI*FLO      /FNRAD))      1911181
     1P(NODEX4  ) = -P(NODEX4  )
  215 CONTINUE                                                          1911184
  220 CONTINUE                                                          1911185
  225 CONTINUE                                                          1911186
      SAREA =PI*(TKRAD**2 - H**2)                                       22661861
      IF (IC.EQ.0) GO TO 226                                            22661862
      DLIQ = D                                                          22661863
      GO TO 8000                                                        22661864
  226 DLIQ = TKRAD + H                                                  22661865
      GO TO 8000                                                        1911187
  300 II = NCIR +NTNK + 1                                               1911188
      JJ = NRAD                                                         1911189
      KK = NRAD / 4                                                     1911190
      IF( VP.GT.V)  GO TO  350                                          1911191
      IINOD =  INODE                                                    1911192
      M=  0                                                             1911193
      DO 303 K1 =1,KK                                                   1911194
```


LOCKHEED
CALIFORNIA COMPANY

TABLE B-1 (CONTINUED)

```
      DO 303 J1 =1,JJ                                                   1911195
      DO 303 I  =1,II                                                   1911196
      M = M+1                                                           1911197
      IF(I.GT. NCIR ) GO TO 303                                         1911198
      NODE = ( M-1 +IINOD +INODE -1)                                    1911199
      NODEX4 = NODE+IX4
      P(NODEX4  ) = -P(NODEX4  )
303   CONTINUE                                                          1911201
      COMUN (1) = 2.
      IF (V.NE.VP) GO TO 304                                            2266203
      SAREA = PI* TKRAD**2                                              22662031
      DLIQ = TKRAD + TKLEN                                              22662032
      GO TO 8000                                                        22662033
304   CONTINUE                                                          22662034
      VPP = PI* TKRAD **2 * TKLEN                                       1911204
      M=0                                                               19112041
      IINOD =II * JJ * KK + INODE                                       1911205
      KK = NSECT                                                        1911206
      DO 330 K1 = 1,KK                                                  1911207
      K  = K1-1                                                         1911208
      DO 325 J1 = 1,JJ                                                  1911209
      J=J1-1                                                            1911210
      DO 320 I =1,II                                                    1911211
      M = M+1                                                           1911212
      IF(I.GT. NCIR) GO TO 320                                          1911213
      NODE = ( M-1 +IINOD  +INODE-1)                                    1911214
      NODEX4 = NODE+IX4
      P(NODEX4  ) = -P(NODEX4  )
      IF(VPP+VP -V .LE.0.0) GO TO 318                                   1911215
      FLO = (FLOAT(K)+.5)*TKLEN/FNSECT
      IF( FLO                    .GT. TKLEN -(VPP+VP-V)/PI/TKRAD**2 )   1911216
     1P(NODEX4  ) = -P(NODEX4  )
318   CONTINUE
320   CONTINUE                                                          1911219
325   CONTINUE                                                          1911220
330   CONTINUE                                                          1911221
      IF (VPP+VP-V.GE.0.0) GO TO 385
      IINOD = (NTNK +NCIR + 1)*NRAD *(NRAD/4 +NSECT) + INODE            1911223
      KK = NRAD / 4                                                     1911224
      M = 0                                                             1911225
      VT = VPP + 4.0*VP-V
      COMUN (1) = 3.
      IC =1                                                             1911227
      IF ((ABS(VT)-EPSILN).LE.0.)  LIQUID = 0
      GO  TO 360                                                        1911228
350   II = NCIR +NTNK +1                                                1911229
      COMUN (1) = 1.
      M  =0                                                             1911230
      IINOD =INODE                                                      1911231
      KK = NRAD /4                                                      1911232
      JJ = NRAD                                                         1911233
      IC =0                                                             1911234
      VT=V
360   TH(1) =2.0
      TH(2)  =1.0
      TH(3)  =0.0
      TH(4)  =60.0
      D=0.0
      DX=  TKRAD/31.0
      DO 361 I=1,60,2
      D = D +DX
```


LOCKHEED
CALIFORNIA COMPANY

TABLE B-1 (CONTINUED)

```
      TH(I+5)  =D
      TH(I+4) =PI*D**2*(3.0*TKRAD-D)/3.0
361   CONTINUE
      CALL XTRP (VT,D,0.0,TH)
      COMUN (2) = D
      H=  TKRAD-D
      DO 380 K1 =1,KK                                                  1911236
      K = K1-1                                                         1911237
      DO 375 J1 =1,JJ                                                  1911238
      J = J1-1                                                         1911239
      DO 370 I  =1,II                                                  1911240
      M = M+1                                                          1911241
      IF( I.GT.NCIR) GO TO 370                                         1911242
      NODE  = M-1 +IINOD                                               1911243
      NODEX4 = NODE+IX4
      IF(IC.EQ.1) P(NODEX4  ) = -P(NODEX4  )
      IF (LIQUID.EQ.0)  GO TO 370
      FLOA=SQRT(FLOAT(I)-.5)/SQRT(FNCIR)*TKRAD
      FLO = FLOAT(K) + .5
      IF(H .LT. FLOA                  *SIN(2.0 * PI *FLO     /FNRAD))  1911245
     1P(NODEX4  ) = -P(NODEX4  )
370   CONTINUE                                                         1911248
375   CONTINUE                                                         1911249
380   CONTINUE                                                         1911250
385   IF (V.GT.EPSILN) GO TO 390
      SAREA = 0.
      DLIQ = TKLEN +2.*TKRAD
       GO TO 8000
390   IF (V.LT.TANKV-EPSILN) GO TO 400
      SAREA = 0.
      DLIQ = 0.
      GO TO 8000
400   IF (V.NE.VP+VPP) GO TO 420                                       22662501
      DLIQ = TKRAD                                                     22662502
      SAREA = PI*TKRAD**2                                              22662503
      GO TO 8000                                                       22662504
420   IF (V.GT.VP) GO TO 430                                           22662505
      DLIQ = TKRAD +TKLEN + H                                          22662506
      SAREA = PI * (TKRAD**2 - H**2)                                   22662507
      GO TO 8000                                                       22662508
430   IF (V.GT.VP+VPP) GO TO 440                                       22662509
      SAREA = PI* TKRAD**2                                             22662510
      DLIQ = TKRAD - (V-VP)/(PI*TKRAD**2) + TKLEN                      22662511
      GO TO 8000                                                       22662512
440   DLIQ = D                                                         22662513
      SAREA = PI*(TKRAD**2- H**2)                                      22662514
      GO TO 8000                                                       22662515
500   IF (ABS(ANGLE).NE.90.0) GO TO 1000                               22662520
      IF (ANGLE) 501,501,502                                           22662521
501   NEGSW = 0
      GO TO 503                                                        22662524
502   NEGSW = 1
      SAVEVO = V
      V = TANKV-V
503   CONTINUE                                                         22662526
      COMUN (1) = 1.
      VP = 2.0/3.0*PI *TKRAD**3 +PI/2.0*TKRAD**2*TKLEN                 1911253
      IF(V-VP) 550,510,590                                             1911254
510   THETA =  PI                                                      1911255
      COMUN(2)=TKRAD
      T1 = PI/2.
```


LOCKHEED
CALIFORNIA COMPANY

TABLE B-1 (CONTINUED)

```
      T2 = 3.*PI/2.
      IC  = 1                                                           1911256
      GO TO 620                                                         1911257
 550  VT = V                                                            1911258
      IC = 1                                                            1911259
      GO TO 600                                                         1911260
 590  IC = 2                                                            1911261
      VT  = 2.0*VP -V                                                   1911262
      IF (ABS(VT)-EPSILN.LE.0.0)  LIQUID = 0
      TH(1) =2.0                                                        1911263
      TH(2) =1.0                                                        1911264
      TH(3) =0.0                                                        1911265
      TH(4) = 60.0                                                      1911266
      D = 0.0                                                           1911267
      DX =  TKRAD/31.0                                                  1911268
      DO 605 I = 1,60 ,2                                                1911269
      D = D+DX                                                          1911270
      TH(I+5) = D                                                       1911271
C     TH(I+4) = 2.0/3.0*PI*D**2*(3.0*TKRAD-D)    +TKLEN*(-((TKRAD-D)*
C    1  SQRT(TKRAD**2-(TKRAD-D)**2)+TKRAD**2*ASIN((TKRAD-D)/TKRAD)))
      TKD = TKRAD-D
      RSQ = TKRAD**2
      TH(I+4) = PI/3.*D**2*(3.*TKRAD-D)+TKLEN*(PI*RSQ/2.- (TKD*
     1           SQRT(RSQ-TKD**2) + RSQ*ASIN(TKD/TKRAD)))
 605  CONTINUE                                                          1911274
      CALL XTRP(VT,THETA, 0.0,TH)                                       1911275
      COMUN(2)= THETA
      THETA =ACOS((TKRAD-THETA)/TKRAD)*2.0
      IF(IC.NE.2)  GO TO 611                                            1911276
      T1  = THETA/2.0                                                   1911277
      T2  = 2.0*PI - THETA/2.0                                          1911278
      GO  TO 620                                                        1911279
 611  T1 = PI -THETA/2.0                                                1911280
      T2 = PI +THETA/2.0                                                1911281
 620  II = NTNK +NCIR +1                                                1911282
      JJ = NRAD                                                         1911283
      KK = NSECT                                                        1911284
      M  = 0                                                            1911285
      IINOD = II*JJ*(NRAD/4) +INODE                                     1911286
      HS = TKRAD*COS(THETA/2.0)                                         1911287
      DO 640 K1 =1,KK                                                   1911288
      K =K1-1                                                           1911289
      DO 635 J1 =1,JJ                                                   1911290
      J =J1-1                                                           1911291
      FLO = FLOAT(J) + .5
      DO 630 I  =1,II                                                   1911292
      M = M+1                                                           1911293
      IF( I.GT.NCIR) GO TO 630                                          1911294
      NODE = M-1 +IINOD +INODE -1                                       1911295
      NODEX4 = NODE+IX4
      IF (NEGSW.EQ.1) P(NODEX4)= - P(NODEX4)                            22662961
      IF( IC.EQ.2)  GO TO 624                                           1911297
      IF( T1.GE. 2.0*PI*FLO      /FNRAD .OR. 2.0*PI*FLO      /FNRAD.GE.T2)1911298
     1  GO TO 629                                                       1911299
      HP = HS *1.0 /COS(ABS(PI  -2.0*PI /FNRAD*FLO      ))              1911300
      FLOA=SQRT(FLOAT(I)-.5)/SQRT(FNCIR)*TKRAD
      IF(FLOA.GT.HP)  P(NODEX4  ) = -P(NODEX4  )
      GO TO 629                                                         1911302
 624  P(NODEX4  ) = -P(NODEX4  )
      IF (LIQUID.EQ.0)  GO TO 629
      IF( T1.LT. 2.0*PI*FLO      /FNRAD .AND. 2.0*PI *FLO      /FNRAD .LT.1911304
```


LOCKHEED
CALIFORNIA COMPANY

TABLE B-1 (CONTINUED)

```
     1 T2 )  GO TO 629                                                  1911305
      HP = HS *1.0 /COS(ABS(      2.0*PI /FNRAD*FLO      ))             1911306
      FLOA=SQRT(FLOAT(I)-.5)/SQRT(FNCIR)*TKRAD
      IF(FLOA.GE.HP)  P(NODEX4  ) = -P(NODEX4  )                        1911307
 629  CONTINUE                                                          1911308
 630  CONTINUE                                                          1911309
 635  CONTINUE                                                          1911310
 640  CONTINUE                                                          1911311
      IINOD =INODE                                                      1911312
      KK    = NRAD /4                                                   1911313
      IMET  = 0                                                         1911314
      M = 0                                                             1911315
 650  DO 670 K1=1,KK                                                    1911316
      K =K1-1                                                           1911317
      FLO = FLOAT(K) + .5
      DO 665 J1=1,JJ                                                    1911318
      J = J1-1                                                          1911319
      DO 660 I =1,II                                                    1911320
      M  = M+1                                                          1911321
      IF( I.GT.NCIR) GO TO 660                                          1911322
      NODE  =M-1 +IINOD +INODE -1                                       1911323
      NODEX4 = NODE+IX4
      IF (NEGSW.EQ.1) P(NODEX4)= - P(NODEX4)                            22663241
      TJ    = 2.0* PI*(FLOAT(J)+.5)/FNRAD
      IF(IC.EQ.2) GO TO 654                                             1911325
      IF( T1.GE.TJ .OR. TJ.GE. T2) GO TO 659                            1911326
      SEC =1.0/COS(ABS(PI -TJ))                                         1911327
      HP = HS*SEC/COS(FLO      *2.0*PI/FNRAD)
      FLOA=SQRT(FLOAT(I)-.5)/SQRT(FNCIR)*TKRAD
      IF (FLOA.GT.HP)  P(NODEX4  ) = -P(NODEX4  )                       1911329
      GO TO 659                                                         1911330
 654  P(NODEX4  ) = -P(NODEX4  )
      IF( T1.LT.TJ  .AND. TJ.LT.T2) GO TO 659                           1911332
      SEC =1.0/COS(TJ)
      HP = HS*SEC/COS(FLO      *2.0*PI/FNRAD)
      FLOA=SQRT(FLOAT(I)-.5)/SQRT(FNCIR)*TKRAD
      IF (FLOA.GE.HP)  P(NODEX4  ) = -P(NODEX4  )                       1911335
 659  CONTINUE                                                          1911336
 660  CONTINUE                                                          1911337
 665  CONTINUE                                                          1911338
 670  CONTINUE                                                          1911339
      IMET =IMET+1                                                      1911340
      IF(IMET.GT.1) GO TO 7000                                          2266341
      M =0                                                              1911342
      IINOD =(NTNK+NCIR+1)*NRAD*(NRAD/4 +NSECT ) +INODE                 1911343
      GO TO 650                                                         1911344
 1000 GO TO 8000
 7000 IF (NEGSW.EQ.1) V= SAVEVO
      IF (V.GE.EPSILN) GO TO 7100
      SAREA = 0.
      DLIQ = 2.*TKRAD
      GO TO 8000
 7100 IF (V.LT.TANKV-EPSILN) GO TO 7200
      SAREA = 0.
      DLIQ = 0.
      GO TO 8000
 7200 CONTINUE
      HEIT = TKRAD - COMUN(2)                                           22663461
      SAREA = PI*(TKRAD**2- HEIT**2). + 2.*TKLEN*SQRT(TKRAD**2-HEIT**2) 22663462
      DLIQ = COMUN(2)                                                   22663463
      IF (V.LT.VP) DLIQ = 2.*TKRAD - COMUN(2)                           22663464
 8000 RETURN
C1000 COMPUTE  FOR ANGLE NE  TO 0 OR  90                                1911347
      END                                                               1911348
```


LOCKHEED
CALIFORNIA COMPANY

TABLE B-1 (CONTINUED)

```
$IBFTC XTRP
      SUBROUTINE XTRP(X,Y,Z,CV)
C     AS OF 05/10/65
C     MINIMUM STORAGE VERSION, X MUST INCREASE
      DIMENSION CV(65)
      AX=X
      AZ=Z
      CV(3)=0.
      ICV=2
      GO TO 2000
 1050 A=CV(6)
 1045 Y=A
 9999 RETURN
C     UNIVARIATE QUADRATIC
 2000 N=CV(4)+4.
      IF (CV(5)-AX) 2010,1050,2200
 2010 DO 2015   I= 9,N,2
      IF (CV(I)-AX) 2015,2020,2020
 2015 CONTINUE
      GO TO 2225
 2020 IF (CV(I-2)-CV(I-4)) 2025,2250,2025
C     COMPUTE
 2025 A=CV(I-3)+(AX-CV(I-4))*((CV(I-1)-CV(I-3))/(CV(I-2)-CV(I-4))+(AX-CV20072930
     1(I-2))/(CV(I)-CV(I-4))*((CV(I+1)-CV(I-1))/(CV(I)-CV(I-2))-(CV(I-1 1609294
     2)-CV(I-3))/(CV(I-2)-CV(I-4)))) 1609295
      GO TO 1045
C     EXTRAPOLATION
 2200 CV(3)=1.
      I=9
      IF (CV(2))          2025,9999,2025
 2225 CV(3)=1.
      I=N-1
      IF (CV(2))          2025,9999,2025
 2250 I=I+2
      GO TO 2025
      END
```


LOCKHEED
CALIFORNIA COMPANY

TABLE B-1 (CONTINUED)

```
$IBFTC GEOMV                                                            2266057
      SUBROUTINE GEOMVG                                                 2266058
C     AS OF 05/05/65
C     GEOMVG SETS CAPACITOR VALUE OF NODE POSITIVE IF NODE IS IN LIQUID 2266059
C     OR NEGATIVE IF NODE IS IN GAS.                                    2266060
      COMMON P(14000), M(16), KKKK(23), CC(12)
      COMMON /CPNET/NTYPE,TKRAD,TKLEN,TEMPZ,NRAD,NCIR,NSECT,NTNK,
     1 TKTHK(5),TKWAL1,TKWAL2,INODE,KOUT,
     2          FMCO,FMNO,FMOLC,VGAS,IGC,IPRESS,FMOLN,FMIN,FMAX,PMIN,
     3          PMAX,FMOLX,TSAT,ANGLE,TX,PR,TANKV,
     5          RADI(4),HELB(14),LLFLOW,HELT,HELP,HELW
     6          ,ISTRAT,SAREA,IOPTSX(5),FMULTF(5),STRINP(20)
     7           ,GSOLD (2),TTOPBL(2),DLIQ  ,NLSURF,ICALL
      COMMON /GEOM/ GSINT,GCOST,GRC,GV1,GV2,GV3,GDV1,GDV2,GPIE,GVOL     2266063
      SURF (C,R) = C*SQRT(AMAX1(0.0,R**2-C**2)) + R**2 * ASIN (AMAX1(   22660631
     1  -1.0, AMIN1(C/R,1.0)))                                          22660632
      RLPRIM(RC,AL) = SQRT(AMAX1(0.0,RC**2-AL**2))                      22660633
      KASE = 0                                                          2266064
      INDKT1=0                                                          2266065
      GPIE = 3.1415927                                                  2266066
      HFPIE =1.5707963                                                  2266067
      IF (NTYPE.NE.1) GO TO 1000                                        2266068
      IF (VGAS) 5,5,6                                                   2266069
C     IF TANK IS FULL, INDKT1  =1, ALL NODES ARE POSITIVE.              2266070
 5    INDKT1=1                                                          2266071
      ALTITD = 2.*TKRAD + TKLEN*COS(ABS(ANGLE))                         22660711
      GO TO 100                                                         2266072
 6    IF (TANKV-VGAS) 7,7,8                                             2266073
C     IF TANK IS EMPTY, INDKT1=2, ALL NODES ARE NEGATIVE.               2266074
 7    INDKT1=2                                                          2266075
      ALTITD = 0.                                                       22660751
      GO TO 100                                                         2266076
C     COMPUTE QUANTITIES FOR GEOM COMMON                                2266077
 8    THETA = ABS(ANGLE)                                                2266078
      GSINT = SIN(THETA)                                                2266079
      GCOST = COS(THETA)                                                2266080
      GRC = TKRAD                                                       2266081
      VLIQ = TANKV-VGAS                                                 2266082
C                                                                       2266083
C     COMPUTE VERTICAL HEIGHT OF TANK AT ANGLE THETA                    2266084
C                                                                       2266085
      HEITHT = 2.*TKRAD + TKLEN*GCOST                                   2266086
C                                                                       2266087
C     COMPUTE HIGHEST POINT OF BOTTOM HEMISPHERE (HEITHA) AND LOWEST    2266088
C     POINT OF UPPER HEMISPHERE (HEITHB).                               2266089
C                                                                       2266090
      HEITHA = TKRAD + TKRAD*GSINT                                      2266091
      HEITHB = TKLEN * GCOST +TKRAD - TKRAD*GSINT                       2266092
C                                                                       2266093
C     COMPUTE  VOLUME 3, THE VOLUME OF THE HEMISPERICAL SEGMENT AT THE  2266094
C     BOTTOM OF THE TILTED HEMISPHERE.                                  2266095
C                                                                       2266096
      CALL VOLUM3                                                       2266097
      IF (VLIQ - GV3) 19 ,18, 20                                        2266098
 18   ALTITD = GRC- GRC*GSINT                                           2266099
C     VOLUME OF LIQUID = VOLUME 3.                                      2266100
      INDKTO = 1                                                        2266101
      KASE =1                                                           2266102
      GO TO 100                                                         2266103
C     VOLUME OF LIQUID IS IN VOLUME 3.                                  2266104
 19   GVOL = VLIQ                                                       2266105
```

TABLE B-1 (CONTINUED)

```
      INDKTO = 1                                                        2266106
      GO TO 25                                                          2266107
C     VOLUME OF LIQUID GREATER THAN VOLUME 3, TEST VOLUME OF GAS.       2266108
 20   IF (VGAS- GV3) 22,21,40                                           2266109
C     VOLUME OF GAS = VOLUME 3                                          2266110
 21   ALTITD = HEITHT - GRC + GRC*GSINT                                 2266111
      KASE = 1                                                          2266112
      INDKTO = 2                                                        2266113
      GO TO 100                                                         2266114
C     VOLUME OF GAS IS IN VOLUME 3.                                     2266115
 22   GVOL = VGAS                                                       2266116
      INDKTO = 2                                                        2266117
 25   KASE = 1                                                          2266118
      GUESS = HEITHA/2.                                                 2266119
      CALL  EACL (KASE, GUESS, AL)                                      2266120
      IF (INDKTO-2) 26,27,27                                            2266121
 26   ALTITD = GRC - AL                                                 2266122
      GO TO 100                                                         2266123
 27   ALTITD = HEITHT -GRC + AL                                         2266124
      GO TO 100                                                         2266125
C                                                                       2266126
C     LIQUID LEVEL IS NOT IN UPPER OR LOWER HEMISPERICAL SEGMENT, TEST  2266127
C     IF HEIGTH B IS LESS THAN HEIGTH A.                                2266128
C                                                                       2266129
 40   IF (HEITHB-HEITHA) 70,41,41                                       2266130
C                                                                       2266131
 41   VOLA = GPIE*GRC**3*(2./3. + GSINT/GCOST)                          2266132
C                                                                       2266133
C     TEST IF LIQUID SURFACE IS IN CYLINDER AND ONE HEMISPHERE.         2266134
C                                                                       2266135
      IF (VLIQ -VOLA) 43,42,44                                          226[illegible]36
C     VLIQ = VOLA, SET KASE = 3 TO SIMPLIFY SURFACE AREA CALCULATION    22[illegible]
 42   ALTITD =  HEITHA                                                  226[illegible]
      KASE =3                                                           2266[illegible]
      GO TO 100                                                         2266140
C     VLIQ LESS THAN  VOLA, SURFACE IN CYLINDER AND LOWER HEMISPHERE.   2266141
 43   INDKT2 = 1                                                        2266142
      GVOL = VLIQ                                                       2266143
      GO TO 47                                                          2266144
C     TEST IF LIQUID SURFACE IS IN CYLINDER AND UPPER HEMISPHERE        2266145
 44   IF (VGAS- VOLA) 46,45,60                                          2266146
C     VGAS =VOLA, SET KASE =3 TO SIMPLIFY  SURFACE ARE COMPUTATION      2266147
 45   KASE =3                                                           2266148
      ALTITD = HEITHB                                                   2266149
      GO TO 100                                                         2266150
C     VGAS LESS THAN VOLA, SURFACE IN CYLINDER AND UPPER HEMISPHERE     2266151
   46 INDKT2 =2                                                         2266152
      GVOL = VGAS                                                       2266153
   47 KASE = 2                                                          2266154
      GUESS =0.                                                         2266155
      CALL  EACL (KASE,GUESS,AL)                                        2266156
      IF (INDKT2 -2) 48,49,49                                           2266157
   48 ALTITD = GRC -AL                                                  2266158
      GO TO 100                                                         2266159
   49 ALTITD = HEITHT -(GRC -AL)                                        2266160
      GO TO 100                                                         2266161
C                                                                       2266162
C     LIQUID SURFACE IS IN CYLINDER ONLY                                2266163
C                                                                       2266164
   60 VCYL = VLIQ -VOLA                                                 2266165
      CYLL = VCYL/(GPIE*GRC**2)                                         2266166
```


LOCKHEED
CALIFORNIA COMPANY

TABLE B-1 (CONTINUED)

```
      ALTITD = HEITHA + CYLL*GCOST                                      2266167
      KASE =3                                                           2266168
      GO TO 100                                                         2266169
C     HEIGTH B IS LESS THAN HEIGTH A, LIQUID SURFACE MAY BE IN BOTH THE 2266170
C     UPPER AND LOWER HEMISPHERES.                                      2266171
C                                                                       2266172
   70 ALA = GRC-HEITHB                                                  2266173
      CALL VOLUM1 (ALA)                                                 2266174
      CALL VOLUM2 (ALA)                                                 2266175
      VOLUA = GV1+GV2+GV3                                               2266176
C                                                                       2266177
C     TEST IF LIQUID SURFACE IS IN CYLINDER AND LOWER HEMISPHERE.       2266178
C                                                                       2266179
      IF (VLIQ - VOLUA) 73,72,74                                        2266180
C     VLIQ = VOLUA                                                      2266181
   72 ALTITD = HEITHB                                                   2266182
      KASE = 4                                                          2266183
      INDKT3 = 1                                                        2266184
      GO TO 100                                                         2266185
C     VLIQ LESS THAN VOLUA, SURFACE IS IN CYLINDER AND LOWER HEMISPHERE 2266186
C                                                                       2266187
   73 INDKT3 = 1                                                        2266188
      GVOL = VLIQ                                                       2266189
      GO TO 77                                                          2266190
C                                                                       2266191
C     TEST IF LIQUID SURFACE IS IN CYLINDER AND UPPER HEMISPHERE.       2266192
C                                                                       2266193
   74 IF (VGAS - VOLUA) 76, 75, 80                                      2266194
C     VGAS = VOLUA                                                      2266195
   75 ALTITD  = HEITHA                                                  2266196
      KASE = 4                                                          2266197
      INDKT3 = 2                                                        2266198
      GO TO 100                                                         2266199
C                                                                       2266200
C     VGAS LESS THAN VOLUA, LIQUID SURFACE IS IN CYLINDER AND UPPER     2266201
C     HEMISPHERE.                                                       2266202
C                                                                       2266203
   76 INDKT3 = 2                                                        2266204
      GVOL = VGAS                                                       2266205
   77 KASE = 4                                                          2266206
      GUESS = (GRC - HEITHB + GRC*GSINT) /2.                            2266207
      CALL  EACL (KASE,GUESS,AL)                                        2266208
      IF (INDKT3 -2) 78,79,79                                           2266209
   78 ALTITD = GRC - AL                                                 2266210
      GO TO 100                                                         2266211
   79 ALTITD = HEITHT - GRC + AL                                        2266212
      GO TO 100                                                         2266213
C                                                                       2266214
C     LIQUID SURFACE IS IN CYLINDER AND BOTH HEMISPHERES.               2266215
C                                                                       2266216
   80 KASE = 5                                                          2266217
      GVOL = VLIQ                                                       22662171
      GUESS = GRC -(HEITHA + HEITHB) /2.                                2266218
      CALL  EACL (KASE,GUESS,AL)                                        2266219
      ALTITD = GRC -AL                                                  2266220
C                                                                       2266221
C     THIS SECTION COMPUTES THE AREA OF THE LIQUID SURFACE IF REQUESTED 22662211
C                                                                       22662212
  100 CONTINUE                                                          22662213
  105 IF (KASE.NE.0) GO TO 110                                          22662214
      AREA = 0.0                                                        22662215
```


LOCKHEED
CALIFORNIA COMPANY

TABLE B-1 (CONTINUED)

```
      GO TO 199                                                         22662216
C                                                                       22662217
 110  IF (KASE.NE.1) GO TO 120                                          22662218
      IF (INDKT0.EQ.2) GO TO 111                                        22662219
      AL =  GRC - ALTITD                                                2266222
      GO TO 112                                                         22662221
 111  AL = ALTITD + TKRAD -HEITHT                                       22662222
 112  AREA = GPIE*(GRC**2 - AL**2)                                      22662223
      GO TO 199                                                         22662224
C                                                                       22662225
 120  IF (KASE.NE.2) GO TO 130                                          22662226
      IF (INDKT2.EQ.2) GO TO 121                                        22662227
      AL = GRC - ALTITD                                                 22662228
      GO TO 122                                                         22662229
 121  AL = ALTITD + GRC - HEITHT                                        2266223
 122  RLP = RLPRIM(GRC,AL)                                              22662231
      AREA = GPIE* RLP**2/2. +SURF(AL/GSINT*GCOST,RLP) +(GPIE *GRC**2/2.22662232
     1 - SURF( AL/GSINT, GRC))/GCOST                                    22662233
      GO TO 199                                                         22662234
C                                                                       22662235
 130  IF (KASE.NE.3) GO TO 140                                          22662236
      AREA = GPIE* GRC**2/ GCOST                                        22662237
      GO TO 199                                                         22662238
C                                                                       22662239
 140  IF (KASE.NE.4) GO TO 150                                          2266224
      IF (INDKT3.EQ.2) GO TO 141                                        22662241
      AL = GRC - ALTITD                                                 22662242
      GO TO 142                                                         22662243
 141  AL = ALTITD + GRC -HEITHT                                         22662244
 142  RLP = RLPRIM (GRC,AL)                                             22662245
      AREA = GPIE* RLP**2/2.+ SURF(AL/GSINT*GCOST,RLP)  +( GPIE*GRC**2  22662246
     1 /2. - SURF(AL/GSINT,GRC))/GCOST                                  22662247
      GO TO 199                                                         22662248
C                                                                       22662249
 150  AL = GRC - ALTITD                                                 2266225
      RLP = RLPRIM (GRC,AL)                                             22662251
      ALPRIM =  -(AL +TKLEN*GCOST)                                      22662252
      RLPP = RLPRIM (GRC,ALPRIM)                                        22662253
      AREA = -(SURF( ALPRIM/GSINT,GRC) + SURF(AL/GSINT,GRC))/GCOST +    22662254
     1 GPIE/2.*(RLP**2 +RLPP**2) +SURF(AL/GSINT*GCOST,RLP) +            22662255
     2 SURF(ALPRIM/GSINT*GCOST, RLPP)                                   22662256
 199  SAREA = AREA                                                      22662257
     C                                                                  22662258
C    THIS SECTION TESTS NODES TO DETERMINE IF THEY ARE IN LIQUID OR GAS.2266226
C                                                                       2266226
 200 MNODE = 2*KKKK(1)+KKKK(2) + INODE                                  2266227
      DLIQ = ALTITD                                                     22662271
C    NNCIR = TOTAL NUMBER OF NODES PER RADIUS                           2266228
      NNCIR = NCIR + NTNK +1                                            2266229
      FGNRAD = NRAD                                                     2266230
      FGNCIR = NCIR                                                     2266231
      FGNSEC = NSECT                                                    2266232
C    NODTOT = TOTAL NUMBER OF NODES IN TANK                             2266233
      NODTOT = 2*NNCIR*NRAD*(NRAD/4) +NNCIR* NRAD *NSECT                2266234
      JAY = MNODE + NODTOT -1                                           2266235
      DO 210 I= MNODE,JAY                                               2266236
 210  P(I) = ABS(P(I))                                                  2266237
C    IS TANK COMPLETELY EMPTY OR COMPLETELY FULL                        2266238
      IF (INDKT1-1) 215,1000,211                                        2266239
 211  LTRAY =1                                                          22662391
      MKL = MNODE                                                       22662392
```


LOCKHEED
CALIFORNIA COMPANY

TABLE B-1 (CONTINUED)

```
      KK = NRAD/4                                                       22662393
      JJ = NRAD                                                         22662394
  212 DO 214 K=1,KK                                                     22662395
      DO 214 J=1,JJ                                                     22662396
      DO 214 I=1,NNCIR                                                  22662397
      IF (I.GT.NCIR) GO TO 213                                          22662398
      P(MKL) = -P(MKL)                                                  22662399
  213 MKL = MKL+1                                                       2266240
  214 CONTINUE                                                          22662401
      IF (LTRAY - 2) 201,202,1000                                       22662402
  201 KK = NSECT                                                        22662403
      GO TO 203                                                         22662404
  202 KK = NRAD/4                                                       22662405
  203 LTRAY = LTRAY+1                                                   22662406
      GO TO 212                                                         22662407
  215 COSTH = COS(ANGLE)                                                2266243
      SINTH = SIN(ANGLE)                                                2266244
      CON1 = GRC/SQRT(FGNCIR)                                           2266245
      CON2 = 2.*GPIE/FGNRAD                                             2266246
      CON3 = GRC*ABS(SINTH)                                             2266247
       IF (HEITHB - ALTITD) 218,216,216                                 2266248
C     UPPER HEMISPHERE IN GAS                                           2266249
  216 JAY1 = MNODE + NNCIR*NRAD*(NRAD/4) -1                             2266250
      MKL = MNODE                                                       2266251
      KK = NRAD/4                                                       22662511
      JJ = NRAD                                                         22662512
      DO 217 K=1,KK                                                     22662513
      DO 217 J =1,JJ                                                    22662514
      DO 217 I =1,NNCIR                                                 22662515
      IF (I.GT.NCIR) GO TO 219                                          22662516
      P(MKL) = -P(MKL)                                                  22662517
  219 MKL = MKL+1                                                       22662518
  217 CONTINUE                                                          22662519
      MNODE = JAY1+1                                                    2266253
      GO TO 200                                                         2266254
  218 GMID = ALTITD - HEITHB                                            2266255
      IF (GMID - CON3) 222,222,220                                      2266256
  220 LIGHT1 = 0                                                        2266257
      GO TO 225                                                         2266258
  222 IF (ANGLE) 223,224,224                                            2266259
  223 LIGHT1 = 2                                                        2266260
      GO TO 225                                                         2266261
  224 LIGHT1 = 1                                                        2266262
  225 IIG = NNCIR                                                       2266263
      JJG = NRAD                                                        2266264
      KKG= NRAD/4                                                       2266265
      HTEST = ALTITD - HEITHB                                           2266266
C     TEST NODES IN UPPER HEMISPHERE.                                   2266267
  226 DO 270 K= 1,KKG                                                   2266268
      RADAC = CON2*(FLOAT(K)-.5)                                        2266269
      RADAS = SIN(RADAC)                                                2266270
      RADAC = COS(RADAC)                                                2266271
      DO 260 J=1,JJG                                                    2266272
      RADB = CON2*(FLOAT(J)-.5)                                         2266273
      RADBC = COS(RADB)                                                 2266274
      DO 250 I=1,IIG                                                    2266275
      IF (I.GT.NCIR) GO TO 248                                          2266276
      IF (LIGHT1 -1) 235,230,233                                        2266277
  230 IF (RADB.GT.HFPIE.AND.RADB.LT.3.*HFPIE)GO TO 235                  2266278
      P(MNODE) = -P(MNODE)                                              2266279
      GO TO 248                                                         2266280
```


LOCKHEED
CALIFORNIA COMPANY

TABLE B-1 (CONTINUED)

```
  233 IF (RADB.LT.HFPIE.OR.RADB.GT.3.*HFPIE) GO TO 235
      P(MNODE) = -P(MNODE)
      GO TO 248
C
  235 CON4 = SQRT(FLOAT(I)-.5)*CON1
      HLONE = CON4*RADAS
      RCPRIM =CON4* RADAC * RADBC
      HCN = CON3 +RCPRIM* SINTH + HLONE * COSTH
      IF (HCN - HTEST) 248,248,240
  240 P(MNODE) = -P(MNODE)
  248 MNODE = MNODE +1
  250 CONTINUE
  260 CONTINUE
  270 CONTINUE
C    CYLINDER
  300 HEITHC = GRC- CON3
      IF (ALTITD - HEITHC) 303,303,305
  303 JAY1 = MNODE + NNCIR*NRAD*NSECT -1
C    SET ALL NODES IN CYLINDER NEGATIVE.
      MKL = MNODE
      KK = NSECT
      JJ = NRAD
      DO 304 K=1,KK
      DO 304 J=1,JJ
      DO 304 I=1,NNCIR
      IF (I.GT.NCIR) GO TO 301
      P(MKL) = -P(MKL)
  301 MKL = MKL+1
  304 CONTINUE
      MNODE = JAY1+1
      GO TO 400
  305 IIG = NNCIR
      JJG = NRAD
      KKG = NSECT
      CON5 = TKLEN / FGNSEC
      DO 370 K= 1,KKG
      HLPRIM = TKLEN - CON5*(FLOAT(K)-.5)
      TEST1 = HLPRIM*COSTH + HEITHC
      IF (TEST1- ALTITD) 310, 307,307
  307 JAY1 =  MNODE + NNCIR* NRAD -1
      MKL = MNODE
      JJ = NRAD
      DO 309 J=1,JJ
      DO 309 I=1,NNCIR
      IF (I.GT.NCIR) GO TO 308
      P(MKL) = -P(MKL)
  308 MKL = MKL+1
  309 CONTINUE
      MNODE = JAY1+1
      GO TO 370
C
  310 TEST1 = TEST1 + 2.*CON3
      IF (TEST1 - ALTITD) 311,311,315
  311 MNODE = MNODE + NNCIR*NRAD
      GO TO 370
C
  315 DO 360 J=1,JJG
      RADCC = COS( CON2*(FLOAT(J)-.5))
      DO 350 I= 1,IIC
      IF (I.GT.NCIR) GO TO 348
      RCPRIM = SQRT(FLOAT(I)-.5)* CON1*RADCC
```


LOCKHEED
CALIFORNIA COMPANY

TABLE B-1 (CONTINUED)

```
      HCN = HLPRIM*COSTH + CON3 + RCPRIM * SINTH
      TEST1 = HCN +HEITHC
      IF (TEST1 -ALTITD) 348,348,320
  320 P(MNODE) = -P(MNODE)
  348 MNODE = MNODE +1
  350 CONTINUE
  360 CONTINUE
  370 CONTINUE
C
C     LOWER HEMISPHERE
C
  400 IF (ALTITD.GE.HEITHA) GO TO 1000
      IF (ALTITD - GRC) 401,402,402
  401 LIGHT2 = 0
      GO TO 410
  402 IF (ANGLE) 403,404,404
  403 LIGHT2 =2
      GO TO 410
  404 LIGHT2 =1
  410 KKG = NRAD/4
      JJG = NRAD
      IIG = NNCIR
      DO 470 K=1,KKG
      RADDC = CON2*(FLOAT(K)-.5)
      RADDS = SIN(RADDC)
      RADDC = COS(RADDC)
      DO 460 J=1,JJG
      RADE = CON2*(FLOAT(J)-.5)
      RADEC = COS(RADE)
      IF (LIGHT2-1) 430,415,420
  415 IF (RADE.LT.HFPIE.OR.RADE.GT.3.*HFPIE) GO TO 430
      MNODE = MNODE + NNCIR
      GO TO 460
  420 IF (RADE.GT.HFPIE.AND.RADE.LT.3.*HFPIE) GO TO 430
      MNODE = MNODE +NNCIR
      GO TO 460
  430 DO 450 I=1,NNCIR
      IF (I.GT.NCIR) GO TO 448
      RCPRIM= CON1*SQRT(FLOAT(I)-.5)
      HLONE = RCPRIM*RADDS
      RCPRIM = RCPRIM* RADDC*RADEC
      HCN = CON3 - RCPRIM*SINTH + HLONE * COSTH
      TEST1 = HEITHA -HCN
      IF (TEST1-ALTITD) 448,448,440
  440 P(MNODE) =-P(MNODE)
  448 MNODE = MNODE +1
  450 CONTINUE
  460 CONTINUE
  470 CONTINUE
 1000 RETURN
      END
```


LOCKHEED
CALIFORNIA COMPANY

TABLE B-1 (CONTINUED)

```
$IBFTC EACE                                                          2266052
      SUBROUTINE EACL (KASE,GUESS,AVOL)                              2266053
C     AS OF 05/05/65
C     USES EQUATION FOR VOLUME SPECIFIED BY KASE TO FIND VALUE AVOL SUCH 2266054
C     THAT  V(AVOL) = GVOL, USING GUESS AS FIRST ESTIMATE OF AVOL.   2266055
C     CONVERGANCE IS BY AITKENS DELTA SQUARED METHOD.                2266056
      DIMENSION W1(6)                                                2266057
      COMMON /GEOM/ GSINT,GCOST,GRC,GV1,GV2,GV3,GDV1,GDV2,GPIE,GVOL  2266067
      COMMON /CPNET/NTYPE,TKRAD,TKLEN,TEMPZ,NRAD,NCTR,NSECT,NTMK,
     1 TKTHK(5),TKWAL1,TKWAL2,INODE,KOUT,
     2          FMCO,FMNO,FMOLC,VGAS,IGC,IPRESS,FMOLN,FMIN,FMAX,PMIN,
     3          PMAX,FMOLX,TSAT,ANGLE,TX,PR,TANKV,
     5          RADI(4),HELB(14),LLFLOW,HELT,HELP,HELW
     6          ,ISTRAT,SAREA,IOPTSX(5),FMULTF(5),STRINP(20)
     7           ,GSCLD (2),TTOPBL(2),DLIG  ,NLSURF,ICALL
      QLIM5 = GRC*GSINT - TKLEN*GCOST
      QLIM5 = QLIM5 - .0001*QLIM5
      QLIM = GRC*GSINT                                               2266058
      QLIM = QLIM - .0001*QLIM
      QLIM1 = GRC - GRC*.0001
      NMAX =20                                                       2266059
      W1(5) = GUESS                                                  2266060
      NITER = 0                                                      2266061
      QMIN = 1.E-37                                                  2266062
      QMAX = 10.                                                     2266063
  710 NITER = NITER +1                                               2266064
      IF (KASE.EQ.1) GO TO 720                                          0641
      IF (KASE.EQ.5) GO TO 716
      W1(5) = AMAX1(-QLIM , AMIN1( QLIM, W1(5)))                     2266065
  711 CALL DELA1 (W1(5),DELT)                                        2266068
  715 W1(1) = W1(5)+ DELT                                            2266071
      GO TO 721                                                         0721
  716 W1(5) = AMAX1(-QLIM , AMIN1( QLIM5,W1(5)))
      CALL DELA2 (W1(5), DELT)
      W1(1) = W1(5) + DELT
      GO TO 721
  720 W1(5) = AMAX1 (0.0, AMIN1(QLIM1,W1(5)))
      CALL DELA0 ( W1(5), DELT)                                         0723
      W1(1)   W1(5) +DELT                                               0724
  721 IF (NITER -1) 722,722,724                                         073
  722 W1(3) =0.0                                                     2266074
      GO TO 730                                                      2266075
  724 IF ((ABS (W1(5) -W1(6)) /AMAX1 (ABS(W1(5)), ABS(W1(6)), QMIN))  2266076
     1 -.0001) 730,726,726                                           2266077
  726 A = (W1(1)-W1(2))/ (W1(5) -W1(6))                              2266078
      W1(3) = (A)/(A-1.0)                                            2266079
      IF (ABS( W1(3))-QMAX) 730,730,728                              2266080
  728 W1(3)  SIGN (QMAX, W1(3))                                      2266081
  730 W1(4) = W1(1) +W1(3)*(W1(5)-W1(1))                             2266082
      W1(2) = W1(1)                                                  2266083
      W1(6) = W1(5)                                                  2266084
  732 W1(5) = W1(4)                                                  2266085
      IF (NITER.GT.NMAX) GO TO 736                                   2266086
      IF ((ABS(W1(2)-W1(6))/ AMAX1(ABS(W1(2)),ABS(W1(6)),QMIN))-.000000 2266087
     1 ) 734,734,7                                                   2266088
  734 CONTINUE                                                       2266089
  736 CONTINUE                                                       2266090
      AVOL=W1(5)                                                     2266091
      RETURN                                                         2266092
      END                                                            2266093
```


LOCKHEED
CALIFORNIA COMPANY

TABLE B-1 (CONTINUED)

```
$IBFTC DEL1
      SUBROUTINE DELA1 (AL,DELTA)
C     AS OF 05/05/65
      COMMON /CPNET/NTYPE,TKRAD,TKLEN,TEMPZ,NRAD,NCIR,NSECT,NTNK,
     1 TKTHK(5),TKWAL1,TKWAL2,INODE,KOUT,
     2          FMCO,FMNO,FMOLC,VGAS,IGC,IPRESS,FMOLN,FMIN,FMAX,PMIN,
     3          PMAX,FMOLX,TSAT,ANGLE,TX,PR,TANKV,
     5          RADI(4),HELB(14),LLFLOW,HELT,HELP,HELW
     6          ,ISTRAT,SAREA,IOPTSX(5),FMULTF(5),STRINP(20)
     7           ,GSOLD (2),TTOPBL(2),DLIQ   ,NLSURF,ICALL
      COMMON /GEOM/ GSINT,GCOST,GRC,     GV1,GV2,GV3,GDV1,GDV2,GPIE,GVOL
      CALL VOLUM1 (AL)
      CALL VOLUM2 (AL)
      CALL DVOLM1 (AL)
      CALL DVOLM2 (AL)
      DELTA = (GVOL  -( GV1+GV2+GV3)) / (GDV1+GDV2)
      RETURN
C     WHEN THE LIQUID LEVEL IS IN THE CYLINDER AND ONE HEMISPHERE
C     THIS ROUTINE COMPUTES DELTA A FOR USE BY THE ITERATION PROCEDURE.
C     IT ASSUMES THAT GV3 HAS PREVIOUSLY BEEN COMPUTED, SINCE GV3 DOES
C     NOT DEPEND ON AL.
      END
```

```
$IBFTC DEL2
      SUBROUTINE DELA2 (AL,DELTA)
C     AS OF 05/05/65
C     COMPUTES DELTA A FOR USE BY THE ITERATION PROCEDURE WHEN THE
C     LIQUID LEVEL IS IN THE CYLINDER AND BOTH HEMISPHERES.
      COMMON /CPNET/NTYPE,TKRAD,TKLEN,TEMPZ,NRAD,NCIR,NSECT,NTNK,
     1 TKTHK(5),TKWAL1,TKWAL2,INODE,KOUT
     2          FMCO,FMNO,FMOLC,VGAS,IGC,IPRESS,FMOLN,FMIN,FMAX,PMIN,
     3          PMAX,FMOLX,TSAT,ANGLE,TX,PR,TANKV,
     5          RADI(4),HELB(14),LLFLOW,HELT,HELP,HELW
     6          ,ISTRAT,SAREA,IOPTSX(5),FMULTF(5),STRINP(20)
     7           ,GSOLD (2),TTOPBL(2),DLIQ   ,NLSURF,ICALL
      COMMON /GEOM/ GSINT,GCOST,GRC,     GV1,GV2,GV3,GDV1,GDV2,GPIE,GVOL
      GAPRIM = -( AL + TKLEN * GCOST)
      CALL VOLUM1 (AL)
      CALL VOLUM2 (AL)
      DELV1 = GV1
      DELV2 = GV2
      CALL VOLUM1 (GAPRIM)
      CALL VOLUM2 (-GAPRIM)
      QNUMER= GVOL  -(DELV1+DELV2-GV2 +2.73.*GPIE*GRC**3 - GV1)
      CALL DVOLM1 (AL)
      CALL DVOLM2 (AL)
      DELV1 =GDV1
      DELV2 =GDV2
      CALL DVOLM1 (GAPRIM)
      CALL DVOLM2 (-GAPRIM)
      DELTA =QNUMER/(DELV1+DELV2 -GDV2 -GDV1)
      RETURN
      END
```


LOCKHEED
CALIFORNIA COMPANY

TABLE B-1 (CONTINUED)

```
$IBFTC VOL1
      SUBROUTINE VOLUM1 (AL)
C     AS OF 05/05/65
      COMMON /GEOM/ GSINT,GCOST,GRC,    GV1,GV2,GV3,GDV1,GDV2,GPIE,GVOL
      GAL = AL
      GRC2=GRC**2
      GSINT2=GSINT**2
      GAL2=GAL**2
      GTEMP=GRC2-GAL2
      GV1=GPIE*GRC*GRC2/3.*(GSINT*(3.-GSINT2)-.5) - GCOST*(GRC2/6. +
     1 GAL2/(3.*GSINT2)) * SQRT(GRC2*GSINT2 -GAL2) - (GPIE/2.+ASIN (
     2 GAL*GCOST/(GSINT*SQRT(GRC2-GAL2))) *GAL*(3.*GRC2-GAL2)/3. +
     3 GRC2*GRC/3.*ASIN ( 2.*GRC2*GCOST*GCOST/(GRC2-GAL2) -1.)
      RETURN
      END

$IBFTC VOL2
      SUBROUTINE VOLUM2 (AL)
C     AS OF 05/05/65
      COMMON /GEOM/ GSINT,GCOST,GRC,    GV1,GV2,GV3,GDV1,GDV2,GPIE,GVOL
      GAL=AL
      GRC2=GRC**2
      GTEMP = GAL/GSINT
      GTEMP2 = GTEMP**2
      GTEMP3 = SQRT (GRC2-GTEMP2)
      GV2  = GSINT/GCOST*( GRC2* ( GTEMP*ASIN( GTEMP/GRC) +GTEMP3 )
     1 -GPIE*GRC2*GTEMP/2.  - GTEMP3**3/3.)
      RETURN
      END

$IBFTC VOL3
      SUBROUTINE VOLUM3
C     AS OF 05/05/65
      COMMON /GEOM/ GSINT,GCOST,GRC,    GV1,GV2,GV3,GDV1,GDV2,GPIE,GVOL
      GTEMP=1.-GSINT
      GV3 = GPIE*GRC**3/3.*( GTEMP**2*(3.-GTEMP))
      RETURN
      END
```


LOCKHEED
CALIFORNIA COMPANY

TABLE B-1 (CONTINUED)

```
$IBFTC DVO1                                                          2266165
      SUBROUTINE DVOLM1 (AL)                                         2266166
C     AS OF 05/05/65
      COMMON /GEOM/ GSINT,GCOST,GRC,    GV1,GV2,GV3,GDV1,GDV2,GPIE,GVOL 2266167
      GAL =AL                                                        2266168
      GRC2= GRC*GRC                                                  2266169
      GAL2= GAL*GAL                                                  2266170
      GTEMP1 = GRC2-GAL2                                             2266171
      GTEMP2 = SQRT(GTEMP1)                                          2266172
      GTEMP3 = SQRT(GRC2*GSINT**2-GAL2)                              2266173
      GTEMP4 = GAL*GCOST/(3.*GSINT**2)                               2266174
      GTEMP5 = GAL*GCOST/(GSINT*GTEMP2)                              2266175
      GTEMP6 = 2.*GRC2*GCOST*GCOST/GTEMP1                            2266176
      GDV1= - ((GRC2/6.*GCOST  + GAL*GTEMP4)*(-GAL/GTEMP3) + GTEMP3* 2266177
     1 2.*GTEMP4)-((GPIE/2.+ASIN(GTEMP5)) * GTEMP1 +(GAL*GRC2 -      2266178
     2 GAL2*GAL/3.) * 1./SQRT(1.-GTEMP5**2)*( GTEMP5/GAL + GAL*GTEMP5/ 2266179
     3 GTEMP1)) + GRC2*GRC/(3.*SQRT(1.-(GTEMP6-1.)**2)) *2.*GAL*     2266180
     4 GTEMP6/GTEMP1                                                 2266181
      RETURN                                                         2266182
      END                                                            2266183

$IBFTC DVO2                                                          2266184
      SUBROUTINE DVOLM2 (AL)                                         2266185
C     AS OF 05/05/65
      COMMON /GEOM/ GSINT,GCOST,GRC,    GV1,GV2,GV3,GDV1,GDV2,GPIE,GVOL 2266186
      GAL=AL                                                         2266187
      GRC2= GRC*GRC                                                  2266188
      GTEMP1 = GAL/GSINT                                             2266189
      GTEMP2 = SQRT( GRC2*GSINT**2 - GAL**2)                         2266190
      GDV2 = GSINT/GCOST *(  GRC2/GSINT  *(GAL/ GTEMP2               2266191
     1              + ASIN ( GTEMP1/GRC)  - GAL/GTEMP2 - GPIE/2. )   2266192
     2 + GTEMP1/GSINT**2* GTEMP2 )                                   2266193
      RETURN                                                         2266194
      END                                                            2266195

$IBFTC DELO                                                          196
      SUBROUTINE DELAO ( AL,DELA)                                    197
C     AS OF 05/05/65
C                                                                    198
C     COMPUTES DELTA A WHEN LIQUID SURFACE IS IN UPPER OR LOWER      199
C     HEMISPHERICAL SEGMENT.                                         200
C                                                                    201
      COMMON /GEOM/ GSINT,GCOST,GRC,GV1,GV2,GV3,GDV1,GDV2,GPIE,GVOL  2266007
      DELA = (GVOL - GPIE/3.*(GRC-AL)**2*(2.*GRC +AL))/(GPIE*(AL**2 - 202
     1 GRC**2))                                                      203
      RETURN                                                         204
      END                                                            205
```


LOCKHEED
CALIFORNIA COMPANY

TABLE B-1 (CONTINUED)

```
$IBFTC GEOMNG
      SUBROUTINE GEOMNG
C     AS OF 6/30/65
      COMMON P(14000),TM(16),MAXT,MAXR,MAXC,KSP,KST
      COMMON /CONTR/  TLIQ,SCLIQ,TGAS,SCGAS,SCALL,TLSMAX,SCINT,TSGAS,
     1COMUN(5),DMCC,TLMAX,TALL,FMLC,GAVITY,FKG,FKL,ZC,PC,ZN,FMLU,FMLA,
     2          ZX,CPX,TLA,GAMMA,RHOL,RHOG,CPL,CPG,RLAM,MCNT,PN,FMC,FMN,
     3          RDUMMY
      COMMON /CPNET/NTYPE,TKRAD,TKLEN,TEMPZ,NRAD,NCIR,NSECT,NTNK,
     1 TKTHK(5),TKWAL1,TKWAL2,INODE,KOUT,
     2          FMCO,FMNO,FMCLC,VGAS,IGC,IPRESS,FMOLN,FMIN,FMAX,PMIN,
     3          PMAX,FMOLX,TSAT,ANGLE,TX,PR,TANKV,
     5          RADI(4),HELD(14),LLFLOW,HELT,HELP,HELW
     6          ,ISTRAT,SAREA,IOPTSX(5),FMULTF(5),STRINP(20)
     7           ,GSOLD (2),TTOPBL(2),DLIQ  ,NLSURF,ICALL
      EQUIVALENCE  (FMULTF(1), FLT),(FMULTF(2),FLKL)
      DIMENSION VS(250),FLA(500),NUMTAB(100),NEXW(125),NSEX(125),MM(125)
      DIMENSION LNO(250),NLNNS(125),NGNNS(125)
      EQUIVALENCE (P(13251),VS),(P(13501),FLA)
     1,(P(12526),NUMTAB),(P(12626),NEXW),(P(12751),NSEX),(P(12876),MM)
      EQUIVALENCE(P(12276),LNO),(P(12151),NLNNS),(P(12026),NGNNS)
C     SUBROUTINE TO DETERMINE WHETHER NODE IS IN LIQUID OR GAS PORTION  1911004
C     OF TANK   NODE IS NEGATIVE(-) IF IN GAS  NO GRAVITY CASE ONLY     1911005
      EQUIVALENCE  (V,VGAS), (GAVITY,GAV)
      PI = 3.14159265
      IX1 = 0
      IX2 = MAXT
      IX3 = IX2+MAXT
      IX4 = IX3+MAXR
      IX5 = IX4+MAXC
      IX6 = IX5+MAXC
      EPSILN = .01
 9003 FORMAT(10E13.5)
 9004 FORMAT(10I13)
      DO 10 I=1,MAXC
      II = I+IX4
 10   P(II) = ABS(P(II))
      FNRAD = NRAD
      FNCIR = NCIR
      FNSECT= NSECT
      NT = 6
 8002 FORMAT(      1I7)
      IINOD  = INODE                                                  19110151
      IF( NTYPE.EQ. 1 ) GO TO 40                                      1911016
      IMET = 0                                                        1911017
 11   II = NCIR +NTNK + 1                                             1911018
      JJ = NRAD                                                       1911019
      KK = NRAD / 4                                                   1911020
      R  =  ( V *3.0 / 4.0 /PI)**.33333333                            1911021
      M = 0                                                           1911022
      DO 30 K1= 1,KK                                                  1911023
      K = K1 - 1                                                      1911024
      DO 25 J1= 1,JJ                                                  1911025
      J = J1 - 1                                                      1911026
      DO 20 I =1,II                                                   19110261
      M = M+1                                                         1911027
      NODE = M -1 + IINOD                                             1911028
      NODEX4 = NODE+IX4
      IF ( I.GT. NCIR) GO TO 20                                       1911029
      FLOA=SQRT(FLOAT(I)-.5)/SQRT(FNCIR)*TKRAD
      IF ( FLOA.LT.R)  P( NODEX4  )=-P(NODEX4  )                      1911030
```


LOCKHEED
CALIFORNIA COMPANY

TABLE B-1 (CONTINUED)

```
20    CONTINUE                                                          1911032
25    CONTINUE                                                          1911033
30    CONTINUE                                                          1911034
      IMET = IMET+1                                                     1911035
      IINOD=  (NCIR + NTNK +1)*NRAD**2 /4 +INODE                        1911036
      IF(IMET.EQ.1) GO TO 11                                            1911037
      GO TO 8000                                                        1911038
40    RP  = ( V*3.0 /4.0 /PI )**.33333333                               1911039
      IF( RP.GT. TKRAD ) GO TO 90                                       1911040
      R = RP                                                            1911041
      IINOD = INODE + (NTNK + NCIR +1)*NRAD**2 /4                       1911042
      JJ =  NRAD                                                        1911043
      KK =  NSECT                                                       1911044
      II =  NTNK + NCIR +1                                              1911045
      M= 0                                                              1911046
      DO 60 K1=1,KK                                                     1911047
      K =K1-1                                                           1911048
      DO 55 J1=1,JJ                                                     1911049
      J =J1-1                                                           1911050
      DO 50 I =1,II                                                     1911051
      M = M+1                                                           1911052
      NODE = M -1 +IINOD                                                1911053
      NODEX4 = NODE+IX4
      IF(I .GT. NCIR) GO TO 50                                          1911054
      FLOA=SQRT(FLOAT(I)-.5)/SQRT(FNCIR)*TKRAD
      FLO = (FLOAT(K)+.5)*TKLEN/FNSECT
      IF( R.GT. SQRT( (FLOA                    )**2 +(TKLEN/2.0 -FLO    1911055
     1)**2))  P(NODEX4  ) = -P(NODEX4  )                                1911056
50    CONTINUE                                                          1911058
55    CONTINUE                                                          1911059
60    CONTINUE                                                          1911060
      IF(R.LT. TKLEN/2.)       R=0.0                                    1911061
      IMET=0                                                            1911062
      M =0                                                              1911063
      IINOD = INODE                                                     1911064
      KK = NRAD/4                                                       1911065
68    DO 80 K1 =1,KK                                                    1911066
      K =K1-1                                                           1911067
      DO 75 J1 =1,JJ                                                    1911068
      J =J1-1                                                           1911069
      DO 70 I  =1,II                                                    1911070
      M = M+1                                                           1911071
      NODE = M-1 +IINOD                                                 1911072
      NODEX4 = NODE+IX4
      IF(I.GT.NCIR)  GO TO 70                                           1911073
      FLOA=SQRT(FLOAT(I)-.5)/SQRT(FNCIR)*TKRAD
      FI = FLOA                                                         1911074
      S = SQRT( (TKLEN/2.0)**2 +FI**2 -2.0*FI*TKLEN/2.0*COS((FLOAT(K)
     1  +.5)*PI*2.0 / FNRAD + PI / 2.0))
      IF( R .GT.S)   P(NODEX4  ) = -P(NODEX4  )                         1911077
70    CONTINUE                                                          1911079
75    CONTINUE                                                          1911080
80    CONTINUE                                                          1911081
      IMET =IMET +1                                                     1911082
      IF( IMET.EQ.2) GO TO 85                                           1911083
      IINOD  = (NTNK +NCIR+1)*NRAD*(NRAD/4 +NSECT) +INODE               1911084
      M = 0                                                             1911085
      GO TO 68                                                          1911086
85    GO TO 8000                                                        1911087
90    R = TKRAD                                                         1911088
      VP  =  4.0/3.0 *PI *R**3                                          1911087
```

TABLE B-1 (CONTINUED)

```
      FLEN   = (V-VP )/2.0 /TKRAD**2 /PI                                1911090
      KK= NSECT                                                         1911091
      M = 0                                                             1911092
      JJ= NRAD                                                          1911093
      II= NCIR +NTNK +1                                                 1911094
      IINOD =    INODE + (NTNK+NCIR+1)*NRAD**2 / 4                      1911095
      DO 110 K1 =1,KK                                                   1911096
      K = K1-1                                                          1911097
      DO 105 J1 =1,JJ                                                   1911098
      J = J1-1                                                          1911099
      DO 100  I =1,II                                                   1911100
      M = M+1                                                           1911101
      NODE = M-1 +IINOD                                                 1911102
      NODEX4 = NODE+IX4
      IF(I.GT. NCIR) GO TO 100                                          1911103
      FLO = (FLOAT(K)+.5)*TKLEN/FNSECT
      PK = FLO                                                          1911104
      IF(PK.GE. TKLEN/2.0-FLEN .AND. TKLEN/2.0+FLEN.GE. PK ) GO TO 95   1911105
      FL = FLEN                                                         1911106
      FLO = (FLOAT(K)+.5)*TKLEN/FNSECT
      IF(FLO                      .GT. TKLEN/2.0 ) FL =-FLEN            1911107
      FLOA=SQRT(FLOAT(I)-.5)/SQRT(FNCIR)*TKRAD
      RPP =SQRT((FLOA                  )**2 +(TKLEN/2.0- FLO            1911108
     1         -FL )**2 )                                               1911109
      IF( TKRAD .LT. RPP) GO TO 100                                     1911110
95    P(NODEX4  ) = -P(NODEX4  )
100   CONTINUE                                                          1911113
105   CONTINUE                                                          1911114
110   CONTINUE                                                          1911115
      IF(TKRAD .LT. TKLEN /2.0 -FLEN) GO TO 8000                        1911116
      M=0                                                               1911117
      IMET =0                                                           1911118
      IINOD= INODE                                                      1911119
      KK = NRAD/4                                                       1911120
      JJ = NRAD                                                         1911121
      II = NTNK + NCIR + 1                                              1911122
113   DO 125 K1 =1,KK                                                   1911123
      K = K1-1                                                          1911124
      DO 120 J1 =1,JJ                                                   1911125
      J = J1-1                                                          1911126
      DO 115 I  =1,II                                                   1911127
      M = M+1                                                           1911128
      NODE = M-1 +IINOD +INODE -1                                       1911129
      NODEX4 = NODE+IX4
      IF(I.GT.NCIR ) GO TO 115                                          1911130
      A =  TKLEN/2.0  -FLEN                                             1911131
      FLOA=SQRT(FLOAT(I)-.5)/SQRT(FNCIR)*TKRAD
      B =  FLOA                                                         1911132
      FLO = FLOAT(K)+.5
      RP = SQRT( A**2 +B**2 -2.0*A*B*COS(FLO      *2.0*PI/FNRAD+PI/2.0)) 1911133
      IF(RP.LT. TKRAD )  P(NODEX4  ) = -P(NODEX4  )                     1911134
115   CONTINUE                                                          1911136
120   CONTINUE                                                          1911137
125   CONTINUE                                                          1911138
      IMET =IMET+1                                                      1911139
      M    =0                                                           1911140
      IF(IMET.NE.1 )  GO TO 8000                                        1911141
      IINOD =  (NTNK +NCIR +1)*NRAD*(NRAD/4 +NSECT ) +INODE             1911142
      GO TO 113                                                         1911143
1000  GO TO 8000
8000  RETURN
      END
```


LOCKHEED
CALIFORNIA COMPANY

BLANK PAGE

TABLE B-1 (CONTINUED)

```
$IBFTC CHOP
      SUBROUTINE CHOP (IND)
C     AS OF 6/30/65
      COMMON P(14000), M(16), KKKK(23), CC(12)
      COMMON /CONTR/  TLIQ,SCLIQ,TGAS,SCGAS,SCALL,TLSMAX,SCINT,TSGAS,
     1COMUN(51),DMCC,TLMAX,TALL,FMLO,GAVITY,FKG,FKL,ZC,PC,ZN,FMLU,FMLA,
     2          ZX,CPX,TLA,GAMMA,RHOL,RHOG,CPL,CPG,RLAM,MCNT,PN,FMC,FMN,R
      COMMON /CPNET/NTYPE,TKRAD,TKLEN,TEMPZ,NRAD,NCIR,NSECT,NTNK,
     1 TKTHK(5),TKWAL1,TKWAL2,INODE,KOUT,
     2          FMCO,FMNO,FMOLC,VGAS,IGC,IPRESS,FMOLN,FMIN,FMAX,PMIN,
     3          PMAX,FMOLX,TSAT,ANGLE,TX,PR,TANKV,
     5          RADI(4),HELB(14),LLFLOW,HELT,HELP,HELW
     6          ,ISTRAT,SAREA,IOPTSX(5),FMULTF(5),STRINP(20)
     7           ,GSOLD (2),TTOPBL(2),DLIQ  ,NLSURF,ICALL
      COMMON /STR/  IDEST (1),BNO   (1),HBAR  (1),QBL   (1),YBAR  (1),
     1              TBOTBL(1),RNO   (1),RNOB  (1),W     (1),DELPT (1),
     2              Q     (1),VBL   (1),ABAR  (1),RHOBMX(1),RHOBMN(1),
     3              DELPB (1),FR    (1),DPEG20(1),GNEW  (1),REYNO (1),
     4              SUMARS(1),DELPF (1),CAPAVG(1),TUPPER(1),CAPBL (1),
     5              CAPTLI(1),DELTLI(1),CUPPER(1),SQUAN (1)
      EQUIVALENCE  (FMULTF(1), FLT),(FMULTF(2),FLKL)
      COMMON/CHP/SMCV,SMCA,SMNV,SMNA,SDMCC,SMLAS,SMLUS,SUMEX,HELWS,GOLD,
     1          ANGOLD,FMG,FML,TS,DELTS,DELVS,FMGAS
      DIMENSION VS(250),FLA(500),NUMTAB(100),NEXW(125),NSEX(125),MM(125)
      DIMENSION LNO(250),NLNNS(125),NGNNS(125)
      EQUIVALENCE (P(13251),VS),(P(13501),FLA)
     1,(P(12526),NUMTAB),(P(12626),NEXW),(P(12751),NSEX),(P(12876),MM)
      EQUIVALENCE(P(12276),LNO),(P(12151),NLNNS),(P(12026),NGNNS)
      EQUIVALENCE (IOPTSX(1),IRSTRT),(IOPTSX(2),IPTLIQ),
     1            (IOPTSX(3),LIBTAP),(IOPTSX(4),MTIME)
      REAL M
      IF (IND.EQ.2)  GO TO 100
      REWIND 11
      READ(11) M(1),HELT,HELP  ,HELW  ,SMCV  ,SMCA  ,SMNV  ,SMNA  ,
     1    SDMCC,SMLAS,SMLUS ,SUMEX ,HELWS ,VGAS  ,GOLD  ,ANGOLD,
     2    TGAS ,TLIQ ,PR   ,PC   ,PN   ,FMG   ,FML,FMCO,FMNO,FMLO
     3  ,TS,TALL,DELTS,DELVS,FMGAS,GSOLD,TTOPBL,ICALL,IDEST,
     4  (BNO(I),I=1,28)
      DO 286 I=1,140
      II = (I-1)*100+1
      III= II+99
      READ (11) (P(J),J=II,III)
  286 CONTINUE
      REWIND 11
      RETURN
  100 CONTINUE
      REWIND 8
      WRITE (8) M(1),HELT  ,HELP  ,HELW  ,SMCV  ,SMCA  ,SMNV  ,SMNA  ,
     1    SDMCC,SMLAS ,SMLUS ,SUMEX ,HELWS ,VGAS  ,GAVITY,ANGLE ,
     2    TGAS ,TLIQ  ,PR    ,PC    ,PN    ,FMG   ,FML,FMCO,FMNO,FMLO
     3  ,TS,TALL,DELTS,DELVS,FMGAS,GSOLD,TTOPBL,ICALL,IDEST,
     4  (BNO(I),I=1,28)
      DO 285 I=1,140
      II = (I-1)*100+1
      III= II+99
      WRITE (8) (P(J),J=II,III)
  285 CONTINUE
      END FILE 8
      REWIND 8
      WRITE (6,305)  M(1)
  305 FORMAT(21H1RUN CHOPPED AT TIME=   E16.8)
```


LOCKHEED
CALIFORNIA COMPANY

TABLE B-1 (CONTINUED)

```
PAUSE 4444                                          2266061
CALL EXIT                                           2266062
STOP                                                2266063
END                                                 2266064
```


LOCKHEED
CALIFORNIA COMPANY

TABLE B-1 (CONTINUED)

```
$IBFTC STRAT                                                            2266000
      SUBROUTINE STRAT                                                  2266001
C     AS OF 10/1/65                                                     2266002
C    IDEST(1)=1 IF THIS IS FIRST TIME CALLED SINCE STRATIFICATION HAS   2266003
C               BEEN DESTROYED IN LIQUID REGION                         2266004
C     IDEST(1)=0 OTHERWISE                                              2266005
      COMMON P(14000),TM(16),MAXT,MAXR,MAXC                             2266006
      COMMON /CONTR/  TLIQ,SCLIQ,TGAS,SCGAS,SCALL,TLSMAX,SCINT,TSGAS,   2266007
     1COMUN(5),DMCC,TLMAX,TALL,FMLO,GAVITY,FKC,FKL,ZC,DC,ZN,FMLU,FMLA,  2266008
     2          ZX,CPX,TLA,GAMMA,RHOL,PHOG,CPL,CPG,RLAM,MCNT,DN,FMC,FMN,R2266009
      COMMON /CPNET/NTYPE,TKRAD,TKLEN,TEMPZ,NRAD,NCIR,NSECT,NTNK,       2266010
     1 TKTHK(5),TKWAL1,TKWAL2,INODE,KOUT,                               2266011
     2          FMCO,FMNO,FMOLC,VGAS,IGC,IPRESS,FMOLN,FMIN,FMAX,DMIN,   2266012
     3          PMAX,FMOLX,TSAT,ANGLE,TX,PR,TANKV,                      2266013
     5          RADI(4),HELB(14),LLFLOW,HELT,HELP,HELW                  2266014
     6          ,ISTRAT,SAREA,IOPTSY(5),FMULTF(5),STRINP(20)            2266015
     7     ,GSOLD (2),TTOPBL(2),DLIQ,FLSURF,ICALL                       2266016
      COMMON /STR/  IDEST (1),RNO    (1),HBAR  (1),QBL   (1),YBAR  (1), 2266017
     1              TBOTBL(1),RNO    (1),RNOB  (1),W     (1),DELPT (1), 2266018
     2              Q      (1),VBL   (1),ABAR  (1),RHOBMX(1),RHOBMN(1),  2266019
     3              DELPB  (1),FR    (1),DPFG20(1),GNEW  (1),REYNO (1),  2266020
     4              SUMARS(1),DELPF (1),CAPAVG(1),TUPPER(1),CAPBL (1),  2266021
     5              CAPTLI(1),DELTLI(1),CUPPER(1),SQUAN (1),NCLAY       2266022
      DIMENSION      D      (1),CP    (1),FMUAVG(1),FK    (1),         2266023
     1RHOAVG(1),FMUSID(1),RHOSID(1),FMUBOT(1),RHOBOT(1),PNO   (1),     2266024
     2GNO   (1)                                                         2266025
      DIMENSION IPHASE(1),MINLNO(1),MAXLNO(1)                           2266026
      DIMENSION VS(250),FLA(500),NUMTAB(100),NEXW(125),NSEX(125),MM(125)2266027
      DIMENSION LNO   (250),NLNNS (125),NGNNS (125)                     2266028
      EQUIVALENCE (P(13251),VS),(P(13501),FLA)                          2266029
     1,(P(12526),NUMTAB),(P(12626),NEXW),(P(12751),NSEX),(P(12876),MM)  2266030
      EQUIVALENCE  (P(12276),LNO  ),(P(12151),NLNNS),(P(12026),NGNNS)   2266031
      EQUIVALENCE  (STRINP(1),EPSIVL),                                  2266032
     1 (STRINP(2),EPSIGN),(STRINP(3),FRTURB),(STRINP(4),FRLAM),         2266033
     2 (STRINP(5),FNLD)                                                 2266034
      EQUIVALENCE (FLT  ,FMULTF(1)),(FLKL  ,FMULTF(2))                  2266035
      REAL  LIN                                                         2266036
      REAL NGNNS                                                        2266037
      IF (KOUT.GE.1)  WRITE (6,9873)  TM(1)                             2266038
 10   NLD = FNLD+.1                                                     2266039
      F460 = 460.0                                                      2266040
      F3600 = 3600.0                                                    2266041
      TLIOF  = TLIO  -F460                                              2266042
      NCLAS = 0                                                         2266043
      ICALL = 0                                                         2266044
      SUMRES = 0.0                                                      2266045
      DO 11 I=1,1                                                       2266046
      SUMARS(I) = 0.0                                                   2266047
      MAXLNO(I) = 0                                                     2266048
      MINLNO(I) = NLD + 1                                               2266049
 11   TBOTBL(I) = 0.0                                                   2266050
      DO 113 I=1,1                                                      2266051
      IF (IDEST(I).EQ.0)  GO TO 113                                     2266052
      GSOLD(I) = 0.0                                                    2266053
      TTOPBL(I)= 0.0                                                    2266054
 113  CONTINUE                                                          2266055
      PIE = 3.1415927                                                   2266056
      TEN5 = 1.0E05                                                     2266057
      TEN11= 1.0E11                                                     2266058
      TEN20 = 1.0E20                                                    2266059
      DD = 1.8 * TKRAD                                                  2266060
```


LOCKHEED
CALIFORNIA COMPANY

TABLE B-1 (CONTINUED)

```
      TDIAM = 2.0*TKRAD                                                 2266061
      DELVOL = TANKV / FNLD                                             2266062
      ITR = 2*MAXT+MAXR                                                 2266063
      GGO = LIN(TM(1),NUMTAB(1))                                        2266064
      GO  = 32.2                                                        2266065
      GO3 = GGO*GO                                                      2266066
      NTEMPS = HFLB(12)+.1                                              2266067
C     DETERMINE MAX AND MIN LAYER OF LIQ. PHASE CONTAINING NODE(S)      2266068
      DO 15 J=1,NTEMPS                                                  2266069
      IF (LNO(J).EQ.0)  GO TO 15                                        2266070
      IF (LNO(J).GT.NLSURF)  GO TO 15                                   2266071
  111 MAXLNO(1) = MAX0(MAXLNO(1),LNO(J))                                2266072
      MINLNO(1) = MIN0(MINLNO(1),LNO(J))                                2266073
   15 CONTINUE                                                          2266074
      DO 17 I=1,1                                                       2266075
      BUF1 = 0.0                                                        2266076
      BUF2 = 0.0                                                        2266077
      DO 16 J=1,NTEMPS                                                  2266078
      IX4 = ITR + J                                                     2266079
      IF (LNO(J).EQ.0)  GO TO 16                                        2266080
      IF (LNO(J).NE.MINLNO(I)) GO TO 151                                2266081
      BUF1 = BUF1 + P(IX4)                                              2266082
      TBOTBL(I) = TBOTBL(I) + P(J)*P(IX4)                               2266083
      GO TO 16                                                          2266084
  151 IF (IDEST(I).EQ.0 . OR. LNO(J).NE.MAXLNO(I))  GO TO 15            2266085
      BUF2 = BUF2 + P(IX4)                                              2266086
      TTOPBL(I) = TTOPBL(I) + P(J)*P(IX4)                               2266087
   16 CONTINUE                                                          2266088
      TBOTBL(I) = TBOTBL(I)/BUF1                                        2266089
      IF(IDEST(I).NE.0)TTOPBL(I) = TTOPBL(I)/BUF2                       2266090
      NCLAY  = 1                                                        2266091
      DO 181 J=1,NTEMPS                                                 2266092
      IF (LNO(J).EQ.0)  GO TO 181                                       2266093
      IF (J.EQ.1)       GO TO 181                                       2266094
      JJ = J-1                                                          2266095
      JBUF = 1                                                          2266096
      DO 18 K=1,JJ                                                      2266097
      IF (LNO(K). EQ. LNO(J) )  JBUF = 0                                2266098
   18 CONTINUE                                                          2266099
      NCLAY  = NCLAY +JBUF                                              2266100
  181 CONTINUE                                                          2266101
   17 CONTINUE                                                          2266102
      NEXT = COMUN(4)+.1                                                2266103
      NLNODS = 0                                                        2266104
      DO 13 I=1,NEXT                                                    2266105
      NRES = MOD(NSEX(I),1000)                                          2266106
      NODE =(NSEX(I)-NRES)/1000                                         2266107
      NRES = 2*MAXT+NRES                                                2266108
      NODEC = NODE + ITR                                                2266109
      IF (P(NODEC).LT.0.0)  GO TO 13                                    2266110
      SUMARS(1) = SUMARS(1) + VS(NODE+1)/TKWAL1                         2266111
      BUF1 = P(NRES)                                                    2266112
      IF (BUF1.GE.TEN20)  BUF1 = BUF1/TEN20                             2266113
      SUMRES = SUMRES + BUF1                                            2266114
      NLNODS = NLNODS + 1                                               2266115
      NLNNS(NLNODS) = NODE                                              2266116
   13 CONTINUE                                                          2266117
      D(1) = DLIQ                                                       2266118
      BUF1 = TTOPBL(1) -F460                                            2266119
      STENS = LIN( . BUF1  ,NUMTAB(151)                                 2266120
   32 CP    (1) =    LIN(TLIQF ,NUMTAB(16) )                            2266121
```


LOCKHEED
CALIFORNIA COMPANY

TABLE B-1 (CONTINUED)

```
      FMUAVG(1) =     LIN(TLIQF ,NUMTAB(21) )
      FK     (1) =    LIN(TLIQF ,NUMTAB( 3) )      /F3600
      RHOAVG(1) =     LIN(TLIQF ,NUMTAB(14) )
      BUF1 = TTOPBL(1)-F460
      FMUSID(1) =     LIN(BUF1  ,NUMTAB(21) )
      RHOSID(1) =     LIN(BUF1  ,NUMTAB(14) )
      CALL NUMERS(CP(1),FMUAVG(1),FK(1),GO3,RHOAVG(1),RHOSID(1),D(1),
     1        FMUSID(1),STENS,TKRAD,PNO(1),GNO(1),RNO(1),BNO)
   50 IF (BNO.GE.1.0)  GO TO 60
      IDEST(1) = 1
      GO TO 9000
   60 BUF1 = TBOTBL(1) - F460
      RHOBOT(1) =    LIN(BUF1  ,NUMTAB(14))
      FMUBOT(1) =    LIN(BUF1  ,NUMTAB(21))
      CALL NUMERS(CP(1),FMUAVG(1),FK(1), GO3  ,RHOAVG(1),RHOBOT(1),DD,
     1                  FMUBOT(1),STENS,TKRAD,DUMX,DUMY,RNOB(1),DUMY)
   70 IF (RNO (1).GT.0.0 .AND. RNOB(1).LT.TEN5)  GO TO 280
      CALL RESET (TLIQ,1)
      GO TO 9000
  280 CONTINUE
      DO 7000 I = 1,1
      DELPT(I) = RHOAVG(I)* GGO * D(I)
      DO 282 J=1,NEXT
      NRES = MOD(NSEX(J),1000)
      NODE = (NSEX(J)-NRES)/1000
      NRES = NRES + 2*MAXT
      NODEC= NODE + ITR
      IF (P(NODEC).GT.0.0.AND.P(NRES).LT.TEN20)  P(NRES)=P(NRES)*TEN20
  282 CONTINUE
      IF (IDEST(I).EQ.0)  GO TO 300
  670 Q(I) =0.0
  672 DO 673 J=1,NLNODS
      JJ = NLNNS(J)
      IX2 = JJ + MAXT
      IX4 = JJ + ITR
  673 Q(I) = Q(I) + P(IX4) * (P(JJ)-P(IX2))
  680 IF (RNO(I).LE.TEN11) GO TO 682
C     TURBULENT
      YBAR(I) = 0.565 * PNO(I)**(-.53333)*(1.0 + .494*PNO(I)**.6667)**.1
     1      *  (GNO(I)/D(I)**3)**(-.1)* (.466* D(I))**.7
      GO TO 690
C     LAMINAR
  682 YBAR(I) = 3.93  * PNO(I)**(-.50)  * (.952 + PNO(I))**.25
     1      *  (GNO(I)/D(I)**3)**(-.25)*(.41 * D(I))**.25
  690 YBAR(I) = AMIN1(YBAR(I),TKRAD)
      IF (ANGLE.NE.0.0 .OR. NTYPE.NE.1)  GO TO 710
  700 VBL(I) = PIE*D(I) * ( TDIAM - YBAR(I)) * YBAR(I)
      GO TO 720
  710 VBL(I) = SUMARS(I) * YBAR(I) * (1.0-YBAR(I)/TKRAD)
  720 ABAR(I) = VBL(I)/D(I)
  730 TTOPBL(I) = TBOTBL(I) + Q(I)/(VBL(I)* RHOAVG(I) * CP(I))
      IPATH = 1
  732 BUF1 = TBOTBL(I)-F460
      BUF2 = TTOPBL(I)-F460
  742 RHOBMX(I) = LIN (BUF1,NUMTAB(14))
      RHOBMN(I) = LIN (BUF2,NUMTAB(14))
  760 GO TO (762,302),IPATH
  762 DELPB (I) = GGO * (RHOBMX(I)+ RHOBMN(I)) * D(I) / 2.0
  770 IF (RNO(I).GT.TEN11)  GO TO 790
  780 FR(I) = FRLAM
      GO TO 800
```


LOCKHEED
CALIFORNIA COMPANY

"REPRODUCIBILITY OF THE ORIGINAL PAGE IS POOR"

TABLE B-1 (CONTINUED)

```
  790  FR(I) = FRTURB                                                    2266183
  800  NTIMES = 0                                                        2266184
  801  DPFG20(I) = FR(I)* D(I) /(TDIAM * 2.0 *  GO    * RHOAVG(I) )      2266185
  810  GNEW  (I) = SQRT(ABS( (DELPB(I)-DELPT(I))/DPFG20(I)))            2266186
  820  IF((ABS((GNEW(I)-GSOLD(I))/GNEW(I))-EPSIGN).LE.0.0)  GO TO 880   2266187
  830  REYNO (I) =  TDIAM * GNEW(I) / FMUAVG(I)                         2266188
       IF(REYNO(I).LT.TEN5)  GO TO 860                                   2266189
  850  FR(I) = 1.820 / (ALOG10(REYNO(I))**2.58)                          2266190
       GO TO 870                                                         2266191
  860  FR(I) = 5.488 /(REYNO(I)**.5)                                     2266192
  870  GSOLD(I)= GNEW (I)                                                2266193
       IF (KOUT.GT.1)  WRITE (6,9872)                                    2266194
       NTIMES = NTIMES+1                                                 2266195
       IF (NTIMES.LE.100)  GO TO 801                                     2266196
       WRITE (6,9201) DPFG20(I),FR(I),D(I),TDIAM,GO,RHOAVG(I),GNEW(I),   2266197
      1               DELPB (I),DELPT(I),GSOLD(I),EPSIGN,REYNO(I),      2266198
      2               FMUAVG(I)                                         2266199
       CALL EXIT                                                         2266200
  880  GSOLD(I) = GNEW(I)                                                2266201
  300  IPATH = 2                                                         2266202
       GO TO 732                                                         2266203
  302  IF (ANGLE.NE.0.0 .OR. NTYPE.NE.1)  GO TO 308                      2266204
       ABAR(I) = PIE * YBAR(I) * (TDIAM - YBAR(I))                       2266205
       GO TO 310                                                         2266206
  308  ABAR(I)=SUMARS(I)* YBAR(I) * (1.0-YBAR(I)/TKRAD)/D(I)             2266207
  310  W(I) = ABAR(I)*GSOLD(I)                                           2266208
  320  REYNO(I) =  TDIAM    * GSOLD(I) / FMUAVG(I)                       2266209
       IF (REYNO(I).GE.TEN5)  GO TO 350                                  2266210
C      LAMINAR                                                           2266211
  340  FR(I) = 5.488/(REYNO(I)**.5)                                      2266212
       GO TO 360                                                         2266213
  350  FR(I) = 1.820/ (ALOG10(REYNO(I))**2.58)                           2266214
C360   DELPF(I) = FR(I)* D(I) * GSOLD(I)**2 /(2.0*TDIAM* GO *RHOAVG(I))  2266215
  360  CONTINUE                                                          2266216
  390  DELPB(I) = GGO * (RHOBMX(I)+RHOBMN(I) ) * D(I) / 2.0              2266217
  400  BUF1 = (DELPB(I)-DELPT(I)) /  DPFG20(I)                           2266218
       GNEW(I) = SQRT (ABS(BUF1))                                        2266219
       GSOLD(I) = GNEW(I)                                                2266220
  410  IF (RNO   (I).GT. TEN11)  GO TO 460                               2266221
C      LAMINAR                                                           2266222
  420  YBAR(I) = 3.93 *PNO(I)**(-.5)*((.952+PNO(I))**.25)*              2266223
      1         ((GNO(I)/(D(I) **3))**(-.25))*(.41*D(I) )**.25          2266224
  430  YBAR(I) = AMIN1(YBAR(I),TKRAD)                                    2266225
       IF (ANGLE.NE.0.0 .OR. NTYPE.NE.1)  GO TO 438                      2266226
       ABAR(I) = PIE * YBAR(I) * (TDIAM - YBAR(I))                       2266227
       GO TO 440                                                         2266228
  438  ABAR(I)=SUMARS(I)* YBAR(I) * (1.0-YBAR(I)/TKRAD) /D(I)            2266229
  440  W   (I) = GNEW(I) * ABAR(I)                                       2266230
  450  HBAR(I) = 2.6667 * FK(I) *((.41)**.25) /YBAR(I)                   2266231
       GO TO 500                                                         2266232
C      TURBULENT                                                         2266233
  460  YBAR(I) = .565 *(PNO(I)**(-.53333))*(1.+.494*(PNO(I)**.66667))**.12266234
      1          *  ((GNO(I)/ D(I)**3)**(-.1))*((.466*D(I) )**.70)      2266235
  470  IF (ANGLE.NE.0.0 .OR. NTYPE.NE.1)  GO TO 478                      2266236
       ABAR(I) = PIE * YBAR(I) * (TDIAM-YBAR(I))                         2266237
       GO TO 480                                                         2266238
  478  ABAR(I) = SUMARS(I) * YBAR(I) * (1.0-YBAR(I)/TKRAD) / D(I)        2266239
  480  W   (I) = GNEW(I) * ABAR(I)                                       2266240
  490  HBAR(I) = .0246 *(FK(I)/D(I) ) *(GNO(I)**.4)*(PNO(I)**.46667)*    2266241
      1         (1.0 + .494* PNO(I)**.66667 )**(-.4)                    2266242
  500  VBL(I) = D   (I)*ABAR(I)                                          2266243
```


LOCKHEED
CALIFORNIA COMPANY

TABLE B-1 (CONTINUED)

```
      IF (1.0/SUMRFS.GT.HBAR(I)*SUMARS(I) )  GO TO 7000
      BUF1 = 0.0
      BUF3 = 0.0
  502 DO 503 J=1,NLMODS
      JJ = NLNMS(J)+1
      IX4 =JJ + ITR
      BUF2 = VS(JJ)/TKWAL1 * (P(JJ)-P(JJ-1))
      P(JJ)   = P(JJ)  -HBAR(I)* BUF2 * TM(5)/ (P(IX4)*VBL(I)*RHOAVG(I))
  503 BUF1 = BUF1 + BUF2
      QBL(I) = BUF1 * HBAR(I)
      IF (QBL(I).LE.0.0)  GO TO 7000
  520 BUF1 = (TTOPBL(I)+TBOTBL(I))/2.0 - F460
  522 CAPAVG(I) = LIN(BUF1,NUMTAB(16))
  590 IF (IDEST(I).EQ.0)TTOPBL(I)=SQUAN(I)+QBL(I)*TM(5)/(VBL(I)*
     1                 RHOAVG(I)*CAPAVG(I) )
      TLMAX = TTOPBL(I)
  610 TUPPER(I) = 0.0
      BUF1 = 0.0
  612 DO 614 J=1,NTEMPS
      IF (LNO(J).EQ.0.OR.LNO(J).GT.MAXLNO(1))  GO TO 614
      IF (LNO(J).NE.MAXLNO(1))  GO TO 614
      IX4 = ITR + J
      BUF1 = BUF1 + P(IX4)
      TUPPER(I) = TUPPER(I) + P(J)*P(IX4)
  614 CONTINUE
      TUPPER(I) = TUPPER(I)/BUF1
      BUF1 = TTOPBL(I) - F460
      BUF3 = TUPPER(I) - F460
      RHOUP = LIN(BUF3,NUMTAB(14))
      HCUP  = LIN(BUF3,NUMTAB(16))
      SDELV = MAXLNO(1)-1
      SDELV = VLIQ -SDELV*DELVOL
      CUPPER(I) = (SDELV*RHOUP + W(I)*TM(5) )*HCUP
      TUPPER(I) = TUPPER(I)+W(I)*TM(5)*(TTOPBL(I)*LIN(BUF1,NUMTAB(16)) -
     1            TUPPER(I)*LIN(BUF3,NUMTAB(16)) ) /CUPPER(I)
      DO 626 J=1,NLD
      IF (J.GT.MAXLNO(1))  GO TO 626
      ICALL = 1
      JJ = MAXLNO(1) - J + 1
      BUF1 = TUPPER(I) - F460
      CAPBL (I) = LIN(BUF1,NUMTAB(16) )
      BUF1 = 0.0
      BUF3 = 0.0
      DO 622 K=1,NTEMPS
      IF (LNO(K).NE.JJ) GO TO 622
      IX4 = ITR + K
      BUF3 = BUF3 + P(IX4)
      BUF1 = BUF1 + P(K)*P(IX4)
  622 CONTINUE
      IF (BUF3.EQ.0.0)  SDELV = SDELV+DELVOL
      IF (BUF3.EQ.0.0)  GO TO 626
      NCLAS = NCLAS+1
      BUF1 = BUF1/BUF3
      BUF4 = BUF1 - F460
      CAPTLI(I) = LIN(BUF4,NUMTAB(16) )
      BUF2 = LIN(BUF4,NUMTAB(14))
      DELTLI(I) = W(I) * TM(5) * (TUPPER(I)*CAPBL(I)-BUF1*CAPTLI(I))
     1    / (SDELV*BUF2 )
      DO 624 K=1,NTEMPS
      IF (LNO(K).NE.JJ) GO TO 624
      SDELV = DELVOL
```


LOCKHEED
CALIFORNIA COMPANY

TABLE B-1 (CONTINUED)

```
      TUPPER(I) = PUF1                                                  2266305
      NGNNS(NCLAS) = TUPPER(I) + DELTLI(I)                              2266306
      P(K) = P(K) + DELTLI(I)                                           2266307
  624 CONTINUE                                                          2266308
      IF (KOUT.LE.1)  GO TO 626                                         2266309
      WRITE(6,9871)                                                     2266310
      WRITE (6,9876)  TUPPER,DELTLI                                     2266311
  626 CONTINUE                                                          2266312
 6998 IDEST (I) = 0                                                     2266313
      SQUAN(I) = TTOPBL(I)                                              2266314
 7000 CONTINUE                                                          2266315
 9000 CONTINUE                                                          2266316
      IF (KOUT.LE.1)  GO TO 9104                                        2266317
      WRITE (6,9875)                                                    2266318
      WRITE (6,9876) (D (I),I=1, 11),(DELPT(I),I=1,19),                 2266319
     1                GSOLD(1),TTOPBL(1),BNO                            2266320
      WRITE (6,9876) (HBAR(I),I=1,7)                                    2266321
 9871 FORMAT(24H0LAYER TEMPS DELTA TEMPS )                              2266322
 9872 FORMAT(18H0G ITER STRAT DEST)                                     2266323
 9873 FORMAT(22H0ENTERING STRAT THETA= F12.5)                           2266324
 9874 FORMAT(14H0LEAVING STRAT)                                         2266325
 9875 FORMAT(22H0D,CP,FMUAVG,FK,RHOAVG/32H FMUSID,RHOSID,FMUBOT,RHOBOT,P2266326
     1NO/21H GNO,DELPT,Q,VBL,ABAR/30H RHOBMX,RHOBMN,DELP3,FR,DPFG20/31H 2266327
     2GNEW,REYNO,SUMARS,DELPF,CAPAVG/34H TUPPER,CAPBL,CAPTLI,DELTLI,CUPP2266328
     3ER/17H GSOLD,TTOPBL,BNO/25H HBAR,QBL,YBAR,TBOTBL,RNO/7H RNOB,W)   2266329
 9876 FORMAT(1H0, 5E13.5)                                               2266330
 9104 IF (KOUT.GE.1)  WRITE (6,9374)                                    2266331
 9201 FORMAT(89H1G ITERATION IN SUBROUTINE STRAT HAS NOT CONVERGED AFTER2266332
     1 100 ITERATIONS.CURRENT VALUES OF /126H0DEL PF/G**2   FRICTION FAC2266333
     2TOR  FLUID DEPTH  TANK DIAMETER  GRAV.CONSTANT  RHO AVERAGE   NEW 2266334
     3G VALUE    DELTA PB      DELTA DT/X2E14.6/ 53H0 OLD G VALUE   TOLE2266335
     4RANCE   REYNOLDS NP.   MU AVERAGE/X4E14.6)                        2266336
      RETURN                                                            2266337
      END                                                               2266338
```


LOCKHEED
CALIFORNIA COMPANY

TABLE B-1 (CONTINUED)

```
$IBFTC NUMERS                                                           2266400
      SUBROUTINE NUMERS(CP,FMUAVG,FK,GGO,RHOAVG,RHOVAR,D,FMUVAR,ST,TKRAD2266401
     1                  ,PNO,GNO,RNO,BNO)                               2266402
C     COMPUTES THE FOLLOWING                                            2266403
C     PRANDTL  NUMBER                                                   2266404
C     GRASHOF  NUMBER                                                   2266405
C     RAYLEIGH NUMBER                                                   2266406
C     BOND     NUMBER                                                   2266407
      PNO = CP * FMUAVG/FK                                              2266408
      GNO = GGO *(RHOAVG-RHOVAR) * RHOVAR*D**3 / FMUVAR**2              2266409
      RNO = PNO * GNO                                                   2266410
      BNO   = RHOAVG * TKRAD**2 * GGO / ST                              2266411
      RETURN                                                            2266412
      END                                                               2266413
```


LOCKHEED
CALIFORNIA COMPANY