Nasa CR 65584

LIBRARY COPY

FEB 13 1967

MANNED SPACECRAFT CENTER
HOUSTON, TEXAS

10156	
(ACCESSION NUMBER)	(THRU)
193	1
(PAGES)	(CODE)
CR-65584	33
(NASA CR OR TMX OR AD NUMBER)	(CATEGORY)

FOREWORD

This report, entitled "Computer Program for the Calculation of Three-Dimensional Configuration Factors," LR 18905, was prepared by the Lockheed-California Company under NASA Contract NAS 9-3349. The Configuration Factor Program utilized under this contract was originally developed by Lockheed in 1963.

Other reports prepared under this contract are:

LR 18899	A Transient Heat Transfer and Thermodynamic Analysis of the Apollo Service Module Propulsion System - Final Report
LR 18900	A Transient Heat Transfer and Thermodynamic Analysis of the Apollo Service Module Propulsion System - Summary Report
LR 18901	An Introduction to Spacecraft Thermal Control
LR 18902	Thermal Analyzer Computer Program for the Solution of General Heat Transfer Problems
LR 18903	Thermal Analyzer Computer Program for the Solution of Fluid Storage and Pressurization Problems
LR 18904	Computer Program for the Calculation of Incident Orbital Radiant Heat Flux

This report was originally written as LR 16657 by Mr. E. R. Linneman of Lockheed's Thermodynamics Department, who developed the logic of the program. The programming was done by Mr. L. H. Michel of Lockheed's Computing Services Department. The present report was revised and updated by Messrs. H. R. Holmes, K. J. Kahn, and B. A. Nevelli, also of the Lockheed-California Company.

PRECEDING PAGE BLANK NOT FILMED.

TABLE OF CONTENTS

	Page
FOREWORD	i
LIST OF FIGURES	v
LIST OF TABLES	vii
SUMMARY	ix
I - INTRODUCTION	1-1
II - PROGRAM DESCRIPTION AND CAPABILITIES	2-1
LINK 1	2-1
LINK 2	2-2
III - PROBLEM SETUP	3-1
SURFACE PARTITIONING AND SELECTION OF VARIABLES	3-1
GRID SIZE	3-3
SIDE INDEX	3-4
SURFACE INPUT SPECIFICATION	3-5
BOUNDARY SURFACE INPUT SPECIFICATION	3-15
IV - PROGRAM INPUT	4-1
SURFACE BLOCK	4-1
Card #1	4-2
Card #2	4-2
Card #3	4-7
Terminal Card	4-7
BOUNDARY BLOCK	4-7
Card #1	4-7
Card #2	4-11
Terminal Card	4-11
CONTROL BLOCK	4-11
Grid Point Computation	4-11
Surface-to-Surface Shape Factors	4-15

TABLE OF CONTENTS (Continued)

	Page
Point-to-Surface Shape Factor	4-16
Interfering Surface Cards	4-17
Surface Area	4-17
End of Input	4-17
V - PROGRAM OUTPUT	5-1
SURFACE-TO-SURFACE SHAPE FACTORS	5-1
POINT-TO-SURFACE SHAPE FACTORS	5-2
VI - EXAMPLE PROBLEMS	6-1
EXAMPLE PROBLEM #1	6-1
Surface Input	6-1
Boundary Input	6-16
Computation Control	6-20
Discussion of Problem	6-22
EXAMPLE PROBLEM #2	6-33
Surface Input	6-33
Boundary Input	6-38
Computation Control	6-41
Discussion of Problem	6-42
EXAMPLE PROBLEM #3	6-57
Surface Input	6-59
Boundary Input	6-61
Computation Control	6-64
Discussion of Problem	6-65
APPENDIX A - DERIVATION OF SURFACE INPUT EQUATIONS	A-1
APPENDIX B - DERIVATION OF THE BASIC PROGRAM EQUATIONS	B-1
APPENDIX C - PROGRAM ARRANGEMENT AND LISTING	C-1

LIST OF FIGURES

Figure		Page
1-1	Standard Geometry	1-2
3-1	Surface Input - Plane	3-7
3-2	Surface Input - Sphere #1	3-8
3-3	Surface Input - Sphere #2	3-8
3-4	Surface Input - Right Circular Cylinder #1	3-9
3-5	Surface Input - Right Circular Cylinder #2	3-10
3-6	Surface Input - Quadric Cylinder	3-11
3-7	Surface Input - Quadric of Revolution	3-12
3-8	Surface Input - General Quadric	3-13
6-1	Example Problem #1 - Surface #1	6-3
6-2	Example Problem #1 - Surface #2	6-4
6-3	Example Problem #1 - Surface #3	6-6
6-4	Example Problem #1 - Surface #4	6-7
6-5	Example Problem #1 - Surface #5	6-9
6-6	Example Problem #1 - Surface #6	6-11
6-7	Example Problem #1 - Surface #7	6-12
6-8	Example Problem #1 - Surface #8	6-14
6-9	Example Problem #1 - Surface #9	6-15
6-10	Example Problem #1 - Surface #10	6-17
6-11	Example Problem #2	6-34
6-12	Example Problem #2 - Partitioned Cone	6-36
6-13	Example Problem #2 - Partitioned Sphere	6-37
6-14	Example Problem #2 - Cylinder	6-39
6-15	Example Problem #3	6-58
6-16	Example Problem #3 - Partitioned Sphere	6-63
C-1	FORTRAN IV Square Deck Setup for Radiation Configuration Factor Program	C-3
C-2	Simplified Flow Diagram	C-4

PRECEDING PAGE BLANK NOT FILMED.

LIST OF TABLES

Table		Page
3-1	Surface Input Specification	3-6
3-2	Boundary Surface Input Specification	3-16
4-1	Dimension Limits	4-1
4-2	General Surface Input Format	4-3
4-3	Sample Surface Inputs	4-4
4-4	General Boundary Input Format	4-8
4-5	Sample Boundary Inputs	4-9
4-6	Computation Input	4-12
4-7	Sample Computation Inputs	4-13
5-1	Surface Specification	5-3
5-2	Boundary Specification	5-4
5-3	Surface-to-Point Shape Factors	5-5
5-4	Point-to-Point Shape Factors	5-6
6-1	Example #1 Input	6-23
6-2	Output for Example #1	6-27
6-3	Example #2 Input	6-43
6-4	Output for Example #2	6-47
6-5	Summary of Example Problem #2	6-57
6-6	Example Problem #3 Input	6-66
6-7	Output for Example #3	6-71
6-8	Summary of Example Problem #3	6-81
C-1	Program Listing	C-5

PRECEDING PAGE BLANK NOT FILMED.

PRECEDING PAGE BLANK NOT FILMED.

SUMMARY

A computer program has been developed by the Lockheed-California Company for the computation of radiation configuration factors. The principal features of the program are:

1. It is designed to include the effects of interference by intermediate surfaces.
2. It will handle planes, spheres, ellipsoids, elliptic cones, elliptic paraboloids, elliptic cylinders, parabolic cylinders, hyperbolic cylinders, hyperboloids of one or two sheets, hyperbolic paraboloids, and cylinders composed of two parallel or two intersecting planes, in any combination as either surfaces or boundary surfaces.
3. It is also designed to offer a high degree of flexibility in the number of surfaces and boundaries, in the methods of specifying these surfaces in the program input, in the computations performed, and in the trade-off between computing time and accuracy.

The use of this program is described in detail and is illustrated by several example problems. The program is written as a FORTRAN IV overlay program for the IBM 7094, with modular subroutine construction with two links, which provides for the finest possible grid size consistent with core size and efficient program operation.

PRECEDING PAGE BLANK NOT FILMED.

LOCKHEED
CALIFORNIA COMPANY

I - INTRODUCTION

The computation of the radiation heat transfer between an area A_1 of surface S_1 and an area A_2 of surface S_2 requires a geometric configuration or shape factor, $F_{1,2}$. This shape factor is defined for the standard geometry Figure 1-1 by equation (1-1), below:

$$F_{1,2} = \frac{1}{\pi A_1} \int_{A_1} \int_{A_2} \frac{\cos \phi_1 \cos \phi_2}{S^2} \, dA_1 \, dA_2 \qquad (1\text{-}1)$$

The purpose of developing the present computer program is to allow computation of both point-to-surface and surface-to-surface shape factors, including the effects of shading by interfering surfaces.

By using modern digital computers, such as the IBM 7094, a numerical integration of equation (1-1) over the areas A_1 and A_2 can be obtained, provided that the surface equations, and therefore the integrand, are known. Given specified types of surface equations such as linear, quadric, trigonometric, exponential, etc., a program defining the integrand of equation (1-1) in terms of the surface equations can be written. For the Lockheed-California Company computer program, it was assumed that all surfaces would be quadric surfaces, that is, surfaces defined by equations of the form given by equation (1-2).

$$Ax^2 + By^2 + Cz^2 + Dxy + Exz + Fyz + Gx + Hy + Iz + J = 0 \qquad (1\text{-}2)$$

It was also assumed that all interfering surfaces would be quadric surfaces. This assumption gives eleven different surface types:

LOCKHEED
CALIFORNIA COMPANY

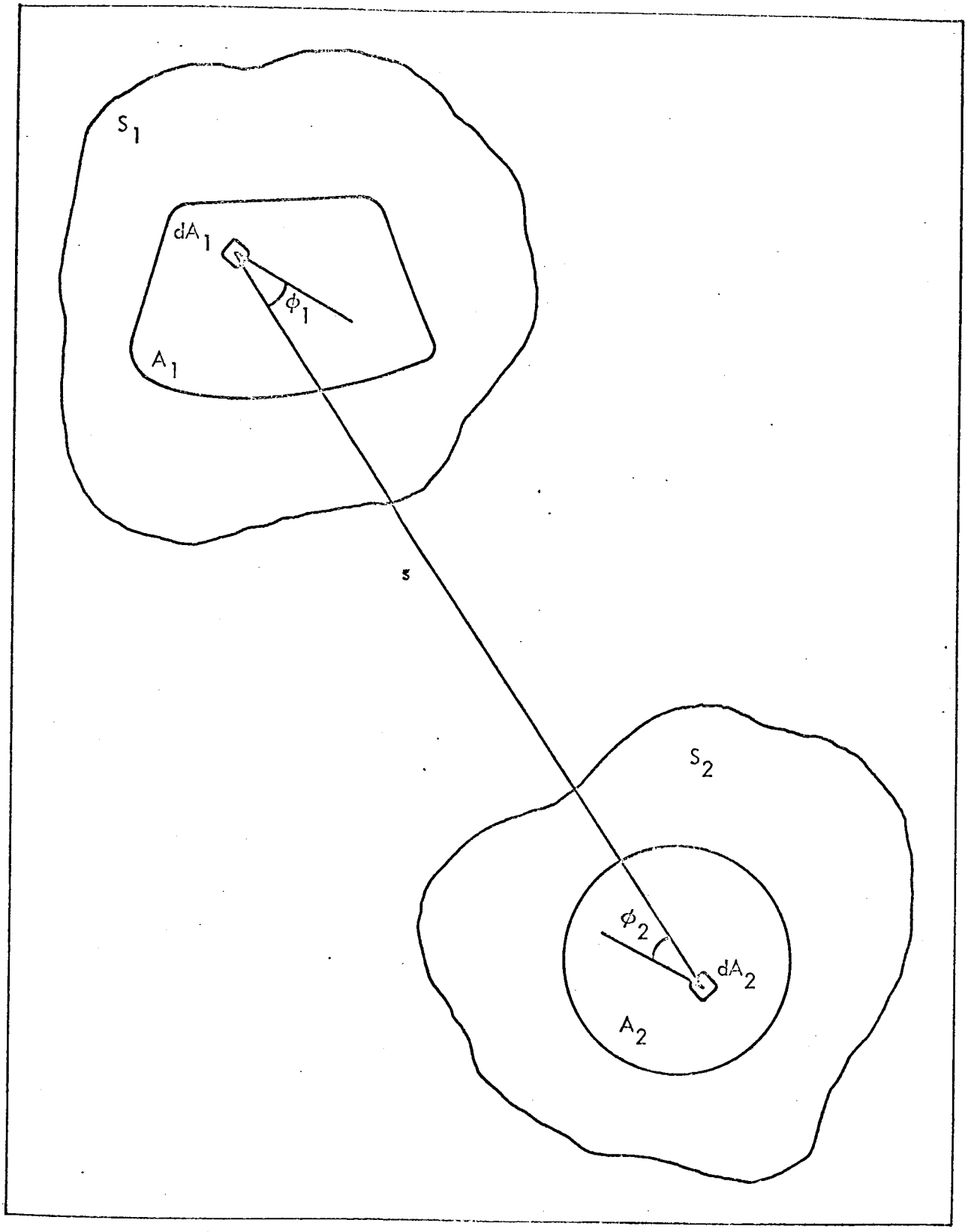

Figure 1-1. Standard Geometry

1. One plane
2. Two parallel or intersecting planes
3. Elliptic cylinders
4. Parabolic cylinders
5. Hyperbolic cylinders
6. Elliptic cones
7. Ellipsoids
8. Elliptic paraboloids
9. Hyperboloids of one sheet
10. Hyperboloids of two sheets
11. Hyperbolic paraboloids

Since a circle is a special case of an ellipse, the list includes spheres, right circular cones, and right circular cylinders, as well as the surfaces obtained by rotating ellipses, paraboloids or hyperboloids around an axis of the curve. Thus, 121 different pairs of distinct arbitrarily oriented surface types are available. Each of these surfaces can be given any boundary which can be defined by a series of segments, each of which is the intersection of the bounded surface with a quadric surface called the boundary surface.

Under these assumptions, the configuration factor program has been developed. The input routine will compute surface and boundary surface equations from a minimum of input data, thus facilitating the program input. The basic program is designed to solve equation (1-1) for the shape factor with or without interference, plus the areas of any given surface. A modification of this program permits the computation of an area weighting factor. This factor is defined as the percent of the total area of surface S_2 which is visible from an average point on surface S_1.

II - PROGRAM DESCRIPTION AND CAPABILITIES

The program is written as a FORTRAN IV overlay program for the IBM 7094, with modular subroutine construction with two links, which provides for the finest possible grid size consistent with core size and efficient program operation.

LINK 1

Link 1 consists of input and grid point computation routines, and routines to find the quadric equation where necessary. Because the input for a large number of surfaces necessarily involves something of a bookkeeping problem, diagnostic routines have also been included. Up to 100 surfaces can be handled in one run.

Inputs may take the form of coefficients of the quadric equation (1-2), a set of points over the surface, coefficients of the equation of a simpler surface such as a plane or sphere, or as points on a simpler surface. Every open primary surface must be bounded by a boundary surface which is defined in a similar fashion. Using these data, the input routine chooses the set of equations which match the input format of each surface and boundary surface, and solves these equations for the coefficients of the quadric equation of the surface. This procedure is described in Appendix A. These coefficients are stored on tape for future reference. With these equations, the program can solve equation (1-1) for the required shape factors.

The program computes a set of grid points on the surface, given the dependent and two independent coordinates. If two independent coordinates of a grid point on a surface are given, equation (1-2) reduces to a quadratic equation in the dependent coordinate of the grid point. For example, if the independent coordinates x_o and y_o of a grid point are given, the dependent coordinate z can be computed by solving equation (2-1).

$$Cz^2 + (Ex_o + Fy_o + I)\, z + (Ax_o^2 + By_o^2 + Dx_oy_o + Gx_o + Hy_o + J) = 0 \qquad (2\text{-}1)$$

Similar equations are used if x or y are the dependent variables. The program uses a standard grid pattern to obtain the independent coordinates of the grid points. The dependent coordinate, the minimum and maximum values of each independent coordinate, and the number of grid points in one direction must be specified in the input.

The coordinates of the surface grid points, along with the previously computed coefficients of the surface and boundary equations, are stored on tape. This tape may be reserved from one run to the next so that once computed, the surface points may be used any number of times without recomputation.

LINK 2

Link 2 performs the actual integration, selecting surfaces from the reserve tape as called for by the input. Not all surfaces on the tape need be used, but any surface for which a shape factor is requested must be on the tape.

Interference by any surface may be checked. If the surface named does in fact interfere, the shape factor will be modified accordingly. A major asset of the interference routine is that it requires only the equation of the interfering surface and its boundaries, thus reducing the core storage requirements.

For any pair of grid points, $P_1 = (x_1, y_1, z_1)$ on surface S_1 defined by the quadric equation $\theta_1(x, y, z) = 0$, and $P_2 = (x_2, y_2, z_2)$ on surface S_2 given by $\theta_2(x, y, z) = 0$, the integrand [equation (2-2)] of equation (1-1) can be computed.

$$\frac{\cos \phi_1 \cos \phi_2}{s^2} \quad dA_1\, dA_2 \qquad (2\text{-}2)$$

The detailed derivation of the computer solution is given in Appendix B. Briefly, the procedure is as follows:

The integrand is given a numerical value for each pair of grid points $P_1(x_1, y_1, z_1)$ on area A_1 of surface S_1, and $P_2(x_2, y_2, z_2)$ on area

LOCKHEED
CALIFORNIA COMPANY

A_2 of surface S_2. With this information, the program performs a numerical integration over the area A_2 and then over the area A_1. The area A_1 is computed by a numerical integration of the quantities iA_1 over the area A_1, and the shape factor is computed by equation (1-1). The program output gives the product of the area times the shape factor $(A_1F_{1,2})$, the area on surface $S_1(A_1)$, and the shape factor $(F_{1,2})$.

The computation of the effects of shading is accomplished by means of a subroutine which operates during the computation of the integrand of equation (1-1). Before finding the integrand for a pair of grid points P_1 on surface S_1 and P_2 on surface S_2, the subroutine finds the points in which the straight line through P_1 and P_2 intersects the shading surface. The points of intersection, if they exist, are then checked for location. If the line segment between P_1 and P_2 intersects the shading surface within its boundaries, the integrand is set equal to zero. If there are no points of intersection between P_1 and P_2 within the boundaries of the shading surface, the integrand is computed.

The machine time required to run this program depends largely upon the selected grid size and the number of interference surfaces. In general, the time for one shape factor computation ranges from 0.5 minutes to 2.0 minutes when run on the IBM 7094.

III - PROBLEM SET-UP

The basic program is designed to compute surface areas, surface-to-surface shape factors with or without shading, and point-to-surface shape factors with or without shading. Since the user may not have the equations of all surfaces and boundary surfaces, a routine has been provided to compute surface and boundary surface equations from a variety of input information. The program will automatically compute and print the equation of each surface and each boundary surface. All the surface area and shape factor computations, including the computation and storage of grid points for them, must be requested in the control section of the input.

The input for each quadric surface depends on how the surface is to be used. If the surface is to be used only as a shading surface and/or as the base of a point for the point-to-surface shape factor, surface and boundary equations, the side index, and the dependent variable are required. If the area of the surface is to be computed, or if the area is to be used in a shape factor computation, additional input is required. This includes a set of limits on the independent variables plus the number of grid points to be used so that a system of grid points can be defined on the surface.

The input for each problem is initiated by the selection of a general coordinate system. All equations, variables and other specifications are then referenced to these coordinates for the completion of that problem's input. A detailed description of these inputs follows.

SURFACE PARTITIONING AND SELECTION OF VARIABLES

For most practical engineering problems, the accuracy of the results depends largely on a technique called surface partitioning. Due to storage limitations, a single surface is divided into a finite grid size before numerical integration of equation (1-1) proceeds. This division is accomplished by a rectangular pattern of grid points projected onto the surface. Certain

LOCKHEED
CALIFORNIA COMPANY

surface orientations may therefore give distorted grids which may adversely affect the accuracy of the integration. To eliminate this problem, the user merely divides or partitions each surface into individual smaller surfaces which are then treated as separate cases by the program.

There are two fundamental reasons for surface partitioning. The first of these involves the selection of surface variables. For each surface input the user must specify the dependent variable. The dependent variable is defined as that axis of a selected fundamental coordinate system which is to be used in projecting a grid pattern on the surface in question. The two independent variables then define a plane in which the actual grid is constructed. Best accuracy therefore is obtained when this plane is most nearly parallel to the surface used. When closed or semi-closed surfaces are involved, no single axis of the chosed coordinate system will be close to perpendicular to the surface at all points and therefore serve as proper choice of the dependent variable. It is essential in these cases that the surface be partitioned - the extent of which depends on the time allotted for the solution. The angle between the dependent variable axis and any surface element must never be zero, nor should it be close to zero. If the angle is close to zero, erroneous shape factors may result.

The second purpose of partitioning is to allow finer grid patterns to be constructed. As the distance between adjacent grid points on any surface approaches the distance between the surfaces, computational accuracy drops considerably. Due to storage limitations, this is alleviated only by surface subdivision which reduces proportionally the grid point separation.

Once it has been decided what partitioning is required on a surface, boundary surfaces must be found which will subdivide the surface as selected. These are usually planes, or sets of planes, but may be any quadric surface. Examples of partitioning a cylinder and a pair of intersecting planes show typically how this is accomplished. Cylinders are divided by at least two planes, mutually perpendicular and intersecting along the axis of the cylinder. These are situated so that the chosen dependent variables intersect the resulting quadrants at their centerlines. Thus nowhere is the surface at an angle greater than 45° to the dependent variable. Two intersecting planes are partitioned for a different reason. For points on one plane near the

intersection line, distances to many grid points on the opposite plane will usually be small compared with grid point separations. This can only be eliminated by partitioning each plane into reasonably small rectangles — thereby reducing grid separations. Additional and more complete explanations of partitioning are included in Section VI, Example Problems.

Following this partitioning, the dependent variable to be used with each subsurface is identified with that surface. The third task involves the independent variables. For each of these variables the maximum and minimum values obtained on the surface are included in the input. These values define a rectangle in the plane of the independent variables bounded by their respective maximums and minimums. The program divides this rectangle into $(GS)^2$ equal subrectangles, where GS, the number of grid points, is specified as described below. The centers of the rectangles are then projected onto the surface, and those which fall on it are included in the integration over the surface.

The necessity for surface partitioning in most engineering applications cannot be overemphasized. If unreasonable results are obtained for a shape factor, surface partitioning is either incorrect or insufficient in nearly all cases.

GRID SIZE

Each surface that requires an integration also requires an input to describe the size of grid to be projected onto it. This input is termed the grid size (abbreviated GS), and is equivalent to the number of subdivisions between the maximum and minimum values of each independent variable. The maximum allowable value of GS is determined solely by computer storage requirements. It may have either of two maximum values, depending on the type of surface. For example, two grid points (one on top and one on the bottom) will be computed for a sphere, while only one grid point will be computed on a plane for each set of independent coordinates. An elliptic paraboloid, a hyperbolic paraboloid, or a parabolic cylinder may be oriented so that the axes of the parabolic cross-sections (in the case of the cylinder, the cross-sections perpendicular to the elements) are parallel to a coordinate axis. If so, these surfaces will only have one grid point per set of independent coordinates and

a maximum GS of 28 may be used. For all other curved surfaces or surfaces consisting of two planes, a maximum GS of 20 is used.

For many cases, such as a view factor to a simply shaped surface at a distance from the source, a GS less than the maximum should be used to save computer time. The maximum error is minimized however when the maximum allowable GS is used.

Note that computer time for the shape factor computation varies as the product $\left[GS(1) \times GS(2)\right]^2$, where GS(1) is the value of GS on the first surface and GS(2) is the value of GS on the second surface. Thus doubling GS on both surfaces increases computer time by a factor of 16. See example problem no. 3 for a specific comparison of grid size, accuracy, and computer time.

SIDE INDEX

The Side Index is an input flag which specifies the required side of any surface in question. The two sides of a surface are defined as positive and negative, the positive side being that one which faces a predetermined reference point for that surface.

The reference point method of side identification is based on the fact that no quadric surface can contain all of the points:

1. (0, 0, 0)	6. (0, -1, 0)
2. (1, 0, 0)	7. (0, 0, -1)
3. (0, 1, 0)	8. (1, 1, 0)
4. (0, 0, 1)	9. (1, 0, 1)
5. (-1, 0, 0)	10. (0, 1, 1)

For each surface, the program tests these points in order. The first of these points which does not lie on the surface is defined as the surface reference point. The positive side of a surface (side index 1.0) is defined as that side which faces the reference point while the other side is called the negative side (side index -1.0). In order to input the required side index (+1.0 or -1.0), the user must independently determine the surface reference point.

SURFACE INPUT SPECIFICATION

This program is based on the assumption that each surface and boundary can be described by equation (3-1).

$$Ax^2 + By^2 + Cz^2 + Dxy + Exz + Fyz + Gx + Hy + Iz + J = 0 \qquad (3\text{-}1)$$

Each surface is identified with equation (3-1) by any one of ten methods or formats, designated by separate input flags. The ten surface input specifications, the required data, and the surfaces which can be described by each format are summarized in Table 3-1. The data required for each of the formats, Flags 0 through 7, are illustrated in Figures 3-1 through 3-8. The points labeled P represent points which will define a unique surface, while the points labeled Q represent an improper choice of points which will fail to define a unique quadric surface.

If the user has or can readily obtain the equation of the surface, the easiest and most accurate way to describe a surface is to use input Flag -1 and give the ten coefficients A through J of the equation. This is the most common way to describe any surface, and should be used in most cases.

If the equation is not easily obtainable or if a non-quadric surface must be approximated by a series of quadric surfaces, the input will depend on the type of surface and the information available to the program user. Eight different input formats are available with special ones for planes, spheres, cylinders and quadrics of revolution, as well as a general method which will handle any surface except a plane. In general, the lower numbered flags are least likely to result in errors (excepting Flag 8).

The first special format (Flag 0) is the only way, other than by the equation, to input a plane. This format requires three points on the plane which are not on a straight line.

There are two special formats for the sphere. The first (Flag 1) requires the coordinates of the center and the length of the radius. The second (Flag 2) requires the coordinates of four points on the sphere which are not all in the same plane.

LOCKHEED
CALIFORNIA COMPANY

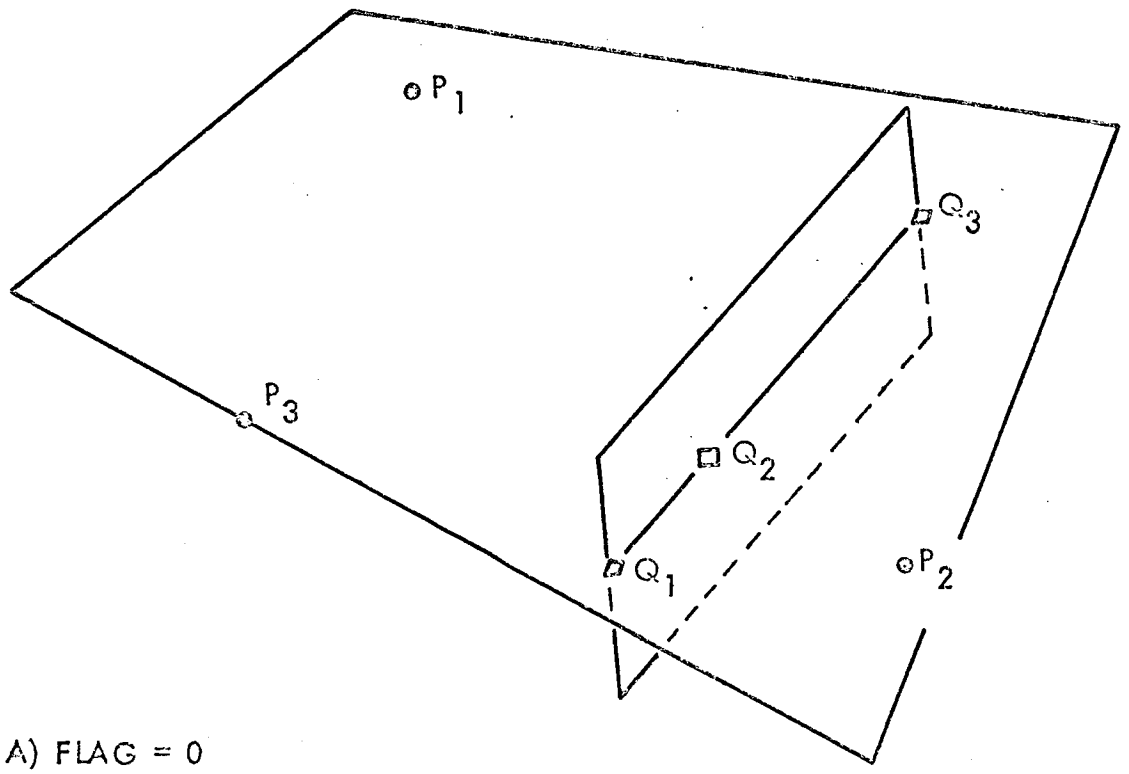

A) FLAG = 0

PLANE: ANY 3 NON-COLINEAR SURFACE POINTS

P_1, P_2, P_3 - WILL DEFINE SURFACE

Q_1, Q_2, Q_3 - WILL NOT DEFINE SURFACE

Figure 3-1. Surface Input - Plane

LOCKHEED
CALIFORNIA COMPANY

TABLE 3-1

SURFACE INPUT SPECIFICATION

Flag	Surface Description	Required Input Data
-1	Quadric surface	The 10 coefficients of the surface equation
0	Plane (Fig. 3-1)	3 non-colinear surface points (P_i, i = 1,2,3)
1	Sphere (Fig. 3-2)	Center (P_k) and radius (R)
2	Sphere (Fig. 3-3)	4 non-coplanar surface points (P_i, i = 1, ..., 4)
3	Right circular cylinder (Fig. 3-4)	2 axis points (P_1 and P_2) plus radius (R)
4	Right circular cylinder (Fig. 3-5)	Direction numbers (l:m:n) of an element plus 3 points (P_i, i = 1,2,3), each on a different element
5	Quadric cylinder (Fig. 3-6)	Direction numbers (l:m:n) of an element plus 5 points (P_i, i = 1, ..., 5), each on a different element
6	Quadric of revolution (Fig. 3-7)	2 axis points (P_0 & P_4) plus 3 surface points (P_i, i = 1,2,3), each on a different cross-section perpendicular to the axis
7	General quadric surface (Fig. 3-8)	9 spaced surface points (P_i, i = 1, ..., 9)
8	Different side or section of preceding surface	Surface number of the preceding surface. The program will use the equation of the indicated surface.

LOCKHEED
CALIFORNIA COMPANY

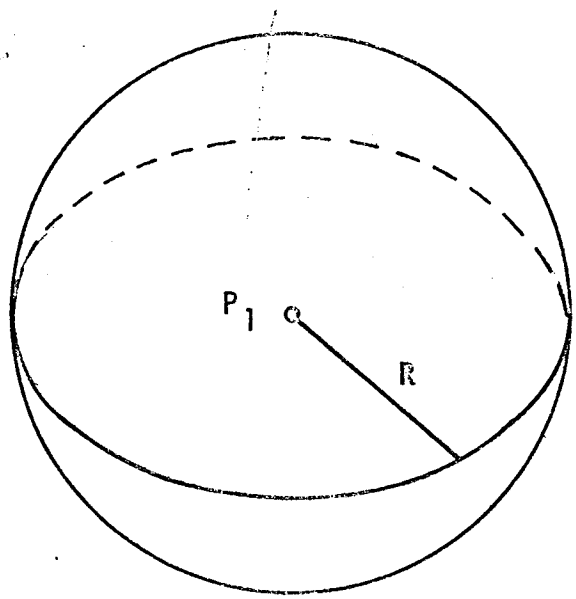

B) FLAG = 1

SPHERE: CENTER P_1 AND RADIUS R

Figure 3-2. Surface Input - Sphere #1

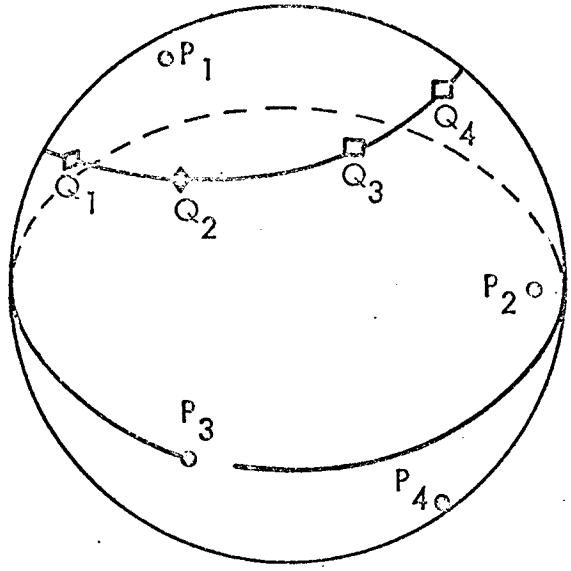

C) FLAG = 2

SPHERE: ANY 4 NON-COPLANAR SURFACE POINTS

P_1 - P_4 WILL DEFINE THE SPHERE

Q_1 - Q_4 WILL NOT DEFINE THE SPHERE

Figure 3-3. Surface Input - Sphere #2

LOCKHEED
CALIFORNIA COMPANY

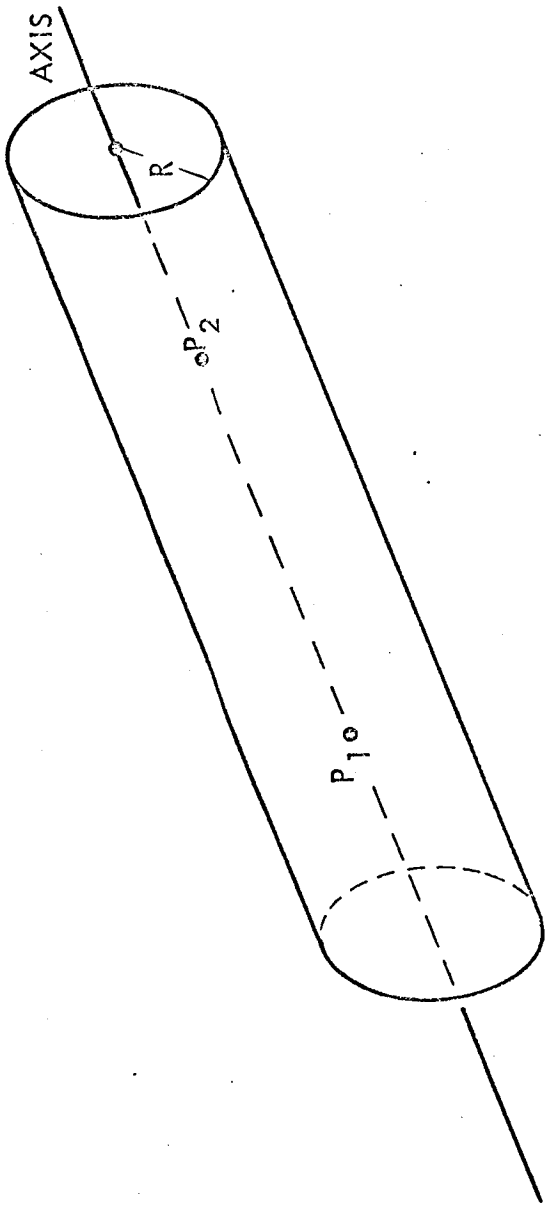

D) FLAG = 3
RIGHT CIRCULAR CYLINDER: 2 AXIS POINTS (P_1, P_2) AND THE RADIUS

Figure 3-4. Surface Input - Right Circular Cylinder #1

LOCKHEED
CALIFORNIA COMPANY

NOTE THAT ALL ELEMENTS ARE PARALLEL, HENCE WILL HAVE THE SAME DIRECTION NUMBERS

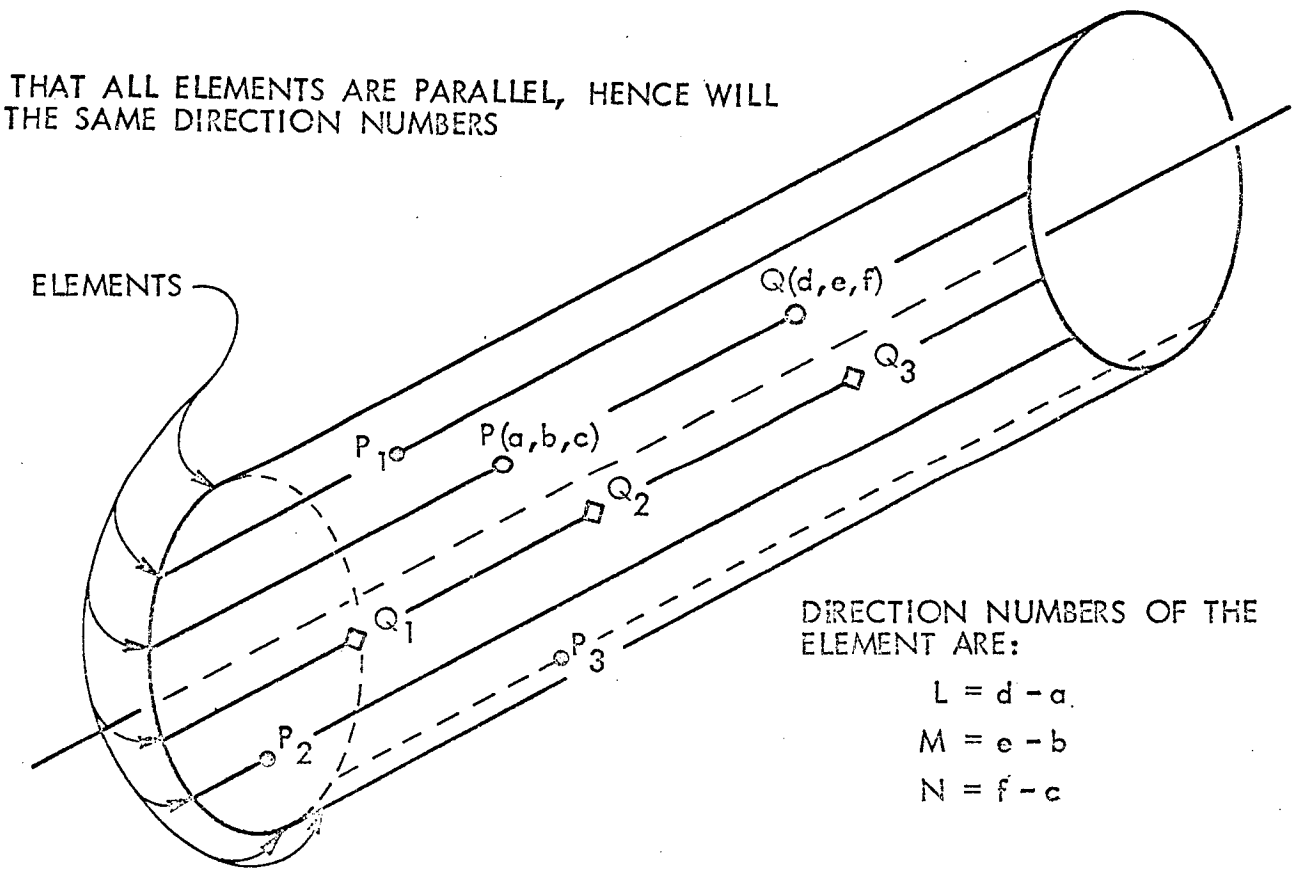

DIRECTION NUMBERS OF THE ELEMENT ARE:

$L = d - a$

$M = e - b$

$N = f - c$

E) FLAG = 4

RIGHT CIRCULAR CYLINDER: DIRECTION NUMBERS OF AN ELEMENT PLUS 3 POINTS EACH ON A DIFFERENT ELEMENT

L, M, N + P_1, P_2, P_3 WILL DEFINE THE SURFACE

L, M, N + Q_1, Q_2, Q_3 WILL NOT DEFINE THE SURFACE

Figure 3-5. Surface Input - Right Circular Cylinder #2

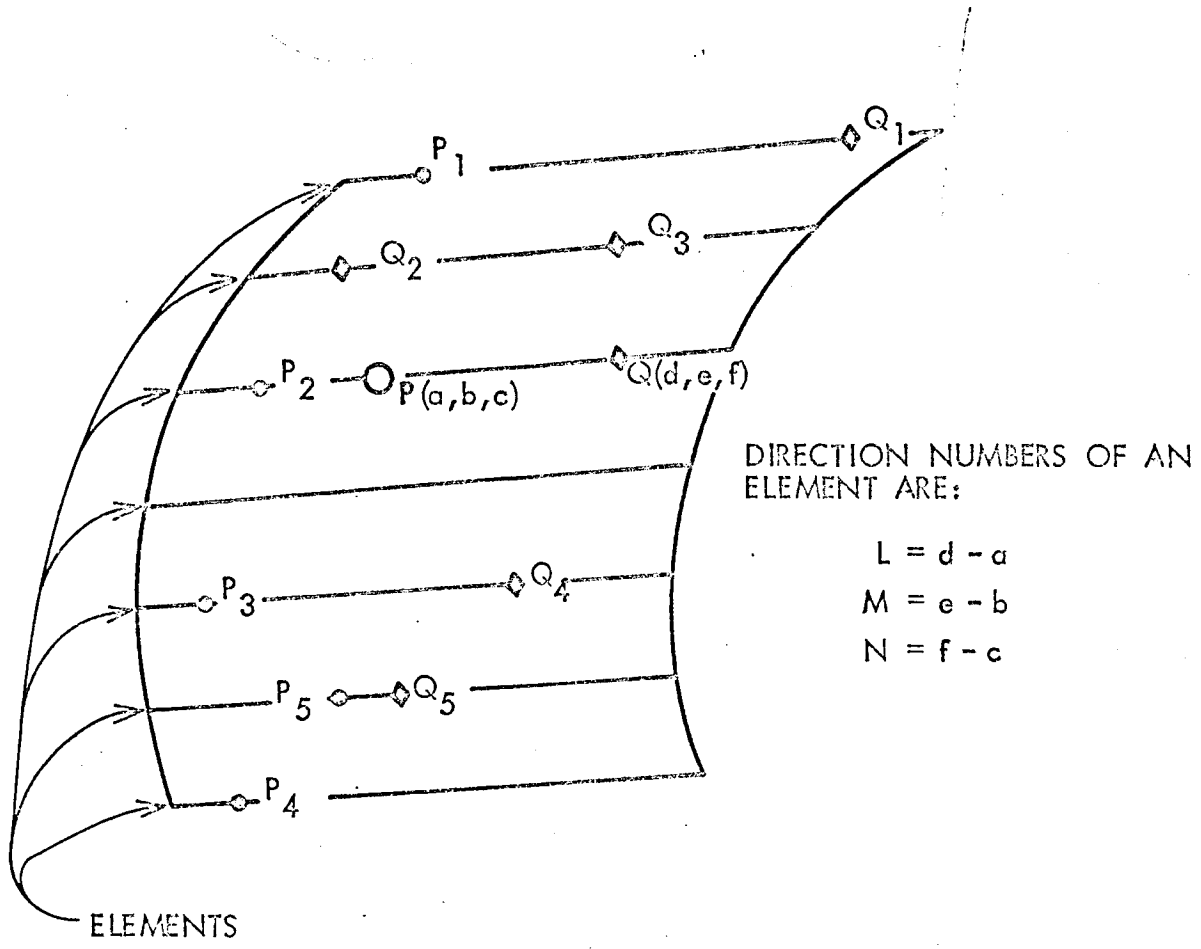

DIRECTION NUMBERS OF AN ELEMENT ARE:

$L = d - a$

$M = e - b$

$N = f - c$

F) FLAG = 5

QUADRIC CYLINDER: DIRECTION NUMBERS OF AN ELEMENT PLUS 5 SURFACE POINTS EACH ON A DIFFERENT ELEMENT

$L, M, N + P_1 - P_5$ WILL DEFINE THE SURFACE

$L, M, N + Q_1 - Q_5$ WILL NOT DEFINE THE SURFACE

Figure 3-6. Surface Input - Quadric Cylinder

LOCKHEED
CALIFORNIA COMPANY

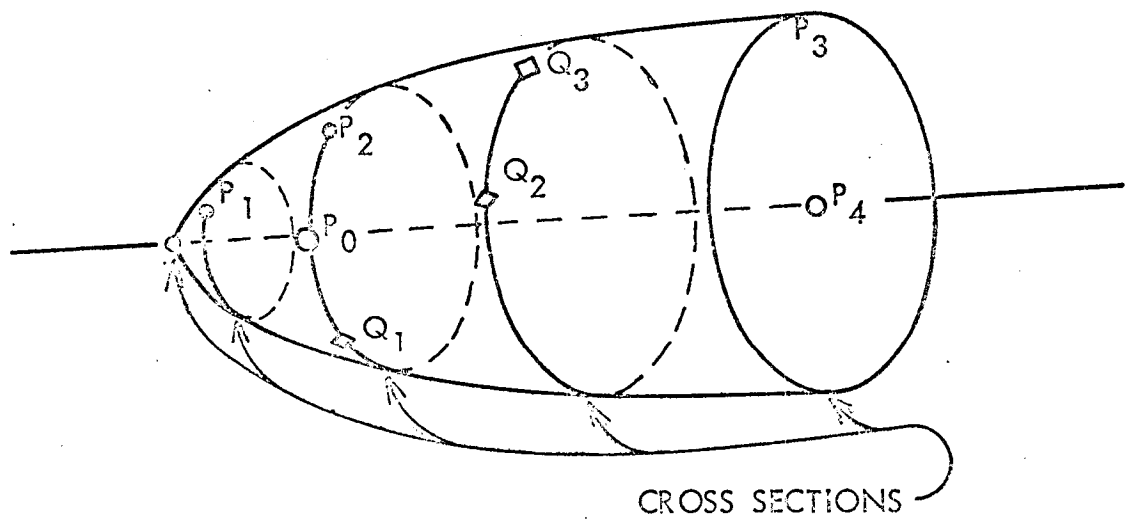

G) FLAG = 6

QUADRIC OF REVOLUTION: 2 AXIS POINTS (P_0, P_4) AND 3 SURFACE POINTS EACH ON A DIFFERENT CROSS SECTION

P_0, P_4 + P_1, P_2, P_3 WILL DEFINE THE SURFACE

P_0, P_4 + Q_1, Q_2, Q_3 WILL NOT DEFINE THE SURFACE

NOTE: FOR A QUADRIC OF REVOLUTION WITH A VERTEX V, P_0 and P_1 CAN BOTH BE SET EQUAL TO V.

Figure 3-7. Surface Input - Quadric of Revolution

LOCKHEED
CALIFORNIA COMPANY

NOTE: THAT ANY NUMBER OF QUADRIC SURFACES MAY BE PASSED THROUGH $Q_1 - Q_9$ AS FOR EXAMPLE THE TWO PLANES, OR THE ELLIPSOID.

POINTS $P_1 - P_9$ CHOSEN IN A RANDOM MANNER AS INDICATED SHOULD DEFINE THE SURFACE.

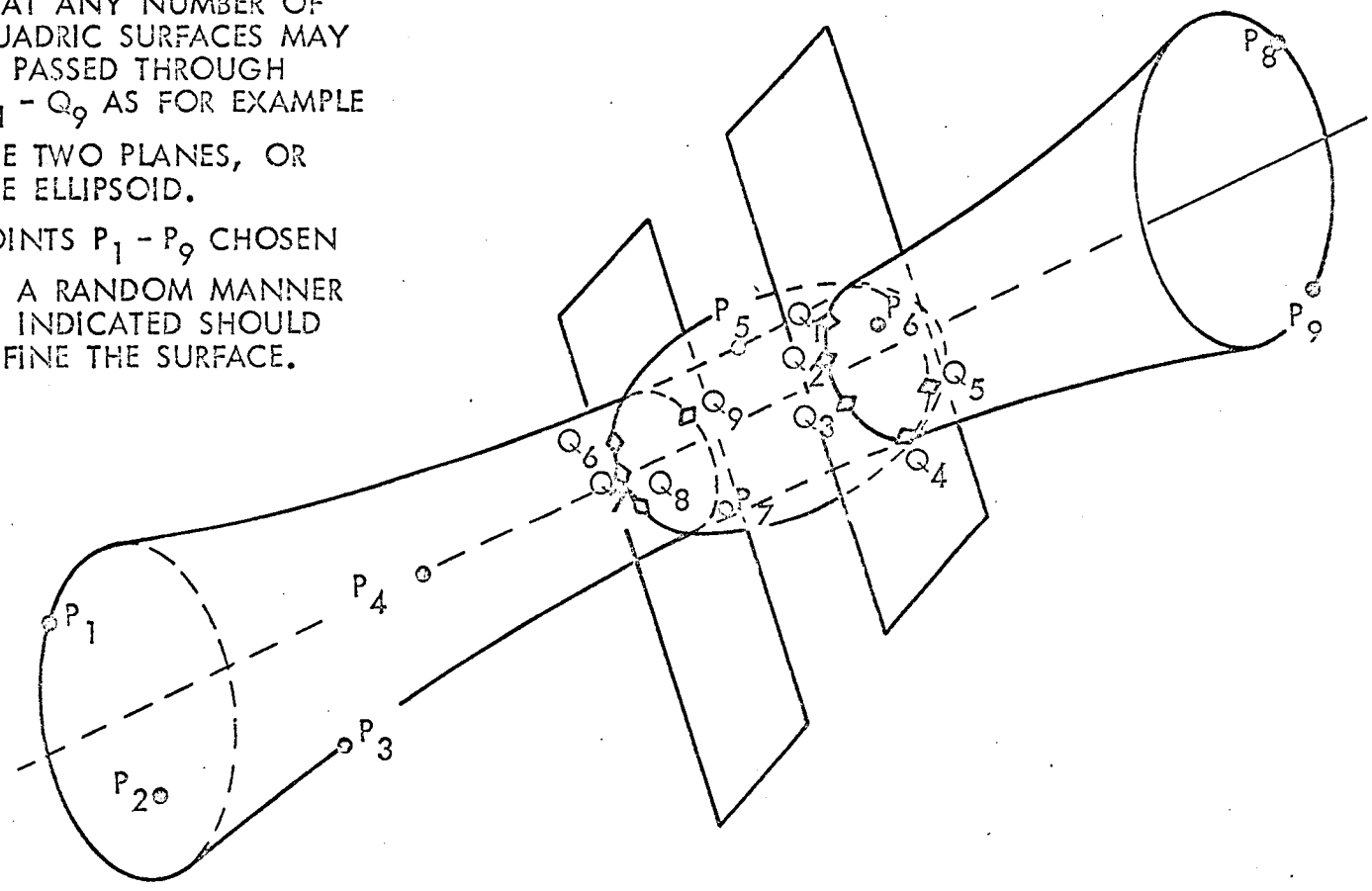

H) FLAG = 7

QUADRIC SURFACE (NOT A PLANE): ANY NINE SURFACE POINTS WHICH DO NOT LIE ON ANY OTHER QUADRIC SURFACE.

Figure 3-8. Surface Input - General Quadric

The program includes three formats for quadric cylinders. The first two are for right circular cylinders only. The first (Flag 3) requires two points on the axis of the cylinder plus the radius, while the second (Flag 4) requires the direction numbers of an element of the cylinder plus three surface points, no two of which are on the same element. The third cylinder input (Flag 5) is for any arbitrary quadric cylinder. It requires the direction numbers of an element plus five surface points, no two of which are on the same element. In general, any cylinder can be defined as the collection of all the parallel straight lines satisfying some specified condition. Using this definition of a cylinder, an element of the cylinder will mean any of these straight lines. The direction numbers (l; m; n) of an element can be obtained by taking any two points $P(x_1, y_1, z_1)$ and $Q(x_2, y_2, z_2)$ on the same element, then $l = x_2 - x_1$, $m = y_2 - y_1$, and $n = z_2 - z_1$.

The last of the special input formats (Flag 6) is for a quadric of revolution other than a plane. This includes spheres, right circular cones, cylinders, ellipsoids, paraboloids, and hyperboloids of revolution. The required input is two axis points and three points on the surface with no two of the surface points on the same cross section perpendicular to the axis. Note that in the special case where the conic crosses the axis (i.e. all but the cylinders and hyperboloids of 1 sheet), the vertices may be used as surface points. Hence, the vertices can be used as both axis and a surface points for these surfaces.

The general quadric input (Flag 7) requires nine surface points. These points must be so located that there will be only one quadric surface which contains them. The best way of achieving this is to choose points which are uniformly distributed over the area of interest. It is essential that no more than five points lie in any one plane (a maximum of four is preferable whenever possible). Unless the surface consists of two parallel or intersecting planes, the points must not all lie in two planes. Since it is possible to choose points which do not define a unique quadric equation, the special input formats should be used whenever possible.

In addition to these surface input formats, there is an input format (Flag 8) which will duplicate a preceding surface equation in case a different area, side, or dependent variable is required on a quadric surface. For

example, to use a different hemisphere of a sphere, or the opposite side of a plane, a new surface must be defined and indexed. However, since the surface equation will be the same in both cases, it is more convenient and economical to duplicate the equation of the original surface than to recompute it. This input (Flag 8) requires only the surface number of the surface whose equation is to be duplicated.

In any case where the machine must compute a surface equation, the nature of the digital solution with its restriction to eight significant figures will limit the accuracy of the equation. In particular, coefficients which should be zero may be given a finite value. If the chosen points do not define a unique quadric surface, the program should compute all zero coefficients and write out "Surface (S) is not defined." However, with digital computation of the determinants one or more of these could yield non-zero coefficients. These coefficients would define the equation of a false surface. To counteract this possibility, each equation which is computed from surface points (input Flags 0, 2, 4, 5, 6, and 7) is sent through a test routine which evaluates the equation at each of the surface points. These values are printed out below the surface reference point q in the order in which the surface points appear in the input. If any one of these values exceeds 0.1, the surface is rejected. Since this is not a flexible test, the user should compare these values with the coefficients of the equation and reject any equation for which one or more of these values approaches the order of magnitude of the average coefficient.

BOUNDARY SURFACE INPUT SPECIFICATION

All boundaries are defined by the intersection of the quadric surface with a quadric boundary surface. The input for a boundary surface will therefore resemble the input for a surface. A boundary surface can be defined in eight ways, as summarized in Table 3-2.

The first (Flag -1) is to use any of the surfaces listed in the surface input as a boundary surface. The required input is the surface number. This gives an easily defined boundary if two surfaces intersect.

LOCKHEED
CALIFORNIA COMPANY

TABLE 3-2

BOUNDARY SURFACE INPUT SPECIFICATION

Flag	Surface	Boundary Surface	Required Input Data
-1	Quadric	Any listed surface	The number (s) of the surface, S(s) whose equation is to be duplicated.
0	Plane	Plane	2 boundary points (P_0 & P_1)
1	Quadric	Plane	3 non-colinear boundary points (P_i, i = 1,2,3)
2	Quadric	Right circular cylinder	2 axis points (P_1 & P_2) plus the radius (R)
3	Quadric	Right circular cylinder	3 boundary points (P_i, i = 1,2,3) plus direction numbers (l:m:n) of an element
4	Quadric	Quadric cylinder	5 boundary points (P_i, i = 1, ..., 5) plus direction numbers (l:m:n) of an element
5	Quadric	Quadric	10 coefficients of the boundary surface
6	Quadric	Quadric	Bounded surface and boundary surface numbers of previously defined boundary surface.

The second case (Flag 0) is for a straight line boundary on a plane. The required input is two points on the boundary. With this information, the program computes the equation of a plane through the two points which is perpendicular to the given plane.

The third form of input (Flag 1) gives a plane boundary surface through any three given non-colinear points. This input requires the coordinates of these three points.

The next three formats are for cylindrical boundary surfaces. The input for each of these is exactly the same as for the cylindrical working surface. For an arbitrary cylinder (Flag 4), the direction numbers of an element plus five boundary points are required, while for a right circular cylinder, either two axis points and the radius (Flag 2) or three boundary points and the direction numbers of an element (Flag 3) are required.

The seventh input (Flag 5) accepts the 10 coefficients of the equation of the boundary surface directly. The last (Flag 6) permits the duplication of a previous boundary surface, from the number of the surface bounded by the previous boundary surface and the number of the boundary on this surface. Note that input Flag -1 duplicates only the surfaces listed in the surface input section, while input Flag 6 duplicates boundary equations. With these two input formats any previously defined surface or boundary surface may be duplicated.

IV - PROGRAM INPUT

This program has a maximum allowable number of surfaces, of boundaries per surface, of grid points per surface, and of interfering surfaces. These dimension limits are shown in Table 4-1.

TABLE 4-1

DIMENSION LIMITS

Quantity	Dimension
Number of quadric surfaces	100
Number of boundaries per surface	6
GS	20
GS for a plane	28
Interfering surfaces	any 10 of the quadric surfaces

The input for the program is divided into three blocks, the surface block, the boundary block, and the control block.

SURFACE BLOCK

The surface input block requires from two to six cards for each surface. Each card has room for seven fields of data, each with ten columns. All fixed point data (integers with no decimal point given) such as surface numbers and flags are input on the right side of the field, while all floating point numbers (data containing a decimal point, which may appear in any of the ten columns) such as the side index, the limits on the variables, or the

LOCKHEED
CALIFORNIA COMPANY

surface points are input on the left of the field. Table 4-2 shows the general input format for a surface, while Table 4-3 gives the required input for each of the 10 surface input specifications.

Card #1

The first card contains five pieces of information, all in fixed point notation. The first is the input format index, which in fixed point notation, occupies the right side of the first field, columns 1 to 10. The second bit of information is the surface number, a fixed point number, in columns 11 to 20. The flag (1 for x, 2 for y, or 3 for z) for the dependent variable occupies the right side of columns 21 to 30. Columns 31 to 40 are to be used to specify the number of boundaries which are to be given for a surface in the boundary input block. If this surface is to have the same equation as a preceding surface (i.e. if the input format flag is 8), then columns 41 to 50 will give the number of the surface whose equation is to be duplicated. Otherwise this space will contain a zero.

Card #2

The second card contains six items of information, all of which are in floating point form and are therefore at the left side of their respective fields. In order, the first is the side index from column 1 to 10. The second and third are, respectively, the minimum and the maximum values of the first independent variable assuming the variables are given in the order x, y, and z. The minimum value occupies the columns 11 to 20, while the maximum value is in columns 21 to 30. Columns 31 to 40 and 41 to 50 will give the minimum and maximum values of the second independent variable. Note that if these values occur out of order, the computation of any shape factor involving this surface may be incorrect, provided the machine will compute it. The last information on this card is the number GS in columns 51 to 60. If the engineer is interested only in computing the surface equation, the last five fields, columns 11 to 60, may be left blank. An example of this would be a surface which is to be used only as an interfering surface.

TABLE 4-2

GENERAL SURFACE INPUT FORMAT

SEQ.									ID
77 80	1 5 10	15 20	25 30	35 40	45 50	55 60	65 70	72	73 76
1st Card	S F FLAG OR INDEX FOR SURFACE INPUT	S SURFACE NUMBER s s ≤ 100 ON 1568	D V DEP. VAR. FLAG FOR SURFACE S	N B NUMBER OF B'DRYS FOR SURFACE S	S N SURFACE NUMBER OF THE SURFACE WHOSE EQUATION IS				
			L = 1, x DEP. L = 2, y DEP. L = 3, z DEP.	NB = 6 ON 1568	TO BE DUPLICATED O IF INPUT FLAG ≠ 8				
2nd Card	S S I SIDE INDEX FOR SURFACE S	M I N - 1 LOWER LIMIT FOR FIRST INDEP. VARIABLE IN	M A X - 1 UPPER LIMIT FOR FIRST INDEP. VARIABLE	M I N - 2 LOWER LIMIT FOR SECOND INDEP. VARIABLE	M A X - 2 UPPER LIMIT FOR SECOND INDEP. VARIABLE	G S GRID SIZE DETERMINES NUMBER OF POINTS ON			
		THE ORDER x, y, z				THE GRID WHICH IS GS^2 (CHECK TABLE 3 FOR DIMENSION)			
3rd or more Cards	THIS CARD, OR CARDS CONTAIN THE SURFACE INPUT; SUCH AS SURFACE COEFFS., POINTS, DIRECTIONAL NUMBERS, ETC. THIS INPUT DEPENDS ON WHAT THE INPUT FLAG P OF CARD 1 CALLS FOR, IF ANYTHING AT ALL.								

GENERAL PURPOSE DATA SHEET

LOCKHEED-CALIFORNIA COMPANY
A DIVISION OF LOCKHEED AIRCRAFT CORPORATION

PREPARED | NAME | DATE | TITLE | PAGE OF

CHECKED | WO | EMA | JOB NO. | GROUP

LOCKHEED
CALIFORNIA COMPANY

TABLE 4-3

SAMPLE SURFACE INPUTS

GENERAL PURPOSE DATA SHEET — LOCKHEED-CALIFORNIA COMPANY, A DIVISION OF LOCKHEED AIRCRAFT CORPORATION

PREPARED / NAME / DATE / TITLE / PAGE OF / CHECKED / JOB NO. / VO / EWA / GROUP

SEQ. 77–80	1–10	11–20	21–30	31–40	41–50	51–60	61–70
1st surface	-1	1	1	4	0		
	-1.	1.	4.	2.	3.	10.	
	A	B	C	D	E	F	G
	H	I	J	(A-J ARE SURFACE COEFFICIENTS)			
2nd surface	0	2	3	4	0		
	1.	-3.	2.	-4.	5.	15.	
	X_1	Y_1	Z_1	X_2	Y_2	Z_2	X_3
	Y_3	Z_3	[$P_i = (x_i, y_i, z_i)$, i = 1, 2, 3 ARE THREE SURFACE POINTS, PLANE]				
3rd surface	1	3	2	1	0		
	-1.	-2.	2.	-2.	2.	14.	
	X_1	Y_1	Z_1	R	(CENTER AND RADIUS OF SPHERE)		
4th surface	2	4	1	0	0		
	1.	-4.	4.	-4.	4.	10.	
	X_1	Y_1	Z_1	X_2	Y_2	Z_2	
	Y_3	Z_3	X_4	Y_4	Z_4		
	[FOUR NON-COPLANAR SURFACE POINTS (P_i, i = 1, 2, 3, 4) ON SPHERE]						
5th surface	3	5	1	2	0		
	-1.	-1.	4.	2.	7.	15.	
	X_1	Y_1	Z_1	X_2	Y_2	Z_2	
	(TWO AXIS POINTS P_1 AND P_2 AND RADIUS OF RIGHT CIRCULAR CYLINDER)						

TABLE 4-3 (Continued)

GENERAL PURPOSE DATA SHEET

LOCKHEED-CALIFORNIA COMPANY
A DIVISION OF LOCKHEED AIRCRAFT CORPORATION

PREPARED | CHECKED | NAME | DATE | TITLE | NO. | EWA | GROUP | PAGE | OF | JOB NO.

SEQ. | ID

77 80	1	5	10	15	20	25	30	35	40	45	50	55	60	65	70	72	73	76					
6th surface			4		6		2		2		0												
	1.			1.		4.		-2.		4.		15.											
	X_1			Y_1		Z_1		X_2		Y_2		Z_2		X_3									
	Y_3			Z_3		L		M		N													
	(THREE POINTS AND DIRECTIONAL NUMBERS OF A RIGHT CIRCULAR CYLINDER)																						
7th surface			5		7		1		2		0												
	-1.			-3.		-1.		2.		5.		16.											
	X_1			Y_1		Z_1		X_2		Y_2		Z_2		X_3									
	Y_3			Z_3		X_4		Y_4		Z_4		X_5		Y_5									
	Z_5			L		M		N															
	(FIVE POINTS AND DIRECTIONAL NUMBERS OF AN ARBITRARY CONIC)																						
8th surface			6		8		2		4		0												
	1.			2.		8.		3.		5.		10.											
	X_1			Y_1		Z_1		X_2		Y_2		Z_2		X_3									
	Y_3			Z_3		X_4		Y_4		Z_4		X_5		Y_5									
	Z_5																						
	[TWO AXIS POINTS (P_1 AND P_2) PLUS THREE POINTS (P_i i = 2, 3, 4) SPACED LONGITUDINALLY OF AN ARBITRARY CONIC OF REVOLUTION]																						
9th surface			7		9		3		2		0												
	1.			1.		4.		1.		4.		18.											
	X_1			Y_1		Z_1																	
	[NINE SURFACE POINTS (P_i i = 1-9) OF AN ARBITRARY CONIC]																						

LR 18905

TABLE 4-3 (Continued)

GENERAL PURPOSE DATA SHEET			LOCKHEED-CALIFORNIA COMPANY A DIVISION OF LOCKHEED AIRCRAFT CORPORATION	PAGE OF
PREPARED	NAME	DATE	TITLE	JOB NO.
CHECKED			NO EWA	GROUP

SEQ.	77 80	1	5	10	15	20	25	30	35	40	45	50	55	60	65	70	72 73	ID
10th surface		-1.		8	-8.	10	-2.	1	-6.	3	-1.	4	15.					
11th surface				9		11												

(COEFFICIENTS OF THIS SURFACE ARE SET EQUAL TO THE SAME COEFFICIENTS AS THOSE OF SURFACE NUMBER FOUR; THIS IS DONE IN THE PROGRAM)

(HERE THE INPUT FLAG SF ≥ 9 WILL CAUSE THE PROGRAM TO TRANSFER TO THE BOUNDARY INPUT SECTION OF THE PROGRAM. S = 11 IS A DUMMY SURFACE NUMBER)

LOCKHEED
CALIFORNIA COMPANY

Card #3

The third, and if necessary, additional cards, supply the input data required for the particular input format flag used in columns 1 to 10 of the first card. These data are supplied in floating point form, seven items per card and ten columns per item (columns 1 to 10, 11 to 20, ..., 61 to 70). Inputs required to specify ten surfaces are shown in Table 4-3, and they serve as examples of each of the ten surface input formats.

Terminal Card

No card is required between surfaces, but a card giving a surface format flag ≥ 9 and a dummy surface number is required at the end of the surface input block.

BOUNDARY BLOCK

The boundary input block requires from one to four cards per boundary. These cards are also dimensioned for seven items - each requiring ten columns. Table 4-4 shows the general input format for a boundary, while Table 4-5 gives the required input for each of the eight boundary input specifications.

Card #1

The first card contains five items in fixed point notation, columns 1 to 50, plus the side index columns 51 to 60 which is in floating point notation. As in the surface input, the first item is the boundary format flag which appears in columns 1 to 10.

The second and third items, columns 11 to 20 and 21 to 30, respectively, are the surface number of the bounded surface and the number of the boundary. The fourth and fifth items, columns 31 to 40, and 41 to 50, depend on the boundary input format flag. If the input format flag is -1, then the boundary surface is to have the same equation as a surface listed in the surface input. Thus, the input in columns 31 to 40 will be the number of the surface whose equation is to be duplicated, while columns 41 to 50 will be blank. If the boundary format Flag 6 is used, the equation of this boundary surface is to duplicate the equation of the nth boundary surface of surface k. Thus, the input in columns 31 to 40 will be the number k of the surface whose nth boundary

TABLE 4-4

GENERAL BOUNDARY INPUT FORMAT

SEQ.							ID
77 80	1 5 10	15 20	25 30	35 40	45 50	55 60	65 70 72 73 76
1st Card	BF	BSN	B	SN	BNBSI		
	FLAG OR INDEX FOR BOUNDARY INPUT	NUMBER OF BOUNDED SURFACE	NUMBER OF THE BOUNDARY FOR SURFACE BSN	BOUNDARY COEFFS. OF BOUNDARY (BSN,B) SET EQUAL TO COEFFS. OF SURFACE NUMBER SN	BOUNDARY COEFFS. SET EQUAL TO PREVIOUS COMPUTED BOUNDARY COEFFS. OF B(SN,BN)	SIDE INDEX FOR BOUNDARY B(BSN,B)	
	THE INPUT IN THESE TWO FIELDS DEPENDS ON THE FLAG BF						
2nd Card or More	THIS CARD OR CARDS CONTAIN THE BOUNDARY INPUT; SUCH AS BOUNDARY COEFFS., POINTS, DIRECTIONAL NUMBER ETC. THIS INPUT DEPENDS ON WHAT THE INPUT FLAG Q OF CARD 1 CALLS FOR, IF ANYTHING AT ALL.						

GENERAL PURPOSE DATA SHEET

LOCKHEED-CALIFORNIA COMPANY
A DIVISION OF LOCKHEED AIRCRAFT CORPORATION

PREPARED | NAME | DATE | TITLE | NO. EWA | CHECKED | GROUP | PAGE OF | JOB NO.

GENERAL PURPOSE DATA SHEET — LOCKHEED-CALIFORNIA COMPANY, A DIVISION OF LOCKHEED AIRCRAFT CORPORATION

PREPARED / NAME / DATE / TITLE / PAGE OF / CHECKED / WO / EWA / JOB NO. / GROUP

TABLE 4-5

SAMPLE BOUNDARY INPUTS

SEQ. (77-80)	1-10	11-20	21-30	31-40	41-50	51-60	61-70	ID (73-76)
1st Bdry	-1	1	1	2	0	-1.0		
	(BOUNDARY B(1,1) IS SET EQUAL TO THE COEFFICIENTS OF SURFACE NUMBER 2)							
2nd Bdry	0	2	1	0	0	1.0		
	X_1	Y_1	Z_1	X_2	Y_2	Z_2		
	[TWO BOUNDARY POINTS (P_1 & P_2) OF PLANE, FROM WHICH BOUNDARY COEFFICIENTS FOR B(2,1) ARE CALCULATED]							
3rd Bdry	1	3	2	0	0	-1.0		
	X_1	Y_1	Z_1	X_2	Y_2	Z_2	X_3	
	Y_3	Z_3						
	[THREE NON-COLINEAR BOUNDARY POINTS (P_i i = 1,2,3) FROM WHICH BOUNDARY COEFFICIENTS FOR B(3,2) ARE CALCULATED]							
4th Bdry	2	3	3	0	0	-1.0		
	X_1	Y_1	Z_1	X_2	Y_2	Z_2	R	
	[TWO AXIS POINTS (P_1 & P_2) AND RADIUS R OF RIGHT CIRCULAR CYLINDER BOUNDARY COEFFICIENTS FOR B(3,3) ARE CALCULATED]							
5th Bdry	3	4	1	0	0	1.0		
	X_1	Y_1	Z_1	X_2	Y_2	Z_2	X_3	
	Y_3	Z_3	L	M	N			
	[THREE BOUNDARY POINTS (P_i i = 1,2,3) AND DIRECTIONAL NOS. l, m, n, OF RIGHT CIRCULAR CYLINDER BOUNDARY COEFFICIENTS FOR B(4,1) ARE CALCULATED]							

LOCKHEED CALIFORNIA COMPANY

TABLE 4-5 (Continued)

SEQ.								ID
6th Bdry	4	5	2	0	0	-1.		
	X_1	Y_1	Z_1	X_2	Y_2	Z_2		
	Y_3	Z_3	X_4	Y_4	Z_4	X_5		
	Z_5	L	M	N				
	FIVE BOUNDARY POINTS (P, i=1,2,3,4,5) AND DIRECTIONAL NOS. OF ARB. CONIC CYLINDER, BOUNDARY							
	COEFFICIENTS FOR L(5,2) ARE CALCULATED							
7th Bdry	5	6	3	0	0	1.		
	A	B	C	D	E	F	G	
	H	I	J					
	BOUNDARY COEFFICIENTS FOR B(6,4) ARE READ IN							
8th Bdry	6	7	1	2	3	-1.		
	BOUNDARY COEFFICIENTS FOR B(7,1) ARE SET EQUAL TO BOUNDARY COEFFICIENTS OF BOUNDARY B(2,3)							
	7	11	3					
	HERE THE BOUNDARY INPUT FLAG BF > 7 WILL CAUSE THE PROGRAM TO TRANSFER TO THE COMPUTATION ROUTINE							

GENERAL PURPOSE DATA SHEET

PREPARED | NAME | DATE | CHECKED

TITLE | WO | EWA | GROUP

LOCKHEED-CALIFORNIA COMPANY
A DIVISION OF LOCKHEED AIRCRAFT CORPORATION

PAGE OF | JOB NO.

LOCKHEED CALIFORNIA COMPANY

surface is to be duplicated and columns 41 to 50 will contain the number n of the boundary surface of surface number k. Columns 51 to 60 will contain the side index of the boundary in floating point notation.

Card #2, etc.

The additional cards required for boundary input format Flags 0, ..., 5 supply the data required by each of these formats - seven items per card in fields of ten columns. The data are given in floating point notation and must be supplied in the order indicated by the format. Examples of each of the eight input formats are given in Table 4-5.

Terminal Card

While no cards are required to separate the data for individual boundaries, a card giving an input flag ≥ 7, a dummy surface number, and a dummy boundary number is required at the end of the boundary block.

CONTROL BLOCK

The last block of input controls the computation in the program. While the surface and boundary surface equations are computed automatically, all other computations must be requested. The input format is shown in Table 4-6. The computation and storage of the grid points on a surface, the surface to surface shape factors, the point to surface shape factors and the computation of surface areas are all included. Samples of each of these are shown in Table 4-7. Note that the grid points for a surface must be computed before a surface area can be used in any of the other three types of computations. The only exceptions are those surfaces which are to be used only as interfering surfaces or surfaces containing the point in a point to surface shape factor.

Grid Point Computation

Control Flags -1 and 0 call for the computation and storage on tape of grid points. Flag -1 is used if there are no previously computed grid points on tape. Once the machine has computed and stored grid points on tape it must search for the end of this storage block before storing additional grid points

TABLE 4-6

COMPUTATION INPUT

SEQ.									ID
77 80	1 5 10	15 20	25 30	35 40	45 50	55 60	65 70	72	73 76
1st Card	K	S(s)	S(t)	NIS					
	COMPUTATION CONTROL FLAG $-1 \leq K \leq 4$	SURFACE NUMBER	SURFACE NUMBER	NUMBER OF INTERFERING SURFACES IF K=1					
				OR 2 $0 \leq NIS \leq 10$					
2nd Card	IS_1	IS_2		IS_{NIS}					
	SURFACE NUMBERS OF THE INTERFERING SURFACES								

GENERAL PURPOSE DATA SHEET

LOCKHEED-CALIFORNIA COMPANY
A DIVISION OF LOCKHEED AIRCRAFT CORPORATION

PREPARED | NAME | DATE | CHECKED | TITLE | WO EWA | GROUP | PAGE OF | JOB NO.

LOCKHEED CALIFORNIA COMPANY

TABLE 4-7

SAMPLE COMPUTATION INPUTS

GENERAL PURPOSE DATA SHEET

LOCKHEED-CALIFORNIA COMPANY
A DIVISION OF LOCKHEED AIRCRAFT CORPORATION

PREPARED | NAME | DATE | CHECKED | TITLE | WO | EWA | GROUP | JOB NO. | PAGE | OF

SEQ. | ID

77 80 | 1 5 10 15 20 25 30 35 40 45 50 55 60 65 70 72 73 75

1st Card

-1 1 2

(WHEN THE FLAG K = -1, NO SURFACE INFORMATION IS ON TAPE. THE PROGRAM CALCULATES ALL POINTS AND DIRECTION NUMBERS OF THE POINTS, ETC., AND STORES ALL THIS INFORMATION ON TAPE, FIRST FOR SURFACE No. 1, THEN FOR SURFACE NO. 2)

2nd Card

0 3 4

[COMPUTE SURFACE INFORMATION (AS ABOVE) FOR SURFACES NOS. 3 AND 4. SINCE K=0, ADD THIS INFORMATION TO THAT ALREADY STORED ON TAPE]

3rd Card

0 5 6

4th Card

0 7

[COMPUTE AND STORE ON TAPE (AS AT CARD 2) SURFACE INFORMATION FOR SURFACES NOS. 5, 6, AND 7, ADDING TO PREVIOUSLY STORED INFORMATION]

5th Card

1 1 2 0

[SINCE K = 1, COMPUTE $F_{1,2}$ AND AREA OF SURFACE NO. 1. IF NIS = 0, ADDITIONAL CARD(S) MUST FOLLOW, LISTING THE INTERFERING SURFACE NUMBERS. (NOT MORE THAN 10 NUMBERS)]

5th Card

1 1 2 N

6th Card

IS_1 IS_2 IS_3 ... IS_N

(SAME AS ABOVE, PLUS N INTERFERING SURFACES, WHOSE NUMBERS ARE IS_1, TO IS_N. IF N IS GREATER THAN 7, USE AN ADDITIONAL CARD)

TABLE 4-7 (Continued)

GENERAL PURPOSE DATA SHEET

LOCKHEED-CALIFORNIA COMPANY
A DIVISION OF LOCKHEED AIRCRAFT CORPORATION

PREPARED | CHECKED | NAME | DATE | TITLE | WO | EWA | GROUP | PAGE | OF | JOB NO. | ID

SEQ.

Card	Columns 1–10	Columns 11–20	Columns 21–30	Columns 31–40	Columns 41–50	Columns 51–60	Columns 61–70
7th Card	2	7	3	NIS			
8th Card	1	3	1.				
9th Card	Y 1	Z 1	Y 2	Z 2	Y 3	Z 3	
10th Card	IS 1	IS 2	...	IS NIS			

(SINCE K = 2, COMPUTE POINT TO SURFACE SHAPE FACTORS FROM POINTS ON SURFACE NO. 7 TO SURFACE NO. 3, WITH NIS INTERFERING SURFACES, WHOSE NUMBERS ARE IS, TO IS_{NIS}. ON THE SECOND CARD, 1. STATES K IS THE DEPENDENT VARIABLE, 3 IS THE NUMBER OF POINT TO SURFACE SHAPE FACTORS TO BE COMPUTED, AND 1. IS THE SIDE INDEX FOR SURFACE 7. ON THE THIRD CARD, y_1, z_1 ARE THE INDEPENDENT VALUES FOR THE POINTS DESIRED, SEVEN PER CARD IF THERE ARE MORE THAN WILL FIT ON ONE CARD. THE FOURTH CARD, GIVING THE INTERFERING SURFACE NOS., APPEARS ONLY IF NIS ≠ 0.)

Card	Columns 1–10	Columns 11–20	Columns 21–30	Columns 31–40	Columns 41–50	Columns 51–60	Columns 61–70
11th Card	3	4					

(SINCE K = 3, COMPUTE THE AREA OF SURFACE NO. 4)

Card	Columns 1–10	Columns 11–20	Columns 21–30	Columns 31–40	Columns 41–50	Columns 51–60	Columns 61–70
12th Card	4						

(SINCE K = 4, RETURN CONTROL TO CONTROL PROGRAM, LINK 0.)

of additional surfaces. Thus Flag -1 is used only on the first card in the control section and Flag 0 is used to call for the grid points of all additional surfaces. All the data on the grid point computation cards are in fixed point notation, and hence appear on the right side of the indicated field.

Card #1 - Since there are no previously stored grid points, control Flag -1 appears in the columns 9 and 10 on this card to indicate that the grid points of the surfaces S(s) and S(t). The surface number s and t occur as fixed point numbers in the columns 11 to 20 and columns 21 to 30 respectively.

Card #2, etc. - Since grid points have been computed and stored according to the instructions of the first card in the control block, control Flag 0 appears in column 10. This control flag tells the machine to compute the grid points for surfaces S(s) and S(t), to search for the last set of stored grid points and to add the grid points of surfaces S(s) and S(t) to those already stored. The surface numbers s and t appear as fixed point numbers in columns 11 to 20 and 21 to 30 respectively.

Surface-to-Surface Shape Factors

The computation of the shape factor F(s,t) from the surface S(s) to surface S(t) for any surfaces S(s) and S(t) whose grid points have been computed requires control Flag 1. The machine then computes and prints out the product $A(s) \cdot F(s,t)$ of the area of surface S(s) times the shape factor F(s,t), the area of surface S(s) and the shape factor F(s,t). If the n interfering surfaces $S(s_1)$ to $S(s_n)$ are listed, the machine will compute the shape factor with interference and add "With interference by $S(s_1)$ .... $S(s_n)$," to the printout.

At least one card is required for each shape factor. If the number n of interfering surfaces is not zero, additional cards will be required.

Card #1 - This card contains the control Flag 1 in column 10 with the surface numbers s and t in fixed point notation in columns 11 to 20 and 21 to 30, respectively. This calls for the shape factor F(s,t) plus A(s)F(s,t) and A(s). The number of interfering surfaces appears in columns 31 to 40 as an integer.

Card #2, etc. - If the number n of interfering surfaces is not zero, the surface numbers s_1 to s_n are given in one or two additional cards as are required. These surface numbers are given in fixed point notation - seven numbers on the first card in columns 1 to 10, columns 11 to 20, etc., and 3 numbers on the second card. The maximum number of interfering surfaces is 10.

Point-to-Surface Shape Factor

Control Flag 2 is used for the shape factor from a point P(i) on surface S(s) to any surface S(t) whose grid points are in storage. The machine will compute the dependent variable of point P(i) and the shape factor from a differential area located on surface S(s) at point P(i) to surface S(t). The printout gives the coordinates of P(i) and the shape factor P(i)F(s,t). If the n interfering surfaces $S(s_1)$ through $S(s_n)$ are specified, the program will account for the interference and add the interference printout. The control cards for the point-to-surface shape factors require at least three cards.

Card #1 - Control Flag 2 appears in column 10 and the fixed point surface numbers s and t in columns 11 to 20, and 21 to 30, respectively. Columns 31 to 40 contain the number of interfering surfaces. This calls for the computation of one or more point-to-surface shape factors from points on S(s) to S(t).

Card #2 - The first entry, in column 10, is a flag (1 for x, 2 for y, or 3 for z) indicating the dependent variable to be used on surface S(s). The number j of points $P(i_1)$ to $P(i_j)$ on surface S(s) for which point-to-surface shape factors are to be computed to surface S(t) appears in fixed point notation in columns 11 to 20. Note that spheres and similar surfaces may yield up to 2j points, as illustrated in Example Problem 3. In columns 21 to 30, the side index for surface S(s) is given in floating point notation. Note that the dependent variable indicated in column 10 and the side index in columns 21 to 30 is not required to agree with those used in any other listing of surface S(s), so they should be chosen to match the points $P(i_1)$ to $P(i_j)$. If any of these points are vertical points on the surface relative to the chosen dependent variable, additional point-to-surface shape factors inputs should be made, each with the appropriate choice of dependent variable. For example, on

LOCKHEED
CALIFORNIA COMPANY

the sphere $x^2 + y^2 + z^2 - 4 = 0$, used as the surface S(5) in the third example problem, the three points P(1) = (2,0,0), P(2) = (0,2,0) and P(3) = (0,0,2) all require a different choice of dependent variable. Thus P(1)F(5,1), P(2)F(5,1), and P(3)F(5,1) must be input separately rather than being input in a single request.

Card #3, etc. - The independent coordinates of the points $P(i_1)$ to $P(i_j)$ are given seven coordinates per card in fields of 10 (columns 1 to 10, 11 to 20, etc.) using floating point notation.

Interfering Surface Cards

If the number n of interfering surfaces is not zero, additional cards must be supplied giving the surface numbers s_1 to s_n of the interfering surfaces $S(s_1)$ to $S(s_n)$. These numbers are given seven to the card in fields of 10 columns.

Surface Area

The computation of surface area is specified one surface per card. The control Flag 3 in column 10 and the fixed point number s in columns 11 to 20 require the computation and printout of the area of surface S(s).

End of Input

A card with control Flag 4 in column 10 ends the input.

V - PROGRAM OUTPUT

The output from this program is fully identified as to which surfaces or points "view" and which are "viewed", the viewing surface or point designated by s and the viewed surface by t. Both area-shape factor products and areas alone are printed.

Tables 5-1 through 5-4 contain typical output information. The first information appearing for each surface or boundary (Tables 5-1 and 5-2) is a duplication of the input for that surface or boundary. This is followed by the surface reference point, Q = (x,y,z) for all surfaces which are not duplicates of a previous surface. If the surface or boundary equation is determined by the computer, the residuals obtained by substituting the coordinates of the surface points (which were used to define the surface equation) into the equation are printed below the reference point Q. In Tables 5-1 and 5-2 all equations were input, so no such numbers exist. If one or more of these values approaches the magnitude of the coefficients, which are printed out for each surface, the limited accuracy of the digital solution has probably resulted in an invalid equation. The magnitude of these residuals should be compared with the coefficients to make sure all invalid equations have been rejected.

Following these surface and boundary summary sheets is a list of computed shape factors. This format depends on whether surface-to-surface or point-to-surface shape factors are computed.

SURFACE-TO-SURFACE SHAPE FACTORS

A typical surface-to-surface shape factor output sheet is shown in Table 5-3. The line beginning with "DELS" includes the increments computed for the independent variables projected rectangle. The second line consists of the surface numbers s and t and their area-view factor product, A(s)F(s,t). The third line of output gives the surface s and its area A(s). The fourth

line repeats the surfaces considered and follows with the shape factor, F(s,t).

The last line in each distinct group is actually the computational input for the next set of outputs. If interference by surfaces s_1 through s_j is specified for the shape factor F(s,t), one or more lines are added above the "DELS" line. These give the surface numbers s and t plus the printout "F(s,t) with interference by surface numbers s_1, ..., s_j"

POINT-TO-SURFACE SHAPE FACTORS

Table 5-4 shows the output for several point-to-surface shape factors. As for the surface-to-surface output, the results are preceded by the computational input. Immediately preceding the first line of output is a block of independent variables for the points on the viewing surface (in this example, surface 5).

The output results begin with the point number i, followed by the viewing surface, s, the viewed surface, t, and the shape factor P(i)F(s,t). The second line contains the coordinates of P(i). If interfering surfaces are given, information identical to that given in the surface-to-surface output is added above the first line.

TABLE 5-1. SURFACE SPECIFICATION

```
    -1          1          1          2          C
-1.000    -18.031    18.031    38.000    76.000    16.000
 1.000     1.000     0.        0.        0.        0.        0.
 0.        0.      -650.250

  Q=(0,0,0)    FOR SURFACE NO.   1

 COEFFICIENTS FOR SURFACE NO.   1   A=   -0.15378700E-02  B=   -0.15378700E-02
 C=   -0.              D=   -0.              E=   -0.              F=   -0.
 G=   -0.              H=   -0.              I=   -0.              J=    0.09999999E 01
    8          2          2          2          1
-1.000    -18.031    18.031    38.000    76.000    16.000

 COEFFICIENTS FOR SURFACE NO.   2   A=   -0.15378700E-02  B=   -0.15378700E-02
 C=   -0.              D=   -0.              E=   -0.              F=   -0.
 G=   -0.              H=   -0.              I=   -0.              J=    0.09999999E 01
    8          3          1          2          1
-1.000    -18.031    18.031     0.       38.000    16.000

 COEFFICIENTS FOR SURFACE NO.   3   A=   -0.15378700E-02  B=   -0.15378700E-02
 C=   -0.              D=   -0.              E=   -0.              F=   -0.
 G=   -0.              H=   -0.              I=   -0.              J=    0.09999999E 01
    8          4          2          2          1
-1.000    -18.031    18.031     0.       38.000    16.000

 COEFFICIENTS FOR SURFACE NO.   4   A=   -0.15378700E-02  B=   -0.15378700E-02
 C=   -0.              D=   -0.              E=   -0.              F=   -0.
 G=   -0.              H=   -0.              I=   -0.              J=    0.09999999E 01
   -1          5          2          0          C
 1.000     -0.       -0.       -0.       -0.       0.
 0.        0.        0.        0.        0.        0.        0.
 1.000     0.       28.000

  Q=(0,0,0)    FOR SURFACE NO.   5

 COEFFICIENTS FOR SURFACE NO.   5   A=    0.              B=    0.
 C=    0.              D=    0.              E=    0.              F=    0.
 G=    0.              H=    0.35714285E-01  I=    0.              J=    0.09999999E 01
   -1          6          1          0          C
 1.000     -0.       -0.       -0.       -0.       0.
 0.        0.        0.        0.        0.        0.        2.920
-1.000     0.       81.000

  Q=(0,0,0)    FOR SURFACE NO.   6

 COEFFICIENTS FOR SURFACE NO.   6   A=    0.              B=    0.
 C=    0.              D=    0.              E=    0.              F=    0.
 G=    0.35696821E-01  H=   -0.12224939E-01  I=    0.              J=    0.09999999E 01
    9          9         -0         -0         -0
```

TABLE 5-2. BOUNDARY SPECIFICATION

```
     5         1         1         0         0     1.000

 1.000    -1.000     0.        0.        0.        0.        0.
 0.        0.        0.

Q=(1,0,0)  FOR BDRY NO. 1   OF SURFACE NO.  1

  COEFFICIENTS FOR BDRY NO.  1  OF SURFACE NO.   1   A=    0.09999999E 01  B=   -0.09999999E 01
  C=    0.              D=    0.              E=    0.              F=    0.
  G=    0.              H=    0.              I=    0.              J=    0.
     5         1         2         0         0    -1.000
 0.        0.        1.000     0.        0.        0.        0.
 0.     -114.000  2888.000

Q=(0,0,0)  FOR BDRY NO. 2   OF SURFACE NO.  1

  COEFFICIENTS FOR BDRY NO.  2  OF SURFACE NO.   1   A=    0.                B=    0.
  C=    0.34626038E-03  D=    0.              E=    0.              F=    0.
  G=    0.              H=    0.              I=   -0.39473683E-01  J=    0.09999999E 01
     6         2         1         1         1    -1.000

  COEFFICIENTS FOR BDRY NO.  1  OF SURFACE NO.   2   A=    0.09999999E 01  B=   -0.09999999E 01
  C=    0.              D=    0.              E=    0.              F=    0.
  G=    0.              H=    0.              I=    0.              J=    0.
     6         2         2         1         2    -1.000

  COEFFICIENTS FOR BDRY NO.  2  OF SURFACE NO.   2   A=    0.                B=    0.
  C=    0.34626038E-03  D=    0.              E=    0.              F=    0.
  G=    0.              H=    0.              I=   -0.39473683E-01  J=    0.09999999E 01
     6         3         1         1         1     1.000

  COEFFICIENTS FOR BDRY NO.  1  OF SURFACE NO.   3   A=    0.09999999E 01  B=   -0.09999999E 01
  C=    0.              D=    0.              E=    0.              F=    0.
  G=    0.              H=    0.              I=    0.              J=    0.
     5         3         2         0         0     1.000
 0.        0.        1.000     0.        0.        0.        0.
 0.      -38.000     0.

Q=(0,0,1)  FOR BDRY NO. 2   OF SURFACE NO.  3

  COEFFICIENTS FOR BDRY NO.  2  OF SURFACE NO.   3   A=   -0.                B=   -0.
  C=   -0.27027027E-01  D=   -0.              E=   -0.              F=   -0.
  G=   -0.              H=   -0.              I=    0.10270270E 01  J=   -0.
     6         4         1         1         1    -1.000

  COEFFICIENTS FOR BDRY NO.  1  OF SURFACE NO.   4   A=    0.09999999E 01  B=   -0.09999999E 01
  C=    0.              D=    0.              E=    0.              F=    0.
  G=    0.              H=    0.              I=    0.              J=    0.
     6         4         2         3         2     1.000

  COEFFICIENTS FOR BDRY NO.  2  OF SURFACE NO.   4   A=   -0.                B=   -0.
  C=   -0.27027027E-01  D=   -0.              E=   -0.              F=   -0.
  G=   -0.              H=   -0.              I=    0.10270270E 01  J=   -0.
     7         9         1        -0        -0    -0.
```


LOCKHEED
CALIFORNIA COMPANY

TABLE 5-3. SURFACE-TO-SURFACE SHAPE FACTORS

```
DELS        0.13256250E-00      0.11250000E-00      0.37500000E-00      0.37500000E-00
 S= 20    T= 28     A(S)F(S,T)=      0.23570722E 01
 S= 20     AREA (S)=      0.40328450E 01
 S= 20    T= 28      F(S,T)=      0.58446885E 00
     1        21        28         -0         -0

DELS        0.98750000E-01      0.18250000E-00      0.37500000E-00      0.37500000E-00
 S= 21    T= 28     A(S)F(S,T)=      0.11544086E 01
 S= 21     AREA (S)=      0.40014727E 01
 S= 21    T= 28      F(S,T)=      0.28849594E-00
     1         1        29         -0         -0

DELS        0.13256250E-00      0.35000000E-01      0.62500000E 00      0.62500000E 00
 S=  1    T= 29     A(S)F(S,T)=      0.10470989E 01
 S=  1     AREA (S)=      0.13771351E 01
 S=  1    T= 29      F(S,T)=      0.76034576E 00
     1         2        29         -0         -0

DELS        0.12187500E-00      0.36249999E-01      0.62500000E 00      0.62500000E 00
 S=  2    T= 29     A(S)F(S,T)=      0.10808827E 01
 S=  2     AREA (S)=      0.13125870E 01
 S=  2    T= 29      F(S,T)=      0.82347512E 00
     1         3        29         -0         -0

DELS        0.10625000E-00      0.41249999E-01      0.62500000E 00      0.62500000E 00
 S=  3    T= 29     A(S)F(S,T)=      0.11076140E 01
 S=  3     AREA (S)=      0.13376735E 01
 S=  3    T= 29      F(S,T)=      0.82801517E 00
     1         4        29         -0         -0

DELS        0.98750000E-01      0.47499999E-01      0.62500000E 00      0.62500000E 00
 S=  4    T= 29     A(S)F(S,T)=      0.98794068E 00
```

TABLE 5-3. POINT-TO-SURFACE SHAPE FACTORS

```
     -1          1          2         -0         -C

SURFACE NUMBER    1   WAS PUT ON TAPE

SURFACE NUMBER    2   WAS PUT ON TAPE
      0          3          4         -0         -C

SURFACE NUMBER    3   WAS PUT ON TAPE

SURFACE NUMBER    4   WAS PUT ON TAPE
      2          5          1          0         -C


      2         21      1.000
 27.750     68.000     27.750     49.000     27.750     30.000     27.750
  0.        27.750    -30.000     27.750    -49.000     27.750    -68.000
  9.500     68.000      9.500     49.000      9.500     30.000      9.500
  0.         9.500    -30.000      9.500    -49.000      9.500    -68.000
 -8.825     68.000     -8.825     49.000     -8.825     30.000     -8.825
  0.        -8.825    -30.000     -8.825    -49.000     -8.825    -68.000

I=  1   S=  5   T=  1   P(I)F(S,T)=       0.22987637E-00
  POINT ON S IS X(I)=       0.27750000E 02  Y(I)=      -0.27999999E 02  Z(I)=       0.68000000E 02

I=  2   S=  5   T=  1   P(I)F(S,T)=       0.24737491E-00
  POINT ON S IS X(I)=       0.27750000E 02  Y(I)=      -0.27999999E 02  Z(I)=       0.48999999E 02

I=  3   S=  5   T=  1   P(I)F(S,T)=       0.69030771E-01
  POINT ON S IS X(I)=       0.27750000E 02  Y(I)=      -0.27999999E 02  Z(I)=       0.30000000E 02

I=  4   S=  5   T=  1   P(I)F(S,T)=       0.42129555E-02
  POINT ON S IS X(I)=       0.27750000E 02  Y(I)=      -0.27999999E 02  Z(I)=       0.

I=  5   S=  5   T=  1   P(I)F(S,T)=       0.74932462E-03
  POINT ON S IS X(I)=       0.27750000E 02  Y(I)=      -0.27999999E 02  Z(I)=      -0.30000000E 02

I=  6   S=  5   T=  1   P(I)F(S,T)=       0.33556215E-03
  POINT ON S IS X(I)=       0.27750000E 02  Y(I)=      -0.27999999E 02  Z(I)=      -0.48999999E 02

I=  7   S=  5   T=  1   P(I)F(S,T)=       0.17203857E-03
  POINT ON S IS X(I)=       0.27750000E 02  Y(I)=      -0.27999999E 02  Z(I)=      -0.68000000E 02

I=  8   S=  5   T=  1   P(I)F(S,T)=       0.71419627E-03
  POINT ON S IS X(I)=       0.95000000E 01  Y(I)=      -0.27999999E 02  Z(I)=       0.68000000E 02

I=  9   S=  5   T=  1   P(I)F(S,T)=       0.78860525E-03
  POINT ON S IS X(I)=       0.95000000E 01  Y(I)=      -0.27999999E 02  Z(I)=       0.48999999E 02

I= 10   S=  5   T=  1   P(I)F(S,T)=       0.18459949E-03
  POINT ON S IS X(I)=       0.95000000E 01  Y(I)=      -0.27999999E 02  Z(I)=       0.30000000E 02

I= 11   S=  5   T=  1   P(I)F(S,T)=       0.81598011E-05
  POINT ON S IS X(I)=       0.95000000E 01  Y(I)=      -0.27999999E 02  Z(I)=       0.

I= 12   S=  5   T=  1   P(I)F(S,T)=       0.13517380E-05
  POINT ON S IS X(I)=       0.95000000E 01  Y(I)=      -0.27999999E 02  Z(I)=      -0.30000000E 02

I= 13   S=  5   T=  1   P(I)F(S,T)=       0.59542524E-06
  POINT ON S IS X(I)=       0.95000000E 01  Y(I)=      -0.27999999E 02  Z(I)=      -0.48999999E 02

I= 14   S=  5   T=  1   P(I)F(S,T)=       0.30244735E-06
```

VI - EXAMPLE PROBLEMS

Three example problems are presented in this section. A detailed discussion of the problems and the reason for including each follows.

The first problem is an exercise showing each of the inputs discussed in Section IV with examples of a variety of surfaces. The second example, which approximates a rocket nozzle and storage tank problem, illustrates the effect of the choice of the dependent variable on computed surface area with the resultant effect on the shape factors. The third problem consists of a sphere inside a cube. This problem has the advantage that all areas and shape factors may be computed exactly as a check on the accuracy of the program. In computing the shape factors from one side of the cube to another, the effect of interference by the sphere is illustrated. In addition, this problem shows the effect of the choice of dependent variable on a shape factor where the area is not affected.

The values of grid size (GS) for these examples were based on the former limits of 16 or 20, depending on the type of surface (see Section III). The capacity is now 20 or 28. The old maximum values of GS were used in Examples 1 and 2. Somewhat lower values were used in Example 3 to demonstrate the accuracy obtainable with modest GS values. The discussion of Example 3 includes a comparison of grid size, accuracy, and computer time.

EXAMPLE PROBLEM #1

The first example problem contains ten surfaces and eight boundary surfaces showing examples of each input format plus examples of each type of computation.

Surface Input

Surface #1 - Arbitrary Conic - Surface #1 is the lower side of a plane circular disk of unit radius lying on the xy-plane with its center at the

LOCKHEED
CALIFORNIA COMPANY

origin as shown in Figure 6-1. Since this surface is a section of a plane, it can be seen from Table 4-2 (General Surface Input Formats) that surface #1 must be defined by equation or by three points. In this case, the ten coefficients A to J of the equation $z = 0$ (the xy-plane) and format Flag -1 is used. A dependent variable of z is required on this plane so the dependent variable flag is 3. The boundary surface $x^2 + y^2 + z^2 - 1 = 0$ is used to cut the plane down to the given disk so one boundary is required. The given plane $z = 0$ contains the points (0,0,0), (1,0,0), and (0,1,0); therefore the surface reference point is (0,0,1). Since the lower side (which faces away from (0,0,1) is required, the side index is -1.0. The surface area will be used in a shape factor computation, therefore the limits on the independent variables and the grid size number GS are required. The minimum value for x on this disk is -1 while the maximum value of x is 1. For y the minimum and maximum values are also -1 and 1. The number GS is set at 16. The input for this surface is:

SF	S	D.V.	NB			
-1	1	3	1			
SS1	MIN-1	MAX-1	MIN-2	MAX-2	GS	
-1.	-1.	1.	-1.	+1.	16.	
A	B	C	D	E	F	G
0.	0.	0.	0.	0.	0.	0.
H	I	J				
0.	1.	0.				

Surface #2 - Plane - The second surface is the top of a section of the plane $6x + 4y - 3z - 12 = 0$ given in Figure 6-2. The required area has one linear and one elliptic boundary. Input Flag 0 and the three surface points (not all on a straight line) (2,0,0), (0,3,0), and (0,0,-4) are used to define surface 2. The dependent variable z is chosen on this surface, requiring Flag 3 for the dependent variable. Note that any variable could be chosen for this surface. Two boundaries are required. The reference point is (0,0,0), and since the plane lies below this reference point, side index 1.0 is used. Since grid points are required for this surface, limits on the independent

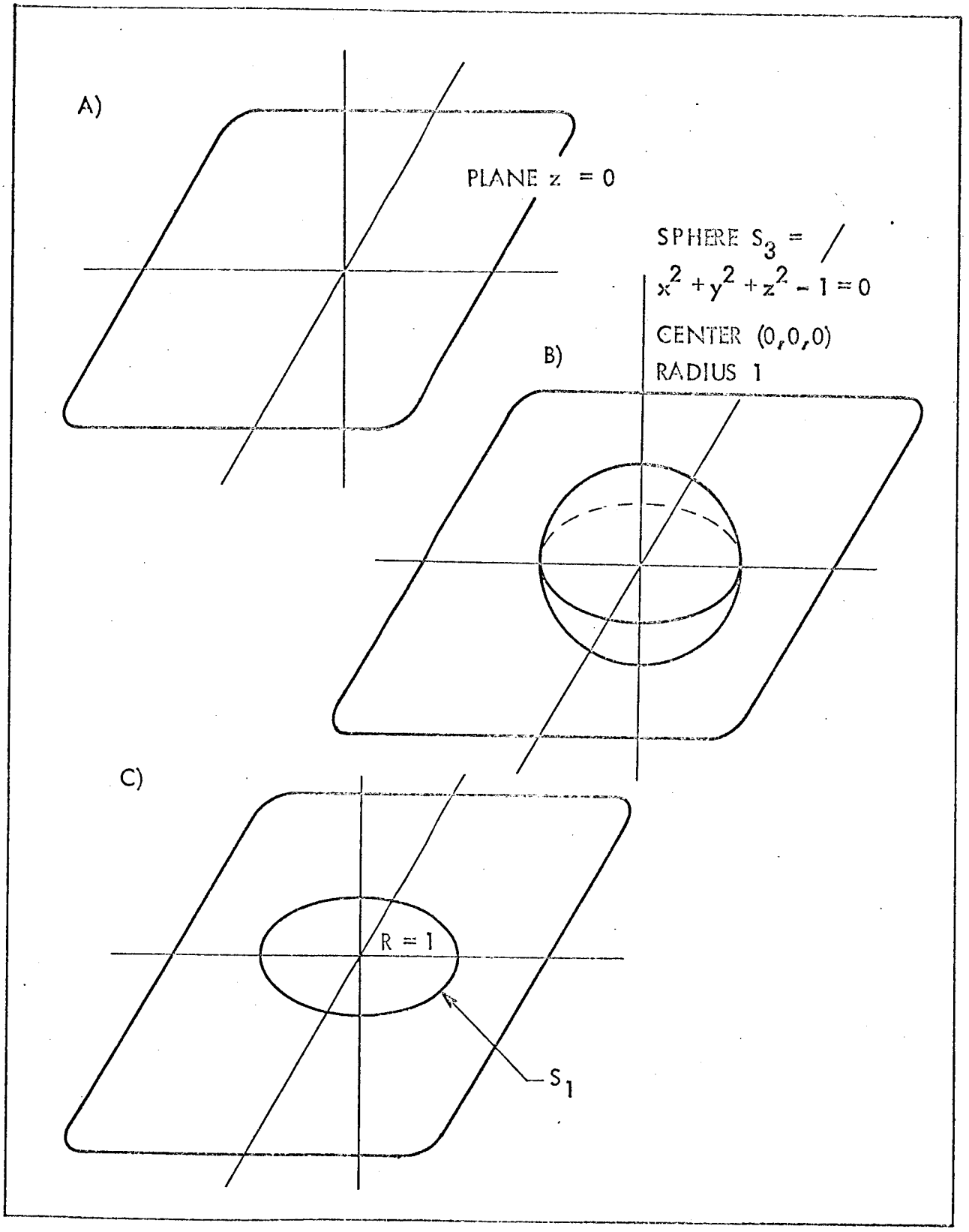

Figure 6-1. Example Problem #1 - Surface #1

LOCKHEED
CALIFORNIA COMPANY

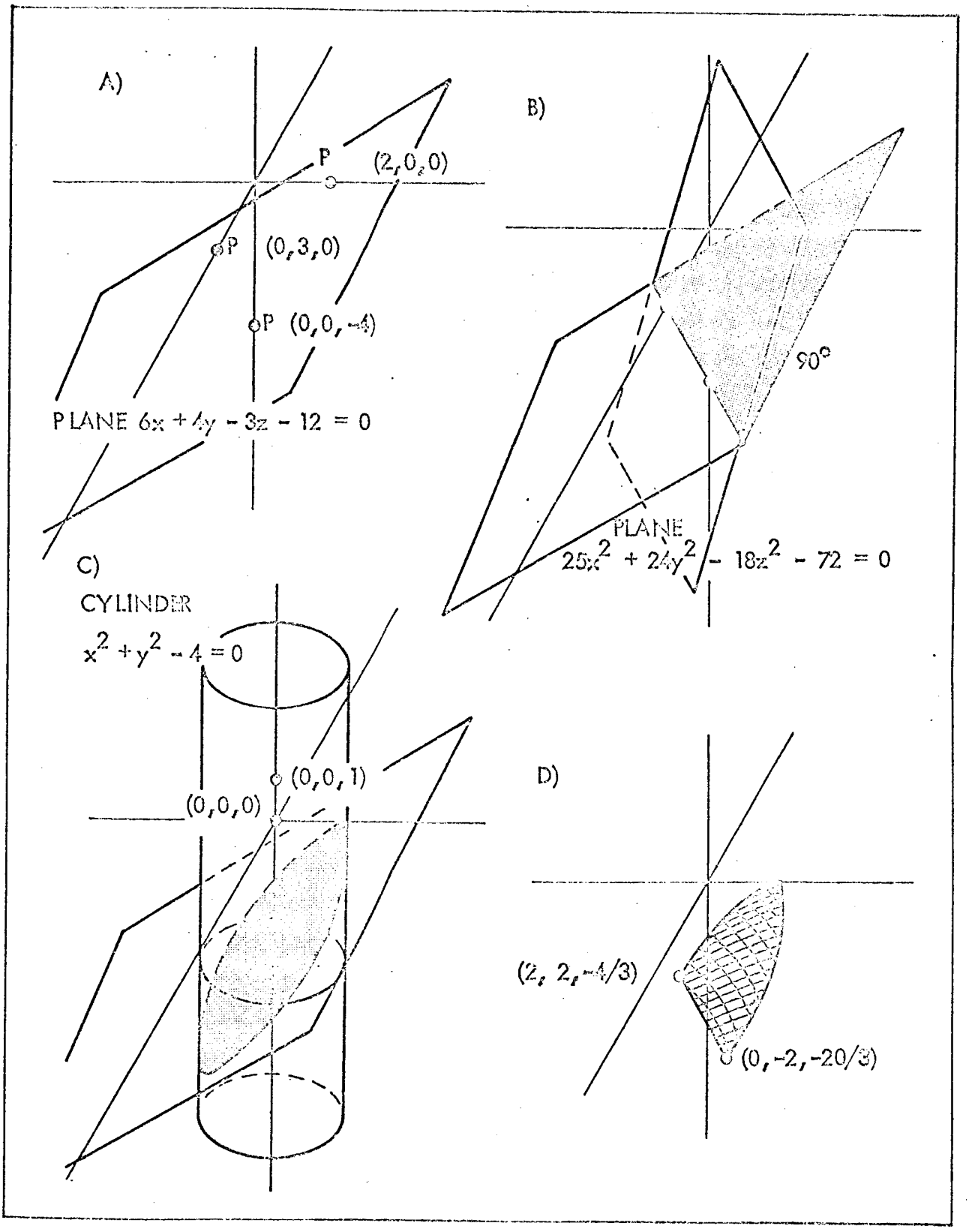

Figure 6-2. Example Problem #1 - Surface #2

LOCKHEED
CALIFORNIA COMPANY

variables $0 \leq x \leq 2$ and $-2 \leq y \leq 2$ are given. The number GS is set equal to 16. Thus the input for this surface is:

SF	S	DV	NB			
0	2	3	2			
SSI	MIN-1	MAX-1	MIN-2	MAX-2	GS	
1.	0.	2.	-2.	2.	16.	
x_1	y_1	z_1	x_2	y_2	z_2	x_3
2.	0.	0.	0.	3.	0.	0.
y_3	z_3					
0.	-4.					

Surface #3 - Sphere - Surface #3 is the inside of the sphere $x^2 + y^2 + z^2 - 1 = 0$, illustrated in Figure 6-3. With input Flag 1, the sphere is defined by the center (0,0,0) and the radius 1.0. On this sphere, the choice of independent variable is arbitrary and x (Flag 1) is used. No boundaries are required as the entire sphere is required. The reference point is (0,0,0), therefore the side index is 1.0 for the inside. This surface is not used in any shape factor or area computation, so the remainder of the second card is left blank. Thus input for this case is:

SF	S	DV	NB
1	3	1	0
SSI			
1.0			
x	y	z	R
0.	0.	0.	1.

Surface #4 - Sphere - The fourth surface consists of the inner (concave) side of the sphere $x^2 + y^2 + z^2 - 2x + 4y - 6z - 35 = 0$, bounded by a plane and a right circular cylinder as given in Figure 6-4. Input Flag 2 plus the four surface points (7,0,0), (7,-5,5), (7,1,5), and (-2,4,5) (not all on a plane) define the surface. For this surface, the dependent variable is x (Flag 1) and two boundaries are used. The reference point is the origin,

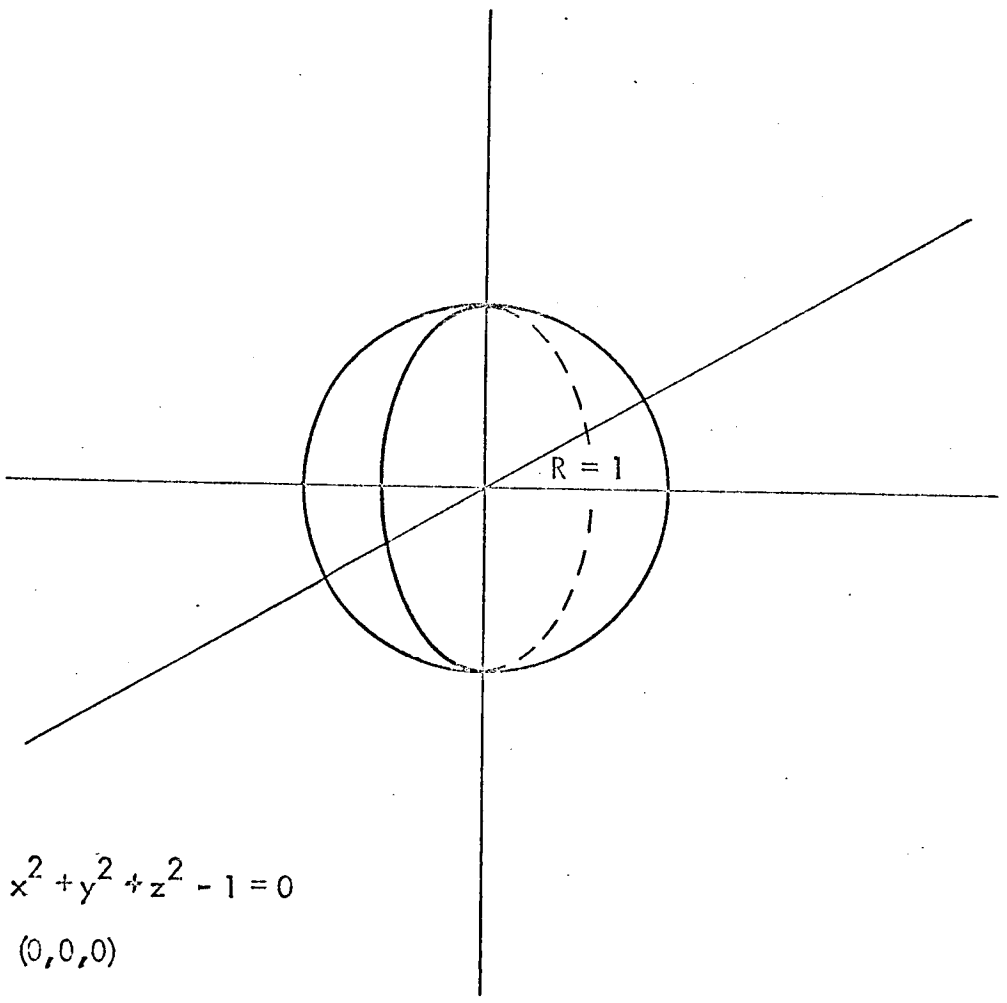

SPHERE $x^2 + y^2 + z^2 - 1 = 0$

CENTER (0,0,0)

RADIUS = 1

Figure 6-3. Example Problem #1 - Surface #3

LOCKHEED
CALIFORNIA COMPANY

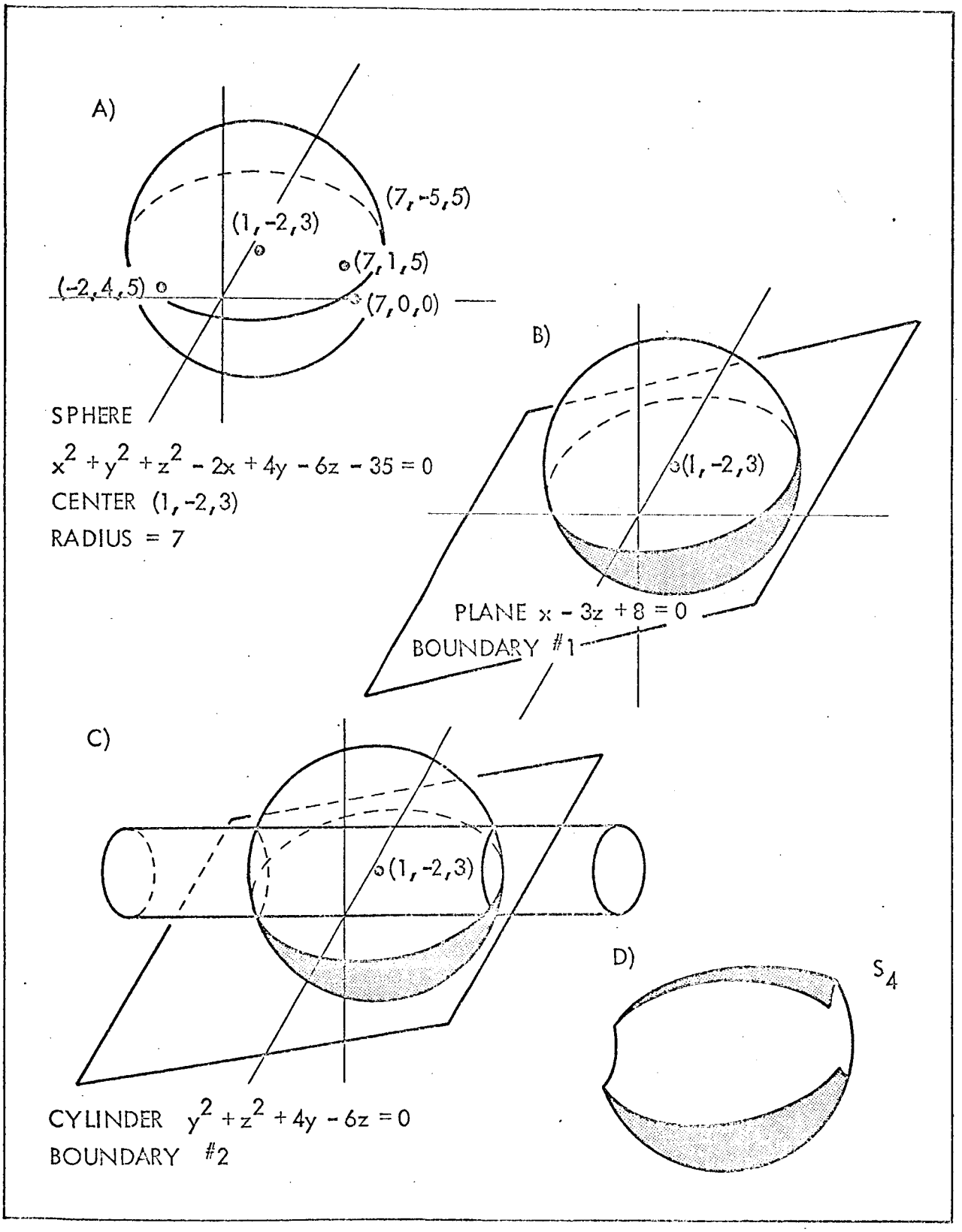

Figure 6-4. Example Problem #1 - Surface #4

LOCKHEED
CALIFORNIA COMPANY

which is inside the sphere, and therefore side index 1.0 is used. The remainder of the second card for this surface is left blank since the surface is not used in the shape factor computations. The input is:

SF	S	DV	NB			
2	4	1	2			
SSI						
1.						
x_1	y_1	z_1	x_2	y_2	z_2	x_3
7.	0.	0.	7.	-5.	5.	7.
y_3	z_3	x_4	y_4	z_4		
1.	5.	-2.	4.	5.		

<u>Surface #5 - Right Circular Cylinder</u> - Surface #5 is the unbounded right circular $8x^2 + 5y^2 + 5z^2 - 4xz + 4xy + 8yz - 36x + 18y + 36z = 0$ in Figure 6-5. Note that an unbounded surface such as this, or either of the next two surfaces, cannot be used in the shape factor computations except as an interfering surface or as the base surface (the surface containing the point) for a point-to-surface shape factor. This surface is defined by input Flag 3, the axis points (1,1,-4) and (2,-1,-2), plus the radius R = 3. The dependent variable is x, the surface has no boundaries, and a side index 1.0 is given. Note that with the reference point (1,0,0) indicated by the equation, this defines the inside of the cylinder. But with the small constant computed by the program, the reference point is changed to (0,0,0), and with the the positive side index, the outside is actually given. The input for this surface is:

SF	S	DV	NB			
3	5	1	0			
SSI						
1.						
x_1	y_1	z_1	x_2	y_2	z_2	R
1.	1.	-4.	2.	-1.	-2.	3.

LOCKHEED
CALIFORNIA COMPANY

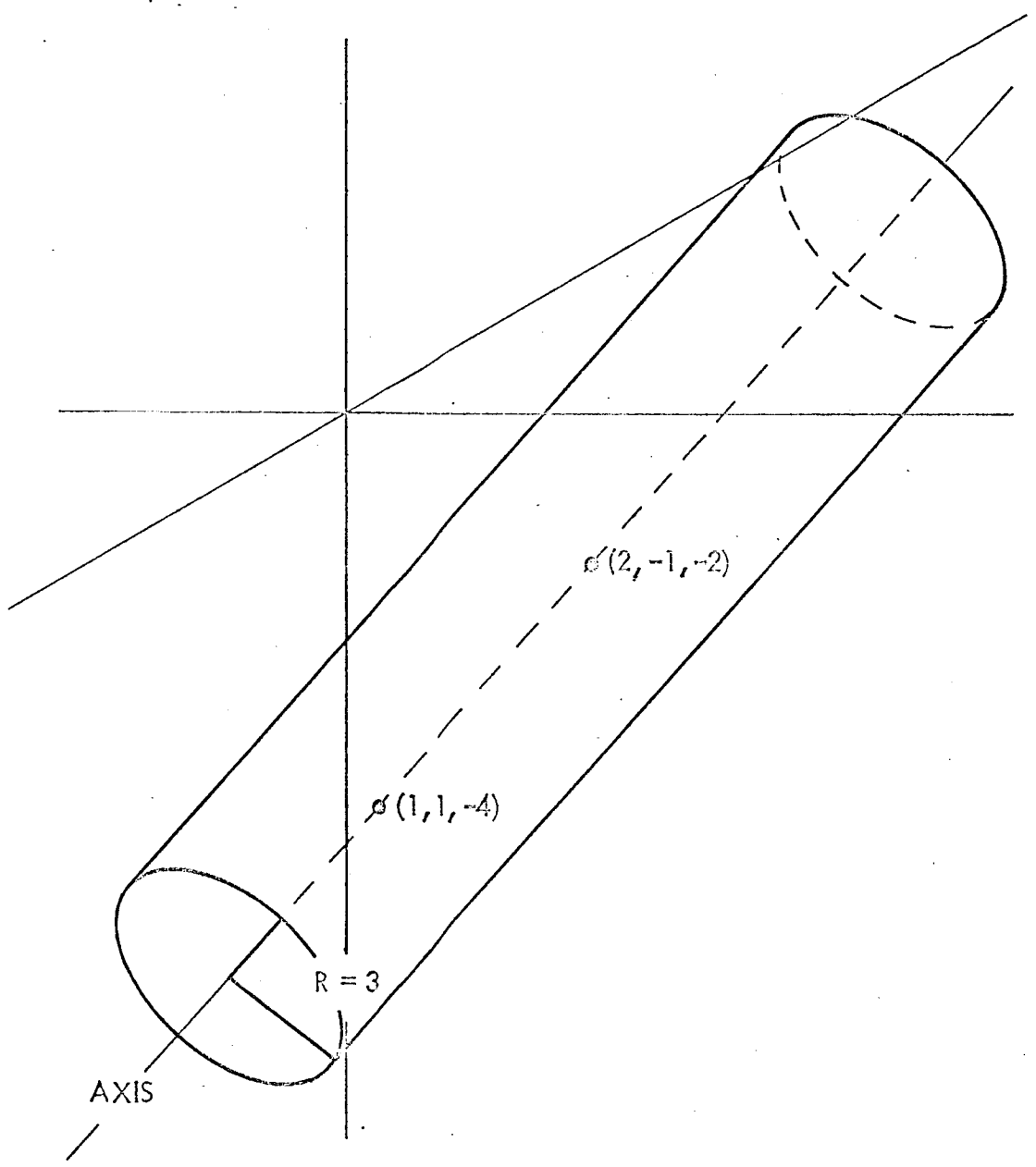

RIGHT CIRCULAR CYLINDER

$$8x^2 + 5y^2 + 5z^2 + 4xy - 4xz + 8yz - 36x + 18y + 36z = 0$$

Figure 6-5. Example Problem #1 - Surface #5

LOCKHEED
CALIFORNIA COMPANY

Surface #6 - Right Circular Cylinder - The unbounded cylinder $x^2 + z^2 - 2x + 6z - 15 = 0$ is shown in Figure 6-6 as surface #6. This cylinder is defined by input Flag 4, the three surface points (no two on the same element) (1,1,2), (-3,0,0), and (4,2,1), plus the direction numbers of an element (0 : 1 : 0). On this cylinder, the choice of dependent variable is restricted to x and z (x is given) since the elements of the cylinder are parallel to the y-axis. With the reference point (0,0,0) inside the cylinder, the side index 1.0 specifies the inside. The input is:

SF	S	DV	NB			
4	6	1	0			
SSI						
1.0						
x_1	y_1	z_1	x_2	y_2	z_2	x_3
1.	1.	2.	-3.	0.	0.	4.
y_3	z_3	L	M	N		
2.	1.	0.	1.	0.		

Surface #7 - Quadric Cylinder - The hyperbolic cylinder $y^2 - z^2 + 64 = 0$, surface #7, is illustrated in Figure 6-7. With input Flag 5, this surface is defined by the five surface points (no two on the same element) (0,0,8), (0,6,10), (0,-6,10), (0,15,17), and (0,-15,17) plus the direction numbers (1 : 0 : 0) of an element. Since the elements are parallel to the x-axis and the tangent planes along the line y = 0, z = 8 are horizontal, z is the only choice of dependent variable. Relative to the reference point (0,0,0), the side index -1.0 indicates the concave side of each sheet of the hyperbolic cylinder (top of the upper sheet and bottom of the lower sheet). With no boundaries given, the input is:

SF	S	DV	NB			
5	7	3	0			
SSI						
-1.						
x_1	y_1	z_1	x_2	y_2	z_2	x_3
0.	0.	8.	0.	6.	10.	0.

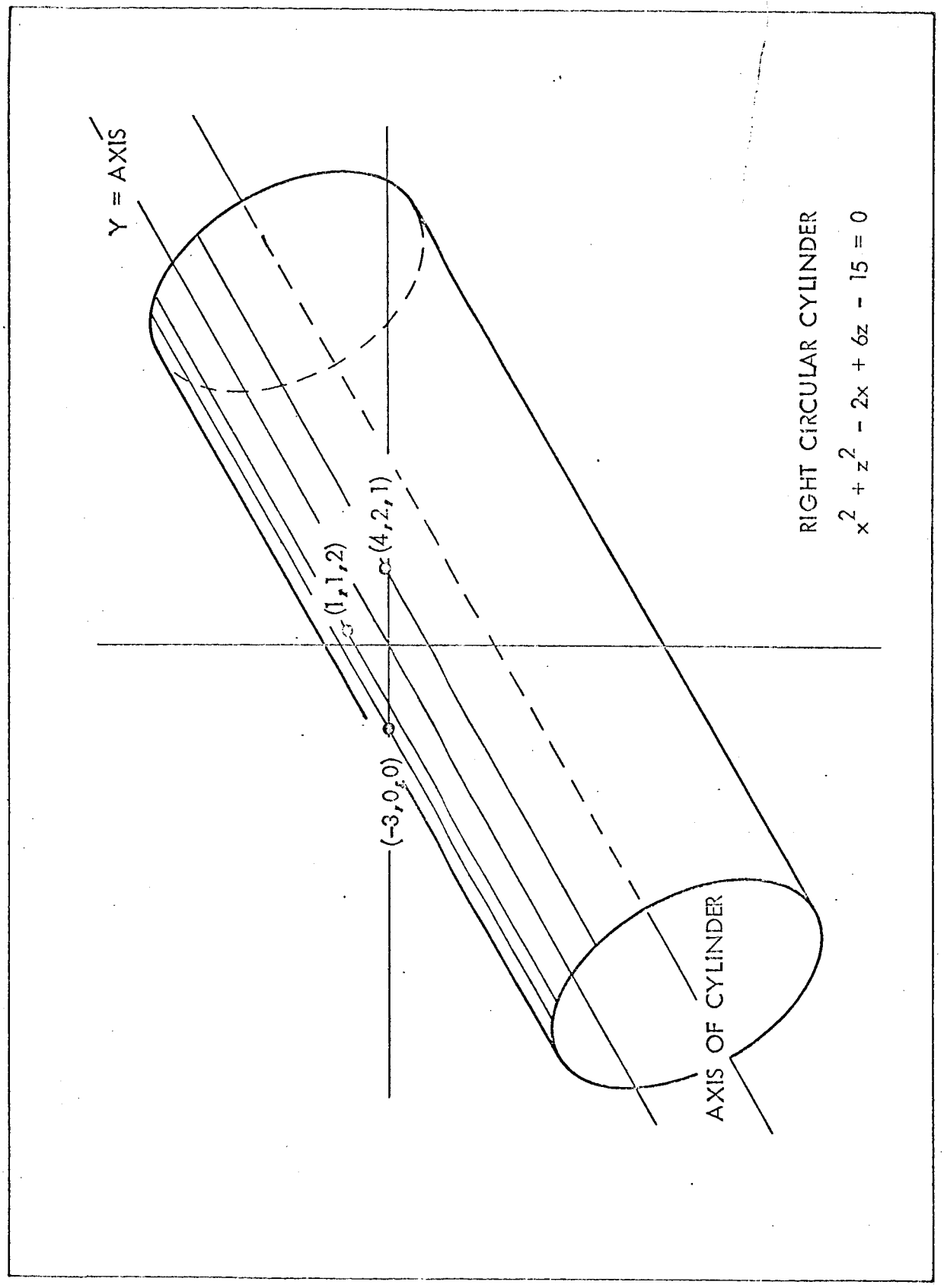

Figure 6-6. Example Problem #1 - Surface #6

LOCKHEED
CALIFORNIA COMPANY

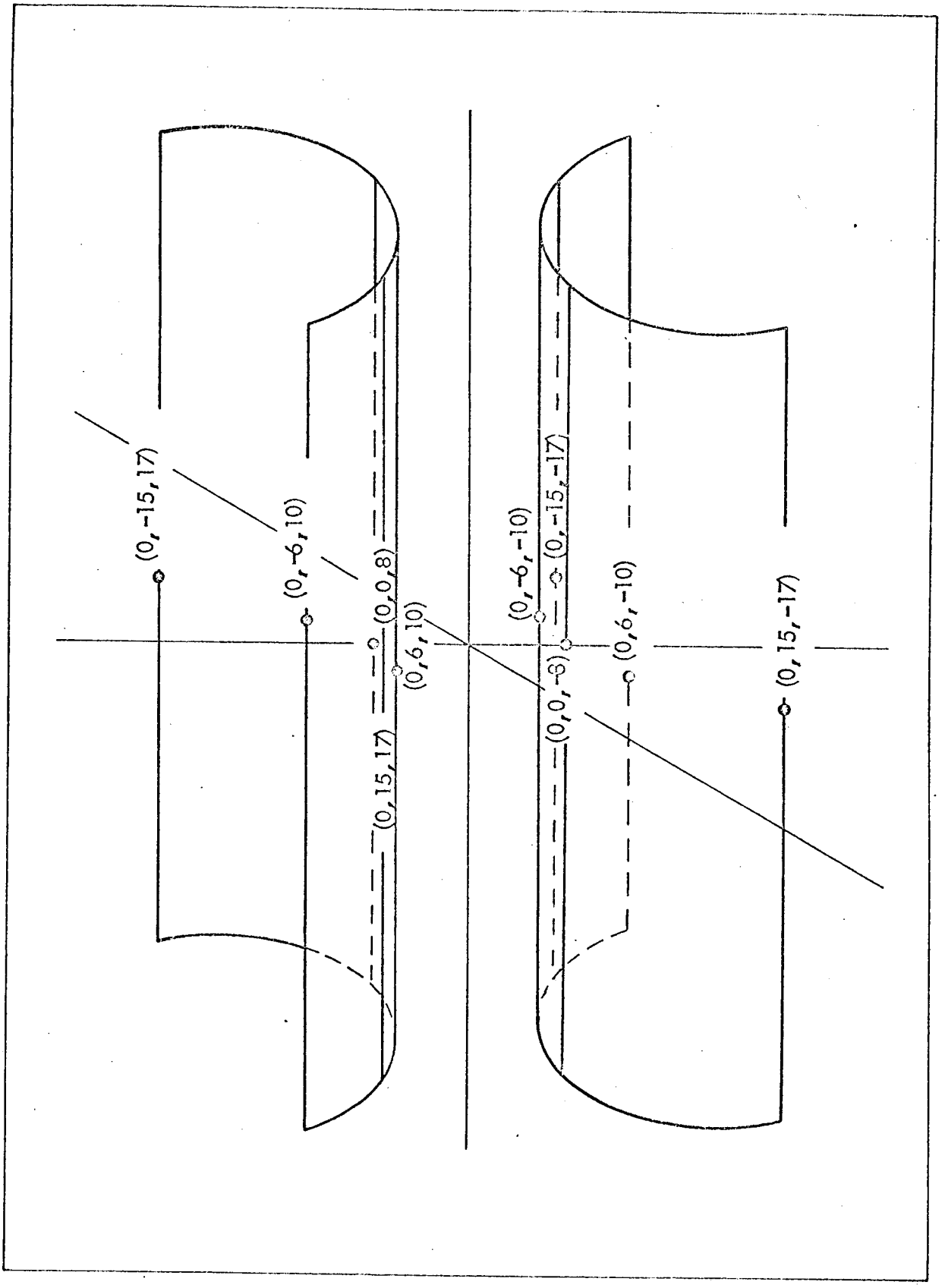

Figure 6-7. Example Problem #1 - Surface #7

LOCKHEED
CALIFORNIA COMPANY

y_3	z_3	x_4	y_4	z_4	x_5	y_5
-6.	10.	0.	15.	17.	0.	-15

z_5	L	M	N
17.	1.	0.	0.

Surface #8 - Quadric of Revolution - Surface #8 is the section of the paraboloid of revolution $x^2 + y^2 + 4z = 0$ cut by the sphere $x^2 + y^2 + z^2 - 1 = 0$ as shown in Figure 6-8. The input Flag 6 requires an axis point (0,0,0), three surface points (no two on the same cross-section) (0,0,0), (-2,2,-2), and (0,-2,-1), plus a second axis point (0,0,1). The dependent variable is z and one boundary is given. The reference point is (1,0,0) and the side index 1.0 gives the convex (outer) surface of the paraboloid. Since the area of surface #8 is required, the limits $-.97175 \leq x \leq .97175$ and $-.97175 \leq y \leq .97175$ and a value of 15 for GS are given. The input is:

SF	S	DV	NB
6	8	3	1

SSI	MIN-1	MAX-1	MIN-2	MAX-2	GS
1.	-.97175	+.97175	-.97175	.97175	15

x_1	y_1	z_1	x_2	y_2	z_2	x_3
0.	0.	0.	0.	0.	0.	-2.

y_3	z_3	x_4	y_4	z_4	x_5	y_5
2.	-2.	0.	-2.	-1.	0.	0.

z_5
1.

Surface #9 - General Quadric - Surface #9 is the ellipsoid, Figure 6-9, $x^2 + 4y^2 + 9z^2 - 24x - 48y - 36z = 0$. Input Flag 7 and the nine surface points (0,0,0), (30,6,2), (-6,6,2), (12,15,2), (12,-3,2), (12,6,8), (12,6,-4), (0,0,4), and (24,0,4) define the surface. The dependent variable is y (Flag 2) and no boundaries are given. The ellipsoid contains the reference point (1,0,0) thus the side index 1.0, gives the inside. The input is:

SF	S	DV	NB
7	9	2	0

LOCKHEED
CALIFORNIA COMPANY

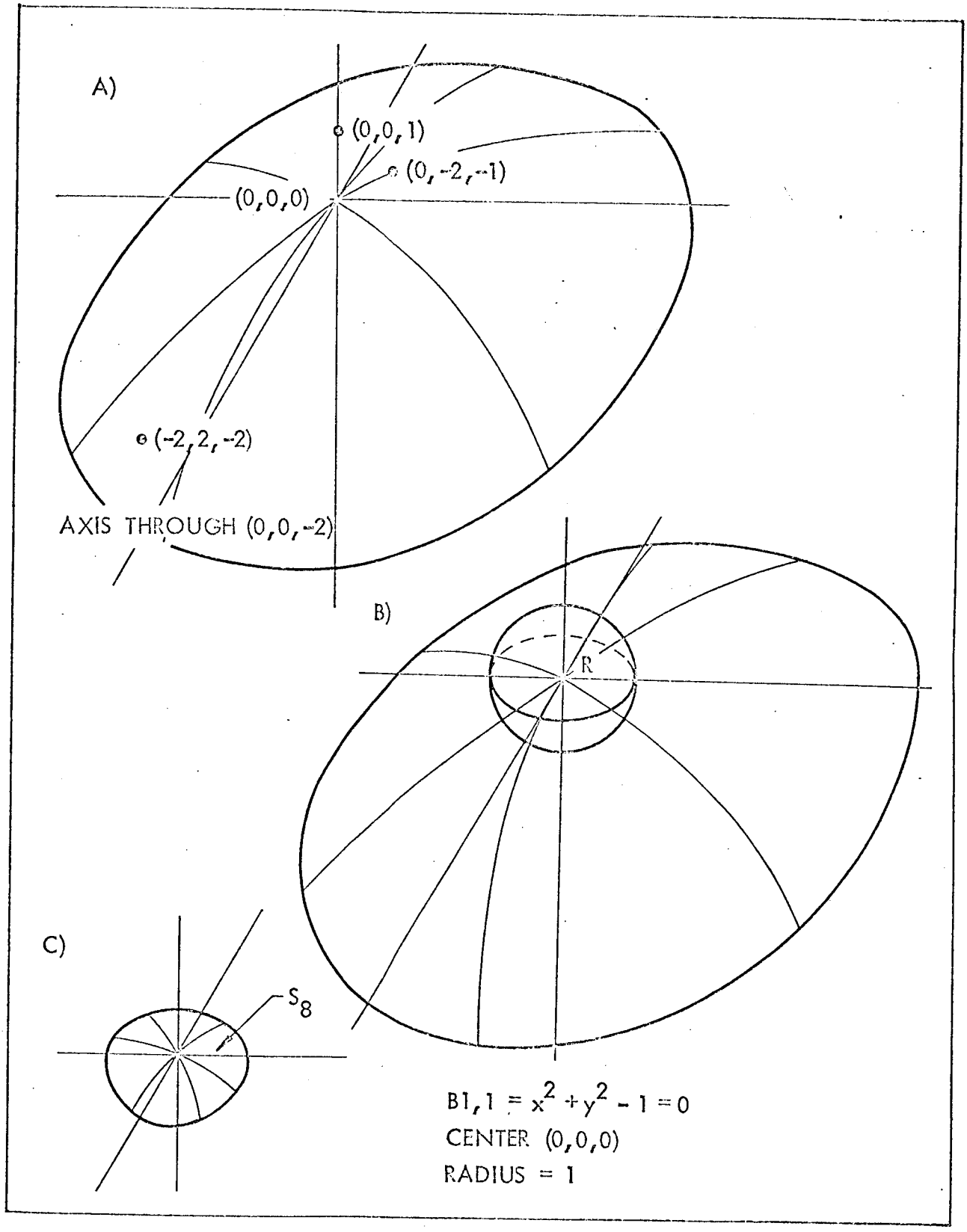

Figure 6-8. Example Problem #1 - Surface #8

LOCKHEED
CALIFORNIA COMPANY

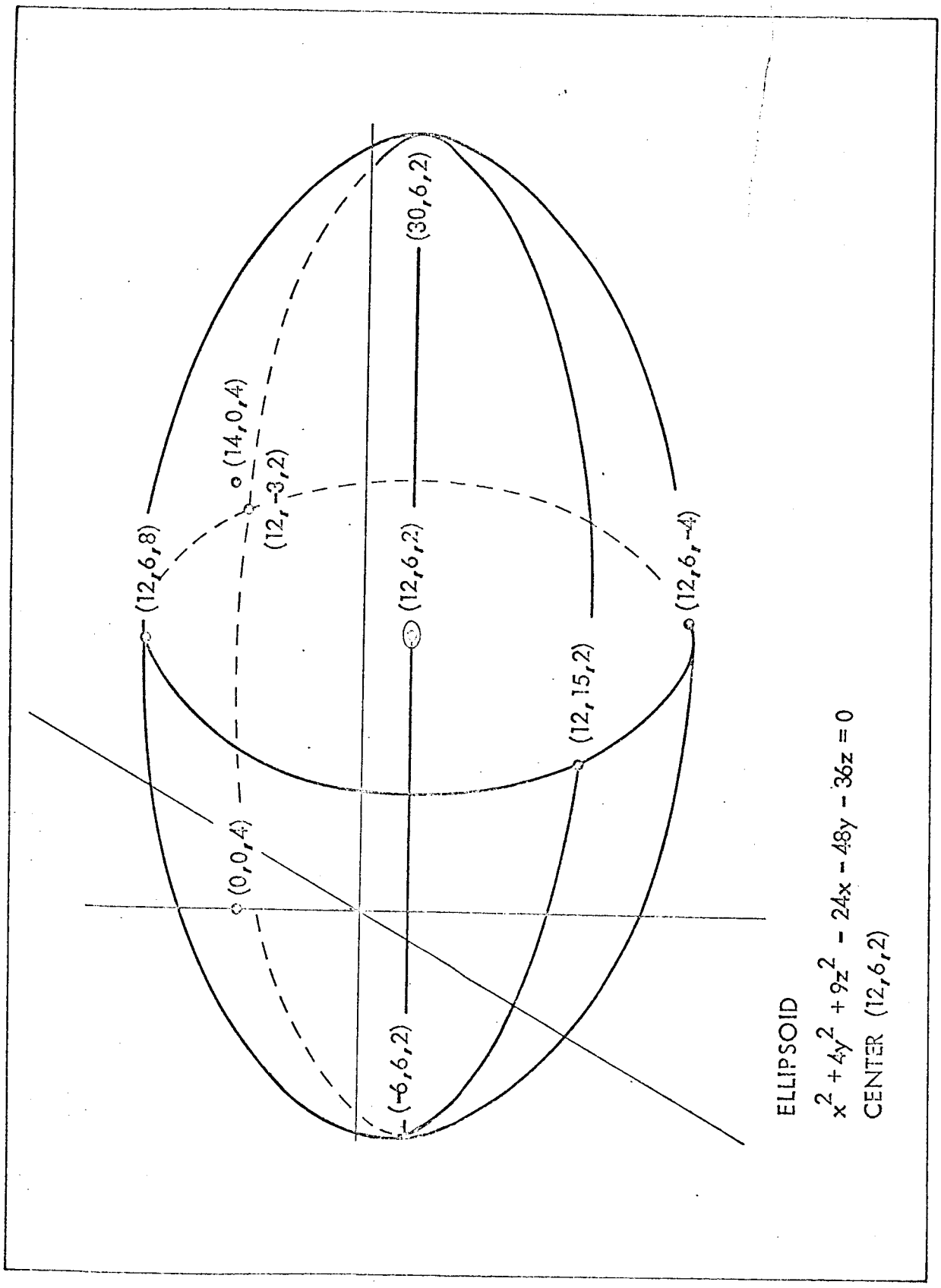

Figure 6-9. Example Problem #1 - Surface #9

LOCKHEED
CALIFORNIA COMPANY

SSI

1.

x_1	y_1	z_1	x_2	y_2	z_2	x_3
0.	0.	0.	30.	6.	2.	-6.
y_3	z_3	x_4	y_4	z_4	x_5	y_5
6.	2.	12.	15.	2.	12.	-3.
z_5	x_6	y_6	z_6	x_7	y_7	z_7
2.	12.	6.	8.	12.	6.	-4.
x_8	y_8	z_8	x_9	y_9	z_9	
0.	0.	4.	24.	0.	4.	

Surface #10 - Duplicate Surface Equation - Surface #10 (Figure 6-10) is a different section of the sphere $x^2 + y^2 + z^2 - 2x + 4y - 6z - 35 = 0$ first defined in surface 4. Flag 8 and the surface number 4 define surface 10. The dependent variable for this surface is z and two boundaries are required. Side index -1.0 indicates the outside since the reference point (1,0,0) is inside the sphere. Note that the reference point is not printed out since this is a duplicated surface equation. The input is:

SF	S	DV	NB	NS
8	10	3	2	4 indicates that the equation of surface 4 is to be duplicated.

SSI

-1.

End of Surface Input - The end of the surface input block is marked by a card giving an input format ≧ 9 and a dummy surface number.

SF	S	
9	11	A surface number not being used.

Boundary Input

Boundary Surface #1 - Listed Quadric Surface - The first boundary surface, labeled B(1,1) and meaning surface 1, boundary 1, is surface #3, labeled S(3), the sphere $x^2 + y^2 + z^2 - 1 = 0$. Since this boundary duplicates a surface, input Flag -1 is used with the number 3 of S(3). Since the reference point (0,0,0) which is not printed out for the duplicated equations of B(1,1) of S(3) and the required area of S(1) are both inside the sphere S(3),

LOCKHEED
CALIFORNIA COMPANY

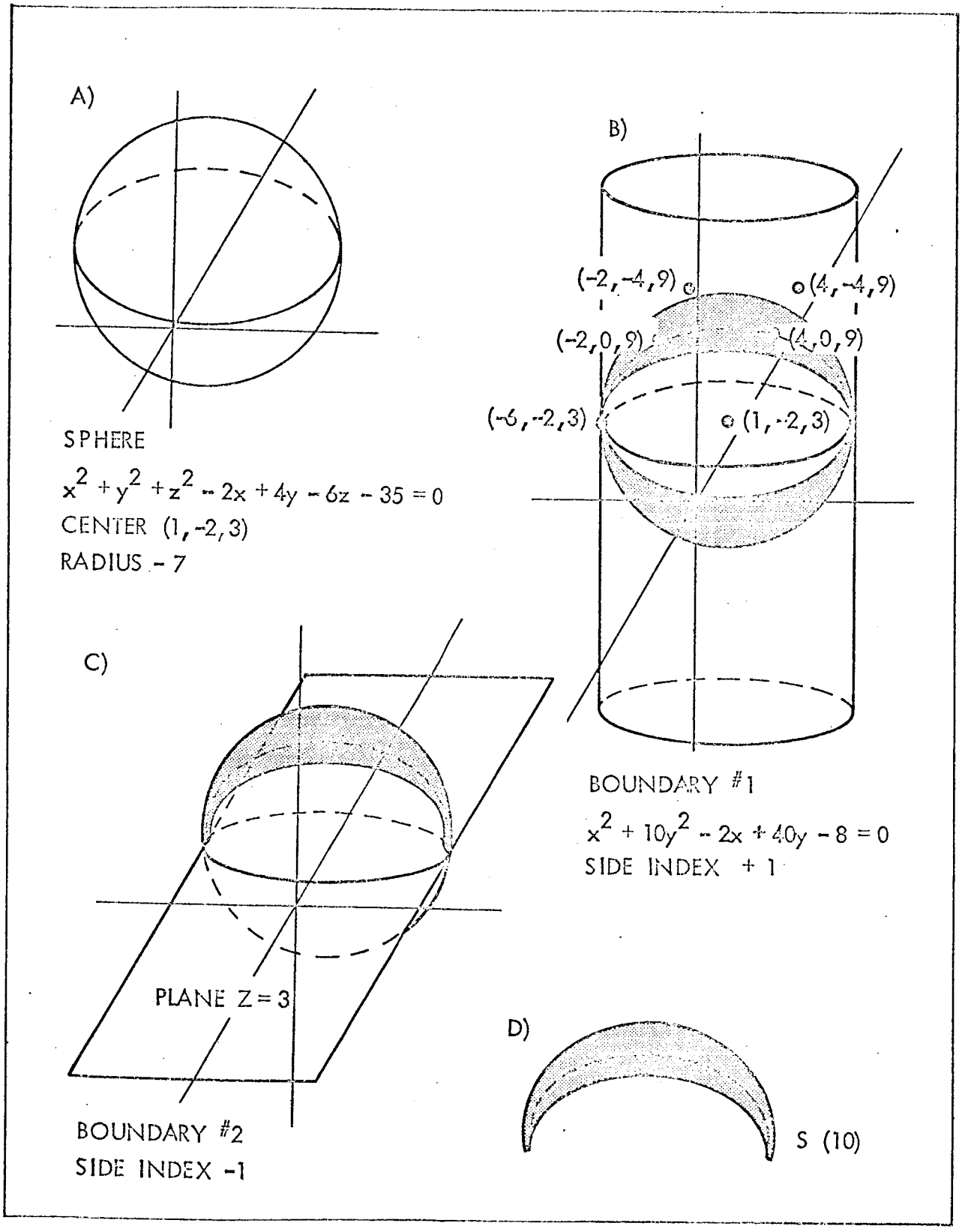

Figure 6-10. Example Problem #1 - Surface #10

LOCKHEED
CALIFORNIA COMPANY

a side index 1.0 is used. The input is:

SF	BSN	B	SN	BN	BSI
-1	1	1	3	--	1.

Boundary Surface #2 - Plane on a Plane - The second boundary surface, B(2,1), is the first boundary on S(2) and is the plane through the two points (0,3,0) and (0,0,-4), perpendicular to S(2). Using input Flag 0, the surface is defined by the boundary points (0,3,0) and (0,0,-4). The reference point (0,0,0) and the required area are both above the boundary plane hence the side index is 1.0. The input is:

BF	BSN	B	SN	BN	BSI
0	2	1	--	--	1.
x_1	y_1	z_1	x_2	y_2	z_2
0.	3.	0.	0.	0.	-4.

Boundary Surface #3 - Plane on Quadric Surface - The third boundary surface, B(4,1), is the plane $x - 3z + 8 = 0$. With input Flag 1 the equation is defined by the three non-colinear boundary points (1,-2,3), (7,-5,5), and (7,1,5). The required area and the reference point (0,0,0) are below the plane giving a side index of 1.0. The input is:

BF	BSN	B	SN	BN	BSI	
1	4	1	--	--	1.	
x_1	y_1	z_1	x_2	y_2	z_2	x_3
1.	-2.	3.	7.	-5.	5.	7.
y_3	z_3					
1.	5.					

Boundary Surface #4 - Right Circular Cylinder - The fourth boundary surface, B(2,2), is the cylinder $x^2 + y^2 - 4 = 0$. With input Flag 2, the equation is defined by the two axis points (0,0,0) and (0,0,1), plus the radius R = 2. The reference point and the required area are both inside the cylinder, so the side index is 1.0. The input is:

BF	BSN	B	SN	BN	BSI
2	2	2	--	--	1.

LOCKHEED
CALIFORNIA COMPANY

x_1	y_1	z_1	x_2	y_2	z_2	R
0.	0.	0.	0.	0.	1.	2.

Boundary Surface #5 - Right Circular Cylinder - The fifth boundary surface, B(4,2), is surface $y^2 + z^2 + 4y - 6z = 0$. This surface is defined by input Flag 3, the three boundary points (7,0,0), (7,1,5), and (7,-5,5) (not all on the same element), plus the direction numbers (1:0:0) of an element. The side index 1.0 gives the outside of the cylinder. The input is:

BF	BSN	B	SN	BN	BSI	
3	4	2	--	--	1.	
x_1	y_1	z_1	x_2	y_2	z_2	x_3
7.	0.	0.	7.	1.	5.	7.
y_3	z_3	L	M	N		
-5.	5.	1.	0.	0.		

Boundary Surface #6 - Quadric Cylinder - The sixth boundary surface, B(10,1) is the elliptic cylinder $x^2 + 10y^2 - 2x + 40y - 8 = 0$. Input Flag 4, the five surface points (-6,-2,3), (-2,0,9), (4,0,9) (-2,-4,9), and (4,-4,9) (no two on the same element), plus the direction numbers (0 : 0 : 1) of an element. The inside of this cylinder is specified by the side index 1.0. The input is:

BF	BSN	B	SN	BN	BSI	
4	10	1	--	--	1.	
x_1	y_1	z_1	x_2	y_2	z_2	x_3
-6.	-2.	3.	-2.	0.	9.	-2.
y_3	z_3	x_4	y_4	z_4	x_5	y_5
-4.	9.	4.	0.	9.	4.	-4.
z_5	L	M	N			
9.	0.	0.	1.			

Boundary Surface #7 - Quadric - The seventh boundary surface, B(10,2), is the plane $z - 3 = 0$. Input Flag 5 and the ten coefficients A through J

LOCKHEED
CALIFORNIA COMPANY

of z -3 = 0 are used to define this surface. The reference point (0,0,0) is below the boundary plane; thus the side index -1.0 indicates the upper hemisphere of S(10). The input is:

BF	BSN	B	SN	BN	BSI	
5	10	2	--	--	-1.	
A	B	C	D	E	F	G
0.	0.	0.	0.	0.	0.	0.
H	I	J				
0.	1.	-3.				

Boundary Surface #8 - Duplicate Boundary Surface - The eighth boundary surface, B(8,1), is $x^2 + y^2 + z^2 - 1 = 0$. Since this is the same as boundary surface B(1,1), input Flag 6 and the surface number 1 plus the boundary number 1 define the boundary surface area. Side index 1.0 [(reference point for B(8,1) = reference point for B(1,1)] specifies the portion of S(8) contained within the sphere. The input is:

BF	BSN	B	SN	BN	BSI
6	8	1	1	1	1.

End of Boundary Block - A card giving input Flag 7 with a dummy surface and boundary numbers is required to close the block.

BF	BSN	B
7	11	1

Computation Control

Grid Point Computation and Storage - Surfaces S(1), S(2) and S(8) are used in shape factor or surface area computation. Therefore grid points must be computed and stored for these surfaces and the input is:

K		S(s)	S(t)
-1	No previously stored grid points	1	2
0	Previously stored S(1) and S(2) grid points are on tape	8	

Surface-to-Surface Shape Factor Without Interference - The shape factor F(1,2) from S(1) to S(2) is required with no interference. Therefore the input is:

K	S(s)	S(t)	NIS
1	1	2	0

LOCKHEED
CALIFORNIA COMPANY

Surface-to-Surface Shape Factor With Interference - To compute the shape factor F(1,2) with interference by S(8), the input is:

K	S(s)	S(t)	NIS
1	1	2	1
IS			
8			

Point-to-Surface Shape Factor Without Interference - To compute the point-to-surface shape factor P(1)F(1,2) from point P(1) with independent coordinates (0.,0.) on S(1) to S(2) without interference requires the control Flag 4, the surface numbers 1 and 2, the dependent variable z on S(1), the number of points, 1, the side index on S(1), the independent coordinates (0,0) of P(1), and the number of interfering surfaces 0. This is given in the form:

K	S(s)	S(t)	NIS
2	1	2	0
DV	NP	SSI	
3	1	-1.	
x_1	y_1	(Since z is dependent)	
0.	0.		

Point-to-Surface Shape Factor With Interference - The input for this case is a combination of the inputs for the surface-to-surface shape factor with interference and the point-to-surface shape factor. The input for the shape factor P(1)F(1,2) from point P(1) on S(1) with interference by S(8) is:

K	S(s)	S(t)	NIS
2	1	2	1
DV	NP	SSI	
3	1	-1.	
x_1	y_1		
0.	0.		
IS			
8			

LOCKHEED
CALIFORNIA COMPANY

Surface Area - Control Flag 3 and the surface number are required to obtain any surface areas not computed in the surface-to-surface shape factor routine. The input for the areas of S(2) and S(8) is:

K	S(s)
3	2
K	S(s)
3	8

End of Input - The end of input is signaled by a card with control Flag 4.

K
4

Discussion of Problem

The input sheets required for this problem and the computed output are given in Tables 6-1 and 6-2, respectively. Since this example problem is intended only to give samples of each type of input and output, the values computed are not discussed.

In reading the output, point Q = (x,y,z) appearing in the printout of the equations for surfaces S(1) through S(9) and all the boundary surfaces except B(1,1) and B(8,1) is the surface or boundary surface reference point. The numbers in the lines immediately below the reference point Q, which occur in the printout for surfaces S(2), S(4) S(6), S(7), S(8), and S(9), plus boundary surfaces B(2,1), B(4,1), B(4,2), and B(10,1), are the values obtained by substituting the coordinates of the surface points used to define the surface equation into the equation. If one or more of these values approaches the magnitude of the coefficients, the limited accuracy of the digital solution has probably resulted in an invalid equation. Note the machine discards the equation if any of these values exceeds 0.1. However, this inflexible test is not an absolute test, so these values should be compared with the size of the coefficients.

For the surface-to-surface shape factor, the first line headed by "DELS" gives the increments computed for the rectangle of the independent variables with the given GS. The second line gives the surface numbers s and t plus the product A(s)F(s,t). The third line gives the surface number s and the area, A(s), of S(s). The last line in this output gives the surface numbers s and t plus the value F(s,t).

LOCKHEED
CALIFORNIA COMPANY

TABLE 6-1

EXAMPLE #1 INPUT

GENERAL PURPOSE DATA SHEET — LOCKHEED-CALIFORNIA COMPANY, A DIVISION OF LOCKHEED AIRCRAFT CORPORATION

PREPARED | NAME | DATE | TITLE | PAGE OF | JOB NO.
CHECKED | WO | EWA | GROUP

SEQ. (77–80)	1–10	11–20	21–30	31–40	41–50	51–60	61–70	ID (73–76)
001	-1	1	3	1	0			
002	-1.	-1.	1.	-1.	1.	16.		
003	0.	0.	0.	0.	0.	0.	0.	
004	0.	1.	0.					
005	0	2	3	2	0			
006	1.	0.	2.	-2.	2.	15.		
007	2.	0.	0.	0.	3.	0.	0.	
008	0.	-4.						
009	1	3	1	0	0			
010	1.							
011	0.	0.	0.	1.				
012	2	4	1	2	0			
013	1.							
014	7.	0.	0.	7.	-5.	5.	7.	
015	1.	5.	-2.	4.	5.			
016	3	5	1	0	0			
017	1.							
018	1.	1.	-4.	2.	-1.	-2.	3.	
019	4	6	1	0	0			
020	1.							
021	1.	1.	2.	-3.	0.	0.	4.	
022	2.	1.	0.	1.	0.			
023	5	7	3	0	0			
024	-1.							
025	0.	0.	8.	0.	6.	10.	0.	

LOCKHEED CALIFORNIA COMPANY

TABLE 6-1 (Continued)

GENERAL PURPOSE DATA SHEET | LOCKHEED-CALIFORNIA COMPANY, A DIVISION OF LOCKHEED AIRCRAFT CORPORATION | PAGE 2 OF

PREPARED | NAME | DATE | TITLE | JOB NO.

CHECKED | WO | EWA | GROUP

SEQ. (77–80)	1–10	11–20	21–30	31–40	41–50	51–60	61–70	ID (73–76)
026	-6.	10.	0.	15.	17.	0.	-15.	
027	7.	1.	0.	0.				
028	6	9	3	1	0			
029	1.	-.97175	.97175	-.97175	.97175	15.		
030	0.	0.	0.	0.	0.	0.	-2.	
031	2.	-2.	0.	-2.	-1.	0.	0.	
032	1.							
033	7	9	2	0	0			
034	1.							
035	0.	0.	0.	30.	0.	2.	-6.	
036	6.	2.	12.	15.	2.	12.	-3.	
037	2.	12.	6.	8.	12.	6.	-8.	
038	0.	0.	4.	24.	0.	4.		
039	8	10	3	2	4			
040	-1.							
041	9	11						
042	-1	1	1	3	0	1.		
043	0	2	1	0	0	1.		
044	0.	3.	0.	0.	0.	-4.		
045	1	4	1	0	0	1.		
046	1.	-2.	3.	7.	-5.	5.	7.	
047	1.	5.						
048	2	2	2	0	0	1.		
049	0.	0.	0.	0.	0.	1.	2.	
050	3	4	2	0	0	1.		

LOCKHEED CALIFORNIA COMPANY

TABLE 6-1 (Continued)

GENERAL PURPOSE DATA SHEET	LOCKHEED-CALIFORNIA COMPANY, A DIVISION OF LOCKHEED AIRCRAFT CORPORATION	PAGE OF
PREPARED / NAME / DATE	TITLE	JOB NO.
CHECKED	WO / EWA	GROUP

SEQ. (77–80)	1–10	11–20	21–30	31–40	41–50	51–60	61–70	ID (73–79)
051	7.	0.	0.	7.	1.	5.	7.	
052	-5.	5.	1.	0.	0.			
053	4	10	1	0	0	1.		
054	-6.	-2.	3.	-2.	0.	9.	-2.	
055	-4.	9.	4.	0.	9.	4.	-4.	
056	9.	0.	0.	1.				
057	5	10	2	0	0	-1.		
058	0.	0.	0.	0.	0.	0.	0.	
059	0.	1.	-3.					
060	6	8	1	1	1	1.		
061	7	11	5					
062	-1	1	2					
063	0	8						
064	1	1	2	0				
065	1	1	2	1				
066	6							
067	2	1	2					
068	3	1	-1.					
069	0.	0.						
070	2	1	2	1				
071	3	1	-1.					
072	0.	0.						
073	8							
074	3	2						
075	3	8						

TABLE 6-1 (Continued)

GENERAL PURPOSE DATA SHEET		LOCKHEED-CALIFORNIA COMPANY A DIVISION OF LOCKHEED AIRCRAFT CORPORATION	PAGE OF
PREPARED	NAME	DATE	TITLE	JOB NO.
CHECKED			AO EWA	GROUP

ID

SEQ.

TABLE 6-2. OUTPUT FOR EXAMPLE #1

```
   -1          1          3          1          0
-1.000     -1.000      1.000     -1.000      1.000     16.000
 0.         0.         0.         0.         0.         0.         0.
 0.         1.000      0.

  Q=(0,0,1)    FOR SURFACE NO.   1

 COEFFICIENTS FOR SURFACE NO.   1   A=    0.                B=    0.
 C=    0.                D=    0.                E=    0.                F=    0.
 G=    0.                H=    0.                I=    0.09999999E 01   J=    0.
    0          2          3          2          0
1.000      0.         2.000     -2.000      2.000     16.000
2.000      0.         0.         0.         3.000      0.         0.
0.        -4.000

  Q=(0,0,0)    FOR SURFACE NO.   2
     -0.                    0.74505806E-08      -0.

 COEFFICIENTS FOR SURFACE NO.   2   A=    0.                B=    0.
 C=    0.                D=    0.                E=    0.                F=    0.
 G=   -0.50000000E 00    H=   -0.33333333E-00    I=    0.25000000E-00    J=    0.09999999E 01
    1          3          1          0          0
1.000     -0.        -0.        -0.        -0.        -0.
0.         0.         0.         1.000

  Q=(0,0,0)    FOR SURFACE NO.   3

 COEFFICIENTS FOR SURFACE NO.   3   A=   -0.09999999E 01   B=   -0.09999999E 01
 C=   -0.09999999E 01   D=   -0.                E=   -0.                F=   -0.
 G=    0.                H=    0.                I=    0.                J=    0.09999999E 01
    2          4          1          2          0
1.000     -0.        -0.        -0.        -0.        -0.
7.000      0.         0.         7.000     -5.000      5.000      7.000
1.000      5.000     -2.000      4.000      5.000

  Q=(0,0,0)    FOR SURFACE NO.   4
      0.74505806E-08       0.67055225E-07       0.37252903E-07       0.52154064E-07

 COEFFICIENTS FOR SURFACE NO.   4   A=   -0.28571428E-01   B=   -0.28571428E-01
 C=   -0.28571428E-01   D=   -0.                E=   -0.                F=   -0.
 G=    0.57142852E-01   H=   -0.11428571E-00    I=    0.17142857E-00    J=    0.09999999E 01
    3          5          1          0          0
1.000     -0.        -0.        -0.        -0.        -0.
1.000      1.000     -4.000      2.000     -1.000     -2.000      3.000

  Q=(0,0,0)    FOR SURFACE NO.   5

 COEFFICIENTS FOR SURFACE NO.   5   A=    0.59652323E 07   B=    0.37282702E 07
 C=    0.37282702E 07   D=    0.29826161E 07   E=   -0.29826161E 07   F=    0.59652323E 07
 G=   -0.26843545E 08   H=    0.13421772E 08   I=    0.26843546E 08   J=    0.09999999E 01
    4          6          1          0          0
1.000     -0.        -0.        -0.        -0.        -0.
1.000      1.000      2.000     -3.000      0.         0.         4.000
2.000      1.000      0.         1.000      0.

  Q=(0,0,0)    FOR SURFACE NO.   6
      0.74505806E-08      -0.29802322E-07      -0.29802322E-07

 COEFFICIENTS FOR SURFACE NO.   6   A=   -0.66666670E-01   B=    0.
 C=   -0.66666670E-01   D=    0.                E=    0.                F=    0.
 G=    0.13333333E-00   H=   -0.                I=   -0.39999999E-00    J=    0.09999999E 01
    5          7          3          0          0
```

TABLE 6-2 (Continued)

```
-1.000    -0.       -0.       -0.       -0.       -0.

 0.        0.        8.000     0.        6.000    10.000     0.
-6.000    10.000     0.       15.000    17.000     0.       -15.000
17.000     1.000     0.        0.

  Q=(0,0,0)    FOR SURFACE NO.   7
       0.74505806E-08      0.14901161E-07      0.14901161E-07      0.17136335E-06      0.74505806E-08

 COEFFICIENTS FOR SURFACE NO.   7   A=    0.                B=    0.15624999E-01
 C=   -0.15624999E-01  D=    0.                E=    0.                F=    0.76889851E-09
 G=   -0.              H=   -0.76889851E-08  I=   -0.92267822E-08  J=    0.09999999E 01
    6          8          3          1          0
1.000    -0.972     0.972    -0.972     0.972    15.000
0.        0.        0.        0.        0.        0.       -2.000
2.000    -2.000     0.       -2.000    -1.000     0.        0.
1.000

  Q=(1,0,0)    FOR SURFACE NO.   8
       0.                  0.                  0.

 COEFFICIENTS FOR SURFACE NO.   8   A=    0.09999999E 01  B=    0.09999999E 01
 C=   -0.              D=   -0.              E=   -0.              F=   -0.
 G=   -0.              H=    0.              I=    0.40000000E 01  J=    0.
    7          9          2          0          0
1.000    -0.       -0.       -0.       -0.       -0.
0.        0.        0.       30.000     6.000     2.000    -6.000
6.000     2.000    12.000    15.000     2.000    12.000    -3.000
2.000    12.000     6.000     8.000    12.000     6.000    -4.000
0.        0.        4.000    24.000     0.        4.000

  Q=(1,0,0)    FOR SURFACE NO.   9
      -0.                 -0.28900253E-05     -0.38743019E-06     -0.37252903E-05      0.86426735E-06     -0.14305115E-05
      -0.80406967E-06      0.15497208E-05      0.41723251E-06

 COEFFICIENTS FOR SURFACE NO.   9   A=   -0.43478265E-01  B=   -0.17391306E-00
 C=   -0.39130437E-00  D=    0.                E=    0.14253286E-07  F=   -0.10366026E-06
 G=    0.10434783E 01  H=    0.20869566E 01  I=    0.15652178E 01  J=    0.
    8         10          3          2          4
-1.000    -0.       -0.       -0.       -0.       -0.

 COEFFICIENTS FOR SURFACE NO.  10   A=   -0.28571428E-01  B=   -0.28571428E-01
 C=   -0.28571428E-01  D=   -0.                E=   -0.                F=   -0.
 G=    0.57142852E-01  H=   -0.11428571E-00  I=    0.17142857E-00  J=    0.09999999E 01
    9         11          -0         -0         -0
```

TABLE 6-2 (Continued)

```
   -1          1          1          3          0      1.000


 COEFFICIENTS FOR BDRY NO.  1  OF SURFACE NO.   1   A=   -0.09999999E 01  B=   -0.09999999E 01
 C=   -0.09999999E 01  D=   -0.                E=   -0.                F=   -0.
 G=    0.              H=    0.                I=    0.                J=    0.09999999E 01
    0          2          1          0          0      1.000


 0.         3.000      0.         0.         0.        -4.000

Q=(0,0,0)  FOR BDRY NO. 1   OF SURFACE NO.  2
        0.74505806E-08      -0.

 COEFFICIENTS FOR BDRY NO.  1  OF SURFACE NO.   2   A=    0.                B=    0.
 C=    0.              D=    0.                E=    0.                F=    0.
 G=    0.34722222E-00  H=   -0.33333333E-00  I=    0.25000000E-00  J=    0.09999999E 01
    1          4          1          0          0      1.000


 1.000     -2.000      3.000      7.000     -5.000      5.000      7.000
 1.000      5.000

Q=(0,0,0)  FOR BDRY NO. 1   OF SURFACE NO.  4
        0.74505806E-08      0.74505806E-08      0.74505806E-08

 COEFFICIENTS FOR BDRY NO.  1  OF SURFACE NO.   4   A=   -0.                B=   -0.
 C=   -0.              D=   -0.                E=   -0.                F=   -0.
 G=    0.12500000E-00  H=   -0.                I=   -0.37500000E-00  J=    0.09999999E 01
    2          2          2          0          0      1.000
 0.         0.         0.         0.         0.        1.000      2.000

Q=(0,0,0)  FOR BDRY NO. 2   OF SURFACE NO.  2

 COEFFICIENTS FOR BDRY NO.  2  OF SURFACE NO.   2   A=   -0.25000000E-00  B=   -0.25000000E-00
 C=    0.              D=    0.                E=    0.                F=    0.
 G=    0.              H=   -0.                I=   -0.                J=    0.09999999E 01
    3          4          2          0          0      1.000
 7.000      0.         0.         7.000      1.000      5.000      7.000
-5.000      5.000      1.000      0.         0.

Q=(0,1,0)  FOR BDRY NO. 2   OF SURFACE NO.  4
       -0.                 0.                 0.23841858E-06

 COEFFICIENTS FOR BDRY NO.  2  OF SURFACE NO.   4   A=   -0.                B=    0.20000000E-00
 C=    0.20000000E-00  D=   -0.                E=   -0.                F=   -0.
 G=    0.              H=    0.79999999E 00  I=   -0.12000000E 01  J=   -0.
    4         10          1          0          0      1.000


-6.000     -2.000      3.000     -2.000      0.         9.000     -2.000
-4.000      9.000      4.000      0.         9.000      4.000     -4.000
 9.000      0.         0.         1.000

Q=(0,0,0)  FOR BDRY NO. 1   OF SURFACE NO. 10
        0.11920929E-06     -0.17881393E-06      0.23841858E-06     -0.26822090E-06      -0.

 COEFFICIENTS FOR BDRY NO.  1  OF SURFACE NO.  10   A=   -0.12500002E-00  B=   -0.12500001E 01
 C=   -0.              D=    0.13245481E-07  E=    0.                F=    0.
 G=    0.25000004E-00  H=   -0.50000008E 01  I=    0.                J=    0.09999999E 01
    5         10          2          0          0     -1.000
```

TABLE 6-2 (Continued)

```
0.        0.        0.        0.        0.        0.        0.

0.        1.000    -3.000

Q=(0,0,0)  FOR BDRY NO. 2   OF SURFACE NO. 10

 COEFFICIENTS FOR BDRY NO.  2  OF SURFACE NO.  10   A=   -0.              B=   -0.
 C=   -0.              D=   -0.              E=   -0.              F=   -0.
 G=   -0.              H=   -0.              I=   -0.33333333E-00  J=    0.09999999E 01
    6         8         1         1         1     1.000


 COEFFICIENTS FOR BDRY NO.  1  OF SURFACE NO.   8   A=   -0.09999999E 01  B=   -0.09999999E 01
 C=   -0.09999999E 01  D=   -0.              E=   -0.              F=   -0.
 G=    0.              H=    0.              I=    0.              J=    0.09999999E 01
    7        11         5        -0        -0    -0.
```


LOCKHEED
CALIFORNIA COMPANY

TABLE 6-2 (Continued)

```
      -1          1          2         -0         -0

  SURFACE NUMBER     1   WAS PUT ON TAPE

  SURFACE NUMBER     2   WAS PUT ON TAPE
       0          8         -0         -0         -0

UNDRFLOW AT 71533 IN MQ

UNDRFLOW AT 71535 IN MQ

  SURFACE NUMBER     8   WAS PUT ON TAPE
       1          1          2         -0         -0


  DELS        0.12500000E-00      0.12500000E-00      0.12500000E-00      0.25000000E-00

   S=  1    T=  2     A(S)F(S,T)=      0.11179877E 01

   S=  1     AREA (S)=      0.32500000E 01

   S=  1    T=  2      F(S,T)=      0.34399622E-00
       1          1          2          1         -0


  S=  1   T=  2     F(S,T) WITH INTERFERENCE BY SURFACE NOS.    8
  DELS        0.12500000E-00      0.12500000E-00      0.12500000E-00      0.25000000E-00

   S=  1    T=  2     A(S)F(S,T)=      0.21719380E-00

   S=  1     AREA (S)=      0.32500000E 01

   S=  1    T=  2      F(S,T)=      0.66828864E-01
       2          1          2         -0         -0


       3          1    -1.000
   0.         0.

   I=  1   S=  1   T=  2   P(I)F(S,T)=      0.34892590E-00
     POINT ON S IS X(I)=      0.              Y(I)=      0.              Z(I)=     -0.
       2          1          2          1         -0


       3          1    -1.000
   0.         0.
  S=  1   T=  2     F(S,T) WITH INTERFERENCE BY SURFACE NOS.    8

   I=  1   S=  1   T=  2   P(I)F(S,T)=      0.25431155E-00
     POINT ON S IS X(I)=      0.              Y(I)=      0.              Z(I)=     -0.
       3          2         -0         -0         -0
```


LOCKHEED
CALIFORNIA COMPANY

TABLE 6-2 (Continued)

```
S=  2      AREA (S)=      0.16434066E 02
    3          8        -0          -0          -0

S=  8      AREA (S)=      0.31403464E 01
    4         -0        -0          -0          -0
```


LOCKHEED
CALIFORNIA COMPANY

For the point-to-surface shape factor P(i)F(s,t), the first line gives the point number i, the surface numbers s and t, plus the shape factor. The second line gives the coordinates of P(i) in the format "POINT ON S IS X(I)=_____Y(I)=_____Z(I)=_____". If interfering surfaces are given, the interference printout described above is added in front of the first line.

The surface area printout is simply the surface number s and the area A(s).

EXAMPLE PROBLEM #2

The second example problem approximates a typical rocket nozzle and storage sphere problem. Three surfaces are involved. The first is a frustrum of a cone, two units high, with bases of .75 units radius and 1.25 units radius. The second is a cylinder with a radius of .75 units on a common axis with the cone starting at the small end of the cone and extending 1.75 units below the cone. The third surface is a sphere of radius 1/2 whose center is 2 units from the axis of the cone cylinder combination and .75 units below their junction. This geometry is illustrated in Figure 6-11. The shape factors from cone to sphere, from sphere to cylinder, and from cylinder to cone are computed. This means that the three areas and the three AF products are all computed. Thus division of each of the AF products by the corresponding surface areas yields the remaining three shape factors.

Surface Input

Cone - The first four surfaces in the input are all parts of the cone $256x^2 + 256y^2 - 16z^2 - 72z - 81 = 0$. Surfaces S(1) and S(2) give the required frustrum of the cone while S(3) and S(4) each give one-half of the given area.

S(1) is defined by input Flag 6 for a quadric of revolution, the axis point (0,0,.75), the three surface points (0,.75,.75), (0,1,1.75), and (0,1.25,2.75), plus the axis point (0,0,2.75). The dependent variable for S(1) is y and one boundary is used. The reference point (0,0,0) is inside the cone, hence the convex (outer) surface requires a side index of -1.0. The limits on the independent variables are $-1.25 \leq x \leq 1.25$ and $.75 \leq z \leq 2.75$, while GS is set equal to 15.

LOCKHEED
CALIFORNIA COMPANY

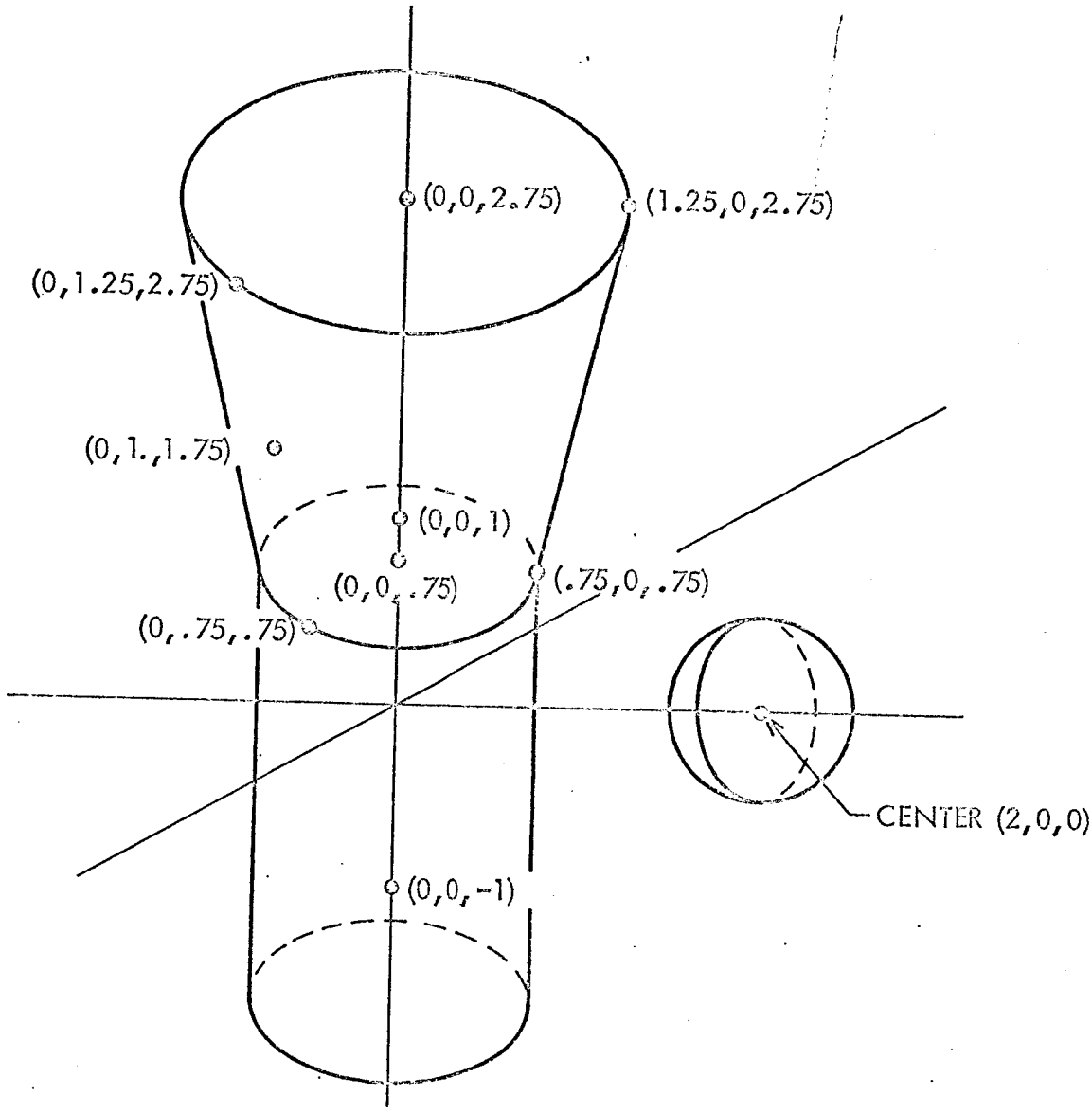

S_1 = CONE $256x^2 + 256y^2 - 16z^2 - 72z - 81 = 0$

S_2, S_3, S_4 = PARTS OF SAME CONE - DIFFERENT VARIABLES

S_5 = SPHERE $4x^2 + 4y^2 + 4z^2 - 16x + 15 = 0$, CENTER (2,0,0), RADIUS .5

S_9 = CYLINDER $16x^2 + 16y^2 - 9 = 0$

S_{10}, S_{11} = PARTS OF SAME CYLINDER - DIFFERENT VARIABLES

Figure 6-11. Example Problem #2

LOCKHEED
CALIFORNIA COMPANY

S(2) is defined by input Flag 8 and the surface number 1 of S(1). The dependent variable is z which changes the limits on the independent variables to $-1.25 \leqq x \leqq 1.25$ and $-1.25 \leqq y \leqq 1.25$. The two planes comprising the boundary B(1,1) are separated and listed as two boundaries. The side index and GS remain unchanged.

S(3) is defined by input Flag 8 and the surface number 1 of S(1). The dependent variable on this half of the cone is x. Two boundaries are used, the new one being the perpendicular planes $x - y = 0$ and $x + y = 0$, which are combined in the single boundary surface $x^2 - y^2 = 0$. The surfaces S(3) and S(4), with this boundary, are shown in Figure 6-12. With x dependent and the given boundaries, the limits on the independent variables are $-1.25 \times \sqrt{2}/2 = -.8838838 \leqq y \leqq .8838838 = 1.25 \times \sqrt{2}/2$ and $.75 \leqq z \leqq 2.75$. The side index and GS remain unchanged.

S(4) is defined by input Flag 8 and the surface number 1. The dependent variable on this half of the cone is y with limits $-.8838838 \leqq x \leqq .8838838$ and $.75 \leqq z \leqq 2.75$ on the independent variables. The number of boundaries, the side index and GS are unchanged.

<u>Sphere</u> - The next four surfaces all lie on the sphere $4x^2 + 4y^2 + 4z^2 - 16x + 15 = 0$. S(5) gives the complete sphere while S(6), S(7), and S(8) divide the sphere into approximately equal subsurfaces each with a different dependent variable (Figure 6-13).

S(5) is defined by input Flag 1, the coordinates (2,0,0) of the center, and the radius R = .5. The dependent variable is x and no boundaries are required. This sphere does not contain its reference point (0,0,0), thus the side index 1.0 indicates the outside. The limits are $-.5 \leqq y \leqq .5$ and $-.5 \leqq z \leqq .5$ for the independent variables and GS is 16.

S(6) is given by Flag 8 and the surface number 5. One boundary, the cone $x^2 - y^2 - z^2 - 4x + 4 = 0$, is used which cuts the limits on the independent variables to $-.5 \times \sqrt{2}/2 = -.3535535 \leqq y \leqq .3535535 = .5 \times \sqrt{2}/2$ and $-.3535535 \leqq z \leqq .3535535$. The dependent variable, side index, and GS are unchanged.

S(7) is given by Flag 8 and the surface number 5. The dependent variable on S(7) is y. Two boundaries, the cone $x^2 - y^2 - z^2 - 4X + 4 = 0$

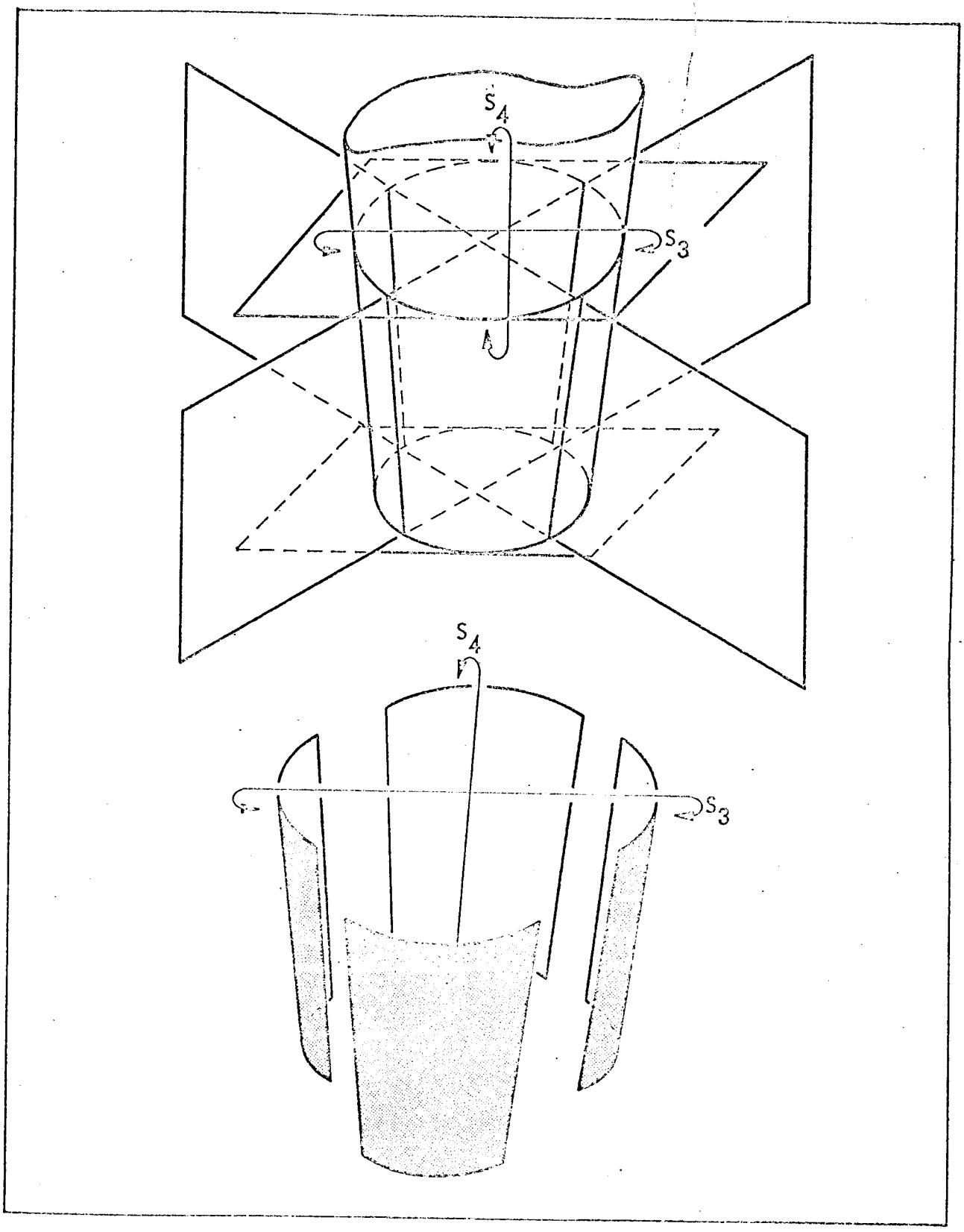

Figure 6-12. Example Problem #2 - Partitioned Cone

LOCKHEED
CALIFORNIA COMPANY

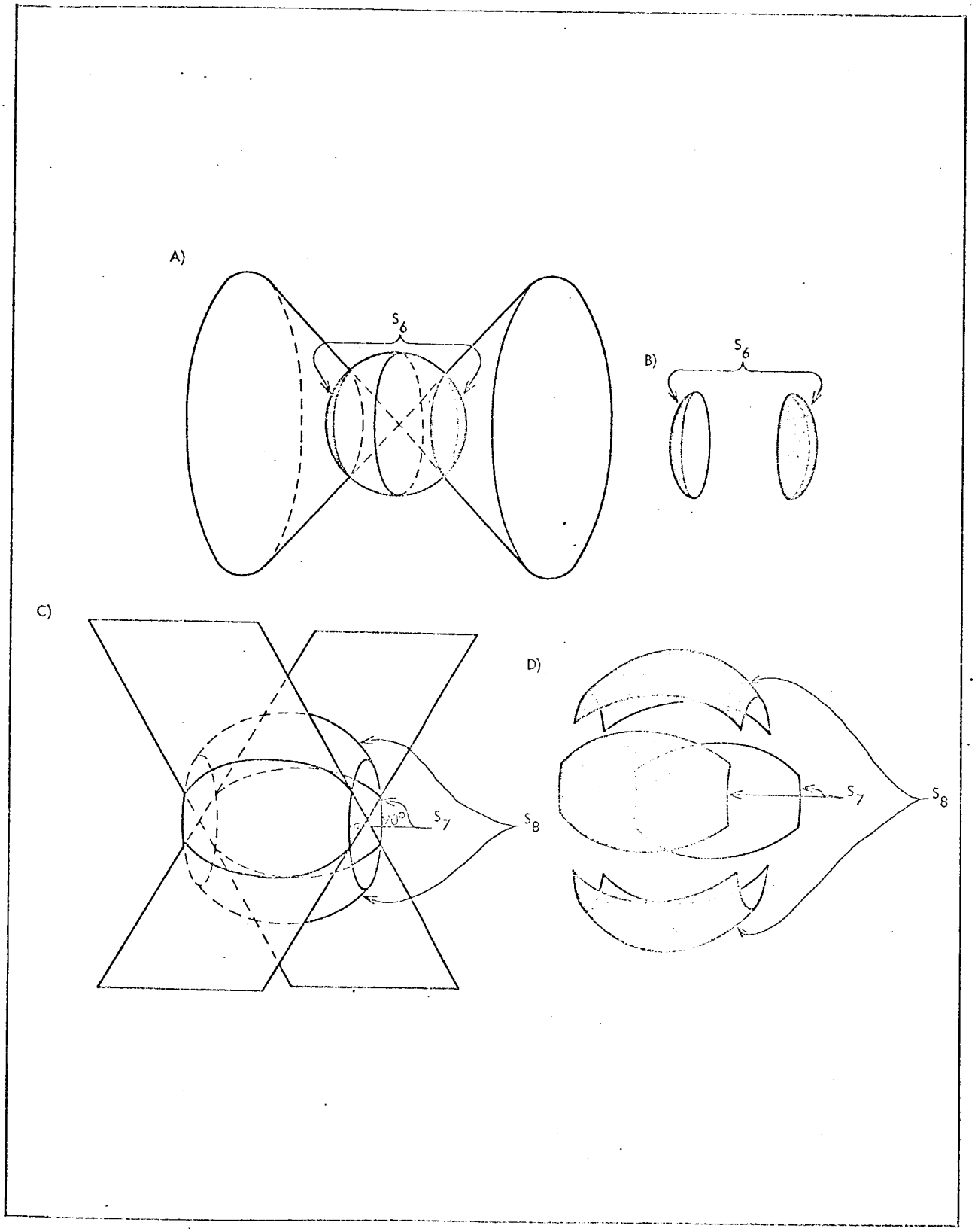

Figure 6-13. Example Problem #2 - Partitioned Sphere

LOCKHEED
CALIFORNIA COMPANY

and the surface $y^2 - z^2 = 0$ consisting of both the planes $y - z = 0$ and $y + z = 0$, are required. The limits on the independent variables are $2 - .3535535 = 1.646446 \leqq x \leqq 2.353554 = 2 + .5 \times \sqrt{2}/2$ and $-.3535535 \leqq z \leqq .3535535$. The side index and GS are unchanged.

S(8) is defined by input Flag 8 and the surface number 5. The dependent variable is z. The limits on the independent variables are $1.646446 \leqq x \leqq 2.353554$ and $-.3535535 \leqq y \leqq .3535535$. The number of boundaries, the side index, and GS are the same as for S(7).

Cylinder - The last three surfaces all lie on the cylinder $16x^2 + 16y^2 - 9 = 0$. S(9) gives the complete cylinder, while S(10) and S(11) each give one-half of the cylinder (Figure 6-14).

S(9) is defined by input Flag 3, the axis points (0,0,-1) and (0,0,1), plus the radius R = .75. The dependent variable is x and one boundary is required. The reference point (0,0,0) is inside the cylinder, so side index -1.0 is required for the outside. The limits are $-.75 \leqq y \leqq .75$ and $-1 \leqq z \leqq .75$ on the independent variables, while GS = 16.

S(10) is given by Flag 8 and the surface number 9. Two boundaries are required, the new one being $x^2 - y^2 = 0$. The limits on the independent variables are $-.75 \times \sqrt{2}/2 = -.5303303 \leqq y \leqq .5303303$ and $-1 \leqq z \leqq .75$. The dependent variable, side index and GS are unchanged.

S(11) is given by Flag 8 and the surface number 9. The dependent variable is y and the limits are $-.5303303 \leqq x \leqq .5303303$ and $-1 \leqq z \leqq .75$ on the independent variables. The number of boundaries, the side index and GS are unchanged.

Boundary Input

Boundaries of the Cone - The frustrum of the cone is bounded top and bottom by the surface $16z^2 - 56z + 33 = 0$, consisting of the two parallel planes $z - .75 = 0$ and $z - 2.75 = 0$. The subsections S(3) and S(4) (Figure 6-12) of the cone are separated by the surface $x^2 - y^2 = 0$, composed of the perpendicular planes $x - y = 0$ and $x + y = 0$.

Boundary B(1,1), the surface $16z^2 - 56z + 33 = 0$, is defined by input Flag 5 and the ten coefficients A through J of the equation. The reference point (0,0,0) for this boundary surface is below the lower surface $z - .75 = 0$

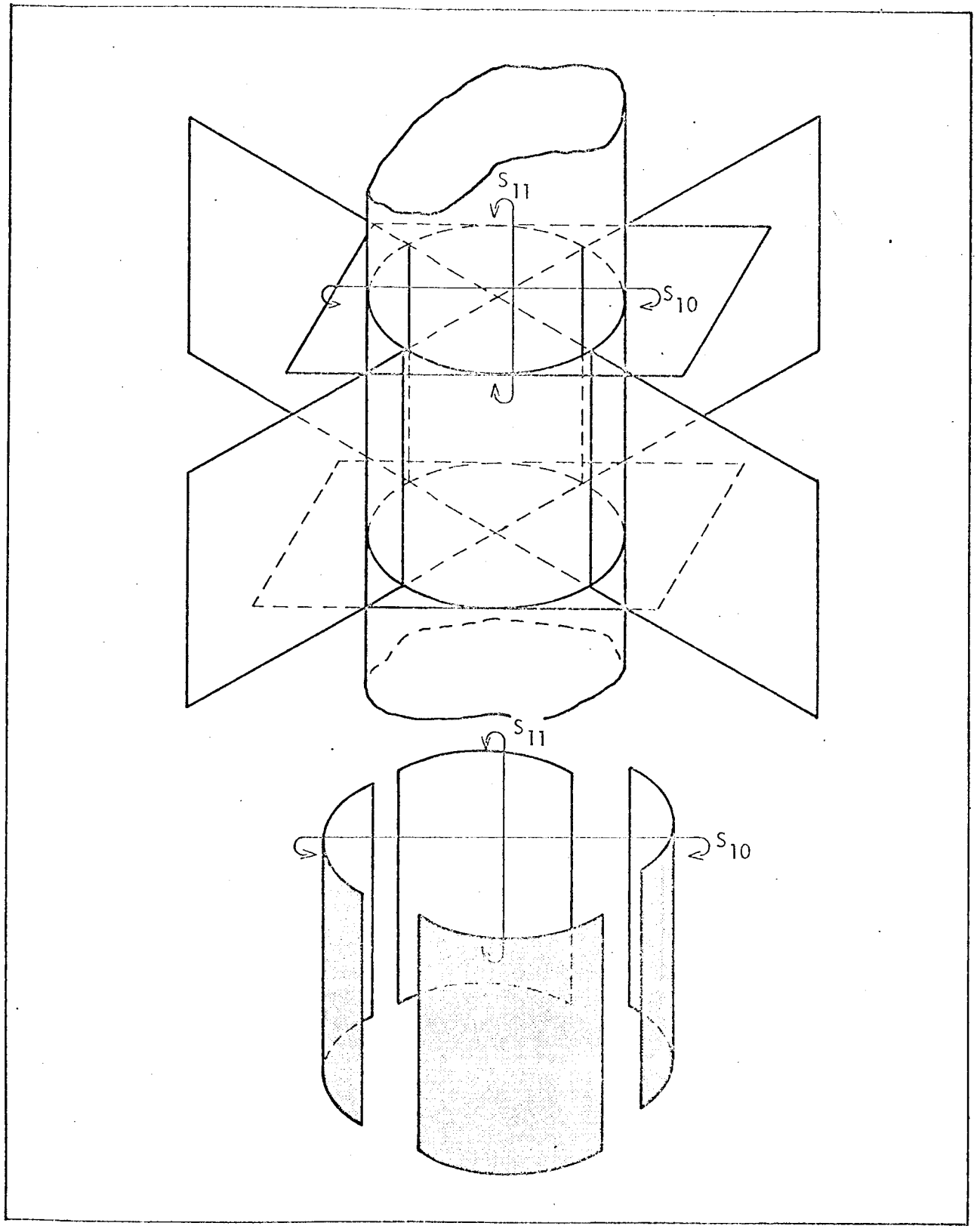

Figure 6-14. Example Problem #2 - Cylinder

LOCKHEED
CALIFORNIA COMPANY

while the required portion of the cone is between the planes $z - .75 = 0$ and $z - 2.75 = 0$. Therefore, the side index is -1.0.

B(3,1) and B(4,1) duplicate B(1,1) and are given by input Flag 6 the surface number 1, and the boundary number 1. The side indicies remain -1.0.

B(2,1) consists of the lower plane $z - .75 = 0$ of the surface $16z^2 - 56z + 33 = 0$. This boundary surface is defined by input Flag 1 and the three noncolinear points (0,0,.75), (0,.75,.75), and (.75,0,.75) on the boundary surface.

The reference point (0,0,0) is below the plane and the required portion of the cone is above it; therefore the side index is -1.0.

B(2,2) is the upper plane $z - 2.75 = 0$. It is defined by input Flag 1 and the three non-colinear points (0,0,2.75), (0,1.25,2.75), and (1.25,0,2.75) on the boundary plane. The reference point and the required surface area are both below $z - 2.75 = 0$, so the side index is 1.0.

B(3,2) consists of the two perpendicular planes $x - y = 0$ and $x + y = 0$ combined in the surface $x^2 - y^2 = 0$. This boundary surface is defined by input Flag 5 and the 10 coefficients A through J of the equation $x^2 - y^2 = 0$. The reference point for boundary surface B(3,2) is (1,0,0) and the side index 1.0 specifies the two opposed sections of the cone required for S(3).

B(4,2) is the same as B(3,2), so it is defined by input Flag 6, the surface number 3, and the boundary surface number 2. The remaining two sections of the cone are represented by S(4) and are defined by a side index -1.0.

<u>Boundaries on the Sphere</u> - The three subsections S(6), S(7) and S(8) of the sphere are separated by two boundary surfaces. The cone $x^2 - y^2 - z^2 - 4x + 4 = 0$ divides the sphere into three vertical slices. The two outside slices (Figure 6-13) form S(6). The perpendicular planes $y - z = 0$, $y + z = 0$, given by the single surface $y^2 - z^2 = 0$, separate the center slice into four equal parts, two opposed sections apiece for S(7) and S(8).

B(6,1), the cone $x^2 - y^2 - z^2 - 4x + 4 = 0$, is defined by the input Flag 5 and the ten coefficients A through J of the equation. The side index 1.0 and the reference point (0,0,0) define the two end slices of the sphere.

B(7,1) and B(8,1) are the same cone defined by input Flag 6, the surface number 6 and the boundary surface number 1. On these two surfaces,

the center slice of the sphere is required so the side index is -1.0

B(7,2) is the surface $y^2 - z^2 = 0$ which is defined by input Flag 5 and the 10 coefficients A through J of the equation. The side index for the two sections of S(7) is 1.0.

B(8,2) duplicates B(7,2), with input Flag 6, the surface number 7, and the boundary surface number 2. The side index for S(8) is -1.0.

Boundaries on the Cylinder - The cylinder, surfaces S(9), S(10), and S(11), are bounded on the top and bottom by the surface $4z^2 + z - 3 = 0$ composed of the parallel planes $z + 1 = 0$ and $z - .75 = 0$. The two sections of the cylinder S(10) and S(11) are separated by the same surface, $x^2 - y^2 = 0$, that separates the two halves S(3) and S(4) of the cone (Figure 6-14).

B(9,1) is the surface $4z^2 + z - 3 = 0$ which is defined by the input Flag 5 and the ten coefficients of $4z^2 + z - 3 = 0$. The required area of the cylinder and the reference point (0,0,0) both lie between the boundary planes $z + 1 = 0$ and $z - .75 = 0$. Therefore, the side index is 1.0.

B(10,1) and B(11,1) duplicate B(9,1), using input Flag 6, the surface number 9, and the boundary surface number 1.

B(10,2), the surface $x^2 - y^2 = 0$, is defined as a quadric cylinder by input Flag 4, the five surface points (0,0,0), (1,1,0), (2,2,0), (1,-1,0), and (-2,2,0), no two on the same element, plus the direction numbers (0 : 0 : 1) of an element. The two sections of S(10) are given by the side index 1.0.

B(11,2) duplicates B(10,2) with input Flag 6, the surface number 10, and the boundary number 2. As the two remaining sections (not in S(10)) are required for S(11); the side index is -1.0.

Computation Control

Grid points are required for all eleven surfaces. The shape factors F(2,5), F(9,2), and F(5,9) are required for the complete surfaces. The equivalent shape factors F(3,6), F(3,7), F(3,8), F(4,6), F(4,7), F(4,8), F(6,10), F(6,11), F(7,10), F(7,11), F(8,10), F(8,11), F(10,3), and F(10,4) in terms of the subsurfaces are also computed for comparison. Note that by symmetry F(11,3) equals F(10,4) and F(11,4) equals F(10,3), so these are not computed.

LOCKHEED
CALIFORNIA COMPANY

Discussion of the Problem

The input sheets for this problem and the output are found in Tables 6-3 and 6-4, respectively.

The relative accuracy of the computed values of the shape factors and the shape factor area products are evaluated in terms of the accuracy of the area computations.

The areas A(1) of S(1) and A(11) of S(11) are also computed for comparison.

The values for the area of the cone give the most striking example of the effect of the choice of dependent variables on the computed areas. The area on S(1) is computed as 238, while the area on S(2) is 12.4 and the sum of the areas on S(3) and S(4) is 12.7. Since the area of the frustrum of a cone can be computed exactly, these numbers can be compared with the actual area. The area of the cone to one decimal is 12.9. Thus, the astronomical area computed for S(1) with y-dependent is in error by a factor of slightly over 18. With z-dependent, the area of S(2) shows an error of 3.9% while the division of the cylinder into two sections S(3) with x-dependent and S(4) with y-dependent reduces the error to 1.5%. Similarly, the area on the sphere S(5) is 3.30, the area on the partitioned sphere 3.22 while the actual area is 3.14. For the cylinder S(9), the area is 7.46 but the partitioned cylinder gives the exact (to two decimals) area 8.24.

Since the AF product is an additive quantity, the value of this product and hence the shape factor can be obtained for the partitioned surfaces by adding AF products, adding areas and then dividing the total AF product by the total area. For example, in computing the AF product from the cone to the sphere, the total AF product is obtained by adding A(3)F(3,6), A(3)F(3,7), A(3)F(3,8), A(4)F(4,6), A(4)F(4,7), and A(4)F(4,8). This is divided by the total area of the cone which is given by the sum of A(3) and A(4) to give the shape factor from cone to sphere. Note that the shape factors themselves are not additive.

The AF products from cone to sphere are .124 with single dependent variable or .132 for the partitioned surfaces. The AF product from the cylinder to cone shows more variation as would be expected since the points on the lines

TABLE 6-3

EXAMPLE #2 INPUT

GENERAL PURPOSE DATA SHEET

LOCKHEED-CALIFORNIA COMPANY
A DIVISION OF LOCKHEED AIRCRAFT CORPORATION

PREPARED | NAME | DATE | TITLE | CHECKED | GROUP | PAGE OF | JOB NO.

SEQ. | ID

Card	Field 1	Field 2	Field 3	Field 4	Field 5	Field 6	Field 7	Field 8	Field 9	Field 10
001		6		1		2		1		0
002	-1.		-1.25		1.25		.75		2.75	15.
003	0.		0.		.75		0.		.75	.75	0.
004	1.		1.75		0.		1.25		2.75	0.	0.
005	0.	.75								
006		8		2		3		2		1
007	-1.		-1.25		1.25		-1.25		1.25	15.
008		8		3		1		2		1
009	-1.		-.8838838		.8838838		.75		2.75	15.
010		8		4		2		2		1
011	-1.		-.8838838		.8838838		.75		2.75	15.
012		1		5		1		0		0
013	1.		-.5		.5		-.5		.5	16.
014	0.		0.		0.		.5			
015		8		6		1		1		5
016	1.		-.3535535		.3535535		-.3535535		.3535535	16.
017		3		7		2		2		5
018	1.		1.646446		2.353554		-.3535535		.3535535	16.
019		8		8		3		2		5
020	1.		1.646446		2.353554		-.3535535		.3535535	16.
021		3		9		1		1		0
022	-1.		-.75		.75		-1.		.75	16.
023	0.		0.		-1.		0.		0.	1.	.75
024		3		10		1		2		9
025	-1.		-.5303303		.5303303		-1.		.75	16.

TABLE 6-3 (Continued)

GENERAL PURPOSE DATA SHEET | LOCKHEED-CALIFORNIA COMPANY, A DIVISION OF LOCKHEED AIRCRAFT CORPORATION

PREPARED | NAME | DATE | TITLE | PAGE OF
CHECKED | W.O. | EWA | JOB NO. | GROUP

SEQ.	1–10	11–20	21–30	31–40	41–50	51–60	61–70
026	8	11	2	2	9		
027	-1.	-.5303303	.5303303	-1.	.75	16.	
028	9	18					
029	5	1	1	0	0	-1.	
030	0.	0.	16.	0.	0.	0.	
031	0.	-56.	33.				
032	1	2	1	0	0	-1.	
033	0.	0.	.75	0.	.75	.75	.75
034	0.	.75					
035	1	2	2	0	0	1.	
036	0.	0.	2.75	0.	1.25	2.75	1.25
037	0.	2.75					
038	6	5	1	1	1	-1.	
039	5	3	2	0	0	1.	
040	1.	-1.	0.	0.	0.	0.	0.
041	0.	0.	0.				
042	6	4	1	1	1	-1.	
043	6	4	2	3	2	-1.	
044	5	6	1	0	0	1.	
045	1.	-1.	-1.	0.	0.	0.	-4.
046	0.	0.	1.				
047	6	7	1	6	1	-1.	
048	5	7	2	0	0	1.	
049	0.	1.	-1.	0.	0.	0.	0.
050	0.	0.	0.				

LOCKHEED
CALIFORNIA COMPANY

TABLE 6-3 (Continued)

GENERAL PURPOSE DATA SHEET

LOCKHEED-CALIFORNIA COMPANY, A DIVISION OF LOCKHEED AIRCRAFT CORPORATION

PREPARED | CHECKED | NAME | DATE | TITLE | NO. | EVA | GROUP | PAGE | OF | JOB NO.

SEQ.	1	5	10	15	20	25	30	35	40	45	50	55	60	65	70	72	ID 73	76
77 80																		
051			6		9		1		6		1	-1.						
052			6		9		2		7		2	-1.						
053			5		9		1		0		0	1.						
054	0.		0.		4.		0.		0.		0.		0.					
055	0.		1.		-3.													
056			6		10		1		9		1	1.						
057			4		10		2		0		0	1.						
058	0.		0.		0.		1.		1.		0.		2.					
059	2.		0.		1.		-1.		0.		-2.		2.					
060	0.		0.		0.		1.											
061			5		11		1		10		1	1.						
062			6		11		2		10		2	-1.						
063			7		12		5											
064			-1		1		3											
065			0		3		4											
066			0		5		6											
067			0		7		9											
068			0		9		10											
069			0		11													
070			1		2		5											
071			1		9		5											
072			1		5		9											
073			1		3		9											
[illegible]			1		3		7											
075			1		3		8											

TABLE 6-3 (Continued)

GENERAL PURPOSE DATA SHEET

LOCKHEED-CALIFORNIA COMPANY
A DIVISION OF LOCKHEED AIRCRAFT CORPORATION

PREPARED | NAME | DATE | TITLE | PAGE OF
CHECKED | | | WO EWA | JOB NO.
GROUP

ID	SEQ.	1	5	10	15	20	25	30	35	40	45	50	55	60	65	70	73	77
	076			1		4		4										
	077			1		4		7										
	078			1		11		5										
	079			1		10		3										
	080			1		10		4										
	081			1		10		10										
	082			1		7		10										
	083			1		5		10										
	084			1		6		11										
	085			1		7		11										
	086			1		8		11										
	087			1		7												
	088			5		11												
	089			3														
	090			4														

TABLE 6-4. OUTPUT FOR EXAMPLE #2

```
     6          1          2          1          0
-1.000     -1.250      1.250      0.750      2.750     15.000
 0.         0.         0.750      0.         0.750      0.750      0.
 1.000      1.750      0.         1.250      2.750      0.         0.
 2.750

  Q=(0,0,0)    FOR SURFACE NO.   1
      -0.14901161E-07     -0.74505806E-07     -0.20861626E-06

  COEFFICIENTS FOR SURFACE NO.   1   A=   -0.31604939E 01  B=   -0.31604939E 01
  C=    0.19753082E-00  D=    0.              E=    0.              F=    0.
  G=    0.              H=   -0.              I=    0.88888900E 00  J=    0.09999999E 01
     8          2          3          2          1
-1.000     -1.250      1.250     -1.250      1.250     15.000

  COEFFICIENTS FOR SURFACE NO.   2   A=   -0.31604939E 01  B=   -0.31604939E 01
  C=    0.19753082E-00  D=    0.              E=    0.              F=    0.
  G=    0.              H=   -0.              I=    0.88888900E 00  J=    0.09999999E 01
     8          3          1          2          1
-1.000     -0.884      0.884      0.750      2.750     15.000

  COEFFICIENTS FOR SURFACE NO.   3   A=   -0.31604939E 01  B=   -0.31604939E 01
  C=    0.19753082E-00  D=    0.              E=    0.              F=    0.
  G=    0.              H=   -0.              I=    0.88888900E 00  J=    0.09999999E 01
     8          4          2          2          1
-1.000     -0.884      0.884      0.750      2.750     15.000

  COEFFICIENTS FOR SURFACE NO.   4   A=   -0.31604939E 01  B=   -0.31604939E 01
  C=    0.19753082E-00  D=    0.              E=    0.              F=    0.
  G=    0.              H=   -0.              I=    0.88888900E 00  J=    0.09999999E 01
     1          5          1          0          0
 1.000     -0.500      0.500     -0.500      0.500     16.000
 2.000      0.         0.         0.500

  Q=(0,0,0)    FOR SURFACE NO.   5

  COEFFICIENTS FOR SURFACE NO.   5   A=    0.26666667E-00  B=    0.26666667E-00
  C=    0.26666667E-00  D=    0.              E=    0.              F=    0.
  G=   -0.10666666E 01  H=   -0.              I=   -0.              J=    0.09999999E 01
     8          6          1          1          5
 1.000     -0.354      0.354     -0.354      0.354     16.000

  COEFFICIENTS FOR SURFACE NO.   6   A=    0.26666667E-00  B=    0.26666667E-00
  C=    0.26666667E-00  D=    0.              E=    0.              F=    0.
  G=   -0.10666666E 01  H=   -0.              I=   -0.              J=    0.09999999E 01
     8          7          2          2          5
 1.000      1.646      2.354     -0.354      0.354     16.000

  COEFFICIENTS FOR SURFACE NO.   7   A=    0.26666667E-00  B=    0.26666667E-00
  C=    0.26666667E-00  D=    0.              E=    0.              F=    0.
  G=   -0.10666666E 01  H=   -0.              I=   -0.              J=    0.09999999E 01
     8          8          3          2          5
 1.000      1.646      2.354     -0.354      0.354     16.000

  COEFFICIENTS FOR SURFACE NO.   8   A=    0.26666667E-00  B=    0.26666667E-00
  C=    0.26666667E-00  D=    0.              E=    0.              F=    0.
  G=   -0.10666666E 01  H=   -0.              I=   -0.              J=    0.09999999E 01
     3          9          1          1          0
-1.000     -0.750      0.750     -1.000      0.750     16.000
 0.         0.        -1.000      0.         0.         1.000      0.750

  Q=(0,0,0)    FOR SURFACE NO.   9
```

TABLE 6-4 (Continued)

```
COEFFICIENTS FOR SURFACE NO.   9   A=   -0.17777777E 01  B=   -0.17777777E 01
C=    0.              D=    0.              E=    0.              F=    0.
G=    0.              H=   -0.              I=   -0.              J=    0.09999999E 01
    8         10         1         2         9
-1.000    -0.530     0.530    -1.000     0.750    16.000

COEFFICIENTS FOR SURFACE NO.  10   A=   -0.17777777E 01  B=   -0.17777777E 01
C=    0.              D=    0.              E=    0.              F=    0.
G=    0.              H=   -0.              I=   -0.              J=    0.09999999E 01
    8         11         2         2         9
-1.000    -0.530     0.530    -1.000     0.750    16.000

COEFFICIENTS FOR SURFACE NO.  11   A=   -0.17777777E 01  B=   -0.17777777E 01
C=    0.              D=    0.              E=    0.              F=    0.
G=    0.              H=   -0.              I=   -0.              J=    0.09999999E 01
    9         12        -0        -0        -0
```


LR 18905

TABLE 6-4 (Continued)

```
     5         1         1         0         0    -1.000

 0.        0.       15.000     0.        0.        0.        0.
 0.      -56.000    33.000

Q=(0,0,0)  FOR BDRY NO. 1   OF SURFACE NO.  1

  COEFFICIENTS FOR BDRY NO.  1  OF SURFACE NO.   1   A=    0.              B=    0.
  C=    0.48484848E-00  D=    0.              E=    0.              F=    0.
  G=    0.              H=    0.              I=   -0.16969696E 01  J=    0.09999999E 01
     1         2         1         0         0    -1.000

 0.        0.        0.750     0.        0.750     0.750     0.750
 0.        0.750

Q=(0,0,0)  FOR BDRY NO. 1   OF SURFACE NO.  2
        0.74505806E-08      0.74505806E-08      0.74505806E-08

  COEFFICIENTS FOR BDRY NO.  1  OF SURFACE NO.   2   A=    0.              B=    0.
  C=    0.              D=    0.              E=    0.              F=    0.
  G=    0.              H=    0.              I=   -0.13333333E 01  J=    0.09999999E 01
     1         2         2         0         0     1.000
 0.        0.        2.750     0.        1.250     2.750     1.250
 0.        2.750

Q=(0,0,0)  FOR BDRY NO. 2   OF SURFACE NO.  2
        0.74505806E-08      0.74505806E-08      0.74505806E-08

  COEFFICIENTS FOR BDRY NO.  2  OF SURFACE NO.   2   A=    0.              B=    0.
  C=    0.              D=    0.              E=    0.              F=    0.
  G=    0.              H=    0.              I=   -0.36363636E-00  J=    0.09999999E 01
     6         3         1         1         1    -1.000


  COEFFICIENTS FOR BDRY NO.  1  OF SURFACE NO.   3   A=    0.              B=    0.
  C=    0.48484848E-00  D=    0.              E=    0.              F=    0.
  G=    0.              H=    0.              I    -0.16969696E 01  J=    0.09999999E 01
     5         3         2         0         0     1.000
 1.000    -1.000     0.        0.        0.        0.        0.
 0.        0.        0.

Q=(1,0,0)  FOR BDRY NO. 2   OF SURFACE NO.  3

  COEFFICIENTS FOR BDRY NO.  2  OF SURFACE NO.   3   A=    0.09999999E 01  B=   -0.09999999E 01
  C=    0.              D=    0.              E=    0.              F=    0.
  G=    0.              H=    0.              I=    0.              J=    0.
     6         4         1         1         1    -1.000


  COEFFICIENTS FOR BDRY NO.  1  OF SURFACE NO.   4   A=    0.              B=    0.
  C=    0.48484848E-00  D=    0.              E=    0.              F=    0.
  G=    0.              H=    0.              I=   -0.16969696E 01  J=    0.09999999E 01
     6         4         2         3         2    -1.000

  COEFFICIENTS FOR BDRY NO.  2  OF SURFACE NO.   4   A=    0.09999999E 01  B=   -0.09999999E 01
  C=    0.              D=    0.              E=    0.              F=    0.
  G=    0.              H=    0.              I=    0.              J=    0.
     5         6         1         0         0     1.000
```


LOCKHEED CALIFORNIA COMPANY

TABLE 6-4 (Continued)

```
1.000     -1.000     -1.000      0.         0.         0.        -4.000
0.         0.         4.000

Q=(0,0,0)  FOR BDRY NO. 1   OF SURFACE NO.  6

 COEFFICIENTS FOR BDRY NO.  1  OF SURFACE NO.   6   A=    0.25000000E-00  B=   -0.25000000E-00
 C=   -0.25000000E-00  D=    0.              E=    0.                F=    0.
 G=   -0.09999999E 01  H=    0.              I=    0.                J=    0.09999999E 01
    6          7          1          6          1    -1.000


 COEFFICIENTS FOR BDRY NO.  1  OF SURFACE NO.   7   A=    0.25000000E-00  B=   -0.25000000E-00
 C=   -0.25000000E-00  D=    0.              E=    0.                F=    0.
 G=   -0.09999999E 01  H=    0.              I=    0.                J=    0.09999999E 01
    5          7          2          0          0     1.000
0.         1.000     -1.000      0.         0.         0.         0.
0.         0.         0.

Q=(0,1,0)  FOR BDRY NO. 2   OF SURFACE NO.  7

 COEFFICIENTS FOR BDRY NO.  2  OF SURFACE NO.   7   A=    0.                B=    0.09999999E 01
 C=   -0.09999999E 01  D=    0.              E=    0.                F=    0.
 G=    0.              H=    0.              I=    0.                J=    0.
    6          8          1          6          1    -1.000


 COEFFICIENTS FOR BDRY NO.  1  OF SURFACE NO.   8   A=    0.25000000E-00  B=   -0.25000000E-00
 C=   -0.25000000E-00  D=    0.              E=    0.                F=    0.
 G=   -0.09999999E 01  H=    0.              I=    0.                J=    0.09999999E 01
    6          8          2          7          2    -1.000

 COEFFICIENTS FOR BDRY NO.  2  OF SURFACE NO.   8   A=    0.                B=    0.09999999E 01
 C=   -0.09999999E 01  D=    0.              E=    0.                F=    0.
 G=    0.              H=    0.              I=    0.                J=    0.
    5          9          1          0          0     1.000


0.         0.         4.000      0.         0.         0.         0.
0.         1.000     -3.000

Q=(0,0,0)  FOR BDRY NO. 1   OF SURFACE NO.  9

 COEFFICIENTS FOR BDRY NO.  1  OF SURFACE NO.   9   A=   -0.                B=   -0.
 C=   -0.13333333E 01  D=   -0.              E=   -0.                F=   -0.
 G=   -0.              H=   -0.              I=   -0.33333333E-00    J=    0.09999999E 01
    6         10          1          9          1     1.000


 COEFFICIENTS FOR BDRY NO.  1  OF SURFACE NO.  10   A=   -0.                B=   -0.
 C=   -0.13333333E 01  D=   -0.              E=   -0.                F=   -0.
 G=   -0.              H=   -0.              I=   -0.33333333E-00    J=    0.09999999E 01
    4         10          2          0          0     1.000
0.         0.         0.         1.000      1.000      0.         2.000
2.000      0.         1.000     -1.000      0.        -2.000      2.000
0.         0.         0.         1.000

Q=(1,0,0)  FOR BDRY NO. 2   OF SURFACE NO. 10
      0.                    0.                    0.                    0.                    0.
```

TABLE 6-4 (Continued)

```
COEFFICIENTS FOR BDRY NO.  2  OF SURFACE NO.  10   A=    0.09999999E 01  B=   -0.09999999E 01

C=   -0.                D=   -0.                E=    0.                F=    0.
G=   -0.                H=    0.                I=   -0.                J=    0.
   6         11          1         10          1     1.000


COEFFICIENTS FOR BDRY NO.  1  OF SURFACE NO.  11   A=   -0.                B=   -0.
C=   -0.13333333E 01    D=   -0.                E=   -0.                F=   -0.
G=   -0.                H=   -0.                I=   -0.33333333E-00    J=    0.09999999E 01
   6         11          2         10          2    -1.000

COEFFICIENTS FOR BDRY NO.  2  OF SURFACE NO.  11   A=    0.09999999E 01  B=   -0.09999999E 01
C=   -0.                D=   -0.                E=    0.                F=    0.
G=   -0.                H=    0.                I=   -0.                J=    0.
   7         12          5         -0         -0    -0.
```


LR 18905

TABLE 6-4 (Continued)

```
     -1          1          2         -0         -0
SURFACE NUMBER    1   WAS PUT ON TAPE
SURFACE NUMBER    2   WAS PUT ON TAPE
      0          3          4         -0         -0
SURFACE NUMBER    3   WAS PUT ON TAPE
SURFACE NUMBER    4   WAS PUT ON TAPE
      0          5          6         -0         -0
SURFACE NUMBER    5   WAS PUT ON TAPE
SURFACE NUMBER    6   WAS PUT ON TAPE
      0          7          8         -0         -0
SURFACE NUMBER    7   WAS PUT ON TAPE
SURFACE NUMBER    8   WAS PUT ON TAPE
      0          9         10         -0         -0
SURFACE NUMBER    9   WAS PUT ON TAPE
SURFACE NUMBER   10   WAS PUT ON TAPE
      0         11         -0         -0         -0
SURFACE NUMBER   11   WAS PUT ON TAPE
      1          2          5         -0         -0


DELS        0.16666666E-00      0.16666666E-00      0.62500000E-01      0.62500000E-01
 S=  2    T=  5     A(S)F(S,T)=      0.12440328E-00
 S=  2     AREA (S)=      0.12369313E 02
 S=  2    T=  5      F(S,T)=      0.10057412E-01
      1          9          2         -0         -0


DELS        0.93750000E-01      0.10937500E-00      0.16666666E-00      0.16666666E-00
 S=  9    T=  2     A(S)F(S,T)=      0.13303796E-01
 S=  9     AREA (S)=      0.74552698E 01
 S=  9    T=  2      F(S,T)=      0.17844822E-02
      1          5          9         -0         -0


DELS        0.62500000E-01      0.62500000E-01      0.93750000E-01      0.10937500E-00
 S=  5    T=  9     A(S)F(S,T)=      0.21098252E-00
 S=  5     AREA (S)=      0.32967237E 01
```


LOCKHEED
CALIFORNIA COMPANY

TABLE 6-4 (Continued)

```
S=  5    T=  9      F(S,T)=      0.63997636E-01
     1          3          6          -0         -0


DELS        0.11785117E-00      0.13333333E-00      0.44194186E-01      0.44194186E-01
 S=  3    T=  6     A(S)F(S,T)=      0.34657088E-01
 S=  3     AREA (S)=      0.63399498E 01
 S=  3    T=  6      F(S,T)=      0.54664609E-02
     1          3          7          -0         -0


DELS        0.11785117E-00      0.13333333E-00      0.44194249E-01      0.44194186E-01
 S=  3    T=  7     A(S)F(S,T)=      0.19510493E-01
 S=  3     AREA (S)=      0.63399498E 01
 S=  3    T=  7      F(S,T)=      0.30773892E-02
     1          3          8          -0         -0


DELS        0.11785117E-00      0.13333333E-00      0.44194249E-01      0.44194186E-01
 S=  3    T=  8     A(S)F(S,T)=      0.61239099E-01
 S=  3     AREA (S)=      0.63399498E 01
 S=  3    T=  8      F(S,T)=      0.96592401E-02
     1          4          6          -0         -0


DELS        0.11785117E-00      0.13333333E-00      0.44194186E-01      0.44194186E-01
 S=  4    T=  6     A(S)F(S,T)=      0.43677874E-02
 S=  4     AREA (S)=      0.63399498E 01
 S=  4    T=  6      F(S,T)=      0.68893089E-03
     1          4          7          -0         -0


DELS        0.11785117E-00      0.13333333E-00      0.44194249E-01      0.44194186E-01
 S=  4    T=  7     A(S)F(S,T)=      0.60568681E-02
 S=  4     AREA (S)=      0.63399498E 01
 S=  4    T=  7      F(S,T)=      0.95534950E-03
     1          4          8          -0         -0
```


LOCKHEED
CALIFORNIA COMPANY

TABLE 6-4 (Continued)

```
DELS        0.11785117E-00      0.13333333E-00      0.44194249E-01      0.44194186E-01
 S=  4    T=  8     A(S)F(S,T)=      0.63545395E-02
 S=  4     AREA (S)=      0.63399498E 01
 S=  4    T=  8      F(S,T)=      0.10023011E-02
     1        10          3          -0          -0

DELS        0.66291286E-01      0.10937500E-00      0.11785117E-00      0.13333333E-00
 S= 10    T=  3     A(S)F(S,T)=      0.87876917E-02
 S= 10     AREA (S)=      0.41199552E 01
 S= 10    T=  3      F(S,T)=      0.21329580E-02
     1        10          4          -0          -0

DELS        0.66291286E-01      0.10937500E-00      0.11785117E-00      0.13333333E-00
 S= 10    T=  4     A(S)F(S,T)=      0.74165173E-03
 S= 10     AREA (S)=      0.41199552E 01
 S= 10    T=  4      F(S,T)=      0.19001451E-03
     1         6          10          -0          -0

DELS        0.44194186E-01      0.44194186E-01      0.66291286E-01      0.10937500E-00
 S=  6    T= 10     A(S)F(S,T)=      0.12823989E-00
 S=  6     AREA (S)=      0.05819621E 00
 S=  6    T= 10      F(S,T)=      0.13383469E-00
     1         7          10          -0          -0

DELS        0.44194249E-01      0.44194186E-01      0.66291286E-01      0.10937500E-00
 S=  7    T= 10     A(S)F(S,T)=      0.28205830E-01
 S=  7     AREA (S)=      0.11303678E 01
 S=  7    T= 10      F(S,T)=      0.24952789E-01
     1         8          10          -0          -0

DELS        0.44194249E-01      0.44194186E-01      0.66291286E-01      0.10937500E-00
```

TABLE 6-4 (Continued)

```
S=  8    T= 10     A(S)F(S,T)=      0.37123086E-01

S=  8     AREA (S)=      0.11303678E 01

S=  8    T= 10      F(S,T)=      0.32841597E-01
     1          6         11         -0         -0


DELS        0.44194186E-01      0.44194186E-01      0.66291286E-01      0.10937500E-00

S=  6    T= 11     A(S)F(S,T)=      0.84201583E-02

S=  6     AREA (S)=      0.95819621E 00

S=  6    T= 11      F(S,T)=      0.87875094E-02
     1          7         11         -0         -0


DELS        0.44194249E-01      0.44194186E-01      0.66291286E-01      0.10937500E-00

S=  7    T= 11     A(S)F(S,T)=      0.75947961E-02

S=  7     AREA (S)=      0.11303678E 01

S=  7    T= 11      F(S,T)=      0.67188713E-02
     1          8         11         -0         -0


DELS        0.44194249E-01      0.44194186E-01      0.66291286E-01      0.10937500E-00

S=  8    T= 11     A(S)F(S,T)=      0.36494599E-02

S=  8     AREA (S)=      0.11303678E 01

S=  8    T= 11      F(S,T)=      0.32285595E-02
     3          1         -0         -0         -0


S=  1     AREA (S)=      0.23840413E 03
     3         11         -0         -0         -0


S= 11     AREA (S)=      0.41199552E 01
     4         -0         -0         -0         -0
```

$x = 0$, $y = \pm.75$ are "vertical" points on the cylinder with x-dependent. The values of the AF product are .0133 with one dependent variable or .0191 for the partitioned surfaces. From the sphere to the cylinder, the AF product is .211 with x-dependent and .213 partitioned. This relatively small difference in the AF product is due to the fact that the area along the curves of vertical points has relatively little effect. Note that the lines $x = 0$, $y = \pm.75$ on the cylinder cannot be seen from any point on the sphere; thus, the areas along these lines will not affect the AF products.

The shape factor for the partitioned surfaces can be computed by dividing the total AF product by the area computed as the sum of the subareas. This gives the comparative values of .0101 and .0104 for the shape factor from the cone to sphere. The largest difference is in the case of the shape factor from the cylinder to cone which changes from .00178 to .00231 due to the partitioning. Although there is relatively little difference in the AF products between the sphere and cylinder, the difference in the area of the sphere produces a change from .0640 to .0662 for the shape factor.

From this it can be seen that partitioning gives more accurate values for the areas of the cone, sphere and cylinder. In general, with one dependent variable, if the surface has a curve of vertical points, the accuracy of the computed area is strictly by chance with no way to eliminate the possibility of a blow-up as noted on the area of S(1). On the other hand, if a surface is partitioned so that there is no curve of vertical points on any subsurface, the maximum percentage of error is proportional to $K/(GS)^2$ where K is a constant for any given surface shape and partitioning method assuming that the same value for GS is used for each subarea. Since the area generally affects the value of the AF product, the accuracy of the area is usually reflected in the AF product, the shape factor, or both.

A summary of the computed AF products, areas and shape factors is given in Table 6-5.

TABLE 6-5

SUMMARY OF EXAMPLE PROBLEM #2

From Surface s	To Surface t	AF Product A(s)F(s,t)	Area of Surface s, A(s)		F(s,t)
			Computed	True	
Cone S(1)			238.4	12.94	
Cone S(2)	Sphere S(5)	.1244	12.37	12.94	.01006
Cone S(3) + S(4)	Sphere S(6) + S(7) + S(8)	.1321	12.68	12.94	.01042
Sphere S(5)	Cylinder S(9)	.2110	3.297	3.142	.064001
Sphere S(6) + S(7) + S(8)	Cylinder S(10) + S(11)	.2132	3.219	3.142	.06624
Cylinder S(9)	Cone S(2)	.01330	7.455	8.242	.001784
Cylinder S(10) + S(11)	Cone S(3) + S(4)	.01906	8.240	8.242	.002313

EXAMPLE PROBLEM #3

The third example problem deals with a sphere inside a cube. While this is not a strictly practical problem, it is similar to any problem involving an enclosed component or storage tank. The particular geometry, however, was chosen to test the accuracy of the program. For this reason a geometry was chosen for which the shape factors as well as the surface areas can be computed. With the surface areas and shape factors the AF products can also be obtained. Thus, every value computed by the program can be checked for accuracy.

The geometry is illustrated in Figure 6-15. The sphere with radius 2 and the cube which is 4.8 units on the edge are centered at the origin. The top and bottom of the cube are parallel to the xy plane, while the front (called surface S(1)) lies in the vertical plane through (3,0,0) and (0,4,0). Shape factors are computed from the front to the top, to one side, and to the back of the cube, with and without interference by the sphere, as well as shape factors from the sphere to the front and top of the cube. Due to symmetry,

LOCKHEED
CALIFORNIA COMPANY

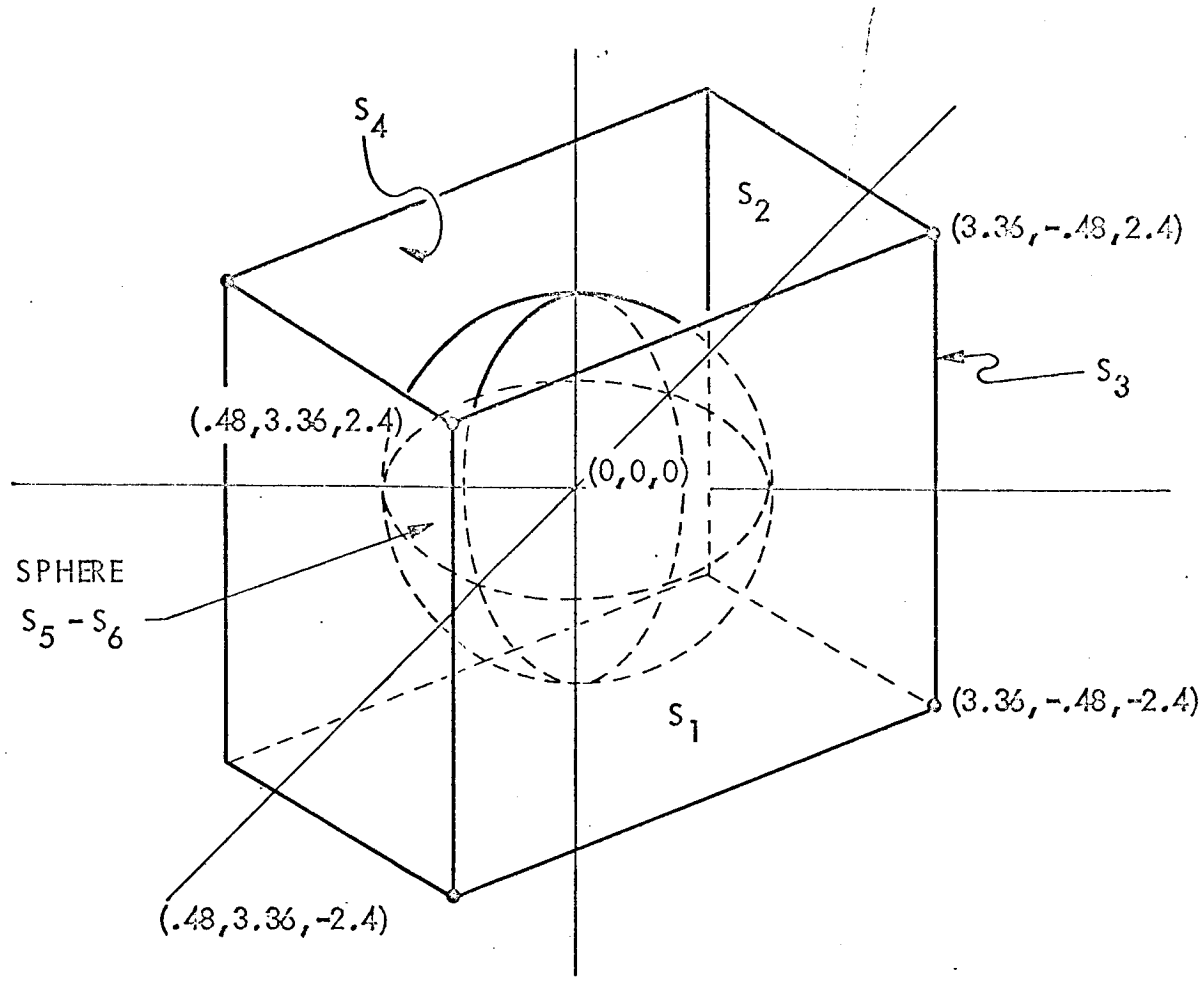

S_1 = PLANE $4x + 3y - 12 = 0$

S_2 = PLANE $z - 2.4 = 0$

S_3 = PLANE $3x - 4y - 12 = 0$

S_4 = PLANE $4x + 3y + 12 = 0$

S_5 = SPHERE $x^2 + y^2 + z^2 - 4 = 0$, x - DEPENDENT

S_6 = SAME SPHERE, z - DEPENDENT

S_7, S_8, S_9 = PARTS OF SAME SPHERE

Figure 6-15. Example Problem #3

LOCKHEED
CALIFORNIA COMPANY

the remaining shape factors duplicate these. Due to the orientation of the top of the cube, its area is not computed exactly. Thus, the shape factors involving the top are also computed for comparison with the values obtained using the vertical surfaces.

Surface Input

Cube - Four of the six surfaces of the cube are specified as surfaces S(1) to S(4). S(1) (the front) lies on the plane $4x + 3y - 12 = 0$. S(2) (the top) lies on the plane $5z - 12 = 0$. S(3) is the far side of the cube and it is on the plane $3x - 4y - 12 = 0$.

S(4) (the back) is on $4x + 3y + 12 = 0$. The near side on $3x - 4y + 12 = 0$ and the bottom on $5z + 12 = 0$ are not used due to the symmetry of the problem.

S(1) is defined by input Flag 0 for a plane and the three surface points (.48, 3.36, 2.4) (.48, 3.36, -2.4), and (3.36, -.48, -2.4). The dependent variable on S(1) is x and three boundaries are used. The reference point (0,0,0) is at the center of the cube. Therefore, the inside is specified by the side index 1.0. The limits on the independent coordinates are $-.48 \leqq y \leqq 3.36$ and $-2.4 \leqq z \leqq 2.4$ while GS is arbitrarily taken as 15.

S(2) is defined by input Flag 0 for a plane and the three surface points (.48, 3.36, 2.4), (3.36, -.48, 2.4), and (-3.36, .48, 2.4). The dependent variable is z and three boundaries are used. The reference point (0,0,0) is below the plane. Thus, the side index is 1.0 for the inside of the cube. The limits on the independent coordinates are $-3.36 \leqq x \leqq 3.36$ and $-3.36 \leqq y \leqq 3.36$ with GS again equal to 15.

S(3) is defined by input Flag -1 and the coefficients 0, 0, 0, 0, 0, 0, 3, -4, 0, and -12. The dependent variable is y and there are two boundaries. The surface reference point is (0,0,0) so the inside of the cube is defined by a side index of 1.0. The limits on the independent coordinates are $-.48 \leqq x \leqq 3.36$ and $-2.4 \leqq z \leqq 2.4$ with GS equal to 15.

S(4) is defined by input Flag -1 and the coefficients 0, 0, 0, 0, 0, 0, 4, 3, 0, and 12. The dependent variable is y and S(4) has three boundaries.

The reference point is (0,0,0) and the side index is 1.0. The limits on the independent coordinates are $-3.36 \leqq x \leqq -.48$ and $-2.4 \leqq z \leqq 2.4$ and GS is 15.

Sphere - The remaining surfaces give all or part of the sphere $x^2 + y^2 - 4 = 0$. S(5) and S(6) show the entire sphere with different dependent variables. Surfaces S(7) and S(8), S(9) and S(10) give parts of the sphere.

S(5) is defined by input Flag 1 and the coordinates (0,0,0) of the center plus the radius 2. The dependent variable is x and there are no boundaries. The reference point is (0,0,0) which is the center of the sphere. Thus, the outside of the sphere is defined by a side index of -1.0. The limits on the independent coordinates are $-2 \leqq y \leqq 2$ and $-2 \leqq z \leqq 2$, with GS equal to 15.

S(6) is defined by input Flag 2 plus the four surface points (0,0,2), (2,0,0), (0,2,0), and (0,0,-2). On S(6) z is dependent with no boundaries. The surface reference point is (0,0,0) and the side index is -1.0. The limits on the independent coordinates are $-2 \leqq x \leqq 2$ and $-2 \leqq y \leqq 2$, while GS is 15.

S(7) is defined by input Flag 8 and the number 6 of S(6) whose equation is to be used for S(7). The dependent variable is x and one boundary is required. The surface reference point is (0,0,0) and the side index -1.0. The limits on the independent coordinates are $-1.414214 \leqq y \leqq 1.414214$ and $-1.414214 \leqq z \leqq 1.414214$, while GS is 15.

S(8) is defined by input Flag 8 and the surface number 6. The dependent variable is y and there are two boundaries. The origin is the reference point and -1.0 the side index. The limits on the independent coordinates are $-1.414214 \leqq x \leqq 1.414214$ and $-1.414214 \leqq z \leqq 1.414214$, with GS equal to 15.

S(9) is defined by input Flag 8 and the surface number 6. The dependent variable is z and there are two boundaries. The origin is the reference point and -1.0 the side index. The limits on the independent coordinates are $-1.414214 \leqq x \leqq 1.414214$ and $-1.414214 \leqq y \leqq 1.414214$, while GS is 15.

S(10) is defined by input Flag 8 and the surface number 6. The dependent variable is z and three boundaries are used. The side index is -1.0 and the reference point is the origin. The limits on the independent coordinates are $-1.414214 \leqq x \leqq 1.414214$ and $-1.414214 \leqq y \leqq 1.414214$, with GS equal to 15.

Boundary Input

Boundaries of the Sides of the Cube - The six planes containing the faces of the cube are used as boundaries either simply or combined into double-plane cylinders.

Boundary B(1,1), which consists of the parallel planes $5z - 12 = 0$ and $5z + 12 = 0$ of the top and bottom of the cube combined as the cylinder $25z^2 - 144 = 0$, is defined by input Flag 5 plus the coefficients 0, 0, 25, 0, 0, 0, 0, 0, 0, and -144 of the equation. The reference point (0,0,0) for this surface is between the two planes. Therefore, the side index 1.0 is used.

Boundaries B(3,1) and B(4,1), which duplicate B(1,1), are given by input Flag 6, the surface number 1, and the boundary number 1. The side indices remain 1.0. B(1,2) duplicates S(3) and is defined by input Flag -1 plus the surface number 3. The reference point is the origin and the side index is 1.0. B(4,2) duplicates B(1,2) and is defined by input Flag 6 plus the surface number 1 and the boundary number 2.

B(1,3) is the near side of the cube ($3x - 4y + 12 = 0$), which is defined by input Flag 0 plus the two boundary points (.48, 3.36, 2.4) and (.48, 3.36, -2.4). The side index and reference point are 1.0 and the origin, respectively.

B(4,3), which duplicates B(1,3), is defined by input Flag 6 plus the surface number 1 and the boundary number 3. The side index remains 1.0.

B(2,1), consisting of the two perpendicular planes S(1) and S(3) combined into the cylinder $12x^2 - 12y^2 - 7xy - 84x + 12y + 144 = 0$, is defined by input Flag 5 plus the coefficients A through J of the equation. The surface reference point (0,0,0) and the required portion of S(2) are in the same angle of these planes. Thus, the side index is 1.0.

B(2,2) consisting of the back S(4), is defined by input Flag -1 and the surface number 4. The side index is 1.0 and the origin is the reference point.

B(2,3), consisting of the rear side ($3x - 4y + 12 = 0$) of the cube, is defined by input Flag 0 plus the boundary points (-3.36, .48, 2.4) and (.48, 3.36, 2.4).

The reference point is (0,0,0) and the side index is 1.0. Note that this does not give a closed system of boundaries for S(2) since there is an unbounded area in the opposite angle of B(2,1) which is not closed by either B(2,2) or B(2,3). Since exact limits are specified for the independent variables on S(2) only one row of grid points crosses the unbounded area. Depending on the orientation of the boundary planes one or more of these grid points will be in the interior of the region. In this case, the cylinder of intersecting planes B(2,1) produces one extraneous grid point. This adds $.200704 = \left[(6.72)^2/(15)^2\right] \cos(0°)$ units to the area of S(2). Thus the computed area given in Table 6-8 should be 22.68 or 1.6 percent low.

B(3,2), consisting of the front, S(1), and the back, S(4), of the cube combined as the cylinder $16x^2 + 9y^2 + 24xy - 144 = 0$ is defined by input Flag 4, the five boundary points (.48, 3.36, 2.4), (3,0,0), (3.36, -.48, -2.4), (-3.36, .48, 2.4), and (0,-4,0) plus the direction numbers (0: 0: 1) of an element of the cylinder. Since the surface reference point (0,0,0) and the required area on S(3) lie between these planes, the side index is 1.0.

<u>Boundaries of the Sphere</u> - S(5) and S(6) require no boundaries, but the sections S(7), S(8), S(9), and S(10) of the sphere each require boundaries. S(7), S(8), and S(9) partition the sphere in the same way that the sphere in example problem #2 was partitioned, while S(10) gives one half of S(9) by using the two planes of B(9,2) individually as separate boundaries.

B(7,1), consisting of the cone $x^2 - y^2 - z^2 = 0$, is defined by input Flag 5 plus the ten coefficients A through J of the equation of the cone. The surface reference point (1,0,0) and the side index 1.0 define the two caps of the partitioned sphere, which are centered on the x-axis, as shown in Figure 6-16.

B(8,1), B(9,1) and B(10,1) all duplicate boundary surface B(7,1). Thus they are defined by input Flag 6, the surface number 7 and the boundary surface number 1. Since these surfaces, S(8), S(9), and S(10), are on the outside of the cone, the side index for each of these boundary surfaces is -1.0.

B(8,2), consisting of $y^2 - z^2 = 0$ which combines the two planes $y - x = 0$ and $y + z = 0$ into a cylinder, is defined by input Flag 4 plus the five boundary points (0,0,0), (0,1,1), (0,-1,-1), (0,1,-1), and (0,-1, 1),

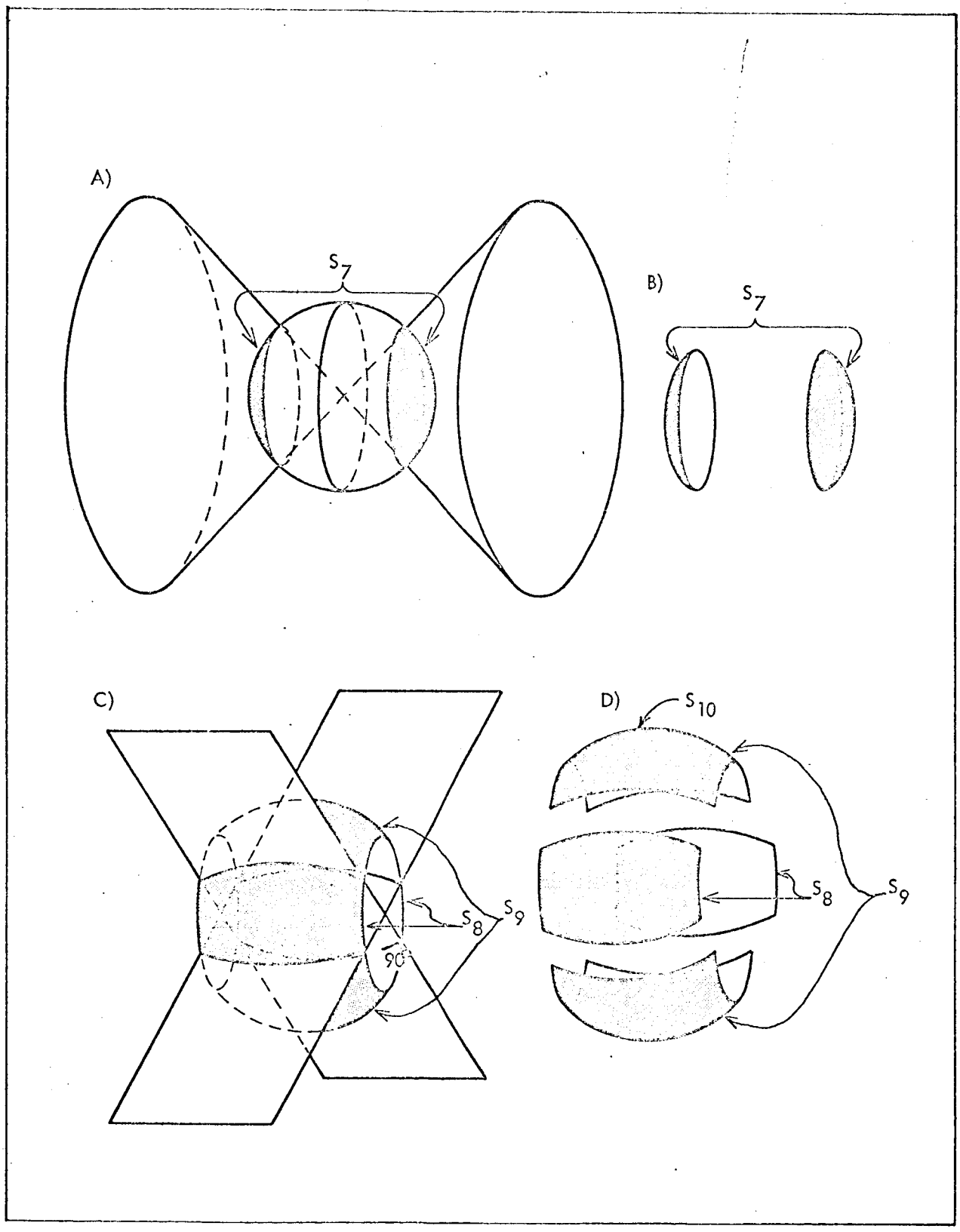

Figure 6-16. Example Problem #3 - Partitioned Sphere

LOCKHEED
CALIFORNIA COMPANY

together with the direction numbers (1: 0: 0) of an element of the cylinder. The surface reference point is (0,1,0) and the side index is 1.0.

B(9,2), which duplicates B(8,2), is defined by input Flag 6 plus the surface number 8 and the boundary number 2. Since S(8) lies in the angles of $y^2 - z^2 = 0$ containing the xy - plane, while S(9) lies in the angles containing the xz - plane, the side index is -1.0 for B(9,1).

B(10,2), consisting of y - z = 0, is defined by input Flag 1 plus the three boundary points (2,0,0), (-2,0,0), and (1.414214, 1, 1). The reference point is (0,1,0) and the side index -1.0.

B(10,3), consisting of y + z = 0 is defined by input Flag 1 plus the three boundary points (2,0,0), (-2,0,0), and (1.414214, 1, -1). The reference point is (0,1,0) and the side index is 1.0. Note that while the union of the B(10,2) and B(10,3) produces the same boundary surface as B(9,2), S(9) and S(10) are not the same. The two boundary surfaces, B(10,2) and B(10,3), acting together give one half of S(9), namely the half that intersects the positive z -axis, while rejecting the part which intersects the negative z axis.

Computation Control

Grid points are required for all ten surfaces. The surface-to-surface shape factors F(1,2), F(1,3), F(1,4), and F(2,1) are computed as if the sphere were not inside the cube. The shape factors F(1,2), F(1,3), and F(1,4) are then computed with interference by the sphere S(5). The shape factors F(1,5), F(5,1), F(6,1), F(7,1), F(8,1), F(9,1), F(5,2), and F(6,2) are computed between all or part of the sphere and the front and top of the cube. To indicate the relative importance of the areas at the intersection of the coordinate axes and the sphere, as well as the area at the point on the sphere closest to S(1) in the computation of the shape factor from the sphere to the front plane of the cube, eight point-to-surface shape factors are requested by supplying four sets of independent coordinates. Since each of the three pairs of points (0,0,±2), (0,±2,0) and (±2,0,0) requires a different dependent variable, three entries are required. The independent coordinates 1.2 and 0 of the closest point (1.6, 1.2, 0) and its companion point (-1.6, 1.2, 0) are added to the independent coordinates 0 and 0 of (±2,0,0) in the third entry. The computation of the area A (1) of S(10) completes the computation.

Discussion of Problem

The input sheets and the output for this problem are shown in Tables 6-6 and 6-7. In the closed symmetric geometry of this problem all the shape factors can be determined accurately from outside information and reasoning. The only outside information required is the well known result that the shape factor from a square to a parallel square is .2 if the squares are exactly opposite each other and the distance between them is equal to the length of a side. These conditions are exactly met by the front and back, top and bottom, etc., of the cube.

From this it can be reasoned that the shape factor from any surface of the cube to any other surface of the cube must be .2. Since the cube is closed, the sum of the shape factors from one side to each of the other five sides must be 1, but the factor to the opposite side is known to be .2. Thus the sum of the shape factors to the four adjacent sides is 1 -.2 = .8. By symmetry these four shape factors must be equal and the shape factor from one side of the cube to an adjacent side is .8/4 = .2. Thus the shape factor from any side of the cube to any other side of the cube is .2.

Consider the case where the sphere is in the center of the cube. Since the sphere is completely enclosed, the sum of these shape factors must be 1. Again, by symmetry, the shape factors from the sphere to each of the six sides of the cube must be equal; therefore, from the sphere to any one side the shape factor is 1/6. Using the fact that A(1)F(1,2) equals A(2)F(2,1), the shape factor from a side to the sphere can also be computed. The area of sphere of radius 2 is 50.26, while the area of each of the sides is 23.04. Thus, the AF product is 50.26 x 1/6 = 8.377 x F(2,1). From the shape factor F(2,1) from plane to sphere can be obtained as 8.377/23.04 = .3636.

The shape factors from side to side with interference by the sphere cannot be computed, but it can be seen that the factors to the other four sides should be equal and considerably larger than the factor to the opposite side, while the sum of these five factors should equal 1 - .3636 = .6364.

Table 6-8 shows the computed and actual values for the AF products, the areas and shape factors computed for this problem. The top entry in each case is the computed value while the bottom is the true one. The identification sphere -X, sphere -Z and sphere -P, respectively, are used in this table for

TABLE 6-6

EXAMPLE PROBLEM #3 INPUT

SEQ.	1–10	11–20	21–30	31–40	41–50	51–60	61–70
001	0	1	1	3	0		
002	1.	-.48	3.36	-2.4	2.4	15.	
003	.48	3.36	2.4	.48	3.36	-2.4	3.36
004	-.48	-2.4					
005	0	2	3	3	0		
006	1.	-3.36	3.36	-3.36	3.36	15.	
007	.48	3.36	2.4	3.36	-.48	2.4	-3.36
008	.48	2.4					
009	-1	3	2	3	0		
010	1.	-.48	3.36	-2.4	2.4	15.	
011	0.	0.	0.	0.	0.	0.	3.
012	-4.	0.	-12.				
013	-1	4	2	3	0		
014	1.	-3.36	-.48	-2.4	2.4	15.	
015	0.	0.	0.	0.	0.	0.	4.
016	3.	0.	12.				
017	1	5	1	0	0		
018	-1.	-2.	2.	-2.	2.	15.	
019	0.	5.	0.	2.			
020	2	6	3	0	0		
021	-1.	-2.	2.	-2.	2.	15.	
022	0.	0.	2.	2.	0.	0.	0.
023	0.	0.	0.	0.	-2.		
024	8	7	1	1	6		
025	1.	-1.414214	1.414214	-1.414214	1.414214	15.	

TABLE 6-6 (Continued)

GENERAL PURPOSE DATA SHEET — LOCKHEED-CALIFORNIA COMPANY, A DIVISION OF LOCKHEED AIRCRAFT CORPORATION

PREPARED | NAME | DATE | TITLE | PAGE OF | JOB NO.
CHECKED | WO | EWA | GROUP

SEQ. (77–80)	1–10	11–20	21–30	31–40	41–50	51–60	61–70	71–72	ID 73–76
026	8	8	2	2	6				
027	-1.	-1.414214	1.414214	-1.414214	1.414214	15.			
028	8	9	3	2	6				
029	-1.	-1.414214	1.414214	-1.414214	1.414214	15.			
030	9	10	3	3	6				
031	-1.	-1.414214	1.414214	-1.414214	1.414214	15.			
032	9	11							
033	5	1	1	0	0	1.			
034	0.	0.	25.	0.	0.	0.	0.		
035	0.	2.	-144.						
036	-1	1	2	3	0	1.			
037	0	1	3	0	0	1.			
038	.48	3.36	2.4	.48	3.36	-2.4			
039	5	2	1	0	0	1.			
040	12.	-12.	0.	-7.	0.	0.	-84.		
041	12.	0.	144.						
042	-1	2	2	4	0	1.			
043	0	2	3	0	0	1.			
044	-3.36	.48	2.4	.48	3.36	2.4			
045	6	3	1	1	1	1.			
046	4	3	2	0	0	1.			
047	.48	3.36	2.4	3.	0.	0.	3.36		
048	-.48	-2.4	-3.36	.48	2.4	0.	-4.		
049	0.	0.		1.					
050	6	[illegible]	1	1	1	1.			

LOCKHEED CALIFORNIA COMPANY

TABLE 6-6 (Continued)

GENERAL PURPOSE DATA SHEET — LOCKHEED-CALIFORNIA COMPANY, A DIVISION OF LOCKHEED AIRCRAFT CORPORATION

PREPARED | NAME | DATE | TITLE | PAGE OF | JOB NO. | CHECKED | WO | EWA | GROUP

SEQ. (77–80)	1–10	11–20	21–30	31–40	41–50	51–60	61–70	ID (73–79)
051	6	4	2	1	2	1.		
052	6	4	3	1	3	1.		
053	5	7	1	0	0	1.		
054	1.	-1.	-1.	0.	0.	0.	0.	
055	0.	0.	0.					
056	6	8	1	7	1	-1.		
057	4	5	2	0	0	1.		
058	0.	0.	0.	0.	1.	1.	0.	
059	-1.	-1.	0.	1.	-1.	0.	-1.	
060	1.	1.	0.	0.				
061	6	9	1	7	1	-1.		
062	6	9	2	8	2	-1.		
063	6	10	1	7	1	-1.		
064	1	10	2	0	0	-1.		
065	2.	0.	0.	-2.	0.	0.	1.414214	
066	1.	1.						
067	1	10	3	0	0	1.		
068	2.	0.	0.	-2.	0.	0.	1.414214	
069	1.	-1.						
070	7	11	5					
071	-1	1	2					
072	0	3	4					
073	0	5	6					
074	0	7	8					
075	0	9	10					

LOCKHEED CALIFORNIA COMPANY

TABLE 6-6 (Continued)

GENERAL PURPOSE DATA SHEET

LOCKHEED-CALIFORNIA COMPANY
A DIVISION OF LOCKHEED AIRCRAFT CORPORATION

PAGE OF

PREPARED NAME DATE TITLE JOB NO.

CHECKED WO EWA GROUP

SEQ.	ID	1–5	6–10	11–15	16–20	21–25	26–30	31–35	36–40	41–45	46–50	51–55	56–60	61–65	66–70	71–72	73–76
076							2										
077							3										
078							4										
079							1										
080							2										
081			5														
082			1				3										
083			5														
084			1				4										
085			5														
086			1				5										
087			1		5		1										
088			1		6		1										
089			1		7		1										
090			1		5		1										
091			1		9		1										
092			1		5		8										
093			1		6		8										
094			8		5		1										
095			3		1		1										
096		0															
097		8			5		1										
098		8			1		1										
099		0															
100		8			5		1										

LOCKHEED
CALIFORNIA COMPANY

TABLE 6-6 (Continued)

GENERAL PURPOSE DATA SHEET	LOCKHEED-CALIFORNIA COMPANY A DIVISION OF LOCKHEED AIRCRAFT CORPORATION	PAGE OF
PREPARED / NAME / DATE	TITLE	JOB NO.
CHECKED	WO / FWA	GROUP

ID	SEQ.	
	101	0.
	102	1.2
	103	1.0
	104	0.

LOCKHEED CALIFORNIA COMPANY

TABLE 6-7. OUTPUT FOR EXAMPLE #3

```
     0          1          1          3          0
 1.000     -0.480      3.360     -2.400      2.400     15.000
 0.480      3.360      2.400      0.480      3.360     -2.400      3.360
-0.480     -2.400

  Q=(0,0,0)     FOR SURFACE NO.   1
      -0.                  -0.                  0.29802322E-07

 COEFFICIENTS FOR SURFACE NO.   1   A=    0.                B=    0.
 C=    0.                D=    0.                E=    0.                F=    0.
 G=   -0.33333333E-00    H=   -0.25000000E-00    I=    0.                J=    0.09999999E 01
     0          2          3          3          0
 1.000     -3.360      3.360     -3.360      3.360     15.000
 0.480      3.360      2.400      3.360     -0.480      2.400     -3.360
 0.480      2.400

  Q=(0,0,0)     FOR SURFACE NO.   2
       0.74505806E-03      -0.44703484E-07      -0.29802322E-07

 COEFFICIENTS FOR SURFACE NO.   2   A=    0.                B=    0.
 C=    0.                D=    0.                E=    0.                F=    0.
 G=    0.12417635E-08    H=    0.14901162E-07    I=   -0.41666669E-00    J=    0.09999999E 01
    -1          3          2          2          0
 1.000     -0.480      3.360     -2.400      2.400     15.000
 0.         0.         0.         0.         0.         0.         3.000
-4.000      0.       -12.000

  Q=(0,0,0)     FOR SURFACE NO.   3

 COEFFICIENTS FOR SURFACE NO.   3   A=   -0.                B=   -0.
 C=   -0.                D=   -0.                E=   -0.                F=   -0.
 G=   -0.25000000E-00    H=    0.33333333E-00    I=   -0.                J=    0.09999999E 01
    -1          4          2          3          0
 1.000     -3.360     -0.480     -2.400      2.400     15.000
 0.         0.         0.         0.         0.         0.         4.000
 3.000      0.        12.000

  Q=(0,0,0)     FOR SURFACE NO.   4

 COEFFICIENTS FOR SURFACE NO.   4   A=    0.                B=    0.
 C=    0.                D=    0.                E=    0.                F=    0.
 G=    0.33333333E-00    H=    0.25000000E-00    I=    0.                J=    0.09999999E 01
     1          5          1          0          0
-1.000     -2.000      2.000     -2.000      2.000     15.000
 0.         0.         0.         2.000

  Q=(0,0,0)     FOR SURFACE NO.   5

 COEFFICIENTS FOR SURFACE NO.   5   A=   -0.25000000E-00   B=   -0.25000000E-00
 C=   -0.25000000E-00    D=   -0.                E=   -0.                F=   -0.
 G=    0.                H=    0.                I=    0.                J=    0.09999999E 01
     2          6          3          0          0
-1.000     -2.000      2.000     -2.000      2.000     15.000
 0.         0.         2.000      2.000      0.         0.         0.
 2.000      0.         0.         0.        -2.000

  Q=(0,0,0)     FOR SURFACE NO.   6
      -0.                  -0.                  -0.                  -0.

 COEFFICIENTS FOR SURFACE NO.   6   A=   -0.25000000E-00   B=   -0.25000000E-00
 C=   -0.25000000E-00    D=   -0.                E=   -0.                F=   -0.
 G=   -0.                H=    0.                I=   -0.                J=    0.09999999E 01
```


LOCKHEED
CALIFORNIA COMPANY

TABLE 6-7 (Continued)

```
     8          7          1          1          6

-1.000     -1.414      1.414     -1.414      1.414     15.000

 COEFFICIENTS FOR SURFACE NO.   7   A=   -0.25000000E-00  B=   -0.25000000E-00
 C=   -0.25000000E-00  D=   -0.              E=   -0.              F=   -0.
 G=   -0.              H=    0.              I=   -0.              J=    0.09999999E 01
     8          8          2          2          6
-1.000     -1.414      1.414     -1.414      1.414     15.000

 COEFFICIENTS FOR SURFACE NO.   8   A=   -0.25000000E-00  B=   -0.25000000E-00
 C=   -0.25000000E-00  D=   -0.              E=   -0.              F=   -0.
 G=   -0.              H=    0.              I=   -0.              J=    0.09999999E 01
     8          9          3          2          6
-1.000     -1.414      1.414     -1.414      1.414     15.000

 COEFFICIENTS FOR SURFACE NO.   9   A=   -0.25000000E-00  B=   -0.25000000E-00
 C=   -0.25000000E-00  D=   -0.              E=   -0.              F=   -0.
 G=   -0.              H=    0.              I=   -0.              J=    0.09999999E 01
     8         10          3          3          6
-1.000     -1.414      1.414     -1.414      1.414     15.000

 COEFFICIENTS FOR SURFACE NO.  10   A=   -0.25000000E-00  B=   -0.25000000E-00
 C=   -0.25000000E-00  D=   -0.              E=   -0.              F=   -0.
 G=   -0.              H=    0.              I=   -0.              J=    0.09999999E 01
     9         11         -0         -0         -0
```

*Due to the format used only three decimal places are printed.

LOCKHEED
CALIFORNIA COMPANY

TABLE 6-7 (Continued)

```
     5         1         1         0         0     1.000

 0.        0.       25.000     0.        0.        0.        0.
 0.        0.     -144.000

Q=(0,0,0)  FOR BDRY NO. 1   OF SURFACE NO.  1

  COEFFICIENTS FOR BDRY NO.  1  OF SURFACE NO.   1   A=   -0.              B=   -0.
  C=   -0.17361110E-00  D=   -0.              E=   -0.              F=   -0.
  G=   -0.              H=   -0.              I=   -0.              J=    0.09999999E 01
    -1         1         2         3         0     1.000

  COEFFICIENTS FOR BDRY NO.  2  OF SURFACE NO.   1   A=   -0.              B=   -0.
  C=   -0.              D=   -0.              E=   -0.              F=   -0.
  G=   -0.25000000E-00  H=    0.33333333E-00  I=   -0.              J=    0.09999999E 01
     0         1         3         0         0     1.000
 0.480     3.360     2.400     0.480     3.360    -2.400

Q=(0,0,0)  FOR BDRY NO. 3   OF SURFACE NO.  1
        0.74505806E-08      0.74505806E-08

  COEFFICIENTS FOR BDRY NO.  3  OF SURFACE NO.   1   A=    0.              B=    0.
  C=    0.              D=    0.              E=    0.              F=    0.
  G=    0.25000001E-00  H=   -0.33333334E-00  I=   -0.              J=    0.09999999E 01
     5         2         1         0         0     1.000


12.000   -12.000     0.       -7.000     0.        0.      -84.000
12.000     0.      144.000

Q=(0,0,0)  FOR BDRY NO. 1   OF SURFACE NO.  2

  COEFFICIENTS FOR BDRY NO.  1  OF SURFACE NO.   2   A=    0.83333333E-01  B=   -0.83333333E-01
  C=    0.              D=   -0.43611110E-01  E=    0.              F=    0.
  G=   -0.58333333E 00  H=    0.83333333E-01  I=    0.              J=    0.09999999E 01
    -1         2         2         4         0     1.000

  COEFFICIENTS FOR BDRY NO.  2  OF SURFACE NO.   2   A=    0.              B=    0.
  C=    0.              D=    0.              E=    0.              F=    0.
  G=    0.33333333E-00  H=    0.25000000E-00  I=    0.              J=    0.09999999E 01
     0         2         3         0         0     1.000
-3.360     0.480     2.400     0.480     3.360     2.400

Q=(0,0,0)  FOR BDRY NO. 3   OF SURFACE NO.  2
       -0.                 -0.

  COEFFICIENTS FOR BDRY NO.  3  OF SURFACE NO.   2   A=    0.              B=    0.
  C=    0.              D=    0.              E=    0.              F=    0.
  G=    0.24999999E-00  H=   -0.33333333E-00  I=   -0.11175870E-07  J=    0.09999999E 01
     6         3         1         1         1     1.000


  COEFFICIENTS FOR BDRY NO.  1  OF SURFACE NO.   3   A=   -0.              B=   -0.
  C=   -0.17361110E-00  D=   -0.              E=   -0.              F=   -0.
  G=   -0.              H=   -0.              I=   -0.              J=    0.09999999E 01
     4         3         2         0         0     1.000
 0.480     3.360     2.400     3.000     0.        0.        3.360
-0.480    -2.400    -3.360     0.480     2.400     0.       -4.000
 0.        0.        0.        1.000
```


LOCKHEED
CALIFORNIA COMPANY

TABLE 6-7 (Continued)

```
Q=(0,0,0)  FOR BDRY NO. 2   OF SURFACE NO.  3

        0.37252903E-07      -0.                  0.37252903E-07      -0.44703484E-07      -0.74505806E-07

  COEFFICIENTS FOR BDRY NO.  2  OF SURFACE NO.   3   A=   -0.11111111E-00  B=   -0.62500002E-01
  C=   -0.                D=   -0.16666667E-00  E=    0.                F=   -0.
  G=    0.13579239E-07    H=    0.10184429E-07  I=   -0.                J=    0.09999999E 01
     6          4          1          1          1     1.000


  COEFFICIENTS FOR BDRY NO.  1  OF SURFACE NO.   4   A=   -0.                B=   -0.
  C=   -0.17361110E-00  D=   -0.                E=   -0.                F=   -0.
  G=   -0.                H=   -0.                I=   -0.                J=    0.09999999E 01
     6          4          2          1          2     1.000

  COEFFICIENTS FOR BDRY NO.  2  OF SURFACE NO.   4   A=   -0.                B=   -0.
  C=   -0.                D=   -0.                E=   -0.                F=   -0.
  G=   -0.25000000E-00  H=    0.33333333E-00  I=   -0.                J=    0.09999999E 01
     6          4          3          1          3     1.000

  COEFFICIENTS FOR BDRY NO.  3  OF SURFACE NO.   4   A=    0.                B=    0.
  C=    0.                D=    0.                E=    0.                F=    0.
  G=    0.25000001E-00  H=   -0.33333334E-00  I=   -0.                      0.09999999E 01
     5          7          1          0          0     1.000


 1.000     -1.000     -1.000      0.         0.         0.         0.
 0.         0.         0.

Q=(1,0,0)  FOR BDRY NO. 1   OF SURFACE NO.  7

  COEFFICIENTS FOR BDRY NO.  1  OF SURFACE NO.   7   A=    0.09999999E 01  B=   -0.09999999E 01
  C=   -0.09999999E 01  D=    0.                E=    0.                F=    0.
  G=    0.                H=    0.                I=    0.                J=    0.
     6          8          1          7          1    -1.000


  COEFFICIENTS FOR BDRY NO.  1  OF SURFACE NO.   8   A=    0.09999999E 01  B=   -0.09999999E 01
  C=   -0.09999999E 01  D=    0.                E=    0.                F=    0.
  G=    0.                H=    0.                I=    0.                J=    0.
     4          8          2          0          0     1.000
 0.         0.         0.         0.         1.000     1.000      0.
-1.000     -1.000      0.         1.000     -1.000     0.        -1.000
 1.000      1.000      0.         0.

Q=(0,1,0)  FOR BDRY NO. 2   OF SURFACE NO.  8
       -0.                  0.                  0.                  0.                  0.

  COEFFICIENTS FOR BDRY NO.  2  OF SURFACE NO.   8   A=   -0.                B=    0.09999999E 01
  C=   -0.09999999E 01  D=   -0.                E=   -0.                F=   -0.
  G=    0.                H=    0.                I=    0.                J=   -0.
     6          9          1          7          1    -1.000


  COEFFICIENTS FOR BDRY NO.  1  OF SURFACE NO.   9   A=    0.09999999E 01  B=   -0.09999999E 01
  C=   -0.09999999E 01  D=    0.                E=    0.                F=    0.
  G=    0.                H=    0.                I=    0.                J=    0.
     6          9          2          8          2    -1.000

  COEFFICIENTS FOR BDRY NO.  2  OF SURFACE NO.   9   A=   -0.                B=    0.09999999E 01
  C=   -0.09999999E 01  D=   -0.                E=   -0.                F=   -0.
  G=    0.                H=    0.                I=    0.                J=   -0.
```


LOCKHEED
CALIFORNIA COMPANY

TABLE 6-7 (Continued)

```
     6        10         1         7         1    -1.000


 COEFFICIENTS FOR BDRY NO.  1  OF SURFACE NO.  10   A=    0.09999999E 01  B=   -0.09999999E 01
 C=   -0.09999999E 01  D=    0.              E=    0.              F=    0.
 G=    0.              H=    0.              I=    0.              J=    0.
    1        10         2         0         0    -1.000
2.000     0.        0.       -2.000     0.        0.        1.414
1.000     1.000

Q=(0,1,0)  FOR BDRY NO. 2   OF SURFACE NO. 10
       0.                  0.                  0.

 COEFFICIENTS FOR BDRY NO.  2  OF SURFACE NO.  10   A=    0.              B=    0.
 C=    0.              D=    0.              E=    0.              F=    0.
 G=    0.              H=    0.09999999E 01  I=   -0.09999999E 01  J=   -0.
    1        10         3         0         0     1.000
2.000     0.        0.       -2.000     0.        0.        1.414
1.000    -1.000

Q=(0,1,0)  FOR BDRY NO. 3   OF SURFACE NO. 10
      -0.                 -0.                  0.

 COEFFICIENTS FOR BDRY NO.  3  OF SURFACE NO.  10   A=   -0.              B=   -0.
 C=   -0.              D=   -0.              E=   -0.              F=   -0.
 G=   -0.              H=    0.09999999E 01  I=    0.09999999E 01  J=    0.
    7        11         5        -0        -0    -0.
```

TABLE 6-7 (Continued)

```
     -1          1          2         -0         -0
SURFACE NUMBER    1   WAS PUT ON TAPE
SURFACE NUMBER    2   WAS PUT ON TAPE
     0           3          4         -0         -0
SURFACE NUMBER    3   WAS PUT ON TAPE
SURFACE NUMBER    4   WAS PUT ON TAPE
     0           5          6         -0         -0
SURFACE NUMBER    5   WAS PUT ON TAPE
SURFACE NUMBER    6   WAS PUT ON TAPE
     0           7          8         -0         -0
SURFACE NUMBER    7   WAS PUT ON TAPE
SURFACE NUMBER    8   WAS PUT ON TAPE
     0           9         10         -0         -0
SURFACE NUMBER    9   WAS PUT ON TAPE
SURFACE NUMBER   10   WAS PUT ON TAPE
     1           1          2         -0         -0


DELS        0.25600000E-00      0.31999999E-00      0.44799999E-00      0.44799999E-00
 S=  1    T=  2     A(S)F(S,T)=      0.46795993E 01
 S=  1     AREA (S)=      0.23039999E 02
 S=  1    T=  2      F(S,T)=      0.20310761E-00
     1           1          3         -0         -0


DELS        0.25600000E-00      0.31999999E-00      0.25600000E-00      0.31999999E-00
 S=  1    T=  3     A(S)F(S,T)=      0.48154953E 01
 S=  1     AREA (S)=      0.23039999E 02
 S=  1    T=  3      F(S,T)=      0.20900588E-00
     1           1          4         -0         -0


DELS        0.25600000E-00      0.31999999E-00      0.19199999E-00      0.31999999E-00
 S=  1    T=  4     A(S)F(S,T)=      0.46101402E 01
 S=  1     AREA (S)=      0.23039999E 02
 S=  1    T=  4      F(S,T)=      0.20009290E-00
     1           2          1         -0         -0
```

TABLE 6-7 (Continued)

```
DELS        0.44799999E-00      0.44799999E-00      0.25600000E-00      0.31999999E-00

 S=  2    T=  1     A(S)F(S,T)=      0.46795992E 01

 S=  2     AREA (S)=      0.22880255E 02

 S=  2    T=  1      F(S,T)=      0.20452565E-00
      1          1          2          1         -0


S=  1   T=  2     F(S,T) WITH INTERFERENCE BY SURFACE NOS.    5
DELS        0.25600000E-00      0.31999999E-00      0.44799999E-00      0.44799999E-00

 S=  1    T=  2     A(S)F(S,T)=      0.35802703E 01

 S=  1     AREA (S)=      0.23039999E 02

 S=  1    T=  2      F(S,T)=      0.15539367E-00
      1          1          3          1         -0


S=  1   T=  3     F(S,T) WITH INTERFERENCE BY SURFACE NOS.    5
DELS        0.25600000E-00      0.31999999E-00      0.25600000E-00      0.31999999E-00

 S=  1    T=  3     A(S)F(S,T)=      0.37014874E 01

 S=  1     AREA (S)=      0.23039999E 02

 S=  1    T=  3      F(S,T)=      0.16065484E-00
      1          1          4          1         -0


S=  1   T=  4     F(S,T) WITH INTERFERENCE BY SURFACE NOS.    5
DELS        0.25600000E-00      0.31999999E-00      0.19199999E-00      0.31999999E-00

 S=  1    T=  4     A(S)F(S,T)=      0.66031986E 00

 S=  1     AREA (S)=      0.23039999E 02

 S=  1    T=  4      F(S,T)=      0.28659717E-01
      1          1          5         -0         -0


DELS        0.25600000E-00      0.31999999E-00      0.26666667E-00      0.26666667E-00

 S=  1    T=  5     A(S)F(S,T)=      0.79180087E 01

 S=  1     AREA (S)=      0.23039999E 02

 S=  1    T=  5      F(S,T)=      0.34366358E-00
      1          5          1         -0         -0
```

TABLE 6-7 (Continued)

```
DELS        0.26666667E-00      0.26666667E-00      0.25600000E-00      0.31999999E-00

 S=  5    T=  1     A(S)F(S,T)=      0.79180090E 01

 S=  5     AREA (S)=      0.44474768E 02

 S=  5    T=  1      F(S,T)=      0.17803373E-00
      1          6          1          -0         -0


DELS        0.26666667E-00      0.26666667E-00      0.25600000E-00      0.31999999E-00

 S=  6    T=  1     A(S)F(S,T)=      0.69512165E 01

 S=  6     AREA (S)=      0.44474768E 02

 S=  6    T=  1      F(S,T)=      0.15629573E-00
      1          7          1          -0         -0


DELS        0.18856186E-00      0.18856186E-00      0.25600000E-00      0.31999999E-00

 S=  7    T=  1     A(S)F(S,T)=      0.38166459E 01

 S=  7     AREA (S)=      0.14741864E 02

 S=  7    T=  1      F(S,T)=      0.25889846E-00
      1          8          1          -0         -0


DELS        0.18856186E-00      0.18856186E-00      0.25600000E-00      0.31999999E-00

 S=  8    T=  1     A(S)F(S,T)=      0.31685918E 01

 S=  8     AREA (S)=      0.17798078E 02

 S=  8    T=  1      F(S,T)=      0.17802998E-00
      1          9          1          -0         -0


DELS        0.18856186E-00      0.18856186E-00      0.25600000E-00      0.31999999E-00

 S=  9    T=  1     A(S)F(S,T)=      0.14001546E 01

 S=  9     AREA (S)=      0.17798078E 02

 S=  9    T=  1      F(S,T)=      0.78668863E-01
      1          5          2          -0         -0


DELS        0.26666667E-00      0.26666667E-00      0.44799999E-00      0.44799999E-00
```


LR 18905

TABLE 6-7 (Continued)

```
S=  5    T=  2     A(S)F(S,T)=      0.68297503E 01

S=  5     AREA (S)=      0.44474768E 02

S=  5    T=  2      F(S,T)=      0.15356460E-00
     1          6          2        -0         -0


DELS       0.26666667E-00      0.26666667E-00      0.44799999E-00      0.44799999E-00

S=  6    T=  2     A(S)F(S,T)=      0.82897630E 01

S=  6     AREA (S)=      0.44474768E 02

S=  6    T=  2      F(S,T)=      0.18639249E-00
     2          5          1        -0         -0


     3          1    -1.000
 0.         0.

I=  1   S=  5   T=  1   P(I)F(S,T)=      0.53672434E-02
  POINT ON S IS X(I)=      0.              Y(I)=      0.              Z(I)=     -0.20000000E 01

I=  2   S=  5   T=  1   P(I)F(S,T)=      0.53672446E-02
  POINT ON S IS X(I)=      0.              Y(I)=      0.              Z(I)=      0.20000000E 01
     2          5          1        -0         -0


     2          1    -1.000
 0.         0.

I=  1   S=  5   T=  1   P(I)F(S,T)=      0.
  POINT ON S IS X(I)=      0.              Y(I)=     -0.20000000E 01  Z(I)=      0.

I=  2   S=  5   T=  1   P(I)F(S,T)=      0.31865954E-00
  POINT ON S IS X(I)=      0.              Y(I)=      0.20000000E 01  Z(I)=      0.
     2          5          1        -0         -0


     1          2    -1.000
 0.         0.        1.200     0.

I=  1   S=  5   T=  1   P(I)F(S,T)=      0.
  POINT ON S IS X(I)=     -0.20000000E 01  Y(I)=      0.              Z(I)=      0.

I=  2   S=  5   T=  1   P(I)F(S,T)=      0.
  POINT ON S IS X(I)=     -0.16000000E 01  Y(I)=      0.12000000E 01  Z(I)=      0.

I=  3   S=  5   T=  1   P(I)F(S,T)=      0.65256266E 00
  POINT ON S IS X(I)=      0.20000000E 01  Y(I)=      0.              Z(I)=      0.

I=  4   S=  5   T=  1   P(I)F(S,T)=      0.98386411E 00
  POINT ON S IS X(I)=      0.16000000E 01  Y(I)=      0.12000000E 01  Z(I)=      0.
     3         10         -0         -0         -0
```


LOCKHEED
CALIFORNIA COMPANY

TABLE 6-7 (Continued)

```
S= 10      AREA (S)=      0.88990434E 01
     4         -0         -0         -0         -0
```


LOCKHEED
CALIFORNIA COMPANY

TABLE 6-8

SUMMARY OF EXAMPLE PROBLEM #3

From Surface s	To Surface t	AF Product Computed/True	Area of Surface s Computed/True	Shape Factor Computed/True
Top S(2)	Front S(1)	4.680	22.88	.2045
		4.608	23.04	.2000
Front S(1)	Top S(2)	4.680	23.04	.2031
		4.608	23.04	.2000
Front S(1)	Side S(3)	4.815	23.04	.2090
		4.608	23.04	.2000
Front S(1)	Back S(4)	4.610	23.04	.2001
		4.608	23.04	.2000
Front S(1)	Sphere-X	7.918	23.04	.3437
		8.377	23.04	.3636
Front S(1)	Sphere-Z	6.951	23.04	.3017
		8.377	23.04	.3636
Front S(1)	Sphere-P	8.385	23.04	.3639
		8.377	23.04	.3636
Sphere - P	Front S(1)	8.385	50.34	.1666
		8.377	50.26	.1667
Sphere - X	Front S(1)	7.918	44.47	.1780
		8.377	50.26	.1667
Sphere - Z	Front S(1)	6.951	44.47	.1563
		8.377	50.26	.1667
Sphere - X	Top S(2)	6.830	44.47	.1536
		8.377	50.26	.1667
Sphere - Z	Top S(2)	8.290	44.47	.1864
		8.377	50.26	.1667
Front S(1)	Top S(2)	3.58	23.04	.155
With Interference by S(5)		3.50	23.04	.152 *
Front S(1)	Side S(3)	3.70	23.04	.161
With Interference by S(5)		3.50	23.04	.152 *
Front S(1)	Back S(4)	.660	23.04	.029
With Interference by S(5)		.660	23.04	.029 *

*These "true" values are computed on the assumption that since F(1,4) is correct, F(1,4) with interference by S(5) is correct.

LOCKHEED
CALIFORNIA COMPANY

S(5), the sphere with x-dependent, S(6), the sphere with z-dependent, and the values computed for the entire sphere from the AF products and areas computed for the subsurfaces S(7), S(8) and S(9) of the partitioned sphere.

The true values used for the three shape factors with interference are based on the assumption that, since the AF product and shape factor from the front surface to the back without interference, F(1,4), is correct to three significant figures, the value of the AF product and F(1,4) with interference will be correct to three significant figures. Therefore, since F(1,4) = .029 with interference and the sum of the five shape factors from S(1) to the sides must equal .636, the shape factors F(1,2) and F(1,3) should be (.636 - .029)/4 = .152 and the AF products .152 x 23.04 = 3.50.

Comparing the areas, the computed area of S(2) is .7% low, while the area of S(1) is exact. This is due to the fact that S(1) covers the rectangle of the limits on the dependent coordinates exactly, while S(2) does not. Any plane area such as S(1), S(3), and S(4) which covers the rectangle of the dependent coordinates is computed exactly regardless of the number of grid points used. The error on S(2) is caused by points whose differential areas overlap the edge of the surface. Note that if the majority of these points happened to be inside the square S(2), their areas would be included and the area would have been too large rather than too small.

This difficulty can never be overcome completely as long as the surface does not cover the rectangle of the dependent coordinates. However, if the surface is partitioned into subareas with the appropriate rectangle of independent coordinates, the number of grid points can be increased for a resultant increase in accuracy. On the sphere the areas computed on S(5) and S(6) are affected by the same condition as the cone S(1), the sphere S(5), and the cylinder S(9) in example problem #2. By partitioning the sphere into three subareas, the error is decreased from 11.4% to .16%.

In comparing the AF products and shape factors for the cube, it is noted that the factor F(1,4) to the opposite side is exact while the factor to the top and adjacent sides are too high. This is entirely due to the areas very close to the common edge. This inaccuracy can be reduced, but never entirely eliminated, by partitioning.

If the subareas are concentrated along the common boundary, the partitioning gives the most improvement for the least cost. Note on the AF products the differences between computed and actual for both F(1,3) with and F(1,3) without interference by the sphere are almost identical. While these differences for F(1,2) with and without interference are very close to the same value. This indicates that the error is principally confined to the area near the common boundary.

The AF products and shape factors from sphere to plane show the effect of the choice of dependent variable as well as the advantage of partitioning. The effect of the area on the plane is shown by the comparison of the values computed for the front and the top. With the accurately computed front and x -dependent (the best choice) the AF product shows an error of -5.5% and the shape factor an error of +6.8%. . If the z is dependent (the worst choice), these errors become -17% and -6.3%, respectively, while with the partitioned sphere these errors are reduced to +.05% and -.06%.

Comparing the AF product from sphere -X to the top and from sphere -Z to the front, the difference simply mirrors the low area computed for the top. The size 8.29 of the AF product from sphere -Z to the top is explained by the fact that the top (0,0,2) of the sphere where the grid points are most densely packed is also the point closest to the top of the cube, while on sphere -X the densest collection of grid points is around (2,0,0) while the point closest to the front of the cube is (1.6,1.2,0). Thus the effect of the reduced area for S(2) (the top) on the AF product is relatively small. The point-to-surface shape factors show the variation in importance of the differential areas as the point moves away from the point (1.6,1.2,0) where the sphere and the front are the closest. At (1.6, 1.2,0) the factor is .984 at (2,0,0) the value drops to .652, and at (0,2,0) the factor is only .319. At the top of the sphere at (0,0,2) the value has dropped to only .005. These values show the importance of concentrating the grid points near the point where the distance between the surfaces is a minimum.

Taken as a whole, this problem illustrates most of the factors which affect accuracy. Additional cases such as from the bottom to the top or from the partitioned sphere to the top could have been computed, however these

results are easily predicted from the work already done. For the shape factor from bottom to top the excluded areas would decrease the AF product, but the shape factor would be nearly correct. In the case of the AF product and shape factor from the partitioned sphere to the top, the AF product would be slightly smaller which would decrease the shape factor and result in a slightly more accurate AF product but less accurate shape factor.

As noted in the boundary input section, page 6-62, the boundary B(2,1) composed of intersecting planes is an improper boundary for this surface since there is an unbounded area in the opposite angle of the double plane cylinder. Under the conditions imposed by the geometry of S(2) one extraneous grid point is produced. As a result the area of S(2) includes an area which is not a part of the cube. The size of this area A´ can be computed from the limits on the independent variables, GS and the angle α between the z axis and the normal to S(2).

$$A' = (x_{max} - x_{min})\ (y_{max} - y_{min})\ \cos(\alpha)\ /\ (GS)^2$$
$$= 6.72 \times 6.72 \times \cos(0)\ /\ 15^2$$
$$= .200704$$

Thus the area of S(2) should be 22.68 instead of 22.88, the corresponding error 1.6% rather than .7%. The distinction between the use of two intersecting planes as a double plane cylinder vs the use of the same planes as two distinct boundaries is also illustrated by the areas 17.8 and 8.9 computed for S(9) and S(10) respectively. In partitioning the sphere, S(9) is defined by using a double plane cylinder of intersecting planes as a boundary. Thus, S(9) includes two opposed sections of the sphere. For S(10), the two planes are used as separate boundaries. As shown in Figure 6-16, S(10) consists of a single section or one-half of S(9). These examples were used to emphasise the fact that a boundary cylinder formed by two intersecting planes splits the surface into four sections which are grouped in two sets of opposed sections. This is very useful for the positioning of cones, cylinders, spheres etc. as shown in Example problems 2 and 3. Two additional surfaces would be required for each of these if single plane boundaries were used in place of the double plane cylinders. Note that for the spheres, a boundary cone has a similar property. However it has also been shown that uncritical

LOCKHEED
CALIFORNIA COMPANY

use of this type of boundary can lead to error. In general the cylinder of intersecting planes should be used only when areas in opposed sections are required.

In this problem relatively small values of GS were used to save computer time without a serious loss of accuracy. Since computer time varies directly as the product of $\left[GS(1) \times GS(2)\right]^2$, doubling the value of GS on one surface increases the computing time by a factor of 4, while doubling GS on both surfaces increases the computing time by a factor of 16. Increasing GS to 20 for the sides of the cube would increase the computer time by a factor of $(20/15)^4 = (4/3)^4 = 3.16$. A partitioning scheme which concentrates the grid points along the common boundary would be more economical than an increase of GS on the unpartitioned surface. For example each plane could be split into a half and two quarters with the quarters along the common boundary. With GS = 10 on each of the subsurfaces, the accuracy will equal that given with GS = 20 on the unpartitioned surfaces. Without utilizing the symmetry of the problem, this will reduce the computer time factor from 3.16 to $9(10/15)^4 = 16/9 = 1.78$. Utilizing symmetry gives $4 \times (10/15)^4 = .79$ or a 21% saving in computer time. Alternately the GS on these surfaces could be increased for further accuracy for the same computer time as the single surfaces with GS = 15. The shape factor from front to side would be reduced from .2090 to .2068, or a reduction from 4.5% error to 3.4% error. The improvement in the factors to the top and back will be less since the error for GS = 15 is lower. In computations involving the partitioned sphere the change would be less than .1% at a cost of a 78% increase in computer time, assuming GS = 15 for each section of the sphere.

APPENDIX A

DERIVATION OF SURFACE INPUT EQUATIONS

This appendix describes the translation of the program input data into coefficients of the equations for the given surfaces. Equations are derived for each surface type in the order listed in Section III. As a preliminary, two subroutines are considered. The first is concerned with the solution of simultaneous homogeneous linear equations, while the other provides equations for the transformation of coordinate systems.

In the routines for computing surface equations, the coefficients frequently occur as the solution of simultaneous homogeneous linear equations. Assume a system of n equations in the variables V_j $j = 1, \ldots, (n + 1)$ represented by:

$$
\begin{array}{l}
a_{11} V_1 + a_{12} V_2 + \cdots\cdots + a_{1(n+1)} V_{(n+1)} = 0 \\
a_{21} V_1 + a_{22} V_2 + \cdots\cdots + a_{2(n+1)} V_{(n+1)} = 0 \\
\quad\vdots \qquad\qquad\qquad\qquad\qquad\qquad \vdots \\
a_{n1} V_1 + a_{n2} V_2 + \cdots\cdots + a_{n(n+1)} V_{(n+1)} = 0
\end{array}
$$

Let $[a_{ij}]$ represent the matrix of coefficients of this system. Since there are n equations in n + 1 variables, the matrix is rectangular of size n by (n + 1). Thus, the removal of one column reduces this matrix to a square matrix. Let $[a_{ij}]_k$ represent the square matrix obtained by deleting the k-th column of the matrix $[a_{ij}]$, and let det $[a_{ij}]_k$ represent the determinant of

LOCKHEED
CALIFORNIA COMPANY

$[a_{ij}]_k$. In this notation, the solution of the system of equations used by this program is given by the equation:

$$V_k = (-1)^{(k+1)} \left(\det [a_{ij}]_k\right) \quad k = 1, \ldots (n+1).$$

The principal value of this solution is that it reduces to the trivial solution $V_k = 0$ for all $k = 1, \ldots, (n + 1)$ whenever the input data are incapable of defining a single surface. For example, if four coplanar points are chosen to define a sphere and the four points are on the circumference of a circle, there are an infinite number of spheres through the points. If the points are not on a circle, there is no sphere containing the four points. Or consider three colinear points. The general solution to the equations related to this problem has to include the equations of all the planes passing through these points. In either of these cases, the program gives the trivial solution $V_k = 0$ for all $k = 1, \ldots, (n + 1)$. This has a double effect on the program operation. First, it cancels all computations requiring this surface, thereby saving computing time. And secondly, it provides a flag to show that the surface is inadequately defined by the input.

As an example of the difference in the equation of a surface vs. the equation of a family of surfaces, consider the plane through the points (1, 0, 0), (0, 2, 0), and (0, 0, 4), as well as the family of planes through (2, 1, 0), (2, 1, 3), and (2, 1, 17). The equation of the plane in intercept form is:

$$x + y/2 + z/4 = 1$$

However, from this it can be seen that for any non-zero value C of the coefficient of z, the plane will also be defined by the equation
$4Cx + 2Cy + Cz - 4C = 0$.

Note, that in effect, the other three coefficients are written as linear functions of the single coefficient C. This is characteristic of the equation of a surface, that the coefficients may be expressed as linear functions of any of the non-zero coefficients with any non-zero value of this

independent coefficient giving a set of coefficients for the same surface. On the other hand, the equation of the family of surfaces is:

$$Ax + By - (2A + B) = 0$$

In this equation there are two independent coefficients, hence no two can be written in terms of the third. This is also characteristic of families of surfaces. Thus, it can be seen that if the general solution $V_1, \ldots, V_{n+1}$ of the n simultaneous homogeneous equations is to define a surface rather than a family of surfaces, it must be possible to write each of the variables V_k as a linear function of any non-zero variable V_h.

A variable is called a non-zero variable if there exists a solution in which it is non-zero. Assume that V_h is a non-zero variable and write the system of equations in the form:

$$\begin{array}{l} a_{11} V_1 + \cdots + a_{1(h-1)} V_{h-1} + a_{1(h+1)} V_{h+1} + \cdots a_{1(n+1)} V_{n+1} = -a_{1h} V_h \\ \vdots \qquad\qquad\qquad\qquad\qquad\qquad\qquad\qquad\qquad\qquad\qquad\qquad \vdots \\ a_{n1} V_1 + \cdots + a_{n(h-1)} V_{h-1} + a_{n(h+1)} V_{h+1} + \cdots a_{n(n+1)} V_{n+1} = -a_{nh} V_h \end{array}$$

From the preceding discussion, it can be seen that if the variables $V_1, \ldots, V_{n+1}$ are to be the coefficients of the equation of a surface, these equations considered as n non-homogeneous equations in the n variables $V1, \ldots, V_{h-1}, V_{h+1}, \ldots, V_{n+1}$ must have a unique solution in terms of V_h. But this means that $\det [a_{ij}]_h$ is not zero and Cramer's rule can be applied. However, this rule is modified here so that the determinant in the numerator for the unknown V_k is $\det [a_{ij}]_k$. This is accomplished by factoring $-V_h$ from, and rearranging the columns of, the standard numerator determinant. As a result, the variable V_k if $k \neq h$ is given by:

$$V_k = (-1)^{(k-h)} V_h \left(\det [a_{ij}]_k\right) / \left(\det [a_{ij}]_h\right)$$

If V_h is now given the value $(-1)^{(h+1)}\left(\det\left[a_{ij}\right]_h\right)$, the equation for V_k reduces to:

$$V_k = (-1)^{k+1}\left(\det\left[a_{ij}\right]_k\right)$$

Note that the expression for V_k is independent of h and that if $k = h$ the equation gives V_h its own assigned value. Hence, on the assumption that there exists a $k = h$ so that $\det\left[a_{ij}\right]_h \neq 0$, the equation for V_k holds for all $k = 1, \ldots, n + 1$. Tracing this assumption back through the previous reasoning shows that this assumption implies that the non-homogeneous equations have a unique solution. Hence, the variables can be written as unique linear functions of a non-zero variable V_h, which implies that the variables $V_1, \ldots, V_{n+1}$ are the coefficients of an equation of a surface. On the other hand, if $\det\left[a_{ij}\right]_k = 0$ for all $k = 1, \ldots, n+1$, the non-homogeneous equations have no solution. Hence, the variables cannot be written as unique linear functions of a non-zero variable and $V_1, \ldots, V_{n+1}$ are the coefficients of a family of surfaces. This demonstrates that the expression for V_k gives the desired solution.

In several of the formats, the equations are first computed in terms of a translated and rotated coordinate system x", y", z". In each such input format, the point which is to be the origin in this transformed system is called P_o with coordinates (x_o, y_o, z_o). However, since the cases differ, this routine is entered at different steps in the various cases. To facilitate the indexing throughout, the direction cosines of the x" axis are called λ, μ, ν, of the y" axis λ_1, μ_1, ν_1, and of the z" axis λ_2, μ_2, ν_2. Using this notation, a transformation routine is developed to reduce the equation $A''x''^2 + B''y''^2 + B''z''^2 + 2G''x'' + J'' = 0$ to an equation in x, y and z. The equations of rotation relating x", y", z" to axes x', y', z' through P_o but parallel to x, y, z are:

$$x'' = \lambda x' + \mu y' + \nu z'$$

$$y'' = \lambda_1 x' + \mu_1 y' + \nu_1 z'$$

$$z'' = \lambda_2 x' + \mu_2 y' + \nu_2 z'$$

Substitution gives:

$$A''(\lambda x' + \mu y' + \nu z')^2 + B''\left[(\lambda_1 x' + \mu_1 y' + \nu_1 z')^2 + (\lambda_2 x' + \mu_2 y' + \nu_2 z')^2\right]$$

$$+ 2G''(\lambda x' + \mu y' + \nu z') + J'' = 0$$

Squaring and grouping in powers of the variables gives:

$$\left[A''\lambda^2 + B''\left(\lambda_1^2 + \lambda_2^2\right)\right] x'^2 + \left[A''\mu^2 + B''\left(\mu_1^2 + \mu_2^2\right)\right] y'^2$$

$$+ \left[A''\nu^2 + B''\left(\nu_1^2 - \nu_2^2\right)\right] z'^2 + 2\left[A''\lambda\mu + B''(\lambda_1\mu_1 + \lambda_2\mu_2)\right] x'y'$$

$$+ 2\left[A''\lambda\nu + B''(\lambda_1\nu_1 + \lambda_2\nu_2)\right] x'z' +$$

$$+ 2\left[A''\mu\nu + B''(\mu_1\nu_1 + \mu_2\nu_2)\right] y'z' + 2G''\lambda x' + 2G''\mu y'$$

$$+ 2G''\nu z' + J'' = 0$$

Substituting for λ_1, μ_1, ν_1 and λ_2, μ_2, ν_2 gives:

$$[B'' + (A'' - B'')\lambda^2]x'^2 + [B'' + (A'' - B'')\mu^2]y'^2 + [B'' + (A'' - B'')\nu^2]z'^2$$
$$+ 2(A'' - B'')\lambda\mu x'y' + 2(A'' - B'')\lambda\nu x'z' + 2(A'' - B'')\mu\nu y'z'$$
$$+ 2G''\lambda x' + 2G''\mu y' + 2G''\nu z' + J'' = 0$$

Which is an equation of the form

$$A'x'^2 + B'y'^2 + C'z'^2 + 2D'x'y' + 2E'x'z' + 2F'y'z' + 2G'x' + 2H'y'$$
$$+ 2I'z' + J' = 0$$

Translation to the x, y, z axes is accomplished by means of the equations:

$$x' = x - x_o$$

$$y' = y - y_o$$

$$z' = z - z_o$$

Substituting for x', y', and z' gives:

$$A' (x - x_o)^2 + B' (y - y_o)^2 + C' (z - z_o)^2 + 2D' (x - x_o) (y - y_o)$$

$$+ 2E' (x - x_o) (z - z_o) + 2F' (y - y_o) (z - z_o)$$

$$+ 2G' (x - x_o) + 2H' (y - y_o) + 2I' (z - z_o) + J' = 0$$

Clearing parentheses and collecting in powers of the variables gives:

$$A'x^2 + B'y^2 + C'z^2 + 2D'xy + 2E'xz + 2F'yz + 2F'yz$$

$$+ 2\left[G' - \left(A'x_o + D'y_o + E'z_o\right)\right]x + 2\left[H' - \left(D'x_o + B'y_o + F'z_o\right)\right]y$$

$$+ 2\left[I' - \left(E'x_o + F'y_o + C'z_o\right)\right]z + \left\{J' + A'x_o^2 + B'y_o^2 + C'z_o^2\right.$$

$$\left. + 2\left[D'x_oy_o + E'x_oz_o + F'y_oz_o - \left(G'x_o + H'y_o + I'z_o\right)\right]\right\} = 0$$

Assembling this information gives the following equations for the general quadric in x, y and z. These equations comprise the transformation subroutine which is used entirely or in part to transform the equations into the x, y, z coordinate system. This routine transforms only equations of the form $A''x''^2 + B''y''^2 + B''z''^2 + 2G''x'' + J'' = 0$ into the equivalent equation in the x, y, z system. However, parts of this routine can be used for the transformation of equations of slightly different form. Therefore, three entry points for this routine are identified. No alternate exits have been provided as there is no use for partially transformed equations since the program requires that every equation be in the same x, y, z coordinate system.

Entry #1 for the complete transformation routine:

$$G' = G'\lambda$$

$$H' = G''\mu$$

$$I' = G''\nu$$

$$K' = A'' - B''$$

Entry #2 if G', H', I' and K' are known or must be computed independently:

$$A = B'' + K'\lambda^2 \qquad D = K'\lambda\mu$$

$$B = B'' + K'\mu^2 \qquad E = K'\lambda\nu$$

$$C = B'' + K'\nu^2 \qquad F = K'\mu\nu$$

Entry #3 if translation only is required:

$$G = G' - (Ax_o + Dy_o + Ez_o)$$

$$H = H' - (Dx_o + By_o + Fz_o)$$

$$I = I' - (Ex_o + Fy_o + Cz_o)$$

$$J = J'' + Ax_o^2 + By_o^2 + Cz_o^2 + 2\left[Dx_oy_o + Ex_oz_o + Fy_oz_o - \left(G'x_o + H'y_o + I'z_o\right)\right]$$

Considering the surface equation computations in the order given in the format table, the first input format requiring computation is the plane given three points. For a plane, the quadric equation $\theta(x, y, z) = 0$ reduces to the linear equation

$$2Gx + 2Hy + 2Iz + J = 0$$

Substituting the coordinates of each of the three input surface points gives the simultaneous homogeneous linear equations:

$$2x_1G + 2y_1H + 2z_1I + J = 0$$

$$2x_2G + 2y_2H + 2z_2I + J = 0$$

$$2x_3G + 2y_3H + 2z_3I + J = 0$$

These equations can be solved by the general solution already developed. However, since the coefficient of J in the first equation is +1, hence never zero, this solution can be shortened by solving for G, H and I by the general solution and then obtaining J from the equation:

$$J = -2\ (Gx_1 + Hy_1 + Iz_1).$$

If the center $P_o = (x_o, y_o, z_o)$ and the radius (R) are known, the equation of the sphere is

$$x^2 + y^2 + z^2 - 2x_ox - 2y_oy - 2z_oz + \left(x_o^2 + y_o^2 + z_o^2 - R^2\right) = 0$$

Hence

$$A = B = C = 1,\ D = E = F = 0,\ G = -x_o,\ H = -y_o,\ I = -z_o$$

and $J = x_o^2 + y_o^2 + z_o^2 - R^2$ are the coefficients.

If four points $P_i = (x_i, y_i, z_i)$ $i = 1, \ldots, 4$ on a sphere are given, substitution into the standard equation of the sphere gives the four linear simultaneous equations:

$$2x_iG + 2y_iH + 2z_iI + J = -\left(x_i^2 + y_i^2 + z_i^2\right) \qquad i = 1, \ldots, 4$$

If $u_i = -\left(x_i^2 + y_i^2 + z_i^2\right)$ then Cramer's rule gives the solution for G, H and I:

$$u = 2 \det [x_i, y_i, z_i, 1] \quad i = 1, \ldots, 4$$

$$G = \left(\det [u_i, y_i, z_i, 1]\right)/u \quad i = 1, \ldots, 4$$

$$H = \left(\det [x_i, u_i, z_i, 1]\right)/u \quad i = 1, \ldots, 4$$

$$I = \left(\det [x_i, y_i, u_i, 1]\right)/u \quad i = 1, \ldots, 4$$

While J is given by:

$$J = u_1 - 2\left(Gx_1 + Hy_1 + Iz_1\right).$$

A right circular cylinder with axis along the x" axis has an equation of the form $y''^2 + z''^2 - R^2 = 0$. Therefore, given two axis points (P_o, P_1) and the radius (R) of the cylinder, the direction numbers of the axis will be:

$$l = x_1 - x_o$$

$$m = y_1 - y_o$$

$$n = z_1 - z_o$$

Then the direction cosines of the axis may be obtained from the equations:

$$d = (l^2 + m^2 + n^2)^{1/2}$$

$$\lambda = l/d$$

$$\mu = m/d$$

$$\nu = n/d$$

Since $G'' = 0$, the coefficients G', H', and I' will also be zero. Thus, computing time can be saved by settling $G' = H' = I' = 0$, $B'' = 1$, $K' = -1$, $J'' = -R^2$ and using the second entry to the transformation routine.

In the case of the right circular cylinder given the direction numbers (l: m: n) of an element plus three points (P_o, P_1, P_2) the first step is to establish a coordinate system.

The point P_o is taken as the origin with (l: m: n) as direction numbers of the positive x" axis. Now at least one of the numbers l, m, and n must be non-zero. Therefore, starting with n each will be tested. If n is not zero, the direction numbers of the y" axis are computed by:

$$l_1 = (x_1 - x_o)$$

$$m_1 = (y_1 - y_o)$$

$$n_1 = -(ll_1 + mm_1)/n$$

If $n = 0$ but $m \neq 0$ then the direction numbers are given by:

$$l_1 = (x_1 - x_o)$$

$$m_1 = -ll_1/m$$

$$n_1 = (z_1 - z_o)$$

Finally, if $n = m = 0$, set $l_1 = 0$ and $m_1 = (y_1 - y_o)$

$$n_1 = (z_1 - z_o)$$

In any case, the direction numbers of the x" and y" axes can be turned into their respective direction cosines as in the preceding case. The direction cosines of the z" axis are computed by the equations:

$$\lambda_2 = \mu\nu_1 - \nu\mu_1$$

$$\mu_2 = \nu\lambda_1 - \lambda\nu_1$$

$$\nu_2 = \lambda\mu_1 - \mu\lambda_1$$

Now the y" and z" coordinates of the points P_1 and P_2 can be computed by the equations:

$$y''_i = \lambda_1 (x_i - x_o) + \mu_1 (y_i - y_o) + \nu_1 (z_i - z_o) \quad i = 1, 2$$

$$z''_i = \lambda_2 (x_i - x_o) + \mu_2 (y_i - y_o) + \nu_2 (z_i - z_o) \quad i = 1, 2$$

Note that the transformed coordinates of P_o are (0, 0, 0) and that for a cylinder with elements parallel to the x" axis the x" coordinates are unnecessary. Since the cylinder passes through P_o, the term J" is zero and the equation is:

$$y''^2 + z''^2 + 2H''y + 2I''z = 0$$

Substituting the coordinates of P_1 and P_2 gives:

$$2y''_i H'' + 2z''_i = -\left(y''^2_i + z''^2_i\right) \quad i = 1, 2$$

The functions u, u_1 and u_2 will be defined by:

$$u = 2\left(y''_1 z''_2 - z''_1 y''_2\right)$$

$$u_i = -\left(y''^2_i + z''^2_i\right) \qquad = 1, 2$$

Then Cramer's rule gives H" and I" by the equations:

$$H'' = (u_1 z_2 - z_1 u_2)/u$$

$$I'' = (y_1 u_2 - u_1 y_2)/u$$

Since H" and I" are given rather than G", the intermediate rotated coefficients G', H' and I' must be computed before entering the transformation routine. Since the rotation equations are homogeneous, the degree of a term is unchanged by rotation. Hence, only H" y" + I" z" must be considered. Substituting the rotated variables for y" and z" gives:

$$H''\left(\lambda_1 x' + \mu_1 y' + \nu_1 z'\right) + I''\left(\lambda_2 x' + \mu_2 y' + \nu_2 z'\right) = \left(H''\lambda_1 + I''\lambda_2\right)x'$$
$$+ (H''\mu_1 + I''\mu_2)y' + (H''\nu_1 + I''\nu_2)\, z'$$

Thus the coefficients G', H' and I' are given by:

$$G' = H''\lambda_1 + I''\lambda_2$$

$$H' = H''\mu_1 + I''\mu_2$$

$$I' = H''\nu_1 + I''\nu_2$$

The coefficients are then obtained by setting B" = 1, K' = -1, J" = 0 and using entry #2 of the transformation routine.

The computations for the arbitrary conic cylinder parallel those just given for the right circular cylinder using the direction numbers of an element and three surface points. The differences arise from the two extra surface points and the equation in the x", y", z" system which is:

$$B'y''^2 + C'z''^2 + 2F''\, y''\, z'' + 2H''y'' + 2I''z'' = 0$$

The computation of the direction cosines of the axis system and the y''_i, z''_i coordinates of the surface points is accomplished using the equations developed for the right circular cylinder. However, for the surface points the index i will have a range from one to four rather than one and two. Substituting these points into the equation of the arbitrary conic cylinder gives four homogeneous simultaneous equations which can be solved by the general method:

$$y''^2_i\, B'' + z''^2_i\, C'' + 2y''_i\, z''_i\, F'' + 2\, y''_i\, H'' + 2z''_i\, I'' = 0 \qquad i = 1, \ldots, 4$$

LOCKHEED
CALIFORNIA COMPANY

Since the equation of the arbitrary conic cylinder does not fit the format of the transformation routine, the rotation must be performed independently. Using the same equations of rotation, the equation is:

$$B''\left(\lambda_1 x' + \mu_1 y' + \nu_1 z'\right)^2 + C''\left(\lambda_2 x' + \mu_2 y' + \nu_2 z'\right)$$

$$+ 2F''\left(\lambda_1 x' + \mu_1 y' + \nu_1 z'\right)\left(\lambda_2 x' + \mu_2 y' + \nu_2 z'\right)$$

$$+ 2H''\left(\lambda_1 x' + \mu_1 y' + \nu_1 z'\right) + 2I''\left(\lambda_2 x' + \mu_2 y' + \nu_2 z'\right) = 0$$

Removing parentheses and collecting terms in powers of the variables gives the equation:

$$\left(B''\lambda_1^2 + C''\lambda_2^2 + 2F''\lambda_1\lambda_2\right)x'^2 + \left(B''\mu_1^2 + C''\mu_2^2 + 2F''\mu_1\mu_2\right)y'^2 +$$

$$\left(B''\nu_1^2 + C''\nu_2^2 + 2F''\nu_1\nu_2\right)z'^2 + 2\left[B''\lambda_1\mu_1 + C''\lambda_2\mu_2 + F''\left(\lambda_1\mu_2 + \mu_1\lambda_2\right)\right]$$

$$x'y' + 2\left[B''\lambda_1\nu_1 + C''\lambda_2\nu_2 + F''\left(\lambda_1\nu_2 + \nu_1\lambda_2\right)\right]x'z' + 2\left[B''\mu_1\nu_1 + C''u_2\nu_2\right.$$

$$\left.F''\left(\mu_1\nu_2 + \nu_1\mu_2\right)\right]y'z' + 2\left(H''\lambda_1 + I''\lambda_2\right)x' + 2\left(H''\mu_1 + I''\mu_2\right)y' +$$

$$2\left(H''\nu_1 + I''\nu_2\right)z' = 0$$

Note that the coefficients G', H' and I' of x', y' and z' are those that were derived before. Thus the rotated equations are:

$$A = B''\lambda_1^2 + C''\lambda_2^2 + 2F''\lambda_1\lambda_2$$

$$B = B''\mu_1^2 + C''\mu_2^2 + 2F''\mu_1\mu_2$$

$$C = B''\nu_1^2 + C''\nu_2^2 + 2F''\nu_1\nu_2$$

$$D = B''\lambda_1\mu_1 + C''\lambda_2\mu_2 + F''\left(\lambda_1\mu_2 + \mu_1\lambda_2\right)$$

$$E = B''\lambda_1\nu_1 + C''\lambda_2\nu_2 + F''\left(\lambda_1\nu_2 + \nu_1\lambda_2\right)$$

$$F = B''\mu_1\nu_1 + C''\mu_2\nu_2 + F''\ (\mu_1\nu_2 + \mu_1\nu_2)$$

$$G' = H''\lambda_1 + I''\lambda_2$$

$$H' = H''\mu_1 + I''\mu_2$$

$$I' = H''\nu_1 + I''\nu_2$$

The transformation routine from entry #3 gives G, H, I and J.

If the axis of a conic of revolution is taken as the x" axis, the equation of the conic of revolution is:

$$A''x''^2 + B''y''^2 + B''z''^2 + 2G''x'' + J'' = 0$$

Using the cylindrical coordinates (x'', ρ'', θ'') where ρ'' is distance from the x" axis and θ'' is the angle around the x" axis, this equation becomes:

$$A''x''^2 + B''\rho^2 + 2G''x'' + J'' = 0$$

Note that since the surface is a body of revolution around the x" axis, this equation is independent of the angle θ. The direction numbers of the x" axis are:

$$l = x_4 - x_o$$

$$m = y_4 - y_o$$

$$n = z_4 - z_o$$

These are reduced to direction cosines by the method developed for the right circular cylinder. Hence the x" coordinates of the points

$P_i = (x_i, y_i, z_i)$ $i = 1, 2, 3$ are given by:

$$x''_i = \lambda(x_i - x_o) + \mu(y_i - y_o) + \nu(z_i - z_o)$$

LOCKHEED
CALIFORNIA COMPANY

If d_i is defined as the distance from P_o to P_i and α_i is defined as the angle $P_i P_o P_b$, the value of ρ_i'' $i = 1, 2, 3$ is given by:

$$\rho_i''^2 = d_i^2 \sin^2 \alpha_i = d_i^2 - d_i^2 \cos^2 \alpha_i \qquad i = 1, 2, 3$$

The scalors l_i, m_i and n_i of the segment $P_o P_i$ $i = 1, 2, 3$ are given by:

$$l_i = x_i - x_o \qquad i = 1, 2, 3$$

$$m_i = y_i - y_o \qquad i = 1, 2, 3$$

$$n_i = z_i - z_o \qquad i = 1, 2, 3$$

Hence d_i and $\cos \alpha_i$ are given by:

$$d_i^2 = l_i^2 + m_i^2 + n_i^2$$

$$\cos \alpha_i = (\lambda l_i + \mu m_i + \nu n_i)/d_i \qquad i = 1, 2, 3$$

Hence $\rho_i''^2$ is given by:

$$\rho_i''^2 = d_i^2 - (\lambda l_i + \mu m_i + \nu n_i)^2 = (1 - \lambda^2) l_i^2 + (1 - \mu^2) m_i^2$$

$$+ (1 - \nu^2) n_i^2 + 2[\lambda l_i (\mu m_i + \nu n_i) + \mu \nu m_i n_i]$$

Substituting these coordinates into the equation of the conic in the cylindrical coordinates gives:

$$x_i''^2 A'' + \rho_i''^2 B'' + 2x_i'' G'' + J'' = 0 \qquad i = 1, 2, 3$$

These simultaneous homogeneous equations can be solved for A", B" and G" by the general method and for J" by the shortcut:

$$J'' = -\left(A''\, x_1''^2 + B''\, \rho_1''^2 + 2G''x_1''\right)$$

The complete transformation routine will then be used to give the coefficients in the x, y, z system.

If nine surface points (P_1, ..., P_9) are given, their coordinates may be substituted into the general quadratic equation giving nine linear homogeneous equations:

$$x_i^2 A + y_i^2 B + z_i^2 C + 2x_i y_i D + 2x_i z_i E + 2y_i z_i F + 2x_i G + 2y_i H$$

$$+ 2z_i I + J = 0$$

These can be solved for A, ..., I by the general method; then -J is given by:

$$J = -\left\{Ax_1^2 + By_1^2 + Cz_1^2 + 2\left[(Dy_1 + Ez_1 + G)\, x_1\right.\right.$$

$$\left.\left. + (Fz_1 + H)\, y_1 + Iz_1\right]\right\}$$

Since all boundaries are defined by the intersection of the working surface with quadric boundary surfaces, the surface equation computations are used wherever possible. In fact, all but one of the boundary surface types are handled in this manner. The one exception is the straight line boundary on a plane. In this case, the boundary surface is defined to be the plane through the given boundary line perpendicular to the given plane. Therefore, if $2G_1x + 2H_1y + 2I_1z + J_1 = 0$ is the equation of the working surface S_1, and if P_o and P_1 are points on the boundary, direction numbers of the normal to S_1 are G_1, H_1 and I_1 while direction numbers for the boundary line are:

$$l = x_1 - x_o$$

$$m = y_1 - y_o$$

$$n = z_1 - z_o$$

Hence, the coefficients G_b, H_b and I_b of the boundary surface must satisfy the equations:

$$lG_b + mH_b + nI_b = 0$$

$$G_1G_b + H_1H_b + I_1I_b = 0$$

These can be solved by the standard method and J_b can then be obtained from

$$J_b = -2(G_bx_o + H_by_o + I_bz_o).$$

APPENDIX B

DERIVATION OF THE BASIC PROGRAM EQUATIONS

For quadric surfaces A_1 and A_2, this program gives a solution for the shape factor equation:

$$F_{1,2} = \frac{1}{\pi A_1} \int_{A_1} \int_{A_2} \frac{Q_1 \cdot Q_2}{s^2} \, dA_2 \cdot dA_1$$

where Q_1 is the larger of the two quantities, $\cos \phi_1$ or zero and Q_2 is the larger of $\cos \phi_2$ or zero.

Let $\theta_1 (x, y, z) = 0$ be the equation of A_1 and $\theta_2(x, y, z) = 0$ be the equation of A_2 where $\theta(x, y, z)$ represents the quadric form:

$$\theta(x, y, z) = Ax^2 + By^2 + Cz^2 + 2Dxy + 2Exz + 2Fyz + 2Gx + 2Hy + 2Iz + J$$

For convenience it is assumed that x is the dependent variable on A_1, while z is dependent on A_2. Any other choice of dependent variables can be handled by the program. However, since the derivations are exactly parallel, only the equations for the case of x dependent on A_1 and z dependent on A_2 are given. The machine sets up a square grid pattern in the plane of the independent coordinates; in the case of surface A_1 that would be the yz plane. This grid pattern gives the independent coordinates and the index of each grid point. Let $P_i(x, y_i, z_i)$ be a grid point on A_1 with independent coordinates, then $\theta_1(x, y_i, z_i) = 0$ can be solved for x.

$$A_1x^2 + 2(D_1y_i + E_1z_i + G_1)\, x + [J_1 + B_1y_i2 + 2\,(F_iy_iz_i + H_iy_i + I,z_i)] = 0$$

Each real solution of this equation gives the x coordinate of a grid point with independent coordinates y_i and z_i. Thus, the single pair (y_i, z_i) of

LOCKHEED
CALIFORNIA COMPANY

independent coordinates could give one, two, or no grid points. However, to avoid "vertical" grid points if $A \neq 0$, the machine rejects the solution when the quadratic has only one root.

Of course, if $A = 0$, the equation is linear and there is only one grid point for each pair of independent coordinates. Each grid point is then checked against the boundaries of the surface A_i with the computed grid points falling outside the specified boundaries being dropped and the remainder stored.

Let θ_{1x_i}, θ_{1y_i} and θ_{1z_i} represent the three partial derivations of θ_1 (x, y, z) evaluated at the point P_i. These are given by:

$$\theta_{1x_y} = 2\,(A_1x_i + D_1y_i + E_1z_i + G_1)$$

$$\theta_{1y_i} = 2\,(D_1x_i + B_1y_i + F_1z_i + H_1)$$

$$\theta_{1z_i} = 2\,(E_1x_i + F_1y_i + C_1z_i + I_1)$$

Using this notation, the differential surface area dA_{1i} of surface A_1 at point P_i (x_i, y_i, z_i) is given in terms of its projection $dA_{1i}^{(p)}$ on the plane of the independent variables (y and z) by the equation:

$$dA_{1i} = \frac{\sqrt{\theta_{1x_i}^2 + \theta_{1y_i}^2 + \theta_{1z_i}^2}}{\theta_{1x_i}^2}\, dA_{1i}^{(p)} = \frac{\sqrt{\theta_{1x_i}^2 + \theta_{1y_i}^2 + \theta_{1z_i}^2}}{\left|\theta_{1x_i}\right|}\, dA_{1i}^{(p)}$$

Note that this equation is undefined if $\theta_{1x_i} = 0$; but this occurs only if the tangent plane at P_i is perpendicular to the yz-plane, hence only if P_i is a vertical point. Therefore, as was stated previously, if any vertical point is chosen as a grid point it must be replaced by four surrounding points. Note, that only the denominator of this expression is dependent on the identity of the dependent coordinate. Hence, the function T_{1i} is defined by:

$$T_{1i} = \sqrt{\theta_{1x_i}^2 + \theta_{1y_i}^2 + \theta_{1z_i}^2}$$

Thus, at any point, P_k, on any quadric surface, A_t, defined by $\theta_t\ (x,y,z) = 0$, if ν represents the dependent coordinate on A_t, the relationship between dA_{tk} and the projected differential area $dA_{tk}^{(p)}$ is given by:

$$dA_{tk} = \frac{T_{tk}}{\left|\theta_t \nu_k\right|}\ dA_{tk}^{(p)}$$

Substituting these values into the shape factor equation gives:

$$F_{1,2} = \frac{1}{\pi A} \int_{A_1^{(p)}} \int_{A_2^{(p)}} \frac{Q_1\ T_1\ Q_2\ T_2}{\left|\theta_{1x}\right| \cdot \left|\theta_{2z}\right| s^2}\ dA_2^{(p)}\ dA_1^{(p)}$$

Assuming that all the grid points of A_1 and A_2 have been computed and stored, the program computes an approximate value for this integral using point by point numerical integration. For each pair of grid points P_i on A_1 and P_j on A_2, the program computes the integral V_{ij} of this equation:

$$V_{ij} = \frac{Q_{1ij}\ T_{1i}\ Q_{2ji}\ T_{2j}}{\left|\theta_{1x_i}\right| \cdot \left|\theta_{2z_j}\right| s^2_{ij}}$$

Now by definition s_{ij} is the distance from P_i to P_j. Therefore:

$$s_{ij}^2 = (x_j - x_i)^2 + (y_j - y_i)^2 + (z_j - z_i)^2$$

The function Q_{1ij} was defined as the larger of the two values $\cos \phi_{1ij}$ or 0, where ϕ_{1ij} is defined as the angle between the normal to A_1 at point P_i and the line segment P_iP_j. A set of direction numbers for the surface A_1 at P_i will be $l_{1i} = \theta_{1x_i}$; $n_{1i} = \theta_{1y_i}$; $n_{1i} = \theta_{1z_i}$, while a set of direction numbers for P_iP_j will be

$$l_{ij} = x_j - x_i\ ;\ m_{ij} = y_j - y_i\ ;\ n_{ij} = z_j - z_i\ .$$

Hence the $\cos \phi_{1ij}$ will be

$$\cos \phi_{1ij} = \frac{\theta_{1x_i} (x_j - x_i) + \theta_{1y_i} (y_j - y_i) + \theta_{1z_i} (z_j - z_i)}{\sqrt{\theta^2_{1x_i} + \theta^2_{1y_i} + \theta^2_{1z_i}} \cdot \sqrt{(x_j - x_i)^2 + (y_j - y_i)^2 + (z_j - z_i)^2}}$$

Similarly $\cos \phi_{2ji}$ is given by:

$$\cos \phi_{2ji} = \frac{\theta_{2x_j} (x_i - x_j) + \theta_{2y_j} (y_i - y_j) + \theta_{2z_j} (z_i - z_j)}{\sqrt{\theta^2_{2x_j} + \theta^2_{2y_j} + \theta^2_{2z_j} \cdot (x_j - x_i)^2 + (y_j - y_i)^2 + (z_j - z_i)^2}}$$

Since the denominator of the expression for $\cos \phi_{1ij}$ is $T_{1i} \cdot s_{ij}$, the value of $W_{1ij} = s_{ij} T_{1i}$, $\cos \phi_{1ij}$ is:

$$W_{1ij} = \theta_{1x_i} (x_j - x_i) + \theta_{1y_i} (y_j - y_i) + \theta_{1z_i} (z_j - z_i)$$

Now by definition, if P_i and P_j are distinct points, T_{1i} and s_{ij} are positive, while if P_i and P_j are the same point, $(x_j - x_i) = (y_j - y_i) = z_j - z_i) = 0$. Hence $\cos \phi_{1ij}$ will be greater than zero if, and only if W_{1ij} is greater than zero. Thus, Q_{1ij} is greater than zero if and only if W_{1ij} is positive. Since the numerator of V_{ij} is a product of factors, V_{ij} will be zero whenever any one of the factors is zero. Thus, if W_{1ij} is less than or equal to zero, V_{ij} will be set equal to zero without further computation. If W_{1ij} is positive, the corresponding factor $W_{2ji} = s_{ij} T_{2j} \cos \phi_{2ji}$ is computed by the formula:

$$W_{2ji} = \theta_{2x_j} (x_i - x_y) + \theta_{2y_j} (y_i - y_j) + \theta_{2z_j} (z_i - z_j).$$

Again, if this factor W_{2ji} is less than or equal to zero the function V_{ij} is set equal to zero; if not s^2_{ij} is computed by the formula given previously and V_{ij} is computed by:

LOCKHEED
CALIFORNIA COMPANY

$$V_{ij} = (W_{1ij} \cdot W_{2ji}) \,/\, (\left|\theta_{1x_i}\right| \cdot \left|\theta_{2z_j}\right| \cdot s^4_{ij})$$

Or in expanded form it is:

$$V_{ij} = \frac{\left[\theta_{1x_i}(x_j - x_i) + \theta_{1y_i}(y_j - y_i) + \theta_{1z_i}(z_j - z_i)\right]}{\left|\theta_{1x_i}\right| \cdot \left|\theta_{2z_j}\right| \cdot}$$

$$\frac{\left[\theta_{2x_j}(x_i - x_j) + \theta_{2y_j}(y_i - y_j) + \theta_{2z_j}(z_i - z_j)\right]}{\cdot\left[(x_j - x_i)^2 + (y_j - y_i)^2 + (z_j - z_i)^2\right]^2}$$

The sum of these integrands V_{ij} for all pairs of grid points P_i on A_1 and P_j and A_2 when multiplied by the standard projected area gives the desired approximation to the value of the integral. Similarly, if the values of dA_{1i} are summed over all grid points P_i on A_1, the approximate value of the area of A_1 is obtained. Then $F_{1,2}$ can be obtained by dividing the value of the integral by π times the area of A_1.

In the computer program, the summation proceeds by taking one point P_i on A_1 and summing over all points P_j on A_2. Note that in practice, since the factors T_{1i} and T_{2j} both appear in numerator and denominator, they are cancelled and do not appear in the computations. Hence T_{1i} is computed only for the computation of the area A_1 or the differential shape factor from P_1 to A_2. The factor T_{2j} is never computed in the shape factor computations, however since all the material is available, the program will compute the T_{2j} s and the area A_2 on request. If the machine is instructed to compute the differential shape factor from point P_i on surface A_1 to surface A_2, the general shape factor equations are used. The principal difference in the computation procedure is in the grid point routine where there is only the dependent variable of the one grid point P_i to compute. The single grid point P_i on A_1 of course reduces the shape factor integral to an integral over A_2 only, but this requires no additional computation since with only one grid point on A_1 there is no summing to be done.

If there is an interference test to be made, it would precede the computation of the factor W_{1ij}. The test is accomplished by solving for the intersections of the line through P_i and P_j with the given surface which is designated as A_3 with quadric equation $\theta_3(x,y,z) = 0$. Then, if there is an intersection point which is both within the boundaries of A_3 and between P_i and P_j, the integrand V_{ij} is set equal to zero and the program advances to the next pair of grid points. If no such intersection point exists, the program makes the next required interference test or if all these tests are finished it proceeds to the computation of W_{1ij} and eventually V_{ij}. The line containing P_i and P_j is defined by the three parametric equations:

$$x = x_i - (x_j - x_i)\, t = x_i + Lt$$

$$y = y_i - (y_j - y_i)\, t = y_i + Mt$$

$$z = z_i - (z_j - z_i)\, t = z_i + Nt$$

Substituting these values for x, y and z into $\theta_3\,(x,y,z) = 0$ gives:

$$A_3\,(x_i + Lt)^2 + B_3\,(y_i + Mt)^2 + C_3\,(z_i + Nt)^2 + 2D_3\,(x_i + Lt)(y_i + Mt)$$
$$+ 2E_3\,(x_i + Lt)\,(z_i + Nt) + 2F_3\,(y_i + Mt)\,(z_i + Nt) + 2\,G_3\,(x_i + Lt)$$
$$+ 2H_3\,(y_i + Mt) + 2I_3\,(z_i + Nt) + J_3 = 0$$

Clearing parentheses and collecting terms in powers of t gives the quadratic in t:

$$\left\{A_3L^2 + B_3M^2 + C_3N^2 + 2\left[L(D_3M + E_3N) + F_3MN\right]\right\} t^2 + 2\left[L(A_3x_i + D_3y_i + E_3z_i + G_3) + M(D_3x_i + B_3y_i + F_3z_i + H_3) + N(E_3x_i + F_3y_i + C_3z_i + I_3)\right]t +$$
$$(A_3x_i^2 + B_3\,y_i^2 + C_3z_i^2 + 2D_3x_iy_i + 2E_3x_iz_i + 2F_3y_iz_i + 2G_3x_i + 2H_3y_i +$$
$$2I_3z_i + J_3) = 0$$

LOCKHEED
CALIFORNIA COMPANY

Or this can be rewritten as

$$\left\{A_3L^2 + B_3M^2 + C_3N^2 + 2\left[L(D_3M + E_3N) + F_3MN\right]\right\} t^2 +$$

$$(L\theta_{3x_i} + M\theta_{3y_i} + N\theta_{3z_i})\, t + \theta_3(x_i, y_i, z_i) = 0$$

This quadratic can then be solved, and for each real solution t such that $0 < t < 1$, the coordinates $x = x_i + Lt$, $y = y_i + Mt$ and $z = z_i + Nt$ are computed. Since $0 < t < 1$ insures that the point of intersection lies between P_i and P_j, it is only necessary to check with the boundaries of A_3 to complete the interference test.

APPENDIX C

PROGRAM ARRANGEMENT AND LISTING

The radiation configuration factor program is coded in FORTRAN IV and overlayed into two links. Figure C-1 shows the deck setup for use with the IBM 7094 computer. The program deck called "1568" in Link 0 is merely a control program for the flow to Link 1 or Link 2 during execution.

The subroutine program decks contained in Link 1 are:

1. Subroutine COMPIL reads the input for the surface and boundary conditions and computes the coefficients for the equation describing these surfaces and boundaries, stores the data on tape unit 11 and prints this input and the coefficients on the output tape.
2. Subroutine MDETR computes the value of determinants and these results are used in computing the coefficients for the general equation of a surface.

The subroutine program decks contained in Link 2 are:

1. Subroutine COMPUT reads the indentification numbers of the surfaces for which shape factors are to be computed and prints the computed results, also stores the needed information for these computations on tape unit 8.
2. Subroutine VPANT searches tape unit 8 for the data of the surfaces for which shape factors are to be computed and brings this data into core storage.
3. Subroutine QMESS computes differential areas and performs a numerical integration to find the area of a given surface, also checks the input flag to see if any identification numbers of interfering surfaces are to be read from the input tape.
4. Subroutine GRID sets flags for later computation of grid points and dependent variables.
5. Subroutine POINT calculates the independent variables for the grid of the surfaces.

6. Subroutine DEPVAR calculates the dependent variables for the grid of the surfaces, and checks to see if all grid points lie within their specified boundaries.

7. Subroutine DIRECT computes the direction numbers for each point of the surfaces.

8. Subroutine FTEST checks the direction numbers for zero values.

9. Subroutine MTEST checks for shading of the surfaces if there were any interfering surfaces specified in the input.

Figure C-2 is a simplified flow diagram, showing the logical arrangement of the program and its two links. Table C-1 is a complete listing of the source program cards.

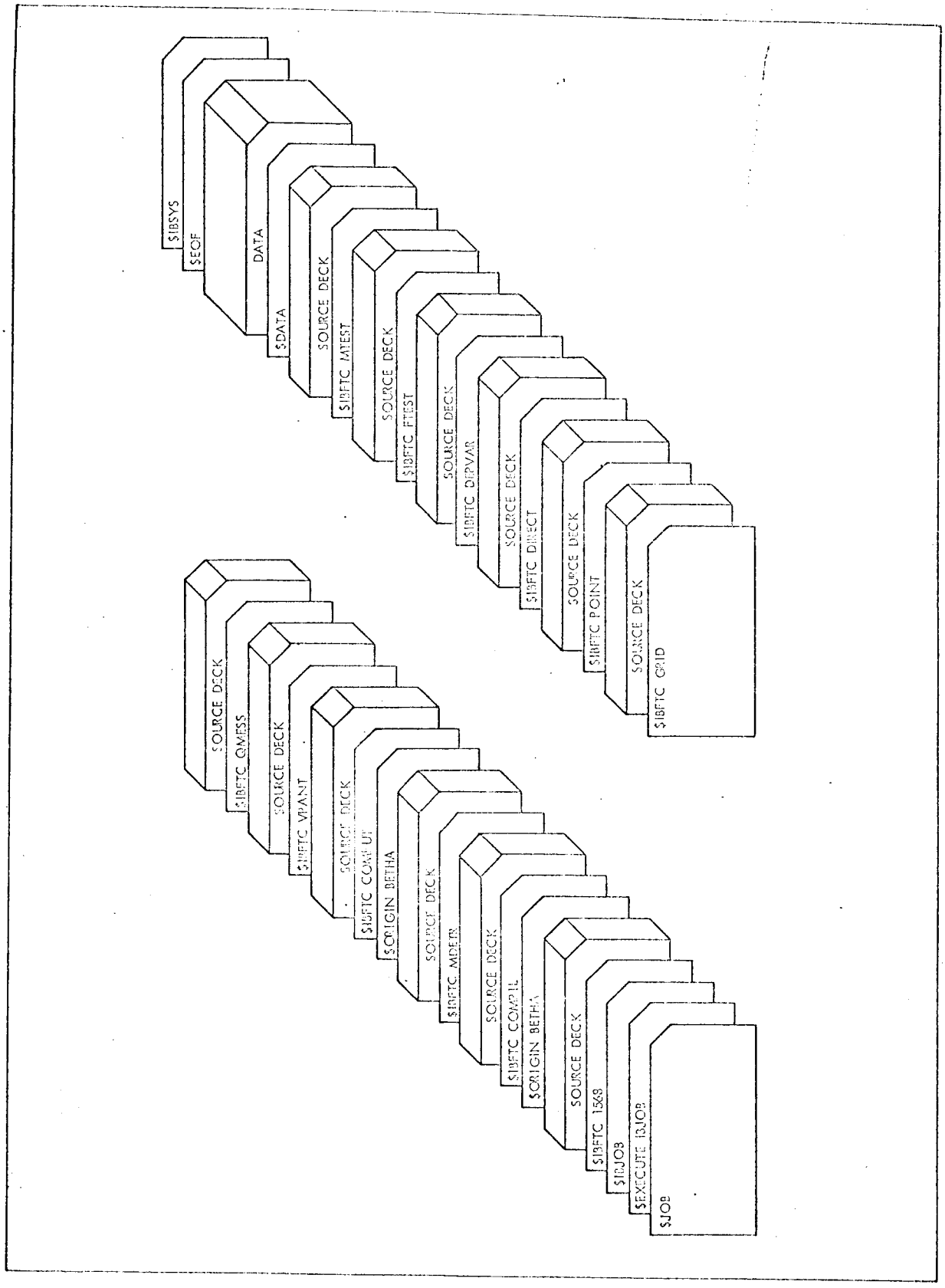

Figure C-1. FORTRAN IV Source Deck Setup for Radiation Configuration Factor Program

LOCKHEED
CALIFORNIA COMPANY

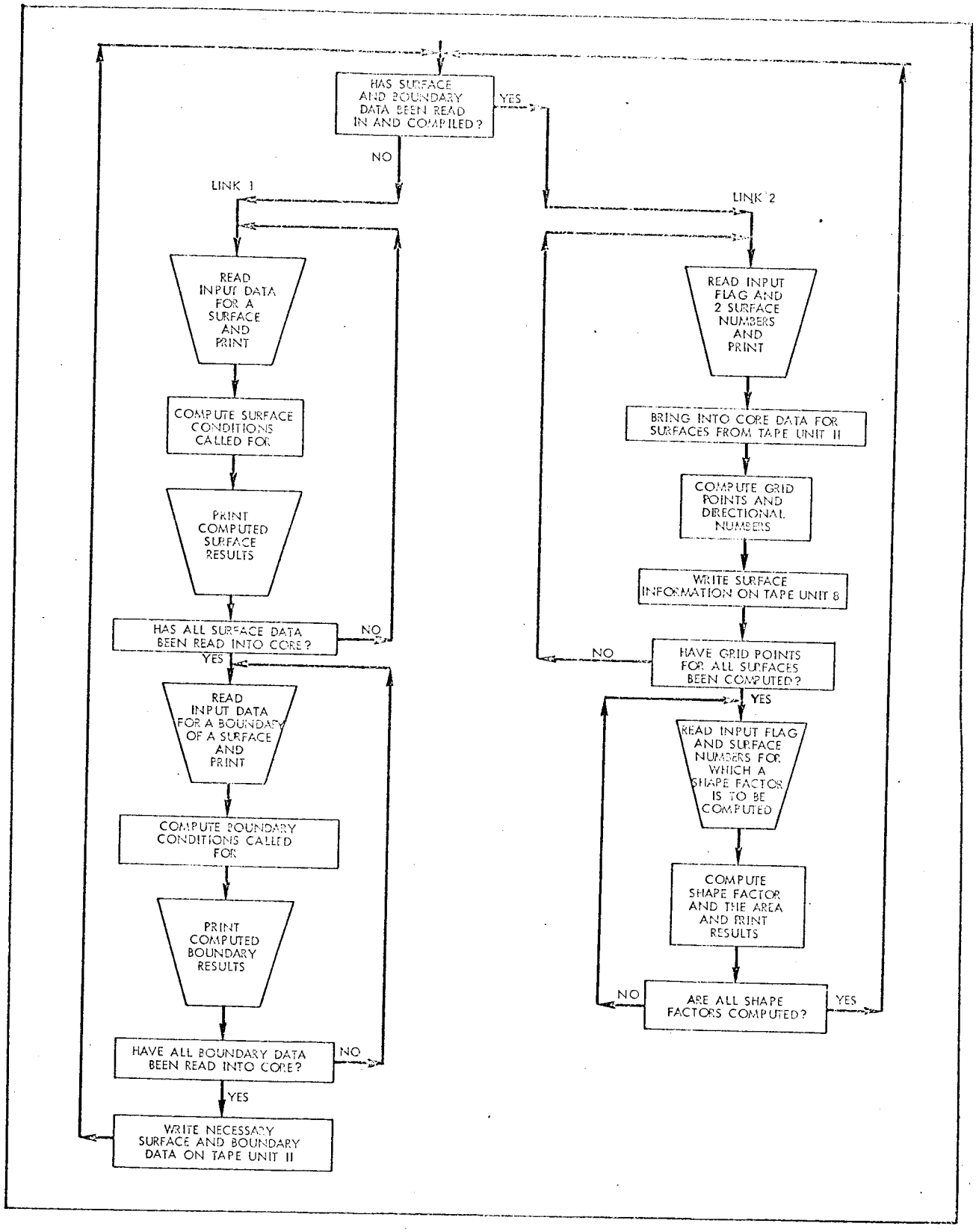

Figure C-2. Simplified Flow Diagram

LOCKHEED
CALIFORNIA COMPANY

TABLE C-1

PROGRAM LISTING

```
$IBFTC 1568     LIST,REF,DECK,M94,XR7
      REWIND 11                                                         1568001
      REWIND 8                                                          1568002
 2    CALL COMPIL                                                       1568003
      CALL COMPUT                                                       1568006
      REWIND 11                                                         1568007
      REWIND 8                                                          1568008
      GO TO 2
      END                                                               1568011
$ORIGIN         BETHA
$IBFTC COMPIL  LIST,REF,DECK,M94,XR7
      SUBROUTINE COMPIL
      DIMENSION DET(9,9),W(5),VAL(9)                                    15680020
      DIMENSION CA(100),CB(100),CC(100),CD(100),CE(100),CF(100),CG(100),15680030
     1 CH(100),CI(100),CJ(100),BA(100,6),BB(100,6),BC(100,6),BD(100,6), 15680040
     2 BE(100,6),BF(100,6),BG(100,6),BH(100,6),BI(100,6),BJ(100,6),     15680050
     3 X(10 ),Y(10 ),Z(10 ),XP(10 ),YP(10 ),ZP(10 ),DLP(10 ),DMP(10 ),  15680060
     4 DNP(10 ),LL(100),KNB(100),DSSI(100),QLIMI(100),QLIM2(100),       15680070
     5 QLIM3(100),QLIM4(100),GRIDS(100),DBSI(100,6),KOUNT(100)          15680080
 500  FORMAT (5I10)                                                     15680280
 501  FORMAT (7F10.3)                                                   15680290
 504  FORMAT (5I10,2F10.3)                                              15680300
 510  FORMAT ( 5H    J=I3,3X,29H  SURFACE S(J) IS NOT DEFINED )         15680310
 512  FORMAT ( 5H    J=I3,3X, 3H K=I3,3X,31H BOUNDARY B(J,K) IS NOT DEFIN15680320
     1ED )                                                              15680330
 514  FORMAT (46H FLAG IR IS GREATER THAN  TWO  IN MAIN PROGRAM )       15680340
 520  FORMAT (1H1)                                                      15680350
 522  FORMAT (36H0       Q=(0,0,0)    FOR SURFACE NO.  I3 )             15680360
 523  FORMAT (27H0    Q=(0,0,0)  FOR BDRY NO. I2,17H   OF SURFACE NO. I3)15680370
 524  FORMAT (36H0       Q=(1,0,0)    FOR SURFACE NO.  I3 )             15680380
 525  FORMAT (27H0    Q=(1,0,0)  FOR BDRY NO. I2,17H   OF SURFACE NO. I3)15680390
 526  FORMAT (36H0       Q=(0,1,0)    FOR SURFACE NO.  I3 )             15680400
 527  FORMAT (27H0    Q=(0,1,0)  FOR BDRY NO. I2,17H   OF SURFACE NO. I3)15680410
 528  FORMAT (36H0       Q=(0,0,1)    FOR SURFACE NO.  I3 )             15680420
 529  FORMAT (27H0    Q=(0,0,1)  FOR BDRY NO. I2,17H   OF SURFACE NO. I3)15680430
 530  FORMAT (36H0       Q=(-1,0,0)   FOR SURFACE NO.  I3 )             15680440
 531  FORMAT (27H0    Q=(-1,0,0) FOR BDRY NO. I2,17H   OF SURFACE NO. I3)15680450
 532  FORMAT (36H0       Q=(0,-1,0)   FOR SURFACE NO.  I3 )             15680460
 533  FORMAT (27H0    Q=(0,-1,0) FOR BDRY NO. I2,17H   OF SURFACE NO. I3)15680470
 534  FORMAT (36H0       Q=(0,0,-1)   FOR SURFACE NO.  I3 )             15680480
 535  FORMAT (27H0    Q=(0,0,-1) FOR BDRY NO. I2,17H   OF SURFACE NO. I3)15680490
 536  FORMAT (36H0       Q=(1,1,0)    FOR SURFACE NO.  I3 )             15680500
 537  FORMAT (27H0    Q=(1,1,0)  FOR BDRY NO. I2,17H   OF SURFACE NO. I3)15680510
 538  FORMAT (36H0       Q=(1,0,1)    FOR SURFACE NO.  I3 )             15680520
 539  FORMAT (27H0    Q=(1,0,1)  FOR BDRY NO. I2,17H   OF SURFACE NO. I3)15680530
 540  FORMAT (36H0       Q=(0,1,1)    FOR SURFACE NO.  I3 )             15680540
 541  FORMAT (27H0    Q=(0,1,1)  FOR BDRY NO. I2,17H   OF SURFACE NO. I3)15680550
 545  FORMAT (35H0      COEFFICIENTS FOR SURFACE NO. I3,3X,2HA=E18.8,2X, 15680560
     12HB=E18.8    / 6X,2HC=E18.8,2X,2HD=E18.8,2X,2HE=E18.8,2X,2HF=E18.8 15680570
     2/6X,2HG=E18.8,2X,2HH=E18.8,2X,2HI=E18.8,2X,2HJ=E18.8 )            15680580
 549  FORMAT (32H0      COEFFICIENTS FOR BDRY NO. I2,17H  OF SURFACE NO. 15680590
     1I3,3X,2HA=E18.8,2X,2HB=E18.8 /6X,2HC=E18.8,2X,2HD=E18.8,2X,2HE=E1815680600
     2.8,2X,2HF=E18.8 /6X,2HG=E18.8,2X,2HH=E18.8,2X,2HI=E18.8,2X,2HJ=   15680610
     3E18.8 )                                                           15680620
      KK=0                                                              15680630
      MAXS=0                                                            15680100
      WRITE (6,520)                                                     15680640
 1    READ  (5      ,500)IP,ISD,(LL(ISD),KNB(ISD)),ISDB                 15680650
      WRITE (6,500) IP,ISD,LL(ISD),KNB(ISD),ISDB                        15681001
      NN=0                                                              15680660
      IP=IP+2                                                           15680670
```


LOCKHEED
CALIFORNIA COMPANY

TABLE C-1

(CONTINUED)

```
      IF (IP-10) 2,2,199
 2    READ  (5      ,501)DSSI(ISD),QLIM1(ISD),QLIM2(ISD),QLIM3(ISD),
     1M4(ISD),GRIDS(ISD)
      WRITE (6,501) DSSI(ISD),QLIM1(ISD),QLIM2(ISD),QLIM3(ISD),
     1 QLIM4(ISD),GRIDS(ISD)
      IR=0
      MAXS=MAXS+1
      KOUNT(MAXS)=ISD
      GO TO (84,42,39,32,27,5,6,60,74,3),IP
C
C     SET SURFACE COEFFS. = TO PREVIOUSLY CALCULATED COEFFS. - FLAG=8
C
 3    A=CA(ISDB)
      B=CB(ISDB)
      C=CC(ISDB)
      D=CD(ISDB)
      E=CE(ISDB)
      F=CF(ISDB)
      G=CG(ISDB)
      H=CH(ISDB)
      QI=CI(ISDB)
      QJ=CJ(ISDB)
      GO TO 107
C
C     READ IN SURFACE COEFICENTS - FLAG=-1
C
 84   READ  (5      ,501)A,B,C,D,E,F,G,H,QI,QJ
      WRITE (6,501) A,B,C,D,E,F,G,H,QI,QJ
      D=D/2.0
      E=E/2.0
      F=F/2.0
      G=G/2.0
      H=H/2.0
      QI=QI/2.0
      GO TO 73
C
C     READ IN THREE PLANE SURFACE POINTS - FLAG=0
C
 42   READ  (5      ,501)(X(I),Y(I),Z(I),I=1,3)
      WRITE (6,501) (X(I),Y(I),Z(I),I=1,3)
      MM=1
      NN=3
      A=0.0
      B=0.0
      C=0.0
      D=0.0
      E=0.0
      F=0.0
      DO 300 I=1,3
      DET(I,1)=Y(I)
      DET(I,2)=Z(I)
      DET(I,3)=1.0
 300  CONTINUE
      CALL MDETR (3,ANS,DET)
      G=ANS
      DO 302 I=1,3
      DET (I,1)=X(I)
      DET (I,2)=Z(I)
      DET (I,3)=-1.0
 302  CONTINUE
      CALL MDETR (3,ANS,DET)
```

TABLE C-1

(CONTINUED)

```
      H=ANS
      DO 304 I=1,3
      DET(I,1)=X(I)
      DET(I,2)=Y(I)
      DET(I,3)=1.0
 304  CONTINUE
      CALL MDETR (3,ANS,DET)
      QI=ANS
      QJ=-2.0*(G*X(1)+H*Y(1)+QI*Z(1))
      GO TO 73
C
C     READ IN CENTER POINT AND RADIUS OF SPHERE - FLAG=1
C
 39   READ  (5      ,501)X(1),Y(1),Z(1),RADIUS
      WRITE (6,501) X(1),Y(1),Z(1),RADIUS
      A=1.0
      B=1.0
      C=1.0
      D=0.0
      E=0.0
      F=0.0
      G=-X(1)
      H=-Y(1)
      QI=-Z(1)
      QJ= X(1)**2 +Y(1)**2+Z(1)**2-RADIUS**2
      GO TO 73
C
C     READ IN FOUR NON-COPLANAR SURFACE POINTS OF SPHERE - FLAG=2
C
 32   READ  (5      ,501)(X(I),Y(I),Z(I),I=1,4)
      WRITE (6,501) (X(I),Y(I),Z(I),I=1,4)
      MM=1
      NN=4
      A=1.0
      B=1.0
      C=1.0
      D=0.0
      E=0.0
      F=0.0
      DO 306 I=1,4
      DET(I,1)=X(I)
      DET(I,2)=Y(I)
      DET(I,3)=Z(I)
      DET(I,4)=1.0
 306  CONTINUE
      CALL MDETR (4,ANS,DET)
      QK=2.0*ANS
      DO 308 I=1,4
      W(I)=-1.0*(X(I)**2+Y(I)**2+Z(I)**2)
 308  CONTINUE
      DO 310 I=1,4
      DET(I,1)=W(I)
      DET(I,2)=Y(I)
      DET(I,3)=Z(I)
      DET(I,4)=1.0
 310  CONTINUE
      CALL MDETR (4,ANS,DET)
      G=ANS/QK
      DO 312 I=1,4
      DET(I,1)=X(I)
      DET(I,2)=W(I)
```


LOCKHEED
CALIFORNIA COMPANY

TABLE C-1

(CONTINUED)

```
      DET(I,3)=Z(I)
      DET(I,4)=1.0
 312  CONTINUE
      CALL MDETR (4,ANS,DET)
      H=ANS/QK
      DO 314 I=1,4
      DET(I,1)=X(I)
      DET(I,2)=Y(I)
      DET(I,3)=W(I)
      DET(I,4)=1.0
 314  CONTINUE
      CALL MDETR (4,ANS,DET)
      QI=ANS/QK
      QJ= -(X(1)**2+Y(1)**2+Z(1)**2+2.0*G *X(1)+2.0*H*Y(1)+2.0*QI*Z(1))
      GO TO 73
C
C     READ IN 2-AXIS PTS AND RADIUS OF RT CIRCULAR CYL - FLAG=3
C
 27   READ  (5      ,501)(X(I),Y(I),Z(I),I=1,2),RADIUS
      WRITE (6,501) (X(I),Y(I),Z(I),I=1,2),RADIUS
      DL=X(2)-X(1)
      DM=Y(2)-Y(1)
      DN=Z(2)-Z(1)
      DD=SQRT(DL*DL+DM*DM+DN*DN)
      QLAMDA=DL/DD
      QMU=DM/DD
      QNEU=DN/DD
      A=0.0
      B=1.0
      G=0.0
      H=0.0
      QI=0.0
      QJ=-RADIUS**2
 68   QK=A-B
      A=B+QK*QLAMDA**2
      C=B+QK*QNEU**2
      B=B+QK*QMU**2
      D=QK*QLAMDA*QMU
      E=QK*QLAMDA*QNEU
      F=QK*QMU*QNEU
 71   QJ=QJ+A*X(1)**2+B*Y(1)**2+C*Z(1)**2 +2.0*((D*Y(1)+E*Z(1)-G)*X(1)+
     1  (F*Z(1)-H)*Y(1)-QI *Z(1))
 72   G=G-A*X(1)-D*Y(1)-E *Z(1)
      H=H-D*X(1)-B*Y(1)-F *Z(1)
      QI=QI-E*X(1)-F*Y(1)-C *Z(1)
      GO TO 73
C
C     READ IN 3 SURFACE PTS AND DIRECTION NOS OF RT CIR CYL - FLAG=4
C
 5    READ  (5      ,501)(X(I),Y(I),Z(I),I=1,3),DL,DM,DN
      WRITE (6,501) (X(I),Y(I),Z(I),I=1,3),DL,DM,DN
      MM=1
      NN=3
      IR=-1
 7    DD=SQRT(DL*DL+DM*DM+DN*DN)
      QLAMDA=DL/DD
      QMU=DM/DD
      QNEU=DN/DD
      IF (DN) 14,9,14
 9    IF (DM) 12,10,12
 10   DM1=Y(2)-Y(1)
```


LOCKHEED
CALIFORNIA COMPANY

TABLE C-1

(CONTINUED)

```
      DN1=Z(2)-Z(1)
      DL1=0.0
      GO TO 16
12    DL1=X(2)-X(1)
      DN1=Z(2)-Z(1)
      DM1=-DL*DL1/DM
      GO TO 16
14    DL1=X(2)-X(1)
      DM1=Y(2)-Y(1)
      DN1=-(DL*DL1+DM*DM1)/DN
16    DD1=SQRT(DL1*DL1+DM1*DM1+DN1*DN1)
      QLAM1=DL1/DD1
      QMU1=DM1/DD1
      QNEU1=DN1/DD1
      QLAM2=QMU*QNEU1-QNEU*QMU1
      QMU2=QNEU*QLAM1-QLAMDA*QNEU1
      QNEU2=QLAMDA*QMU1-QMU*QLAM1
      YP(1)=QLAM1*(X(2)-X(1))+QMU1*(Y(2)-Y(1))+QNEU1*(Z(2)-Z(1))
      YP(2)=QLAM1*(X(3)-X(1))+QMU1*(Y(3)-Y(1))+QNEU1*(Z(3)-Z(1))
      ZP(1)=QLAM2*(X(2)-X(1))+QMU2*(Y(2)-Y(1))+QNEU2*(Z(2)-Z(1))
      ZP(2)=QLAM2*(X(3)-X(1))+QMU2*(Y(3)-Y(1))+QNEU2*(Z(3)-Z(1))
      IF (IR) 22,48,19
19    IF (IR-2) 22,48,48
22    W(1)=-(YP(1)**2+ZP(1)**2)
      W(2)=-(YP(2)**2+ZP(2)**2)
      QK=2.0*(YP(1)*ZP(2)-YP(2)*ZP(1))
      HP=(W(1)*ZP(2)-ZP(1)*W(2))/QK
      QI=(YP(1)*W(2)-W(1)*YP(2))/QK
      G=HP*QLAM1+QI*QLAM2
      H=HP*QMU1+QI*QMU2
      QI=HP*QNEU1+QI*QNEU2
      A=0.0
      B=1.0
      QJ=0.0
      GO TO 68
48    YP(3)=QLAM1*(X(4)-X(1))+QMU1*(Y(4)-Y(1))+QNEU1*(Z(4)-Z(1))
      YP(4)=QLAM1*(X(5)-X(1))+QMU1*(Y(5)-Y(1))+QNEU1*(Z(5)-Z(1))
      ZP(3)=QLAM2*(X(4)-X(1))+QMU2*(Y(4)-Y(1))+QNEU2*(Z(4)-Z(1))
      ZP(4)=QLAM2*(X(5)-X(1))+QMU2*(Y(5)-Y(1))+QNEU2*(Z(5)-Z(1))
      DO 316 I=1,4
      DET(I,1)=ZP(I)**2
      DET(I,2)=YP(I)*ZP(I)
      DET(I,3)=YP(I)
      DET(I,4)=ZP(I)
316   CONTINUE
      CALL MDETR (4,ANS,DET)
      BP=2.0*ANS
      DO 318 I=1,4
      DET(I,1)=YP(I)**2
      DET(I,2)=YP(I)*ZP(I)
      DET(I,3)=YP(I)
      DET(I,4)=ZP(I)
318   CONTINUE
      CALL MDETR (4,ANS,DET)
      CP=-2.0*ANS
      DO 320 I=1,4
      DET(I,1)=YP(I)**2
      DET(I,2)=ZP(I)**2
      DET(I,3)=YP(I)
      DET(I,4)=ZP(I)
320   CONTINUE
```


LOCKHEED
CALIFORNIA COMPANY

TABLE C-1

(CONTINUED)

```
      CALL MDETR (4,ANS,DET)
      F=ANS
      DO 322 I=1,4
      DET(I,1)=YP(I)**2
      DET(I,2)=ZP(I)**2
      DET(I,3)=YP(I)*ZP(I)
      DET(I,4)=ZP(I)
  322 CONTINUE
      CALL MDETR (4,ANS,DET)
      HP=-ANS
      DO 324 I=1,4
      DET(I,1)=YP(I)**2
      DET(I,2)=ZP(I)**2
      DET(I,3)=YP(I)*ZP(I)
      DET(I,4)=YP(I)
  324 CONTINUE
      CALL MDETR (4,ANS,DET)
      QI=ANS
      A=BP*QLAM1**2+CP*QLAM2**2+2.0*QLAM1*QLAM2*F
      B=BP*QMU1**2+CP*QMU2**2+2.0*QMU1*QMU2*F
      C=BP*QNEU1**2+CP*QNEU2**2+2.0*QNEU1*QNEU2*F
      D=BP*QLAM1*QMU1+CP*QLAM2*QMU2+(QLAM1*QMU2+QMU1*QLAM2)*F
      E=BP*QLAM1*QNEU1+CP*QLAM2*QNEU2+(QLAM1*QNEU2+QNEU1*QLAM2)*F
      F=BP*QMU1*QNEU1+CP*QMU2*QNEU2+(QMU1*QNEU2+QNEU1*QMU2)*F
      G=HP*QLAM1+QI*QLAM2
      H=HP*QMU1+QMU2*QI
      QI=HP*QNEU1+QNEU2*QI
      QJ=0.0
      GO TO 71
C
C     READ IN 5 PTS. AND DIRECTION NOS OF ARBITRARY CONIC CYL - FLAG=5
C
    6 READ  (5      ,501)(X(I),Y(I),Z(I),I=1,5),DL,DM,DN
      WRITE (6,501) (X(I),Y(I),Z(I),I=1,5),DL,DM,DN
      MM=1
      NN=5
      GO TO 7
C
C     READ IN 2 AXIS PTS P0 AND P4 + 3 PTS OF ARB CONIC OF REV -FLAG=6
C
   60 READ  (5      ,501)(X(I),Y(I),Z(I),I=1,5)
      WRITE (6,501) (X(I),Y(I),Z(I),I=1,5)
      MM=2
      NN=4
      DL=X(5)-X(1)
      DM=Y(5)-Y(1)
      DN=Z(5)-Z(1)
      DD=SQRT(DL*DL+DM*DM+DN*DN)
      QLAMDA=DL/DD
      QMU=DM/DD
      QNEU=DN/DD
      DLP(1)=X(2)-X(1)
      DLP(2)=X(3)-X(1)
      DLP(3)=X(4)-X(1)
      DMP(1)=Y(2)-Y(1)
      DMP(2)=Y(3)-Y(1)
      DMP(3)=Y(4)-Y(1)
      DNP(1)=Z(2)-Z(1)
      DNP(2)=Z(3)-Z(1)
      DNP(3)=Z(4)-Z(1)
      DO 61 I=1,3
```

TABLE C-1

(CONTINUED)

```
      XP(I)=QLAMDA*DLP(I)+QMU*DMP(I)+QNEU*DNP(I)
      YP(I)=(1.0-QLAMDA**2)*DLP(I)**2+(1.0-QMU**2)*DMP(I)**2+(1.0-QNEU**
     12)  *DNP(I)**2-2.0*(QLAMDA*DLP(I)*(QMU*DMP(I)+QNEU*DNP(I))+
     2      QMU*QNEU*DMP(I)*DNP(I))
 61   CONTINUE
      DO 62 I=1,3
      DET(I,1)=YP(I)
      DET(I,2)=XP(I)
      DET(I,3)=1.0
 62   CONTINUE
      CALL MDETR (3,ANS,DET)
      A=ANS
      DO 63 I=1,3
      DET(I,1)=XP(I)**2
      DET(I,2)=XP(I)
      DET(I,3)=-1.0
 63   CONTINUE
      CALL MDETR (3,ANS,DET)
      B=ANS
      DO 64 I=1,3
      DET(I,1)=XP(I)**2
      DET(I,2)=YP(I)
      DET(I,3)=.5
 64   CONTINUE
      CALL MDETR (3,ANS,DET)
      G=ANS
      QJ=-(A*XP(1)**2+B*YP(1)+2.0*XP(1)*G)
      QI=G*QNEU
      H=G*QMU
      G=G*QLAMDA
      GO TO 68
C
C     READ IN 9 SPACED SURFACE PTS OF AN ARB CONIC - FLAG=7
C
 74   READ  (5      ,501)(X(I),Y(I),Z(I),I=1,9)
      WRITE (6,501) (X(I),Y(I),Z(I),I=1,9)
      MM=1
      NN=9
      DO 76 I=1,9
      DET(I,1)=Y(I)**2
      DET(I,2)=Z(I)**2
      DET(I,3)=X(I)*Y(I)
      DET(I,4)=X(I)*Z(I)
      DET(I,5)=Y(I)*Z(I)
      DET(I,6)=X(I)
      DET(I,7)=Y(I)
      DET(I,8)=Z(I)
      DET(I,9)=1.0
 76   CONTINUE
      CALL MDETR (9,ANS,DET)
      A=ANS
      DO 77 I=1,9
      DET(I,1)=X(I)**2
      DET(I,2)=Z(I)**2
      DET(I,3)=X(I)*Y(I)
      DET(I,4)=X(I)*Z(I)
      DET(I,5)=Y(I)*Z(I)
      DET(I,6)=X(I)
      DET(I,7)=Y(I)
      DET(I,8)=Z(I)
      DET(I,9)=-1.0
```


LOCKHEED
CALIFORNIA COMPANY

TABLE C-1

(CONTINUED)

```
77    CONTINUE
      CALL MDETR (9,ANS,DET)
      B=ANS
      DO 78 I=1,9
      DET(I,1)=X(I)**2
      DET(I,2)=Y(I)**2
      DET(I,3)=X(I)*Y(I)
      DET(I,4)=X(I)*Z(I)
      DET(I,5)=Y(I)*Z(I)
      DET(I,6)=X(I)
      DET(I,7)=Y(I)
      DET(I,8)=Z(I)
      DET(I,9)=1.0
78    CONTINUE
      CALL MDETR (9,ANS,DET)
      C=ANS
      DO 79 I=1,9
      DET(I,1)=X(I)**2
      DET(I,2)=Y(I)**2
      DET(I,3)=Z(I)**2
      DET(I,4)=X(I)*Z(I)
      DET(I,5)=Y(I)*Z(I)
      DET(I,6)=X(I)
      DET(I,7)=Y(I)
      DET(I,8)=Z(I)
      DET(I,9)=-.5
79    CONTINUE
      CALL MDETR (9,ANS,DET)
      D=ANS
      DO 80 I=1,9
      DET(I,1)=X(I)**2
      DET(I,2)=Y(I)**2
      DET(I,3)=Z(I)**2
      DET(I,4)=X(I)*Y(I)
      DET(I,5)=Y(I)*Z(I)
      DET(I,6)=X(I)
      DET(I,7)=Y(I)
      DET(I,8)=Z(I)
      DET(I,9)=.5
80    CONTINUE
      CALL MDETR (9,ANS,DET)
      E=ANS
      DO 81 I=1,9
      DET(I,1)=X(I)**2
      DET(I,2)=Y(I)**2
      DET(I,3)=Z(I)**2
      DET(I,4)=X(I)*Y(I)
      DET(I,5)=X(I)*Z(I)
      DET(I,6)=X(I)
      DET(I,7)=Y(I)
      DET(I,8)=Z(I)
      DET(I,9)=-.5
81    CONTINUE
      CALL MDETR (9,ANS,DET)
      F=ANS
      DO 82 I=1,9
      DET(I,1)=X(I)**2
      DET(I,2)=Y(I)**2
      DET(I,3)=Z(I)**2
      DET(I,4)=X(I)*Y(I)
      DET(I,5)=X(I)*Z(I)
```

TABLE C-1

(CONTINUED)

```
      DET(I,6)=Y(I)*Z(I)
      DET(I,7)=Y(I)
      DET(I,8)=Z(I)
      DET(I,9)=.5
82    CONTINUE
      CALL MDETR (9,ANS,DET)
      G=ANS
      DO 83 I=1,9
      DET(I,1)=X(I)**2
      DET(I,2)=Y(I)**2
      DET(I,3)=Z(I)**2
      DET(I,4)=X(I)*Y(I)
      DET(I,5)=X(I)*Z(I)
      DET(I,6)=Y(I)*Z(I)
      DET(I,7)=X(I)
      DET(I,8)=Z(I)
      DET(I,9)=-.5
83    CONTINUE
      CALL MDETR (9,ANS,DET)
      H=ANS
      DO 85 I=1,9
      DET(I,1)=X(I)**2
      DET(I,2)=Y(I)**2
      DET(I,3)=Z(I)**2
      DET(I,4)=X(I)*Y(I)
      DET(I,5)=X(I)*Z(I)
      DET(I,6)=Y(I)*Z(I)
      DET(I,7)=X(I)
      DET(I,8)=Y(I)
      DET(I,9)=.5
85    CONTINUE
      CALL MDETR (9,ANS,DET)
      QI=ANS
      QJ=-(A*X(1)**2+B*Y(1)**2+C*Z(1)**2 +2.0*((D*Y(1)+E*Z(1)+G)*X(1)+
     1  (F*Z(1)+H)*Y(1)+QI*Z(1)))
73    IF (QJ) 104,86,104
86    IF (A+2.0*G) 103,87,103
87    IF (B+2.0*H) 102,88,102
88    IF (C+2.0*QI) 101,89,101
89    IF (A) 100,90,100
90    IF (B) 99,91,99
91    IF (C) 98,92,98
92    IF (D) 97,93,97
93    IF (E) 96,94,96
94    IF (F) 95,108,95
95    ALPHA=F
      IF (KK) 420,420,421
420   WRITE (6,540)ISD
      GO TO 105
421   WRITE (6,541)KK,ISD
      GO TO 105
96    ALPHA=E
      IF (KK) 422,422,423
422   WRITE (6,538)ISD
      GO TO 105
423   WRITE (6,539)KK,ISD
      GO TO 105
97    ALPHA=D
      IF (KK) 424,424,425
424   WRITE (6,536)ISD
```

0548

LOCKHEED
CALIFORNIA COMPANY

TABLE C-1

(CONTINUED)

```
902   CONTINUE
      IF (NFLAG) 915,915,910
910   IF (KK) 906,906,908
906   WRITE (6,510)ISD
      GO TO 915
908   WRITE (6,512)KK,ISD
915   WRITE (6,950)(VAL(I),I=MM,NN)
950   FORMAT ( 6H      6E20.8/6X,3E20.8)
905   IF (IR-1) 107,213,213
107   CA(ISD)=A
      CB(ISD)=B
      CC(ISD)=C
      CD(ISD)=D
      CE(ISD)=E
      CF(ISD)=F
      CG(ISD)=G
      CH(ISD)=H
      CI(ISD)=QI
      CJ(ISD)=QJ
      D=2.0*D
      E=2.0*E
      F=2.0*F
      G=2.0*G
      H=2.0*H
      QI=2.0*QI
      WRITE (6,545)ISD,A,B,C,D,E,F,G,H,QI,QJ
      GO TO 1
108   IF (IR-1) 109,110,110
109   WRITE (6,510)ISD
      GO TO 1
110   WRITE (6,512)ISD,KK
      GO TO 200
C
C     STARTING BOUNDARY SPECIFICATIONS
C
199   WRITE (6,520)
200   READ  (5     ,504)IQ,ISD,KK,ISDB,K2,(DBSI(ISD,KK))
      WRITE (6,504) IQ,ISD,KK,ISDB,K2,DBSI(ISD,KK)
      NN=0
      IQ=IQ+2
      IF (IQ-8) 201,201,299
201   IR=1
      IF (KK-1) 770,202,204
202   WRITE (6,505)
505   FORMAT (1H0)
204   CONTINUE
      GO TO (206,207,42,27,210,211,     205,203),IQ
C
C     BDRY COEFFS. SET = TO PREVIOUS CALCULATED BDRY COEFFS. FLAG = 6
C
203   A=BA(ISDB,K2)
      B=BB(ISDB,K2)
      C=BC(ISDB,K2)
      D=BD(ISDB,K2)
      E=BE(ISDB,K2)
      F=BF(ISDB,K2)
      G=BG(ISDB,K2)
      H=BH(ISDB,K2)
      QI=BI(ISDB,K2)
      QJ=BJ(ISDB,K2)
      GO TO 213
```


LOCKHEED
CALIFORNIA COMPANY

TABLE C-1

(CONTINUED)

```
      GO TO 105
425   WRITE (6,537)KK,ISD
      GO TO 105
98    ALPHA=C
      IF (KK) 426,426,427
426   WRITE (6,534)ISD
      GO TO 105
427   WRITE (6,535)KK,ISD
      GO TO 105
99    ALPHA=B
      IF (KK) 428,428,429
428   WRITE (6,532)ISD
      GO TO 105
429   WRITE (6,533)KK,ISD
      GO TO 105
100   ALPHA=A
      IF (KK) 430,430,431
430   WRITE (6,530)ISD
      GO TO 105
431   WRITE (6,531)KK,ISD
      GO TO 105
101   ALPHA=C+2.0*QI
      IF (KK) 432,432,433
432   WRITE (6,528)ISD
      GO TO 105
433   WRITE (6,529)KK,ISD
      GO TO 105
102   ALPHA=B+2.0*H
      IF (KK) 434,434,435
434   WRITE (6,526)ISD
      GO TO 105
435   WRITE (6,527)KK,ISD
      GO TO 105
103   ALPHA=A+2.0*G
      IF (KK) 436,436,437
436   WRITE (6,524)ISD
      GO TO 105
437   WRITE (6,525)KK,ISD
      GO TO 105
104   ALPHA=QJ
      IF (KK) 438,438,439
438   WRITE (6,522)ISD
      GO TO 105
439   WRITE (6,523)KK,ISD
105   A=A/ALPHA
      B=B/ALPHA
      C=C/ALPHA
      D=D/ALPHA
      E=E/ALPHA
      F=F/ALPHA
      G=G/ALPHA
      H=H/ALPHA
      QI=QI/ALPHA
      QJ=QJ/ALPHA
      IF (NN) 905,905,900
900   NFLAG=0
      DO 902 I=MM,NN
      VAL(I)=A*X(I)**2+B*Y(I)**2+C*Z(I)**2+2.0*D*X(I)*Y(I)+2.0*E*X(I)*Z(
     1I) +2.0*F*Y(I)*Z(I)+2.0*G*X(I)+2.0*H*Y(I)+2.0*QI*Z(I)+QJ
      IF (ABS(VAL(I))-0.1) 902,904,904
904   NFLAG=2
```

TABLE C-1

(CONTINUED)

```
C
C     BDRY COEFFS. SET = TO CALCULATED SURFACE COEFFS. FLAG = -1
C
 206  A=CA(ISDB)
      B=CB(ISDB)
      C=CC(ISDB)
      D=CD(ISDB)
      E=CE(ISDB)
      F=CF(ISDB)
      G=CG(ISDB)
      H=CH(ISDB)
      QI=CI(ISDB)
      QJ=CJ(ISDB)
      GO TO 213
C
C     READ IN BOUNDARY COEFICIENTS FLAG=5
C
 205  READ  (5      ,501)A,B,C,D,E,F,G,H,QI,QJ
      WRITE (6,501) A,B,C,D,E,F,G,H,QI,QJ
      D=D/2.0
      E=E/2.0
      F=F/2.0
      G=G/2.0
      H=H/2.0
      QI=QI/2.0
      GO TO 73
C
C     READ IN TWO BOUNDARY POINTS FLAG=0
C
 207  READ  (5      ,501)(X(I),Y(I),Z(I),I=1,2)
      WRITE (6,501) (X(I),Y(I),Z(I),I=1,2)
      MM=1
      NN=2
      DL=X(2)-X(1)
      DM=Y(2)-Y(1)
      DN=Z(2)-Z(1)
      G=DN*CH(ISD)-DM*CI(ISD)
      H=DL*CI(ISD)-DN*CG(ISD)
      QI=DM*CG(ISD)-DL*CH(ISD)
      QJ=-2.0*(G*X(1)+H*Y(1)+QI*Z(1))
      A=0.0
      B=0.0
      C=0.0
      D=0.0
      E=0.0
      F=0.0
      GO TO 73
 210  READ  (5      ,501)(X(I),Y(I),Z(I),I=1,3),DL,DM,DN
      WRITE (6,501) (X(I),Y(I),Z(I),I=1,3),DL,DM,DN
      MM=1
      NN=3
      GO TO 7
 211  IR=2
      GO TO 6
 213  BA(ISD,KK)=A
      BB(ISD,KK)=B
      BC(ISD,KK)=C
      BD(ISD,KK)=D
      BE(ISD,KK)=E
      BF(ISD,KK)=F
      BG(ISD,KK)=G
```


LOCKHEED
CALIFORNIA COMPANY

TABLE C-1

(CONTINUED)

```
      BH(ISD,KK)=H                                                      15687210
      BI(ISD,KK)=QI                                                     15687220
      BJ(ISD,KK)=QJ                                                     15687230
      D=2.0*D                                                           15687240
      E=2.0*E                                                           15687250
      F=2.0*F                                                           15687260
      G=2.0*G                                                           15687270
      H=2.0*H                                                           15687280
      QI=2.0*QI                                                         15687290
      WRITE (6,549)KK,ISD,A,B,C,D,E,F,G,H,QI,QJ                         15687300
      IF (IR-2) 200,200,216                                             15687310
 216  WRITE (6,514)                                                     15687320
      GO TO 770                                                         15687330
 299  WRITE (6,520)                                                     15687340
      IF (MAXS.GT.0) GO TO 6077                                         COMPL01
 7000 RETURN                                                            COMPL02
 6077 IF (IQ.LT.23) GO TO 7001                                          15685001
 6098 READ (11) IDD                                                     15685002
      IF (IDD) 6099,6099,6098                                           15685003
 6099 BACKSPACE 11                                                      15685004
 7001 DO 7005 J=1,MAXS                                                  COMPL03
      I=KOUNT(J)                                                        15680507
      NB=KNB(I)                                                         COMPL04
      IF (NB.GT.0.AND.NB.LT.7) GO TO 7003                               COMPL 5
      NB=1                                                              COMPL06
 7003 WRITE (11) I,CA(I),CB(I),CC(I),CD(I),CE(I),CF(I),CG(I),CH(I),CI(I)
     1 ,CJ(I),LL(I),KNB(I),NB,DSSI(I),QLIM1(I),QLIM2(I),QLIM3(I),
     2 QLIM4(I),GRIDS(I),(BA(I,K),BB(I,K),BC(I,K),BD(I,K),BE(I,K),BF(I,K
     3 ),BG(I,K),BH(I,K),BI(I,K),BJ(I,K),DBSI(I,K),K=1,NB)
 7005 CONTINUE                                                          COMPL100
      IDD=0                                                             COMPL102
      WRITE (11) IDD                                                    COMPL103
      END FILE 11                                                       1568004
      REWIND 11                                                         1568005
      GO TO 7000                                                        15685001
 770  CALL EXIT                                                         15687380
      STOP                                                              15687390
      END                                                               15687400
$IBFTC MDETR   LIST,REF,DECK,M94,XR7
      SUBROUTINE MDETR (N,C,A)                                          15680020
      DIMENSION A(9,9),B(10)                                            15680030
      LN=N-1                                                            15680050
      DO 18 I=1,LN                                                      15680060
      MI=I+1                                                            15680070
      DO 18 K=MI,N                                                      15680080
      IF (A(I,I)) 19,3,19                                               15680090
 3    K1=I+1                                                            15680100
      DO 6 K2=K1,N                                                      15680110
      IF (A(I,K2)) 4,6,4                                                15680120
 4    DO 5 JJ=1,N                                                       15680130
      B(JJ)=A(JJ,K2)                                                    15680140
      A(JJ,K2)=A(JJ,I)                                                  15680150
      A(JJ,I)=-B(JJ)                                                    15680160
 5    CONTINUE                                                          15680170
      GO TO 19                                                          15680180
 6    CONTINUE                                                          15680190
      C=0.0                                                             15680200
      GO TO 100                                                         15680210
 19   AA=A(K,I)/A(I,I)                                                  15680220
      DO 18 J=I,N                                                       15680230
 17   A(K,J)=A(K,J)-AA*A(I,J)                                           15680240
```


LOCKHEED
CALIFORNIA COMPANY

TABLE C-1

(CONTINUED)

```
 18   CONTINUE                                                          15680250
      B(1)=1.0                                                          15680260
      DO 32 L=1,N                                                       15680270
      B(L+1)=B(L)*A(L,L)                                                15680280
 32   CONTINUE                                                          15680290
      C=B(N+1)                                                          15680300
 100  RETURN                                                            15680310
      END                                                               15680320
$ORIGIN        BETHA
$IBFTC COMPUT  LIST,REF,DECK,M94,XR7
      SUBROUTINE COMPUT                                                 15680020
      DIMENSION CA(10 ),CB(10 ),CC(10 ),CD(10 ),CE(10 ),CF(10 ),CG(10 ),15680030
     1 CH(10 ),CI(10 ),CJ(10 ),BA(10 ,6),BB(10 ,6),BC(10 ,6),BD(10 ,6), 15680040
     2 BE(10 ,6),BF(10 ,6),BG(10 ,6),BH(10 ,6),BI(10 ,6),BJ(10 ,6),     15680050
     3 X(875),Y(875),Z(875),XP(875),YP(875),ZP(875),DLP(875),DMP(875),  15680060
     4 DNP(875),LL(10 ),KNB(10 ),DSSI(10 ),QLIM1(10 ),QLIM2(10 ),       15680070
     5 QLIM3(10 ),QLIM4(10 ),GRIDS(10 ),DBSI(10 ,6)                     15680080
      DIMENSION DKP(875),DL(875),DM(875),DN(875),DK(875),PHI(875),      15680090
     1 PSI(875),MIS(10),T(875),U(875),V(875),QQ(875),    VPST(875)      15680100
      COMMON /ECOM/  CA,  CB,   CC      , CD      , CE      , CF         15680130
     1   ,    CG      , CH      , CI      , CJ      , BA      , BB       15680140
     2   ,    BC      , BD      , BE      , BF      , BG      , BH       15680150
     3   ,    BI      , BJ      , X       , Y       , Z       , XP       15680160
     4   ,    YP      , ZP      , DLP     , DMP     , DNP     , LL       15680170
     5   ,    KNB     , DSSI    , QLIM1   , QLIM2   , QLIM3   , QLIM4    15680180
     6   ,    GRIDS   , DBSI    , DKP     , DL      , DM      , DN       15680190
     7   ,    DK      , PHI     , PSI     , MIS     , T       , U        15680200
     8   ,    V       , QQ      , VPST    , NGO     , NDO     , NP       15680210
     9   ,    IP      , IL      , IH      , IT      , IS      , NC       15680220
     1   ,    NLD     , IU      , NFT     , NSIGMA  , NPP     , KP       15680230
     2   ,    A       , B       , C       , D       , E       , F        15680240
     3   ,    G       , H       , QI      , QJ      , RIGHT   , DEL1     15680250
     4   ,    DEL2    , DEL1P   , DEL2P   , NBDD    , NVP,NOIS,NAREA,LTEMS 15680260
      LTEMS=0                                                           COMPU001
      IH=0                                                              COMPU002
      NFLAG=1                                                           COMPU003
 2    READ (5,200) KNTRL,IT,IS,NOIS,NAREA                               COMPU004
      WRITE (6,200) KNTRL,IT,IS,NOIS,NAREA                              15681017
      NBDD=0                                                            COMPU005
      IF (KNTRL) 3,5,4                                                  COMPU006
 3    IDD=0                                                             COMPU007
      WRITE (8) IDD                                                     COMPU008
      REWIND 8                                                          COMPU009
      GO TO 5                                                           COMPU010
 4    WRITE (6,210)                                                     COMPU011
      GO TO (402,401),NFLAG                                             COMPU012
 401  IDD=0                                                             COMPU013
      WRITE (8) IDD                                                     COMPU014
      END FILE 8                                                        COMPU015
      REWIND 8                                                          COMPU016
 402  NFLAG=1                                                           COMPU017
      GO TO (101,104,106,770),KNTRL                                     COMPU018
 5    GO TO (6,9),NFLAG                                                 COMPU019
 6    NFLAG=2                                                           COMPU020
 7    READ(8) IDD                                                       COMPU021
      IF (IDD) 410,410,7                                                COMPU022
 410  BACKSPACE 8                                                       COMPU023
 9    LTEMS=IT                                                          COMPU026
      IT=1                                                              COMPU027
      KFLG=1                                                            COMPU028
      GO TO 415                                                         COMPU029
```

TABLE C-1

(CONTINUED)

```
411   IF (IS.LT.1) GO TO 2                                              COMPU030
412   LTEMS=IS                                                          COMPU033
      IS=1                                                              COMPU034
      KFLG=2                                                            COMPU03K
      IT=1                                                              COMPU036
415   READ (11) IDD,CA(1),CB(1),CC(1),CD(1),CE(1),CF(1),CG(1),CH(1),    COMPUZ03
     1 CI(1),CJ(1),LL(1),KNB(1),NB,DSSI(1),QLIM1(1),QLIM2(1),QLIM3(1),  COMPU003
     2 QLIM4(1),GRIDS(1),(BA(1,K),BB(1,K),BC(1,K),BD(1,K),BE(1,K),      COMPU040
     3 BF(1,K),BG(1,K),BH(1,K),BI(1,K),BJ(1,K),DBSI(1,K),K=1,NB)        COMPU041
      IF (IDD.NE.LTEMS) GO TO 415                                       COMPU042
      REWIND 11                                                         COMPU025
      GO TO (416,417),KFLG                                              COMPU043
416   NGO=1                                                             COMPU044
      GO TO 418                                                         COMPU045
417   NGO=4                                                             COMPU046
418   CALL GRID                                                         COMPU047
      IF (RIGHT-1.0) 10,113,11                                          15680600
10    WRITE (6,201) LTEMS                                               15680610
      GO TO (411,2),KFLG                                                15680620
11    WRITE (6,202)                                                     15680630
      GO TO 770                                                         15680640
113   GO TO (419,420),KFLG                                              1568 65
419   NLD=1                                                             15680104
      GO TO 421                                                         15680105
420   NLD=2                                                             15680106
421   CALL DIRECT                                                       15680660
      IF (NP) 425,425,330                                               15680650
425   WRITE (6,8000) LTEMS                                              15680121
8000  FORMAT (18H0  SURFACE NUMBER  I4,22H   WAS NOT PUT ON TAPE  )     15680122
8001  FORMAT (18H0  SURFACE NUMBER  I4,19H   WAS PUT ON TAPE  )         15680126
      GO TO (411,2),KFLG                                                15680127
330   IF (KNB(IT)) 310,310,312                                          15680690
310   NB=1                                                              15680700
      DBSI(IT,1)=0.0                                                    15680710
      GO TO 314                                                         15680720
312   NB=KNB(IT)                                                        15680730
314   WRITE (8 ) LTEMS,NP,NB,DEL1,DEL2,CA(IT),CB(IT),CC(IT),CD(IT),CE(IT15680740
     1),CF(IT),CG(IT),CH(IT),CI(IT),CJ(IT),(BA(IT,I),BB(IT,I),BC(IT,I), 15680750
     2 BD(IT,I),BE(IT,I),BF(IT,I),BG(IT,I),BH(IT,I),BI(IT,I),BJ(IT,I),  15680760
     3 DBSI(IT,I),I=1,NB),(X(I),Y(I),Z(I),DL(I),DM(I),DN(I),DK(I),I=1,NP15680770
     4)                                                                 15680780
      WRITE (6,8001) LTEMS                                              15680131
      GO TO (411,2),KFLG                                                15680132
101   IH=0                                                              15681110
      GO TO 51                                                          15681120
104   IH=-1                                                             15681130
      LTEMS=IT                                                          15680135
      IT=1                                                              15680136
      READ (5,204) LL(IT),NP,DSSI(IT),(X(I),Y(I),I=1,NP)                1568  4
      WRITE (6,204) LL(IT),NP,DSSI(IT),(X(I),Y(I),I=1,NP)               15681018
      NBDD=2                                                            15681150
      MDEP=LL(IT)                                                       15681160
      GO TO (30,32,35),MDEP                                             15681170
30    DO 31 I=1,NP                                                      15681180
      Z(I)=Y(I)                                                         15681190
      Y(I)=X(I)                                                         15681200
31    CONTINUE                                                          15681210
      GO TO 35                                                          15681220
32    DO 33 I=1,NP                                                      15681230
      Z(I)=Y(I)                                                         15681240
33    CONTINUE                                                          15681250
```


LOCKHEED
CALIFORNIA COMPANY

TABLE C-1

(CONTINUED)

```
35    NGO=2                                                          15681260
      REWIND 11                                                      15681270
37    READ (11) IDD,CA(1),CB(1),CC(1),CD(1),CE(1),CF(1),CG(1),CH(1),  COMPUZ48
     1 CI(1),CJ(1),LL(3),KNB(1),NB,DSSI(3),QLIM1(1),QLIM2(1),QLIM3(1), COMPU049
     2 QLIM4(1),GRIDS(1),(BA(1,K),BB(1,K),BC(1,K),BD(1,K),BE(1,K),     COMPU050
     3 BF(1,K),BG(1,K),BH(1,K),BI(1,K),BJ(1,K),DBSI(1,K),K=1,NB)       COMPU051
      IF (IDD.NE.LTEMS) GO TO 37                                     COMPU052
      IF (KNB(1).GT.0) GO TO 82                                      COMPU053
81    KNB(IT)=0                                                      15681370
      GO TO 39                                                       15681380
82    KNB(IT)=NB                                                     15681390
39    CALL GRID                                                      15681400
      NLD=1                                                          15681410
      CALL DIRECT                                                    15681420
      IT=LTEMS                                                       15680141
      IF (NP) 38,38,50                                               15681430
38    WRITE (6,8003) LTEMS                                           15680142
8003  FORMAT (23H0  NO POINTS ON SURFACE  I4  )                      15680143
      GO TO 42                                                       15680145
106   IH=1                                                           15681440
      GO TO 119                                                      15681450
50    NVP=2                                                          15681460
      CALL VPANT                                                     15681470
      IF (NVP) 42,42,2                                               15681480
42    IF (NOIS) 2,2,360                                              15681500
360   READ  (5      ,271)(MIS(I),I=1,NOIS)                           15681510
      WRITE (6,271) (MIS(I),I=1,NOIS)                                15681019
271   FORMAT (7I10)                                                  15681520
      GO TO 2                                                        15681530
51    NVP=1                                                          15681540
      CALL VPANT                                                     15681550
      IF (NVP) 42,42,44                                              15681560
44    DELSAT=DEL1*DEL2                                               15681570
      SUM=0.0                                                        15681580
      DO 53 I=1,NP                                                   15681590
      SUM=SUM+VPST(I)                                                15681600
53    CONTINUE                                                       15681610
      WRITE (6,261)DEL1,DEL2,DEL1P,DEL2P                             15681620
261   FORMAT ( 9H   DELS   4E20.8)                                   15681630
      VSST=DELSAT*SUM                                                15681640
      WRITE (6,205)IT,IS,VSST                                        15681650
      GO TO 120                                                      15681660
119   IS=IT                                                          15681670
      REWIND 8                                                       15681680
56    READ  (8      )IDD                                             15681690
      IF (IDD) 60,60,54                                              15681700
54    IF (IT-IDD) 56,61,56                                           15681710
60    WRITE (6,201)IT                                                15681720
      GO TO 2                                                        15681730
61    BACKSPACE 8                                                    15681740
      READ  (8      )IT,NP,NB,DEL1,DEL2,A,B,C,D,E,F,G,H,QI,QJ,(BA(1,I),  15681750
     1  BB(1,I),BC(1,I),BD(1,I),BE(1,I),BF(1,I),BG(1,I),BH(1,I),BI(1,I),15681760
     2  BJ(1,I),DBSI(1,I),I=1,NB),(X(I),Y(I),Z(I),DL(I),DM(I),DN(I),   15681770
     3  DK(I),I=1,NP)                                                 15681780
120   DELSAT=DEL1*DEL2                                               15681790
      SUM=0.0                                                        15681800
      DO 62 I=1,NP                                                   15681810
      SUM=SUM+SQRT(DL(I)**2+DM(I)**2+DN(I)**2)/DK(I)                 15681820
62    CONTINUE                                                       15681830
      SAT=DELSAT*SUM                                                 15681840
      WRITE (6,206)IT,SAT                                            15681850
```


LOCKHEED
CALIFORNIA COMPANY

TABLE C-1

(CONTINUED)

```
      IF (IH) 2,222,2
  222 VFST=VSST/SAT
      WRITE (6,208)IT,IS,VFST
      GO TO 2
  200 FORMAT (5I10)
  201 FORMAT (16H0   SURFACE NO. I3,50H  WAS NOT PUT ON TAPE,NO DEP. PTS
     1 WERE CALCULATED )
  202 FORMAT (62H0   RIGHT,A FLAG SET IN GRID IS GREATER THAN ONE  WHA
     1HOPPEN )
  204 FORMAT (2I10,1F10.3/(7F10.3))
  205 FORMAT ( 6H0   S=I3,2X,4H  T=I3,2X,14H   A(S)F(S,T)= E20.8)
  208 FORMAT ( 6H0   S=I3,2X,4H  T=I3,2X,11H    F(S,T)= E20.8 )
  206 FORMAT ( 6H0   S=I3,2X,12H   AREA (S)= E20.8)
  210 FORMAT (1H0/1H0 )
  770 RETURN
      END
$IBFTC VPANT   LIST,REF,DECK,M94,XR7
      SUBROUTINE VPANT
      DIMENSION CA(10 ),CB(10 ),CC(10 ),CD(10 ),CE(10 ),CF(10 ),CG(10 ),
     1 CH(10 ),CI(10 ),CJ(10 ),BA(10 ,6),BB(10 ,6),BC(10 ,6),BD(10 ,6),
     2 BE(10 ,6),BF(10 ,6),BG(10 ,6),BH(10 ,6),BI(10 ,6),BJ(10 ,6),
     3 X(875),Y(875),Z(875),XP(875),YP(875),ZP(875),DLP(875),DMP(875),
     4 DNP(875),LL(10 ),KNB(10 ),DSSI(10 ),QLIM1(10 ),QLIM2(10 ),
     5 QLIM3(10 ),QLIM4(10 ),GRIDS(10 ),DBSI(10 ,6)
      DIMENSION DKP(875),DL(875),DM(875),DN(875),DK(875),PHI(875),
     1 PSI(875),MIS(10),T(875),U(875),V(875),QQ(875),     VPST(875)
      COMMON /ECOM/  CA,  CB,   CC      , CD      , CE      , CF
     1    ,    CG      , CH      , CI      , CJ      , BA      , BB
     2    ,    BC      , BD      , BE      , BF      , BG      , BH
     3    ,    BI      , BJ      , X       , Y       , Z       , XP
     4    ,    YP      , ZP      , DLP     , DMP     , DNP     , LL
     5    ,    KNB     , DSSI    , QLIM1   , QLIM2   , QLIM3   , QLIM4
     6    ,    GRIDS   , DBSI    , DKP     , DL      , DM      , DN
     7    ,    DK      , PHI     , PSI     , MIS     , T       , U
     8    ,    V       , QQ      , VPST    , NGO     , NDO     , NP
     9    ,    IP      , IL      , IH      , IT      , IS      , NC
     1    ,    NLD     , IU      , NFT     , NSIGMA  , NPP     , KP
     2    ,    A       , B       , C       , D       , E       , F
     3    ,    G       , H       , QI      , QJ      , RIGHT   , DEL1
     4    ,    DEL2    , DEL1P   , DEL2P   , NBDO    , NVP,NOIS,MAPFA,LTEMS
      REWIND 8
      KOUNT=0
      GO TO (1,5),NVP
    1 READ  (8      )IDD
      IF (IDD) 17,17,11
   11 IF (IT-IDD) 12,13,12
   12 IF (IS-IDD) 1,14,1
   13 KOUNT=KOUNT+1
      BACKSPACE 8
      READ  (8      )IT,NP,NB,DEL1,DEL2,A,B,C,D,E,F,G,H,QI,QJ,(BA(1,I),
     1  BB(1,I),BC(1,I),BD(1,I),BE(1,I),BF(1,I),BG(1,I),BH(1,I),BI(1,I),
     2  BJ(1,I),DBSI(1,I),I=1,NB),(X(I),Y(I),Z(I),DL(I),DM(I),DN(I),
     3  DK(I),I=1,NP)
      IF (IT-IS) 8,14,8
    8 IF (KOUNT-2) 1,6,16
   14 KOUNT=KOUNT+1
      BACKSPACE 8
      READ  (8      )IS,NPP,NB,DEL1P,DEL2P,A,B,C,D,E,F,G,H,QI,QJ,(BA(1,I)
     1, BB(1,I),BC(1,I),BD(1,I),BE(1,I),BF(1,I),BG(1,I),BH(1,I),BI(1,I),
     2  BJ(1,I),DBSI(1,I),I=1,NB),(XP(I),YP(I),ZP(I),DLP(I),DMP(I),
     3  DNP(I),DKP(I),I=1,NPP)
```


LOCKHEED
CALIFORNIA COMPANY

TABLE C-1

(CONTINUED)

```
      IF (KOUNT-2) 1,6,18
 5    KOUNT=1
 2    READ  (8      )IDD
      IF (IDD) 17,17,3
 3    IF (IS-IDD) 2,4,2
 4    BACKSPACE 8
      READ  (8      )IS,NPP,NB,DEL1P,DEL2P,A,B,C,D,E,F,G,H,QI,QJ,(BA(1,I)
     1, BB(1,I),BC(1,I),BD(1,I),BE(1,I),BF(1,I),BG(1,I),BH(1,I),BI(1,I),
     2  BJ(1,I),DBSI(1,I),I=1,NB),(XP(I),YP(I),ZP(I),DLP(I),DMP(I),
     3  DNP(I),DKP(I),I=1,NPP)
 6    CALL QMESS
      IF (IH) 9,25,19
 9    DO 21 I=1,NP
      PIFST=VPST(I)*DK(I)/SQRT(DL(I)**2+DM(I)**2+DN(I)**2)
      WRITE (6,50)I,IT,IS,PIFST,X(I),Y(I),Z(I)
 21   CONTINUE
      GO TO 25
 17   NVP=0
      WRITE (6,51)KOUNT,IT,IS
      GO TO 25
 18   WRITE (6,52)
      GO TO 25
 19   WRITE (6,53)
 50   FORMAT (6H0    I=I3,2X,3H S=I3,2X,3H T=I3,3X,11HP(I)F(S,T)=E20.8/
     16X,19HPOINT ON S IS X(I)=E20.8,2X,5HY(I)=E20.8,2X,5HZ(I)=E20.8 )
 51   FORMAT (12H0      KOUNT=I2,2X,3H S=I3,2X,3H T=I3,74H   WHAT EVER KO
     1UNT EQUALS THATS HOW MANY OF THESE SURFACES APPEAR ON TAPE )
 52   FORMAT (52H0      KOUNT IN VPANT IS GREATER THAN TWO WHA HOPPEN )
 53   FORMAT (47H0      IH IS GREATER THAN ZERO IN VPANT ROUTINE )
 25   RETURN
      END
$IBFTC QMESS   LIST,REF,DECK,M94,XR7
      SUBROUTINE QMESS
      DIMENSION CA(10 ),CB(10 ),CC(10 ),CD(10 ),CE(10 ),CF(10 ),CG(10 ),
     1 CH(10 ),CI(10 ),CJ(10 ),BA(10 ,6),BB(10 ,6),BC(10 ,6),BD(10 ,6),
     2 BE(10 ,6),BF(10 ,6),BG(10 ,6),BH(10 ,6),BI(10 ,6),BJ(10 ,6),
     3 X(875),Y(875),Z(875),XP(875),YP(875),ZP(875),DLP(875),DMP(875),
     4 DNP(875),LL(10 ),KNB(10 ),DSSI(10 ),QLIM1(10 ),QLIM2(10 ),
     5 QLIM3(10 ),QLIM4(10 ),GRIDS(10 ),DBSI(10 ,6)
      DIMENSION DKP(875),DL(875),DM(875),DN(875),DK(875),PHI(875),
     1 PSI(875),MIS(10),T(875),U(875),V(875),QQ(875),     VPST(875)
      COMMON /ECOM/  CA,  CB,   CC      , CD      , CE      , CF
     1   ,    CG      , CH      , CI      , CJ      , BA      , BB
     2   ,    BC      , BD      , BE      , BF      , BG      , BH
     3   ,    BI      , BJ      , X       , Y       , Z       , XP
     4   ,    YP      , ZP      , DLP     , DMP     , DNP     , LL
     5   ,    KNB     , DSSI    , QLIM1   , QLIM2   , QLIM3   , QLIM4
     6   ,    GRIDS   , DBSI    , DKP     , DL      , DM      , DN
     7   ,    DK      , PHI     , PSI     , MIS     , T       , U
     8   ,    V       , QQ      , VPST    , NGO     , NDO     , NP
     9   ,    IP      , IL      , IH      , IT      , IS      , NC
     1   ,    NLD     , IU      , NFT     , NSIGMA  , NPP     , KP
     2   ,    A       , B       , C       , D       , E       , F
     3   ,    G       , H       , QI      , QJ      , RIGHT   , DEL1
     4   ,    DEL2    , DEL1P   , DEL2P   , NBDD    , NVP,NOIS,NFLAG,LTEMS
 200  FORMAT (7I10)
 201  FORMAT (62H0      NO INTERFERING SURFACES APPEAR ON TAPE FOR SURFAC
     1E NOS. I3,  6H  AND I3 )
 202  FORMAT (33H0   NO. OF INTERFERING SURFACES= I3,3X,39H NO. OF INTER
     1FERING SURFACES ASKED FOR= I3,3X,21HBETWEEN SURFACE NOS. I3,3X,
     2 4HAND I3 )
```


LOCKHEED
CALIFORNIA COMPANY

TABLE C-1

(CONTINUED)

```
206   FORMAT (6H    VA= E20.8 /5H    T=I2,2X,11H  AREA (T)= E20.8)
210   FORMAT (5H    S= I3,3X,2HT=I3,5X,40HF(S,T) WITH INTERFERENCE BY SUR
     1FACE NOS. 10I5 )
      REWIND 11
      KLM=0
      KP=0
      VA=0.0
      PI=3.14159265
      DELSAS=DEL1P*DEL2P
      IF (NOIS) 6,6,18
18    READ  (5      ,200)(MIS(I),I=1,NOIS)
      WRITE (6,210)IT,IS,(MIS(I),I=1,NOIS)
      GO TO 6
4     SUM=0.0
      DO 7 J=1,NPP
      SUM=SUM+QQ(J)/DKP(J)
7     CONTINUE
      VPST(KP)=DELSAS*SUM/(PI*DK(KP))
      IF (NFLAG) 50,50,40
40    DAT=DEL1*DEL2*SQRT(DL(KP)**2+DM(KP)**2+DN(KP)**2)/DK(KP)
      DO 45 J=1,NPP
      IF (QQ(J)) 45,45,42
42    DAS=DELSAS*SQRT(DLP(J)**2+DMP(J)**2+DNP(J)**2)/DKP(J)
      VA=VA+DAT*DAS
45    CONTINUE
      IF (KP-NP) 50,47,47
47    SA=0.0
      DO 48 J=1,NPP
      SA=SA+SQRT(DLP(J)**2+DMP(J)**2+DNP(J)**2)/DKP(J)
48    CONTINUE
      SA=SA*DELSAS
      WRITE (6,206)VA,IS,SA
50    CONTINUE
      IF (KP-NP) 6,28,28
6     KP=KP+1
      DO 13 J=1,NPP
      T(J)=XP(J)-X(KP)
      U(J)=YP(J)-Y(KP)
      V(J)=ZP(J)-Z(KP)
      R=DL(KP)*T(J)+DM(KP)*U(J)+DN(KP)*V(J)
      IF (R) 11,11,9
9     RP= -(DLP(J)*T(J)+DMP(J)*U(J)+DNP(J)*V(J))
      IF (RP) 11,11,12
11    QQ(J)=0.0
      GO TO 13
12    W= (T(J)*T(J)+U(J)*U(J)+V(J)*V(J))**2
      QQ(J)=(R*RP)/W
13    CONTINUE
      IF (NOIS) 4,4,16
16    IF (KLM) 17,17,26
17    READ  ( 11    )IDD
      IF (IDD) 20,20,19
19    DO 2 I=1,NOIS
      IF (MIS(I)-IDD) 2,5,2
2     CONTINUE
      GO TO 17
20    IF (KLM) 21,21,22
21    WRITE (6,201)IT,IS
      NOIS =0
      REWIND 11
      GO TO 4
```


LOCKHEED
CALIFORNIA COMPANY

TABLE C-1

(CONTINUED)

```
 5      BACKSPACE 11
        KLM=KLM+1
        READ (11) IDD,CA(KLM),CB(KLM),CC(KLM),CD(KLM),CE(KLM),CF(KLM),
       1 CG(KLM),CH(KLM),CI(KLM),CJ(KLM),LL(KLM),KNB(KLM),NB,DSSI(KLM),
       2 QLIM1(1),QLIM2(1),QLIM3(1),QLIM4(1),GRIDS(1),(BA(KLM,I),BB(KLM,I)
       3,BC(KLM,I),BD(KLM,I),BE(KLM,I),BF(KLM,I),BG(KLM,I),BH(KLM,I),
       4 BI(KLM,I),BJ(KLM,I),DBSI(KLM,I),I=1,NB)
        IF (KLM-NOIS) 17,26,22
 22     IF (KLM-NOIS) 25,26,25
 25     WRITE (6,202)KLM,NOIS,IT,IS
 26     DO 30 I=1,KLM
        A=CA(I)
        B=CB(I)
        C=CC(I)
        D=CD(I)
        E=CE(I)
        F=CF(I)
        G=CG(I)
        H=CH(I)
        QI=CI(I)
        QJ=CJ(I)
        NSIGMA=I
        NBDD=KNB(I)
        CALL MTEST
 30     CONTINUE
        GO TO 4
 28     RETURN
        END
$IBFTC GRID     LIST,REF,DECK,M94,XR7
        SUBROUTINE GRID
        DIMENSION CA(10 ),CB(10 ),CC(10 ),CD(10 ),CE(10 ),CF(10 ),CG(10 ),
       1 CH(10 ),CI(10 ),CJ(10 ),BA(10 ,6),BB(10 ,6),BC(10 ,6),BD(10 ,6),
       2 BE(10 ,6),BF(10 ,6),BG(10 ,6),BH(10 ,6),BI(10 ,6),BJ(10 ,6),
       3 X(875),Y(875),Z(875),XP(875),YP(875),ZP(875),DLP(875),DMP(875),
       4 DNP(875),LL(10 ),KNB(10 ),DSSI(10 ),QLIM1(10 ),QLIM2(10 ),
       5 QLIM3(10 ),QLIM4(10 ),GRIDS(10 ),DBSI(10 ,6)
        DIMENSION DKP(875),DL(875),DM(875),DN(875),DK(875),PHI(875),
       1 PSI(875),MIS(10),T(875),U(875),V(875),QQ(875),     VPST(875)
        COMMON /ECOM/  CA,  CB,    CC      , CD      , CE      , CF
       1   ,    CG      , CH      , CI      , CJ      , BA      , BB
       2   ,    BC      , BD      , BE      , BF      , BG      , BH
       3   ,    BI      , BJ      , X       , Y       , Z       , XP
       4   ,    YP      , ZP      , DLP     , DMP     , DNP     , LL
       5   ,    KNB     , DSSI    , QLIM1   , QLIM2   , QLIM3   , QLIM4
       6   ,    GRIDS   , DBSI    , DKP     , DL      , DM      , DN
       7   ,    DK      , PHI     , PSI     , MIS     , T       , U
       8   ,    V       , QQ      , VPST    , NGO     , NDO     , NP
       9   ,    IP      , IL      , IH      , IT      , IS      , NC
       1   ,    NLD     , IU      , NFT     , NSIGMA  , NPP     , KP
       2   ,    A       , B       , C       , D       , E       , F
       3   ,    G       , H       , QI      , QJ      , RIGHT   , DEL1
       4   ,    DEL2    , DEL1P   , DEL2P   , NBDD    , NVP,NOIS,NAREA,LTEMS
        GO TO (1,2,3,4,7),NGO
 1      IL=0
        IP=IT
        GO TO 5
 2      IL=-1
        IP=IT
        GO TO 6
 3      IL=1
        IP=IS
```


LOCKHEED
CALIFORNIA COMPANY

TABLE C-1

(CONTINUED)

```
      GO TO 5
 4    IL=2
      IP=IS
 5    CALL POINT
      GO TO 7
 6    NP=NP
 7    KDEP=LL(IP)
      GO TO (  12,13,14),KDEP
 12   NDO=1
      GO TO 16
 13   NDO=2
      GO TO 16
 14   NDO=3
 16   CALL DEPVAR
      NC=NC
      IF (NC-1) 20,8,24
 20   WRITE (6,200)
 200  FORMAT (34H    NC IS LESS THAN ONE WHA HOPPEN )
      CALL EXIT
      STOP
 8    IL=IL+2
      GO TO (30,31,32,33,34),IL
 30   NC=6
      GO TO 23
 31   NC=5
      GO TO 23
 32   NC=8
      GO TO 23
 33   NC=7
      GO TO 23
 34   NFT=2
 23   RIGHT=1.0
      GO TO 25
 24   RIGHT=0.0
 25   RETURN
      END
$IBFTC POINT   LIST,REF,DECK,M94,XR7
      SUBROUTINE POINT
      DIMENSION CA(10 ),CB(10 ),CC(10 ),CD(10 ),CE(10 ),CF(10 ),CG(10 ),
     1 CH(10 ),CI(10 ),CJ(10 ),BA(10 ,6),BB(10 ,6),BC(10 ,6),BD(10 ,6),
     2 BE(10 ,6),BF(10 ,6),BG(10 ,6),BH(10 ,6),BI(10 ,6),BJ(10 ,6),
     3 X(875),Y(875),Z(875),XP(875),YP(875),ZP(875),DLP(875),DMP(875),
     4 DNP(875),LL(10 ),KNB(10 ),DSSI(10 ),QLIM1(10 ),QLIM2(10 ),
     5 QLIM3(10 ),QLIM4(10 ),GRIDS(10 ),DBSI(10 ,6)
      DIMENSION DKP(875),DL(875),DM(875),DN(875),DK(875),PHI(875),
     1 PSI(875),MIS(10),T(875),U(875),V(875),QQ(875),    VPST(875)
      COMMON /ECOM/  CA,  CB,   CC      , CD      , CE      , CF
     1   ,    CG      , CH      , CI      , CJ      , BA      , BB
     2   ,    BC      , BD      , BE      , BF      , BG      , BH
     3   ,    BI      , BJ      , X       , Y       , Z       , XP
     4   ,    YP      , ZP      , DLP     , DMP     , DNP     , LL
     5   ,    KNB     , DSSI    , QLIM1   , QLIM2   , QLIM3   , QLIM4
     6   ,    GRIDS   , DBSI    , DKP     , DL      , DM      , DN
     7   ,    DK      , PHI     , PSI     , MIS     , T       , U
     8   ,    V       , QQ      , VPST    , NGO     , NDO     , NP
     9   ,    IP      , IL      , IN      , IT      , IS      , NC
     1   ,    NLD     , IU      , NFT     , NSIGMA  , NPP     , KP
     2   ,    A       , B       , C       , D       , E       , F
     3   ,    G       , H       , QI      , QJ      , RIGHT   , DEL1
     4   ,    DEL2    , DEL1P   , DEL2P   , NBDD    , NVP,NOIS,NAREA,LTEMS
      I=0
```


LOCKHEED
CALIFORNIA COMPANY

TABLE C-1

(CONTINUED)

```
      IR=LL(IP)
      IF (GRIDS(IP) .LT. 2.0 ) GO TO 40
      IF (QLIM2(IP) .GT. QLIM1(IP))  GO TO 1
      STLM2 = QLIM2(IP)
      QLIM2(IP) = QLIM1(IP)
      QLIM1(IP) = STLM2
 1    IF (QLIM4(IP) .GT. QLIM3(IP))  GO TO 3
      STLM2 = QLIM4(IP)
      QLIM4(IP) = QLIM3(IP)
      QLIM3(IP) = STLM2
 3    I=I+1
      GO TO (   2,4,6),IR
 2    DELY=(QLIM2(IP)-QLIM1(IP))/GRIDS(IP)
      DELZ=(QLIM4(IP)-QLIM3(IP))/GRIDS(IP)
      QLIM1(IP)=QLIM1(IP)+DELY/2.0
      QLIM3(IP)=QLIM3(IP)+DELZ/2.0
      Y(I)=QLIM1(IP)
      Z(I)=QLIM3(IP)
      DEL1=DELY
      DEL2=DELZ
 8    I=I+1
      Y(I)=Y(I-1)+DELY
      Z(I)=QLIM3(IP)
      QMAX=AMAX1(Y(I),QLIM2(IP))
      IF (QMAX-QLIM2(IP)) 10,8,10
 10   QLIM3(IP)=QLIM3(IP)+DELZ
      QMAX=AMAX1(QLIM3(IP),QLIM4(IP))
      IF (QMAX-QLIM4(IP)) 40,12,40
 12   I=I+1
      Y(I)=QLIM1(IP)
      Z(I)=QLIM3(IP)
      GO TO 8
 4    DELX=(QLIM2(IP)-QLIM1(IP))/GRIDS(IP)
      DELZ=(QLIM4(IP)-QLIM3(IP))/GRIDS(IP)
      QLIM1(IP)=QLIM1(IP)+DELX/2.0
      QLIM3(IP)=QLIM3(IP)+DELZ/2.0
      X(I)=QLIM1(IP)
      Z(I)=QLIM3(IP)
      DEL1=DELX
      DEL2=DELZ
 20   I=I+1
      X(I)=X(I-1)+DELX
      Z(I)=QLIM3(IP)
      QMAX=AMAX1(X(I),QLIM2(IP))
      IF (QMAX-QLIM2(IP)) 28,20,28
 28   QLIM3(IP)=QLIM3(IP)+DELZ
      QMAX=AMAX1(QLIM3(IP),QLIM4(IP))
      IF (QMAX-QLIM4(IP)) 40,22,40
 22   I=I+1
      X(I)=QLIM1(IP)
      Z(I)=QLIM3(IP)
      GO TO 20
 6    DELX=(QLIM2(IP)-QLIM1(IP))/GRIDS(IP)
      DELY=(QLIM4(IP)-QLIM3(IP))/GRIDS(IP)
      QLIM1(IP)=QLIM1(IP)+DELX/2.0
      QLIM3(IP)=QLIM3(IP)+DELY/2.0
      X(I)=QLIM1(IP)
      Y(I)=QLIM3(IP)
      DEL1=DELX
      DEL2=DELY
 30   I=I+1
```


LOCKHEED
CALIFORNIA COMPANY

TABLE C-1

(CONTINUED)

```
      X(I)=X(I-1)+DELX
      Y(I)=QLIM3(IP)
      QMAX=AMAX1(X(I),QLIM2(IP))
      IF (QMAX-QLIM2(IP)) 38,30,38
 38   QLIM3(IP)=QLIM3(IP)+DELY
      QMAX=AMAX1(QLIM3(IP),QLIM4(IP))
      IF (QMAX-QLIM4(IP)) 40,32,40
 32   I=I+1
      X(I)=QLIM1(IP)
      Y(I)=QLIM3(IP)
      GO TO 30
 40   NP=I
      RETURN
      END
$IBFTC DIRECT  LIST,REF,DECK,M94,XR7
      SUBROUTINE DIRECT
      DIMENSION CA(10 ),CB(10 ),CC(10 ),CD(10 ),CE(10 ),CF(10 ),CG(10 ),
     1 CH(10 ),CI(10 ),CJ(10 ),BA(10 ,6),BB(10 ,6),BC(10 ,6),BD(10 ,6),
     2 BE(10 ,6),BF(10 ,6),BG(10 ,6),BH(10 ,6),BI(10 ,6),BJ(10 ,6),
     3 X(875),Y(875),Z(875),XP(875),YP(875),ZP(875),DLP(875),DMP(875),
     4 DNP(875),LL(10 ),KNB(10 ),DSSI(10 ),QLIM1(10 ),QLIM2(10 ),
     5 QLIM3(10 ),QLIM4(10 ),GRIDS(10 ),DBSI(10 ,6)
      DIMENSION DKP(875),DL(875),DM(875),DN(875),DK(875),PHI(875),
     1 PSI(875),MIS(10),T(875),U(875),V(875),QQ(875),     VPST(875)
      COMMON /ECOM/  CA,  CB,    CC      , CD      , CE      , CF
     1    ,    CG      , CH      , CI      , CJ      , BA      , BB
     2    ,    BC      , BD      , BE      , BF      , BG      , BH
     3    ,    BI      , BJ      , X       , Y       , Z       , XP
     4    ,    YP      , ZP      , DLP     , DMP     , DNP     , LL
     5    ,    KNB     , DSSI    , QLIM1   , QLIM2   , QLIM3   , QLIM4
     6    ,    GRIDS   , DBSI    , DKP     , DL      , DM      , DN
     7    ,    DK      , PHI     , PSI     , MIS     , T       , U
     8    ,    V       , QQ      , VPST    , NGO     , NDO     , NP
     9    ,    IP      , IL      , IH      , IT      , IS      , NC
     1    ,    NLD     , IU      , NFT     , NSIGMA  , NPP     , KP
     2    ,    A       , B       , C       , D       , E       , F
     3    ,    G       , H       , QI      , QJ      , RIGHT   , DEL1
     4    ,    DEL2    , DEL1P   , DEL2P   , NEDD    , NVP,NOIS,NAREA,LITEMS
      NLD=NLD
      IF (NP) 11,11,5
 5    GO TO (1,2,3,9,10,11),NLD
 1    IU=IT
      LW=0
      GO TO 3
 2    IU=IS
      LW=1
 3    NSIGMA=0
      DO 4 I=1,NP
      DL(I)=(CA(IU)*X(I)+CD(IU)*Y(I)+CE(IU)*Z(I)+CG(IU))*DSSI(IU)
      DM(I)=(CD(IU)*X(I)+CB(IU)*Y(I)+CF(IU)*Z(I)+CH(IU))*DSSI(IU)
      DN(I)=(CE(IU)*X(I)+CF(IU)*Y(I)+CC(IU)*Z(I)+CI(IU))*DSSI(IU)
 4    CONTINUE
      KDEP=LL(IU)
      GO TO (20,21,22),KDEP
 20   NFT=1
      GO TO 25
 21   NFT=3
      GO TO 25
 22   NFT=4
 25   CALL FTEST
      NLD=NLD
```


LOCKHEED
CALIFORNIA COMPANY

TABLE C-1

(CONTINUED)

```
      GO TO (1,2,8,9,10,11),NLD
 8    DO 30 I=1,NP
      DK(I)=ABS(DL(I))
 30   CONTINUE
      GO TO 11
 9    DO 31 I=1,NP
      DK(I)=ABS(DM(I))
 31   CONTINUE
      GO TO 11
 10   DO 32 I=1,NP
      DK(I)=ABS(DN(I))
 32   CONTINUE
 11   RETURN
      END
$IBFTC DEPVAR  LIST,REF,DECK,M94,XR7
      SUBROUTINE DEPVAR
      DIMENSION CA(10 ),CB(10 ),CC(10 ),CD(10 ),CE(10 ),CF(10 ),CG(10 ),
     1 CH(10 ),CI(10 ),CJ(10 ),BA(10 ,6),BB(10 ,6),BC(10 ,6),BD(10 ,6),
     2 BE(10 ,6),BF(10 ,6),BG(10 ,6),BH(10 ,6),BI(10 ,6),BJ(10 ,6),
     3 X(875),Y(875),Z(875),XP(875),YP(875),ZP(875),DLP(875),DMP(875),
     4 DNP(875),LL(10 ),KNB(10 ),DSSI(10 ),QLIM1(10 ),QLIM2(10 ),
     5 QLIM3(10 ),QLIM4(10 ),GRIDS(10 ),DBSI(10 ,6)
      DIMENSION DKP(875),DL(875),DM(875),DN(875),DK(875),PHI(875),
     1 PSI(875),MIS(10),T(875),U(875),V(875),QQ(875),     VPST(875)
      COMMON /ECOM/  CA,  CB,   CC      , CD      , CE      , CF
     1    ,    CG      , CH      , CI      , CJ      , BA      , BB
     2    ,    BC      , BD      , BE      , BF      , BG      , BH
     3    ,    BI      , BJ      , X       , Y       , Z       , XP
     4    ,    YP      , ZP      , DLP     , DMP     , DNP     , LL
     5    ,    KNB     , DSSI    , QLIM1   , QLIM2   , QLIM3   , QLIM4
     6    ,    GRIDS   , DBSI    , DKP     , DL      , DM      , DN
     7    ,    DK      , PHI     , PSI     , MIS     , T       , U
     8    ,    V       , QQ      , VPST    , NGO     , NDO     , NP
     9    ,    IP      , IL      , IH      , IT      , IS      , NC
     1    ,    NLD     , IU      , NFT     , NSIGMA  , NPP     , KP
     2    ,    A       , B       , C       , D       , E       , F
     3    ,    G       , H       , QI      , QJ      , RIGHT   , DEL1
     4    ,    DEL2    , DEL1P   , DEL2P   , NBDD    , NVP,NOIS,NAREA,LTEMS
      NPP=0
      IF (NBDD) 600,600,602
 600  NFLAG=1
      GO TO 603
 602  NFLAG=2
 603  GO TO (1,101,201),NDO
 1    DO 2 I=1,NP
      PSI(I)=CD(IP)*Y(I)+CE(IP)*Z(I)+CG(IP)
 2    CONTINUE
      IF (CA(IP)) 5,3,5
 3    DO 303 I=1,NP
      IF (PSI(I)) 303,14,303
 303  CONTINUE
      DO 304 I=1,NP
      X(I)=-(CB(IP)*Y(I)**2+CC(IP)*Z(I)**2+2.0*(CF(IP)*Y(I)*Z(I)+CH(IP)
     1  *Y(I)+CI(IP)*Z(I))+CJ(IP))/(2.0*PSI(I))
 304  CONTINUE
      GO TO 11
 5    J=0
      DO 306 I=1,NP
      TER=(PSI(I)**2-CA(IP)*(CB(IP) *Y(I)**2+CC(IP) *Z(I)**2+CJ(IP)+2.0*
     1  (CF(IP)*Y(I)*Z(I)+CH(IP)*Y(I)+CI(IP)*Z(I))))
      IF (TER) 605,7,8
```

TABLE C-1

(CONTINUED)

```
605   GO TO (306,606),NFLAG
606   WRITE (6,900)Y(I),Z(I),LTEMS
900   FORMAT (10H  POINT Y=E20.8,2X,2HZ=E20.8,20H  IS NOT ON SURFACE I3)
      GO TO 306
8     PHI(I)=SQRT(TER)
      GO TO 9
7     X(I)=-PSI(I)/CA(IP)
      GO TO 10
9     X(I)=(PHI(I)-PSI(I))/CA(IP)
      NPP=NPP+1
      XP(NPP)=(-PHI(I)-PSI(I))/CA(IP)
      YP(NPP)=Y(I)
      ZP(NPP)=Z(I)
10    J=J+1
      X(J)=X(I)
      Y(J)=Y(I)
      Z(J)=Z(I)
306   CONTINUE
      NP=J
      IF (NPP) 402,402,400
400   DO 401 I=1,NPP
      NP=NP+1
      X(NP)=XP(I)
      Y(NP)=YP(I)
      Z(NP)=ZP(I)
401   CONTINUE
402   NP=NP
11    J=NP
      NOB=KNB(IP)
      IF (NOB) 13,13,4
4     DO 308 I=1,NOB
      NP=J
      J=0
      DO 308 JQ=1,NP
      THETA=(BA(IP,I)*X(JQ)**2+BB(IP,I)*Y(JQ)**2+BC(IP,I)*Z(JQ)**2
     1 +BJ(IP,I)+2.0*((BD(IP,I)*Y(JQ)+BE(IP,I)*Z(JQ)+BG(IP,I))*X(JQ)
     2  +(BF(IP,I)*Z(JQ)+BH(IP,I))*Y(JQ)+BI(IP,I)*Z(JQ)))*DBSI(IP,I)
      IF (THETA) 608,608,320
608   GO TO (308,610),NFLAG
610   WRITE (6,902)X(JQ),Y(JQ),Z(JQ),LTEMS
902   FORMAT (10H  POINT X=E20.8,2X,2HY=E20.8,2X,2HZ=E20.8,20H  IS NOT O
     1N SURFACE I3)
      GO TO 308
320   J=J+1
      X(J)=X(JQ)
      Y(J)=Y(JQ)
      Z(J)=Z(JQ)
308   CONTINUE
      NP=J
13    IF (NP) 612,612,611
612   WRITE (6,904) LTEMS
904   FORMAT (25H     NO POINTS ON SURFACE I3 )
611   NC=1
12    RETURN
14    I=I
      IL=IL+2
      GO TO (19,18,15,16,17),IL
15    WRITE (6,500)LTEMS
500   FORMAT (12H            SA I3,5H= NOP )
      NC=4
      GO TO 12
```


LOCKHEED
CALIFORNIA COMPANY

TABLE C-1

(CONTINUED)

```
16    WRITE (6,502)IP,IT,IP,IT,IS,IP
502   FORMAT (12H          VS I3,2X,I3,4H ,VP I3,2X,I3,6H K, VS I3,2X,
     1 I3,10H = NOP - P )
      GO TO 20
17    WRITE (6,504)IP,IT,IP,IT,IS,IP,IS,IP,I
504   FORMAT (10H        VS I3,2X,I3,5H , VP I3,2X,I3, 6H K, VS I3,2X,
     1 I3,5H , VP I3,2X,I3,2X,I3,14H = NOL - P - Q )
      GO TO 20
18    WRITE (6,506)IS,IP,IP,IT,IP,IT
506   FORMAT (12H          VS I3,2X,I3,5H , VS I3,2X,I3,5H , VP I3,2X,
     1 I3,14H K , = NOP - P )
      NC=2
      GO TO 12
19    WRITE (6,508)IS,IP,I
508   FORMAT (12H          VP I3,2X,I3,2X,I3,12H = NOP - P,O )
      NC=3
      GO TO 12
20    IF (IH) 510,511,511
510   NC=6
      GO TO 12
511   NC=5
      GO TO 12
101   DO 22 I=1,NP
      PSI(I)=CD(IP)*X(I)+CF(IP)*Z(I)+CH(IP)
22    CONTINUE
102   IF (CB(IP)) 105,103,105
103   DO 23 I=1,NP
      IF (PSI(I)) 23,14,23
23    CONTINUE
104   DO 24 I=1,NP
      Y(I)=-(CA(IP)*X(I)**2+CC(IP)*Z(I)**2+CJ(IP)+2.0*(CE(IP)*X(I)*Z(I)
     1  +CG(IP)*X(I)+CI(IP)*Z(I)))/(2.0*PSI(I))
24    CONTINUE
      GO TO 11
105   J=0
      DO 26 I=1,NP
      TER=(PSI(I)**2-CB(IP)*(CA(IP)*X(I)**2+CC(IP)*Z(I)**2+CJ(IP)+2.0*
     1  (CE(IP)*X(I)*Z(I)+CG(IP)*X(I)+CI(IP)*Z(I))))
      IF (TER) 620,107,108
620   GO TO (26,622),NFLAG
622   WRITE (6,910)X(I),Z(I),LTEMS
910   FORMAT (10H  POINT X=E20.8,2X,2HZ=E20.8,20H  IS NOT ON SURFACE I3)
      GO TO 26
108   PHI(I)=SQRT(TER)
      GO TO 109
107   Y(I)=-PSI(I)/CB(IP)
      GO TO 25
109   Y(I)=(PHI(I)-PSI(I))/CB(IP)
      NPP=NPP+1
      XP(NPP)=X(I)
      YP(NPP)=(-PHI(I)-PSI(I))/CB(IP)
      ZP(NPP)=Z(I)
25    J=J+1
      X(J)=X(I)
      Y(J)=Y(I)
      Z(J)=Z(I)
26    CONTINUE
      NP=J
      IF (NPP) 406,406,404
404   DO 405 I=1,NPP
      NP=NP+1
```


LOCKHEED
CALIFORNIA COMPANY

TABLE C-1

(CONTINUED)

```
      X(NP)=XP(I)
      Y(NP)=YP(I)
      Z(NP)=ZP(I)
405   CONTINUE
406   NP=NP
      GO TO 11
201   DO 30 I=1,NP
      PSI(I)=CE(IP)*X(I)+CF(IP)*Y(I)+CI(IP)
30    CONTINUE
202   IF (CC(IP)) 205,203,205
203   DO 32 I=1,NP
      IF (PSI(I)) 32,14,32
32    CONTINUE
204   DO 34 I=1,NP
      Z(I)=-(CA(IP)*X(I)**2+CB(IP)*Y(I)**2+CJ(IP)+2.0*(CD(IP)*X(I)*Y(I)
     1  +CG(IP)*X(I)+CH(IP)*Y(I)))/(2.0*PSI(I))
34    CONTINUE
      GO TO 11
205   J=0
      DO 36 I=1,NP
      TER=(PSI(I)**2-CC(IP)*(CA(IP)*X(I)**2+CB(IP)*Y(I)**2+CJ(IP)+2.0*
     1  (CD(IP)*X(I)*Y(I)+CG(IP)*X(I)+CH(IP)*Y(I))))
      IF (TER) 630,207,208
630   GO TO (36,632),NFLAG
632   WRITE (6,920)X(I),Y(I),LTEMS
920   FORMAT (10H  POINT X=E20.8,2X,2HY=E20.8,20H  IS NOT ON SURFACE I3)
      GO TO 36
208   PHI(I)=SQRT(TER)
      GO TO 209
207   Z(I)=-PSI(I)/CC(IP)
      GO TO 35
209   Z(I)=(PHI(I)-PSI(I))/CC(IP)
      NPP=NPP+1
      XP(NPP)=X(I)
      YP(NPP)=Y(I)
      ZP(NPP)=(-PHI(I)-PSI(I))/CC(IP)
35    J=J+1
      X(J)=X(I)
      Y(J)=Y(I)
      Z(J)=Z(I)
36    CONTINUE
      NP=J
      IF (NPP) 412,412,408
408   DO 409 I=1,NPP
      NP=NP+1
      X(NP)=XP(I)
      Y(NP)=YP(I)
      Z(NP)=ZP(I)
409   CONTINUE
412   NP=NP
      GO TO 11
      END
$IBFTC FTEST   LIST,REF,DECK,M94,XR7
      SUBROUTINE FTEST
      DIMENSION CA(10 ),CB(10 ),CC(10 ),CD(10 ),CE(10 ),CF(10 ),CG(10 ),
     1 CH(10 ),CI(10 ),CJ(10 ),BA(10 ,6),BB(10 ,6),BC(10 ,6),BD(10 ,6),
     2 BE(10 ,6),BF(10 ,6),BG(10 ,6),BH(10 ,6),BI(10 ,6),BJ(10 ,6),
     3 X(875),Y(875),Z(875),XP(875),YP(875),ZP(875),DLP(875),DMP(875),
     4 DNP(875),LL(10 ),KNB(10 ),DSSI(10 ),QLIM1(10 ),QLIM2(10 ),
     5 QLIM3(10 ),QLIM4(10 ),GRIDS(10 ),DPSI(10 ,6)
      DIMENSION DKP(875),DL(875),DM(875),DN(875),DK(875),PHI(875),
```


LOCKHEED
CALIFORNIA COMPANY

TABLE C-1

(CONTINUED)

```
     1 PSI(875),MIS(10),T(875),U(875),V(875),QQ(875),     VPST(875)        15680100
      COMMON /ECOM/  CA,  CB,   CC      , CD      , CE      , CF            15680130
     1   ,    CG      , CH      , CI      , CJ      , BA      , BB            15680140
     2   ,    BC      , BD      , BE      , BF      , BG      , BH            15680150
     3   ,    BI      , BJ      , X       , Y       , Z       , XP            15680160
     4   ,    YP      , ZP      , DLP     , DMP     , DNP     , LL            15680170
     5   ,    KNB     , DSSI    , QLIM1   , QLIM2   , QLIM3   , QLIM4         15680180
     6   ,    GRIDS   , DBSI    , DKP     , DL      , DM      , DN            15680190
     7   ,    DK      , PHI     , PSI     , MIS     , T       , U             15680200
     8   ,    V       , QQ      , VPST    , NGO     , NDO     , NP            15680210
     9   ,    IP      , IL      , IH      , IT      , IS      , NC            15680220
     1   ,    NLD     , IU      , NFT     , NSIGMA  , NPP     , KP            15680230
     2   ,    A       , B       , C       , D       , E       , F             15680240
     3   ,    G       , H       , QI      , QJ      , RIGHT   , DEL1          15680250
     4   ,    DEL2    , DEL1P   , DEL2P   , NBDD    , NVP,NOIS,NAREA,LTEMS    15680260
      NFT=NFT                                                                 15680410
      IF (NP) 2,2,4                                                           15680420
2     NLD=6                                                                   15680430
      GO TO 15                                                                15680440
4     GO TO (1,6,101,201),NFT                                                 15680450
1     J=0                                                                     15680460
      DO 12 I=1,NP                                                            15680470
      IF (DL(I)) 10,11,10                                                     15680480
11    WRITE (6,402)LTEMS,X(I),Y(I),Z(I)                                       15680490
      GO TO 12                                                                15680500
10    J=J+1                                                                   15680510
      X(J)=X(I)                                                               15680520
      Y(J)=Y(I)                                                               15680530
      Z(J)=Z(I)                                                               15680540
      DL(J)=DL(I)                                                             15680550
      DM(J)=DM(I)                                                             15680560
      DN(J)=DN(I)                                                             15680570
12    CONTINUE                                                                15680580
      NP=J                                                                    15680590
      NLD=3                                                                   15680600
15    RETURN                                                                  15680610
6     WRITE (6,400)                                                           15680620
400   FORMAT (62H   NFT EQUALS TWO WHICH SHOULD NOT BE UNTIL PROGRAM IS 15680630
     1REVISED )                                                               15680640
402   FORMAT (11H   SURFACE I3,19H  IS VERTICAL AT X=E20.8,2X,2HY=E20.8,15680650
     1 2X,2HZ=E20.8 )                                                         15680660
      CALL EXIT                                                               15680670
      STOP                                                                    15680680
101   J=0                                                                     15680690
      DO 14 I=1,NP                                                            15680700
      IF (DM(I)) 110,13,110                                                   15680710
13    WRITE (6,402)LTEMS,X(I),Y(I),Z(I)                                       15680720
      GO TO 14                                                                15680730
110   J=J+1                                                                   15680740
      X(J)=X(I)                                                               15680750
      Y(J)=Y(I)                                                               15680760
      Z(J)=Z(I)                                                               15680770
      DL(J)=DL(I)                                                             15680780
      DM(J)=DM(I)                                                             15680790
      DN(J)=DN(I)                                                             15680800
14    CONTINUE                                                                15680810
      NP=J                                                                    15680820
      NLD=4                                                                   15680830
      GO TO 15                                                                15680840
201   J=0                                                                     15680850
      DO 202 I=1,NP                                                           15680860
```


LOCKHEED
CALIFORNIA COMPANY

TABLE C-1

(CONTINUED)

```
      IF (DN(I)) 210,203,210
  203 WRITE (6,402)LTEMS,X(I),Y(I),Z(I)
      GO TO 202
  210 J=J+1
      X(J)=X(I)
      Y(J)=Y(I)
      Z(J)=Z(I)
      DL(J)=DL(I)
      DM(J)=DM(I)
      DN(J)=DN(I)
  202 CONTINUE
      NP=J
      NLD=5
      GO TO 15
      END
$IBFTC MTEST   LIST,SEF,DECK,M94,XR7
      SUBROUTINE MTEST
      DIMENSION CA(10 ),CB(10 ),CC(10 ),CD(10 ),CE(10 ),CF(10 ),CG(10 ),
     1 CH(10 ),CI(10 ),CJ(10 ),BA(10 ,6),BB(10 ,6),BC(10 ,6),BD(10 ,6),
     2 BE(10 ,6),BF(10 ,6),BG(10 ,6),BH(10 ,6),BI(10 ,6),BJ(10 ,6),
     3 X(875),Y(875),Z(875),XP(875),YP(875),ZP(875),DLP(875),DMP(875),
     4 DNP(875),LL(10 ),KNB(10 ),DSSI(10 ),QLIM1(10 ),QLIM2(10 ),
     5 QLIM3(10 ),QLIM4(10 ),GRIDS(10 ),DBSI(10 ,6)
      DIMENSION DKP(875),DL(875),DM(875),DN(875),DK(875),PHI(875),
     1 PSI(875),MIS(10),T(875),U(875),V(875),QQ(875),    VPST(875)
      COMMON /ECOM/  CA,  CB,   CC     , CD     , CE     , CF
     1   ,    CG     , CH     , CI     , CJ     , BA     , BB
     2   ,    BC     , BD     , BE     , BF     , BG     , BH
     3   ,    BI     , BJ     , X      , Y      , Z      , XP
     4   ,    YP     , ZP     , DLP    , DMP    , DNP    , LL
     5   ,    KNB    , DSSI   , QLIM1  , QLIM2  , QLIM3  , QLIM4
     6   ,    GRIDS  , DBSI   , DKP    , DL     , DM     , DN
     7   ,    DK     , PHI    , PSI    , MIS    , T      , U
     8   ,    V      , QQ     , VPST   , NGO    , NDO    , NP
     9   ,    IP     , IL     , IH     , IT     , IS     , NC
     1   ,    NLD    , IU     , NFT    , NSIGMA , NPP    , KP
     2   ,    A      , B      , C      , D      , E      , F
     3   ,    G      , H      , QI     , QJ     , RIGHT  , DEL1
     4   ,    DEL2   , DEL1P  , DEL2P  , NBOD   , NVP,MOIS,NPTEA,LTEMS
      KP=KP
      GAMMA=A*X(KP)**2+B*Y(KP)**2+C*Z(KP)**2+QJ+2.0*((D*Y(KP)+E*Z(KP)+
     1  G)*X(KP)+(F*Z(KP)+H)*Y(KP)+QI*Z(KP))
      BET1=A*X(KP)+D*Y(KP)+E*Z(KP)+G
      BET2=B*Y(KP)+D*X(KP)+F*Z(KP)+ H
      BET3=C*Z(KP)+E*X(KP)+F*Y(KP)+QI
      DO 24 J=1,NPP
      ALPHA=(A*T(J)+2.0*(D*U(J)+E*V(J)))*T(J)+ (B*U(J)+2.0*F*V(J))*U(J)
     1   + C*V(J)**2
      BETHA=BET1*T(J)+BET2*U(J)+BET3*V(J)
      IF (ALPHA) 7,5,7
    5 THETAD=-1.0
      THETAC=-GAMMA/(2.0*BETHA)
      GO TO 13
    7 TEST=BETHA**2-ALPHA*GAMMA
      IF (TEST) 8,9,11
    8 GO TO 24
    9 THETAD=-1.0
      THETAC=-BETHA/ALPHA
      GO TO 13
   11 THETAC=(-BETHA+SQRT(BETHA**2-ALPHA*GAMMA))/ALPHA
   12 THETAD=(-BETHA-SQRT(BETHA**2-ALPHA*GAMMA))/ALPHA
```

TABLE C-1

(CONTINUED)

```
13    IF (THETAC) 18,18,10                                          15680630
10    IF (THETAC-1.0) 14,18,18                                      15680640
14    XC=X(KP)+THETAC* T(J)                                         15680650
      YC=Y(KP)+THETAC* U(J)                                         15680660
      ZC=Z(KP)+THETAC* V(J)                                         15680670
17    NN=NSIGMA                                                     15680680
      IF (NBDD) 26,26,3                                             15680690
3     DO 30 I=1,NBDD                                                15680700
      VAL=(BA(NN,I)*XC**2+BB(NN,I)*YC**2+BC(NN,I)*ZC**2+BJ(NN,I)+2.0*  15680710
     1 ((BD(NN,I)*YC+BE(NN,I)*ZC+BG(NN,I))*XC+(BF(NN,I)*ZC+BH(NN,I))*  15680720
     2 YC+BI(NN,I)*ZC))*DBSI(NN,I)                                  15680730
      IF (VAL) 30,30,26                                             15680740
30    CONTINUE                                                      15680750
18    IF (THETAD) 24,24,15                                          15680760
15    IF (THETAD-1.0) 19,24,24                                      15680770
19    XD=X(KP)+THETAD* T(J)                                         15680780
      YD=Y(KP)+THETAD* U(J)                                         15680790
      ZD=Z(KP)+THETAD* V(J)                                         15680800
22    NN=NSIGMA                                                     15680810
      IF (NBDD) 26,26,4                                             15680820
4     DO 34 I=1,NBDD                                                15680830
      VAL=(BA(NN,I)*XD**2+BB(NN,I)*YD**2+BC(NN,I)*ZD**2+BJ(NN,I)+2.0*  15680840
     1 ((BD(NN,I)*YD+BE(NN,I)*ZD+BG(NN,I))*XD+(BF(NN,I)*ZD+BH(NN,I))*  15680850
     2 YD+BI(NN,I)*ZD))*DBSI(NN,I)                                  15680860
      IF (VAL) 34,34,26                                             15680870
34    CONTINUE                                                      15680880
      GO TO 24                                                      15680890
26    QQ(J)=0.0                                                     15680900
24    CONTINUE                                                      15680910
      RETURN                                                        15680920
      END                                                           15680930
                                                                          1251

                                                                       001251
```


LOCKHEED
CALIFORNIA COMPANY