A STUDY OF SIMULATION-AIDED ENGINEERING DESIGN

by

Ian Mitroff

Internal Working Paper No. 66

June 1967

This research was supported in part by the National Aeronautics and Space Administration under General Grant #NSG-243-62 under the University of California.

Space Sciences Laboratory
Social Sciences Project
University of California
Berkeley

ACKNOWLEDGEMENTS

The author wishes to thank the members of his dissertation committee for their guidance and helpful criticisms. In particular, the author wishes to acknowledge Professor Davis's criticisms of the "social" aspects of the dissertation, Professor Crossman for his criticisms of the "technical" aspects, and Professor Churchman for his criticisms of the "philosophical" aspects.

I also wish to take this opportunity to especially thank Professor Churchman, and, in this same vein, Professor Thomas A. Cowan. My association with them has been both a warm and constant source of inspiration whose influence extends far beyond the confines of this study.

To the staff of the Lawrence Radiation Laboratory who so graciously consented to this study and continually supported its aims, I express my sincere appreciation. Most of all, to the particular engineer who was the object of this study, I cannot express enough thanks.

I acknowledge the kindness of the editors of the IRE Transactions on Engineering Management for giving me their permission to reprint Fig. 9 of David L. Marples's article, "The Decisions of Engineering Design."

To Mr. Paul Wing for his considerable programming efforts; to Miss Alice Tabet, Miss Phyllis Dexter, and Miss Sandra Cole for their help in preparing the manuscript, the author wishes to express his sincere appreciation.

Finally, to my wife Donna and our family "Sophie," I gratefully and proudly acknowledge both their love and encouragement without which I would have floundered.

PREFACE

This is a report of a case study of engineering design. It is fundamentally a case study of the behavior of a particular design engineer before and after the introduction of a new design aid, i.e., a computer simulation of the engineer's own design behavior. This report documents the engineer's responses to the simulation.

At the same time, this is also a case study of the formulation and development of a general method for studying engineering design. As a result, this report is just as concerned with the methodology and general implications of the method as it is with documenting a particular application of the method. This is essentially the theme of Chapter I.

Even though there are many competing viewpoints on the nature of engineering design, we feel that none of the authors in the field has yet sufficiently demonstrated the superiority of his particular viewpoint. We believe that this is due to their failure to define in a precise manner the exact nature of the problem. Chapter I must be regarded as an introductory definition of what we take to be the real problems confronting the analyst of the engineering design process. Chapter I accomplishes this by critically evaluating the methods for studying design as proposed by other authors. We show that how and what a particular method defines as "the problem" in turn dictates how and what the method defines as "the solution." We demonstrate that the development of a general method for studying design (which this study attempts to provide), as well as a particular application of it, is really no better than the original formulation

of the problem the method is intended to solve. Hence our emphasis on defining the problem and on the methodology for solving it.

Chapter I must also be regarded as a case history in the discovery and in the formulation of a method for solving a complex problem. As a case history, Chapter I shows how the formulation of the problem and the interpretation of the study's results changed with the development of the study itself. The formulation and interpretation changed with the investigator's growing recognition of the importance of the role of behavioral factors in the design process. What follows is a case history in the discovery of general factors governing the design process; it is a case history of the formulation of general hypotheses instead of a testing of specific hypotheses.

Chapter II represents a preliminary description of the specific design task of the study. It gives a very general description of the task's technical and behavioral content. This general account is a strict prerequisite for an understanding of later, more detailed accounts. Most important of all though, Chapter II shows the decisive influence of variables which were not programmed. These variables are mostly behavioral. They were not programmed only because the extent of their importance was not fully recognized until near the end of the study, i.e., with testing out of what had actually been programmed.

Chapter II gives a preliminary demonstration of the fact that there is no more basic behavioral variable governing a design than the personality of the client for whom the engineer designs. There is also no more basic behavioral variable than the personality of the engineer. Different personality types not only initiate a design differently but also influence its development differently. For example, there is a considerable difference between the ways clients define their design needs. Most clients,

it would seem, either overdefine or underdefine their requirements. As a result, the engineer is forced to adopt various strategies in order to get his clients either to relax or to "firm up" certain requirements. In order to proceed with a design, the engineer must essentially get his clients to redefine their design needs.

Chapter II shows how the face to face interaction between the engineer and one of his clients is one of the most crucial behavioral factors in determining the properties of the design's product. Unfortunately, as this also was not programmed, Chapter II shows that the simulation model as it now stands is not capable of representing the whole of the specific design process studied. But then this only strengthens our point that any model which only conceives of design as a process of optimizing technical variables is dangerously incomplete. In many respects, the most important design variables yet to be modeled and optimized are behavioral variables like the amount and kind of "understanding" that exists between the different parties to a design project.

Since the program represents a rather large and complicated model, an extensive explanation of both its construction and structure is necessary for an understanding of its implications. Chapter III which gives this explanation is also necessary for an understanding of the results of later chapters. And Chapter III once more testifies to the fact that the program is mainly a representation of the technical content of the engineer's job.

Chapter IV is exclusively devoted to the problems of testing any simulation model. Essentially the chapter proposes that any specific test of the program's adequacy in representing the engineer's design behavior be based on a criterion of utility. We argue that if the engineer "accepts" the program as a useful design aid, then he is accepting the

program as a valid representation of his own design behavior. Chapter IV discusses the general methodological implications behind such a test.

Chapter V constitutes a detailed and extensive application of the results of Chapter IV. The chapter shows that even if the program does not represent every design variable, the program is still exceedingly useful in giving the largest view to date of the whole design system. The program allows the engineer, his boss, or even his clients to examine more fully and systematically the consequences of general design strategies than has heretofore been possible. In addition to giving an extensive test of the program, Chapter V also gives the most complete description of the engineer's task.

Finally, Chapter VI summarizes our general conclusions and proposals for future research. The chapter re-emphasizes our most general conclusion, i.e., that the extent of the interdependence between the technical and behavioral aspects of design is much greater than has heretofore been recognized. Specific research proposals are developed out of this general conclusion.

TABLE OF CONTENTS

Page

ACKNOWLEDGEMENTS ii

PREFACE iv

LIST OF MAJOR SYMBOLS xi

LIST OF FIGURES xv

CHAPTER

I. INTRODUCTION. 1

II. THE TASK: PART I 25

General Design Requirements 49

III. THE PROGRAM (DESIGN) AND THE TASK: PART II 53

IV. TOWARDS A BEHAVIORAL THEORY OF SIMULATION 111

1. Preface 111
2. Introduction. 112
3. To Simulate Reality Is to Represent Reality 114
4. Turing's Test 117
5. Mind Is Behavior. 123
6. Can a Machine Think?
   Can a Man Think? 127
7. Rationalism and Empiricism. 140
8. Rationalism and Empiriciam and Man-
   Machine Dialectics 145
9. Churchman's Necessary and Sufficient Conditions
   for Simulation 156

V. EVALUATING THE PROGRAM; AND THE TASK: PART III 159

VI. SUMMARY AND RECOMMENDATIONS 245

BIBLIOGRAPHY. 265

APPENDIX I: FORTRAN IV LISTING OF THE PROGRAM (DESIGN) 272

1. MAIN. 273
2. INPUT 275
3. CYL 279
4. MONTOR. 284
5. XSPACE. 286

Page

6. FORMS 289
7. EXACT 292
8. STORE 304
9. SPH 312
10. RANK. 316
11. LCY 323
12. WFLC. 324
13. WINDOW. 325
14. BLOCK 327
15. STF 328

LIST OF MAJOR SYMBOLS

RF = radius of LH_2 flask, in.

LF = length of LH_2 flask, in.

RC = radius of cylindrical pressure vessel, in.

LC = length of cylindrical pressure vessel, in.

RS = radius of spherical pressure vessel, in.

R = radius, in.

ΔRF_{incr} = amount of clearance (increment) between LH_2 flask and pressure vessel, in.

WNCR = width of non-counting region, in.

DNCR = diameter of non-counting region, in.

ΔNCR = distance from center of LH_2 flask to center of non-counting region, in.

WFLC = width of box flange, in.

BOXHT = height of box flange, in.

IB = operating nuclear beam intensity

IBA = allowable nuclear beam intensity

THICKW = design thickness of mylar window, in.

WD = mylar window deflection, in.

H1, H2, V1, V2 = dimensions of external space, in.

E(METAL) = modulus of elasticity, psi.

σ_{YP}(METAL) = yield strength, psi.

σ_{ANNEAL}(METAL) = annealed yield strength, psi.

SF(METAL) = safety factor

C(METAL) = constant

EL(METAL) = elongation (ductility), in./in.

ρ(METAL) = density, gms/cm^3

P = pressure, psi

NTNSTY = stress-concentration factor

DCRIT = critical forming diameter, in.

t_3 = thickness of cylindrical pressure vessel, in.

t_2 = base thickness of spherical pressure vessel, in.

t_1 = crown (apex) thickness of spherical pressure vessel, in.

T_{3E} = thickness of cylindrical pressure vessel required for external pressure (30 psi), in.

T_{3I} = thickness of cylindrical pressure vessel required for internal pressure (150 psi), in.

T_{2E} = base thickness of spherical pressure vessel required for external pressure, in.

T_{2I} = base thickness of spherical pressure vessel required for internal pressure, in.

T_{1E} = crown thickness of spherical pressure vessel required for external pressure, in.

T_{1I} = crown thickness of spherical pressure vessel required for internal pressure, in.

RATIO = T_{2I}/T_{3I}

T_{3I}' = T_{3I} computed for an annealed condition, in.

T_{2I}' = T_{2I} computed for an annealed condition, in.

T_{1I}' = T_{1I} computed for an annealed condition, in.

T_{3A} = allowable cylinder thickness, in.

T_{2A} = allowable base thickness, in.

T_{1A} = allowable apex thickness, in.

T3DC = cylindrical design thickness = MAX(T_{3E}, T_{3I}), in.

T2DS = spherical design thickness = MAX(T_{2E}, T_{2I}), in.

T1DS = spherical design thickness = MAX(T_{1E}, T_{1I}), in.

t_{3STF} = thickness of <u>stiffened</u> cylindrical pressure vessel required for external pressure, in.

B_{STF} = width of stiffener ring, in.

H_{STF} = height of stiffener ring, in.

I_{STF} = moment of inertia of stiffener ring, in.^{4}

K = number of stiffener rings

THK1 = t_{3STF} (K-1), in.

THK2 = t_{3STF} (K), in.

S = K + 1 = number of stiffener regions

V(S) =LC/(2RC x S)

V_{INIT} = V(S=1) = V(K=0) = LC/2RC

ρT = density x thickness, gms/cm^2

$\rho T_{3A}(1)$ = ρT_{3AL} = allowable ρT , left-secondary, gms/cm^2

$\rho T_{3A}(2)$ = ρT_{3AR} = allowable ρT, right-secondary, gms/cm^2

$\rho T_{1A}(1)$ = ρT_{1AL} = allowable ρT, left-primary, gms/cm^2

$\rho T_{1A}(2)$ = ρT_{1AR} = allowable ρT, right-primary, gms/cm^2

$\rho T_3(1)$ = left-secondary design ρT, gms/cm^2

$\rho T_3(2)$ = right-secondary design ρT, gms/cm^2

$\rho T_1(1)$ = left-primary design ρT, gms/cm^2

$\rho T_1(2)$ = right-primary design ρT, gms/cm^2

$$\left.\begin{array}{l} WT(1) \\ WT(2) \\ WT(3) \\ WT(4) \end{array}\right\} = \text{weighting factors}$$

$\Delta\rho_{3AL} = \rho T_{3A}(1) - \rho T_3(1)$, gms/cm^2

$\Delta\rho_{3AR} = \rho T_{3A}(2) - \rho T_3(2)$, gms/cm^2

$\Delta\rho_{1AL} = \rho T_{1A}(1) - \rho T_1(1)$, gms/cm^2

$\Delta\rho_{1AR} = \rho T_{1A}(2) - \rho T_1(2)$, gms/cm^2

$\Delta\rho_1(ALTNT) = WT(1) \times \Delta\rho_{1AL}$, gms/cm^2

$\Delta\rho_2(ALTNT) = WT(2) \times \Delta\rho_{1AR}$, gms/cm^2

$\Delta\rho_3(ALTNT) = WT(3) \times \Delta\rho_{3AL}$, gms/cm^2

$\Delta\rho_4(ALTNT) = WT(4) \times \Delta\rho_{3AR}$, gms/cm^2

$\Delta\rho_{TOTAL} = \Delta\rho_1 + \Delta\rho_2 + \Delta\rho_3 + \Delta\rho_4$, gms/cm^2

RO = number of positive $\Delta\rho$'s (e.g., if $\Delta\rho_1$, $\Delta\rho_2$, $\Delta\rho_3$, $\Delta\rho_4$ all > 0 , then RO = 4)

COST(ALTNT) = total cost of a design alternative, $

TIME(ALTNT) = total time of a design alternative, hrs.

LIST OF FIGURES

Figure		Page
1.	The Design Process	4
2.	Varieties of LH_2 Containers	29
3.	A Cylindrical Pressure Vessel	30
4.	LH_2 Fill and Boil-Off Lines	33
5.	Cylinder in Place	34
6.	Sphere in Place	35
7.	Program Structure	59
8.	Minimum and Incremented Cylinders and Spheres	60
9.	MAIN Logic	62
10.	Minimum and Incremented Cylinders and Spheres	63
11.	An Example of Extending a Cylindrical Shell to the NCR	67
12.	Locations of Cylinders with Respect to NCR	69
13.	Cylinder Configurations	70
14.	CYL Logic	72
15.	CYL (cont.)	74
16.	DCFW and WFWCYL	75
17.	CYL (cont.)	78
18.	Sphere Configurations	80
19.	Sphere Configurations	81
20.	MONTOR Logic	82
21.	XSPACE Logic	83
22.	FORMS Logic	84

Figure Page

23. Machined, Spun, and Drawn Forms 87a

24. EXACT Logic 88

25. EXACT (cont.) 90

26. STF 92

27. EXACT (cont.) 93

28. EXACT (cont.) 95

29. STORE Logic 96

30. Primary and Secondary ρT's. 98

31. Primary and Secondary ρT's. 99

32. Total Number of Design Alternatives 106

33. Preliminary Design Sketches, Case I 164

34. Final Design Sketch: Case 1-4" D 183

35. Final Design Sketch: Case 3-4" D 184

36. Final Design Sketch: Case 4-8" D 185

37. Final Design Sketch: Case 6-8" D 186

38. Final Design Sketch: Existing Alternative. 187

39. Alligator-Jaw Configuration 195

40. Pages 1 through 13--Computer Input and Output, Case I 201-213

41. ρT Rank WFWSPH, Case II 229

42. ρT/RL Rank WFWSPH, Case II. 231

43. Hi ρT's, SF(Be) = 2.00, Case III. 235

44. Lo ρT's, SF(Be) = 2.00, Case III. 236

45. Hi ρT's, SF(Be) = 4.00, Case III. 241

46. Lo ρT's, SF(Be) = 4.00, Case III. 242

CHAPTER I

INTRODUCTION

While it is clear that the function of engineering is design, it is, unfortunately, not clear what design is, what it is that engineers actually do, and what they ought to do. The objective of this study is to add to our understanding of all three areas. Even though we have limited ourselves to examining the actual behavior of a single design engineer, we still believe that our study contributes toward a general understanding of engineering design. Furthermore, we also believe that by knowing what a particular engineer can do, we are helping to define what an engineer can be expected to do, and in this sense, what ought to be done in order to improve design.

If it is not clear how we can improve design, then it is because we are largely ignorant of what engineers actually do. It is not because of any lack of proposals for making improvements. On the contrary, there are numerous articles which attempt to explain and to put design on a rational basis.[1] Although almost all of these articles have been based on some empirical work, almost none of them have reported, let alone related, what they have had to say about the design process in general to a specific and systematic study of how design is done in particular. Most studies are long on what ought to be done theoretically but short on what is done practically. As a result, most descriptions of design fail to

---

[1]For a general collection of articles, see J. Christopher Jones and D. G. Thornley, eds., Conference on Design Methods. For a guide to the rest of the literature on design, see the list of references to this study.

make clear whether they are describing design as it is presently done or as it should be done. In other words, what compels one to accept as "rational" what a particular author happens to define as "a rational method of design"?[2] From our point of view, our hesitancy to accept any particular notion of rationality stems from a nagging doubt that while a method may appear to be rational on paper, it may nevertheless fail to be rational in practice.

Even fewer in number are those investigations which have systematically described engineering design as both a technical and a social process. Most studies, it would seem, serve to emphasize one point of view to the exclusion of the other. For example, Gosling's paper on "The Relevance of System Engineering,"[3] excellent as it is, represents in our view the archetype of the technical description of design. Kornhauser,[4] on the other hand, might very well represent, though not without qualification, the social archetype. Kornhauser, we must point out, represents the "social" point of view in a manner characteristic of his particular study and of his professional outlook. Basically, Kornhauser was

---

[2]For example, even though the title of J. Christopher Jones' paper is "A Method of Systematic Design," it is not clear, by Jones' own admission, in what sense Systematic Design is actually systematic, i.e., systematic both in theory and in practice by actual test. Consider what Jones himself says:

> Some parts of the suggested method have been tried out with some success in design teaching projects and in prototype development in ergonomics and industrial design. In these cases it has seldom been possible to carry the method through to a logical conclusion for want of the new kind of design organization that seems to be necessary to permit a complete change to systematic work. Other parts of the method are based more on conjecture, and on the reports of others, than on the writer's experience. In many cases the suggested methods are better regarded as a basis for further investigation than for application in current design work.
> Cf., Jones and Thornley, op. cit., p. 53.

[3]Cf. Jones and Thornley, op. cit., pp. 23-36.

[4]William Kornhauser, Scientists in Industry: Conflict and Accommodation.

interested in the behavior of scientists and engineers as professionals in organizations. As a sociologist, he was interested in studying how organizations as social enterprises affect the social behavior of the employed professional. He was not interested in studying how organizations affect the design behavior of engineers. Since our primary interest is with design behavior, we require a different and more general meaning of "social." The meaning we have in mind is more nearly expressed by "behavioral." In the sense that the term behavioral is more encompassing, Kornhauser only supplies a part of our intended meaning. Unlike him, we are not interested in the sociology of professionals in organizations solely for the sake of sociology, professions, or organizations. Our only interest is in the possible contribution these fields of knowledge may make to our understanding of design as an activity which is performed by a professional who usually works within some kind of formal organization. In addition, to the extent that the field of psychology has an actual contribution to make to our understanding of design as a behavioral process, the other part of our meaning of "social as behavioral" is to come from psychology. Not only are we concerned with the sociology of the design process, we are also concerned with its description as a psychological process as well.

There are two studies which come close to meeting all of our criteria for a systematic and accurate description of design. They are Marples' paper on "The Decisions of Engineering Design"[5] and Ramström and Rhenman's paper on "A Method of Describing the Development of an Engineering Project."[6] Both papers attempt to describe the general process of design

---

[5]D. L. Marples, "The Decisions of Engineering Design," IRE Trans. on Engineering Management, Vol. EM-8 (June, 1961), pp. 55-71.

[6]D. Ramström and E. Rhenman, "A Method of Describing the Development of an Engineering Project," IRE Trans. on Engineering Management, Vol. EM-12 (September, 1965), pp. 79-86.

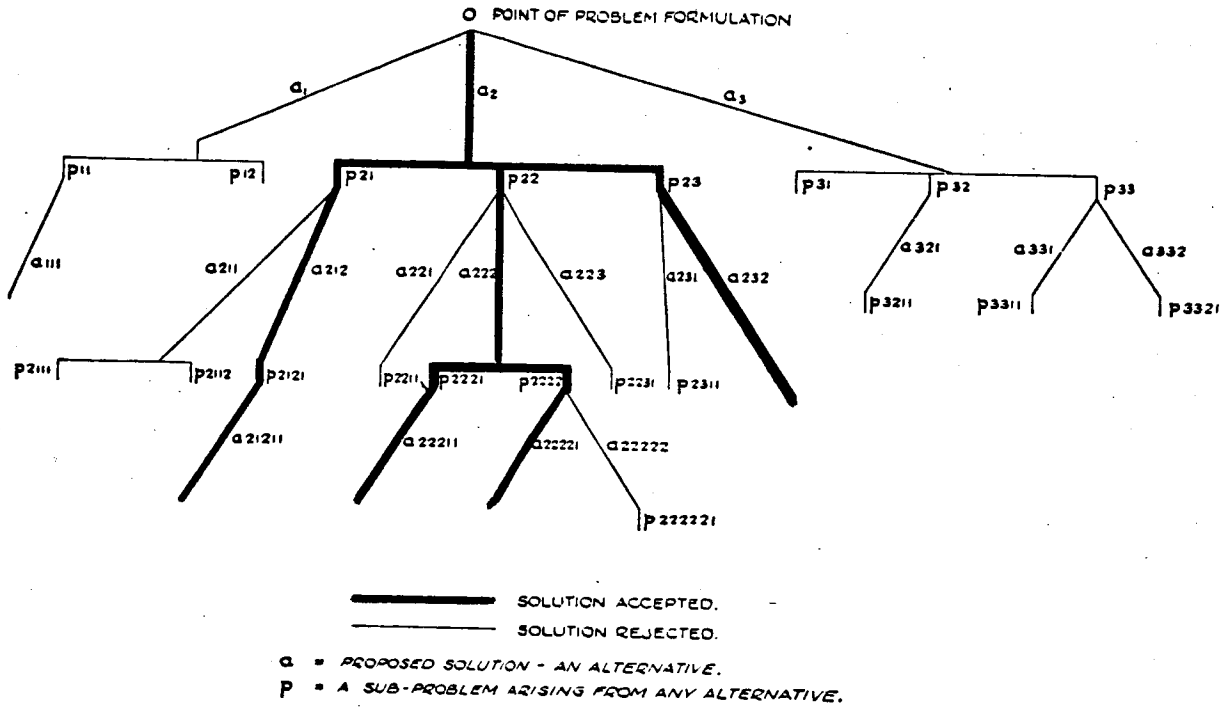

Fig. 9—The design process.

FIG. 1

THE DESIGN PROCESS — DAVID L. MARPLES, "THE DECISIONS OF ENGINEERING DESIGN", IRE TRANS. on ENGINEERING MANAGEMENT, Vol. EM-8 (June, 1961), p. 63.

in terms of specific design projects. At the same time, they more or less make reference to design as a behavioral process. We shall discuss both studies in detail since they provide not only the point of departure but also the point of reference for this study's contributions.

Marples postulates that it is possible to describe the process of engineering design in terms of a "decision tree" which is similar in structure to the "trees" of game theory, i.e., a game in "extensive" form.[7] While the starting point of any tree would be the point of problem formulation, the end point, i.e., a solution, would be the sum of the solutions to the set of subproblems attendant to any proposed solution to the original problem (see Fig. 1). On the basis of this formulation, the design process is equivalent to a decision process, and a decision process is itself equivalent to a strategy for selecting a particular proposal out of the entire set of proposed solutions. Therefore, if we could specify a designer's decision rules for the construction of a tree and for the selection of a solution, then we would be able to specify the general process by which an individual designer creates a particular design.

Marples, in effect, is asking for the design strategies that an engineer uses. Based upon the analysis of a few specific design projects, Marples was able to observe some of the following strategies and to make some of the following observations about design:

> Irrespective of the level [of the problem in the decision tree] each proposal for the solution of a given problem eventually falls into one of three classes, the first two of which are equivalent to rejection and the last to acceptance.
> 1) Judged not feasible . . .
> 2) Judged feasible but inferior.
> 3) Judged feasible and the best.

---

[7] Cf. R. D. Luce and H. Raiffa, Games and Decisions, p. 48.

> The designer, then, has two main functions. First, he must conduct a search for possible solutions. Second, he must collect evidence about each one with a view to classifying it as quickly as possible. To be judged 'not feasible' a solution must have a subproblem which is taken to be insoluble. In a sense, of course, all problems are soluble--given enough time. But time is scarce and in many instances the demand for development time is treated as an insoluble subproblem . . .
>
> If all the subproblems are judged soluble, but solutions have yet to be found, it is impossible to be certain that any one of the proposals is the best, and each must be pursued through the next of subproblems until reasonable certainty is attained that the best can be distinguished . . .
>
> If all the proposals are judged not feasible, a search for further alternatives will be instituted. If this is unsuccessful, the problem will be insoluble, and the corresponding solution to the problem one higher up in the tree will thereby become not feasible. An alternative to rejecting the solution is lowering the standard of satisfactory solution . . .
>
> Two strategies in the examination of proposals can be employed. Proposals can be examined serially, one after the other, until a solution is found which is feasible, or they can be examined in parallel until the best can be distinguished.[8]

To elaborate, the decision to proceed serially or to proceed in parallel is dependent upon such factors as the following: (1) whether the advantages of any one particular proposal are distinct and decisive; (2) the available manpower, i.e., whether there is time for examining more than one proposal; and (3) the difficulty of getting a solution. Since "the nature of a problem can only be found by examining it through proposed solutions and it seems likely that its examination through one, and only one, gives a very biased view," according to Marples, one <u>ought</u> to consider "at least two radically different solutions . . . in order to get, through comparisons of subproblems, a clear picture of the 'real nature' of the problem."[9] But on the other hand, one must also strike a balance

---

[8]Marples, <u>op</u>. <u>cit</u>., pp. 63-64.

[9]Marples, <u>op</u>. <u>cit</u>., p. 64.

between the efficiency of proceeding directly to a solution, even if it is not the best, and the certainty of knowing how good any proposal is by evaluating it in terms of another.

To continue, if as Marples says the designer has two main functions, (1) searching for solutions and (2) evaluating their suitability, then it should not be surprising that "most of a designer's time is spent in examining the effects of . . . proposed solutions."[10] This requires that the designer be able to visualize the future life of a proposal, and this in turn requires the ability to predict, either through calculation or test, the subproblems of a proposed design. Unfortunately, the procedure may not be as straightforward as it appears and may indeed be downright vicious, i.e., a vicious circle. The circle is this: we only test and calculate for those subproblems which we can predict or foresee, but the ability to predict is dependent upon what we are able to test or calculate:

> Most calculations are made in order to simulate the future, but, of course, can only be applied to problems whose nature is perceived. For example, a structure may be stressed to carry the expected loads, but if it is not perceived that the conditions of the load will lead to fatigue, the wrong calculation [or no calculation] may be made. There is no way of being sure that all the subproblems of a given design have been perceived and the necessary calculations and tests made. The ability to perceive subproblems is one of the major contributions of experience and has enormous value in saving time and money.[11]

The foregoing suggests to Marples that a design is marked by stages, by "critical decisions" which determine which solutions and subproblems are to be attacked next. In a sense, the critical decisions determine which problems will be identified as problems and hence attacked; they also constitute "stop rules," i.e., when a problem will be considered as "solved":

---

[10]Marples, op. cit., p. 68.

[11]Marples, loc. cit.

> A number of features characterise the critical decision. First, it is taken by someone much higher in the executive hierarchy than the designer who explores the consequences of proposed solutions. Nominally, such decisions are taken by the Chief Engineer, but in general it appears that the level at which it is taken is affected by the level of abstraction of the decision [i.e., the level in the decision tree] . . .
>
> Second, the decision is treated as if it were irrevocable. Major oversights apart, every other designer on the project will subsequently assume that the decision will not be revised, and will be able to work accordingly . . .
>
> Third, the activities of the team undergo a marked change at the time of the decision. From drawing up comparisons of proposals for the solution of one problem, they turn to the examination of proposals for the particular set of subproblems which follows from the choice made.[12]

The critical decisions are made by evaluating the proposals which have been considered against a set of criteria. If the criteria are themselves not clearly defined, then one of the subproblems the designer faces is the search for relevant criteria. In other words, the criteria for making critical decisions can become part of the problem, about which, paradoxically enough, a critical decision must be made. In any case, criteria must be formulated not only for solving the problem but also for developing criteria:

> In practice the designer sets a level of acceptability in respect of each value [e.g., cost, space requirements, safety, accessibility], and if this level is not reached by a given proposal its achievement becomes a subproblem of the proposal. Standards of acceptability are set by the customs of the industry and the firm and can eventually be traced to the values which the higher management of the firm choose to emphasize. Thus, the relative importance of quality, safety, reliability, and so forth may be part of the marketing policy of the firm and any changes in the importance of these values with reference to a particular project should be specified for the designer by higher management. It may happen that no guidance is given. The designer is then obliged to set his own standards, possibly to the detriment of the over-all interests of the concern [or client].[13]

---

[12] Marples, loc. cit.

[13] Marples, op. cit., p. 69.

In general, the values and considerations that lead to the establishment of design criteria can be grouped under three headings: 1) engineering values which reflect the properties of materials and the "laws" of physical science (nature); 2) administrative values which reflect the importance of time, cost, space, and manpower; and 3) abstract values which pertain to safety and health and perhaps even to social well-being. From the standpoint of a piece of "concrete hardware," which is the end product of all engineering design, engineering values would be more operational than administrative values, and administrative values, in turn, would be more operational than abstract values. According to Marples, the operational nature of these values follows from their "inflexibility." Administrative and abstract values are not values which must be satisfied according to some law of nature; on the other hand, the properties of materials and the "laws" of physical science are values that must be satisfied. Therefore, engineering values are less flexible than administrative or abstract values.

In summary, if the critical decisions determine the design tree, then it is some set of criteria which determines the critical decisions. The criteria, in turn, are "derived" from some set (or weighting) of basic engineering, administrative and abstract values.

Let us now very briefly evaluate what Marples has had to say. First of all, we feel the need for a great deal of clarification. For example, we question the purpose of the following statement which is typical of this study: "The subproblems of one solution differ from those of the next and, in general, it would appear that the designer, at each stage, chooses the solution having, in his estimation, the easier set of subproblems."[14] If the statement is meant to be a "rich" tautology, then

---

[14]Marples, op. cit., p. 60.

it falls short, for one can always contend that in solving a problem--in fact, any problem--he is choosing the easier set of subproblems without telling us very much about the problem or the process. The point is that without a definition of "easier," "subproblem," or "solution," amongst other things, such statements are vacuously empty. Of course, when Marples implies that we can define "easier" in terms of a decision-tree and certain strategies, he is to be commended. But this raises a second and more crucial question. Who is it that defines the decision-tree?--the engineer? his boss? his client? the researcher studying the process? or perhaps, even some combination of all the above parties? Basically, who is it that gives the "givens" or knows the "knowns" underlying the description of a design project in terms of a decision tree? Hopefully, an answer to this question constitutes one of the contributions that this particular study has to make. Briefly, our answer is that how and by whom a tree is defined reflects the purposes of a particular study and investigator. We might expect, for example, that what a manager would call a "decision" might be quite different from what a designer himself would call a decision. Most likely a manager would have a different purpose in studying a design project than, say, a designer interested in gaining self-knowledge for self-improvement. As a result of their different purposes, as well as their different training, background, and social position, etc., they would be expected to observe and hence to gather different "facts" about the design process. Thus, in a sense to be explained later, a "realistic" description of a design tree depends upon an "enlargement" and "supplementation" of individual perspectives. We must somehow identify and bring together all the different facets for viewing design in order to guarantee comprehensiveness.

The same sorts of questions can be addressed to the notions of what constitutes a "feasible" solution and a "best" solution. In our study, it turns out that the various parties to a design have varying notions of "feasibility," and "best"; in a sense, each player of the design game has a different design tree.

In general, we may ask, what are the general kinds of variables that influence the development of any particular tree? How are criteria developed, not only for conceptualizing what the problem is, but also for conceptualizing what constitutes a solution? How do the different players of the design game (an engineer, a client, and an organization) influence the whole design process? As an example of a more specific kind of question, is it possible for the engineer, client, and organization to bargain amongst themselves over what constitutes an "irrevocable" decision or an "inflexible" design criterion? And since one question leads to another, we can also ask, what kinds of bargaining situations are there? Does the criterion "inflexible" for one situation become more or less "flexible" for another? These are some of the kinds of questions we will consider later. We consider it to be the value of Marples' study that he provided us with the necessary perspective for raising such questions; he need not apologize for not having answered them. But then the answers to such questions will also show, as Marples does not, how extensively engineering design must be described in behavioral terms, and not just in technical terms. Because design is so extensively permeated by behavioral factors, it is not unequivocally clear that while physical laws must be fundamentally satisfied, administrative and abstract values may be

fundamentally compromised.[15]

We will have more to say about how we will use Marples' study after we have reviewed Ramström and Rhenman's paper.

Where Marples only implicitly characterizes engineering design as a problem-solving process, Ramström and Rhenman make the characterization explicit:

> Engineering work is, to a large extent, complex problem-solving as opposed to routinized and programmed decision-making (March and Simon[16]). As such, it shows basic similarities to other fields of problem-solving which have been made the subject of theoretical and empirical studies, such as the solving of mathematical and social problems (Newell and Simon[17]) and the treatment of business problems (Clarkson[18]). Engineering can thus be regarded as an example of heuristic problem-solving (Newell and Simon[17]); that is to say, problems are often solved by means of rules of thumb. The following illustrates the heuristics commonly encountered in engineering work:
>
> 1) the technique of dividing the problem into subproblems through the use of a means-end analysis;
> 2) the use of indirect evaluation criteria, which work as operational subgoals;
> 3) the use of planning techniques, i.e., defining in broad terms a certain course of action without specifying in detail the program required for its achievement.

---

[15]Basically, it appears that there is a confusion over the different senses of the word "must." If one has decided to use a particular material (or if one is so restricted), then one must satisfy that material's properties. Thus, the first sense of the word is factual. On the other hand, the second sense of "must" seems to be normative. Why must we decide to use this and only this particular material? Are there not other materials that we could use? One must be careful to distinguish between these two different senses of the word "must" in order to show the sense in which the different meanings actually are interdependent. That is, the factual does depend upon the normative but in a complicated way, and one that demands analysis. Cf. C. West Churchman, Prediction and Optimal Decision: Philosophical Issues of a Science of Values.

[16]J. G. March and H. A. Simon, Organizations.

[17]A. Newell and H. A. Simon, "Heuristic Problem-Solving," Operations Research (January, 1958).

[18]G. Clarkson, Portfolio Selection: A Simulation of Trust Investment.

> 4) the replacement of optimal goals by goals with a lower level of operation, i.e., a solution is accepted when it is considered 'good enough' or 'satisfactory,' even if it does not represent an optimal result.[19]

Marples's idea of a "best feasible" solution (i.e., the notion that a designer searches for an optimal solution) is replaced by the idea of a "satisfactory" solution. In the language of March and Simon,[20] the preceding list of heuristics is characteristic of a system governed by a "bounded rationality." This means that "only a limited number of possible alternatives and factors in the environment which influence these alternatives are taken into account in the course of the problem-solving process."[21] The consequence is that "the [decision] mechanisms directing the decision-maker's selection and treatment of these different items are thus of great importance."[22] Ramström and Rhenman are, we might say, merely illustrating the important influence of problem-solving variables on Marples's critical design decisions. Consider what they have to say about the implications of Bruner, Goodnow, and Austin's[23] work for design:

> Time plays an important role in the problem-solving process; the chronological order in which problems are analyzed and the order in which impulses come from the environment have an important influence on the results of the problem-solving activity. Furthermore, the decision-maker can, at any given point, take into account only a limited number of aspects of the design problem.[24]

---

[19] Ramström and Rhenman, op. cit., p. 79.

[20] March and Simon, loc. cit.

[21] Ramström and Rhenman, loc. cit.

[22] Ibid.

[23] J. S. Bruner, J. J. Goodnow, and G. A. Austin, A Study of Thinking.

[24] Ramström and Rhenman, loc. cit.

Besides describing engineering design as a technical, problem-solving activity, Ramström and Rhenman note that design is also a group activity carried out within the confines of an organization, at least for the projects they studied. In many cases, if not most, the client is also a member of that very same organization. As such, the organization determines the objectives and rules of procedure of the engineering and client groups. For example, an organization specifies the legitimate channels of communication between the engineering department and those departments the engineering department is intended to serve; the organization, in essence, defines the engineer's place within the engineering group and the engineering group's place within the organization. In sum, the formal and informal aspects of organizations are expected to have an influence on design.

Ramström and Rhenman are thus explicitly describing the development of an engineering design project in behavioral terms; it is a problem-solving process that is governed by both social (i.e., sociological <u>and</u> psychological) and technical factors. Perhaps it would better represent their position to say that while most aspects of engineering design are definitely technical, there are also definite but <u>separate</u> behavioral aspects. Let us enquire further into how they differentiate between those aspects which are definitely technical and those which are definitely behavioral. The following statement not only represents an outline of the ensuing analysis, it is also a summary of the analysis up to this point:

> The ultimate control of the engineering process is with the customer. The customer presents management with a specification. This specification influences the aspects that management seeks to control. The engineering unit then proceeds to solve the design problems involved (controlling itself in a sense) before finally presenting the production side of the firm with a manufacturing specification. The engineer is, however, controlled

> not only by management directives, but also by the norms of his profession, the requirements of official control bodies, and other similar considerations.[25]

The accomplishment of the above, i.e., the translation from the customer's specifications to hardware by means of engineering, is described in terms of various "dimensions." First, there are the customer's needs as expressed by his specifications; those dimensions or variables which the customer uses in describing the project are referred to as the need dimensions. Secondly, there are the dimensions that an engineer uses, the product dimensions which describe the design object in terms a workshop can understand, and hence, build; a blueprint would be a common example of a project described in product dimensions. Ramström and Rhenman note that although both the customer and engineer refer to the same object, their descriptions are nonetheless different because their purposes of description are different: the customer describes the object in terms of need or use; the engineer, in terms of construction. Thirdly, there is another set of dimensions which pertain to engineering; these are the engineering dimensions which express the technical factors an engineer must consider in translating a customer's needs into a working blueprint for a shop. Finally, there are the control dimensions which management uses to manage or control its engineering department; some specific examples of control dimensions would consist of the kinds of drawing procedures a particular organization would recognize and the kinds of support facilities it would supply its engineers with.

Let us note that what Ramström and Rhenman call produce and engineering dimensions Marples calls engineering values; and similarly, what

---

[25]Ramström and Rhenman, op. cit., p. 80.

the one calls control dimensions, the other calls administrative values. The translation is not one-to-one though, for where Ramström and Rhenman have a category for the customer, Marples has a category for abstract values, and the two are not necessarily the same. Abstract values can refer no less to the abstract demands of management than they can to those of the client, or even, for that matter, to those of the engineer. What Ramström and Rhenman have done is to make explicit the introduction of another player to the design game, the customer, and what Marples has done is to introduce another dimension for characterizing the parties' values, an abstract-concrete scale.

Now, which dimensions can we associate with the behavioral aspects of design and which with the technical? It appears that the product and engineering dimensions most clearly and unambiguously convey the purely technical aspects, while the need and control dimensions convey the behavioral aspects of design. To this point we shall return later, for a question we have is whether the differentiation is indeed so clear and unambiguous. That Ramström and Rhenman think so, we can infer from an observation they make, that "the transformation from need dimensions often has the character of a changeover from nonoperational to operational concepts."[26] We should note that the attempt to differentiate between the concrete objects of the world and the abstract ideas and values of the mind on the basis of operationalism has a long history behind it;[27] it is not unique to the particular studies we happen to be reviewing.

---

[26] Ramström and Rhenman, op. cit., p. 86.

[27] Cf. C. West Churchman, Theory of Experimental Inference and Prediction and Optimal Decision: Philosophical Issues of a Science of Values; E. A. Singer, Experience and Reflection.

> [Ramström and Rhenman] summarize . . . as follows. The process of problem-solving in engineering work can be described formally as a transformation of the problem defined in the space formed by the need dimensions to the solution given in the space formed by the product dimensions. That is to say, problem-solving involves:
> 1) choosing relevant dimensions
> 2) assigning a value to these dimensions.
>
> An essential characteristic of the problem-solving process is thus the transformation of need to product dimensions, a transformation which normally takes place via the utilization of control and engineering dimensions.[28]

What general comments can we make about this paper? First of all, is the ultimate control of the design process really with the customer? By the authors' own admission, they observed that it is the engineer who defines what the customer's real problem is, at least in the sense of making the customer's needs "operational." The customer, it seems, retained control only in the sense of forcing the engineer to keep coming back in order to get additional information. This additional information allowed the engineer to better define the customer's problem--the implication being that the customer exercised control only because he was ignorant of his needs. Presumably the process would have been much more efficient if the customer really knew what he wanted. That the customer can terminate the project we are not denying; what we are merely pointing out is that the engineer has a great deal of control over the customer's exercise of "ultimate control." As we will show later, the control over a project is really shared between the customer, engineer, and organization, and that, depending upon the circumstances, the engineer can make the customer exercise his "ultimate control" differently.

Secondly, the more general kinds of questions we raised earlier about Marples's paper are equally applicable here. Who is it that defines what the "relevant" dimensions of a project are? Does the customer solely

---

[28] Ramström and Rhenman, op. cit., p. 81.

define his need dimensions; the engineer, solely the product and engineering dimensions; and does management solely define the control dimensions? What is the relationship of the researcher? Does he help all the parties by defining what their "true" dimensions really are? As the history of science repeatedly shows, the "true" nature of a problem depends upon who it is that defines the "problem," let alone the "truth."[29]

Finally, are the only behavioral components of the process to be identified with the customer's needs and the administration's control dimensions or can the selection and formulation of product and engineering dimensions be equally described in behavioral terms? After all, according to the hypothesis, engineering design _is_ supposed to be a problem-solving activity through and through. Now if this is the case, then might we not expect the formulation of product and engineering dimensions to be governed by problem-solving variables such as the search for "satisfactory" solutions rather than the search for the optimal solution? And might we not expect that the search for any particular satisfactory solution will be governed by the amount of problem-solving time available? Surely the amount of available time must affect how the engineer can formulate the engineering and product dimensions. Furthermore, since who it is that defines a problem affects what the problem _is_, surely who the engineer happens to be (i.e., his behavioral characteristics) must affect what engineering and product dimensions are selected for consideration. We can summarize this part of the discussion by asking, _What technical factors govern the satisfaction of customer needs and what behavioral factors govern the identification of engineering or technical variables?_ How is

---

[29] _Cf._ Churchman and Singer, _loc. cit._; Thomas S. Kuhn, _The Structure of Scientific Revolutions._

a "transformation" of "needs" into "products" defined, how is it actually accomplished, and who is it that is to define the criteria for describing how the parties to a design actually proceed? How can the investigator studying the process guarantee that he has captured the essential "transformation" factors, namely that he has studied the correct variables influencing a basic design situation worth studying? As Ramström and Rhenman themselves admit, our more exacting questions of their paper are not mere academic exercises but have practical significance:

> In practice, the solution of an engineering problem is not simply a question of transformation from need to product dimensions. The restrictions on engineering work imposed by the need or the engineering dimensions are seldom so exacting that only one solution is possible in product terms. Some discretion is usually left to the engineer, since the task, as defined in need dimensions, can often be performed by several alternative products.[30]

If an engineer has discretion, then he has the freedom to exercise judgment over a design. Design, in other words, is not merely a game governed solely by technical equations. It is the engineer and not the equations who does the designing. Either the engineer learns to manipulate his equations in order to satisfy conscious (i.e., explicit) design objectives or he is manipulated unconsciously by equations he does not understand for purposes he does not intend to be accomplished. Thus, it is not that engineering is not a technical activity, but rather that it is a technical activity directed by a behavioral creature. All our questions reduce to the following: What is engineering judgment, how is it exercised, and how can it be studied?

It is said at this point that Marples and particularly Ramström and Rhenman were taken seriously, and as we are suggesting, they were taken

---

[30]Ramström and Rhenman, op. cit., p. 82.

much more seriously than they took themselves. If engineering design is a problem-solving activity that can be characterized in terms of decision processes, and if, as Ramström and Rhenman contend, heuristic programming has been successfully used in other areas of decision-making, then why can't we program engineering design? If a computer is particularly well suited for handling decision processes in the form of tree structures, then why can't we use heuristic programming to show how a design project is developed, where the critical decisions are, and, in short, how the input (the customer's needs) is transformed into a product by an engineer? As the work of Newell and Simon, and Clarkson[31] shows, there is no reason why we can not in principle program engineering design, except perhaps for the point that Ramström and Rhenman themselves raise, that "engineering work is, to a large extent, complex problem-solving as opposed to routinized and programmed decision-making [underscoring mine]."[32] But as Newell and Simon, and Clarkson show, even non-routine tasks are programmable. Perhaps before we decide on principle what can or can not be programmed, we would do well empirically to see what can actually be accomplished.

This study is a report on the results of such a programming effort. This study represents an attempt to describe the general factors, both technical and behavioral, associated with the development of a particular engineering project. Such behavioral factors as the organizational environment, the social background of the client, and that of the

---

[31] Cf. Newell and Simon, loc. cit.; Clarkson, loc. cit.; see also E. A. Feigenbaum and J. Feldman, Computers and Thought and A. C. Hoggatt and F. E. Balderston, eds., Symposium on Simulation Models: Methodology and Applications to the Behavioral Sciences for further applications of heuristic programming and computer simulation.

[32] Ramström and Rhenman, op. cit., p. 79.

engineer were considered in order to show what effect they have upon the decisions of engineering design. Not all of these factors have been programmed, at least not to the same extent. Since our programming effort originally began with the intent of seeing to what extent engineering design could be described solely as a technical problem-solving activity, the behavioral aspects of design were not explicitly programmed per se because they were not explicitly studied from the start. Since their effect only became truly evident in the course of the study, only their implicit effect has been indicated. It should not be inferred though that design as a behavioral activity is not programmable. In fact, we consider it one of this study's major contributions that we show to what extent engineering design is a behavioral activity, and as a behavioral activity, it is programmable. We demonstrate this by showing the extent to which the behavior of the organization, client, and engineer permeate the entire technical process. <u>If we cannot program behavior, then we cannot truly program technique which is a result of that behavior</u>. Note that we are not implying that we have programmed all of the various aspects of an engineering design project. We are merely saying that much which at a first glance seems unprogrammable can be programmed. We will indicate in the following chapters those areas out of the entire process which the program actually represents.

We should also make it clear that we are describing the development of a general method for studying the design process as much as we are actually describing the development of a particular project. We contend that not only is our method general but that it is also a more concrete method for describing what "it" is that actually takes place during design.

Perhaps we can best support our contention by contrasting our position with that of Marples and of Ramström and Rhenman. They essentially studied the decisions of design by the method of description; i.e., they studied what was occurring by having the persons involved make notes of what was being decided upon and the basis for their decisions. We contend that by programming the basis for such decisions, we have advanced beyond a mere qualitative description to an explicit and more systematic modeling of the process. And as an explicit modeling of the process (more properly speaking, a "simulation"), we contend that we are in a better position to understand what "it" is than an engineer can be said to do. Since programming forces one to become explicit about what "it" is that he is observing, describing, and programming, we have something more concrete and lasting than a mere qualitative description of the design.

A final introductory word is necessary before we describe our project and the simulation program which represents it. We have studied the design behavior of a single engineer only. The job of computer programming the decision rules or design heuristics of a single engineer is time-consuming and tedious enough without programming the other parties to the project, let alone programming the behavior of other engineers for comparison. Our contention, therefore, is not that our program represents the whole of the design process as it is practiced everywhere. Instead we contend that by programming the general factors that influence a single designer we have a general representation of the individual's design behavior, and as a general representation, the program can be used for comparison with programs written for other individuals to get at the <u>universal</u> design factors that designers universally consider. Perhaps we need not defend our use of the word "general" any more than Marples who only studied a few engineering projects and could nevertheless entitle his paper "<u>The</u>

Decisions of Engineering Design [underscoring mine]." Certainly the fact that Ramström and Rhenman only studied a few engineering projects didn't prevent them from implying that engineering design could be generally described as a problem-solving process. But more to the point, the fact that most descriptions of engineering design are not even based on a single concrete study of design does not prevent most authors from claiming that they have a general method for not only describing design but also for improving it.

In a later chapter specifically devoted to the methodology of simulation, we will consider the foregoing issues in more detail. We will also consider the thorny issue, which we have repeatedly raised, namely, how the researcher can ensure himself that he has accurately "captured" the situation so that he can be in a position to make accurate recommendations for improving the situation. Essentially, we propose that we "sweep in" the research subject as a critic of the researcher; not only does the researcher study the engineer, but the engineer, in some sense, also studies the researcher and what the researcher thinks he has perceived and programmed. We ask whether the engineer thinks that the simulation is sufficiently accurate to accept it as a substitute for his own behavior; in short, can the simulation program serve as a design aid by becoming the designer?

In summary, we believe that our contribution to the understanding of engineering design is fourfold: 1) we are suggesting a general method for modeling (simulating) engineering design; 2) we are proposing our own methodological interpretation of what it means to "simulate" a system; 3) we are suggesting that engineering design is not just a technical and a behavioral process but that it is more properly speaking a behavioral-

technical[33] process which cannot be studied as though it were one or the other; and 4) we have used a specific study in order to develop our general ideas.

---

[33] *Cf*. E. L. Trist, G. W. Higgin, H. Murray, and A. B. Pollock, *Organizational Choice*.

CHAPTER II

THE TASK: PART I

In his book, The Design of Social Research, Russell Ackoff specifies the form which a scientific definition of property should take:

> X has the property p if, when X is in an environment N and is under stimulus S, X exhibits (or has a certain probability of exhibiting) a property q or behavior b.
>
> This means that, in providing a scientific [i.e., objective] definition of a property, we would specify the following:
>
> X: The class of things (subjects) to which the property can be attributed.
>
> N: The kind of environment in which X should be observed.
>
> S: The kind of stimulus to which X should be subjected in the specified environment N.
>
> R: Response of the subject (X) to the stimulus (S) in the specified environment (N).[1]

In our study, the object of interest is a mechanical design engineer. The environment is a large university research lab,[2] and the stimulus is a design specification. The responses or the "properties" of the engineer that we wish to measure are the rules that he uses in order to transform a design specification into a design object. The responses, in other words, represent the engineer's design behavior. Finally, the computer program that we've written represents the language in terms of which the

---

[1]Russell L. Ackoff, The Design of Social Research, p. 60.

[2]Cf. G. M. Swatez, "Social Organization of a University Laboratory," Internal Working Paper #44 (April, 1966), Space Sciences Laboratory, University of California, Berkeley.

various components of our definition of engineering design will be expressed. We probably can not overemphasize this latter point: the program is the language in terms of which our model of design is expressed; it is not the whole model itself. The program allows us to express more precisely some of our model's workings.

Before we can discuss the program, it is necessary to have a general qualitative understanding of the design task, if only for the reason that without some kind of qualitative description, the quantitative description which the program represents would be unintelligible. A general description is also necessary for other reasons. However precise the program may be in representing some task variables, it is imprecise in representing others. It is not as though we have been imprecise by conscious design or through careless mistakes. It is just that every study is limited in (1) being able to identify all of the conceivably pertinent task variables and (2) even if we could identify all the variables to begin with, we would still be limited in being able to incorporate them all into our model. Such practical considerations as the tractability, simplicity, and economy of description and solution always limit the number and kinds of variables an investigator models.[3] In our case, we have not been able to program every pertinent design variable; one reason is that the task as a whole

---

[3]We face these considerations in practice because of the difficult issues we are confronted with in theory. Consider that if a choice is to be made between a model which is "simple" and one which is "true," then is there any doubt over which we should choose? We should choose the truth! But the answer is deceiving, since we often define as "true" that which is "simple." As Goodman puts it, "simplicity is one test of truth; but what is the test of simplicity?" For example, "is a genuine simplification achieved by deriving mathematics from a few logical concepts at the cost of three big volumes of complicated formulae?" Cf. Nelson Goodman, "The Test of Simplicity," Science, Vol. 128 (October, 1958), p. 1064. In Chapter IV, we consider the practical implications of this conundrum. There the question becomes, how much of a situation must one model in order for the model to be "realistic" and yet "manageable"?

is just too large for one investigator to research, let alone program in detail. Even a single engineer's behavior is much too involved. For example, we did not truly realize when we began our study the degree to which one must program persons other than the engineer himself in order to have a program of the engineer's personal design rules. Apparently, the properties (i.e., responses) of our single engineer are not just the properties of his individual self; as a member of an organization, the engineer's responses are also the properties of his group self.[4] In sum, an overview of the task is necessary before we can explain what the program does as well as does not represent.

As we proceed throughout the body of the report, we will also find it necessary to discuss the task more than once. Our first discussion will be quite general, and, as the situation warrants it, our later discussions will become quite specific.

As already mentioned, this is a report of a case study of the activities of a single mechanical engineer who works in a large university research laboratory. The following description of his activities is not only based upon formal interviews and observations of the engineer but also upon informal interviews and observations as well. In addition, what follows is also based upon interviews and observations of the engineer's immediate boss, his fellow engineers, and finally even of some of his clients, i.e., the physicists for whom the engineer designs.

---

[4] In Churchman's terms, the engineer's individual behavior is not completely separable from that of the whole system. For a general discussion on the separability of systems, see C. W. Churchman, "On Whole Systems," Internal Working Paper #31 (May, 1965), Space Sciences Laboratory, University of California, Berkeley.

This report deals with the design of a pressure vessel for an experiment in basic physics. In general, the purpose of an experiment is to study the reaction of "target" particles to various nuclear stimuli, i.e., in this case, high energy nuclear particles shot from an accelerator. The target particles consist of pure protons and electrons in the form of liquid hydrogen (LH_2) at its normal boiling point. The use of LH_2 imposes containment problems which make safe handling more difficult than "ordinary" fluids. The normal boiling point of LH_2 is 20.4° K or -422° F. Its heat of vaporization is also extremely low (about 9 watt hours per liter) as compared to, say, water. Because of its low boiling point and low heat of vaporization, extreme measures are necessary in order to store LH_2 with minimal loss due to either boiling or vaporization. Normally the LH_2 is stored in a container within another container, the space between containers being evacuated to about 10^{-6} mm Hg in order to eliminate convection losses and to minimize residual gas conduction. Mechanical connections between the two containers are also minimized to reduce heat leaks by solid conduction. When these techniques are effectively used the predominantly remaining heat input to the LH_2 is by radiation. Black body radiation from room temperature to -422° F is about 34 watts per sq. ft. or 4 liters of LH_2 boiled away per hour per sq. ft. of cold surface. (Since LH_2 in laboratory quantities costs about one dollar per liter, if an experiment runs continuously for a month or more, the cost of LH_2 consumed can be important. Generally though, the cost of the LH_2 is not the most important cost of an experiment.) Heat loss due to radiation is significantly and most easily reduced by loosely wrapping several very thin low emissivity shields around the colder LH_2 vessel.

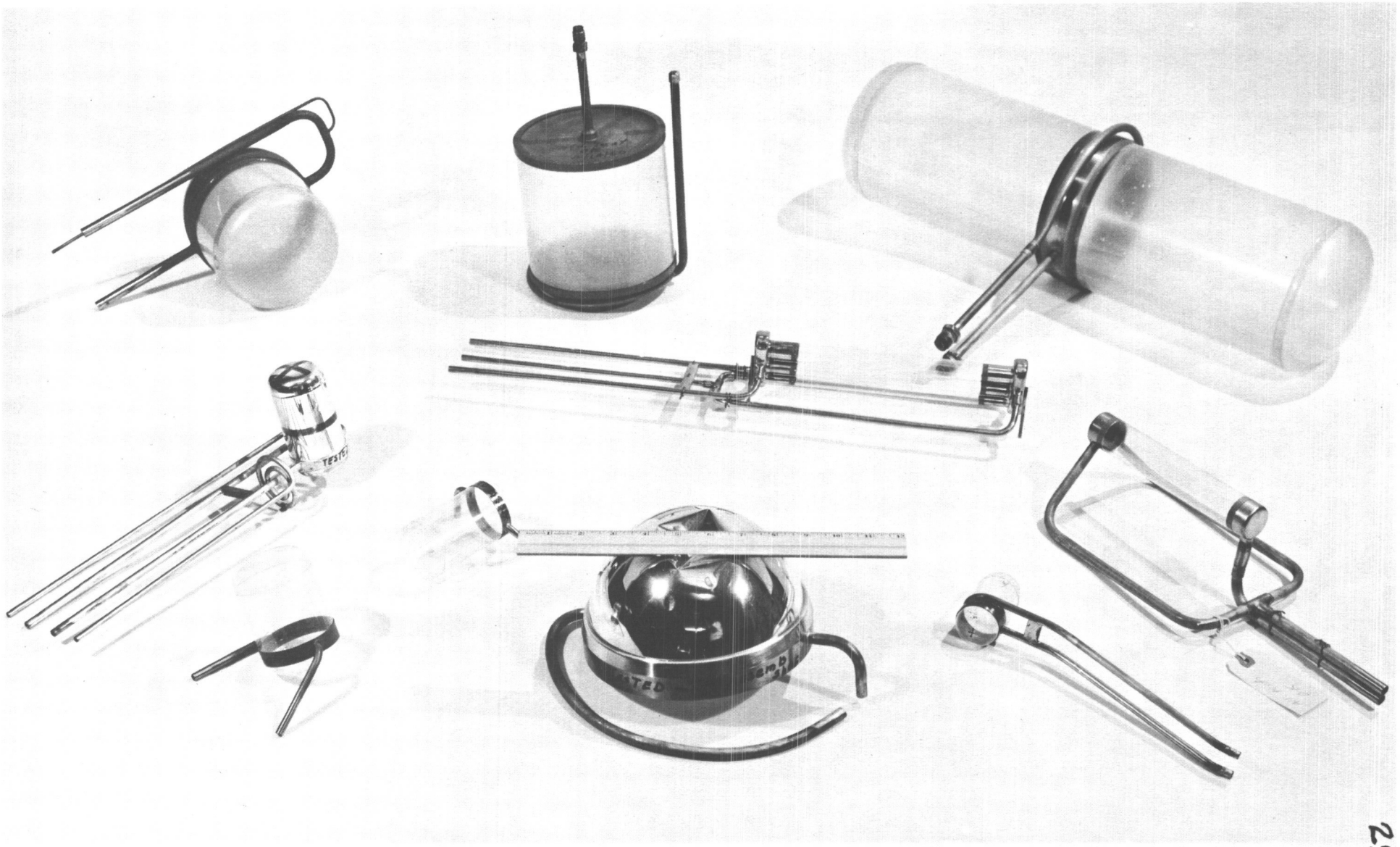

FIG. 2 - VARIETIES OF LH_2 CONTAINERS

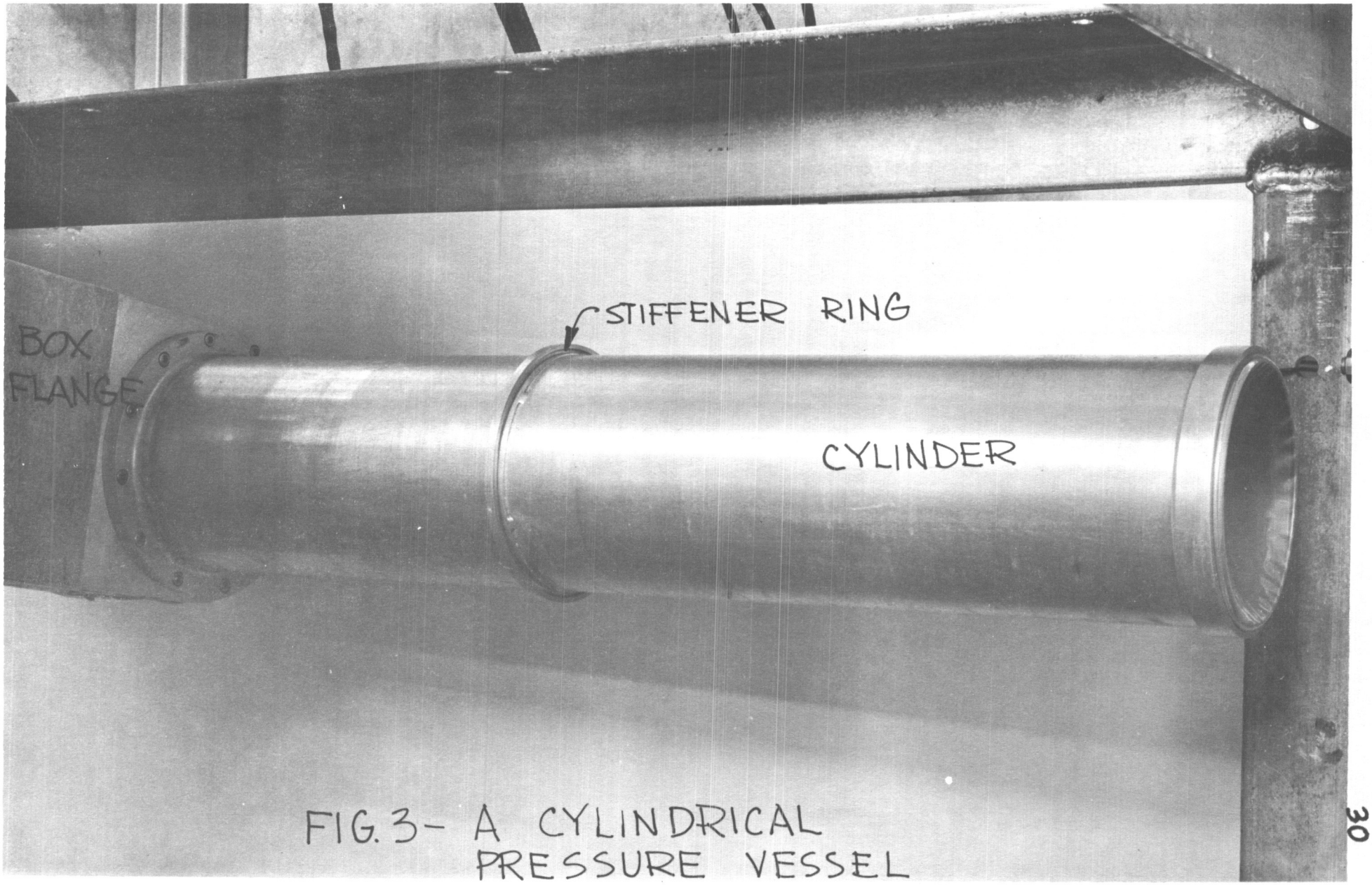

FIG. 3- A CYLINDRICAL PRESSURE VESSEL

Thermal requirements by themselves almost dictate the use of a double-walled evacuated container for the storage of the LH_2. The engineer, in effect, has interpreted the thermal requirements as implying the construction of a dewar flask, i.e., a LH_2 container within an outer container. If only one container were used it would have to be inordinately thick in order to reduce the heat transfer to tolerable levels, and, in general, a thick container would not be desirable because of the greater possibility of nuclear scattering, i.e., the walls of the container could interfere with the production and detectability of the target reactions. This double insulation scheme also reduces heat flux levels low enough to minimize bubbling (gas generation) within the LH_2. This is important because the physicist must know the average density of the target (LH_2) particles. Bubbling makes the calculation of an average density untenable; the LH_2 can bubble more in one area than in another.

Other considerations also affect the design of the outer (the pressure vessel) and inner containers. During operation, the inner LH_2 container is subjected only to low internal pressure and can generally be made negligibly "thin" as compared to the outer vessel. The inner vessel is usually made of a low nuclear cross-section plastic film (see Fig. 2). This kind of film offers little resistance either to the incident nuclear stimuli or to the resultant nuclear reactions which are a response to the stimuli. The same cannot necessarily be said of the outer container, the pressure vessel itself (see Fig. 3).

LH_2 has a wide explosive range when mixed with air. As one possible safeguard against a dangerous accident, the laboratory safety committee requires that the outer vessel be designed to withstand an internal pressure

of 150 psi.[5] An additional requirement on this vessel is that it withstand an external buckling pressure of 30 psi, a load which is roughly two times its normal vacuum load of 14.7 psi. By comparison, the inner LH_2 container is only designed for an internal pressure of 40 psi for normal operation at 14.7 psi. The usual inner container would be destroyed with even the slightest external pressure differential.

As a result, the engineer must design under two conflicting specifications: (1) In order to satisfy the physics requirements, the pressure vessel must be "thin enough" to allow nuclear particles to pass in and out with minimum interference. If the outer vessel is "too thick," the particles' interaction with the LH_2 will be obscured by their interaction with the vessel itself. For the physicist, the vessel constantly threatens to emerge from the background to swamp the foreground. That is, if the vessel is too thick, the physicist ends up studying the vessel's reactions to the nuclear stimuli instead of the LH_2's. (2) At the same time, in order to satisfy the laboratory's safety committee, the vessel must be thick enough to withstand the previously mentioned internal and external forces the vessel might be expected to incur in the course of its operation.

Other design parameters are also in conflict. The outer pressure vessel must be physically large enough to enclose the inner LH_2 container, its insulation, and plumbing without contact (see Fig. 4). (The plumbing consists of the "fill" and "boil-off" lines. The "fill" lines replenish the supply of LH_2; the "boil-off" lines vent away the gaseous H_2 produced during operation, thereby preventing a dangerous pressure build up.) At

---

[5] Cf. "Procedures for the Design and Operation of Hazardous Research Equipment," UCRL - 9711, University of California Radiation Laboratory, Berkeley.

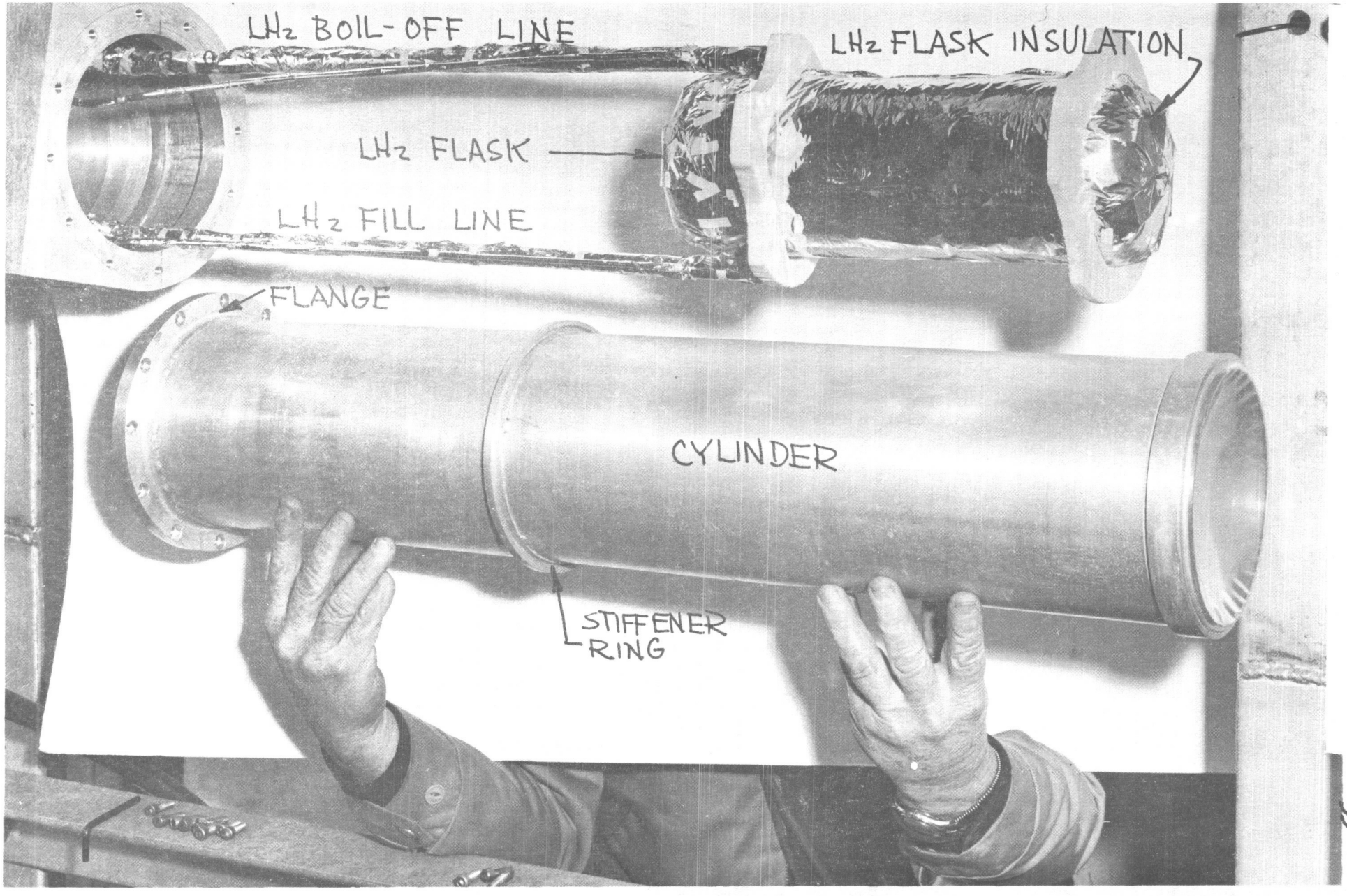
LH2 BOIL-OFF LINE
LH2 FLASK INSULATION
LH2 FLASK
LH2 FILL LINE
FLANGE
CYLINDER
STIFFENER RING

FIG. 4

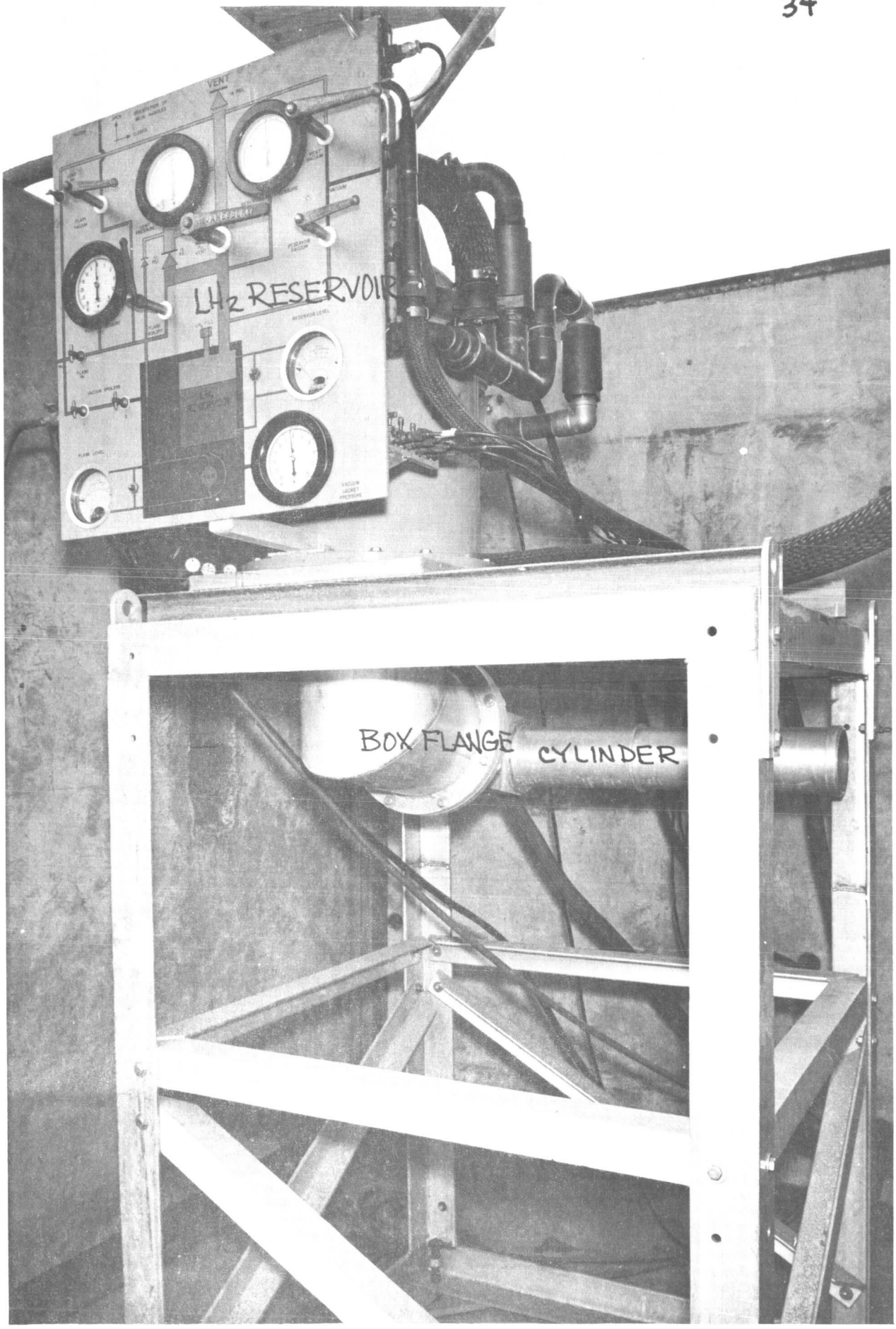

FIG. 5- CYLINDER IN PLACE

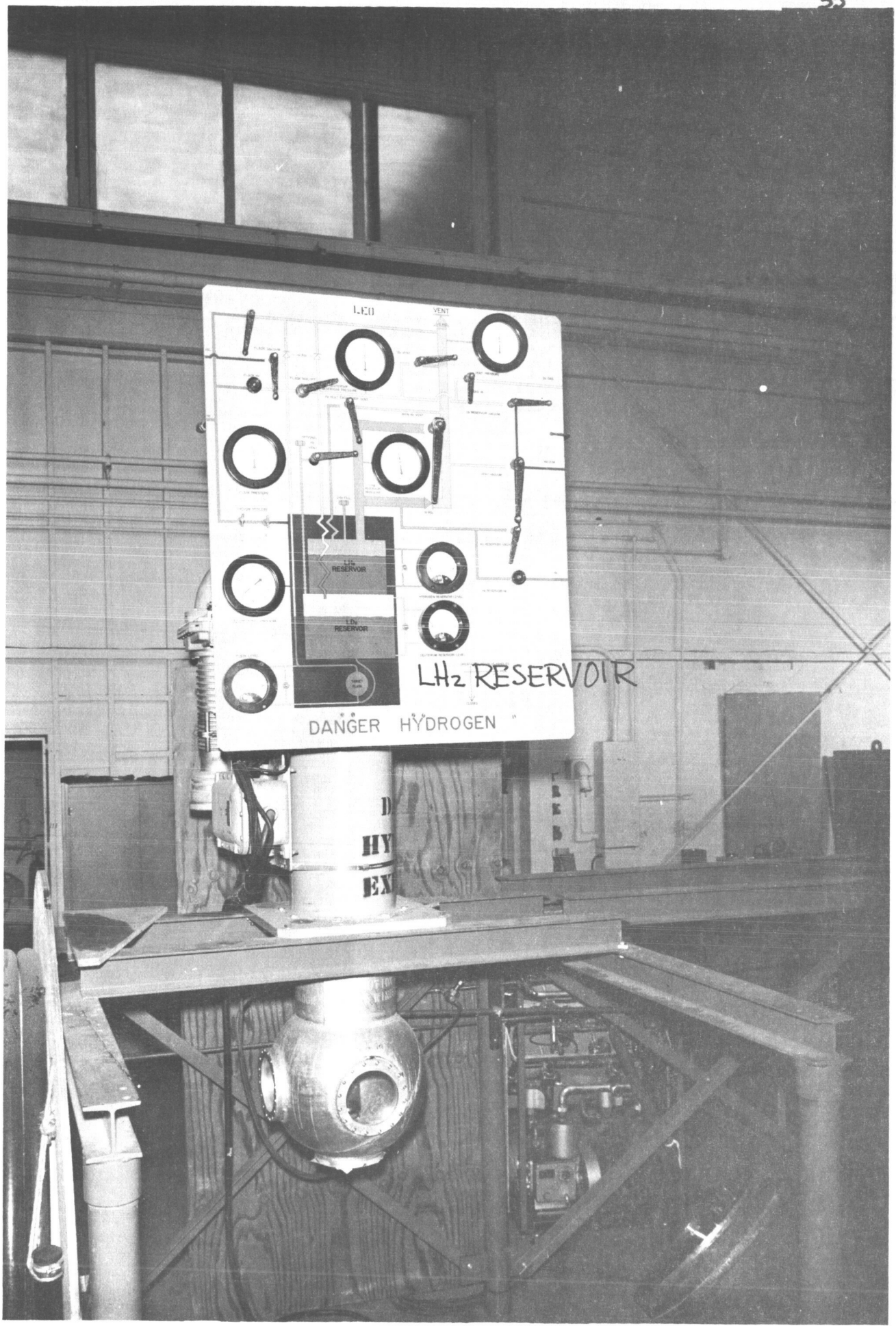

FIG. 6- SPHERE IN PLACE

the same time, the outer pressure vessel must also be small enough to be clear of the other experimental equipment and measuring instruments such as magnets, spark chambers and nuclear counters which usually surround the vessel (see Figs. 5 and 6). Here, as before, the pressure vessel must satisfy the conflicting requirements of each party to the design. For the engineer, the larger the vessel, in general the easier it is to build the system initially as well as to service it later. A larger vessel gives the engineer easier access to the delicate inner LH_2 container for service replacement or repairs. One of the ways of building "larger" vessels depends upon the physicist being able to tolerate openings and heavy massive flanges on the pressure vessel. Unfortunately large openings and flanges on the outer container can only be tolerated in a few regions of the experimental space, and the point is that the tolerable regions may not be conveniently located with respect to the vessel so that the engineer can effectively utilize this space. In any case, it's not that the engineer just doesn't want to build smaller vessels for the physicist. Smaller vessels can always be built the hard way, i.e., without using openings and flanges, by constructing the outer vessel directly over the prior assembled inner container. Rather, it is the case that smaller vessels can also turn out to be impractical and inconvenient for the physicist as well. If the inner container ever has to be replaced or repaired while in service, such service can be costly. The inner container replacement can take anywhere from one to three days for even "accessible" flasks with machine down time going at the rate of about $1,000 a day.

Conflict and compromise seems to be the essence of the process. For every design variable, what appears as beneficial from one point of view appears as detrimental from another. Consider that if from the

engineer's point of view larger flanged vessels tend to be easier to build and to service later, they also tend to be thicker, and in this sense, from the physicist's point of view, they may be even less preferable. But then, to introduce another design variable, the easier it is to build a vessel the less that vessel costs. It may be quite expensive to build any particular small thin pressure vessel, and this is the point, the physicist has to make a trade-off between size, thickness, and construction cost; he has to determine the relative importance of these variables for his specific experiment. In addition, consider another variable like choice of materials. In general, the engineer chooses between 6061 aluminum, 300 series stainless steel,[6] or a low alloyed beryllium. Yield point wise, the beryllium is stronger than either the heat-treated aluminum alloy or the annealed (i.e., non heat-treated) stainless steel. (300 series stainless steel is used because of its non-magnetic properties, and 300 stainless doesn't respond to heat treat; there is no heat-treat strengthening effect.) Beryllium also has a higher modulus of elasticity than either the aluminum or steel has; this is important for meeting the 30 psi external load requirement. And beryllium (Be) also has a lower density and atomic number than the others. All these factors would appear to suggest Be as the better design material for the physics requirements. But like every other variable, this is not the whole story.

Be is extremely brittle and notch sensitive and thus cannot be formed by conventional techniques. Virtually all Be parts, like spheres (see Fig. 5), for example, would have to be initially machined from a much

---

[6]For the properties of 6061 Al and 300 stainless steel, see Alcoa Aluminum Handbook, Aluminum Company of America, 1959, p. 38.

thicker forging and then reduced to whatever final thickness was desired by chemical milling. Since this final thickness can be as low as 0.005" to 0.010", a great deal of reduction can be involved. But the real point is that compared to the Al or steel, Be forging stock is very expensive. Be stock costs roughly $100 to $150 per pound. With suitable facilities, the chips removed, if they are not, for one, contaminated by cutting fluids can have a salvage value of about $15 to $20 per pound. But even when taking salvaged material into account a thin Be vessel can still cost on the order of several thousands of dollars per pound by the time it is reduced to its final dimensions. In comparison, the ratio of the bulk material cost (not the final cost of the reduced vessel) of Be to stainless steel or Al is anywhere from 50 or 100 to 1.

In addition to its high bulk material cost, Be presents technical difficulties as well. Machining a thin, say 0.010", vessel from a much thicker stock billet or forging assumes, in addition to the basic assumption that chemical milling can even accomplish the job, that whatever voids or imperfections exist in the Be stock are small and insignificant. This means that suitable sensitive flaw detection techniques must be used prior to machining, or even better, prior to purchase with the properties guaranteed by the manufacturer. This again adds to the cost of using Be. In contrast, there is little risk or sunk cost involved in forming thin Al vessels by deep drawing if the stock is inspected for flaws prior to drawing. A technique used at the Laboratory allows the forming of Al hemispheres less than 0.001" thick at a rate of about 4 to 6 per hour with essentially zero rejects.

In the design of pressure vessels, or any device for that matter which is subject to high stresses, a more significant property than yield

strength or ultimate strength is the allowable design stress. The allowable design stress of a material can be thought of as that stress level, i.e., that fraction of the yield stress or ultimate stress, at which a particular material in a particular form, e.g., rod, sheet, foil, plate, forging, etc., can be used with little or no chance of failure due to defects in the original material or manufacturing process. If the material is newly developed and little data is available on its properties, the engineer feels that he must use that material with caution, i.e., its allowable design stress must be kept low. For Be this means that although it can have a higher yield or ultimate strength than either the Al or stainless steel under consideration, Be has a higher safety factor attached to its use. All the above factors and others (which we shall discuss later) mitigate somewhat Be's strength advantage over 300 stainless steel and 6061 Al. Again, the physicist has to make a trade-off between the strength of a material and the cost of using that material; or, what amounts to the same thing, the physicist must trade-off the thinness of a vessel against the cost of getting that thinness by using a particular material.

In general, every design variable affects every other variable. The optimization of any one variable usually means the sub-optimization of another. As a result, there exists no design which is truly optimal in every sense. There exists, instead, many design alternatives (in Marples's language, "proposals"), each having its own particular advantage; i.e., some proposals are more advantageous to the engineer; and others, to the physicist. A brief summary of the relationships may further serve to emphasize these points: while large thick vessels tend to be cheap, i.e., construction-wise, they tend to be expensive material-wise (simply because larger vessels just use more material than smaller

vessels). On the other hand, while small thin vessels tend to be cheap material-wise, construction-wise they tend to be more expensive than large thick vessels. As a further illustration of the complexity and confounding of the relationships which are involved, there is also the material dependence we mentioned earlier while large beryllium vessels are thinner than large 6061 aluminum vessels, beryllium vessels are generally much more expensive than aluminum vessels. Hopefully, herein lies an area to which a simulation study of design can make a contribution, namely, making more precise (where mere words alone fail) the complex relationships amongst numerous design variables.[7]

While the foregoing remarks have been mainly directed toward identifying the task's technical variables, at the same time, we could not help identifying certain behavioral variables. Recall that some alternatives are more "advantageous" to one party's "point of view" than to the other's. Recall also that the physicist must make a "trade-off" between such factors as cost, thickness, and size, if he wishes to get the design alternative that best suits his "needs." If the physicist doesn't make the trade-off "explicit," then the engineer will be forced to make it for him in order to build some alternative. Unfortunately, what the engineer may consider most important to optimize may not be what the physicist himself would have optimized. In a sense, we are merely re-emphasizing our previous discussion of Marples and of Ramström and Rhenman. There, we

---

[7]As a further illustration of the clumsiness of words, consider that if by "large" we mean, in addition to a vessel which is large in diameter, one which is "long" in length, then it is not always true that large vessels by virtue of their largeness alone are necessarily thicker (or at least "much" thicker) than smaller vessels. Through the addition of "stiffeners" (i.e., if they are possible), vessels which are large in the sense of length may be made thinner than the design thickness which an unstiffened vessel requires, i.e., a vessel with uniform walls.

pointed out that who it is that defines a problem determines not only what is solved but also how it is solved. In terms of our present discussion, we explore this statement's consequences further by showing that how the engineer and the physicist communicate to one another affects not only the formulation of their design requirements but also what is built.

A project usually begins with an informal meeting between the engineer and physicist. Their first meeting will most likely spell out in quite general terms the necessary support services required of the engineer: an LH_2 container, a pressure vessel, and supporting service equipment. Although it varies from experiment to experiment, probably the most definitely known requirement is the date of the experiment. Since the demand for using the Laboratory's nuclear accelerators ("machines") is intensely competitive, the log of experiments is carefully planned in advance.[8] As a result, the engineer will most likely need to have a working design within a rather rigid deadline ("rigid," that is, as compared to other requirements) which, on the average, is anywhere from three to six months. Of those additional requirements that are explicitly defined (most requirements are defined implicitly), they are either sketched (i.e., communicated) on a blackboard, sketched on a drawing, or verbally dictated to the engineer. In general, if all the physicist's requirements were actually spelled out, the following might be specified: the location, size, and material properties of the LH_2 container; the location, size, or space restrictions on the vessel and its associated support components

---

[8]More experiments, it would appear, are proposed for the Lab's machines than could possibly be accommodated. As a consequence, how machine-time is allocated is in itself an interesting problem and one whose solution reveals many pertinent features of the Laboratory's political and social organization. Cf. Swatez, op. cit., pp. 87-96.

(these requirements are necessary in order to prevent the vessel from interfering with the production and measurement of the resultant nuclear particles); and finally, and perhaps most important of all--the physical and material properties of the vessel itself, i.e., its maximum allowable thickness, its uniformity, its density, and its atomic number. Whether or not all these requirements are explicitly considered depends upon, amongst other things, the engineering experience of a physicist. If a physicist is experienced, either through having done design himself or through having worked with engineers before, he can perhaps recognize the importance of spelling out certain design requirements in order to get the physics he wants.[9] Another factor affecting the formulation of a physicist's design requirements is the degree to which a physicist has conceptualized his experiment. If a physicist's experiment is well-formulated, then the space requirements of the LH_2 container and vessel might be given down to the nearest inch or better. Even the vessel's detailed properties might be precisely defined. For instance, if a physicist wishes to ensure himself that the vessel does not seriously obscure his view of the nuclear reactions of the LH_2, then he may wish to specify the specific physical and material properties of the vessel which his experiment requires.

If an experiment is still tentatively conceived at the time the engineer is called in (and it seems that many experiments are), then almost all of the physicist's requirements will be expressed quite generally. In fact, since most of the time the requirements for most variables are loosely defined (a physicist will say to an engineer, "Make the vessel

---

[9]We point this out because there are a number of graduate students at the Lab who may have occasion to use the services of an engineer. Being less experienced than their doctoral counterparts, they don't always exactly know what it is they need and hence what it is that they need to request of an engineer.

as thin and as small as possible"), one of the engineer's biggest problems is to define what a physicist's problem really is and hence what he really wants. And since almost every experiment is tentative in some respects, the engineer constantly faces this problem. Being a well defined experiment we emphasize is not an all or nothing state of affairs. Some variables are always more tightly defined than others, even up to the point of construction and actual use of the equipment. In sum, while the meetings between the engineer and the physicist are informally conducted, some of their communication is actually formal in the sense that some of the design variables are explicitly defined. But apparently much is also informal in the sense that many variables are left undefined or implicitly defined.

What we have been saying is that a statement of the design requirements can not be completely removed from a description of the design process as a whole.[10] In those informal meetings between the engineer and the physicist, a lot more than the communication and formulation of design requirements takes place. A lot of crucial designing takes place.

Consider that even if it can not always be explicitly defined, one of the most crucial design parameters is the vessel's thickness, or more accurately, its thickness multiplied by its material density. In a sense ρt (ρ = the material's density; t = the vessel's thickness) is a measure of the nuclear barrier that the vessel imposes between the measuring instruments and the LH_2. Now, at that first meeting when the physicist says, "Make the vessel as thin as possible," the engineer has to get some idea

---

[10] In Churchman's terms, we need to understand the whole system before the behavior of a subsystem can be adequately described, let alone truly understood. Cf. Churchman, loc. cit.

of how thin is thin. And, of course, the whole problem is that "thin is not thin" in isolation from other variables. Even if the engineer can always build a low ρt vessel, i.e., if the physicist is willing to spend a lot of development time and money for, say, using Be, a low ρt may still only be bought at the expense (both literally and figuratively) of other design parameters. And it doesn't help to resolve matters if we bring up an earlier point; at this time, the physicist's initial experimental conditions are most likely only loosely formulated. The engineer and the physicist both really know that the experimental conditions can change, and sometimes, change drastically. Yet, the engineer has to give some estimate of the ρt, cost, and size of vessel he can deliver in order to get the whole process going. Unfortunately, the engineer may be rigidly held to his estimate or to the physicist's request. This is when good engineers learn to become good salesmen. The engineer has to point out that his is <u>only</u> an estimate. Not only is it <u>not</u> a trivial task to do an instant ρt, cost, and size analysis in one's head, it is also not a trivial task to construct a well designed vessel. The engineer, in short, has to sell the idea to the physicist that his is not merely a trivial "nuts and bolts" task but instead a complex optimization problem which demands the physicist's understanding. Again, since there are many design alternatives, the physicist should not be too surprised if later analysis does not confirm the engineer's first estimate or the physicist's first request.

At the heart of the matter is what the physicist <u>really</u> wants. After all, it takes time and money to design and build a new vessel from scratch, and the thinner the vessel the higher the premium one pays for each additional increment of "thinness." This is when an engineer might

ask a physicist if he could use an old experiment's vessel,[11] because if the physicist can, the engineer considers his job done. The engineer has provided the physicist with a working vessel with a minimum expenditure of the Lab's time and money. The engineer often says:

> If a garbage can would work, I'd use it. My job is to give the physicist something which works and which satisfies him, not to design the most perfect vessel from scratch.

Even though later design stages are marked by formal analysis and engineering drawings, this still does not guarantee the engineer that he will experience no further design changes. Even how far he will proceed with his formal analysis is determined by the degree of formalization of the experiment. Yet, here too, the engineer must begin to plan ahead and anticipate "bugs" as well as reconsider his deadline: Design time can take anywhere from one day, for modifying an existing vessel, to two months, for designing a completely new vessel. Detailing and fabrication time is anywhere from one week to three months, and it takes about two weeks to test and check out a finished design. Thus, it may take as little as two weeks to get a working design or as long as five and a half months. If the design is complicated the time estimate can easily be doubled. The engineer's working rule is that on the average it will take six months and $10,000 to go from blackboard to finished product.

At this point we can perhaps best explain one of our earlier objections to Ramström and Rhenman. It seems to be a gross understatement to say that an engineer's job is merely one of "transforming" a customer's needs into a product. The simple word "transform" hardly does justice to the richness and complexity of the interaction that takes place between

---

[11] Old vessels are stored in a warehouse for just this possibility. Along with the existing part, there is also a blueprint of past designs on file.

the engineer and the physicist. Not only does the engineer transform the physicist's requirements into a product, but he can also transform the physicist's requirements into other requirements. If by giving requirements a physicist acts to define an engineer's problem, then to the extent that an engineer also acts to define a physicist's problems, the engineer also gives physics requirements. By designing the physicist's vessel, the engineer is also helping to design the physicist's experiment, and perhaps more than the physicist would like to admit. The point is that in order for both parties to get what they need (the physicist, good engineering; the engineer, good physics requirements), they both need to (better) understand each other's job, i.e., what the other party is trying to accomplish. The engineer says:

> If I knew more about the physics of the experiment and what the physicist was trying to do--what's really important to him--I could probably give him a much better design.

The engineer and the physicist need more information than their isolated requirements provide; they need a knowledge of why certain requirements are much more important than others. And what we are suggesting is that perhaps one way a physicist or engineer can better understand his own job is to understand the job of another. If you want to understand the technical aspects of design, study the behavioral aspects--and vice versa. In sum, the basic defect of Ramström and Rhenman's schema is that they assume that both parties already know their requirements to begin with. But we are suggesting that the design process is as much an exercise in defining and understanding one's own requirements as it is a process of designing and actually building something.

It may help to give a further example as to the necessity for increased mutual understanding between the parties to a design. Consider

that if a physicist defines his requirements unrealistically, say, too narrowly, then he may, in effect, get unrealistic engineering of his own doing. In other words, if it makes an engineer's job more difficult if he has to assume what is of importance to a physicist, then it doesn't necessarily make it any easier for the engineer if the problem is over defined. One extreme doesn't cancel the other. For example, some physicists go so far as to do their own engineering; they almost present the engineer with a finished detailed drawing of what they want built. In such cases, the engineer is reduced to a bystander who mechanically carries out orders. Of course in such instances, the engineer is not really an engineer; he neither designs nor evaluates the physicist's experimental equipment. But if that's what a physicist wants or thinks that's what he needs, then that's what he gets. As the engineer's boss (himself an engineer) puts it:

> We usually give the physicists what they want, but it is often not what they need (emphasis added).

Design, to put it bluntly, is not always a rational game played by men of good will. It's not that both parties are basically uncooperative, deceiving, and antagonistic. Nothing could be further from the truth. It's instead the case that engineers and physicists do not always understand one another and, as a result, the possibility is present for more than just a slight misunderstanding to occur. For instance, if an engineer's design deadline is quickly approaching and the physicist has still not allocated his experimental space amongst the engineer and other support personnel, then one tactic all engineers (and not merely this particular engineer being studied) have at their disposal for "firming up" their requirements is to force one of their design proposals by making

a detailed and finished drawing of it. It can be pretty difficult for a physicist to reject a finished drawing that looks ready to be built. Put otherwise, here is an example of what Marples might call a critical design decision that is not taken by someone "higher up" in the organization. It is also an example of a case where a critical decision is not completely governed by rational factors.

We can also raise a much more specific objection, one which applies to Marples. It is not always true that safety requirements are either less inflexible than engineering requirements or even inseparable from them. Here we have a case where the safety requirements (150 psi internal and 30 psi external) are the most well known design requirements.

Relating what we have had to say thus far to Ackoff's model for scientific definitions, the stimuli that the engineer transforms into a product are much more complicated than some formal specification list. Much more than a simplified stimulus-response model is operating. The stimuli are part of the whole process: the engineer's face to face interaction with a physicist; the engineer's design strategies; in short, the stimuli are almost inseparable from the engineer's responses. In this sense, this report is as much a study of how we can identify the stimuli to which the engineer responds, as this is a study of those responses themselves. In fact, our final chapter will constitute a recommendation as to the form and kinds of variables a design specification list should take.

In order to be able to discuss the task in more precise and technical terms, in the next chapter we will discuss the program itself. Although as we have mentioned, the program does not represent all the aspects of the design process (namely, the complete development of a

project from start to end), the program is quite good in simulating how alternative designs are conceived once the necessary requirements which define the physicist's needs are given. Thus, by describing the program we will also be describing the kind of input information (stimuli) the engineer requires in order to not only start a design but more importantly to be able to select a "best" alternative to build.

Before we end this chapter we summarize the general kinds of requirements a design might be subject to. In general, every particular design will be subject to different subsets of these requirements. As we have noted, these requirements can neither be properly understood nor separated from the process which defines them and continue to retain their meaning.

General Design Requirements

I. Physics Requirements (as the engineer conceives of them; not necessarily as the physicist conceives of them).

   A. A definite geometrical LH_2 container (flask) to satisfy the requirements for a particle interaction experiment.

      1. Size

         a. length
         b. width or diameter
         c. height or diameter
         d. tolerances on the above (to see if existing flasks will suffice)

      2. Shape

         a. flatness of flask ends (i.e., domes)
         b. flatness of flask sides

   B. Layout and space restrictions on the associated target (i.e., the LH_2 flask) components because of:

      1. Limited space itself
      2. Optical path requirements for photographic and counting equipment
      3. Particle path requirements

C. Material restrictions on the target flask, heat shield, and vacuum jacket (i.e., the pressure vessel)

1. Maximum allowable ρt (density x thickness) consistent with shape (see I. A. 2. above)
2. Maximum allowable $\rho t/RL$ or ρtA, where A = atomic number and RL = radiation length in gms./cm.
3. Uniformity of thickness in "thin" areas, i.e., the maximum allowable variation in thickness in a formed head
4. Optical transparency, i.e., minimum allowable optical transparency at a particular wavelength

D. General Requirements

1. "Trouble free" operation
2. A definite due date--in general, a "working" target at "any" cost
3. A "bubble free" flask
4. A target "fixed" in space with respect to thermal and gravity loads
5. Fixed cost--maximum amount physicist can afford to pay meeting all other requirements

II. Engineering Requirements (again, <u>as the engineer sees them, not necessarily as the Lab's engineering committees visualize them)</u>

A. Safety--the Lab's requirements

1. 150 psi internal pressure <u>test</u> on vacuum jacket
2. 30 psi external pressure <u>test</u> on vacuum jacket
3. 40 psi (or twice the working pressure, whichever is greater) on LH_2 flask at its operating temperature [on uncomplicated designs with thermally matched materials, an LN <u>test</u> (77° K) or an LH_2 <u>test</u> (4° K) may be substituted for an LH_2 test at 20° K]
4. Twice the working pressure (internal and external) on all other components (valves, lines, LN jacket)
5. Proper use of materials, e.g., general precautions with brittle materials

B. Overall structural integrity due to other imposed forces:

1. Thermal forces acting on the system with subsystem parts with or without constraints

   a. proper use of brittle materials; e.g., thermal strains do not exceed allowable elongations

2. Magnetic
3. Earthquake

   a. design of stands and supports to reduce tipover, general instability

C. Other engineering (i.e., other engineering support groups' requirements)

1. Layout and space restrictions imposed by support equipment (usually outside of the pressure vessel)

   a. spark chambers
   b. scintillation and other counters
   c. magnets
   d. shielding
   e. movement of the above

2. Material restrictions imposed by the above, (i.e., II. C. 1.)

   a. optical transparency
   b. magnetic permeability
   c. density, thickness, atomic number

D. General personal requirements specific to the engineer himself

1. The design be as "simple" as possible

   a. minimize irreversible fabrication sequences
   b. "easy" to assemble and disassemble for service
   c. "easily" changed, i.e., reusable on other similar experiments
   d. flexible for above (i.e., II. D. 1. c.)
   e. "low" cost

2. Reasonable thermal efficiency

   a. comparable boil-off rate (or better) without excessive costs or complications to previous designs

3. Vacuum tight

   a. maximum leak rate not to exceed capabilities of standardized pumping system

4. Acceptable base pressure required for II. D. 2.

   a. 10^{-5} to 10^{-6} mm. Hg. maximum to make residual gas conduction negligible compared to black body radiation and solid conduction heat leaks.

5. Stable operation

   a. adequate thermal shielding to ensure stable operation, i.e., to prevent LH_2 level surges by geysering

6. Acceptable simulation of LH_2 operating conditions by an LN or LH_2 test

7. Confidence in:

   a. analysis (degree of simulation, credibility of references)
   b. past designs
   c. commercial components
      (1) established reliability
      (2) cost
      (3) availability off the shelf[12]

8. Check against previously established "reliability"

---

[12]This consideration can oftentimes be crucial. Many more items are displayed in commercial catalogues than are readily available. The engineer notes that literally any small outfit can put out a catalogue without having even a single item in stock. One has to learn which suppliers can actually deliver or else be prepared to pay the penalty for lost time and money while a "paper" company makes their catalogue items. Good designers know their commercial suppliers.

CHAPTER III

THE PROGRAM (DESIGN) AND THE TASK: PART II

In the last chapter, we described the engineer's task in very general terms and with about equal emphasis on the task's behavioral aspects as on its technical aspects. In this chapter, we mainly emphasize the technical. For the most part, we do so by explaining the task in terms of the program; the program is to be our vehicle for describing the task's technical features. In a later chapter, when we make a detailed comparison between the program's behavior and that of the engineer's, we shall have more to say about the task's contents. At that time, we shall once again elaborate on the job's actual technical and behavioral features as compared with those features the program simulates.

Before we describe the program, a few preliminary remarks are necessary if we are to understand the program's development and present structure. First of all, DESIGN is the result of a cooperative venture; it represents the combined efforts of this investigator and that of the subject to write a program about the subject's own design behavior. In the sense that he was a constant critic of the program's logic, the engineer, even though he did none of the actual programming, was nonetheless an active participant in certain phases of the program's development. This was deemed advisable for two reasons: (1) the necessity of securing the engineer's constant check on the author's inferences and formalizations of the engineer's design rules, and (2) the need for maintaining the engineer's active interest in an extended, detailed, and probing study of

this nature. This last reason also points to one of the most desirable features of a computer simulation study of this kind; it "almost" sells itself. At the conclusion of this investigation, the engineer and the organization will be left with something of more immediate and practical use than a mere theoretical analysis of one engineer's job. (In the eyes of the engineer and organization, most academic analyses of engineering design probably further the goals of the investigator more than they further the immediate goals of the engineer and organization.) Hopefully, we will leave the engineer and the organization with a new design aid, which by virtue of the engineer's active participation in its development, both the engineer and the organization may be more prone to accept. We are contending then that in our case it was not only relatively easier to sell the idea of a computer simulation study to begin with, but that a study of this nature may also help to make it easier for both the engineer and the organization to adopt this study's general conclusions.[1]

The reason for the engineer's active participation in the program's writing can also be understood in terms of the study's progress. In the beginning when progress was slow, the engineer (as well as this researcher himself) experienced difficulty in believing that this study's over-all goals would ever be attained. The attainment of the study's goals seemed almost impossible. However, with increasing success, and particularly with the actual running of the program, the engineer soon developed a

---

[1] The issue is one of the implementation of this study's conclusions. In this sense, our prediction is that a subject which has had either the opportunity to participate in a study's formulation or who stands to receive a useful tool as the result of that study's findings will be more inclined to accept that study's over-all conclusions. For a general discussion of the concept of implementation, see C. W. Churchman and A. H. Schainblatt, "The Researcher and the Manager: A Dialectic of Implementation," Management Science, Vol. 12 (February 1965); see also, P. Ratoosh and C. W. Churchman, "Innovation in Group Behavior," Center for Research in Management Science, Working Paper No. 10, University of California, Berkeley.

stake in the study. Essentially, the program, if successful, would represent an addition to his repertory of design aids. But if so, then this meant that the engineer also had a stake in the program's formulation. Thus, although in accordance with the initial terms of the project, this investigator always retained final control over the study's over-all methodology and goals, a good part of the study's control was shared in the interest of making the program of more permanent and immediate use to the engineer. The point is that this research strategy decisively affected the program's structure.

In a very real sense, both parties, investigator and subject, studied each other. Through the use of extensive informal interviews, tape-recorded subject protocols, and constrained problem-solving interviews,[2] this researcher inferred and then formalized the engineer's design rules. At the same time, to the extent that the engineer checked some of the author's inferences and formalizations by making some of his own, the engineer (albeit informally) studied and confirmed the author's fommulations. This check not only revealed the engineer's evaluations of the program's adequacy but it also gave further knowledge of the engineer's actual design rules. The engineer could point to something concrete and begin to say in which ways his actual behavior was different. In Chapter

---

[2]Since these methods have been extensively described elsewhere, we merely note their use in passing. In Chapter V, we will give some examples of the subject's protocols. For a discussion on the place of these techniques in simulation studies, see G. P. E. Clarkson, Portfolio Selection: A Simulation of Trust Investment; see also, G. P. E. Clarkson and W. F. Pounds, "Theory and Method in the Exploration of Human Decision Behavior," M.I.T. Research Paper, School of Industrial Management; A. Newell and H. A. Simon, "The Simulation of Human Thought," The RAND Corporation, P-1734 (June, 1959); A. Newell and H. A. Simon, "Computer Simulation of Human Thinking," The RAND Corporation, P-2276 (April, 1961); H. A. Simon, "Modeling Human Mental Processes," The RAND Corporation, P-2221 (February, 1961).

V, the engineer's evaluations will be carefully examined in order to provide a test of the program's validity.

There is also another way to characterize some of the decisions which decisively influenced the program's development. Basically, these decisions were of two kinds: (1) those which influenced the program's content, and (2) those which influenced its structure (note: these two classes are not, nor were they meant to be, mutually exclusive in any strictly formal sense). The decisions which pertained to content essentially affected which factors or variables the program included, while the decisions which pertained to structure affected how the variables were included, i.e., how they were represented. Both kinds of decisions imply that the program, like every scientific model, is in some respects an idealization of the engineer's actual design behavior. Because the program was written in a cooperative spirit, some of the idealizations (i.e., program rules) are based on the mutual agreement of both this investigator and the subject. Other idealizations more nearly represent one party's point of view than they do the other's.

As an illustration of these kinds of decisions, consider the following: while the engineer's task is to design and to supervise the construction of an LH_2 flask, a pressure vessel, and its associated support equipment, the program simulates only the design of the pressure vessel. Here is but one example of what the program does not consider out of the host of factors which it could have considered. Here is where one must also understand the reasons for such a decision. These reasons can perhaps be best understood in terms of the study's basic goal. Our goal was to contribute toward an understanding of engineering design; it was not to study every detailed aspect of an engineer's job. (In practice to study every aspect for once and for all would be impossible,

since in theory one can study the effect of an infinite number of as yet unaccounted for variables.) In fact, the desire to increase our understanding of design by studying only a limited number of factors was a general criterion which governed our selection of this particllar task as an appropriate one to model in the first place. We wanted a task which was just "complicated enough" to represent the general features and problems of engineering design, and yet at the same time, a task which was not "so complicated" as to preclude its programming within a limited amount of time. (After a preliminary investigation of all the available alternatives which the Laboratory very graciously offered, the preceding considerations governed the decision to study this particular task and this particular engineer). Thus while in principle we certainly could have investigated and programmed the design of an LH_2 flask, the pressure vessel (as the more interesting and well defined system) was selected for detailed study. (Properly speaking, both the LH_2 flask and the pressure vessel are sub-systems to one another and to the larger systems of which they are a part. As subsystems, they are not really independent of one another; i.e., the design of one really affects the design of the other. For simplicity's sake though, the program considers them to be independent--again, another example of what DESIGN does not consider.)

In general, at every stage of the program's development, this investigator,acting in the interests of preserving the program's simplicity and tractability, forced the engineer to decide on whether every feature he thought pertinent was (1) in fact actually necessary for capturing the task's essence (and hence, the essence of the design process), and (2) if a feature was thought necessary, the degree to which it could be idealized. We might add that in general the engineer agreed with the necessity of

proceeding with these two principles even if it was often difficult for him (and for the researcher) to live with them. All in all, it was more important for both this investigator and the engineer to get a working program within a comparatively short period of time than it was to get a detailed and comprehensive program (which probably would have taken an inordinately large amount of time). It was more important to represent more of the general kinds of features the engineer has to consider than it was to represent less but in greater detail.

In accordance with the above principles, the program (DESIGN) essentially covers the design of two basic kinds of pressure vessels: (1) spherical shells, and (2) cylindrical shells with hemispherical heads. Here we have an example of a case where the engineer is certainly not as restricted; he has many more pressure vessel alternatives available to him, e.g., cylindrical shells with torispherical heads, torispherical shells by themselves, plus numerous variations on these themes. We might say that the engineer's agreement as described above, has imposed an external limitation on the engineer's "natural" internal limitations which govern the growth of his design tree. All we note for now is that, again, every study seems subject to these kinds of limitations. In sum, with all the foregoing preliminary considerations in mind, we note that we are to study the program's simulation of the design of spherical and cylindrical pressure vessels. Without any further detailed justifications of the program's idealizations, we proceed straightaway to describe its structure.

Fig. 7 shows the program's basic structure. The boxes indicate the major subroutines, and the numbers in the circles refer to the order in which the subroutines are called. The left-hand circles refer to the order in which the cylindrical pressure vessels are processed; the right-

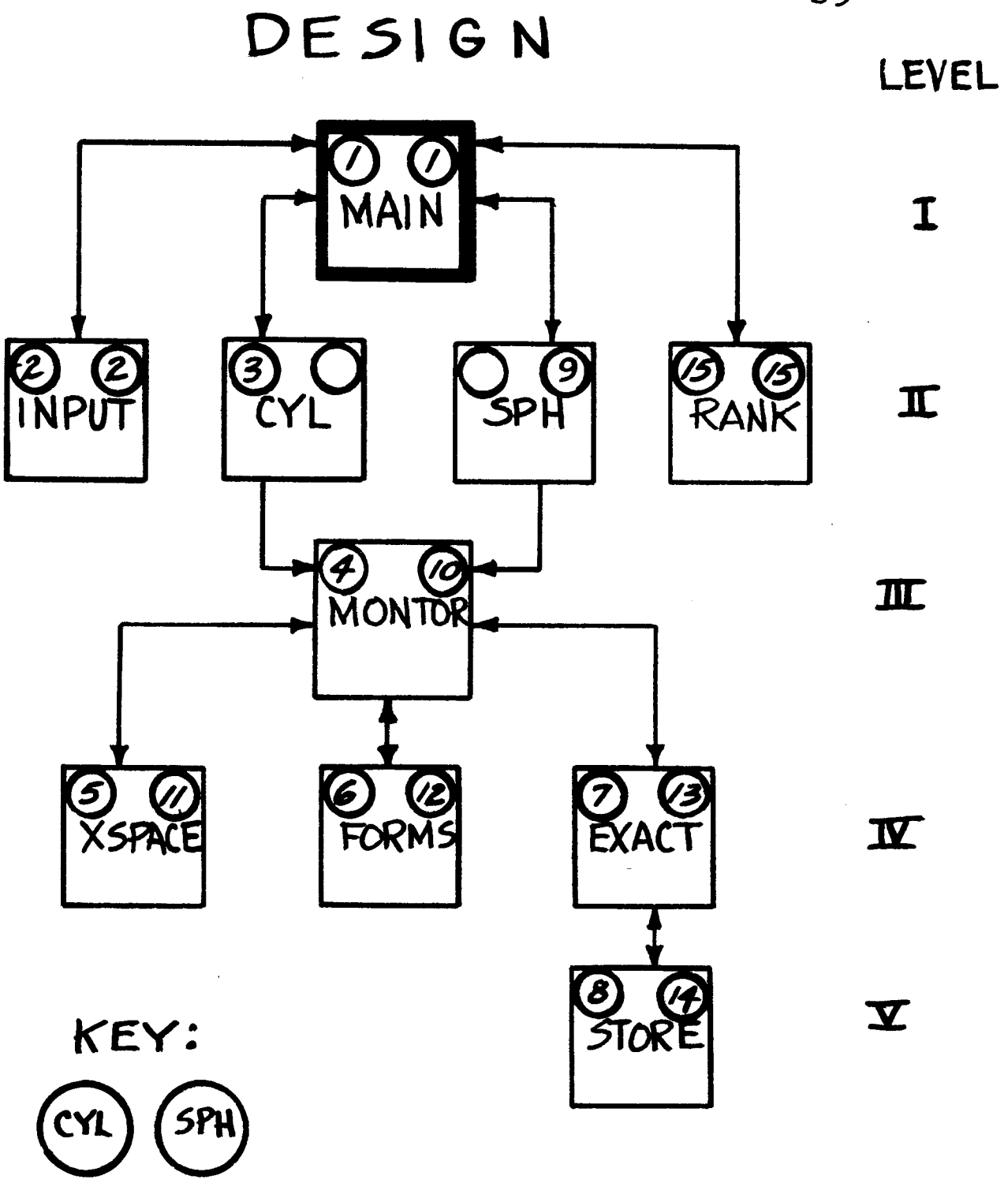

FIG. 7 PROGRAM STRUCTURE

FOR "LONG" FLASKS :

FOR "SHORT" FLASKS :

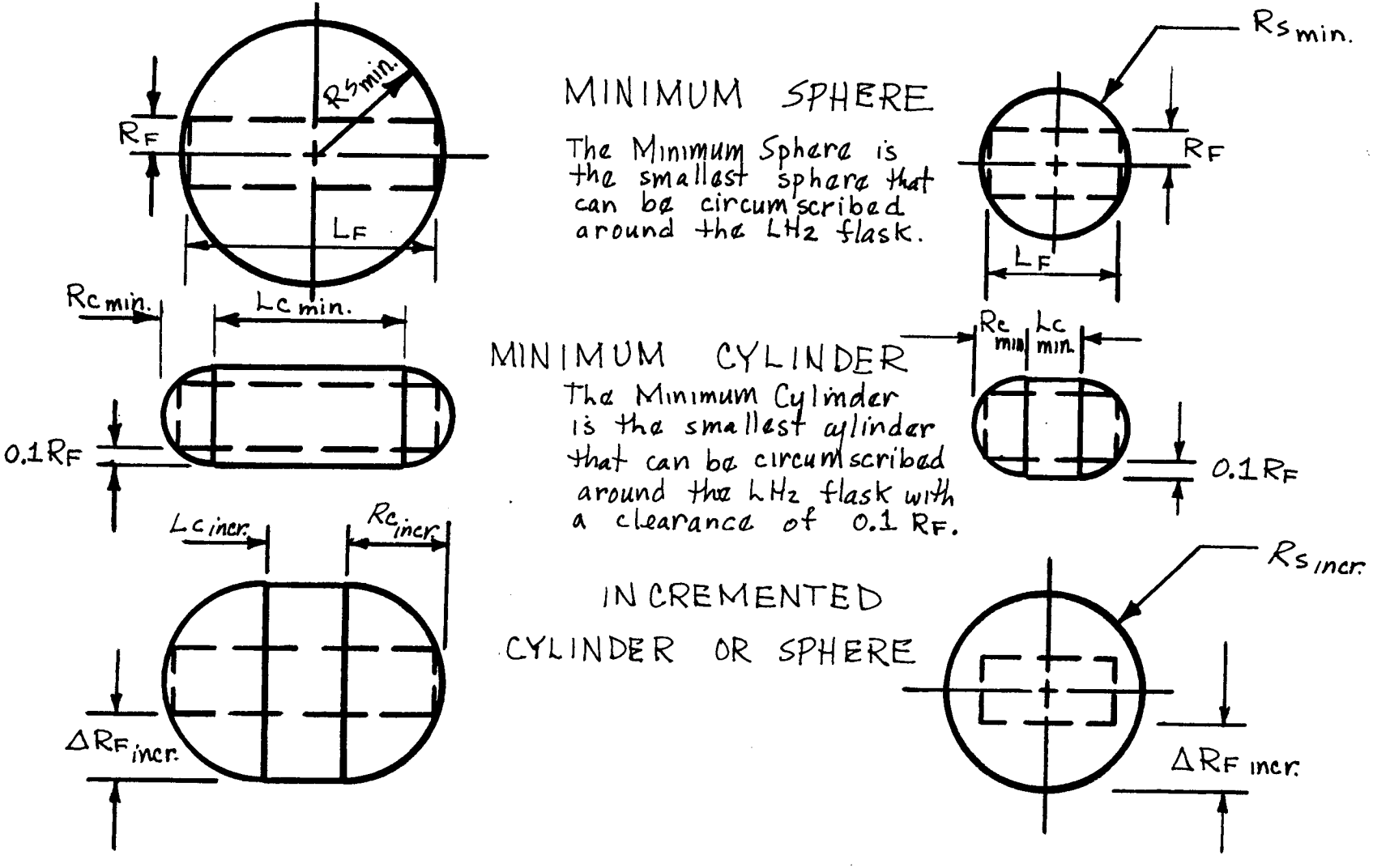

MINIMUM SPHERE

The Minimum Sphere is the smallest sphere that can be circumscribed around the LH2 flask.

MINIMUM CYLINDER

The Minimum Cylinder is the smallest cylinder that can be circumscribed around the LH2 flask with a clearance of 0.1 RF.

INCREMENTED CYLINDER OR SPHERE

FIG. 8

hand circles refer to the order in which the spherical pressure vessels are processed. The levels indicate which subroutines call which, i.e., the depth in the program at which the various subroutines are called.

MAIN is the executive or master subroutine whose function it is (1) to generate the basic pressure vessel shapes from which all the other shapes that the program considers will be derived, and (2) to call the various subroutines which operate on the basic shapes. Given the dimensions of the LH_2 flask, i.e., its radius (RF) and its length (LF) (MAIN calls INPUT whose function is to supply these dimensions), MAIN generates three basic pressure vessel shapes: a "minimum" sphere, a "minimum" cylinder, and either an "incremented" sphere or cylinder (see Fig. 8). The terms "minimum" and "incremented" are defined with respect to the amount of clearance between the inside shell wall and the LH_2 flask. The program's minimum sphere and minimum cylinder represent the smallest respective shapes that can be built which just satisfy the servicing requirements. This means that any smaller shapes would make it extremely difficult, if not impossible, to insert not only the LH_2 flask and its insulation (as described in Chapter II) but also its necessary fill and boil-off lines for replenishing the supply of LH_2. In addition to the minimum shapes, the engineer, and hence the program, considers an incremented shape which, depending on the initial size of the LH_2 container, is either a sphere or a cylinder (see Fig. 8). An incremented shape makes it even easier for the engineer to satisfy the servicing requirements. A larger sphere or cylinder, as we indicated in Chapter II, may also be easier to manufacture. We have, as a result, a representation of the engineer's first heuristics for generating design alternatives: minimum shells are considered as possibilities for satisfying the physicist's

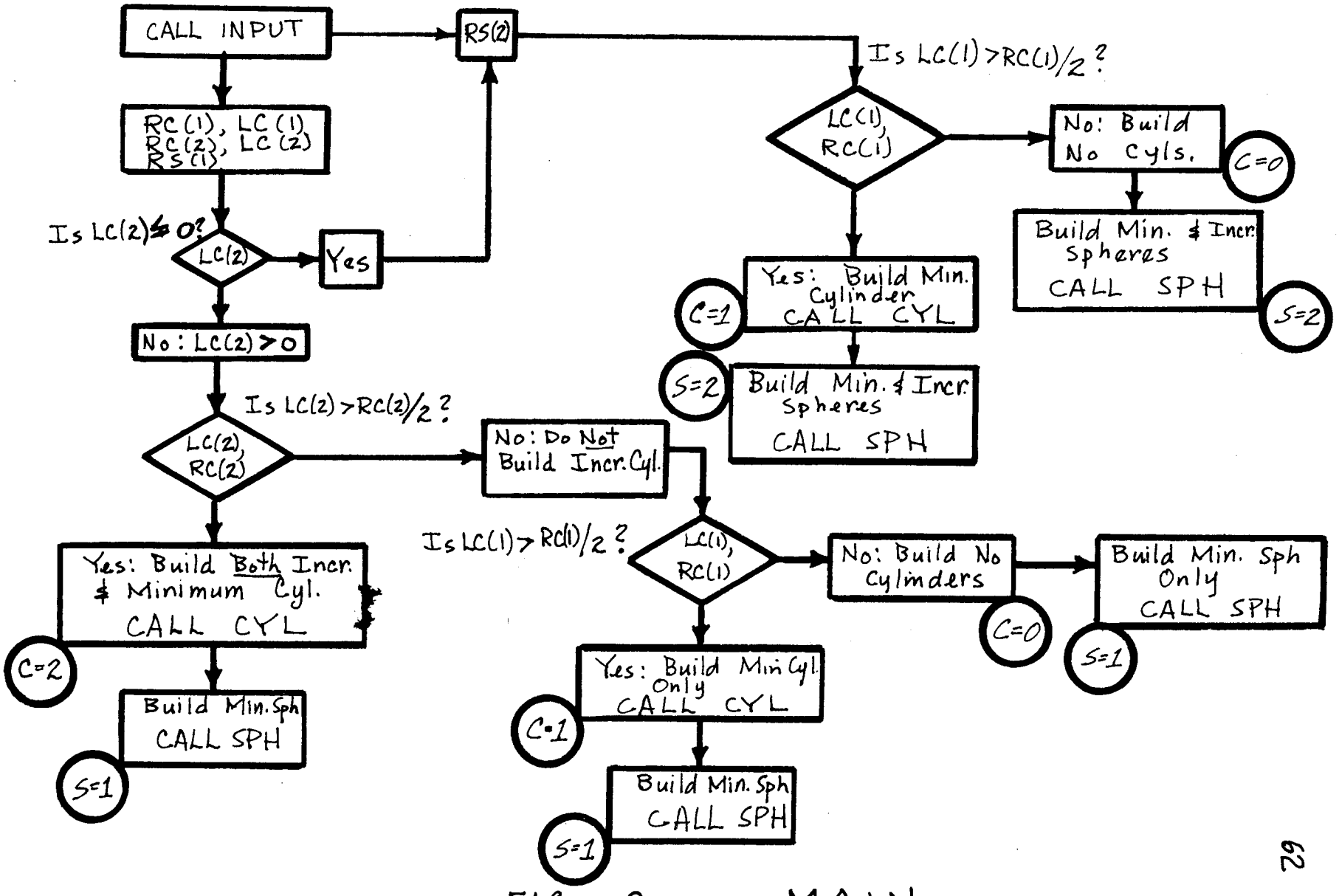
CALL INPUT
RC(1), LC(1)
RC(2), LC(2)
RS(1)
RS(2)
Is LC(2) ≤ 0?
LC(2)
Yes
No: LC(2) > 0
Is LC(2) > RC(2)/2 ?
LC(2), RC(2)
Yes: Build Both Incr. & Minimum Cyl.
CALL CYL
C=2
Build Min. Sph
CALL SPH
S=1
No: Do Not Build Incr. Cyl.
Is LC(1) > RC(1)/2 ?
LC(1), RC(1)
Yes: Build Min Cyl. Only
CALL CYL
C=1
Build Min. Sph
CALL SPH
S=1
No: Build No Cylinders
C=0
Build Min. Sph Only
CALL SPH
S=1
Is LC(1) > RC(1)/2 ?
LC(1), RC(1)
Yes: Build Min. Cylinder
CALL CYL
C=1
Build Min. & Incr. Spheres
CALL SPH
S=2
No: Build No Cyls.
C=0
Build Min. & Incr. Spheres
CALL SPH
S=2

FIG. 9 MAIN

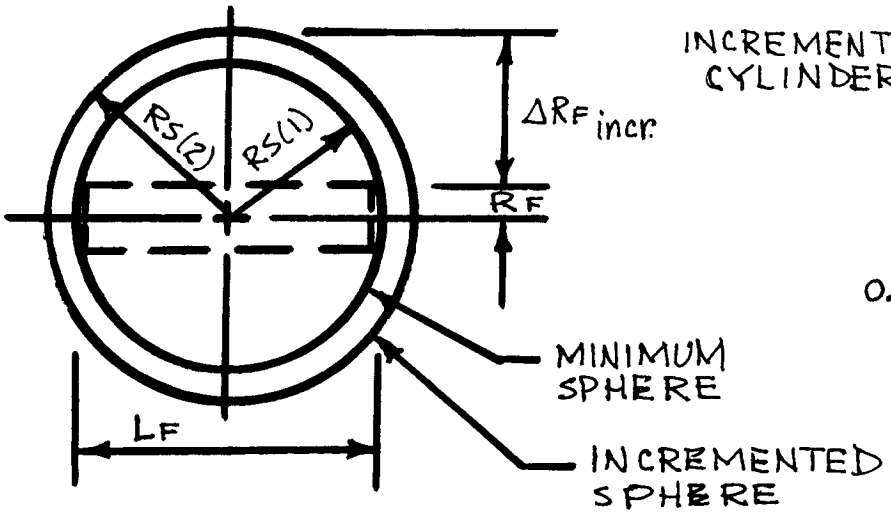

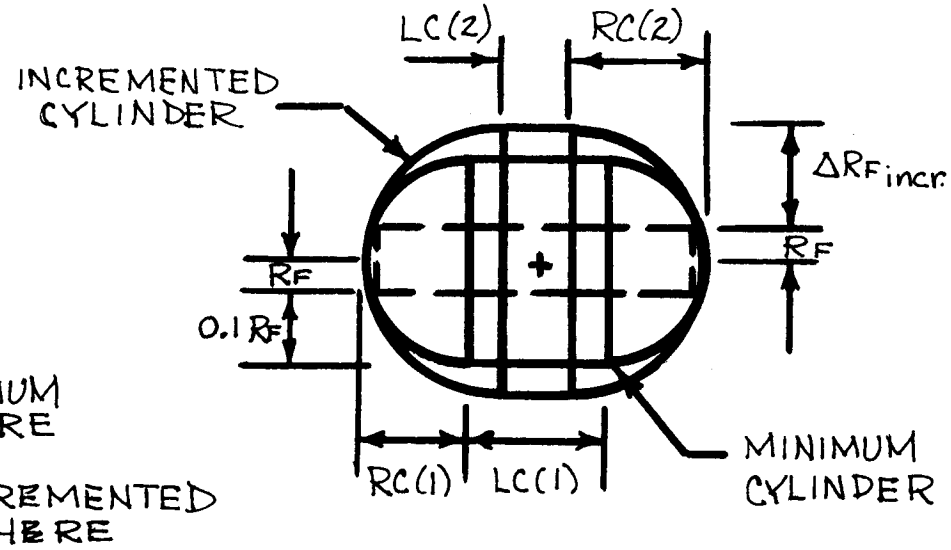

MINIMUM SPHERE : $RS(1) = \sqrt{R_F^2 + (L_F/2)^2}$

INCR. SPHERE : $RS(2) = R_F + \Delta R_{F\,incr.}$

MINIMUM CYLINDER : $RC(1) = R_F + 0.1\,R_F$
$LC(1) = LCY\,(0.1\,R_F)$

INCR. CYLINDER : $RC(2) = R_F + \Delta R_{F\,incr.}$
$LC(2) = LCY\,(\Delta R_{F\,incr.})$

where

$LCY\,(\Delta R_F) = L_F - 2\sqrt{\Delta R_F\,(\Delta R_F + R_F)}$

length of cylinder

FIG. 10

demand for low thickness and minimum space shells, and incremented shells are considered as possibilities because of their greater ease of construction and maintenance.

A brief but more extensive outline of MAIN's program logic is in order. MAIN's first function is to call INPUT (see Fig. 9) which supplies the radius (RF) and length of flask (LF) which the pressure vessel is required to enclose. (RF and LF, in effect, define the shape and quantity of LH_2 the physicist wishes to study.) On the basis of the flask dimensions, MAIN computes the radius of a minimum sphere [RS(1)], and the radii and lengths of both a minimum [RC(1) and LC(1)] and incremented [RC(2) and LC(2)] cylinder (see Fig.10). As Figs. 8 and 10 show, the minimum sphere is the smallest sphere that can be circumscribed around the LH_2 flask. According to this definition, the minimum sphere would appear to touch the LH_2 flask at its corners. In reality though, LH_2 flasks are rounded at their corners so that the program's minimum sphere actually clears the flask; if this were not the case there could be serious problems of heat leaks being developed as described in Chapter II. The program, in other words, idealizes the flask as a cylinder with plane flat ends. As Figs. 8 and 10 also show, the minimum cylinder is the smallest cylinder that can be circumscribed around the LH_2 flask with a clearance of 0.1 RF. 0.1 RF represents the minimum clearance for which the engineer can build a cylinder which will still be able to enclose both the flask and its fill and boil-off lines. The point for our discussion is that given the dimensions of the LH_2 as supplied by INPUT, MAIN determines the dimensions of the minimum cylinder and sphere according to fixed rules, i.e., rules which determine the amount of minimum clearance for a cylinder and a sphere. The incremented cylinder, on the other hand, as Figs. 8 and 10

show, is not only determined by MAIN's internal program rules for defining cylinders (RC, LC) but also by the explicit specifications of the engineer or physicist. Through INPUT the engineer or physicist expresses his preference for the size of incremented cylinder they wish to consider. The value assigned to ΔRF_{incr} specifies the size of incremented cylinder DESIGN investigates.

After the determination of the minimum sphere [RS(1)], minimum cylinder [RC(1), LC(1)], and incremented cylinder [RC(2), LC(2)], MAIN next asks whether the incremented cylinder can be built in the sense of whether it is geometrically possible. It can be shown by elementary trigonometric methods that for an arbitrary clearance of ΔRF, the length of a cylindrical shell with hemispherical ends which are <u>tangent</u> to the corners of the LH_2 flask is given by the following expression: (cylinder length as a function of ΔRF=) LCY (ΔRF) = LF - $2\sqrt{\Delta RF(\ RF+LF)}$. Therefore, if LC(2) is less than or equal to zero, the construction of an incremented cylinder is geometrically, as well as physically, impossible; the size of the increment (ΔRF_{incr}) is such as to preclude the construction of a cylinder. The preceding statements correspond to the first IF Statement in Fig. 9: is LC(2) $\leq$ 0? If the answer is Yes, an incremented cylinder is no longer a possibility. Instead, an incremented sphere [RS(2)] is indicated; the incremented cylinder in effect turns into an incremented sphere. If the answer is No, then the possibility of an incremented cylinder is explored further. Even though LC(2) is greater than zero, this by itself is not enough for the possibility of a cylinder; the length of a cylinder must also be "long enough." If a cylinder is "too short," it can not be properly analyzed according to the formulas DESIGN has. MAIN rejects the possibility of a cylinder, either incremented or minimum, if its length

is less than or equal to half its radius. If LC(2) is greater than RC(2)/2 then it turns out that not only can the incremented cylinder be built but also the minimum cylinder as well. That is, if LC(2) > RC(2)/2, then LC(1) > RC(1)/2. As a result, C would equal 2 and S would equal 1, indicating that MAIN would call CYL twice and SPH once; we have the possibility of two cylinders and one sphere [it turns out that even if we never build any cylinders (i.e., C=0), one can always build the minimum sphere (i.e., S always equals at least 1)]. If LC(2) is not greater than RC(2)/2 [i.e.,LC(2) $\leq$ RC(2)/2], then an incremented cylinder is not a possibility. Furthermore, since LC(2) less than RC(2)/2 implies nothing about the relationship between LC(1) and RC(1)/2, the question "is LC(1) greater than RC(1)/2?" must still be asked. If the answer is Yes, then C=1 and S=1. If, on the other hand, the answer is No, then C=0 and S=1. In any case, without exploring MAIN's structure further, this is the manner in which the basic design shapes are generated and in which the subroutines of level two are called. For a detailed examination of the program's structure, see Appendix I, where a complete Fortran IV listing of the program appears.

The two subroutines of level two which operate on the basic shapes are CYL and SPH. These subroutines essentially explore the possibility of additional design alternatives, i.e., variations on the themes of the basic shapes. Both CYL and SPH determine how the basic shapes, in conjunction with the experiment's external space requirements, may be modified in order to yield additional design alternatives. Consider the minimum and incremented cylinders of Fig. 8. While these configurations can always be built as shown, if their cylindrical portions can be extended to a region of the experimental space known as the non-counting

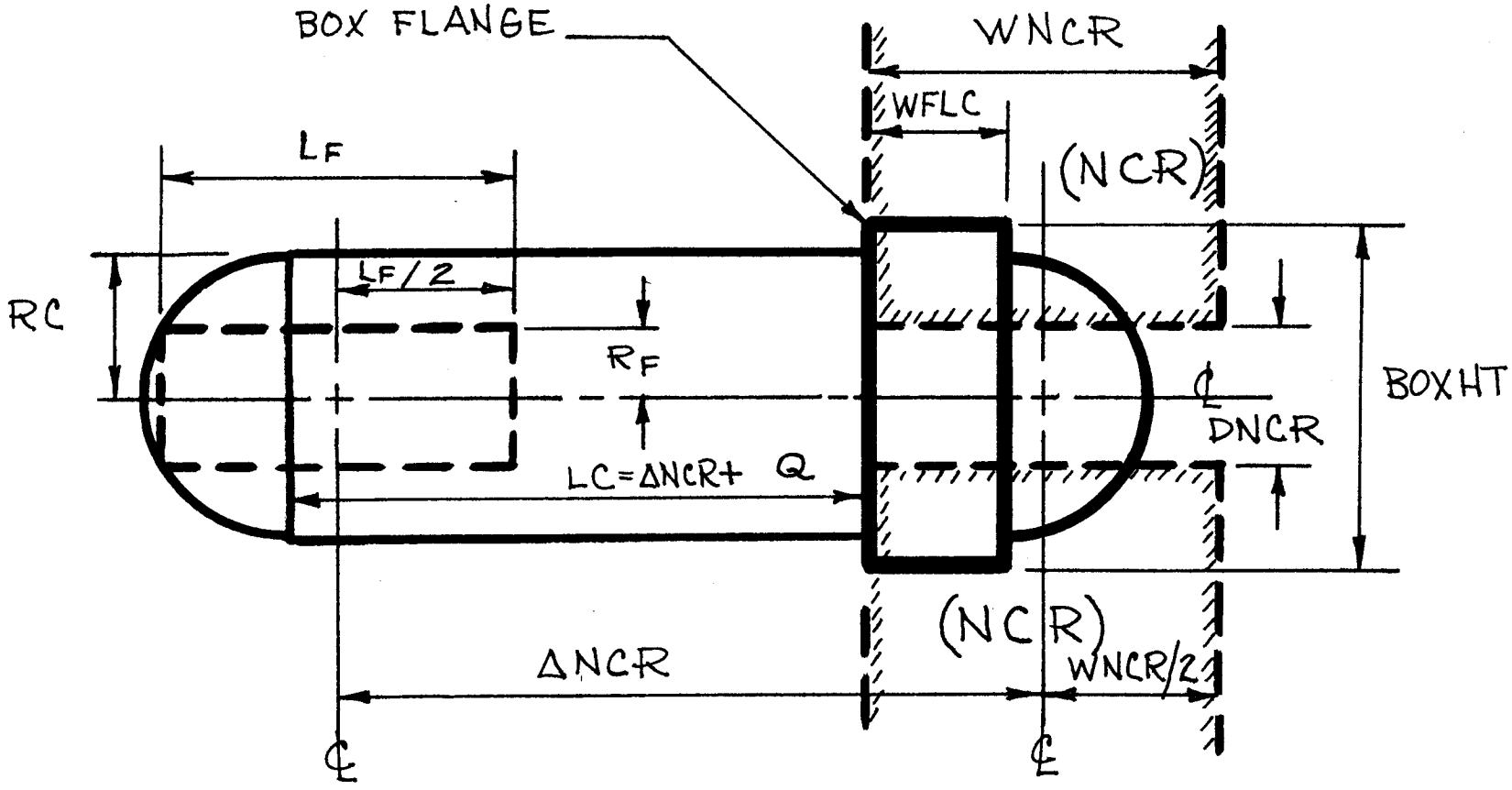

CONFIG = DCFD, an example of extending a cylindrical shell to the NCR.

FIG. 11

region (NCR), then it may be even easier for the engineer to build and to service them. The NCR (see Fig. 11) represents that portion of the experimental space where the physicist will not be measuring any nuclear reactions, and, as a result, that region of space where the physicist can tolerate massive flanges. The point is that if the engineer can somehow reach this region then he can place a box flange on the end of the cylindrical shell, and a box flange in general gives the engineer more room not only for installing the LH_2 flask and its fill and boil-off lines to begin with but also for later servicing the system; a box flange essentially makes the whole system more accessible.

Fig. 11 gives an example of an extended cylindrical shell. The NCR has been idealized as two rectangular strips of infinite height separated by a gap of height (diameter) DNCR. DESIGN also assumes for simplicity that the NCR is rotationally symmetric; in reality, the NCR is a discontinuous space of complicated shape. With the NCR as shown in Fig. 11, it is easy to show that the length for the extended cylinder is given by the following expression: $LC = \Delta NCR + Q$, where $Q \equiv (LC - WNCR)/2$. ΔNCR defines the location of the NCR with respect to the center of the LH_2 flask. (Since the original minimum and incremented shapes are symmetrically placed with respect to the LH_2 flask, ΔNCR equally defines the location of the basic shapes with respect to the NCR.) WNCR and DNCR represent the NCR's width and diameter. DNCR indicates that in general the physicist will be interested in studying whatever reactions may appear down the center line of the LH_2 flask (more properly speaking, some solid angle of the flask); hence, DNCR represents a gap in the NCR where massive flanges will not be tolerated.

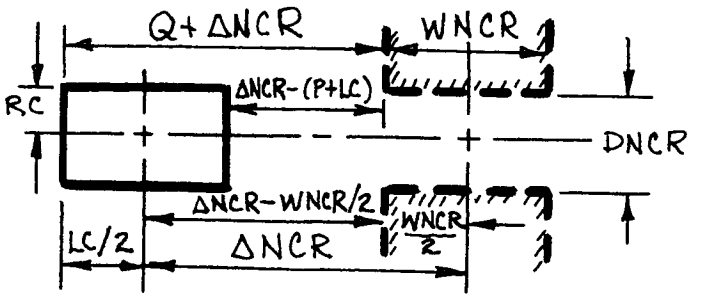

OUT:

$\Delta NCR \geq P+LC$

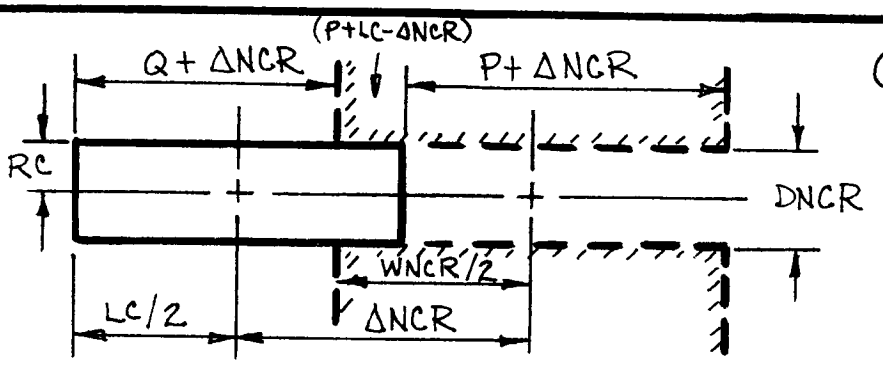

OUT-IN:

$P < Q \leq \Delta NCR$

or

$Q \leq P < \Delta NCR$

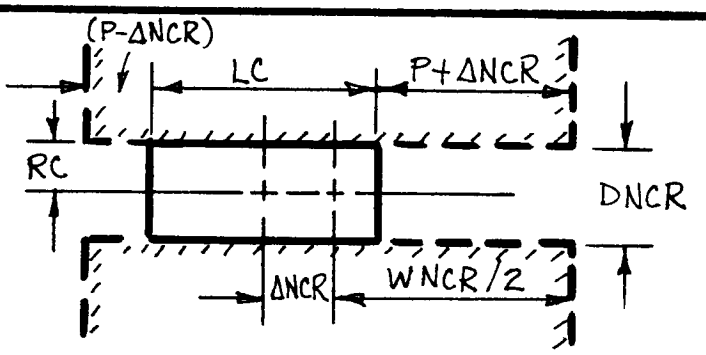

IN:

$Q \leq \Delta NCR \leq P$

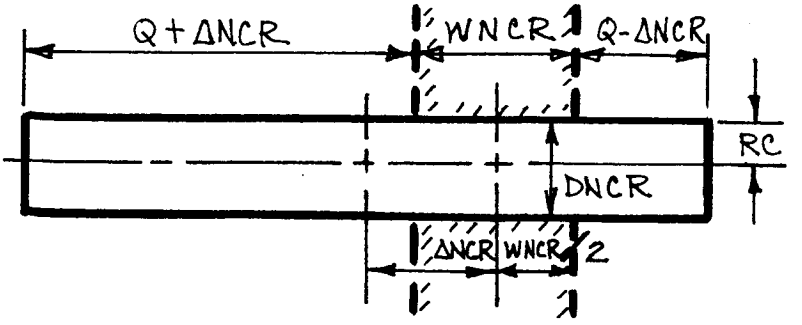

OUT-IN-OUT:

$P < \Delta NCR < Q$

$P \equiv (WNCR - LC)/2$, $Q \equiv (LC - WNCR)/2$

$P = -Q$

FIG. 12

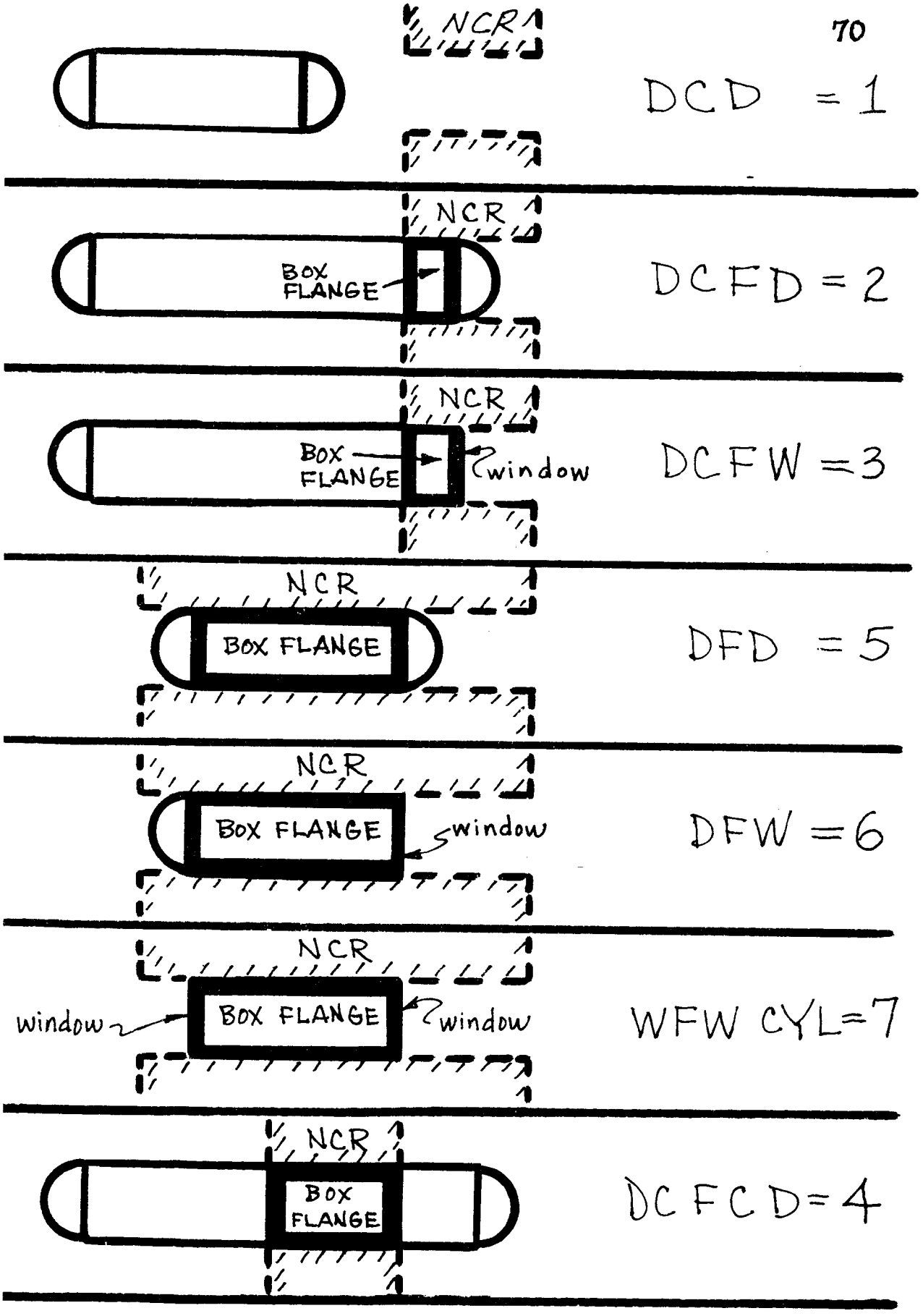

CYLINDER CONFIGURATIONS

FIG. 13

For the NCR as we have defined its shape, Fig. 12 shows all the possible locations of cylinders with respect to the NCR. Only the cylindrical portion is shown as only this much of the cylindrical shell is needed in order to differentiate between the different positions. Fig. 12 gives the logic which CYL uses in order to differentiate between the various cylinder positions. By inspection of the logic it can be seen that the categories are mutually exclusive and exhaustive (again, for the NCR as it is defined). Fig. 12, in essence, determines the kinds of additional alternatives CYL constructs. This can be seen by considering the next figure. Fig. 13 gives a listing of all the possible ways of extending a shell to the NCR and, once there, of using a box flange. First of all, no matter where a cylinder is located with respect to the NCR, a DCD (hemispherical dome - cylinder - hemispherical dome) configuration can always be built. The DCD configuration represents the basic shapes unmodified. Other alternatives are possible depending on the LH_2 flask's (and hence on the basic cylinder's) initial location with respect to the NCR. For a cylinder which is OUT, in addition to the DCD configuration, the DCFD (F stands for the box flange) and DCFW (W stands for a "window," i.e., instead of a hemispherical dome on the right end, a plastic sheet may be used as a possible substitute) configurations are possibilities. DCFD and DCFW are also possibilities for a cylinder which is OUT-IN. For a cylinder which is located entirely within the NCR, configurations DCD, DFD, DFW, and WFWCYL are possible. And finally for a cylinder which is "long" as compared to the width of the NCR (WNCR), the OUT-IN-OUT case, configurations DCD and DCFCD are possible. The numbers in Fig. 13, e.g., DCFW=3, are the internal program designations used to represent the various configurations. These numbers are used consistently

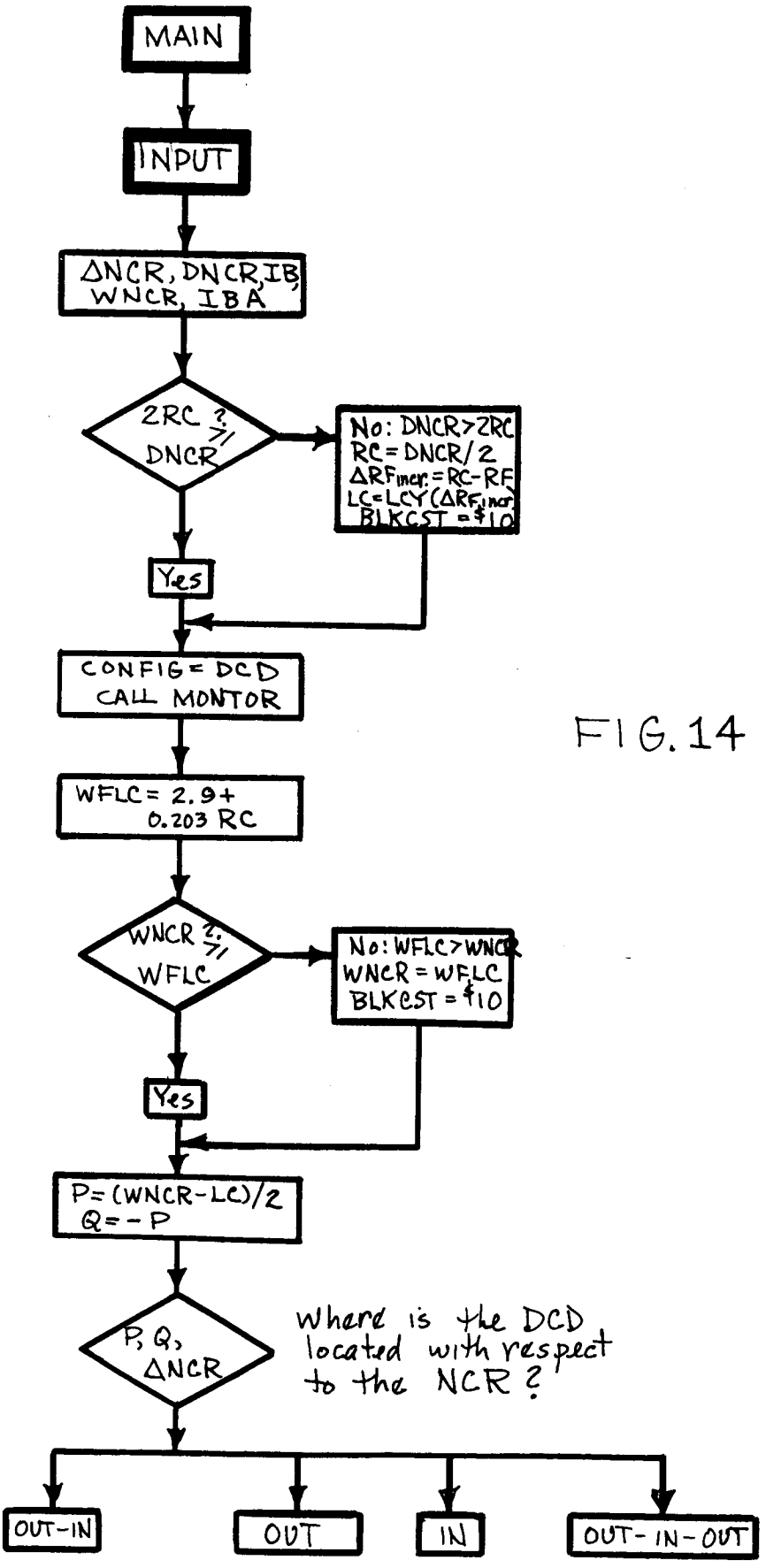
MAIN
INPUT
ΔNCR, DNCR, IB, WNCR, IBA
2RC ?≥ DNCR
No: DNCR>2RC
RC = DNCR/2
ΔRF incr. = RC-RF
LC=LCY(ΔRF incr)
BLKCST = $10
Yes
CONFIG = DCD
CALL MONTOR
WFLC = 2.9+ 0.203 RC
WNCR ?≥ WFLC
No: WFLC>WNCR
WNCR = WFLC
BLKCST = $10
Yes
P=(WNCR-LC)/2
Q=-P
P, Q, ΔNCR
Where is the DCD located with respect to the NCR?
OUT-IN
OUT
IN
OUT-IN-OUT

FIG. 14 CYL

throughout DESIGN. Within the program, they are referred to as the CONFIG numbers.

With the aid of Figs. 14 through 17, we give a brief outline of CYL's structure. Fig. 14 first of all emphasizes an earlier point, i.e., CYL is reached through MAIN. Furthermore, since it is also MAIN which calls INPUT, CYL gets by way of MAIN its necessary input data (essentially, the dimensions which define the NCR and the properties of the incident nuclear beam, IB). (This is true for every subroutine; they all get their input data by way of MAIN; the input variables are all stored in COMMON.) The first thing CYL does, contrary to the way it is shown in Fig. 14 (Fig. 14 is incorrect in this respect) is to call MONTOR; all DCD configurations are processed before any other configurations are considered, the minimum DCD being considered before the incremented DCD. After the DCD configuration is processed, CYL next checks to see whether the diameter of the DCD cylinder is large enough to fit into the NCR. If the diameter of the cylinder is smaller than the diameter of the NCR, a box flange can not be built without falling outside of the NCR, i.e., into the gap under DNCR (see Fig. 11). Instead of rejecting the possibility of a flanged alternative, CYL considers the possibility of incrementing the cylinder's diameter in order to fit into the NCR. CYL in effect is saying to the physicist, "either give me more NCR (a smaller DNCR) to work with or I'll have to build a larger diameter shell in order to (even) consider the possibility of flanged design alternatives." CYL increments the cylinder radius to DNCR/2 and computes on this basis a new length of cylinder LC=LCY (ΔRF_{incr}), where ΔRF_{incr} now equals DNCR/2-RF. A "black mark" to the extent of $10 is also noted against this alternative in order to represent the engineer's concern over this state of affairs. The $10. represents a nominal design cost attached to finding ways of surmounting the

$\Delta NCR \geqslant P + LC$

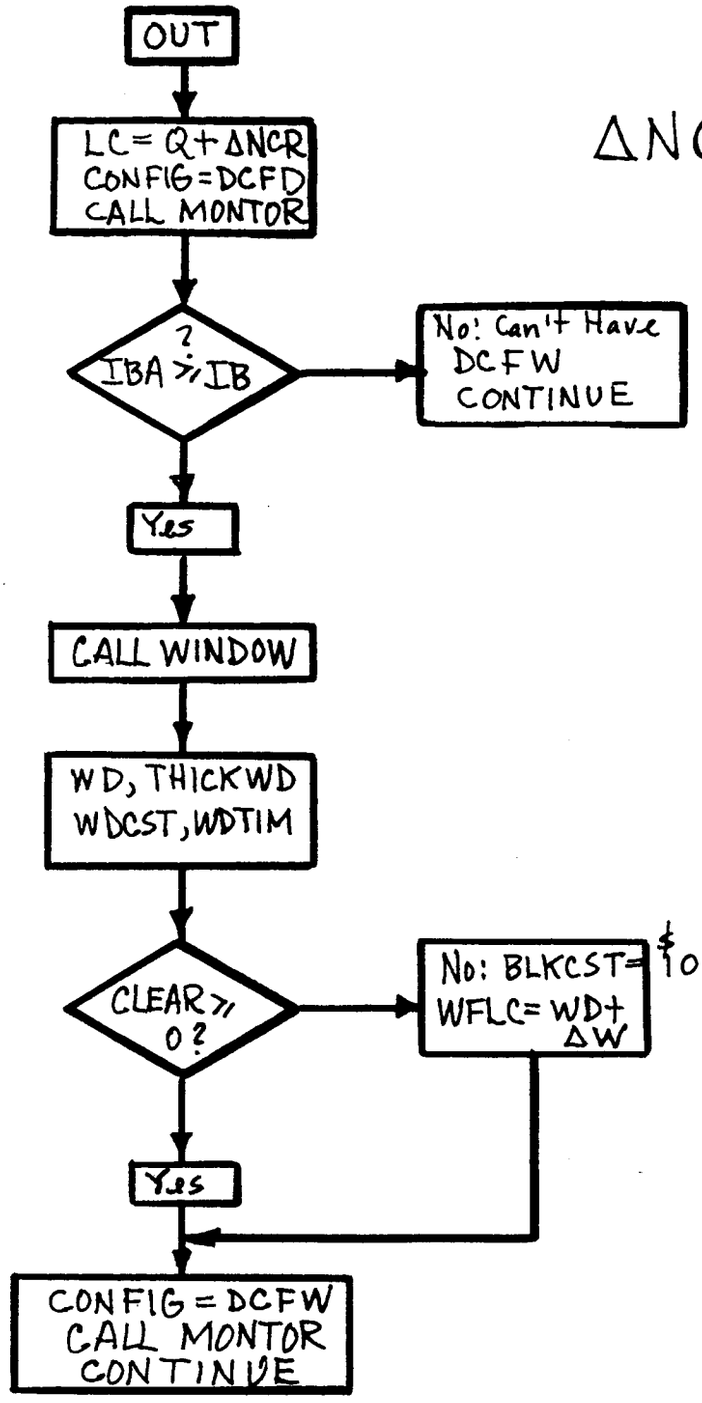

FIG. 15 CYL (cont.)

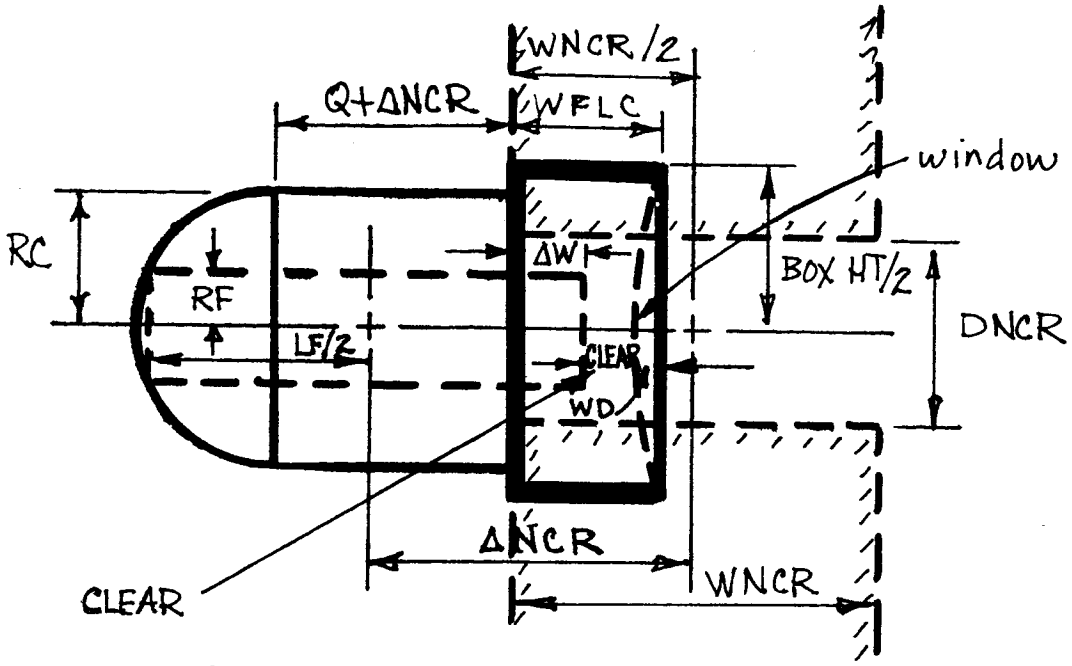

$$\Delta W = (LF + WNCR)/2 - \Delta NCR$$

$$CLEAR = WFLC - (WD + \Delta W)$$

DCFW

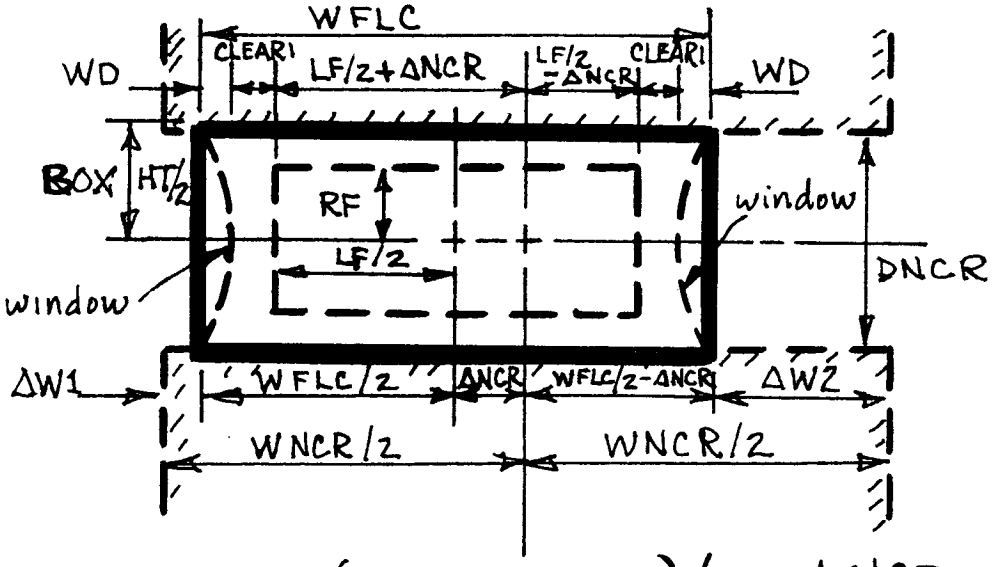

$$\Delta W1 = (WNCR - WFLC)/2 - \Delta NCR$$

$$\Delta W2 = (WNCR - WFLC)/2 + \Delta NCR$$

$$CLEAR1 = (WFLC - LF)/2 - WD$$

WFW CYL

FIG. 16

difficulty or of pointing the difficulty out to the physicist; it takes time and money to confer over design problems. Next, the width of box flange needed is computed and then compared with the WNCR available. If the WNCR is too small, CYL increments the WNCR to the WFLC required and adds an additional black mark or black cost (BLKCST) of $10 against the alternative. The question then asked is "where is the DCD located with respect to the NCR?" Based on the logic of Fig. 12, CYL proceeds accordingly on the basis of the answer to this question.

Figs. 15 and 16 consider the case of a cylinder which is OUT, while Figs. 16 and 17 consider the case of a cylinder which is IN. We present only these two cases as they are sufficient to illustrate the general features of CYL. Fig. 15 also assumes other features about the particular OUT case we have chosen to discuss. Fig. 16 shows the relative dimensions of the OUT case (the DCFW configuration) which Fig. 15 treats. The logic of Fig. 15 assumes that WNCR/2 is greater than or equal to WFLC and that $\Delta W \geq 0$. If these conditions do not hold, then the logic of Fig. 15 would have to be altered. The complete CYL subroutine listed in Appendix I is, of course, general; it includes all possibilities; i.e., OUT cases for WNCR/2 < WFLC as well. The first thing the OUT portion of CYL does is to set LC=Q+ΔNCR as shown. As previously discussed, this is the length for a cylinder extended to the NCR. CYL (or at least that portion represented in Fig. 15) next calls MONTOR, for once the extended length of cylinder is computed, the DCFD configuration has been created. (MONTOR does the detailed analysis of the design alternatives.) Now, the question becomes whether the possibility of a window alternative exists. If the expected nuclear beam intensity (IB) is greater than the allowable beam intensity (IBA) then the DCFW configuration is not possible, for the beam in operation would be strong enough to burn through a plastic window. If

a window is possible intensitywise, CYL calls the subroutine WINDOW (not shown) to check on the window's possibility geometrywise.

The subroutine WINDOW computes, as a function of the cylinder's radius, the necessary thickness of window required to withstand both the 150 psi internal and the 30 psi external design forces: THICKW = 0.006 RC.[3] Since a window is built up out of stock sheets of 0.014", 0.010", 0.0075", 0.005", 0.003", 0.001" (or at least these are the stock sheet sizes the program recognizes), WINDOW rounds off THICKW computed above to the nearest thousandth's of an inch and then computes the number of stock sheets required of a given size by determining the number of times the largest size (0.014") goes into THICKW, the number of times the next largest size (0.010") goes in, etc., until THICKW is expressed in stock sizes.

Thus, WINDOW computes, in addition to THICKW, the number of stock sheets required to build up any computed window thickness. WINDOW also computes the cost (WDCST) and time (WDTIM) involved in putting together a window; in addition, it computes the inward deflection (WD) of the window acting under the external vacuum load of 14.7 psi. In Fig. 16, the window is shown deflected inward as it would be under operating conditions. This brings us to the next question. Is the clearance (CLEAR) between the deflected window and the LH_2 flask greater than or equal to zero? If CLEAR is less than zero, the width of box flange (WFLC) is made

---

[3] Cf. Andrew Du Bois, "Strength of Mylar Diaphragms," LRL Engineering Note 3140-01 M219 (March, 1959), unpublished; and William Pope, "A Proposed Design Equation for Circular Mylar Windows," LRL Engineering Note 3140-01 M228 (August, 1959), unpublished. The technical references to this chapter, of which the references above are but two examples, constitute the "main" sources of technical data and design equations that the engineer uses for "cylindrical" and "spherical" pressure vessel design. For more general design problems pertaining to pressure vessels, the engineer has over 40 references that he consults. In addition, he continually adds to his list of references.

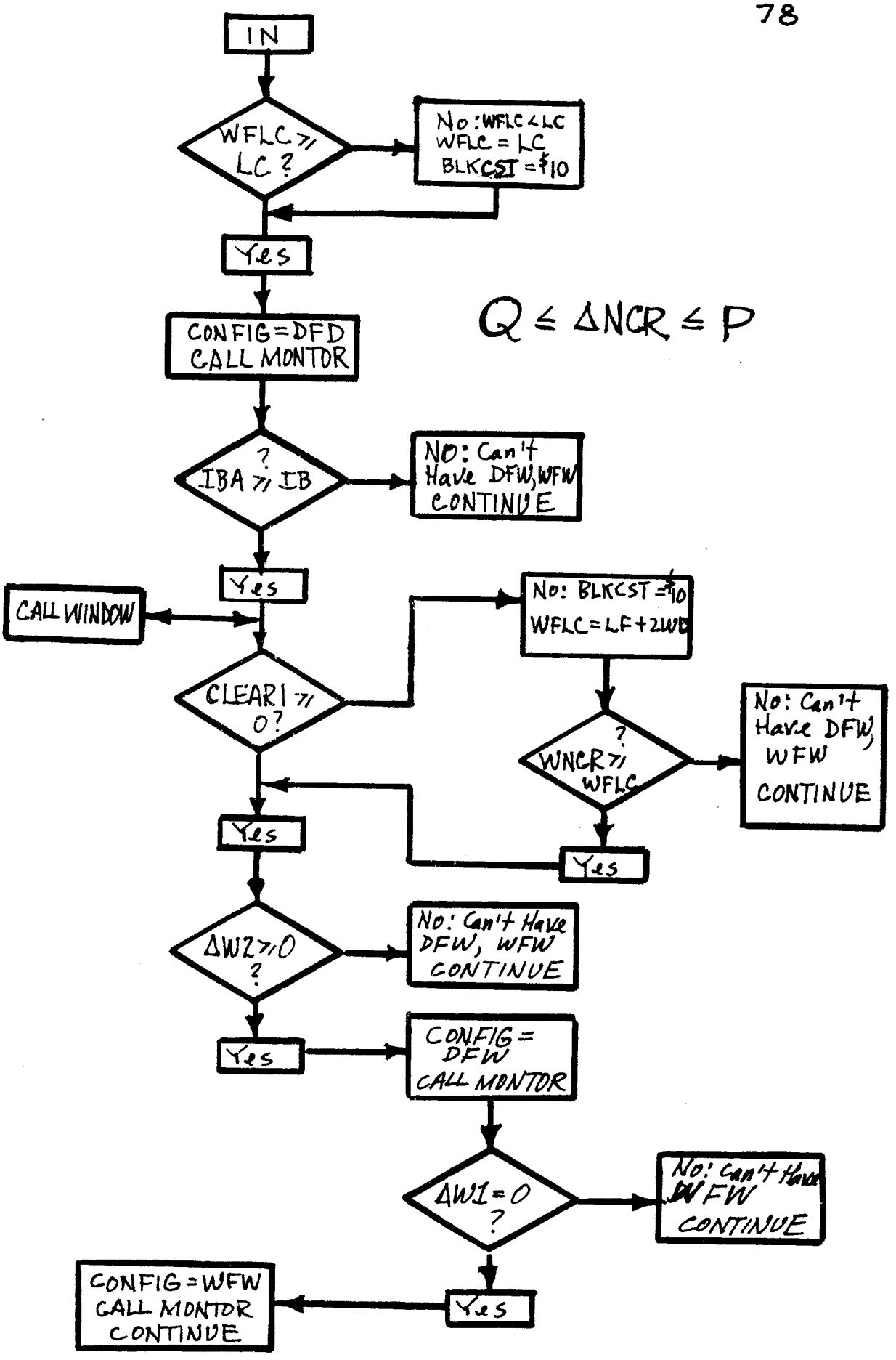

FIG. 17 CYL (cont.)

larger to accommodate the deflected window (WLFC=WD+ΔW), and another potential black cost of $10 against the alternative is noted. (Black costs are cumulative, since each alternative farther down the design tree essentially faces all the problems of the preceding alternatives.)

We do not discuss the IN (see Fig. 17) case in any great detail since the logic is only different in particular and not in principle to the OUT case. Whereas in the OUT case there was only the possibility for a window at the right end, in the IN case there is the possibility for a window at the left end as well. Essentially, what must be checked is whether there is enough WFLC within the WNCR to provide enough clearance (CLEAR1 $\geq$ 0) for a window at both ends. This means checking both ΔW2 and ΔW1 (see Fig. 16). If ΔW2 $\geq$ 0, then we can have at least the possibility of a DFW configuration in addition to the earlier DCD and DFD design alternatives. If ΔW1 as well is greater than or equal to zero, then the configuration WFWCYL is also possible. With this we end our brief description of CYL's structure.

We do not discuss the subroutine SPH since it essentially works like CYL. Figs. 18 and 19 merely summarize the kinds of sphere configurations that are possible. Suffice it to say that configuration SPHERE of Fig. 18 corresponds to configuration DCD of Fig. 13, SFS and SFS11 correspond to DCFD, SFW to DCFW and DFW, WFWSPH to WFWCYL, and SFS12 to DCFCD.

Fig. 20 gives the structure of MONTOR. MONTOR analyzes, in turn, each configuration as it is developed in CYL and SPH. In general, all the cylinder configurations are analyzed first and only then, the spheres. Furthermore, considering only the cylinders, all the minimum cylinder configurations are analyzed first and then the incremented cylinders afterwards. For example, consider a minimum cylinder which is OUT. The configurations analyzed in order of development would be a minimum DCD

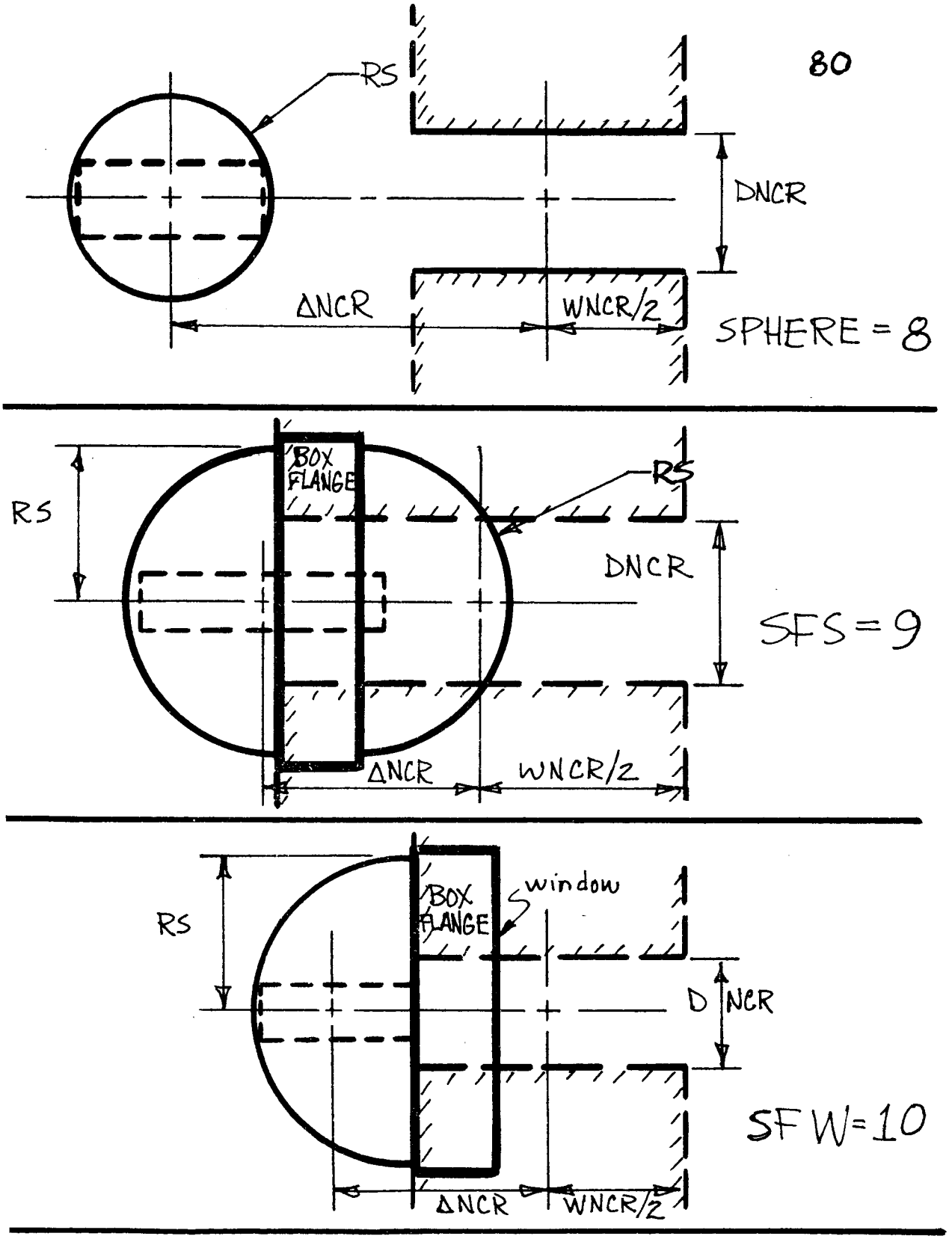

SPHERE CONFIGURATIONS

FIG. 18

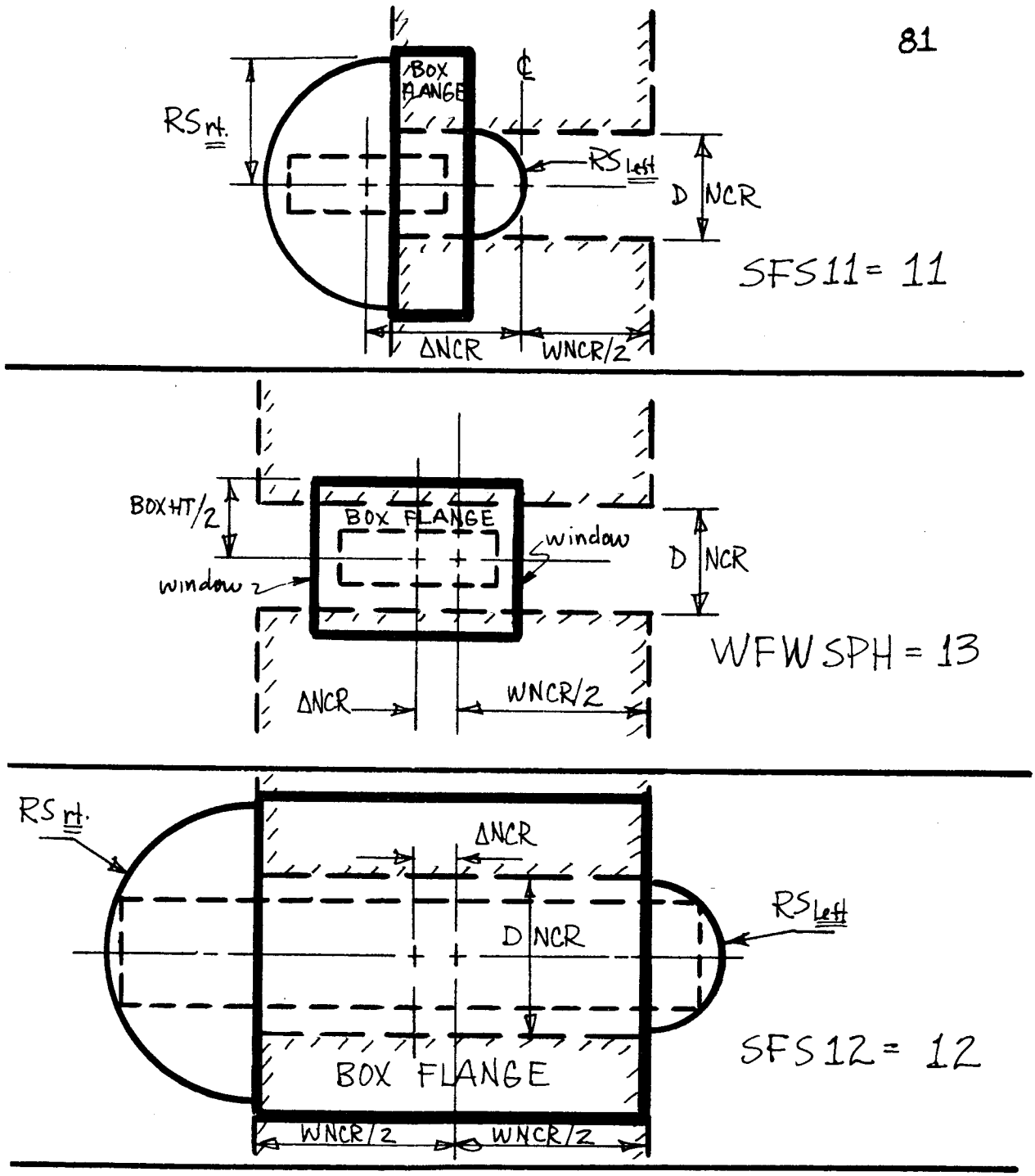

SPHERE CONFIGURATIONS

FIG. 19

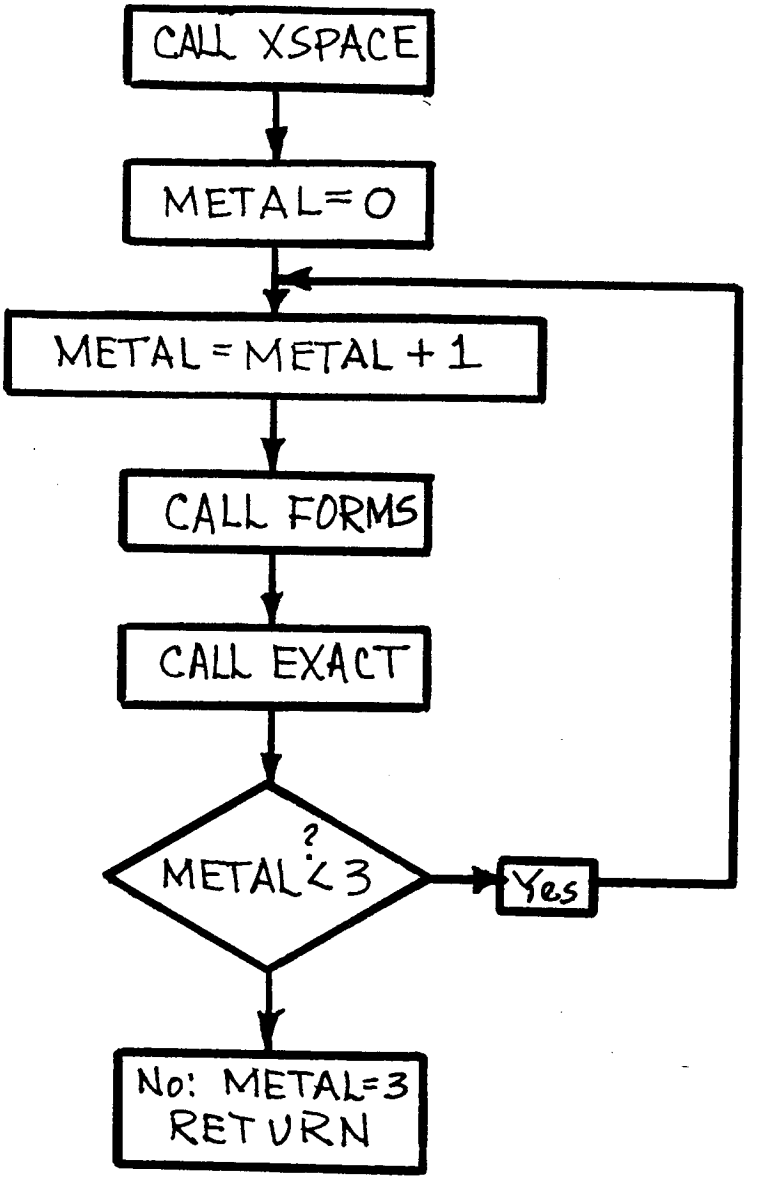

MONTOR

FIG. 20

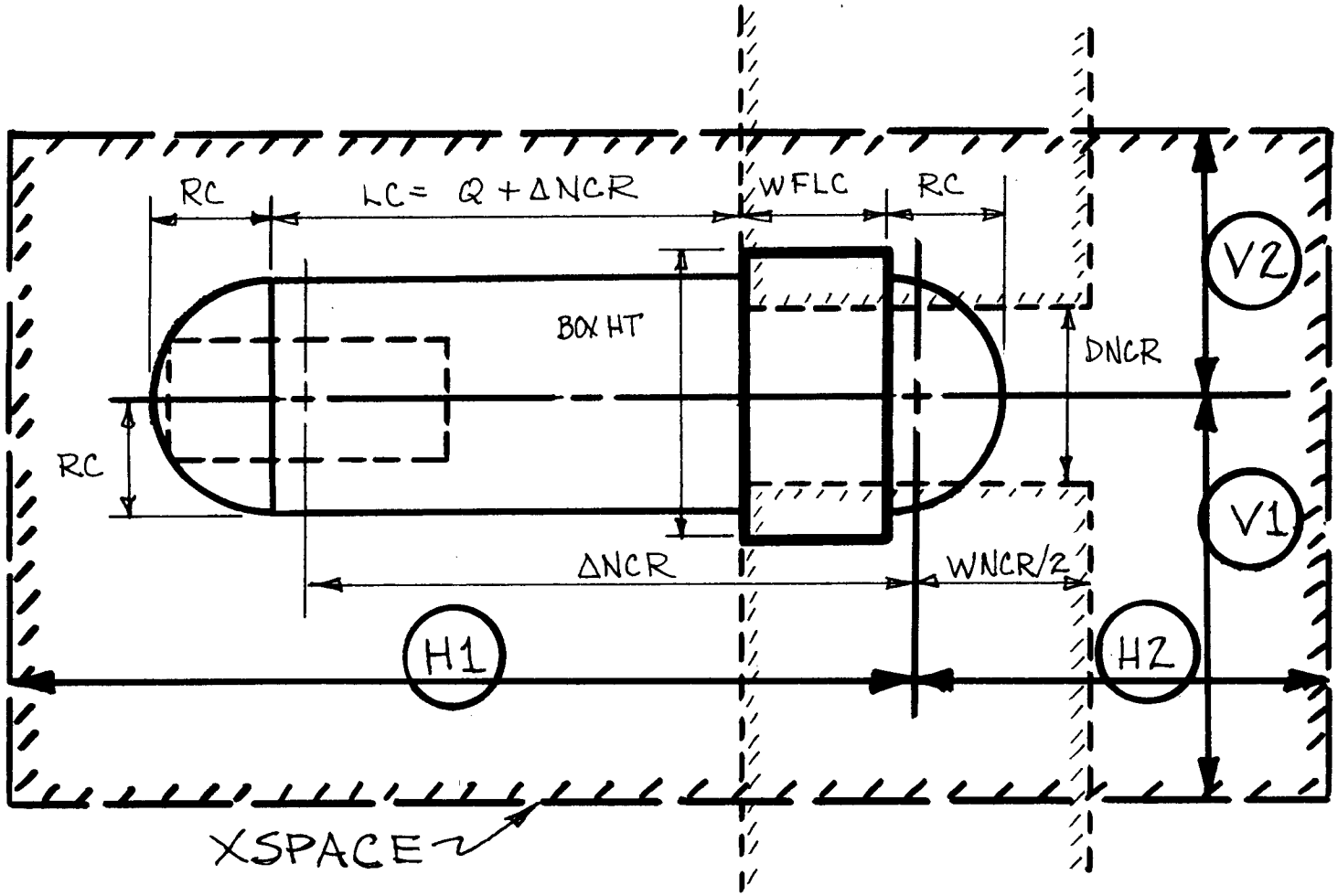

$\Delta H1 = H1 - [RC + (Q + \Delta NCR) + WNCR/2]$; $\Delta V1 = V1 - RC$

$\Delta H2 = H2 - [RC - (WNCR/2 - WFLC)]$; $\Delta V2 = V2 - RC$

FIG. 21

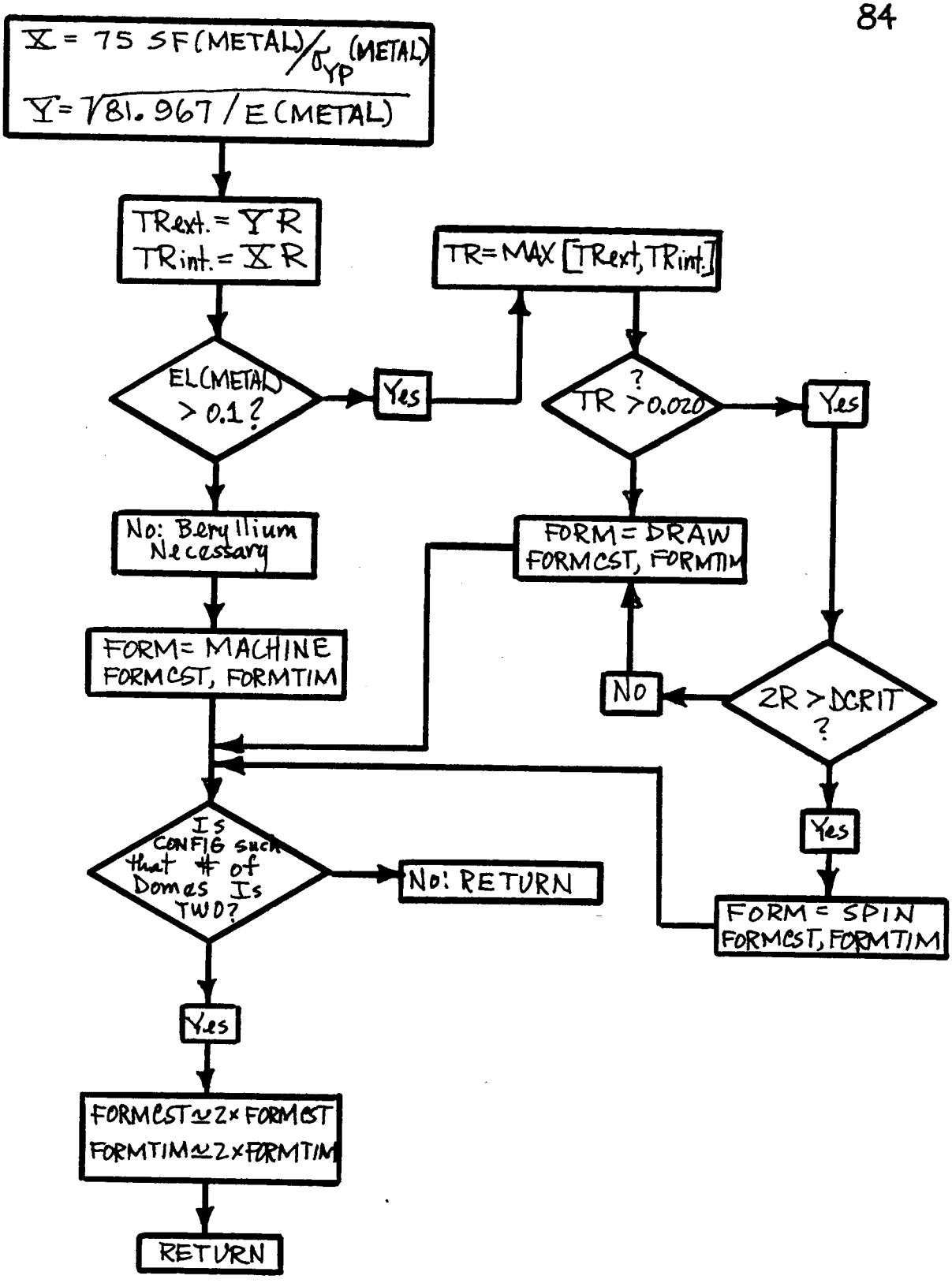
X = 75 SF(METAL)/σYP (METAL)
Y = √81.967 / E(METAL)
TRext. = YR
TRint. = XR
TR = MAX [TRext, TRint.]
EL(METAL) > 0.1 ?
Yes
TR > 0.020 ?
Yes
No: Beryllium Necessary
FORM = DRAW
FORMCST, FORMTIM
FORM = MACHINE
FORMCST, FORMTIM
NO
2R > DCRIT ?
Yes
Is CONFIG such that # of Domes Is TWO?
No: RETURN
FORM = SPIN
FORMCST, FORMTIM
Yes
FORMCST ≃ 2 × FORMCST
FORMTIM ≃ 2 × FORMTIM
RETURN

FIG. 22 FORMS

configuration, a minimum DCFD, and a minimum DCFW (if the latter is at all possible). MONTOR would then analyze all the incremented cylindrical configurations, and only after all the cylinders were finished, the spheres, starting with the minimum spheres first again.

For each alternative, MONTOR first calls XSPACE, the subroutine which analyzes how well a particular alternative fits within the over-all external space allotted to the design in general. H1, H2, V1, and V2 define the space the physicist has allotted to the engineer in which to build his pressure vessel. Fig. 21 illustrates for the configuration DCFD the kind of computations XSPACE performs. Not only are ΔH1, ΔH2, ΔV1, and ΔV2 computed, but in addition, for every one of them which is negative (e.g., if $\Delta H2 < 0$) another black cost of $10 is noted against that design alternative. But more important than calling XSPACE is MONTOR's calling of the subroutines FORMS and EXACT. MONTOR's most important function is to call these subroutines three times, once for each of the metals out of which a configuration can be built. From Chapter II, the metals considered are 6061 Al, 300 stainless steel, and Be. A configuration like DCFW would be analyzed in turn as made from Al, then stainless, and finally Be.

FORMS performs two major functions: (1) it provides a preliminary estimate of the required design thickness for the hemispherical ends of the cylinder and sphere configurations, and (2) on the basis of those preliminary estimates and on the ductility [EL(METAL)] of the particular metal under consideration, FORMS (see Fig. 22) decides on the method of manufacturing the hemispherical domes. FORMS gets its preliminary thickness estimates from an elementary membrane analysis and a formula based on a not so elementary buckling analysis of spheres. For a thin-walled spherical

pressure vessel, it can be shown that a membrane analysis yields the following expression: $T = PxR/2\sigma$, where $\sigma \equiv$ stress in the pressure vessel walls for a vessel of thickness, T, and radius, R, under an internal pressure load of P.[4] In the program, this expression becomes TR_{int} = PxRxSF(METAL/2σ_{YP}(METAL), where $TR_{int} \equiv$ the wall thickness required for a vessel of radius, R (i.e., RC or RS), SF(METAL) $\equiv$ the safety-factor the engineer uses in working with a particular metal (the safety-factor expresses, amongst other things, the engineer's familiarity, confidence, and experience in using a particular design metal; the lower his confidence, the higher the safety-factor--the safety-factor is commonly called the ignorance factor); finally, σ_{YP}(METAL) $\equiv$ the metal's yield strength. FORMS embodies this expression for P = 150 psi. TR_{ext} is the formula for the pressure vessel's thickness required for the external buckling load: $TR_{ext} = [(\sqrt{P/(0.366E(METAL))})R]$, which for P = 30 psi becomes $[(\sqrt{81.967/E(METAL)})R]$.[5]

---

[4] Cf. E. P. Popov, Mechanics of Materials, pp. 222-225.

[5] This formula was originally derived by von Karman and Tsien. Cf. Theodore von Karman and Hsue-Shen Tsien, "The Buckling of Spherical Shells by External Pressure," Journal of Aeronautical Science, Vol. 7 (December, 1939), pp. 43-50; and Theodore von Karman, H. S. Tsien, and L. G. Dunn, "The Influence of Curvature on the Buckling Characteristics of Structures," Journal of Aeronautical Science, Vol. 7 (May, 1940), pp. 276-289. See also Emmett A. Witmer, Collected Papers on the Instability of Shell Structures, NASA Technical Note D1510, 1962; and Garth E. Cook, "A Comparison to Theory of Observed Stability Failure of Thin Spherical Shells," UCRL Report 8403, University of California Lawrence Radiation Laboratory, Berkeley. Both Witmer and Cook experimentally "confirm" the equation originally developed by von Karman and Tsien. Cook's data (p. 9, Table I of the reference cited above) mainly confirms (for 3 out of 3 test cases) the analysis for partially spherical vessels (not full hemispherical domes) which were spun and then machined. Cook shows the formula to be under conservative (i.e., not conservative) for spun domes in 3 out of 8 test cases.

Based on the ductility of a particular metal (Al, stainless steel, or Be) expressed in terms of its elongation [EL (METAL)] and on the greater of the two preliminary design thicknesses ($TR = MAX[TR_{ext}, TR_{int}]$), FORMS decides on the method of manufacturing a hemispherical dome (either MACHINE, DRAW or SPIN). Since Fig. 22 is pretty much self-explanatory we stress only two further points: (1) whether a dome is "spun" or not depends upon some critical diameter of dome (DCRIT), i.e., if a dome is too large (2R>DCRIT) then it can not be "drawn"; the size of the dome exceeds the Lab's facilities for making "drawn" domes. (2) FORMS also computes the cost (FORMCST) and time (FORMTIM) of making a dome; these costs are "approximately" doubled if a configuration like DCD, for example, requires two domes. The cost is not exactly double though for many of the operations and jigs and fixtures necessary for making one dome do not need to be duplicated from scratch when making the other dome.

We now turn to the subroutine EXACT, the largest subroutine of the whole program. Associated with each manufacturing process of FORMS is a particular thickness distribution. Fig. 23 shows the variation in thickness for hemispherical domes. Fig. 23 also gives the more detailed stress analysis relationships which EXACT assumes. For example,let us examine the SPIN relationships. $T_{2I} = TR_{int} \times NTNSTY$ and $T_{2E} = TR_{ext}$ reflect the fact that EXACT designs for the weakest link in the chain. For a spun dome, since the base thickness (t_2) is thinner than the crown (t_1), it is the base which must be designed to resist the design loads. In addition NTNSTY reflects the fact that the simple membrane analysis thickness (TR_{int}) must be increased to take care of the stress concentration developed where a hemisphere and a cylinder are joined.[6] And finally, $t_1 = 1.3t_2$

---

[6]Since the cylinder is subject to the expression TR_{int}=PxRxSF(METAL/ σ_{YP}(METAL), while the sphere is subject to the expression TR_{int}=PRSF(METAL)/ $2\sigma_{YP}$(METAL), there is a stress discontinuity at the juncture. Under the action of internal pressure, the cylinder tends to expand outwardly (circum-

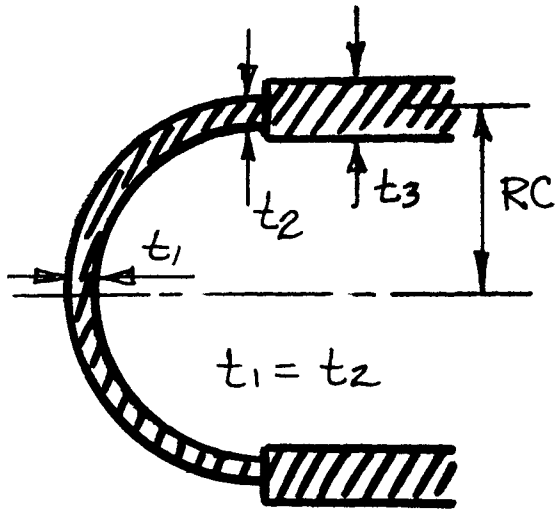

MACHINE:

$T_{1I} = TR_{int.}\ NTNSTY$

$T_{1E} = TR_{ext.}$

$T_{2I} = T_{1I}$

$T_{2E} = T_{1E}$

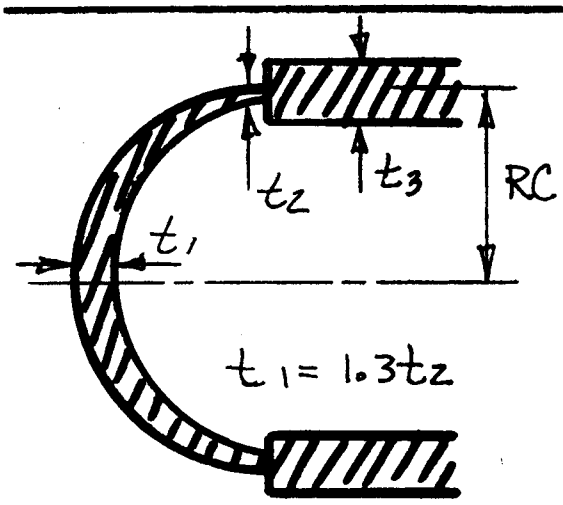

SPIN:

$T_{2I} = TR_{int.}\ NTNSTY$

$T_{2E} = TR_{ext.}$

$T_{1I} = 1.3\ T_{2I}$

$T_{1E} = 1.3\ T_{2E}$

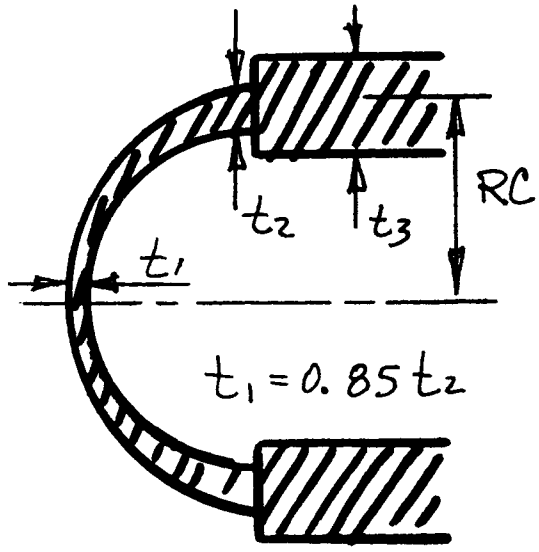

DRAW:

$T_{1I} = TR_{int.}\ NTNSTY$

$T_{1E} = TR_{ext.}$

$T_{2I} = T_{1I} / 0.85$

$T_{2E} = T_{1E} / 0.85$

FIG. 23

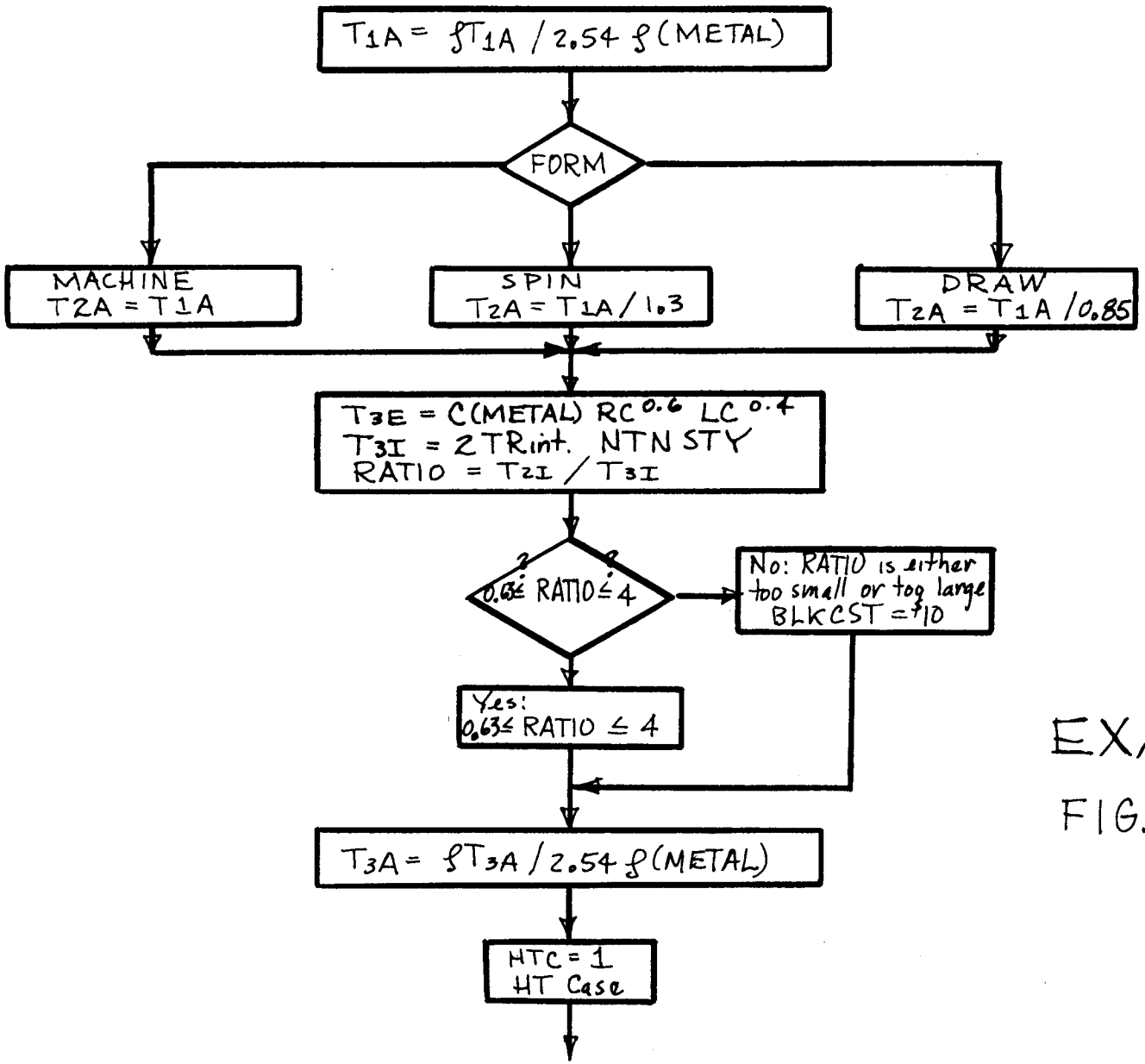
T1A = ρT1A / 2.54 ρ(METAL)
FORM
MACHINE
T2A = T1A
SPIN
T2A = T1A / 1.3
DRAW
T2A = T1A / 0.85
T3E = C(METAL) RC 0.6 LC 0.4
T3I = 2TRint. NTN STY
RATIO = T2I / T3I
0.63 ≤ RATIO ≤ 4
No: RATIO is either too small or too large
BLKCST = *10
Yes:
0.63 ≤ RATIO ≤ 4
T3A = ρT3A / 2.54 ρ(METAL)
HTC = 1
HT Case

EXACT

FIG. 24

gives the thickness distribution over the hemisphere due to spinning.

EXACT (Fig. 24) starts by computing T_{1A}, the allowable design thickness. The allowable design thickness is, in essence, the least upper bound the physicist can tolerate; any thickness greater than T_{1A} exceeds the physicist's design specification. Next, depending on the manufacturing form, EXACT computes the allowable design thickness on T_2, i.e., T_{2A}. At this point, although it is not shown on Fig. 24, EXACT computes the relationships of Fig. 23. The thicknesses required for internal[7] and external[8] loads on the cylinder are computed next, and depending on the

---

ferentially) more than the sphere. As a result, local shear and bending forces develop. If one made the cylinder thickness equal to twice the sphere's thickness, then no shear or bending forces would be developed due to the action of internal pressure alone. Shear forces and bending moments are not precluded by the action of whatever external pressure loads are acting on the vessel. Cf. Popov, op. cit., pp. 225-227.

[7]The program assumes that a constant stress concentration factor can be applied in the analysis. In reality, the stress concentration factor is a complicated function of the RATIO T_{2I}/T_{3I}. Cf. H. Kraus, G. G. Bilodeau, and B. F. Langer, "Stresses in Thin-Walled Pressure Vessels with Ellipsoidal Heads," Paper #60 - SA - 12, Trans. ASME, Vol. 12 (1960), pp. 1-12. The Kraus, Bilodeau, and Langer paper allows one to determine the stress concentration factor from graphs which represent a computer solution of the Love-Meissner equations (as given in the paper). The engineer has determined that a stress concentration factor (NTNSTY) of 1.1 is good down to a RATIO of 0.63 provided $2RC/T_{3I} \geq 100$ and $2.0 \geq RATIO \geq 0.63$ both hold. The program extends the upper RATIO limit of 2 to 4 on the basis of engineer's calculations. It seems that the data in the Kraus, Bilodeau, and Langer paper can be extrapolated up to 4 in order for the program to handle a larger number of analyses without having the program at the same time become under conservative.

[8]$T_{3E} = C(METAL)\ RC^{0.6}\ LC^{0.4}$ comes from Raymond J. Roark, Formulas for Stress and Strain, p. 318. There the formula reads P' (Buckling pressure) =

$$\frac{0.807\ E(METAL)\ T_{3E}^2}{LCxRC} \sqrt[4]{\left[\frac{1}{1 - \mu(METAL)}\right]^3 \frac{T_{3E}^2}{RC^2}}$$

where $\mu(METAL) \equiv$ poisson's ratio. For P' = 30psi, this formula can be rearranged to read as it is shown in Fig. 18. Harold E. Saunders, and Dwight F. Windenburg, "Strength of Thin Cylindrical Shells under External Pressure," Trans. ASME, Vol. 53 (1931) "confirm" Roark's equation (case 31). The engineer has also "confirmed" the equation with 6 to 8 buckled cylinders of a limited length to diameter test series. The advantage of the Saunders and Windenburg paper to the engineer is that it reduces the complicated Roark equation to graphs.

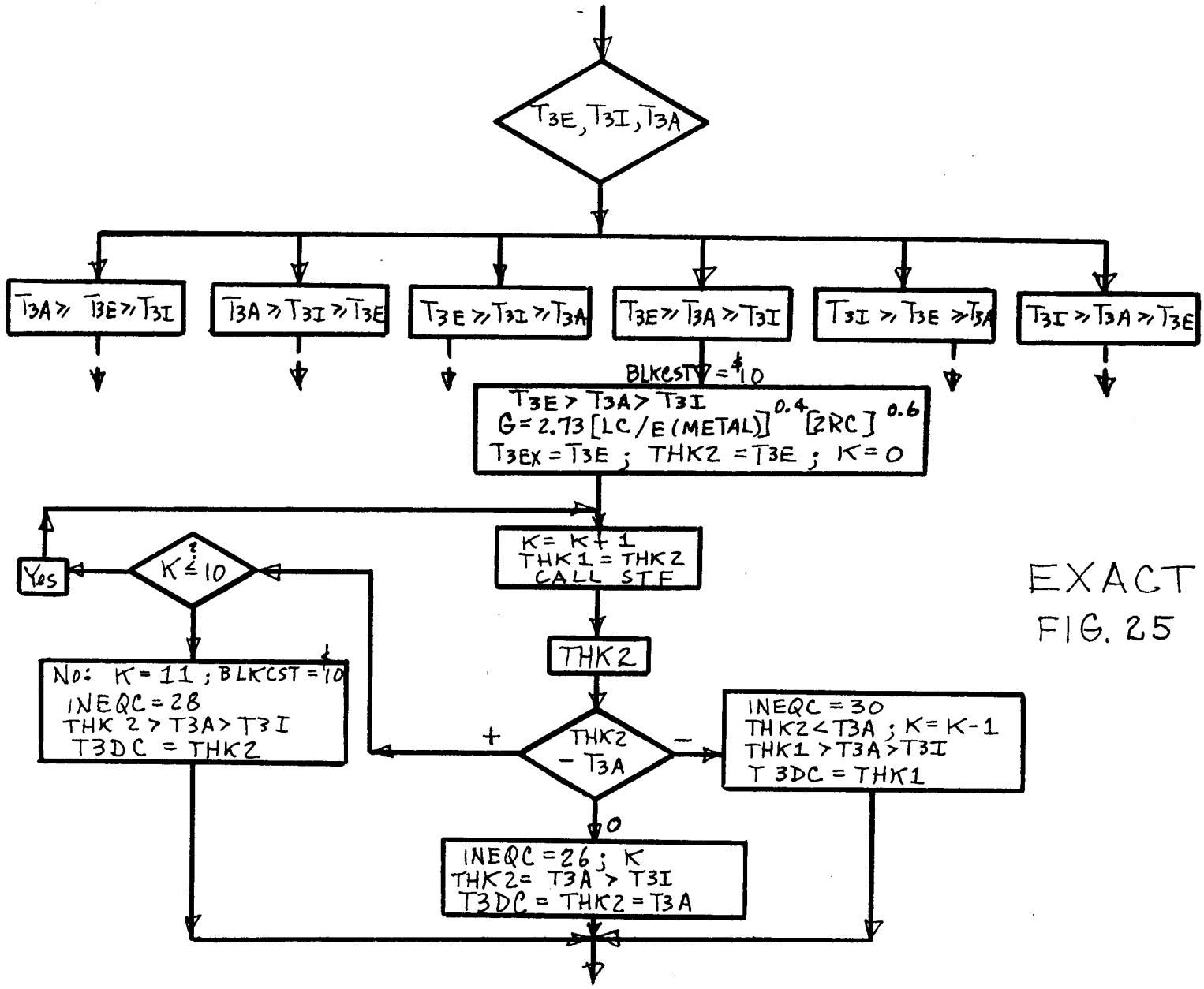
T3E, T3I, T3A
T3A ≥ T3E ≥ T3I
T3A ≥ T3I ≥ T3E
T3E ≥ T3I ≥ T3A
T3E ≥ T3A ≥ T3I
T3I ≥ T3E ≥ T3A
T3I ≥ T3A ≥ T3E
BLKCST = $10
T3E > T3A > T3I
G = 2.73 [LC/E (METAL)]^0.4 [ZRC]^0.6
T3EX = T3E ; THK2 = T3E ; K = 0
K = K + 1
THK1 = THK2
CALL STF
THK2
THK2 − T3A
+
−
0
INEQC = 30
THK2 < T3A ; K = K − 1
THK1 > T3A > T3I
T 3DC = THK1
INEQC = 26 ; K
THK2 = T3A > T3I
T3DC = THK2 = T3A
K ≤ 10
Yes
No: K = 11 ; BLKCST = $10
INEQC = 28
THK 2 > T3A > T3I
T3DC = THK2

EXACT
FIG. 25

RATIO of the internal sphere thickness to the internal cylinder thickness where they are joined (T_{2I}/T_{3I}), a check is performed on the adequacy of the stress concentration factor (NTNSTY) assumed in the preceding analysis. Finally, the first page of EXACT's logic ends with the computation of T_{3A}, the cylinder's allowable thickness, and with the setting up of the forthcoming analysis by designating the case of a heat-treated (HTC = 1) cylinder.

The analysis starts (Fig. 25) with the determination of the relationship holding between T_{3E}, T_{3I}, and T_{3A}. Fig. 25 analyzes but one of the possible inequalities, the case where $T_{3E}>T_{3A}>T_{3I}$. Since T_{3E} already exceeds the allowable T_{3A}, a black cost of $10 is noted against the alternative. In addition, since T_{3E} <u>does</u> exceed T_{3A}, here is a case where the possibility exists for reducing the thickness required for a uniformly thick cylinder (i.e., T_{3E}) by adding stiffeners. Fig. 26 gives the computational details involved in adding stiffeners, and shows the difference between a stiffened and an unstiffened design, which we have been considering up to this point.[9] T_{3EX} is set equal to T_{3E} for purposes of preserving the initial unstiffened design thickness (what Fig. 26 labels as t_{3E}). K = 0 (the number of stiffeners) and THK2 (the stiffened cylinder thickness) = T_{3E} initialize the stiffener subroutine STF (not shown, but Fig. 26 represents the steps STF performs). The rest of Fig. 25 is devoted to asking how many stiffeners one can add to the cylinder in order to get T_{3E} to come as close as possible to T_{3A}. Starting with K = 0, EXACT assumes that at least one stiffener is possible (K = K + 1, which, if K = 0, becomes K = 1).

---

[9]Stiffeners are designed according to the Roark and Saunders and Windenburg analysis. I_{STF} is merely the moment of inertia of a ring plus 10%. The limits of applicability of the stiffener routine are the same as the limits of applicability of the Roark, Saunders and Windenburg equation, i.e., $0.5 \leq V(S) \leq 6$. The increase in I_{STF} by 10% is based on the findings of Saunders and Windenburg.

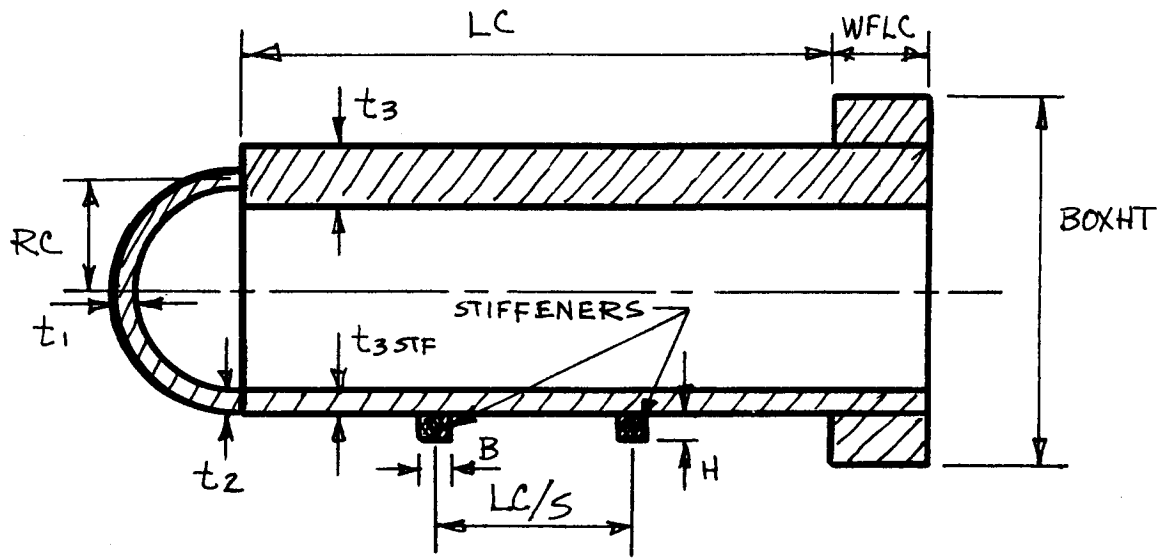

$K \equiv$ # of STIFFENERS ; $S \equiv$ # of REGIONS $= K+1$; $D \equiv 2RC$

$$t_{3\,STF} = THK2 = G/S^{0.4} = 2.73\left[LC/\langle E\,(METAL)\,S\rangle\right]^{0.4} D^{0.6}$$

$$I_{STF} = 1.38\,D^3\,LC/\langle S\,E(METAL)\rangle \;;\; H_{STF} = (36\,I_{STF})^{0.25} \;;$$

$$B_{STF} = H_{STF}/3$$

$$V(S) = LC/\langle DS\rangle \;;\; V_{INIT} = LC/D \text{ , i.e., for } S=1 \Rightarrow K=0$$

FIG. 26 STF

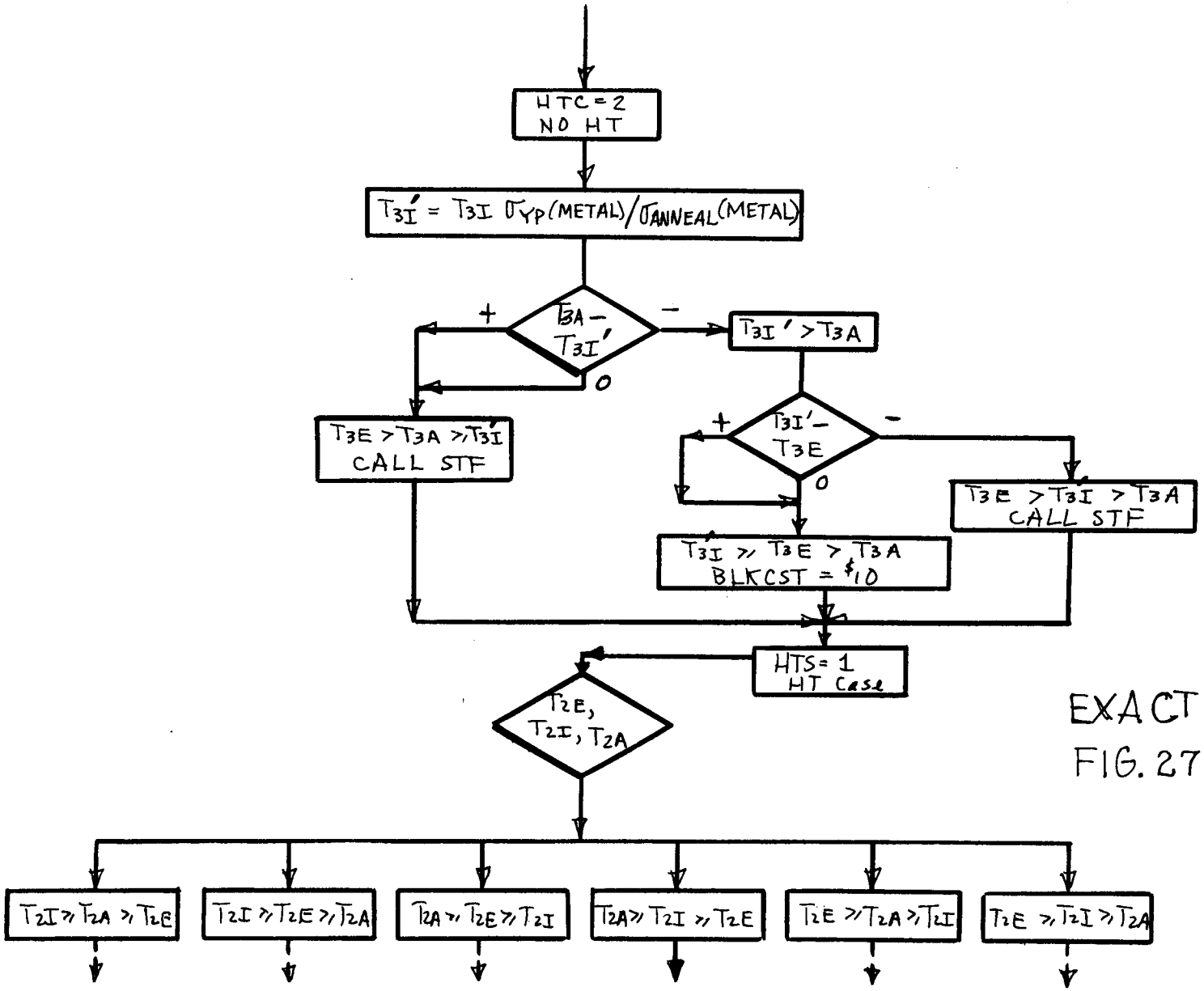
HTC = 2
NO HT
T3I' = T3I σYP(METAL)/σANNEAL(METAL)
T3A − T3I'
+
−
0
T3I' > T3A
T3E > T3A ≥ T3I'
CALL STF
T3I' − T3E
+
−
0
T3E > T3I' > T3A
CALL STF
T3I' ≥ T3E > T3A
BLKCST = $10
HTS = 1
HT Case
T2E, T2I, T2A
T2I ≥ T2A ≥ T2E
T2I ≥ T2E ≥ T2A
T2A ≥ T2E ≥ T2I
T2A ≥ T2I ≥ T2E
T2E ≥ T2A ≥ T2I
T2E ≥ T2I ≥ T2A

EXACT
FIG. 27

THK1 is set equal to THK2 which, before STF is called for the first time, equals T_{3E}. THK1 preserves the previously stiffened thickness (K) before each addition of a stiffener (K = K+1). STF is called, and a new THK2 is computed, which, for the first time through, equals THK2 for K=1. Next, the question is asked whether the new cylinder thickness equals, is less than, or is greater than T_{3A}. If THK2 > T_{3A}, then EXACT keeps on adding stiffeners up to a maximum of 11 or until THK2 $\leq T_{3A}$. If THK2 = T_{3A}, EXACT adds no more stiffeners, for the allowable has been attained. If THK2 < T_{3A}, EXACT has added too many stiffeners; it reverts to its previous stiffened thickness, THK1 (hence the necessity for saving the initial thickness). In any case, depending on the outcome, a cylinder design thickness, T3DC, is computed. The number of stiffeners (K) is noted, and in addition, an inequality number (INEQC) which tells the program user how the design thickness was computed. Each final design thickness calculation has its own inequality number uniquely identifying the route by which it was reached. In other words, the inequality numbers act as external identifying marks to the internal program logic.

Fig. 27 considers the same cylinder from the standpoint of no heat-treat, i.e., an annealed cylinder. Since heat-treating mainly affects the strength properties of the cylinder's material and not the cylinder's buckling behavior, only the internal thickness computation is corrected for the <u>removal</u> of heat-treat by multiplying by $\sigma_{YP}/\sigma_{ANNEAL}$ to give $T_{31}' = PRSF(METAL)/2\sigma_{ANNEAL}(METAL)$. The top part of Fig. 27 is mostly a replay of Fig. 25 with many of the steps left out, while the bottom part of Fig. 27 is more of the same only now with the hemisphere. Fig. 28 completes the hemisphere analysis. Essentially, the only difference between the exact analysis of a cylinder and that of a hemisphere is that the former has the possibility of stiffeners while the latter does not (or at least this program does not consider the latter possibility). The

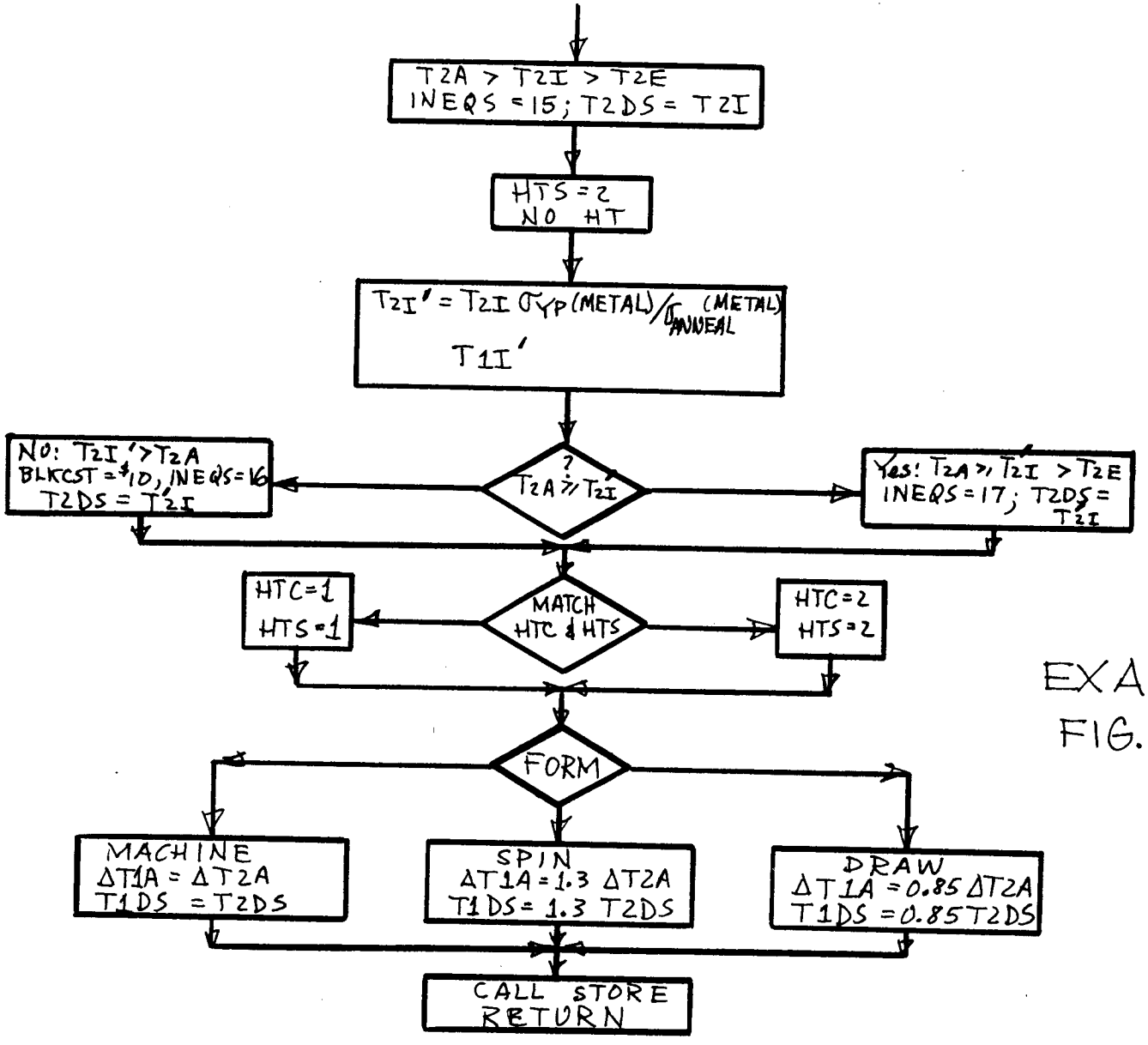
T2A > T2I > T2E
INEQS = 15; T2DS = T2I
HTS = 2
NO HT
T2I' = T2I σYP (METAL)/σANNEAL (METAL)
T1I'
NO: T2I' > T2A
BLKCST = $10, INEQS = 16
T2DS = T'2I
T2A ≥ T2I'
Yes: T2A ≥ T2I > T2E
INEQS = 17; T2DS = T2I
HTC = 1
HTS = 1
MATCH HTC & HTS
HTC = 2
HTS = 2
FORM
MACHINE
ΔT1A = ΔT2A
T1DS = T2DS
SPIN
ΔT1A = 1.3 ΔT2A
T1DS = 1.3 T2DS
DRAW
ΔT1A = 0.85 ΔT2A
T1DS = 0.85 T2DS
CALL STORE
RETURN

EXACT
FIG. 28

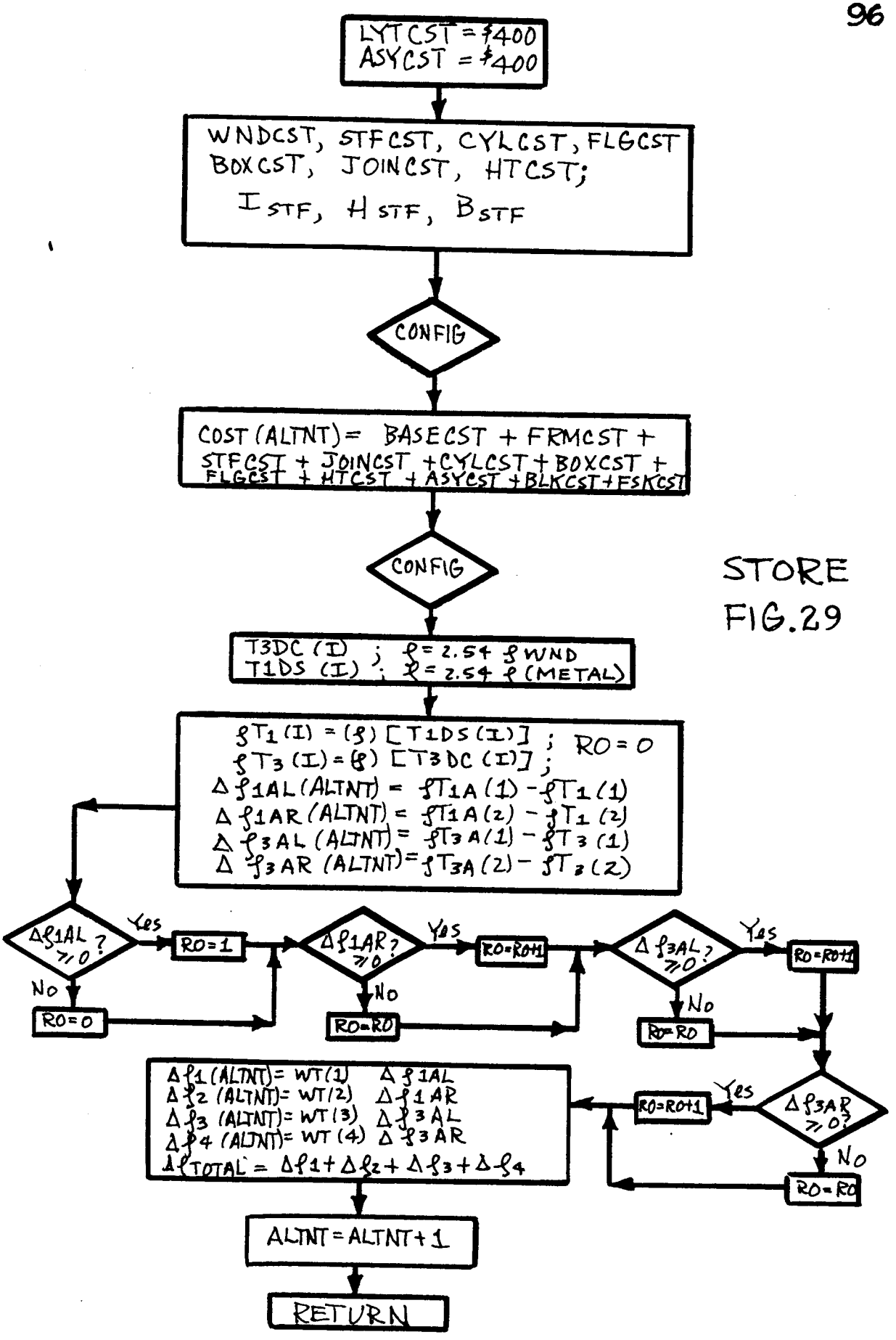
LYTCST = $400
ASYCST = $400
WNDCST, STFCST, CYLCST, FLGCST
BOXCST, JOINCST, HTCST;
I STF, H STF, B STF
CONFIG
COST (ALTNT) = BASECST + FRMCST +
STFCST + JOINCST + CYLCST + BOXCST +
FLGCST + HTCST + ASYCST + BLKCST + FSKCST
CONFIG
T3DC (I) ; ρ = 2.54 ρ WND
T1DS (I) ; ρ = 2.54 ρ (METAL)
ρT1 (I) = (ρ) [T1DS (I)] ; RO = 0
ρT3 (I) = (ρ) [T3DC (I)] ;
Δρ1AL (ALTNT) = ρT1A (1) − ρT1 (1)
Δρ1AR (ALTNT) = ρT1A (2) − ρT1 (2)
Δρ3AL (ALTNT) = ρT3A (1) − ρT3 (1)
Δρ3AR (ALTNT) = ρT3A (2) − ρT3 (2)
Δρ1AL ≥ 0 ?
Yes
RO = 1
No
RO = 0
Δρ1AR ≥ 0 ?
Yes
RO = RO+1
No
RO = RO
Δρ3AL ≥ 0 ?
Yes
RO = RO+1
No
RO = RO
Δρ3AR ≥ 0 ?
Yes
RO = RO+1
No
RO = RO
Δρ1 (ALTNT) = WT (1) Δρ1AL
Δρ2 (ALTNT) = WT (2) Δρ1AR
Δρ3 (ALTNT) = WT (3) Δρ3AL
Δρ4 (ALTNT) = WT (4) Δρ3AR
Δρ TOTAL = Δρ1 + Δρ2 + Δρ3 + Δρ4
ALTNT = ALTNT + 1
RETURN

STORE
FIG. 29

latter part of Fig. 28 matches heat-treated and non-heat-treated cylinders and spheres together. Finally, EXACT computes $\Delta T_{1A} = T_{1A}$ - T1DS, the difference between the allowable thickness of the sphere's crown and its design thicknesses; ΔT_{2A} is also computed (ΔT_{3A} having been computed earlier).

STORE (See Fig. 29) is the last subroutine whose structure we shall discuss in any detail. One of STORE's main functions is to compute the costs and times associated with the analysis, layout (drawing), design and construction of any design alternative. STORE begins by assigning a common cost of $400 layout and $400 assembly to each and every alternative. The common layout and assembly times are both 40 hours. (In general, but not without exceptions, time = 0.1 cost.) The window (WNDCST), stiffener (STFCST), cylinder (CYLCST), flange (FLGCST), box flange (BOXCST), join (JOINCST), and heat-treat (HTCST) are added to the total cost [COST(ALTNT)] of an alternative as they are appropriate to that alternative's configuration, e.g., a DCD configuration has no window and hence no associated window cost; an unstiffened cylinder would have no STFCST (but it could have a stiffener analysis cost; every time a cylinder is analyzed for stiffeners, $20 per analysis is computed, even if it turns out that stiffeners can't be used, e.g., even if stiffeners reduce the cylinder's thickness way below the allowable). As a further example of the kinds of costs (and indirectly, times), we illustrate BASECST = LYTCST (layout) + DTLCST (base detail): For configurations DCD and SPHERE, the DTLCST is $300; for DCFD, $400; for DCFW, $370; for DFD, SFS, and SFS11, $300; for DFW and SFW, $250; WFWCYL and WFWSPH, $200; and for DCFCD and SFS12, $450. Finally we note that every alternative contains a common flask cost (FSKCST).

NUMBER	CONFIG	PRIMARY 1	PRIMARY 2	SECONDARY 1	SECONDARY 2
1	DCD	T1DS (1)	T1DS (1)	T3DC (1)	T3DC (1)
2	DCFD	T1DS (1)	T1DS (1)	T3DC (1)	T2DS (1)
3	DCFW	T1DS (1)	THICKW $\times \rho_{WND}$	T3DC (1)	0
4	DCFCD	T1DS (1)	T1DS (2)	T3DC (1)	T3DC (2)
5	DFD	T1DS (1)	T1DS (1)	T2DS (1)	T2DS (1)
6	DFW	T1DS (1)	THICKW $\times \rho_{WND}$	T2DS (1)	0
7	WFWCYL	THICKW $\times \rho_{WND}$	THICKW $\times \rho_{WND}$	0	0
8	SPHERE	T1DS (1)	T1DS (1)	T2DS (1)	T2DS (1)
9	SFS	T1DS (1)	T1DS (1)	T2DS (1)	T2DS (1)
10	SFW	T1DS (1)	THICKW $\times \rho_{WND}$	T2DS (1)	0
11	SFS11	T1DS (1)	T1DS (2)	T2DS (1)	T2DS (2)
12	SFS12	T1DS (1)	T1DS (2)	T2DS (1)	T2DS (2)
13	WFWSPH	THICKW $\times \rho_{WND}$	THICKW $\times \rho_{WND}$	0	0
		ρT_1 (1) LEFT	ρT_1 (2) RIGHT	ρT_3 (1) LEFT	ρT_3 (2) RIGHT

S T A N D A R D

FIG. 30

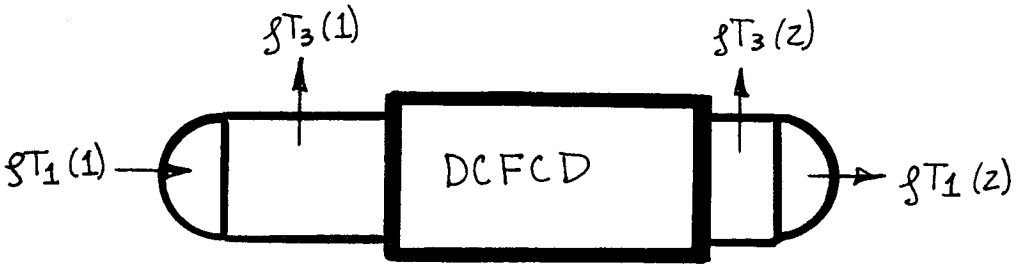

$\rho T_1(1) = \rho(\text{METAL})\ T1DS(1)$
$\rho T_1(2) = \rho(\text{METAL})\ T1DS(2)$

$\rho T_3(1) = \rho(\text{METAL})\ T3DC(1)$
$\rho T_3(2) = \rho(\text{METAL})\ T3DC(2)$

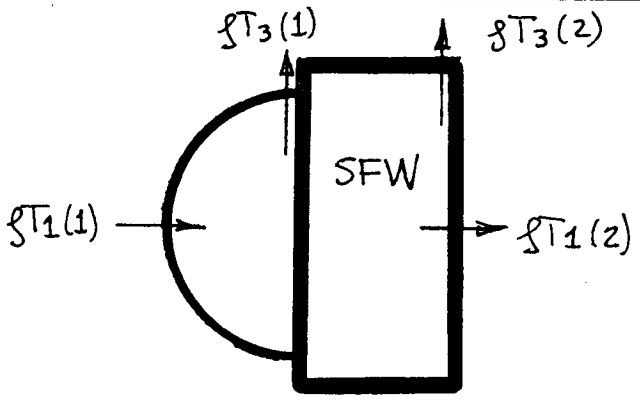

$\rho T_1(1) = \rho(\text{METAL})\ T1DS(1)$
$\rho T_1(2) = \rho_{WND}\ \text{THICK}\ W$

$\rho T_3(1) = \rho(\text{METAL})\ T2DS(1)$
$\rho T_3(2) = 0$

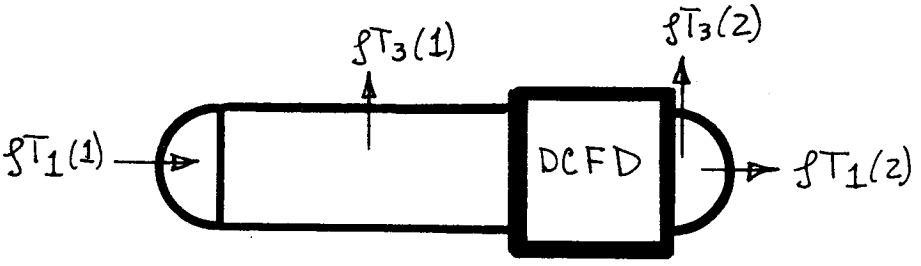

$\rho T_1(1) = \rho(\text{METAL})\ T1DS(1)$
$\rho T_1(2) = \rho(\text{METAL})\ T1DS(1)$

$\rho T_3(1) = \rho(\text{METAL})\ T3DC(1)$
$\rho T_3(2) = \rho(\text{METAL})\ T2DS(1)$

FIG. 31

STORE also computes many of the properties associated with an alternative that has stiffeners, their moment of inertia (I_{STF}), height (H_{STF}), width (B_{STF}), V(S=K+1), and V_{INIT}; V(S) tells how well the assumptions underlying the use of the stiffener formula for computing THK2 are met. If V is greater than 6 or less than 0.5, then this information tells the program user that he had better scrutinize carefully the program's stiffener analysis, since the assumptions underlying the analysis have been violated.

STORE's most important functions are (1) to compute the design ρT's from the design thicknesses and (2) to compare the design ρT's with the allowable ρT's. STORE begins by computing the proper ρ, T1DS(I), and T3DC(I), all of which depend upon the particular cylinder or sphere configuration (see Figs. 30 and 31). Fig. 31 which gives three examples of the kinds of computations involved illustrates the basic principle underlying the computational scheme of Fig. 30. We are not merely interested in computing the ρ's and design thicknesses; we are interested in computing them in a manner which allows us to compare the relative advantages of different design configurations. For example, consider an experiment where the nuclear stimuli (i.e., the incident beam particles) are shot in down the Left Primary direction [i.e., $\rho T_1(1)$]. ρT_1 then stands for a measure of the nuclear barrier which prevents the physicist from studying the LH_2 target particles directly; the physicist, we emphasize again, is interested in studying the reaction of the LH_2 particles to the nuclear stimuli and not the reaction of the vessel itself. Similarly, $\rho T_1(2)$ (the Right Primary direction), $\rho T_3(1)$ and $\rho T_3(2)$ (the Left and Right Secondary directions respectively) represent measures of the exit barriers, the barriers which prevent the physicist from measuring the LH_2 target particles' responses directly. Although the physicist will most

likely measure the responses at odd angles and in more than four positions, STORE's 2 Primary and 2 Secondary directions (at right angles to one another) represent a simple way to take account of the general input and output directions. Fig. 30 gives the general scheme for calculating Primary and Secondary ρ's and T's. In Fig. 30, $\rho = \rho(\text{METAL})$ except where a window is used.

In Fig. 31, configuration DCFCD represents the standard: the Primary ρT's are the ρT's of the spheres while the Secondary ρT's are those of the cylinders. The ρT's of DCFCD, in effect, define the directions in which the physicist will shoot in stimuli and measure responses out. DCFCD is the standard because it is the most general case. The barriers to the incident nuclear stimuli and responses are all different, i.e., $\rho T_1(1) \neq \rho T_1(2)$ and $\rho T_3(1) \neq \rho T_3(2)$, whereas this is not true of the other configurations of Fig. 30. The important point though is that the Primary and Secondary designations of all the configurations have not only been set up in an attempt to permit a comparison between diverse design alternatives; they have also been set up with the intent of representing realistically the ρT barriers the various configurations present. Consider the SFW configuration of Fig. 31; since the right-hand sphere has been replaced by a window, the window's ρT has also replaced the sphere's Right Primary ρT. Furthermore, whereas the SFW's Left Secondary ρT is the ρT of its sphere's base, SFW's Right Secondary ρT is the secondary ρT of the window, which, in order to compare a window effectively with other configurations, is set equal to zero.

Having computed $\rho T_1(I)$ and $\rho T_3(I)$ (I = 1 means Left; I = 2 means Right) on the basis of Fig. 30, STORE next computes the difference between the allowable ρT's and the design ρT's: $\Delta\rho 1AL$, $\Delta\rho 1AR$, $\Delta\rho 3AL$, and $\Delta\rho 3AR$. These differences measure how well each of the design ρT's in the different

directions is meeting the physicist's allowable ρT's, in effect, meeting the allowable nuclear barriers the physicist can tolerate and still get good physics data. STORE also counts the number of positive differences (a positive difference means the allowable ρT is greater than or equal to the design ρT); every time a difference is positive, the number RO is increased by 1 up to a maximum of 4 which would occur if all the differences were positive (i.e., if all the design T's met the physicist's allowables). In addition, STORE applies "weighting factors" [WT(1), WT(2), WT(3), and WT(4)] to the differences in order to get "weighted differences." These weighting factors measure how important it is to meet the allowable ρT's in the various directions. If the Left Secondary direction, for example, is more important for a particular physics experiment than the other three directions, then it might have <u>both</u> a low allowable ρT and a high weighting factor. Perhaps the justification for this can best be understood in terms of $\Delta\rho_{TOTAL}$:$\Delta\rho_{TOTAL}$, the sum of the weighted differences, represents the attempt to sum up in one number how well each design alternative is meeting the physicist's allowable ρT's. $\Delta\rho_{TOTAL}$ attempts to reduce the $\Delta\rho$ comparison of different design alternatives down to the comparison of a single number in terms of which the alternatives can be ranked. While the allowable ρT's themselves represent <u>what</u> ρT's the physicist deems important to meet, the weighting factors represent <u>how</u> important it is to meet them respectively.

The need for a weighting factor in addition to an allowable ρT hinges on the fact that $\Delta\rho_{TOTAL}$, like any single number which attempts to summarize many factors, is a subtle measure. If $\Delta\rho_{TOTAL}$ were merely the sum of the individual $\Delta\rho$'s unweighted (i.e., $\Delta\rho_{1AL}$, $\Delta\rho_{1AR}$, etc.), then each alternative which had the same $\Delta\rho_{TOTAL}$ would be equivalent to every

other, even though some alternatives might meet some individual $\Delta\rho$'s much more closely than others; only the final sum would be important, not the individual differences. The use of weighting factors attempts to correct this situation by making $\Delta\rho_{TOTAL}$ a much more sensitive measure to individual differences and thus making equivalance a more difficult feat to achieve by chance alone. Even if by chance two design alternatives might have the same <u>unweighted</u> sum of $\Delta\rho$'s, the use of weighting factors makes it even more unlikely that their weighted sums would be the same. Weighting factors express the fact that it is more important to meet the allowable ρT in some directions than it is in others. For example, suppose $\rho T_{3A}(1)$ is a more important design ρT than $\rho T_{1A}(2)$, say by a factor of 10, i.e., WT(2) = 1 and WT(3) = 10. Then, an alternative which only meets $\rho T_{3A}(1)$ one-tenth as well as an alternative which meets $\rho T_{1A}(2)$ by one is just as good: i.e., if $\Delta\rho_{3AL} = \rho T_{3A}(1) - \rho T_3(1) = 1/10$ and if $\Delta\rho_{1AR} = \rho T_{1A}(2) - \rho T_1(2) = 1$ [i.e., $\rho T_1(2)$ meets its allowable better than $\rho T_3(1)$] , then $WT(2)\Delta\rho_{1AR}$ still equals $WT(3)\Delta\rho_{3AL}$(10 x 1/10 = 1 x 1).

Finally, the last step STORE performs is the numbering of all the alternatives as they are processed (ALTNT = ALTNT + 1). If we recall that the minimum cylinders are processed first, incremented cylinders (if there are any) second, minimum spheres third, and incremented spheres (if there are any) last, then perhaps we can see that design alternative number 1 is a DCD heat-treated Al minimum cylinder, design alternative #2 is a non-heat-treated DCD Al minimum cylinder, design alternative #3 is a heat-treated DCD stainless steel minimum cylinder, etc.

RANK, the last major subroutine of the program, does just what its name implies. It ranks all the design alternatives with respect to each

of the parameters $\Delta\rho_{TOTAL}$, total cost, and total time. The first list, the ρT rank, ranks the alternatives by $\Delta\rho_{TOTAL}$ in terms of their RO numbers. All the RO = 4 designs are ranked first, the design having the highest $\Delta\rho_{TOTAL}$ being placed first. Next, the RO = 3 designs are ranked: then, the RO = 2; then RO = 1; and whatever RO = 0 designs remain. The designs are ranked within like RO number blocks in order to compare like things. The reason for this procedure is that the engineer is interested in the best design out of the group that meets all four allowables, then those that only meet three allowables, etc. Ranking the design alternatives in equal RO number blocks is also done for another reason. If all the design alternatives were lumped together and ranked only on the basis of $\Delta\rho_{TOTAL}$, then the ranking routine would be insensitive to the fact that an alternative which only meets the allowables on, say, two ρT's is <u>not</u> equivalent to an alternative which has the same $\Delta\rho_{TOTAL}$ but which meets all four allowables. In other words, an alternative which meets each allowable slightly [i.e., $\Delta\rho_1$, $\Delta\rho_2$, $\Delta\rho_3$, and $\Delta\rho_4$ all ≥ 0] may be preferable to an alternative which only meets two alternatives very well and two quite poorly [e.g., $\Delta\rho_1$, $\Delta\rho_2 >> 0$ and $\Delta\rho_3$, $\Delta\rho_4 < 0$ such that $\Delta\rho_{TOTAL} >> 0$].

RANK also ranks the alternative designs with respect to, first, their total <u>cost</u> of design and manufacture (maintenance costs are not included), and, second, their total <u>time</u> of design and manufacture. The lowest cost and the least time alternatives are ranked first in their respective lists. Since the logic for constructing ranking subroutines is well known, we present no outline of RANK's logic.

Our outline of DESIGN's structure is complete. At this time we summarize by merely listing the input variables DESIGN requires. (In Chapter V, when we test the program's validity, we will also present a typical program

output.) The input variables which DESIGN requires are the following:

RF, LF, ΔRF_{incr}, WNCR, DNCR, IB, IBA, H1, H2, V1, V2, E(METAL), σ_{YP}(METAL), σ_{ANNEAL}(METAL), SF(METAL), C(METAL), EL(METAL), ρ(METAL), NTNSTY, DCRIT, WT(1), WT(2), WT(3), WT(4), ρ_{WND}, $\rho T_{1A}(1)$, $\rho T_{1A}(2)$, $\rho T_{3A}(1)$, and $\rho T_{3A}(2)$.

At this point, we can raise in a more precise manner some of our previous concerns. In Chapters I and II, we repeatedly raised the question, "who is it that defines the problem?" Here, the question has become (i.e., assuming that the program to begin with is a good representation of the design process once the input variables have been given), "Who is it that gives the input variables?" Unless the physicist specifies what he wants, then it is the engineer who has to define the problem by assuming the values of many of the input variables. For instance, the physicist's prescription to make the vessel "as thin as possible" really begs the question, or at least, defers it to the engineer. Thin in what direction? Equally thin in all directions? In other words, what allowable ρT's and weighting factors does the physicist wish the engineer to use? It would seem that something which is important enough to demand is important enough to define more precisely. But, on the other hand, as Chapter II also pointed out, it does not behoove the physicist to over define his input variables or design requirements; it does not behoove either the physicist or the engineer to be overly rigid about the values of certain variables--unless, of course, either the physicist or the engineer is willing to pay a premium in time and money for getting a certain design (and only that design). The point is, as the program dramatically shows, that there are many design alternatives each possessing its own advantages. Again, the moral is

TOTAL DESIGN ALTERNATIVES

	OUT = 18	OUT- IN = 18	IN = 19	OUT- IN-OUT = 12
(C=2)+(S=1) = 3	54	54	57	36
(C=1)+(S=1) = 2	36	36	38	24
(C=1)+(S=2) = 3	54	54	57	36
(C=0)+(S=1) = 1	18	18	19	12
(C=0)+(S=2) = 2	36	36	38	24

ALTERNATIVES PER CONFIGURATION

	CYLINDERS CONFIG x METAL x HT	SPHERES CONFIG x METAL x HT
OUT	DCD DCFD x 3 x 2 = 18 DCFW	SPHERE SFS (SFS11) x 3 x 2 = 18 SFW
OUT-IN	DCD DCFD x 3 x 2 = 18 DCFW	SPHERE SFS (SFS11) x 3 x 2 = 18 SFW
IN	DCD DFD } x 3 x 2 DFW } + = 19 WFWCYL x 1	SPHERE SFS } x 3 x 2 SFW } + = 19 WFWSPH x 1
OUT-IN-OUT	DCD DCFCD x 3 x 2 = 12	SPHERE SFS 12 x 3 x 2 = 12

FIG. 32

that the input variables can not be effectively defined independently of an understanding of the design process of the engineer and of the physicist. And a crucial part, if not the most crucial part, of that process which the program does not represent is how the input is defined. We will illustrate these points again when in Chapter V we compare the program's behavior with that of the engineer himself. We will indicate the typical kinds of variables the engineer seems to define and those which the physicist defines.

Before we leave this chapter we ought to clarify a point made in the preceding paragraph. Namely, just how many alternative designs does the program construct? The answer starts with an inspection of Fig. 9. As an example we consider the case where C=2, S=1. We also assume for simplicity's sake that both the cylinders, minimum and incremented, are OUT (see Fig. 22). Then, for both cylinders, DCD, DCFD, and DCFW are possible configurations. Next, all three configurations can be built from three possible metals, each of these metals can either be heat-treated or not. Thus, there are 2(C=2) x 3(configurations) x 3(metals) x 2(heat-treat states) = 36 cylindrical design alternatives. In addition, we also assume that the minimum sphere is OUT as well (generally, if the cylinder is OUT, then so is the sphere; this also holds for the other designations, i.e., IN, IN-OUT, etc.). If the sphere is OUT, then SPHERE, SFS, and SFW are possible configurations. (Under certain circumstances SFS11 replaces SFS as a configuration.) Each of these configurations can also be built from three metals, and, again, each metal can be either heat-treated or not. Thus, there are 1(S=1) x 3(configurations) x 3(metals) x 2(heat-treat states) = 18 spherical design alternatives. Altogether there are 54 alternatives. Fig. 32 gives the number of alternatives for the other conditions. The OUT-IN, IN, and OUT-IN-OUT cases are computed in a similar

manner to the OUT example presented here. The only exception is a partial exception; the WFWCYL and WFWSPH configurations of the IN case are only made from one metal, and that one metal is not heat-treated. WFWCYL and WFWSPH are really neither a cylinder nor a sphere; they are box-flange alternatives which merely happen to have been reached by way of CYL and SPH respectively. If one can use a massive box-flange to begin with, generally one doesn't make it any less massive by using one material over another, and presumably, one doesn't care. As a result, for the IN case there are only 19 alternatives instead of the 24 that would be possible if WFWCYL and WFWSPH were both made from three metals in two heat-treat states.

The large number of design alternatives that the program constructs provides an interesting commentary in itself on the kind of understanding that the engineer has of the physicist's role. Originally, the intent of this study was to write a general program which would simulate the development of the final two or three design alternatives which the engineer considers in any particular design problem; the intent was not to simulate, as the program presently does, the entire design space itself. Our intent, in other words, was to go farther in programming the design process than we have been able to do. Or, to put the matter differently, DESIGN lacks heuristics which are sufficiently strong enough to reduce the design space down to the final alternatives the engineer presents to the physicist for his final consideration. The reason for this lies with the engineer's limited conception of the physicist's role. The engineer does not feel that he can give heuristics which are general enough to characterize all of the different subsets of design proposals that any particular physicist might be interested in. <u>It is easier for the engineer to describe his whole design space in general than to describe the</u>

multitudinous subsets of the space that different physics experiments involve. It is not that the engineer can't formulate any heuristics which characterize a physicist's needs. On the contrary, the engineer seems able to formulate too many. The trouble is that each heuristic, either separately or in conjunction with others, seems to be overly restrictive so that the adoption of any set of additional heuristics threatens to exclude whole classes of design alternatives (e.g., SFS's) that are of general potential interest to particular physicists.

The point is that stronger design heuristics depend upon what it is the customer wants, a characterization that the engineer feels unable to make in general. In other words, what the engineer finally presents for a particular physicist's final consideration depends upon who that physicist is; it depends upon the particular physicist who is proposing the experiment. Not only do different experiments have different requirements but so do different physicists as well. Contrary to a naive conception of science, and philosophy, the requirements are not just "out there" as a property of nature existing on their own accord independently of human motives; instead, they depend upon a highly trained observer of nature to know how to observe, interpret and transmit them. And different physicists observe, interpret, and transmit differently--or, at least they do from the engineer's point of view.

Thus, in order for the program (or any program for that matter) to be (truly) able to simulate the engineer's individual design behavior, we have discovered that it is necessary to be able to simulate the physicist's physics behavior as well. Just how much of the physicist's behavior we need to simulate is a matter we consider in the next and following chapters. The next chapter discusses the meaning of simulation in

general and, in particular, what it means to test a simulation whose interpretation and validity depends upon factors that have not been simulated. To that discussion, we now turn.

CHAPTER IV

TOWARDS A BEHAVIORAL THEORY OF SIMULATION

1. Preface

2. Introduction

3. To Simulate Reality Is to Represent Reality

4. Turing's Test

5. Mind Is Behavior

6. Can a Machine Think? Can a Man Think?

7. Rationalism and Empiricism

8. Rationalism and Empiricism and Man-Machine Dialectics

9. Churchman's Necessary and Sufficient Conditions for Simulation

1. Preface

The purpose of this chapter is to examine several current viewpoints on the nature of simulation. The outcome of the discussion is a very general examination of what it means "to construct" and "to test" a simulation.

The author has no pretensions that the arguments offered here are final and conclusive or necessarily in the "mainstream" of current philosophic thought. Rather the discussion is motivated by the desire to encourage other engineers and scientists to develop their own viewpoints on the philosophical aspects of simulation.

2. Introduction

To simulate reality is to represent reality, not to reproduce it. Thus, for better or worse, any discussion of the concept of simulation must sooner or later, either explicitly or implicitly, consider the concept of reality. It is the explicit thesis of this chapter that reality is a state of mind, and that mind is behavior.[1] What kind of behavior is to be labelled as mind is something for another mind to determine. Usually, the "other mind" is a scientific researcher who, in accordance with the purposes or goals of his research, defines for his particular experiment what is to be the behavioral definition of mind. It is also the thesis of this chapter that if it is a man's behavior that is being simulated by, say, a computer program, then it may better serve the scientific objectives of the researcher if he uses the research subject (in this case, the man being simulated) as a judge of what mind is and, hence, of

---

[1] " . . . within our century 'mind' has been taken to be 'behavior', for the present day outlook is that mind is behavior rather than that which is responsible for behavior." Cf. C. West Churchman and Russell L. Ackoff, "An Experimental Measure of Personality," Philosophy of Science, Vol. 14 (1947), p. 304.

what is real. All too often the research subject plays a passive role in deciding on what is real. Essentially, we will argue that perhaps the most fruitful use and test of a simulation study is whether the man accepts the program as a substitute for his own behavior. If the man "accepts" the program as a substitute, then we wish to argue that some combination of man-machine behavior is acting as "another mind" in order to say what the reality of the first mind (the man's) is.

In order to pave the way for the development of our test for validating a simulation, we explore in detail the question, Can a machine think? The answer is, Yes! Yes, in the sense that a machine can "display" the kind of behavior that is associated with mind. This result forms an essential part of our interpretation of a test (Turing's Test) which has been widely used in validating simulation studies. In terms of Turing's Test, the contention of this chapter is that an intuitive use of Turing's Test is actually better suited for many research purposes than the original formulation of the test.

The later part of this chapter discusses the relationship of two historic schools of thought, rationalism and empiricism, to contemporary notions of reality and mind as authors in the field of simulation conceive of them.

Finally, we relate our chapter's results to a paper by Dr. C. W. Churchman, "An Analysis of the Concept of Simulation." Churchman's paper develops the necessary and sufficient conditions for defining the concept of simulation. Those conditions provide a general standard to which we refer our chapter's conclusions. In general, this chapter is but one extensive elaboration on how one might actually use and verify each of Churchman's conditions.

3. To Simulate Reality Is to Represent Reality

Webster's Dictionary defines simulation as "to assume the appearance of, without the reality; to feign." In a paper by Harman, "Simulation: A Survey," Thomas and Deemer are quoted as suggesting the following paraphrase of Webster: "to simulate is to attain the essence of, without the reality." Harman elaborates by noting that "the substitution of 'essence' for 'appearance' [in Webster's definition above] makes the vital difference between the scientific and casual use of simulation. It not only is not necessary [sic] that the simulator not 'appear' as its real-life counterpart, but frequently attempts to imitate reality closely may be detrimental to the purposes of the simulation. For example, to expedite the training of pilots a relatively accurate duplication of the cockpit is necessary for the trainer, but to duplicate the bulky whole of the airplane would defeat the purpose of the simulator."[2] A number of other authors make the same point. Essentially, their argument is that to simulate is to model, and to model is to represent. The essence of simulation is thus in the representation and not in the exact copying of reality:

> A model of something is a representation of it designed to incorporate those features deemed to be significant for one or more specific purposes . . . . For most purposes, it is unimportant whether models superficially look like the thing modeled . . . . What is important is that the responses of the model to changes . . . be similar to those of the real system.[3]

---

[2]Harry H. Harman, "Simulation: A Survey," Proceedings of the Western Joint Computer Conference, 1961, p. 1.

[3]Guy H. Orcutt, "Simulation of Economic Systems," The American Economic Review, Vol. L, No. 5 (December, 1960), p. 897.

> A simulation of a system or an organism is the operation of a model or simulator which is a representation of the system or organism. The model is amenable to manipulations which would be impossible, too expensive or impracticable to perform on the entity it portrays. The operation of the model can be studied and from it, properties concerning the behavior of the actual system or its subsystems can be inferred.[4]

Harman summarizes:

> What they [the various definitions of simulation] have in common is an attempt to substitute other elements for some or all of the real elements of a system. Perhaps the simplest and most direct definition of simulation is merely the act of representing some aspects of the real world by numbers or other symbols that can be easily manipulated in order to facilitate its study. In this sense, simulation is one of the oldest analytical tools.[5]

But so expressed, the problem of simulation becomes the problem of specifying the essential system elements to be simulated. Unfortunately, as Harman himself points out, we have no really adequate methodology for defining system elements, let alone "essential" elements. We might say that even if we were to grant the assertion that we could adequately simulate whole systems, we have yet to simulate how system elements are selected. Consequently, our original claim to be able to simulate whole systems is to be questioned. As we will discover in the course of this chapter, our ability to simulate a whole system is dependent upon our ability to define a system's elements, and, paradoxically, our ability to define a system's elements is in many ways dependent upon our ability to define the whole system. The paradox is that one way to define a whole system is to simulate it.[6] What remains is an evaluation of the

---

[4]Martin Shubik, "Simulation of the Industry and the Firm," The American Economic Review, Vol. L, No. 5 (December, 1960), p. 909.

[5]Harman, op. cit., p. 2.

[6]Consider what Harman says: "The more that is known about the properties of an element of a system, the better it can be simulated." Harman, op. cit., p. 4. But this is strange indeed, for the very reason we are doing the simulation at all is to learn about the system's elements. Consider also the following:

The designer and the analyst resort to simulation when it is either impossible, not economically feasible, or just sufficiently inconvenient to

paradox's seriousness. At best, we may have merely misused terms; at worst, there may be a fundamental deficiency inherent in the terms themselves.

In getting out of a paradox, one common strategy is not to ignore it but rather to try to work around it, hoping eventually to be able to come back and confront it directly. Thus, for the moment let us assume that we already have a simulation model, which, in fact, we do. Then, instead of asking how we defined our model's elements to begin with, let us instead ask how we can test and validate our model. As we shall show, an answer to the second question basically involves an answer to the first. How one "tests" a simulation model reveals how one initially defined the model. Thus, we turn to an examination of what it means to "validate" a simulation.

---

experiment with and study the real system. They make use of some alternative system which differs from the object system in at least one characteristic. Since they are rarely concerned with all the characteristics of the real system, they attempt to discover or construct an alternative system which is similar to the real system in the characteristics of interest, and which, because of the dissimilarity of characteristics which are largely irrelevant to the investigation, is easier, cheaper, or more convenient to study. Of course, there is some departure from reality; the alternative system cannot be expected to exactly reproduce the characteristics of interest. This is the price exacted for the simplicity and accessibility of the alternative system. Often there exists a considerable range of alternatives, each consisting of a different balance between faithfulness of reproduction and simplicity of construction and operation. Part of the investigator's problem is the selection of the appropriate alternative; he must decide how much of a departure from reality can be tolerated in the interest of simplicity and economy. <u>There are implicit in this procedure the assumption that the investigator knows enough about the characteristics of interest to intelligently select or construct an alternative system and that he knows enough about the interactions to decide which characteristics of the object system are irrelevant and expendable</u>. [underscoring mine]

R. W. Conway, B. M. Johnson and W. L. Maxwell, "Some Problems of Digital Systems Simulation," <u>Management Science</u>, Vol. 6 (October, 1959), p. 93.

4. Turing's Test

The question of what constitutes an adequate test of a simulation is all too often the least reflective part of any simulation study. A criterion developed by Turing is the only test known to this author that attempts to answer the question. The test hinges on the notion of an "imitation game":

> The game is played by three players--a machine, a human and an interrogator--and there are two channels of communication (say teleprinters) which link the interrogator, separately, to the human and the machine. The object of the game is for the interrogator to identify which of the two players is the machine. Active questioning is allowed, and the machine's task is to fool the interrogator while the human is assumed to do his best to reveal his 'true' identity. The interrogator succeeds and the machine is declared unable to 'think,' if on a given number of trials he is able to identify which player is which on a better than chance basis.
>
> The adaptation of Turing's Test to the problem of discriminating between the output of a particular model of human behavior and the decision behavior of the human proceeds as follows: Data are gathered on the human's decision processes by collecting protocols or other records of his decision behavior. The output generated by the model is also collected and can now be directly compared with that of the human. This comparison can be carried out at many levels. The only restriction is the level of detail of the data that can be gathered on the human's decision processes. When the model generates decision behavior that meets the criterion of Turing's Test, the model is said to be sufficient to account for the human's decision-making behavior.
>
> Clearly, this test can be applied to the output of the model as a whole as well as to the behavior of the individual decision mechanisms. In the former case the test might be considered to be quite weak, since there presumably are a variety of decision rules that will yield a specified output. But, by carrying the matching process down to the level of the individual decision processes the tests become more and more discriminating. Consequently, the strength of the test can be determined by the experimenter; and our confidence in the empirical validity of the model is manifestly a function of the levels of detail at which the matching process is carried out.[7]

---

[7]Geoffrey P. E. Clarkson, and W. F. Pounds, "Theory and Method in the Exploration of Human Decision Behavior," M.I.T. School of Industrial Management Research Paper, pp. 23-24.

We have quoted Clarkson and Pounds extensively because one would be hard put to find two other investigators who have had more to say about the specific problem of validating a simulation. Nevertheless, however extensive their discussion is, we must still take issue with their treatment. Our intent is not to be picayune, but rather to ask for clarification, and to point out the difficulties that confront one in attempting to apply Turing's Test as presented by Clarkson and Pounds. We will try to make our points of criticism correspond to the order in which the steps of the argument appear in the text.

First of all, one wonders what is meant by the statement that "the machine's task is to fool the interrogator while the human is assumed to do his best to reveal his 'true' identity." There must be more to the test than this, for one can always find some grounds on which to fool an interrogator. Depending upon the kinds of questions asked, the "task" may be either trivial or impossibly difficult. More to the point, how does one check the assumption that the human is doing "his best to reveal his 'true' identity"? How does one know, for instance, that the human has been properly motivated? Such knowledge or prior assurance presupposes that we have already differentiated between man and machine in order to verify the assumption.[8] Perhaps most crucial of all, who is to be the interrogator? The answer to this question, as we shall see, will

---

[8] Oettinger indirectly shows how we have unconsciously assumed man as "the" standard for thinking. If we consider a machine as the standard for computing, then it might be just as appropriate to say that a machine is thinking: "If after exchanging an appropriate series of messages with each room, the experimenter [i.e., the interrogator] is unable to tell which holds the man and which the computer, the computer might be said to be thinking. Since the situation is symmetrical, one could equally well conclude that the man is computing [underscoring mine]." Anthony G. Oettinger, "The Uses of Computers in Science," Scientific American, Vol. 215, No. 3 (September, 1966), p. 166.

constitute the basis for our definition and validation of simulation. We merely remark at this time that we may want the interrogator to be the same human as the one who is trying to reveal his true identity, i.e., the human who is being simulated. We might say that by being his own interrogator, one comes to discover his own true identity or equally the reality of one's identity. Without pursuing the question of "truth" or "reality" any further at this point, we may still note that we would surely expect different declarations as to which is man and which is machine depending upon whether the interrogator were the man's boss, his wife, his psychiatrist, his research associates, or perhaps even some social scientist acting as a participating observer. Certainly each of these interrogators or investigators would surely have a different experimental purpose and hence quite possibly a different criterion as to what constitutes differentiation between man and machine. With this background, we have a right to question the following statement: "The interrogator succeeds and the machine is declared unable to 'think' if on a given number of trials he [the interrogator] is able to identify which player is which on a better than chance basis." This statement begs the question, for one of the most difficult decisions to make in any experimental design is that of selecting the necessary number of trials or experimental runs. Another way to raise the same objection is to consider the following question: which level of significance assigned by which investigator (or interrogator) gives "a better than chance basis" for discriminating between man and machine? At present, there is no <u>single</u> answer that is "better" for any specific experiment let alone for any general class of experiments. In concluding our comments on this part of Clarkson's and Pounds' statement, we note that later on we will want to examine more carefully what can be meant by "think" in such a procedure.

The question of which particular group or individual investigator is performing the study again arises when one asks what constitutes the data on the human's output. Data is not material that exists on its own right. As Churchman and others[9] have shown, there is no data apart from a theory of data. In Clarkson's and Pounds' case, the data is interpreted in terms of a theory of human problem-solving as developed by Newell, Shaw, and Simon.[10] In their view, human problem-solving can be

---

[9]Cf. C. West Churchman, Prediction and Optimal Decision, Philosophical Issues of a Science of Values; Russell L. Ackoff, The Design of Social Research; Russell L. Ackoff, Shiv K. Gupta, and J. Sayer Minas, Scientific Method: Optimizing Applied Research Decisions; C. West Churchman, Theory of Experimental Inference; Edgar A. Singer, Experience and Reflection. Also, consider the following:

Is it possible to devise an information storage and retrieval system that will conveniently retrieve pertinent records in response to all possible questions? Unfortunately it is not. Any record we might choose to examine has an infinite number of real or potential attributes, any one of which could serve by its existence or absence to answer a possible question.

This can be illustrated by considering an ordinary color slide that is to be inserted in a collection of other slides. We can think at once of a number of attributes by which it could be retrieved: the date of the photograph, the location at which it was made, the names of [the] individuals in the picture. To this we might add the name of the photographer, the type of camera, the lens, the film, the exposure, the light or weather conditions under which the photograph was taken, the date of developing, the developing solutions used, the specific developing procedures. Each of these items could be detailed and embroidered indefinitely. If we took another tack, we could go into almost infinite detail on the content of the photograph: we could describe the relationship of the people photographed to one another or to the photographer; we could specify the presence or absence of all known or conjectured geological formations, plant or animal species, cloud formations, man-made structures and so on ad infinitum. Not only is it impossible to create an information storage and retrieval system that will respond fully to all possible questions but also it would be prohibitively expensive to try to approach such a condition. In practice all information storage and retrieval systems must adopt more modest objectives.
Ben-Ami Lipetz, "Information Storage and Retrieval," Scientific American, Vol. 215, No. 3 (September, 1966), pp. 226-227.
In other words, every information system collects some, and not all, of the "facts" associated with a particular system. Which facts are collected depend upon the objectives of the research, i.e., the methodology and purposes of the researchers.

[10]Clarkson and Pounds, op. cit., pp. 17-18.

characterized in terms of a set of basic information processes which operate on a vocabulary or set of variables which describe the problem and its environment. The elements of the theory are in effect specific decision "mechanisms" which direct one to look for specific decision mechanisms in the responses of human problem-solvers; the solutions to problems are assumed to result from the theory's mechanisms. These comments, of course, apply no less to the machine's output than they do to the man's; a particular theory of "machine behavior" directs one to look for that kind of machine behavior. Now, if all our "data" is interpreted through some theory of data collection (i.e., in essence, data constitution), then our comparison between the man's and the machine's output is certainly not a matter of "direct comparison." Clarkson and Pounds admit as much when they state that "this comparison can be carried out at many levels." If so, then surely the kind of data one collects is not independent of the level of comparison. One certainly would collect different data for different levels, and as a result, the criterion of deciding when Turing's Test is satisfied would not be independent of the different levels as well. In science, one does not collect data on different levels without a theory of what constitutes a different level.

We also take exception with the statement that "the only restriction is the level of detail of the data that can be gathered on the human's decision processes." The restriction applies equally to the level of data that can be gathered on the machine's decision processes. Clarkson and Pounds themselves imply as much, for one always has a choice as to which level on which to compare the man and the machine. As noted in the text, we can apply the test to the machine's gross output as well as to the level of individual decision mechanisms. Again, we will stress the point that both authors make; both, the gross output as well as the

individual decision mechanisms, are capable of a multitude of representations depending upon the purposes of different investigators. We also note that the same investigator may choose to apply different representations for different experimental purposes. In this context, "carrying the matching process down to the level of the individual decision processes" does not by itself make the tests any more discriminating. What we require in addition is some assurance that the tests which are supposed to validate the simulation are themselves valid. We can rephrase this as the following: what validates the validation? Or, what is the criterion of proof? After all, it has to be proved not simply asserted that we are actually reaching different levels. What appears as a finer level in one circumstance may be a gross misapplication in another situation. In terms of Ackoff's notion of a research model,[11] part of the outcome of any research is an ever richer notion of what constitutes a finer subdivision of the problem facing the next research project. What constitutes a level of data is not something to be defined once and for all but something to be constantly re-examined in the light of every new simulation study.

We might summarize this part of the discussion by noting that the "matching process" engaged in by the investigator represents the investigator's verification process. What an investigator accepts as a verification of a simulation study represents what an investigator believes reality to be as much as reality is verified through the process. Thus, as our beliefs change so does verification and, in a sense to be discussed, reality also changes. Contrary to a naive conception of science, verification, as a result, is never a final process. Every new application

---

[11] Russell L. Ackoff, The Design of Social Research. See especially chapters one through three.

of a study is just as much a further verification of the study as it is a further application. Finally, we state that for Turing's Test to be applicable we need a theory of the interrogator who verifies the test.

5. Mind Is Behavior

Before we can present our theory of the interrogator behind Turing's Test, we need to examine some further concepts which the test presupposes. One of those concepts is "reality." Our discussion can no longer avoid considering a question we have been holding in reserve all this time: What is it that a simulation is a representation of? Our discussion will be guided by a paper of Churchman's, "An Analysis of the Concept of Simulation." We will examine the concept of reality through the concept of "mind":

> . . . it is assumed that the concept of reality is meaningful only when there are two minds. A single mind, receiving 'inputs,' has no way of recognizing what is simulation and what is real. It can only 'postulate' in a meaningless way that something--it knows-not-what--caused the inputs; or that the inputs themselves are reality; or that its own structure is reality. It cannot know that other minds exist; it cannot satisfactorily know that it itself exists. But consider the case of a second mind observing the first mind. The second mind observing the environment of the first, recognizes the sources of the inputs, recognizes how the first mind responds. The second mind can reasonably discourse on what is reality for the first mind. It can, in fact, describe the reality of the first mind in terms of a set of sentences. For all practical purposes it can regard the sentences themselves as constituting the "reality" of the first mind. All these abilities of the second mind are subject to error, of course. But the theory of errors does not disturb the basic metaphysical tenet that reality is meaningful only to a mind observing another mind. Furthermore, the observing mind's reality is meaningful only to another observing mind. For example, to this third mind both the environment and the appearances of the first mind are the realities of the second.[12]

---

[12] C. West Churchman, "An Analysis of the Concept of Simulation," Symposium on Simulation Models, A. C. Hoggatt and F. E. Balderston, eds., pp. 1-2.

As much is implied in Turing's Test or this seems to be the intent. If not, we will so interpret this to be the test's intent, since we are reconsidering the test for our purposes. Reality is something which is decided by the interrogator. This much we accept, for ultimately, this is the role that every scientific worker fulfills when deciding on the fit between his model and the reality the model is supposed to stand for. What we have been questioning is how the interrogator should decide and who the interrogator should be. And this is where reality and mind become intertwined. To say that the reality is in the human we are simulating and that the representation is in the machine or in a computer program is to say that we already know what the Real is. But this should be the outcome of the research project, not something to be so sure about beforehand. As we have been arguing, if we knew what were real in the first place, why do the study at all? Besides, up to this point we have given no arguments to the contrary which prove that a machine cannot display mind and therefore cannot fill the role of the interrogator. In fact, we wish to show that it is possible for a machine to display mind. Since an interrogator only knows what is real by being interrogated himself by another mind, we wish to demonstrate the sense in which a machine can fulfill the role of that "other mind" or other interrogator.

In the end, reality is to be taken as a property of a collection of minds, and not as a property of a single mind. Ultimately, reality is a property of the largest "other" mind we can know, mankind; reality, in this sense, is an historical process, since what we take as knowledge of reality changes with historical progress.[13]

At this point we will define more precisely what we mean by mind so we can specify more fully in what sense a machine can be said to think

---

[13] Cf. C. W. F. Hegel, The Phenomenology of Mind, translated by J. B. Baillie.

To elaborate on what we mean by mind, we consider two basic modes for defining an object or an event. They are structural and functional classes.[14] Now, we wish to argue that while machines are not necessarily structurally similar to men and while machines are not living purposeful individuals, they can and do display that kind of purposeful behavior which we, as other minds, label as mind. That is, we wish to argue that it is not necessary for a machine to be alive for it to be able to display mind. It is not at all clear that a machine cannot think or display any other function attributed to living things if we consider that the line between the living and the nonliving is extremely difficult to define:

> The living is not merely what is subject to functional explanation. But many biologists have sought to discover specific functions, which separately, or in combination, define life. Among such criteria were offered those of 'irritability,' 'reproduction,' 'self-preservation,' 'metabolism;' but for every such offering one finds examples which fall into one of the following: 1. Elements within the class of living beings which do not display the function. 2. Elements in classes taken not to be living which do display the function.
>
> For example, certain types of butterflies cannot reproduce themselves but certain crystals can; a building equipped with electric safety devices can be considered to be self-preservative, numerous chemicals display irritability, and gasoline engines display metabolic processes. Attempts at combining the functions have fared no better. In all cases it has been possible to construct or point out mechanisms which display the functions offered in a specific definition, but which are still excluded from the realm of the living. Because of the failure of functional definitions of life, some biologists have sought to furnish mechanical (more specifically, physico-chemical, or bio-chemical) definitions in terms of a basic living matter. These efforts seem doomed to failure, however, because for each structural definition some matter can be synthesized which possesses the specified physical and chemical properties, and yet is not taken to be alive.[15]

Thus, the living and the nonliving are not to be distinguished in a denotatively functional way. But then, we may ask, how are they to be

---

[14] Cf. Ackoff, op. cit., pp. 56-64. C. West Churchman and Russell L. Ackoff, "An Experimental Measure of Personality," Philosophy of Science, Vol. 14 (1947), pp. 304-332.

[15] Churchman and Ackoff, op. cit., p. 308.

distinguished? In a connotatively functional way by the difference between the kinds of purposive behavior they display. The difference between men and machines is a function of the kinds of group or collective behavior they are potentially capable of displaying. Man, but one example of the class of living things, is defined with respect to the collective behavior of other members of the class of men.

As an example, let us consider a man who wishes to build a chair. One obvious reflection to make is that one can build a chair in many diverse ways and, most likely, a particular individual will only use a small subset out of all the possible ways. Now we wish to use this latter and rather obvious reflection to make some points which are perhaps not so obvious. First, a number of morphologically dissimilar behavior patterns (e.g., sawing, hammering, carving, gluing) which have nothing structurally in common can be subsumed under a single functional class, the set of purposive acts which have in common the goal of "building-a-chair." Second, a particular act of construction is only defined with respect to the general class of acts that are considered as acts of construction. That is, we have no desire to call any or all behavior "construction," but, at the same time, we also wish to guard against the possibility of our defining the class too narrowly. Basically, we wish to include all the ways in which a man can "possibly" build a chair so we can assert that we have identified all the "potential" behavior patterns indicative of the activity. Now, obviously our concern is not with chairs _per se_, but rather with identifying all the diverse activities we wish to associate with human behavior in contrast to machine behavior. The conclusion we wish to draw is that a particular individual is identified as a member of a general class of individuals because his particular set of behavior

patterns (BP's) can be identified as one of the potentially available BP's characteristic of members of the general class. Man is man, we wish to conclude, because of the existence of other men to identify man-like behavior. Man is man, it should also be noted, in contrast not only to machine-like behavior but also in contrast to other life-like behavior (i.e., other life-like BP's).

6. Can a Machine Think? Can a Man Think?

It may still be questionable as to whether the difference between men and machines may be determined on the basis of BP's as future machines become increasingly capable of performing complex acts.[16] Perhaps the most illuminating way to consider the question is to study the arguments of one who considers the difference between men and machines, if not decisive and distinct, at least potentially resolvable. Michael Scriven's paper, "The Mechanical Concept of Mind," seems to us to raise the issue in the most general way. He asks whether there is any

---

[16]A number of computer programs have been written that learn--that modify their own programs in an adaptive direction on the basis of experience. The existence of such self-adaptive programs takes most of the meaning out of such statements as: 'A computer can only do what you program it to do.' The statement becomes exactly parallel to a statement like: 'A human being can only do what his genes program him to do.' G. P. E. Clarkson and H. A. Simon, "Simulation of Individual and Group Behavior," The American Economic Review, Vol. L, No. 5 (December, 1960), p. 925.

In order for a [computer] program to improve itself substantially it would have to have at least a rudimentary understanding of its own problem-solving process and some ability to recognize an improvement when it found one. There is no inherent reason why this should be impossible for a machine. Given a model of its own workings, it could use its problem-solving power to work on the problem of self-improvement. The present programs are not quite smart enough for this purpose; they can only deal with the improvement of programs much simpler than themselves. Marvin L. Minsky, "Artificial Intelligence," Scientific American, Vol. 215, No. 3 (September, 1966), p. 260.

"essential" difference between a man and a machine. Although, as we have seen, men have historically looked for the difference in such concepts as "irritability," "reproduction," "self-preservation," or "metabolism," Scriven takes the essential difference to be one of "consciousness." "The question we seek to answer with our everyday tests is whether a man is conscious or unconscious: whereas of machines we enquire whether they are capable of consciousness or not."[17]

Scriven's argument is sufficiently general to warrant a detailed criticism. Scriven begins with the assertion that machines are not alive. True, he says, there are cases where living things are not conscious. e.g., trees and plants, and there are also cases where the consciousness of living things is in doubt, e.g., a man in a coma, or a child of extremely low I.Q., but nevertheless, only of living things do we entertain doubt of their consciousness. About machines we have no doubt. They are not alive. Therefore, they can not be capable of consciousness. But, as Scriven continues, it might still be said that complexity of behavior might be sufficient for a machine to attain consciousness. Thus, Scriven's original question now becomes: "Is complexity of behaviour or degree of organization essentially connected with consciousness: even behaviour as complex as a man's?"[18] Apparently not!

> We can sum up the problem very simply. Everyone knows what 'conscious' means; everyone knows he is conscious when he is thinking or remembering, watching or reading. But there can be no inner tests of <u>other</u> people's mental conditions and we must judge them from without, <u>if we can judge them at all</u>. This is where the difficulties begin. First, though it may <u>in fact</u> be certain whether a man is conscious or unconscious, we cannot always be certain from watching him or testing his behaviour . . . the outward signs (including speech) are not infallible indications of consciousness. It is therefore quite certain that they are not, even in men, whom we know may be

---

[17]Michael Scriven, "The Mechanical Concept of Mind," <u>Mind</u>, Vol. 62 (April, 1953), p. 231.

[18]Scriven, <u>op</u>. <u>cit</u>., p. 232.

> conscious, the same thing as consciousness. Second, there is the very different question of deciding whether something is conscious, i.e. whether it is capable of being conscious . . . . Behavior is not attached to consciousness as thunder is to lightning . . . . The one does not guarantee the other but is guaranteed by it. An indefinitely long series of behavioural observations is not equivalent to the observation of consciousness . . . . There is an essential connexion between the capacity for complex behaviour and Consciousness [i.e., the capability of being conscious]; the one is a necessary condition of the other. But it is not a sufficient condition; and though we may decide which living things are conscious from their behaviour, we cannot decide if everything is conscious from its behaviour. Life is itself a necessary condition of consciousness, and though behaviour is a factor which sometimes decides the question whether a certain system is alive, it is again not the only one [underscoring mine].[19]

Everyone apparently knows his own behavior and thus can use this as evidence of his own consciousness, but only because one is aware of one's own consciousness to begin with. But what of the consciousness of others? On Scriven's grounds, BP's are not sufficient to establish another's consciousness. We need some additional evidence because the observation of complex behavior by itself is nothing more than the observation. There is no guarantee that behavior no matter how complex is the result or product of living things. Complexity may be necessary but it is not sufficient to define consciousness. But then, we ask, what is? Scriven does not say. All we are assured is that "Life is itself a necessary condition of Consciousness, and though behavior is a factor which sometimes decides the question whether a certain system is alive, it is again not the only one." In fact, as Scriven notes, the behavior of many nonliving things is much more complicated than that of living things.

The conclusion seems inescapable:

> Machines do not even belong to the category of things which can be dead or alive . . . .

---

[19]Scriven, op. cit., p. 232-233.

> [Yet] it does not seem that there is anything in the construction, constituents or behaviour of the human being which it is essentially impossible for science to duplicate and synthesise. On the other hand there seem to be some important and meaningful descriptions of human behaviour which can never be properly applied to machines. We feel puzzled that the basis for a description can be reproduced, yet the description can not be reapplied.
>
> [Nevertheless], machines will never be conscious, because . . . a reproduction of a man sufficiently exact to be conscious is too exact to be still a machine.[20]

The argument also continues on other grounds. For one, is it possible that machines could ever think? Would it be possible to change the meanings of "machine" and "think" so that we could assert in some meaningful sense that "a machine can think"? The answer is no, for although we may come to rely on computers to aid our thinking they remain only aids to thinking and not thought itself. Computers are aids like slide-rules and no one would dare call a slide-rule intelligent:

> Unless operated by an intelligent being [a computer] is entirely useless: but even when it is operated by an intelligent being, it does not thereby become intelligent, only useful. It may be entirely similar in construction to a human brain; but the human brain is a physiological mechanism, no more intelligent than a muscle. Certainly the brain is an indispensable component of an intelligent being, unlike a muscle, and the relative intelligence of various creatures may be deducible from their brain structure. But it is the creature that is intelligent, not the brain: people have good brains or mediocre brains, but never intelligent brains: it is they who are intelligent. Now computers are not even as well placed in this competition as brains; for they are not indispensable to anyone's intelligence, any more than books are indispensable to memory. And one can no more say that a computer is intelligent than that a book remembers. This is the argument that shows 'intelligent' to be an improper adjective for the noun 'computer'.[21]

According to Scriven, we have thus shown that intelligence like consciousness is an improper name for a computer or machine. "It is also the argument that shows there has been a change of meaning of one of these terms if the combination [say, thinking machine] has a proper use."[22]

---

[20]Scriven, op. cit., p. 233. [21]Scriven, op. cit., pp. 235-236.

[22]Scriven, op. cit., p. 236.

The argument also has further dimensions. Suppose we were to land on a foreign planet. We meet a robot who appears to be everything that Scriven has denied up to this point: the robot appears to exhibit intelligent behavior and in general appears to be an example of a conscious machine. How, Scriven asks, can we convince the sceptic that no matter how intelligent or conscious this robot appears to be it is nevertheless no more than a machine? One way is if we can be certain that "at every stage the behaviour of the components, and in large, of the robot itself is mechanical. For else it may be that the real origin of its movements, speech, and gestures is some non-mechanical influence--a soul perhaps, or an alien being."[23] If we had built the machine ourselves, then of course we would know that we had built nothing more than a machine. Let us suppose that this is the case; we know that we have a machine because we built it. Still this need not imply that we can predict our machine's every move. In principle we could say that this would be possible, but in practice we would not always be able to predict the machine's behavior quickly enough. The principle still holds though, for given enough time the machine's behavior is predictable whereas at present we cannot say the same of human behavior. But even though we cannot presently predict human behavior, this too in principle might eventually be true; i.e., man's behavior might be equally capable of a mechanical explanation. Nevertheless,

> It is at least certain that we cannot prove that the robot is [capable of being conscious]. For we have . . . a complete causal explanation of all its behavior and this explanation does not at any stage depend on its consciousness, and so its behavior cannot be a proof of the possession of consciousness. Consciousness is not a property which can be detected in a machine by any physical examination, because it cannot be <u>identified</u> with any physical characteristics of a machine . . . . The fundamental element . . . is the subjective impression and it is exactly this element whose presence in the robot is in question.[24]

---

[23] Scriven, <u>op</u>. <u>cit</u>., p. 237.

[24] Scriven, <u>op</u>. <u>cit</u>., p. 238.

With this we end our summary of Scriven's paper. Now, what can we say about Scriven's arguments? First of all, it appears to us that instead of proving the essential difference between men and machines to be consciousness, Scriven has merely asserted the difference; i.e., machines are not conscious because machines are not living things and only living things, he asserts, are conscious things. In its briefest form, the argument seems to read, living things are conscious because they are living. Now, however appealing this argument may be to common sense, Scriven's job as a critical analyst, is not to make appeals to common sense but rather to validate common sense. The very premises or hypotheses of the argument used to assert the difference are the very things we want proved. Lest we be misunderstood, we are not necessarily denying that machines are not alive. We are raising instead the point how we can know scientifically why they are not alive, and more precisely, in what respects do machines differ from living things? As we showed earlier, the answer is not clear. As Scriven himself admits, step by step, function by function, a machine can imitate a living being, so again wherein really lies the essential difference?

The ground shifts. Scriven now takes the essential difference to be that we alone can know with positive assurance our own thoughts. Of the inner thoughts and feelings of others we may have doubts but of ours we need entertain none. We only know of others by way of their gross behavior but of our own behavior we directly know because we directly experience our own consciousness to begin with. But if we now ask how we really know of our own inner consciousness, we must answer, as Scriven does not, but as he would nonetheless be compelled to on the basis of his own hypotheses, that we only observe our own gross behavior as well. Why then doesn't this doubt of the behavior of others spread to ourselves?

It must, for his argument smacks of solipsism, of isolated minds, each of them only sure of his own existence and each of them doubting the existence of others. While one is supposedly in direct touch with his own mind he has precariously little touch with others. Except, we ask, can one really know the existence of his own consciousness without knowing the consciousness of others? We would have to answer no, unless there is someone amongst us so privileged as never to make mistakes; someone so privileged who would never have need of others to inform him of his forgetfulness, of his carelessness, and perhaps even of his true intentions. Consciousness, contrary to the notions of the Solipsist, is a process of interacting with other minds and things in order that one may check that his self-knowledge is indeed general knowledge and not self-delusion. A single individual, we emphasize, cannot always say that he is aware of his own perceptions. As Scriven himself notes, there are cases, e.g., the man in the coma, where a man cannot be said to be conscious. We must say instead that man as a member of the class of men has the potential for consciousness where, if the potential is to be realized, it must be realized collectively and not individually. Again, we point to the notion that the richest sense of consciousness is a property of no one single mind but of all minds, for no one mind can be said to contain all the facets of knowledge or perceive all the individual modes of consciousness.[25] If one man were simultaneously physicist, doctor, psychiatrist, historian, sociologist, artist, and theologian for now and ever more, then we might seriously entertain the notion that one mind and one mind alone could know that he were perfectly conscious. Of such a man it might be said that he knew, without the slightest possibility for error, the

---

[25] Cf. Hegel, loc. cit. We interpret this to be one of the main theses of the Phenomenology.

ultimate ground for his perfect consciousness. Such a man would have had to master what innumerable intellectual groups have been unable to comprehend. For a single individual to be truly conscious, that individual would have to have the consciousness of a group mind.

One must agree with Scriven though when he argues that complexity of behavior by itself is not sufficient to define consciousness. It is not the complexity of behavior per se but rather the morphology or function into which a BP falls that makes the BP an aspect of a living thing, for no single BP by itself is indicative of life. In fact, every BP by itself is capable of machine reproduction. This is why we have emphasized the notions of a morphological class and of class membership. A living thing, we repeat, is characterized by its potential ability to use different BP's, i.e., morphologically dissimilar behavioral acts, in order to obtain a common goal. Earlier we gave the example of "building-a-chair," we can also give the example of a man who may either walk, trot, run, bicycle or drive a car in order to obtain the goal of crossing a city. Now, of course, we have begged a crucial question all along: who is it that defines the BP's indicative of life? All we do at this time is to note that it is another mind who creates the morphologies for a particular scientific investigation, each investigation in general requiring its own set of BP's which differentiate between the living and the nonliving. Note that even here we are not saying that there is still some essential difference between the living and nonliving, since for every essential difference we can define, some machine can be built to produce that "essential difference." Thus, to say that another mind defines the categories of life is not to say that we or the other mind can unambiguously differentiate between what is living and what is nonliving.

Let us modify one of Scriven's statements somewhat by inserting a negation: "[A] reproduction of a man sufficiently [underscoring mine] exact to be conscious is [NOT] too exact to be still a machine." When we consider that we do define consciousness as BP's, that consciousness within the context of a scientific investigation is a BP, then a reproduction which is "sufficiently exact" to display those BP's characteristic of consciousness could be an exhibition of machine consciousness. Depending on the experimental purpose as measured with respect to some idealized research model,[26] one could have numerous sufficiently exact definitions of "sufficiently exact" for "machine consciousness."

As for the argument on the grounds of usefulness, i.e.,

> Unless operated by an intelligent being [a computer] is entirely useless . . . [the computer like the brain is] no more intelligent than a muscle . . . it is the creature that is intelligent, not the brain: people have good brains or mediocre brains, but never intelligent brains: it is they who are intelligent.[27]

Scriven misses the point. Since a group of minds definethe purpose of an object, they in effect define what can be said to display mind. That any one purposeful BP is not the whole of that behavior we call mind-like is not in dispute. But, the point is that Scriven assumes that we already know that the "it" is or the "they" that is intelligent, whereas the most important use of objects may indeed be to reveal what is mind-like about the human-mind in terms of non-human objects. Machines, after all, even if built by humans, can and do teach other humans how to become intelligent.

> [One] can no more say that a computer is intelligent than that a book remembers.[28]

Of course a book does not remember. The point is though that a book is an aspect of that kind of behavior we associate with "remembrance." A

---

[26] Cf. Ackoff, loc. cit.

[27] Scriven, op. cit., pp. 235-236.

[28] Scriven, op. cit., p. 236.

book is an additional example of the phenomenon of mind which produced the book. A book is a testimony to mind.[29]

The robot argument also has its defects. As Singer[30] showed every event in Nature is potentially capable of a mechanical explanation. At the same time all phenomena can be equally described in teleological terms such as to resolve any vitalist-mechanist controversy. In terms of our previous discussion, every event in Nature can be described equally in structural or functional terms; this becomes especially evident when we recognize that every functional description presupposes some structural description and vice versa. Thus, we need not worry about "mysterious soulful forces" or "non-mechanical influences" since we can always define functionally or teleologically what we are presently unable to define mechanically. And we can define our functional classes in such a way that the functional, in terms of an idealized research model, becomes potentially susceptible of a mechanical explanation as science progresses in developing more encompassing schemas. The only one who need be disturbed about some scientific explanation of "mysterious forces" is he who wishes to preserve the mystery for mystery's sake.

Assuming we ourselves have built the robot, as Scriven notes, is to guarantee that we know what it is that we have built. To be sure, we know that we have built some kind of a machine, but this in itself is not enough to inform us of the essential differences between men and machines, since, for one thing, if consciousness is not identifiable with

---

[29]McCarthy cites as a possibility an information system where, "Everyone will have better access to the Library of Congress than the librarian himself now has . . . . The system will serve as each person's external memory, with his messages in and out kept nicely filed and reminders displayed at designated times." John McCarthy, "Information," Scientific American, Vol. 215, No. 3 (September, 1966), p. 71.

[30]Edgar A. Singer, "Mechanism, Vitalism, Naturalism," Philosophy of Science, Vol. 13, No. 2 (April, 1946), pp. 81-99.

any component of the machine, it is not equally identifiable or localizable in any part of the human machine. Furthermore, to say that one has a causal explanation of the machine's behavior, <u>even if one has built the machine</u>, is to postulate a lot.

It is also a lot to say that "given enough time in principle we could predict the machine's every move." Consider what Turing has had to say about this:

> It will seem that given the initial state of the machine and the input signals, it always is possible to predict all future states. This is reminiscent of Laplace's view that from the complete state of the universe at one moment of time, as described by the positions and velocities of all particles, it should be possible to predict all future states . . . . But the number of states of which [a digital computer] is capable is usually enormously large. For instance, the number of states for the machine now working at Manchester is about $2^{165,000}$, i.e., about $10^{50,000}$.[31]

Yes, in principle, we could predict the machine's every moment, but if we could accomplish such an enormous job for a machine, why couldn't we in principle accomplish the job for a man? The fact of the matter is that we have no causal explanation for most of our machines for all possible uses or purposes under all possible conditions. A moment's reflection on the different kinds of causality[32] we have at our disposal and on the enormous effort involved in establishing that a particular kind holds should be sufficient to demonstrate the vacuousness of Scriven's claim. If only we had causal explanations of machine behavior! This is

---

[31] A. M. Turing, "Can a Machine Think?" <u>Computers and Thought</u>, E. A. Feigenbaum and Julian Feldman, eds., pp. 17-18.

[32] <u>Cf</u>. Ackoff, <u>op</u>. <u>cit</u>., pp. 65-68; see also, Ackoff, Gupta, and Minas, <u>op</u>. <u>cit</u>., pp. 15-19. The three forms of causality which science recognizes are (1) cause-effect or deterministic causality, (2) producer-product or probabilistic causality, and (3) correlation. The three forms correspond to (1) a phenomenon X is both <u>necessary</u> and <u>sufficient</u> for the occurrence of another phenomenon Y, (2) X is necessary but not sufficient for Y, and (3) X is not known to be either necessary or sufficient for Y's occurrence (X and Y tend to be present or absent together).

not to say that we can't in principle; this is merely to illustrate the difficulties in practice. If we can postulate so much about machines, why can't we postulate as much about men and remove the "subjective impression" which constitutes the "fundamental element" of the human machine. Presumably, Scriven knows "objectively" that the "fundamental element" of the human element is some "subjective impression." How paradoxical to know so positively about that which is inherently subjective, i.e., incapable of objective expression.

Scriven's difficulties began when he took consciousness as a primitive term which, as a primitive, he didn't feel the need to define: "Everyone knows what 'conscious' means."[33] On closer inspection of course consciousness does need to be defined: "Life is itself a necessary condition of Consciousness."[34] But now if we ask for a definition of "life," unfortunately, none is forthcoming. Life, it turns out, is the fundamental primitive of Scriven's paper: "In the first part of this paper, we worked on the basis of a fairly simple idea (an unanalysed concept [underscoring mine]) of machine and living organism."[35] This is the defect of the argument; it does not analyze its basic terms. As a result, Scriven cannot tell what is different between man and machine because he cannot tell us what is not different.

In sum, we need not say that a machine is alive in order for it to be life-like. We need not devaluate human importance in order to recognize machine importance. In fact, one of the best ways to find out what is of human importance about man may be to find out all that is machine-like, and in this way, to find out all that is not machine-like.[36] We

---

[33]Scriven, op. cit., p. 232. [34]Scriven, op. cit. p. 233.

[35]Scriven, op. cit., p. 239.

[36]Consider what von Neumann has had to say:

We need not accept untenable arguments about the nature of men and machines in order to assert man's eminence. Acceptance of poor arguments as to the "essential difference" seems to imply the converse, man's lack of eminence.

We also wish to make another point about the nature of mind. Along with Scriven, we must agree that the mind and the brain are not necessarily the same. While the brain is in the head (if we ignore such crucial items as the spinal cord), we cannot necessarily say the same for the mind, for the evidence for mind is a certain set of BP's we label as characteristic of human mind-like activity. Only part of the evidence would be neurological BP's and hence only part of the evidence is roughly associated with the brain. In this sense, most of the evidence for mind takes place away from the body, in books, in cities, in languages, and in culture in general. The rule therefore is that culture is mind.[37] The reader, we trust, can readily perceive the truth of this rule if he will merely take

---

> Natural organisms are, as a rule, much more complicated and subtle, and therefore much less well understood in detail, than are artificial automata.

The point is that "artificial automata" tell us how complicated "natural automata" are; they tell us what "natural" is. "Natural" is always quite "artificial," for the natural is always an artificial construct of <u>our</u> making. Von Neumann implies as much,for as he continues:

> Nevertheless some regularities which we observe on the organization of the former [i.e., natural automata] may be quite instructive in our thinking and planning of the latter [i.e., artificial automata]; and conversely a good deal of our experiences and difficulties with our artificial automata can be to some extent projected on our interpretation of natural organisms.

John von Neuman, "The General and Logical Theory of Automata," <u>The World of Mathematics</u>, Vol. 4, James R. Newman, ed., p. 2070.

[37] <u>Cf</u>. Hegel, <u>loc</u>. <u>cit</u>.

the time to reflect on the fact that while he probably knows people who no doubt have a brain, whether they also have a mind is not beyond doubt.

7. Rationalism and Empiricism

To summarize up to this point, we have been approaching the notion of reality through the notion of mind, and what we have done so far is to say that mind will be defined as a certain kind of behavior. What we have yet to determine is the kind of mind or behavior the interrogator of Turing's Test need manifest in order to validate a simulation. To put it otherwise, the mode of reality that the interrogator assumes equally describes the mind of the interrogator.

Now, there seem to us to be two basic approaches to reality that investigators in the field of simulation have used. The first approach seems to imply that system data can be collected independently of the criterion of simulation. In this view, the "data" themselves are real and the program based upon the data is the representation of reality. In its most sophisticated version, the data are collected according to one theory and the simulation model is tested against the data according to another theory. Clarkson's simulation of the behavior of a trust investment officer in constructing a stock portfolio would be a classic example of this type.[38] The trust investment officer's behavior, the "data", were collected according to the theory of human problem-solving as postulated by Newell, Shaw and Simon. Since we have already outlined the nature of their theory earlier, we shall say no more about it here. What we shall note is that the computer program constructed from the data based upon Newell, Shaw, and Simon's theory was tested against another set of data, the "direct behavior" of the trust investment officer, according

---

[38] Geoffrey P. E. Clarkson, Portfolio Selection: A Simulation of Trust Investment.

to a series of statistical tests. That is, after the simulation model, in this case a computer program, was constructed, the program's output was "directly" compared with the man's output and the two outputs were judged for "goodness-of-fit" according to various statistical tests.

In its least sophisticated version, contrary to Clarkson's study, an experimenter contends that he need presuppose no model in order to collect the system's data. In this view, while a theory might be necessary for writing a simulation model for testing the model against the "raw facts" of the real world, the facts as facts would not be dependent upon any theory for their existence or perception. This tradition in Western science has been characterized by Churchman as Naive Empiricism.[39] As an historical tradition, this attitude is still to be found throughout science; it is not necessarily to be associated with any particular simulation study.[40]

On the other hand, there also seems to be another attitude towards simulation which stresses the need for logical rigor instead of empirical data. The archetype of this class is perhaps best represented by the Logic Theory Machine,[41] also by Newell, Shaw, and Simon. The task of the Logic Theory Machine is to prove theorems in the sentential calculus, the criteria of proof being part of the machine's internal program. The criteria of proof also work in this case as heuristics which guide the proving of theorems; in effect, a property of the system, i.e., the validity and the consistency of certain rules are both the criteria of

---

[39] Cf. C. West Churchman, Theory of Experimental Inference, Chapter VI.

[40] This is also the moral to footnote 9.

[41] Allen Newell, J. C. Shaw, and H. A. Simon, "Empirical Explorations with the Logic Theory Machine: A Case Study in Heuristics," Computers and Thought, E. A. Feigenbaum and Julian Feldman, eds., pp. 109-133.

proof and part of the strategy for constructing proofs. In this case, the system is the set of rules which define the structure of the Logic Theory Machine. One may, of course, not like the particular structure Newell, Shaw, and Simon have assumed; if so, one is free to define other structures and other logics. As we shall see, the Logic Theory Machine is part of another tradition in Western science which we associate with Rationalism. While Newell, Shaw, and Simon are certainly not to be classified as rationalists, we might say that to a rationalist, the Logic Theory Machine, whatever its logical structure, would represent a superior form of knowledge in contrast to knowledge based upon the contingencies of empirical data. For a rationalist, the knowledge of the Logic Theory Machine would be superior in the sense that the truth of the proved theorems would apparently be above the vagaries of human sense perception.

The two traditions in simulation might be best represented by two of the main section headings that Feigenbaum and Feldman use to divide their book, Computers and Thought. We would identify the empirical tradition with the "Simulation of Cognitive Processes,"[42] and the rational tradition with the field of "Artificial Intelligence."[43] Note that,

---

[42] Consider, for example, what Clarkson and Simon say: "To write a heuristic program of a decision-making process, we do not first have to construct a mathematical model, and then write a program to simulate the behavior of the model. We can directly write a program that manipulates meaningful symbols in the same ways that (we hypothesize) the human decision maker manipulates them [underscoring mine]." Clarkson and Simon, op. cit., p. 925. Of course, one may need presuppose no "mathematical model." The question is whether one can "directly" write a program without presupposing any model. See also footnote 9.

[43] It is almost as though those who work in the field of artificial intelligence are saying that the most efficient way to understand and to simulate human thought processes is to investigate formal systems whose behavior is clear and distinct. Consider what Feigenbaum and Feldman say:

> The fascination with mechanical theorem proving for most of the researchers working in this area lies less with the end (the production of theorems, perhaps new and important) than with the means (a thorough understanding of the organization of information

properly speaking, the division between pure and empirical studies is not complete. Even the Logic Theory Machine was run for data, i.e., for various heuristics, the machine's success in actually proving theorems was investigated. Furthermore, the Logic Theory Machine became the basis for the General Problem Solver which attempted to simulate how people actually solve logic problems.[44] The traditions are not meant to be used as a precise way of classifying studies, rather they are to be taken as a guide for indicating the relative emphasis or spirit of studies in the field.

On the basis of our discussion, a question we want to consider is the following: Can either the investigator or the interrogator assign reality to the data in the spirit of empiricism or must they, in the spirit of rationalism, assign reality to a formal model of a system? In order to answer our question we wish to examine the doctrines of these two schools of thought a bit further. Our examination will still be quite general, as we have no desire to review the entire history of Western epistemology; we merely wish to illustrate the importance of these schools of thought for our topic.

Rationalism we will characterize as expressing a basic concern with the whole of reality, with the whole system. For the rationalist, the concern was not with a particular subsystem, for essentially, they

---

processing activity in mathematical discovery). It is felt that understanding these problem-solving processes is an important step toward the programming of more complex and general problem-solving processes, for a variety of intellectual tasks. In theorem-proving research, as in the game-playing studies, the simplicity of the formal system allows most of the research effort to be devoted to understanding problem-solving processes rather than to modeling the task environment [underscoring mine].
E. A. Feigenbaum and Julian Feldman, eds., Computers and Thought, p. 107. Notice the emphasis on "simplicity" and "formal systems."

[44] Allen Newell and H. A. Simon, "GPS, a Program that Simulates Human Thought," Computers and Thought, E. A. Feigenbaum and Julian Feldman, eds., pp. 279-293.

asked, how could one even identify something as a subsystem without first having identified the general system of which it was a subpart? The question naturally arises then how one is to identify a general system, and once having asked this much, it is but a short step to the question of how one might conceptualize the "most general" system. In the language of the systems engineer, we could say that the interest lay with defining the optimal representation of the most general system. The affinity with the systems engineer becomes even greater if we realize that for the 17th century rationalist, defining was the modern counterpart of design. To continue the parallel, we could say that before the rationalist would have felt qualified to design a particular system, he would have required a general theory of systems design.

Another way to understand the rationalist's point of view is to say that he was concerned with discovering the first principles of knowledge that would be true for every system no matter what the particular experience happened to be. The first principles were to be the fundamental laws governing the nature of man's knowledge of the world. Perhaps we can better understand the rationalist's concern if we understand what he certainly did not consider as fundamental, i.e., empirical experience. The distinction was between the contingencies of particular examples of imperfectly existent systems and the universal necessity of the perfectly conceived laws of formal science. It should be no surprise to discover then that for the rationalist the ideal models of perfection were the purely formal systems of mathematics and logic whose truths were taken to be universal.[45]

---

[45] . . . the rationalists not only demanded a perfect whole-system as a standard for system design; they also demanded a fully qualified proof of the perfect whole-system. The rationalist was above all a scientist, and for him nothing can be admitted to the fund of knowledge that has not passed the most carefully designed criteria

On the other hand, there is also the tradition which appeals to nonformal systems. The appeal is directed away from the purely formal laws of reason to the objects of experience and to the testimony of the senses. For this position reality or the laws of reality are ultimately to be built up from finite sets of simple facts or basic system elements. The simple facts are to be a direct expression of the immediately given in experience, i.e., given without the necessity of presupposing any general laws of experience.[46] We might say then that the distinction between the empiricist and the rationalist is rooted in the nature of the primitive realities or unquestioned assumptions their respective positions presuppose. For the rationalist, the primitives were rooted in the fundamental laws of reason to the exclusion of particular experience, and for the empiricist, the primitives were rooted in the fundamental facts of experience to the exclusion of what were to him vacuous laws of reasoning. The concern of the rationalist was not with "the particular and transitory objects of experience" but with the fundamental nature of all objects and of all experience. For the empricist on the other hand, the object of experience that he had before him in the concrete here and now was the basic reality of his senses.

8. Rationalism and Empiricism and Man-Machine Dialectics

Now, in a sense, this chapter is reliving this basic struggle between the themes of the rationalist and the empiricist: Is reality to be assigned to the empirical man, the data, or to a computer program

---

of objective truth.
C. West Churchman, "On Whole Systems," Space Sciences Laboratory Internal Working Paper No. 31, University of California, Berkeley.

[46] Cf. C. West Churchman, Theory of Experimental Inference, Chapter IV.

which simulates the man's empirical behavior? To sweep in Turing's Test, is the interrogator to be a purely formal test which decides on the fit between the program's output and the man's output or is the interrogator to be some nonformal test which decides on the fit between man and program on the basis of some intuitive test? In a sense, the moral to our story is that both the program and the man are to be the reality of the situation, and that both a formal test and a nonformal test of the goodness of fit between man and machine are to be the interrogator. It remains to give the rationale for our moral.

A program is to be the reality of the system in the sense that as a program it represents a formalization of the general rules of human behavior for that particular system. Even if we have only simulated a single human being the program is general in the sense that it represents the general rules of behavior for that individual. Yet, at the same time, the man is also to represent the reality of the system for the reason that the man's behavior is the basic system that gave rise to the program. Most investigators might say that the man's behavior <u>is</u> "the" only reality, period. But, to the extent that a program is a general expression of the behavior[47] of a man, and hence, a formulation of a man's mind, a program can serve as a standard to which the man can refer his "actual" behavior for comparison. To the extent that a program as a standard modifies the man's actual behavior because, as one example, a program reveals inconsistencies, the program becomes the new or actual reality of the situation that is capable in turn of giving rise to a newer reality

---

[47]We do not mean to imply that a particular program is a general expression for all of a man's possible behavior. The program is a general expression of those particular BP's studied, and only for those particular BP's.

changed behavior on the part of the man. And so it goes back and forth.[48] A better program in the sense of a more general program may precipitate extensive revisions in the man's basic BP's, and this in turn may form the basis for an even more general program. Each generation of programs represents an historical evolution in the formal representation of the system and of the mind of man.

We are proposing then that the test of a simulation sweep in more than the usual fictional, unbiased and impartial scientific investigator. (Fictional, because science lacking complete knowledge of human behavior has yet to prove that it does indeed obtain unbiased and impartial scientific observers. The problem for science is to show how we can take account of our values so we can "adjust" work performed under less than standard conditions to standard unbiased conditions.) We also wish to sweep in the user of a simulation who, in the case of a human system, will most probably be the man being simulated. Not only should we as scientific investigators be interested in assigning reality as we see fit either to the man we are modeling or to the program or model of the man, we should also be interested in having the man assign reality to either himself or to the program of his behavior as he sees fit. After all, what the man sees fit to call reality in this situation may be the most revealing piece of evidence about the reality of the system, which we as investigators can collect.

At this stage, our proposal for the criterion of validating a simulation is mostly intuitive. By intuitive we mean the opposite of

---

[48]In Scriven's terms, we might say that the consciousness observing is also the consciousness observed. The consciousness studying reality is also the consciousness becoming real, i.e., the consciousness becoming conscious.

a formal test procedure with well-defined steps. We propose that a man as one mind observing another mind state whether that other mind, in this case the computer program, can inform him of his own mind by acting as a representation of the man's BP's. Essentially, we would be asking, "Would you be willing to accept the program as a substitute for your own mind?" In this context, we are saying that the man fulfills the role of the interrogator in Turing's Test, and since the man can only fulfill this role because of the existence of a program, the program also acts to fulfill the role of the interrogator. Man and machine have become inseparably bound together in the process of discovering their individual roles. What we have done therefore is to examine the sense in which a man and a program of a man can in turn fulfill the role of the reality of the system being simulated and, in turn, the role of the interrogator. We have at the same time been illustrating the sense in which the man simulates the program if the program can be said to simulate the man.

Our version of Turing's Test is intuitive in the sense that so far all we have done is to imply that depending on whether the man merely says that he "accepts" or "rejects" the program, that this by itself is a valid test of the simulation. But our proposal is not put forth in the spirit of wishing to preserve its intuitive character. The spirit of our proposal is certainly not to persuade the scientific community to be satisfied with a simple report of "accept" or "reject." The next chapter will illustrate how we can make our proposal more formal.

To the extent that we have emphasized the role of the person being simulated as a possible judge of the simulation, our proposal is for the development of a behavioral theory of Turing's Test. In the usual scientific investigation, the rôle of the interrogator is most commonly fulfilled

by the experimenter himself. As Churchman expresses the matter,

> Consider, for example, the Samuel checker playing machine that seems to perform reasonably well in the task of playing checkers. Does the machine know that it has indeed performed well? The right answer seems to be 'no'. Then what is the system that does know this? The answer seems to be 'Dr. Samuel and his friends'.[49]

Of course, strictly speaking, the investigator almost invariably delegates his role to some series of statistical tests whose function it is to "judge" whether the BP's of the man and the BP's of the program cannot be differentiated between on a better than chance basis. At least this seems to be common procedure in the behavioral sciences. Since the act of "delegation" is at the core of the procedure, one does not get around the need for a behavioral theory of simulation by avoiding the use of the man being simulated as the judge of the simulation. Since the experimenter is also a man who judges one has the right to question whether his own BP's are in the best interests of scientific procedure. Because the crucial part of the experimenter's role is how he decides to delegate his role, the crucial part of any experimental design depends upon the experimenter's behavior. For example, the question of which statistical tests to use and which variables to test are questions that statistics does not answer. These, the experimenter decides. What statistics does is to say that <u>if</u> the variables are of such and such a nature (e.g., normal or poisson) and <u>if</u> it is relevant to test for, say, the difference between the means of two populations, <u>then</u> there are certain statistical procedures which perform the test in various senses of a "best statistical test." Since we are interested in observing more than the usual

---

[49] C. West Churchman, "Rationalist Inquiring Systems," Space Sciences Laboratory Internal Working Paper No. 31, University of California, Berkeley, pp. 3-4.

scientific observer perceives through the usual notions of statistical tests, we have emphsized the necessity for formalizing the role of the man being simulated.

We can probably best explain our motivation for introducing an intuitive test by contrasting our informal proposal with the "supposedly" formal policies of another. Clarkson, as we mentioned earlier, validated his simulation on the basis of various statistical tests. While we have no desire to reject outright the use of statistics, since, for one thing, one would most likely want to use a statistical design somewhere along the line in formalizing our intuitive test, we do wish to point out how Clarkson's own tests become informal. Let us consider that Clarkson, as to be expected, obtained differences between the behavior of the trust investment officer and that of the computer program with respect to the stock portfolios they selected. Now, of course, the differences were not grave, but the point is that this required a human evaluation, Clarkson's; in effect, this was the part of the study that was anything but formal.

In Clarkson's case, as in any scientific investigation, the investigator must decide on the error between the system and the system model that is allowable. Now, here's the point: In general there are three possible ways in which errors or differences between the system and the model can be accounted for:

> The first is that the model is correct in that it correctly determined that these stocks were overpriced. Under this hypothesis the discrepancy resulted from the trust officer not noticing that he was violating his own rules on evaluating stock prices [underscoring mine]. The second answer is an adaptation of the first--namely that although the rules incorporated in the model are in themselves correct the model was at fault for not allowing for possible time lags in noticing that a stock was over-priced. The third possible answer is that the model's rules are wrong and that in fact the two companies were not over-priced. The evidence from the protocols [a record of the trust investment officer's running comments while forming a portfolio] is sufficient to reject the third possible answer, but it is not sufficient to discriminate between the first two. It seems quite

> likely that the second comes closer to describing what was taking place, than the first--that is, that the model chose incorrectly by not allowing some changes to go unnoticed.[50]

In other words, even though the model was partially at fault, it was Clarkson, not statistics, who was the final arbiter in deciding to accept the model as a valid simulation of the man. It was Clarkson who intuitively ("It seems quite likely [underscoring mine] that the second hypothesis] comes closer to describing what was taking place, than the first.") chose between the first and second hypotheses.

It is unfortunate that the trust investment officer was not swept into the process. Since one always has a choice between accepting the model or rejecting the data, it would have been informative to have the trust investment officer himself compare his own behavior with that of the program. If the officer were to admit that he was indeed violating some of his own rules, then he would be implying that the program is real in the sense we discussed earlier. Namely, the program would be real if it were to act as a modifier of the officer's behavior. If the program were accepted as correct, then we could say that the man was simulating the program. Unfortunately, we repeat, we do not know from Clarkson's study if the trust investment officer would accept the program as an aid to his decision-making.

At this time we wish to make some additional comments in a further attempt to justify our proposal for an intuitive test of a simulation. Our justification will take the form of noting some of the general criticisms which can be leveled against both the rationalist and empiricist modes of thought. In a sense the rationalist's most fundamental problem is to show how his fundamental laws of reasoning to which all experience must conform are indeed fundamental. In general, it would

---

[50] Clarkson, op. cit., p. 68.

appear that what is taken to be fundamentally rational is justified in either one of two ways. In the first, some system of rational laws is taken as a fundamental means which is necessary for the attainment of some basic end; in this case, the end is not part of the original rational system of laws. In the second way, the system is taken as an end in itself; in this case, the system is fundamental by definition. Now, for fundamental defined in the first sense, we have a right to wonder why the system by itself is fundamental, since it is dependent upon something outside the system for its fundamental justification. It appears that the something outside the system, the basic goal, is more fundamental than the original system. And, if in the second sense, the goal is part of the system, what is it that forces us to accept the system or goal as fundamental? As an example, why are mathematics and logic the most general forms of knowledge, and if they are, which particular formulation of them is the most general form? Most general, we ask, by whose definition for which purpose?

A more pertinent criticism of rationalism for our purposes takes the following form: If experience must conform to the laws of reason, how do we ensure ourselves that experience actually does? As soon as we realize that we have to ask which particular set of laws of reason it is that we wish to have experience conform to, then we are led back to the questions of the preceding paragraph. If at this point we say that perhaps the question can be answered by some direct appeal to experience, i.e., in certain circumstances certain kinds of reasoning are fundamental for certain purposes, then it appears that contrary to the original hypotheses, reason must now conform to experience. An example here would consist of the case of the pure mathematician who uses experience in order to discover how his theorems are to be proved and also of

the effect of different axiomatic structures on the kinds of theorems that can be proved.

On the other hand, the empiricist is equally beset with fundamental difficulties. As we argued much earlier in this chapter, the empiricist must use some general rules in order to collect his "simple," "basic," or "raw facts." Presumably, one needs some general theory of experimental design in order that one can satisfy himself that his data are indeed the basic data he ought to collect.[51] In general, it would appear that data are never truly raw. If there is a qualifier to be applied to "data," then it is in keeping with the theme of this chapter to say that data is either consciously or unconsciously collected. Consciously collected data is data which is collected by an experimenter who is consciously aware of the experimental design his and every research project presupposes. This kind of experimenter recognizes that the existence, and hence the collection, of data always presupposes some kind of model. If there is really any kind of raw data, it is data which is gathered by a raw experimenter, unconsciously using an unanalyzed experimental procedure.

Here we wish to re-emphasize the role of the man being simulated as a possible judge or arbiter of the dispute between a rationalistic and empiricist view of reality. And at this point, we wish to emphasize the specific role of DESIGN in this process. While the program is not a perfect substitute or representation of the engineer's design behavior, it is not a complete failure either. The program simulates some aspects of the engineer's behavior quite well, so well in fact that the program has already assumed the role of a standard.[52] As

---

[51]Again, see footnote 9.

[52]See case II of Chapter V.

an example, recall that the engineer in actual practice only explores a few basic alternative solutions to any design problem. To examine any more than a few proposals would be costly in time and money and would probably exceed the engineer's allowable budget. Thus, a limit on design time and money restricts the engineer to finding not the optimal solution to the design problem but instead a solution which is "satisfactory." Since the program explores the entire set of possible designs (within some limits), the engineer has an opportunity to evaluate, as he has not had before, his notions of what constitutes a satisfactory solution, and hence, for the first time, the engineer has a check on his design strategies. As a result, this investigator has also had a further opportunity to evaluate both the program's and the engineer's design criteria. The program, although imperfect, by acting as a design aid to the engineer, also acts as a guide to that behavior of the engineer which remains to be improved. The program with all its imperfections is still a general model of the engineer's design behavior, and as a general model, the program, in conjunction with the engineer himself, has made it possible to gather additional data about design which could not have been gathered without a program. And new data forms the basis for an improved program which forms the basis for an improved design procedure on the part of the engineer. And in principle an improved design procedure can give rise to newer data which can form the basis for a more improved program which can give rise to still newer data which . . .

Since the purpose of this chapter has not been to review in detail the history of Western epistemology, we will not present in detail history's subsequent answers to rationalism and empiricism. All we note here is that some of history's later answers have emphasized the necessity of both modes of thought; to paraphrase Kant: without empirical data

our formal systems are vacuous, and without formal systems to guide us, our data is chaotic. Without some data to start with we could never construct a general program, and without some theory of programming, we could never collect some data to program. There are numerous variations on Kant's theme; to give but one more: a general system computer without empirical input stands idle and produces no output, and at the same time, without a general system data format (e.g., punched data cards), it is impossible to input empirical data into a machine. We are in the position of having to design the form we want our data to be in before we can prove that the form we have designed is adequate for our research purposes.

Our use of the engineer as an arbiter has tried to steer a middle course between an empty rationalism and a blind empiricism. As an arbiter between theory and data the engineer uses his design intuition in order to utilize the richness of the empirical data that a formal theory of behavior would be unable to capture. The engineer as the interrogator of Turing's Test decides on the fit between man and machine on the basis of his subjective impressions on the fit between his own behavior and that of the program. What we are saying then is that the demand for a precise definition of a formal test for validating a simulation may be prone to miss the most fruitful use of the empirical data. On the other hand, our earlier detailed discussion on the nature of scientific definitions serves to emphasize that we are not content to preserve the subjective nature of the engineer's impressions for the sake of subjectivity. Instead, an extensive part of this author's study is concerned with satisfying the conditions which underlie the development of a scientific definition consistent within the means of a limited study.

9. Churchman's Necessary and Sufficient Conditions for Simulation

We wish to conclude our chapter by relating what we have had to say about simulation to what Churchman has defined as the necessary and sufficient conditions for the concept:

> . . . the following are each necessary conditions that x be taken as a simulator of y, and that the entire set is a sufficient condition.
>
> (1) knowledge of x can be used to predict y (within error limits);
> (2) x is a formalized language with rules of validity;
> (3) the rules of validity are in part based on sampling;
> (4) y is a formalized language that can be taken to 'approximate reality.'[53]

The first requirement is a rather obvious one although, as our laborious arguments have tried to show, it is by no means obvious how one satisfies it. We use x, in our case a computer program, to predict the behavior of y, an engineer. And as we will show, x does predict y within error limits. The basis for the assertion is founded upon the opinions of both this author acting as a scientific investigator and y himself acting as the interrogator of our formulation of Turing's Test. Our final chapters document what x does as well as does not predict within limits. We do not go into details here since we are primarily concerned with methodology rather than results.

Secondly, x is a formalized language with rules of validity. The formalized language is the language of computer programming and that of a behavioral theory of human problem-solving which can be expressed in terms of a program language. We require with Churchman that x be a formalized language with expressible rules of validity in order that we can be said to know explicitly what it is that is simulating y. A formal language for our purposes is a formalized scientific

---

[53] C. West Churchman, "An Analysis of the Concept of Simulation," op. cit., p. 2.

description of a system:

> A formal system is a set of entities, operations, properties and relations; a set of rules for combining these; a set of rules that provide estimates of what combinations are assertions; a set of rules that provide estimates of what can be inferred from an assertion; a set of rules that provide measures of the costs and accuracy of the estimates; a set of rules that generate assertions about the 'whole'; a set of rules that provide estimates of the validity of these wholistic assertions as well as the cost and accuracy of the estimates.[54]

Thirdly, both x itself and the validation of x as a representation of y <u>are</u> based on sampling. It is basically impossible for us to study and therefore to represent every aspect of y. Thus, x as a representation of y only represents a particular sample out of the possible ways we could study and program y. The rules of validating x fare no better; the number of circumstances in which to test x are at least as large as the number of circumstances in which we would like to observe and to gather data about y. The point is that the validation of a study takes place every time we run the program and continue the study. Validation is <u>never</u> a final process.

The third rule, we emphasize, expresses the fact that x need only represent y, and not be all of y, in order to simulate y.

Fourthly:

> [The last condition is] that simulation occurs only if the predicate is some aspect of reality. In other words, the domain of y in the expression 'x simulates y,' must be the set of assertions about the real world. The intent of simulation research is to reveal something about reality. Hence in the spirit of an analysis of a concept, we shall assert that the reality of y is a necessary condition in simulation.[55]

This last requirement formed the basis for our exploration of the concept of mind. For our study, y is a mind and a mind is a certain set of BP's.

---

[54] Churchman, <u>op</u>. <u>cit</u>., p. 4.

[55] Churchman, <u>op</u>. <u>cit</u>., p. 5.

In order to answer which kind of BP's can be mind, we considered the answers of two opposing schools of thought. We have wished to conclude that a single mind is only real by being imbedded within some well-defined general theory of mind-like behavior. Only then can we state with scientific precision what it is that we know to be real. At the same time, we also wish to conclude that any general theory of mind must be based upon empirical data in order to determine which particular set of BP's can stand for mind in any particular study. And finally, we conclude that we need still another aspect of mind, the subject himself to interrogate or to decide what is real, his own mind or a representation of his mind.

> . . . the observing mind has a choice as to what it should assign as the reality of the observed mind. Whether or not the choice is correct depends on a third mind, one that judges the purposes of the second. The second mind cannot know the reality of the first until all observing minds are content, and this contentment is an unattainable ideal [i.e., reality is an ideal, an unattainable description of the world, but which nevertheless can be approximated].[56]

---

[56] Churchman, op. cit., p. 12.

CHAPTER V

EVALUATING THE PROGRAM; AND THE TASK: PART III

For purposes of evaluating the simulation, the results of the last chapter can be summarized as follows: the engineer and not some formal test (whether it be statistical or otherwise) is to be the evaluator of the program; in the sense of Turing's Test, the engineer is to be his own interrogator. The reason for having the engineer be his own interrogator is that by interrogating himself, the engineer is also giving us additional information about his job that we might not be able to collect otherwise. Having the engineer respond to a new design aid is one technique for studying the old aid, the engineer by himself. As a result, not only is this a report of a case study of what the engineer has done in the past, this is also a case study of what the engineer will be doing in the future. If the program by itself represents what the engineer has done in the past, then how the engineer responds to the program in the present represents what he will be doing in the future. The point is that <u>if the program is a good simulation, i.e., "good" from the "engineer's" point of view, then the program is useful for future designs</u>.

In terms of Ackoff's idealized research model for constructing a scientific definition of an object (i.e., a plan for measuring an object's properties; see Chapter II), the program represents an additional stimulus that we have presented to the engineer. By having the engineer <u>actively</u>

respond to (i.e., criticize and evaluate) the program, we gain additional information about his technical and behavioral properties as a designer. We also find out what about his job remains constant by observing how it changes in response to a controlled stimulus. To the possible objection that such a procedure changes what we wish to study, we reply that change is a natural property of the task. After all, the engineer constantly seeks to improve and revamp his methods.[1] We have merely tried to study this aspect of his job as well by having him respond to a simulation of his job. Besides, one of the methodological implications of the last chapter is that in order to measure an object's properties, one must study how the object "adjusts" itself (i.e., changes its responses) to changes in the stimuli. Since the object's properties are its responses, to study an object is to study how its properties change.

Basically, the methodological decision to use the engineer as the evaluator of the program is a response to our own fundamental research goals, the desire to add to our understanding of engineering design. In accordance with Chapter IV, our methodology is primarily a consequence of our teleology. But our methodology is also a response to certain organizational constraints. Since it takes anywhere from half a day up to a week for the engineer to go through a preliminary analysis and sketch of a single design alternative, it would take an inordinate amount of time to obtain any large number of cases with which to compare the program. (We note that it only takes half a day for an alternative which is a response to a "straightforward" set of design requirements; e.g., a case where the

---

[1]See Case III (later in this chapter) for an illustration of this phenomenon. Case III specifically shows how the engineer's knowledge of Be's properties changed.

engineer has plenty of space in which to build an incremented vessel around the LH_2 flask. If, on the other hand, the requirements are "tight," say, the engineer has to figure out a novel way to get an LH_2 flask into a small vessel, then a preliminary analysis and sketch could take up to a week.) In addition, both the task and the program are large; there are many design variables. Thus, if we wanted to compare the engineer's and the program's behavior in any systematic sense the number of observations required for statistical significance in, say, a factorial design could easily make unreasonable demands on the engineer's and Laboratory's time. Furthermore, if we wanted to compare the program against real on-going designs, since the engineer only does three or four designs a year, we could go on collecting data forever. Most important of all, during the course of this study, the engineer gradually assumed other duties. He worked his way into a more responsible job within the organization. As the saying goes, he worked his way out of his present job. As a result, the designs the engineer did during the phase of the study's program evaluation were not done as a part of his present duties. They represented an extra responsibility which the engineer graciously assumed in addition to his normal duties. The designs were done for the general benefit of this study and, in particular, to satisfy the engineer's own curiosity about the goodness of the program. Since the engineer still expected to do some pressure vessel designs in the future, a good program would become a good design aid. Finally, we note that the program was only set up in the first place to simulate about 50% of all of the possible kinds of design configurations the engineer ever can and does design. The program only simulates the design of the simplest configurations. This feature again increases the time we would have to wait around in order to compare the program with real on-going designs

of the right configuration. The moral is that real-life examples in real-life organizations are not set up for the convenience of the statistician. But then, as we have repeatedly argued, the measure of a study's significance is not generally measured in terms of its statistical significance. For us, the basic questions of this chapter are: What significance does the program have for the engineer, and how does the engineer measure the significance of this study?

Case I

In August of 1966, the engineer's boss suggested that physicist X's experiment might be a good case to study. In accordance with the usual procedure, physicist X had just put in a preliminary request for an engineer by explaining in very general terms the nature of his experiment to the engineer's boss. Since X's experiment was still in the early planning stages, it would give us the opportunity to document the development of an experiment and design from the very start. The engineer agreed, and we proceeded to contact X in order to get a working statement of his experimental needs.

At the first meeting, X explained that he wanted the engineer's early involvement in order to have the engineer help him design his experiment. He wanted the engineer to do a feasibility study, the results of which would help the physicist decide on the exact nature of the experiment he would do. As a start, the physicist wanted the engineer to compare the relative advantages of two classes of designs, those for an LH_2 flask of RF=1.5" and LF=12.0" and those for an RF of 3.0" and LF=12.0". These dimensions were about the only definite pieces of information the engineer was to receive initially. The dimensions of the NCR, the allowable ρT's, the weighting factors, etc., were all left undefined. On the other

hand, ΔNCR was at least partially defined in the sense that X wanted a clear view of the sides of the LH_2 flask; i.e., he wanted the flask to be entirely outside of whatever NCR was finally decided upon. X's general instructions to the engineer were to make his designs "as thin as possible." As far as time went, X remarked that the date of his experiment was "about" six months in the future. (At the time of this writing, about seven months to the day have passed with no final design decisions having been made.) The engineer later commented that X characteristically "underdefined" his design requirements. Seven months later, the engineer also remarked that the initial requirements may have been underdefined on purpose and that no final design requirements may have been formulated even up to the present for the reason that at the time X originally called him in, X may not have even been scheduled for an approved experiment on one of the Lab's nuclear machines. X may have merely called the engineer in to get a better idea as to whether any of his proposed experiments were actually worth doing, i.e., whether the engineering presented any physics obstacles. In this case, the requirements were purposefully underdefined because the physicist was using the engineer to help him formulate them in the first place. Even though his requirements were underdefined, physicist X recognized the importance of consulting the engineer from almost the very inception of his experiment.

The engineer began his examination of design proposals by sketching 6 general kinds of configurations (see Fig. 33). Proposals #1 and 2 sort of bracket the NCR. While proposal #1 represents the LH_2 flask as just outside (or just touching) the NCR [i.e., ΔNCR = (LF + WNCR)/2 whatever WNCR is], proposal #2 represents the flask at a greater and variable distance from the NCR. If LC is the length of proposal #1's cylinder, then ℓ + LC is the length of proposal #2's cylinder, where ℓ satisfies

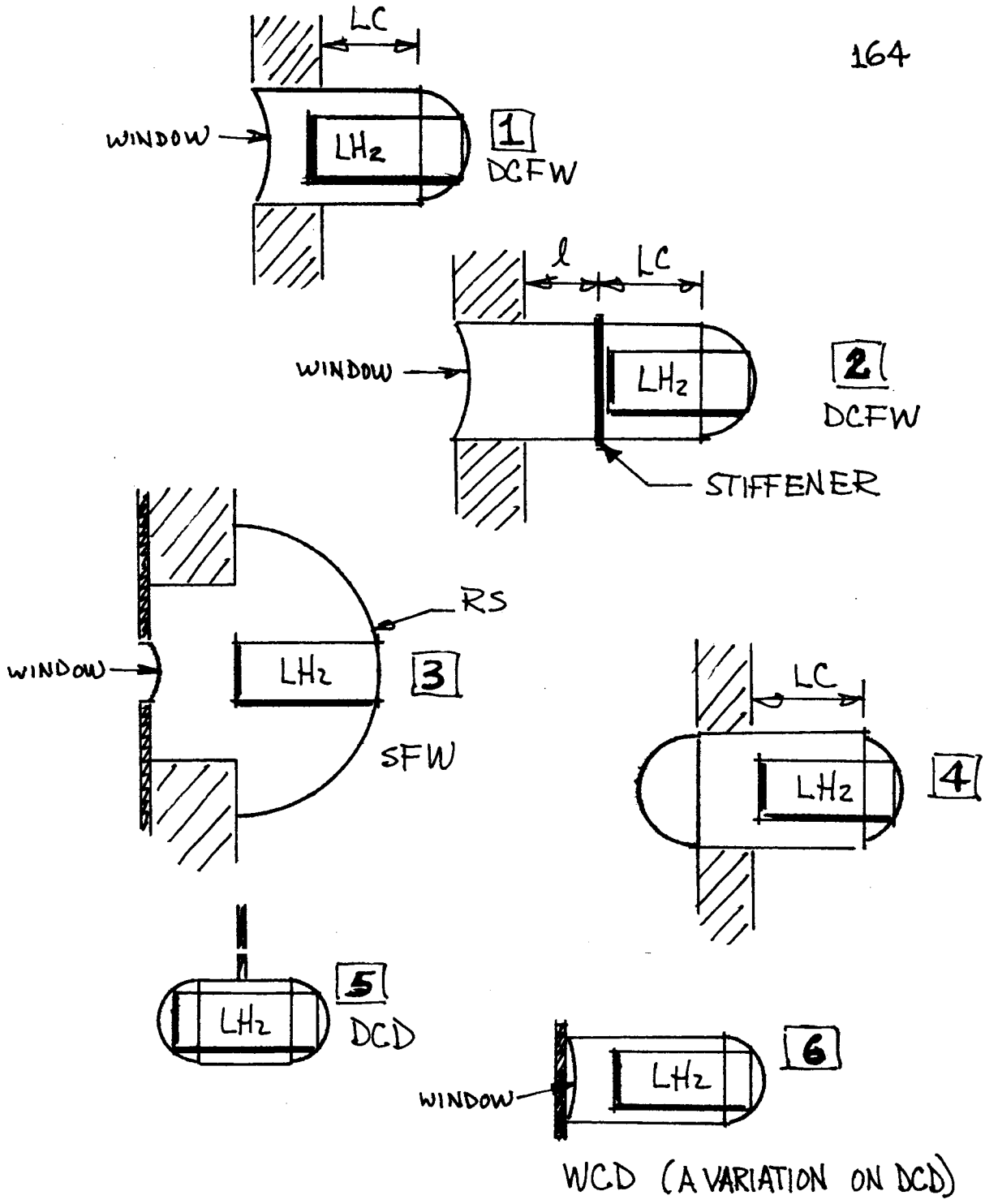

PRELIMINARY DESIGN SKETCHES

FIG. 33

the relationship $0 < \ell \leq LC$. Proposal #2 illustrates the point that with the addition of a single stiffener, the engineer can about triple ΔNCR, i.e., about double the distance of the flask from the NCR, <u>without at the same time increasing the cylinder's thickness</u>. Furthermore, if the engineer wanted, he could theoretically go on adding sections of length LC between stiffeners indefinitely. Each stiffened section would, in effect, represent an individual cylinder having the same thickness as a single cylinder of length LC. The engineer stopped adding sections with the consideration of proposal #2, since this proposal alone is general enough to illustrate the essential features of the process. This proposal is also general enough to raise some more specific questions about the physicist's design requirements. What is more important, the distance of the flask from the NCR?, a cylinder of uniform thickness?, or a minimum ρT cylinder? If the physicist can tolerate an alternative which has a concentrated mass at a known point, i.e., a stiffener, then he can get a long cylinder which has the same thickness (and hence the same ρT everywhere except at the stiffener) as a short cylinder of uniform thickness but having its flask twice as close to the NCR. The question is, can the physicist tolerate a stiffener? If he can't, the engineer can always build a long uniformly thick unstiffened cylinder having, of course, a greater ρT than a uniformly thick short cylinder as represented by proposal #1. Since X didn't say whether he could or couldn't tolerate stiffeners, proposal #2 became, at least at this stage, a design possibility for the engineer. The point is that since all the engineer was told was to make the designs "as thin as possible," stiffeners are a possibility that should at least be considered for making a long cylinder thin.

Proposal #2 also makes for an interesting comparison with the program. For one, the program just doesn't generate every stiffened alternative in the same way as the engineer does. The program successively adds stiffeners to a cylinder of fixed length constructed for a flask located at a fixed and given distance from the NCR. The only way to have the program consider the same kind of proposal as #2 is essentially to input it into the program by means of the dimension ΔNCR. The program, in contrast to the engineer, does not generate alternatives by modifying a given ΔNCR. For any single run of the program, the program only considers ΔNCR as both fixed and given. Here we have an example of a point made earlier: namely, who gives the "givens" affects what is finally gotten. The point is that the "givens" affect not only what the program generates but also what the engineer generates as well. Proposal #2 shows how the engineer acts to define the problem.

Proposal #4 raises the engineer's question as to whether a window is actually more efficient ρTwise for the particular cases at hand. Proposal #4, along with #2, performs another function as well: they force the physicist to begin considering how much external space he is willing to allot to an alternative. Proposals #3, #5, and #6 round out the simple design configurations the engineer explicitly considered on paper. Note that proposal #6 is a configuration which the program does not consider; proposal #6 is not a programmed possibility.

Since proposals #2 and #4 are essentially contained in proposal #1, the engineer decided to analyze only configuration #1 in detail. By analyzing #1, he would also, in effect, be analyzing #'s 2 and 4. Proposals 5 and 6, on the other hand, were rejected outright because of their relative complexity and their lack of any distinct advantages over proposal #1. In general, building a minimum DCFW (#1) is easier than building

a minimum DCD (#5). To the engineer, building a minimum DCD is like building "a ship in a bottle [emphasis added]." Proposal #3 (the minimum sphere) was also rejected since analyzing proposal #1 already involves analyzing a hemisphere, and one whose ρT will obviously be lower than the minimum sphere. ρTwise the hemisphere of proposal #1 is a better alternative than proposal #2 (the smaller the sphere, the thinner its walls). Proposal #1 also takes less external space than #2 does. These considerations reveal how the engineer not only eliminates design alternatives as a whole, but in addition, processes alternatives in parallel by embedding the analysis of some alternatives within others. The program, with the exception of certain limited cases which we will discuss later, does not process alternatives in parallel or embed alternatives within alternatives.

The engineer began a simultaneous and detailed look at two DCFW configurations, one DCFW for the 3 x 12 flask and the other for the 6 x 12. Although he initially assigned a range of 2" to 3" to RC for the 1.5" radius flask and a range of 3.5" to 4" to RC for the 3" radius flask, the engineer began his computations using only RC's of 2" and 4" respectively. Note that the 2" RC roughly corresponds to a minimum cylinder for the 1.5" flask (although according to the program, the minimum RC would actually equal "RF + a clearance of 0.1 RF" or 1.65" altogether), while the 4" definitely represents an incremented cylinder for the 3" flask (in fact, $\Delta RF_{incr} = 4 - 3 = 1$"). Strictly speaking, even the 2" RC represents an incremented cylinder since its actual increment of 2 - 1.5 = 0.5" is certainly noticeably greater than the program's minimum increment of 0.15". But then it should be noted that the RC's of 2" and 4" were not only chosen because of the engineer's decision to analyze slightly incremented shells (but "incremented" nevertheless), they were also chosen because of their convenience. Having once done the computations for the 2" shell, in many cases the corresponding calculations for the 4" shell become almost

trivial. Most important of all though, 2" and 4" were selected for analysis because they represent stock sizes. In the engineer's view there's not much point in analyzing some odd diameter shell if one can get an easily available and catalogued tube which is "close enough" to the supposedly "minimum" shapes. Since X did not indicate how much of a premium in time and money he was willing to pay for specially constructed, absolutely thin shells, the engineer assumed that stock sizes would be good enough to do a good job.

On the basis of a membrane stress analysis, assuming a yield point stress of 40,000 psi and a safety factor of 1.5 (the engineer, in other words, assumed a heat-treated aluminum alloy as the construction material), the thicknesses of the cylinders required for the 150 psi internal pressure load were calculated to be 0.113" for RC = 2" and 0.226" for RC = 4" [T_{3I} = 150 x 1.5 RC/40,000]. Using the Saunders paper referred to in Chapter III,[2] the cylinder thicknesses required for the 30 psi external pressure load were calculated at 0.025" and 0.036" respectively (RC = 2" and RC = 4"). Using the Saunders paper, the engineer reads off a graphical solution of the complicated von Mises equation for the pressure at which a short tube under both an axial and a circumferential load collapses due to buckling instability. In comparison, the program numerically solves an approximation of the von Mises equation [it will be recalled that the approximation is $T_{3E} = C(METAL)RC^{0.6}\ LC^{0.4}$]. In order to use Saunders' graph, the engineer must compute, amongst other things, the lengths of the cylinders. For convenience's sake, these were determined by merely drawing the cylinder lengths necessary to circumscribe an RC = 2" shell over a 3 x 12 flask and an RC = 4" shell over

---

[2]Harold E. Saunders and Dwight F. Windenburg, "Strength of Thin Cylindrical Shells under External Pressure," Trans ASME, Vol. 53 (1931), pp. 207-218.

a 6 x 12 flask. The RC = 2" shell's length was measured with an ordinary engineer's scale at 10.5"; the RC = 4", at 10.125".(Hereafter, we shall refer to the RC = 2" shell as the 4" D, i.e., diameter, shell and the RC = 4" as the 8" D shell.) From LC/R's of 10.5/2 = 5.25 for the 4" D shell and 10.125/4 = 2.56 for the 8" D_1 shell, and for a critical pressure of p_{crit} = 30 x 28/10.3 = 81.5 psi (the external design pressure of 30 psi is increased by the ratio of 28 to 10.3, the ratio of the modulus of steel to the modulus of 6061Al to account for the fact that Saunders' graph has been calibrated in terms of steel, not Al), ratios of t over RC are directly read off of Saunders' graph: for 4" D, t/RC $\simeq$ 0.0125; for 8" D, t/RC $\simeq$ 0.009; therefore, multiplying by the appropriate RC yields T_{3E} = 0.025" (4" D) and 0.036" (8" D).

The thicknesses of the hemispheres required for the 150 psi internal pressure load are calculated by merely halving the required cylinder thicknesses for internal pressure, i.e., T_{1I} = 150 x RC/(2 x 40,000), which rounded off are 0.006" (4" D) and 0.012" (8" D). The hemispheres' thicknesses required for the 30 psi external load are calculated from the fromula previously discussed in Chapter III: $p_{crit} = 0.366\ E(METAL)\ x\left(T_{1E}/RC\right)$. For p_{crit}=81.5 psi, E = 10.3 x 10^6, T_{1E} = 0.0057(4" D) and 0.0115 (8" D). We summarize the engineer's results up to this point:

LH_2 flask	3 x 12	6 x 12
RC	2" (4" D)	4" (8" D)
LC	10.5"	10.125"
T_{3I}	0.011"	0.023"
T_{3E}	0.025"	0.036"
T_{1I}	0.006"	0.012"
T_{1E}	0.006"	0.012"

Next, the engineer computed the ratio of the minimum required design thickness for the hemispheres to the minimum required design thickness for the cylinders (the minimum required design thickness is the greater of T_{3E} and T_{3I} for the cylinders and the greater of T_{1E} and T_{1I} for the hemispheres; both the cylinders and hemispheres must be designed for the largest computed thicknesses): $6/25 \simeq 1/4$ and $12/36 = 1/3$. These ratios it will be recalled, are computed for the purpose of performing a more exact stress analysis for the required design thicknesses. Since the more exact analysis is only defined for ratios greater than or equal to 0.50, the engineer is thus faced with the necessity of having to modify his preliminary design thicknesses before the final design thicknesses can even be computed from the preliminary ones. The difficulty is due to the fact that the Kraus paper[3] only presents an analysis for ratios down to 0.50. In addition, there is an indication that the analysis itself "blows up" below 0.50. The engineer has plotted some of Kraus' data and has observed that the closer the ratio approaches 0.50, the higher the stress concentration factors become. (Of course, as the engineer himself is the first to admit, lacking the confirming data, he is not certain that the analysis does indeed blow up below 0.50. He can only guess what does happen on the basis of the trend which Kraus' data above 0.50 indicates.)

A small ratio is also undesirable for still another reason. It makes for a tough welding problem. In our specific cases, the spheres being much thinner than the cylinders, the spheres could literally be burnt up while trying to weld them to the thicker cylinders. While supplying enough heat to weld the cylinders, we could be supplying more than enough

---

[3] H. Kraus, G. G. Bilodeau, and B. F. Langer, "Stresses in Thin-Walled Pressure Vessels with Ellipsoidal Heads," Paper #60-SA-12, Trans. ASME, Vol. 12 (1960), pp. 1-12.

heat to weld the spheres to the cylinders. Thus, in order to improve on the preliminary thickness ratios (and associated problems) the engineer began to consider alternate design possibilities: (1) gradually taper the cylinders to the joint so that the cylinder is thinner at the joint; (2) form the hemispherical domes by drawing so that the hemispheres will be thicker at the joint; and (3) add stiffeners to the cylinders in order to reduce the T_{3E}'s. Each of these possibilities will increase the ratios above their present values. Since the first two possibilities will, in general, not yield as thin a design by themselves as stiffeners will, the engineer decided to analyze the possibility of stiffeners further. Essentially, the first two possibilities merely get around the ratio problem at the joint. Stiffeners make the designs as a whole better, i.e., thinner.

Adding a single stiffener to both shells is equivalent to halving the length of the cylinder that must be designed to withstand the external pressure load. A single stiffener in the middle of both cylinders breaks the design of each whole cylinder down to the design of two equal cylindrical sections of length LC/2: 10.5"/2 = 5.25" and 10.125"/2 = 5.06". Using Saunders' graphs again with new LC/R's of 2.62 (4" D) and 1.26 (8" D), and p_{crit} = 81.5 psi as before, T_{3E}'s of 0.018 (4" D) and 0.028 were computed. As with the Kraus paper, the Saunders paper also has limits to its analysis which the engineer must check. For the 8" D case, an LC/RC of 1.26 together with a T_{3E}/2RC of 0.0035 indicate that the thickness of 0.028" as computed from Saunders' graphical solution to the von Mises equation is not conservative. As Saunders himself shows, for the particular LC/RC and T_{3E}/2RC for the 8" D case above, the actual <u>experimental</u> load for buckling is about 6% lower than that computed from <u>theory</u>. This means that the design thickness should be higher than that computed

from theory. In practice, the engineer would compensate by choosing the next thickest stock sheet above that required for the computed thickness of 0.028".

In order to get an idea of the advantage of additional stiffeners the engineer also analyzed the case of two stiffeners. Two stiffeners effectively divide each cylinder up into three shorter ones of lengths 10.5"/3 = 3.5" and 10.125"/3 = 3.38" respectively. Using LC/RC's of 1.74 (4" D) and 0.845 (8" D) and p_{crit} = 81.5 psi, T_{3E}'s of 0.0156" and 0.0232" were computed. Again, the T_{3E} calculated for the 8" D shell was not found to be conservative. According to Saunders, the actually observed load for buckling is about 10% <u>lower</u> than 81.5 psi which the von Mises equation predicts. As a result, even though it is not an exact procedure which is theoretically justifiable, the engineer upped his thickness calculation by going back to Saunders' graph of the von Mises equation and using 81.5 x 1.1 (i.e., a 10% <u>increase</u> in p_{crit}) or 90 psi instead of the original 81.5 psi; T_{3E} now becomes 0.025". The engineer notes that this way of using Saunders' graphs may be grossly inaccurate for large differences between the theoretically computed and the actually observed values of the buckling loads. Nevertheless, even for large discrepancies, it is still a procedure which gets one "in the ball park" in a field where there are very few generally applicable design equations. We should also note that contrary to the program's approximation of the von Mises equation, there exist no well-defined cut-off points or limits to the use of the von Mises equation itself as presented in Saunders. Saunders merely gives a series of 10 data points for cylinders with varying LC/RC's of 2.00 down to 0.125, all having essentially the same T_{3E}/2RC of approximately 0.003. For these 10 data points, Saunders tabulates the actually observed vs. the theoretically computed buckling loads. He gives no

general limits in terms of $T_{3E}/2RC$ and LC/RC for using the von Mises equation. For this reason and the fact that the von Mises equation, to begin with, is difficult to solve (hence, the extreme usefulness of Saunders' paper, which does at least solve this equation), the engineer suggested programming the approximations, although in practice, he actually uses von Mises by way of Saunders. We summarize the analysis up to this point:

Preliminary Design Thicknesses

Case	4" D	T_{3E}	T_{1I}	$T_{1I\text{-drawn}}$	$\frac{T_{1I\text{-drawn}}}{T_{3E}}$ = RATIO
1	No stiffeners	0.025 in.	0.006 in.	0.008 in.	0.320
2	1 stiffener	0.018 in.	0.006 in.	0.008 in.	0.445
3	2 stiffeners	0.016 in.	0.006 in.	0.008 in.	0.500
	8" D				
4	No stiffeners	0.036 in.	0.012 in.	0.016 in.	0.445
5	1 stiffener	0.028 in.	0.012 in.	0.016 in.	0.571
6	2 stiffeners	0.025 in.	0.012 in.	0.016 in.	0.640

It should be noted that the engineer has improved on the ratios both by adding stiffeners and by considering the hemispheres as drawn. It should also be noted that the engineer has computed a larger thickness for a drawn dome than the program does. Again, the engineer is thinking of stock sizes and rounds 0.006"/0.85 = 0.00706" (as an example) up to 0.008" In general, it would seem that for added confidence the engineer "usually"--but not always--rounds up and not down to the nearest stock size. Presumably, different engineers would "round off" differently, a behavioral factor that can be of considerable technical importance designwise both

with respect to safety and to the computation of ρT.

We might interject at this point that from some of the engineer's protocols specifically collected for the particular cases at hand, one can see how the engineer, by considering drawing as the solution to several problems, is basically considering several factors at once. In the jargon of computer programming, the engineer is simultaneously calling several of DESIGN's levels or subroutines at once. For example, during the course of reviewing the advantages of drawing, the engineer also considered one of its possible disadvantages. One possible objection to drawing is that while it certainly makes the crown of the hemisphere thinner, it also, at the same time, makes the hemisphere's base thicker. The engineer's chain of thought went something like the following:

> X's case has the incident beam going straight through the dome's crown, and, as a result, X wants it specially thin there, but he also wants the cylinder-dome combination to be thin because he wants to measure reactions out the side of the cylinder. By making the done drawn such that the thickness is a little bit greater at the junction between the cylinder and the dome, it not only makes the welding easier but it also makes the stress concentration less because the variation in thickness from cylinder to dome is less. And lowering the stress concentration by making the dome a little bit thicker at the joint can actually make the dome thinner over-all than if it were uniformly thick to begin with. Making it a little bit thicker at the base actually makes it a little bit thinner in the long run . . . The point is that by drawing, the design is thinner where the incident beam goes in [the primary] and it is also thinner where the beam goes out [the secondary--the cylinder] at the expense of the joint which we are really not interested in for this particular experiment. Or, rather, it's not that we're not interested in the joint; it's just that the joint is a small region compared to the rest of the cylinder. We're sacrificing one area for the sake of the whole.

A low ρT for the dome and cylinder is more important than a low ρT for the joint. The engineer is, in a sense, evaluating the whole design ρT-wise from the very inception of the analysis.

After considering drawing plus stiffeners, the engineer has a better idea of the preliminary design thicknesses from which to compute

his final design thicknesses. For the 4" D shell, since case 3 is the only alternative to have a ratio of at least 0.50, case 3 was the only 4" D alternative which the engineer analyzed in detail. Case 3 shows that often one only analyzes what one is able to, and not necessarily what one would like to.

One might still ask why the engineer didn't consider a 4" D shell with more than two stiffeners especially since it certainly appears that the greater the number of stiffeners, the higher the ratio of $T_{1I\text{-drawn}}$ to T_{3E}. The reason is that it did not appear to the engineer that a third stiffener would actually make the shell appreciably thinner. The difference between the theoretically computed p_{crit} from von Mises and the empirically observed p_{crit} tends to offset any advantage of adding a third and any additional stiffeners.

The engineer proceeded on to the most exact analysis using Kraus' paper. The Kraus paper gives three stress concentration factors SI_j, SI_{cr}, and SI_{cyl}.[4] SI_j refers to the stress concentration (or stress intensity, SI) at the junction of the cylinder and dome. (The Kraus paper doesn't say whether for any particular case the stress concentration which SI_j represents occurs specifically in the cylinder or in the dome. All we know is that it is either in the cylinder or in the dome.) SI_{cr} refers to the stress concentration in the crown of the sphere (at t_1, see Fig. 23, Chapter III), while SI_{cyl} refers specifically to the stress concentration in the cylinder "near" the junction. From the SI's, a more refined analysis of actual stresses in the cylinders and hemispheres due to the action of the 150 psi internal pressure load can be determined. The initial stresses due to internal pressure were based on a yield point

---

[4] Kraus, Bilodeau, and Langer, op. cit., p. 7.

stress of 40,000 psi, a safety factor of 1.50, and a membrane stress analysis. The difference between the more refined stress analysis and the membrane stress analysis gives the engineer a check on the safety factor he initially assumed. If the more refined analysis confirms his initial safety factor, his preliminary design thicknesses essentially become his final design thicknesses. If the more refined analysis does not confirm his initial safety factor, the whole procedure must be reiterated with the assumption of a higher initial safety factor.

In order to prevent any misunderstanding, it should be carefully understood that the Kraus analysis does not check on the absolute value of the initial safety factor assumed. The analysis only checks the relative value assumed. No matter what the safety factor, the analysis merely says whether it must be increased or not. The initial selection of a safety factor remains as "personal" as ever. Note: "personal" does not necessarily mean "subjective." "Personal" means that the engineer bases the selection of a safety factor on his own design experience, only part of which is subjective.

The SI's are used to determine the "actual" stresses due to the 150 psi internal pressure load. (The more refined analysis does not affect the stresses due to the 30 psi external pressure load.) The actual stresses due to the 150 psi design load are computed by directly modifying the membrane analysis' stresses with the SI's:

$$S_j = SI_j \times S_{cyl} = SI_j \times \frac{150\ RC}{t_3}$$

$$S_{cr} = SI_{cr} \times S_{cyl} = SI_{cr} \times \frac{150\ RC}{t_3}$$

$$S'_{cyl} = SI_{cyl} \times S_{cyl} = SI_{cyl} \times \frac{150\ RC}{t_3}$$

The SI's and actual stresses themselves are, in other words, defined in terms of the cylinder's membrane analysis' stress. The engineer also computes another stress, S'_{cr}, one which is his <u>own</u> modification of Kraus' S_{cr}:

$$S'_{cr} = S_{cr} \times \frac{t_1}{t_2} .$$

The engineer takes into account that Kraus' analysis only holds under the assumption of a uniformly thick hemisphere; the analysis, as a result, must be modified somehow for spun or drawn domes which are not uniform. The factor t_1/t_2 tries to take care of this by merely increasing Kraus' stress S_{cr} in direct proportion to the thickness variation over the dome, the ratio of the dome's thickness at its junction (or base) to its thickness at its crown (t_1).

From the preliminary thicknesses of T_{3E} = 0.016" and t_2 = 0.008", the ratios t_2/T_{3E} = 0.50 and $2RC/T_{3E}$ = 4/0.016 = 250 were computed. In terms of these ratios or independent variables, Kraus' paper tabulates the SI's as dependent variables.[5] (Note that although the Kraus analysis only affects the stresses and thicknesses for the 150 <u>internal</u> pressure load, the required cylinder thickness for the 30 psi <u>external</u> pressure load being greater in this particular case than the required cylinder thickness for internal pressure, it is T_{3E} and not T_{3I} which is used to compute the ratios on which the more refined stress analysis due to <u>internal</u> pressure is based. If T_{3I} were greater than T_{3E}, then T_{3I} would have been used.) By interpolation (Kraus only tabulates the SI's for $2RC/T_{3E}$ ratios of 10, 25, 50, 100, and 300; our case is 250), SI_{cyl} = 1.01, S_j = 1.11, and S_{cr} = 1.013. Using a pressure of 150 psi, S'_{cyl} is calculated at 19,000 psi, S_j at 20,800 psi, and S'_{cr} at 25,000 psi.

---

[5] <u>Ibid</u>.

From the maximum stress, which in this case is S_{cr}', the revised safety factor is computed: SF = 40,000/25,300 = 1.58. Since the revised safety factor is very near the initially assumed value of 1.50, and more importantly, since external pressure governs the design in all the cases being investigated, the revised safety factor is not great enough to change the minimum design thicknesses required, i.e., the greater of the two, the internal or external design thicknesses. In sum, the external thicknesses are still the minimum required thicknesses.

If the thicknesses required for the internal pressure load were, to begin with, greater than those required for external pressure, then the engineer would probably reiterate, but only if the revised SF appeared great enough to increase the required thicknesses over the old thicknesses already upped on the basis of stock shells. For reiteration to occur, it must appear likely that the exact values of the required thicknesses based on the revised SF will be greater than the stock size thickness which are already greater than the exact values of the old required thicknesses. If, on the other hand, the physicist is willing to pay a premium for a nonstock shell, the engineer would definitely reiterate.

That the revised SF of 1.58 is very close to the initial SF of 1.50 is a consequence of the two stiffeners. Through just a cursory inspection of Kraus' data, the engineer can easily see that the other alternatives having different $2RC/T_{3E}$ and t_2/T_{3E} ratios yield higher SI's which ultimately yield higher revised SF's. Stiffeners, in short, can not only improve the design but also the analysis leading to the design. Having investigated the most favorable case, the engineer terminated the more exact analysis portion of the 4" D cases.

A comparison at this point of what the engineer does with what the program does is quite striking. The program certainly neither reiterates nor computes its own SI's. It will be recalled from Chapter III that only a single SI (NTNSTY), which furthermore is input into the program, is used in DESIGN. This single SI, NTNSTY, is supposed to apply equally to the cylinder, to the sphere, as well as to the junction. Since the single SI assumed of NTNSTY = 1.1 is, for the most part, conservative (as indicated in Chapter III), the difference between the program's calculations and those of the engineer's is that the program's should be slightly thicker. The reason for not exactly simulating the engineer's use of Kraus' analysis is partly due to the difficulty of reproducing the Kraus analysis itself. We would have either had to reproduce Kraus' basic method of solving the Love-Meissner equations or to have translated Kraus' tabular solution into other equations for use in DESIGN. Perhaps the present discussion is a case in point for the need to reconsider the current format of many technical papers. Not only is a graphical or tabular presentation of engineering data extremely helpful to the practicing design engineer, but also, with the increasing use of computers in design, the mathematical representation of results is becoming just as important. A mathematical representation, as helpful as it would have been to this investigator simulating the engineer, would have been just as helpful to the engineer himself. After all, we might ask, what if the engineer wanted to write his own design program employing Kraus' analysis?

The other reason for not programming the engineer's exact use of Kraus' analysis is due to the fact that it would have been extremely difficult and time-consuming to program all the engineer's variations on the iterative process. The example discussed here is but one form, and

one of the simplest at that. For example, if the thicknesses used in the Kraus ratio of t_2 to t_3 are the thicknesses required for internal pressure, then for each iteration, the SI's can increase creating the difficulty of defining convergence, i.e., when the engineer will no longer continue revising his previous safety factor.

Without going through all of the details again (they are essentially the same), case 6 of the 8" D alternatives yielded a revised SF of 1.64. This SF is still close enough to the initially assumed SF of 1.50 as not to alter the necessity of designing the shell for the T_{3E} of 0.025". The revised SF, in other words, is not large enough to offset the thickness requirements for external pressure. Since case 4's ratio was quite close to 0.5, it was also analyzed further by assuming that its ratio was, in effect, 0.5 (contrast this with case 1 of the 4" D alternatives). Case 5 with a ratio which is definitely above 0.5 was, as to be expected, analyzed as well. In both cases, the external pressure requirements still continued to govern the design thicknesses.

Next, using the same formulas as those described in Chapter III, the engineer computed the properties of the stiffeners for cases 3 and 6,

Case	I_{STF}	B_{STF}	H_{STF}
3	0.303×10^{-4} in.^{4}	0.061 in.	0.183 in.
6	2.34×10^{-4} in.^{4}	0.101 in.	0.303 in.

(Although the dimensions of these stiffeners are certainly noticeable in comparison with the thicknesses of the cylinders, the engineer made the interesting comment in passing that unless he specifically pointed this out to physicists they probably wouldn't give it a second thought. Up to the point where the stiffeners are explicitly discussed, it would appear that most physicists are mainly interested in the resulting low ρT

cylinders which stiffeners yield. But as soon as stiffeners are noted, they then become concerned about them as localized nuclear scattering barriers. In general, this puzzles the engineer to no end. To him the physicists' behavior seems unreasonable. Since they are measuring reactions anyhow, can't they, he asks, merely discount those few reactions which happen to pass through the stiffeners? If only a few reactions actually pass through the stiffeners, and since the locations of the stiffeners are definitely known, doesn't it become almost trivial to account for their effect on the detectability of the reactions?)

After the stiffeners, using the same formula as the program (THICKW = 0.006 RC), the thicknesses of the windows were computed. In contrast to the program which only computes a thickness for a window of the same diameter as the cylinder or sphere, the engineer, in addition, also assumed a window of slightly less diameter than the cylinder's in order to bound in some way a window "ρT vs. physics-area-scanned" trade-off. The engineer is thinking of another way to lower ρT for the physicist if the physicist can tolerate a smaller scan. The following THICK W's were computed:

	Window Diameter	COMPUTED THICKW	Stock Sheets $\times 10^{-3}$					STOCK THICKW
	D		14	10	7.5	5	3	
	3	0.009"		1				= 0.010"
(4" D)	4	0.012"			1	1		= 0.0125"
(8" D)	7	0.021"		2				= 0.020"
	8	0.024"		2		1		= 0.025"

Notice the way the engineer rounds both up <u>and</u> down in translating the computed THICK W into available stock sizes.

The engineer summarized his results in the five final design sketches which follow. The sketches were "final" only in the sense that they represented the final form of the initial alternatives that were even considered as solutions to the physicist's problem in the first place. The sketches also represented the final form of presentation of the engineer's initial results to the physicist.

These sketches merit a close examination for they embody much more than a mere summary of the preceding analysis. They represent a number of additional and crucial (in Marples' terms, "critical") design decisions on the part of the engineer. Fig. 34 is a summary of case 1 of the 4" D alternatives. Case 1 was chosen for presentation in order to give the physicist an idea of the thickness necessary for a uniformly thick shell. The important things to note about the sketch are the thicknesses of the cylinder and hemisphere: Whereas the cylinder's thickness matches the theoretically computed value, the hemisphere's does not. The cylinder is shown as 0.025" thick because it just so happens that a heat-treatable 0.025' 6061 Al cylinder is a readily available stock catalogue item; if it were not, the cylinder would have to be thicker. The sphere, on the other hand, is definitely thicker. A heat-treatable 0.006" 6061 Al hemisphere is not a stock item. The closest heat-treatable hemisphere is one which is 0.016" thick. By drawing, the crown of the hemisphere can be reduced to about 0.012" and the base to about 0.014" or 0.015". Note that 0.012" is double the computed minimum of 0.006". As the engineer puts it:

> After you go through all the computations you still have to face reality. You have to face up to what you can actually get. Unless the physicist is willing to pay a premium, a 0.016" hemisphere drawn down to 0.12" is practical. If X desperately needs a minimum ρT, then we may be able to chemically-mill the 0.012" down to 0.006", but it'll be pushing us hard to get down that far. It's not easy to manufacture a dome of that thickness.

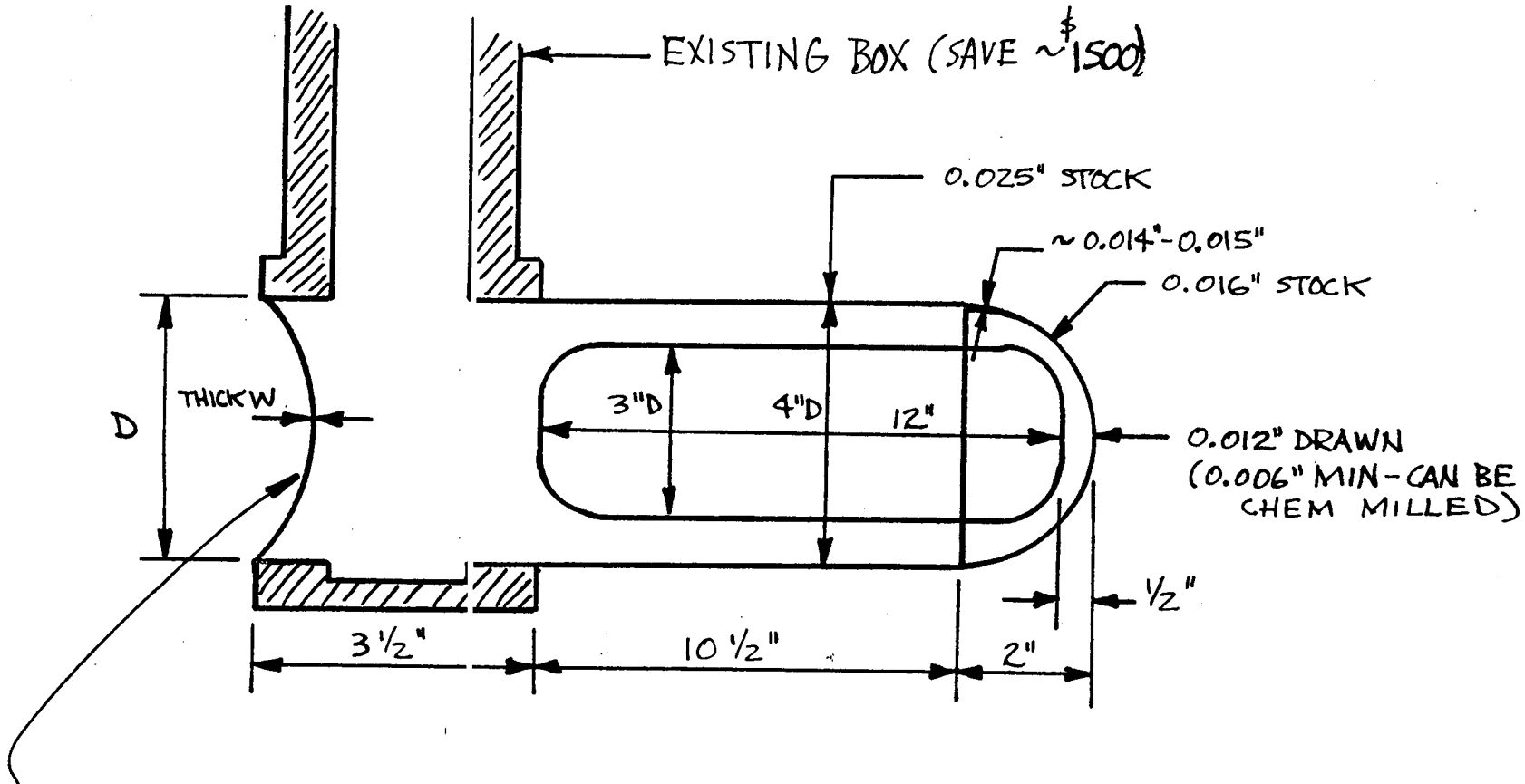

D	THICK W
4"	0.012"
3"	0.010"

CASE 1 - 4"D

FINAL DESIGN SKETCH

FIG. 34

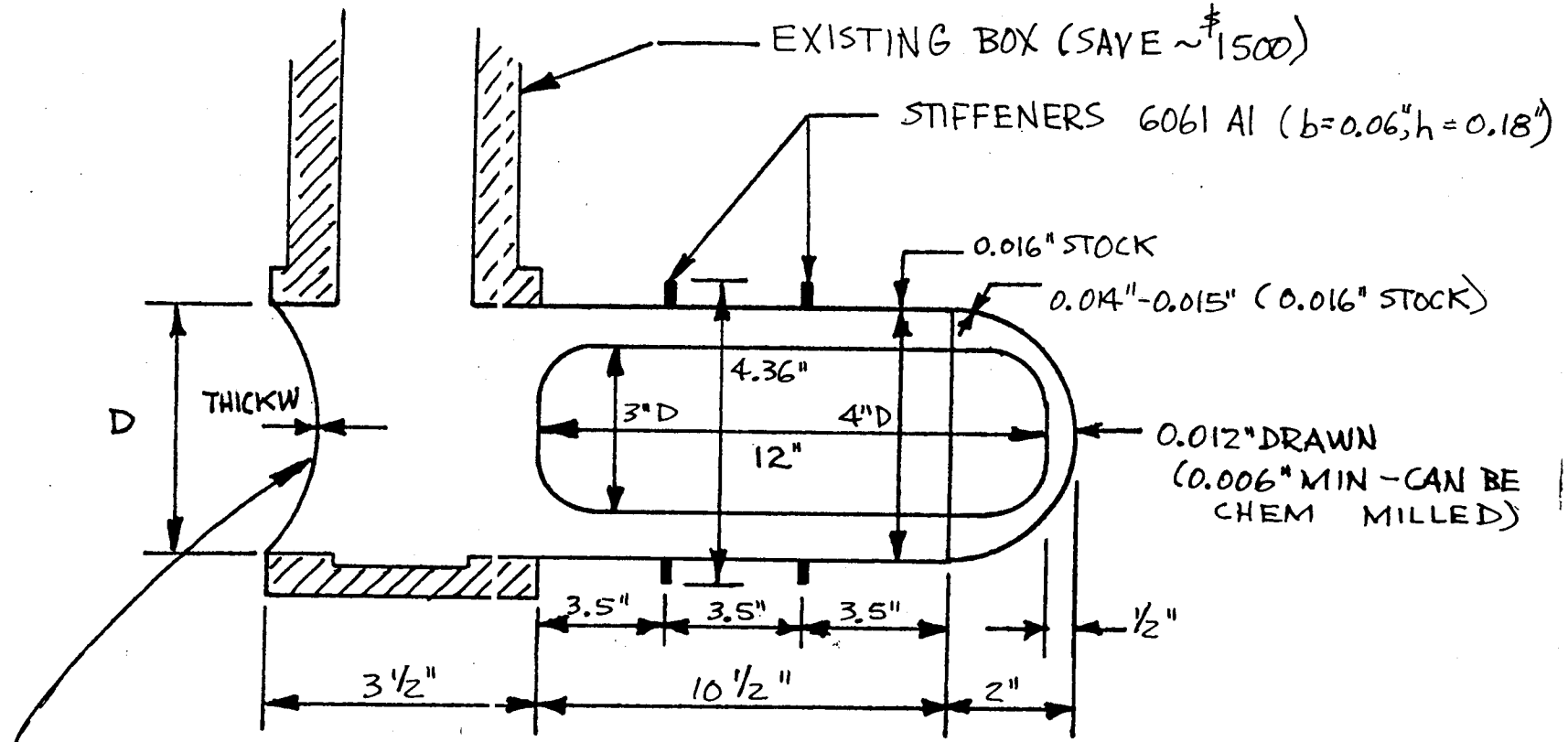

MYLAR WINDOW

D	THICKW
4"	0.012"
3"	0.010"

CASE 3 - 4"D

FINAL DESIGN SKETCH

FIG. 35

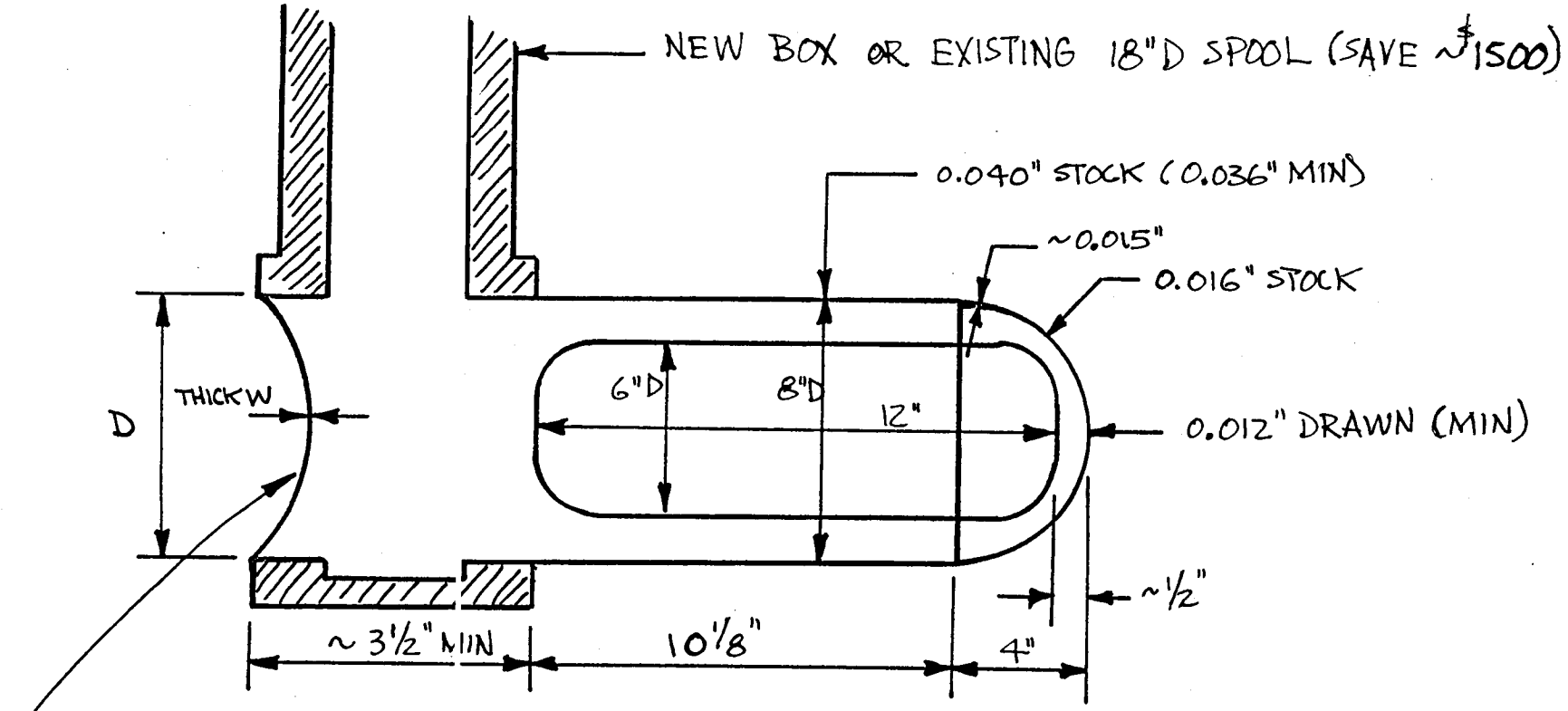

MYLAR WINDOW

D	THICK W
8"	0.025"
7"	0.020"

CASE 4 - 8"D

FINAL DESIGN SKETCH

FIG. 36

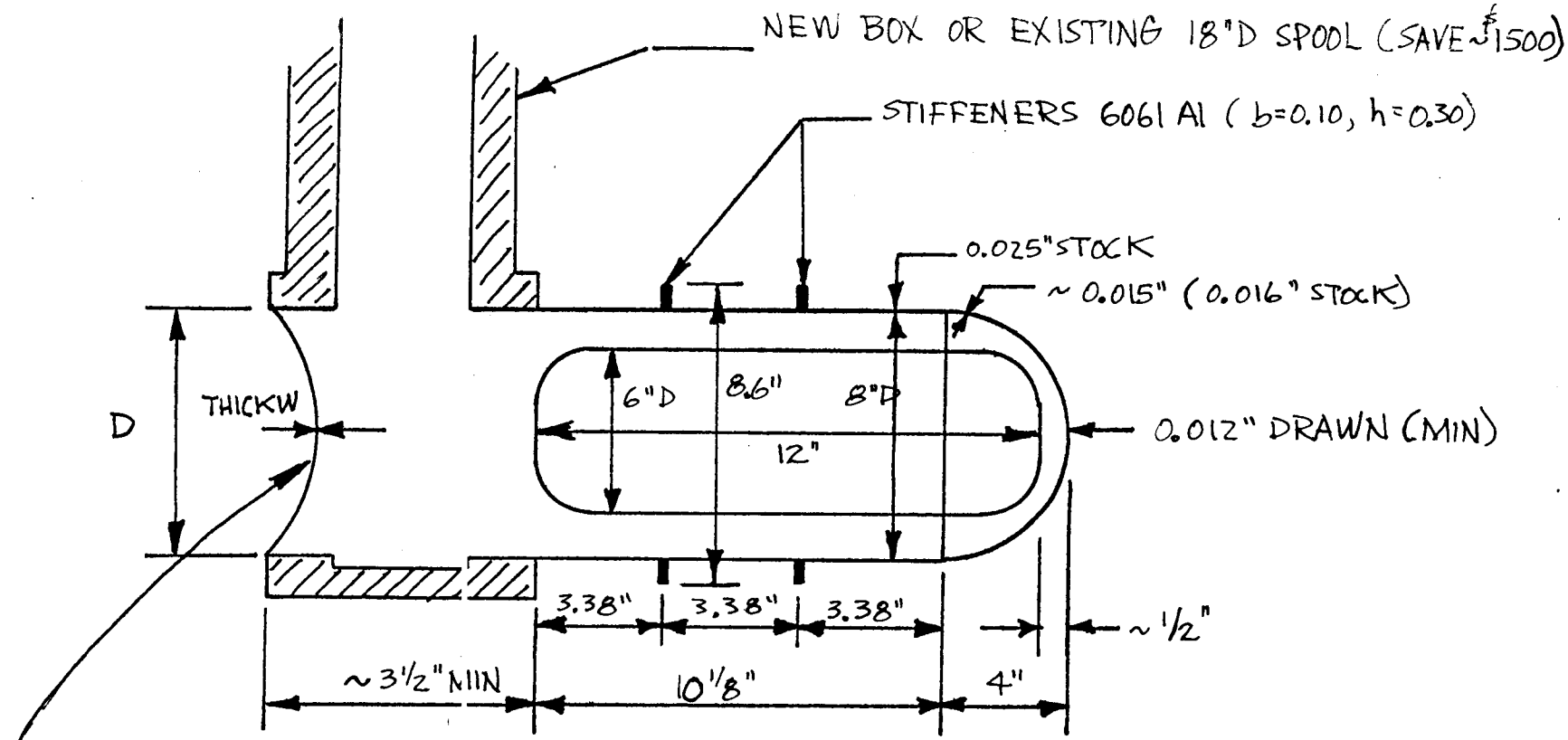

MYLAR WINDOW

D	THICKW
8"	0.025"
7"	0.020"

CASE 6 - 8"D

FINAL DESIGN SKETCH

FIG. 37

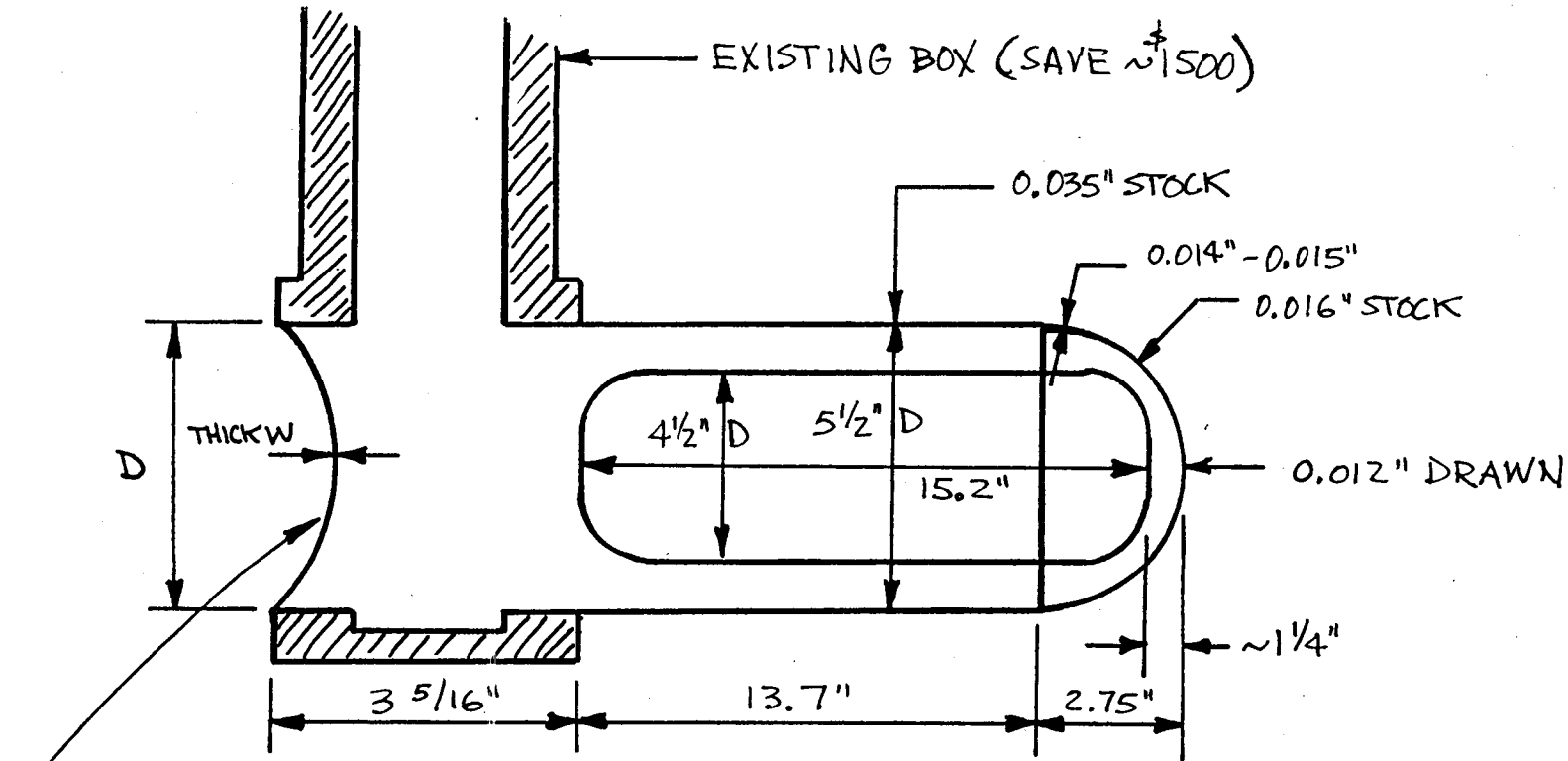

MYLAR WINDOW

D	THICK W
6"	0.018"
5"	0.015"

EXISTING ALTERNATIVE

FINAL DESIGN SKETCH

FIG. 38

The same comments apply to Figs. 35, 36, and 37. For the cases where the computed minimum thicknesses are different from the generally larger stock thicknesses, both are shown. Fig. 35 is a summary of case 3 of the 4" D alternatives. Figs. 36 and 37 are summaries of cases 4 and 6 of the 8" D alternatives.

The sketches also contain further design decisions. They show how the immediate existence of an object can affect the design of that object. In Figs. 34 and 35, the box-flange is shown as an already existing part. The hydrogen-target group has a catalogue of its past designs. Before actually building <u>any</u> part from scratch, the engineer consults the catalogue to see if any existing parts stored from past experiments are "close enough" to meet his current design needs. In Figs. 34 and 35, an already existing box-flange of width 3.50" happens to be more than the program's theoretically required minimum width of 3.306" (WFLC = 2.90 + 0.203 RC). The engineer, in this case, is fortunate enough to have an already existing box of more than enough width in which to, by bending the lines, carry out the LH_2 fill and boil-off lines from the flask. The important point is that by utilizing an already existing box, the engineer "estimates" that he can save the physicist about $1500--a "critical" factor in the engineer's making a critical design decision. This is certainly a prominent example of a case where the engineer makes a design decision with the interests of the physicist directly in mind. This example also illustrates the point that, in contrast to the program, the engineer does not generally perform any explicit preliminary cost calculations unless a novel method of manufacturing, of design analysis or, as in this case, a prominent way of saving money is involved. Generally, only the outstanding <u>relative</u> cost differences between alternatives are noted. As indicated in Chapter II, the engineer, from past experience,figures that by

the time any design is actually in operation, it will have come close to costing $10,000 and taken 6 months to build. Relative cost differences, if important, are only estimated from these general values. This is also an example of a case where the program will be useful precisely because it does not match what the engineer has traditionally done; the program will give him a chance to check his intuitive cost estimates.

Figs. 36 and 37 represent a somewhat different state of affairs. Here there is no already existing box-flange of the appropriate cylindrical diameter. Therefore, either the engineer builds a new box from scratch of height 11.2" (BOXHT = 2.8 x RC = 2.8 x 4; this formula is part of XSPACE) or "sells" X the idea of a spool, a way of building a box that was practiced in the "old days." Spools, in effect, are larger circular boxes. In this case, there exists an 18" D spool of width 3.50". Although the spool is significantly (to say the least) taller than a new box would have to be, it is, on the other hand, essentially cost-free. Its cost, like all existing parts, is considered charged to its initial experiment. As a result, X could save himself, again, approximately $1500 if he can use a taller box (the spool), i.e., if he is to be able to live with less experimental space. The spool is also available for immediate use thus saving, in addition to design money, design time. Here is a concrete example of a space-cost/time trade-off the physicist will have to consider.

Perhaps the influence of already existing parts on a current design is nowhere so evident as it is in Fig. 38. Fig. 38 represents a design alternative which can be built up from completely existent parts. It represents a design alternative almost halfway between case 1 (4" D) and case 4 (8" D). Since X was only interested in a "feasibility" study to begin with, an in-between flask size and a cost time-free design like

Fig. 38 should at least be considered. As the engineer put it:

> The fact that X's experiment is not even scheduled at this point, the fact that he has not shown me a layout, and that he hasn't shown me where other equipment has definitely forced firm dimensions on his flask--all this implies that he is not necessarily interested in either a 3 x 12 or 6 x 12 flask specifically. . . If he would have come to me with a firm layout showing magnets and spark chambers clustered around a flask and if I could have seen that some of these things were either existing or were already in progress, then I would have felt that I couldn't have deviated a great deal from his 3 x 12 and 6 x 12 dimensions. But he didn't do that. He's not at that stage of the game; his experiment is not that far along as planning goes. My guess is that something like this [Fig. 38] is just as easy to sell as the dimensions of the flask . . . Look at it this way. Just the fact that he is interested in both a 3" D and a 6" D flask implies that he'll consider something in between.

If the design of Fig. 38 may be advantageous to X from the standpoint of essentially zero design time and design cost, it certainly <u>is</u> advantageous to the engineer for the very same reasons. From the engineer's point of view, it is the easiest design he could possibly consider. To put it mildly, we need not be surprised if the engineer is particularly interested in "selling" the design of Fig. 38. One should not interpret this to mean that the engineer is thereby interested in selling X a "bill of goods." He is merely interested in pointing out to X the significant advantages of an essentially complete design. All in all, the point that still emerges is that <u>the hydrogen target group's catalogue of past designs is one of its most important design aids. Fig. 38 represents a design alternative arrived at by almost entirely practical and historical design considerations, and not by conventional analytical techniques</u>.

We can summarize up to this point by noting some general differences between the behavior of the engineer and that of the program. Whereas the engineer most definitely considers stock sizes and past designs, the program (except for the calculation of THICKW in terms of stock-

sheet thicknesses) does not. The reason for not building these capabilities into the program were mainly practical. It would have been extremely time-consuming to organize the large amount of catalogued stock-size and past design data that the engineer has general access to. It would have been even more time-consuming to specify the appropriate heuristics necessary to say when a catalogued past design was "close enough" to a current design in order to supplement it or even replace it outright. Theoretically speaking, there seem to be no reasons why given enough research time, such heuristics could not be inferred as well. Similarly, although often a decisive (and even crucial) determiner of the properties of the design alternatives, it just did not seem crucial for an understanding of the design process that we program how the engineer actually rounds off his computed design thicknesses to available stock sizes. Noting the significance of the procedure seemed more important than actually programming it.

Another important general difference consists of the use the engineer makes of the parameter RATIO. Not only does he generally use this parameter in a partially different method of detailed analysis, e.g., reiteration, but, as the particular examples considered here illustrate, he sometimes uses it for considering additional design modifications like tapering which the program does not consider at all. Even a step like drawing which the program does consider is sometimes handled differently. The engineer knows from past experience that aluminum hemispheres can be drawn and, as a result, no longer always goes through an explicit formal calculation of aluminum's ductility for evaluating it for manufacture like FORMS does. In the particular examples described here, the engineer considered drawing in conjunction with tapering in order to raise the value of RATIO to at least 0.5. The engineer was using RATIO in

order to look ahead and avoid, amongst other things, a difficult welding problem. The program, in contrast, merely assumes that such problems can be solved by the engineer. The program does not consider such detailed manufacturing problems like welding. It also does not consider such solutions as tapering.

Of course, given the fact that the program considers stiffeners, one of the most important ways of using RATIO is taken into account. The program, fortunately enough, does at least consider enough design alternatives as to be able to match a great deal of what the engineer actually does. As we shall want to conclude later, the program, like every scientific model, predicts or matches some aspects of the engineer's behavior in some design situations quite well and other aspects, not as well. As we might expect, some aspects of the program match better in one kind of situation than in another.

About three and a half weeks after first talking with X, the engineer was ready to report back on his preliminary investigations. The engineer could have actually reported back within three days or so were it not for the necessity of extending the process out so that it could be analyzed and recorded in separate sessions of at most two to three hours per day. Approximately another week was taken up in arranging schedules so that researcher, engineer, and physicist could all meet together at a mutually convenient time. If it took all this time for this researcher to study the engineer and for all the parties to get together, it certainly took considerably less time for the physicist to examine and reject all of the engineer's initial proposals. In short, they were all too thick, for minimum thickness was really the major criterion. More precisely, X's major design criterion was that the radiation loss through the mylar flask and cylinder walls (the secondary direction) be no more

than half of the radiation loss through the LH_2 itself. That this was X's major criterion only becomes known to the engineer at the time he reported back. It certainly was not given as an initial design requirement.

Once given this requirement and, in addition, the fact that the radiation loss through a particular material is proportional to the product of that material's density and its atomic number (Rad L $\propto \rho Z$; this relationship was supplied by X), it became a relatively easy matter for both the physicist and the engineer together to do an instantaneous evaluation of the proposals which the engineer had considered up to that point:

Rad $LH_2 \propto 0.07 \times 1 = 0.07$

Rad L Al $\propto 2.7 \times 13 = 35.1$

Rad L MYLAR $\propto 1.4 \times 12 = 16.8$

From X's criterion of 1/2 Rad L H_2 x Length $H_2 \geq$ (Rad L MYLAR x t MYLAR + Rad L Al x t_{Al}) ,

$$t_{Al} \leq \frac{1/2 \text{ Rad } LH_2 \times \text{Length } H_2 - \text{Rad L MYLAR} \times \text{t MYLAR}}{\text{Rad L Al}}$$

From a simple membrane analysis of the LH_2 flask itself, assuming a yield point stress of 10,000 psi and a design pressure of 40 psi for the 1.5" radius flask, the engineer calculated an "on the spot" approximate t MYLAR. t MYLAR $\simeq PR/\sigma_{YIELDPT}$ = 40 x 1.5/10,000 $t_{MYLAR} \simeq 0.006"$. Therefore,

$$t_{Al} \leq \frac{1/2(0.07)(1.5) - (16.8)(0.006)}{35.1}$$

$$t_{Al} \leq -0.00138"$$

Since it is only the numerator (1/2 RAD L H_2 x Length H_2 - Rad L MYLAR x t MYLAR) which makes the pressure vessel's thickness requirements negative, the result shows that it would be physically impossible for any pressure vessel made from any material to satisfy X's criterion. But even though nothing will really work, the question still arises as to whether there is still something which would work better than what the engineer has considered thus far.

At this point, a particular requirement of X took on special significance. X did not require a uniformly low thickness pressure vessel; he only needed a vessel that was thin in the horizontal plane; it did not have to be thin on its top and bottom as well. This suggested to both parties a rather special kind of design known as an "alligator-jaw" (see Fig. 39). X, because he had had occasion to use such designs before and, hence, was basically familiar with it as a design possibility to begin with, suggested the alligator-jaw to the engineer as much as the engineer proposed it to X. The point is that only because X had a previous acquaintance with such designs and therefore could emphasize the fact the he really didn't need a design which was equally thin on its top and bottom as it was on its sides, did the engineer come to consider an alligator-jaw. The engineer does not normally consider such special designs unless they appear sufficiently advantageous. It certainly is not clear a priori that they are always superior to more conventional designs. The advantage of an alligator-jaw, for example, is only realized if the height of its window can be made small (a fact which will assume major significance). It's not that the engineer is basically reluctant to consider such designs; it's rather that he only desires to give a physicist only what he thinks will truly "get the job done" in a minimum amount of time and with the least cost. And in order to do this, we hope

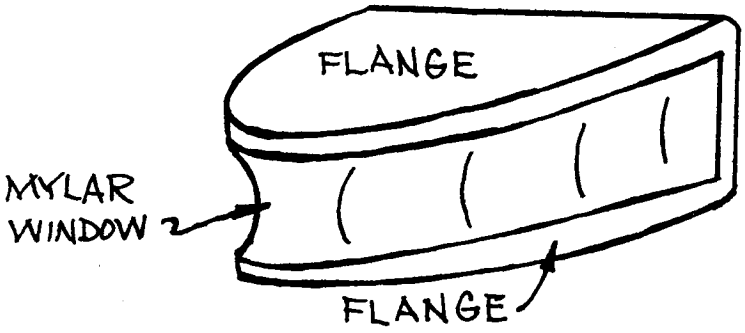

ALLIGATOR-JAW

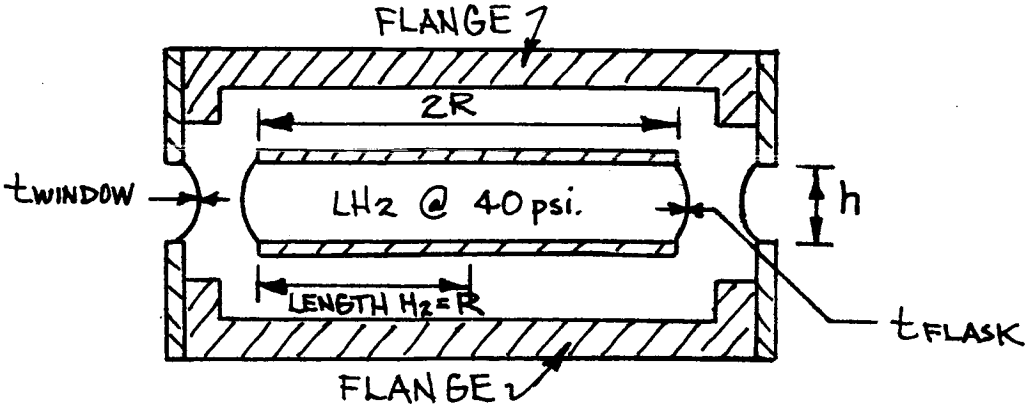

FIG. 39

we have made it clear by now how much more than a mere listing of the physicist's requirements the engineer really needs. The engineer needs, above all, an <u>understanding</u> of what it is the physicist is trying to do so that he can recognize the special importance of particular requirements.

After meeting with X for about two hours, the engineer went back to his office to investigate the possibility of an alligator-jaw design in some detail. In order to minimize the required thickness of the alligator-jaw's mylar window (the "thinness" desired in the horizontal plane), the engineer considered making the LH_2 flask's cross-section rectangular instead of circular (see Fig. 39). Making the flask rectangular allows one to reduce the height of the jaw's window, and the smaller the height, the thinner the window. In order to find out the dimensions of the flask, the engineer used X's criterion again:

$$1/2 \text{ Rad } LH_2 \times \text{Length } H_2 \geq (\text{Rad L WINDOW} \times t_{WINDOW} + \text{Rad L FLASK} \times t_{FLASK}).$$

For a flask of width 2R and of height h, and using some approximate design equations for alligator-jaw vessels <u>and</u> flasks (the LH_2 flask is also an alligator-jaw in this case for the purpose of minimizing its thickness as well), t_{WINDOW} and t_{FLASK} were computed: $t_{WINDOW} \simeq (3 \times 10^{-5})Ph = (3)(150 \text{ psi}) \times 10^{-5}h = 4.50 \times 10^{-3}h$; $t_{FLASK} \simeq (8.3 \times 10^{-5})Ph = (8.3)(40 \text{ psi}) \times 10^{-5}h = 3.32 \times 10^{-3}h$. (These formulas have been empirically derived from the engineer's past experience with the design and test of alligator-jaw window designs.) Going through all the algebra, X's criterion finally reduces to $2R/h \geq 2.8$. Therefore, for $h = 2''$, $2R = 5.6''$; for $h = 3''$, $2R = 8.4''$.

Since an alligator-jaw is only advantageous if its window height is small, and since one way of accomplishing this is by reducing the flask's height (the smaller the flask height, the smaller the window necessary for "looking" at the full flask, and, as a result, the thinner the barrier through which the flask's reactive particles must ultimately pass), the engineer used X's criterion to find the minimum width of LH_2 flask that would be required for an alligator-jaw of minimal height. Since the diameter of X's beam of incident particles would be in the range of 2" to 3" (hence the initial requirement for a flask of 3" D), X would need a minimum width of flask of anywhere from 5.6" to 8.4". Unfortunately, this meant that the greater width of the alligator-jaw vessel in which the flask would be placed would certainly exceed the width of magnet (7" to 8") which X would have available.

Apparently X only had a certain size magnet in which he could study the reaction of LH_2 to particles in a magnetic field. Upon telephoning back these preliminary results within a few days X terminated his feasibility study. Having run into a basic conflict over space, X told the engineer that he would contact him for further studies only when he had further and perhaps more compatible physics requirements to investigate. As mentioned earlier, X "may" (the engineer doesn't know for sure) have merely been interested in investigating whether even the tentative conceptions of his experiments were worth doing.

At this point, there being nothing more that we could get from X (but not all that we would have liked to have gotten), there was nothing more we could do than to proceed straight away to a comparison of what the engineer had done with what the program could do. (Ideally, we hoped that we could interest the physicist in the comparison as well and, in this way, get more of his comments about the design process in general

and the engineer in particular. Unfortunately, as shall be obliged to discuss more fully later, we were never really able to secure any physicist's detailed comments about the value of such a program from his point of view. Physicists, it would seem, were either too busy to be able to get interested in the study or just not interested, period. One must sympathize though; the demands on a physicist's time are exacting. Presumably, a physicist has much more important things to do than to concern himself with a study that does not appear to involve him directly.)

One of the most important things we have to make clear before we can sensibly discuss the comparison of the program's behavior with that of the engineer's is how the program's input was defined. Since, as we have already shown with the input to the engineer, the input is one of the most crucial factors in determining the match between the program's and the engineer's output, and since different individuals conceive of the input differently, who the particular individual is who determines the program's input determines, in effect, the degree and kind of match. In accordance with the goals of this study and its resultant methodology (see Chapter IV), in all cases it was the engineer who defined the input. Since the engineer (as the original design aid) was the being who partially (the physicist was the other part) defined the input to his very own self in the first place, it seemed only natural (in the light of Chapter IV) to have him define the input to the new design aid as well. The reasons for this were basically twofold: (1) Even though he neither conceived of the study nor directly wrote the program, the engineer, as the reality we are supposedly modeling, must be regarded (once we grant him the status of reality) as the person whose conceptions of the input we are most interested in studying. This leads us to the second reason. (2) By having the engineer define the input to something other than himself

we gain additional opportunities to study the original thing-in-itself. Again, by having the engineer define the input, we continue to study what he considers important to simulate in order to understand what he himself does.

The foregoing reasons lead us in turn to but another important fact of the methodology underlying the comparison, i.e., once given the input, the subsequent ways in which the engineer and program were matched. As discussed in Chapter IV, the engineer was his own interrogator. What he deemed important to match and how he matched (as an example, the particular ways in which he scanned the program's output) constituted the process of evaluation.

Against the possible objection that such a matching procedure is inherently subjective, we make the rather obvious point that it is certainly no more subjective than the original behavior on which the program is based on in the first place. If the engineer's behavior is good enough to collect in the first place, then why aren't his behavioral responses to the program just as good or as important to collect? After all, merely programming the engineer's design behavior does not make either that behavior or the program "by itself" objective. Neither does a formal evaluation of the program. What we have tried to argue, in effect, is that a self-comparison with the program, i.e., a self-examination, may give the engineer a better understanding of the implications of his own design behavior, and in this sense, make his own behavior more objective. In sum, the things we are interested in "are" his subjective evaluations of the program, so that perhaps we, or somebody else in the future, will be able to program those responses as well. We are not interested in how, for example, a statistician would formally evaluate the program, but rather what the engineer as the most important "immediate"

user of the program thinks and feels about it. As engineers studying the engineering design process from a behavioral point of view, there are perhaps no more important responses we could collect than the engineer's own impressions of the program itself.

The preceding remarks become extremely important once we consider the enormous difficulties involved in evaluating any large program of the sort which DESIGN represents. Amongst other things, it becomes extremely difficult, given the paucity of opportunities to collect data in any statistically significant sense, to formally evaluate the program's sensitivity to any extensive and systematic changes in the input variables. This should help to explain why the engineer, out of curiosity's sake, purposefully chose some of the program's input variables different from his own input in order to get some idea of the program's sensitivity.

The preceding remarks may also help us to understand another reason for sweeping in the engineer: Not only does the program require some input which the engineer did not have occasion to use (because it was just not defined) but conversely, the engineer used some input which the program is just not capable of handling. The engineer as an evaluator is in a position to comment on the seriousness of these differences. What follows must be looked upon as an exercise in the engineer's learning how to use a new design tool by giving his evaluations of it. We list his evaluations in the order in which the engineer explored the program's consequences.

The program was first run for the 3 x 12 flask. Since the engineer already knew his own previous design solutions, he "almost" knew exactly what to input in order to have the program check on his designs. (Fig. 40, which lists the input and output, not only treats the specific case

INPUT PARAMETERS

RF	=	1.500	RF
LF	=	12.000	LF
DLR3	=	0.500	ΔRF_{incr}
WNCR	=	3.500	WNCR
DNCR	=	3.300	DNCR
DLNCR	=	7.750	ΔNCR
IB	=	1.000	IB
IBA	=	2.000	IBA
H1	=	15.000	H1
H2	=	2.100	H2
V1	=	2.500	V1
V2	=	2.500	V2

METAL	E(METAL)	YPSTRS (σ_{YP}(METAL))	ANNEAL (σ_{ANNEAL}(METAL))	SF (SF(METAL))	C (C(METAL))	EL (EL(METAL))	PHO (ρ(METAL))
AL	1.000E 07	4.000E 04	1.000E 04	1.50	6.600E-03	0.310	2.700
FE	3.000E 07	3.000E 04	3.000E 04	1.25	4.310E-03	0.600	9.000
BE	3.700E 07	5.400E 04	5.400E 04	2.00	3.810E-03	0.050	1.820

NTNSTY=	1.100	NTNSTY
DCRIT =	16.000	DCRIT
WT(1)=	1.0000E 01	WT(1)
WT(2)=	1.0000E 01	WT(2)
WT(3)=	1.0000E 01	WT(3)
WT(4)=	1.0000E 01	WT(4)
ROWND=	1.395	ρ_{WND}
RHOT1AL(PRIMLE) =	0.050	ρ_{T1AL}
RHOT1AR(PRIMRT) =	0.050	ρ_{T1AR}
RHOT3AL(SECDLE) =	0.110	ρ_{T3AL}
RHOT3AR(SECDRT) =	0.110	ρ_{T3AR}

FIG. 40 - PAGE 1

COMMON OUTPUT

ABMINLE (IN.)	LE-ABMINLE (IN.),	FLASK COST ($)	FLASK TIME (HRS.)
2.630	9.370	800.0	80.0

ABSOLUTE MINIMUM REQUIRED LENGTH OF FLASK FOR RF=1.50"

ALTNT			RC or RS	LC	WNCR.....CHECK			DNCR.....CHECK				WINDOW			XSPACE.....CHECK		
					WFLC	WNCR-WFLC=7		DNCR	2R	2R-DNCR	ΔRFincr.	THICKW	WD				ΔH1
ALT	CONFIG	SHAP	RADIUS	LENGTH	WIDTHFL	WNCR	DELWNCR	DNCRX	2 X RAD	DELDNCR	DELR3	THK	DEL	SHTS	BOX TYP	BOX HT	DELH1
1	DCD	1	1.650	10.625	3.235	3.500	0.265	3.300	3.300	0.000	0.500	0.000	0.000	0	N/A	0.000	0.287
2	DCD	1	1.650	10.625	3.235	3.500	0.265	3.300	3.300	0.000	0.500	0.000	0.000	0	N/A	0.000	0.287
3	DCD	1	1.650	10.625	3.235	3.500	0.265	3.300	3.300	0.000	0.500	0.000	0.000	0	N/A	0.000	0.287
4	DCD	1	1.650	10.625	3.235	3.500	0.265	3.300	3.300	0.000	0.500	0.000	0.000	0	N/A	0.000	0.287
5	DCD	1	1.650	10.625	3.235	3.500	0.265	3.300	3.300	0.000	0.500	0.000	0.000	0	N/A	0.000	0.287
6	DCD	1	1.650	10.625	3.235	3.500	0.265	3.300	3.300	0.000	0.500	0.000	0.000	0	N/A	0.000	0.287
7	DCFD	3	1.650	11.313	3.235	3.500	.265	3.300	3.300	.000	0.150	0.000	0.000	0	BOX	4.620	-0.056
8	DCFD	3	1.650	11.313	3.235	3.500	.265	3.300	3.300	0.000	0.150	0.000	0.000	0	BOX	4.620	-0.056
9	DCFD	3	1.650	11.313	3.235	3.500	0.265	3.300	3.300	0.000	0.150	0.000	0.000	0	BOX	4.620	-0.056
10	DCFD	3	1.650	11.313	3.235	3.500	0.265	3.300	3.300	0.000	0.150	0.000	0.000	0	BOX	4.620	-0.056
11	DCFD	3	1.650	11.313	3.235	3.500	0.265	3.300	3.300	0.000	0.150	0.000	0.000	0	BOX	4.620	-0.056
12	DCFD	3	1.650	11.313	3.235	3.500	0.265	3.300	3.300	0.000	0.150	0.000	0.000	0	BOX	4.620	-0.056
13	DCFW	3	1.650	11.313	3.235	3.500	0.265	3.300	3.300	0.000	0.150	0.011	0.698	2	BOX	4.620	-0.056
14	DCFW	3	1.650	11.313	3.235	3.500	0.265	3.300	3.300	0.000	0.150	0.011	0.698	2	BOX	4.620	-0.056
15	DCFW	3	1.650	11.313	3.235	3.500	0.265	3.300	3.300	0.000	0.150	0.011	0.698	2	BOX	4.620	-0.056
16	DCFW	3	1.650	11.313	3.235	3.500	0.265	3.300	3.300	0.000	0.150	0.011	0.698	2	BOX	4.620	-0.056
17	DCFW	3	1.650	11.313	3.235	3.500	0.265	3.300	3.300	0.000	0.150	0.011	0.698	2	BOX	4.620	-0.056
18	DCFW	3	1.650	11.313	3.235	3.500	0.265	3.300	3.300	0.000	0.150	0.011	0.698	2	BOX	4.620	-0.056
19	DCD	2	2.000	5.354	3.306	3.500	0.194	3.300	4.000	-0.700	0.500	0.000	0.000	0	N/A	0.000	0.573
20	DCD	2	2.000	5.354	3.306	3.500	0.194	3.300	4.000	-0.700	0.500	0.000	0.000	0	N/A	0.000	0.573
21	DCD	2	2.000	5.354	3.306	3.500	0.194	3.300	4.000	-0.700	0.500	0.000	0.000	0	N/A	0.000	0.573
22	DCD	2	2.000	5.354	3.306	3.500	0.194	3.300	4.000	-0.700	0.500	0.000	0.000	0	N/A	0.000	0.573
23	DCD	2	2.000	5.354	3.306	3.500	0.194	3.300	4.000	-0.700	0.500	0.000	0.000	0	N/A	0.000	0.573
24	DCD	2	2.000	5.354	3.306	3.500	0.194	3.300	4.000	-0.700	0.500	0.000	0.000	0	N/A	0.000	0.573
25	DCFD	2	2.000	10.677	3.306	3.500	0.194	3.300	4.000	-0.700	0.500	0.000	0.000	0	BOX	5.610	-0.089
26	DCFD	2	2.000	10.677	3.306	3.500	0.194	3.300	4.000	-0.700	0.500	0.000	0.000	0	BOX	5.610	-0.089

FIG. 40 - PAGE 2

ALINT ALT	CONFIG	SHAP	RC or RS RADIUS	LC LENGTH	WNCR WFLC WIDTHFL	WNCR-WNCR=1 WNCR	DELWNCR	DNCR DNCRX	2R 2 X RAD	2R-DNCR DELDNCR	ΔRF mor DELR3	WINDOW THICKW THK	WD DEL	SHTS	XSPACE BOX TYP	BOX HT	CHECK ΔH1 DELH1
27	DCFD	2	2.000	10.677	3.306	3.500	0.194	3.300	4.000	-0.700	0.500	0.000	0.000	0	BOX	5.600	-0.089
28	DCFD	2	2.000	10.677	3.306	3.500	0.194	3.300	4.000	-0.700	0.500	0.000	0.000	0	BOX	5.600	-0.089
29	DCFD	2	2.000	10.677	3.306	3.500	0.194	3.300	4.000	-0.700	0.500	0.000	0.000	0	BOX	5.600	-0.089
30	DCFD	2	2.000	10.677	3.306	3.500	0.194	3.300	4.000	-0.700	0.500	0.000	0.000	0	BOX	5.600	-0.089
31	DCFW	2	2.000	10.677	3.306	3.500	0.194	3.300	4.000	-0.700	0.500	0.013	0.740	4	BOX	5.600	-0.089
32	DCFW	2	2.000	10.677	3.306	3.500	.194	3.300	4.000	-0.700	0.500	0.013	0.740	4	BOX	5.600	-0.089
33	DCFW	2	2.000	10.677	3.306	3.500	0.194	3.300	4.000	-0.700	0.500	0.013	0.740	4	BOX	5.600	-0.089
34	DCFW	2	2.000	10.677	3.306	3.500	0.194	3.300	4.000	-0.700	0.500	0.013	0.740	4	BOX	5.600	-0.089
35	DCFW	2	2.000	10.677	3.306	3.500	0.194	3.300	4.000	-0.700	0.500	0.013	0.740	4	BOX	5.600	-0.089
36	DCFW	2	2.000	10.677	3.306	3.500	0.194	3.300	4.000	-0.700	0.500	0.013	0.740	4	BOX	5.600	-0.089
37	SPHERE	1	6.185	0.000	4.155	4.155	0.000	3.300	12.369	-9.069	0.500	0.000	0.000	0	N/A	0.000	1.065
38	SPHERE	1	6.185	0.000	4.155	4.155	0.000	3.300	12.369	-9.069	0.500	0.000	0.000	0	N/A	0.000	1.065
39	SPHERE	1	6.185	0.000	4.155	4.155	0.000	3.300	12.369	-9.069	0.500	0.000	0.000	0	N/A	0.000	1.065
40	SPHERE	1	6.185	0.000	4.155	4.155	0.000	3.300	12.369	-9.069	0.500	0.000	0.000	0	N/A	0.000	1.065
41	SPHERE	1	6.185	0.000	4.155	4.155	0.000	3.300	12.369	-9.069	0.500	0.000	0.000	0	N/A	0.000	1.065
42	SPHERE	1	6.185	0.000	4.155	4.155	0.000	3.300	12.369	-9.069	0.500	0.000	0.000	0	N/A	0.000	1.065
43	SFS	5	7.370	0.000	4.155	4.155	0.0	3.300	14.741	-11.441	0.500	0.000	0.000	0	BOX	20.637	5.552
44	SFS	5	7.370	0.000	4.155	4.155	0.000	3.300	14.741	-11.441	0.500	0.000	0.000	0	BOX	20.637	5.552
45	SFS	5	7.370	0.000	4.155	4.155	0.000	3.300	14.741	-11.441	0.500	0.000	0.000	0	BOX	20.637	5.552
46	SFS	5	7.370	0.000	4.155	4.155	0.000	3.300	14.741	-11.441	0.500	0.000	0.000	0	BOX	20.637	5.552
47	SFS	5	7.370	0.000	4.155	4.155	0.000	3.300	14.741	-11.441	0.500	0.000	0.000	0	BOX	20.637	5.552
48	SFS	5	7.370	0.000	4.155	4.155	0.000	3.300	14.741	-11.441	0.500	0.000	0.000	0	BOX	20.637	5.552

FIG. 40- PAGE 3

ALT	CONFIG	XSPACE.....CHECK ΔH2 DELH2	ΔV1 DELV1	ΔV2 DELV2	METAL	FORM	RATIO	HT HEAT	T3I T3I	CYLINDER T3I T3IPM	THK1 T3EOR	THK2 T3E	BASE OF SPHERE T2I T2I	T2I' T2IPM	T2E T2E	CROWN OF SPHERE T1I T1I	T1I' T1IPM	T1E T1E	INEQUALITY INEQC CYL	INEQS SPH
1	OCD	2.787	0.850	0.850	AL	DRAW	0.588	YES	0.010	0.041	0.023	0.015	0.006	0.024	0.006	0.005	0.020	0.005	38	15
2	OCD	2.787	0.850	0.850	AL	DRAW	0.588	NO	0.010	0.041	0.023	0.023	0.006	0.024	0.006	0.005	0.020	0.005	39	16
3	OCD	2.787	0.850	0.850	FE	DRAW	0.588	NO	0.011	0.011	0.015	0.015	0.007	0.007	0.003	0.006	0.006	0.003	53	23
4	OCD	2.787	0.850	0.850	FE	DRAW	0.588	YES	0.011	0.011	0.015	0.015	0.007	0.007	0.003	0.006	0.006	0.003	20	22
5	OCD	2.787	0.850	0.850	BE	MACH	0.500	YES	0.010	0.010	0.013	0.013	0.005	0.005	0.002	0.005	0.005	0.002	6	15
6	OCD	2.787	0.850	0.850	BE	MACH	0.500	NO	0.010	0.010	0.013	0.013	0.005	0.005	0.002	0.005	0.005	0.002	9	17
7	OCFD	-1.135	0.190	0.190	AL	DRAW	0.588	YES	0.010	0.041	0.024	0.015	0.006	0.024	0.006	0.005	0.020	0.005	38	15
8	OCFD	-1.135	0.190	0.190	AL	DRAW	0.588	NO	0.010	0.041	0.024	0.024	0.006	0.024	0.006	0.005	0.020	0.005	39	16
9	OCFD	-1.135	0.190	0.190	FE	DRAW	0.588	NO	0.011	0.011	0.015	0.011	0.007	0.007	0.003	0.006	0.006	0.003	53	23
10	OCFD	-1.135	0.190	0.190	FE	DRAW	0.588	YES	0.011	0.011	0.015	0.011	0.007	0.007	0.003	0.006	0.006	0.003	20	22
11	OCFD	-1.135	0.190	0.190	BE	MACH	0.500	YES	0.010	0.010	0.014	0.014	0.005	0.005	0.002	0.005	0.005	0.002	6	15
12	OCFD	-1.135	0.190	0.190	BE	MACH	0.500	NO	0.010	0.010	0.014	0.014	0.005	0.005	0.002	0.005	0.005	0.002	9	17
13	OCFW	0.515	0.190	0.190	AL	DRAW	0.588	YES	0.010	0.041	0.024	0.015	0.006	0.024	0.006	0.005	0.020	0.005	38	15
14	OCFW	0.515	0.190	0.190	AL	DRAW	0.588	NO	0.010	0.041	0.024	0.024	0.006	0.024	0.006	0.005	0.020	0.005	39	16
15	OCFW	0.515	0.190	0.190	FE	DRAW	0.588	NO	0.011	0.011	0.015	0.011	0.007	0.007	0.003	0.006	0.006	0.003	53	23
16	OCFW	0.515	0.190	0.190	FE	DRAW	0.588	YES	0.011	0.011	0.015	0.011	0.007	0.007	0.003	0.006	0.006	0.003	20	22
17	OCFW	0.515	0.190	0.190	BE	MACH	0.500	YES	0.010	0.010	0.014	0.014	0.005	0.005	0.002	0.005	0.005	0.002	6	15
18	OCFW	0.515	0.190	0.190	BE	MACH	0.500	NO	0.010	0.010	0.014	0.014	0.005	0.005	0.002	0.005	0.005	0.002	9	17
19	OCD	3.073	0.500	0.500	AL	DRAW	0.588	YES	0.012	0.049	0.024	0.016	0.007	0.029	0.007	0.006	0.025	0.006	38	15
20	OCD	3.073	0.500	0.500	AL	DRAW	0.588	NO	0.012	0.049	0.024	0.024	0.007	0.029	0.007	0.006	0.025	0.006	39	16
21	OCD	3.073	0.500	0.500	FE	DRAW	0.588	NO	0.014	0.014	0.016	0.016	0.008	0.008	0.004	0.007	0.007	0.003	53	23
22	OCD	3.073	0.500	0.500	FE	DRAW	0.588	YES	0.014	0.014	0.016	0.016	0.008	0.008	0.004	0.007	0.007	0.003	20	22
23	OCD	3.073	0.500	0.500	BE	MACH	0.500	YES	0.012	0.012	0.014	0.014	0.006	0.006	0.003	0.006	0.006	0.003	6	15
24	OCD	3.073	0.500	0.500	BE	MACH	0.500	NO	0.012	0.012	0.014	0.014	0.006	0.006	0.003	0.006	0.006	0.003	9	17
25	OCFD	-1.556	-0.300	-0.300	AL	DRAW	0.588	YES	0.012	0.049	0.026	0.015	0.007	0.029	0.007	0.006	0.025	0.006	38	15
26	OCFD	-1.556	-0.300	-0.300	AL	DRAW	0.588	NO	0.012	0.049	0.026	0.026	0.007	0.029	0.007	0.006	0.025	0.006	39	16

FIG. 40 - PAGE 4

ALT	CONFIG	XSPACE.....CHECK ΔH2 DELH2	ΔV1 DELV1	ΔV2 DELV2	METAL	FORM	RATIO	HT HEAT	CYLINDER T3I T3I	T3I' T3IPM	THK1 T3EOR T3E	THK2 T3E	BASE OF SPHERE T2I T2I	T2I' T2IPM	T2E T2E	CROWN OF SPHERE T1I T1I	T1I' T1IPM	T1E T1E	INEQUALITY INEQC CYL	INEQS SPH
27	OCFD	-1.556	-0.300	-0.300	FE	DRAW	0.588	NO	0.014	0.014	0.017	0.017	0.008	0.008	0.004	0.007	0.007	0.003	53	23
28	OCFD	-1.556	-0.300	-0.300	FE	DRAW	0.588	YES	0.014	0.014	0.017	0.017	0.008	0.008	0.004	0.007	0.007	0.003	20	22
29	OCFD	-1.556	-0.300	-0.300	BE	MACH	0.500	YES	0.012	0.012	0.015	0.015	0.006	0.006	0.003	0.006	0.006	0.003	6	15
30	OCFD	-1.556	-0.300	-0.300	BE	MACH	0.500	NO	0.012	0.012	0.015	0.015	0.006	0.006	0.003	0.006	0.006	0.003	9	17
31	OCFW	0.444	-0.300	-0.300	AL	DRAW	0.588	YES	0.012	0.049	0.026	0.015	0.007	0.029	0.007	0.006	0.025	0.006	38	15
32	OCFW	0.444	-0.300	-0.300	AL	DRAW	0.588	NO	0.012	0.049	0.026	0.026	0.007	0.029	0.007	0.006	0.025	0.006	39	16
33	OCFW	0.444	-0.300	-0.300	FE	DRAW	0.588	NO	0.014	0.014	0.017	0.017	0.008	0.008	0.004	0.007	0.007	0.003	53	23
34	OCFW	0.444	-0.300	-0.300	FE	DRAW	0.588	YES	0.014	0.014	0.017	0.017	0.008	0.008	0.004	0.007	0.007	0.003	20	22
35	OCFW	0.444	-0.300	-0.300	BE	MACH	0.500	YES	0.012	0.012	0.015	0.015	0.006	0.006	0.003	0.006	0.006	0.003	6	15
36	OCFW	0.444	-0.300	-0.300	BE	MACH	0.500	NO	0.012	0.012	0.015	0.015	0.006	0.006	0.003	0.006	0.006	0.003	9	17
37	SPHERE	3.565	-3.685	-3.685	AL	DRAW	1.000	YES	0.023	0.090	0.021	0.021	0.023	0.090	0.021	0.019	0.077	0.018	0	22
38	SPHERE	3.565	-3.685	-3.685	AL	DRAW	1.000	NO	0.023	0.090	0.021	0.021	0.023	0.090	0.021	0.019	0.077	0.018	0	23
39	SPHERE	3.565	-3.685	-3.685	FE	DRAW	1.000	YES	0.025	0.025	0.012	0.012	0.025	0.025	0.012	0.021	0.021	0.010	0	22
40	SPHERE	3.565	-3.685	-3.685	FE	DRAW	1.000	NO	0.025	0.025	0.012	0.012	0.025	0.025	0.012	0.021	0.021	0.010	0	23
41	SPHERE	3.565	-3.685	-3.685	BE	MACH	1.000	YES	0.019	0.019	0.009	0.009	0.019	0.019	0.009	0.019	0.019	0.009	0	7
42	SPHERE	3.565	-3.685	-3.685	BE	MACH	1.000	NO	0.019	0.019	0.009	0.009	0.019	0.019	0.009	0.019	0.019	0.009	0	9
43	SFS	-0.078	-7.819	-7.819	AL	DRAW	1.000	YES	0.027	0.107	0.025	0.025	0.027	0.107	0.025	0.023	0.091	0.021	0	22
44	SFS	-0.078	-7.819	-7.819	AL	DRAW	1.000	NO	0.027	0.107	0.025	0.025	0.027	0.107	0.025	0.023	0.091	0.021	0	23
45	SFS	-0.078	-7.819	-7.819	FE	DRAW	1.000	YES	0.030	0.030	0.014	0.014	0.030	0.030	0.014	0.025	0.025	0.012	0	22
46	SFS	-0.078	-7.819	-7.819	FE	DRAW	1.000	NO	0.030	0.030	0.014	0.014	0.030	0.030	0.014	0.025	0.025	0.012	0	23
47	SFS	-0.078	-7.819	-7.819	BE	MACH	1.000	YES	0.023	0.023	0.011	0.011	0.023	0.023	0.011	0.023	0.023	0.011	0	22
48	SFS	-0.078	-7.819	-7.819	BE	MACH	1.000	NO	0.023	0.023	0.011	0.011	0.023	0.023	0.011	0.023	0.023	0.011	0	23

FIG. 40 - PAGE 5

ALT	CONFIG	DESIGN THICKNESS T3DC	T2DS	T1DS	ALLOW. T.S T3A T3ALLW	T2A T2ALLW	T1A T1ALLW	DEL ALLW T.S ΔT3A DELT3A	ΔT2A DELT2A	ΔT1A DELT1A	K STIF	VON MISES CK VINIT VINIT	V(S) VFINAL	STIFF ISTF ISTIFF	HSTF HSTIFF	BSTF BSTIFF	COST BASE	WNDO	FORM
1	DCD	0.015	0.006	0.005	0.016	0.009	0.007	0.001	0.003	0.002	2	3.22	1.07	0.0000	0.159	0.053	960.0	0.0	170.0
2	DCD	0.041	0.024	0.020	0.016	0.009	0.007	-0.025	-0.015	-0.013	0	3.22	3.22	0.0000	0.000	0.000	960.0	0.0	170.0
3	DCD	0.015	0.007	0.006	0.005	0.003	0.002	-0.010	-0.004	-0.003	0	3.22	3.22	0.0000	0.000	0.000	960.0	0.0	170.0
4	DCD	0.015	0.007	0.006	0.005	0.003	0.002	-0.010	-0.004	-0.003	0	3.22	3.22	0.0000	0.000	0.000	960.0	0.0	170.0
5	DCD	0.013	0.005	0.005	0.024	0.011	0.011	0.011	0.006	0.006	0	3.22	3.22	0.0000	0.000	0.000	960.0	0.0	732.0
6	DCD	0.013	0.005	0.005	0.024	0.011	0.011	0.011	0.006	0.006	0	3.22	3.22	0.0000	0.000	0.000	960.0	0.0	732.0
7	DCFD	0.015	0.006	0.005	0.016	0.009	0.007	0.001	0.003	0.002	2	3.43	1.14	0.0000	0.161	0.054	840.0	0.0	170.0
8	DCFD	0.041	0.024	0.020	0.016	0.009	0.007	-0.025	-0.015	-0.013	0	3.43	3.43	0.0000	0.000	0.000	840.0	0.0	170.0
9	DCFD	0.011	0.007	0.006	0.005	0.003	0.002	-0.006	-0.004	-0.003	1	3.43	1.71	0.0000	0.135	0.045	840.0	0.0	170.0
10	DCFD	0.011	0.007	0.006	0.005	0.003	0.002	-0.006	-0.004	-0.003	1	3.43	1.71	0.0000	0.135	0.045	840.0	0.0	170.0
11	DCFD	0.014	0.005	0.005	0.024	0.011	0.011	0.010	0.006	0.006	0	3.43	3.43	0.0000	0.000	0.000	840.0	0.0	732.0
12	DCFD	0.014	0.005	0.005	0.024	0.011	0.011	0.010	0.006	0.006	0	3.43	3.43	0.0000	0.000	0.000	840.0	0.0	732.0
13	DCFW	0.015	0.006	0.005	0.016	0.009	0.007	0.001	0.003	0.002	2	3.43	1.14	0.0000	0.161	0.054	807.0	10.0	135.0
14	DCFW	0.041	0.024	0.020	0.016	0.009	0.007	-0.025	-0.015	-0.013	0	3.43	3.43	0.0000	0.000	0.000	807.0	10.0	135.0
15	DCFW	0.011	0.007	0.006	0.005	0.003	0.002	-0.006	-0.004	-0.003	1	3.43	1.71	0.0000	0.135	0.045	807.0	10.0	135.0
16	DCFW	0.011	0.007	0.006	0.005	0.003	0.002	-0.006	-0.004	-0.003	1	3.43	1.71	0.0000	0.135	0.045	807.0	10.0	135.0
17	DCFW	0.014	0.005	0.005	0.024	0.011	0.011	0.010	0.006	0.006	0	3.43	3.43	0.0000	0.000	0.000	807.0	10.0	366.0
18	DCFW	0.014	0.005	0.005	0.024	0.011	0.011	0.010	0.006	0.006	0	3.43	3.43	0.0000	0.000	0.000	807.0	10.0	366.0
19	DCD	0.016	0.007	0.006	0.016	0.009	0.007	0.000	0.001	0.001	2	2.34	0.78	0.0000	0.177	0.059	700.0	0.0	150.0
20	DCD	0.049	0.029	0.025	0.016	0.009	0.007	-0.033	-0.021	-0.017	0	2.34	2.34	0.0000	0.000	0.000	700.0	0.0	150.0
21	DCD	0.016	0.008	0.007	0.005	0.003	0.002	-0.011	-0.005	-0.004	0	2.34	2.34	0.0000	0.000	0.000	700.0	0.0	150.0
22	DCD	0.016	0.008	0.007	0.005	0.003	0.002	-0.011	-0.005	-0.004	0	2.34	2.34	0.0000	0.000	0.000	700.0	0.0	150.0
23	DCD	0.014	0.006	0.006	0.024	0.011	0.011	0.010	0.005	0.005	0	2.34	2.34	0.0000	0.000	0.000	700.0	0.0	1000.0
24	DCD	0.014	0.006	0.006	0.024	0.011	0.011	0.010	0.005	0.005	0	2.34	2.34	0.0000	0.000	0.000	700.0	0.0	1000.0
25	DCFD	0.015	0.007	0.006	0.016	0.009	0.007	0.001	0.001	0.001	3	2.67	0.67	0.0000	0.171	0.057	800.0	0.0	150.0
26	DCFD	0.049	0.029	0.025	0.016	0.009	0.007	-0.033	-0.021	-0.017	0	2.67	2.67	0.0000	0.000	0.000	800.0	0.0	150.0

FIG. 40 - PAGE 6

ALT	CONFIG	DESIGN THICKNESS. T3DC	T2DS	T1DS	A L L W.....T ' S. T_{3A} T3ALLW	T_{2A} T2ALLW	T_{1A} T1ALLW	DEL ALLW T ' S ΔT_{3A} DELT3A	ΔT_{2A} DELT2A	ΔT_{1A} DELT1A	K STIF	VON MISES CK V_{INIT} VINIT	$V(S)$ VFINAL	S T I F F I_{STF} ISTIFF	H_{STF} HSTIFF	B_{STF} BSTIFF	C O S T BASE	WNDO	FORM
27	DCED	0.017	0.008	0.007	0.005	0.003	0.002	-0.011	-0.005	-0.004	0	2.67	2.67	0.0000	0.000	0.000	800.0	0.0	150.0
28	DCED	0.017	0.008	0.007	0.005	0.003	0.002	-0.011	-0.005	-0.004	0	2.67	2.67	0.0000	0.000	0.000	800.0	0.0	150.0
29	DCED	0.015	0.006	0.006	0.024	0.011	0.011	0.009	0.005	0.005	0	2.67	2.67	0.0000	0.000	0.000	800.0	0.0	1000.0
30	DCED	0.015	0.006	0.006	0.024	0.011	0.011	0.009	0.005	0.005	0	2.67	2.67	0.0000	0.000	0.000	800.0	0.0	1000.0
31	DCEW	0.015	0.007	0.006	0.016	0.009	0.007	0.001	0.001	0.001	3	2.67	0.67	0.0000	0.171	0.057	770.0	20.0	125.0
32	DCEW	0.049	0.029	0.025	0.016	0.009	0.007	-0.033	-0.021	-0.017	0	2.67	2.67	0.0000	0.000	0.000	770.0	20.0	125.0
33	DCEW	0.017	0.008	0.007	0.005	0.003	0.002	-0.011	-0.005	-0.004	0	2.67	2.67	0.0000	0.000	0.000	770.0	20.0	125.0
34	DCEW	0.017	0.008	0.007	0.005	0.003	0.002	-0.011	-0.005	-0.004	0	2.67	2.67	0.0000	0.000	0.000	770.0	20.0	125.0
35	DCEW	0.015	0.006	0.006	0.024	0.011	0.011	0.009	0.005	0.005	0	2.67	2.67	0.0000	0.000	0.000	770.0	20.0	500.0
36	DCEW	0.015	0.006	0.006	0.024	0.011	0.011	0.009	0.005	0.005	0	2.67	2.67	0.0000	0.000	0.000	770.0	20.0	500.0
37	SPHERE	0.023	0.023	0.019	0.009	0.009	0.007	-0.014	-0.014	-0.012	0	0.00	0.00	0.0000	0.000	0.000	960.0	0.0	618.0
38	SPHERE	0.090	0.090	0.077	0.009	0.009	0.007	-0.081	-0.081	-0.069	0	0.00	0.00	0.0000	0.000	0.000	960.0	0.0	618.0
39	SPHERE	0.025	0.025	0.021	0.003	0.003	0.002	-0.022	-0.022	-0.019	0	0.00	0.00	0.0000	0.000	0.000	960.0	0.0	618.0
40	SPHERE	0.025	0.025	0.021	0.003	0.003	0.002	-0.022	-0.022	-0.019	0	0.00	0.00	0.0000	0.000	0.000	960.0	0.0	618.0
41	SPHERE	0.019	0.019	0.019	0.011	0.011	0.011	-0.008	-0.008	-0.008	0	0.00	0.00	0.0000	0.000	0.000	960.0	0.0	4208.0
42	SPHERE	0.019	0.019	0.019	0.011	0.011	0.011	-0.008	-0.008	-0.008	0	0.00	0.00	0.0000	0.000	0.000	960.0	0.0	4208.0
43	SES	0.027	0.027	0.024	0.009	0.009	0.007	-0.018	-0.018	-0.016	0	0.00	0.00	0.0000	0.000	0.000	730.0	0.0	786.0
44	SES	0.107	0.107	0.091	0.009	0.009	0.007	-0.099	-0.099	-0.084	0	0.00	0.00	0.0000	0.000	0.000	730.0	0.0	786.0
45	SES	0.030	0.030	0.025	0.003	0.003	0.002	-0.027	-0.027	-0.023	0	0.00	0.00	0.0000	0.000	0.000	730.0	0.0	786.0
46	SES	0.030	0.030	0.025	0.003	0.003	0.002	-0.027	-0.027	-0.023	0	0.00	0.00	0.0000	0.000	0.000	730.0	0.0	786.0
47	SES	0.023	0.023	0.023	0.011	0.011	0.011	-0.012	-0.012	-0.012	0	0.00	0.00	0.0000	0.000	0.000	730.0	0.0	5118.0
48	SES	0.023	0.023	0.023	0.011	0.011	0.011	-0.012	-0.012	-0.012	0	0.00	0.00	0.0000	0.000	0.000	730.0	0.0	5118.0

FIG. 40- PAGE 7

		C O S T							T I M E									
ALT	CONFIG	CYL	HT	STF	FLNG	BOX	JOIN	TOTAL COST	BASE	WNDO	FORM	CYL	HT	STF	FLNG	BOX	JOIN	TOTAL TIME
1	DCD	48.0	20.0	55.0	0.0	0.0	34.0	2487.0	96.0	0.0	17.0	4.8	11.0	5.5	0.0	0.0	3.4	257.7
2	DCD	48.0	0.0	0.0	0.0	0.0	34.0	2432.0	96.0	0.0	17.0	4.8	0.0	0.0	0.0	0.0	3.4	243.2
3	DCD	48.0	0.0	0.0	0.0	0.0	38.0	2456.0	96.0	0.0	17.0	4.8	0.0	0.0	0.0	0.0	3.8	245.6
4	DCD	48.0	20.0	20.0	0.0	0.0	38.0	2506.0	96.0	0.0	17.0	4.8	11.0	2.0	0.0	0.0	3.8	259.6
5	DCD	377.0	20.0	0.0	0.0	0.0	46.0	3345.0	96.0	0.0	24.0	4.8	11.0	0.0	0.0	0.0	4.6	261.4
6	DCD	377.0	0.0	0.0	0.0	0.0	46.0	3325.0	96.0	0.0	24.0	4.8	0.0	0.0	0.0	0.0	4.6	250.4
7	DCFD	48.0	20.0	55.0	30.0	860.0	28.0	3301.0	84.0	0.0	17.0	4.8	11.0	5.5	3.0	86.0	2.8	339.1
8	DCFD	48.0	0.0	0.0	30.0	860.0	28.0	3246.0	84.0	0.0	17.0	4.8	0.0	0.0	3.0	86.0	2.8	324.6
9	DCFD	48.0	0.0	45.0	48.0	860.0	35.0	3354.0	84.0	0.0	17.0	4.8	0.0	4.5	5.0	86.0	3.5	335.8
10	DCFD	48.0	20.0	65.0	48.0	860.0	35.0	3404.0	84.0	0.0	17.0	4.8	11.0	6.5	5.0	86.0	3.5	349.8
11	DCFD	398.0	20.0	0.0	30.0	860.0	48.0	4188.0	84.0	0.0	24.0	4.8	11.0	0.0	3.0	86.0	4.8	343.6
12	DCFD	398.0	0.0	0.0	30.0	860.0	48.0	4169.0	84.0	0.0	24.0	4.8	0.0	0.0	3.0	86.0	4.8	332.6
13	DCFW	48.0	20.0	55.0	30.0	860.0	17.0	3222.0	80.7	0.5	13.5	4.8	11.0	5.5	3.0	86.0	1.7	330.7
14	DCFW	48.0	0.0	0.0	30.0	860.0	17.0	3167.0	80.7	0.5	13.5	4.8	0.0	0.0	3.0	86.0	1.7	316.2
15	DCFW	48.0	0.0	45.0	48.0	860.0	19.0	3270.0	80.7	0.5	13.5	4.8	0.0	4.5	5.0	86.0	1.9	326.9
16	DCFW	48.0	20.0	65.0	48.0	860.0	19.0	3320.0	80.7	0.5	13.5	4.8	11.0	6.5	5.0	86.0	1.9	340.9
17	DCFW	398.0	20.0	0.0	30.0	860.0	23.0	3764.0	80.7	0.5	12.0	4.8	11.0	0.0	3.0	86.0	2.3	325.3
18	DCFW	398.0	0.0	0.0	30.0	860.0	23.0	3744.0	80.7	0.5	12.0	4.8	0.0	0.0	3.0	86.0	2.3	314.3
19	DCD	50.0	20.0	60.0	0.0	0.0	50.0	2230.0	70.0	0.0	14.5	5.0	11.0	6.0	0.0	0.0	5.0	231.5
20	DCD	50.0	0.0	0.0	0.0	0.0	50.0	2170.0	70.0	0.0	14.5	5.0	0.0	0.0	0.0	0.0	5.0	216.5
21	DCD	50.0	0.0	0.0	0.0	0.0	50.0	2190.0	70.0	0.0	14.5	5.0	0.0	0.0	0.0	0.0	5.0	218.5
22	DCD	50.0	20.0	20.0	0.0	0.0	50.0	2240.0	70.0	0.0	14.5	5.0	11.0	2.0	0.0	0.0	5.0	232.5
23	DCD	475.0	20.0	0.0	0.0	0.0	48.0	3453.0	70.0	0.0	30.0	5.0	11.0	0.0	0.0	0.0	4.8	241.8
24	DCD	475.0	0.0	0.0	0.0	0.0	48.0	3433.0	70.0	0.0	30.0	5.0	0.0	0.0	0.0	0.0	4.8	230.8
25	DCFD	50.0	20.0	93.0	36.0	873.0	40.0	3338.0	80.0	0.0	14.5	5.1	11.0	9.3	4.0	87.3	4.0	343.2
26	DCFD	50.0	0.0	0.0	36.0	873.0	40.0	3245.0	80.0	0.0	14.5	5.1	0.0	0.0	4.0	87.3	4.0	324.9

FIG. 40 - PAGE 8

		C O S T							T I M E									
ALT	CONFIG	CYL	HT	STF	FLNG	BOX	JOIN	TOTAL COST	BASE	WNDO	FORM	CYL	HT	STF	FLNG	BOX	JOIN	TOTAL TIME
27	DCFD	50.0	0.0	0.0	61.0	873.0	45.0	3320.0	80.0	0.0	14.5	5.1	0.0	0.0	6.0	87.3	4.5	331.4
28	DCFD	50.0	20.0	20.0	61.0	873.0	45.0	3370.0	80.0	0.0	14.5	5.1	11.0	2.0	6.0	87.3	4.5	345.4
29	DCFD	536.0	20.0	0.0	36.0	873.0	51.0	4602.0	80.0	0.0	30.0	5.1	11.0	0.0	4.0	87.3	5.1	351.5
30	DCFD	536.0	0.0	0.0	36.0	873.0	51.0	4582.0	80.0	0.0	30.0	5.1	0.0	0.0	4.0	87.3	5.1	340.5
31	DCFW	50.0	20.0	93.0	36.0	873.0	25.0	3278.0	77.0	0.5	12.0	5.1	11.0	9.3	4.0	87.3	2.5	335.7
32	DCFW	50.0	0.0	0.0	36.0	873.0	25.0	3185.0	77.0	0.5	12.0	5.1	0.0	0.0	4.0	87.3	2.5	317.4
33	DCFW	50.0	0.0	0.0	61.0	873.0	25.0	3255.0	77.0	0.5	12.0	5.1	0.0	0.0	6.0	87.3	2.5	323.4
34	DCFW	50.0	20.0	20.0	61.0	873.0	25.0	3305.0	77.0	0.5	12.0	5.1	11.0	2.0	6.0	87.3	2.5	337.4
35	DCFW	536.0	20.0	0.0	36.0	873.0	24.0	4055.0	77.0	0.5	15.0	5.1	11.0	0.0	4.0	87.3	2.4	330.3
36	DCFW	536.0	0.0	0.0	36.0	873.0	24.0	4035.0	77.0	0.5	15.0	5.1	0.0	0.0	4.0	87.3	2.4	319.3
37	SPHERE	0.0	20.0	0.0	0.0	0.0	123.0	2961.0	96.0	0.0	55.0	0.0	11.0	0.0	0.0	0.0	12.3	298.3
38	SPHERE	0.0	0.0	0.0	0.0	0.0	123.0	2961.0	96.0	0.0	55.0	0.0	0.0	0.0	0.0	0.0	12.3	289.3
39	SPHERE	0.0	20.0	0.0	0.0	0.0	94.0	2932.0	96.0	0.0	55.0	0.0	11.0	0.0	0.0	0.0	9.4	295.4
40	SPHERE	0.0	0.0	0.0	0.0	0.0	94.0	2932.0	96.0	0.0	55.0	0.0	0.0	0.0	0.0	0.0	9.4	286.4
41	SPHERE	0.0	20.0	0.0	0.0	0.0	37.0	6465.0	96.0	0.0	90.0	0.0	11.0	0.0	0.0	0.0	3.7	324.7
42	SPHERE	0.0	0.0	0.0	0.0	0.0	37.0	6455.0	96.0	0.0	90.0	0.0	0.0	0.0	0.0	0.0	3.7	314.7
43	SES	0.0	20.0	0.0	251.0	1066.0	192.0	4546.0	73.0	0.0	70.0	0.0	11.0	0.0	15.0	106.6	19.2	434.8
44	SES	0.0	0.0	0.0	251.0	1066.0	192.0	4546.0	73.0	0.0	70.0	0.0	0.0	0.0	15.0	106.6	19.2	425.8
45	SES	0.0	20.0	0.0	333.0	1066.0	166.0	4684.0	73.0	0.0	70.0	0.0	11.0	0.0	23.0	106.6	16.6	448.2
46	SES	0.0	0.0	0.0	333.0	1066.0	166.0	4684.0	73.0	0.0	70.0	0.0	0.0	0.0	23.0	106.6	16.6	439.2
47	SES	0.0	20.0	0.0	251.0	1066.0	98.0	8784.0	73.0	0.0	106.0	0.0	11.0	0.0	15.0	106.6	9.8	461.4
48	SES	0.0	0.0	0.0	251.0	1066.0	98.0	8784.0	73.0	0.0	106.0	0.0	0.0	0.0	15.0	106.6	9.8	452.4

FIG. 40 - PAGE 9

BLACK COST & BLACKTIME

ALT	CONFIG	BLACK....MARK BLKCST	BLKTIM
1	DCD	0.0	0.0
2	DCD	20.0	2.0
3	DCD	40.0	4.0
4	DCD	50.0	5.0
5	DCD	10.0	1.0
6	DCD	10.0	1.0
7	DCFD	20.0	2.0
8	DCFD	40.0	4.0
9	DCFD	60.0	6.0
10	DCFD	70.0	7.0
11	DCFD	30.0	3.0
12	DCFD	30.0	3.0
13	DCFW	10.0	1.0
14	DCFW	30.0	3.0
15	DCFW	50.0	5.0
16	DCFW	60.0	6.0
17	DCFW	20.0	2.0
18	DCFW	20.0	2.0
19	DCD	0.0	0.0
20	DCD	20.0	2.0
21	DCD	40.0	4.0
22	DCD	50.0	5.0
23	DCD	10.0	1.0
24	DCD	10.0	1.0
25	DCFD	40.0	4.0
26	DCFD	60.0	6.0

ALT	CONFIG	BLACK....MARK BLKCST	BLKTIM
27	DCFD	80.0	8.0
28	DCFD	90.0	9.0
29	DCFD	50.0	5.0
30	DCFD	50.0	5.0
31	DCFW	30.0	3.0
32	DCFW	50.0	5.0
33	DCFW	70.0	7.0
34	DCFW	80.0	8.0
35	DCFW	40.0	4.0
36	DCFW	40.0	4.0
37	SPHERE	40.0	4.0
38	SPHERE	60.0	6.0
39	SPHERE	40.0	4.0
40	SPHERE	60.0	6.0
41	SPHERE	40.0	4.0
42	SPHERE	50.0	5.0
43	SFS	50.0	5.0
44	SFS	70.0	7.0
45	SFS	50.0	5.0
46	SFS	70.0	7.0
47	SFS	50.0	5.0
48	SFS	70.0	7.0

FIG. 40 - PAGE 10

ST RANK ST RANK RO

RANK	ALINT	CONFIG	RHO-1 RANK (GM/SQ.CM) $\Delta\rho_{TOTAL}$	RHO-NO.	INDIV WEIGHTED DELTA ALLW RHO-TIS (GM/SQ.CM) $\Delta\rho_1$	$\Delta\rho_2$	$\Delta\rho_3$	$\Delta\rho_4$	INDIV DELTA ALLW RHO-TIS (GM/SQ.CM) $\Delta\rho_{1AL}$	$\Delta\rho_{1AR}$	$\Delta\rho_{3AL}$	$\Delta\rho_{3AR}$
1	17 Be	DCEW	1.9495E 00	4	2.6693E-01	1.1[illegible]24E-1	4.7231E-01	1.1[illegible]E 00	[illegible].027	0.011	0.047	0.110
2	18 Be	DCEW	1.9495E 00	4	2.6693E-01	1.1[illegible]24E-01	4.7231E-01	1.1[illegible]E 00	[illegible].027	0.011	0.047	0.110
3	11 Be	DCED	1.8731E 00	4	2.6693E-01	2.6693E-01	4.7231E-01	8.6693E-01	.027	0.027	0.047	0.087
4	12 Be	DCED	1.8731E 00	4	2.6693E-01	2.6693E-01	4.7231E-01	8.6693E-01	.027	0.027	0.047	0.087
5	35 Be	DCEW	1.7685E 00	4	2.1750E-01	3.9371E-02	4.1162E-01	1.1[illegible]E 00	.022	0.004	0.041	0.110
6	36 Be	DCEW	1.7685E 00	4	2.1750E-01	3.9371E-02	4.1162E-01	1.1[illegible]E 00	.022	0.004	0.041	0.110
7	31 Be	DCED	1.6641E 00	4	2.1750E-01	2.1750E-01	4.1162E-01	8.1750E-01	.022	0.022	0.041	0.082
8	29 Be	DCED	1.6641E 00	4	2.1750E-01	2.1750E-01	4.1162E-01	8.1750E-01	.022	0.022	0.041	0.082
9	5 Be	DCD	1.5[illegible]96E 00	4	2.6693E-01	2.6693E-01	4.8785E-01	4.8785E-01	.027	0.027	0.049	0.049
10	6 Be	DCD	1.5[illegible]96E 00	4	2.6693E-01	2.6693E-01	4.8785E-01	4.8785E-01	.027	0.027	0.049	0.049
11	13 Al	DCEW	1.4273E 00	4	1.4992E-01	1.1[illegible]24E-01	6.7131E-02	1.1[illegible]E 00	.015	0.011	0.007	0.110
12	23 Be	DCD	1.3292E 00	4	2.1750E-01	2.1750E-1	4.4709E-01	4.4709E-01	.022	0.022	0.045	0.045
13	24 Be	DCD	1.3292E 00	4	2.1750E-01	2.1750E-01	4.4709E-01	4.4709E-01	.022	0.022	0.045	0.045
14	34 Al	DCEW	1.3054E 00	4	7.5661E-02	3.9371E-02	9.0389E-02	1.1[illegible]E 00	.008	0.004	0.009	0.110
15	7 Al	DCED	1.0551E 00	4	1.4992E-01	1.4992E-01	6.7131E-02	6.8814E-01	.015	0.015	0.007	0.069
16	25 Al	DCED	8.4249E-01	4	7.5661E-02	7.5661E-02	9.0389E-02	6.0378E-01	.008	0.008	0.009	0.060
17	1 Al	DCD	4.8526E-01	4	1.4992E-01	1.4992E-01	9.2708E-02	9.2708E-02	0.015	0.015	0.009	0.009
18	19 Al	DCD	2.0260E-01	4	7.5661E-02	7.5661E-02	2.5637E-02	2.5637E-02	0.008	0.008	0.003	0.003
19	42 Be	SPHERE	-2.9439E-1	2	-3.7360E-01	-3.7360E-1	2.2640E-01	2.2640E-01	-.037	-0.037	0.023	0.023
20	41 Be	SPHERE	-2.9439E-01	2	-3.7360E-01	-3.7360E-1	2.2640E-01	2.2640E-01	-.037	-0.037	0.023	0.023
21	15 Fe	DCEW	-6.6160E-01	2	-6.5252E-01	1.1[illegible]24E-01	-1.2193E 00	1.1[illegible]E 00	-.065	0.011	-0.122	0.110
22	15 Fe	DCEW	-6.6160E-01	2	-6.5252E-01	1.1[illegible]24E-01	-1.2193E 00	1.1[illegible]E 00	-0.065	0.011	-0.122	0.110
23	48 Be	SES	-9.6435E-01	2	-5.4109E-01	-5.4109E-01	5.8912E-02	5.8912E-02	-0.054	-0.054	0.006	0.006
24	47 Be	SES	-9.6435E-01	2	-5.4109E-01	-5.4109E-1	5.8912E-02	5.8912E-02	-0.054	-0.054	0.006	0.006
25	14 Al	DCEW	-1.3907E 00	2	-9.0332E-01	1.1[illegible]24E-01	-1.7[illegible]6E 00	1.1[illegible]E 00	-.090	0.011	-0.170	0.110
26	33 Fe	DCEW	-2.0[illegible]6E 00	2	-8.9700E-01	3.9371E-02	-2.3230E 00	1.1[illegible]E 00	-0.090	0.004	-0.232	0.110
27	34 Fe	DCEW	-2.0[illegible]6E 00	2	-8.9700E-01	3.9371E-02	-2.3230E 00	1.1[illegible]E 00	-.090	0.004	-0.232	0.110
28	32 Al	DCEW	-2.3527E 00	2	-1.1974E 00	3.9371E-02	-2.2947E 00	1.1[illegible]E 00	-0.120	0.004	-0.229	0.110
29	37 Al	SPHERE	-2.5119E 00	2	-8.1225E-01	-8.1225E-01	-4.4376E-01	-4.4376E-01	-0.081	-0.081	-0.044	-0.044
30	9 Fe	DCED	-2.7803E 00	2	-6.5252E-01	-6.5252E-01	-1.2193E 00	-2.5591E-01	-0.065	-0.065	-0.122	-0.026
31	10 Fe	DCED	-2.7803E 00	2	-6.5252E-01	-6.5252E-01	-1.2193E 00	-2.5591E-01	-0.065	-0.065	-0.122	-0.026
32	43 Al	SES	-3.6070E 00	2	-1.0638E 00	-1.0638E 00	-7.3074E-01	-7.3074E-01	-0.106	-0.106	-0.074	-0.074
33	8 Al	DCED	-4.0487E 00	2	-9.0332E-01	-9.0332E-01	-1.7066E 00	-5.4743E-01	-0.090	-0.090	-0.170	-0.055
34	27 Fe	DCED	-4.6615E 00	2	-8.9700E-01	-8.9700E-01	-2.3230E 00	-5.4353E-01	-0.090	-0.090	-0.232	-0.054
35	28 Fe	DCED	-4.6615E 00	2	-8.9700E-01	-8.9700E-01	-2.3230E 00	-5.4353E-01	-0.090	-0.090	-0.232	-0.054
36	3 Fe	DCD	-5.1928E 00	2	-6.5252E-01	-6.5252E-01	-1.9439E 00	-1.9439E 00	-0.065	-0.065	-0.194	-0.194
37	4 Fe	DCD	-5.1928E 00	2	-6.5252E-01	-6.5252E-01	-1.9439E 00	-1.9439E 00	-0.065	-0.065	-0.194	-0.194
38	2 Al	DCD	-5.2619E 00	2	-9.0332E-01	-9.0332E-01	-1.7066E 00	-1.7066E 00	-0.090	-0.090	-0.170	-0.170
39	26 Al	DCED	-5.5863E 00	2	-1.1974E 00	-1.1974E 00	-2.2947E 00	-8.9689E-01	-0.120	-0.120	-0.229	-0.090
40	21 Fe	DCD	-6.0871E 00	2	-8.9700E-01	-8.9700E-01	-2.1466E 00	-2.1466E 00	-0.090	-0.090	-0.215	-0.215
41	22 Fe	DCD	-6.0871E 00	2	-8.9700E-01	-8.9700E-01	-2.1466E 00	-2.1466E 00	-0.090	-0.090	-0.215	-0.215
42	20 Al	DCD	-6.9841E 00	2	-1.1974E 00	-1.1974E 00	-2.2947E 00	-2.2947E 00	-0.120	-0.120	-0.229	-0.229
43	40 Fe	SPHERE	-1.5615E 01	2	-3.8200E 00	-3.8200E 00	-3.9823E 00	-3.9823E 00	-0.382	-0.382	-0.398	-0.398
44	39 Fe	SPHERE	-1.5615E 01	2	-3.8200E 00	-3.8200E 00	-3.9823E 00	-3.9823E 00	-0.382	-0.382	-0.398	-0.398
45	46 Fe	SES	-1.9210E 01	2	-4.6482E 00	-4.6482E 00	-4.9568E 00	-4.9568E 00	-0.465	-0.465	-0.496	-0.496
46	45 Fe	SES	-1.9210E 01	2	-4.6482E 00	-4.6482E 00	-4.9568E 00	-4.9568E 00	-0.465	-0.465	-0.496	-0.496
47	38 Al	SPHERE	-1.9648E 01	2	-4.7488E 00	-4.7488E 00	-5.0750E 00	-5.0750E 00	-0.475	-0.475	-0.508	-0.508
48	44 Al	SES	-2.4028E 01	2	-5.7551E 00	-5.7551E 00	-6.2590E 00	-6.2590E 00	-0.576	-0.576	-0.626	-0.626

FIG. 40- PAGE 11

(+ ALLW RHO-T'S (GM/SQ.CM)				- DESIGN RHO-T'S (GM/SQ.CM)				DESIGN THICKNESSES (INCHES)				CONFIG	ALTNT	RANK
RHOT1A PRIMLE $\rho T_{1A}(1)$	RHOT1A PRIMPT $\rho T_{1A}(2)$	RHOT3A SECDLE $\rho T_{3A}(1)$	RHOT3A SECDPT $\rho T_{3A}(2)$	RHOT1L PRIMLE $\rho T_1(1)$	RHOT1P PRIMPT $\rho T_1(2)$	RHOT3L SECDLE $\rho T_3(1)$	RHOT3P SECDPT $\rho T_3(2)$	T1DSL PRIMLE T1DS(1)	T1DSP PRIMPT T1DS(2)	T3DCL SECDLE T3DC(1)	T3DCP SECDPT T3DC(2)			ρT RANK
0.050	0.050	0.110	0.110	0.023	.039	0.063	0.000	0.005	.011	0.014	0.000	DCEW	17	1
0.050	0.050	0.11	.110	0.023	0.039	0.063	0.000	.005	.011	0.014	.000	DCEW	18	2
0.050	.050	0.110	0.110	0.023	0.023	0.063	0.023	0.005	.005	0.014	0.005	DCEW	11	3
0.050	0.050	0.110	0.110	0.023	.023	0.063	0.023	0.005	0.005	0.014	0.005	DCEW	12	4
0.050	0.050	0.110	0.110	0.028	0.046	0.069	0.000	0.006	0.013	0.015	.000	DCEW	35	5
0.050	0.050	0.110	0.110	0.028	0.046	0.069	0.000	0.006	0.013	0.015	.000	DCEW	36	6
0.050	0.050	0.110	0.110	0.028	0.028	0.069	0.028	0.006	0.006	0.015	.006	DCEW	30	7
0.050	0.050	0.110	0.110	0.028	0.028	0.069	0.028	0.006	0.006	0.015	.006	DCEW	29	8
0.050	0.050	0.110	0.110	0.023	0.023	0.061	0.061	0.005	.005	0.013	0.013	DCD	5	9
0.050	0.050	0.110	0.110	0.023	.023	0.061	0.061	0.005	0.005	0.013	0.013	DCD	6	10
0.050	0.050	0.110	0.110	0.035	.039	0.103	0.000	0.005	0.011	0.015	.000	DCEW	13	11
0.050	0.050	0.110	0.110	0.028	0.028	0.065	0.065	0.006	0.006	0.014	0.014	DCD	23	12
0.050	0.050	0.110	0.110	0.028	0.028	0.065	0.065	0.006	0.006	0.014	0.014	DCD	24	13
0.050	0.050	0.110	0.110	0.042	0.046	0.101	0.000	0.006	0.013	0.015	.000	DCEW	31	14
0.050	0.050	0.110	0.110	0.035	.035	0.103	0.041	0.005	0.005	0.015	0.006	DCED	7	15
0.050	0.050	0.110	0.110	0.042	.042	0.101	0.050	0.006	0.006	0.015	0.007	DCED	25	16
0.050	0.050	0.110	0.110	0.035	0.035	.101	0.101	0.005	0.005	0.015	0.015	DCD	1	17
0.050	0.050	0.110	0.110	0.042	0.042	0.107	0.107	0.006	0.006	0.016	0.016	DCD	10	18
0.050	0.050	0.110	0.110	0.087	0.087	0.087	0.087	.010	0.010	0.010	0.010	SPHERE	42	19
0.050	0.050	0.110	0.110	0.087	0.087	0.087	0.087	.010	0.010	0.010	0.010	SPHERE	41	20
0.050	0.050	0.110	0.110	0.115	.039	0.232	0.000	.006	0.011	0.011	0.000	DCEW	16	21
0.050	0.050	0.110	0.110	0.115	.039	0.232	0.000	0.006	0.011	0.011	0.000	DCEW	15	22
0.050	0.050	0.110	0.110	0.104	0.104	0.104	0.104	0.023	0.023	0.023	0.023	SES	48	23
0.050	0.050	0.110	0.110	0.104	0.104	0.104	0.104	0.023	0.023	0.023	0.023	SES	47	24
0.050	0.050	0.110	0.110	0.147	.039	0.287	0.000	0.020	0.011	0.041	0.000	DCEW	14	25
0.050	0.050	0.110	0.110	0.143	.046	0.342	0.000	0.007	0.013	0.017	0.000	DCEW	33	26
0.050	0.050	0.110	0.110	0.143	.046	0.342	0.000	0.007	0.013	0.017	0.000	DCEW	34	27
0.050	0.050	0.110	0.110	0.17	0.046	0.330	0.000	.025	0.013	0.049	0.000	DCEW	32	28
0.050	0.050	0.110	0.110	0.131	.131	0.154	0.154	0.010	0.010	0.023	0.023	SPHERE	37	29
0.050	0.050	0.110	0.110	0.115	0.115	0.232	0.136	0.006	0.006	0.011	0.007	DCED	9	30
0.050	0.050	0.110	0.110	0.115	0.115	0.232	0.136	0.006	0.006	0.011	0.007	DCED	10	31
0.050	0.050	0.110	0.110	0.156	0.156	0.184	0.184	0.023	0.023	0.027	0.027	SES	43	32
0.050	0.050	0.110	0.110	0.147	.140	0.287	0.165	0.020	0.020	0.041	0.024	DCED	8	33
0.050	0.050	0.110	0.110	0.14	.147	0.342	0.164	0.007	0.007	0.017	0.008	DCED	27	34
0.050	0.050	0.110	0.110	0.140	.140	0.342	0.164	0.007	0.007	0.017	0.008	DCED	28	35
0.050	.050	0.110	0.110	0.115	.115	0.304	.304	0.006	0.006	0.015	0.015	DCD	3	36
0.050	0.050	0.110	0.110	0.115	.115	0.304	0.304	0.006	0.006	0.015	0.015	DCD	4	37
0.050	0.050	0.110	0.110	0.140	0.140	0.287	0.287	0.020	0.020	0.041	0.041	DCD	2	38
0.050	0.050	0.110	0.110	0.170	0.170	0.330	0.200	0.025	0.025	0.049	.029	DCED	26	39
0.050	0.050	0.110	0.110	0.140	0.140	0.325	0.325	0.007	0.007	0.016	0.016	DCD	21	40
0.050	0.050	0.110	0.110	0.140	0.140	0.325	0.325	0.007	0.007	0.016	0.016	DCD	22	41
0.050	0.050	0.110	0.110	0.170	0.170	0.330	0.330	0.025	0.025	0.049	0.049	DCD	20	42
0.050	0.050	0.110	0.110	0.432	0.432	0.508	0.508	0.021	0.021	0.025	0.025	SPHERE	40	43
0.050	0.050	0.110	0.110	0.432	.432	0.508	0.508	0.021	0.021	0.025	0.025	SPHERE	39	44
0.050	0.050	0.110	0.110	0.515	0.515	0.606	0.606	0.025	0.025	0.030	0.030	SES	46	45
0.050	0.050	0.110	0.110	0.515	0.515	0.606	0.606	0.025	0.025	0.030	0.030	SES	45	46
0.050	0.050	0.110	0.110	0.525	0.525	0.618	0.618	0.077	0.077	0.096	0.096	SPHERE	38	47
0.050	0.050	0.110	0.110	0.626	0.626	0.736	0.736	0.091	0.091	0.107	0.107	SES	44	48

FIG. 40- PAGE 12

COST RANK	ALTNT	CONFIG	SHAPE	TOTAL COST (DOLLARS) $
1	20	DCD	2	2170.[illegible]
2	21	DCD	2	2190.0
3	19	DCD	2	2235.0
4	22	DCD	2	2241.[illegible]
5	2	DCD	1	2432.[illegible]
6	3	DCD	1	2456.[illegible]
7	1	DCD	1	2487.0
8	4	DCD	1	2536.0
9	39	SPHERE	1	2932.0
10	40	SPHERE	1	2932.[illegible]
11	37	SPHERE	1	2961.0
12	38	SPHERE	1	2961.0
13	14	DCEW	3	3167.0
14	32	DCEW	2	3185.0
15	13	DCEW	3	3222.0
16	26	DCED	2	3245.[illegible]
17	8	DCED	3	3246.0
18	33	DCEW	2	3255.0
19	15	DCEW	3	3279.[illegible]
20	31	DCEW	2	3278.0
21	7	DCED	3	3321.
22	34	DCEW	2	3325.[illegible]
23	16	DCEW	3	3320.[illegible]
24	27	DCED	2	3320.[illegible]
25	6	DCD	1	3325.[illegible]
26	25	DCED	2	3338.[illegible]
27	5	DCD	1	3345.0
28	9	DCED	3	3354.0
29	23	DCED	2	3370.[illegible]
30	10	DCED	3	3404.[illegible]
31	24	DCD	2	3433.0
32	23	DCD	2	3453.0
33	18	DCEW	3	3744.0
34	17	DCEW	3	3754.0
35	36	DCEW	2	4035.0
36	35	DCEW	2	4055.0
37	12	DCED	3	4168.[illegible]
38	11	DCED	3	4188.[illegible]
39	43	SES	5	4546.0
40	44	SES	5	4546.0
41	30	DCED	2	4582.[illegible]
42	29	DCED	2	4612.[illegible]
43	45	SES	5	4684.0
44	46	SES	5	4684.[illegible]
45	42	SPHERE	1	6455.0
46	41	SPHERE	1	6465.0
47	47	SES	5	8784.0
48	48	SES	5	8784.0

TIME RANK	ALTNT	CONFIG	SHAPE	TOTAL TIME (HOURS)	SCALED TIME HRS.
1	8	DCED	3	324.6	108.2
2	26	DCED	2	324.9	108.3
3	27	DCED	2	331.4	11[illegible].5
4	12	DCED	3	332.6	11[illegible].9
5	9	DCED	3	335.8	111.9
6	7	DCED	3	339.1	113.0
7	30	DCED	2	340.5	113.5
8	25	DCED	2	343.2	114.4
9	11	DCED	3	343.6	114.5
10	28	DCED	2	345.4	115.1
11	10	DCED	3	349.8	116.6
12	29	DCED	2	351.5	117.2
13	18	DCEW	3	314.3	157.2
14	14	DCEW	3	316.2	158.1
15	32	DCEW	2	317.4	158.7
16	36	DCEW	2	319.3	159.6
17	33	DCEW	2	323.4	161.7
18	17	DCEW	3	325.3	162.7
19	15	DCEW	3	326.9	163.5
20	35	DCEW	2	330.3	165.1
21	13	DCEW	3	330.7	165.4
22	31	DCEW	2	335.7	167.3
23	34	DCEW	2	337.4	168.7
24	44	SES	5	425.8	17[illegible].3
25	16	DCEW	3	340.9	170.5
26	43	SES	5	434.9	173.9
27	46	SES	5	439.2	175.7
28	45	SES	5	448.2	179.3
29	48	SES	5	452.4	181.0
30	47	SES	5	461.4	184.6
31	20	DCD	2	216.5	216.5
32	21	DCD	2	218.5	218.5
33	24	DCD	2	230.8	23[illegible].8
34	19	DCD	2	231.5	231.5
35	22	DCD	2	232.5	232.5
36	23	DCD	2	241.8	241.8
37	2	DCD	1	243.2	243.2
38	3	DCD	1	245.6	245.6
39	6	DCD	1	25[illegible].4	25[illegible].4
40	1	DCD	1	257.7	257.7
41	4	DCD	1	259.6	259.6
42	5	DCD	1	261.4	261.4
43	42	SPHERE	1	286.4	286.4
44	39	SPHERE	1	289.3	289.3
45	39	SPHERE	1	295.4	295.4
46	37	SPHERE	1	298.3	298.3
47	42	SPHERE	1	314.7	314.7
48	41	SPHERE	1	324.7	324.7

FIG. 40 - PAGE 13

at hand, it also represents a typical output of DESIGN.) In general, each specific piece of input was chosen in accordance with one of four principles: (1) that input which was merely given to the engineer by the physicist in the first place (RF = 1.50", LF = 12.0"); (2) that input which was known to the engineer prior to the physicist's specific requirements (e.g., in addition to NTNSTY, DCRIT, and ρ_{WND}, the outstanding examples would be the properties of the metals which are part of the engineer's stock-in-trade data); (3) that input which was specifically based on what the engineer had already designed (e.g., a ΔRF_{incr} of 0.500 produces the kind of "incremented" cylinders the engineer designed; WNCR = 3.500" reflects the fact that the engineer already knew he had an existing box of width 3.50" and therefore knew he needed a WNCR of at least 3.500". While the values of IB and IBA reflected the fact that the engineer generally considered window designs, the particular values of H1, H2, V1 and V2 reflected the dimensions of the <u>specific</u> DCFW's he considered. Even more specific was the selection of the allowable ρT's; they were specifically based on the minimum--not stock--design thicknesses of case 3 and on the density of Al, 2.70 gm./cm^3); (4) finally, there was that input which was selected for a variety of reasons, some of which combined the three preceding principles. For example, ΔNCR = 7.750" was selected on the basis of both principles 1 and 3. ΔNCR = 7.50" reflects the fact that <u>the physicist</u> wanted a 12" long flask entirely outside of the NCR and that <u>the engineer</u> had defined a WNCR of 3.500". Therefore, ΔNCR = (LF + WNCR)/2 = 7.750". Next, DNCR = 3.300" was specifically selected in order that the engineer could compare his "incremented" designs with the program's minimums. The engineer knew that unless the DNCR was selected "small enough," no minimum cylinders would be generated. The DNCR must be at least no larger than the diameter of the minimum

cylinder for this to happen. Any larger DNCR will cause the minimum cylinder to increment up to the DNCR in order to preserve the possibility of flanged box designs (e.g., DCFD, DCFW, SFS, SFW, etc.). (Since the engineer knew the program's rule for generating minimum shapes, he easily calculated the necessary DNCR at 3.300".) Finally, there was the problem of selecting the weighting factors. The weighting factors like the allowable ρT's are really something which X should have specified. (This is just one specific illustration of where we would have liked having the physicist's participation in evaluating the program.) Lacking the necessary information, the engineer fell back on the physicist's very general request to make the shell "as thin as possible." He loosely interpreted this as meaning "all directions are equally important." Furthermore, in order to magnify the differences between the allowable ρT's and the design ρT's, the engineer arbitrarily set all the weighting factors at 10.

In evaluating the program, the first thing the engineer did was to search for the particular alternatives which he had specifically designed. This means that he carefully scrutinized the program for DCFW heat-treated aluminum alternatives. Of the two heat-treated aluminum DCFW designs (alternatives 13 and 31), alternative 31, as the incremented shell, was the corresponding alternative to what the engineer had previously designed. Reading across page 3 we should not be surprised to find that alternative 31 first of all has the correct radius of 2.00", especially since the value of ΔRF_{incr} of 0.5" was specifically chosen for that purpose. What is surprising though is the difference, even if it is only slight (in fact, because it <u>is</u> slight but not negligible), in the cylinder's length (10.677 - 10.177"). Here is a case where the program revealed where the engineer had earlier made a very small and trivial

mistake of approximately 1/8 in. in scaling the cylinder's length at 10.5". The point is that here was also a case where the program gained in stature precisely because it caught a trivial mistake. The program was "accepted" by the engineer at this step precisely because it did not match what he had erroneously done.

Continuing, the WNCR check showed that an assumed WNCR of 3.500" gave the engineer 0.194" more than he actually needed for building a box flange. This means that the program confirmed the engineer's earlier decision to use an already existing box-flange of 3.50". Specifically, the program showed he only needed a flange of 3.306". The program also showed that for a ΔRF_{incr} of 0.5", the 4" D shell would fit in the DNCR by 0.7" to spare (in comparison, alternative 13 just fits as designed). The program next computed the necessary thickness for a 4" D window. Note that whereas the program computes 0.013", the engineer computed 0.012" (actually 0.0125"). The difference consists of the fact that the engineer (as noted before) rounds up or down. The difference becomes even more noticeable when we observe how the calculation of THICKW affects the selection of the number of stock sheets. Whereas the engineer used one 0.005" and one 0.0075" stock sheet, the program uses one 0.010" and three 0.001" stock sheets. Since the value of the window deflection (WD) is dependent on the number of stock sheets used to build up any THICKW, a small difference in the calculation of THICKW can have a small but sometimes important effect on WD. Unfortunately, it was only after the program was written and only by examining the consequences of the program's procedure that the engineer became consciously aware of his actual procedure for calculating THICKW. But then, fortunately, this becomes another case where, because of a difference, the engineer can learn from the program and can use the program to point to what he actually does in terms

of a difference. In other words, from the engineer's point of view, the program may sometimes be a good simulation if it does not exactly match what he does. In the sense that a difference can be revealing, the engineer may actually learn more from "slight" differences than from an exact match.

Since WD is much less than WNCR, as the engineer merely assumed it would be when he did his own designs (the engineer did not calculate WD explicitly), the engineer did not find it necessary to check on the calculation of WD for the specific case at hand. It was merely good enough for the program to confirm his previous implicit assumption: that a box-flange of 3.50" would be wide enough to accommodate a window deflection.

Because it was not of immediate interest nor as important in comparing the program with what he had done, the engineer skipped the XSPACE data and proceeded straight away to the most important data of all, the thicknesses of the cylinder and dome (Fig. 40, page 5). First of all, the program shows that the dome is drawn. Even though this matches what the engineer did, we should note, once again, that whereas the engineer considered drawing the dome for several reasons, the program considered drawing for one reason only, i.e., the value of Al's elongation. Continuing across, the engineer remarked that the RATIO of T_{2I}/T_{3I} of 0.588 was still "close enough" to 0.63 to justify the constant stress concentration factor of NTNSTY = 1.1. Next, the engineer remarked that to him the match between the computed minimum (i.e., not stock) design thicknesses was "truly amazing." We present a tabular comparison by way of summary up to this point:

3 x 12 case

	Engineer	Program
T_{1I}	0.006"	0.006"
T_{1E}	0.006"	0.006"
T_{2I}	0.008"	0.007"
T_{2E}	0.008"	0.007"
T_{3I}	0.011"	0.012"
T_{3E}	0.025"	0.026"
t_{3STF}	0.016"	0.015"

Page 7 also gives the program's summary of the analysis thus far. The first three columns (T3DC, T2DS, T1DS) give the design thicknesses for alternative 31. The next six columns list the allowable thicknesses and the differences between the allowable thicknesses and the actual design thicknesses. Alternative 31, as it can be seen, betters the allowables which the engineer selected on the basis of his design (case 3) by 0.001". But by far the most important information of all on page 7 are the results of the stiffener analysis. Here we find "the" major difference between the program and the engineer. Whereas the engineer only used two stiffeners, the program put in three. Now, the question is how serious the difference is. And, this is a question for the engineer to evaluate, not statistics.

The difference fundamentally has to do with the way that the program decides to put in stiffeners. Looking back to page 5, the engineer can see that the cylinder inequality number is 38 (INEQC = 38). This means, going back to the subroutine EXACT, that the program added stiffeners until $T_{3A} > t_{3STF} > T_{3I}$. The question, therefore, is whether this was a

good rule to begin with. For the most part, the engineer thinks that it was and still is. The rule was originally put in order to make the required thickness for external pressure approach as closely as possible the thickness required for internal pressure, thus approaching, as closely as possible, a minimum thickness design. The main objection against the rule is that additional stiffeners should be added only if they make a "significant" difference in the cylinder's thickness. But, as the engineer admits, in general this appears extremely difficult to do, since, like for most of DESIGN's variables and processes, such a rule would have to take into account the general needs of specific physicists. What is "significant" for one physicist may not be for another. In sum, the most general concept of "significance" (which DESIGN presently embodies) is already based on the general demand to make the shell "as thin as possible." Thus, according to the engineer, the program is not really "wrong"; it merely is a simplification of the many design steps open to the engineer. Possibly the easiest way to remedy the situation somewhat would be to have the program print out as distinct and separate alternative designs with one, two, three, . . . numbers of stiffeners. The program presently prints out only the "best" stiffened design. It should be mentioned that this was really the engineer's specific intent all along. He specifically wanted to demonstrate to physicists the decisive advantages of stiffened designs. In the past, physicists have been somewhat reluctant to consider stiffened designs because of the possible scattering problems mentioned earlier. In order to "sell" the advantages of stiffeners, the engineer wanted the program to show how "thin as possible" stiffeners could make a design.

In any case, having once gone back to the source of the difference, the engineer did not consider the difference decisive. Essentially the

reason consisted of the fact that the final design thicknesses of alternative 31 are almost exactly the same as what he designed, and, therefore, the ρT ranking list would still give the engineer one of the things he was most interested in learning from the program, i.e., how the particular designs which he explicitly considered ranked against those he could have considered but didn't. A comparison with alternative 13 even tended to strengthen this evaluation because, for the particular cases at hand, alternative 13 showed that thicknesswise and stiffener propertywise (i.e., H_{STF} and B_{STF}), the differences in thicknesses were small over a range of shell diameter from 3.300" to 4.000", and for 2 vs. 3 stiffeners. In either case, the properties of the stiffeners were exceedingly close to the values the engineer had calculated himself.

Since he had not explicitly calculated any costs himself, the engineer deferred an examination of the various costs to later. He skipped directly to page 11 to the ρT ranking list. This was, without a doubt, after the detailed examination of the program's design thicknesses, the most interesting part of the program to the engineer. The usefulness of this routine was, to a large extent, a measure of the usefulness of the whole program. It not only summarized much of the previous analysis, but it also provided the engineer with, for the first time, a really comprehensive and "objective" evaluation of many of his design proposals.

More important than the absolute value of any alternative's $\Delta\rho_{TOTAL}$ value was its relative rank as compared to the other alternatives. Specifically, the engineer was particularly interested in the rank of alternative 31. At a first glance it may seem that alternative 31 is not particularly "high" in the list, but then this judgment can only be made with reference to those other alternatives which are "higher." Except

for alternative 13 which is ranked 11th, every alternative ranked higher than 31 is made from Be. But this was what the engineer suspected would happen beforehand. In fact, it was the major reason for inputting Be originally. In a very real sense (as he did with the rule for adding stiffeners), the engineer, by comparing Be with his more traditional metals like stainless steel and Al was using the program to verify what he had suspected all along but had never had the chance to investigate as systematically as he could with the ρT ranking list. From the very start (in addition to checking out the program), the engineer was using the program to conduct a feasibility study. Thus, the engineer was certainly not surprised by the demonstrated superiority of Be designs. Quite the contrary. He merely felt that he was able to confirm what he knew, the superiority of Be, ρTwise.

The engineer would only have been surprised if alternative 31 were not near the best of the Al alternatives. In this sense, it was not the absolute rank of alternative 31 that was important, but the fact that it was essentially as good as the best of the Al alternatives. If alternative 31 came out to be noncompetitive, the engineer would have seriously questioned the ρT ranking routine itself. As he put it himself,

> I would have been surprised to find out that we could have been doing things wrong for all these years. I just wouldn't have been able to believe it.

What confirmed the essential validity of ρT ranking structure was its tendency to confirm the engineer's intuition as to how the various alternatives should be ranked. Take, for example, alternative 32, the counterpart to 31. Alternative 32 is the same in every respect except for the fact that it is not heat-treated, which, of course, changes all its design thicknesses, T_{3I}, T_{2I}, T_{1I}. Thus, it should be, as it is, farther down in the list. In fact, since alternative 32 is the last of

the non heat-treated Al DCFW alternatives, it should be the worst of all the incremented DCFW's. Thus, it should be the worst of all the DCFW's which it is. Likewise, spheres, because they have a larger diameter, should also be farther down. On the other hand, the addition of a window to any alternative should raise its position. Compare, for example, alternatives 25 and 31. Obviously, a much more systematic study over a large range of variables would be necessary in order to discover in general how ranking varies as a simultaneous function of configuration, heat-treat, window, metal, and initial flask dimensions. The same kind of systematic study would also be necessary in order to investigate the general validity of the ranking routine itself before it in turn could be used to discover how ranking does vary with the aforementioned variables. In addition to the preceding variables, we would still have to show how ranking varies with two of the most important kinds of variables of all, the initially "given" allowable ρT's and the weighting factors.

At this point we can see how the decision to print out only the "best" stiffened alternative had further consequences. By not being printed out as a separate alternative, case 1 (T_{3E} = 0.025" as calculated by the engineer) or the design without any stiffeners, was not ranked with respect to the other alternatives. Thus, although he has not lost any design information about the alternative (e.g., its thicknesses), the engineer has lost what is now to him the most important information of all, its ρT rank. Unfortunately, it would take a great deal of work to go back and correct this oversight. We have one example of where, to say the least, the engineer is more adaptable than the program.

Next, the engineer merely scanned the cost ranking list. While he felt that the costs of the DCFD, and sphere configurations were in the right "ball park," as he put it, he also felt that the DCD configura-

tions were too low. Both the minimum and incremented DCD's were looking good at the expense of alternatives 13 and 31, both DCFW's. The engineer recalled that at the time he gathered together the various detailed costs (see Fig. 40, pages 6 through 9), he merely assigned a common assembly cost of $400 to all of the alternatives. This, in effect, assumes that all the alternatives can be built somehow, but, unfortunately, really ignores the fact that it is relatively much more difficult to assemble any minimum configuration and particularly a minimum DCD ("the ship in the bottle," as the engineer calls it). The engineer felt that even though he only wanted to use the program in the future for cost "estimates," but nevertheless still use it, he had better go back and re-examine his bases for estimating the costs. The same comments applied to the time ranking routine as well. These two features of the program were probably doing the poorest job of any routine. But even so, the engineer felt that they were still adequate enough to point out the relative disadvantages of Be costwise as much as the ρT list pointed out their advantages ρTwise.

In sum, the engineer felt that if he interpreted the cost list correctly by discounting the false goodness of DCD's and by further noting that every Al alternative in front of 31 (except for 13) was really poorer ρTwise, then he felt that the program really confirmed his best design choice given the configurations from which he compared. The point is that the differences between the best alternatives costwise (20, 21, etc.) and alternative 31 would not really be enough to offset the advantage of alternative 31 ρTwise.

We now turn to the 6 x 12 flask designs. We shall not burden the reader with an extensive comparison. We shall only list the major variables which the engineer compared. Furthermore, since, for example, the metals considered were the same, we shall only list as well the values

of the major input variables that were important and specific to the 6 x 12 case:

$RF = 3.000''$, $LF = 12{,}000''$,

$\Delta RF_{incr} = 1.000''$, $WNCR = 3.500''$,

$DNCR = 6.600''$, $\Delta NCR = 7.750''$,

$NTNSTY = 1.100$, $DCRIT = 16.000$,

$WT(1) = WT(2) = WT(3) = WT(4) = 10$,

$\rho_{WND} = 1.395$, $\rho T_{1AL} = \rho T_{1AR} = 0.085$,

$\rho T_{3AL} = \rho T_{3AR} = 0.175$

We compare the program and engineer:

6 x 12 case

	Engineer	Program
RC	4.0"	4.000"
LC	10 1/8"	10.148"
WNCR	∿ 3 1/2" minimum	3.712"
T_{1I}	0.012"	0.012"
T_{1E}	0.012"	0.011"
T_{2I}	0.016"	0.015"
T_{2E}	0.016"	0.013"
T_{3I}	0.023"	0.025"
T_{3E}	0.036"	0.037"
t_{3STF}	0.025"	0.028"

Alternative 31 was again the alternative of comparison, a stiffened, heat-treated, drawn, Al design. As the comparison shows the match is, according to the engineer, "extremely good." The only discrepancy is that whereas the program's alternative has 1 stiffener, the engineer's had 2. The program, in fact almost exactly matches all the thickness that the

engineer computed for the 8" D 1 stiffener design, i.e., case 5. The program's value of t_{3STF} = 0.028", in fact, exactly matches what the engineer computed for case 5. Why, then, we ask, is there a difference? The answer again lies with the way in which the program added stiffeners. The program added stiffeners until (according to the inequality number, INEQC = 37), T_{3A} = 0.026" > t_{3STF} = 0.028" > T_{3I} = 0.025". When the program tried to add another stiffener to make the design as thin as possible, i.e., as close to T_{3I} as possible, an additional stiffener made the inequality become T_{3A} = 0.026" > T_{3I} = 0.025" > t_{3STF} (whatever t_{3STF} then became). Since T_{3I} is the minimum design thickness possible, the program reverted to the one stiffener design. Because the program, in other words, originally computed a T_{3I} of 0.025" or just 0.002" higher than the engineer did (i.e., T_{3I} = 0. 023"), a whole additional stiffener was rejected. Perhaps there is no more dramatic example of where a little difference in the input can make a big difference in the output, and this means that who it is that defines the input is exceedingly important. If the NTNSTY factor had been originally defined as 1.08 instead of 1.10, the program would have exactly matched the engineer's case 6 with 2 stiffeners. And the point is that the engineer would have not been forcing the match if he had originally defined an NTNSTY of 1.08, since for the particular case at hand, a value of 1.08 would have actually been much more appropriate for matching what he had done. If an NTNSTY value of 1.10 can sometimes be underconservative (for a RATIO value near 0.50), it can far more often be overconservative. This has been the basis all along for sweeping the engineer in as the evaluator of the program. He is sensitive as to the "why" of certain differences in the output, and the point is that once he understood the reason for a difference, the engineer could accept the program as a good simulation.

As a short but further illustration of the importance of who it is that defines the input, let us consider the effect of the initially defined allowable ρT's on the ρT ranking list. If ρT_{1AL} and ρT_{1AR} are changed from 0.085 gms/cm^2 to 0.100 gm/cm^2, and ρT_{3AL} and ρT_{3AR} from 0.175 to 0.200, then none of the properties associated with alternative 31 change. The only thing that changes is its position in the ρT ranking list. For allowable ρT's of 0.085 and 0.175, alternative 31's rank is 17 and only meets the allowables in two directions, the left primary and right secondary directions. Furthermore, in addition to the expected higher ranks of 12 Be designs, there are also four better Al designs, the best Al being alternative 13 (the minimum heat-treated, stiffened, Al design) with a rank of 9 and meeting all four allowables. On the other hand, for ρT's of 0.100 and 0.200, alternative 31's rank is 14 and meets all the allowables. The only better Al is now alternative 13 with a rank of 11. The point is again that <u>a little difference in who it is that is choosing the input makes a big difference in the output</u>.

Since the arguments of this section have been long and involved, we briefly summarize the main points and conclusions: (1) What the engineer finally builds is mainly dependent upon three factors: (a) The first is dependent on what he can basically analyze, i.e., the particular equations he has <u>available</u> for analysis, his <u>knowledge</u> of their use, and the <u>limits</u> on the equations themselves which affect their use. (b) The second factor is the existence and availability of stock parts, and the third factor (c) is the existence and availability of formerly designed parts. (2) The program simulates only the part associated with (1)(a) above. By the engineer's own estimate, the program simulates only up to 50% of all possible configurations the engineer ever considers (e.g., the alligator-jaw for one). (3) When compared at the level of actual detailed

computations, there is a noticeable difference in <u>some</u> of the engineer's behavior and that of the program. For example, recall the engineer's simultaneous considerations and execution of several steps like drawing and the addition of stiffeners. But there is also a noticeable similarity in many of the steps like the membrane analysis, the external pressure analysis, and the calculation of stiffeners. (4) When compared at the level of gross output, according to the engineer's own evaluations, there was a good fit between the program and what he himself had done. More to the point was the engineer's criterion of "goodness of fit." Since the engineer was most interested in comparing alternatives ρTwise, and since the alternatives either matched quite closely thicknesswise or could easily be adjusted to match (e.g., a simple change in NTNSTY from 1.10 to 1.08), the engineer accepted the program more for its over-all ρT comparison between alternatives than he accepted it for its close matching. In other words, it was not as important for the program to match <u>exactly</u> what he had done as it was for it to be "in the ball park" (as he put it). It was more important for the program to give him a comprehensive evaluation of how good what he had done in the past actually was. In the engineer's own words, "the program looks good enough to be used for a preliminary design evaluation of alternatives." (5) The engineer's sensitivity to the influence of variables like NTNSTY on the program also points to another reason for having the engineer judge not only its goodness of fit but, more importantly, the program's general adequacy. <u>The engineer's sensitivity to a single variable is enough to prove the general point that he who determines the input determines the output</u>.

Case II

Towards the end of the investigation of X's case, the engineer's boss, who was by now aware of the program's "success," became interested in applying it to a problem he had at hand. Since he was not as familiar with the program's detailed operation as the engineer was, he wanted a preliminary evaluation of one of his designs done for him, by the engineer using the program.

Essentially, the only input given to the engineer was the little that was initially given to his boss by the physicist requesting the study: RF = 36.0", LF = 42.0", ΔNCR = 0.0", and the fact that WNCR was to be wide enough to completely enclose the design. In addition, the engineer's boss had assumed for his design metal the 6061 heat-treatable Al alloy. He had assumed a relatively low safety factor of 1.10 in order to get a "close" design. The only other fact that was really known was that the physicist (hereafter referred to as Y) was only interested in the primary directions. Y did not care how thick the secondary directions were as long as the primary directions were, as usual, "as thin as possible."

The major input variables that the engineer had to assume in order to run the program were as follows: (1) ΔRF_{incr} = 2.00" ; for a large flask of the size being considered, the engineer knew that a large amount of insulation would be necessary in order to minimize the loss of hydrogen. Thus, a relatively large increment was indicated. (2) WNCR = 55.0"; the engineer merely guessed at a value of WNCR large enough to accommodate a WFW type of configuration with, most likely, large window deflections in order that he could investigate whatever advantages a window configuration might have to offer. (3) In addition to the 6061 Al alloy which his boss had already assumed, the engineer also considered another Al alloy,

ρT RANK

RANK ρT	ALTNT		CONFIG	RHO-T RANK (GM/SQ.CM) DROTTL $\Delta\rho_{TOTAL}$	RHO-NO. RO
1	13	MYLAR	WFWSPH	-7.7874E 01	2
2	14	6061	SFW	-9.5317E 01	2
3	7	6061	SFS	-1.1276E 02	2
4	1	6061	SPHERE	-1.1276E 02	2
5	19	5083	SFW	-1.2944E 02	2
6	18	5083	SFW	-1.2944E 02	2
7	15	6061	SFW	-1.5754E 02	2
8	12	5083	SFS	-1.8100E 02	2
9	6	5083	SPHERE	-1.8100E 02	2
10	11	5083	SFS	-1.8100E 02	2
11	5	5083	SPHERE	-1.8100E 02	2
12	8	6061	SFS	-2.3720E 02	2
13	2	6061	SPHERE	-2.3720E 02	2
14	16	300	SFW	-3.2197E 02	2
15	17	300	SFW	-3.2197E 02	2
16	4	300	SPHERE	-5.6607E 02	2
17	3	300	SPHERE	-5.6607E 02	2
18	9	300	SFS	-5.6607E 02	2
19	10	300	SFS	-5.6607E 02	2

FIG. 41

5083.[6] 5083 is a non-heat-treatable Al alloy which is stronger than 6061 in a non-heat-treated condition. Because the required vessel would be large, and therefore, perhaps too large for the Lab's heat-treating facilities, the engineer deemed it wise to consider another alloy which was particularly good in a non-heat-treated condition. Furthermore, since the program was basically set up to run and compare any three different metals, one might as well take advantage of the capability; thus, the third metal assumed was the 300 series stainless steel, also a non-heat-treatable alloy. (4) NTNSTY = 1.00, DCRIT = 16.0", and ρ_{WND} = 1.395 gms/cm^3 as usual. (5) In order to stress the importance of the primary directions over the secondary, the engineer arbitrarily chose WT(1) = WT(2) = 100 and WT(3) = WT(4) = 0. (6) The importance of the primary was also reflected in the allowable ρT's selected: $\rho T_{1AL} = \rho T_{1AR}$ = 0.500 gms/cm^2; $\rho T_{3AL} = \rho T_{3AR}$ = 5.000 gms/cm^2. These values, like the weighting functions, were also chosen somewhat arbitrarily. These allowable ρT's were merely the result of the engineer's very rough estimate of what the actual design ρT's might be.

The program was run, and the results, to say the least, were highly surprising. The ρT ranking list (see Fig. 41), the output of most interest, showed that the best alternative ρTwise was one that the engineer's boss had not seriously considered at all. (Since only a <u>relative</u> ρT comparison of alternatives was really of interest, we only show and discuss, in addition to the input, the ρT ranking list.) The program clearly showed the superiority of the WFWSPH configuration even though the thicknesses of its windows were noticeably greater than the thickness of every other configuration's hemispheres. For example, if we compare the thickness of WFWSPH's left-primary window (0.251") to

[6] <u>Cf.</u> <u>Alcoa Aluminum Handbook</u>, Aluminum Company of America, 1959.

ρT/RL RANK

RANK	ALTNT	CONFIG	RHO-T RANK (GM/SQ.CM) DROTTL $\Delta\rho$ TOTAL	RHO-NO.
ρT/RL				
1	13 MYLAR	WFWSPH	1.5372E 00	4
2	14 6061	SFW	-6.8359E-01	3
3	19 5083	SFW	-2.1116E 00	3
4	18 5083	SFW	-2.1116E 00	3
5	15 6061	SFW	-3.2876E 00	3
6	17 300	SFW	-2.1834E 01	3
7	16 300	SFW	-2.1834E 01	3
8	1 6061	SPHERE	-2.9044E 00	2
9	7 6061	SFS	-2.9044E 00	2
10	12 5083	SFS	-5.7604E 00	2
11	6 5083	SPHERE	-5.7604E 00	2
12	5 5083	SPHERE	-5.7604E 00	2
13	11 5083	SFS	-5.7604E 00	2
14	2 6061	SPHERE	-8.1124E 00	2
15	8 6061	SFS	-8.1124E 00	2
16	10 300	SFS	-4.5204E 01	2
17	4 300	SPHERE	-4.5204E 01	2
18	9 300	SFS	-4.5204E 01	2
19	3 300	SPHERE	-4.5204E 01	2

FIG. 42

alternative 14's left-primary (0.155"), the difference is certainly noticeable. But of course the real point is that ρTwise the advantage is just the opposite. Since the density of the mylar (1.395) is considerably lower than the density of Al (2.70), ρTwise the window is actually much better (0.889 to 1.064 gms/cm^2). We have to remember that ρT and not T alone is the criterion for ranking alternatives.

The program showed the engineer's boss that in spite of his previous intuitive doubts concerning the assembly and testing out of such large windows, he should actually have given the alternative serious consideration. Here we have a case where the program was "accepted" as a valuable preliminary design aid precisely because it did not match a preconception. The element of "surprise" was instrumental in confirming the program's utility.

The boss's acceptance of the program is even more dramatic when we realize that the program was "accepted" by someone for whom it was not even written for (i.e., modeled after) in the first place. By sweeping the engineer's boss as well into the validation process, we have a richer and broader notion of the program's utility than if we only stuck with a comparison of the engineer.

We should also mention that the preceding conclusions were strengthened even more when the engineer converted the allowable ρT's into allowable ρT's divided by radiation lengths. That is, if the design criterion becomes ρT/RL, then the ρT ranking list, which now becomes a ρT/RL ranking list, shows the WFWSPH alternative to be even better (see Fig 42). Not knowing the physicist's criterion to be either ρT or ρT/RL, the engineer thought that it would be instructive, both for his boss and for Y, if he were to run the program for ρT/RL as well. The procedure

also shows, once again, how the choice of input decisively affects the output: Since the engineer now knew the superiority of the WFWSPH alternative, as well as its detailed thicknesses and the fact that the ρT/RL criterion would only further demonstrate WFWSPH's superiority, he could now choose the allowable ρT/RL's to deliberately emphasize the alternative's superiority. Notice that whereas before the highest RO number was only 2, it now became 4. In addition to the WFWSPH alternative, the ρT/RL criterion also showed the relative superiority of window alternatives in general (i.e., in this case, SFW alternatives).

Case III

As a final attempt to get at least one physicist's evaluation of the program, this researcher suggested that the engineer do a program evaluation of a past design and then present the results for a particular physicist's comments. We both thought that by confronting a physicist with what the program could have done with one of his past designs, we could perhaps secure a physicist's interest by giving him something concrete to evaluate. More specifically, we also thought that the best way to accomplish the above would be to run the program twice, first merely trying to match what was designed and, second, definitely trying to better the design.

This part of the study involved the engineer's selecting a past design which was, first of all, on file and, most of all, a configuration the program could simulate. It also involved selecting a design which was done for a physicist who was still with the Lab and who had expressed at least a tentative willingness to cooperate. There were not many designs which met all these criteria. There were, in fact, only two. One, a 6061 Al, heat-treated DCFW, was selected.

From the drawings on file, the engineer either read off directly or merely scaled the values of the major input variables he needed: RF = 1.50", LF = 18.75", ΔRF_{incr} = 1.50", WNCR = 4.75", DNCR = 6.00", ΔNCR = 13.125". In addition to assuming Al as the design had, the engineer also considered 300 stainless steel and Be as metals for comparison. One of the major assumptions the engineer had to make were the values of the weighting factors; for convenience, as much as for a lack of information, he assumed them all equal to 10. Finally, from the design's stock thicknesses, it was an easy matter for the engineer to compute reasonable estimates of the allowable ρT's for the program. Even if the physicist had originally wanted lower allowables, the engineer reasoned that these estimates would still suffice as a beginning, since they had apparently been good enough for the physicist's final consideration: ρT_{1AL} = 0.210 gms/cm^2 (≃ 0.030 in. x 2.54 cm/in. x 2.70 gms/cm^3); ρT_{1AR} = 0.080 (= 0.0225 x 2.54 x 1.395); $\rho T_{3AL} = \rho T_{3AR}$ = 0.280 (≃ 0.040 x 2.54 x 2.70).

A comparison of the most important variables follows:

	Drawing	Program
RC	3.00"	3.000"
LC	17.50"	17.527"
T3DC	0.040"	0.040"
T2DS, T1DS	0.015", 0.020"	0.009", 0.011"
THICKW	0.0225"	0.019"

The agreement, remarkable as it is by itself, becomes even more remarkable when we note that we have compared the program written especially for the engineer to a design which was not even originally done by the engineer. Not having any idea as to what another engineer might have assumed for the 6061 heat-treated Al alloy safety factor, it is indeed remarkable that the final design

H1 ρT's

RANK	ALTNT	CONFIG	RHO-T RANK (GM/SQ.CM) DRCTTL $\Delta\rho_{TOTAL}$	RHO-NO.
1	5 Be	DCD	6.5434E 00	4
2	6 Be	DCD	6.5434E 00	4
3	17 Be	DCFW	6.3325E 00	4
4	18 Be	DCFW	6.3325E 00	4
5	35 Be	DCFW	6.3325E 00	4
6	36 Be	DCFW	6.3325E 00	4
7	11 Be	DCFD	6.1582E 00	4
8	12 Be	DCFD	6.1582E 00	4
9	29 Be	DCFD	6.1582E 00	4
10	30 Be	DCFD	6.1582E 00	4
11	23 Be	DCD	5.7207E 00	4
12	24 Be	DCD	5.7207E 00	4
13	13 Al	DCFW	4.4392E 00	4
14	31 Al	DCFW	4.4392E 00	4
15	1 Al	DCD	3.9695E 00	4
16	7 Al	DCFD	3.7271E 00	4
17	25 Al	DCFD	3.7271E 00	4
18	19 Al	DCD	2.2626E 00	4
19	42 Be	SPHERE	3.1357E 00	3
20	41 Be	SPHERE	3.1357E 00	3
21	48 Be	SFS	1.1348E 00	3
22	47 Be	SFS	1.1348E 00	3
23	4 Fe	DCD	6.8768E-01	3
24	3 Fe	DCD	6.8768E-01	3
25	33 Fe	DCFW	4.0828E-01	3
26	15 Fe	DCFW	4.0828E-01	3
27	34 Fe	DCFW	4.0828E-01	3
28	16 Fe	DCFW	4.0828E-01	3
29	14 Al	DCFW	1.8868E-01	2
30	32 Al	DCFW	1.8868E-01	2
31	37 Al	SPHERE	-7.6618E-01	2
32	27 Fe	DCFD	-3.4793E 00	2
33	9 Fe	DCFD	-3.4793E 00	2
34	10 Fe	DCFD	-3.4793E 00	2
35	28 Fe	DCFD	-3.4793E 00	2
36	43 Al	SFS	-4.2224E 00	2
37	2 Al	DCD	9.8093E-02	1
38	21 Fe	DCD	-5.2967E 00	1
39	22 Fe	DCD	-5.2967E 00	1
40	26 Al	DCFD	-4.6795E 00	0
41	8 Al	DCFD	-4.6795E 00	0
42	20 Al	DCD	-6.7762E 00	0
43	40 Fe	SPHERE	-2.2006E 01	0
44	39 Fe	SPHERE	-2.2006E 01	0
45	38 Al	SPHERE	-2.8565E 01	0
46	46 Fe	SFS	-3.3384E 01	0
47	45 Fe	SFS	-3.3384E 01	0
48	44 Al	SFS	-4.2390E 01	0

FIG. 43

SF (Be) = 2.00

Lo ρT's

RANK	ALTNT	CONFIG	RHO-T RANK (GM/SQ.CM) DRCTTL $\Delta\rho_{TOTAL}$	RHO-NO.
1	5 Be	DCD	1.1934E 00	4
2	6 Be	DCD	1.1934E 00	4
3	1 Al	DCD	7.0228E-01	4
4	12 Be	DCFD	8.0823E-01	3
5	30 Be	DCFD	8.0823E-01	3
6	11 Be	DCFD	8.0823E-01	3
7	29 Be	DCFD	8.0823E-01	3
8	8 Al	DCFD	-2.0682E-01	3
9	26 Al	DCFD	-2.0682E-01	3
10	18 Be	DCFW	9.8252E-01	2
11	36 Be	DCFW	9.8252E-01	2
12	17 Be	DCFW	9.8252E-01	2
13	35 Be	DCFW	9.8252E-01	2
14	14 Al	DCFW	5.0529E-01	2
15	32 Al	DCFW	5.0529E-01	2
16	24 Be	DCD	3.7071E-01	2
17	23 Be	DCD	3.7071E-01	2
18	20 Al	DCD	-7.1432E-01	2
19	15 Fe	DCFW	-4.9417E 00	1
20	33 Fe	DCFW	-4.9417E 00	1
21	16 Fe	DCFW	-4.9417E 00	1
22	34 Fe	DCFW	-4.9417E 00	1
23	31 Al	DCFW	-5.1613E 00	1
24	13 Al	DCFW	-5.1613E 00	1
25	42 Be	SPHERE	-2.2143E 00	0
26	41 Be	SPHERE	-2.2143E 00	0
27	3 Fe	DCD	-3.8378E 00	0
28	4 Fe	DCD	-3.8378E 00	0
29	47 Be	SFS	-4.2152E 00	0
30	48 Be	SFS	-4.2152E 00	0
31	2 Al	DCD	-5.2519E 00	0
32	37 Al	SPHERE	-6.1162E 00	0
33	9 Fe	DCFD	-8.8293E 00	0
34	27 Fe	DCFD	-8.8293E 00	0
35	28 Fe	DCFD	-8.8293E 00	0
36	10 Fe	DCFD	-8.8293E 00	0
37	43 Al	SFS	-9.5724E 00	0
38	25 Al	DCFD	-1.0029E 01	0
39	7 Al	DCFD	-1.0029E 01	0
40	21 Fe	DCD	-1.0647E 01	0
41	22 Fe	DCD	-1.0647E 01	0
42	19 Al	DCD	-1.2126E 01	0
43	40 Fe	SPHERE	-2.7356E 01	0
44	39 Fe	SPHERE	-2.7356E 01	0
45	38 Al	SPHERE	-3.3915E 01	0
46	46 Fe	SFS	-3.8734E 01	0
47	45 Fe	SFS	-3.8734E 01	0
48	44 Al	SFS	-4.7740E 01	0

FIG. 44

SF (Be) = 2.00

thicknesses for the cylinder match so closely. According to the engineer, even neglecting the possibility of a difference in safety factor, the differences in the hemisphere's thicknesses are not unreasonable. This became clear when the engineer pointed out that the design which was built in 1961 was made by spinning. This, by itself, is almost enough to account for the differences in thicknesses since the program considers the dome drawn. The engineer noted that the facilities for drawing domes six years ago were not like they are now. The other part of the reason for the difference between the program and the drawing, the engineer ascribes to the fact that the drawing's thicknesses refer to stock parts while the program refers to the theoretically computed minimum required thicknesses. In the same vein, the other designer probably used another safety factor on calculating the window's thickness. Furthermore, whereas the drawing assumes a window built up out of three 0.0075" stock sheets, our engineer would use two 0.010" sheets.

Having satisfied himself that he had found the most likely reasons for the differences, the output of major interest became, as to be expected by now, the ρT ranking list. The ρT ranking list (see Fig. 43) showed the alternative being matched, number 13, to be the best of the aluminums; alternative number 13 was ranked 13, the first 12 alternatives all being Be. In other words, for the <u>particular</u> allowable ρT's assumed, the physicist (hereafter referred to as Z) got himself the best aluminum design that he could have gotten. But the real question in the engineer's mind was whether Z could have done even better. "What would have happened," the engineer asked, "if Z had originally asked for allowable ρT's even lower?" In order to find out, the engineer reran the program with everything the same except for the allowable ρT's. Except for ρT_{1AR}, which could be figured on the program's computed value of 0.019", all the allowable

ρT's were made approximately one-third of their former values:

$\rho T_{1AL} = 0.070$, $\rho T_{1AR} = 0.065$ (0.019 x 2.54 x 1.395), $\rho T_{3AL} = \rho T_{3AR} = 0.090$.

A comparison between the program's design for the initially assumed ρT's and for the reduced values is extremely illuminating:

	Hi ρT's	Lo ρT's
T2DC, T1DS	0.099"-0.011"	0.009"-0.011"
T_{3I}	0.019"	0.019"
T_{3E}	0.040"	0.040"
t_{3STF}	0.040"	0.019"
K	0	5
H_{STF}	0	0.237"
B_{STF}	0	0.079"

By adding 5 stiffeners, Z could have improved on the design thickness of his cylinder by a little more than a factor of two, from 0.040" down to 0.019". Furthermore, as the ρT ranking list for this case also shows, there are three additional Al designs which are even better (see Fig. 44). Alternative 1, for example, a minimum DCD, 6061 heat-treated Al design with six stiffeners, asks the question why Z wanted such a big increment ($\Delta RF_{incr} = 1.50"$) to begin with. A smaller diameter design would have been much more efficient. Essentially then, what the engineer planned to ask of Z was why he originally selected what he had and, given the program, would he now select differently. More specifically, the engineer was interested in finding out how Z would make a trade-off between, say, ρT and cost. For example, alternative 29 which is rankedhigh on the Lo ρT's list is ranked very low on the cost list (rank no. 42). In general, Be vessels which are excellent ρTwise are quite poor costwise.

Unfortunately, we were not able to get much of a response out of Z. We certainly could get nowhere near the detailed evaluation of the program we wanted. A detailed examination of how he would trade off cost and ρT seemed completely out of the question. In short, it appeared that the presentation was basically threatening; it seemed to undermine some of Z's major preconceptions about design. After the meeting the engineer remarked that he thought that Z had probably designed the vessel himself since, for one, the original drawing only bore the signature of a draftsman and did not contain that of an engineer; for another, the engineer also remarked that Z characteristically overdefined his design requirements, often leaving no alternative for an engineer but merely to draw up what Z had already decided upon. In earlier talks with Z, this researcher had occasion to observe him remark that he didn't think the problem being studied was particularly interesting in the sense that he thought that the design of pressure vessels was essentially governed by the choice of material. Z felt that the number of degrees of freedom (i.e., independent variables) associated with the design of pressure vessels was essentially limited by the materials one had to work with. As our long discussion shows, such is far from really being the case.

On the other hand, the meeting with Z was not a complete loss, and it was not at all in his disfavor either. Z did respond to the program enough to be convinced of the advantage of stiffeners, as he had definitely not been convinced prior to the meeting. He was also definitely interested in exploring the possibility of using Be having seen its advantage ρTwise. Up to this point Be had not been extensively used because of the special safety precautions that would be required for its use. It was also costly and hard to work with, but, even so, the program suggested to Z the desirability of at least investigating its future use.

Perhaps Z paid the program the most favorable compliment of all when upon noticing the distinct advantages of using stiffeners, he suggested making stiffeners out of Be. Even though it might be at present difficult and costly to make entire Be vessels with Be stiffeners, it would be relatively easy to make Al or stainless steel vessels with Be stiffeners. This approach would make it feasible with present techniques to combine the best features of the different metals.

In any case, if Z now felt that the engineer's job had "a few more degrees of freedom" than he had previously thought, he didn't openly admit it. But he did acknowledge it in one sense by conceding, for one, the advantage of stiffeners. For the most part, the program must be credited with this change in behavior if not in attitude. Without the program, it is doubtful whether the evidence would have been as convincing. Of course, this is not to deny that the mere fact of two people confronting Z alone must have had some influence on his partial acceptance of the results. Nevertheless, even for this to have occurred, the program was first necessary.

Before concluding this section, there is one more aspect of case III that is relevant to our general discussion. Some time after the meeting with Z, the engineer, in the course of his general readings, came across a book which gave him a better and more detailed understanding of Be's properties.[7] On this basis of his readings, the engineer revised his estimate of the difficulty and uncertainty involved in dealing with Be. Because of its extreme brittleness and notch sensitivity, to mention only two of the factors, the engineer felt that at this time he would have to increase his safety factor associated with Be from 2 up to 4. We might

---

[7]G. E. Darwin and J. H. Buddery, Metallurgy of Rarer Metals-7: Beryllium.

H1 ρT's

RANK	ALTNT		CONFIG	RHO-T RANK (GM/SQ.CM) DRCTTL $\Delta\rho_{TOTAL}$	RHO-NO.
1	5	Be	DCD	5.7032E 00	4
2	6	Be	DCD	5.7032E 00	4
3	17	Be	DCFW	5.2842E 00	4
4	18	Be	DCFW	5.2842E 00	4
5	35	Be	DCFW	5.2842E 00	4
6	36	Be	DCFW	5.2842E 00	4
7	13	Al	DCFW	4.4392E 00	4
8	31	Al	DCFW	4.4392E 00	4
9	1	Al	DCD	3.9695E 00	4
10	7	Al	DCFD	3.7271E 00	4
11	25	Al	DCFD	3.7271E 00	4
12	19	Al	DCD	2.2626E 00	4
13	12	Be	DCFD	4.2624E 00	3
14	30	Be	DCFD	4.2624E 00	3
15	11	Be	DCFD	4.2624E 00	3
16	29	Be	DCFD	4.2624E 00	3
17	24	Be	DCD	3.4149E 00	3
18	23	Be	DCD	3.4149E 00	3
19	4	Fe	DCD	6.8768E-01	3
20	3	Fe	DCD	6.8768E-01	3
21	15	Fe	DCFW	4.0828E-01	3
22	33	Fe	DCFW	4.0828E-01	3
23	16	Fe	DCFW	4.0828E-01	3
24	34	Fe	DCFW	4.0828E-01	3
25	14	Al	DCFW	1.8868E-01	2
26	32	Al	DCFW	1.8868E-01	2
27	37	Al	SPHERE	-7.6618E-01	2
28	42	Be	SPHERE	-2.2287E 00	2
29	41	Be	SPHERE	-2.2287E 00	2
30	9	Fe	DCFD	-3.4793E 00	2
31	27	Fe	DCFD	-3.4793E 00	2
32	10	Fe	DCFD	-3.4793E 00	2
33	28	Fe	DCFD	-3.4793E 00	2
34	43	Al	SFS	-4.2224E 00	2
35	2	Al	DCD	9.8093E-02	1
36	21	Fe	DCD	-5.2967E 00	1
37	22	Fe	DCD	-5.2967E 00	1
38	26	Al	DCFD	-4.6795E 00	0
39	8	Al	DCFD	-4.6795E 00	0
40	48	Be	SFS	-6.2304E 00	0
41	47	Be	SFS	-6.2304E 00	0
42	20	Al	DCD	-6.7762E 00	0
43	40	Fe	SPHERE	-2.2006E 01	0
44	39	Fe	SPHERE	-2.2006E 01	0
45	38	Al	SPHERE	-2.8565E 01	0
46	46	Fe	SFS	-3.3384E 01	0
47	45	Fe	SFS	-3.3384E 01	0
48	44	Al	SFS	-4.2390E 01	0

FIG. 45

SF (Be) = 4.00

Lo ρT's

RANK	ALTNT		CONFIG	RHO-T RANK (GM/SQ.CM) DRCTTL $\Delta\rho_{TOTAL}$	RHO-NO.
1	1	Al	DCD	7.0228E-01	4
2	8	Al	DCFD	-2.0682E-01	3
3	26	Al	DCFD	-2.0682E-01	3
4	14	Al	DCFW	5.0529E-01	2
5	32	Al	DCFW	5.0529E-01	2
6	6	Be	DCD	3.5321E-01	2
7	5	Be	DCD	3.5321E-01	2
8	20	Al	DCD	-7.1432E-01	2
9	19	Be	DCFW	-6.5767E-02	1
10	36	Be	DCFW	-6.5767E-02	1
11	17	Be	DCFW	-6.5767E-02	1
12	35	Be	DCFW	-6.5767E-02	1
13	30	Be	DCFD	-1.0876E 00	1
14	12	Be	DCFD	-1.0876E 00	1
15	11	Be	DCFD	-1.0876E 00	1
16	29	Be	DCFD	-1.0876E 00	1
17	15	Fe	DCFW	-4.9417E 00	1
18	33	Fe	DCFW	-4.9417E 00	1
19	16	Fe	DCFW	-4.9417E 00	1
20	34	Fe	DCFW	-4.9417E 00	1
21	13	Al	DCFW	-5.1613E 00	1
22	31	Al	DCFW	-5.1613E 00	1
23	24	Be	DCD	-1.9351E 00	0
24	23	Be	DCD	-1.9351E 00	0
25	3	Fe	DCD	-3.8378E 00	0
26	4	Fe	DCD	-3.8378E 00	0
27	2	Al	DCD	-5.2519E 00	0
28	37	Al	SPHERE	-6.1162E 00	0
29	42	Be	SPHERE	-7.5787E 00	0
30	41	Be	SPHERE	-7.5787E 00	0
31	9	Fe	DCFD	-8.8293E 00	0
32	27	Fe	DCFD	-8.8293E 00	0
33	11	Fe	DCFD	-8.8293E 00	0
34	28	Fe	DCFD	-8.8293E 00	0
35	43	Al	SFS	-9.5724E 00	0
36	7	Al	DCFD	-1.0029E 01	0
37	25	Al	DCFD	-1.0029E 01	0
38	21	Fe	DCD	-1.0647E 01	0
39	22	Fe	DCD	-1.0647E 01	0
40	48	Be	SFS	-1.1580E 01	0
41	47	Be	SFS	-1.1580E 01	0
42	19	Al	DCD	-1.2126E 01	0
43	40	Fe	SPHERE	-2.7356E 01	0
44	39	Fe	SPHERE	-2.7356E 01	0
45	38	Al	SPHERE	-3.3915E 01	0
46	46	Fe	SFS	-3.8734E 01	0
47	45	Fe	SFS	-3.8734E 01	0
48	44	Al	SFS	-4.7740E 01	0

FIG. 46

SF (Be) = 4.00

say that, strangely enough, because of additional knowledge, the engineer's uncertainty about using Be actually increased. With time and experience in actually using the metal, the SF would probably go down. In any case the point is clear: as the engineer puts it, "my safety factor is sort of a measure of a number of things: ignorance, familiarity with the material, its elongation, whether it's a ductile or brittle material--basically, how much actual experience I've had with the material." The point is equally described in terms of "confidence." Because none of his past Al designs has failed by using a safety factor of 1.50, the engineer has "confidence" in the SF he uses for Al. We could equally say that the engineer has confidence in Al for a SF of 1.50.

In order to see what the effects of changing Be's SF are, we present just the ρT ranking lists revised for both the Hi and Lo allowable ρT's of before. Without having changed the properties of the Al designs by one bit, the improvement in their ranking is indeed striking (see Figs. 45 and 46).

Concluding Remarks

While differing in extent to be sure, the program was nonetheless validated by three different parties: the engineer, his boss, and a particular physicist, Z. The criterion of validation was "utility." While the match between the program's and the engineer's output was more than satisfactory, this was not the major factor in the program's acceptance. Precisely because the program printed out more than what the engineer explicitly considered was it all the more useful. It was not because the program exactly matched or did not match what the engineer did that made the program acceptable. The program was accepted as useful only

because the engineer understood why it matched as well as did not match. The mere fact of matching alone would not have been sufficient for its acceptance. The program gave the engineer a larger view of the whole design system. This was the criterion for acceptance.

CHAPTER VI

Summary and Recommendations

The purpose of this chapter is basically twofold: first, to summarize our most general conclusions, and, secondly, to use them as a basis for suggesting future research. For the most part, we shall develop our recommendations in terms of some of the literature which directly concerns the nature of the engineering design process. We shall also discuss some additional topics which, although they might appear to have little to do with engineering design, can nevertheless be shown to affect it significantly.

Our first and most general conclusion is one that we have repeatedly emphasized, i.e., that design is both a technical and a behavioral process. Since the literature on design has nowhere recognized the extent of the interaction that exists between these two points of view, we feel that we cannot really overemphasize this conclusion. In fact, the contents of Chapter V should be taken as a testimony to this conclusion's actual importance. There we demonstrated that who the engineer and physicist are fundamentally determines what is finally designed. The engineer not only affects the design by analyzing only what he knows how to analyze but also by how he responds to a particular physicist's needs. The physicist, on the other hand, affects the design not only by how he expresses his needs but also by how he responds to a particular engineer. There could be nothing more fundamentally behavioral about the engineering design process than how the personal

knowledge and personalities of the particular individuals involved affect what is designed. In case this point is still not clear, we can only offer some more of the engineer's comments as additional proof:

> Possibly the reason why physicists aren't used to or aren't receptive to some of our thoughts about stiffeners is that other engineers around here are designing similar equipment with higher safety factors . . . . And if you use a higher safety factor for the same loading conditions, it just doesn't pay to add stiffeners.

The point is general. What is true for the single input variable "safety factor" is true for every other design variable, input or output. Because no two engineers have exactly the same experience or field of knowledge, their designs can be fundamentally different. The same is also true of physicists. In order to know when to request an alligator-jaw, a physicist must first have the knowledge that such things even exist.

The foregoing remarks are not meant to imply that design is nothing but a behavioral process. They are merely directed against the position that argues that design is nothing but a technical process. As we stated in Chapter I, our position is that design is both. But even more to the point, our position is that <u>every</u> aspect of design is equally interpretable in technical as well as behavioral terms and that one interpretation without the other is incomplete. <u>Every design variable has both a behavioral as well as a technical meaning</u>. This is the sense in which we interpret every design variable to be both technical and behavioral in nature. And this is the very point we are criticizing other authors writing on the engineering design process for not taking. Of those authors we are familiar with, only Buhl comes close to emphasizing our point:

> . . . The way we analyze is dependent upon who we are and how we think by virtue of the training and experience we have had. Some individuals require more physical things as in the case of the mechanical engineer. Some people are very adept at

analysis with words while others better understand graphic analysis.[1]

In comparison, Asimow, Gosling, Marples, and Norris,[2] while they all recognize the contribution that social science can make to design, nevertheless still imply, like Ramström and Rhenman[3] in Chapter I, that the behavioral and technical aspects of design are basically separate and distinct. What they all seem to be saying is that while social science can be profitably used to improve factors like the interaction between the client and the engineer, there still remain some features which are completely technical in the sense that they are completely independent of behavioral concerns. We, on the other hand, are promoting the radical point of view that every feature is equally and inseparably behavioral as well as technical.

Perhaps a specific recommendation will help to make the preceding points clearer. In Chapter V we remarked in passing that it would have

---

[1]Harold R. Buhl, Creative Engineering Design, pp. 83-84. We would supplement Buhl's analysis somewhat by noting that words and graphic analysis are both abstract, and that one is not necessarily more or less abstract than the other. Instead, abstraction is a two-way street. What is physical to the mechanical engineer may be quite abstract to the electrical engineer. Electrical phenomena are not always more abstract than mechanical. We may merely be describing different psychological types to whom one kind of phenomenon is more abstract than the other. Cf. C. G. Jung, "Psychological Types," The Basic Writings of C. G. Jung, New York, Modern Library Edition, pp.183-285.

[2]Morris Asimow, Introduction to Design; William Gosling, "The Relevance of System Engineering" in Conference on Design Methods, J. C. Jones and D. G. Thornley, eds., pp. 23-32; David L. Marples, "The Decisions of Engineering Design," IRE Transactions on Engineering Management (June 1961), pp. 60-71; K. W. Norris, "The Morphological Approach to Engineering Design" in Conference on Design Methods, pp. 115-140.

[3]D. Ramström and E. Rhenman, "A Method of Describing the Development of an Engineering Project," IRE Transactions on Engineering Management, Vol. EM-12, No. 3 (September, 1965), pp. 79-86.

been extremely helpful if Kraus[4] had expressed his solution to the Love-Meissner equations in analytical as well as in tabular terms. Our first proposal, therefore, is for a survey. We think it would be most informative and extremely relevant to know who reads what journal and what use is made of what is read. Amongst other things, we feel it would be worth knowing whether different engineers and engineering groups prefer different kinds of technical formats. A preference of format would clearly be one representation of the behavioral dimension of technical papers. At the same time, it would certainly influence the technical content of papers, since format and content are generally interdependent. For example, in the Kraus paper the construction of a tabular format was clearly influenced by the number and kinds of variables for which the Love-Meissner equations were solved.[5] A different format would have required a different solution of the equations, and vice versa; a different kind of solution would have required a different kind of format. A different kind of technical solution would have made possible a different kind of use and interpretation of the physical phenomena involved.

The interdependence of any behavioral and technical interpretation of any design variable can also be seen in another aspect of the Kraus paper. This aspect as well is also directly related to the paper's format. Essentially, the point is that the kind of solution which influenced the format was in turn influenced by the kinds of experimental results that were originally available. The kinds and ranges of variables reported in the literature, to which Kraus' theoretical solution could be compared, affected the kind and range of solution which Kraus

---

[4] H. Kraus, G. G. Bilodeau, and B. F. Langer, "Stresses in Thin-Walled Pressure Vessels with Ellipsoidal Heads," Paper #60-SA-12, Trans. ASME, Vol. 12 (1960), pp. 1-12.

[5] Cf. Kraus, Bilodeau, and Langer, op. cit., p. 6.

constructed.[6] Presumably a different format (a behavioral factor), possibly requiring a solution which was expressed in terms of different variables, would require new experimental work (i.e., a technical factor); it could even require the discovery and creation of new technical theories for the stress analysis of pressure vessels.

We can summarize our most general criticism of Asimow, Gosling, Marples, Norris, and Ramström and Rhenman by noting that no matter how much lip service they all pay to the human factors in design, their conception of the design process is still too mechanistic. Perhaps a specific paragraph from Norris will help to make this clear:

> The first step in all organized design processes is to establish and set out the field of investigation. Especially if one is looking for a new or peculiar solution, this field should include all acceptable and reasonable or possible solutions. One of the normally accepted ways of doing this is to produce a straightforward list of possible answers. The morphological way of doing this, however, is to produce a table or matrix where all the parameters concerned are listed vertically and the corresponding parameters "steps" are listed horizontally. The parameters of such a "morphological chart" describe, in general, the features and functions of the subject considered. They indicate what the subject must in fact "BE" or "HAVE". The parameter "steps" on the other hand describe, in general, the "MEANS" of achieving the required characteristics as indicated by the parameters.[7]

The emphasis of all the authors cited, and especially Norris in particular is more on the "parameters," the "steps," the "means," in other words, the emphasis is more on a technical description of the problem than on who it is that will be solving the problem. The trouble is that they all emphasize, if not basically assume, that design is a wholly rational, technical process. None of them even once mentions the fact that there can be gross misunderstanding or even open conflict between the parties

---

[6] Cf. Krause, Bilodeau, and Langer, op. cit., pp. 3-4.

[7] Norris, op. cit., p. 116.

to a design. (The listing of answers is not so "straight-forward.") Now in these respects our program really fares no better. DESIGN, by itself, is also no more than a collection of mechanically expressed decision rules which operate on a given "problem." But then in compensation, this is why we felt compelled to emphasize all the complex interaction leading up to the definition of a "given" input. This is also why we emphasized the significance of the program to the engineer. Chapter V's detailed discussion of the comparison between the program's and the engineer's behavior explicitly shows what is only implicitly contained in Chapter III's discussion of DESIGN' s structure: Chapter V explicitly shows that the program is really a representation of how a single engineer conceives of the "problem." It also shows how a particular engineer conceives of the general characteristics, i.e., needs, of physicists. Furthermore, because the number of variables characterizing those needs is large and because they are understood differently by the parties involved, Chapter V shows that the chances for misunderstanding and conflict are not at all nil. The following comments of the engineer should serve to emphasize some of the preceding points:

> The main advantage of the program is that it allows a comparison of a lot of alternatives with respect to a lot of design variables. This is particularly advantageous for a complicated layout in which space requirements are tight and it's difficult to come up with an alternative that's equally efficient in terms of ρT and cost as well as space. The program shows at a glance which alternatives meet which requirements. Contrast this with what we've had to do. When we sold a design to a physicist in the past, if it was one that was hard to come by originally--i.e., it took five or six layouts to get something that presumably met all the requirements--we weren't going to take all five or six layouts to the physicist and say you have to use alternative number 6 because the first five didn't meet your requirements because of such and such reasons. This might have implied that it was a trial and error type of design and it might make him lose confidence in the way we do things by just his finding out how we actually have to do things. And so just to get a firm commitment on a design so something can be built, say in a hurry

> without wasting a lot of time, we would limit the number of possible designs we consider to just a few, for the fewer we take to him, the easier it is to sell him on one particular design [emphasis added]. The program not only considers more alternatives but it also considers them all at once. Here again the program is superior because of the latter respect. If we only take one design to a physicist and he says, yes, it meets all my requirements except this one, well, you know in the back of your mind that you did consider that but you just can't recall what the problem was and why you didn't propose some different solution. You probably did the layout maybe a month or so ago, and now you just don't have all the facts at your disposal.

In comparison with what really takes place between the engineer and a physicist, Norris's position is too weak. He thinks that by merely using his morphological approach, an engineer will finally produce "a solution which may need a little explanation but in its more developed forms will certainly be acceptable to the client."[8]

At this point some of our recommendations for future research should seem almost obvious. First of all, we should like to see what programs written for other engineers and other engineering jobs would look like. More specifically, we wonder what kinds of design variables other engineers, by virtue of their own personal experience and knowledge, would characteristically identify and how they would conceptualize them. We also wonder if they would measure the significance of a program in the same sense that our engineer did. As the foregoing remarks of our engineer indicate, by merely giving him an over-all view of his design strategies, an improvement in the technical performance of his job was made possible. This is the real significance of DESIGN, for DESIGN does not improve on the technical performance of individual analytical steps. It contains no radical technical innovations of any sort. It merely draws out the general implications of what the engineer has heretofore been doing. But then this is the technical advantage of a study

---

[8]Norris, op. cit., p. 130.

like this. It allows one to test out one's conceptions of the design process as other studies, like Marples' and Ramström and Rhenman's, have not been able to do. As we mentioned in Chapter I, their studies were essentially descriptive of particular past designs; they were not developed in terms of a format like a computer program which permits the running of the model on a host of future designs.[9]

Just the fact alone that even a part of our description of the design process has been programmed has been enough for the engineer himself to suggest some courses for future research. This is due to the fact that the engineer would like to use the program for a systematic examination of the feasibility of various classes of designs. Of interest would be the sensitivity of the program to various kinds of changes in many of the design variables such as safety factors, material properties, allowable ρT's, weighting factors, NTNSTY, etc. It would constitute an important follow-up study in its own right to observe how the engineer conducted his examination and what changes in his design behavior resulted as a consequence. It would also be of interest to observe what changes, if any, he made in the program as conditions changed over time. In this same vein, the prolonged reactions of his colleagues would certainly be worth noting, particularly as they also come to use the program.

The most interesting piece of research we would like to see carried out is the simulation of the interaction between an engineer and a physicist, or, in more general terms, between an engineer and a client. In our case, it would be extremely interesting to see how much of the

---

[9]These same criticisms can also be leveled against Asimow's "morphology of design." Cf., Asimow, op. cit., pp. 11-19.

interaction could be captured by starting with a program of a physicist's behavior alone. The most general formulation of a proposal would read somewhat as follows: Given the construction of n different programs representing the design behavior of n different engineers and also given m programs for m different physicists, first, what similarities and differences exist between all n programs taken as a group and all m programs taken as a group? In other words, what are the general similarities and differences amongst engineers taken as a group, and what are the differences and similarities amongst physicists? Secondly, what kinds of interaction programs (I_{ijk}) would be needed to match engineer i's program (E_i) to physicist j's program (P_j) for some set of criteria k (C_k) defining effective design performance? Presumably, different E_i's, P_j's, and C_k's would require different I_{ijk}'s, or, in words, different engineers, physicists, and sets of criteria would require different amounts and kinds of interaction for the effective performance of a design project. For example, from Chapter V it should be obvious that a minimum ρT criterion requires different design behavior than a minumum cost criterion. In general, there are as many different sets of criteria as there are ways of combining the general design requirements outlined at the end of Chapter II.

Some of the more detailed kinds of topics that would certainly be worth investigating are the following: (1) the effect of using different formal psychological systems with respect to both the construction and actual performance of E_i, P_j, C_k, and I_{ijk}[10]; (2) the feasibility

---

[10]Wolman, in this respect, represents a helpful guide to the advantages and disadvantages of various psychological systems. Cf. Benjamin B. Wolman, Contemporary Theories and Systems in Psychology.

of using the literature on conflict to construct various models of I_{ijk} in order to represent the different kinds of conflict and bargaining situations that can exist between the engineer, physicist, and organization[11]; (3) the effect on the performance of the entire design system by using different forms of communication media for transmitting both the input and output[12]; (4) the effect on performance by using on-line interaction between the engineer, physicist, and computer program; and (5) the effect of various information displays.[13] (Chapter V is a complicated documentary on the use of multiple information displays: graphical, analytical, and finally, the program itself.) We only mention these topics because even though we were not able to investigate their effects formally and systematically, we were still able to note their influence. Chapter V, which only represents a step in documenting their effect on the design process, will have to be supplemented by second-generation, and hopefully, more systematic studies. For example, where Chapter V only informally noted

---

[11] Cf. Lewis Coser, The Functions of Social Conflict; Raymond W. Mack and Richard C. Snyder, "The Analysis of Social Conflict--Toward an Overview and Synthesis," Journal of Conflict Resolution, Vol. 1, No. 2 (1957), pp. 212-248; Thomas C. Schelling, The Strategy of Conflict. Schelling might be particularly appropriate. He suggests the use of modified game theoretic models for studying conflict situations for which the present formalized theory of games cannot quite handle.

[12] Cf. Edmund Carpenter and Marshall McLuhan, Explorations in Communication; Edward T. Hall, The Silent Language; Marshall McLuhan, The Gutenberg Galaxy.

[13] Cf. E. R. F. W. Crossman, J. E. Cooke, and R. J. Beishon, "Visual Attention and the Sampling of Displayed Information in Process Control," Human Factors in Technology Research Group Paper HFT-64-11(T), University of California, Berkeley. Also see E. R. F. W. Crossman, "Information Processes in Human Skill," British Medical Bulletin, Vol. 20, No. 1 (1964), pp. 32-37. Crossman, Cooke, and Bushon's paper can certainly be used as supporting evidence for our earlier discussion on the interdependence of behavioral and technical factors. In their terms, the information content that can be extracted from technical papers is just as much a function of format as it is a function of the paper's basic technical content.

the differences in personality types and their effect on the design process, a more systematic study would relate these differences to some of the current formulations of psychological theory. It would constitute an appropriate research project to investigate the correlations between personality types (or factors) and the kinds of safety factors which different engineers typically assumed. Of equal interest would be the reason why different physicists characteristically, among other things, overdefine or underdefine their design requirements. In any case, Chapter V accomplished its purpose by merely showing that such factors are much more important than most authors on engineering design have heretofore recognized.

There are also other topics which, although they have not been directly related to the literature on design in the past, should be in the future. We would also like to see these incorporated into the construction of future programs. Most of these studies have to do with the differences in education, training, and values of scientists and engineers.[14] For example, Kornhauser says:

> Professions vary in their selectivity of recruitment, intensity of training, and state of intellectual development, among other ways. The strength of the professional orientation among practitioners will depend on the extent to which their profession possesses these properties. In the physical sciences, recruitment is very selective, training intensive, and knowledge far advanced . . . . By comparison, in engineering, recruitment is not very selective, training is not very long, and knowledge is not so advanced. As a result, professional identity is weaker among engineers than scientists.[15]

Kornhauser goes on to show how differences in professional identification are related to differences in the type of organization that a scientist,

---

[14] Cf. William J. Goode, "Community within a Community: The Professions," American Sociological Review, Vol. 22 (April 1957), pp. 194-200; William Kornhauser, Scientists in Industry: Conflict and Accommodation.

[15] Cf. Kornhauser, op. cit., p. 149.

in contrast to an engineer, identifies with. Numerous other authors make the same point. In general, scientists are professionalized to the university, and engineers, to industry. What makes it hard to draw universally valid generalizations is the fact that there are enormous differences between different kinds of engineers taken as a group and between scientists taken as a group. The industrial scientist may actually have more in common with the engineer in industry than with the university scientist, and conversely, the research engineer may have much more in common with the university scientist than with his counterpart in industry.[16] Confounding this whole picture is the environment; the values of scientists, engineers, and organizations are all interdependent. As much as scientists and engineers are "adjusted to" the values of the organization in which they work, they also adjust the organization to them. Numerous studies only continue to confirm the fact that the scientific and engineering values of scientists and engineers are definitely related to the type of organization in which they work. In turn, the values of organizations are definitely molded by the kind of professionals they employ.[17]

---

[16] Cf. Herbert A. Shepard, "Social Change in Science and Engineering," IRE Transactions on Engineering Management (March 1961), pp. 11-14.

[17] William M. Evan, "Role Strain and the Norm of Reciprocity in Research Organizations," The American Journal of Sociology, Vol. 68, No. 3 (November 1962), pp. 346-354; Gerald Gordon, Sue Marquis, and O. W. Anderson, "Freedom and Control in Four Types of Scientific Settings," The American Behavioral Scientist (December 1962), pp. 39-43; Simon Marcson, "Role Adaptation of Scientists in Industrial Research," IRE Transactions on Engineering Management, Vol. EM-7 (December 1960), pp. 159-166; Simon Marcson, "Role Concept of Engineering Managers," IRE Transactions on Engineering Management, Vol. EM-7 (March 1960), pp. 30-33; Herbert A. Shepard, "Engineers as Marginal Men," Journal of Engineering Education, Vol. 47, No. 7 (March 1957), pp. 536-542; Herbert A. Shepard, "Superiors and Subordinates in Research," Journal of Business, Vol. 29, (October 1956), pp. 251-267; Howard M. Vollmer, Todd R. La Porte, William Pedersen, and Phyllis Langton, Adaptation of Scientists in Five Organizations; A Comparative Analysis, Technical Report, SRI Project No. IMU-3580, Stanford University, May 1964.

What the preceding paragraph suggests is a systematic study of the effects of different organizational environments on design. It also suggests a more general study of the effect of the kind of relationship that can exist between an engineer, a client, and an organization. Depending upon the type of client, engineer, and organization, it seems only natural to expect differences to occur in the design process. For instance, it seems almost obvious that there would be differences depending upon whether the client and engineer were or were not members of the same organization. The foregoing comments are also necessary if we are to appreciate the point that the conclusions of this study are only based upon the observations of a single engineer who works in a rather special environment. The conclusions of this study may not apply with equal force to all other environments.

As we mentioned in Chapter II, the environment under which the engineer works is a large university research laboratory. But what we didn't mention in Chapter II is that the clients for whom the engineer designs control the environment in some very important ways. His clients not only have more education, but more importantly, more power and official recognition within the Lab than he does. Swatez repeatedly shows how the policies and actions of the Laboratory reflect its basic science orientation:

> At the time of this study (1964) the formal structure of the Lawrence Radiation Laboratory (considering the Berkeley Laboratory only) consists of four research divisions (Physics, Nuclear Chemistry, Inorganic Materials Research, and Biology-and-Medicine), a technical <u>support</u> [underscoring mine] division (engineering and shops), and a number of administrative and general services departments. Each research division is headed by an Associate Director of the Laboratory. This has been so for several years. Only early in 1963 was an Associate

> Director for the technical support division. This man is a physicist, no longer active in research [emphasis added].[18]

> The Lab has long been characterized by the extensive if not complete protection of the researchers from non-scientific problems of administration. Recent developments have represented an attempt to maintain this protection in spite of--although partly by means of--an increasing administrative rationalization. The non-scientific, or technical and administrative service divisions have become more and more bureaucratized as they have become larger, but the scientific groups have largely maintained their informality [emphasis added].[19]

> . . . the official orientation of the Lab is that administration and technical services are there only to help the physicists. Since the top management of the Lab has always been in the hands of scientists, scientific goals and service to the scientists is the dominant orientation.[20]

As a direct example of the power of physicists, the engineer's remarks supplied the following:

> Supposedly every vessel is to be tested to 30 psi external pressure. Well, once we had a vessel which was not only marginally designed for external pressure, but it was marginally designed for internal pressure as well. When we tested it, we got to 29 or 29½ psi--something like that--and the vessel buckled locally with a small dent. We stopped the test, salvaged the vessel, pounded out the dent, and only retested the vessel to 27 or 28 psi, i.e., something slightly lower than what it had originally been. Now, since the physicist was on a very tight schedule, he got permission from the safety committee to go ahead with the design even though it didn't meet the 30 psi requirement. It's not that I couldn't have gotten permission as well; it's just that it was much easier for the physicist to get permission because he's just in a position to assume more responsibility for this kind of a decision in case the design should fail in practice.

This example not only reveals the power that physicists have in the organization, but it also shows how, in Ramström and Rhenman's terms

---

[18] G. M. Swatez, "Social Organization of a University Laboratory," Internal Working Paper No. 44 (April 1966), Space Sciences Laboratory, University of California, Berkeley, pp. 74-75.

[19] Swatez, op. cit., p. 77.

[20] Swatez, op. cit., p. 141.

(see Chapter I), the "product and engineering dimensions" of a design can be (in contrast to Ramström and Rehnman's thoughts) highly dependent on the "needs and control dimensions." The point is that it is not always so unambiguously clear as to the reason for a certain design decision. It is not a trivial task to decide whether the basis for a decision is either technical or administrative. In reality, most decisions, even if largely one or the other, are still a bit of both.

If, as we have contended, that the personalities, personal experience, and knowledge of a particular engineer and physicist decisively affect a design, then by now we should have seen how the personality of an organization can also affect a design as decisively. Perhaps this is nowhere seen as clearly as it is in the fact that a physicist has the power to choose the particular engineers he wants working for him: If a physicist wants a particular engineer, he need merely go over to a department head and request that engineer. Of course, the request by itself does not always guarantee the physicist that he will get what he wants.

The influence of the organization can also be seen in many other ways. As but one additional example, we discuss the effect of the Lab's purchasing procedures. Because the Lab is a governmental organization (in the sense that it is funded by the AEC), every item that is fabricated on the outside must be put up for low bid by the Lab's purchasing department. Now, if this procedure is intended to save the general taxpayer money, it doesn't always work out that way. It can often cost more to have the purchasing department search out a low-bidder than it would if the engineer merely ordered what was most easily available. As the engineer puts it:

> There is a dead period in which every outside design is sort of totally frozen. Once the design is given over to purchasing to go out and get quotations, then purchasing does all of the liaison with the vendor. The engineer generally doesn't have an opportunity to speak with the vendor because if the engineer were to speak with one vendor, then legally he would be required to speak with them all. If we wanted to make a change in the design that would actually save time and money in the fabrication, we'd have to pull all the bids back in, cancel the bids, make the changes, and then go back out and bid all over again on the same project. This can often be quite costly and time-consuming.

To say the least, it would be extremely interesting to study the effect of all such "delays" on the total cost and time estimates of various design alternatives. It would be even more interesting to study how and whether such delays affect the decision to even propose an outside-fabricated alternative in the first place.

Perhaps the point is clear: Even though such factors as the organizational environment were not explicitly programmed, there seems to be no reason why in principle such factors could not have been programmed. Furthermore, there seems to be every reason to want to do so. If the relatively little that we have actually programmed was of such comparatively large use to the engineer, then we can only speculate as to the even greater use that a larger program could be put to. Presumably, an even larger program could better integrate the design policies of all the parties involved, i.e., the engineer, the physicist, and the organization.

If this study has produced some rather direct and useful consequences for a particular design engineer, then we also believe that it contains some rather long run implications for the training and practice of future engineers. We believe that a study like this calls into question some of the most cherished, and hence, most often unspoken, assumptions of engineering education. One of those assumptions is that

since engineering is problem-oriented, engineering design is best taught through the solution of countless problems. This may indeed be true, but perhaps only if we re-evaluate the kinds of exercises that have been traditionally called "problems." Most, if not all of the problems given to engineering undergraduates require only a single answer. These problems are already so over-defined that they prohibit the student from taking an active role. Since the student works neither to define the problem nor to formulate the criterion for a "solution," they are problems in name only. Consider what Baddour has to say:

> Examination of the effect of the single-answer problem on engineering attitudes reveals:
>
> (1) Incomplete or contradictory data have little place in single answer problems.
>
> (2) Engineering judgment is not required of either the student or the instructor, hardly a situation to encourage its development.
>
> (3) The very existence of an objective standard puts the instructor in an almost impregnable position, which only a few of the very bright students will dare to challenge. Skepticism and the questioning attitude are not encouraged by this situation. Neither the data, the applicability of the method, nor the result are open to question.
>
> (4) The single-answer problem usually suggests the infallibility of logic rather than the ultimate word of experiment. The early history of science bears witness to the paralysing effect of this attitude.[21]

Another assumption that this study questions--and perhaps it is the most important unspoken assumption of all--is that it is more important to teach analysis to engineering undergraduates than it is to teach synthesis (whatever synthesis is and however it can be taught).[22]

---

[21]R. F. Baddour et al., "Report on Engineering Design," Journal of Engineering Education, Vol. 51, No. 8 (April 1961), p. 651.

[22]Dixon raises precisely this point. Cf. John R. Dixon, "Design and Analysis: A Conflict of Interest," Journal of Engineering Education, Vol. 54, No. 7 (March 1964), pp. 243-245.

Consider Baddour again:

> Recent engineering graduates were criticized for unwillingness and inability to consider a complete problem such as a design problem. Instead they showed a desire to seek a fully specified problem which could be answered by analytical methods. It was stated that engineers with advanced degrees were even more prone to avoid a complete problem. When they did tackle a whole problem, they tended to struggle to analyze it with all generality rather than break it down into manageable pieces. Men trained at second-rate schools were often found to be more willing to attempt the solution of a whole problem than those trained at first-class schools. In spite of inferior technical education these men often worked into positions of leadership [from] whence they directed the work of those from the better schools.
>
> . . . Several times it was remarked that young engineers tend to consider problems which do not involve mathematics at least at the level of the calculus as beneath their dignity--something to be turned over to a technician who was without the benefit of higher education. <u>This attitude often prevails in spite of the clear indication that the most important decisions in a design problem must often be made without assistance from higher math</u> [underscoring mine].[23]

Indeed, the most important design decisions are qualitative and not quantitative:

> In a design problem, synthesis must come first. It is necessary to have a concept before it can be analyzed. Furthermore, nearly every physical device is far too complex to permit analysis directly. In order to make the problem amenable to analysis, it is necessary to conceive a model having the essential characteristics of the actual device but simplified to eliminate nonessential detail. A physical device always differs from its model and justment is required to select a proper model or to decide whether a useful model is indeed possible. The use of automatic computation is making it possible to use more complicated models but it should not be assumed without proof that a more complicated model better represents the physical device. In short, numerical analysis must be used with judgment.[24]

We cannot really belabor the point that the most important design decision is the choice of which system to use in order to represent the design situation:

---

[23] Baddour, <u>op</u>. <u>cit</u>., p. 649.

[24] Baddour, <u>op</u>. <u>cit</u>., p. 649.

> The false assurance which engineers, and more importantly management, often derive from an overanalyzed problem can have disastrous results.
>
> Perhaps the most important use of analysis by the designer comes from his knowledge of general principles, and the form of mathematical relationships rather than from actual computation. This knowledge gives limits and direction to the conceptual process.
>
> It is usually a shock to students entering practice to discover what a small percentage of the decisions made by a designer are made on the basis of the kind of calculation he has spent so much time learning in school.[25]

Engineering educators might help to minimize "shock" by exploring the possibilities of using simulation techniques in order to help (or if not help, then force) students to look at "the whole design system." Simulation techniques might be profitably used to help practicing engineers as well as students systematically compare the effectiveness of various analytical techniques in meeting the needs of various kinds of clients. As the program shows from the very start, our engineer is certainly synthesizing general design alternatives (like cylinders and spheres) in order to analyze the requirements of his clients. In future research, experiments should definitely be run noting the effect of synthesizing various analytical schemes.

If there is any one moral to a study of this kind, it is this: One does not really improve the process of design by improving the parts of a design system at the expense of the whole system. The practice of engineering design will not be improved by merely improving on the body of analytical techniques. Realistic improvements in techniques will only be made by constructing more sophisticated models of the needs of those who will be using the techniques themselves (i.e., engineers) as well as those who will be using the end product of the techniques (i.e., the

---

[25] Baddour, op. cit., p. 650.

clients). Ultimately, the product of a design will only be good as the knowledge we have of the consumer's needs.

BIBLIOGRAPHY

_____, Alcoa Aluminum Handbook, Aluminum Company of America, 1959.

_____, "Procedures for the Design and Operation of Hazardous Research Equipment," U.C.R.L.-9711, University of California, Berkeley.

Ackoff, Russell L., The Design of Social Research, Chicago, The University of Chicago Press, 1953.

_____, Gupta, Shiv K., and Minas, J. Sayer, Scientific Method, Optimizing Applied Research Decisions, New York, John Wiley and Sons, 1962.

Ashby, W. Ross, "What Is an Intelligent Machine?," Proceedings of the Western Joint Computer Conference, 1961, pp. 275-280.

Asimov, Morris, Introduction to Design, New Jersey, Prentice-Hall, 1962.

Baddour, R.F., et.al., "Report on Engineering Design," Journal of Engineering Education, Charles R. Walker, ed., New York, McGraw-Hill, 1962, pp. 214-221.

Bruner, Jerome S., Goodnow, Jacqueline J., and Austin, George A., A Study of Thinking, New York, Science Editions, 1966.

Buhl, Harold R., Creative Engineering Design, Ames, Iowa, The Iowa State University Press, 1960.

Carpenter, Edmund and McLuhan, Marshall, eds., Explorations in Communication, Boston, Beacon Press, 1966.

Churchman, C. West, "An Analysis of the Concept of Simulation," in Symposium on Simulation Models: Methodology and Applications to the Behavioral Sciences, A.C. Hoggatt and F.E. Balderston, eds., Cincinnatti, Ohio, South-Wester Publishing Co., 1963, pp.1-12.

_____, and Ackoff, Russell L., "An Experimental Measure of Personality," Philosophy of Science, Vol. 14 (1947), pp. 304-332.

Churchman, C. West, "Management and Science," Management Science Research Center, Working Paper No. 29, Berkeley, University of California, 1961.

_____, Prediction and Optimal Decision, Philosophical Issues of a Science of Values, New Jersey, Prentice-Hall, 1961.

_____, and Ackoff, Russell L., Psychologistics (mimeographed), Philadelphia, University of Pennsylvania, 1946.

Churchman, C. West, "Rationalist Inquiring Systems," Space Sciences Laboratory, Internal Working Paper No. 29, University of California, Berkeley.

_____, Theory of Experimental Inference, New York, The MacMillan Co., 1948.

_____, "On Whole Systems," Space Sciences Laboratory, Internal Working Paper No. 31, University of California, Berkeley, May 1965.

Clarkson, Geoffrey P.E., Portfolio Selection: A Simulation of Trust Investment, New Jersey, Prentice-Hall, 1962.

_____, and Pounds, W.F., "Theory and Method in the Exploration of Human Decision Behavior," M.I.T. School of Industrial Management Research Paper.

_____, and Simon, Herbert A., "Simulation of Individual and Group Behavior," The American Economic Review, Vol. L, No. 5 (December, 1960), pp. 920-932.

Conway, R.W., Johnson, B.M., and Maxwell, W.L., "Some Problems of Digital Systems Simulation," Management Science, Vol. 6 (October, 1959), pp. 92-110.

Cook, Garth E., "A Comparison to Theory of Observed Stability Failure of Thin Spherical Shells," U.C.R.L. Report 8403, Lawrence Radiation Laboratory, Berkeley.

Coser, Lewis, The Functions of Social Conflict, New York, The Free Press, 1956.

Crossman, E.R.F.W., Cooke, J.E., and Bershon, R.J., "Visual Attention and the Sampling of Displayed Information in Process Control," Human Factors in Technology Research Group Paper HFT-64-11 (T), Berkeley, University of California.

Crossman, E.R.F.W., "Information Processes in Human Skill," British Medical Bulletin, Vol. 20, No. 1 (1964), pp. 32-37.

Danielson, Lee E., Characteristics of Engineers and Scientists, Ann Arbor, Bureau of Industrial Relations, University of Michigan, 1960.

Darwin, G. E., Buddery, J. H., Metallurgy of the Rarer Metals -7: Beryllium, New York, Academic Press, 1960.

Davis, Louis E., "Applying Science and Technology to Social Problems," Human Factors in Technology Research Group Paper, HFT-65-17 (S), Berkeley, University of California.

Dixon, John R., "Design and Analysis: A Conflict of Interest?" Journal of Engineering Education, Vol. 54, No. 7 (March, 1964), pp. 243-245.

Du Bois, Andrew, "Strength of Mylar Diaphragms," L. R. L. Engineering Note 3140-01 M219 (March, 1959), Berkeley, Lawrence Radiation Laboratory.

English, J. Morley, "Understanding the Engineering Design Process," Los Angeles, Department of Engineering, University of California, Report No. 64-7, 1964.

Evan, William M., "Role Strain and the Norm of Reciprocity in Research Organizations," The American Journal of Sociology, Vol. 68, No. 3 (November, 1962), pp. 346-354.

Feigenbaum, Edward A., and Feldman, Julian, eds., Computers and Thought, New York, McGraw-Hill, 1963.

Gilkey, H. J., "Definition of Engineering--A Counter Proposal," Journal of Engineering Education, Vol. 50, No. 3 (December, 1959), pp. 257-261.

Goode, William J., "Community within a Community: The Professions," American Sociological Review, Vol. 22 (April, 1957), pp. 194-200.

Goodman, Nelson, "The Test of Simplicity," Science, Vol. 128 (October, 1958), pp. 1064-1069.

Gordon, Gerald, Anderson, Odin and Marquis, Sue, "Organization for Scientific Productivity," The American Behavioral Scientist (December, 1961), pp. 35-37.

_____, Marquis, Sue, and Anderson, O. W., "Freedom and Control in Four Types of Scientific Settings," The American Behavioral Scientist (December, 1962), pp. 39-43.

Gosling, William, "The Relevance of System Engineering," in Conference on Design Methods, J.C. Jones and D.G. Thornley, eds., New York, Pergamon Press, pp. 23-32.

Greenberger, Martin, "The Uses of Computers in Organizations," Scientific American, Vol. 215, No. 3 (September, 1966), pp. 192-202.

Harman, Harry H., "Simulation: A Survey," Proceedings of the Western Joint Computer Conference, 1961, pp. 1-9.

Hegel, G.W.F., The Phenomenology of Mind, translated by J.B. Baillie, London, George Allen and Unwin Ltd., 1964.

Hoggatt. A.C., and Balderston, F.E., eds., Symposium on Simulation Models: Methodology and Applications to the Behavioral Sciences, Cincinnati, Ohio, South-Western Publishing Co., 1963.

Israel, David R., "Simulation Techniques for the Test and Evaluation of Real-Time Computer Programs," Association for Computing Machinery, Vol. 4, No. 3 (1957), pp. 354-361.

Jones, J. Christopher, and Thornley, D.G., eds., Conference on Design Methods, New York, Pergamon Press, 1963.

C.G. Jung, "Psychological Types," The Basic Writings of C.G. Jung, New York, Modern Library Edition, pp. 183-285.

Kornhauser, William, Scientists in Industry: Conflict and Accommodation, Berkeley, University of California Press, 1963.

Kraus, H. Bilodeau, G.G., Langer, B.F., "Stresses in Thin-Walled Pressure Vessels with Ellipsoidal Heads," Paper #60-SA-12, Trans. ASME, Vol. 12 (1960), pp. 1-12.

Kuhn, Thomas S., The Structure of Scientific Revolutions, Chicago, University of Chicago Press, 1962.

Lipitz, Ben-Ami, "Information Storage and Retreival," Scientific American, Vol. 215, No. 3 (September, 1966), pp. 224-242.

Luce, R. Duncan, and Raiffa, Howard, Games and Decisions, New York, John Wiley and Sons, 1958.

Mack, Raymond W., and Snyder, Richard C., "The Analysis of Social Conflict - Toward an Overview and Synthesis," Journal of Conflict Resolution, Vol. 1, No. 2 (1957), pp. 212-248.

March, James G., and Simon, Herbert A., Organizations, New York, John Wiley and Sons, 1958.

Marcson, Simon, "Role Adaptation of Scientists in Industrial Research," IRE Transactions on Engineering Management, (December, 1960), pp. 159-166.

_____, "Role Concept of Engineering Managers," IRE Transactions on Engineering Management, (March, 1960), pp. 30-33.

Marples, David L., "The Decisions of Engineering Design," IRE Transactions on Engineering Management, (June, 1961), pp. 60-71.

Martin, H.W., and Thomson, R.J., "Work Measurement and Productivity in Engineering Design," IRE Transactions on Engineering Management, (September, 1960), pp. 83-95.

McCarthy, John, "Information," Scientific American, Vol. 215, No. 3 (September, 1966), pp. 64-73.

McLuhan, Marshall, The Gutenberg Galaxy, University of Toronto Press, 1962.

Minsky, Marvin L., "Artificial Intelligence," Scientific American, Vol. 215, No. 3 (September, 1966), pp. 246-260.

Newell, Allen, and Simon, H.A., "Computer Simulation of Human Thinking," The Rand Corporation, P-2276 (April, 1961).

_____, Shaw, J.C., and Simon, H.A., "Empirical Explorations with the Logic Theory Machine: A Case Study in Heuristics," in Computers and Thought, E.A. Feigenbaum and Julian Feldman, eds., New York, McGraw-Hill, 1963, pp. 109-113.

_____, and Simon, H.A., "GPS-A Program that Simulates Human Thought," in Computers and Thought, E.A. Feigenbaum and Julian Feldman, Eds., New York, McGraw-Hill, 1963, pp. 279-293.

_____, "Heuristic Problem Solving," Operations Research, (January, 1958).

_____, "The Simulation of Human Thought," The Rand Corporation, P-1734 (June, 1959).

Norris, K. W., "The Morphological Approach to Engineering Design," in Conference on Design Methods, J. C. Jones and D. G. Thornley, eds., New York, Pergamon Press, 1963.

Oettinger, Anthony G., "The Uses of Computers in Science," Scientific American, Vol. 215, No. 3 (September, 1966), pp. 160-172.

Orcutt, Guy H., "Simulation of Economic Systems," The American Economics Review, Vol. L, No. 5 (December, 1960), pp. 893-907.

Pope, William, "A Proposed Design Equation for Circular Mylar Windows," LRL Engineering Note 3140-01 M288 (August, 1959), Berkeley, Lawrence Radiation Laboratory.

Popov, E. P., Mechanics of Materials, New Jersey, Prentice-Hall, 1958.

Ramström, D., and Rhenman, E., "A Method of Describing the Development of an Engineering Project," IRE Trans. on Engineering Management, Vol. EM-12 (September, 1965), pp. 79-86.

Ratoosh, P., and Churchman, C. W., "Innovation in Group Behavior," Center for Research in Management Science Working Paper No. 10, Berkeley, University of California,

Riegel, John W., Intangible Rewards for Engineers and Scientists, Ann Arbor, Bureau of Industrial Relations, University of Michigan, 1958.

Roark, Raymond J., Formulas for Stress and Strain, New York, McGraw-Hill, 1954.

Samuel, A. L., "Some Studies in Machine Learning Using the Game of Checkers," in Computers and Thought, E. A. Feigenbaum and Julian Feldman, eds., New York, McGraw-Hill, 1963, pp. 11-35.

Saunders, Harold E., and Windenberg, Dwight F., "Strength of Thin Cylindrical Shells under External Pressure," Trans. ASME, Vol. 53 (1931), pp. 207-218.

Schelling, Thomas C., The Strategy of Conflict, New York, Galaxy, 1963.

Schmit, Lucien, "Automated Design," International Science and Technology (June, 1966), pp. 63-78.

Scriven, Michael, "The Mechanical Concept of Mind," Mind, Vol. 62, (April, 1953), pp. 230-240.

Shepard, Herbert A., "Engineers as Marginal Men," Journal of Engineering Education, Vol. 47, No. 7 (March, 1957), pp. 536-542.

_____, "Social Change in Science and Engineering," IRE Transactions on Engineering Management, (March, 1961), pp. 11-14.

_____, "Superiors and Subordinates in Research," Journal of Business, Vol. 29, (October, 1956), pp. 261-267.

Shubik, Martin, "Simulation of the Industry and the Firm," The American Economic Review, Vol. L, No. 5 (December, 1960), pp. 908-919.

Simon, H.A., "Modeling Human Mental Processes," The Rand Corporation, P-2221 (February, 1961).

Singer, E.A., Experience and Reflection, C. West Churchman, ed., Philadelphia, University of Pennsylvania Press, 1959.

Swatez, Gerald M., "Social Organization of a University Laboratory," Space Sciences Laboratory Internal Working Paper No. 44 (April, 1966), Berkeley, University of California.

Trist, E.L., Higgin, G.W., Murray, H., and Pollock, A.B., Organizational Choice, London, Tavistock Publications, 1963.

Turing, A.M., "Can a Machine Think?", in Computers and Thought, E.A. Feigenbaum and Julian Feldman, eds., New York, McGraw-Hill, 1963, pp. 11-35.

Vollmer, Howard M., La Porte, Todd R., Pedersen, William, and Langton, Phyllis, Adaptation of Scientists in Five Organizations; A Comparative Analysis, Technical Report, SRI Project No. IMU-3581, Stanford University, May, 1964.

von Karman, Theodore, and Tsien, Hsue-Shen, "The Buckling of Spherical Shells by External Pressure," Journal of Aeronautical Science, Vol. 7, (December, 1939), pp. 43-50.

_____, and Dunn, L.G., "The Influence of Curvature on the Buckling Characteristics of Structures," Journal of Aeronautical Science, Vol. 7, (May, 1940), pp. 276-289.

von Neuman, John, "The General and Logical Theory of Automata," in The World of Mathematics, Vol. 4, James R. Newman, ed., New York, Simon and Schuster, 1956, pp. 2070-2098.

Witmer, Emmett A., Collected Papers on the Instability of Shell Structures, NASA Technical Note D1510, 1962.

Wolman, Benjamin B., Contemporary Theories and Systems in Psychology, New York, Harper and Brothers, 1960.

1. MAIN


```
C              MAIN ROUTINE -                                          MA
      REAL LF,LC,LCY                                                   MA
      INTEGER CC,SS,ALTNT,TERM                                         MA
      COMMON CONFIG,SHAP,WORK,WNCR,DELNCR,BLKCST,P,Q,B,RF,LF,DNCRX,    MA
     1 WNCRX,DLR3X,IB,IBA,ABMNLF,DELR1,DELR2,DELR3,DELLF,DNCR,DELWCR   MA
     2 ,DLDNCR,LINES                                                   MA
      COMMON /C/ RC,LC,LCRHS,WFLC                                      MA
      COMMON /SFH/ RS,RSRHS,WFLS                                       MA
      COMMON /STIFF/ ISTIFF,BSTIFF,HSTIFF,F,D,G,K,THK2,V,VINIT         MA
      COMMON/WNDW /WD,THICKW,WNDCST,WNDTIM,SHEETS,RHOTW,RHOWND         MA
      COMMON /XSPC/ H1,H2,V1,V2,DELH1,DELH2,DELV1,DELV2,BOXTP,BOXHT,   MA
     1 SPLHT                                                           MA
      COMMON /STR/ CONFG,SHAPE,COST,TIME,MAXALT,RONMBR,DROTTL,NO,DROTL1,MA
     1 DROTL2,DROTL3,DROTL4,DRO1AL,DRO1AR,DRO3AL,DRO3AR,RHOT1A,RHOT2A, MA
     2 RHOT3A,RHOT1L,RHOT1R,RHOT3L,RHOT3R,TIMNO,CSTNC                  MA
     3 ,FSKCST,FSKTIM                                                  MA
      COMMON /NPT/ WT,NTNSTY,ALTNT,ALPH                                MA
       COMMON /XCT/ INEQC,INEQS,T1I,T1E,T2I,T2E,T3I,T3E,RATIO,HTC,HTS, MA
     1 T1DS,T2DS,T3DC,T1IPRM,T2IPRM,T3IPRM,T1A,T2A,T3A,DELT1A,DELT2A, MA
     2 DELT3A,T3EX                                                     MA
      COMMON /MTL/ METAL,E,YPSTRS,SF,C,EL,RHC,ANEAL,DCRIT              MA
      COMMON /FRM/ FRMCST,FRMTIM,TREXT,TRINT,FORM                      MA
      COMMON /FINAL/ TERM(10,3),NNN                                    MA
      DIMENSION BLKCST(7),RC(2),LC(2),LCRHS(2),RS(12),RSRHS(12),       MA
     1 ISTIFF(2),BSTIFF(2),HSTIFF(2),K(2),V(2),VINIT(2),CONFG(100),    MA
     2 SHAPE(100),COST(100),TIME(100),RONMBR(100),DROTTL(100),NO(100), MA
     3 DROTL1(100),DROTL2(100),DROTL3(100),DROTL4(100),DRO1AL(100),    MA
     4 DRO1AR(100),DRO3AL(100),DRO3AR(100),RHOT1A(2),RHOT2A(2),RHOT3A(2)MA
     5,RHOT1L(2),RHOT1R(2),RHOT3L(2),RHOT3R(2),TIMNO(100),CSTNC(100),  MA
     6 WT(4),ALPH(3),INEQC(2),INEQS(2),T1I(2),T1E(2),T2I(2),T2E(2),    MA
     7 T3I(2),T3E(2),RATIO(2),HTC(2),HTS(2),T1DS(2),T2DS(2),T3DC(2),   MA
     8 T2IPRM(2),T3IPRM(2),T1A(2),T2A(2),T3A(2),E(3),YPSTRS(3),SF(3),  MA
     9 C(3),EL(3),RHC(3),ANEAL(3),TREXT(2),TRINT(2),FORM(2),T1IPRM(2)  MA
     1 ,T3EX(2),DELT1A(2),DELT2A(2),DELT3A(2)                          MA
    5 CALL INPUT                                                       MA
      REWIND 1
      REWIND 2
      REWIND 3
      REWIND 8
      NNN=0                                                            MA
      IF (DELLF.GE.0.) GO TO 10                                        MA
      LF=ABMNLF                                                        MA
      BLKCST(1)=10.                                                    MA
C        COMPUTE RC'S,LC'S,RS'S AND DETERMINE EXTENT OF ANALYSIS       MA
   10 X=LCY(DELR3)                                                     MA
      RC(1)=RF+DELR1                                                   MA
      LC(1)=LCY(DELR1)                                                 MA
      RS(1)=RF+DELR2                                                   MA
      IF (X.LE.0.) GO TO 25                                            MA
C        INCREMENTED CYL                                               MA
      RC(2)=RF+DELR3                                                   MA
```

```
      LC(2)=X                                                           MA
      SS=1                                                              MA
      IF (LC(1).GT.RC(1)/2.) GO TO 15                                   MA
      CC=0                                                              MA
      GO TO 35                                                          MA
   15 IF (LC(2).GT.RC(2)/2.) GO TO 20                                   MA
      CC=1                                                              MA
      GO TO 35                                                          MA
   20 CC=2                                                              MA
      GO TO 35                                                          MA
   25 CC=1                                                              MA
      IF (LC(1).GT.RC(1)/2.) GO TO 30                                   MA
      SS=1                                                              MA
      GO TO 35                                                          MA
   30 SS=2                                                              MA
      RS(2)=RF+DELR3                                                    MA
C        INDEX IS POSITION IN OUTPUT ARRAY                              MA
   35 ALTNT=1                                                           MA
      WNDCST=0.                                                         MA
      WNDTIM=0.                                                         MA
      IF (CC.GT.0) CALL CYL(CC)                                         MA
      BLKCST(2)=0.                                                      MA
      WNCR=WNCRX                                                        MA
      DNCR=DNCRX                                                        MA
      WP=0.                                                             MA
      THICKW=0.                                                         MA
      SHEETS=0.                                                         MA
      DO 40 J=1,2                                                       MA
      K(J)=0                                                            MA
   40 INEQC(J)=0                                                        MA
      CALL SPHERE (SS)                                                  MA
      CALL RANK                                                         MA
      GO TO 5                                                           MA
      END                                                               MA
```

2. INPUT

```
2878 MIT2DEF - DEBUG                                                    DATE
     INPT    - FEN      - -      SOURCE STATEMENT      - -             IFN

      SUBROUTINE INPUT                                                  I
      INTEGER RONMBR,TIMNO,CSTNO,CONFG                                  I
      REAL NTNSTY,LE,IB,IBA,LCY                                         I
      COMMON CONFIG,SHAP,WORK,WNCR,DELNCR,BLKCST,P,Q,B,RF,LF,DNCRX,     I
     1 WNCRX,DLR3X,IB,IBA,ABMNLF,DELR1,DELR2,DELR3,DELLF,DNCR,DELWCR    I
     2 ,DLDNCR,LINES                                                    I
      COMMON /C/ RC,LC,LCRHS,WELC                                       I
      COMMON /SPH/ RS,RSRHS,WELS                                        I
      COMMON /STIFF/ ISTIFF,RSTIFF,HSTIFF,E,D,G,K,THK2,V,VINIT          I
      COMMON/WNDW /WD,THICKW,WNDCST,WNDTIM,SHEETS,RHOTW,RHOWND          I
      COMMON /XSPC/ H1,H2,V1,V2,DELH1,DELH2,DELV1,DELV2,BOXTP,BOXHT,    I
     1 SPLHT                                                            I
      COMMON /STR/ CONFG,SHAPE,COST,TIME,MAXALT,RONMBR,DROTTL,NO,DROTL1,I
     1 DROTL2,DROTL3,DROTL4,DRO1AL,DRO1AR,DRO3AL,DRO3AR,RHOT1A,RHOT2A,  I
     2 RHOT3A,RHOT1L,RHOT1R,RHOT3L,RHOT3R,TIMNO,CSTNO                   I
     3 ,FSKCST,FSKTIM                                                   I
      COMMON /NPT/ WT,NTNSTY,ALTNT,ALPH                                 I
      COMMON /XCT/ INEQC,INEQS,T1I,T1E,T2I,T2E,T3I,T3E,RATIO,HTC,HTS,   I
     1 T1DS,T2DS,T3DC,T1IPRM,T2IPRM,T3IPRM,T1A,T2A,T3A,DELT1A,DELT2A,   I
     2 DELT3A,T3EX                                                      I
      COMMON /MTL/ METAL,E,YPSTRS,SF,C,EL,RHO,ANEAL,DCRIT               I
      COMMON /FRM/ FRMCST,FRMTIM,TREXT,TRINT,FORM                       I
      DIMENSION BLKCST(7),RC(2),LC(2),LCRHS(2),RS(12),RSRHS(12),        I
     1 ISTIFF(2),RSTIFF(2),HSTIFF(2),K(2),V(2),VINIT(2),CONFG(100),     I
     2 SHAPE(100),COST(100),TIME(100),RONMBR(100),DROTTL(100),NO(100),  I
     3 DROTL1(100),DROTL2(100),DROTL3(100),DROTL4(100),DRO1AL(100),     I
     4 DRO1AR(100),DRO3AL(100),DRO3AR(100),RHOT1A(2),RHOT2A(2),RHOT3A(2)I
     5,RHOT1L(2),RHOT1R(2),RHOT3L(2),RHOT3R(2),TIMNO(100),CSTNO(100),   I
     6 WT(4),ALPH(3),INEQC(2),INEQS(2),T1I(2),T1E(2),T2I(2),T2E(2),     I
     7 T3I(2),T3E(2),RATIO(2),HTC(2),HTS(2),T1DS(2),T2DS(2),T3DC(2),    I
     8 T2IPRM(2),T3IPRM(2),T1A(2),T2A(2),T3A(2),E(3),YPSTRS(3),SF(3),   I
     9 C(3),EL(3),RHO(3),ANEAL(3),TREXT(2),TRINT(2),FORM(2),T1IPRM(2)   I
     1 ,T3EX(2),DELT1A(2),DELT2A(2),DELT3A(2)                           I
C        INPUT AND INTIALIZATION                                        I
C        FLASK DATA                                                     I
      READ 1001,RF,LF,DLR3X                                             I
 1001 FORMAT (5F8.3)                                                    I
C        NON-COUNTING REGION DATA                                       I
      READ 1001,WNCRX,DNCRX,DELNCR,IB,IBA                               I
C        EXTERNAL SPACE DATA                                            I
      READ 1001,V1,V2,H1,H2                                             I
C        METAL DATA -- AL=1, BE=2, RE=3                                 I
      DO 20 I=1,3                                                       I
   20 READ 1002,E(I),YPSTRS(I),ANEAL(I),SF(I),C(I),EL(I),RHO(I)         I
 1002 FORMAT   (3E11.3,F6.2,  E8.3,F5.3,F7.3)                           I
C        FORM PLUS EXACT DATA                                           I
      READ 1001,NTNSTY,DCRIT                                            I
C        WINDOW DATA                                                    I
      READ 1001,RHOWND                                                  I
      READ 1003,(WT(I),I=1,4)                                           I
 1003 FORMAT   (4F10.4)                                                 I
```

```
2878 MITROFF - DEBUG                                                    DATE
     INPT   - FEN      - -      SOURCE STATEMENT      - -      IFN

      PRINT 1004,RF,LF,DLR3X                                            I
 1004 FORMAT (1H1,20X,16HINPUT PARAMETERS///1X,                         I
     1 6HRF    =,F8.3/1X,                                               I
     2 6HLF    =,F8.3/1X,                                               I
     3 6HDLR3  =,F8.3)                                                  I
      PRINT 1005,WNCRX,DNCRX,DELNCR,IB,IBA                              I
 1005 FORMAT (1H0, 6HWNCR =,F8.3/1X,                                    I
     1 6HDNCR  =,F8.3/1X,                                               I
     2 6HDLNCR=,F8.3/1X,                                                I
     3 6HIB    =,F8.3/1X,                                               I
     4 6HIBA   =,F8.3)                                                  I
      PRINT 1006,H1,H2,V1,V2                                            I
 1006 FORMAT (1H0, 6HH1    =,F8.3/1X,                                   I
     1 6HH2    =,F8.3/1X,                                               I
     2 6HV1    =,F8.3/1X,                                               I
     3 6HV2    =,F8.3)                                                  I
      PRINT 1007                                                        I
 1007 FORMAT (1H0, 5HMETAL,10X,1HF,11X,6HYPSTRS,8X,6HANNEAL,7X,2HSF,9X,1I
     1HC,9X,2HEL,6X,3HRHO//)                                            I
      DO 30 I=1,3                                                       I
   30 PRINT 1008,ALPH(I),F(I),YPSTRS(I),ANEAL(I),SF(I),C(I),EL(I),RHO(I)I
 1008 FORMAT (1H ,1X,A2,4X,1P3E14.3,2X,0PF7.2,2X,1PE10.3,2X,0PF6.3,3X,  I
     1 F7.3)                                                            I
      PRINT 1009,NTNSTY,DCRIT                                           I
 1009 FORMAT (1H0, 7HNTNSTY=,F8.3,/1X,7HDCRIT =,F8.3)                   I
      PRINT 1010, (WT(I),I=1,4),RHOWND                                  I
 1010 FORMAT (1H0, 6HWT(1)=,1PE11.4/1X,                                 I
     1 6HWT(2)=,1PE11.4/1X,                                             I
     2 6HWT(3)=,1PE11.4/1X,                                             I
     3 6HWT(4)=,1PE11.4//1X,                                            I
     4 6HRHOWND=,0PF8.3)
      READ 1011, (RHOT1A(I),I=1,2),(RHOT3A(I),I=1,2)                    I
 1011 FORMAT (4F7.3)                                                    I
      PRINT 1012,(RHOT1A(I),I=1,2),(RHOT3A(I),I=1,2)                    I
 1012 FORMAT (1H0,18HRHOT1AL(PRIMLF) = F7.3/                            I
     1          1X,18HRHOT1AR(PRIMRT) = F7.3/                           I
     2          1X,18HRHOT3AL(SECDLF) = F7.3/                           I
     3          1X,18HRHOT3AR(SECDRT) = F7.3)                           I
      PRINT 1013                                                        I
 1013 FORMAT (1H1, 50H NO. CONFIG    PRIM-1     PRIM-2     SECD-1     SECD-2I
     1 /15X,37HT1DS(1)    T1DS(2)    T3DC(1)    T3DC(2) ///             I
     2 3X, 83H1  DCD       T1DS(1)    T1DS(1)    T3DC(1)    T3DC(1)      I
     3 DELWNCR = WNCR - FLG WID//                                       I
     4 3X, 88H2  DCED      T1DS(1)    T1DS(1)    T3DC(1)    T2DS(1)      I
     5 DELDNCR = DNCRX - 2. X RADIUS //                                 I
     6 3X, 82H3  DCEW      T1DS(1)    THICKW     T3DC(1)      0.         I
     7 DELR3 = 2.IN.  OR (DNCRX/2. - RF) //                             I
     8 11X,36HS    T    A    N    D    A    R    D,15X,44HDELV1 = V1 - RI
     9ADIUS , FOR CONFIG DCD -- ETC. /                                  I
     1 3X, 49H4  DCECD     T1DS(1)    T1DS(2)    T3DC(1)    T3DC(2) /   I
     2 62X,30HDELT3A = T3ALLW - T3DC -- ETC. /                          I
     3 3X, 83H5  DED       T1DS(1)    T1DS(1)    T2DS(1)    T2DS(1)      I
```

```
2878 MITROFF - DEBUG                                                    DATE
     INPT   - FEN      - -      SOURCE STATEMENT      - -              IFN

    4 VINIT = CYL LENGTH / (2. X RADIUS) //                                I
    5 3X, 31H6  DEW      T1DS(1)   THICKW    T2DS(1)     0.               I
    6 VFINAL = VINIT / STIFF //                                            I
    7 3X, 92H7  WEWCYL   THICKW    THICKW      0.         0.              I
    8 DIFF = (Q + DELNCR) - RADIUS / 2.//                                  I
    9 3X, 50H8  SPHERE   T1DS(1)   T1DS(1)   T2DS(1)   T2DS(1) //)         I
     PRINT 1014                                                            I
 1014 FORMAT (1H ,                                                         I
    1 2X,121H9  SFS      T1DS(1)   T1DS(1)   T2DS(1)   T2DS(1)             I
    2 DROTL1 = WT(1)  X  (RHOT1AL - RHOT1L = DRO1AL) -- LEFT--PRIM-1// I
    32X, 47H10  SFW      T1DS(1)   THICKW    T2DS(1)     0./ 61X,    63HI
    4 DROTL2 = WT(2)  X  (RHOT1AR - RHOT1R = DRO1AR) -- RIGHT-PRIM-2/  I
    52X, 50H11  SFS11    T1DS(1)   T1DS(2)   T2DS(1)   T2DS(2) //       I
    62X,122H12  SFS12    T1DS(1)   T1DS(2)   T2DS(1)   T2DS(2)           I
    7 DROTL3 = WT(3)  X  (RHOT3AL - RHOT3L = DRO3AL) -- LEFT--SECD-1// I
    92X  47H13  WEWSPH   THICKW    THICKW      0.         0. / 61X  63 HI
    9 DROTL4 = WT(4)  X  (RHOT3AR - RHOT3R = DRO3AR) -- RIGHT-SECD-2 / I
    115X,4HLEFT,6X,5HRIGHT,5X,4HLEFT,6X,5HRIGHT //  61X,            66HI
    2 DROTTL = DROTL1 + DROTL2 + DROTL3 + DROTL4 ,  RHO-T RANK QUANTITYI
    3/// 62X,66HFOR EACH  DRO1AL,DRO1AR,DRO3AL,DRO3AR,THAT IS POSITIVE,I
    4 THE RONMBR // 62X,36HINCREASES BY '1' UP TO A MAX OF '4'.)          I
     DO 40 L=1,100                                                         I
     RONMBR(L)=0                                                           I
     DROTTL(L)=0.                                                          I
     NO(L)=0                                                               I
     TIME(L)=0.                                                            I
     COST(L)=0.                                                            I
     DROTL1(L)=0.                                                          I
     DROTL2(L)=0.                                                          I
     DROTL3(L)=0.                                                          I
     DROTL4(L)=0.                                                          I
     TIMNO(L)=0                                                            I
     CSTNO(L)=0                                                            I
     CONFG(L)=0                                                            I
     DRO1AL(L)=0.                                                          I
     DRO1AR(L)=0.                                                          I
     DRO3AR(L)=0.                                                          I
     DRO3AL(L)=0.                                                          I
     RHOT1L(L)=0.                                                          I
     RHOT1R(L)=0.                                                          I
     RHOT3L(L)=0.                                                          I
  40 RHOT3R(L)=0.                                                          I
     DO 45 L=1,7                                                           I
  45 BLKCST(L)=0.                                                          I
     LINES=100                                                             I
     THICKW=0.                                                             I
     WD=0.                                                                 I
     SHEETS=0.                                                             I
     DELR3=DLR3X                                                           I
     DELR1=0.1*RF                                                          I
     DELR2=SQRT(RF*RF+(LF/2.)*(LF/2.))-RF                                  I
     ABMNLF=1.242RF+0.50                                                   I
```

```
2873 MITROFF - DEBUG                                                    DATE   1
     INPT   - FEN      - -      SOURCE STATEMENT      - -      IFN

      DELLF=LF-ABMNLF                                                    IN
      IF (RF.GT.2.) GO TO 100                                            IN
C        FLASK DIAM LE 4 INCHES                                          IN
      FSKCST=800.                                                        IN
      GO TO 105                                                          IN
  100 FSKCST=AINT(667.17+33.33*RF)                                       IN
  105 FSKTIM=0.1*FSKCST                                                  IN
      PRINT 1000,ABMNLF,DELLF,FSKCST,FSKTIM                              IN
 1000 FORMAT (1H1,15X,14HCOMMON  OUTPUT//47HABMINLF     LF-ABMINLF    FLASIN
     1K COST   FLASK TIME/ 6H (IN.),8X, 6H(IN.),8X,3H($),8X,6H(HRS.)//  IN
     2F8.3,3X,F8.3,4X,F9.1,6X,F6.1)                                      IN
      RETURN                                                             IN
      END                                                                IN
```

3. CYL


```
2878 MITROFF - DEBUG                                                    DATE
     CYLA    - FEN      - -        SOURCE STATEMENT        - -         TEN

      SUBROUTINE CYL(CC)
      INTEGER CONFIG,SHAP,WORK,CC,TERM,ALTNT
      REAL LF,LC,LCRHS,IB,IBA,LCY
      COMMON CONFIG,SHAP,WORK,WNCR,DELNCR,BLKCST,P,Q,R,RF,LF,DNCRX,
     1 WNCRX,DLR3X,IB,IBA,ABMNLF,DELR1,DELR2,DELR3,DELLF,DNCR,DELWCR
     2 ,DLDNCR,LINES
      COMMON /C/ RC,LC,LCRHS,WELC
      COMMON /SPH/ RS,RSRHS,WELS
      COMMON /STIFF/ ISTIFF,BSTIFF,HSTIFF,E,D,G,K,THK2,V,VINIT
      COMMON/WNDW /WD,THICKW,WNDCST,WNDTIM,SHEETS,RHOTW,RHOWND
      COMMON /XSPC/ H1,H2,V1,V2,DELH1,DELH2,DELV1,DELV2,BOXTP,BOXHT,
     1 SPLHT
      COMMON /STR/ CONFG,SHAPE,COST,TIME,MAXALT,RONMBR,DROTTL,NO,DROTL1,
     1 DROTL2,DROTL3,DROTL4,DRO1AL,DRO1AR,DRO3AL,DRO3AR,RHOT1A,RHOT2A,
     2 RHOT3A,RHOT1L,RHOT1R,RHOT3L,RHOT3R,TIMNO,CSTNO
     3 ,FSKCST,FSKTIM
      COMMON /NPT/ WT,NTNSTY,ALTNT,ALPH
      COMMON /XCT/ INEQC,INEQS,T1I,T1E,T2I,T2E,T3I,T3E,RATIO,HTC,HTS,
     1 T1DS,T2DS,T3DC,T1IPRM,T2IPRM,T3IPRM,T1A,T2A,T3A,DELT1A,DELT2A,
     2 DELT3A,T3EX
      COMMON /MTL/ METAL,E,YPSTRS,SE,C,EL,RHO,ANEAL,DCRIT
      COMMON /FRM/ FRMCST,FRMTIM,TREXT,TRINT,FORM
      COMMON /FINAL/ TERM(10,3),NNN
      DIMENSION BLKCST(7),RC(2),LC(2),LCRHS(2),RS(12),RSRHS(12),
     1 ISTIFF(2),BSTIFF(2),HSTIFF(2),K(2),V(2),VINIT(2),CONFG(100),
     2 SHAPE(100),COST(100),TIME(100),RONMBR(100),DROTTL(100),NO(100),
     3 DROTL1(100),DROTL2(100),DROTL3(100),DROTL4(100),DRO1AL(100),
     4 DRO1AR(100),DRO3AL(100),DRO3AR(100),RHOT1A(2),RHOT2A(2),RHOT3A(2)
     5,RHOT1L(2),RHOT1R(2),RHOT3L(2),RHOT3R(2),TIMNO(100),CSTNO(100),
     6 WT(4),ALPH(3),INEQC(2),INEQS(2),T1I(2),T1E(2),T2I(2),T2E(2),
     7 T3I(2),T3E(2),RATIO(2),HTC(2),HTS(2),T1DS(2),T2DS(2),T3DC(2),
     8 T2IPRM(2),T3IPRM(2),T1A(2),T2A(2),T3A(2),E(3),YPSTRS(3),SE(3),
     9 C(3),EL(3),RHO(3),ANEAL(3),TREXT(2),TRINT(2),FORM(2),T1IPRM(2)
     1 ,T3EX(2),DELT1A(2),DELT2A(2),DELT3A(2)
      DO 180 SHAP=1,CC
      BLKCST(2)=0.
      WORK=SHAP
      CONFIG=1
      WD=0.
      THICKW=0.
      SHEETS=0.
      WNDCST=0.
      WNDTIM=0.
      DNCR=DNCRX
      WNCR=WNCRX
      DELR3=DLR3X
      DLDNCR=DNCRX-2.*RC(SHAP)
C        WEL AND LCY ARE FUNCTIONS
      WELC=WEL(RC(SHAP))
      DELWCR=WNCR-WELC
      IF (DELWCR.GE.0.) GO TO 15
```

```
C          WNCR IS LESS THAN WELC                                          C
      WNCR=WELC                                                            C
      BLKCST(2)=BLKCST(2)+10.                                              C
C          CALL SUBROUTINES FOR PRESENT CONFIG                             C
   15 CALL MONTOR                                                          C
      IF ((AINT(DNCR*1000.+0.5)).LE.(AINT(2000.*RC(SHAP)))) GO TO 20
C          INCREMENT IF POSSIBLE                                           C
       DELR3=DNCR/2.-RF                                                    C
C          SAVE NEW INCREMENT                                              C
      IF (LCY(DELR3).LE.0.) GO TO 17                                       C
C          ADD 2 TO SHAP TO DEFINE METHOD OF REACHING INCR                 C
      WORK=SHAP+2                                                          C
C          INCREASE RC TO DNCR/2                                           C
      RC(SHAP)=DNCR/2.                                                     C
      LC(SHAP)=LCY(DELR3)                                                  C
      GO TO 19                                                             C
   17 NNN=NNN+1                                                            C
      TERM(NNN,1)=4                                                        C
      TERM(NNN,2)=ALTNT                                                    C
      TERM(NNN,3)=WORK                                                     C
      GO TO 180                                                            C
   19 WELC=WEL(RC(SHAP))                                                   C
C          WELC WILL BE DIFFERENT IN GENERAL -- RC WAS CHANGED             C
      DELWCR=WNCR-WELC                                                     C
C          PERFORM WNCR CHECK AGAIN USING NEW WELC                         C
      IF (DELWCR.GE.0.) GO TO 20                                           C
      DELWCR=0.
C          WNCR IS LESS THAN WELC                                          C
      WNCR=WELC                                                            C
      BLKCST(2)=BLKCST(2)+10.                                              C
   20 P=(WNCR-LC(SHAP))/2.                                                 C
      Q=-P                                                                 C
      R=(LF-LC(SHAP))/2.                                                   C
      IF (DELNCR.LT.((WNCR+LC(SHAP))/2.0))GO TO 40                         C
C          CYL IS OUTSIDE                                                  C
      LC(SHAP)=DELNCR+Q                                                    C
      IF (LC(SHAP).LE.(RC(SHAP)/2.)) GO TO 180                             C
C          SET CONFIG TO DCED - 2                                          C
      CONFIG=2                                                             C
      DLDNCR=DNCRX-2.*RC(SHAP)                                             C
   30 CALL MONTOR                                                          C
      IF (IB.GT.IBA) GO TO 180                                             C
      CALL WINDOW(RC(SHAP))                                                C
      B1=DELNCR-((WNCR+LF)/2.)
      IF ((WELC+B1).GE.WD) GO TO 38
      WELC=B1+WD
      BLKCST(2)=BLKCST(2)+10.                                              C
      IF (WELC.LE.WNCR) GO TO 38
   37 NNN=NNN+1                                                            C
      TERM(NNN,1)=5                                                        C
      TERM(NNN,2)=ALTNT
      TERM(NNN,3)=WORK
```

```
      SHEETS=0.
      THICKW=0.
      WD=0.
      WNDCST=0.
      WNDTIM=0.
      GO TO 180
   38 CONFIG=3                                                          C
C        CHANGE CONFIG TO DCEW - 3
      CALL MONTOR                                                       C
      GO TO 180                                                         C
   40 IF (DELNCR.GT.P) GO TO 70                                         C
C        CYL IS INSIDE                                                  C
      IF (DELNCR.GE.0) GO TO 45                                         C
C        ERROR IN PROGRAM LOGIC                                         C
      NNN=NNN+1                                                         C
      TERM(NNN,1)=6                                                     C
      TERM(NNN,2)=ALTNT                                                 C
      TERM(NNN,3)=WORK                                                  C
      GO TO 180                                                         C
   45 CONFIG=5                                                          C
C        CYL COMPLETELY INSIDE NCR                                      C
      CALL MONTOR                                                       C
      IF (TB.GT.TBA) GO TO 180                                          C
      CALL WINDOW(RC(SHAP))                                             C
      IF ((B+WD).GT.(P-DELNCR)) GO TO 65                                C
      IF ((B+WD).GT.(P+DELNCR)) GO TO 60                                C
      CONFIG=7                                                          C
      WELC=LC(SHAP)+2.*(B+WD)                                           C
      DELWCR=WNCR-WELC                                                  C
      CALL MONTOR                                                       C
      GO TO 180                                                         C
   60 NNN=NNN+1                                                         C
      TERM(NNN,1)=7                                                     C
      TERM(NNN,2)=ALTNT                                                 C
      TERM(NNN,3)=WORK                                                  C
C        IMPOSSIBLE TO HAVE WED - SHOULD HAVE BEEN REVERSED             C
      GO TO 180                                                         C
   65 IF ((B+WD).GT.(P+DELNCR)) GO TO 67                                C
      CONFIG=6                                                          C
      WELC=LC(SHAP)+B+WD                                                C
      DELWCR=WNCR-WELC                                                  C
      GO TO 69                                                          C
   67 NNN=NNN+1                                                         C
      TERM(NNN,1)=8                                                     C
      TERM(NNN,2)=ALTNT                                                 C
      TERM(NNN,3)=WORK                                                  C
      GO TO 180                                                         C
   69 CALL MONTOR                                                       C
      GO TO 180                                                         C
   70 HALF=RC(SHAP)/2.                                                  C
      IF (DELNCR-Q) 75,85,90                                            C
   75 CONFIG=4                                                          C
```

```
      LCRHS(SHAP)=0-DELNCR                                              C
      LC(SHAP)=0+DELNCR                                                 C
      IF ((LC(SHAP).LE.HALF).OR.(LCRHS(SHAP).LE.HALF)) GO TO  80        C
      CALL MONTOR                                                       C
      GO TO 180                                                         C
   80 NNN=NNN+1                                                         C
      TERM(NNN,1)=9                                                     C
      TERM(NNN,2)=ALTNT                                                 C
      TERM(NNN,3)=WORK                                                  C
      GO TO 180                                                         C
   82 NNN=NNN+1                                                         C
      TERM(NNN,1)=10                                                    C
      TERM(NNN,2)=ALTNT                                                 C
      TERM(NNN,3)=WORK                                                  C
      GO TO 180                                                         C
   85 IF (P.GE.0) GO TO 82                                              C
   90 X=WELC                                                            C
      J=1                                                               C
      IF     (X.GT.(WNCR-(P+DELNCR))) GO TO 140                         C
      LC(SHAP)=0+DELNCR                                                 C
      WELC=WNCR-P-DELNCR                                                C
C        WELC NOW SET TO AMOUNT CYL IS INSIDE NCR                       C
      IF (LC(SHAP).GT.HALF) GO TO 104                                   C
C        X IS ORIGINAL FLANGE WIDTH                                     C
C        Y=LC-RC/2 - HALF=RC/2                                          C
C        J=1,4 OVERHANG=0 , J=2,3 FOR OVERHANG GT 0                     C
      Y=WELC-HALF+LC(SHAP)                                              C
C        CHECK TO SEE IF AVAIL LENGTH IS SUFFICIENT                     C
      IF (X.LE.Y) GO TO 95                                              C
      IF (Y.GT.(WNCR-HALF-LC(SHAP))) GO TO 180                          C
C        OVERHANG IS OK - DOES NOT STICK OUT OF RHS                     C
      J=2                                                               C
      WELC=X                                                            C
      GO TO 100                                                         C
   95 WELC=Y                                                            C
  100 LC(SHAP)=HALF                                                     C
  104 CONFIG=2                                                          C
      DELWCR=WNCR-WELC                                                  C
  105 CALL MONTOR                                                       C
      IF (IB.GT.IBA) GO TO 180                                          C
      R=RC(SHAP)                                                        C
      CALL WINDOW(R)                                                    C
      GO TO (110,125,155,170),J                                         C
  110 IF ((B+WD).GT.(P+DELNCR)) GO TO 180                               C
  115 WELC=WELC+B+WD                                                    C
  120 CONFIG=3                                                          C
      CALL MONTOR                                                       C
      GO TO 180                                                         C
C        SET CONFIG TO DOEW - 3                                         C
C        CHECK OVERHANG AGAINST B+WD                                    C
  125 IF         ((Y+HALF-WNCR+2.*P).GE.(B+WD)) GO TO 120                C
C        OVERHANG IS LESS THAN B+WD                                     C
```

```
      GO TO 110
C        FLANGE IS LARGER THAN LENGTH OF CYL INSERTED
  140 IF ((Q+DELNCR).GT.HALF) GO TO 145
C      LC=Q+DELNCR LT RC/2 - NOT OK
      IF (X.GT.(WNCR-HALF-P+DELNCR)) GO TO 180
C     OVERHANG IS LESS THAN P+DELNCR-OK
      LC(SHAP)=HALF
      J=3
      Z=Q+DELNCR
      GO TO 104
  145 J=4
      LC(SHAP)=Q+DELNCR
C        WELC IS STILL INTACT AT ORIGINAL VALUE
      GO TO 104
  155 IF ((X+HALF-WNCR+2.*P).GE.(B+WD)) GO TO 160
C        IF MEANS WE NEED MORE ROOM
      IF ((B+WD).GT.(P+DELNCR)) GO TO 180
C        IF MEANS ROOM IS AVAIL
      WELC=B+WD+WNCR-HALF+2.*Q+DELNCR
  160 CONFIG=3
      DELWCR=WNCR-WELC
      CALL MONTOR
      GO TO 180
C        J=4 CASE FOLLOWS
  170 IF ((X-WNCR+P+DELNCR).GE.(P+WD)) GO TO 160
C        NEED MORE ROOM
      IF ((B+WD).GT.(P+DELNCR)) GO TO 180
      WELC=B+WD+WNCR-P-DELNCR
      GO TO 160
  180 CONTINUE
      RETURN
      END
```

4. MONTOR


```
      SUBROUTINE MONTOR                                                 MN
C        THIS SUBROUTINE CALLS THE VARIOUS ANALYSIS SUBROUTINES AS      MN
C        NEEDED                                                         MN
      INTEGER CONFIG                                                    MN
      COMMON CONFIG,SHAP,WORK,WNCR,DELNCR,BLKCST,P,Q,R,RF,LF,DNCRX,     MN
     1 WNCRX,DLR3X,IR,IRA,ABMNLF,DELR1,DELR2,DELR3,DELLF,DNCR,DELWCR    MN
     2 ,OLDNCR,LINES                                                    MN
      COMMON /C/ RC,LC,LCRHS,WFLC                                       MN
      COMMON /SPH/ RS,RSRHS,WFLS                                        MN
      COMMON /STIFF/ ISTIFF,RSTIFF,HSTIFF,F,D,G,K,THK2,V,VINIT          MN
      COMMON/WNDW /WD,THICKW,WNDCST,WNDTIM,SHEETS,RHOTW,RHOWND          MN
      COMMON /XSPC/ H1,H2,V1,V2,DELH1,DELH2,DELV1,DELV2,BOXTP,BOXHT,    MN
     1 SPLHT                                                            MN
      COMMON /STR/ CONFG,SHAPE,COST,TIME,MAXALT,RONMBR,DROTTL,NO,DROTL1,MN
     1 DROTL2,DROTL3,DROTL4,DRO1AL,DRO1AR,DRO3AL,DRO3AR,RHOT1A,RHOT2A,  MN
     2 RHOT3A,RHOT1L,RHOT1R,RHOT3L,RHOT3R,TIMNO,CSTNO                   MN
     3 ,FSKCST,FSKTIM                                                   MN
      COMMON /NPT/ WT,NTNSTY,ALTNT,ALPH                                 MN
      COMMON /YCT/ INEOC,INEOS,T1I,T1E,T2I,T2E,T3I,T3E,RATIO,HTC,HTS,   MN
     1 T1DS,T2DS,T3DC,T1IPRM,T2IPRM,T3IPRM,T1A,T2A,T3A,DELT1A,DELT2A,   MN
     2 DELT3A,T3EX                                                      MN
      COMMON /ATL/ METAL,F,YPSTRS,SF,C,EL,RHO,ANEAL,DCRIT               MN
      COMMON /FRM/ FRMCST,FRMTIM,T3EXT,TRINT,FORM                       MN
      DIMENSION BLKCST(7),RC(2),LC(2),LCRHS(2),RS(12),RSRHS(12),        MN
     1 ISTIFF(2),RSTIFF(2),HSTIFF(2),K(2),V(2),VINIT(2),CONFG(100),     MN
     2 SHAPE(100),COST(100),TIME(100),RONMBR(100),DROTTL(100),NO(100),  MN
     3 DROTL1(100),DROTL2(100),DROTL3(100),DROTL4(100),DRO1AL(100),     MN
     4 DRO1AR(100),DRO3AL(100),DRO3AR(100),RHOT1A(2),RHOT2A(2),RHOT3A(2)MN
     5,RHOT1L(2),RHOT1R(2),RHOT3L(2),RHOT3R(2),TIMNO(100),CSTNO(100),   MN
     6 WT(4),ALPH(3),INEOC(2),INEOS(2),T1I(2),T1E(2),T2I(2),T2E(2),     MN
     7 T3I(2),T3E(2),RATIO(2),HTC(2),HTS(2),T1DS(2),T2DS(2),T3DC(2),    MN
     8 T2IPRM(2),T3IPRM(2),T1A(2),T2A(2),T3A(2),F(3),YPSTRS(3),SF(3),   MN
     9 C(3),EL(3),RHO(2),ANEAL(3),TREXT(2),TRINT(2),FORM(2),T1IPRM(2)   MN
     1 ,T3EX(2),DELT1A(2),DELT2A(2),DELT3A(2)                           MN
      IF (CONFIG.EQ.13.OR.CONFIG.EQ.7) GO TO 25                         MN
      BLKCST(4)=0.0                                                     MN
      CALL XSPACE                                                       MN
      METAL=0
    5 METAL=METAL+1
C        RESET                                                          MN
      BLKCST(5)=0.                                                      MN
      BLKCST(6)=0.                                                      MN
C        RESET STIFFENER VARIABLES                                      MN
      DO 15 I=1,2                                                       MN
      VINIT(I)=0.                                                       MN
      V(I)=0.                                                           MN
      ISTIFF(I)=0.                                                      MN
      HSTIFF(I)=0.                                                      MN
   15 RSTIFF(I)=0.                                                      MN
      BLKCST(7)=0.                                                      MN
      CALL FORMS                                                        MN
```

```
      CALL EXACT                                                        MN
   20 IF (METAL.LT.3) GO TO 5
      GO TO 30                                                          MN
   25 INFOS(1)=0                                                        MN
      ERMCST=0.
      ERMTIM=0.
      CALL STORE                                                        MN
   30 RETURN                                                            MN
      END                                                               MN
```

5. X SPACE


```
      SUBROUTINE XSPACE                                                 XS
      REAL LC,L                                                         XS
      INTEGER CONFIG,SHAP,WORK,BOXTP                                    XS
      COMMON CONFIG,SHAP,WORK,WNCR,DELNCR,BLKCST,P,Q,B,RF,LF,DNCRX,     XS
     1 WNCRX,DLR3X,IB,IBA,ABMNLF,DELR1,DELR2,DELR3,DELLF,DNCR,DELWCR    XS
     2 ,DLDNCR,LINES                                                    XS
      COMMON /C/ RC,LC,LCRHS,WFLC                                       XS
      COMMON /SPH/ RS,RSRHS,WFLS                                        XS
      COMMON /STIFF/ ISTIFF,BSTIFF,HSTIFF,F,D,G,K,THK2,V,VINIT          XS
      COMMON/WNDW /WD,THICKW,WNDCST,WNDTIM,SHEETS,RHOTW,RHOWND          XS
      COMMON /XSPC/ H1,H2,V1,V2,DELH1,DELH2,DELV1,DELV2,BOXTP,BOXHT,    XS
     1 SPLHT                                                            XS
      COMMON /STR/ CONFG,SHAPE,COST,TIME,MAXALT,RONMBR,DROTTL,NO,DROTL1,XS
     1 DROTL2,DROTL3,DROTL4,DRO1AL,DRO1AR,DRO3AL,DRO3AR,RHOT1A,RHOT2A,  XS
     2 RHOT3A,RHOT1L,RHOT1R,RHOT3L,RHOT3R,TIMNO,CSTNO                   XS
     3 ,FSKCST,FSKTIM                                                   XS
      COMMON /NPT/ WT,NTNSTY,ALINT,ALPH                                 XS
      COMMON /XCT/ INEQC,INEQS,T1I,T1E,T2I,T2E,T3I,T3E,RATIO,HTC,HTS,   XS
     1 T1DS,T2DS,T3DC,T1IPRM,T2IPRM,T3IPRM,T1A,T2A,T3A,DELT1A,DELT2A,   XS
     2 DELT3A,T3EX                                                      XS
      COMMON /MTL/ METAL,E,YPSTRS,SF,C,EL,RHO,ANEAL,DCRIT               XS
      COMMON /FRM/ FRMCST,FRMTIM,TREXT,TRINT,FORM                       XS
      DIMENSION BLKCST(7),RC(2),LC(2),LCRHS(2),RS(12),RSRHS(12),        XS
     1 ISTIFF(2),BSTIFF(2),HSTIFF(2),K(2),V(2),VINIT(2),CONFG(100),     XS
     2 SHAPE(100),COST(100),TIME(100),RONMBR(100),DROTTL(100),NO(100),  XS
     3 DROTL1(100),DROTL2(100),DROTL3(100),DROTL4(100),DRO1AL(100),     XS
     4 DRO1AR(100),DRO3AL(100),DRO3AR(100),RHOT1A(2),RHOT2A(2),RHOT3A(2)XS
     5,RHOT1L(2),RHOT1R(2),RHOT3L(2),RHOT3R(2),TIMNO(100),CSTNO(100),   XS
     6 WT(4),ALPH(3),INEQC(2),INEQS(2),T1I(2),T1E(2),T2I(2),T2E(2),     XS
     7 T3I(2),T3E(2),RATIO(2),HTC(2),HTS(2),T1DS(2),T2DS(2),T3DC(2),    XS
     8 T2IPRM(2),T3IPRM(2),T1A(2),T2A(2),T3A(2),E(3),YPSTRS(3),SF(3),   XS
     9 C(3),EL(3),RHO(3),ANEAL(3),TREXT(2),TRINT(2),FORM(2),T1IPRM(2)   XS
     1 ,T3EX(2),DELT1A(2),DELT2A(2),DELT3A(2)                           XS
      GO TO (10,10,10,10,20,20,25,30,35,35,35,35,45),CONFIG             XS
C        CONFG1  2  3  4  5  6  7  8  9 10 11 12 13                     XS
   10 DELH1=H1-DELNCR-LC(SHAP)/2.-RC(SHAP)                              XS
C        WRITE LATER                                                    XS
   15 IF(DELH1.LT.0.) BLKCST(4)=10.                                     XS
      GO TO 50                                                          XS
   20 DELH1=H1-RC(SHAP)-DELNCR-WFLC/2.                                  XS
      GO TO 15                                                          XS
   25 DELH1=H1-DELNCR-WFLC/2.                                           XS
      GO TO 50                                                          XS
   30 DELH1=H1-RS(WORK)-DELNCR                                          XS
      GO TO 15                                                          XS
   35 IF (WORK.GT.4) GO TO 40                                           XS
      IF (DELNCR.GE.(WNCR/2.)) GO TO 40                                 XS
      DELH1=H1-RS(WORK)-DELNCR-WFLS/2.                                  XS
      GO TO 15                                                          XS
   40 DELH1=H1-RS(WORK)-WNCR/2.                                         XS
      GO TO 15                                                          XS
```

```
   45 DELH1=H1-DNCR-WFLS/2.                                              XS
   50 GO TO (55,65,75,95,85,90,90,100,105,115,110,130,125),CONFIG        XS
C        CONFG1  2  3  4  5  6  7   8   9  10  11  12  13                XS
   55 DELH2=H2+DELNCR-LC(SHAP)/2.-RC(SHAP)                               XS
   60 IF (DELH2.LT.0.) BLKCST(4)=BLKCST(4)+10.                           XS
      GO TO 135                                                          XS
   65 IF ((RC(SHAP)/2.).GT.(Q+DELNCR)) GO TO 70                          XS
      DELH2=H2-WFLC-RC(SHAP)+WNCR/2.                                     XS
      GO TO 60                                                           XS
   70 DELH2=H2-(RC(SHAP)-WNCR)/2.+Q+DELNCR-WFLC-RC(SHAP)                 XS
      GO TO 60                                                           XS
   75 IF ((RC(SHAP)/2.).GT.(Q+DELNCR)) GO TO 80                          XS
      DELH2=H2-WFLC+WNCR/2.                                              XS
      GO TO 60                                                           XS
   80 DELH2=H2-WFLC+Q+DELNCR-(RC(SHAP)-WNCR)/2.                          XS
      GO TO 60                                                           XS
   85 DELH2=H2-WFLC/2.+DELNCR-RC(SHAP)                                   XS
      GO TO 135                                                          XS
   90 DELH2=H2-WFLC/2.+DELNCR                                            XS
      GO TO 135                                                          XS
   95 DELH2=H2-      RC(SHAP)-Q+DELNCR-WFLC/2.                           XS
      GO TO 60                                                           XS
C        SPHERES FOLLOW                                                  XS
  100 DELH2=H2+DELNCR-RS(WORK)                                           XS
      GO TO 60                                                           XS
  105 IF (DELNCR.GE.(WNCR/2.)) GO TO 110                                 XS
      RSRHS(WORK)=RS(WORK)                                               XS
      DELH2=H2-WFLS/2.+DELNCR-RSRHS(WORK)                                XS
      GO TO 60                                                           XS
  110 DELH2=H2-WFLS+WNCR/2.-RSRHS(WORK)                                  XS
      GO TO 60                                                           XS
  115 IF (WORK.GT.4) GO TO 120                                           XS
C        NO SHIFT                                                        XS
      GO TO 125                                                          XS
  120 DELH2=H2+WNCR/2.-WFLS                                              XS
      GO TO 135                                                          XS
  125 DELH2=H2-WFLS/2.+DELNCR                                            XS
      GO TO 60                                                           XS
  130 DELH2=H2-WNCR/2.-RSRHS(WORK)                                       XS
      GO TO 60                                                           XS
C        CHECK V1 AND V2                                                 XS
  135 IF (CONFIG.EQ.8) GO TO 140                                         XS
      IF (CONFIG.GT.1) GO TO 145                                         XS
      DELV1=V1-RC(SHAP)                                                  XS
      DELV2=V2-RC(SHAP)                                                  XS
      GO TO 168                                                          XS
  140 DELV1=V1-RS(WORK)                                                  XS
      DELV2=V2-RS(WORK)                                                  XS
      GO TO 168                                                          XS
  145 IF (CONFIG.GT.8) GO TO 155                                         XS
C        CYL ANALYSIS                                                    XS
      BOXHT=2.8*RC(SHAP)                                                 XS
```

```
150 SPLHT=BOXHT+4.                                                    XS
    GO TO 160                                                         XS
155 BOXHT=2.8*RS(WORK)                                                XS
    GO TO 150                                                         XS
160 IF ((2.*AMIN1(V1,V2)).GE.SPLHT) GO TO 165                         XS
    BOXTP=1                                                           XS
C      TYPE 1 IS BOX, TYPE 2 IS SPOOL                                 XS
    DELV1=V1-BOXHT/2.                                                 XS
    DELV2=V2-BOXHT/2.                                                 XS
    GO TO 170                                                         XS
165 BOXTP=2                                                           XS
    BOXHT=SPLHT                                                       XS
    DELV1=V1-SPLHT/2.                                                 XS
    DELV2=V2-SPLHT/2.                                                 XS
    GO TO 175                                                         XS
168 BOXTP=3                                                           XS
    BOXHT=0.                                                          XS
170 IF (DELV1.LT.0.) BLKCST(4)=BLKCST(4)+10.                          XS
    IF (DELV2.LT.0.) BLKCST(4)=BLKCST(4)+10.                          XS
175 RETURN                                                            XS
    END                                                               XS
```

6. FORMS


```
      SUBROUTINE FORMS                                                  F
      INTEGER CONFIG,SHAP,WORK,FORM                                     F
      REAL MNDTIM,MNDCST,LBRTIM,LBRCST                                  F
      COMMON CONFIG,SHAP,WORK,WNCR,DELNCR,BLKCST,P,Q,B,RF,LF,DNCRX,     F
     1 WNCRX,DLR3X,IB,IBA,ABMNLF,DELR1,DELR2,DELR3,DELLF,DNCR,DELWCR    F
     2 ,DLDNCR,LINES                                                    F
      COMMON /C/ RC,LC,LCRHS,WFLC                                       F
      COMMON /SPH/ RS,RSRHS,WFLS                                        F
      COMMON /STIFF/ ISTIFF,BSTIFF,HSTIFF,F,D,G,K,THK2,V,VINIT          F
      COMMON/WNDW /WD,THICKW,WNDCST,WNDTIM,SHEETS,RHOTW,RHOWND          F
      COMMON /XSPC/ H1,H2,V1,V2,DELH1,DELH2,DELV1,DELV2,BOXTP,BOXHT,    F
     1 SPLHT                                                            F
      COMMON /STR/ CONFG,SHAPE,COST,TIME,MAXALT,RONMBR,DROTTL,NO,DROTL1,F
     1 DROTL2,DROTL3,DROTL4,DRO1AL,DRO1AR,DRO3AL,DRO3AR,RHOT1A,RHOT2A,  F
     2 RHOT3A,RHOT1L,RHOT1R,RHOT3L,RHOT3R,TIMNO,CSTNO                   F
     3 ,FSKCST,FSKTIM                                                   F
      COMMON /NPT/ WT,NTNSTY,ALTNT,ALPH                                 F
      COMMON /XCT/ INEQC,INEQS,T1I,T1E,T2I,T2E,T3I,T3E,RATIO,HTC,HTS,   F
     1 T1DS,T2DS,T3DC,T1IPRM,T2IPRM,T3IPRM,T1A,T2A,T3A,DELT1A,DELT2A,   F
     2 DELT3A,T3EX                                                      F
      COMMON /MTL/ METAL,E,YPSTRS,SF,C,EL,RHO,ANEAL,DCRIT               F
      COMMON /FRM/ FRMCST,FRMTIM,TREXT,TRINT,FORM                       F
      DIMENSION BLKCST(7),RC(2),LC(2),LCRHS(2),RS(12),RSRHS(12),        F
     1 ISTIFF(2),BSTIFF(2),HSTIFF(2),K(2),V(2),VINIT(2),CONFG(100),     F
     2 SHAPE(100),COST(100),TIME(100),RONMBR(100),DROTTL(100),NO(100),  F
     3 DROTL1(100),DROTL2(100),DROTL3(100),DROTL4(100),DRO1AL(100),     F
     4 DRO1AR(100),DRO3AL(100),DRO3AR(100),RHOT1A(2),RHOT2A(2),RHOT3A(2)F
     5,RHOT1L(2),RHOT1R(2),RHOT3L(2),RHOT3R(2),TIMNO(100),CSTNO(100),   F
     6 WT(4),ALPH(3),INEQC(2),INEQS(2),T1I(2),T1E(2),T2I(2),T2E(2),     F
     7 T3I(2),T3E(2),RATIO(2),HTC(2),HTS(2),T1DS(2),T2DS(2),T3DC(2),    F
     8 T2IPRM(2),T3IPRM(2),T1A(2),T2A(2),T3A(2),E(3),YPSTRS(3),SF(3),   F
     9 C(3),EL(3),RHO(3),ANEAL(3),TREXT(2),TRINT(2),FORM(2),T1IPRM(2)   F
     1 ,T3EX(2),DELT1A(2),DELT2A(2),DELT3A(2)                           F
      DIMENSION TR(2)                                                   F
      IF (CONFIG.LT.11) GO TO 5                                         F
C        N= NUMBER OF DIFFERENT HEMISHERES                              F
      N=2                                                               F
      GO TO 10                                                          F
    5 N=1                                                               F
   10 DO 100 I=1,N                                                      F
   15 X=75.*SF(METAL)/YPSTRS(METAL)                                     F
      Y=SQRT(81.967/E(METAL))                                           F
      IF (CONFIG.GE.8) GO TO 20                                         F
      R=RC(SHAP)                                                        F
      GO TO 25                                                          F
   20 IF (I.EQ.1) R=RS(WORK)                                            F
      IF (I.EQ.2) R=RSRHS(WORK)                                         F
   25 TREXT(I)=Y*R                                                      F
      TRINT(I)=X*R                                                      F
      TR(I)=AMAX1(TREXT(I),TRINT(I))                                    F
      IF ((EL(METAL)).GT.0.1) GO TO 40                                  F
```

```
C        BERYLIUM NECESSARY -
      IF (R.GE.8.) GO TO 30
      FRMCST=AINT(383.34*R-266.69+0.5)
      FRMTIM=AINT(0.667+7.170*R)
      GO TO 35
   30 FRMCST=AINT(1300.*R+0.5)-7600.
      FRMTIM=AINT(10.5*R)-26.
   35 FORM(I)=1
C        MACHINED
      GO TO 75
   40 IF (TR(I).GT.0.02) GO TO 65
   45 FORM(I)=3
C        DRAW
      DRWCST=5.
      DRWTIM=.5
      IF (R.GE.2.) GO TO 50
      MNDCST=25.
      MNDTIM=2.5
      STPCST=30.
      STPTIM=3.
      DSTCST=75.
      DSTTIM=7.5
      GO TO 60
   50 STPCST=20.
      STPTIM=2.
      IF (R.GT.4.) GO TO 55
      MNDCST=-10.+AINT(17.5*R+0.5)
      MNDTIM=AINT(1.250*R)
      DSTCST=-50.+AINT(62.50*R+.5)
      DSTTIM=0.1*DSTCST
      GO TO 60
   55 MNDCST=-80.+AINT(35.0*R+.5)
      MNDTIM=-4.+AINT(2.250*R)
      DSTCST=-225.+AINT(106.25*R+.5)
      DSTTIM=-20.+AINT(10.*R)
   60 FRMCST=DRWCST+MNDCST+STPCST+DSTCST
      FRMTIM=DRWTIM+MNDTIM+STPTIM+DSTTIM
      GO TO 75
   65 IF ((2.*R).GT.DCRIT) GO TO 70
      GO TO 45
C        SPIN
   70 SPNCST=60.
      SPNTIM=6.
      FNHCST=20.
      FNHTIM=2.
      MNDCST=-500.+AINT(87.50*R)
      MNDTIM=-8.+AINT(2.750*R)
      LBRCST=AINT(5.0*R)
      LBRTIM=0.1*LBRCST
      FORM(I)=2
      FRMCST=SPNCST+LBRCST+FNHCST+MNDCST
      FRMTIM=SPNTIM+LBRTIM+FNHTIM+MNDTIM
```

```
   75 GO TO (80,90),N                                                    F
   80 GO TO (85,85,105,85,85,105,105,85,85,105),CONFIG                   F
C        CONFG1  2   3  4  5   6   7  8  9  10                           F
   85 L=FORM(I)                                                          F
      GO TO (86,87,88),L                                                 F
   86 FRMCST=FRMCST+FRMCST                                               F
      FRMTIM=FRMTIM+FRMTIM                                               F
      GO TO 105                                                          F
   87 FRMCST=2.*FRMCST-MNDCST                                            F
      FRMTIM=2.*FRMTIM-MNDTIM                                            F
      GO TO 105                                                          F
   88 FRMCST=FRMCST+DRWCST+STPCST                                        F
      FRMTIM=FRMTIM+DRWTIM+STPTIM                                        F
      GO TO 105                                                          F
   90 IF (I.EQ.1) GO TO 95                                               F
      FRMCST=FRMCST+HOLDC                                                F
      FRMTIM=FRMTIM+HOLDT                                                F
      GO TO 105                                                          F
   95 HOLDC=FRMCST                                                       F
C        SAVE LHS COST AND TIME                                           F
      HOLDT=FRMTIM                                                       F
  100 CONTINUE                                                           F
  105 RETURN                                                             F
      END                                                                F
```

7. EXACT


```
2878 MITROFF - DEBUG                                                    DATE   1
     EXCTA  - FFN     - -      SOURCE STATEMENT      - -                IFN

      SUBROUTINE EXACT                                                  EX
C        NUMBER 3 GENERALLY REFERS TO CYLINDERS                         EX
C        NUMBERS 1 AND 2 GENERALLY REFER TO SPHERES                     EX
C        SUBSCRIPT I IS USED TO DISTINGUISH RHS,LHS SPHERES             EX
C        SUBSCRIPT J IS USED TO DISTINGUISH RHS,LHS CYLINDERS           EX
      INTEGER RTRN,HOLD,PASS,CONFIG,FORM,HTS,HTC,WORK,SHAP              EX
      REAL NTNSTY,LC,LCRHS                                              EX
      COMMON CONFIG,SHAP,WORK,WNCR,DELNCR,BLKCST,P,Q,B,RF,LF,DNCRX,     EX
     1 WNCRX,DLR3X,IB,IBA,ABMNLF,DELR1,DELR2,DELR3,DELLF,DNCR,DELWCR    EX
     2 ,OLDNCR,LINES                                                    EX
      COMMON /C/ RC,LC,LCRHS,WFLC                                       EX
      COMMON /SPH/ RS,RSRHS,WFLS                                        EX
      COMMON /STIFF/ ISTIFF,BSTIFF,HSTIFF,F,D,G,K,THK2,V,VINIT          EX
      COMMON/WNDW /WD,THICKW,WNDCST,WNDTIM,SHEETS,RHOTW,RHOWND          EX
      COMMON /XSPC/ H1,H2,V1,V2,DELH1,DELH2,DELV1,DELV2,BOXTP,BOXHT,    EX
     1 SPLHT                                                            EX
      COMMON /STR/ CONFG,SHAPE,COST,TIME,MAXALT,RONMBR,DROTTL,ND,DROTL1,EX
     1 DROTL2,DROTL3,DROTL4,DRO1AL,DRO1AR,DRO3AL,DRO3AR,RHOT1A,RHOT2A,  EX
     2 RHOT3A,RHOT1L,RHOT1R,RHOT3L,RHOT3R,TIMND,CSTND                   EX
     3 ,ESKCST,ESKTIM                                                   EX
      COMMON /NPT/ WT,NTNSTY,ALINT,ALPH                                 EX
      COMMON /XCT/ INEQC,INEQS,T1I,T1E,T2I,T2E,T3I,T3E,RATIO,HTC,HTS,   EX
     1 T1DS,T2DS,T3DC,T1IPM ,T2IPM ,T3IPM ,T1A,T2A,T3A,DELT1A,DELT2A,   EX
     2 DELT3A,T3EX                                                      EX
      COMMON /MTL/ METAL,E,YPSTRS,SF,C,EL,RHO,ANEAL,DCRIT               EX
      COMMON /FRM/ FRMCST,FRMTIM,TREXT,TRINT,FORM                       EX
      DIMENSION BLKCST(7),RC(2),LC(2),LCRHS(2),RS(12),RSRHS(12),        EX
     1 ISTIFF(2),BSTIFF(2),HSTIFF(2),K(2),V(2),VINIT(2),CONFG(100),     EX
     2 SHAPE(100),COST(100),TIME(100),RONMBR(100),DROTTL(100),ND(100),  EX
     3 DROTL1(100),DROTL2(100),DROTL3(100),DROTL4(100),DRO1AL(100),     EX
     4 DRO1AR(100),DRO3AL(100),DRO3AR(100),RHOT1A(2),RHOT2A(2),RHOT3A(2)EX
     5,RHOT1L(2),RHOT1R(2),RHOT3L(2),RHOT3R(2),TIMND(100),CSTND(100),   EX
     6 WT(4),ALPH(3),INEQC(2),INEQS(2),T1I(2),T1E(2),T2I(2),T2E(2),     EX
     7 T3I(2),T3E(2),RATIO(2),HTC(2),HTS(2),T1DS(2),T2DS(2),T3DC(2),    EX
     8 T2IPM(2) ,T3IPM(2), T1A(2),T2A(2),T3A(2),E(3),YPSTRS(3),SF(3),   EX
     9 C(3),EL(3),RHO(3),ANEAL(3),TREXT(2),TRINT(2),FORM(2),T1IPM(2)    EX
     1 ,T3EX(2),DELT1A(2),DELT2A(2),DELT3A(2)                           EX
      PASS=1                                                            EX
      IF (CONFIG.EQ.4) GO TO 5                                          EX
      IF (CONFIG.LE.10) GO TO 10                                        EX
C        TWO HEMISPHERES FOR CONFIG 11 12                               EX
      N=2                                                               EX
      GO TO 15                                                          EX
    5 TRINT(2)=TRINT(1)                                                 EX
      TREXT(2)=TREXT(1)                                                 EX
      FORM(2)=FORM(1)                                                   EX
      N=2                                                               EX
      GO TO 15                                                          EX
   10 N=1                                                               EX
C        COMPUTE SPHERE THICKNESSES                                     EX
   15 DO 35 I=1,N                                                       EX
```

```
      T1ALLW=RHOT1A(I)/RHO(METAL)/2.54                                  E
      T1A(I)=T1ALLW                                                     E
      LL=FORM(I)                                                        E
      GO TO (20,25,30),LL                                               E
   20 T1I(I) = TRINT(I)*NTNSTY                                          E
C        FORM 1 (MACHINE)                                               E
      T1E(I) = TREXT(I)                                                 E
      T2I(I) = T1I(I)                                                   E
      T2E(I) = T1E(I)                                                   E
      T2ALLW=T1ALLW                                                     E
      GO TO 35                                                          E
C        FORM 2 (SPIN)                                                  E
   25 T2I(I) = TRINT(I)*NTNSTY                                          E
      T2E(I) = TREXT(I)                                                 E
      T1I(I) = 1.3*T2I(I)                                               E
      T1E(I) = 1.3*T2E(I)                                               E
      T2ALLW=T1ALLW/1.3                                                 E
      GO TO 35                                                          E
C        FORM 3 (DRAW)                                                  E
   30 T1I(I)=TRINT(I)*NTNSTY                                            E
      T1E(I)=TREXT(I)                                                   E
      T2I(I)=T1I(I)/0.85                                                E
      T2E(I)=T1E(I)/0.85                                                E
      T2ALLW=T1ALLW/0.85                                                E
   35 T2A(I)=T2ALLW                                                     E
      IF (CONFIG.GT.4) GO TO 355                                        E
C        CYLINDER ANALYSIS IS NECESSARY                                 E
      IF (CONFIG.EQ.4) GO TO 40                                         E
      M=1                                                               E
      GO TO 44                                                          E
   40 M=2                                                               E
      N=1                                                               E
   44 J=1                                                               E
      K(1)=0                                                            E
      K(2)=0                                                            E
      BLKCST(5)=0.                                                      E
      BLKCST(6)=0.                                                      E
C        TWO CYLINDERS / DCFCD CONFIG                                   E
   45 X=C(METAL)*RC(SHAP)**.6                                           E
      IF (J.EQ.1) GO TO 50                                              E
      T3E(J)=X*LCRHS(SHAP)**.4                                          E
      GO TO 55                                                          E
   50 T3E(J)=X*LC(SHAP)**.4                                             E
   55 T3I(J)=2.*TRINT(J)*NTNSTY                                         E
      T3EX(J)=T3E(J)                                                    E
      RATIO(J)=T2I(J)/T3I(J)                                            E
      IF (RATIO(J).GE.0.63.AND.RATIO(J).LE.4.) GO TO 60                 E
C        RATIO IS TOO SMALL FOR EXACT ANALYSIS                          E
      BLKCST(5)=BLKCST(5)+10.                                           E
   60 T3IPRM=T3I(J)*YPSTRS(METAL)/ANEAL(METAL)                          E
      T3IPM(J)=T3IPRM                                                   E
C        EXACT ANALYSIS                                                 E
```

```
      T3ALLW=RHOT3A(J)/RHO(METAL)/2.54                                  EX
      T3A(J)=T3ALLW                                                     EX
      HTC(J)=1                                                          EX
      IF (T3ALLW - T3E(J)) 155,130,65                                   EX
   65 IF (T3ALLW .GT.T3I(J)) GO TO 80                                   EX
      T3DC(J)=T3I(J)                                                    EX
      BLKCST(5)=BLKCST(5)+10.                                           EX
      INEQC(J)=1                                                        EX
C        T3I.GE.T3A.GT.T3E                                              EX
      ASSIGN 75 TO RTRN                                                 EX
      GO TO 350                                                         EX
   75 T3DC(J)=T3IPRM                                                    EX
      INEQC(J)=2                                                        EX
      BLKCST(5)=BLKCST(5)+10.                                           EX
      HTC(J)=2                                                          EX
C        T3IPRM.GT.T3A.GT.T3E                                           EX
      GO TO 110                                                         EX
   80 IF (T3E(J).GE.T3I(J)) GO TO 95                                    EX
      INEQC(J)=3                                                        EX
      T3DC(J)=T3I(J)                                                    EX
C        T3A.GT.T3I.GT.T3E                                              EX
      ASSIGN 85 TO RTRN                                                 EX
      GO TO 350                                                         EX
   85 T3DC(J)=T3IPRM                                                    EX
      HTC(J)=2                                                          EX
      IF (T3ALLW.GE.T3IPRM) GO TO 90                                    EX
      INEQC(J)=4                                                        EX
C        T3IPRM.GT.T3A.GT.T3E                                           EX
      BLKCST(5)=BLKCST(5)+10.                                           EX
      GO TO 110                                                         EX
   90 INEQC(J)=5                                                        EX
C        T3A.GE.T3IPRM.GT.T3E                                           EX
      GO TO 110
   95 INEQC(J)=6                                                        EX
      HTC(J)=1                                                          EX
      T3DC(J)=T3E(J)                                                    EX
C        T3A.GT.T3E.GE.T3I                                              EX
      ASSIGN 100 TO RTRN                                                EX
      GO TO 350                                                         EX
  100 HTC(J)=2                                                          EX
      IF (T3IPRM-T3ALLW) 120,115,105                                    EX
  105 INEQC(J)=7                                                        EX
      BLKCST(5)=BLKCST(5)+10.                                           EX
C        T3IPRM.GT.T3A.GT.T3E                                           EX
  108 T3DC(J)=T3IPRM                                                    EX
  110 ASSIGN 555 TO RTRN                                                E
      GO TO 350                                                         E
  115 INEQC(J)=8                                                        E
C        T3A.EQ.T3IPRM.GT.T3E                                           E
      T3DC(J)=T3ALLW                                                    E
      GO TO 110                                                         E
  120 IF(T3IPRM.GE.T3E(J)) GO TO 125                                    E
```

```
      INEQC(J)=9                                                        E
C        T3A.GT.T3E.GT.T3IPRM                                           E
      T3DC(J)=T3E(J)                                                    E
      GO TO 110                                                         E
  125 INEQC(J)=10                                                       E
C        T3A.GT.T3IPRM.GE.T3E                                           E
      GO TO 108                                                         E
  130 IF (T3E(J).GT.T3I(J)) GO TO 140                                   E
      INEQC(J)=11                                                       E
      ASSIGN 135 TO RTRN                                                E
C        T3I.GE.T3E.EQ.T3A                                              E
      T3DC(J)=T3I(J)                                                    E
      IF (T3I(J).GT.T3E(J)) BLKCST(5)=BLKCST(5)+10.                     E
      GO TO 350                                                         E
  135 INEQC(J)=12                                                       E
      BLKCST(5)=BLKCST(5)+10.                                           E
C        T3IPRM.GT.T3E.EQ.T3A                                           E
      HTC(J)=2                                                          E
      GO TO 110                                                         E
  140 T3DC(J)=T3ALLW                                                    E
      INEQC(J)=13                                                       E
C        T3A.EQ.T3E.GT.T3I                                              E
      ASSIGN 145 TO RTRN                                                E
      GO TO 350                                                         E
  145 HTC(J)=2                                                          E
      IF (T3ALLW.GE.T3IPRM) GO TO 150                                   E
      INEQC(J)=14                                                       E
C        T3IPRM.GT.T3A.EQ.T3E                                           E
      BLKCST(5)=BLKCST(5)+10.                                           E
      T3DC(J)=T3IPRM                                                    E
      GO TO 110                                                         E
  150 INEQC(J)=15                                                       E
C        T3A.EQ.T3E.GE.T3IPRM                                           E
      T3DC(J)=T3E(J)                                                    E
      GO TO 110                                                         E
  155 IF (T3E(J).GT.T3I(J)) GO TO 165                                   E
      INEQC(J)=16                                                       E
C        T3I.GE.T3E.GT.T3A                                              E
      T3DC(J)=T3I(J)                                                    E
      BLKCST(5)=BLKCST(5)+10.                                           E
      ASSIGN 160 TO RTRN                                                E
      GO TO 350                                                         E
  160 INEQC(J)=17                                                       E
C        T3IPRM.GT.T3E.GT.T3A                                           E
      T3DC(J)=T3IPRM                                                    E
      HTC(J)=2                                                          E
      BLKCST(5)=BLKCST(5)+10.                                           E
      GO TO 110                                                         E
C        T3E.GT.T3A/CHECK STIFFENERS                                    E
  165 D=2.*RC(SHAP)                                                     E
      T3EX(J)=T3E(J)                                                    E
      THK2=T3E(J)                                                       E
```

```
2878 MITROFF - DEBUG                                                    DATE    1
     EXCTA   - EFN      - -      SOURCE STATEMENT      - -              IFN

      F=LC(SHAP)/E(METAL)                                                EX
      G=2.73*F**0.4*D**0.6                                               EX
      K(J)=0                                                             EX
      IF (T3I(J).LT.T3ALLW) GO TO 220                                    EX
C        T3E.GT.T3I.GE.T3A                                               EX
      BLKCST(5)=BLKCST(5)+10.                                            EX
      HTC(J)=2                                                           EX
      IF (T3IPRM.GE.T3E(J)) GO TO 170                                    EX
C        T3E.GT.T3IPRM.GE.T3A                                            EX
 1665 THK1=T3E(J)
 1670 K(J)=K(J)+1
      THK1=THK2
      CALL STE(J)
      IF (THK2-T3IPRM) 1675,1680,1690
 1675 INFQC(J)=53
C        THK1.GT.T3IPRM.GE.T3A
      T3DC(J)=THK1
      K(J)=K(J)-1
      GO TO 169
 1680 INFQC(J)=52
C        THK2=T3IPRM.GE.T3A
 1685 T3DC(J)=THK2
      THK1=THK2
      GO TO 169
 1690 IF (K(J).LE.10) GO TO 1670
      INFQC(J)=51
C        THK2.GT.T3IPRM.GE.T3A
      GO TO 1685
  169 ASSIGN 175 TO RTRN                                                 EX
      GO TO 350                                                          EX
  170 INFQC(J)=18                                                        EX
C        T3IPRM.GE.T3E.GT.T3A                                            EX
      T3DC(J)=T3IPRM                                                     EX
      ASSIGN 175 TO RTRN                                                 EX
      GO TO 350                                                          EX
  175 K(J)=0
      THK2=T3E(J)
  176 K(J)=K(J)+1
      THK1=THK2                                                          EX
      CALL STE(J)                                                        EX
      IF (THK2-T3I(J)) 200,205,215                                       EX
  200 T3DC(J)=THK1                                                       EX
      K(J)=K(J)-1                                                        EX
      INFQC(J)=20                                                        EX
C        THK1.GT.T3I.GE.T3A                                              EX
  202 HTC(J)=1                                                           EX
      GO TO 110                                                          EX
  205 INFQC(J)=21                                                        EX
C        THK2=T3I.GE.T3A                                                 EX
  210 T3DC(J)=THK2                                                       EX
      GO TO 202                                                          EX
  215 IF (K(J).LE.10) GO TO 176                                          EX
```

```
      INEQC(J)=22                                                       EX
C        THK2.GT.T3T.GE.T3A                                             EX
      GO TO 210                                                         EX
  220 IF (T3ALLW.LT.T3IPRM) GO TO 300                                   EX
C        T3E.GT.T3A.GE.T3IPRM                                           EX
  225 K(J)=K(J)+1                                                       EX
      THK1=THK2                                                         EX
      CALL STE(J)                                                       EX
  240 IF (THK2-T3ALLW) 265,245,255                                      EX
C        HTC=1                                                          EX
  245 INEQC(J)=26                                                       EX
C        THK2=T3A.GT.T3I                                                EX
      T3DC(J)=THK2                                                      EX
      ASSIGN 250 TO RTRN                                                EX
      GO TO 350                                                         EX
  250 HTC(J)=2                                                          EX
      INEQC(J)=27                                                       EX
C        THK2=T3A.GE.T3IPRM                                             EX
      GO TO 110                                                         EX
  255 IF (K(J).LE.10) GO TO 225                                         EX
      BLKCST(5)=BLKCST(5)+10.                                           EX
      INEQC(J)=28                                                       EX
C        THK2.GT.T3A.GT.T3I                                             EX
      T3DC(J)=THK2                                                      EX
      ASSIGN 260 TO RTRN                                                EX
      GO TO 350                                                         EX
  260 INEQC(J)=29                                                       EX
C        THK2.GT.T3A.GE.T3IPRM                                          EX
      HTC(J)=2                                                          EX
      GO TO 110                                                         EX
  265 IF (THK2.GE.T3IPRM) GO TO 275                                     EX
      BLKCST(5)=BLKCST(5)+10.                                           EX
      K(J)=K(J)-1                                                       EX
      INEQC(J)=30                                                       EX
C        THK1.GT.T3A.GT.T3I                                             EX
      T3DC(J)=THK1                                                      EX
      ASSIGN 270 TO RTRN                                                EX
      GO TO 350                                                         EX
  270 INEQC(J)=31                                                       EX
C        THK1.GT.T3A.GE.T3IPRM                                          EX
      HTC(J)=2                                                          EX
      GO TO 110                                                         EX
  275 INEQC(J)=32                                                       EX
C        T3A.GT.THK2.GT.T3I                                             EX
      T3DC(J)=THK2                                                      EX
      ASSIGN 280 TO RTRN                                                EX
      GO TO 350                                                         EX
  280 INEQC(J)=33                                                       EX
C        T3A.GT.THK2.GE.T3IPRM                                          EX
      HTC(J)=2                                                          EX
      GO TO 110                                                         EX
  300 HTC(J)=1                                                          EX
```

```
      K(J)=0                                                            EX
  305 K(J)=K(J)+1                                                       EX
      THK1=THK2                                                         EX
      CALL STF(J)                                                       EX
      IF (THK2-T3ALLW) 340,320,335                                      EX
  320 INEQC(J)=36                                                       EX
C        THK2=T3A.GT.T3I                                                EX
      GO TO 110                                                         EX
  325 T3DC(J)=THK2                                                      EX
  330 BLKCST(5)=BLKCST(5)-10.                                           EX
      ASSIGN 3450 TO RTRN                                               EX
      GO TO 350                                                         EX
 3450 HTC(J)=2                                                          EX
      BLKCST(5)=BLKCST(5)+10.                                           EX
      K(J)=0
      T3E(J)=T3EX(J)
      IF (T3E(J)-T3IPRM) 3455,3460,3465
 3455 INEQC(J)=39                                                       EX
C        T3IPRM.GT.T3E.GT.T3A                                           EX
      T3DC(J)=T3IPRM                                                    EX
      GO TO 110                                                         EX
 3460 INEQC(J)=40                                                       EX
C        T3IPRM=T3E.GT.T3A                                              EX
      HTC(J)=2                                                          EX
      T3DC(J)=T3E(J)                                                    EX
      GO TO 110                                                         EX
 3465 THK1=T3E(J)                                                       EX
 3470 K(J)=K(J)+1                                                       EX
      THK1=THK2                                                         EX
      CALL STF(J)                                                       EX
      IF (THK2-T3IPRM) 3475,3480,3490                                   EX
 3475 INEQC(J)=43                                                       EX
C        THK1.GT.T3IPRM.GT.T3A                                          EX
      T3DC(J)=THK1                                                      EX
      K(J)=K(J)-1                                                       EX
      GO TO 110                                                         EX
 3480 INEQC(J)=42                                                       EX
C        THK2=T3IPRM.GT.T3A                                             EX
 3485 T3DC(J)=THK2                                                      EX
      THK1=THK2                                                         EX
      GO TO 110                                                         EX
 3490 IF (K(J).LE.10) GO TO 3470                                        EX
      INEQC(J)=41                                                       EX
C        THK2.GT.T3IPRM.GT.T3A                                          EX
      GO TO 3485                                                        EX
  335 IF (K(J).LE.10) GO TO 305                                         EX
      INEQC(J)=35                                                       EX
C        THK2.GT.T3A.GT.T3I                                             EX
      BLKCST(5)=BLKCST(5)+10.                                           EX
      GO TO 325                                                         EX
  340 IF (THK2.GE.T3I(J)) GO TO 345                                     EX
      INEQC(J)=37                                                       EX
```

```
      K(J)=K(J)-1                                                       EX
C        THK1.GT.T3A.GT.T3I                                             EX
      T3DC(J)=THK1                                                      EX
      GO TO 330                                                         EX
  345 INEQC(J)=3R                                                       EX
C        T3A.GT.THK2.GE.T3I                                             EX
      GO TO 325                                                         EX
  350 DELT3A(J)=T3ALLW-T3DC(J)                                          EX
C        SPHERE ANALYSIS FOLLOWS                                        EX
      L=HTC(J)                                                          EX
      I=1                                                               EX
      GO TO 360                                                         EX
  355 IF (N.EQ.2) PASS=1                                                EX
      L=1                                                               EX
      I=1                                                               EX
  360 T2IPRM=T2I(I)*YPSTRS(METAL)/ANEAL(METAL)                          EX
      T1IPRM=T1I(I)*YPSTRS(METAL)/ANEAL(METAL)                          EX
      T2IPM(I)=T2IPRM                                                   EX
      T1IPM(I)=T1IPRM                                                   EX
      IF (T2ALLW-T2E(I)) 475,365,405                                    EX
  365 IF (T2E(I)-T2I(I)) 366,3805,385                                   EX
  366 GO TO (370,380),L                                                 EX
  370 INEQS(I)=1                                                        EX
C        T2I.GT.T2E.EQ.T2A                                              EX
      BLKCST(6)=BLKCST(6)+10.                                           EX
  372 T2DS(I)=T2I(I)                                                    EX
      HTS(I)=1                                                          EX
      GO TO 535                                                         EX
  380 INEQS(I)=2                                                        EX
C        T2IPRM.GT.T2E=T2A                                              EX
      HTS(I)=2                                                          EX
      T2DS(I)=T2IPRM                                                    EX
      BLKCST(6)=BLKCST(6)+10.                                           EX
      GO TO 535                                                         EX
 3805 GO TO (3810,380),L                                                EX
 3810 INEQS(I)=3                                                        EX
C        T2I=T2E=T2A                                                    EX
      GO TO 372                                                         EX
  385 GO TO (390,395),L                                                 EX
  390 INEQS(I)=4                                                        EX
C        T2A=T2E.GT.T2I                                                 EX
      HTS(I)=1                                                          EX
      T2DS(I)=T2E(I)                                                    EX
      GO TO 535                                                         EX
  395 HTS(I)=2                                                          EX
      IF (T2ALLW.LT.T2IPRM) GO TO 400                                   EX
      INEQS(I)=6                                                        EX
C        T2A.EQ.T2E.GE.T2IPRM                                           EX
      T2DS(I)=T2E(I)                                                    EX
      GO TO 535                                                         EX
  400 INEQS(I)=5                                                        EX
C        T2IPRM.GT.T2A =.T2E                                            EX
```

```
      BLKCST(5)=BLKCST(5)+10.                                           EX
      T2DS(I)=T2IPRM                                                    EX
      GO TO 535                                                         EX
  405 IF (T2ALLW-T2I(I)) 4050,4150,420                                  EX
 4050 GO TO (410,415),L                                                 EX
  410 INEQS(I)=7                                                        EX
C        T2I.GT.T2A.GT.T2E                                              EX
      BLKCST(5)=BLKCST(5)+10.                                           EX
  412 T2DS(I)=T2I(I)                                                    EX
      HTS(I)=1                                                          EX
      GO TO 535                                                         EX
 4150 GO TO (4155,415),L                                                EX
 4155 INEQS(I)=9                                                        EX
C        T2I=T2A.GT.T2E                                                 EX
      GO TO 412                                                         EX
  415 HTS(I)=2                                                          EX
      INEQS(I)=8                                                        EX
C        T2IPRM.GT.T2A.GT.T2E                                           EX
      T2DS(I)=T2IPRM                                                    EX
      BLKCST(5)=BLKCST(5)+10.                                           EX
      GO TO 535                                                         EX
  420 IF (T2E(I).LT.T2I(I)) GO TO 455                                   EX
      GO TO (425,430),L                                                 EX
  425 INEQS(I)=10                                                       EX
C        T2A.GT.T2E.GE.T2I                                              EX
      HTS(I)=1                                                          EX
      T2DS(I)=T2E(I)                                                    EX
      GO TO 535                                                         EX
  430 HTS(I)=2                                                          EX
      IF (T2IPRM-T2ALLW) 435,445,450                                    EX
  435 IF (T2IPRM.LT.T2E(I)) GO TO 440                                   EX
      INEQS(I)=11                                                       EX
C        T2A.GT.T2IPRM.GE.T2E                                           EX
      T2DS(I)=T2IPRM                                                    EX
      GO TO 535                                                         EX
  440 INEQS(I)=12                                                       EX
C        T2A.GT.T2E.GT.T2IPRM                                           EX
      T2DS(I)=T2E(I)                                                    EX
      GO TO 535                                                         EX
  445 INEQS(I)=13                                                       EX
C        T2A.EQ.T2IPRM.GT.T2E                                           EX
      T2DS(I)=T2IPRM                                                    EX
      GO TO 535                                                         EX
  450 INEQS(I)=14                                                       EX
C        T2IPRM.GT.T2A.GT.T2E                                           EX
      T2DS(I)=T2IPRM                                                    EX
      BLKCST(5)=BLKCST(5)+10.                                           EX
      GO TO 535                                                         EX
  455 GO TO (460,465),L                                                 EX
  460 INEQS(I)=15                                                       EX
      HTS(I)=1                                                          EX
C        T2A.GT.T2I.GT.T2E                                              EX
```

```
      T2DS(I)=T2I(I)                                                    EX
      GO TO 535                                                         EX
  465 HTS(I)=2                                                          EX
      IF (T2ALLW.GE.T2IPRM) GO TO 470                                   EX
      INEQS(I)=16                                                       EX
C        T2IPRM.GT.T2A.GT.T2E                                           EX
      BLKCST(6)=BLKCST(6)+10.                                           EX
      GO TO 472                                                         EX
  470 INEQS(I)=17                                                       EX
C        T2A.GE.T2IPRM.GT.T2E                                           EX
  472 T2DS(I)=T2IPRM                                                    EX
      GO TO 535                                                         EX
  475 BLKCST(6)=BLKCST(6)+10.                                           EX
      IF (T2ALLW.LT.T2I(I)) GO TO 500                                   EX
      GO TO (480,485),L                                                 EX
  480 INEQS(I)=18                                                       EX
C        T2E.GT.T2A.GE.T2I                                              EX
      HTS(I)=1
      T2DS(I)=T2E(I)                                                    EX
      GO TO 535                                                         EX
  485 HTS(I)=2                                                          EX
      IF (T2ALLW.LT.T2IPRM) GO TO 490                                   EX
      INEQS(I)=19                                                       EX
C        T2E.GT.T2A.GE.T2IPRM                                           EX
      T2DS(I)=T2E(I)                                                    EX
      GO TO 535                                                         EX
  490 IF (T2E(I).LT.T2IPRM) GO TO 495                                   EX
      INEQS(I)=20                                                       EX
C        T2E.GE.T2IPRM.GT.T2A                                           EX
      T2DS(I)=T2E(I)                                                    EX
      GO TO 535                                                         EX
  495 INEQS(I)=21                                                       EX
C        T2IPRM.GT.T2E.GT.T2A                                           EX
      T2DS(I)=T2IPRM                                                    EX
      GO TO 532                                                         EX
  500 IF (T2I(I).LT.T2E(I)) GO TO 515                                   EX
      GO TO (505,510),L                                                 EX
  505 HTS(I)=1                                                          EX
      INEQS(I)=22                                                       EX
C        T2I.GE.T2E.GT.T2A                                              EX
      T2DS(I)=T2I(I)                                                    EX
      GO TO 535                                                         EX
  510 INEQS(I)=23                                                       EX
C        T2IPRM.GT.T2E.GT.T2A                                           EX
      HTS(I)=2                                                          EX
      T2DS(I)=T2IPRM                                                    EX
      GO TO 532                                                         EX
  515 GO TO (520,525),L                                                 EX
  520 HTS(I)=1                                                          EX
      INEQS(I)=24                                                       EX
C        T2E.GT.T2I.GT.T2A                                              EX
      T2DS(I)=T2E(I)                                                    EX
```

```
      GO TO 535                                                         EX
  525 HTS(I)=2                                                          EX
      IF (T2E(I).LT.T2IPRM) GO TO 530                                   EX
      INFQS(I)=25                                                       EX
C        T2E.GE.T2IPRM.GT.T2A                                           EX
      T2DS(I)=T2E(I)                                                    EX
      GO TO 535                                                         EX
  530 INFQS(I)=26                                                       EX
C        T2IPRM.GT.T2E.GT.T2A                                           EX
      T2DS(I)=T2IPRM                                                    EX
  532 BLKCST(6)=BLKCST(6)+10.                                           EX
  535 DELT2A(I)=T2ALLW-T2DS(I)                                          EX
      IF (CONFIG.LT.8) GO TO 538                                        EX
      T3A(I)=T2A(I)                                                     EX
      T3E(I)=T2E(I)                                                     EX
      T3EX(I)=T3E(I)                                                    EX
      T3I(I)=T2I(I)                                                     EX
      T3IPM(I)=T2IPRM                                                   EX
      T3DC(I)=T2DS(I)                                                   EX
      DELT3A(I)=DELT2A(I)                                               EX
      RATIO(I)=T2I(I)/T3I(I)                                            EX
  538 LL=FORM(I)                                                        EX
      GO TO (540,545,550),LL                                            EX
  540 DELT1A(I)=DELT2A(I)                                               EX
      T1DS(I)=T2DS(I)                                                   EX
      GO TO 555                                                         EX
  545 DELT1A(I)=DELT2A(I)*1.3                                           EX
      T1DS(I)=1.3*T2DS(I)                                               EX
      GO TO 555                                                         EX
  550 DELT1A(I)=DELT2A(I)*0.85                                          EX
      T1DS(I)=0.85*T2DS(I)                                              EX
  555 IF (N.EQ.2) GO TO 605
      IF (CONFIG.EQ.4) GO TO 600                                        EX
C        STORE ALINT ATTRIBUTES                                         EX
  560 CALL STORE                                                        EX
      IF (CONFIG.LE.4) GO TO 580                                        EX
      IF (I.EQ.1) GO TO 575                                             EX
      IF (N.EQ.2) GO TO 570                                             EX
  565 RETURN                                                            EX
C        CONFIG 11 AND 12                                               EX
  570 IF (I.EQ.1) GO TO 610                                             EX
      PASS=2                                                            EX
      I=1                                                               EX
      BLKCST(6)=0.                                                      EX
      GO TO 360                                                         EX
  575 IF (PASS.EQ.2) GO TO 565                                          EX
      L=2                                                               EX
C        NOW HT CASE - SAME LHS                                         EX
      GO TO 360                                                         EX
  580 IF (M.EQ.2) GO TO 590                                             EX
  585 GO TO RTRN,(75,85,100,135,145,160,175,250,260,270,280,300,3450,   EX
     1 565)                                                             EX
```

```
      2878 MITROFF - DEBUG                                                DATE    1
           EXCTA  - EFN      - -      SOURCE STATEMENT       - -        IFN

  590 IF (PASS.EQ.1) GO TO 595                                            EX
C        GET 2ND LHS                                                     EX
      J=1                                                                EX
      RTRN=HOLD                                                          EX
      GO TO 585                                                          EX
  595 PASS=2                                                             EX
      GO TO 585                                                          EX
  600 IF (J.NE.1) GO TO 560                                              EX
      J=2                                                                EX
      HOLD=RTRN                                                          EX
      PASS=1                                                             EX
C        GO GET RHS                                                      EX
      GO TO 45                                                           EX
  605 IF (I.EQ.2) GO TO 560                                              EX
      IF (PASS.EQ.2) GO TO 560                                           EX
      GO TO 615                                                          EX
  610 L=1                                                                EX
  615 I=2                                                                EX
C        GO TO GET RHS                                                   EX
      GO TO 360                                                          EX
C        RETURN IS AT 565                                                EX
      END                                                                EX
```

8. STORE


```
      SUBROUTINE STORE                                                  S
      INTEGER CSTESK,PASS,CONFIG,ALTNT,HTC,HTS,WORK,FORM,SHAP,SHAPE,    S
     1 CONFG,RONMBR,BOXTP,SH,SIDES,CSTNO,TIMNO                          S
      REAL L,LC,LCRHS,ISTIFF,JOIN1,JOIN2,JOIN3,JOIN4,MACH,LYTCST,METLCS S
     1 ,JN1,JN2,JN3,JNCST,JNTIM,LF                                      S
      COMMON CONFIG,SHAP,WORK,WNCR,DELNCR,BLKCST,P,Q,B,RF,LF,DNCRX,     S
     1 WNCRX,DLR3X,IB,IBA,ABMNLF,DELR1,DELR2,DELR3,DELLF,DNCR,DELWCR    S
     2 ,DLDNCR,LINES                                                    S
      COMMON /C/ RC,LC,LCRHS,WFLC                                       S
      COMMON /SPH/ RS,RSRHS,WFLS                                        S
      COMMON /STIFF/ ISTIFF,BSTIFF,HSTIFF,F,D,G,K,THK2,V,VINIT          S
      COMMON/WNDW /WD,THICKW,WNDCST,WNDTIM,SHEETS,RHOTW,RHOWND          S
      COMMON /XSPC/ H1,H2,V1,V2,DELH1,DELH2,DELV1,DELV2,BOXTP,BOXHT,    S
     1 SPLHT                                                            S
      COMMON /STR/ CONFG,SHAPE,COST,TIME,MAXALT,RONMBR,DROTTL,NO,DROTL1,S
     1 DROTL2,DROTL3,DROTL4,DRO1AL,DRO1AR,DRO3AL,DRO3AR,RHOT1A,RHOT2A,  S
     2 RHOT3A,RHOT1L,RHOT1R,RHOT3L,RHOT3R,TIMNO,CSTNO                   S
     3 ,ESKCST,ESKTIM                                                   S
      COMMON /NPT/ WT,NTNSTY,ALTNT,ALPH                                 S
       COMMON /XCT/ INEQC,INEQS,T1I,T1E,T2I,T2E,T3I,T3E,RATIO,HTC,HTS,  S
     1 T1DS,T2DS,T3DC,T1IPRM,T2IPRM,T3IPRM,T1A,T2A,T3A,DELT1A,DELT2A,   S
     2 DELT3A,T3EX                                                      S
      COMMON /MTL/ METAL,E,YPSTRS,SF,C,EL,RHO,ANEAL,DCRIT               S
      COMMON /FRM/ FRMCST,FRMTIM,TREXT,TRINT,FORM                       S
      COMMON /RNK/ T1DL,T1DR,T3DL,T3DR,ROTD1L,ROTD1R,ROTD3L,ROTD3R      S
      COMMON /XTRA/ HEAT,TYP                                            S
      DIMENSION BLKCST(7),RC(2),LC(2),LCRHS(2),RS(12),RSRHS(12),        S
     1 ISTIFF(2),BSTIFF(2),HSTIFF(2),K(2),V(2),VINIT(2),CONFG(100),     S
     2 SHAPE(100),COST(100),TIME(100),RONMBR(100),DROTTL(100),NO(100),  S
     3 DROTL1(100),DROTL2(100),DROTL3(100),DROTL4(100),DRO1AL(100),     S
     4 DRO1AR(100),DRO3AL(100),DRO3AR(100),RHOT1A(2),RHOT2A(2),RHOT3A(2)S
     5,RHOT1L(2),RHOT1R(2),RHOT3L(2),RHOT3R(2),TIMNO(100),CSTNO(100) ,  S
     6 WT(4),ALPH(2),INEQC(2),INEQS(2),T1I(2),T1E(2),T2I(2),T2E(2),     S
     7 T3I(2),T3E(2),RATIO(2),HTC(2),HTS(2),T1DS(2),T2DS(2),T3DC(2),    S
     8 T2IPRM(2),T3IPRM(2),T1A(2),T2A(2),T3A(2),E(3),YPSTRS(3),SF(3),   S
     9 C(3),EL(3),RHO(3),ANEAL(3),TREXT(2),TRINT(2),FORM(2),T1IPRM(2)   S
     1 ,T3EX(2),DELT1A(2),DELT2A(2),DELT3A(2)                           S
     2 ,T1DL(100),T1DR(100),T3DL(100),T3DR(100),ROTD1L(100),ROTD1R(100),S
     3 ROTD3L(100),ROTD3R(100)                                          S
      DIMENSION TYP(3),LTTRS(13),HEAT(3),WORD(3),JN1(13),JN2(13),JN3(13)S
     1 ,FL(13),RHOT1(2),RHOT2(2),RHOT3(2),DTLCST(13,2)                  S
      EQUIVALENCE (DELR1,DELR(1))                                       S
      DIMENSION DELR(3)                                                 S
      DATA (WORD(N),N=1,3)/4HMACH,4HSPIN,4HDRAW/                        S
C        CONFIG'S 4,11,12 HAVE TOTAL FLANGE COST ALREADY                S
      DATA(JN1(I),I=1,13)/2.,0.,0.,0.,0.,0.,0.,1.,0.,0.,0.,0.,0./,      S
     1     (JN2(I),I=1,13)/0.,1.,1.,1.,0.,0.,0.,0.,0.,0.,0.,0.,0./,     S
     2     (JN3(I),I=1,13)/0.,1.,0.,1.,2.,1.,0.,0.,2.,1.,1.,1.,0./,     S
     3     (FL (I),I=1,13)/0.,2.,2.,1.,2.,2.,2.,0.,2.,2.,1.,1.,2./      S
      DATA ((DTLCST(I,J),I=1,13),J=1,2)/560.,440.,407.,495.,330.,275.,  S
     1 220.,560.,330.,275.,495.,495.,220.,300.,400.,370.,450.,300.,250.,S
```

```
2878 4ITRDEF - DEBUG                                                    DATE
     STORA  - EFN      - -      SOURCE STATEMENT      - -              IFN

    2 200.,300.,300.,250.,450.,450.,200./                                S
      DATA (ITIRS(I),I=1,13)/6H DCD  ,6H DCFD ,6H DCFW ,6HDCFCD ,        S
     1 6H DFD  ,6H DFW  ,6HWFWCYL,6HSPHERE,6H SFS  ,6H SFW  ,6HSFS11 ,   S
     2 6HSFS12 ,6HWFWSPH/                                                S
      DO 4321 IPHONY=1,1
      J=1                                                                S
      SIDES=1                                                            S
      IF (CONFIG.NE.4.AND.CONFIG.NE.11.AND.CONFIG.NE.12) GO TO 45        S
C        SIDES EQUALS 2 FOR CONFIG'S 4,11,12                             S
      SIDES=2                                                            S
   45 CONFG(ALTNT)=CONFIG                                                S
      SHAPE(ALTNT)=WORK                                                  S
   50 IF (CONFIG.GE.8) GO TO 60                                          S
      WELANG=WELC                                                        S
      R=RC(SHAP)                                                         S
      D=2.*R                                                             S
      IF (J.EQ.2) GO TO 55                                               S
      L=LC(SHAP)                                                         S
      GO TO 58                                                           S
   55 L=LCRHS(SHAP)                                                      S
   58 S=K(J)+1                                                           S
      VINIT(J)=L/D                                                       S
      V(J)=L/(S*D)                                                       S
      IF (S.EQ.1.) GO TO 59                                              S
      ISTIFF(J)=1.39*D**3*L/(S*E(METAL))                                 S
      HSTIFF(J)=(36.*ISTIFF(J))**0.25                                    S
      BSTIFF(J)=HSTIFF(J)/3.                                             S
      T3F(J)=T3DC(J)                                                     S
      GO TO 70                                                           S
   59 ISTIFF(J)=0.                                                       S
      HSTIFF(J)=0.                                                       S
      BSTIFF(J)=0.                                                       S
      GO TO 70                                                           S
   60 L=0.                                                               S
      WELANG=WELS                                                        S
      IF (J.EQ.2) GO TO 65                                               S
      R=RS(WORK)                                                         S
      GO TO 66                                                           S
   65 R=RSPHS(WORK)                                                      S
   66 D=2.*R                                                             S
   70 IF (J.EQ.2) GO TO 410                                              S
      LYTCST=400.                                                        S
  105 BASCST=LYTCST+DTLCST(CONFIG,SHAP)                                  S
      BASTIM=0.1*BASCST                                                  S
  115 IF (CONFIG.NE.13.AND.CONFIG.NE.7) GO TO 125                        S
C        TWO WINDOWS FOR CONFIG'S 13 AND 7                               S
  120 WNDCST=2.*WNDCST                                                   S
      WNDTIM=2.*WNDTIM                                                   S
  125 STFCST=0.                                                          S
      STFTIM=0.                                                          S
      IF (CONFIG.GT.4) GO TO 162                                         S
C        COMPUTE COST OF STIFFENERS                                      S
```

```
      M=1                                                               S
  127 I=INFOC(M)                                                        S
      S=K(M)                                                            S
      IF (I.EQ.26.OR.I.EQ.30.OR.I.EQ.31.OR.I.EQ.37.OR.I.EQ.43) GO TO 130S
C        FOR ALL OTHER INFOC NUMBERS S EQUALS THE NUMBER OFANALYSIS PASSS
      IF (S.EQ.0.) GO TO 162                                            S
  128 X=S*20.                                                           S
C        X IS ANALYSIS COST - MUST HAVE $20/ANALYSIS PASS               S
      GO TO 135                                                         S
  130 X=(S+1.)*20.                                                      S
      Z=0.                                                              S
      IF (S.EQ.0.) GO TO 160                                            S
  135 GO TO (140,145,155),METAL                                         S
C        Y IS STIFFENER MACHINING COST                                  S
  140 Y=2.*R+2.                                                         S
C        T IS STIFFENER TOOLING COST                                    S
      T=9.*R-22.                                                        S
C        W IS STIFFENER WELDING  COST                                   S
  142 W=1.5*R+4.                                                        S
      GO TO 150                                                         S
  145 Y=4.*R+4.                                                         S
      T=R+6.                                                            S
      GO TO 142                                                         S
  150 Z=(W+Y)*S+T                                                       S
      GO TO 160                                                         S
  155 Z=5.*S                                                            S
  160 STFCST=AMIN1(X+Z+0.5)                                             S
      STFTIM=0.1*STFCST                                                 S
      IF (CONFIG.NE.4) GO TO 162                                        S
      IF (M.EQ.2) GO TO 161                                             S
      M=2                                                               S
      HOLD=STFCST                                                       S
      GO TO 127                                                         S
  161 STFCST=STFCST+HOLD                                                S
      STFTIM=0.1*STFCST                                                 S
  162 CYLCST=0.                                                         S
      M=1                                                               S
      CYLTIM=0.                                                         S
C        COMPUTE COST OF CYLINDER                                       S
  163 IF (CONFIG.GT.4) GO TO 180                                        S
C        T IS TOOLING COST                                              S
C        S IS SETUP COST                                                S
C        RM IS FINISH MACHINING RATE                                    S
C        FM IS FINISH MACHINE RATE                                      S
      GO TO (165,165,170),METAL                                         S
  165 METLCS=0.                                                         S
      GO TO 175                                                         S
  170 METLCS=11.27*D*L                                                  S
  175 T=16.+R                                                           S
      S=22.+3.25*D                                                      S
      IF (R.GT.6.) GO TO 180                                            S
      RM=25.+2.50*R                                                     S
```

```
      GO TO 185                                                         S
  180 RM=6.667*R                                                        S
  185 RMCST=1.256*R*L/RM                                                S
      FM=1.2+0.2*R                                                      S
      FMCST=.1257*R*R*L/FM                                              S
      SUM=T+S+RMCST+FMCST                                               S
      CYLTIM=0.1*SUM                                                    S
      CYLCST=AINT(SUM+METLCS)                                           S
      IF (CONFIG.NE.2) GO TO 187                                        S
      X=DELNCR-(RF+WNCR)/2.                                             S
      IF (X*(X+48.)*(RF+LF)/(DELR(2*SHAP-1)*RF*LF).LE.6000.) GO TO 189  S
      CYLCST=CYLCST+200.                                                S
      CYLTIM=CYLTIM+20.                                                 S
      GO TO 189                                                         S
  187 IF (CONFIG.NE.4) GO TO 189                                        S
      IF (M.EQ.2) GO TO 188                                             S
      M=2                                                               S
      HOLD1=CYLTIM                                                      S
      HOLD2=CYLCST                                                      S
      L=LCRHS(SHAP)                                                     S
      GO TO 163                                                         S
  188 CYLCST=CYLCST+HOLD2                                               S
      CYLTIM=CYLTIM+HOLD1                                               S
      L=LC(SHAP)                                                        S
C        COMPUTE COST OF FLANGE                                         S
  189 FLGCST=0.                                                         S
      FLGTIM=0.                                                         S
      IF (CONFIG.EQ.1.OR.CONFIG.EQ.8) GO TO 210                         S
      GO TO (190,200,190),METAL                                         S
C        AL AND BE                                                      S
  190 FLGTIM=AINT(2.0*R+0.5)
      IF (R.GT.6.) GO TO 195
      FLGCST=AINT(18.0*R+0.5)
      GO TO 210                                                         S
  195 FLGCST=AINT(34.0*R+0.5)
      GO TO 210                                                         S
C        FE                                                             S
  200 FLGTIM=AINT(3.2*R+0.1)
      IF (R.GT.6.) GO TO 205
      FLGCST=AINT(38.0*R-14.5)
      GO TO 210                                                         S
  205 FLGCST=AINT(86.0*R-300.5)
C        COMPUTE COST OF BOX                                            S
  210 IF (BOXTP.EQ.3) GO TO 227                                         S
      IF (BOXTP.EQ.2) GO TO 215                                         S
      BOXCST=AINT(801.+36.*R+0.5)                                       S
      GO TO 230                                                         S
  215 IF (R.GT.6.) GO TO 220                                            S
C        SPOOL                                                          S
      A=3.*R+13.                                                        S
      B=12.*R+304.                                                      S
      GO TO 225                                                         S
```

```
2872 MITROFF - DEBUG                                                    DATE
     STORA  - FFN      - -      SOURCE STATEMENT      - -              IFN

  220 A=R.*R-46.                                                         S
      B=24.*R+160.                                                       S
  225 BOXCST    =     AINT(A+B+150.+0.5)                                 S
      GO TO 230                                                          S
  227 BOXCST=0.                                                          S
  230 BOXTIM=0.1*BOXCST                                                  S
C        COMPUTE COST OF JOINONG                                         S
      M=1                                                                S
  235 GO TO (240,245,290),METAL                                          S
C        AL                                                              S
  240 IF (R.GT.6.) GO TO 245                                             S
      TOOL=-20.+20.*R                                                    S
      GO TO 250                                                          S
  245 TOOL=-150.+41.6*R                                                  S
  250 WELD=2.5*R                                                         S
      JOIN1=AINT(TOOL+WELD+.5)                                           S
      IF (R.GT.6.) GO TO 255                                             S
      TOOL=10.*(R-1.)                                                    S
      GO TO 260                                                          S
  255 TOOL=20.*R-70.                                                     S
  260 JOIN2=AINT(TOOL+WELD+.5)                                           S
      GO TO 300                                                          S
C        FE                                                              S
  265 IF (R.GT.6.) GO TO 270                                             S
      TOOL=10.*(R-1.)                                                    S
      WELD=5.*R+3.                                                       S
      GO TO 275                                                          S
  270 TOOL=16.667*R-50.                                                  S
      WELD=10.+5.0*R                                                     S
  275 JOIN1=AINT(TOOL+WELD+0.5)                                          S
      IF (R.GT.6.)GO TO 280                                              S
      TOOL=5.*(R-1.)                                                     S
      GO TO 285                                                          S
  280 TOOL=8.333*R-25.                                                   S
  285 JOIN3=AINT(TOOL+WELD+0.5)                                          S
      GO TO 300                                                          S
C        BE                                                              S
  290 MACH=2.5*R                                                         S
      GLUE=18.+.5*R                                                      S
      JOIN1=AINT(MACH+GLUE+0.5)                                          S
      JOIN2=JOIN1                                                        S
      MACH=15./4.*R                                                      S
      JOIN3=AINT(MACH+GLUE+0.5)                                          S
  300 IF (CONFIG.NE.11.AND.CONFIG.NE.12) GO TO 310                       S
      IF     (M.NE.1) GO TO 305                                          S
      M=2                                                                S
      JOIN4=JOIN3                                                        S
C        ONLY NEED JOIN 3                                                S
      R=RSRHS(WORK)                                                      S
      GO TO 235                                                          S
  305 HOLD1=JOIN3                                                        S
      R=RS(WORK)                                                         S
```

```
2878 MITROFF - DEBUG                                                    DATE
     STORA  - EFN      - -      SOURCE STATEMENT      - -              IFN

      JOIN3=JOIN4                                                        S
      JOIN4=HOLD1                                                        S
  310 IF (CONFIG.EQ.7.OR.CONFIG.EQ.13) GO TO 315                         S
      IF (HTS(1).NE.1.AND.HTS(2).NE.1) GO TO 315                         S
C        COMPUTE HEAT TREAT COST                                         S
      HTCST=20.                                                          S
      HTTIM=11.                                                          S
      GO TO 320                                                          S
  315 HTCST=0.                                                           S
      HTTIM=0.                                                           S
  320 JNCST=JN1(CONFIG)*JOIN1+JN2(CONFIG)*JOIN1+JN3(CONFIG)*JOIN3        S
      IF (CONFIG.EQ.11.OR.CONFIG.EQ.12) GO TO 325                        S
      IF (CONFIG.EQ.4) JNCST=2.*JNCST                                    S
      GO TO 330                                                          S
  325 JNCST=JNCST+JOIN4                                                  S
  330 JNTIM=0.1*JNCST                                                    S
      ASYCST=400.                                                        S
      ASYTIM=40.                                                         S
      FNGCST=FLGCST*FL(CONFIG)                                           S
      FNGTIM=FLGTIM*FL(CONFIG)
      CSTBLK=0.                                                          S
      DO 335 I=1,7                                                       S
  335 CSTBLK=CSTBLK+BLKCST(I)                                            S
      TIMBLK=0.1*CSTBLK                                                  S
      COST(ALTNT)=BASCST+WNDCST+FRMCST+STFCST+JNCST+CYLCST+BOXCST+FNGCSTS
     1 +HTCST+ASYCST+CSTBLK+FSKCST                                       S
      TIME(ALTNT)=BASTIM+WNDTIM+FRMTIM+STFTIM+JNTIM+CYLTIM+BOXTIM+FNGTIMS
     1 +HTTIM+ASYTIM+TIMBLK+FSKTIM                                       S
C        CHECK AND ADJUST T3'S                                           S
      IF (CONFIG.LE.4) GO TO 350                                         S
      IF (CONFIG.EQ.7.OR.CONFIG.EQ.13) GO TO 345                         S
      T3DC(1)=T2DS(1)                                                    S
      GO TO 350                                                          S
  345 T3DC(1)=0.                                                         S
  350 GO TO (355,360,365,380,360,365,365,360,360,365,375,375,365),CONFIGS
C        CONFG 1   2   3   4   5   6   7   8   9  10  11  12  13         S
  355 T3DC(2)=T3DC(1)                                                    S
      GO TO 380                                                          S
  360 T3DC(2)=T2DS(1)                                                    S
      GO TO 380                                                          S
  365 T3DC(2)=0.                                                         S
      GO TO 380                                                          S
  375 T3DC(2)=T2DS(2)                                                    S
C        CHECK PRIMARY RHOT'S                                            S
  380 IF (CONFIG.EQ.7.OR.CONFIG.EQ.13)T1DS(1)=THICKW                     S
      GO TO (385,385,390,395,385,390,390,385,385,390,395,395,390),CONFIGS
C        CONFG 1   2   3   4   5   6   7   8   9  10  11  12  13         S
  385 T1DS(2)=T1DS(1)                                                    S
      GO TO 395                                                          S
  390 T1DS(2)=THICKW                                                     S
      RO=RHOWND*2.54                                                     S
      IF (CONFIG.EQ.7.OR.CONFIG.EQ.13) GO TO 398
```

```
C       CONFIG. EQ. 3,6, OR 10
        RHOT1(1)=RHO(METAL)*T1DS(1)*2.54
        RHOT1(2)=RO*T1DS(2)
        RHOT3(1)=RHO(METAL)*T3DC(1)*2.54
        RHOT3(2)=RO*T3DC(2)
        GO TO 401
  395   RO=2.54*RHO(METAL)                                              S
  398   DO 400 I=1,2                                                    S
        RHOT1(I)=RO*T1DS(I)                                             S
  400   RHOT3(I)=RO*T3DC(I)                                             S
C          SAVE DESIGN THICKNESSES                                      S
  401   T3DL(ALTNT)=T3DC(1)                                             S
        T3DR(ALTNT)=T3DC(2)                                             S
        T1DL(ALTNT)=T1DS(1)                                             S
        T1DR(ALTNT)=T1DS(2)                                             S
C          SAVE DESIGN RHO-T'S                                          S
        ROTD1L(ALTNT)=RHOT1(1)                                          S
        ROTD1R(ALTNT)=RHOT1(2)                                          S
        ROTD3L(ALTNT)=RHOT3(1)                                          S
        ROTD3R(ALTNT)=RHOT3(2)                                          S
C          COMPUTE NUMBERS FOR USE IN RHO-T RANKING                     S
        DRO1AL(ALTNT)=RHOT1A(1)-RHOT1(1)                                S
        DRO1AR(ALTNT)=RHOT1A(2)-RHOT1(2)                                S
        DRO3AR(ALTNT)=RHOT3A(2)-RHOT3(2)                                S
        DRO3AL(ALTNT)=RHOT3A(1)-RHOT3(1)                                S
        RO=0.                                                           S
        IF (DRO1AL(ALTNT).GE.0.) RO=1.                                  S
        IF (DRO1AR(ALTNT).GE.0.) RO=RO+1.                               S
        IF (DRO3AL(ALTNT).GE.0.) RO=RO+1.                               S
        IF (DRO3AR(ALTNT).GE.0.) RO=RO+1.                               S
        RONMBR(ALTNT)=RO                                                S
        DROTL1(ALTNT)=WT(1)*DRO1AL(ALTNT)                               S
        DROTL2(ALTNT)=WT(2)*DRO1AR(ALTNT)                               S
        DROTL3(ALTNT)=WT(3)*DRO3AL(ALTNT)                               S
        DROTL4(ALTNT)=WT(4)*DRO3AR(ALTNT)                               S
  410   IF (LINES.LE.54) GO TO 415                                      S
C          PRINT HEADER                                                 S
        LINES=3                                                         S
        PRINT 1001                                                      S
 1001   FORMAT (1H1,35X,16HWNCR.......CHECK,8X,25HDNCR.................CHECS
       1K,8X,11HW I N D O W,7X,18HXSPACE.......CHECK)                   S
        PRINT 1002                                                      S
 1002   FORMAT (1H0,129HALT  CONFIG SHAP RADIUS  LENGTH WIDTHFL   WNCR  DES
       1LWNCR  DNCRX  2 X RAD DELDNCR DELR3     THK   DFL  SHTS   BOX TYP S
       2BOX HT  DELH1// )                                               S
  415   IF (SIDES.EQ.1) GO TO 420                                       S
C          INVERT J TO GET PASS                                         S
        PASS=3-J                                                        S
        GO TO 425                                                       S
  420   PASS=J                                                          S
  425   I=J                                                             S
        DROTTL(ALTNT)=DROTL1(ALTNT)+DROTL2(ALTNT)+DROTL3(ALTNT)+DROTL4(ALTS
```

```
     1NT)                                                                S
      NO(ALTNT)=ALTNT                                                    S
      TIMNO(ALTNT)=ALTNT                                                 S
      CSTNO(ALTNT)=ALTNT                                                 S
C        NO(ALTNT) IS USED FOR REFERENCE IN RANK ROUTINE                 S
C        PRINT DATA                                                      S
      LINES=LINES+1                                                      S
      M=FORM(I)                                                          S
      N=HTS(J)                                                           S
  427 CONTINUE                                                           S
      SH=SHEETS                                                          S
      IF (OLDNCR.EQ.-0.) OLDNCR=0.                                       S
      PRINT1003,ALTNT,LTTRS(CONFIG),WORK,R,L,WELANG,WNCR,DELWCR,DNCRX,D,S
     1OLDNCR,DELD3,THICKW,WD,SH     ,TYP(BOXTP),BOXHT,DELHI             S
 1003 FORMAT (1H ,I3,2X,A6,I4,8F8.3,F7.3,F8.3,F7.3,I3,5X,A5,2F8.3)       S
      WRITE (1) PASS,ALTNT,LTTRS(CONFIG),DELH2,DELV1,DELV2,ALPH(METAL), S
     1 WORD(N),RATIO(J),HEAT(N),T3I(J),T3IPRM(J),T3FX(J),T3E(J),         S
     2 T2I(I),T2IPRM(I),T2E(I),T1I(I),T1IPRM(I),T1E(I),INEQC(J),INEQS(I)S
      WRITE (2) PASS,ALTNT,LTTRS(CONFIG),T3DC(J),T2DS(I),T1DS(I),T3A(J),S
     1 T2A(I),T1A(I),DELT3A(J),DELT2A(I),DELT1A(I),K(J),VINIT(J),V(J),   S
     2 ISTIFF(J),HSTIFF(J),RSTIFF(J),BASCST,WNDCST,FRMCST                S
      WRITE (3) PASS,ALTNT,LTTRS(CONFIG),CYLCST,HTCST,STFCST,FLGCST,     S
     1 BOXCST,JNCST,COST(ALTNT),BASTIM,WNDTIM,FRMTIM,CYLTIM,HTTIM,STFTIMS
     2 ,FLGTIM,BOXTIM,JNTIM,TIME(ALTNT)                                  S
      IF (CONFIG.EQ.1.OR.CONFIG.GE.5) GO TO 430                          S
      X=D+DELNCR                                                         S
      HALF=R/2.                                                          S
      Y=X-HALF                                                           S
      GO TO 435                                                          S
  430 X=0.                                                               S
      Y=0.                                                               S
      HALF=0.                                                            S
  435 WRITE (8) PASS,ALTNT,LTTRS(CONFIG),CSTBLK,TIMBLK,X,HALF,Y          S
      IF (SIDES.EQ.1) GO TO 440                                          S
 1234 CONTINUE                                                           S
      IF (J.EQ.2) GO TO 440                                              S
      J=2                                                                S
      GO TO 50                                                           S
  440 PRINT 1017                                                         S
 1017 FORMAT (1X)
      LINES=LINES+1                                                      S
      MAXALT=ALTNT                                                       S
      ALTNT=ALTNT+1                                                      S
 4321 CONTINUE
      RETURN
      END                                                                S
```

9. SPH


```
$*
$IBFTC SPHR     DECK
      SUBROUTINE SPHERE(SS)                                             S
      INTEGER CONFIG,SHAP,WORK,SS,TERM,ALTNT                            S
      REAL LF,IB,IBA                                                    S
      COMMON CONFIG,SHAP,WORK,WNCR,DELNCR,BLKCST,P,Q,B,RF,LF,DNCRX,     S
     1 WNCRX,DLR3X,IB,IBA,ABMNLF,DELR1,DELR2,DELR3,DELLF,DNCR,DELWCR    S
     2 ,DLDNCR,LINES                                                    S
      COMMON /C/ RC,LC,LCRHS,WFLC                                       S
      COMMON /SPH/ RS,RSRHS,WFLS                                        S
      COMMON /STIFF/ ISTIFF,BSTIFF,HSTIFF,F,D,G,K,THK2,V,VINIT          S
      COMMON/WNDW /WD,THICKW,WNDCST,WNDTIM,SHEETS,RHOTW,RHOWND          S
      COMMON /XSPC/ H1,H2,V1,V2,DELH1,DELH2,DELV1,DELV2,BOXTP,BOXHT,    S
     1 SPLHT                                                            S
      COMMON /STR/ CONFG,SHAPE,COST,TIME,MAXALT,RONMBR,DROTTL,NO,DROTL1,S
     1 DROTL2,DROTL3,DROTL4,DRO1AL,DRO1AR,DRO3AL,DRO3AR,RHOT1A,RHOT2A,  S
     2 RHOT3A,RHOT1L,RHOT1R,RHOT3L,RHOT3R,TIMNO,CSTNO                   S
     3 ,FSKCST,FSKTIM                                                   S
      COMMON /NPT/ WT,NTNSTY,ALTNT,ALPH                                 S
      COMMON /XCT/ INEQC,INEQS,T1I,T1E,T2I,T2E,T3I,T3E,RATIO,HTC,HTS,   S
     1 T1DS,T2DS,T3DC,T1IPRM,T2IPRM,T3IPRM,T1A,T2A,T3A,DELT1A,DELT2A,   S
     2 DELT3A,T3EX                                                      S
      COMMON /MTL/ METAL,E,YPSTRS,SF,C,EL,RHO,ANEAL,DCRIT               S
      COMMON /FRM/ FRMCST,FRMTIM,TREXT,TRINT,FORM                       S
      COMMON /FINAL/ TERM(10,3),NNN                                     S
      DIMENSION BLKCST(7),RC(2),LC(2),LCRHS(2),RS(12),RSRHS(12),        S
     1 ISTIFF(2),BSTIFF(2),HSTIFF(2),K(2),V(2),VINIT(2),CONFG(100),     S
     2 SHAPE(100),COST(100),TIME(100),RONMBR(100),DROTTL(100),NO(100),  S
     3 DROTL1(100),DROTL2(100),DROTL3(100),DROTL4(100),DRO1AL(100),     S
     4 DRO1AR(100),DRO3AL(100),DRO3AR(100),RHOT1A(2),RHOT2A(2),RHOT3A(2)S
     5,RHOT1L(2),RHOT1R(2),RHOT3L(2),RHOT3R(2),TIMNO(100),CSTNO(100),   S
     6 WT(4),ALPH(3),INEQC(2),INEQS(2),T1I(2),T1E(2),T2I(2),T2E(2),     S
     7 T3I(2),T3E(2),RATIO(2),HTC(2),HTS(2),T1DS(2),T2DS(2),T3DC(2),    S
     8 T2IPRM(2),T3IPRM(2),T1A(2),T2A(2),T3A(2),E(3),YPSTRS(3),SF(3),   S
     9 C(3),EL(3),RHO(3),ANEAL(3),TREXT(2),TRINT(2),FORM(2),T1IPRM(2)   S
     1 ,T3EX(2),DELT1A(2),DELT2A(2),DELT3A(2)                           S
      SHAP=0
    5 SHAP=SHAP+1
      BLKCST(3)=0.
      WD=0.                                                             S
      THICKW=0.                                                         S
      SHEETS=0.                                                         S
9999999 N+32JK2P2     WND CST = 0.                                      S
      WNDTIM=0.
      WORK=SHAP                                                         S
      CONFIG=8                                                          S
      WFLS=WFL(RS(WORK))                                                S
      DLDNCR=DNCRX-2.*RS(SHAP)                                          S
      DNCR=DNCRX                                                        S
      WNCR=WNCRX                                                        S
      DELR3=DLR3X                                                       S
      DELWCR=WNCR-WFLS                                                  S
      IF (DELWCR.GE.0.) GO TO 10                                        S
C        WNCR IS LESS THAN WFLS                                         S
      WNCR=WFLS                                                         S
```

```
C         STORE BLACKMARK
      BLKCST(3)=BLKCST(3)+10.
C         CALL SUBROUTINE FOR PRESENT CONFIG
      DELWCR=WNCR-WFLS
   10 CALL MONTOR
      IF (DNCR.LE.(2.*RS(SHAP)))GO TO 15
C         INCREMENT IF POSSIBLE
      DELR3=DNCR/2.-RF
      WORK=WORK+2
      RS(WORK)=DNCR/2.
      WFLS=WFL(RS(WORK))
      DELWCR=WNCR-WFLS
      IF (DELWCR.GE.0.) GO TO 15
C         WNCR LT WFLS
      WNCR=WFLS
C         STORE BLACKMARK
      BLKCST(3)=BLKCST(3)+10.
   15 P=(WNCR-LF)/2.
      Q=-P
      IF (DELNCR.GT.(WNCR/2.)) GO TO 70
C         INSIDE
      IF (DELNCR.GT.P) GO TO 30
      IF (DELNCR.LT.Q) GO TO 17
      CONFIG=9
C         WFLS=COMPUTED VALUE FROM PREVIOUS SECTION
C         SET CONFIG TO SFS - 9
      CALL MONTOR
      IF (IB.GT.IBA) GO TO 110
      CALL WINDOW(RS(WORK))
      IF (WD.GT.(P-DELNCR)) GO TO 25
C         CAN HAVE WINDOW AT LEFT END
      IF (WD.LE.(P+DELNCR)) GO TO 20
C         IMPOSSIBLE TO HAVE WINDOW AT LEFT AND NOT AT RIGHT
      NNN=NNN+1
      TERM(NNN,1)=1
      TERM(NNN,2)=ALTNT
      TERM(NNN,3)=WORK
      GO TO 110
   17 NNN=NNN+1
      TERM(NNN,1)=2
      TERM(NNN,2)=ALTNT
      TERM(NNN,3)=WORK
      GO TO 110
C         X IS LENGTH OF FLASK PROTRUDING FROM NCR
   20 WFLS=LF+2.*WD
      CONFIG=13
      DELWCR=WNCR-WFLS
      CALL MONTOR
   25 IF (WD.GT.(P+DELNCR)) GO TO 110
C         PUT WINDOW RHS
      CONFIG=10
      WFLS=LF+WD
      DELWCR=WNCR-WFLS
      CALL MONTOR
      GO TO 110
```

```
   30 IF (DELNCR-Q) 35,40,45
   35 WFLS=WNCR
      CONFIG=12
C        RADIUS  LHS WILL BE DIFFERENT THAN RADIUS RHS
      X=Q+DELNCR
      RS(WORK)=SQRT(X*X+RF*RF)
      X=Q-DELNCR
      RSRHS(WORK)=SQRT(X*X+RF*RF)
      DELWCR=WNCR-WFLS
      CALL MONTOR
      GO TO 110
   40 IF (Q.GT.P) GO TO 45
      NNN=NNN+1
      TERM(NNN,1)=3
      TERM(NNN,2)=ALTNT
      TERM(NNN,3)=WORK
      GO TO 110
   45 IF (WFLS-(WNCR-(P+DELNCR))) 50,55,60
   50 WFLS=WNCR-P-DELNCR
   55 X=Q+DELNCR
      RSRHS(WORK)=RS(WORK)
      DLDNCR=DNCRX-2.*RS(WORK)
      RS(WORK)=SQRT(X*X+RF*RF)
C        RSRHS EQUALS ORIGINAL RS
      CONFIG=11
      DELWCR=WNCR-WFLS
      CALL MONTOR
      IF (IB.GT.IBA) GO TO 110
      CALL WINDOW(RS(WORK))
      IF (WD.GT.(P+DELNCR)) GO TO 110
      CONFIG=10
      WFLS=WFLS+WD
      DELWCR=WNCR-WFLS
      CALL MONTOR
      GO TO 110
   60 RSRHS (WORK)=RS(WORK)
      X=Q+DELNCR
      RS(WORK)=SQRT(X*X+RF*RF)
      CONFIG=11
      CALL MONTOR
      IF (IB.GT.IBA) GO TO 110
      CALL WINDOW(RS(WORK))
      IF (WFLS.GE.(WNCR-P-DELNCR+WD)) GO TO 65
      IF (WD.GT.(P+DELNCR)) GO TO 110
      WFLS =WNCR-P-DELNCR+WD
   65 CONFIG=10
      DELWCR=WNCR-WFLS
      CALL MONTOR
      GO TO 110
   70 RSINCR=RS(1)+(DNCR-WNCR/2.)*LF/(2.*RS(1))
C        OUTSIDE  -  CHECK FOR SHIFT
C        DETERMINE MINIMUM SPHERE SIZE NECESSARY
      IF (WORK.GT.1) GO TO 100
C        MINIMUM SPHERE
      WORK=WORK+4
```

```
      RS(WORK)=RSINCR                                                   S
      DLDNCR=DNCRX-RS(WORK)*2.                                          S
C        FULL SHIFT ROUTINE                                             S
   73 DELWCR=WNCR-WFLS                                                  S
      IF (DELWCR.GE.0.) GO TO 75                                        S
      WFLS=WFL(RS(WORK))                                                S
      WNCR=WFLS                                                         S
C        STORE BLACK MARK                                               S
      BLKCST(3)=BLKCST(3)+10.                                           S
   75 CONFIG=9                                                          S
      CALL MONTOR                                                       S
C        SET CONFIG SFS - 9                                             S
      IF (IB.GT.IBA) GO TO 110                                          S
      CALL WINDOW(RSINCR)                                               S
      D=(LF+WNCR)/2.-DNCR                                               S
      IF (D.GE.0.) GO TO 85                                             S
C        D LT 0 - SET D POSITIVE                                        S
      D=-D                                                              S
C        FLASK IS COMPLETELY OUTSIDE NCR                                S
      IF ((D+WFLS).GT.WD) GO TO 80                                      S
C        TOO MUCH WINDOW DEFLECTION                                     S
      IF ((WD-D).GT.WNCR) GO TO 110                                     S
      DELWCR=WNCR-WFLS                                                  S
      WFLS=WD-D                                                         S
C        CONFIG SFW - 10                                                S
   80 CONFIG=10                                                         S
      DELWCR=WNCR-WFLS                                                  S
      CALL MONTOR                                                       S
      GO TO 110                                                         S
   85 IF (WFLS.GT.D) GO TO 95                                           S
C        WFLS LT D -                                                    S
   90 IF ((D+WD).GT.WNCR) GO TO 110                                     S
      WFLS=D+WD                                                         S
      GO TO 80                                                          S
   95 IF (WFLS.LE.(D+WD)) GO TO 90                                      S
      GO TO 80                                                          S
  100 IF (RS(WORK).GT.RSINCR) GO TO 105                                 S
C        FULL SHIFT NECESSARY                                           S
      WORK=WORK+4                                                       S
      GO TO 73                                                          S
  105 WORK=WORK+8                                                       S
C        PARTIAL SHIFT WILL SUFFICE - RS GT RSINCR                      S
      RSINCR=RS(WORK)                                                   S
      GO TO 73                                                          S
  110 IF (SHAP.LT.SS) GO TO 5
      RETURN                                                            S
      END                                                               S
$*
```

10. RANK


```
      SUBROUTINE RANK                                                   R
C        THIS SUBROUTINE RANKS ALL ALTNT'S ACCORDING TO RHO-T, COST,    R
C        AND TIME                                                       R
      INTEGER START,HOLD,ALTNT,RNK ,CONFG,RNKCST,RNKTIM ,RONMBR          R
     1 ,TEMP,CSTHLD,TIMHLD,CSTNO,TIMNO,CONFIG                            R
      REAL MONEY                                                        R
      COMMON CONFIG,SHAP,WORK,WNCR,DELNCR,BLKCST,P,Q,R,RF,LF,DNCRX,     R
     1 WNCRX,DLR3X,IP,IRA,ARMNLF,DELR1,DELR2,DELR3,DELLF,DNCR,DELWCR    R
     2 ,DLONCR,LINES                                                    R
      COMMON /C/ WC,LC,LCRHS,WFLC                                       R
      COMMON /SPH/ PS,PSRHS,WFLS                                        R
      COMMON /STIFF/ ISTIFF,BSTIFF,HSTIFF,E,D,G,K,THK2,V,VINIT          R
      COMMON/WIND /WD,THICKW,WNDCST,WNDTIM,SHEETS,RHOTW,RHOWND          R
      COMMON /XSPC/ H1,H2,V1,V2,DELH1,DELH2,DELV1,DELV2,BOXTP,BOXHT,    R
     1 SPLHT                                                            R
      COMMON /STR/ CONFG,SHAPE,COST,TIME,MAXALT,RONMBR,DROTTL,NO,DROTL1,R
     1 DROTL2,DROTL3,DROTL4,DRO1AL,DRO1AR,DRO3AL,DRO3AR,RHOT1A,RHOT2A,  R
     2 RHOT3A,RHOT1L,RHOT1R,RHOT3L,RHOT3R,TIMNO,CSTNO                   R
     3 ,RNKCST,RNKTIM                                                   R
      COMMON /NPT/ NT,INTNSTY,ALTNT,ALPH                                R
      COMMON /ACT/ INFOC,INFOS,T1I,T1E,T2I,T2E,T3I,T3E,RATIO,HTC,HTS,   R
     1 T1DS,T2DS,T3DC,T1IPRM,T2IPRM,T3IPRM,T1A,T2A,T3A,DELT1A,DELT2A,   R
     2 DELT3A,T3EX                                                      R
      COMMON /ATL/ ALTSL,F,YPSTRS,SF,C,FL,RHO,ANEAL,DCRIT               R
      COMMON /FRM/ FRMCST,FRMTIM,TREXT,TRINT,FORM                       R
      COMMON /RNK/ T1DL,T1DR,T3DL,T3DR,ROTD1L,ROTD1R,ROTD3L,ROTD3R      R
      COMMON /FINAL/ TERM(10,3),NNN                                     R
      DIMENSION BLKCST(7),EC(2),LC(2),LCRHS(2),PS(12),PSRHS(12),        R
     1 ISTIFF(2),BSTIFF(2),HSTIFF(2),K(2),V(2),VINIT(2),CONFG(100),     R
     2 SHAPE(100),COST(100),TIME(100),RONMBR(100),DROTTL(100),NO(100),  R
     3 DROTL1(100),DROTL2(100),DROTL3(100),DROTL4(100),DRO1AL(100),     R
     4 DRO1AR(100),DRO3AL(100),DRO3AR(100),RHOT1A(2),RHOT2A(2),RHOT3A(2)R
     5,RHOT1L(2),RHOT1R(2),RHOT3L(2),RHOT3R(2),TIMNO(100),CSTNO(100) ,  R
     6 NT(4),ALPH(2),INFOC(2),INFOS(2),T1I(2),T1E(2),T2I(2),T2E(2),     R
     7 T3I(2),T3E(2),RATIO(2),HTC(2),HTS(2),T1DS(2),T2DS(2),T3DC(2),    R
     8 T2IPRM(2),T3IPRM(2),T1A(2),T2A(2),T3A(2),F(3),YPSTRS(3),SF(3),   R
     9 C(3),FL(3),RHO(3),ANEAL(3),TREXT(2),TRINT(2),FORM(2),T1IPRM(2)   R
     1 ,T3EX(2),DELT1A(2),DELT2A(2),DELT3A(2)                           R
     2 ,T1DL(100),T1DR(100),T3DL(100),T3DR(100),ROTD1L(100),ROTD1R(100),R
     3 ROTD3L(100),ROTD3R(100)                                          R
      DIMENSION LTTRS(13),SCALE(13),SCLTIM(100)                         R
      DATA (SCALE(I),I=1,13)/1.,3.,2.,3.,2.5,2.,1.,1.,2.5,2.,3.,3.,1./  R
      DATA  (LTTRS(I),I=1,13)/6H DCD  ,6H DCED ,6H DCEW ,6HDCFCD ,6H DFDR
     1  ,6H DFS  ,6HWFRCYL,6HSPHERE,6H SFS  ,6H SFW  ,6HSFS11 ,6HSFS12 ,R
     26HFWSPH/                                                          R
      CALL EXMSET(LDC,IFLAG,-3,36,-2,46)                                R
      DO 1100 I=1,3                                                     R
      END FILE L                                                        R
 1100 REWIND L                                                          R
      END FILE 8                                                        R
      REWIND 8                                                          R
```

```
2878 MITROFF - DEBUG                                                    DATE
     RNKA   - FEN      - -      SOURCE STATEMENT      - -              IFN

      LINES=100                                                          R
 1150 IF (LINES.LE.54) GO TO 1160                                        R
C        PRINT HEADER                                                    R
      PRINT 1004                                                         R
 1004 FORMAT (1H1,14X,17HXSPACE......CHECK,31X,15HC Y L I N D E R,7X,16HR
     1 BASE OF SPHERE ,3X,28HCROWN OF SPHERE   INEQUALITY//)             R
      PRINT 1005                                                         R
 1005 FORMAT (1H ,131HALT CONFIG  DELH2   DELV1   DELV2  METAL FORM  RATR
     1TO HEAT  T3I  T3IPM T3EOR  T3E    T2I  T2IPM  T2E    T1I  T1IPM  TR
     2IE    CYL   SPH//)                                                R
      LINES=3                                                            R
C        NOW READ DATA                                                   R
 1160 READ (1) J,ALTNT,LETTRS,DELH2,DELV1,DELV2,ALMTL,WORDS,RAT,HEATN,   R
     1 T3IJ,T3IP,T3EXJ,T3EJ,T2II,T2IP,T2EI,T1II,T1IP,T1EI,INQC,INQS      R
 1180 PRINT 1006, ALTNT,LETTRS,DELH2,DELV1,DELV2,ALMTL,WORDS,RAT,HEATN,  R
     1 T3IJ,T3IP,T3EXJ,T3EJ,T2II,T2IP,T2EI,T1II,T1IP,T1EI,INQC,INQS      R
 1006 FORMAT (1H ,I3,1X,A6,3F8.3,2X,A2,3X,A4,F7.3,1X,A3,1X,4F6.3,1X,     R
     1 3F6.3,1X,3F6.3,2I6 )                                              R
      LINES=LINES+1                                                      R
      IF (J.EQ.2) GO TO 1160                                             R
 1170 PRINT 1000                                                         R
 1000 FORMAT (1X)                                                        R
      LINES=LINES+1                                                      R
      IF (ALTNT.LT.MAXALT) GO TO 1150                                    R
      LINES=100                                                          R
 1190 IF (LINES.LE.54) GO TO 1200                                        R
C        PRINT HEADER                                                    R
      PRINT 1007                                                         R
 1007 FORMAT (1H1,11X, 56HDESIGN  THICKNESS   A L L W.....T ' S   DEL   AR
     1LLW  T ' S,9X,12HVON MISES CK,6X,13HS  T  I  F  F,8X,10HC  O  S   TR
     2 )                                                                 R
      PRINT 1008                                                         R
 1008 FORMAT (1H0,129HALT CONFIG  T3DC  T2DS  T1DS T3ALLW T2ALLW T1ALLW R
     1DELT3A DELT2A DELT1A STIF VINIT VFINAL  JSTIFF HSTIFF BSTIFF   BASR
     2E   WNDO   FORM//)                                                 R
      LINES=3                                                            R
 1200 READ (2) J,ALTNT,LETTRS,T3DCJ,T2DSI,T1DSI,T3AJ,T2AI,T1AI,DLT3,    R
     1 DLT2,DLT1,KJ,VIN,VJ,ISTF,HSTF,BSF,BASCST,WNDCST,FRMCST            R
 1220 PRINT 1009, ALTNT,LETTRS,T3DCJ,T2DSI,T1DSI,T3AJ,T2AI,T1AI,DLT3,   R
     1 DLT2,DLT1,KJ,VIN,VJ,ISTF,HSTF,BSF ,BASCST,WNDCST,FRMCST           R
 1009 FORMAT (1H ,I3,1X,A6,3F6.3,6F7.3,I4,1X,2F6.2,1X,F8.4,2F7.3,F7.1,   R
     1 F6.1,F8.1)                                                        R
      LINES=LINES+1                                                      R
      IF (J.EQ.2) GO TO 1200                                             R
 1210 PRINT 1000                                                         R
      LINES=LINES+1                                                      R
      IF (ALTNT.LT.MAXALT) GO TO 1190                                    R
      LINES =100                                                         R
 1230 IF (LINES.LE.54) GO TO 1240                                        R
C        PRINT HEADER                                                    R
      PRINT 1010                                                         R
 1010 FORMAT (1H1,22X,10HC  O  S  T,38X,22HT      I      M       E)       R
```

```
2878 MITROFF - DEBUG                                                    DATE
     RNKA   - FFN      - -      SOURCE STATEMENT      - -              IFN

      PRINT 1011                                                        R
 1011 FORMAT (1H ,52X,5HTOTAL,58X,5HTOTAL)                              R
      PRINT 1012                                                        R
 1012 FORMAT (1H ,121HALT CONFIG    CYL    HT    STF    FLNG    BOX   JOIN R
     1   COST     BASE  WNDO  FORM   CYL    HT    STF   FLNG    BOX   JOIN  R
     2TIME  //)                                                         R
      LINES=3                                                           R
 1240 READ (3) J,ALTNT,LETTRS,CYLCST,HTCST,STFCST,FLGCST,BOXCST,JNCST,   R
     1  CST,BASTIM,WNDTIM,FRMTIM,CYLTIM,HTTIM,STFTIM,FLGTIM,BOXTIM,      R
     2 JNTIM,TIM                                                        R
 1260 PRINT 1013,ALTNT,LETTRS,CYLCST,HTCST,STFCST,FLGCST,BOXCST,JNCST,   R
     1  CST,BASTIM,WNDTIM,FRMTIM,CYLTIM,HTTIM,STFTIM,FLGTIM,BOXTIM,      R
     2 JNTIM,TIM                                                        R
 1013 FORMAT (1H ,I3,1X,A6,F8.1,F5.1,3F7.1,F7.1,F8.1,1X,9F6.1,F8.1)     R
      LINES=LINES+1                                                     R
      IF (J.EQ.2) GO TO 1240                                            R
 1250 PRINT 1000                                                        R
      LINES=LINES+1                                                     R
      IF (ALTNT.LT.MAXALT) GO TO 1230                                   R
      LINES =100                                                        R
 1115 IF (LINES.LE.54) GO TO 1120                                       R
      PRINT 1014                                                        R
 1014 FORMAT (1H1,11X,13HBLACK....MARK,5X,17HOUTSIDE.....CHECK)         R
      PRINT 1015                                                        R
 1015 FORMAT (1H0,49HALT CONFIG BLKCST BLKTIM  Q+DELNCR RAD/2.    DIFF  R
     1 //)                                                              R
      LINES=3                                                           R
 1120 READ (8) J,ALTNT,LETTRS,CSTBLK,TIMBLK,X,HALF,Y                    R
 1140 PRINT 1016,ALTNT,LETTRS,CSTBLK,TIMBLK,X,HALF,Y                    R
 1016 FORMAT (1H ,I3,1X,A6,2F7.1,2X,F7.3,2X,F6.3,2X,F7.3)               R
      LINES=LINES+1                                                     R
      IF (J.EQ.2) GO TO 1120                                            R
 1130 PRINT 1000                                                        R
      LINES=LINES+1                                                     R
      IF (ALTNT.LT.MAXALT) GO TO 1115                                   R
    5 PRINT 999                                                         R
  999 FORMAT (1H1,31X,15HSHAPE   NUMBERS,////,19X, 9HCYLINDERS,25X,7HSPHR
     1ERES,//,13X,7HMINIMUM,5X,9HINCREMENT,12X,7HMINIMUM,5X,9HINCREMENT,R
     2///5HBASIC,8X,5HDELR1,8X,5HDELR3,15X,5HDELR2,8X,5HDELR3//6HSHAPES,R
     39X,1H1,12X,1H2,19X,1H1,12X,1H2,//// 8HDIAM-NCR/15X,1H3,12X,1H4,19XR
     4,1H3,12X,1H4,/ 9HINCREMENT//// 4HFULL,41X, 7H1 TO 5 ,6X, 6H2 TO 6,R
     5/15X,14HDOESN'T  APPLY,/ 5HSHIFT,37X,26H1 TO 3 TO 7 -- 2 TO 4 TO 8R
     6//// 7HPARTIAL,37X, 8H(1 TO 9),6X,7H2 TO 10/15X,14HDOESN'T  APPLY,R
     7/ 5HSHIFT,37X,27H1 TO 3 TO 11---2 TO 4 TO 12,////15X, 52H    9 IS R
     8A FICTITIOUS SHAPE NUMBER. IT IS IMPOSSIBLE/15X,53HBY DEFINITION OR
     9F THE MINIMUM SPHERE TO PARTIAL SHIFT./15X,55HYET, NUMBER 9 IS NECR
     1ESSARY FOR SHAPE NUMBER CONTINUITY.)                              R
C         RHO-T RANK ROUTINE                                            R
      START=0                                                           R
   10 START=START+1                                                     R
      NUMBER=-1                                                         R
      DO 50 ALTNT=START,MAXALT                                          R
```

```
2878 MITROFF - DEBUG                                                    DATE
     RNKA    - FEN      - -        SOURCE STATEMENT        - -        IFN

C        RANK BY HIGHEST RHO-NUMBER FIRST                                R,
      IF (RONMBR(ALTNT)-NUMBER) 50,20,30                                 R,
C        THEN RANK BY HIGHEST DRO TOTAL                                  R,
   20 IF (DROTTL(ALTNT).GT.DROT) GO TO 40                                R,
      GO TO 50                                                           R,
   30 NUMBER=RONMBR(ALTNT)                                               R,
   40 DROT=DROTTL(ALTNT)                                                 R,
      HOLD=ALTNT                                                         R,
      HOLD1=NO(ALTNT)                                                    R,
   50 CONTINUE                                                           R,
      IF (HOLD.EQ.START) GO TO 60                                        R,
C        SAVE 3 NUMBERS                                                  R,
      DROTTL(HOLD)=DROTTL(START)                                         R,
      DROTTL(START)=DROT                                                 R,
      RONMBR(HOLD)=RONMBR(START)                                         R,
      RONMBR(START)=NUMBER                                               R,
      NO(HOLD)=NO(START)                                                 R,
      NO(START)=HOLD1                                                    R,
      GO TO 10                                                           R,
   60 IF (START.LT.MAXALT) GO TO 10                                      R,
      LINES=100                                                          R,
      DO 75  RNK=1,MAXALT                                                R,
      IF (LINES.LE.47) GO TO 70                                          R,
   65 PRINT 2001                                                         R,
 2001 FORMAT (1H1,126HRANK   ALTNT   CONFIG    RHO-T RANK    RHO-NO.      R,
     1INDIV WEIGHTED DELTA ALLW RHO-T'S              INDIV DELTA ALLW RHO-TR,
     2'S       = )                                                       R,
      PRINT 2002                                                         R,
 2002 FORMAT (1H ,112H                          (GM/SQ.CM)                R,
     1            (GM/SQ.CM)                                 (GM/SQ.CM))  R,
      PRINT 2003                                                         R,
 2003 FORMAT (1H0,122H                          DROTTL                DROTLR,
     11       DROTL2       DROTL3       DROTL4      DRO1AL   DRO1AR   DRO3AL  R,
     2DRO3AR)                                                            R,
      PRINT 2004                                                         R,
 2004 FORMAT (1H0,122H                                                PRIMLR,
     1F       PRIMRT       SECDLF       SECDRT      PRIMLF   PRIMRT   SECDLF  R,
     2SECDRT// )                                                         R,
      LINES=0                                                            R,
   70 L=NO(RNK)                                                          R,
      M=CONFG(L)                                                         R,
      LINES=LINES+1                                                      R,
      PRINT 2009, RNK,L,LTTRS(M),DROTTL(RNK),RONMBR(RNK),DROTL1(L),      R,
     1 DROTL2(L),DROTL3(L),DROTL4(L),DRO1AL(L),DRO1AR(L),DRO3AL(L),      R,
     2 DRO3AR(L)                                                         R,
 2009 FORMAT (1H ,I3,I6,4X,A6,2X,1PE11.4,5X,I2,2X,1P4E12.4,1X,0P4F8.3)   R,
   75 CONTINUE                                                           R,
      LINES=100                                                          R,
      DO 95 RNK=1,MAXALT                                                 R,
      IF (LINES.LE.47) GO TO 90                                          R,
C        PRINT HEADER                                                    R,
      PRINT 2005                                                         R,
```

```
2878 MITROFF - DEBUG                                                    DATE
     RNKA  - EFN      - -      SOURCE STATEMENT      - -      IFN

2005 FORMAT (1H1,122H (    +    ALLW  RHO-T'S          -          DESIGN RHR/
    1O-T'S                     DESIGN THICKNESSES          CONFIG  ALTNTR/
    2  RANK)                                                            R/
     PRINT 2006                                                         R/
2006 FORMAT (1H , 88H          (GM/SQ.CM)                        (GM/SQ.R/
    1CM)                            (INCHES))                           R/
     PRINT 2007                                                         R/
2007 FORMAT (1H0, 99HRHOT1AL RHOT1AR RHOT3AL RHOT3AR   RHOT1L  RHOT1R  R/
    1RHOT3L  RHOT3R      T1DSL   T1DSR   T3DCL   T3DCR)                 R/
     PRINT 2008                                                         R/
2008 FORMAT (1H0,100H2PRIMLF  PRIMRT  SECDLF  SECDRT    PRIMLF  PRIMRT  R/
    1SECDLF  SECDRT      PRIMLF  PRIMRT  SECDLF  SECDRT// )             R/
     LINES=0                                                            R/
   90 LINES=LINES+1                                                     R/
      L=NO(RNK)                                                         R/
      M=CONFG(L)                                                        R/
C        PRINT DATA                                                     R/
      PRINT 2010,    RHOT1A(1),RHOT1A(2),RHOT3A(1),RHOT3A(2),          R/
     1          ROTD1L(L),ROTD1R(L),ROTD3L(L),ROTD3R(L),T1DL(L),T1DR(L),R/
     2 T3DL(L),T3DR(L),LTTRS(M),L,RNK                                   R/
 2010 FORMAT (1H ,F6.3,3(F7.3,1X),1X,4F8.3,4X,4F8.3,3X,A6,3X,I3,I5)     R/
   95 CONTINUE                                                          R/
      DO 98 I=1,MAXALT                                                  R/
      CONFIG=CONFG(I)                                                   R/
   98 SCLTIM(I)=TIME(I)/SCALF(CONFIG)                                   R/
C        NOW PERFORM RANKING BY COST                                    R/
      START=0                                                           R/
  100 START=START+1                                                     R/
      MONEY=10.**25                                                     R/
      HOURS=10.**25                                                     R/
      DO 120 ALTNT=START,MAXALT                                         R/
      IF (COST(ALTNT).GE.MONEY) GO TO 110                               R/
      MONEY=COST(ALTNT)                                                 R/
      CSTHLD=ALTNT                                                      R/
      HOLD1=CSTNO(ALTNT)                                                R/
  110 IF (SCLTIM(ALTNT).GE.HOURS) GO TO 120                             R/
      HOURS=SCLTIM(ALTNT)                                               R/
      TIMHLD=ALTNT                                                      R/
      HOLD2=TIMNO(ALTNT)                                                R/
  120 CONTINUE                                                          R/
      IF (CSTHLD.EQ.START) GO TO 130                                    R/
      COST(CSTHLD)=COST(START)                                          R/
      COST(START)=MONEY                                                 R/
      CSTNO(CSTHLD)=CSTNO(START)                                        R/
      CSTNO(START)=HOLD1                                                R/
  130 IF (TIMHLD.EQ.START) GO TO 140                                    R/
      SCLTIM(TIMHLD)=SCLTIM(START)                                      R/
      SCLTIM(START)=HOURS                                               R/
      TIMNO(TIMHLD)=TIMNO(START)                                        R/
      TIMNO(START)=HOLD2                                                R/
  140 IF(START.LT.MAXALT) GO TO 100                                     R/
      LINES=100                                                         R/
```

```
2878 MITROFF - DEBUG                                                    DATE   1
     RNKA   - FEN      - -      SOURCE STATEMENT      - -      IFN

      DO 165 I=1,MAXALT                                                  R/
      IF (LINES.LE.47) GO TO 160                                         R/
C        PRINT HEADER                                                    R/
      PRINT 1020                                                         R/
 1020 FORMAT (1H1,2X,4HCOST,30X,5HTOTAL,12X,4HTIME,29X,16HTOTAL      SCALR/
     1ED )                                                               R/
      PRINT 1021                                                         R/
 1021 FORMAT                                                             R/
     1(1H ,2X, 4HRANK,3X,5HALTNT,3X,6HCONFIG,3X,5HSHAPE,5X,4HCOST,13X,   R/
     2 4HRANK,3X,5HALTNT,3X,6HCONFIG,3X,5HSHAPE,4X,14HTIME       TIME /   R/
     3 35X,9H(DOLLARS), 42X,7H(HOURS) )                                  R/
      LINES=0                                                            R/
  160 RNKCST=CSTNO(I)                                                    R/
      RNKTIM=TIMNO(I)                                                    R/
      M=CONFG(RNKCST)                                                    R/
      N=CONFG(RNKTIM)                                                    R/
C        PRINT TIME AND COST RANKING DATA                                R/
      PRINT 1022,I,RNKCST,LTTRS(M),SHAPE(RNKCST),COST(I),I,RNKTIM,       R/
     1 LTTRS(N),SHAPE(RNKTIM),TIME(RNKTIM),SCLTIM(I)                     R/
 1022 FORMAT (1X,I4,I8,4X,A6,I6,5X,F9.1,11X,I3,I8,4X,A6,I6,F10.1,F11.1) R/
      LINES=LINES+1                                                      R/
  165 CONTINUE                                                           R/
C        DETERMINE IF ANY ERROR TERMINATIONS                             R/
      IF (NNN.LE.0) GO TO 170                                            R/
      PRINT 1023                                                         R/
 1023 FORMAT (1H1,17X,19HERROR  TERMINATIONS//16X,23HBEFORE   MESSAGE   SR/
     1HAPE/16X,22HALTNT    CODE       NO. //)                           R/
      PRINT 1024, (TERM(I,2),TERM(I,1),TERM(I,3), I=1,NNN)               R/
 1024 FORMAT (17X,I3,5X,I3,6X,I3)                                        R/
      PRINT 1025                                                         R/
 1025 FORMAT (1X,////24X,11HERROR CODES///                               R/
     163H  1    WD.GT.P+DELNCR -- MUST HAVE RIGHT WINDOW TO GET LEFT ONE R/
     110X,14HCAN'T HAVE WFS //                                           R/
     263H  2    LOGIC ERROR 2  -- INEQUALITY DELNCR.LE.P NOT SATISFIED   R/
     210X,25HCAN'T HAVE SFS,SFW,WFWSPH//                                 R/
     363H  3    LOGIC ERROR 3  -- Q.GT.0 AND P.GE.Q ARE INCONSISTENT     R/
     310X,25HCAN'T HAVE SFS,SFS11,SFW //                                 R/
     451H  4    UNABLE TO INCREMENT RADIUS TO FIT DIAM OF NCR //         R/
     563H  5    INCREMENTED WELC(=B+WD) IS GREATER THAN WNCR             R/
     510X,17HCAN'T HAVE WINDOW //                                        R/
     663H  6    LOGIC ERROR 6  -- INEQUALITY Q.LE.DELNCR.LE.P NOT SATIS. R/
     610X,25HCAN'T HAVE DFD,DFW,WFWCYL //)                               R/
      PRINT 1027                                                         R/
 1027 FORMAT (                                                           R/
     763H  7    B+WD.GT.P+DELNCR -- MUST HAVE RIGHT WINDOW TO GET LEFT   R/
     710X,14HCAN'T HAVE WFD //                                           R/
     863H  8    B+WD.GT.P+DELNCR AND P-DELNCR                            R/
     810X,21HCAN'T HAVE DFW,WFWCYL //                                    R/
     963H  9    LC.LE.RC/2                                               R/
     910X,16HCAN'T HAVE DCFCD //                                         R/
     X63H 10    LOGIC ERROR 10 -- Q.GT.0 AND P.GE.Q ARE INCONSISTENT     R/
     X10X,20HCAN'T HAVE DCFD,DCFW //)                                    R/
```

```
2878 MITROFF - DEBUG                                                    DATE
     RNKA   - EFN      - -      SOURCE STATEMENT      - -              IFN

     GO TO 175                                                          R
 170 PRINT 1028                                                         R
1028 FORMAT (1H1,16X,22HNO ERROR TERMINATIONS )                         R
 175 RETURN                                                             R
     END                                                                R
```

11. LCY


```
      REAL FUNCTION LCY(DEL)                                            LC
C        LCY IS LENGTH OF CYLINDER GIVEN FLASK LENGTH                   LC
      REAL LF                                                           LC
      COMMON CONFIG,SHAP,WORK,WNCR,DELNCR,BLKCST,P,Q,B,RF,LF,DNCRX,     LC
     1 WNCRX,DLR3X,IB,IBA,ABMNLF,DELR1,DELR2,DELR3,DELLF,DNCR,DELWCR    LC
     2 ,DLDNCR,LINES                                                    LC
      COMMON /C/ RC,LC,LCRHS,WFLC                                       LC
      COMMON /SPH/ RS,RSRHS,WFLS                                        LC
      COMMON /STIFF/ ISTIFF,BSTIFF,HSTIFF,F,D,G,K,THK2,V,VINIT          LC
      COMMON/WNDW /WD,THICKW,WNDCST,WNDTIM,SHEETS,RHOTW,RHOWND          LC
      COMMON /XSPC/ H1,H2,V1,V2,DELH1,DELH2,DELV1,DELV2,BOXTP,BOXHT,    LC
     1 SPLHT                                                            LC
      COMMON /STR/ CONFG,SHAPE,COST,TIME,MAXALT,RONMBR,DROTTL,ND,DROTL1,LC
     1 DROTL2,DROTL3,DROTL4,DRO1AL,DRO1AR,DRO3AL,DRO3AR,RHOT1A,RHOT2A,  LC
     2 RHOT3A,RHOT1L,RHOT1R,RHOT3L,RHOT3R,TIMND,CSTND                   LC
     3 ,FSKCST,FSRTIM                                                   LC
      COMMON /NPT/ WT,NTNSTY,ALTNT,ALPH                                 LC
       COMMON /XCT/ INEQC,INEQS,T1I,T1E,T2I,T2E,T3I,T3E,RATIO,HTC,HTS,  LC
     1 T1DS,T2DS,T3DC,T1IPRM,T2IPRM,T3IPRM,T1A,T2A,T3A,DELT1A,DELT2A,   LC
     2 DELT3A,T3EX                                                      LC
      COMMON /MTL/ METAL,E,YPSTRS,SF,C,EL,RHO,ANEAL,DCRIT               LC
      COMMON /FRM/ FRMCST,FRMTIM,TREXT,TRINT,FORM                       LC
      DIMENSION BLKCST(7),RC(2),LC(2),LCRHS(2),RS(12),RSRHS(12),        LC
     1 ISTIFF(2),BSTIFF(2),HSTIFF(2),K(2),V(2),VINIT(2),CONFG(100),     LC
     2 SHAPE(100),COST(100),TIME(100),RONMBR(100),DROTTL(100),ND(100),  LC
     3 DROTL1(100),DROTL2(100),DROTL3(100),DROTL4(100),DRO1AL(100),     LC
     4 DRO1AR(100),DRO3AL(100),DRO3AR(100),RHOT1A(2),RHOT2A(2),RHOT3A(2)LC
     5,RHOT1L(2),RHOT1R(2),RHOT3L(2),RHOT3R(2),TIMND(100),CSTND(100),   LC
     6 WT(4),ALPH(3),INEQC(2),INEQS(2),T1I(2),T1E(2),T2I(2),T2E(2),     LC
     7 T3I(2),T3E(2),RATIO(2),HTC(2),HTS(2),T1DS(2),T2DS(2),T3DC(2),    LC
     8 T2IPRM(2),T3IPRM(2),T1A(2),T2A(2),T3A(2),E(3),YPSTRS(3),SF(3),   LC
     9 C(3),EL(3),RHO(3),ANEAL(3),TREXT(2),TRINT(2),FORM(2),T1IPRM(2)   LC
     1 ,T3EX(2),DELT1A(2),DELT2A(2),DELT3A(2)                           LC
      LCY      =LF-2.*SQRT(DEL*(DEL+2.*RF))                             LC
      RETURN                                                            LC
      END                                                               LC
```

12. WFLC


```
      REAL FUNCTION WFL(R)                                              WF
C        COMPUTE WIDTH OF FLANGE                                        WF
      COMMON CONFIG,SHAP,WORK,WNCR,DELNCR,BLKCST,P,Q,B,RF,LF,DNCRX,     WF
     1 WNCRX,DLR3X,IB,IBA,ABMNLF,DELR1,DELR2,DELR3,DFLLF,DNCR,DELWCR    WF
     2 ,DLDNCR,LINES                                                    WF
      COMMON /C/ RC,LC,LCRHS,WFLC                                       WF
      COMMON /SPH/ RS,RSRHS,WFLS                                        WF
      COMMON /STIFF/ ISTIFF,BSTIFF,HSTIFF,F,D,G,K,THK2,V,VINIT          WF
      COMMON/WNDW /WD,THICKW,WNDCST,WNDTIM,SHEETS,RHOTW,RHOWND          WF
      COMMON /XSPC/ H1,H2,V1,V2,DELH1,DELH2,DELV1,DELV2,BOXTP,BOXHT,    WF
     1 SPLHT                                                            WF
      COMMON /STR/ CONFG,SHAPE,COST,TIME,MAXALT,RONMBR,DROTTL,ND,DROTL1,WF
     1 DROTL2,DROTL3,DROTL4,DRO1AL,DRO1AR,DRO3AL,DRO3AR,RHOT1A,RHOT2A,  WF
     2 RHOT3A,RHOT1L,RHOT1R,RHOT3L,RHOT3R,TIMND,CSTND                   WF
     3 ,ESKCST,ESKTIM                                                   WF
      COMMON /NPT/ WT,NTNSTY,ALTNT,ALPH                                 WF
      COMMON /XCT/ INEQC,INEQS,T1I,T1E,T2I,T2E,T3I,T3E,RATIC,HTC,HTS,   WF
     1 T1DS,T2DS,T3DC,T1IPRM,T2IPRM,T3IPRM,T1A,T2A,T3A,DELT1A,DELT2A,   WF
     2 DELT3A,T3EX                                                      WF
      COMMON /MTL/ METAL,F,YPSTRS,SF,C,EL,RHO,ANEAL,DCRIT               WF
      COMMON /FRM/ FRMCST,FRMTIM,TREXT,TRINT,FORM                       WF
      DIMENSION BLKCST(7),RC(2),LC(2),LCRHS(2),RS(12),RSRHS(12),        WF
     1 ISTIFF(2),BSTIFF(2),HSTIFF(2),K(2),V(2),VINIT(2),CONFG(100),     WF
     2 SHAPE(100),COST(100),TIME(100),RONMBR(100),DROTTL(100),ND(100),  WF
     3 DROTL1(100),DROTL2(100),DROTL3(100),DROTL4(100),DRO1AL(100),     WF
     4 DRO1AR(100),DRO3AL(100),DRO3AR(100),RHOT1A(2),RHOT2A(2),RHOT3A(2)WF
     5,RHOT1L(2),RHOT1R(2),RHOT3L(2),RHOT3R(2),TIMND(100),CSTND(100),   WF
     6 WT(4),ALPH(3),INEQC(2),INEQS(2),T1I(2),T1E(2),T2I(2),T2E(2),     WF
     7 T3I(2),T3E(2),RATIO(2),HTC(2),HTS(2),T1DS(2),T2DS(2),T3DC(2),    WF
     8 T2IPRM(2),T3IPRM(2),T1A(2),T2A(2),T3A(2),F(3),YPSTRS(3),SF(3),   WF
     9 C(3),EL(3),RHO(3),ANEAL(3),TREXT(2),TRINT(2),FORM(2),T1IPRM(2)   WF
     1 ,T3EX(2),DELT1A(2),DELT2A(2),DELT3A(2)                           WF
      WFL    =2.9+0.203*R                                              WF
      RETURN                                                            WF
      END                                                               WF
```

13. WINDOW


```
      SUBROUTINE WINDOW(R)                                              WI
C        THIS ROUTINE CAN BE EXTENDED TO HANDLE THINNER SHEETS BY       WI
C         INCREASING DIMENSION OF TW AND T AND EXTENDING DATA STATEMENT WI
      COMMON CONFIG,SHAP,WORK,WNCR,DELNCR,BLKCST,P,Q,B,RF,LF,DNCRX,     WI
     1 WNCRX,DLR3X,IB,IBA,ABMNLF,DELR1,DELR2,DELR3,DELLF,DNCR,DELWCR    WI
     2 ,DLDNCR,LINES                                                    WI
      COMMON /C/ RC,LC,LCRHS,WFLC                                       WI
      COMMON /SPH/ RS,RSRHS,WFLS                                        WI
      COMMON /STIFF/ ISTIFF,BSTIFF,HSTIFF,F,D,G,K,THK2,V,VINIT          WI
      COMMON/WNDW /WD,THICKW,WNDCST,WNDTIM,SHEETS,RHCTW,RHOWND          WI
      COMMON /XSPC/ H1,H2,V1,V2,DELH1,DELH2,DELV1,DELV2,BOXTP,BOXHT,    WI
     1 SPLHT                                                            WI
      COMMON /STR/ CONFG,SHAPE,COST,TIME,MAXALT,RONMBR,DROTTL,NO,DROTL1,WI
     1 DROTL2,DROTL3,DROTL4,DRO1AL,DRO1AR,DRO3AL,DRO3AR,RHOT1A,RHOT2A,  WI
     2 RHOT3A,RHOT1L,RHOT1R,RHOT3L,RHOT3R,TIMNO,CSTNO                   WI
     3 ,FSKCST,FSKTIM                                                   WI
      COMMON /NPT/ WT,NTNSTY,ALTNT,ALPH                                 WI
       COMMON /XCT/ INEOC,INEOS,T1I,T1E,T2I,T2E,T3I,T3E,RATIO,HTC,HTS,  WI
     1 T1DS,T2DS,T3DC,T1IPRM,T2IPRM,T3IPRM,T1A,T2A,T3A,DELT1A,DELT2A,   WI
     2 DELT3A,T3EX                                                      WI
      COMMON /MTL/ METAL,E,YPSTRS,SF,C,EL,RHC,ANEAL,DCRIT               WI
      COMMON /FRM/ FRMCST,FRMTIM,TREXT,TRINT,FORM                       WI
      DIMENSION BLKCST(7),RC(2),LC(2),LCRHS(2),RS(12),RSRHS(12),        WI
     1 ISTIFF(2),BSTIFF(2),HSTIFF(2),K(2),V(2),VINIT(2),CONFG(100),     WI
     2 SHAPE(100),COST(100),TIME(100),RONMBR(100),DROTTL(100),NO(100),  WI
     3 DROTL1(100),DROTL2(100),DROTL3(100),DROTL4(100),DRO1AL(100),     WI
     4 DRO1AR(100),DRO3AL(100),DRO3AR(100),RHOT1A(2),RHOT2A(2),RHOT3A(2)WI
     5,RHOT1L(2),RHOT1R(2),RHOT3L(2),RHOT3R(2),TIMNO(100),CSTNO(100) ,  WI
     6 WT(4),ALPH(3),INEOC(2),INEOS(2),T1I(2),T1E(2),T2I(2),T2E(2),     WI
     7 T3I(2),T3E(2),RATIO(2),HTC(2),HTS(2),T1DS(2),T2DS(2),T3DC(2),    WI
     8 T2IPRM(2),T3IPRM(2),T1A(2),T2A(2),T3A(2),E(3),YPSTRS(3),SF(3),   WI
     9 C(3),EL(3),RHO(3),ANEAL(3),TREXT(2),TRINT(2),FORM(2),T1IPRM(2)   WI
     1 ,T3EX(2),DELT1A(2),DELT2A(2),DELT3A(2)                           WI
      DIMENSION TW(7),T(6)                                              WI
      DATA (T(I),I=1,6)/0.014,0.010,0.0075,0.005,0.003,0.001/           WI
      THICKW=0.                                                         WI
      SHEETS=0.                                                         WI
      TW(1)=AINT(6.*R+0.5)/999.999
      DO 35 I=1,6                                                       WI
      ALPHA=TW(I)/T(I)                                                  WI
      SH=AINT(ALPHA)                                                    WI
      ADDTNL=SH*T(I)                                                    WI
      SHEETS=SHEETS+SH                                                  WI
      THICKW=THICKW+ADDTNL                                              WI
      IF (THICKW.GE.TW(1)) GO TO 40                                     WI
C        COMPUTE NEXT TW                                                WI
      TW(I+1)=TW(I)-ADDTNL                                              WI
   35 CONTINUE                                                          WI
C        MUST ADD ONE MORE SHEET TO COMPLETE WINDOW                     WI
      SHEETS=SHEETS+1.                                                  WI
      THICKW=THICKW+T(I)                                                WI
```

```
40 WNDCST=5.*SHEETS                                                    WI
   WNDTIM=.5                                                           WI
45 IF (THICKW.GT.0.014) GO TO 50                                       WI
   WD=C.12*R+0.5                                                       WI
   GO TO 55                                                            WI
50 WD=(R/10.05)*10.**(1.53*10.0**(-4.0*R))+0.5                         WI
55 RHCTW=RHCWND*THICKW*2.54                                            WI
   RETURN                                                              WI
   END                                                                 WI
```

14. BLOCK


```
2873 MITROFF - 9/22/66                                                    DATE    0
     BLOK    - EEN      - -        SOURCE STATEMENT        - -          IFN

BLOCK DATA                                                                  BL
COMMON /XTRA/ HEAT(3),TYP(3)                                                BL
COMMON /NPT/ WT(4),NTNSTY,ALTNT,ALPH(3)                                     BL
DATA (TYP(I),I=1,3)/5H BOX ,5HSPOOL,5H N/A /                                BL
DATA (HEAT(N),N=1,3)/3HYES,3H NO,3HN/A/                                     BL
DATA (ALPH(I),I=1,3)/2HAL,2HFE,2HBE/                                        BL
END                                                                         BL
```

STF


```
      SUBROUTINE STF(J)                                                 S
      INTEGER SHAP                                                      S
      REAL ISTIFF,LC,LCRHS                                              S
      COMMON CONFIG,SHAP,WORK,WNCR,DELNCR,BLKCST,P,Q,B,RF,LF,DNCRX,     S
     1 WNCRX,DLR3X,IB,IBA,ABMNLF,DELR1,DELR2,DELR3,DELLF,DNCR,DELWCR    S
     2 ,DLDNCR,LINES                                                    S
      COMMON /C/ RC,LC,LCRHS,WFLC                                       S
      COMMON /SPH/ RS,RSRHS,WFLS                                        S
      COMMON /STIFF/ ISTIFF,BSTIFF,HSTIFF,E,D,G,K,THK2,V,VINIT          S
      COMMON/WNDW /WD,THICKW,WNDCST,WNDTIM,SHEETS,RHOTW,RHOWND          S
      COMMON /XSPC/ H1,H2,V1,V2,DELH1,DELH2,DELV1,DELV2,BOXTP,BOXHT,    S
     1 SPLHT                                                            S
      COMMON /STR/ CONFG,SHAPE,COST,TIME,MAXALT,RONMBR,DROTTL,NO,DROTL1,S
     1 DROTL2,DROTL3,DROTL4,DRO1AL,DRO1AR,DRO3AL,DRO3AR,RHOT1A,RHOT2A,  S
     2 RHOT3A,RHOT1L,RHOT1R,RHOT3L,RHOT3R,TIMNO,CSTNO                   S
     3 ,ESKCST,ESKTIM                                                   S
      COMMON /NPT/ WT,NTNSTY,ALTNT,ALPH                                 S
       COMMON /XCT/ INEQC,INEQS,T1I,T1E,T2I,T2E,T3I,T3E,RATIO,HTC,HTS,  S
     1 T1DS,T2DS,T3DC,T1IPRM,T2IPRM,T3IPRM,T1A,T2A,T3A,DELT1A,DELT2A,   S
     2 DELT3A,T3EX                                                      S
      COMMON /MTL/ METAL,E,YPSTRS,SF,C,EL,RHO,ANEAL,DCRIT               S
      COMMON /FRM/ FRMCST,FRMTIM,IREXT,TRINT,FORM                       S
      DIMENSION BLKCST(7),RC(2),LC(2),LCRHS(2),RS(12),RSRHS(12),        S
     1 ISTIFF(2),BSTIFF(2),HSTIFF(2),K(2),V(2),VINIT(2),CONFG(100),     S
     2 SHAPE(100),COST(100),TIME(100),RONMBR(100),DROTTL(100),NO(100),  S
     3 DROTL1(100),DROTL2(100),DROTL3(100),DROTL4(100),DRO1AL(100),     S
     4 DRO1AR(100),DRO3AL(100),DRO3AR(100),RHOT1A(2),RHOT2A(2),RHOT3A(2)S
     5,RHOT1L(2),RHOT1R(2),RHOT3L(2),RHOT3R(2),TIMNO(100),CSTNO(100),   S
     6 WT(4),ALPH(3),INEQC(2),INEQS(2),T1I(2),T1E(2),T2I(2),T2E(2),     S
     7 T3I(2),T3E(2),RATIO(2),HTC(2),HTS(2),T1DS(2),T2DS(2),T3DC(2),    S
     8 T2IPRM(2),T3IPRM(2),T1A(2),T2A(2),T3A(2),E(3),YPSTRS(3),SF(3),   S
     9 C(3),EL(3),RHO(3),ANEAL(3),IREXT(2),TRINT(2),FORM(2),T1IPRM(2)   S
     1 ,T3EX(2),DELT1A(2),DELT2A(2),DELT3A(2)                           S
      S=K(J)+1                                                          S
C        S IS NUMBER OF REGIONS - K IS NUMBER OF STIFFENERS             S
      V(J)=LC(SHAP)/(S*D)                                               S
      IF (V(J).LE.6.) GO TO 20                                          S
C        VON MISES ANALYSIS ROUTINE MAY BE INSERTED HERE                S
      BLKCST(7)=BLKCST(7)+10.                                           S
   20 THK2=G/S**0.4                                                     S
      RETURN                                                            S
      END                                                               S
```