FOURTH SEMIANNUAL REPORT

on

Research on The Mechanism and Kinetics of Oxidation of Silicon in Air

For the period

1 December 1966 to 31 May 1967

Grant Number NASA Grant NGR-39-009-042

National Aeronautics and Space Administration

Washington, D. C. 20546

June 10, 1967

K. Vedam
F. Lukes
R. Rai

Table of Contents

	Summary	(ii)
1.	Introduction	1
2.	Part I. Instrumentation for Ellipsometry	2
3.	Part II. Determination of Refractive index and thickness of thin films on silicon by ellipsometry	12
4.	References	36
5.	Conclusions	37
6.	Personnel	38

SUMMARY

The instrumentation to determine the ellipticity parameter of the reflected light from a surface has been completed and is described in detail in this report. The instrumentation which can also be used for any polarimetric determination enables us to determine Δ to an accuracy of $\pm 0.01°$ when ψ is known, within a matter of seconds, and eliminates the subjective error involved in visual determinations.

Using this instrumentation measurements of the ellipticity parameters have been measured on several specimens of silicon covered with an oxide layer. In addition to measurements in air the values of Δ and ψ were also determined when the samples were immersed in a liquid like toluene or benzene. From these measurements in air and in liquid it is possible simultaneously to determine the refractive index and the thickness of the oxide film by a self consistency method described in this report. The oxide films of thickness varying from 80Å to 300Å are found to have a value of the refractive index 1.484 ± 0.004 for $\lambda 5461$Å.

1. Introduction

This report summarizes the work done during the period December 1, 1966 to May 31, 1967. The report is divided into two parts. The first part deals with a detailed description of the instrumentation for automatic rapid determination of the ellipsometer readings. The instrumentation was completed during this period and has been successfully used to make the measurements in the second part of the report. The second part of the report deals with the simultaneous and independent determination of the refractive index and thickness of thin oxide films (< 250 Å) on silicon. These determinations were made by measuring the ellipticity parameter of the light reflected from the sample immersed in air and in a suitable liquid. These results indicate that the refractive index of the oxide film is 1.48 which is definitely higher than the value 1.46 which has been assumed by the previous investigators. The significance of this higher value of refractive index for the oxide film is also discussed.

The two parts of the report have been written in a form suitable for making a final draft to be published as two papers. So some repetition could not be avoided.

2. Part I

Instrumentation to be used with an Ellipsometer for the rapid Determination of the Ellipticity Parameters

Introduction

It is well known that the surfaces of a freshly cleaved sample of any material, say like silicon single crystal get contaminated by oxygen and other constituents of the atmospheric air within a fraction of a second. Further even in the best vacuum available in the laboratory noticeable contamination of such a "clean" surface by the oxygen can be detected in a matter of minutes. Hence in studies such as the oxidation kinetics of "clean" surfaces it is imperative that the method of measurement must satisfy both the following conditions: (i) the measuring technique itself should not influence the property being studied and (ii) the time taken to complete one measurement at any stage must be very small - at least of the order of a second if not less. The ellipsometric technique can be conveniently used for these type of studies, provided the second condition is satisfied. The following describes an experimental arrangement by which this has been achieved at a relatively moderate cost. To our knowledge such a system or any arrangement similar to this has not been described in the literature.

Incidentally since the experimental arrangement is almost identical for polarimetric measurements as well, the same procedure can be adapted to advantage to study the time dependence of the optical rotatory power of mutarotatory materials and such other phenomena which are strongly time dependent.

Experimental Technique

The principle as well as the basic instrumentation of ellipsometry is well known and has been described in numerous publications[1-3]. To recapitulate briefly the ellipsometer is a standard polarizing spectrometer with the facility to introduce a quarterwave plate in the optical path either before or after reflection from the experimental surface. Consider the former case i.e. the quarterwave plate transmits the incident beam and that it is fixed in orientation with the fast axis inclined at 45° to the plane of incidence. In such a case when the polarizer and analyzer are suitably oriented so that the beam reflected from the surface is extinguished, then it can be shown[4] that

$$\Delta = 90° - 2P$$

and

$$\psi = -A$$

where Δ and ψ are the ellipticity parameters which define the ratio of the Fresnel coefficients for the p and s component waves i.e.,

$$\frac{R_p}{R_s} = \tan \psi \, e^{i\Delta}$$

and P and A are the orientations of the polarizer and analyzer at extinction.

Further it is usually found that only one of these two ellipticity parameters vary significantly while the second remains essentially constant during the course of an experiment of short duration. For example in the case of the formation of SiO_2 over Si in air, during the time Δ varied by 2°, the variation in ψ was only 0.01°. Thus in this case one can follow the formation of the contaminating oxide layer on the surface of silicon by following the changes in Δ keeping ψ constant; in other words in this experiment it is only necessary to follow the position of polarizer P keeping

the analyzer A fixed, to obtain good extinction. Of course when large thickness variations of the contaminating layer are considered, it will be necessary to vary both Δ and Ψ. However in such cases the time interval is usually much larger and thus it is not necessary to employ the following rapid determination technique.

Instrumentation

In the experimental set up developed shown schematically in Fig. 1 the light source is a high intensity PEK #110 mercury arc lamp with a liminous intensity of approximately 140,000 candles/cm^2. A PEK Model 401 dc power supply provides the necessary operating parameters for the lamp. The output ripple of the 401 power supply, according to the manufacturer, is less than 3% at the rated load; while a more regulated power supply would be advantageous in reducing a.c. noise. The major problem with the lamp is the intensity drift. The lamp was adjusted for constant current every 1/2 hour. An operational feed back control may prove useful in eliminating this drift, but such has not been employed in our setup. The lamp itself is mounted in a PEK Model 901 lamp housing which provides a variable-focus (12"-30") projection lens system.

The light output passes through a Fabry-Perot transmission type interference filter for λ5461Å corresponding to the Hg spectral green line. Since the light source is a high pressure mercury arc type, there is noticeable continuous background down to the ultraviolet. Since this background in the near ultraviolet is transmitted by the interference filter, it was necessary to remove it by using a broad band yellow filter to obtain accurate values of the ellipticity parameters.

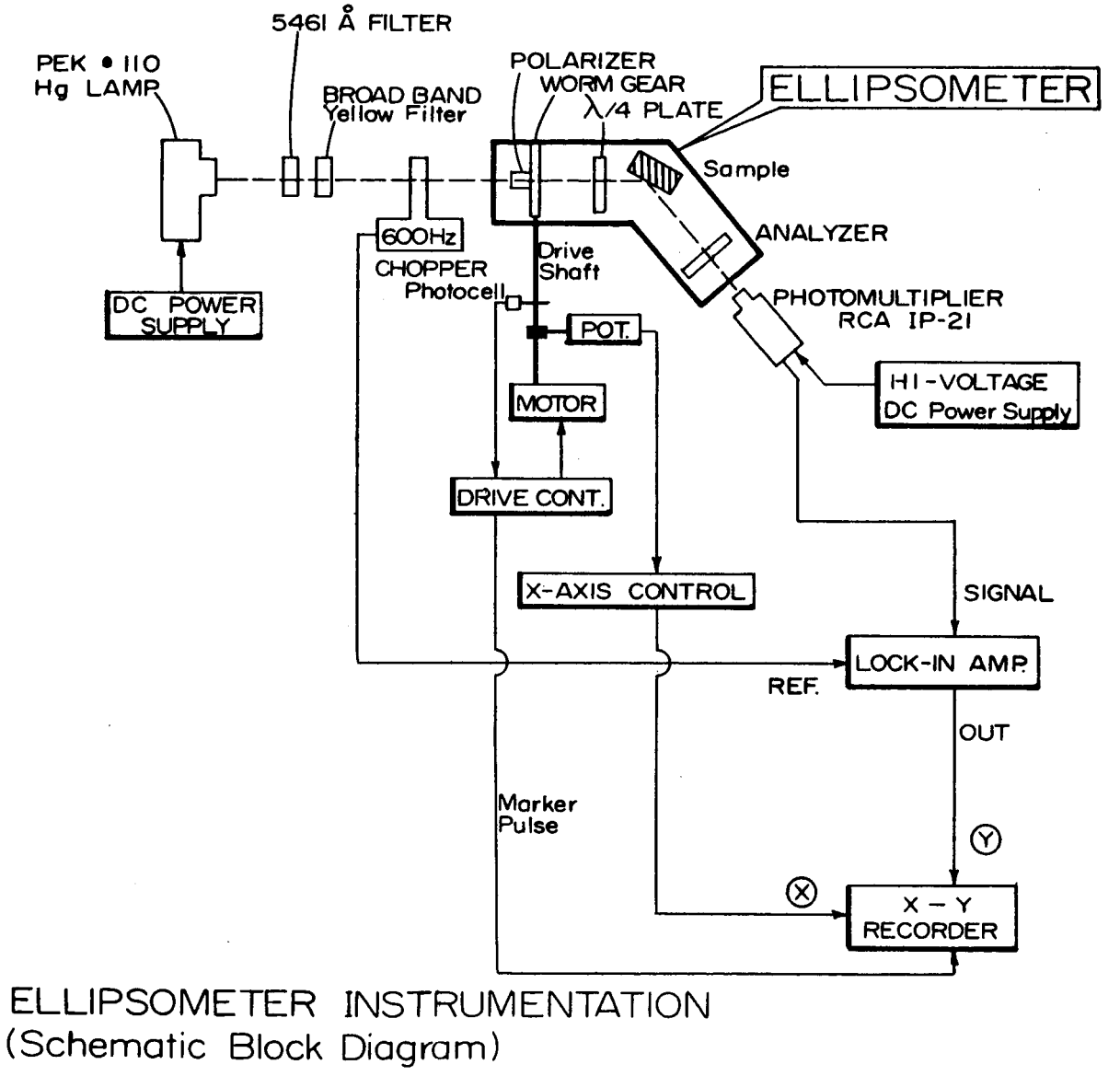

Figure 1

Schematic drawing of the Instrumentation for Ellipsometry

The light is then chopped by a mechanical chopper. Selection of the chopping frequency involves the consideration of the amplifying device. Amplifiers have a noise power spectrum that varies as the reciprocal of the frequency near zero frequency due to the so-called flicker effect (1/f noise). To avoid the 1/f noise the signal should be made to appear at some frequency above 10HZ for tube-type amplifiers and above 500HZ for transistor systems. The chopper employed in the set-up shown is a Princeton Applied Research Model BZ-1 providing an interrupting frequency of 600HZ. The chopper provides an electrically isolated square-wave signal (1 volt p-p) which is sychronous with the chopping frequency and this signal is used as the reference for the Lock-in Amplifier.

The light beam is then collimated by the entrance lens arrangement of a Gaertner ellipsometer and is linearly polarized by a Glan-Thompson prism. The standard ellipsometer unit was modified along the following lines in order that the minimum setting of the polarizer can be determined to within ±0.01° and in a short time of the order of 1 sec. The polarizer is attached to a 360 tooth worm gear which is driven by a sychronous motor. One revolution of the worm rotates the polarizer through exactly 1°. The shaft on which the worm is mounted has a blank gear disc with a small hole through it to pass a small beam of light once every revolution. The beam of light hits a photocell which accuates a relay counting network, (Fig. 2). The counting network provides the sweeping control by rotating the polarizer a set number of degrees, reversing direction, driving back the same number of degrees and continuing this reversing process until stopped.

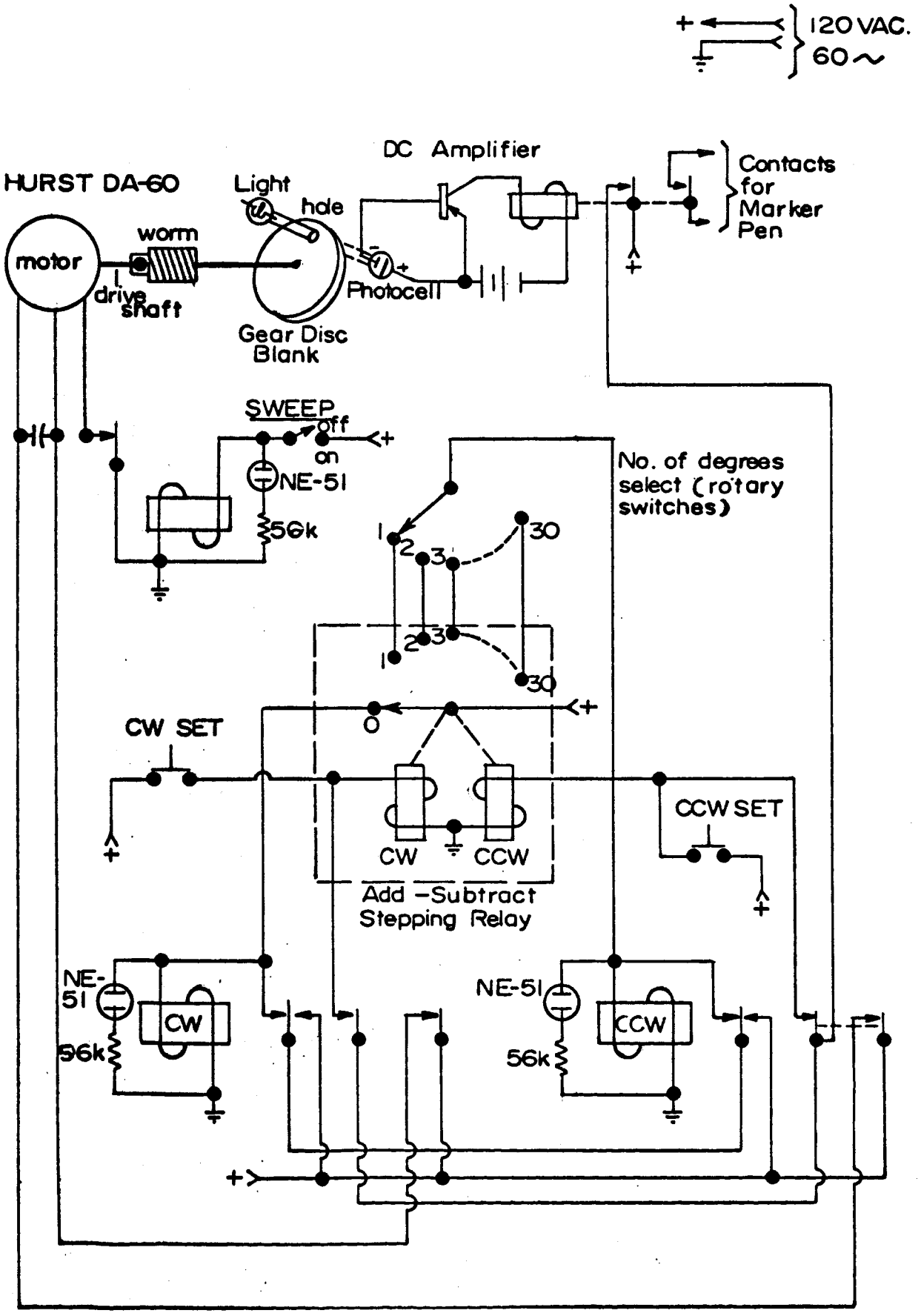

SWEEP CONTROL

Since the initial formation of the contaminating occurs very fast it is desirable to take as many readings as possible in a short time. The speed of the motor was selected to drive the polarizer at a rate of 1°/sec, (60 RPM). High speeds were tried but the major factor here is that the effective bandwidth noise filtering (time constant) of the Lock-in Amplifier must be reduced, hence increasing the noise. Also connected to the drive shaft is a 10-turn precision potentiometer. This potentiometer with a voltage divider circuit (X-axis control) is used to provide the angles of rotation. One revolution of the shaft produces a voltage change of 100 mv at the output of the X-axis control and this output drives the X-axis of the chart recorder. Correlation of the polarizer position to the calibrations on the chart paper is made by allowing 100 mv = 1° = 1" of movement along the X-axis. A 100 mv = 1° = 2" provides higher resolution in reading accuracy; ±0.01°, but limits the sweep to 7° because the chart paper is only 15" long.

If an X-Y recorder is not available a standard roll-chart recorder can be employed by providing a marker-pulse correlation, 1 pulse/1°. A chart speed of 1"/sec will provide a resolution of 1°/1".

Detection of the light output from the ellipsometer is done by a photomultiplier tube; the output of which is fed into the signal input of the lock-in amplifier. Stray modulated A.C. light, especially at the reference frequency of 600HZ, should be effectively blocked from entering the photomultiplier since this will introduce false signals that will be detected by the lock-in amplifier. Other light, while not directly concerned with the signal, will increase the noise due to the shot effect:

$S/N = \frac{i}{\sqrt{i^2 n}}$; where $i^2 n$ = Mean shot noise current; and,

i = average photoelectric signal current.

General considerations for improving the S/N ratio of Photomultiplier detectors are (i) The photomultiplier used should have a photocathode which shows peak sensitivity at the wavelength being used. In the set-up shown, using a wavelength of λ5461Å, an S-4, S-5, S-11, or S-20 spectral response would be a satisfactory choice. (ii) cooling the photomultiplier will reduce thermionic emission (dark current). This would be necessary if the light intensity is extremely low. It was found not necessary when using a PEK #110 mercury lamp. (iii) Using as low a voltage on the photomultiplier tube as possible as is consistent with the required gain. An RCA IP-21 PM tube with a supply voltage of 500-800 V and a 10 stage voltage divider of 10-250K resistors provides a satisfactory arrangement. If the signal is very low, cooling the PM tube should be tried first rather than increasing the supply voltage.

The lock-in amplifier employed in the set-up shown in Fig. 1, is a Princeton Applied Research Model JB-4. A lock-in amplifier is a detection system capable of operating with an extremely narrow equivalent noise bandwidth. The signal input is applied to a frequency selective amplifier with a Q = 25 to limit the input bandwidth. The output of the signal amplifier is applied to the input of a phase sensitive detector which mixes the input signal and the reference signal so as to produce the corresponding sum and difference frequencies. A low-pass filter stops the upper portion of the band, but the lower side (DC) is passed by the low pass filter; the

bandwidth of which determines the effective bandwidth of the amplifier. Lock-in amplifiers usually are called phase-sensitive detectors because the DC output produced by a signal at the reference frequency is proportional to the cosine of the relative phase of the signal the the reference.

The effective integrated noise bandwidth βN_i of the amplifier is: $\beta N_i = 1/2\ RC\ H_2$. If the wave shape of the signal is to be preserved the integrating time $Ti = \frac{1}{\beta N_i}$ must be less than the shortest time in which a significant change in signal intensity can occur.

The DC output from the lock-in amplifier is fed into the Y-axis of an X-Y chart recorder. The output signal from the X-axis control is fed into X-axis of the recorder. The chart recorder used is a Hewlett-Packard Model 2D-2, providing an input sensitivity on both axis as high as 0.5mv/1". One possible disadvantage with an X-Y recorder is that the area of the chart is only 11" x 15", thereby limiting the number of degrees that can be recorded to 15° for 1°/1" resolution or 7° for a 1°/2" resolution. However, in the experiments on the oxidation kinetics of silicon, with air as the first medium sweeps greater than 6° are not required.

The output graph on the chart will resemble as $\cos^2\theta$ curve as can be shown by elementary considerations of the analysis of linearly polarized light. To determine the minimum point of such a curve, the usual procedure is to select two points on either side of the minimum at which the intensities are the same, and take the mean of these two settings of the nicol. Using such a procedure an accuracy of ±0.01° has been achieved with air as the first medium.

The advantage of this instrumentation and recording arrangement, is (i) once an approximate value of Δ and ψ are known this method provides for a rapid scanning and a precise fixing of the extinction position, (ii) it provides a permanent record which can be analyzed later at leisure. These advantages enable one to follow the initial contamination of freshly cleaved surfaces which proceeds, as we know , at a very rapid rate.

3. Part II

Independent Determination of the Refractive Index and the Thickness of Thin Films by Ellipsometry

Introduction

The ellipsometric technique of studying the surface films has come to the fore in the last few years due to the use of computers in solving the equations for the parameters of the elliptically polarized light reflected by the surface film on an absorbing substrate. The usual experimental arrangement consists of polarized light incident from a medium of refractive index n_o on to a nonabsorbing surface film of refractive index n_1 as in Fig. 3. The film rests on an absorbing substrate of complex refractive index $\bar{n}_2 = n_2 - ik_2 = n_2(1-ik)$. In most of the measurements thus far the first medium has been air ($n_o = 1$).

Such measurements have been successfully employed to study the oxidation kinetics of many metals and semiconductors. However for small film thicknesses (e.g., SiO_2 films <250A) it has not been possible to obtain unique values of the refractive indices of the film as well as its thickness from these measurements. Hence it has been the usual practice to assume a value for the refractive index of the film and deduce the film thickness from the observations. In the case of silicon the refractive index of the oxide film is usually taken to be 1.460 for λ5461Å. This corresponds to the refractive index of vitreous silica. There is no evidence to indicate that the oxide film is in such disordered state for small film thicknesses. As ordered forms of silicon dioxide stable at room temperature (e.g., α-quartz, cristobalite etc.) have slightly higher refractive indices than vitreous silica, a direct determination of the refractive index of the film will provide some

information about the degree of order at such small film thickness. Further if the value of the refractive index for different film thicknesses can be determined then it will be of interest to see how it varies with film thickness.

One possible way of determining the refractive index and the thickness of the film independently is to employ two different fluids as the first medium (for example, air and an inert liquid like benzene, toluene, carbon tetrachloride etc.) and solve for the two variables refractive index and film thickness. Such measurements have been carried out on oxide films on silicon; and the results are given below.

Theoretical Considerations

In studying oxide films on silicon with liquids like C_6H_6 or $C_6H_5 \cdot CH_3$, one meets with the case when the refractive index of the first medium, n_o, is greater than that of the film n_1. In such a case two situations are possible: Case (i) the angle of incidence ϕ_o is less than the critical angle ϕ_c (= $\sin^{01} n_1/n_o$) and Case (ii) $\phi_o > \phi_c$. For both these cases detailed calculations have been carried out and the results are discussed below.

Here it may be mentioned that Reddy and Bokins have used a liquid (an electrolyte) as the first medium in their investigations on electrochemical studies; but in this case the refractive index of the first medium is less than that of the film and hence they could employ the well-known equations of Archer.

The case where the first medium has a higher refractive index than the film has also been considered by Passaglia _et al_, but in their studies the substrate was nonabsorbing.

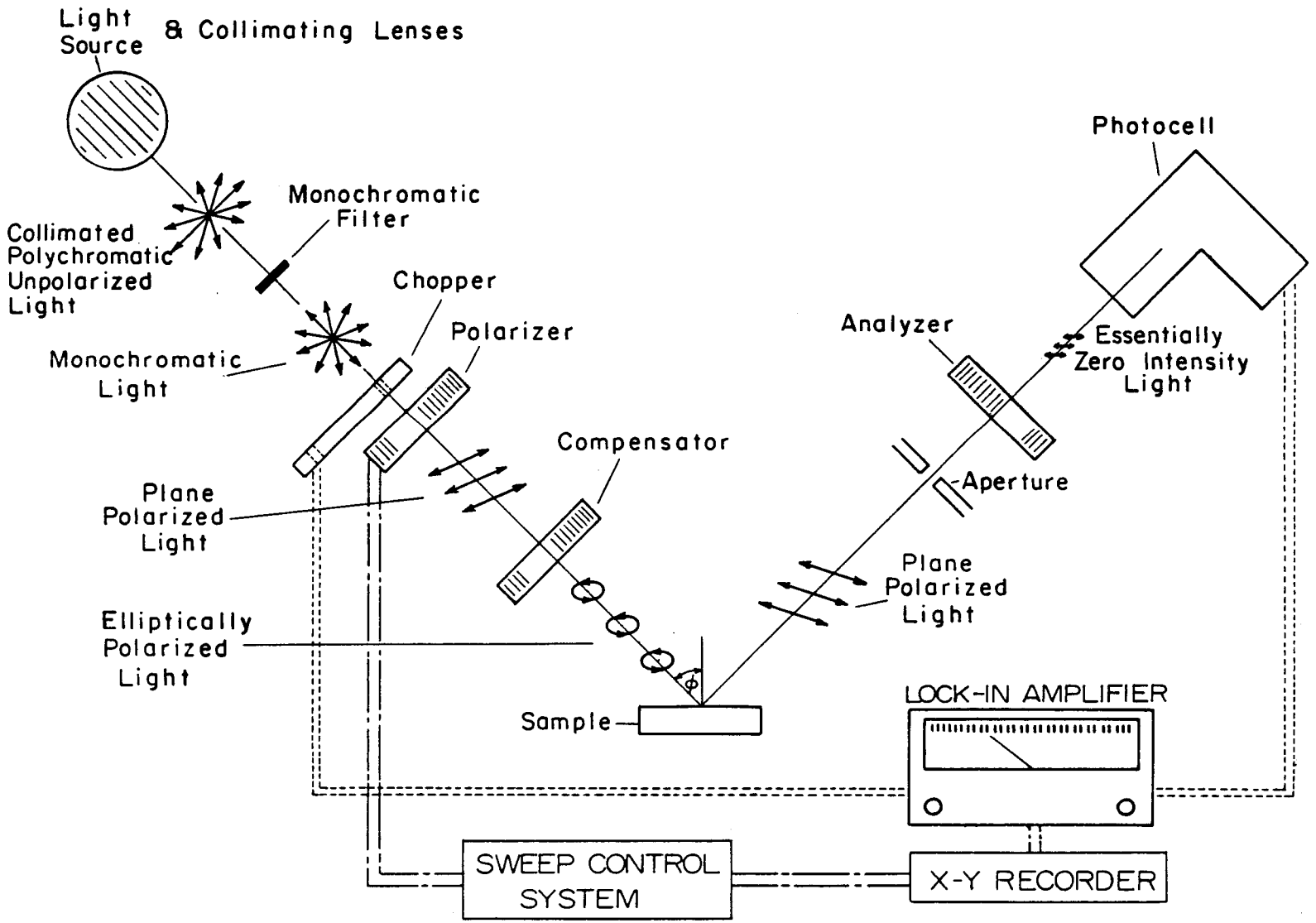

Figure 3

Schematic drawing of Ellipsometry

Case (i). $\phi_o < \phi_c$: In this case the well-known Drude's exact equations for the ellipticity parameters of the reflected light are valid. For the sake of completeness these equations are given below.

$$\tan \psi e^{i\Delta} = \frac{\gamma_{1p} + \gamma_{2pe}^{-2i\delta}}{1 + \gamma_{1p}\,\gamma_{2pe}^{-2i\delta}} \times \frac{1 + \gamma_{1s}\,\gamma_{2se}^{-2i\delta}}{\gamma_{1s} + \gamma_{2se}^{-2i\delta}} \tag{1}$$

where Ψ and Δ are the ellipticity parameters, r_{1p}, r_{2p}, r_{1s}, and r_{2s} are the Fresnel reflection coefficient for the parallel (p) and perpendicular (s) components at the interfaces 1 and 2. The expression for these Fresnel coefficients are given below:

$$\begin{aligned}
r_{1p} &= (n_o \cos \phi_1 - n_1 \cos \phi_o)/(n_o \cos \phi_1 + n_1 \cos \phi_o) \\
r_{1s} &= (n_1 \cos \phi_o - n_1 \cos \phi_1)/(n_o \cos \phi_o + n_1 \cos \phi_1) \\
r_{2p} &= (n_1 \cos \bar{\phi}_2 - \bar{n}_2 \cos \phi_1)/(n_1 \cos \bar{\phi}_2 + \bar{n}_2 \cos \phi_1) \\
r_{2s} &= (n_1 \cos \phi_1 - \bar{n}_2 \cos \bar{\phi}_2)/(n_1 \cos \phi_1 + \bar{n}_2 \cos \bar{\phi}_2)
\end{aligned} \tag{2}$$

ϕ_1 is the angle of refraction in the film and $\bar{\phi}_2$ is given by

$$\bar{n}_2 \cos \phi_2 = (\bar{n}_2^2 - n_1^2 \sin^2 \phi_1)^{1/2} \tag{3}$$

δ is related to the thickness d of the film by the following equation

$$\delta = \frac{2\pi d}{\lambda} (n_1^2 - n_o^2 \sin^2 \phi_o)^{1/2} \tag{4}$$

where λ is the wavelength of light.

Using these equations detailed computations of Δ and Ψ have been made with IBM 7074 computer for the value of the refractive index of the liquid, n_o, varying from 1.38 to 1.60. For each value of the refractive

index of the liquid the computations were made for different film thicknesses and different refractive indices of the film. The angle of incidence ϕ_o was taken to be 70°.

Figure 4 shows the variation of Δ and Ψ for δ varying from 0° to 180° for the case of light incident from the liquid Toluene (n_1 = 1.496 for 5461 Å) on to surface films of refractive indices 1.487, 1.460 and 1.406; on the substrate silicon. The angle of incidence in all these cases is taken to be 70°. The first two values chosen for the refractive index of the film correspond to the index of Cristobalite and vitreous silics respectively. The value 1.406 for the refractive index of the film corresponds to a critical angle slightly larger than the angle of incidence of 70° used in the calculations. Representative values of δ are marked on the curves.

The most striking result which is apparent on a study of the figure is the very large change in Δ and an appreciable change in ψ for small changes in δ as the angle of incidence approaches the critical angle. For example for the highest refractive index of the film used in the calculation 1.487, Δ changes from 7.65° at δ= 0 to -20.27° at δ = 32°. On the other hand for the smallest refractive index of the film, 1.406 (i.e. when the critical angle is only slightly larger than the angle of incidence) Δ changes from 7.65° at δ = 0 to -56.12° at δ = 0.50°.

It is seen from the figure that this increase in sensitivity with respect to δ as one approaches the critical angle is accompanied by a relatively insensitive behavior over a large region of δ (6° -174° in curve for n_1).

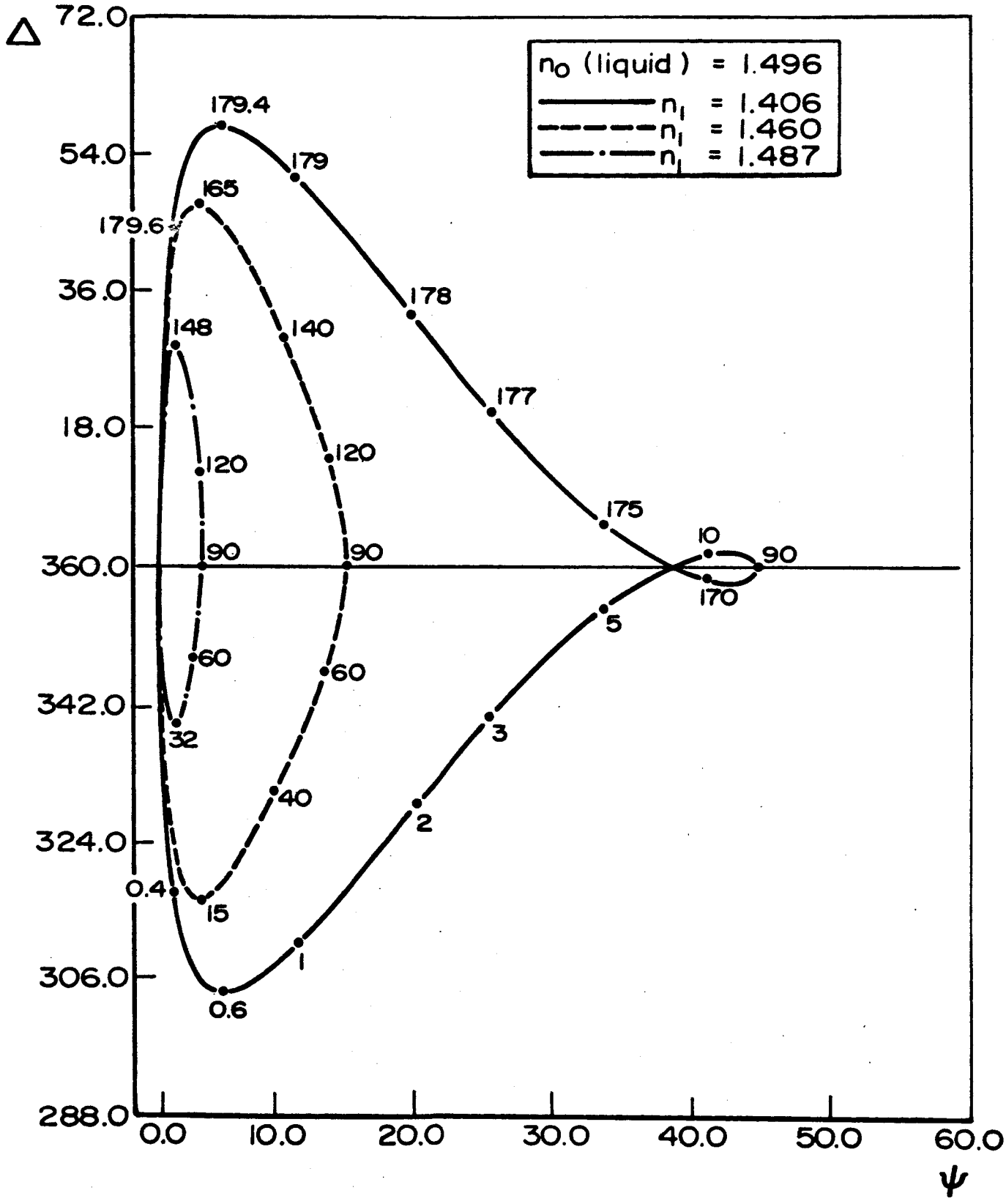

Figure 4

Variation of Δ and ψ with δ for light incident from Toluene.

Figure 5 exhibits the variation of Δ and ψ as a function of δ for three different values of the refractive indices of the liquid. The angle of incidence is again assumed to be 70° and the refractive index of the film on a substrate of silicon is assumed to be 1.460. The refractive indices 1.467 and 1.496 for the liquid correspond to that of carbon tetrachloride and toluene respectively. The value 1.5536 for the refractive index of the liquid corresponds to a critical angle slightly larger than 70°. The curves again show the same features as described in the previous paragraph.

Figure 6 shows the variation of Δ and ψ as a function of δ when light is incident from air on to films of refractive indices 1.406, 1.460 and 1.487. The angle of incidence is again assumed to be 70° and the substrate is silicon. This case has been discussed in detail by Archer[7] and Saxena[8], and has been reproduced here for comparison. Since the refractive index of air is less than that of the film, there is a phase change of 180° in one of the components of the reflected light. This is the reason for plotting Δ around 180° in this case in contrast to Figs. 4 and 5.

The highly increased sensitivity relative to δ when using a liquid of suitable refractive index instead of air as the first medium, is however very deceptive. This can be seen from Table I, where the film thickness and the changes in Δ corresponding to value of $\delta = 0.10$ are given for various liquids. As one approaches the critical angle, $(n_1^2 - n_o^2 \sin^2\phi_o)$ tends to zero and hence a small value of δ corresponds to a large value of d. Hence the sensitivity with respect to the film thickness is about the same whatever be the first medium.

TABLE I

$n_1 = 1.460$ $\phi_o = 70°$ $\delta = 0.10$

	n_o	$\Delta_1 - \Delta_o$ (in degrees)	d in Å
air	1.000	0.42	1.36
CCl_4	1.4671	0.21	3.16
$C_6H_5CH_3$	1.4960	0.80	3.85
-	1.5536	27.61	89.5

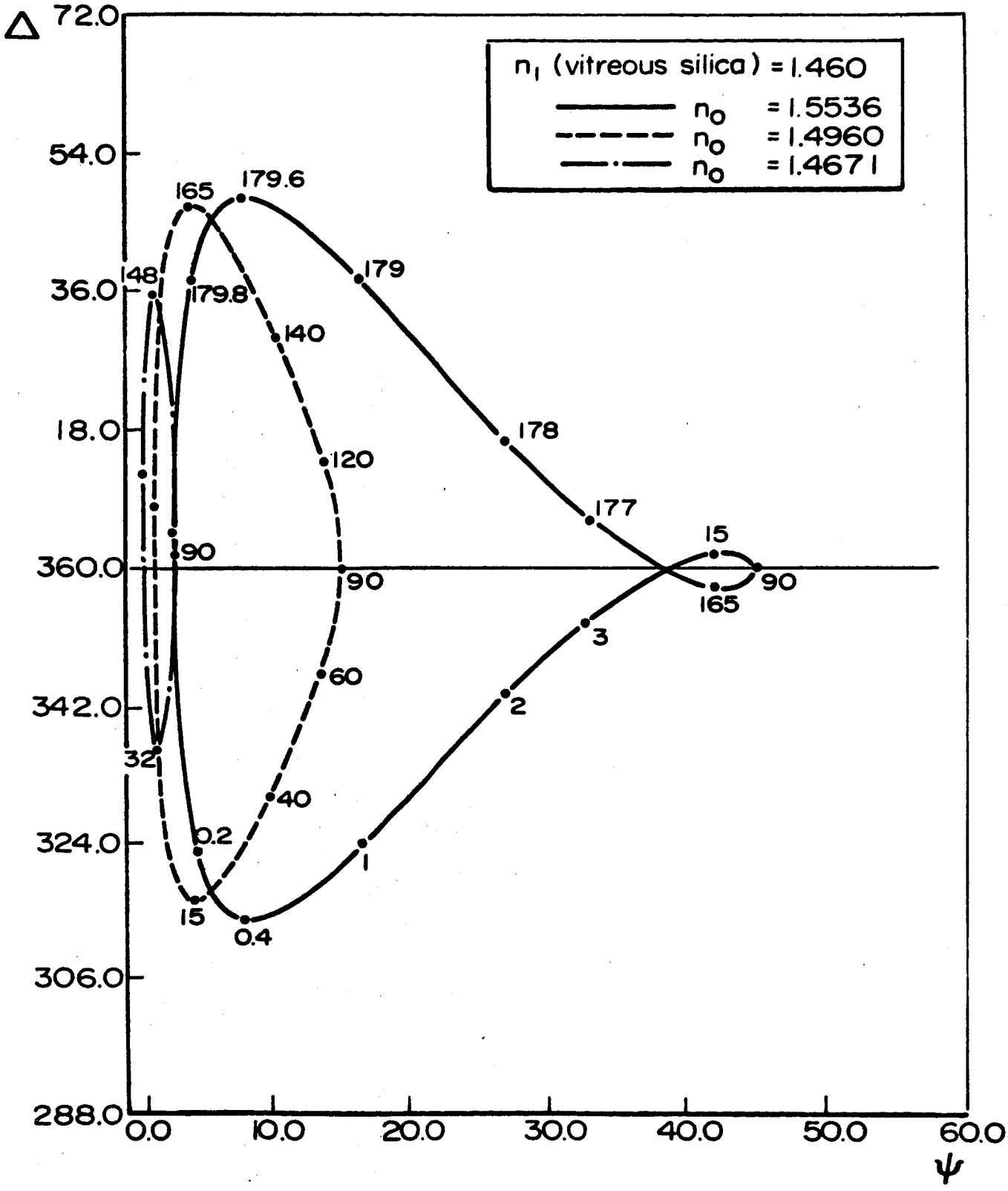

Figure 5

Variation of Δ and ψ with δ for light incident on a vitreous silica film on silicon.

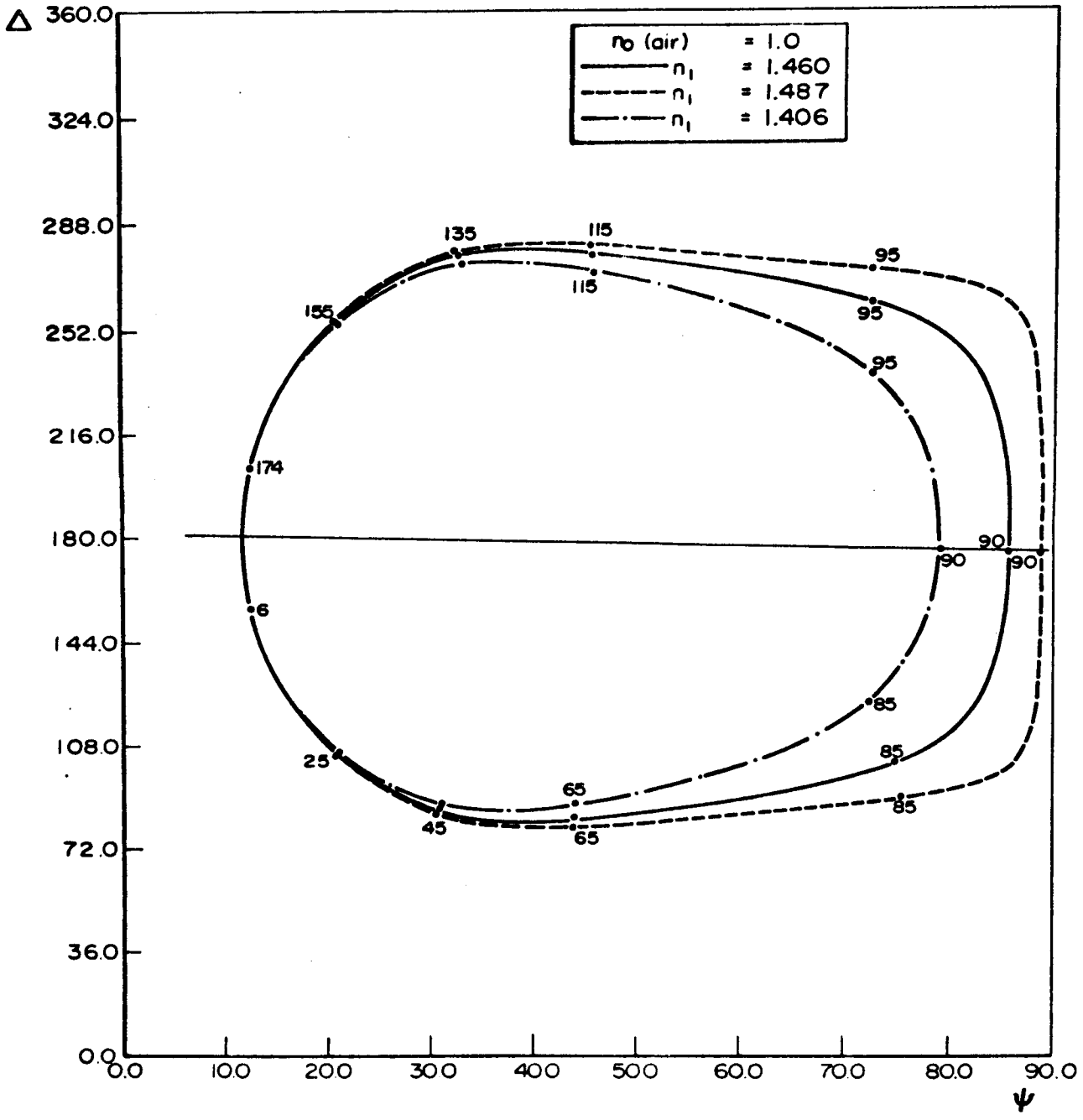

Figure 6

Variation of Δ and ψ with δ for the light incident from air.

Case (ii) $\phi_o > \phi_c$: When the angle of incidence ϕ_o is greater than the critical angle ϕ_c, total reflection takes place at the liquid-film interface. However a disturbance is propagated inside the film and this decays exponentially. For very small film thicknesses one would expect this disturbance to be reflected from the interface between the film and the substrate and affect the values of Δ and Ψ.

Vasicek[9] has considered this problem for the case when the substrate is a nonabsorbing dielectric medium like glass. But for an absorbing substrate like silicon, the results will be different. Suitable expressions for Δ and Ψ have been derived for such a case as shown below:

Let us consider light incident from a medium of refractive index n_o on a film of refractive index n_1 and let this film lie on a substrate of complex refractive index $\bar{n}_2$. If $n_o > n_1$, and the angle of incidence ϕ_o greater than the critical angle ϕ_c, then the reflection coefficients at the first boundary are

$$r'_p = e^{i\delta}{}_p \tag{5}$$

$$r'_s = e^{i\delta'}{}_s \tag{6}$$

where δ'_p and δ'_s are given by

$$\tan 1/2\delta'_s = (n_o^2 \sin^2 \Phi_o - n_1^2)^{1/2} / n_o \cos \phi_o \tag{7}$$

and

$$\tan 1/2\, \delta'_p = \frac{n_o^2}{n_1^2} \tan 1/2\, \delta'_s \tag{8}$$

We have to use the Fresnel's formulae

$$r_p e^{i\delta_p} = \frac{r_p' + r_p'' e^{-ix}}{1 + r_p' r_p'' e^{-ix}} \tag{9}$$

$$r_s e^{i\delta_s} = \frac{r_s' + r_s'' e^{-ix}}{1 + r_s' r_s'' e^{-ix}} \tag{10}$$

where

$$x = \frac{4\pi d}{\lambda} \left(n_1^2 - n_o^2 \sin^2 \phi_o\right)^{1/2} = -i\delta' \tag{11}$$

To calculate r_p'' and r_s'' let us take the limiting case, $x = o$.

In this case the medium of refractive index n_o is in direct contact with medium of complex refractive index $\bar{n}_2$ and the reflection coefficients $r_p^o e^{i\delta_p^o}$ and $r_s^o e^{i\delta_s^o}$ are given by

$$r_p^o e^{i\delta_p^o} = \frac{\bar{n}_2 \cos \Phi_o - n_o \cos \bar{\Phi}_1}{\bar{n}_2 \cos \Phi_o + n_o \cos \bar{\Phi}_1} \tag{12}$$

$$r_s^o e^{i\delta_s^o} = \frac{n_o \cos \Phi_o - \bar{n}_2 \cos \bar{\Phi}_1}{n_o \cos \Phi_o + \bar{n}_2 \cos \bar{\Phi}_1} \tag{13}$$

$$\bar{n}_2 \cos \Phi_1 = \bar{n}_2^2 - n_o^2 \sin^2 \Phi_o = \bar{n}_2 \cos \bar{\Phi}_1 - in_2 k_2 \tag{14}$$

Hence

$$r_p^o e^{i\delta_p^o} = \frac{e^{i\delta_p'} + r_p''}{1 + e^{i\delta_p'} r_p''} \tag{15}$$

Hence

$$r_p'' \left[r_p^o e^{i(\delta_p^o + \delta_p')} - 1\right] = e^{i\delta_p'} - r_p^o e^{i\delta_p^o} \tag{16}$$

$$r_p'' = -e^{i\delta'_p} \frac{[1 - r_p^o e^{i(\delta_p^o - \delta_p')}]}{[1 - r_p^o e^{i(\delta_p^o + \delta_p')}]} \tag{17}$$

Similarly for r_s''

$$r_s'' = -e^{i\delta'_s} \left[\frac{1 - r_s^o e^{i(\delta_s^o - \delta_s')}}{1 - r_s^o e^{i(\delta_s^o + \delta_s')}}\right] \tag{18}$$

Now for an arbitrary thickness d of film,

$$r_p e^{i\delta_p} = \frac{e^{i\delta'_p} - e^{i\delta'_p} \dfrac{[1 - r_p^o e^{i(\delta_p^o - \delta_p')}]}{[1 - r_p^o e^{i(\delta_p^o + \delta_p')}]} e^{-ix}}{1 - e^{i\delta'_p} e^{i\delta_p'} \dfrac{[1 - r_p^o e^{i(\delta_p^o - \delta_p')}]}{[1 - r_p^o e^{i(\delta_p^o + \delta_p')}]} e^{-ix}} \tag{19}$$

or

$$r_p e^{i\delta_p} = \frac{e^{i\delta'_p} [(1 - r_p^o \exp i(\delta_p^o + \delta_p')) - e^{-\delta'} (1 - r_p^o \exp i (\delta_p^o - \delta_p')]}{[1 - r_p^o e^{i(\delta_p^o + \delta_p')}] - e^{-\delta'} [1 - r_p^o e^{i(\delta_p^o - \delta_p')}] e^{i2\delta'_p}} \tag{20}$$

$$r_s e^{i\delta_s} = \frac{e^{i\delta'_s} [(1 - r_s^o \exp i(\delta_s^o + \delta_s')) - e^{-\delta'} (1 - r_s^o \exp i(\delta_s^o - \delta_s'))]}{[1 - r_s^o e^{i(\delta_s^o + \delta_s')}] - e^{-\delta'} [1 - r_s^o e^{i(\delta_s^o - \delta_s')}] e^{i2\delta'_s}} \tag{21}$$

Since

$$\tan \Psi e^{i\Delta} = \frac{r_p}{r_s} e^{i(\delta_p - \delta_s)} \tag{22}$$

one can evaluate ψ and Δ from equations 20, 21 and 22. Such computations have been performed with the help of IBM 7074 computer and the results obtained are discussed below.

Figure 7 shows the variation of Δ as a function of δ' for various angles of incidence beyond the critical angle, for light incident from toluene with a refractive index 1.496 on to a film of refractive index 1.460 on silicon. Finally Fig. 8 shows the variation of Δ as a function of δ' for an angle of incidence 89°, the liquid medium being toluene. In this case the films on the silicon surface have different refractive indices varying from 1.100 to 1.460. In Figs. 7 and 8 the region of δ' from 0 to 40° is shown on an enlarged scale. The main conclusions to be drawn from a study of these figures are: (i) the overall sensitivity in this technique is very poor compared to that when the angle of incidence ϕ_o is less than the critical angle ϕ_c. (ii) All the change in Δ takes place for δ' less than 80°. For larger values of δ', in other words for larger thickness of the films, there is almost no change in Δ. This is as it should be, because in the phenomenon of total internal reflection the disturbance which penetrates the film decays exponentially and hence increasing the film thickness beyond a certain value will have no effect. (iii) A study of Figs. 8 reveals a decrease in sensitivity with increasing critical angle. (iv) As the angle of incidence is increased from the critical angle the sensitivity increases initially, and then starts to decrease. This is seen in Fig. 7.

The final conclusion from these studies is that it is not advantageous to work with angles of incidence greater than the critical angle.

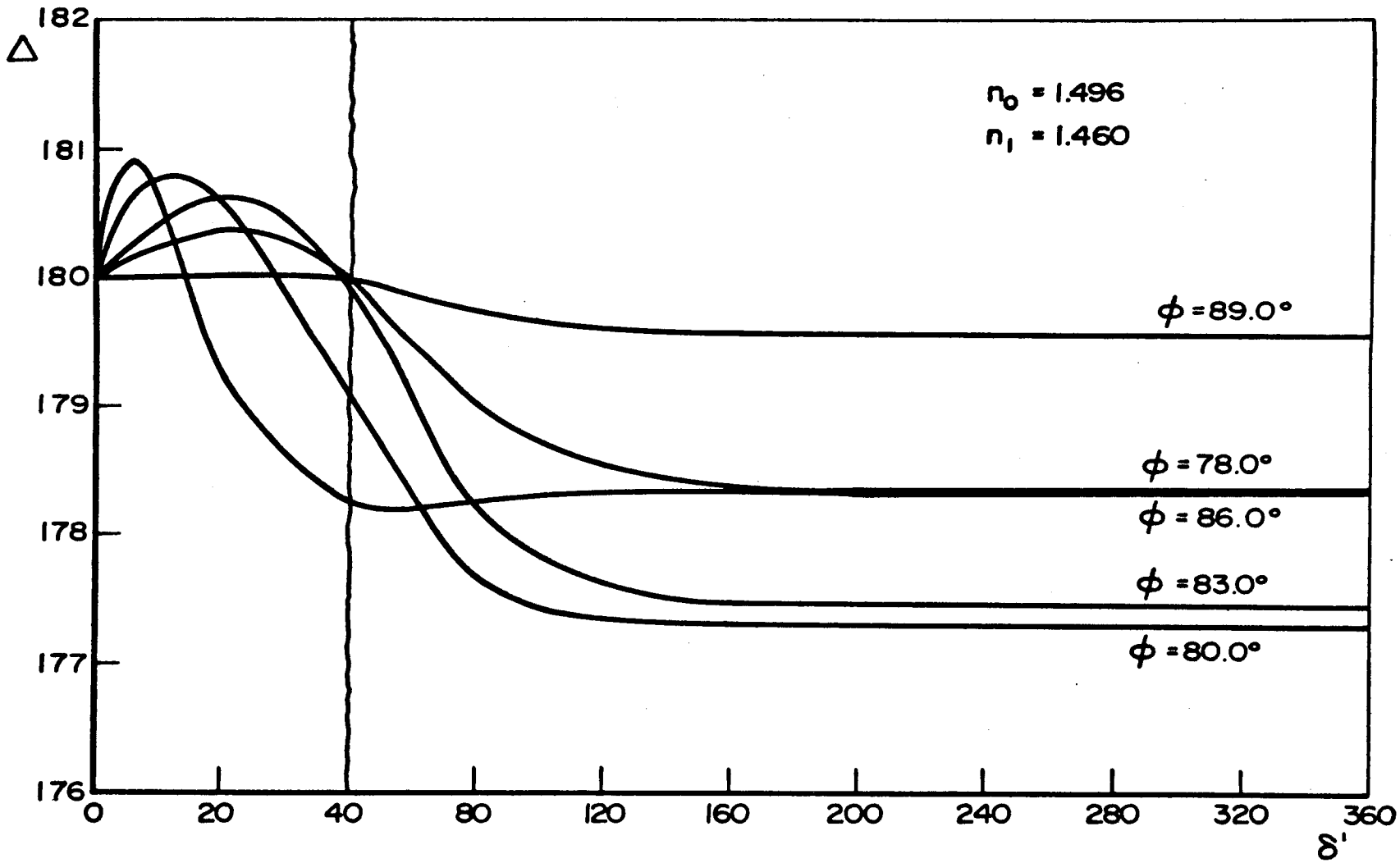

Figure 7

Variation of Δ with δ' for various angles of incidence higher than the critical angle, from toluene on to vitreous silica film on silicon.

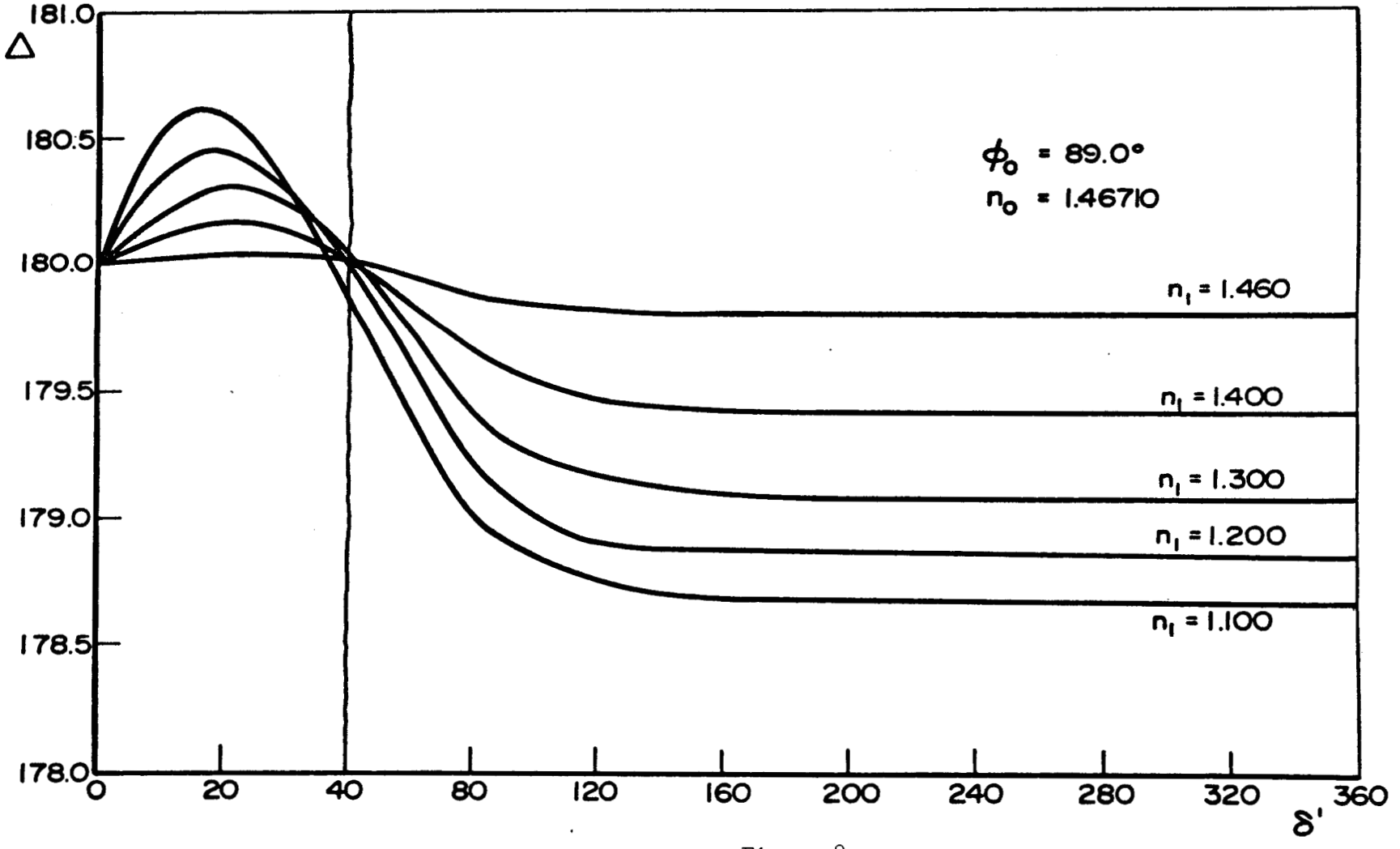

Figure 8

Variation of Δ with δ' at an angle of incidence 89° from toluene on to various films on silicon.

Simultaneous Determination of Refractive Index and the thickness of the oxide film on Silicon

As mentioned in the introduction our interest is to explore the possibility of a simultaneous determination of the refractive index and the thickness of the film using two fluids as the first medium. From our results for case (i) it is seen that the sensitivity relative to film thickness is about the same as in air when we use a liquid like toluene as the first medium. Hence with a slight modification of the existing experimental technique it is possible to determine Δ and ψ with the sample in air and in a liquid, to about the same degree of accuracy. If the refractive indices of the two fluids used as the first medium are n_{o1} and n_{o2} and the experiments are performed on the same specimen with the same film thickness then we can write

$$\delta_1 = \frac{2\pi d}{\lambda} \left(n_1^2 - n_{o1}^2 \sin^2\phi_o\right)^{1/2}$$
$$\delta_2 = \frac{2\pi d}{\lambda} \left(n_1^2 - n_{o2}^2 \sin^2\phi_o\right)^{1/2} \qquad (23)$$

Here δ_1 and δ_2 are evaluated from the measured values of Δ and ψ. From these two equations n_1 and d can be determined independently.

However the evaluation of δ from the measured ellipticity parameters Δ and ψ, requires a knowledge of the refractive index of the film. Thus the above method of determining the refractive index of the film from measurements in two different fluids, appears to involve a circular argument. However it is possible to employ a self consistency approach to resolve this difficulty. First we assume some reasonable value for the refractive index of the film and evaluate δ_1 and δ_2 from the measured Δ and ψ with the two fluids. From these δ_1 and δ_2 we calculate the refractive index of the

film n_1 with the help of Eq. (23). If the assumed value of the refractive index is not correct, the calculated value of the refractive index will come out different from the assumed value. This procedure is repeated for various closely spaced values of the assumed refractive index, till one gets a good agreement between the calculated and the assumed values of the refractive index. In practice the measured values of Δ and ψ will automatically restrict the range of values of the refractive index over which this self consistency procedure is to be carried out. In addition a knowledge of the nature of the film will permit us to work only with such values of refractive index which are physically reasonable. For example in the case of the oxide film on silicon we can reasonably assume that the refractive index will be in the range 1.44 to 1.55. The accuracy in the determination of the refractive index of the film by the self-consistency procedure is quite high, as will be seen from the discussion below.

Experimental Procedure

The experimental technique involved in ellipsometry is well known and will not be described here. The only modification involved in the liquid technique is the provision for a sample holder to hold the specimen in the liquid contained in a suitable cell. This cell was so designed that light enters and leaves the cell normal to the cell windows. The two cell windows were inclined at 40° to each other so that the incident and reflected light rays make an angle of 140° with each other. The sample holder was a goniometeric head suitably mounted in the liquid cell. With this arrangement the reflecting surface of the sample could be easily centered and adjusted to coincide with the vertical axis of rotation passing through the center of the table of the ellipsometer. All these adjustments could be done

without disturbing the cell and a suitable portion of the sample was used for light incident at an angle of incidence of 70° with the above arrangement.

It must be mentioned here that the proper orientation and centering of the sample is absolutely necessary in this technique as otherwise a large error is introduced in the measured values of the angles of Polarizer and Analyzer.

Experimental measurements were made by using the arrangement P_{0-360} Q_{45} S A_{0-360} (fast axis of the quarter wave plate is kept at 45° and the Polarizer and Analyzer are moved simultaneously for the minimum intensity position) as shown in Fig. 3. In this arrangement the $\lambda/4$ plate cancels the ellipticity due to the reflection from the sample and the light after reflection is plane polarized.

Then $\Delta = 90° - 2P$ (24)

and $\psi = -A$ (25)

where P and A are the polarizer and analyzer angles at the position of minimum intensity.

The results reported here are on silicon samples cleaved parallel to the (111) plane using the well known technique of Gobeli and Allen[10]. The samples were heated in a clean furnace and due care was taken that no additional dislocation sources or contamination were formed on the surface. This was achieved by protecting the surface of the sample by not letting the surface touch or be touched by any other object after cleavage. The samples were kept on a platinum foil while being heated. The heated samples were aged in air for a day or two so that the thickness of the SiO_2 film on Si stablized to a constant value, and would not change during the time involved in measurements.

Independent determination of Δ and ψ were made by using the method described above both in the case of air and liquid. In the present measurements the liquids used was either toluene or benzene. Both the liquids whenever used were from a freshly opened bottle of analytic reagent type liquid. The refractive indices of toluene and benzene used were experimentally found using an Abbe Refractometer. The values found and used are 1.4956 and 1.4992 respectively at 23.0°C. All the measurements were made in an air conditioned room where the temperature was maintained at the above value.

Using the computed tables δ was evaluated from the measured values of Δ and ψ. The self consistency procedure described above was applied. Figure 9 shows how the correct value of the refractive index of the film was obtained by this method. In this figure the computed values of the refractive index of the film are plotted as a function of the assumed values. The intersection of this curve with the straight line at 45° to the axis of the abscissa gives the actual value of the refractive index of the film. If the assumed value of the refractive index is less than this correct value, the calculated value comes out to be lower than the assumed value. On the other hand if the assumed value is more than the correct value, the calculated values comes out to be higher than the assumed value. Very close to the correct value of the refractive index the calculated value varies steeply with the assumed value. Hence the correct value of the refractive index can be fixed very precisely.

An estimate of the error in the refractive index of the film determined by this procedure was made as follows. The measured value of Δ was changed by ±2° and the self consistency procedure was applied in the two

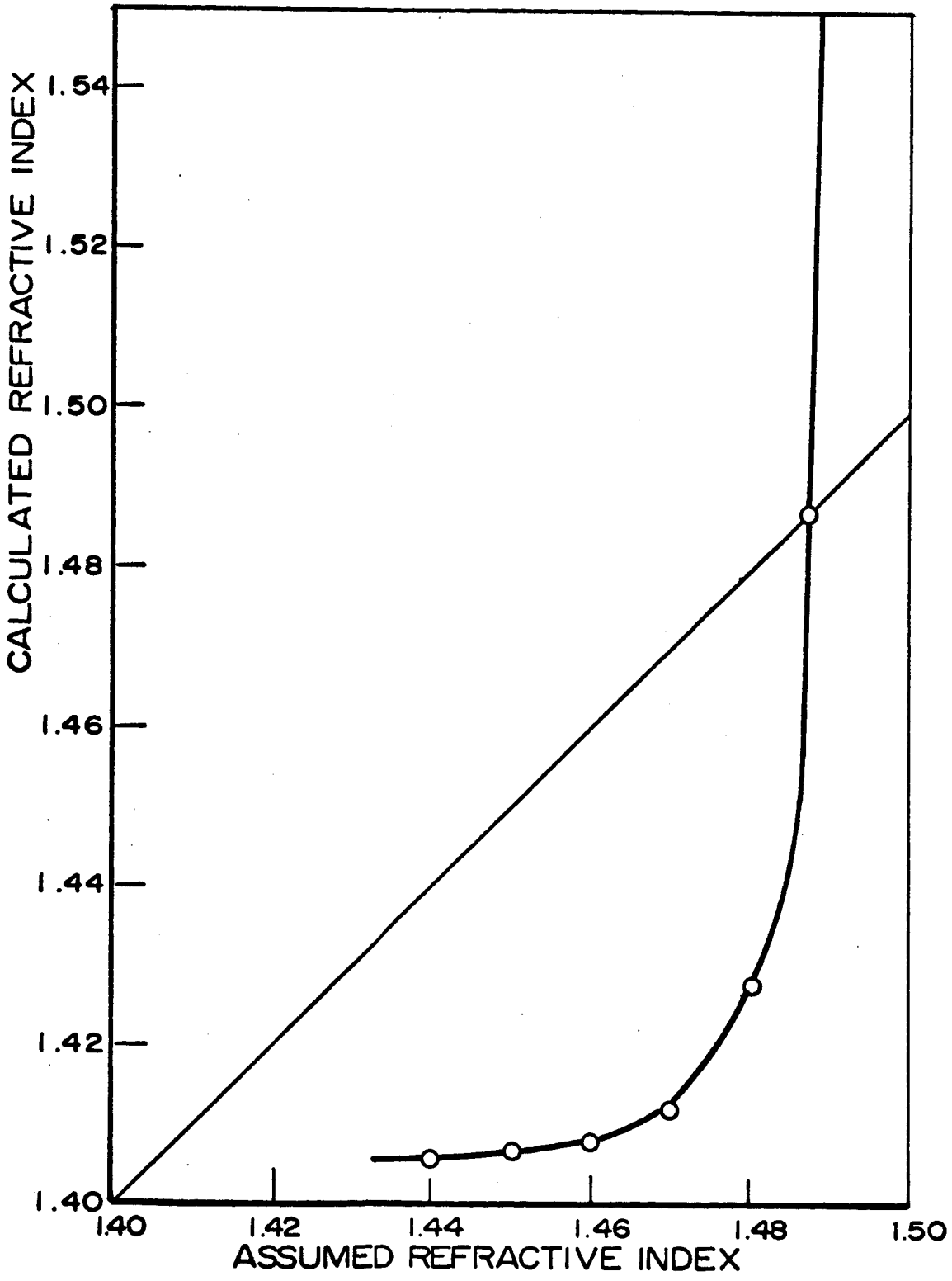
CALCULATED REFRACTIVE INDEX
1.54
1.52
1.50
1.48
1.46
1.44
1.42
1.40
1.40
1.42
1.44
1.46
1.48
1.50
ASSUMED REFRACTIVE INDEX

cases to calculate the corresponding values of the refractive index of the film. It is found that this change of ±2° in Δ causes an error of ±0.004 in the value of the refractive index. For film thickness less than 60Å, the limit of error in the refractive index is more. In the present series of measurements the value of Δ in the liquid can be determined to ±1° and in air ±0.02°.

Table II gives the values of the refractive index and film thickness determined by the above method in seven samples of silicon with varying oxide film thicknesses. The samples 2a and 2b as well as 4a and 4b are matched pairs of cleaved surfaces oxidized under similar conditions. The table also gives the liquid in which the measurements were carried out.

The following conclusions can be reached. All the seven different specimens give consistent values for the refractive index of the film. The average value of the refractive index thus found is 1.484 ±.004. Measurements on matched pair of specimens with two different liquids give the same value for the film thickness within the limits of accuracy.

In all the previous investigations on the kinetics of oxidation of silicon, the refractive index of the oxide film was taken to be 1.460, that of vitreous silica. The ordered forms of SiO_2 like cristobalite, quartz etc. have considerably higher value than 1.460. The present direct determination of the refractive index of the oxide film gives a value 1.484 which definitely indicates that the oxide film has a high degree of order at such small film thicknesses ($<$ 300 Å). In fact this value is close to the refractive index of cristobalite. We do not know whether we could conclude from these measurements that these oxide films have the cristobalite

TABLE II

Sample No.	Experimentally Measured Values				Liquid Used	Refractive index of film	Thickness of film
	In Air		In Liquid				
	Δ(°)	ψ(°)	Δ(°)	ψ(°)			
1	115.62	17.84	353.62	1.92	Toluene	1.486±0.004	262
2a	113.92	18.18	353.91	1.91	Toluene	1.487±0.004	273
2b	115.98	17.80	341.92	2.17	Benzene	1.480±0.002	262
3	171.74	11.82	4.86	1.92	Benzene	1.480±0.015	24
4a	153.46	12.60	3.40	1.84	Toluene	1.487±0.005	84
4b	153.74	12.60	358.30	1.93	Benzene	1.479±0.005	84
5	137.68	13.98	351.98	1.98	Benzene	1.480±0.003	147

structure. It would be interesting if one could obtain a more direct evidence about the structure of these oxide films by, say the Low Energy Electron Diffraction technique. It is also necessary to push the present ellipsometric method of determining the refractive index of the film for accurate determination of the refractive index of very thin films i.e. < 50 Å. Such work is in progress.

4. References

1. "Ellipsometry in the Measurement of Surfaces and Thin Films", Ed. E. Passaglia, R. R. Stronberg and J. Kruger, Nat. Bur. Stds., Misc. Publ. No. 256 (1964).
2. A. Vasicek, "Optics of Thin Films", North Holland Publishing Co., Amsterdam (1960).
3. O. S. Heavens "Optical Properties of Thin Solid Films", Butterworths, London (1955).
4. R. J. Archer, "Ellipsometry in the Measurement of Surfaces and Thin Films., Ed. E. Passaglia et al, (1964) p. 255.
5. A. K. N. Reddy and J. O. M. Bokins, ibid, p. 229.
6. E. Passaglia and R. R. Stronberg, Jour. Res. Nat. Bur. Stds. 68A 601 (1964).
7. R. J. Archer and G. W. Gobeli, Jour. Phys. Chem. Solids 26, 343 (1965).
8. A. N. Saxena, Jour. Opt. Soc. Amer. 55, 1061 (1965).
9. A. Vasicek "Optics of Thin Films" North Holland Pub. Co., Amsterdam (1960) p. 365.
10. G. W. Gobeli and F. G. Allen, Jour. Phys. Chem. Solids 14, 23 (1960).

5. Conclusions

It is now possible to carry out the ellipsometric measurements automatically within a matter of seconds to a fairly high degree of accuracy. The refractive index and the thickness of thin films in the range 60Å to 300Å of SiO_2 on Si can now be uniquely determined by carrying out measurements with the sample immersed in two fluids. The refractive index of such thin films of SiO_2 is found to be 1.484 ± 0.004 and not 1.460 as has been assumed by pervious workers.

6. Personnel

There has been no change in the personnel associated with this project during this report period. Besides the principal investigator, K. Vedam, Associate Professor of Solid State Science, the following persons have been working on this project:

Dr. F. Lukes: Senior Research Associate

Mr. R. Rai: Graduate Assistant; 1/2 time

Mr. J. Labenski: Technician; 1/2 time

Dr. R. Srinivasan: Senior Research Associate, even though not supported by this agency has continued his unstinting help and assistance in the theoretical aspects of this project.