N67-31206 20pgs
CR-85861

Document No. ARA-T-9173-21

24 February 1964

Prepared for

National Aeronautics and Space Administration
Goddard Space Flight Center
Aeronomy and Meteorology Division
Greenbelt, Maryland

by

Robert P. Bartlett
Arnold H. Glaser
Thomas F. Wood

# TECHNICAL NOTE NO. 4

CONTRACT NAS 5-1204

# TIROS ATTITUDE DATA ENCODER

ARACON Geophysics Company
a Division of Allied Research Associates, Inc.
Virginia Road, Concord, Mass.

## FOREWORD

This note describes TIRADE - - TIROS Attitude Data Encoder. TIRADE employs the CDC 160-A computers, presently in use at the field stations, for automatic reduction of the V-scanner attitude data. Horizon data from the V-scanner voltage triggers is fed to the 160-A through a computer controlled interface unit. With a small addition of circuitry to the interface unit, the 160-A computer can also be employed for real-time reduction and printout of the housekeeping telemetry data.

# TIROS ATTITUDE DATA ENCODER

# (TIRADE)

## 1. Introduction

Attitude data from the TIROS Wheel will be available in the form of differentiated horizon scanner outputs, telemetered in real time to the CDA stations. The dual-channel horizon scanner outputs are fed to voltage triggers on the ground to determine the time of earth-sky and sky-earth transitions. These times can then be employed to produce a roll history of the satellite for the period during which the data is received by the ground station. Sine-curve fits to the roll data then enable a prediction of the spin axis attitude.

The most desirable form of timing data for the horizon crossings is one in which the time of any horizon crossing can be related to that of any other. Thus relative time should be available for each of the four types of horizon crossings (events) encountered (sky-earth and earth-sky for each of the two channels). Additionally, the entire sequence of events must be referenced in absolute time, although with less precision than is required for the relative event timing.

The time referencing of the horizon events is easily done using the CDC 160-A computer. In the TIRADE system, events in the form of trigger pulses from the Schmitt circuits feed the computer through a special interface unit along with 1000 cps pulses from the Master Clock. A clock register is set up in the 160-A and events and clock pulses are continuously read into the computer. The computer program stores the contents of the clock register each time an event is detected. An additional input to the computer is some selected event whose time of occurrence is accurately known. The computer storage of the clock time for this event then allows all events to be referenced in absolute time.

After the completion of the V-scanner telemetry for a single orbit, the event times are punched on paper tape by the 160-A for teletype transmission to Goddard Space Flight Center.

## 2. Input Data

It is assumed that each of the four types of events will be available from the sensor channels as the output of a Schmitt trigger on a separate line. The maximum event rate will be fifty-two events per minute, corresponding to a satellite spin rate of 13 rpm. The Schmitt trigger circuits must be capable of driving some 200 feet of shielded wire. A 1,000 cps clock source, suitably buffered to drive 200 feet of shielded wire is also assumed to be available.

An additional input is required to provide an absolute time reference for the events. This can be any event(such as the Alarm One signal) whose time of occurrence is known accurate to 1-2 seconds and which occurs during the time in which pulses from the 1000 cps clock source are available to the computer.

## 3. Determination of Event Times Using the CDC 160-A Computer

### 3.1 General

Event times are determined in the 160-A by setting up a clock register which is incremented each time a clock pulse is sent to the computer interface unit. Events, in the form of output pulses from the trigger circuits, set flip-flops in the TIRADE interface unit. With the arrival of each clock pulse, the contents of the event flip-flops are read into the computer and examined by the computer program. If any event is detected, the contents of the clock register are stored in memory along with a code identifying the event type. Since relative event time should be recorded with a real time precision of $\pm$ 1 millisecond, two 160-A 12 bit memory locations will be required for each event time and its identifier code. With a maximum satellite readout time of approximately 20 minutes. 1,040 events would be recorded for a 13 rpm spin rate, requiring only 2,080 words of core memory.

The incrementing of the clock register is begun after the TIRADE program is set in operation and clock pulses begin to appear in the clock channel. The times recorded for the events are relative to the time at which the clock register incrementing is begun. When an event occurs on the

reference event line which is known in absolute time, its relative time allows all the recorded horizon events to be referenced in absolute time. The system will be capable of operating on data in either a taped or direct mode.

## 3.2 Description of Interface Equipment

### 3.2.1 Input Requirements

Six signals from the ground station equipment feed the interface through approximately 200 feet of cable: the four horizon event triggers, a clock source, and the absolute time reference event. The event triggers can directly set flip-flops through buffers in the interface equipment if the trigger rise times are 0.2 microseconds or less. With longer rise times, a pulse shaper will precede each flip-flop.

The clock channel with 1 kc pulses feeds a pulse generator which in turn produces pulses compatible with the system modules.

### 3.2.2 Computer Connection

The interface unit is designed as a standard peripheral unit for the 160-A. It is addressed and controlled by the 160-A through the input and output cables which link all of the other peripheral units to the computer.

CDC line levels for communication with external equipment are "1", -0.5 v ($\pm$ 0.25 v) and "0", -16 v ($\pm$ 2.5 v). Level amplifiers are included in the interface unit to transform the interface logic levels to the CDC levels and to provide buffering between interface modules and the I/O lines.

### 3.2.3 System Operation

Prior to receipt of the event and clock signals, the TIRADE program is started in the 160-A. An EXC instruction sends a 12-bit external function code to the TIRADE interface unit accompanied by a function ready signal. The 52XX code sets one of the three select flip-flops (figure 1) (52XX has been arbitrarily chosen and may be readily changed if it conflicts with any other external unit select code). The lower half of the function code determines which of the select flip-flops is set. Three functions for the interface unit are permitted:

FIG 1

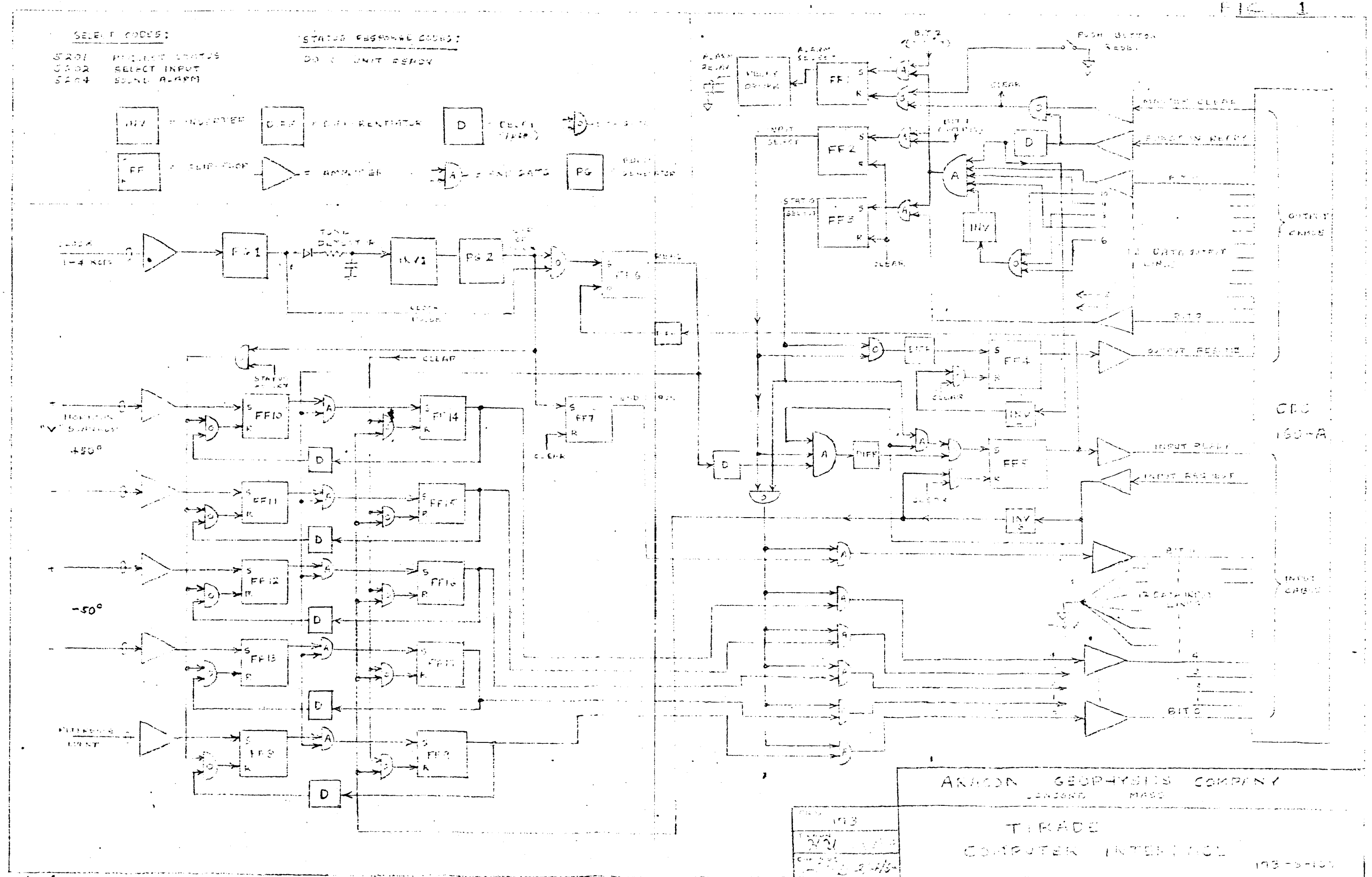
SELECT CODES:
S201 PROJECT STATUS
S202 SELECT INPUT
S204 SOUND ALARM
STATUS RESPONSE CODES:
D0 = UNIT READY
INV = INVERTER
D = DELAY
FF = FLIP-FLOP
AMPLIFIER
PG = PULSE GENERATOR
CLEAR
PG 1
PG 2
INV 1
FF 6
FF 7
FF 10
FF 11
FF 12
FF 13
FF 14
FF 15
FF 16
FF 17
FF 9
+50°
-50°
FF 1
FF 2
FF 3
FF 4
FF 5
DIFF
INV
ALARM RELAY
RELAY DRIVER
ALARM SELECT
INPUT SELECT
STATUS SELECT
BIT 2
PUSH BUTTON RESET
MASTER CLEAR
FUNCTION READY
BIT 1
12 DATA OUTPUT LINES
BIT 3
OUTPUT READY
OUTPUT CABLE
INPUT READY
INPUT RESPONSE
BIT 0
12 DATA INPUT LINES
BIT 5
INPUT CABLE
CDC 160-A
ARAMCO GEOPHYSICS COMPANY
TIRADE
COMPUTER INTERFACE

4-1

4-2

| | |
|---|---|
| 5201 | Select Status |
| 5202 | Select Input |
| 5204 | Select Alarm |

A function ready signal, accompanied by a Status Select Code will clear all the flip-flops in the TIRADE unit and set FF3 which triggers FF4, and sends an "output resume" to the computer. An INA instruction then delivers an input request to the TIRADE unit which AND'd with the Status Select output sets the "input ready" flip-flop. The computer then reads the word on the input lines which be $0000_8$ if the unit is functioning properly and the power is turned on.

After checking status, the computer program issues a Select Input code which sets FF2, and delivers an "output resume" signal from FF4. An INA instruction is then issued by the computer causing an "input request" to be sent to the TIRADE unit. The TIRADE unit will not respond with an "input ready" signal until the receipt of a clock pulse. The "input ready" flip-flop is set when the clock pulse arrives thus allowing the 160-A to read in a word and proceed with the program. Ingestion of a word causes a counter to be incremented by one. The program then loops around and again requests input through an INA instruction. Thus, each clock pulse causes the counter to be incremented, provided the average loop time is less than the clock period. The average time for execution of the loop is somewhat less than 250 microseconds.

Events occurring on one or more of the input lines from the event trigger circuits set the appropriate flip-flops FF10-FF13 and FF8. These in turn set the corresponding flip-flops FF14-FF17 and FF9 upon receipt of a clock pulse prior to generation of an "input ready" signal. (Clock pulse triggers from FF6 are delayed before being routed to the input ready flip-flop). The outputs of FF14-FF17 and FF9 are delivered to the 160-A input cable and read by the computer when the delayed clock pulse sets FF5.

The end of the event record is detected by noting the absence of clock pulses. The time detector following the pulse generator PG1 is de-energized causing PG2 to trigger. This causes flip-flop FF7 to be set and produces an "input ready" so that the word may be read into the computer. (Clock

pulses are no longer available). The program loop notes the presence of a "1" in bit position 11 and jumps out of the loop to the edit routine.

### 3.2.4. TIRADE Alarm

Experience with ground station operations has proved that a signalling device to attract the attention of computer operators is very desirable. The Bendix G-15 was so equipped (a bell alarm). Incorporation of program addressable alarm in the TIRADE unit is easily accomplished and is shown in Figure 1. An Alarm Select Code triggers FF1 which then closes a relay. Reset is accomplished by a manual push button or by the execution of any EXF code.

## 4. TIRADE CDC 160-A Program

### 4.1 General Program Structure

The basic TIRADE program performs the following tasks:

(1) storage of attitude-sensor event type and time;

(2) editing of the stored data;

(3) output of the modified data on paper tape, magnetic tape, and printer.

Figure 2 shows a flow diagram for this basic program.

### 4.2 Time-and Event-storage Capacity

Storage of event type and time is restricted to two words per event (s) record. Thus, in bank 1 alone there is room for $2047_{10}$ events. Once output formats are specified and the consequent program sections are spelled out, there will undoubtedly be a good portion of bank 0 available for data storage.

Since four bits of each two-word record will be devoted to recording event type, the basic clock will consist of twenty bits. This gives an overflow time of $2^{20}$ ms. or approximately 17-3/4 min. An edit routine is used to detect overflow, and thus the basic clock can be expanded to any desired capacity. (Note that the real-time reference which is supplied must come within 17-3/4 min. of the first – or last – recorded event.)

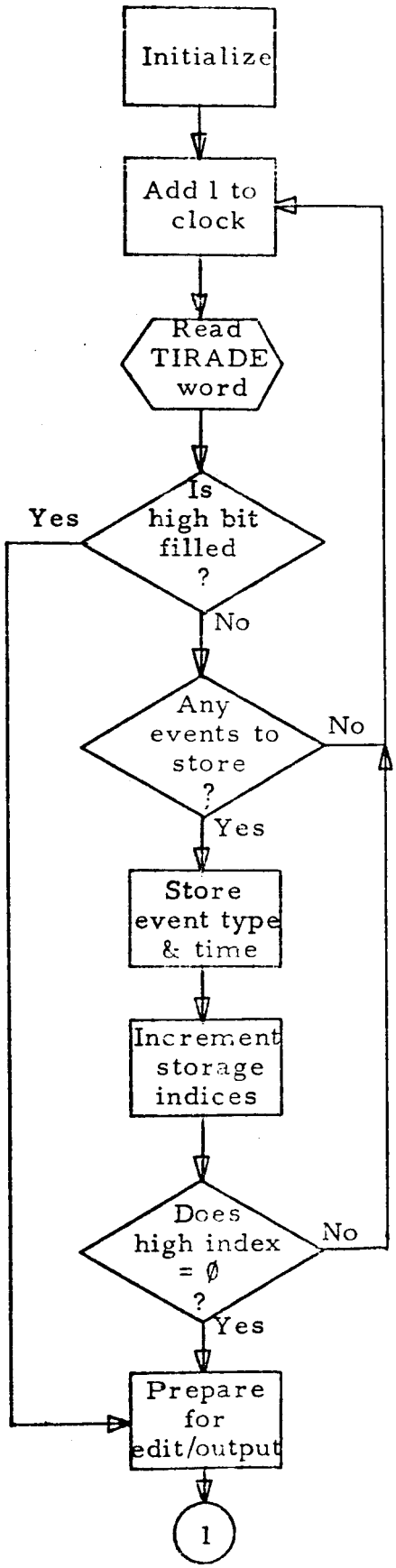


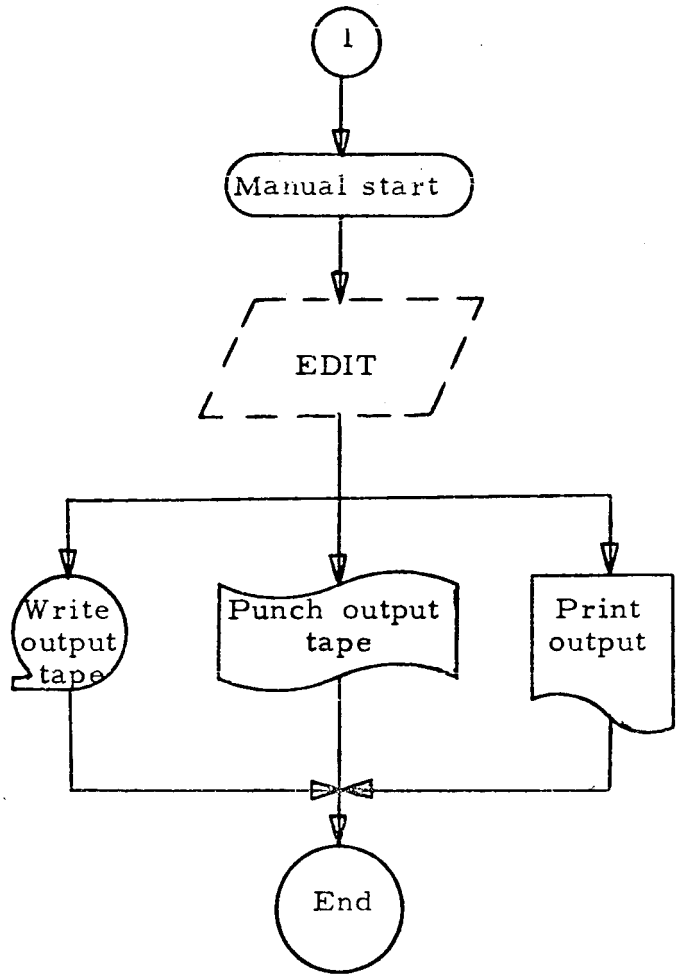


Figure 2

Flow chart for basic TIRADE program

## 4.3 Word Composition

The input word in the TIRADE unit involves six trivial "0" -bits and six bits of information (Fig. 3).

TIRADE Primary Word

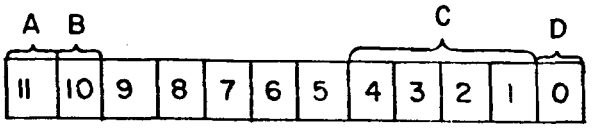


A— ALL DATA STORING FINISHED

B— READ SECONDARY WORD

C— EVENT TYPE

D— ABSOLUTE TIME REFERENCE

Fig. 3

Provided that the high-order bit is not present, the accepted word is given a "zero check" to see if any events have occurred in the last real-time millisecond. If so, the word is left-shifted, coupled with eight high bits of clock, and placed in the high storage area. The corresponding low-clock word is stored in the low storage area.

## 5. Features of the TIRADE System

Event-time determination using the CDC 160-A offers the following advantages:

(1) Simplicity – The only hardware construction is that of the interface unit, which is a standard peripheral unit for the 160-A. The number of components is minimal, assuring high reliability, ease of assembly, and freedom from "bugs". All interface components will be standard digital modules.

(2) Optimum Output Format — TIRADE will keep track of, and will output, total elapsed time from start of timing clock, rather than the time increments between events as in DTMD. This will avoid cumulative time errors resulting from punch or teletype transmission errors. The output format is composed by the computer, so that it can be in the form most

acceptable to the NASA computers.

(3) Flexibility – Since TIRADE is essentially a computer interface, radical changes in the character of significance of the input data should not require any changes other than to the computer program. This may be important for future modifications of TIROS (elliptic orbit, etc.), or where other digital data is being introduced. In particular, if digital processing of general telemetry is contemplated, about 75% of TIRADE would be used in the resulting interface without any compromise of its original function.

(4) Accuracy – The design of TIRADE makes use of the unique input circuitry of the CDC 160-A to insure recognition and timing of events to one millisecond of relative time. Events can occur with any frequency and in any combination. Input buffering of each information line makes non-recognition of an event impossible. The accuracy of absolute time of a selected reference event determines the accuracy of absolute time referencing. No special provisions are required for an accuracy of 1-2 seconds. Use of a signal taken from the RCA Master Clock will make possible absolute accuracy approaching one millisecond, which is far in excess of any rational requirement.

## 6. Use of TIRADE System for Digitizing of Housekeeping Telemetry

### 6.1 Introduction

With the addition of little hardware to the interface unit, the TIRADE system can be used to digitize the housekeeping telemetry, perform scale and parameter conversions, and print out the results in near real time. This action, including the output printing, can occur simultaneously with the horizon-event time determination.

For the TIRADE system, expanded to include telemetry reduction, one of the telemetry channels which carries housekeeping data is switched to the input of a voltage-to-digital converter. The manner in which triggers pulses will be supplied to the converter depends on the exact nature of the telemetry commutator output and the expected signal-to-noise ratio. If this output is in a standard IRIG PAM output format (where the output corresponding to each commutator position is gated for less than the time interval between adjacent positions and each output appears on a pedestal), a synchro-

nizing pulse train can be extracted from the telemetry signal and the converter triggered synchronously with the commutator position advance. On the other hand, with an output format which does not allow for sync pulse derivation, the trigger pulses for the converter will be provided by counting down from the 1-KC clock source. With either mode of operation, the converter will be triggered several times for a single commutator switch position to enable noise smoothing, and in the case of the second output format described above, to aid in identifying change of switch position.

Trigger pulses are gated to the converter when a signal from the Command Programmer indicates the advent of housekeeping telemetry. The trigger pulses will then continue until the computer has determined that a commutator cycle is complete. The computer then issues an external function code which closes the gate for the converter trigger pulses.

An end-of-conversion pulse from the A-D converter sets a flip-flop whose output feeds one of the bit positions of the primary (clock triggered) TIRADE word fed to the computer with each clock pulse. After readin of the primary TIRADE word, the output register of the converter is gated to the 160-A input-cable amplifiers and the "input ready" is enabled. When the computer program detects the presence of a "1" in this bit position, a second INA is issued to TIRADE at the completion of the previously described TIRADE loop, and the converter output (secondary TIRADE word) is read into the computer. The action described is performed so rapidly that the normal TIRADE operation is undisturbed.

Assignment of the digitized samples to specific commutator positions is performed in the computer. The basic reference for position identification is the marker-pulse which occupies every tenth commutator position. Marker pulses are larger in amplitude than the full scale voltage delivered to the subcarrier oscillators for any of the data inputs.

After a complete nine-second commutator cycle is read into the computer, an edit routine identifies commutator position, scales, translates, or otherwise transforms the digital values for the telemetry into the appropriate parameter format, and outputs the parameters along with their position number on the typewriter or printer. Thus, access time to the

reduced housekeeping data is in the order of seconds after a telemetry commutator cycle is complete.

## 6.2 Equipment Operation

The additional hardware required to adapt TIRADE for housekeeping data reduction is shown in Figure 4.

The discriminator output for Beacon 1 or 2 is manually switched to the input of the analog-to-digital converter. Two methods of triggering the converter are shown depending on the exact nature of the telemetry commutator output. The first method, employed if standard IRIG PAM is used, (pedestal and gated output) involves extracting synchronizing pulses from the PAM discriminator output. The sync-detector output clears the divide-by-5 counter and sets FF22 allowing 100-cycle pulses to pass thru the gate A1. After five pulses, the counter resets FF22, inhibiting A1. If A2 has been opened by a signal from the command programmer, indicating telemetry is imminent, each 100-cycle pulse triggers the A-D converter. An "end-of-conversion" pulse from the converter then sets FF18, and the output of FF18 sets FF19 upon receipt of a read (clock) pulse in the same manner described previously for buffer transfer. The output of FF19 feeds bit position 10 for the CDC input cable and is read into the computer by the delayed clock pulse. FF19 is reset when the computer accepts the primary TIRADE data word, and this results in the triggering of FF20. The output of FF20 allows the digital equivalent of the telemetry to be passed to the CDC input cable amplifiers, and opens AND gate A4 allowing a computer "input request" to set the "input ready" flip-flop FF5.

When the computer program detects a "1" in bit position 10, indicating that the digitizer has been triggered, an INA instruction is issued and the computer reads in the secondary TIRADE word which is the data on the input lines. Bits 0-9 of the secondary word are the 10 bits of output from the A-D converter. (Ten bits probably represents more than the precision required for housekeeping data and can readily be reduced). Bit 11 of the secondary word is tied to the overload output of the converter and will be filled with a one when an analog voltage exceeds the full scale voltage of the converter. Full scale will be adjusted to be greater than a commutator information

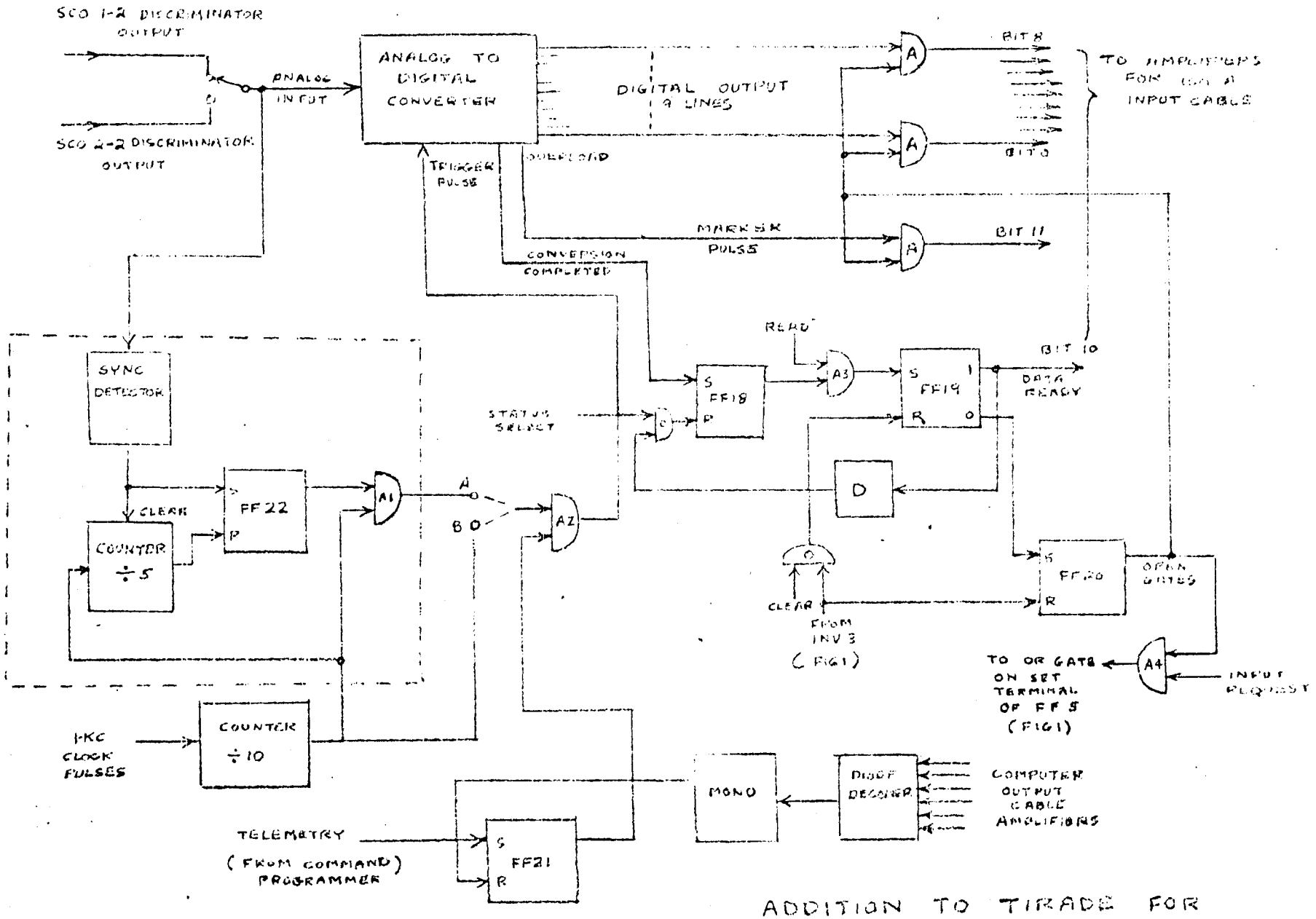


ADDITION TO TIRADE FOR TELEMETRY DIGITIZING

FIG. 4

pulse, but less than a marker pulse. Thus triggering of the converter during a marker pulse results in a "one" in bit position 11. After the computer reads the secondary word, FF19 is reset, and the computer and TIRADE interface are ready to accept the next clock pulse as described previously.

It can be seen that five digital samples will be obtained for each commutator position for the mode of operation described.

If the telemetry commutator output does not permit sync pulse extraction, the circuitry shown in the dotted lines will be eliminated, and the trigger output will come from "B", which is simply a continuous 100-cycle pulse train.

In either mode of operation, the computer program performs various tests to determine how many commutator positions have been digitized. When the data for the 88 commutator positions have been read into the computer, an external function code triggers the monostable multivibrator and resets FF21, eliminating further triggering of the converter.

## 6.3 Selection of Trigger Mode

Of the two modes of triggering described, the mode which uses sync pulses derived from the PAM output is the easier to employ. Its use assumes no telemetry dropouts and, consequently, the computer program for commutator position assignment of the digitized samples is straightforward.

However, if nosey operation or dropouts are anticipated in the telemetry link, the constant-rate triggering of the converter is the preferable mode of operation. In general, the procedures to be described to overcome poor telemetry are based on fitting the telemetry time history to a curve whose behavior is known at several points in sequence. (Marker pulse, calibration points, etc.). This type of curve fitting can be employed even in the presence of varying commutator clock frequencies, if the telemetry output is continually sampled at a rate high enough to ensure accurate reconstruction of the telemetry time history. Thus a constant-rate triggering of the converter will be adopted for digitizing telemetry housekeeping data.

## 6.4 CDC 160-A Program for Handling Attitude Data and Housekeeping Telemetry

### 6.4.1. Program Structure (Figure 5)

The expanded computer program needed to handle housekeeping data retains the basic attitude-event loop described in section 4. Added to this loop are two main sections: one to store the housekeeping data and the other to edit and print it. The storage loop is used only as long as the housekeeping telemetry comes into the TIRADE unit -- or about 9 sec. Editing and printing will take no more than 90 sec. Thus within 1-1/2 min. of their transmission, the housekeeping data will be available for inspection in printed form.

### 6.4.2 Storage of Housekeeping Data

The TIRADE primary-word 10 bit is first filled (with a "1") when the A-D converter has been triggered. Each time the computer finds this 10-bit filled it will ask for a secondary data word. Filling the 10-bit at constant time intervals (every .01 sec) will greatly facilitate the averaging of housekeeping data. For each commutator position there will be an average of five data samplings, and the average of each sampling set will become one of the eightly stored information words.

The computer will carry on this procedure until it has stored a complete block of eighty words. It will then issue an external function code to command the TIRADE unit to stop digitizing. It will also shut off the store routine and turn on the edit/output section.

### 6.4.3 Program Flexibility

The flexibility of internal logic checks can provide safeguards against a variety of mishaps in data transmission. Three basic problems which we shall discuss briefly are: (1) false marker pulses; (2) loss of one or more of the eightly information pulses; (3) loss of one or more of the marker pulses.

Problem 1 can be solved by checking to see that a first marker pulse is followed by a second and a third (etc.) at the proper intervals.

Problem 2 is avoided by specifying constant-interval digitizing of telemetry. Since digitizing of a given pulse does not depend upon reception

of the previous pulse, a full set of eighty information words will be generated--even though some of them may be erroneous.

Problem 3 demands stronger corrective measures than the other two. There should be a logic check to establish which apparent marker pulses are genuine and to establish the "phase" of the data, i. e., where the marker-pulse centers are. Then if the computer is left with only a partial housekeeping record, it can slide the record (a marker-pulse interval at a time) and check key housekeeping questions for reasonable answers.

Finally, in the event of severe system malfunction, the computer can output the digitized data on a plotter for human inspection.

### 6.4.4 Editing and Printing the Housekeeping Data

The attitude-event loop will keep the computer busy for (at most) 275 microseconds. However, the time between successive checks of the TIRADE primary word is 1000 microseconds. The computer is, therefore, diverted to working its way through the housekeeping edit/output routine in 700-microsecond intervals of time. In fact, the basic-cycle time of the 160-A is such that the machine is available for long periods of time to perform any internal logic functions which may be desired.

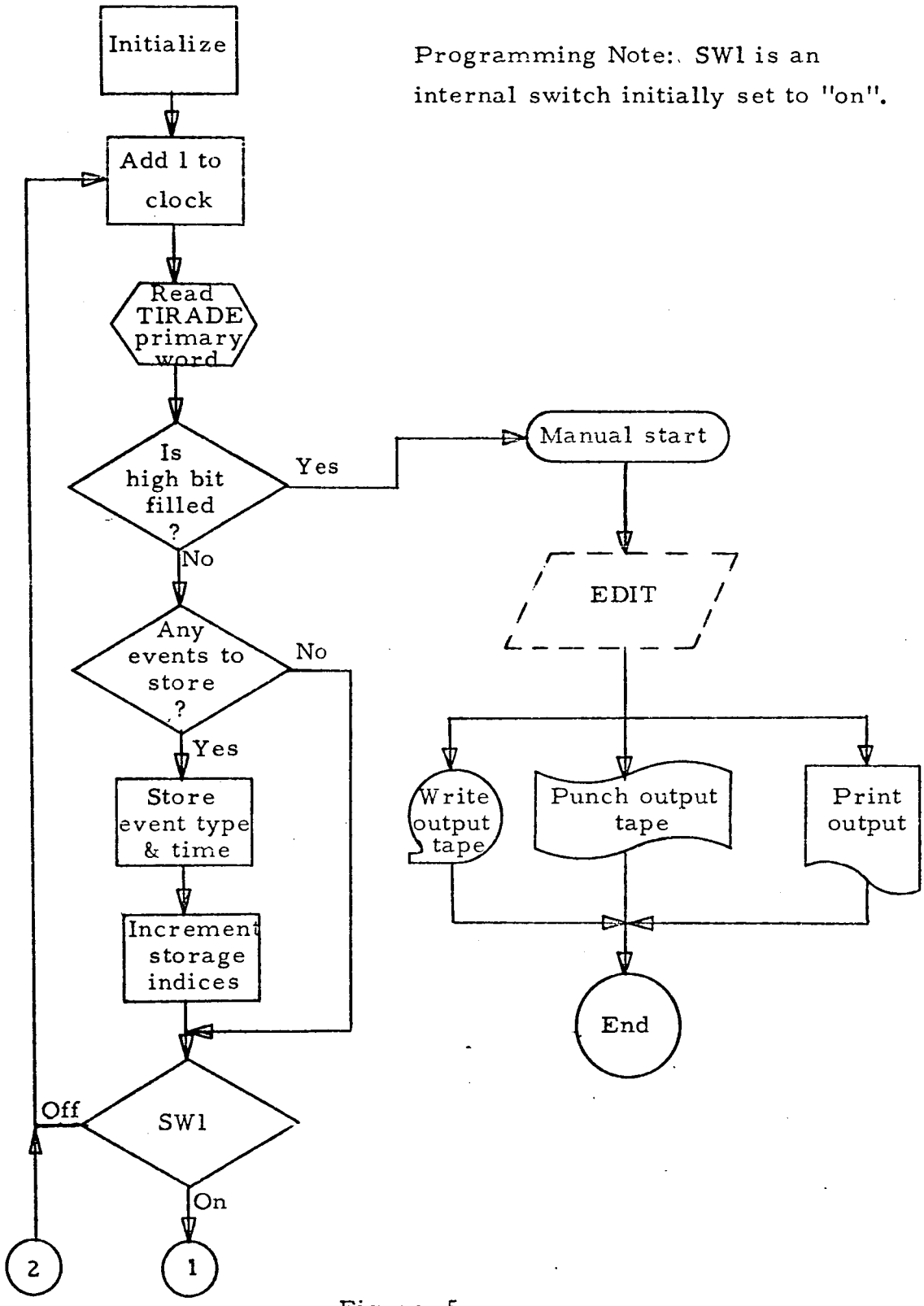


Programming Note: SW1 is an internal switch initially set to "on".

Figure 5

Flow chart for TIRADE program, including telemetry