JOTNO 19

ANALYTICAL AND EXPERIMENTAL DETERMINATION OF LOCALIZED STRUCTURE TO BE USED IN LABORATORY VIBRATION TESTING OF SHELL STRUCTURE-MOUNTED COMPONENTS, SATURN V

FINAL REPORT

NOR 67-127 JULY 1967

Prepared For
George C. Marshall Space Flight Center
National Aeronautics and Space Administration
Huntsville, Alabama

NASA CONTRACT NAS8-20025

NORTHROP CORPORATION, Norair Division
3901 West Broadway
Hawthorne, California
Chintsun Hwang, W.S. Pi, N.M. Bhatia (Authors)

ABSTRACT

The final report covers the work performed for the contract entitled, "Analytical and Experimental Determination of Localized Structure to be Used in Laboratory Vibration Testing of Shell Structure-Mounted Components, SATURN V." The contract was executed during the period of April 1965 to July 1967 inclusive. Earlier work performed in the contract was reported in the yearly progress report dated May 1966 (two volumes), and a progress report dated January 1967. Except for an overall work summary and some revised data, the final report describes essentially the additional work items performed since January 1967. Major subjects in the final report include the revised finite difference program for localized shell vibration, shell transient and acoustic responses considering mass attachments, shock and blast overpressure. Also described are the theory and procedure in designing shell scale models.

FOREWORD

The final report was prepared by Northrop Corporation, Norair Division, Hawthorne, California, under contract no. NAS8-20025, "Analytical and Experimental Determination of Localized Structure to be Used in Laboratory Vibration Testing of Shell Structure-Mounted Components, SATURN V."

The subject contract is administered under the direction of the Vibration and Acoustics Branch, Structures Division, Propulsion and Vehicle Engineering Laboratory, George C. Marshall Space Flight Center of the National Aeronautics and Space Administration. Mr. J.H. Farrow and Mr. R.E. Jewell are the principal and alternate technical representatives. Mr. C.E. Lifer served as the alternate technical representative in the early phase of the contract. Mr. L.D. Saint is the program monitor. The program manager at Northrop Norair is Dr. Chintsun Hwang, Member of Technical Management, Structures and Dynamics Research Branch. Dr. W.S. Pi, Dr. N.M. Bhatia and Mr. J.R. Yamane participated in the project. Mr. P.E. Finwall is responsible for the experimental tasks of the program.

CONTENTS

Section	Title	Page
	ABSTRACT	i
	FOREWORD	ii
I	INTRODUCTION	1
II	THE REVISED FINITE DIFFERENCE COMPUTER PROGRAM	9
III	THE RESPONSE OF STIFFENED SHELL STRUCTURES TO TRANSIENT AND IMPULSIVE LOADINGS	32
IV	ACOUSTIC LOADING AND BLAST OVERPRESSURE	61
V	SHELL SCALE MODEL DESIGN PROCEDURE	78
IV	CONCLUSIONS AND RECOMMENDATIONS	85
	REFERENCES	89

APPENDICES

A	Keypunch Input Format and Listings of the Finite Difference Computer Program	A-1
B	Keypunch Input Format and Listings of the Shell Transient Response Computer Programs	B-1
C	Input Data Format, Program Listing, and Typical Output Data of the Acoustic Response Computer Program	C-1

ILLUSTRATIONS

Figure	Title	Page
1	Instrument Unit Scale Model Design Drawing	3
2	S-2 Thrust Cone Scale Model Design Drawing	4
3	S-2 Forward Skirt Scale Model Design Drawing	5
4	S-1C Oxidizer Tank Upper Bulkhead Scale Model Design Drawing	6
5	Instrumentation Block Diagram	8
6	Typical Stiffened Shell Structure and the Supporting Fixture	11
7	Grid Pattern Over Quarter Instrument Unit Panel Used in the Finite Difference Program	12
8	Typical Analytical Modal Pattern Representing a Quarter of the Instrument Unit Panel	16
9	Transient Response of Instrument Unit Structure	46
10	Natural Frequencies for a Simply Supported Cylindrical Shell	49
11	Response of Cylindrical Shell Structure to Transient Load	50
12	Axial Deflection	57
13	Circumferential Deflection (The First Mode)	58
14	Circumferential Deflection (The Second Mode)	59
15	Acoustic Test Instrumentation on the Instrument Unit Scale Model	62
16	Block Diagram, Recording and Analysis Equipment for Acoustic Tests	63
17	Accelerometer Data of the Instrument Unit Scale Model	65
18	Strain Gage and Microphone Data of the Instrument Unit Scale Model	66

ILLUSTRATIONS (Continued)

Figure	Title	Page
19	Typical Input Power Spectrum of Acoustic Loads Applied to Instrument Unit Scale Model	67
20	Typical Acoustic Response Power Spectrum of Instrument Unit Scale Model	68
21	Transfer Function Corresponding to a Single Mode	73
22	Driving Point Impedance of Unloaded Instrument Unit Scale Model	76
23	Driving Point Impedance of Instrument Unit Segment with Components Attached, Support Configuration (I)	84

TABLES

Table	Title	Page
1	Modal Input Data Used in the Instrument Unit Acoustic Response Program	77

SECTION I

INTRODUCTION

In laboratory vibration testing of shell structure-mounted components, an important requirement is to simulate the localized dynamic characteristics of the segment and the mounted components. The objective of the present contract is to develop design and testing techniques for segmented shell segments from typical SATURN V structures. In the process, to achieve proper design of the elastic supports, a preliminary study was executed on various types of spring supports attached to a rectangular plate. Simultaneously, the overall dynamic responses of the structure were investigated. Based on the overall response data, a part of the shell structure was defined as the shell segment. Proper constraints and boundary conditions were specified to achieve the similarity in dynamic responses as compared to the complete shell structure. In the second year of the program period, additional work items were included concerning the transient and acoustic responses of shell structures as well as shock load and blast overpressure.

During the contract period, a yearly progress report dated May 1966 and an intermediate report dated January 1967 were issued covering the work accomplished up to the reporting time (References 1, 2). The final report covers essentially the work performed during the balance of the contract period. For the sake of completeness, this report also presents a general review of all the work items carried out in the contract.

In analyzing the vibration behavior of a flexibly-supported rectangular plate, a finite difference method was used. The method transformed the fourth order partial differential equation of a plate in rectangular coordinates into a finite difference equation in terms of the normal displacement at selected grid points. Additional grid points were used beyond the plate boundary. Proper boundary conditions were used representing either a free edge or an edge with local flexible supports. Considering the dynamic inertia effect of the plate mass, the problem was reduced to an eigenvalue matrix formulation. The numerical solution of the final matrix equation yielded the the modal and frequency data of the rectangular plate. As compared to the

experimental data, the solution by the finite difference method was found to be very reliable. Using this approach, the dynamic effects of various types of flexible supports were evaluated.

To investigate the overall shell dynamic behavior prior to segmentation, four scale models were fabricated based on various parts of SATURN V structures. Duplicate models were made for segmentation purposes. The scale models which were manufactured and tested are listed below and shown in Figures 1-4. The detail technique in scale model design is described in Section V of this final report.

S-4B	Instrument unit, 1:6.67 scale (Figure 1)
S-2	Thrust cone including simulated rocket engines, 1:10 scale (Figure 2)
S-2	Forward skirt including Lox tank upper bulkhead, 1:10 scale (Figure 3)
S-1C	Lox tank upper bulkhead including partial cylindrical shell structure, 1:10 scale. (Figure 4)

Analytical and experimental programs were conducted to determine the vibration and dynamic response behavior of the shell structures. In the analytical phase, partial differential equations were established along the shell meridian. The dependent variables include three displacement components, the angle of rotation and the four shell internal stress components in the same directions as the four displacement variables. The stress variables are the transverse shear Q, the membrane stresses N_ϕ, N and the merdian bending moment M_ϕ. For each circumferential harmonic number, the equations were solved numerically to yield proper modal and frequency data. The dynamic effects of the stringers and the ring stiffeners were handled differently. For the stringers which were located along the shell meridians, their stiffness was averaged and merged with the shell to form a mean stiffness. For the ring stiffeners, the dynamic impedances were formulated individually. The impedances were represented in terms of the increments of the shell internal stresses as functions of the local displacements. These increments were introduced into the differential equations at the ring stiffener locations during numerical integration. The computer program to execute the integration and typical modal and frequency data for shell structure models were presented in Reference 1.

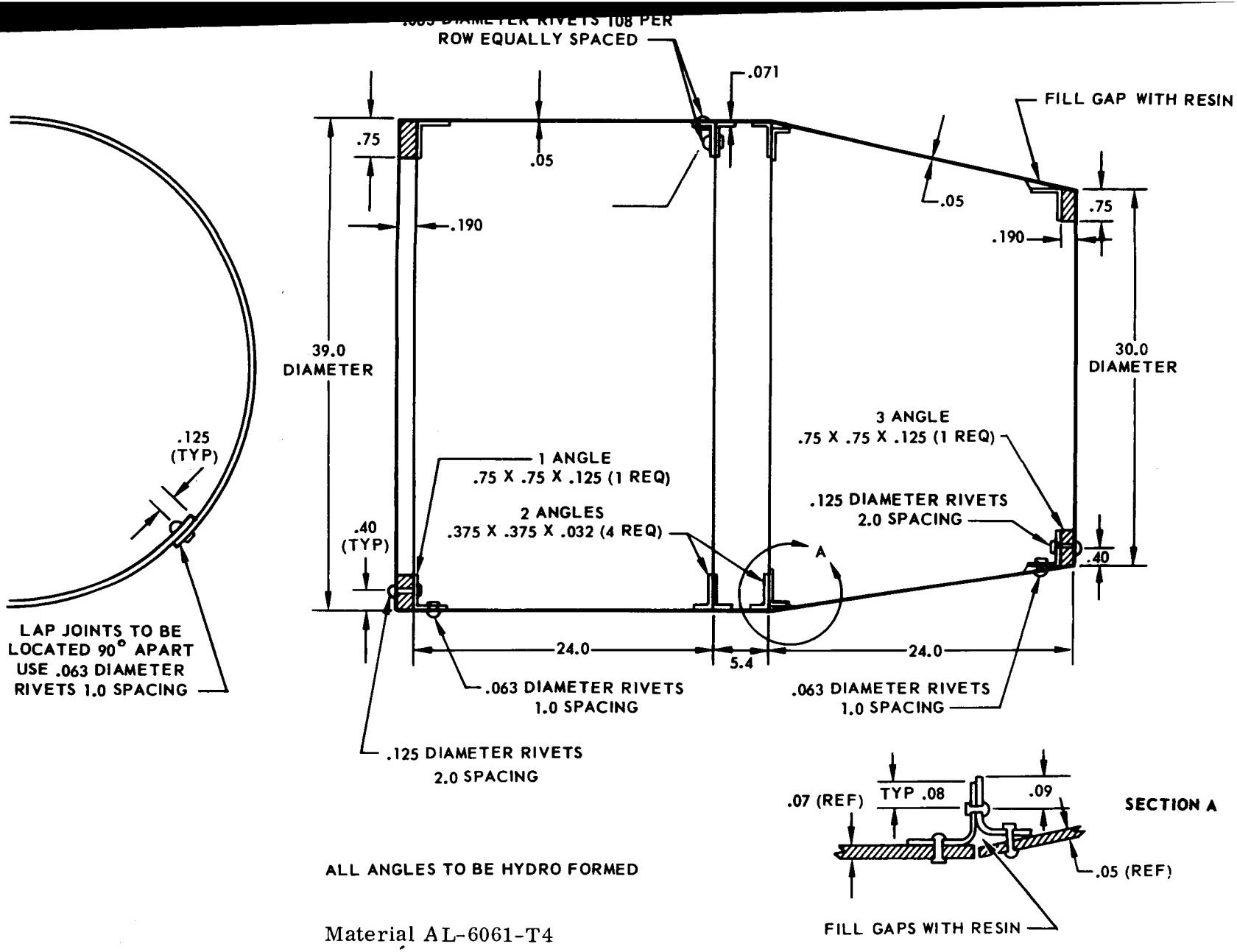

ALL ANGLES TO BE HYDRO FORMED

Material AL-6061-T4

FIGURE 1. INSTRUMENT UNIT SCALE MODEL DESIGN DRAWING

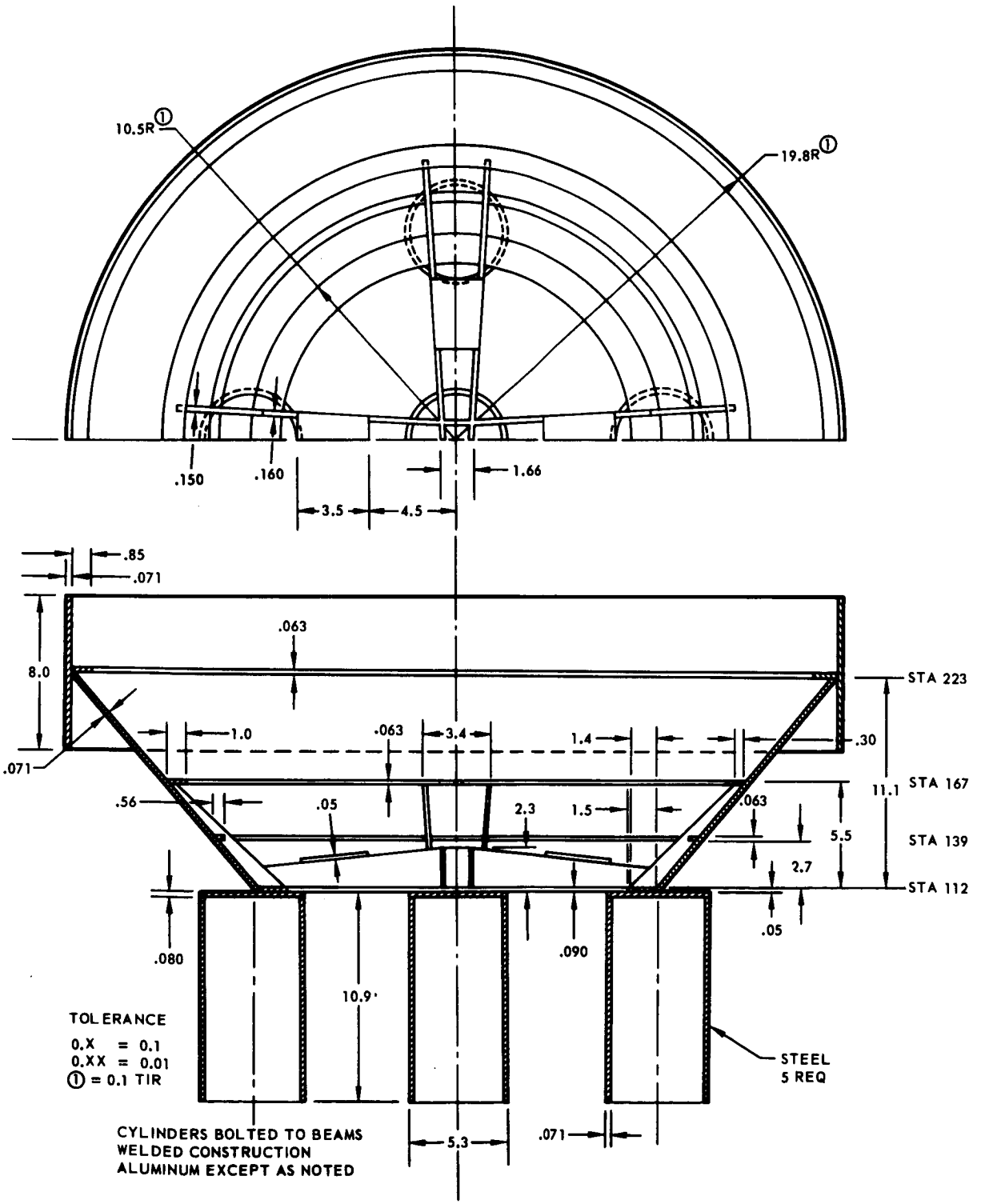

FIGURE 2. S-2 THRUST CONE SCALE MODEL DESIGN DRAWING

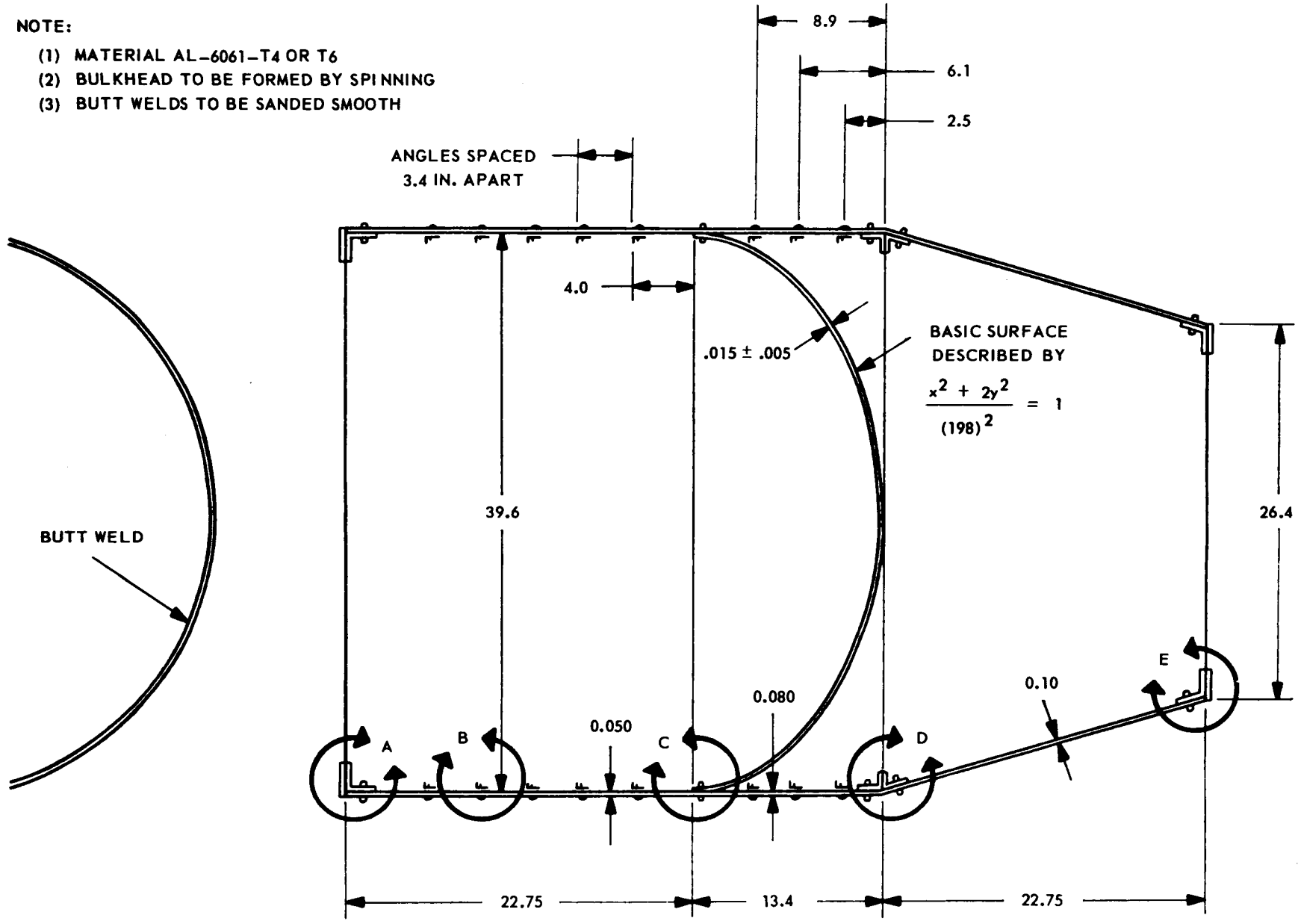

FIGURE 3. S-2 FORWARD SKIRT SCALE MODEL DESIGN DRAWING

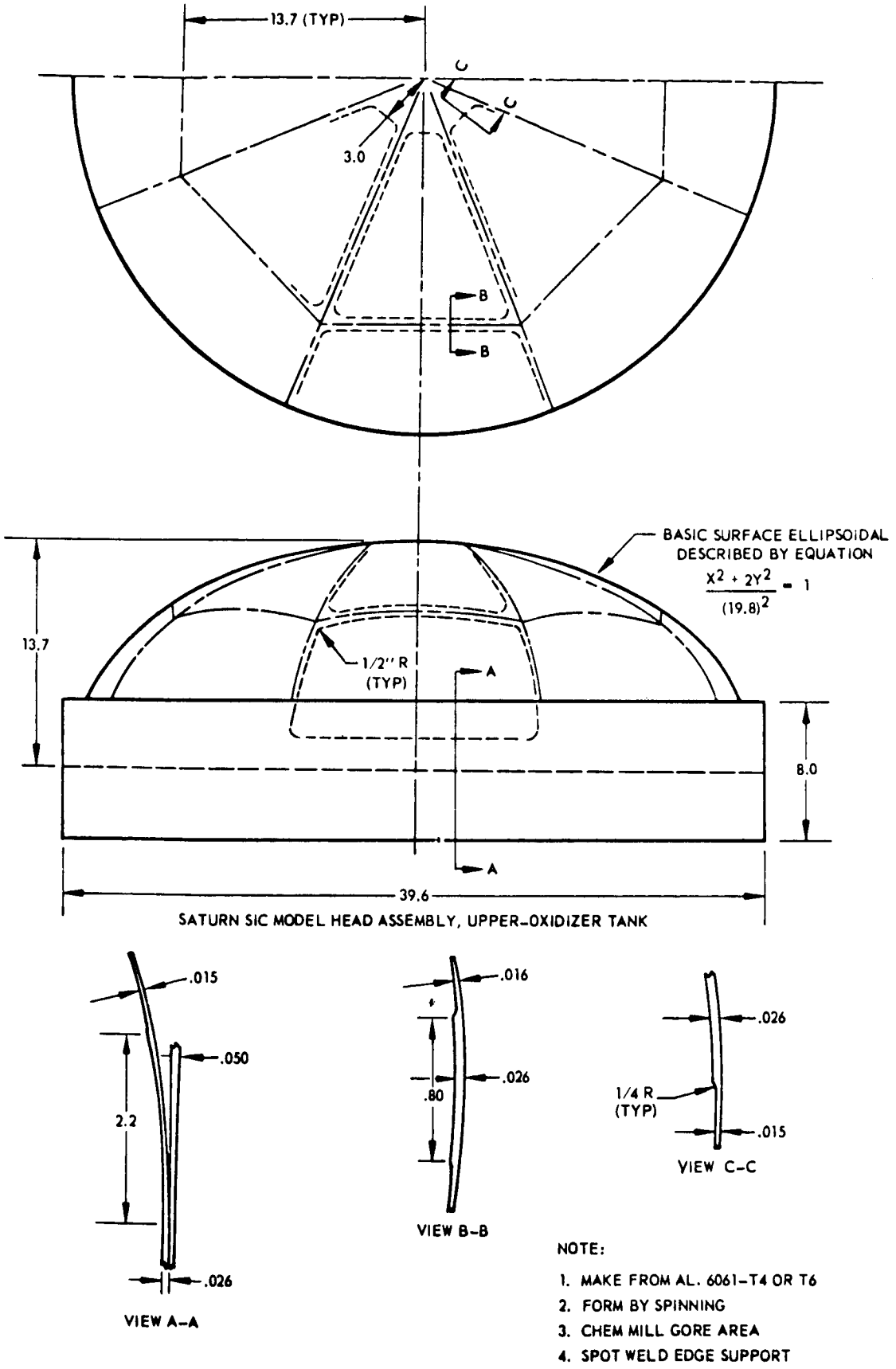

GURE 4. S-1C OXIDIZER TANK UPPER BULKHEAD SCALE MODEL DESIGN DRAWING

In the parallel experimental program, the shell models were excited sinusoidally. For overall impedance investigation, a frequency sweep was performed to record the impedance at specific locations as a function of the frequency. In the modal survey corresponding to an observed natural frequency, proximity probes were used to record the shell responses at various locations. A block diagram showing the test instrumentation is given in Figure 5. Test data obtained in the first year performance period may be found in Reference 1.

Tests were also performed on a segmented instrument unit shell structure model with and without simulated component attachments. The response data of the segmented shell were evaluated against the corresponding data of the complete shell structure. During the design and test process, a procedure was developed which may serve as a guide to testing engineers. After the segmentation technique was proven on the scale model shell structure, the full scale SATURN V instrument unit was segmented and tested. The impedance data for the scale model and full scale segmented shell structures were compared using proper scaling relations. The design procedure, as well as the analytical and experimental data of segmented shells were presented in Reference 2.

The analytical prediction of the vibration of a flexibly supported shell segment was based on a finite difference technique. The technique was a generalization of the method applied to the rectangular plate which was described previously in the section. It involved the formulation of the equilibrium and compatibility conditions of a cross-stiffened shell element. Attached masses and the corresponding mass moment of inertia effects were included in the equilibrium equations. Grid points were assumed which covered the shell segment and the neighboring areas. The relating matrix technique and the numerical data were illustrated in Reference 2. Since the completion of the intermediate report, certain modifications and improvements were made on the finite difference computer program which is presented in Section II of the final report.

Additional work items performed in the extended period of the contract included the dynamic and acoustic response investigation of the shell scale models which are described in the final report. Specifically, Section III deals with the transient and impulsive responses of the stiffened shells. Section IV describes the analytical and experimental investigation on the acoustic loading and blast overpressure on a shell structure model. Section V concludes the report with the comprehensive shell scale model design procedure which may be used for future design purposes. The input formats and the detail listings of all computer programs are given in the appendices.

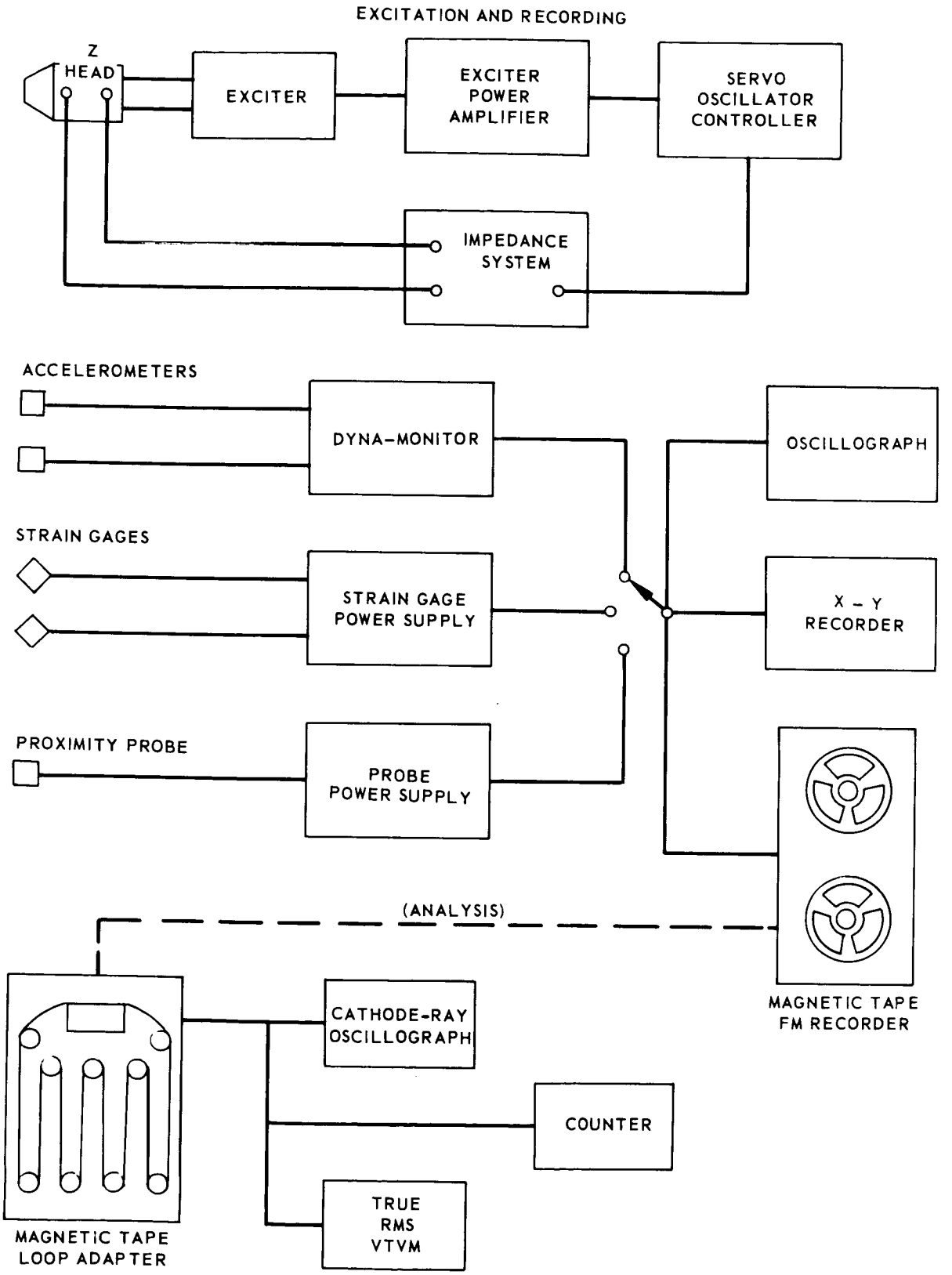

FIGURE 5. INSTRUMENTATION BLOCK DIAGRAM

SECTION II

THE REVISED FINITE DIFFERENCE COMPUTER PROGRAM

GENERAL

The program gives the analytical predictions of natural vibration modes and frequencies of a solid or sandwich curved panel with arbitrary boundary and supporting conditions. It is written in FORTRAN IV language, for the use of IBM 7090 or 7094 data processing systems. The user is required to prepare a complete coefficient matrix, derived from the finite difference expressions of equilibrium, compatibility, and boundary equations. For the detail analysis, the reader is referred to Reference 2. In the program, proper arrangement of the matrix rows is required as shown in the input data format. The program is set up for (172 x 172) coefficient matrix, although its function is mechanized to accommodate any matrix of reasonable size. In the latter case, due consideration should be given to the capacity of the in-core storage space. Furthermore, DIMENSION and EQUIVALENCE statements should be made compatible to the size of the matrix chosen.

The program adapts an overlay structure. The contents in each link are as follows:

a. MAIN

It "CALLS" all subsequent links.

b. $ ORIGIN BETA

It contains two subroutines - matrix multiplication, and matrix inversion, which are linked directly to the main program.

c. $ ORIGIN ALPHA - CHN 1 (CHN 1 indicates the first chain.)

It evaluates all elements needed for the coefficient matrix, and puts them into a table form called "E Table". Mass matrices are also formed in this link. This subroutine is linked to ORIGIN BETA.

d. $ORIGIN ALPHA - CHN 2

Formation of AA3 matrix (compatibility equations) is carried out by transfering the proper elements in the E table to the proper locations in the AA3 matrix. Some matrix algebra are also performed here. This subroutine is linked to ORIGIN BETA, and overlaid on CHN 1.

e. $ORIGIN ALPHA - CHN 3

Formation of AA1 matrix (equilibrium equations) is carried out in this chain. Some matrix algebra are performed. The subroutine is linked to ORIGIN BETA, and overlaid on CHN 2.

f. $ORIGIN ALPHA - CHN 4

Formation of AA2 matrix (boundary conditions) is accomplished. With further matrix manipulation, reduction of the coefficient matrix results in an eigenmatrix. This subroutine is linked directly to ORIGIN BETA, and overlaid on CHN 3.

g. $ORIGIN BETA - CHN 5

Subroutine "MITER", which computes the eigenvalues and eigenvectors, is included in this link. Calling "MITER" is the sole purpose of this link. It is linked directly to the main program, and overlaid on all the aforementioned links except the main program and the COMMON statements.

Users should note that there are three working peripheral tapes specifically assigned to the program in addition to the variable tape numbers connected with the "MITER" subroutine.

INPUT DATA

Figure 6 shows the full scale instrument unit test panel set-up. Prior to the test, a (1:6.67) scale model of the panel was tested. The finite difference computer program was used to obtain the modal data of the scale model. Corresponding to a quarter of the shell panel, the program is set up for the grid pattern shown in Figure 7.

Following is a list of the coding symbols used in the program:

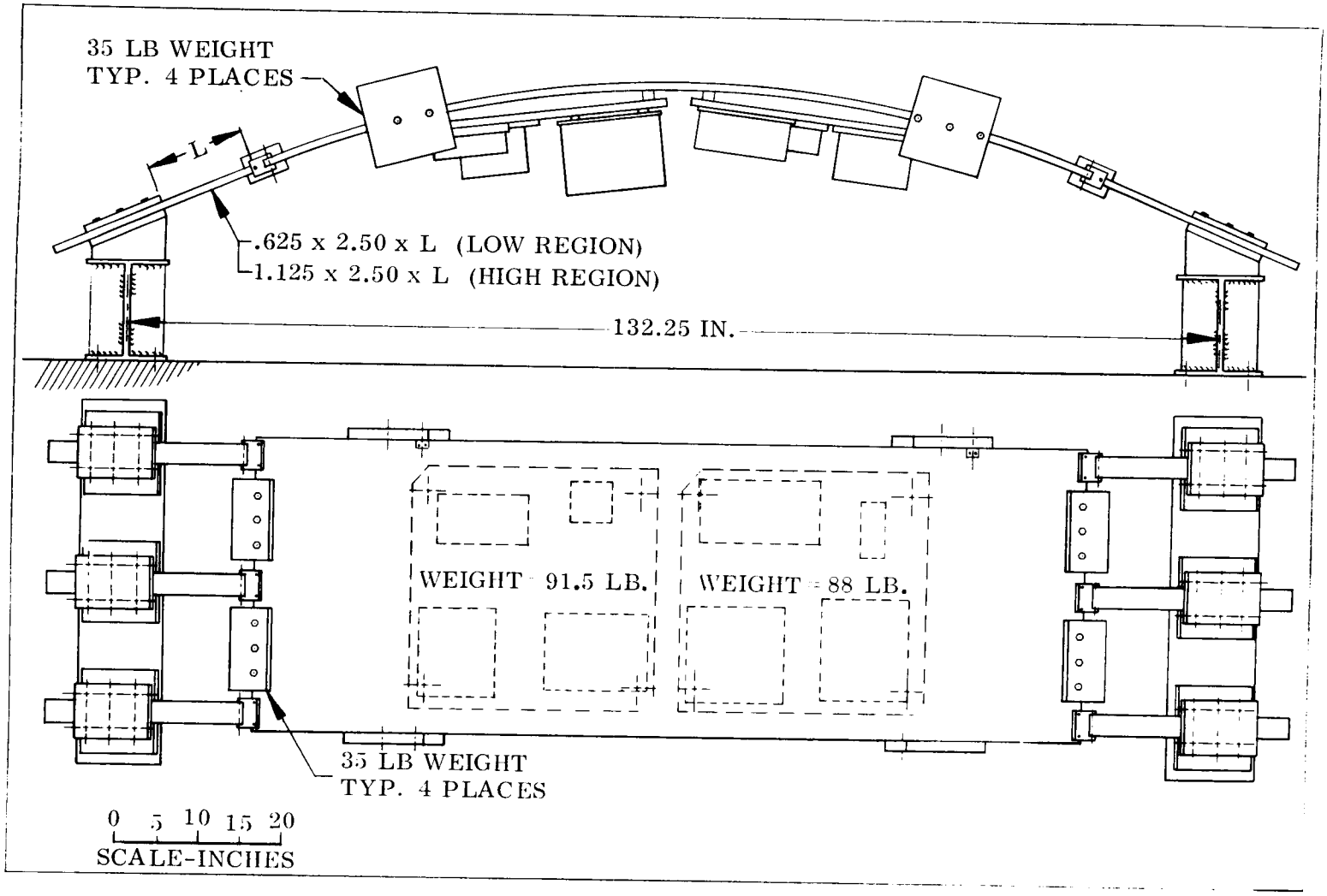

FIGURE 6. TYPICAL STIFFENED SHELL STRUCTURE AND THE SUPPORTING FIXTURE

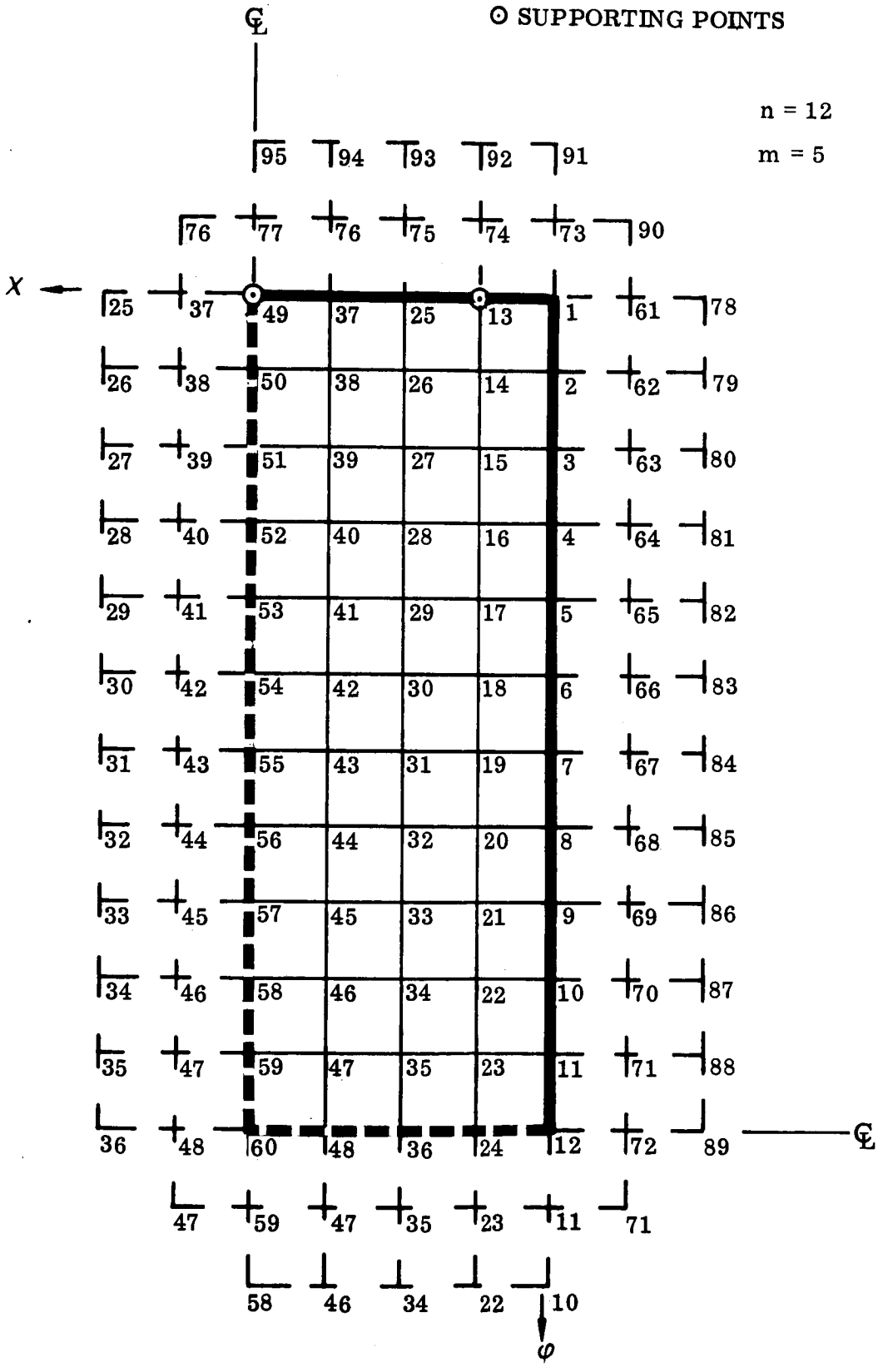

FIGURE 7. GRID PATTERN OVER QUARTER INSTRUMENT UNIT PANEL USED IN THE FINITE DIFFERENCE PROGRAM

1. Solid Shell

Symbols used in Analysis	Fortran Coding	Definitions
a	A	Radius of curvature (in)
b	B	Length of a panel in x-direction (in)
φ_o	PHIO	Circumferential angle in φ-direction (rad)
ν	PNU	Poisson's ratio
E	E	Young's modulus of elasticity (lb/in^2)
ρ	RHO	Mass density per unit volume (lb-sec^2/in^4)
h	H	Shell thickness (in)
n	N	Number of grid points in φ-direction, (=12)
m	M	Number of grid points in x-direction, (=5)
—	NMODE	Number of modes sought
—	IOPT	=1 for solid shell
z_{sx}, $z_{s\varphi}$	SZX, SZP	Distances from c.g. of the stiffeners to the middle surface of the panel in x-direction and φ-direction, (in.) numbers of values to be read in are controlled by an index, NEXT; their locations in the array by J1, J2 and K2.
A_{sx}, $A_{s\varphi}$	SAX, SAP	Cross sectional area of stiffener * in x-direction and φ-direction (in^2). Controlling indices are J1, J2, K2 and NEXT.
I_{sx}, $I_{s\varphi}$	SIX, SIP	Moment of inertial of stiffener, * in x-direction and φ-direction respectively, about its own centroidal axis (in^4). Controlling indices are J1, J2, K2 and NEXT.
K_x	BARKX	Spring constant of a point-support along the axis x = 0, (lbs/in) Controlling indices are I1, I2, and NXT1.
K_φ	BARKP	Same as above along the axis φ = 0, (lbs/in) Controlling indices are I3, I4, and NXT2.
W_x	WX	Weights along the boundary x = 0, (lbs) Controlling indices are I5, I6, and NXT3.

Symbols used in Analysis	Fortran Coding	Definitions
W_φ	WP	Weights along the boundary $\varphi = 0$, (lbs) Controlling indices are I5, I6, and NXT4.
W	WT	Weights at interior points of the panel (lbs) Controlling index is JWT
i, j	IM1, IM2	Row and column number, respectively, of off-diagonal term of mass (internal) matrix.
—	M3	Number of off-diagonal mass term
(M_1) i, j, $i \neq j$	AM3	Actual element that corresponds to Im1 and IM2 in the (internal) mass matrix. Number of this off-diagonal terms is limited to six.
—	IETBL, NEC	Row number and column number, respectively of the matrix element (E) table. The E table is generated according to the definition of Table 2, Reference 2, for all grid points. A particular element of the table is to be transferred to a particular location in the coefficient matrix A.
—	NXRO	Number of non-zero elements in a row of coefficient matrix.
—	NAC	Column number of the non-zero element in the coefficient matrix.
—	NR, NC, NC1 NC2, NC3	Defined in the diagram shown in INPUT FORMAT. For any other size of coefficient matrix, they are computed as follow

*NOTE: For a stiffener which is placed along one boundary of the panel, double the values of the corresponding cross-sectional area and the moment of inertia as input.

Referring to the diagram shown in the INPUT FORMAT,

For submatrix AA1,

$NR = MN$
$NC = 2MN + 3M + 3N + 1$
$NC1 = MN$
$NC2 = 2M + 2N + 1$
$NC3 = MN + M + N$

For submatrix AA2,

$NR = 2M + 2N + 1$
$NC = MN + 2M + 2N + 1$
$NC1 = MN$
$NC2 = 2M + 2N + 1$

For submatrix AA3,

$NR = MN + M + N$
$NC = 2MN + 3M + 3N + 1$
$NC1 = MN$
$NC2 = 2M + 2N + 1$
$NC3 = MN + M + N$

2. Sandwiched Shell

The definitions made for the solid shell apply to the sandwiched shell with the following exceptions and additional definitions.

Symbols used in Analysis	Fortran Coding	Definition
h	H	Total thickness of outer and inner facings.
c	CORE	Thickness of core.
$\overline{m}$	BARM	Mass per unit area of the panel.
—	IOPT	= 2. For sandwiched panel.

The key punch format for the input data and the program listings are attached to the report as APPENDIX A. Typical modal data obtained through the finite difference computes program for the segmented instrument unit panel is shown in Figure 8.

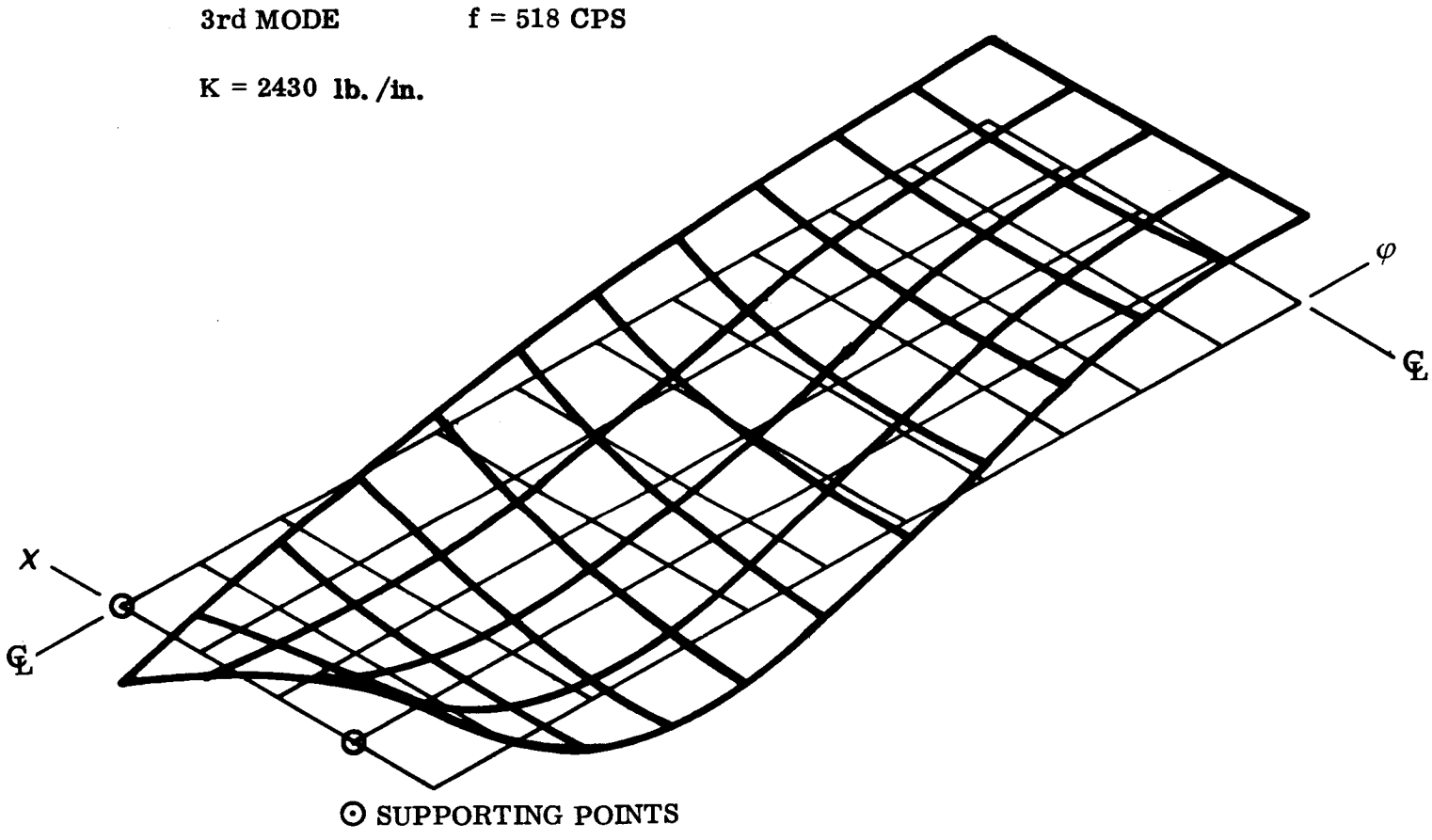

FIGURE 8. TYPICAL ANALYTICAL MODAL PATTERN REPRESENTING A QUARTER OF THE INSTRUMENT UNIT PANEL

FORMULATION OF THE FINITE DIFFERENCE COMPUTER PROGRAM

In order that the user may adapt the finite difference computer program to his specific need, the present subsection describes the detail formulation and organization of the program. With this information, it is expected that the user will be able to organize a coefficient matrix for a shell panel structure with arbitrary boundary and support conditions. Applying the coefficient matrix as input data, the finite difference computer program may be used to generate the desired modal information.

Basic Grid Pattern Setup

The following procedures may be used to generate the basic grid pattern for a cross-stiffened cylindrical panel with arbitrary dimensions and boundary conditions.

1. Develop the curved panel into a plane surface, draw the boundary lines and mark down the location of the edge point supports, concentrated weight attachments, and center line of the stiffeners.

2. Mark all axes of symmetry, if any.

3. Set the coordinate axes which coincide with two boundary lines as shown in the following figure.

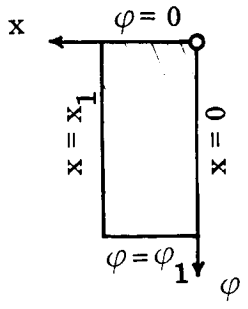

4. Cover the panel proper with two sets of equidistant grid lines X = constant and φ = constant. The grid pitch is Δx in the x direction and $a\Delta\varphi$ in the φ direction, where a is the radius of the cylindrical panel.

   Use the following guide lines:

   a. Each boundary line, axis of symmetry or the center line of a stiffener coincides with one of the grid lines.

   b. Each point support or concentrated weight attachment coincides with a grid point (the intersection of two grid lines) if possible. Otherwise locate the said point close to a grid point.

c. Make the grid pitches Δx and $a\Delta\varphi$ equal or close to being equal.

d. For a panel with one axis of symmetry, only half of the panel need be considered. For a panel with two axes of symmetry only one quarter of the panel need be considered in order to obtain symmetrical mode shapes.

5. Assign numbers to each grid point on the part of the panel including points on the boundary lines and the axes of symmetry (see Figure 7). The station numbers start from 1 to (nxm), where n is the total number of grid lines in φ-direction while m is the total number of grid lines in x direction. In Figure 7, it may be seen that n = 12 and m = 5 for the grid pattern under consideration.

6. Set up the necessary exterior stations according to the following rules:

   a. Extend two grid pitches from the points on the panel edges.

   b. Extend one grid pitch in each direction from the corner points of the part of the panel concerned.

   c. Extend two grid pitches from the points on the axes of symmetry.

7. Assign numbers to exterior stations starting from (nxm) + 1 according to the following order.

   a. Points one pitch away from the edges in the x-direction (station 61 - 72 in Figure 7).

   b. Points one pitch away from the edges in the φ-direction station 73 - 77 in Figure 7).

   c. Points two pitches away from the edges in the x-direction (station 78 - 89 in Figure 7).

   d. Points one pitch in each direction away from the corner points which are the intersections of two edges (station 90 in Figure 7).

   e. Points two pitches away from the edges in the φ-direction (station 91 - 95 in Figure 7).

8. Identify the station numbers of the points beyond the axes of symmetry to be the same as those of their image points with respect to the axes of symmetry. (station 10 - 11, 22 -23, 25 - 48, 58 - 59, 71, 76 in Figure 7.)

9. Write down proper boundary conditions at each point on the edges. Detailed description of the boundary conditions is shown on Page 25 through Page 26 of Reference 2.

Formulation of the Coefficient Matrix

After the grid pattern has been completed, the procedures shown on Page 39 through Page 40 of Reference 2 may be used to generate the coefficient matrix [A]. The simplified finite difference operators are given below. The definitions of the index numbers are given in the Index Table on Page 41, Reference 2.

1. Equilibrium Equation Operator. Apply to all stations on the part of the panel including the boundary points (sta. 1 - 60 in Figure 7).

$$\left.\begin{array}{ccccc}
0 & 0 & E6 & 0 & 0 \\
0 & E5 & E4 & E5 & 0 \\
E3 & E2 & \underset{(w_i)}{E8} & E2 & E3 \\
0 & E5 & E4 & E5 & 0 \\
0 & 0 & E6 & 0 & 0 \\
 & E9 & \underset{(\Phi_i)}{E7} & E9 &
\end{array}\right\} \quad (A1)$$

In the above table, the symbols E2 through E9 indicate the coefficients of the finite difference equation. They are identified on P. 31, 32, Reference 2. The symbols used in the above and following tables may also be identified with the corresponding items in Table 2, Reference 2.

2. Boundary Condition Operator for V_X.

The following operator is applied to points along the edge $X = 0$. (Sta. 1 - 12 in Figure 7).

0	E67	0	E11	0
E66	E36	E10 (w_i)	E12	E1
0	E67	0	E11	0

(A2)

This operator may be applied to the points along the edge $X = X_1$. In the latter case, a negative spring constant is to be entered as input for each spring support.

3. Boundary Condition Operator for $M_{X\varphi}$.

The condition is applicable to the corner points which are the intersections of two edges. Enter positive spring constants for the corners $X = 0$, $\varphi = 0$ and $X = X_1$, $\varphi = \varphi_1$. Enter negative spring constants for the corners $X = 0$, $\varphi = \varphi_1$ and $X = X_1$, $\varphi = 0$. (Sta. 1 in Figure 7).

E66	0	E1
0	E68 (w_i)	0
E1	0	E66

(A 3)

4. Boundary Condition Operator for $M_{X\varphi}$.

The condition is applicable to points along the boundary lines $X = 0$ and $X = X_1$. (Sta. 1 through 12 in Figure 7).

0	E14	0
E1	E15 (w_i)	E1
0	E14	0

(A4)

5. Boundary Condition Operator for V_φ.

The condition is applicable to points along the edges $\varphi = 0$, (positive spring constant input) and $\varphi = \varphi_1$ (negative spring constant input). (Sta. 1, 13, 25, 37, 49 in Figure 7).

$$\begin{bmatrix} 0 & E1 & 0 \\ E17 & E18 & E17 \\ 0 & E16 \ (w_i) & 0 \\ E37 & E69 & E37 \\ 0 & E66 & 0 \end{bmatrix} \tag{A5}$$

6. Boundary Condition Operator for M_φ.

The condition is applicable to points along the edges $\varphi = 0$ and $\varphi = \varphi_1$. (Sta. 1, 13, 25, 37, 49 in Figure 7).

$$\begin{bmatrix} 0 & E1 & 0 \\ E19 & E20 \ (w_i) & E19 \\ 0 & E1 & 0 \end{bmatrix} \tag{A6}$$

7. Compatibility Condition Operator.

Apply only to the interior points. (Sta. 14-24, 26-36, 38-48, 50-60 in Figure 7).

	E22	E21 (w_i)	E22	
0	0	E28	0	0
0	E27	E26	E27	0
E25	E24	E23 (Φ_i)	E24	E25
0	E27	E26	E27	0
0	0	E28	0	0

(A7)

8. Boundary Condition Operator for S_X.

Apply to all points along the edges $X = 0$ and $X = X_1$ except the corner points. The following tables are used for points not on the axis of symmetry. (Sta. 2 through 11 in Figure 7).

E64	0	E30
0	0 (w_i)	0
E30	0	E64

E66	0	E1
0	0 (Φ_i)	0
E1	0	E66

(A8a)

Apply the following to points on the axis of symmetry (Sta. 12 in Figure 7).

E64	0	E30
E30	0 (w_i)	E64

E66	0	E1
E1	0 (Φ_i)	E66

(A8b)

9. Boundary Condition Operator for N_φ.

Apply to points along the edges $\varphi = 0$ and $\varphi = \varphi_1$ where there is no spring support. (Sta. 1, 25, 37 in Figure 7).

E1	E29 (Φ_i)	E1

(A9)

10. Boundary Condition Operator for Displacement v.

The condition specifies that no tangential displacement is admissible at the spring supports. Apply to points along the edges $\varphi = 0$ with spring supports. (Sta. 13 and 49 in. Figure 7). This condition can be used only if an axis of symmetry exists as shown below:

0		0	E33	0
E31 (w_i)	Edge of panel, $\varphi = 0$	E1	E29 (Φ_i)	E1
E35		E38	E34	E38
E35		E38	E32	E38
E35		E38	E32	E38
E31		E1	E29	E1

Axis of symmetry, $\varphi = \frac{1}{2}\varphi_1$

(A10)

11. Boundary Condition Operator for N_χ.

Apply to points along the edges $\chi = 0$ and $\chi = \chi_1$ without spring support. (Sta. 1 through 12 in Figure 7).

E1
E29 (Φ_1)
E1

(A11)

12. Boundary Conditions Operator for u.

Apply to points along the edge $\chi = 0$ with spring supports. This condition can be used only if there is an axis of symmetry in the φ direction.

E1	E63 ----------	E63	E63	E1	0
E29	E32----------	E32	E73	E29 (Φ_1)	E72
E1	E63----------	E63	E63	E1	0

Axis of symmetry $\chi = \frac{\chi_1}{2}$ Edge $\chi = 0$

(A12)

where E72 and E73 are two new index numbers which are not given in Table 2, Reference 2. They are defined as:

$$E72 = -\nu\lambda^2 \frac{K}{K_\varphi}$$

$$E73 = -4 + \nu\lambda^2 \frac{K}{K_\varphi}$$

This condition is not used in the computer program shown in Appendix A since no support exists at $\chi = 0$.

13. Boundary Condition Operator for $N_{\varphi x}$.

Apply to points along the edges $\varphi = 0$ and $\varphi = \varphi_1$ except the corner points. The following table is used for point not on an axis of symmetry. (Sta. 13, 25, 37 in Figure 7).

E66	0	E1
0	0 (Φ_i)	0
E1		E66

(A13a)

The following table is used for point on the axis of symmetry. (Sta. 49 in Figure 7.)

E66	E1
0 (Φ_i)	0
E1	E66

(A13b)

14. Stress Function Operator for Φ_c.

Apply to one selected point on the panel. (Sta. 60 in Figure 7.)

1 (Φ_i)

(A14)

The following diagram shows the details of organizing the coefficient matrix. The diagram may be compared with a similar diagram shown on page 40, Reference 2.

w_a (mn)	w_b (2(m + n) + 1)	Φ (mn + m + n)
w_1 w_2------		Φ_1 Φ_2
Equilibrium Equation Operators		(A1)
Boundary Condition Operators for V_χ (A2) Boundary Condition Operators for $M_{\chi\varphi}$ (A3) Boundary Condition Operators for M_χ (A4) Boundary Condition Operators for V_φ (A5) Boundary Condition Operators for M_φ (A6)		0
1) Compatibility Condition Operators		(A7)
Boundary Condition Operators for S_χ		(A8)
Boundary Condition Operators for N_φ or v		(A9) or (A10)
0		Boundary Condition Operators for N_χ or u (A11) or (A12) Boundary Condition Operators for $N_{\varphi\chi}$ (A13) Stress Function Operator for Φ_c (A14)

Preparation of Coefficient Matrix Input Data

The coefficient matrix is read in as three submatrices, named "AA1", "AA2", and "AA3", which are shown below. In the computer program, the submatrices are generated in the order: AA3, AA1, AA2, to facilitate data reduction:

AA1 Equilibrium Equation Operators		(mn) x (2mn+3m+3n+1)
AA2 Boundary Condition Operators for V_χ, $M_{\chi\varphi}$, M_χ, V_φ, and M_φ	0	(2m+2n+1) x (mn+2m+2n+1)
AA3 Compatibility Operators, Boundary Condition Operators for S_χ, N_φ, v, N_χ, u, $N_{\varphi\chi}$, and Operator for Φ_c		(mn+m+n) x (2mn+3m+3n+1)

Corresponding to the grid pattern shown in Figure 7, where m= 5, n = 12, the sizes of the three submatrices are (60 x 172), (35 x 95), and (77 x 172), respectively. In order to explain the coefficient matrix input in detail, two examples showing the generation of a row of the submatrix are illustrated below.

Example 1. The first row of AA3 matrix represents the compatibility condition (A7) at point 14. The finite difference operators and the related grid point stations are shown below:

Grid Pattern in the neighborhood of point (14):

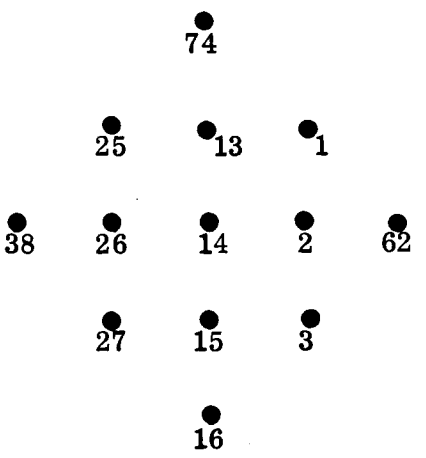

The corresponding coefficient of w_i and Φ_i are:

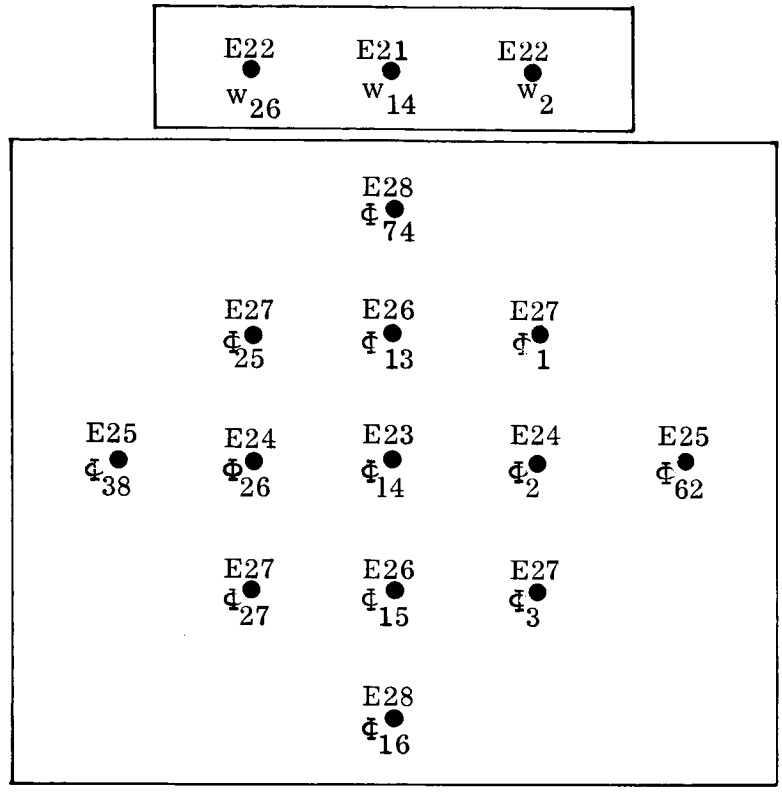

From the above diagrams, the 96th row of the coefficient matrix, i.e., the first row of AA3 matrix, may be generated in the following manner. There is a total of 16 non-zero elements in this row.

Column No.	2	14	26	96	97	98	108	109	110	111	120	121	122	133	157	169
Index No.	E22	E21	E22	E27	E24	E27	E26	E23	E26	E28	E27	E24	E27	E25	E25	E28

Note that Column Number of $w_r = r$, i.e., the grid number is the matrix column number.

Column Number of $\Phi_r = r + (mn + 2m + 2n + 1) = r + 95$, i.e., the grid number plus 95 is the matrix column number.

The input data card which is identified as (AA30001A) in Appendix A is read as:

016 (002022) (014021) (026022) (096027) (097024) (098027) (108026) (109023) ....

where the parentheses are added for convenience in reading. In the card, the first number (016) indicates the total number of non-zero elements appearing in this row. The second number (002) is the column number of the first non-zero element, while the third number (022) is the corresponding index number. The fourth and fifth numbers are the column number and index number of the second non-zero element of the row,

and so on. The station number (14) of the center point to which the finite difference operator is applied is entered as the first number of the input data card AA300000, which reflects the row number of the matrix element on the (E) table generated.

Example 2. When the finite difference operator is applied to a point one or two pitches away from the axis of symmetry, some new index numbers will be assigned. Consider the compatibility condition (A7) applied to grid point 48 as an example:

Grid Pattern in the neighborhood of point (48):

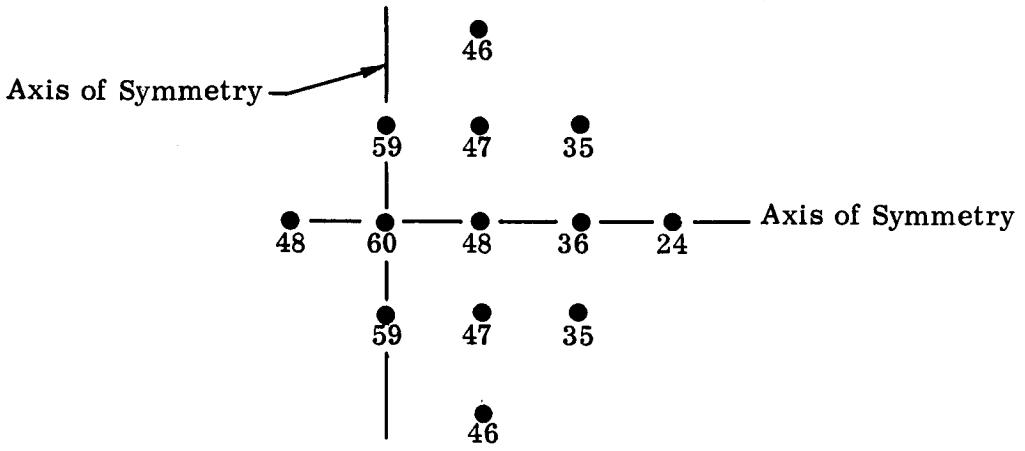

The corresponding coefficients for w_i and Φ_i are

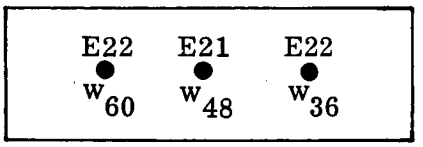

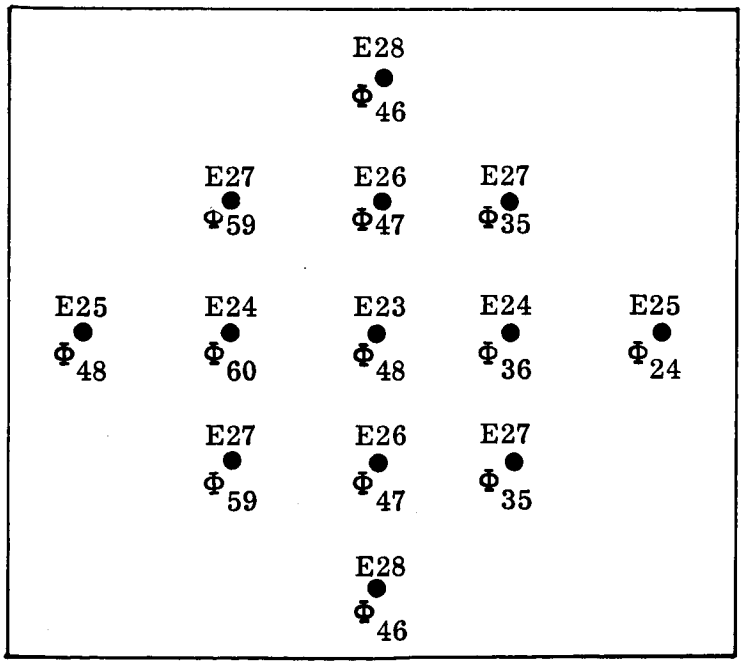

Corresponding to the above operators, the 33rd row of the AA3 matrix is:

Col. No.	36	48	60	119	130	131	141	142	143	154	155
Index No.	E22	E21	E22	E25	(E27+E27)	E24	(E28+E28)	(E26+E26	(E23+E 25)	(E27+E27)	E24

The total number of non-zero elements in this row is 11. Referring to Table 2, Reference 2, the following symbols are defined:

E61 = 2 x E27

E62 = 2 x E28

E60 = 2 x E26

E52 = E23+E25

The corresponding input for the 33rd row of AA3 matrix card (AA30033) is

011 (036022)(048021)(060022)(119025)(130061)(131024)(141062)(142060)(143052)(154061)(155024).

The 33rd number in input data cards AA30000 is 48. The latter number identifies the proper location of the (E) table from which the computed elements are selected.

Additional Information

The computer program described in Appendix A deals with a curved panel with double axes of symmetry supported at discrete points along the edges. The corresponding grid pattern is fixed as shown in Figure 7. The following suggestions are listed in order to modify the program for application to other structures:

1. Change dimension and equivalence statements to fit the requirements. Evidently, all dimensions dependent on the grid sizes m, n, are to be modified.

2. For a panel with either one or none axis of symmetry, modify the statements used to compute the grid pitches $\Delta\chi$ and $a\Delta\varphi$.

3. The boundary conditions u = 0 or v = 0 can be applied only if there is an axis of symmetry in φ or χ direction, respectively. If the condition u = 0 is used, two new index numbers, E72 and E73, should be defined in the program.

4. The sign of the spring constant input of a point support is dependent on the specific edge where the support is located. The sign may be determined using the following diagram.

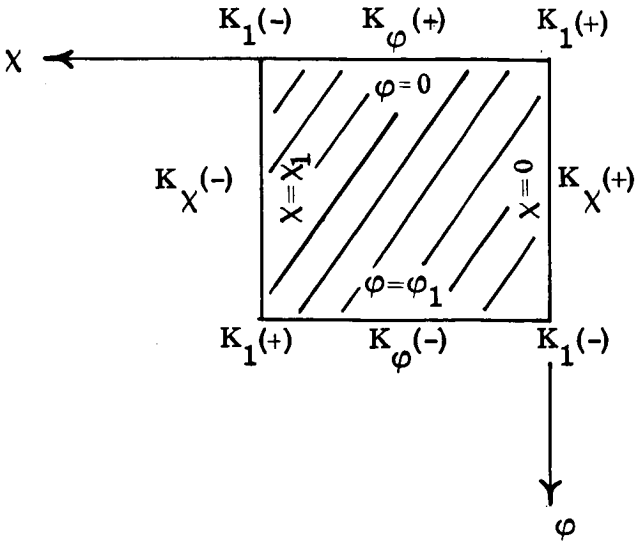
$K_1(-)$
$K_\varphi(+)$
$K_1(+)$
χ
$\varphi=0$
$K_\chi(-)$
$\chi=\chi_1$
$\chi=0$
$K_\chi(+)$
$\varphi=\varphi_1$
$K_1(+)$
$K_\varphi(-)$
$K_1(-)$
φ

SECTION III

THE RESPONSE OF STIFFENED SHELL STRUCTURES TO TRANSIENT AND IMPULSIVE LOADINGS

The objective of this analysis is to develop a technique for handling stiffened shell structure response problems involving transient and impulsive loads. For this purpose, the normal-mode method of analysis is developed. The response solutions for the displacements and stresses are expressed in terms of a series of normal modes of free vibration for the built-up shell structure. With the use of energy expressions and Lagrange's equations, a set of uncoupled equations for the generalized coordinates is obtained. The solutions to these equations are in terms of time and space integrals.

A method is also developed to determine the normal modes and natural frequencies for a mass attached structure using natural frequency and modal data of the same structure without mass attachments. Transient response solution is obtained for the complete structure with mass attachments. The advantage of this procedure is that an uncoupled set of dynamic equations is obtained for the solution of the transient response problem involving the mass attached structure.

Detail programming information related to this section is presented in Appendix B of this report.

TRANSIENT RESPONSE SOLUTION

In this subsection, analytical solution for the transient response of built-up shell structures is developed. Details of the computer program are described. The computer program has been checked-out considering the response of the instrument unit shell model. In order to determine the convergence properties of this method, a test case of simply supported cylindrical shell is also illustrated.

A. Theory

The Lagrange's equations in generalized coordinates, for a system with external and/or non-conservative forces, may be written in the following form:

$$\frac{d}{dt}\left(\frac{\partial T}{\partial \dot{q}_i}\right) - \frac{\partial (T - V)}{\partial q_i} = Q_i, \quad i = 1, 2, \ldots n \tag{1}$$

where

T = Total kinetic energy of the built-up structure

V = Total potential energy of the structure

$q_i(t)$ = i^{th} generalized coordinate for the ith normal mode

Q_i = i^{th} generalized component of the external and non-conservative forces

For the present problem, the non-conservative force is assumed to be a viscous damping force. Therefore,

$$Q_i = \iint_s \left[\vec{P} - (\lambda \rho h)\, \dot{\vec{U}}\right] \cdot \vec{U}_i \, ds_1 \, ds_2 \tag{2}$$

where

P = External pressure acting on the system

λ = Viscous damping coefficient/unit mass

ρ = Material density

h = Thickness

s_1, s_2 = Orthogonal coordinates covering the reference surface of the structure

The displacement vector $\vec{U}(s_1, s_2, t)$ is expressed in terms of the normal modes as

$$\vec{U}(s_1, s_2, t) = \sum_{i=1}^{\infty} q_i(t)\, \vec{U}_i(s_1, s_2) \tag{3}$$

Substituting the expression for $\vec{U}$ from Equation (3) into Equation (2) yields

$$Q_i = \iint_s \left[\vec{P} - (\lambda \rho h) \sum_{j=1}^{\infty} q_j \vec{U}_j\right] \cdot \vec{U}_i \, ds_1 ds_2$$

In view of the orthogonality of normal mode displacements,

$$\iint_s \rho h\, (\vec{U}_j \cdot \vec{U}_i)\, ds_1 \, ds_2 = 0, \quad \text{if } i \neq j$$

$$\iint_s \rho h (\vec{U}_i \cdot \vec{U}_i)\, ds_1 \, ds_2 \equiv N_i \neq 0, \quad \text{if } i = j \tag{4}$$

the generalized force may be expressed in the following manner:

$$Q_i = \iint_s (\vec{P} \cdot \vec{U}_i) \; ds_1 \, ds_2 - \lambda N_i \dot{q}_i \tag{5}$$

Equation (1) is rewritten with the viscous damping term as follows:

$$\frac{d}{dt}\left(\frac{\partial T}{\partial \dot{q}_i}\right) - \frac{\partial (T - V)}{\partial q_i} + \lambda N_i \dot{q}_i = P_i \tag{6a}$$

where

$$P_i = \iint_s (\vec{P} \cdot \vec{U}_i) \; ds_1 \, ds_2 \tag{6b}$$

In general, since T and V are functions of $\dot{\vec{U}}$ and $\vec{U}$, the kinetic and potential energy terms are quadratic functions of the generalized coordinates $\dot{q}_i$ and q_i, respectively. Detail development of these terms for a shell of revolution with ring stiffeners is given later in the section. At the present, only the general forms of the expressions are considered. Terms of Equation (6a) are expressed by:

$$\frac{d}{dt} \frac{\partial T}{\partial \dot{q}_i} = \sum_{j=1}^{\infty} m_{ij} \ddot{q}_j \tag{7a}$$

and

$$\left(\frac{\partial V}{\partial q_i}\right) = \sum_{j=1}^{\infty} k_{ij} \dot{q}_j \tag{7b}$$

In general, the generalized mass and spring terms are of the following form:

$$m_{ij} = \iint_s \Big| \quad \Big|_{ij} \; ds_1 \, ds_2 \tag{8a}$$

$$k_{ij} = \iint_s \Big| \quad \Big|_{ij} \; ds_1 \, ds_2 \tag{8b}$$

The m_{ij} terms are derived in Subsection 1. B for a specific case. It is observed that, since m_{ij} and k_{ij} are derived from the free vibration modes of a built-up structure, they satisfy the following conditions:

$$m_{ij} = k_{ij} = 0, \text{ for } i \neq j$$

and

$$m_{ii} \neq 0, \; k_{ii} \neq 0$$

With the use of Equations (7a, b), the Lagrange Equation (6a) for the case of undamped free vibrations becomes:

$$m_{ii} \ddot{q}_i + k_{ii} q_i = 0$$

The solution to the above homogeneous equation is $q_i = e^{i\omega_i t}$. Hence,

$$k_{ii} = \omega_i^2 \, m_{ii} \tag{9}$$

For the forced vibration case considering damping, Equation (6a) becomes:

$$m_{ii} \ddot{q}_i + \omega_i^2 m_{ii} q_i + \lambda N_i \dot{q}_i = P_i(t), \quad i = 1, 2 \ldots \infty \tag{10a}$$

This uncoupled set of equations may be written as

$$\ddot{q}_i + \lambda \frac{N_i}{m_{ii}} q_i + \omega_i^2 q_i = \frac{1}{m_{ii}} P_i \tag{10b}$$

The solution to Equation (10b) is given by

$$\begin{aligned} q_i(t) = {} & \exp\left[\frac{\lambda t}{2} \frac{Ni}{m_{ii}}\right] (A_i \cos \gamma_i t + B_i \sin \gamma_i t) \\ & + \frac{1}{m_{ii} \gamma_i} \int_0^t P_i(\tau) \exp\left[-\frac{\lambda Ni}{2m_{ii}} (t-\tau)\right] \sin \gamma_i (t-\tau) \, d\tau \end{aligned} \tag{11a}$$

where

$$\gamma_i = \left[\omega_i^2 - \left(\frac{\lambda N_i}{2m_{ii}}\right)^2\right]^{1/2} \tag{11b}$$

and A_i and B_i are determined from initial displacement and velocity of the structure.

The displacement solution to the transient response problem is obtained by summation of the series in Equation (3) with the generalized coordinate expressions provided by Equation (11). The procedure for computing the generalized coordinate expressions q_i (t) is as follows: For a given external pressure $\vec{P}$ acting on the system, the generalized pressure terms P_i (t) are computed using Equation (6b). The values of N_i and m_{ii} are obtained for a particular problem using Equations (4) and (8a), respectively. The expressions for A_i and B_i are obtained from the initial displacement and velocity of the structures. For the case when initial displacement and velocity of the structure are zero, $A_i = 0$, $B_i = 0$. The expression for q_i (t) is then obtained by integrating either analytically or numerically, the second term on the right-hand side of Equation (11a).

B. Energy Expressions

In this subsection, kinetic energy expressions are given for a shell of revolution, as well as for ring stiffeners and mass attachments. These expressions are used to derive the generalized mass expression m_{ij} for the complete built-up structure. The kinetic energy expression for a shell of revolution is:

$$T_s = \frac{1}{2} \int_0^{\ell} \int_0^{2\pi} \rho h \, (\dot{\vec{U}} \cdot \dot{\vec{U}}) \, r d\theta \, ds \tag{12}$$

where $\dot{\vec{U}}$ is the velocity vector at any point of the shell. Substituting from Equation (3) the normal mode expansion terms into Equation (12) yields:

$$T_s = \frac{1}{2} \int_0^{\ell} \int_0^{2\pi} \rho h \left(\sum_{i=1}^{\infty} \dot{q}_i \vec{U}_i \right) \cdot \left(\sum_{j=1}^{\infty} \dot{q}_j \vec{U}_j \right) r d\theta ds$$

$$\frac{\partial T_s}{\partial \dot{q}_i} = \int_0^{\ell} \int_0^{2\pi} \rho h \, (\vec{U}_i) \cdot \left(\sum_{j=1}^{\infty} \dot{q}_j \vec{U}_j \right) r d\theta ds$$

$$= \sum_{j=1}^{\infty} \dot{q}_j \iint \rho h \, (\vec{U}_i \cdot \vec{U}_j) \, r d\theta ds$$

$$\frac{d}{dt}\left(\frac{\partial T_s}{\partial \dot{q}_i} \right) = \sum_{j=1}^{\infty} \ddot{q}_j \iint \rho h \, (u_i u_j + v_i v_j + w_i w_j) \, r d\theta ds \tag{13}$$

where u, v, and w are the displacement components for the displacement vector $\vec{U}$.

The kinetic energy expression for all the ring stiffeners is:

$$T_{\overline{R}} = \sum_R \int_0^{2\pi} \left\{ \frac{(\rho A)_R \, a_R}{2} \left[(\dot{u} + \dot{\beta} e_n)^2 + (\dot{w} - \dot{\beta} \, e_\phi)^2 + \dot{v}^2 \right] + \frac{\rho_R a_R}{2} (I_\phi + I_n) \dot{\beta}^2 \right\}_{s = s_R} d\theta \tag{14}$$

where

R = Subscript identifying rings

A = Ring cross-sectional area

a_R = Radius of ring Number R

β = Rotation of shell at point of attachment of ring

e_n = Eccentricity of ring centroid along the normal to the shell surface

e_ϕ = Meridional distance from ring centroid to shell point of attachment

I_ϕ = Area moment of inertial of ring cross-section about the axis parallel to meridian tangent of the shell

I_n = Area moment of inertia of ring cross-section about the axis normal to surface of the shell

s = Meridian location of ring stiffener

Substituting the normal mode expansion terms into Equation (14), there is obtained:

$$T_R = \sum_R \int_0^{2\pi} \left\{ \frac{\rho_R A_R a_R}{2} \left(\left[\sum_{j=1}^{\infty} (u_j + \beta_j e_n) \dot{q}_j \right]^2 + \left[\sum_{j=1}^{\infty} (w_j - \beta_j e_\phi) \dot{q}_j \right]^2 + \left[\sum_{j=1}^{\infty} v_j \dot{q}_j \right]^2 \right) + \frac{\rho_R a_R}{2} (I_\phi + I_n) \left(\sum_{j=1}^{\infty} \beta_j \dot{q}_j \right)^2 \right\}_{s = s_R} d\theta$$

which further yields:

$$\frac{d}{dt}\left(\frac{\partial T_R}{\partial \dot{q}_i}\right) = \sum_R \left[\sum_{j=1}^{\infty} \ddot{q}_j \int_0^{2\pi} \left\{ \rho_R A_R a_R \left[(u_i + \beta_i e_n)(u_j + \beta_j e_n) + (w_i - \beta_i e_\phi)(w_j - \beta_j e_\phi) + (v_i v_j) \right] + \rho_R a_R (I_\phi + I_n) \beta_i \beta_j \right\}_{s = s_R} d\theta \right] \tag{15}$$

The kinetic energy expression for all the mass attachments identified by subscript L is:

$$T_M = \sum_L \frac{1}{2} M_L \left(\dot{\vec{U}} \cdot \dot{\vec{U}}\right)\Big|_{\substack{\theta = \theta_L \\ s = s_L}} \tag{16}$$

Therefore,

$$\frac{d}{dt}\left(\frac{\partial T_M}{\partial \dot{q}_i}\right) = \sum_L M_L \sum_{j=1}^{\infty} \ddot{q}_j \left(\vec{U}_i \cdot \vec{U}_j\right)\Big|_{\substack{\theta = \theta_L \\ s = s_L}} \tag{17}$$

The individual terms from Equations (13), (15) and (17) are added together to obtain:

$$\frac{d}{dt}\left[\frac{\partial (T_S + T_{\overline{R}} + T_M)}{\partial \dot{q}_i}\right] = \sum_{j=1}^{\infty} m_{ij} \ddot{q}_j \tag{18a}$$

where

$$\begin{aligned} m_{ij} = & \int_0^{\ell} \int_0^{2\pi} \rho h \left(u_i u_j + v_i v_j + w_i w_j\right) r d\theta ds \\ & + \sum_R \int_0^{2\pi} \Big| \rho_R A_R a_R \Big[(u_i + \beta_j e_n)(u_j + \beta_j e_n) \\ & + (w_i - \beta_i e_\phi)(w_j - \beta_j e_\phi) + (v_i v_j) \Big] \\ & + \rho_R a_R (I_\phi + I_n) \beta_i \beta_j \Big|_{s = s_R} d\theta \\ & + \sum_L M_L \left(u_i u_j + v_i v_j + w_i w_j\right) \Big|_{\substack{\theta = \theta_L \\ s = s_L}} \end{aligned} \tag{18b}$$

If the normal modes are considered for a shell with ring stiffeners and mass attachments, these normal mode terms will yield the condition that

$$m_{ij} = 0 \text{ for } i \neq j$$

$$m_{ii} \neq 0$$

And Equations (18a, b) become:

$$\frac{d}{dt}\left(\frac{\partial T}{\partial \dot{q}_i}\right) = m_{ii}\,\ddot{q}_i \tag{19a}$$

and

$$\begin{aligned} m_{ii} = & \int_0^{\ell}\int_0^{2\pi} \rho h(u_i^2 + v_i^2 + w_i^2)\, r d\theta\, ds \\ & + \sum_R \int_0^{2\pi} \Big\{ \rho_R A_R a_R \left[(u_i + \beta_i e_n)^2 + (w_i - \beta_i e_\phi)^2 + v_i^2\right] \\ & + \rho_R a_R (I_\phi + I_n)\beta_i^2 \Big\}_{s=s_R} d\theta \\ & + \sum_L M_L (u_i^2 + v_i^2 + w_i^2)\Big|_{\substack{\theta=\theta_L \\ s=s_L}} \end{aligned} \tag{19b}$$

For the case of rotationally symmetric built-up shell structures, displacement vector $\vec{U}(s_1, s_2, t)$ of Equation (3) above can be expressed in terms of the three displacement components u, v, w and Equation (3) written as:

$$\vec{U}(s, \theta, t) \equiv \begin{Bmatrix} u \\ v \\ w \end{Bmatrix} = \sum_{i=1}^{n} q_i(t) \begin{Bmatrix} u_i(s) \cos n_i\theta \\ v_i(s) \sin n_i\theta \\ w_i(s) \cos n_i\theta \end{Bmatrix} \tag{20}$$

where n_i = circumferential wave number for the ith made. In Equation (20), summation of N normal modes is considered, $i = 1, 2 \ldots N$ identify the natural frequencies of the structure in an ascending order. Substituting the ith terms of u, v, w from Equation (20) into Equation (19b) and integrating with respect to θ the following expression is reached:

$$m_{ii} = \pi \int_0^{\ell} r\rho h\,(u_i^2 + v_i^2 + w_i^2)\, ds$$

$$+ \sum_R \pi \Big\{ \rho_R A_R a_R \left[(u_i + \beta_i e_n)^2 + (w_i - \beta_i e_\phi)^2 + v_i^2 \right]$$

$$+ \rho_R a_R (I_\phi + I_n) \beta_i^2 \Big\}_{s=s_R} + \sum_L M_L \Big[(u_i^2 + w_i^2) \cos^2 n_i \theta_L$$

$$+ v_i^2 \sin^2 n_i \theta_L \Big]_{s=s_L} \tag{21}$$

In Equation (21), the values of $u_i(s)$, $v_i(s)$, $w_i(s)$ must be known as a functional relation or in the form of numerical values. Correspondingly, the first term of Equation (21) may be integrated analytically or numerically. The computer program which performs the numerical integration will be described later in the section.

C. Transient Point Force Acting on Stiffened Shell Structure

The theory described in subsection (A) is applied to the transient response of a built-up shell structure acted upon by an arbitrary transient point force. The force is applied radially at location (s_o, θ_o) on the stiffened shell structure. To evaluate the generalized force P_i from Equation (6b), the radial component P_r of the load $\vec{P}$ is taken as nonzero:

$$P_i = \int_0^\ell \int_0^{2\pi} P_r \, w_i(s, \theta) \, r d\theta \, ds$$

$$= F_r(t) \, w_i(s_o, \theta_o) \tag{22}$$

where F_r is the total applied force given by Equation (22).

The expression for the generalized coordinate $q_i(t)$ is obtained by substituting P_i from Equation (22) into Equation (11a).

$$q_i(t) = \exp\left(-\frac{\lambda t}{2} \frac{N_i}{m_{ii}}\right) (A_i \cos \gamma_i t + B_i \sin \gamma_i t)$$

$$+ \frac{w_i(s_o) \cos(n_i \theta_o)}{m_{ii} \gamma_i} \int_0^t F_r(t) \exp\left[-\frac{\lambda N_i}{2 m_{ii}} (t - \tau)\right] \sin \gamma_i (t - \tau) \, d\tau \tag{23}$$

The integration of the second term of Equation (23) is performed numerically. The numerical integration subroutine will be described in Appendix B.

If the initial displacement and velocity of the shell structure are assumed to be zero, then in Equation (22),

$$A_i = O, \quad B_i = O$$

In order to illustrate the method, consider a damped sinusoidal point force acting on the stiffened shell structure. The force may be represented as:

$$F_r(t) = F_o \, e^{-\alpha t} \cos \omega t \tag{24}$$

where ω = forcing function frequency (rad/sec)

α = decay factor for the forcing function.

Substituting the right hand side of Equation (24) into Equation (23) yields:

$$q_i(t) = \frac{w_i(s_o)\cos(n_i\theta_o)F_o}{m_{ii}\gamma_i} \int_o^t \cos\omega\tau \, e^{-\alpha\tau} e^{-\frac{\lambda(t-\tau)}{2}} \sin\gamma_i(t-\tau)\, d\tau$$

The integral of this expression is given by

$$q_i(t) = \frac{w_i(s_o)\cos(n_i\theta_o)F_o}{m_{ii}\gamma_i} e^{-\frac{\lambda t}{2}} \left\{ \frac{\sin\gamma_i t}{2} \left[e^{-\beta t} \left\{ \frac{-\beta\cos(\omega+\gamma_i)t + (\omega+\gamma_i)\sin(\omega+\gamma_i)t}{\beta^2 + (\omega+\gamma_i)^2} \right.\right.\right.$$

$$\left. + \frac{-\beta\cos(\omega-\gamma_i)t + (\omega-\gamma_i)\sin(\omega-\gamma_i)t}{\beta^2 + (\omega-\gamma_i)^2} \right\} + \beta \left\{ \frac{1}{\beta^2 + (\omega+\gamma_i)^2} + \frac{1}{\beta^2 + (\omega-\gamma_i)^2} \right\} \Bigg]$$

$$+ \frac{\cos\gamma_i t}{2} \left[e^{-\beta t} \left\{ \frac{\beta\sin(\omega+\gamma_i)t + (\omega+\gamma_i)\cos(\omega+\gamma_i)t}{\beta^2 + (\omega+\gamma_i)^2} \right.\right.$$

$$\left.\left.\left. - \frac{\beta\sin(\omega-\gamma_i) + (\omega-\gamma_i)\cos(\omega-\gamma_i)t}{\beta^2 + (\omega-\gamma_i)^2} \right\} - \left\{ \frac{(\omega+\gamma_i)}{\beta^2 + (\omega+\gamma_i)^2} - \frac{(\omega-\gamma_i)}{\beta^2 + (\omega-\gamma_i)^2} \right\} \right] \right\} \tag{25}$$

where

$$\beta \equiv \alpha - \frac{\lambda}{2}\left(\frac{N_i}{m_{ii}}\right) \tag{26}$$

In case the damping is caused by the structural elements including the shell, rings and mass attachments, the following condition may be used:

$$N_i = m_{ii}$$

So that, γ_i and β in Equations (11b) and (26) are written as:

$$\gamma_i = \left[\omega_i^2 - \left(\frac{\lambda}{2}\right)^2\right]^{1/2},$$

$$\beta = \left(\alpha - \frac{\lambda}{2}\right) \tag{27a,b}$$

D. Computer Program for the Transient Response of the Stiffened Shell Structure

A computer program is developed to determine the transient response of a stiffened shell structure. The program is designed for rotationally symmetric built-up shell structures. However, it may be adapted to handle other types of structures, if the normal mode and frequency data are available. The initial displacement and velocity of the structure are assumed to be zero.

The program is designed to handle any arbitrary time dependent point force acting on the shell structure. For this purpose, Equation (23), which involves numerical integration, is employed. The numerical values of the forcing function $F_r(t)$ must be given at a sufficient number of time intervals in order that the numerical integration subroutine may yield accurate response data. The $F_r(t)$ data is part of the input to the computer program. In the sample run described in subsection (E), a damped sinusoidal forcing function, Equation (24), is used. The program generated response data, $q_i(t)$, are compared with the values computed with the use of Equation (25), which was obtained through analytical integration.

The analytical expressions used in the computer program are given by Equations (20), (21), (23), (24), and (27a, b). The keypunch input data format and program listing are given in Appendix B. The input data parameters and the notations used in the program consist of the following:

TIN	=	initial time, (sec.)
DELT	=	increment of time, (sec.)
TEND	=	end of the time, (sec.)
LAMDA (λ)	=	damping coefficient
FFCT (F_r)	=	forcing function at t = 0, (lbs.)
ALFA (α)	=	decay coefficient
THO	=	location of loading (circumferentially)
ØMFC (ω)	=	forcing function frequency (rad/sec)
NX, NY	=	axial half wave number and circumferential wave number
U, V, W, BETA	=	axial, circumferential, lateral, and rotatory displacement, respectively
ITAO	=	number of incremental time to describe the history of forcing function
MT	=	number of incremental time to describe the history of vibro-response + 1
TETA	=	circumferential location where response is desired, (rad.)
NM	=	number of modes considered
NS	=	number of sections, a minus sign is attached if a ring stiffener exists at the rightmost end of the structure
NRESP	=	number of points responses are sought
NSEG	=	number of segments in the section
NSTAT	=	total number of segments in the entire structure + 1
LØCFC	=	segment at which the force is applied

(LRESP(I), I=1, NRESP)	=	segments at which responses are sought
ØM (ω_i)	=	modal frequency, (rad./sec.)
NCH (n_i)	=	circumferential wave number
NDEGR	=	number of degrees of the polynomial describing the meridian configuration
AC(I), I=1, 7	=	coefficients of the polynomial
XA	=	beginning point (left to right) of the section (in.)
XB	=	ending point of the section, (in.)
HA (h)	=	thickness of shell at the particular section (in.)
RHØS (ρ)	=	material mass density for the section, (lb-sec^2/in^4)
KT2	=	1, if ring exists only at the first segment of the section
	=	2, if ring exists at every segment in the section
	=	0, no rings in the section
RHØ (ρ_R)	=	mass density of ring material (lb-sec^2/in^4)
EN (e_n)	=	distance, in the direction perpendicular to the shell surface, from shell point of attachment to the centroid of the ring cross section, (in.)
EPHI (e_φ)	=	meridional distance from shell point of attachment to the centroid of the ring cross section, (in.)
IX (I_φ)	=	area moment of inertia about the axis parallel to meridian tangent of the shell surface at the point of attachment, (in^4)
IY (I_n)	=	area moment of inertia about the axis perpendicular to the surface of the shell, (in^4)
RRAD (a_R)	=	principal radius of curvature of the ring, (in.)
AREA (A_R)	=	cross sectional area, (in^2)
NR	=	0, cylindrical shell case - no stiffener
	=	1, general stiffened shell structure

Z_1, Z_2, Z_3, Z_4 and FQ

These are the data punched out from General Stiffened Shell program. The only data used in the present program are Z_1 and FQ.

Z_1 = circumferential wave number

FQ = natural frequency (cps)

The response data generated by the computer program is plotted in Figure 9.

E. Transient Response Program Applied to Simply Supported Cylindrical Shell

The transient response of a simply supported cylindrical shell is considered in this subsection. Equations to compute the natural frequencies and normal modes for the cylindrical shell are given. The method to generate the input data for the transient response program is described. The particular set of geometric parameters for the cylindrical shell is selected to have comparable overall dimensions and identical material properties as the instrument unit scale model described previously.

The natural frequencies of a simply supported shell are given by the equation:

$$\omega_{nk}^{2} = \frac{1}{12\left(\frac{a}{h}\right)^{4}\left(\frac{h}{\nu}\right)^{2}}\left\{\left[n^{2} + \left(k\pi\frac{a}{\ell}\right)^{2} - 1\right]^{2} + \frac{12(1-\nu^{2})\left(\frac{a}{h}\right)^{2}\left(k\pi\frac{a}{\ell}\right)^{4}}{\left[n^{2} + \left(k\pi\frac{a}{\ell}\right)^{2}\right]^{2}}\right\} \tag{28}$$

where

n = circumferential wave number

k = axial half wave number

The lowest n frequencies determined by Equation (28) are arranged in ascending order and numbered from $i = 1, 2, \ldots n$, such that

$$\omega_1 < \omega_2 < \ldots < \omega_n \tag{29}$$

where corresponding to the ith frequency ω_i,

$$n = n_i, \quad k = k_i$$

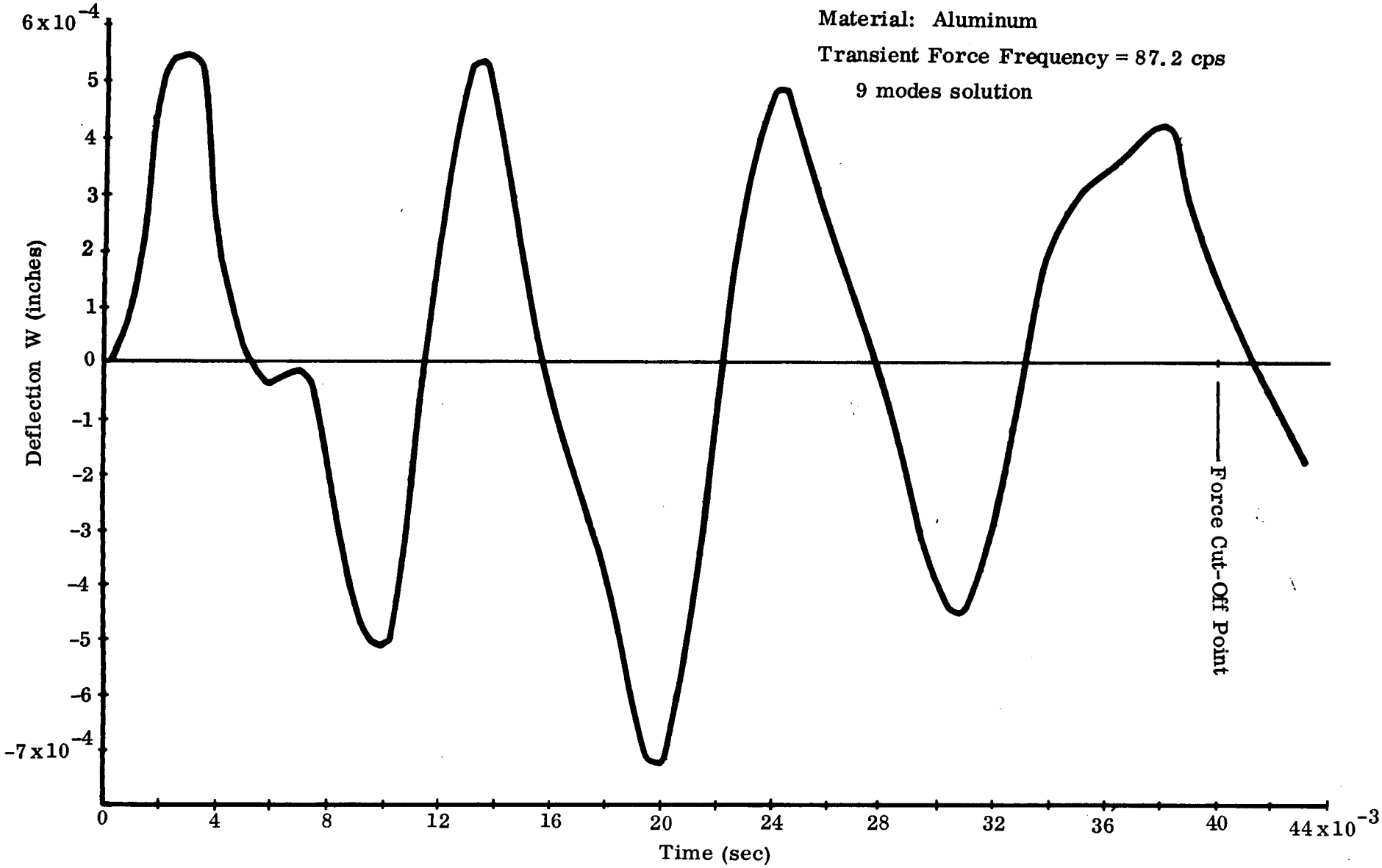

FIGURE 9. TRANSIENT RESPONSE OF INSTRUMENT UNIT STRUCTURE

The normal modes of a simply supported cylindrical shell are given by the expressions:

$$\left.\begin{aligned} u &= A \cos n\theta \cos \left(k\pi \frac{a}{\ell} x\right) \\ v &= B \sin n\theta \sin \left(k\pi \frac{a}{\ell} x\right) \\ w &= C \cos n\theta \sin \left(k\pi \frac{a}{\ell} x\right) \end{aligned}\right\} \quad \begin{aligned} &\text{for } 0 \le x \le \left(\frac{\ell}{a}\right) \\ &0 \le \theta \le 2\pi \end{aligned} \tag{30}$$

where, $x = \frac{s}{a}$, the normalized axial coordinate

Comparing the above expressions to normal mode terms in Equation (20), the mode displacements are obtained as shown below:

$$\left.\begin{aligned} u_i &= A_i \cos \left(k_i\pi \frac{a}{\ell} x\right) \\ v_i &= B_i \sin \left(k_i\pi \frac{a}{\ell} x\right) \\ w_i &= C_i \sin \left(k_i\pi \frac{a}{\ell} x\right) \end{aligned}\right\} \tag{31}$$

In Equations (31), the constants A_i and B_i are expressed in terms of C_i by the following relations:

$$A_i = \left\{ \frac{\left[-\nu \left(k_i\pi \frac{a}{\ell}\right)^2 + n_i^2\right] \left(k_i\pi \frac{a}{\ell}\right)}{\left[\left(k_i\pi \frac{a}{\ell}\right)^2 + n_i^2\right]^2} \right\} C_i \tag{32a}$$

$$B_i = \left\{ \frac{\left[(2+\nu) \left(k_i\pi \frac{a}{\ell}\right)^2 + n_i^2\right] n_i}{\left[\left(k_i\pi \frac{a}{\ell}\right)^2 + n_i^2\right]^2} \right\} C_i \tag{32b}$$

These equations are obtained by substituting u, v, and w from Equation (30) into the differential equations for a cylindrical shell. Equations (28), (31) and (32a,b) are used to generate data for the frequencies and modal displacements for a given set of geometric parameters described below. These data are then used as input to the transient response program where the response can be computed at any point on the shell structure. In the sample run, the response was computed at the point where load was applied.

Geometric Parameters for Test Case

The simply supported cylindrical shell considered for the test run has the same overall dimensions and material properties as the instrument unit scale mode. These are:

diameter	d	= 39.0 inch (a = 19.5 inch)
thickness	h	= 0.05 inch
length	ℓ	= 53.4 inch

The material properties for aluminum are

Young's modulus	E	= 10.3×10^6 psi
Poisson's ratio	ν	= 0.3
Material density	ρ	= 0.2591×10^{-3} lb. sec.^{2}/in.^{4}

In Figure 10 frequency spectra for k = 1, 3, 5, 7, 9, and 11 are plotted for the particular test case with geometric parameters described below. The lowest hundred frequencies are numbered as shown. The fundamental frequency corresponding to $k_1 = 1$ and $n_1 = 6$ is $\omega_1 = 461.6$ rad./sec., (73.6 cycles/sec.).

In Figure 11, the graph of radial displacement response as a function of time is shown. This response is for the case where a sinusoidal force is applied at a point on the middle span of the cylindrical shell. The forcing function frequency is identical to the fundamental frequency of the structure. The difference between the fundamental mode response and summation of the response for the lowest 18 modes is significant. The peak value of displacement for the 18-mode response is more than twice the peak for fundamental mode response alone. Convergence of the modal response is found to be quite rapid. The solution for the lowest 12 modes differed from the lowest 18 mode solution by only 0.5 percent for the peak value of displacement response.

Computer Program for Test Case

The analytical expressions used in this computer program are given by Equations (28), (31) and (32a,b). The nomenclature for input data are as follows:

A	Radius of the cylinder (in)
H	Thickness of the cylinder skin (in)

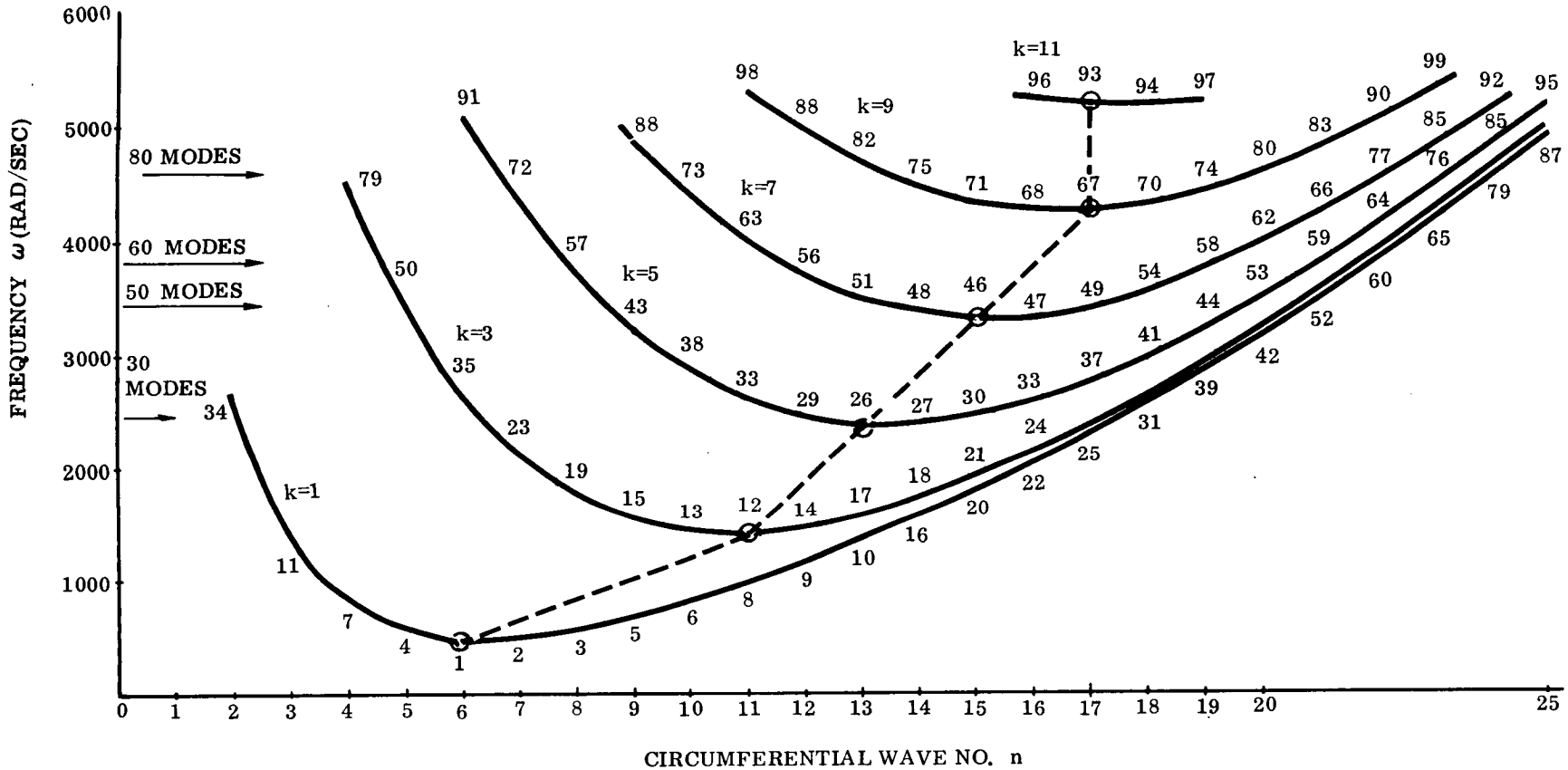

FIGURE 10. NATURAL FREQUENCIES FOR A SIMPLY SUPPORTED CYLINDRICAL SHELL

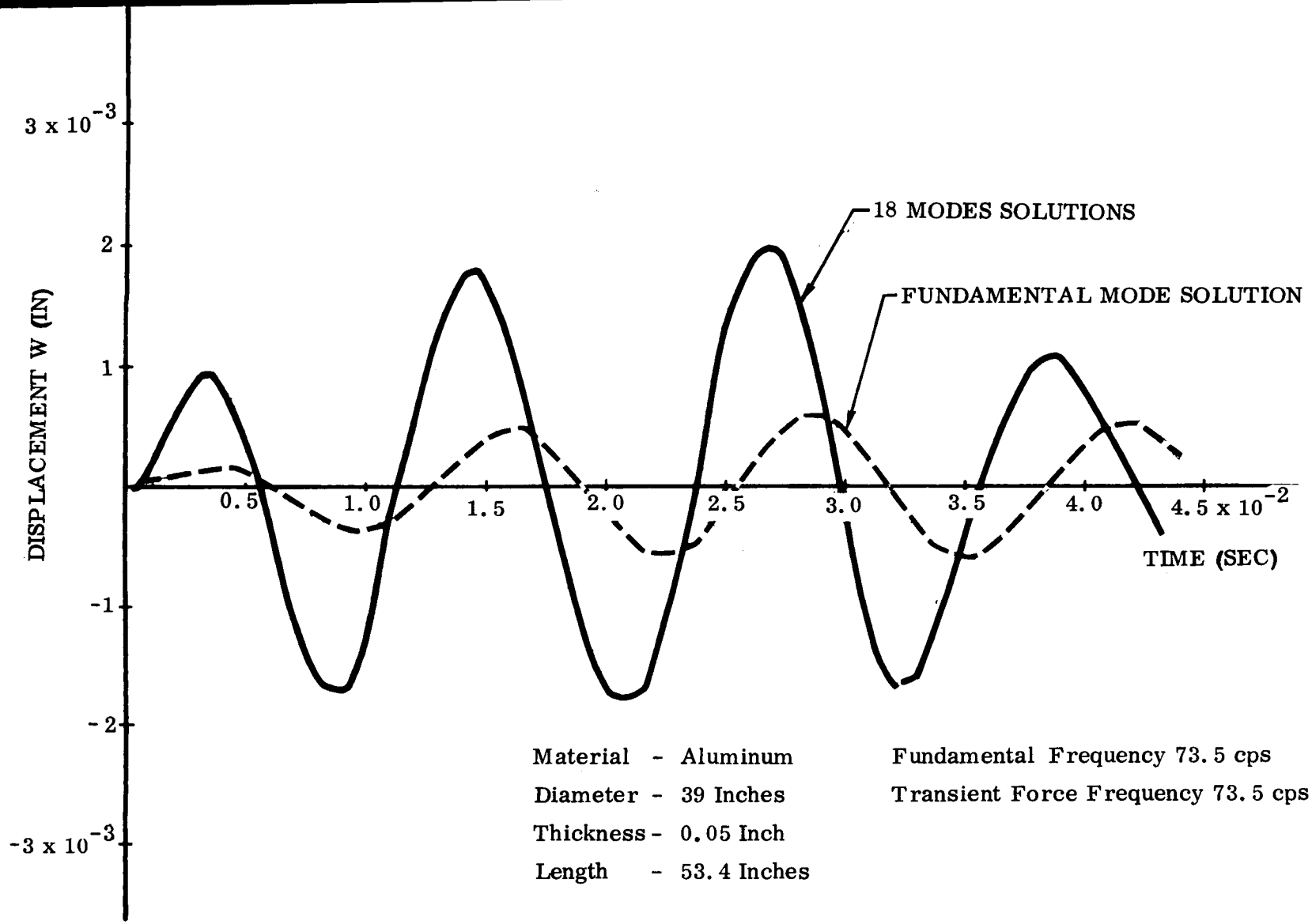

FIGURE 11. RESPONSE OF CYLINDRICAL SHELL STRUCTURE TO TRANSIENT LOAD

E	Young's modulus of elasticity (psi)
NU	Poisson's ratio (0)
RHO	Material density of cylinder skin (lb-sec^2/in^4)
L	Length of the cylinder (in)
KF	Highest axial half wave number of interest (0)
NF	Highest circumferential wave number of interest (0)
NKF	Highest number of mode of interest (0)
KINC	= 1 covers all axial half wave number of interest = 2 all even or all odd of axial half wave number (if KS = 1, odd; if KS = 2, even)
KS	Lowest axial half wave number of interest (0)
NS	Number of interior stations to determine the mode shape + 1 (0)

The keypunch input format is shown in Appendix B.

NATURAL FREQUENCIES AND NORMAL MODES OF SHELL STRUCTURES WITH MASS ATTACHMENTS

The mass attachments change the natural frequencies and mode shapes of the structural system. Even very small masses, which may change the natural frequencies only slightly, can cause significant changes of modal shapes.

The present method of approach is as follows: The normal modes and natural frequencies for a mass attached structure are obtained with the use of modal and frequency data for a structure without mass attachments. By the use of Lagrange's equations developed in the section, an eigenvalue matrix equation is formulated. The eigenvalues and eigenvectors of this matrix equation are then used to determine the frequencies and mode shapes of the mass attached structure. These data are then used as input to the transient response program. The advantage of this procedure is that an uncoupled set of differential equations is obtained which deals with the transient response of shell structures with attached masses.

A. Theory

The analytical approach to obtain the natural frequencies and mode shapes of a mass attached stiffened shell structure is based on the use of normal mode data for

the unloaded stiffened shell. For this purpose, Equation (10a) developed previously is modified to include the effect of additional mass attachments and the damping and forcing function terms are set equal to zero:

$$m_{ii}\,\ddot{q}_i + \omega_i^2\, m_{ii}\, q_i + \left(\sum_{j=1}^{\infty} M_{ij}\,\ddot{q}_j\right) = 0 \tag{33}$$

where m_{ii} is given by Equation (21) and M_{ij} is identical to the last term of Equation (18b):

$$M_{ij} = \sum_L M_L\,(u_i u_j + v_i v_j + w_i w_j)\Big|_{\substack{\theta = \theta_L \\ s = s_L}} \tag{34a}$$

For a rotationally symmetric shell structure, with the use of Equation (20), Equation (34a) is rewritten as:

$$M_{ij} = \sum_L M_L \left[(u_i u_j + w_i w_j)\cos n_i\theta_L \cos n_j\theta_L + v_i v_j \sin n_i\theta_L \sin n_j\theta_L\right]_{s=s_L} \tag{34b}$$

Corresponding to the free harmonic vibration motion of the complete system, the generalized coordinate q_i is given by:

$$q_i^{(r)}(t) = A_i^{(r)} \sin \omega_r t \tag{35}$$

where r represents the rth mode of free vibration of the complete system. Substitution of q_i from Equation (35) into Equation (33) gives:

$$-\omega_r^2\, m_{ii} A_i^{(r)} + \omega_i^2\, m_{ii} A_i^{(r)} - \omega_r^2 \left(\sum_{j=1}^{n} M_{ij} A_j^{(r)}\right) = 0, \quad i = 1, 2, 3, \ldots n \tag{36}$$

Both sides of this equation are multiplied by $\left(\dfrac{\omega_1^2}{\omega_i^2 \omega_r^2 m_{ii}}\right)$ to obtain:

$$\left(\frac{\omega_1^2}{\omega_r^2}\right) A_i^{(r)} = \left(\frac{\omega_1^2}{\omega_i^2}\right)\left[A_i^{(r)} + \frac{1}{m_{ii}}\left(\sum_{j=1}^{n} M_{ij} A_j^{(r)}\right)\right], \quad i = 1, 2 \ldots n \tag{37}$$

Due to practical limitations in computation, only the first n modes are considered in Equation (37). It is also noted that ω_1 ---- ω_i are the known frequencies of the unloaded shell, ω_r is the unknown frequency of the mass attached shell. The equation may be rewritten as:

$$\left(\frac{\omega_1^2}{\omega_r^2}\right) A_i^{(r)} = \left(\frac{\omega_1^2}{\omega_i^2}\right)\left[\sum_{j=1}^{n}\left(A_i^{(r)} + \frac{M_{ij}}{m_{ii}} A_j^{(r)}\right)\right] \quad , \; i = 1, 2 \ldots n \tag{38}$$

The corresponding matrix equation is:

$$\left(\frac{\omega_1^2}{\omega_r^2}\right) \begin{Bmatrix} A_1 \\ A_2 \\ \cdot \\ \cdot \\ A_i \\ \cdot \\ \cdot \\ \cdot \\ \cdot \\ \cdot \\ A_n \end{Bmatrix}^{(r)} = \begin{bmatrix} \left(1 + \frac{M_{11}}{m_{11}}\right) & \left(\frac{M_{12}}{m_{11}}\right) & \cdots & \cdots \\ \left[\left(\frac{\omega_1}{\omega_2}\right)^2\left(\frac{M_{21}}{m_{22}}\right)\right] & \left[\left(\frac{\omega_1}{\omega_2}\right)^2\left(1 + \frac{M_{22}}{m_{22}}\right)\right] & \cdots & \cdots \\ \cdots & \cdots & \cdots & \cdots \\ \cdots & \cdots & \cdots & \left(\frac{\omega_1}{\omega_n}\right)^2\left(1 + \frac{M_{nn}}{m_{nn}}\right) \end{bmatrix} \begin{Bmatrix} A_1 \\ A_2 \\ A_i \\ \cdot \\ \cdot \\ \cdot \\ \cdot \\ \cdot \\ A_n \end{Bmatrix}^{(r)} \tag{39}$$

Equation (39) represents an eigenvalue problem with eigenvalues $\frac{1}{\lambda_r} = \left(\frac{\omega_1^2}{\omega_r^2}\right)$ and eigenvectors $\begin{Bmatrix} A_1 \\ A_2 \\ \cdot \\ A_n \end{Bmatrix}^{(r)}$. The eigenvalues and eigenvectors for the matrix can be computed with the use of the Miters eigenvalue subroutine supplied in the program package.

B. Simply Supported Cylindrical Shell with Mass Attachment

The theory developed above is used to determine natural frequencies and mode shapes for a simply supported cylindrical shell with mass attachments. The generalized mass expression m_{ii} for the shell is given by the first term of Equation (21):

$$m_{ii} = \pi a^2 \rho h \int_0^{(\ell/a)} (u_i^2 + v_i^2 + w_i^2)\, dx \tag{40}$$

where $x = \frac{s}{a}$ the normalized axial coordinate. Substitution of the expressions u_i, v_i, w_i from Equations (31) into the above equations gives:

$$m_{ii} = \pi a^2 \rho h \int_0^{(\ell/a)} \left[A_i^2 \cos^2(k_i \pi \frac{a}{\ell} x) + (B_i^2 + C_i^2) \sin^2(K_i \pi \frac{a}{\ell} x) \right] dx$$

therefore,

$$m_{ii} = \pi a^2 \rho h \frac{\ell}{2a} (A_i^2 + B_i^2 + C_i^2) \tag{41}$$

In Equation (41), the constants A_i and B_i are expressed in terms of C_i through Equations (32a, b). Furthermore, it is assumed that $C_i = 1$, so that the maximum w_i displacement becomes unity. The generalized mass expression M_{ij}, given by Equation (34b), becomes:

$$\begin{aligned} M_{ij} = \sum_L M_L \Bigg\{ \Bigg[& A_i A_j \cos(k_i \pi \frac{a}{\ell} X_L) \cos(k_j \pi \frac{a}{\ell} X_L) + C_i C_j \sin(k_i \pi \frac{a}{\ell} X_L) \\ & \sin(k_j \pi \frac{a}{\ell} X_L) \Bigg] \cdot \cos n_i \theta_L \cos n_j \theta_L + B_i B_j \sin(k_i \pi \frac{a}{\ell} X_L) \\ & \sin(k_j \pi \frac{a}{\ell} X_L) \sin n_i \theta_L \sin n_j \theta_L \Bigg\} \end{aligned} \tag{42}$$

Using Equations (41), (42), and the natural frequencies ω_i determined from Equation (28) above, the (n x n) matrix Equation (39) is solved in terms of the eigenvalues and eigenvectors.

The displacement modes for the shell are then determined by the use of equations:

$$\begin{Bmatrix} u(x,\theta) \\ v(x,\theta) \\ w(x,\theta) \end{Bmatrix} = \sum_{i=1}^{n} A_i^{(r)} \begin{Bmatrix} A_i \cos(n_i\theta) \cos(k_i \pi \frac{a}{\ell} x) \\ B_i \sin(n_i\theta) \sin(k_i \pi \frac{a}{\ell} x) \\ C_i \cos(n_i\theta) \sin(k_i \pi \frac{a}{\ell} x) \end{Bmatrix} \tag{43}$$

C. Computer Program for Cylindrical Shell with Mass Attachments

A computer program is developed, based on the above theory, to determine the natural frequencies and mode shapes of a simply supported cylindrical shell with mass attachments. This program can be generalized to handle rotationally symmetric built-up shells with attached masses. The analytical expressions used in the program are given by Equations (32a, b), (39), (41), (42) and (43). The Miters subroutine is used to determine the eigenvalues and eigenvectors of the matrix in Equation (39).

The input data parameters for the program are:

A (a)	Radius of cylinder (in)
CL (ℓ)	Length of cylinder (in)
H (h)	Thickness of the skin (in)
Rho (ρ)	Mass density of the skin material (lb-sec^2/in^4)
XL (X_L)	Meridional distance from the left end to the location where mass is attached (in)
THL (θ)	Cylindrical angle (rad)
THI	Initial angular location where response is sought (rad)
AMASS (M_L)	Attached mass (lb-sec^2/in)
INC	Number of increment to determine stations in either axial or circumferential direction
NMODE	The least number of modes, with which convergence will be secured
IMODE	Starting number of mode with which behavior of convergence can be observed (IMOD < NMODE)
IINC	Number of modes to be added to IMOD in convergence study. The modes are added in successive batches until NMODE is reached.

The output data consists of:

ω_r - r^{th} natural frequency of mass attached shell (rad/sec)

$$\begin{Bmatrix} A_1 \\ A_2 \\ \cdot \\ \cdot \\ \cdot \\ A_n \end{Bmatrix}^{(r)} - r^{th} \text{ mode shape vector}$$

$\begin{Bmatrix} u \\ v \\ w \end{Bmatrix}$ - displacements at various locations of the shell

The simply supported cylindrical shell used previously in the unloaded configuration is now investigated with additional mass attachment. The mass M_L and location of the mass are:

$M_L = 0.259 \times 10^{-2}$ lb sec^2/in., which is the mass corresponding to a 1 lb weight.
$X_L = \left(\frac{\ell}{2a}\right)$
$\theta_L = 0$

The two lowest natural frequencies and the corresponding mode shapes are computed using 30, 40 and 50 modes of the unloaded shell. The computed results show that the frequencies and mode shapes converge for the 40 mode solution. Furthermore, it was found that for the 10 mode solution, frequencies converge to within 3 percent of the 40 mode solution. However, the mode shapes from the 10 mode solution did not show good agreement with the mode shape from 40 mode solution. This is the usual result of the energy approach, namely the frequencies converge to the correct values faster than the mode shapes as the number of modes used for computation is increased.

Using 40 modes, the computed frequencies and corresponding mode shapes for the lowest two modes of the mass attached shell are shown in Figures 12, 13, and 14. Figure 12 shows the displacement w along the axial coordinate of the shell for modes 1 and 2. Figure 13 and 14 show the displacement w along the circumferential coordinate of the shell. Similar results have been obtained experimentally (Reference 4) for a cylindrical shell with somewhat different geometric parameters. In general, the mode shapes obtained in the analysis are very similar to the above quoted experimental results.

D. Stiffened Shell Structures with Mass Attachments

The computer program described above for the mass-attached cylindrical shells can be readily generalized to determine the natural frequencies and mode shapes of rotationally symmetric shell structures with mass attachments. The basic theory and analysis are identical for both type shells. A brief description of the method for writing this computer program is now given.

The program is designed to compute the eigenvalues and eigenvectors of the (n x n) matrix in Equation (39). The expressions for m_{ii} and M_{ij} are given by Equations (21) and (34b), respectively. In these equations, the values of $u_i(s)$, $v_i(s)$ and $w_i(s)$ must be known

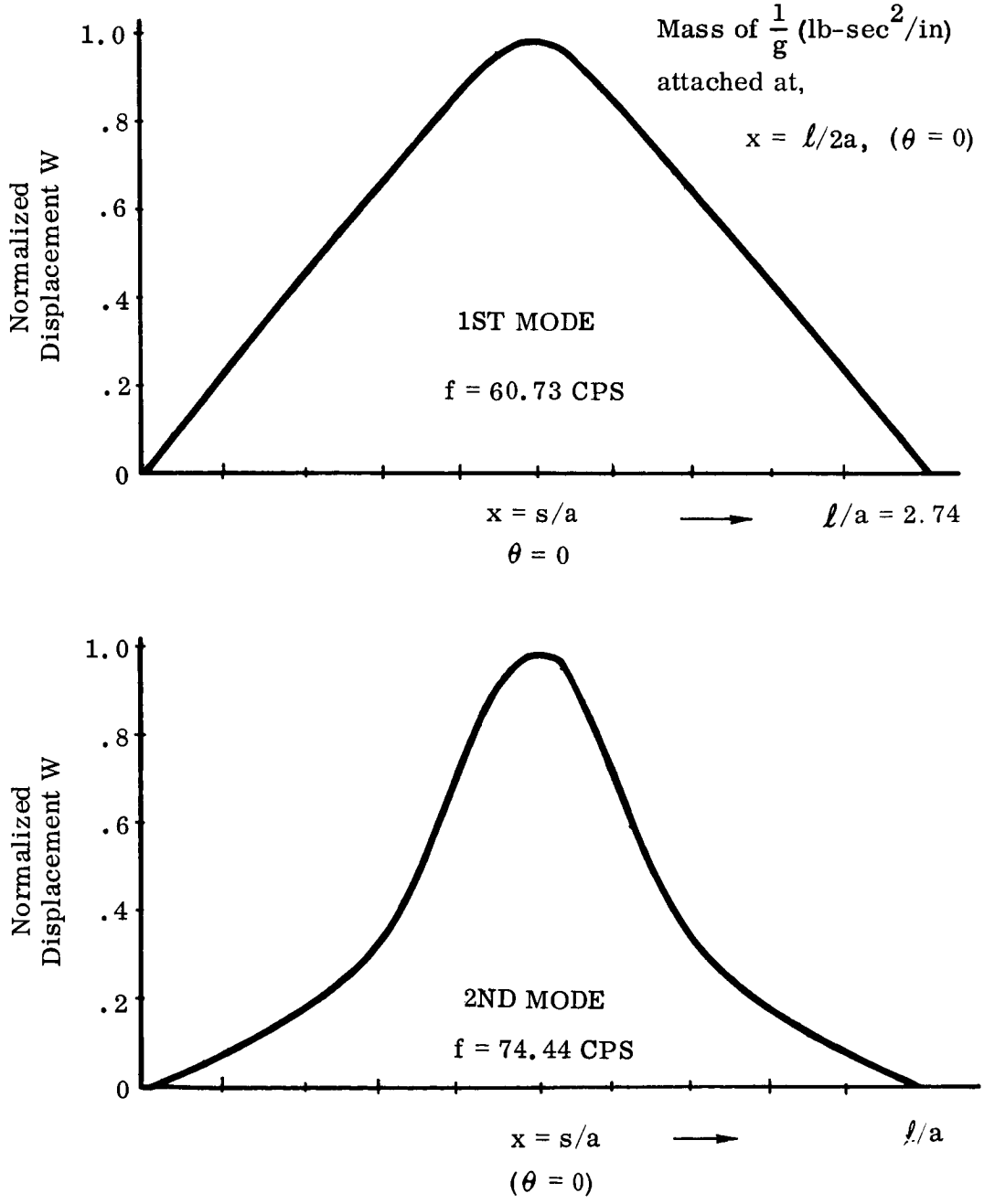

FIGURE 12. AXIAL DEFLECTION

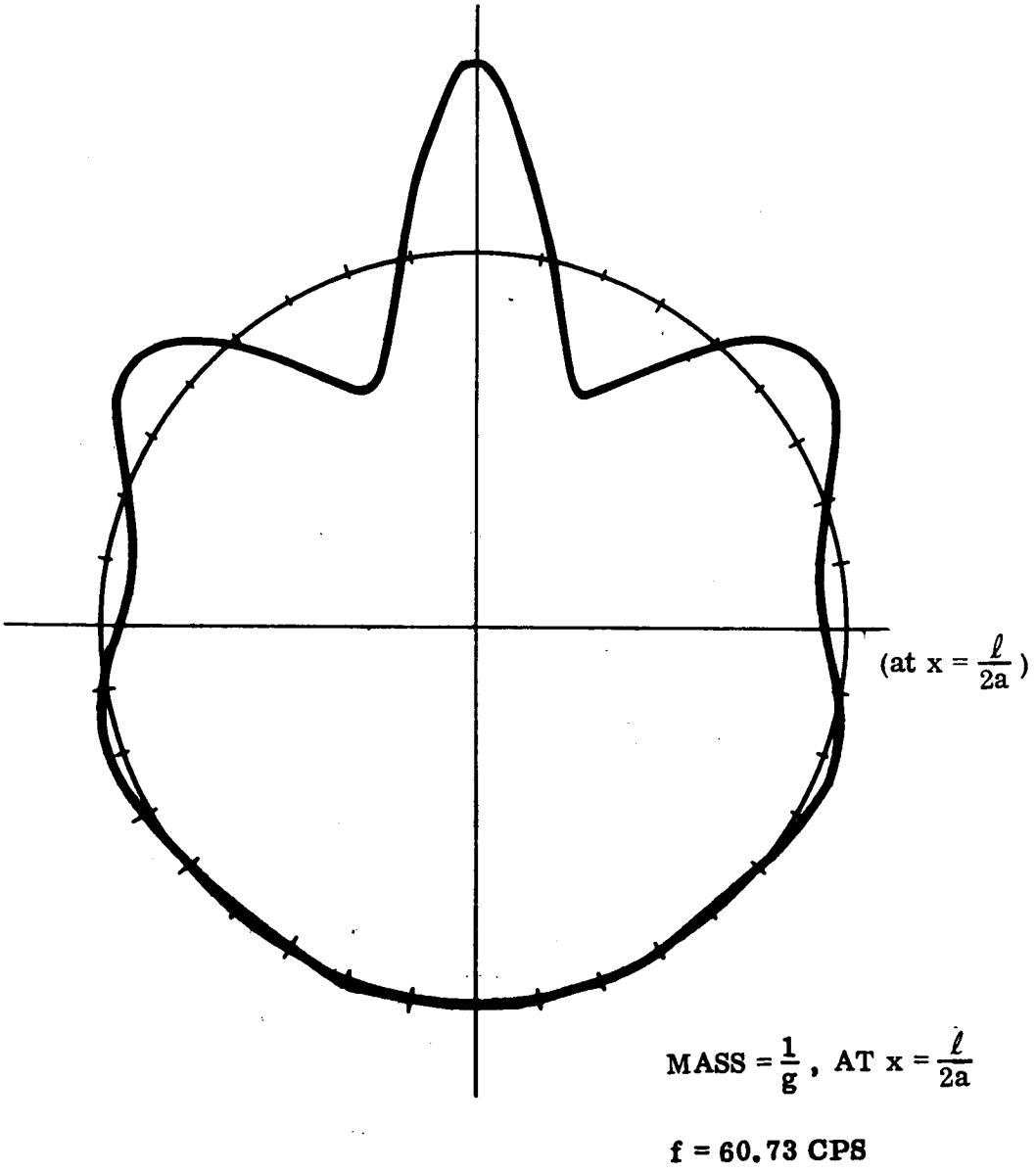

FIGURE 13. CIRCUMFERENTIAL DEFLECTION (THE FIRST MODE)

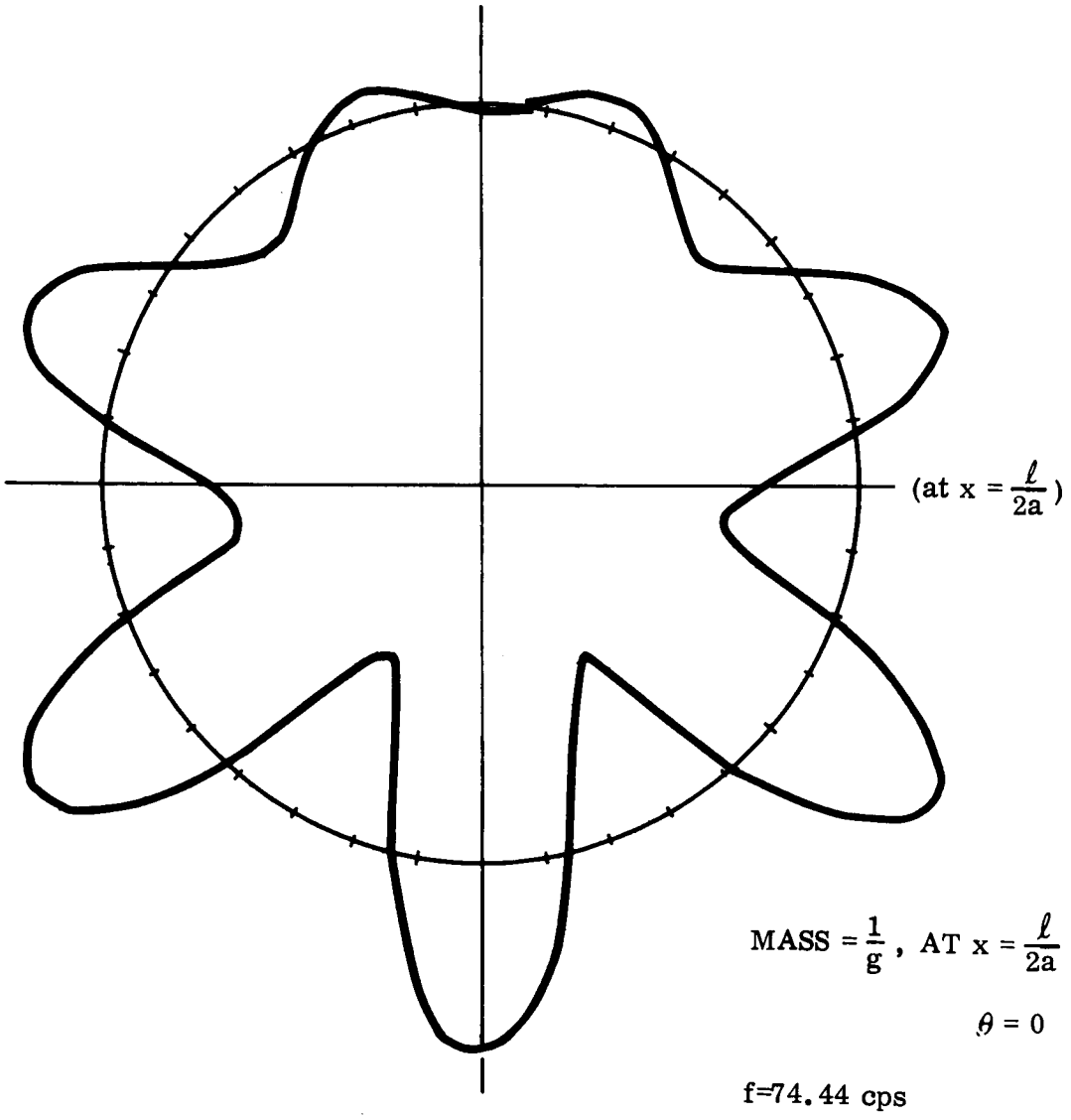

FIGURE 14. CIRCUMFERENTIAL DEFLECTION (THE SECOND MODE)

as a functional relation or in the form of numerical values at sufficient number of locations along the axial coordinate of the built-up shell structure. Hence, the first term of Equation (21) may be integrated either analytical or numerically. The numerical integration subroutine has been used in the transient response computer program described previously. The same subroutine is used in the present program.

The input data to this computer program consist of the geometric parameters for the built-up shell and sufficient number of natural frequencies with corresponding mode shapes to obtain convergent eigenvalues for the (n x n) matrix. The computed values of the eigenvectors are then used to determine the displacement components of the shell. The displacements are computed by using Equation (20) which is rewritten for the rotationally symmetric shell case as

$$\begin{Bmatrix} u(s,\theta) \\ v(s,\theta) \\ w(s,\theta) \end{Bmatrix} = \sum_{i=1}^{n} A_i^{(r)} \begin{Bmatrix} u_i(s) \cos n_i \theta \\ v_i(s) \sin n_i \theta \\ w_i(s) \cos n_i \theta \end{Bmatrix}$$

where superscript (r) represents the rth mode of the mass attached shell. The input data parameters and the notations used in the program are similar to those used for the transient response program discussed above.

SECTION IV

ACOUSTIC LOADING AND BLAST OVERPRESSURE

RANDOM ACOUSTIC TESTING

The Saturn V instrument unit scale model was mounted in a 170 cubic-foot reverberant chamber for broad band random acoustic noise tests. The chamber was lined with 8-inch thick open-cell foam material to provide anechoic conditions. The ends of the specimen were capped, with the lower end bolted securely to the chamber floor. As shown in Figure 15, four accelerometers were mounted to the periphery of the instrument unit 90 degrees apart and one each to the upper and lower shell segments. Three microphones were mounted around the specimen for external sound field measurements. One additional microphone was installed inside the specimen at the geometric center.

Tests were conducted at an overall sound pressure level of 145 dB for two configurations of the instrument unit model. In the first test, no masses simulating instrument packages were installed. In the second test, eight weights were installed on the instrument unit section of the model. Each weight was centered within a 15 degree section simulating instrument package installation.

The recording instrumentation consisted of Endevco Dyna-Monitors, B & K and Altec Microphones and Power Supplies, C.E.C. Recording Oscillograph, and a Sanborn 14-Channel Magnetic Tape Recorder. A block diagram of the essential components of instrumentation used for recording and analysis of the acoustic data are shown in Figure 16.

In the random acoustic tests performed, the real time data were recorded on magnetic tapes. The loop data were processed into power spectral data using standard instrumentation. Specifically, autocorrelation function was generated based on the real time data. The Fourier transformation of the autocorrelation function yielded the power spectral data which were plotted by the X-Y recorder. Typical input and response power spectra for the random acoustic excitation are shown subsequently in this section under the heading "Acoustic Response Analysis of Stiffened Shell Models" together with the analytical response spectrum.

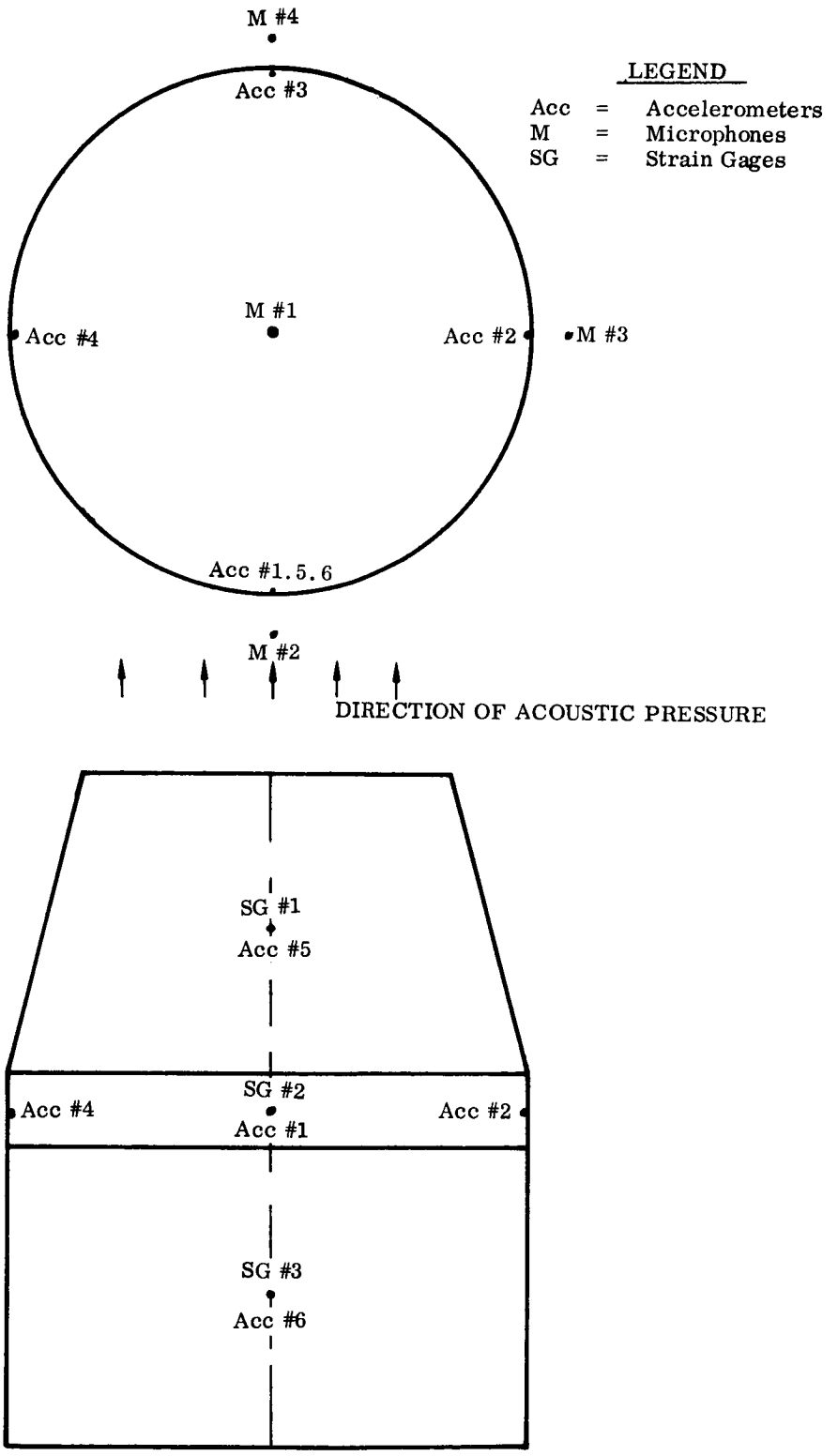

FIGURE 15. ACOUSTIC TEST INSTRUMENTATION ON THE INSTRUMENT UNIT SCALE MODEL

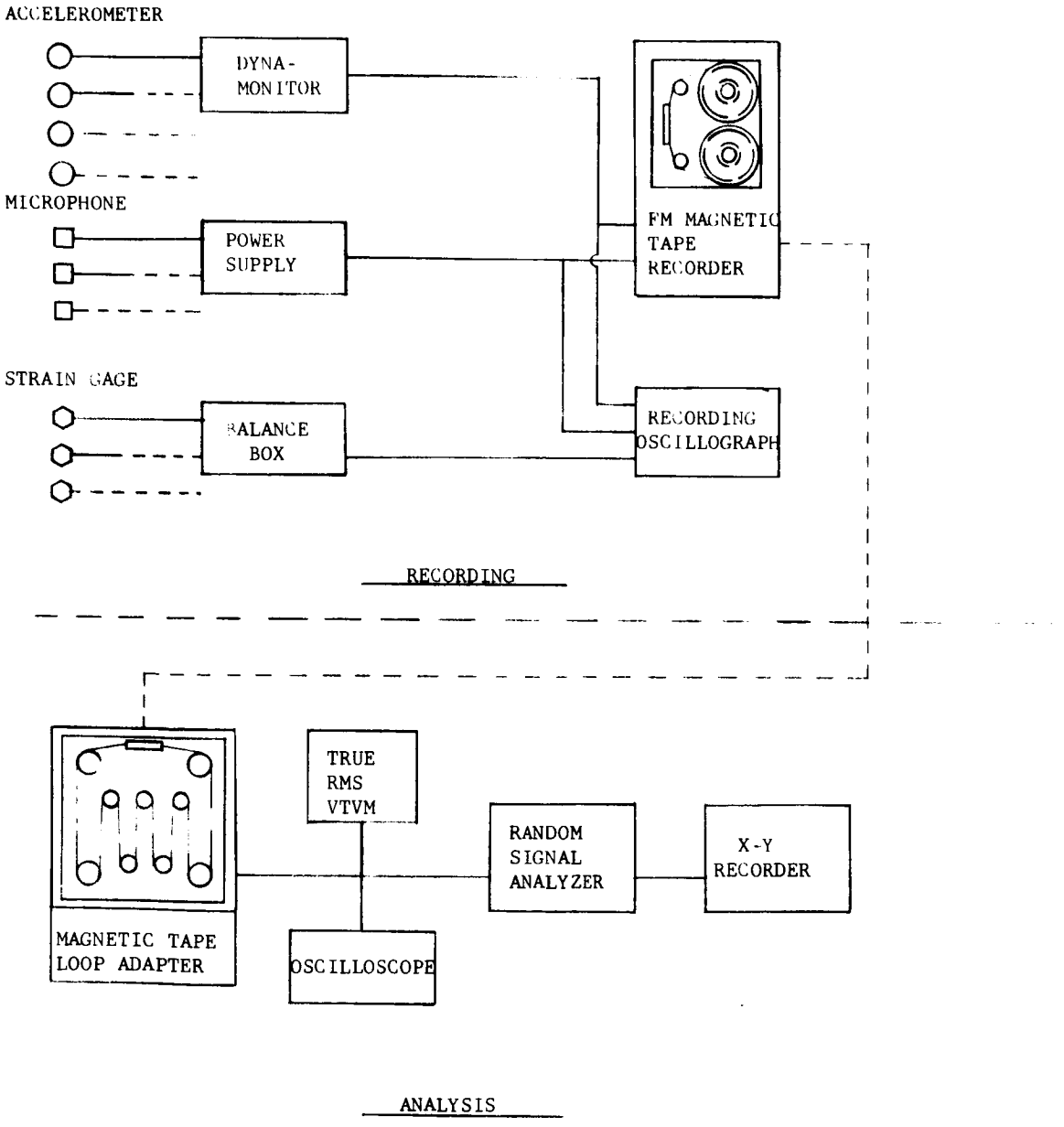

FIGURE 16. BLOCK DIAGRAM, RECORDING AND ANALYSIS EQUIPMENT FOR ACOUSTIC TESTS

BLAST OVERPRESSURE TESTING

The same instrument unit scale model was subjected to a simulated blast overpressure condition in the same configurations as that used for broad band random acoustic testing. The capped ends of the specimen allow atmospheric pressure to exist within the specimen cavity while the external surface is exposed to the overpressure pulse. The tests were conducted in the reverberant chamber.

The overpressure pulse was obtained by applying a controlled electrical impulse to the Norair MK-V acoustic generator. The generator employs a unique poppet valve design which controls the high pressure air flow at the mouth of the horn. The single electrical impulse produces a high pressure wave in the form of a shock front sawtooth. Peak pressures approaching 0.5 psi were obtained by this method. Six accelerometers and four microphones were monitored and recorded for both specimen configurations tested. The locations of the pickups were the same as that used in the acoustic tests which are shown in Figure 15. In addition to the above mentioned instrumentation, an attempt was made to record the surface bending strain at three points on the specimen surface. It was found during initial tests that the strain levels were too low to be accurately recorded for analysis purposes. Typical real time data are shown in Figures 17 and 18 for the unloaded instrument unit scale model. In Figure 17, the accelerometer data are recorded in six (6) channels. The corresponding strain gage and microphone data are recorded in Figure 18.

ACOUSTIC RESPONSE ANALYSIS OF STIFFENED SHELL MODELS

A (1:6.67) scale model of the instrument unit shell structure was tested in Northrop Norair acoustic chamber. The detail test setup was described in previous subsections. The real time data were recorded on magnetic tape loops and processed into power spectra using standard instrumentation. Typical input and response power spectra generated in this manner are plotted in Figures 19 and 20. An analytical technique described in References 5 and 6 was used to generate the response data using the input spectrum and the previously obtained natural frequency modes of the shell scale model. The data obtained analytically are over-plotted in Figure 20. The following is a description of the analysis.

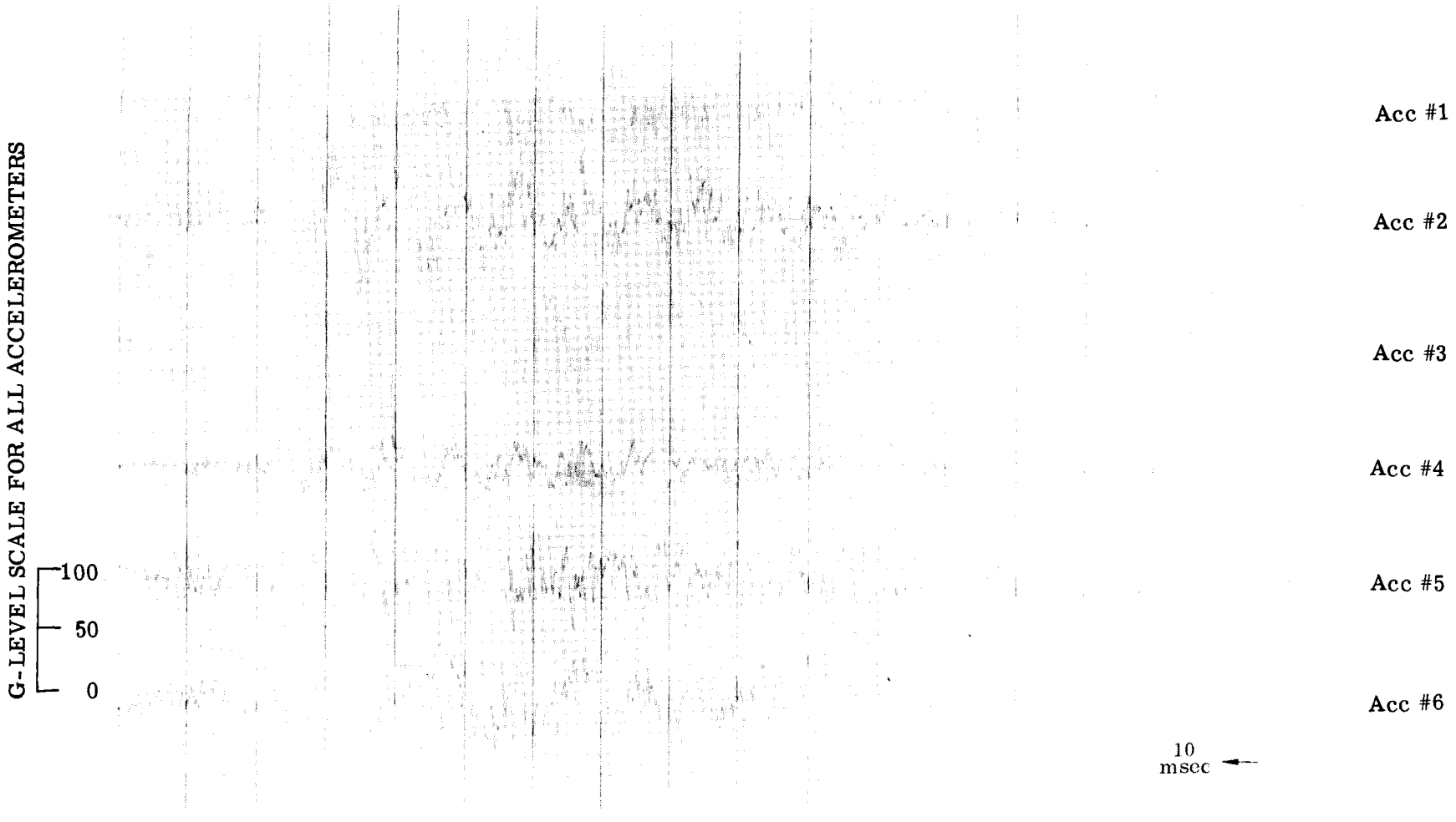

FIGURE 17. ACCELEROMETER DATA OF THE INSTRUMENT UNIT SCALE MODEL

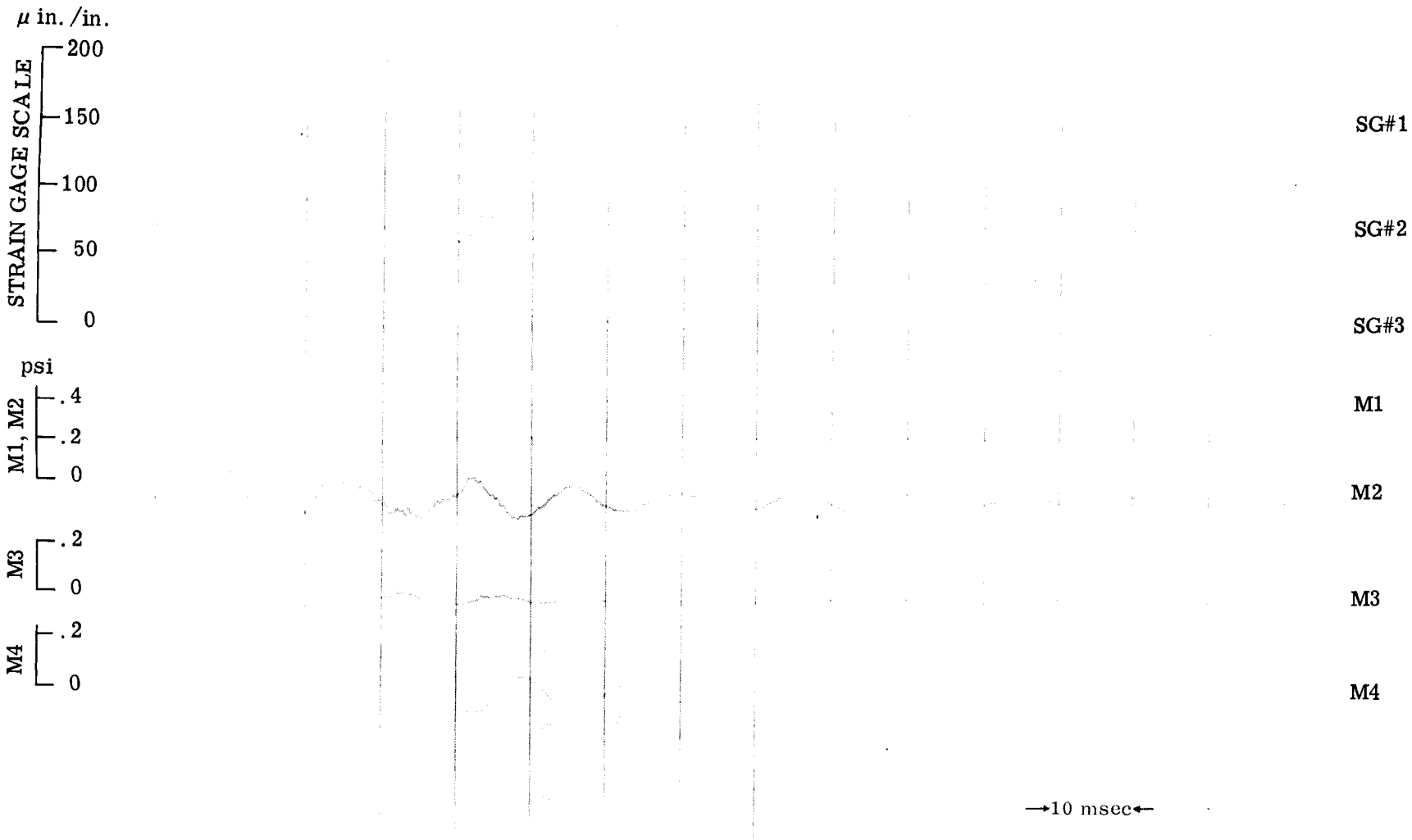

FIGURE 18. STRAIN GAGE AND MICROPHONE DATA OF THE INSTRUMENT UNIT SCALE MODEL

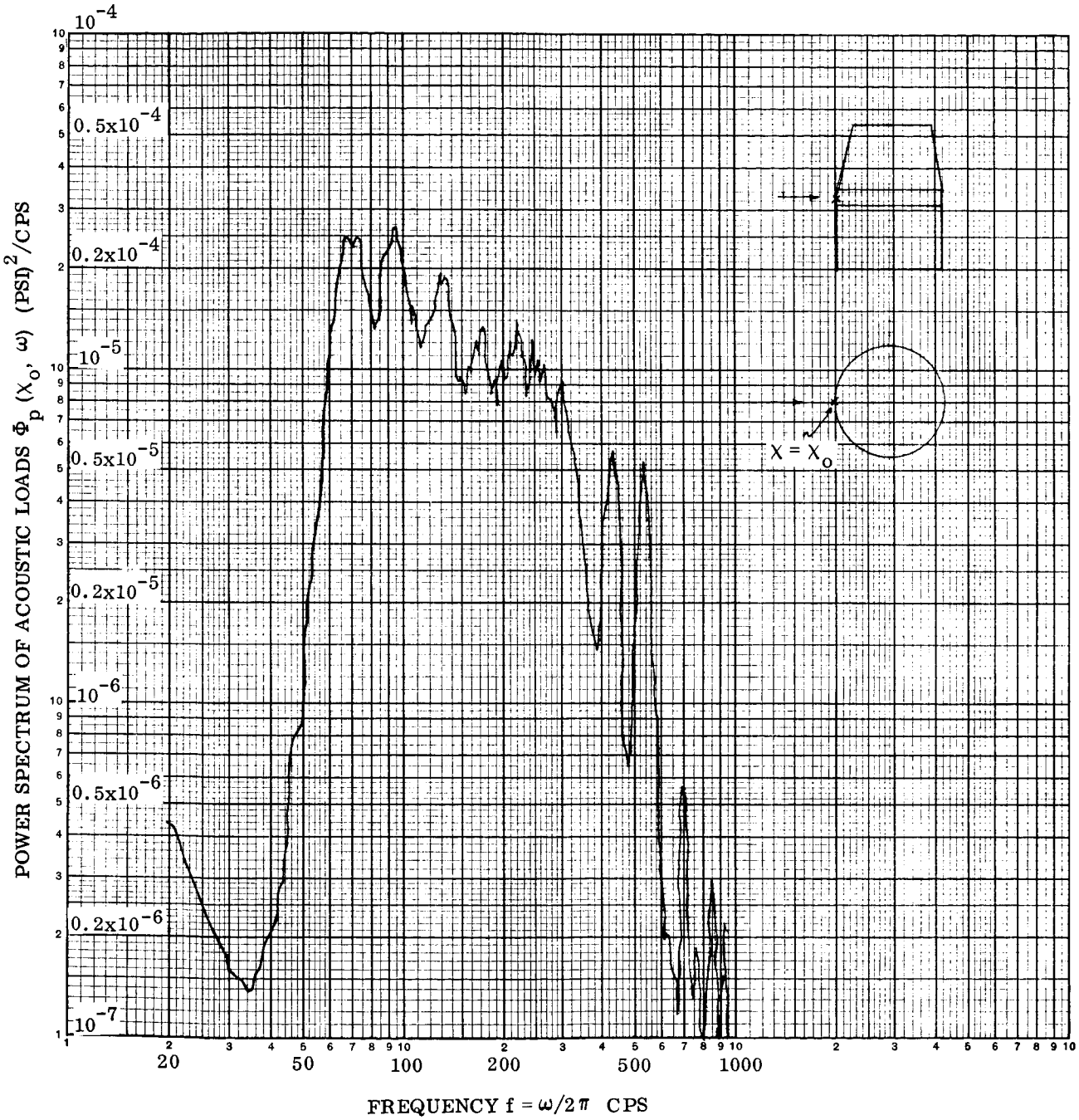

FIGURE 19. TYPICAL INPUT POWER SPECTRUM OF ACOUSTIC LOADS APPLIED TO INSTRUMENT UNIT SCALE MODEL

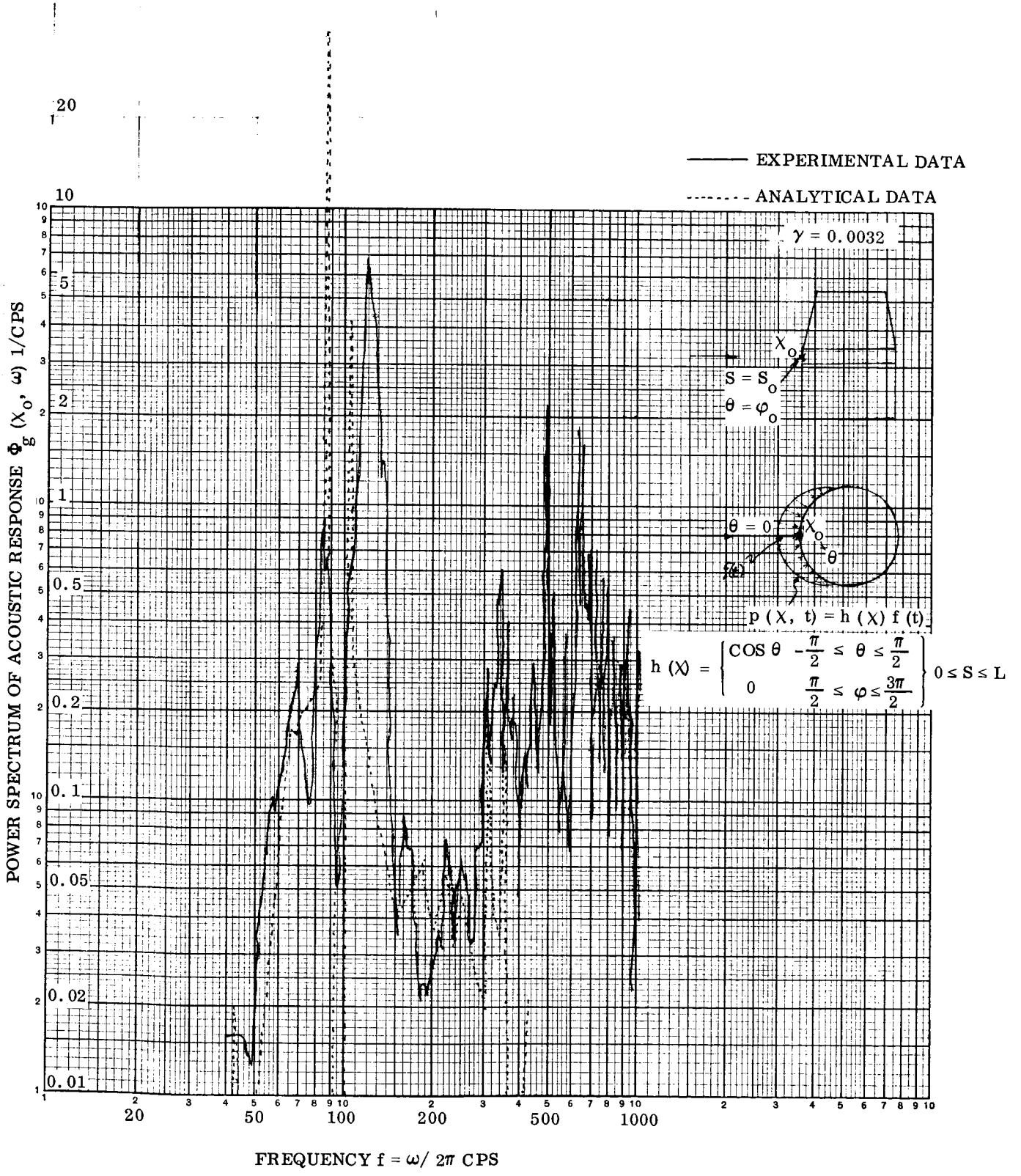

FIGURE 20. TYPICAL ACOUSTIC RESPONSE POWER SPECTRUM OF INSTRUMENT UNIT SCALE MODEL

Let the Fourier transform of the acoustic pressure be expressed as $F_p(x, \omega)$, it may be shown that the expression for the power spectrum of the radial displacement is:

$$\phi_w(x,\omega) = \sum_k \sum_j \frac{w_k(x)}{M_k\left[(\omega_k^2 - \omega^2) + iC_k\omega\right]} \frac{w_j(x)}{M_j\left[(\omega_j^2 - \omega^2) - iC_j\omega\right]} \times$$

$$\iint_{\bar{A}\,\bar{A}} \lim_{T\to\infty} \sqrt{\frac{\pi}{2T^2}}\, F_p^T(x_1, \omega)\, \overline{F_p^T(x_2, \omega)}\, w_k(x_1)\, w_j(x_2)\, d\bar{A}_1 d\bar{A}_2 \qquad (1)$$

In the above formulation, only the normal pressure is considered. The following conventions are used:

$w_k(x)$ = the kth normal mode of the shell

ω_k = the kth eigen-frequency (rad/sec)

M_k = the generalized mass corresponding to the kth mode

$$= \int_{\bar{A}} m(w_k^2 + u_k^2 + v_k^2)\, d\bar{A} + \sum_r \rho_r a_r \int_0^{2\pi} \Big| A\left[(u_k + \beta_k e_n)^2 + v_k^2 + (w_k - \beta_k e_\phi)^2\right] + (I_x + I_y)\beta_k^2 \Big|_r d\theta \qquad (2)$$

C_k = the damping coefficient of the kth mode

$\bar{A}$ = the total surface area of the shell

T = time

r = index for rings in stiffened shell

i = $\sqrt{-1}$

m = mass of shell per unit area

w, u, v = displacement components

β = angle of rotation

ρ_r = density of the ring stiffener material

a_r = radius of the ring stiffener

A = cross section of the ring stiffener

I_x, I_y = moment of inertia of the ring stiffener about its principal axes

e_n, e_ϕ = distance between c.g. of the ring to the point of attachment in n and ϕ directions, respectively, (see Reference 1, p. 23)

The power spectral density as obtained from an external pressure pickup is assumed to be typical of the acoustic input spectra, (Figure 19). The following assumptions are employed to simplify the computations.

A) $$p(x, t) = h(x)\, f(t) \tag{3}$$

i.e.,

$$F_p^T(x, \omega) = h(x)\, F^T(\omega) \tag{4}$$

where

$$F^T(\omega) = \frac{1}{\sqrt{2\pi}} \int_{-T}^{T} f(t)\, e^{-i\omega t}\, dt \tag{5}$$

B) $$C_k = 2\gamma\omega_k \tag{6}$$

where

$$\gamma = \frac{c}{c_{cr}} \simeq \frac{\delta}{2\pi}$$

c = damping coefficient

= the magnitude of the viscous resistance at unit velocity

c_{cr} = critical damping coefficient

δ = the logarithmic decrement of the amplitude

Substituting Equations (3) through (6) into (1) and using the definition of the power spectrum, the following is obtained:

$$\Phi_p(x, \omega) = \lim_{T\to\infty} \sqrt{\frac{\pi}{2T^2}}\, F_p^T(x, \omega)\, \overline{F_p^T(x, \omega)} \tag{7}$$

The power spectral density of the shell acoustic response may be obtained as follows:

$$\Phi_w(x,\omega) = \Phi_p(\omega) \sum_k \sum_j \frac{w_k(x)}{M_k\left[(\omega_k^2 - \omega^2) + 2i\gamma\omega\omega_k\right]} \cdot \frac{w_j(x)}{M_j\left[(\omega_j^2 - \omega^2) - 2i\gamma\omega\omega_j\right]} \times$$

$$\int_{\bar{A}} w_k(x_1)\, h(x_1) \int_{\bar{A}} w_j(x_2)\, h(x_2)\, d\bar{A}_2\, d\bar{A}_1$$

$$= \Phi_p(\omega) \sum_k \sum_j \frac{B_k\, w_k(x)}{M_k\left[(\omega_k^2 - \omega^2)^2 + 4\gamma^2\omega^2\omega_k^2)\right]} \cdot \frac{B_j\, w_j(x)}{M_j\left[(\omega_j^2 - \omega^2)^2 + 4\gamma^2\omega^2\omega_j^2)\right]} \times$$

$$\left[(\omega_k^2 - \omega^2)(\omega_j^2 - \omega^2) + 4\gamma^2\omega^2\, \omega_j\omega_k\right] \tag{8}$$

where

$$\Phi_p(\omega) = \frac{\Phi_p(x_o, \omega)}{h^2(x_o)} \tag{9}$$

$$B_k = \int_{\bar{A}} w_k(x)\, h(x)\, d\bar{A} \tag{10}$$

In Equation (10), B_k is the generalized force corresponding to mode $w_k(x)$. For the unloaded instrument unit scale model, $w_k(x) = \bar{w}_k(s) \cos n_k\theta$, the acoustic pressure distribution is assumed as the following:

$$h(x) = \begin{cases} \cos\theta, & -\frac{\pi}{2} \le \theta \le \frac{\pi}{2} \\ 0, & \frac{\pi}{2} \le \theta \le \frac{3\pi}{2} \end{cases} \quad 0 \le s \le L \tag{11}$$

so that

$$\phi_p(\omega) = \phi_p(x, \omega)\Big|_{\theta=0,\ s=s_o}$$

$$B_k \begin{cases} = -\dfrac{2}{n_k^2 - 1} \cos \dfrac{n_k \pi}{2} \displaystyle\int_o^L R(s)\, \bar{w}_k(s)\, ds \ , & n_k \neq 1 \\ = (\pi/2) \displaystyle\int_o^L R(s)\, \bar{w}_k(s)\, ds \ , & n_k = 1 \end{cases} \tag{12}$$

In Equations (12), R(s) is the geometrical radius of the shell which is a function of the meridian locations. The solid line in Figure 20 shows the typical experimental power spectrum data of the shell response. The ordinate used in the plot is the spectral density of the acceleration level measured in g's. In other words, it represents the spectral density of $(w\omega^2/\bar{g})$ and has a dimension of (cps^{-1}) since the frequency coordinate is in cps. The dotted line indicates the computed value (Φ_g) corresponding to the shell natural frequencies with $\gamma = 0.0032$. The formula used to compute Φ_g is an alternative version of Equation (8) which is explained below:

$$\phi_g(x, \omega) = \phi_w(x, \omega) \frac{\omega^4}{\bar{g}^2}$$

$$= \phi_p(\omega) \sum_k \sum_j \frac{B_k\, w_k(x)}{M_k \bar{g} \left\{ \left[\left(\frac{\omega_k}{\omega}\right)^2 - 1 \right]^2 + 4\gamma^2 \left(\frac{\omega_k}{\omega}\right)^2 \right\}} \frac{B_j\, w_j(x)}{M_j \bar{g} \left\{ \left[\left(\frac{\omega_j}{\omega}\right)^2 - 1 \right]^2 + 4\gamma^2 \left(\frac{\omega_j}{\omega}\right)^2 \right\}} \times$$

$$\left\{ \left[\left(\frac{\omega_k}{\omega}\right)^2 - 1 \right] \left[\left(\frac{\omega_j}{\omega}\right)^2 - 1 \right] + 4\gamma^2 \left(\frac{\omega_k}{\omega}\right) \left(\frac{\omega_j}{\omega}\right) \right\} \tag{13}$$

where subscript g indicates the response in terms of acceleration level and $\bar{g}$ is the gravitational acceleration.

To mechanize the analysis described above, the following step-by-step procedures may be used.

1. Run a stiffened shell program or other similar programs to obtain all the natural modes with frequencies lower than the upper limit of the response frequency range. The program generates the natural frequency ω_k and mode shape w_k, u_k, v_k, β_k, etc. for each mode. Figure 21 shows the effect of the shell response at high frequency region which is influenced by a low frequency mode using the single mode approach. The plot stresses the importance of compiling all the natural frequency modes below the cut-off frequency in acoustic response investigation.

2. Compute the generalized mass M_k for each mode using Equation (2).

3. Choose a typical input power spectrum of acoustic loads $\Phi_p(x_o, \omega)$ at a certain location $x = x_o$.

4. Determine the spacewise pressure distribution function h(x).

5. Compute the generalized force B_k for each mode using Equation (10).

6. Determine a number of frequencies ω on the input spectrum at which the values of $\Phi_p(x_o, \omega)$ are measured or tabulated. The following frequencies are to be included:

   a. A frequency corresponding to the peak of the input spectrum. Also two or three additional frequencies in its neighborhood which completely define the peak pattern.

$$\frac{\Phi_g(\omega)}{\Phi_p(\omega)} = \frac{\bar{K}}{\left\{\left[\left(\frac{\omega_k}{\omega}\right)^2 - 1\right]^2 + 4\gamma^2\left(\frac{\omega_k}{\omega}\right)^2\right\}}$$

$$\bar{K} = \left(\frac{w_k B_k}{M_k \bar{g}}\right)^2$$

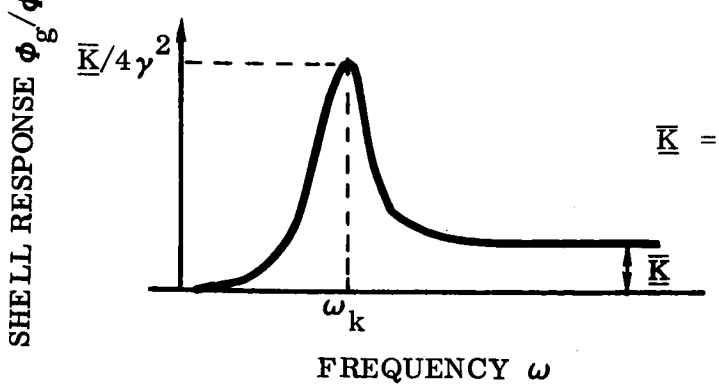

FIGURE 21. TRANSFER FUNCTION CORRESPONDING TO A SINGLE MODE

b. A shell natural frequency. Also two or three additional frequencies in the neighborhood of the natural frequency.

After the above frequencies have been chosen, additional frequency values are selected so that the entire frequency range is properly covered.

7. Measure $\Phi_p(x_o, \omega)$ at each response frequency ω determined in the previous step.

8. Compute and tabulate $\dfrac{\Phi_p(x_o, \omega)}{h^2(x_o)} = \Phi_p(\omega)$ as a function of ω.

9. Determine the damping coefficient $c = \gamma c_{cr}$ based on experimental data. In case the damping data is not available, the following procedure may be used. The procedure is based on a best fit of the peak values of the analytical and experimental response power spectra at certain mode frequencies. Use the following formula to estimate the peak value of the power spectral density of the shell acoustic response at the natural frequency of the kth mode ($\omega = \omega_k$):

$$\Phi_g(x, \omega_k) \simeq \Phi_p(\omega_k) \left[\frac{B_k\, w_k(x)}{M_k \bar{g}}\right]^2 \frac{1}{4\gamma^2}$$

In the above equation, γ is adjusted so that a proper fit may be obtained between the test and analytical data. Several natural frequency modes are used to reach a reasonable mean value of the damping coefficient.

10. Run the acoustic response program to obtain the shell response $\Phi_g(x_1, \omega)$ at a specific location $x = x_1$ with the following data as input:

a. The damping constant γ

b. The natural frequencies of the modes ω_k, $k = 1, 2 \ldots N$

c. The generalized forces of the modes B_k, $k = 1, 2 \ldots N$

d. The generalized masses of the modes M_k, $k = 1, 2 \ldots N$

e. The response frequencies $\omega(I)$, $I = 1, 2 \ldots L$

f. The input power spectrum $\Phi_p[\omega(I)]$, $I = 1, 2 \ldots L$

g. The amplitudes of the normal mode shapes at $x = x_1$
$w_k(x_1)$, $k = 1, 2 \ldots N$

where N = the total number of input modes

L = the total number of stations selected in the frequency domain

The complete program and the work instructions to carry out the above analytical procedures are given in Appendix C.

A sample run was performed to predict the acoustic response of the instrument unit scale model in the frequency range between 40 and 350 cps. The spacewise pressure distribution was assumed to be prescribed by Equation (11). Nine natural modes were employed as part of the input. The model data were obtained through the general stiffened shell program. Their validity was confirmed by vibration tests.

Figure 22 shows the driving point impedance plot of the unloaded instrument unit scale model. The computed eigen-frequencies of the input modes used in acoustic analysis are marked in the figure. The low impedance points in between the arrow-heads reflect the modes with odd circumferential wave numbers ($n_k = 3, 5, 7 \ldots$). It may be seen from Equation (12) that

$$B_k = 0 \quad \text{for} \quad n_k = 3, 5, 7 \ldots$$

Therefore, those modes do not contribute to the response spectrum and are not included in the acoustic response computation. Table 1 shows the detail modal data of the input modes used. The data (w_k) have been normalized and are non-dimensional. It may be seen that $(B_k w_k) / (M_k \bar{g})$ remains to be non-dimensional while $\bar{g}$ has a unit of (inch/second^2). The analytical spectrum computed in this manner is plotted as a broken line in Figure 20.

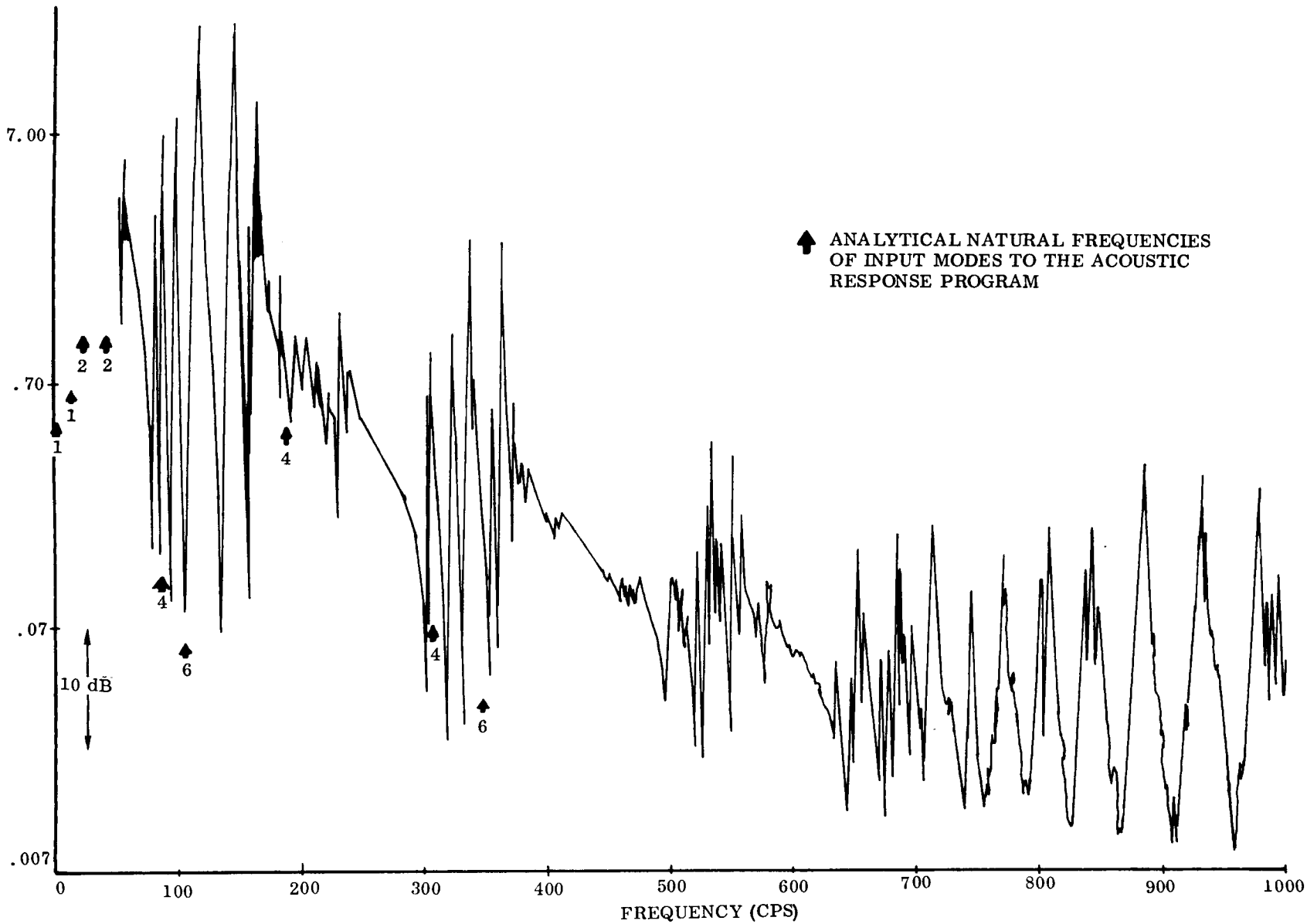

FIGURE 22. DRIVING POINT IMPEDANCE OF UNLOADED INSTRUMENT UNIT SCALE MODEL

TABLE 1. MODAL INPUT DATA USED IN THE INSTRUMENT UNIT ACOUSTIC RESPONSE PROGRAM

HARMONIC NO. n_j	NATURAL FREQUENCY (cps) $\omega_j / 2\pi$	AMPLITUDE OF MODAL SHAPE AT θ=O, S=S_o w_k	GENERALIZED MASS M_k (lb. in. sec^2)	INTEGRATION CONSTANT B_k (lb. in.)
1	0.11	0.988	0.0908	$926 \times \left(\frac{\pi}{2}\right)$
1	15.0	-0.0235	0.06	$74.5 \times \left(\frac{\pi}{2}\right)$
2	22.8	0.786	0.0377	$732.1 \times \left(\frac{2}{3}\right)$
2	42.6	-0.209	0.0243	$-107.3 \times \left(\frac{2}{3}\right)$
4	87.25	0.99	0.029	$-745 \times \left(\frac{2}{15}\right)$
6	105.0	0.984	0.0263	$628 \times \left(\frac{2}{35}\right)$
4	188.8	0.21	0.01985	$-69.5 \times \left(\frac{2}{15}\right)$
4	306.6	-0.408	0.0192	$-131.7 \times \left(\frac{2}{15}\right)$
6	348.5	-0.753	0.0218	$257 \times \left(\frac{2}{35}\right)$

SECTION V

SHELL SCALE MODEL DESIGN PROCEDURE

To design shell scale models for dynamic investigation, it is important to establish specific similitude relations. The similitude relations are used to define the dimensions, materials and other parameters in model design. They are also used to interpret the model dynamic response data and to predict the corresponding responses in the full scale structure.

During the present investigation, a number of scale models have been designed and tested. In one case, the scale model dynamic response data were compared with the full scale structure data. In general, the procedure has been found satisfactory and is described below.

GENERAL SCALING CONSIDERATIONS

Assume a prototype structure which has a diameter of 260 inches and is made of honeycomb sandwich. The scale model is made of solid aluminum sheet with ring stiffeners. The linear scale ratio is 1:6.67. The basic dimension system of length, force, time is used. In establishing the scaling relations, a prime on a variable is used to indicate the full scale structure (prototype). A non-primed variable is used to indicate the scale model. Corresponding to the basic dimensions (ℓ, F, t), the following nomenclatures are used:

$$\ell' = \lambda \ell$$
$$F' = \chi F$$
$$t' = \tau t$$

For most other variables, the scaling ratio is represented by σ attached with a subscript indicating the variable under consideration. Thus the scaling factor for the Young's modulus is:

$$\sigma_E = E'/E.$$

To establish proper scaling relations for shell structures, typical shell dynamic equations are established. The procedure used here is similar to the one demonstrated

in the previous reports. Starting with the shell equations originated by Vlasov (Reference 8), the equations in the most general form are:

$$\begin{cases} \frac{1}{Eh} \Delta\Delta \Phi + \mathcal{D} w = 0 & (1) \\ D \Delta\Delta w - \mathcal{D} \Phi = q_n & (2) \end{cases}$$

In the above equations, h is the shell thickness, D is the shell flexural rigidity, Δ is the Laplace operator in the curvilinear coordinates, $\mathcal{D}$ is another second order differential operator. Φ is an auxiliary stress function whose second derivatives yield the in-plance stresses. Φ has a dimension of $(F\ell)$. w is the normal displacement, q_n is the normal load on the shell. For a cylindrical shell, the cylindrical coordinate system (r, θ, z) is used. The two differential operators may be written as:

$$\Delta = \frac{1}{r^2} \frac{\partial^2}{\partial\theta^2} + \frac{\partial^2}{\partial z^2}$$

$$\mathcal{D} = \frac{1}{r} \left(\frac{1}{r^2} \frac{\partial^2}{\partial\theta^2} + \frac{\partial^2}{\partial z^2} \right)$$

So that Δ has the dimension of $\left(\frac{1}{\ell^2}\right)$ and $\mathcal{D}$ has the dimension of $\left(\frac{1}{\ell^3}\right)$. The shell flexural rigidity D may be defined below.

For solid shell:

$$D = \frac{Eh^3}{12(1 - \nu^2)} \tag{3}$$

For honeycomb sandwich shell:

$$D = \frac{Eh(h + 2c)^2}{16\,(1 - \nu^2)} \tag{4}$$

where h is the sandwich skin total thickness and c is the core thickness.

For dynamic case, it is understood that a factor $e^{i\Omega t}$ has been dropped from all terms of (1), (2). The normal load q_n is represented in terms of the inertia forces. Thus, for a solid shell

$$q_n = \rho h \omega^2 w \tag{5}$$

For a honeycomb sandwich shell,

$$q_n = \rho H \omega^2 w \tag{6}$$

where H is the compacted thickness of the shell.

Using the primed variables for the prototype structure and non-primed variables for the scale model, the coupled shell equations (1), (2) for the prototype may be rewritten as follows in terms of the scale model variables:

$$\begin{cases} \dfrac{\chi}{\sigma_E \lambda^4} \dfrac{1}{Eh} \Delta\Delta\Phi + \dfrac{1}{\lambda^2} \mathscr{D} w = 0 & (7) \\[2ex] \dfrac{\sigma_D}{\lambda^3} D \Delta\Delta w - \dfrac{\chi}{\lambda^2} \mathscr{D}\Phi = \sigma_\rho \sigma_\Omega{}^2 \sigma_H \lambda \rho h \omega^2 w & (8) \end{cases}$$

In order that Equations (7), (8) are equivalent to Equations (1), (2) applied to the scale model, the following scaling relations are required:

$$\chi = \sigma_E \lambda^2 \tag{9}$$

$$\sigma_D = \sigma_E \lambda^3 \tag{10}$$

$$\sigma_\Omega = \frac{1}{\sqrt{\sigma_H \lambda}} \sqrt{\frac{\sigma_E}{\sigma_\rho}} = \frac{1}{\lambda^2} \sqrt{\frac{\sigma_D}{\sigma_\rho \sigma_H}} \tag{11}$$

In the above derivation, it has been assumed that:

$$\sigma_\Phi = \chi \lambda \tag{12}$$

Since the second derivatives of the auxiliary function Φ yields the membrane stresses, Equation (12) is acceptable as long as the shell thickness is scaled according to (λ). In case this latter condition is not satisfied, then the membrane stress scaling relation is violated. Proper compensation is needed if the membrane stresses are significant. A typical example of discrepancy in membrane stress scaling involves the modeling of a sandwich honeycomb shell using a solid shell. This will be explained later through Equation (10).

Equation (9) defines the scaling relation for the Young's moduli of the prototype and the scale model in terms of the force and length scales. Equation (10) defines the shell flexural rigidity scaling relation which is important in thin shells used in aerospace structures. σ_D is a ratio of the flexural rigidity where proper expression

(3) or (4) is to be used. Equation (11) defines the frequency ratio. The equation is reduced to:

$$\sigma_{\Omega} = \Omega' / \Omega = \frac{1}{\lambda} \sqrt{\frac{\sigma_E}{\sigma_\rho}} \tag{13}$$

for the special case $\sigma_H = \lambda$. For a shell structure where concentrated mass(es) M is attached, the contribution to the inertia term at the right hand side of Equation (72) is of the following type:

$$q_n = \frac{M}{\bar{\ell}^2} \omega^2 w \tag{14}$$

where $\bar{\ell}^2$ is the area of attachment. A scaling relation similar to (11) is then:

$$\sigma_{\Omega} = \sqrt{\lambda} \sqrt{\frac{\sigma_E}{\sigma_M}} = \frac{1}{\lambda} \sqrt{\frac{\sigma_D}{\sigma_M}} \tag{15}$$

which may be rewritten as:

$$\sigma_M = \frac{\sigma_D}{\lambda^2 \sigma_{\Omega}^{\ 2}} = \lambda^2 \sigma_H \sigma_\rho \tag{16}$$

Equation (16) is essentially a relation of consistent mass scaling for the shell and the attached mass.

Consider a scale model made of the same material as the prototype, $\sigma_E = \sigma_\rho = 1$, the scaling relations are simplified as shown below:

$$\chi = \lambda^2 \tag{17}$$

$$\sigma_D = \lambda^3 \tag{18}$$

$$\sigma_{\Omega} = \frac{1}{\sqrt{\lambda \sigma_H}} \tag{19}$$

$$\sigma_M = \lambda^2 \sigma_H \tag{20}$$

Equation (19) is reduced to $\sigma_{\Omega} = \frac{1}{\lambda}$ if the special condition $\sigma_H = \lambda$ applies. The corresponding scaling relation (20) is then $\sigma_M = \lambda^3$.

Now consider the dynamic impedance of a shell structure, the impedance amplitude may be defined as:

$$|Z(\omega)| = \frac{|F|}{w\omega^2} \tag{21}$$

which has a dimension of mass. The scaling relation for impedance amplitude is then:

$$\sigma_Z = \lambda^2 \sigma_H \sigma_\rho = \frac{\sigma_D}{\lambda^2 \sigma_\Omega{}^2} \tag{22}$$

NUMERICAL DATA

A scale model is designed for a Saturn V sandwich honeycomb shell structure. A linear scaling ratio of $\lambda = 6.67$ is used. The scale model uses solid aluminum sheet 6061-T4 with ring stiffeners. The same material is used in the majority portion of the prototype structure. The prototype shell has the following dimensional and material data:

$$R' = 260''$$

$$H' = 0.1125'', \; h' = 0.042''$$

$$c' = 0.90''$$

$$E' = E = 10.3 \times 10^6 \text{ psi}$$

$$\nu' = \nu = 0.30$$

The other dimensional details including stiffeners, attached weights, and supporting conditions are not given here. They may be computed according to the relations established in the section. Applying Equation (4), the flexural rigidity of the prototype shell is:

$$D' = 1.005 \times 10^5 \text{ lb. in.}$$

Assuming a scale model shell thickness of 0.071", the following scaling ratios are obtained:

$$\sigma_H = H'/h = 1.585$$

$$\sigma_D = \frac{1.005 \times 10^5}{338} = 297$$

$$\sigma_\Omega = \frac{1}{\sqrt{\sigma_H \lambda}} = \frac{1}{\lambda^2}\sqrt{\frac{\sigma_D}{\sigma_\rho \sigma_H}} = \frac{1}{3.25} \tag{23}$$

According to Equation (10), $\sigma_D = \sigma_E \lambda^3 = 296$ which is consistent with the above computed value. Equation (16) is used to compute the mass scaling ratio which yields:

$$\sigma_M = \frac{\sigma_D}{\lambda^2 \sigma_\Omega{}^2} = 70.5 \tag{24}$$

which is also equal to σ_Z according to Equation (22). The driving point dynamic impedances for the prototype and the scale model are plotted in Figure 23. In the plot, the ordinate indicates the impedance in terms of $\left|Z(\omega)\right| \cdot \bar{g}$ so that the unit is (lb.) instead of a mass unit. The prototype data are plotted in a solid line. The scale model data which have been modified using Equations (23), (24), are plotted in a broken line.

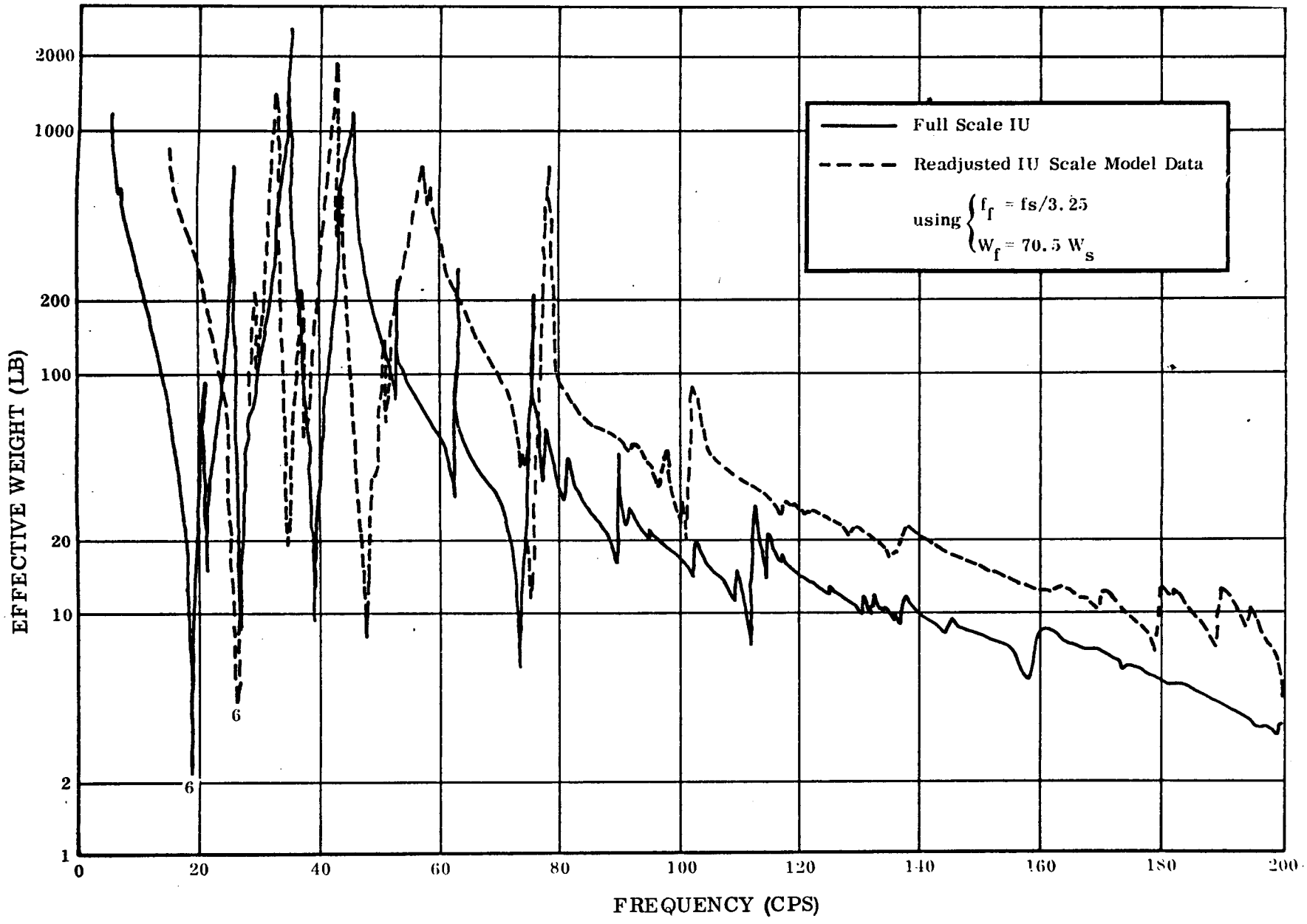

FIGURE 23. DRIVING POINT IMPEDANCE OF INSTRUMENT UNIT SEGMENT WITH COMPONENTS ATTACHED, SUPPORT CONFIGURATION (I)

SECTION VI

CONCLUSIONS AND RECOMMENDATIONS

REVIEW OF ACCOMPLISHED WORK

The shell structures in the various stages of the SATURN V system are large, massive, and intricate. To conduct vibration tests involving the components mounted on the shell structures, correspondingly large and expensive facilities are needed. To perform the tests economically on certain shell-mounted components, with no sacrifice in the validity of the test data, a rational shell segmentation procedure is an attractive approach.

The procedure described in the report involved the determination of the dynamic responses of the complete and uncut shell structure. Based on the response data, a part of the shell structure with the mounted components was determined and segmented. To compensate for the dynamic interaction between the segmented shell and the remaining structure, flexible supports were adapted in the test setup. A criterion in the segmentation and support design was to retain as many as possible of the major vibration modes of the uncut shell structure. The modal data were obtained in the vibration test using a frequency sweep. The segmentation procedure served to demonstrate the feasibility and desirability of the approach.

A shell model scaling technique developed in the contract period will be of special interest to testing engineers. Using the technique, scale models were designed to verify the segmentation procedure. The test data based on the scale model were scaled up to predict the vibration response of the full scale structure. In this manner, the segmented specimen of the full scale SATURN shell structure was designed and fabricated. Applying this technique, the engineer will have sufficient confidence that the designed specimen will have the desired dynamic responses under vibration.

To substantiate the test procedure, a parallel analytical investigation was conducted in the program. Specifically, the overall shell response was investigated using an integration procedure. For the segmented shell with mounted components, a finite difference technique was developed to generate the modal data.

The detailed work items on shell segmentation completed during the contract period are listed below:

1. A rectangular plate with various flexible supports was tested to evaluate the dynamic characteristics of the supports and the effect of point supports to the plate responses.

2. A finite difference computer program was developed to predict the modal data of the flexibly-supported rectangular plate.

3. Four (4) shell scale models were designed and fabricated based on the component-mounted SATURN shell structures. Vibration tests were performed to acquire the modal data. The shell scale model design procedure was formulated and documented in the final report.

4. Differential equations were established for the complete shell of revolution. Detailed formulation of the dynamic impedance of the ring stiffeners was carried out and documented in the first year progress report (Reference 1). A computer program was generated using stepwise integration and considering the ring impedances.

5. A segmentation procedure was established which was applied to two shell scale models. Vibration test data were acquired and documented for the segmented specimens.

6. A finite difference method was used to predict the modal data of the segmented shell. The mass and moment inertia of the attached components were considered, as well as the edge flexible supports. The method was mechanized in a computer program. In general, the analytical data generated by the computer program compared favorably with the test data.

7. A shell model scaling technique described above was applied to the SATURN S-4B instrument unit prototype (full scale) structure. Vibration tests were successfully conducted on the full scale segmented shell structure with mounted components making use of the scale model data acquired previously.

In addition to the work items described above, shell dynamic responses of a more general nature were investigated during the second year of the contract period. The investigation included the responses of the stiffened shell structures under transient and impulsive loadings, and the shell acoustic and blast overpressure

responses. The work conducted on these additional subjects is described in Sections III and IV of the present report. A number of computer programs were generated and checked out for the purpose which are documented in the Appendix.

CONCLUSIONS AND RECOMMENDATIONS

The investigation conducted in the contract demonstrated the feasibility of performing vibration tests for shell-mounted components using a segmented shell structure. A design procedure and related guidelines were formulated for this purpose. (See Reference 2 and the final report.) As is well known to the test engineers, the design and location of the flexible supports have a significant effect on the dynamic responses of the segmented structure. Since the SATURN shell structures are always large and expensive, it is well advisable to conduct a scale model investigation prior to segmentation design and fabrication. In the S-4B instrument unit segmentation test conducted in the contract, it was found that sufficient friction and damping existed in the segmented shell and supports. No additional damping devices were needed to control the vibration amplitudes. For other shell structures such as the S-1C oxidizer tank bulkhead, the inherent damping in the segmented piece may be relatively small. In this case, it may be necessary to adjust the vibration input to regulate the amplitudes. Otherwise, damping devices may be installed at the supporting stations to control the response amplitudes.

In the vibration tests performed, partially because of size and facility limitations, the vibration inputs (shaker heads) were connected to the test specimens. The inputs were regulated so that the desired amplitudes (as functions of the frequency) were reached at specified locations. In certain tests, it may be desirable to install the flexibly-supported specimen on a very rigid structure. The vibration inputs are then supplied through the rigid structure. For the latter case, the procedure reported in the contract may still apply with certain modifications such as the manner the vibration amplitudes are monitored and controlled, etc.

Analytical study on the modal responses of the complete and segmented shell supplied a guideline and gave insight to the problems involved. It is thus always advisable to apply the analytical technique described in the report or similar methods before or during the tests.

To conclude the report, the following specific recommendations are postulated:

1. Use the segmentation procedure for selected component qualification tests on SATURN structures. It may be advisable to start with some hardware where substantial experiences have been accummulated on the testing of a shell structure which was not segmented. When properly applied, substantial savings in time and expenses may be realized in conducting vibration tests using the segmented shells.

2. Explore the use of the finite element method in predicting the modal data of the segmented shell structures. In the contract work, the finite difference method was used to investigate the modal behavior of a segmented and flexibly-supported shell. The finite difference method possesses certain desirable features in dealing with singly or doubly curved shell structures. Using the method, the input data generation to the computer program is somewhat cumbersome. In order that the segmentation technique may be used by a large number of testing engineers, it is advisable to explore the use of the finite element method where the input data may be generated in a more mechanical fashion. It is recommended that the latter approach be explored in future investigations.

3. Further explore the acoustic responses of a stiffened shell structure of the SATURN type. During the contract period, random acoustic tests were performed on the complete instrument unit scale model. Power spectra of the acoustic input, the shell responses and the acoustic pressure inside the enclosed shell were generated. An analytical method was used to predict the shell acoustic response which was described in the present report. Since the preparations of the report draft, the principal investigator has further explored the subject. Using wave propagation equations together with the shell dynamic equations, it was possible to formulate the acoustic spectra inside the shell cavity considering the shell modal data, the shell structural damping as well as the air damping. Since the more delicate components in a SATURN system are located inside the shell structure which are subject to intense acoustic excitation during the launch phase, the analytical approach holds promise to predict the detailed acoustic distribution inside the structure as well as to define possible approaches of reducing the undesirable acoustic excitation. It is recommended that further investigation be carried out in the subject area.

REFERENCES

1. C. Hwang, J. Brass, J. R. Yamane, "Analytical and Experimental Determination of Localized Structure to be Used in Laboratory Vibration Testing of Shell Structure-Mounted Components, SATURN V," Northrop Norair Report NOR 66-201, 2 volumes, May 1966.

2. C. Hwang, W. S. Pi, "Analytical and Experimental Determination of Localized Structure to be Used in Laboratory Vibration Testing of Shell Structure-Mounted Components, SATURN V," Northrop Norair Report NOR 67-19, January 1967.

3. R. Niemi, R. Rabenau, "Blast Effect on Space Vehicle Structures," NASA Technical Note D-2945, February 1966.

4. R. S. Levy, etc., "Experimental Determination of System Parameters for Thin-Walled Cylinders," Report No. RAC 1117-6, Republic Aviation Corp., under NASA contract NAS 8-11514, June 1964.

5. J. E. Greenspon, "Modeling of Spacecraft under Random Loading," NASA Contractor Report No. CR-132, November 1964.

6. S. H. Crandall, "Random Vibration," John Wiley and Sons, Inc., New York, 1958, Chapter 8, pp. 187-230.

7. H. L. Langhaar, "Dimensional Analysis and Theory of Models," John Wiley and Sons, Inc., New York, 1960.

8. V. V. Novozhilov, "The Theory of Thin Shells," P. Noordhoof, Ltd., The Netherlands, 1959.

APPENDIX A

KEYPUNCH INPUT FORMAT AND LISTINGS OF THE FINITE DIFFERENCE COMPUTER PROGRAM

LISTINGS

The following listing contains the complete main program and its subroutines with the exception of a subroutine named "MITER"*. The MITER subroutine is a standard eigenvalue, eigenvector routine. Its physical package of the subroutine follows CHN5. Input data are also included here. The technique for their arrangements was explained in Section II previously.

Sample runs have been performed using 60 internal and boundary points for the scale mode of the shell panel as shown in Figure 6, Section II. Figure 7 shows the grid point arrangement. The computer output representing detail modal and frequency data were submitted to NASA Marshall Space Flight Center. The data listings are too voluminous to be included in the report. It is suggested that interested personnel contact NASA Marshall Space Flight Center Propulsion and Vehicle Engineering Laboratory for detail information on the program.

*The writeup and subroutine deck of "MITER" are available at IBM SHARE general library.

KEY PUNCH FORM - GENERAL PURPOSE

JOB TITLE					ENGINEER	PAGE
FINITE DIFFERENCE PROGRAM						1 OF 3
DPWA SERIAL NO.	PRE.	OPD JOB NO.	DASH	FOR ORGN. NO.	ANALYST	DATE

INPUT DATA FORMAT

A	B	PHIO	PNU	E	RHO

H	CORE	BARM	N	M	*	**	*NMODE
							**IOPT

J1	K2	JWT

SZX (1)	SZX (2)	- - - - -	SZX (J1)	SZP (1)	SZP (2)
		- - - - -			
- - - -	SZP (K2)				
- - - -					
SIX (1)	SIX (2)	- - -	SIX (J1)	SIP (1)	SIP (2)
		- - -			
- - -	SIP (K2)				
- - -					
SAX (1)	SAX (2)	- - -	SAX (J1)	SAP (1)	SAP (2)
		- - -			
- - -	SAP (K2)				
- - -					

J2	NEXT	
		FOR NEXT 0, REPEAT THIS AND THE FOLLOWING CARDS
		FOR NEXT 1, THE FOLLOWING IS THE LAST READING FOR SAX, SAP, SIX, SIP, SZX, SZP

SAX (J2)	SAP (J2)	SIX (J2)	SIP (J2)	SZX (J2)	SZP (J2)

I1	I2	NXTI	
			FOR NXTI 0, REPEAT THIS AND THE FOLLOWING CARDS
			FOR NXTI 1, THE FOLLOWING IS THE LAST READING FOR BARKX

KEY PUNCH FORM - GENERAL PURPOSE

FORM 20-708 (R.7-63)

JOB TITLE	ENGINEER	PAGE
FINITE DIFFERENCE PROGRAM		2 OF 3

DPWA SERIAL NO.	PRE.	DPD JOB NO.	DASH	FOR ORGN. NO.	ANALYST	DATE

```
BARKX (I1)        BARKX (I2)
I3  I4  NXT2   FOR NXT2 = 0, REPEAT THIS AND THE NEXT DATA CARDS
               FOR NXT2 = 1, THE NEXT CARD READING IS THE LAST FOR BARKP
BARKP (I3)        BARKP (I4)
I5  I6  NXT3   FOR NXT3 = 0, REPEAT THIS AND THE NEXT DATA CARDS
               FOR NXT3 = 1, THE NEXT CARD READING IS THE LAST FOR WX
WX (I5)           WX (I6)
I7  I8  NXT4   FOR NXT4 = 0, REPEAT THIS AND THE NEXT DATA CARDS
               NXT4 = 1, THE NEXT READING IS THE LAST FOR WP
WP (I7)           WP (I8)
WT (1)            WT (2)        ---        WT (JWT)
M3  (IM1 (I), IM2 (I), I = 1, M3)
                                -----
AM3 (1)           AM3 (2)       ------     ------     AM3 (M3)
NR  NC  NC1  NC2  NC3   NR = 77, NC = 172, NC1 = 60, NC2 = 35, NC3 = 77                    AA3
                *1   (IETBL (I), I = 1, NR)
                     ----------------------------------------                              AA3
```

KEY PUNCH FORM - GENERAL PURPOSE
FORM 20-708 (R.7-63)

JOB TITLE	ENGINEER	PAGE
FINITE DIFFERENCE PROGRAM		3 OF 3

DPWA SERIAL NO.	PRE.	DPD JOB NO.	DASH	FOR ORGN. NO.	ANALYST	DATE

NZR0	(NAC (I), NEC (I), I = 1, NZR0)	
	----------	AA3
NR NC NC1 NC2 NC3	NR = 60, NC = 172, NC1 = 60, NC2 = 35, NC3 = 77	
		AA1
	*2 (IETBL (J), J = 1, NR)	
	----------	AA1
NZR0	(NAC (I), NEC (I), I = 1, NZR0)	
	----------	AA1
NR NC NC1 NC2	NR = 35, NC = 95, NC1 = 60, NC2 = 35	
		AA2
	*3 (IETBL (J), J = 1, NR)	
	----------	AA2
	(NAC (I), NEC (I), I = 1, NZR0)	
	----------	AA2

*1 THIS IS TO READ THE ROW NUMBER OF "E TABLE", THE CORRESPONDING ELEMENTS OF WHICH ARE TO BE TRANSFERRED TO AA3

*2 SAME AS ABOVE EXCEPT THE ELEMENTS ARE TRANSFERRED TO AA1

*3 SAME AS ABOVE EXCEPT THE ELEMENTS ARE TRANSFERRED TO AA2

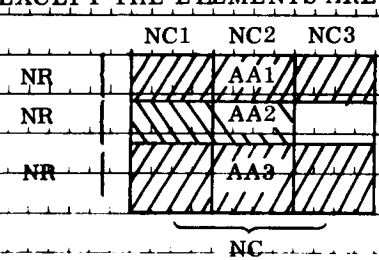

MATRIX DIAGRAM
(172 x 172)

```
$EXECUTE        IBJOB
$IBJOB          GO,MAP
$IBFTC SHELL
C  FREE VIBRATION OF CURVED PANEL WITH GRID POINTS OF 60*60
C  MAIN PROGRAM TO CALL ALL LINKS IN ORIGIN ALPHA                          MAIN
C   IN TAPE 9 A33INV*A31, A33INV*A32, AND (A12-A13*A33INV*A32)*A22*AM2
C   ARE STORED
C   IN TAPE 3  AM2, AM1, A12-A13*A33INV*A32, AND A11-A13*A33INV*A31
C   ARE STORED
C   IN TAPE 4  E TABLE AND THE FINAL MATRIX ARE STORED
      CALL CHN1                                                           MAIN
      CALL CHN2                                                           MAIN
      CALL CHN3                                                           MAIN
      CALL CHN4
      CALL CHN5
      STOP                                                                MAIN
      END                                                                 MAIN
$ORIGIN         BETA
$IBFTC MLMAX
      SUBROUTINE MLTMX (NDA,MDA,N1,M1,A,NDB,MDB,N2,M2,B,NDC,MDC,ABF)      MLTX
C                                                                         MLTM
C     **FOR MULTIPLICATION OF REAL MATRICES                               MLTM
C       AB = A * B                                                        MLTM
      DIMENSION A(NDA,MDA),B(NDB,MDB),AB(77,60),ABF(NDC,MDC)              MLTX
C                                                                         MLTM
 10   DO 1 I=1,N1                                                         MLTM
      DO 1 J=1,M2                                                         MLTM
      AB(I,J)=0.                                                          MLTM
      DO 1 K=1,M1                                                         MLTM
      PRODCT=A(I,K)*B(K,J)                                                MLTM
 1    AB(I,J)=AB(I,J)+PRODCT                                              MLTM
      DO 2 I=1,N1                                                         MLTX
      DO 2 J=1,M2                                                         MLTX
 2    ABF(I,J)=AB(I,J)                                                    MLTX
      RETURN                                                              MLTM
      END
$IBFTC MATIV
      SUBROUTINE MXIV (A,N,B,M,DETERM)
      DIMENSION IPIVOT(77),A(N,N),B(N,1),INDEX(77,2),PIVOT(77)
C     MATRIX INVERSION WITH ACCOMPANYING SOLUTION OF LINEAR EQUATIONS   MINV0040
```

```
      EQUIVALENCE (IROW,JROW), (ICOLUM,JCOLUM), (AMAX, T, SWAP)
C
C     INITIALIZATION
C
   10 DETERM=1.0
   15 DO 20 J=1,N
   20 IPIVOT(J)=0
   30 DO 550 I=1,N
C
C     SEARCH FOR PIVOT ELEMENT
C
   40 AMAX=0.0
   45 DO 105 J=1,N
   50 IF (IPIVOT(J)-1) 60, 105, 60
   60 DO 100 K=1,N
   70 IF (IPIVOT(K)-1) 80, 100, 740
   80 IF (ABS(AMAX)-ABS(A(J,K))) 85, 100, 100
   85 IROW=J
   90 ICOLUM=K
   95 AMAX=A(J,K)
  100 CONTINUE
  105 CONTINUE
  110 IPIVOT(ICOLUM)=IPIVOT(ICOLUM)+1
C
C     INTERCHANGE ROWS TO PUT PIVOT ELEMENT ON DIAGONAL
C
  130 IF (IROW-ICOLUM) 140, 260, 140
  140 DETERM=-DETERM
  150 DO 200 L=1,N
  160 SWAP=A(IROW,L)
  170 A(IROW,L)=A(ICOLUM,L)
  200 A(ICOLUM,L)=SWAP
  205 IF(M) 260, 260, 210
  210 DO 250 L=1, M
  220 SWAP=B(IROW,L)
  230 B(IROW,L)=B(ICOLUM,L)
  250 B(ICOLUM,L)=SWAP
  260 INDEX(I,1)=IROW
  270 INDEX(I,2)=ICOLUM
  310 PIVOT(I)=A(ICOLUM,ICOLUM)
```

```
  320 DETERM=DETERM*PIVOT(I)                                          MINV0490
C                                                                     MINV0500
C     DIVIDE PIVOT ROW BY PIVOT ELEMENT                               MINV0510
C                                                                     MINV0520
  330 A(ICOLUM,ICOLUM)=1.0                                            MINV0530
  340 DO 350 L=1,N                                                    MINV0540
  350 A(ICOLUM,L)=A(ICOLUM,L)/PIVOT(I)                                MINV0550
  355 IF(M) 380, 380, 360                                             MINV0560
  360 DO 370 L=1,M                                                    MINV0570
  370 B(ICOLUM,L)=B(ICOLUM,L)/PIVOT(I)                                MINV0580
C                                                                     MINV0590
C     REDUCE NON-PIVOT ROWS                                           MINV0600
C                                                                     MINV0610
  380 DO 550 L1=1,N                                                   MINV0620
  390 IF(L1-ICOLUM) 400, 550, 400                                     MINV0630
  400 T=A(L1,ICOLUM)                                                  MINV0640
  420 A(L1,ICOLUM)=0.0                                                MINV0650
  430 DO 450 L=1,N                                                    MINV0660
  450 A(L1,L)=A(L1,L)-A(ICOLUM,L)*T                                   MINV0670
  455 IF(M) 550, 550, 460                                             MINV0680
  460 DO 500 L=1,M                                                    MINV0690
  500 B(L1,L)=B(L1,L)-B(ICOLUM,L)*T                                   MINV0700
  550 CONTINUE                                                        MINV0710
      IF (DETERM.NE.0.) GO TO 600
      WRITE (6,555)
 555  FORMAT(1H0,17H ZERO DETERMINANT)
      STOP
C                                                                     MINV0720
C     INTERCHANGE COLUMNS                                             MINV0730
C                                                                     MINV0740
  600 DO 710 I=1,N                                                    MINV0750
  610 L=N+1-I                                                         MINV0760
  620 IF (INDEX(L,1)-INDEX(L,2)) 630, 710, 630                        MINV0770
  630 JROW=INDEX(L,1)                                                 MINV0780
  640 JCOLUM=INDEX(L,2)                                               MINV0790
  650 DO 705 K=1,N                                                    MINV0800
  660 SWAP=A(K,JROW)                                                  MINV0810
  670 A(K,JROW)=A(K,JCOLUM)                                           MINV0820
  700 A(K,JCOLUM)=SWAP                                                MINV0830
  705 CONTINUE                                                        MINV0840
```

```
  710 CONTINUE                                                          MINV0850
  740 RETURN                                                            MINV0860
  750 END                                                               MINV0870
$ORIGIN        ALPHA
$IBFTC CHAN1
      SUBROUTINE CHN1
C  CHAIN 1 - SETUP FOR E TABLE                                           CHN1
C
      DIMENSION SAX(60),SIX(60),SZX(60),SAP(60),SIP(60),SZP(60),WT(60), CHN1
     1  BARKX(60),BARKP(60),WP(60),CZX(60),FX(60),DBXP(60),DBX(60),     CHN1
     2  CZP(60),FP(60),DPPR(60),DP(60),SKP(60),BIGP(60),BIGR(60),       CHN1
     3  ALFA(60),BETA(60),AM1(60,60),AM2(35,60),EL(60,80),WX(60),       CHN1
     4  SKX(60),BIGH(60),IM1(20),IM2(20),AM3(20)                        CHN1
      COMMON NM,NMODE,E,RHO,H,D,ADP2,BARM,IOPT                          CHN1
C                                                                       CHN1
C FOR SINGLE SHELL IOPT =1                                              CHN1
C FOR SANDWICHED SHELL WITH HONEYCOMB CORE IOPT =2                      CHN1
C                                                                       CHN1
   10 FORMAT (6E12.8/3E12.8,4I3)                                        CHN1
   30 FORMAT(3I3)
   31 FORMAT(2I3)                                                       MAIN
   32 FORMAT(6E12.8)                                                    MAIN
   50 FORMAT(I12,E12.8,I12,E12.8,I12)                                   MAIN
   62 FORMAT(2E12.8)
    1 STARTS=1000.                                                      MAIN
      REWIND 3                                                          CHN1
      REWIND 4                                                          CHN1
      REWIND 9                                                          CHN1
      READ (5,10) A,B,PHIO,PNU,E,RHO,H,CORE,BARM,N,M,NMODE,IOPT         CHA1
      N =N-1                                                            CHN1
      M =M-1                                                            CHN1
      NM=(N+1)*(M+1)                                                    MAIN
      DO 15 I=1,NM                                                      MAIN
      SAX(I)=0.                                                         MAIN
      SIX(I)=0.                                                         MAIN
      SZX(I)=0.                                                         MAIN
      SAP(I)=0.                                                         MAIN
      SIP(I)=0.                                                         MAIN
      SZP(I)=0.                                                         MAIN
      WT(I)=0.                                                          MAIN
```

```
      BARKP(I)=0.                                                       MAIN
   25 WP(I)=0.                                                          MAIN
   15 CONTINUE                                                          MAIN
      CN=N                                                              MAIN
      CM=M                                                              MAIN
      N1=N+1                                                            MAIN
      M1=M+1                                                            MAIN
      NEXT =0                                                           MAIN
      DO 20 I=1,N1                                                      MAIN
      BARKX(I)=0.                                                       MAIN
   20 WX(I)=0.                                                          MAIN
      IF(IOPT-2) 336,337,338                                            CHN1
  338 STOP                                                              CHA1
  336 WRITE (6,7)                                                       CHA1
    7 FORMAT (1H1 //20X,62H ** FINITE DIFFERENCE METHOD FOR LOCALIZED SHCHN1
     1ELL VIBRATION ** ///)                                             CHN1
      GO TO 328                                                         CHN1
  337 WRITE (6,339)CORE,BARM                                            CHA1
  339 FORMAT (1H1 //75H FINITE DIFFERENCE METHOD FOR SANDWICHED SHELL   CHN1
     1WITH       CORE THICKNESS =E14.5,22H AND RIGIDITY FACTOR =E14.5,//)CHN1
  328 WRITE (6,300)                                                     CHA1
  300 FORMAT (1H 35X,18H ** INPUT DATA ** //)                           CHN1
      WRITE (6,310)                                                     CHA1
  310 FORMAT(9X,1HA 13X,1HB 11X,4HPHIO 13X,2HNU 15X,1HE 11X,3HRHO 13X,  MAIN
     1        1HH 13X,5HNMODE)                                          MAIN
      WRITE (6,320) A,B,PHIO,PNU,E,RHO,H,NMODE                          CHA1
  320 FORMAT(7E15.5,8X,I2 //)                                           MAIN
      READ (5,30) J1,K2,JWT                                             CHA1
      READ (5,32) (SZX(I),I=1,J1),(SZP(I),I=1,K2)                       CHA1
      READ (5,32) (SIX(I),I=1,J1),(SIP(I),I=1,K2)                       CHA1
      READ (5,32) (SAX(I),I=1,J1),(SAP(I),I=1,K2)                       CHA1
   26 READ (5,31) J2,NEXT                                               CHA1
      READ (5,32) SAX(J2),SAP(J2),SIX(J2),SIP(J2),SZX(J2),SZP(J2)       CHA1
      IF(NEXT-1) 26,52,26                                               MAIN
   52 READ (5,30) I1,I2,NXT1                                            CHA1
      READ (5,62) BARKX(I1),BARKX(I2)                                   CHA1
      IF(NXT1-1) 52,51,52                                               MAIN
   51 READ (5,30) I3,I4,NXT2                                            CHA1
      READ (5,62) BARKP(I3),BARKP(I4)                                   CHA1
      IF(NXT2-1) 51,53,51                                               MAIN
```

```
 53 READ (5,30) I5,I6,NXT3                                          CHA1
    READ (5,62) WX(I5),WX(I6)                                       CHA1
    IF(NXT3-1) 53,54,53                                             MAIN
 54 READ (5,30) I7,I8,NXT4                                          CHA1
    READ (5,62) WP(I7),WP(I8)                                       CHA1
    IF(NXT4-1) 54,55,54
 55 READ (5,32) (WT(I),I=1,JWT)
    WRITE (6,330)                                                   CHA1
330 FORMAT( 8H **AX** )                                             MAIN
    WRITE (6,340) (SAX(I),I=1,NM)                                   CHA1
    WRITE (6,350)                                                   CHA1
350 FORMAT(// 9H **APHI** )                                         MAIN
    WRITE (6,340) (SAP(I),I=1,NM)                                   CHA1
    WRITE (6,360)                                                   CHA1
360 FORMAT(// 9H ** ZX **)                                          MAIN
    WRITE (6,340) (SZX(I),I=1,NM)                                   CHA1
    WRITE (6,370)                                                   CHA1
370 FORMAT(// 9H ** ZP **)                                          MAIN
    WRITE (6,340) (SZP(I),I=1,NM)                                   CHA1
    WRITE (6,380)                                                   CHA1
380 FORMAT(// 9H ** IX **)                                          MAIN
    WRITE (6,340) (SIX(I),I=1,NM)                                   CHA1
    WRITE (6,390)                                                   CHA1
390 FORMAT(// 9H ** IP **)                                          MAIN
    WRITE (6,340) (SIP(I),I=1,NM)                                   CHA1
    WRITE (6,400)                                                   CHA1
400 FORMAT(// 9H ** WX **)                                          MAIN
    WRITE (6,340) (WX(I),I=1,N1)                                    CHA1
    WRITE (6,410)                                                   CHA1
410 FORMAT(// 9H ** WP **)                                          MAIN
    WRITE (6,340) (WP(I),I=1,NM)                                    CHA1
    WRITE (6,420)                                                   CHA1
420 FORMAT(// 9H ** WT **)                                          MAIN
    WRITE (6,340) (WT(I),I=1,NM)                                    CHA1
    WRITE (6,430)                                                   CHA1
430 FORMAT(// 9H ** KX **)                                          MAIN
    WRITE (6,340) (BARKX(I),I=1,N1)                                 CHA1
    WRITE (6,440)                                                   CHA1
440 FORMAT(// 9H ** KP **)                                          MAIN
    WRITE (6,340) (BARKP(I),I=1,NM)                                 CHA1
```

```
340 FORMAT(6E18.5)                                                      MAIN
 60 H2 =H*H                                                             MAIN
    H3 =H2*H                                                            MAIN
    PNU2 =PNU*PNU                                                       MAIN
    IF(IOPT-2) 101,102,103                                              CHN1
103 STOP                                                                CHA1
101 D =E*H3/(12.*(1.-PNU2))                                             CHN1
    GO TO 104                                                           CHN1
102 D =(E*H*(H+2.*CORE)**2)/(16.*(1.-PNU2))                             CHN1
104 DELX =0.5*B/CM                                                      CHN1
    DELP =0.5*PHIO/CN                                                   MAIN
    BLAM =A*DELP/DELX                                                   MAIN
    SK =E*H/(1.-PNU2)                                                   MAIN
    ADP =A*DELP                                                         MAIN
    HADP =H*ADP                                                         MAIN
    HDELX =H*DELX                                                       MAIN
    EAP =E/ADP                                                          MAIN
    EDX =E/DELX                                                         MAIN
    DO 100 I=1,NM                                                       MAIN
    SKX(I) =SK+E*SAX(I)/ADP                                             MAIN
    CZX(I) =SAX(I)*SZX(I)/(SAX(I)+HADP)                                 MAIN
    FX(I) =EAP*(SIX(I)+SAX(I)*(SZX(I)-CZX(I))**2)                       MAIN
    DBXP(I) =D+SK*CZX(I)*CZX(I)                                         MAIN
    DBX(I) =FX(I)+DBXP(I)                                               MAIN
    CZP(I) =SAP(I)*SZP(I)/(SAP(I)+HDELX)                                MAIN
    FP(I) =EDX*(SIP(I)+SAP(I)*(SZP(I)-CZP(I))**2)                       MAIN
    DPPR(I) =D+SK*CZP(I)*CZP(I)                                         MAIN
    DP(I) =FP(I)+DPPR(I)                                                MAIN
    SKP(I) =SK+EDX*SAP(I)                                               MAIN
100 CONTINUE                                                            MAIN
    PNU5 =0.5*PNU                                                       MAIN
    DNU =D*(1.-PNU)                                                     MAIN
    PNUK =PNU2*SK*SK                                                    MAIN
    AK =A*SK                                                            MAIN
    PKN1 =(1.-PNU)*SK*SK                                                MAIN
    PNUK1 =PNU*SK*SK                                                    MAIN
    DO 110 J=1,NM                                                       MAIN
    BIGH(J) =PNU5*(DBXP(J)+DPPR(J))+DNU                                 MAIN
    SKXP =SKX(J)*SKP(J)                                                 MAIN
    BIGP(J) =(SKXP-PNUK1)/PKN1                                          MAIN
```

```
      BIGR(J) =(SKXP-PNUK)/AK                                           MAIN
      ALFA(J) =PNU*DBXP(J)+2.*DNU                                       MAIN
      BETA(J) =PNU*DPPR(J)+2.*DNU                                       MAIN
  110 CONTINUE                                                          MAIN
      RG =RHO*386.064                                                   MAIN
      IF (IOPT-2) 112,113,114
  114 STOP
  112 RGH =RG*H
      GO TO 116
  113 RGH =BARM*386.064
  116 DXAP =RGH*DELX*ADP
C                                                                       MAIN
C  FORMATION OF M1 AND M2 MATRIX                                        MAIN
      DO 119 I =1,NM                                                    CHN2
      DO 119 J =1,NM                                                    CHN2
  119 AM1(I,J) =0.                                                      CHN2
C                                                                       MAIN
      DO 120 I=1,NM                                                     MAIN
      IF(I-N1) 130,130,125
  125 AM1(I,I) =1.+(WT(I)+RG*(SAP(I)*ADP+SAX(I)*DELX))/DXAP             CHN1
      GO TO 120                                                         MAIN
  130 AM1(I,I) =1.                                                      CHN1
  120 CONTINUE                                                          MAIN
      K =1                                                              MAIN
      DO 140 I=1,M1                                                     MAIN
      AM1(K,K) =1.                                                      CHN1
      K=K+N1                                                            MAIN
  140 CONTINUE                                                          MAIN
      READ (5,403) M3,(IM1(IJ),IM2(IJ),IJ=1,M3)                         CHN1
      READ (5,32) (AM3(K),K=1,M3)                                       CHN1
  403 FORMAT (20I3)                                                     CHN1
      DO 414 K =1,M3                                                    CHN1
      I=IM1(K)                                                          CHN1
      J=IM2(K)                                                          CHN1
  414 AM1(I,J) =AM3(K)                                                  CHN1
C                                                                       MAIN
C                                                                       MAIN
      M2=2*(N+M+2)+1                                                    MAIN
C                                                                       MAIN
      DO 142 I=1,M2                                                     MAIN
```

```
      DO 142 J=1,NM                                                     MAIN
  142 AM2(I,J) =0.                                                      MAIN
C                                                                       CHN2
      BL3 =BLAM**3                                                      MAIN
      ADP2 =ADP*ADP                                                     MAIN
      APRG =ADP2*RGH                                                    MAIN
      APRL =BLAM*(1.-PNU)*APRG                                          MAIN
      RG5 =0.5*RG                                                       MAIN
      RG4 =0.5*RG5                                                      MAIN
C                                                                       MAIN
      DO 150 I=2,N1                                                     MAIN
  150 AM2(I,I)=-2.*(D/DBX(I))*((RG5*(SAP(I)*ADP+SAX(I)*DELX)+WX(I))/(BL3MAIN
     1*APRG))                                                           MAIN
      AM2(N+2,1) =2.*(RG4*(SAP(1)*ADP+SAX(1)*DELX)+WX(1))/APRL          MAIN
      DO 146 K=2,M1                                                     MAIN
      I =N1*(K-1)+1                                                     MAIN
      L =2*N+3+K                                                        CHN1
      AM2(L,I) =-2.*(D/DP(I))*(BLAM*(RG5*(SAX(I)*DELX+SAP(I)*ADP)+WP(I))MAIN
     1  )/(ADP2*RGH)                                                    MAIN
  146 CONTINUE                                                          MAIN
      WRITE (6,122)                                                     CHA1
  122 FORMAT (1H125HMASS 1 MATRIX - INTERNAL )                          CHN1
      DO 121 I=1,NM                                                     CHN1
      WRITE (6,470) I                                                   CHA1
  121 WRITE (6,340) (AM1(I,J),J=1,NM)                                   CHA1
      WRITE (6,126)                                                     CHA1
  126 FORMAT(//26H MASS 2 MATRIX - BOUNDARY )                           MAIN
      DO 152 I=1,M2
      WRITE (6,470) I                                                   CHA1
  152 WRITE (6,340) (AM2(I,J),J=1,NM)                                   CHA1
C                                                                       MAIN
C  TO MAKE A STORAGE TABLE FOR ELEMENTS USED IN MATRICES                MAIN
C                                                                       MAIN
      BL2 =BLAM*BLAM                                                    MAIN
      BL4 =BL2*BL2                                                      MAIN
      BLD4 =BL4/D                                                       MAIN
      BLD2 =BL2/D                                                       MAIN
      FAC14 =PNU/BL2                                                    MAIN
      FAC19 =PNU*BL2                                                    MAIN
      FAC21 =ADP2*BL2                                                   MAIN
```

```
      ADBL2 =ADP2/BL2                                                   MAIN
C
      JK=80                                                             MAIN
C                                                                       CHN2
      DO 165 I=1,NM                                                     MAIN
      DO 165 J=1,JK                                                     MAIN
  165 EL(I,J) =0.                                                       MAIN
      ADBL2 =ADP2/BL2                                                   MAIN
      WRITE (3)((AM2(I,J),J=1,NM),I=1,M2)
      WRITE (3)((AM1(K,L),L=1,NM),K=1,NM)
      DO 170 J=1,NM                                                     MAIN
      EL(J,1) =1.                                                       MAIN
      EL(J,2) =-4.*(BLD4*DBX(J)+BLD2*BIGH(J))                           MAIN
      EL(J,3) =BLD4*DBX(J)                                              MAIN
      EL(J,4) =-4.*(BLD2*BIGH(J)+DP(J)/D)                               MAIN
      EL(J,5) =2.*BLD2*BIGH(J)                                          MAIN
      EL(J,6) =DP(J)/D                                                  MAIN
      EL(J,7) =2.*FAC21/(A*D)                                           MAIN
      EL(J,8) =6.*BLD4*DBX(J)+8.*BLD2*BIGH(J)+6.*DP(J)/D                MAIN
      EL(J,9) =-0.5*EL(1,7)                                             MAIN
      EL(J,11) =ALFA(J)/(BL2*DBX(J))                                    MAIN
      EL(J,12) =-2.*(1.+EL(J,11))                                       MAIN
      EL(J,13) =(2.*BARKP(1)*ADP2)/(D*BLAM*(1.-PNU))
      EL(J,14) =FAC14*DBXP(J)/DBX(J)                                    MAIN
      EL(J,15) =-2.*(1.+EL(J,14))                                       MAIN
      EL(J,17) =BL2*BETA(J)/DP(J)                                       MAIN
      EL(J,18) =-2.*(1.+EL(J,17))                                       MAIN
      EL(J,19) =FAC19*DPPR(J)/DP(J)                                     MAIN
      EL(J,20) =-2.*(1.+EL(J,19))                                       MAIN
      EL(J,21) =-2.*FAC21*BIGR(J)                                       MAIN
      EL(J,22) =-0.5*EL(J,21)                                           MAIN
      EL(J,23) =6.*SKX(J)*BL4/SK+8.*BIGP(J)*BL2+6.*SKP(J)/SK            MAIN
      EL(J,24) =-4.*BL2*(SKX(J)*BL2/SK+BIGP(J))                         MAIN
      EL(J,25) =SKX(J)*BL4/SK                                           MAIN
      EL(J,26) =-4.*(SKP(J)/SK+BIGP(J)*BL2)                             MAIN
      EL(J,27) =2.*BIGP(J)*BL2                                          MAIN
      EL(J,28) =SKP(J)/SK                                               MAIN
      EL(J,29) =-2.                                                     MAIN
      EL(J,30) =D*(1.-PNU)/A                                            MAIN
      EL(J,31) =SK*ADBL2*BIGR(J)/SKX(J)                                 MAIN
```

```
      EL(J,32) =-4.                                                     MAIN
      EL(J,33) =-FAC14*SK/SKX(J)                                        MAIN
      EL(J,34) =-(4.+EL(J,33))                                          MAIN
      EL(J,35) =2.*EL(J,31)                                             MAIN
      EL(J,36) =-EL(J,12)                                               MAIN
      EL(J,37) =-EL(J,17)                                               MAIN
      EL(J,38) =2.                                                      MAIN
      EL(J,39) =2.*EL(J,2)                                              MAIN
      EL(J,40) =2.*EL(J,3)                                              MAIN
      EL(J,41) =2.*EL(J,4)                                              MAIN
      EL(J,42) =2.*EL(J,5)                                              MAIN
      EL(J,43) =2.*EL(J,6)                                              MAIN
      EL(J,44) =EL(J,3)+EL(J,8)                                         MAIN
      EL(J,45) =EL(J,6)+EL(J,8)                                         MAIN
      EL(J,46) =EL(J,3)+EL(J,6)+EL(J,8)                                 MAIN
      EL(J,47) =2.*EL(J,11)                                             MAIN
      EL(J,48) =-EL(J,47)                                               MAIN
      EL(J,49) =4.*EL(J,5)                                              MAIN
      EL(J,50) =4.*EL(J,27)                                             MAIN
      EL(J,51) =2.*EL(J,14)                                             MAIN
      EL(J,52) =EL(J,25)+EL(J,23)                                       MAIN
      EL(J,53) =EL(J,23)+EL(J,28)                                       MAIN
      EL(J,54) =EL(J,17)*2.                                             MAIN
      EL(J,55) =-EL(J,54)                                               MAIN
      EL(J,56) =EL(J,23)+EL(J,25)+EL(J,28)                              MAIN
      EL(J,57) =2.*EL(J,22)                                             MAIN
      EL(J,58) =2.*EL(J,24)                                             MAIN
      EL(J,59) =2.*EL(J,25)                                             MAIN
      EL(J,60) =2.*EL(J,26)                                             MAIN
      EL(J,61) =2.*EL(J,27)                                             MAIN
      EL(J,62) =2.*EL(J,28)                                             MAIN
      EL(J,63) =2.                                                      MAIN
      EL(J,64) =-EL(1,30)                                               MAIN
      EL(J,65) =2.*EL(1,9)                                              MAIN
      EL(J,66) =-1.                                                     MAIN
      EL(J,67) =-EL(J,11)                                               MAIN
      EL(J,69) =-EL(J,18)
      EL(J,70) =2.*EL(J,19)
      EL(J,71) =4.
  170 CONTINUE                                                          MAIN
```

```
      EL(1,68) =+(BARKX(1)*ADP2)/(D*BLAM*(1.-PNU)*0.5)                  MAIN
C                                                                       MAIN
      DO 180 K=2,M1                                                     MAIN
      I=(K-1)*(N+1)+1                                                   MAIN
  180 EL(I,16) =-2.*BLAM*BARKP(I)*ADP2/DP(I)                            MAIN
      DO 185 I=2,N1                                                     MAIN
  185 EL(I,10) =-2.*BARKX(I)*ADP2/(DBX(I)*BL3)                          MAIN
      WRITE (6,450)                                                     CHA1
  450 FORMAT(1H114H ** E TABLE **)                                      MAIN
      DO 460 I=1,NM                                                     MAIN
      WRITE (6,470) I                                                   CHA1
      WRITE (6,480) (EL(I,J),J=1,71)                                    CHA1
  460 CONTINUE                                                          MAIN
      WRITE (4) ((EL(I,J),J=1,71),I=1,NM)                               CHN1
  470 FORMAT(/9H ROW NO. I2)                                            MAIN
  480 FORMAT(8E15.4)                                                    MAIN
      RETURN
      END                                                               MAIN
$ORIGIN        ALPHA
$IBFTC CHAN2
      SUBROUTINE CHN2
C                                                                       CHN2
C  CHAIN 2 - DEFINE AA3 AND PERFORM SOME ALGEBRA                        CHN2
C                                                                       MAIN
      DIMENSION EL(60,80),AA3(77,172),B1(77,1),A31(77,60),A32(77,35),   CHN2
     1   A33(77,77),IETBL(77),NAC(50),NEC(50),AROW(172)                 CHN2
      EQUIVALENCE (AA3(1),A31(1),EL(1)),(AA3(4621),A32(1)),             CHN2
     1   (AA3(7316),A33(1))                                             CHN2
      COMMON NM                                                         CHN2
C                                                                       MAIN
C                                                                       MAIN
      REWIND 4                                                          CHN2
      READ (5,512) NR,NC,NC1,NC2,NC3                                    CHN2
  512 FORMAT (5I3)                                                      CHN2
  575 FORMAT(36I2)
  535 FORMAT(24I3)
  560 FORMAT( 8H ** ROW I2,2H**)
  565 FORMAT(8E15.4)
C                                                                       MAIN
C                                                                       MAIN
```

```
      DO 600 I=1,NR                                                     MAIN
      DO 600 J=1,NC                                                     MAIN
  600 AA3(I,J) =0.                                                      MAIN
      READ (4) ((EL(I,J),J=1,71),I=1,NM)                                CHN2
C                                                                       MAIN
      READ (5,575) (IETBL(J),J=1,NR)                                    CHA2
C                                                                       MAIN
      DO 610 J=1,NR                                                     MAIN
      L3 =IETBL(J)                                                      MAIN
      DO 603 K1=1,NC                                                    CHN2
  603 AROW(K1) =0.                                                      CHN2
      READ (5,535) NZRO,(NAC(I),NEC(I),I=1,NZRO)                        CHA2
      DO 609 K=1,NZRO                                                   CHN2
      L1=NAC(K)                                                         MAIN
      L2=NEC(K)                                                         MAIN
  609 AROW(L1) =EL(L3,L2)                                               CHN2
      WRITE (4)(AROW(JX),JX=1,NC)                                       CHN2
  610 CONTINUE                                                          CHN2
      REWIND 4                                                          CHN2
C                                                                       MAIN
  615 WRITE (6,630)                                                     CHA2
  630 FORMAT(1H1 16H** A31 MATRIX **//)                                 MAIN
      READ (4) ((EL(I,J),J=1,71),I=1,NM)                                CHN2
      DO 640 I=1,NR                                                     CHN2
      READ (4) (AA3(I,J),J=1,NC)
      WRITE (6,560) I                                                   CHA2
  640 WRITE (6,565) (A31(I,J),J=1,NC1)                                  CHN2
      WRITE (6,650)                                                     CHA2
  650 FORMAT(1H1 16H** A32 MATRIX **//)                                 MAIN
      DO 660 I=1,NR                                                     CHN2
      WRITE (6,560) I                                                   CHA2
  660 WRITE (6,565) (A32(I,J),J=1,NC2)                                  CHN2
      WRITE (6,670)                                                     CHA2
  670 FORMAT(1H1 16H** A33 MATRIX **//)                                 MAIN
      DO 680 I=1,NR                                                     CHN2
      WRITE (6,560) I                                                   CHA2
  680 WRITE (6,565) (A33(I,J),J=1,NC3)                                  CHN2
C                                                                       CHN2
      REWIND 4                                                          CHN2
C                                                                       CHN2
```

```
      DO 690 I=1,NR                                                     CHN2
  690 B1(I,1) =1.                                                       CHN2
      CALL MXIV (A33,NR,B1,1,DETR)                                      CHN2
      CALL MLTMX(NR,NR,NR,NR,A33,NR,NC1,NR,NC1,A31,NR,NC1,A31)          CHN2
      CALL MLTMX (NR,NR,NR,NR,A33,NR,NC2,NR,NC2,A32,NR,NC2,A32)         CHN2
      WRITE (9) ((A31(I,J),J=1,NC1),I=1,NR)
      WRITE (9) ((A32(I,J),J=1,NR),I=1,NC2)
      RETURN
      END                                                               CHN2
$ORIGIN        ALPHA                                                    CHN3
$IBFTC CHAN3
      SUBROUTINE CHN3                                                   CHN3
C  CHAIN 3 - DEFINE AA1 AND SOME INTERMEDIATE ALGEBRA                   CHN3
      DIMENSION EXT3(77,60),AA1(60,172),A11(60,60),A12(60,35),A13(60,77)CHN3
      DIMENSION EL(60,80),IETBL(60),NAC(50),NEC(50),AROW(172)           CHN3
      EQUIVALENCE (AA1(1),A11(1),EL(1)),(AA1(3601),A12(1)),             CHN3
     1   (AA1(5701),A13(1))                                             CHN3
      COMMON NM                                                         CHN3
      READ (5,316) NR,NC,NC1,NC2,NC3                                    CHN3
      NR3 =NC3                                                          CHN3
      DO 720 I=1,NR                                                     CHN2
      DO 720 J=1,NC                                                     CHN2
  720 AA1(I,J) =0.                                                      CHN2
      READ (4) ((EL(I,J),J=1,71),I=1,NM)                                CHN3
  316 FORMAT (5I3)                                                      CHN3
      READ (5,575) (IETBL(J),J=1,NR)                                    CHA2
  575 FORMAT(36I2)
      DO 736 J=1,NR                                                     CHN3
      L3 =IETBL(J)                                                      CHN3
C                                                                       CHN2
      DO 732 J1=1,NC                                                    CHN3
  732 AROW(J1) =0.                                                      CHN3
      READ (5,535) NZRO,(NAC(I),NEC(I),I=1,NZRO)                        CHA2
      DO 730 K=1,NZRO                                                   CHN2
      L1=NAC(K)                                                         CHN2
      L2=NEC(K)                                                         CHN2
      AROW(L1) =EL(L3,L2)                                               CHN3
  730 CONTINUE                                                          CHN2
      WRITE (4)(AROW(K2),K2=1,NC)                                       CHN3
  736 CONTINUE                                                          CHN3
```

```
      REWIND 4                                                          CHN3
      WRITE (6,740)                                                     CHA2
  740 FORMAT(1H1 16H** A11 MATRIX **//)                                 CHN2
      READ (4) ((EL(I,J),J=1,71),I=1,NM)                                CHN3
      DO 741 I=1,NR                                                     CHN2
      READ (4) (AA1(I,J),J=1,NC)
      WRITE (6,745) I                                                   CHA2
  741 WRITE (6,750) (A11(I,J),J=1,NC1)                                  CHN3
      REWIND 9                                                          CHN3
C                                                                       CHN3
  535 FORMAT(24I3)
  745 FORMAT(8H ** ROW I2,2H**)                                         CHN2
  750 FORMAT(8E15.4)                                                    CHN2
      WRITE (6,755)                                                     CHA2
  755 FORMAT(1H1 16H** A12 MATRIX **//)                                 CHN2
      DO 751 I=1,NR                                                     CHN2
      WRITE (6,745) I                                                   CHA2
  751 WRITE (6,750) (A12(I,J),J=1,NC2)                                  CHN3
      WRITE (6,765)                                                     CHA2
  765 FORMAT(1H1 16H** A13 MATRIX **//)                                 CHN2
      DO 761 I=1,NR                                                     CHN2
      WRITE (6,745) I                                                   CHA2
  761 WRITE (6,750) (A13(I,J),J=1,NC3)                                  CHN3
      READ (9) ((EXT3(I,J),J=1,NC1),I=1,NR3)                            CHN3
      CALL MLTMX (NR,NC3,NR,NC3,A13,NR3,NC1,NR3,NC1,EXT3,NR3,NC1,EXT3)  CHN3
      DO 772 I=1,NR                                                     CHN3
      DO 772 J=1,NC1                                                    CHN3
  772 A11(I,J) =A11(I,J)-EXT3(I,J)                                      CHN3
      READ (9) ((EXT3(I,J),J=1,NC2),I=1,NR3)                            CHN3
      CALL MLTMX (NR,NC3,NR,NC3,A13,NR3,NC1,NR3,NC2,EXT3,NR3,NC1,EXT3)  CHN3
      REWIND 4                                                          CHN3
      DO 746 I=1,NR                                                     CHN3
      DO 746 J=1,NC2                                                    CHN3
  746 A12(I,J) =A12(I,J)-EXT3(I,J)                                      CHN3
      WRITE (3) ((A12(I,J),J=1,NC2),I=1,NR)
      WRITE (3) ((A11(I,J),J=1,NC1),I=1,NR)
      RETURN                                                            MLTM
      END
$ORIGIN        ALPHA
$IBFTC CHAN4
```

```
      SUBROUTINE CHN4
C  CHAIN 4 - DEFINE AA2, AND REDUCTION OF MATRIX WILL BE COMPLETED        CHN4
      DIMENSION EL(60,80),A21(35,60),A22(35,35),EXT4(60,60),EXT5(60,60),CHN4
     1AM1(60,60),AA2(35,95),B1(35,1),B2(60,1),NAC(50),NEC(50),IETBL(35) CHN4
      DIMENSION AROW(100)                                                CHN4
      EQUIVALENCE (AA2(1),A21(1),EL(1)),(AA2(2101),A22(1))               CHN4
      COMMON NM                                                          CHN4
      READ (5,300) NR,NC,NC1,NC2                                         CHN4
  300 FORMAT (4I3)                                                       CHN4
      DO 501 I=1,NR                                                      MAIN
      DO 501 J=1,NC                                                      MAIN
  501 AA2(I,J) =0.                                                       CHN4
      READ (4) ((EL(I,J),J=1,71),I=1,NM)                                 CHN4
  575 FORMAT(36I2)                                                       CHN2
      READ (5,575) (IETBL(J),J=1,NR)                                     CHA2
      DO 511 J=1,NR                                                      MAIN
      L3 =IETBL(J)                                                       MAIN
      DO 513 J1=1,NC                                                     CHN4
  513 AROW(J1) =0.                                                       CHN4
  552 READ (5,535) NZRO,(NAC(I),NEC(I),I=1,NZRO)
      DO 510 K=1,NZRO                                                    MAIN
      L1=NAC(K)                                                          MAIN
      L2=NEC(K)                                                          MAIN
      AROW(L1) =EL(L3,L2)                                                CHN4
  510 CONTINUE                                                           MAIN
      WRITE (4) (AROW(J1),J1=1,NC)                                       CHN4
  511 CONTINUE                                                           MAIN
      REWIND 4                                                           CHN4
  509 WRITE (6,550)                                                      CHA2
  550 FORMAT(1H1 16H** A21 MATRIX **//)                                  MAIN
      READ (4) ((EL(I,J),J=1,71),I=1,NM)                                 CHN4
      DO 520 I=1,NR                                                      MAIN
      READ (4) (AA2(I,J),J=1,NC)
      WRITE (6,560) I                                                    CHA2
  520 WRITE (6,565) (A21(I,J),J=1,NC1)                                   CHN4
      WRITE (6,570)                                                      CHA2
  560 FORMAT( 8H ** ROW I2,2H**)                                         MAIN
  565 FORMAT(8E15.4)                                                     MAIN
  570 FORMAT(1H1 16H** A22 MATRIX **//)                                  MAIN
      DO 521 I=1,NR                                                      MAIN
```

```
      WRITE (6,560) I                                                   CHA2
  521 WRITE (6,565) (A22(I,J),J=1,NC2)                                  CHN4
      DO 522 I=1,NC2                                                    CHN4
  522 B1(I,1) =1.                                                       MAIN
      REWIND 3                                                          CHN4
  535 FORMAT(24I3)                                                      MAIN
      CALL MXIV (A22,NC2,B1,1,DETER)                                    CHN4
      M2 =NR
      READ(3)((EXT4(I,J),J=1,NM),I=1,M2)                                CHN4
      CALL MLTMX (NC2,NC2,NC2,NC2,A22,NM,NM,M2,NM,EXT4,NM,NM,EXT4)      CHN4
      READ (3) ((AM1(I,J),J=1,NM),I=1,NM)
      READ (3) ((EXT5(I,J),J=1,NC2),I=1,NM)
      CALL MLTMX (NM,NM, NM,NC2,EXT5,NM,NM,NC2,NM,EXT4,NM,NM,EXT4)      CHN4
      DO 320 I=1,NM                                                     CHN4
      DO 320 J=1,NM                                                     CHN4
  320 AM1(I,J) =AM1(I,J)-EXT4(I,J)                                      CHN4
      WRITE (9) ((EXT4(I,J),J=1,NM),I=1,NM)                             CHN4
      READ(3)((EXT4(I,J),J=1,NM),I=1,NM)                                CHN4
      CALL MLTMX (NC2,NC2,NC2,NC2,A22,NR,NC1,NR,NC1,A21,NR,NC1,A21)     CHN4
      CALL MLTMX (NM,NM, NM,NC2,EXT5,NR,NC1,NR,NC1,A21,NM,NM,EXT5)      CHN4
      DO 420 I=1,NM                                                     CHN4
      DO 420 J=1,NM                                                     CHN4
  420 EXT4(I,J) =EXT4(I,J)-EXT5(I,J)                                    CHN4
      DO 780 I=1,NM                                                     CHN2
  780 B2(I,1) =1.                                                       CHN4
      CALL MXIV (EXT4,NM,B2,1,DET)                                      CHN4
      CALL MLTMX (NM,NM,NM,NM,EXT4,NM,NM,NM,NM,AM1,NM,NM,AM1)           CHN4
      DO 430 I=1,NM                                                     CHN4
      DO 430 J=1,NM                                                     CHN4
  430 EL(I,J) =AM1(I,J)                                                 CHN4
      WRITE (4) ((AM1(I,J),J=1,NM),I=1,NM)                              CHN4
      WRITE (6,782)                                                     CHA2
  782 FORMAT(1H1 13HFINAL MATRIX /)                                     CHN2
      DO 785 I=1,NM                                                     CHN4
      WRITE (6,560) I
  785 WRITE (6,565) (EL(I,J),J=1,NM)                                    CHN4
      RETURN                                                            CHN4
      END
$ORIGIN        BETA
$IBFTC CHAN5
```

```
      SUBROUTINE CHN5
      COMMON NM,NMODE,E,RHO,H,D,ADP2,BARM,IOPT                          CHN5
      DIMENSION GUESS(60,1),VECTOR(60,5),EIGVAL(5),TEMP(650),           CHN5
     1   EIGM(60,120),NAKSR(5),NAKDR(5),ITRS(15)                        CHN5
      N2 =NM*2                                                          CHN5
      BACKSPACE 4                                                       CHN5
      DO 12 I=1,NM                                                      CHN5
      DO 12 J=1,N2                                                      CHN5
   12 EIGM(I,J) =0.                                                     CHN5
      READ (4) ((EIGM(I,J),J=1,NM),I=1,NM)
C                                                                       CHN5
      NC =1
      NGUESS =0                                                         CHN5
      N =NM                                                             CHN5
      MAXR =NM                                                          CHN5
      EPSP =0.                                                          CHN5
      EPDP =0.                                                          CHN5
      NITRDP =300                                                       CHN5
      RDP =0.8                                                          CHN5
      RSP =0.8                                                          CHN5
      NITRSP =60                                                        CHN5
      NTAPE =4                                                          CHN5
      NTAPEI =6                                                         CHN5
C                                                                       CHN5
      CALL MITERS (EIGM,GUESS,NGUESS,N,NMODE,MAXR,NC,EPSP,EPDP,NAKSR,   CHN5
     1   NAKDR,NITRSP,NITRDP,RSP,RDP,IR,TEMP,VECTOR,EIGVAL,ITRS,        CHN5
     2   NTAPE,NTAPEI)                                                  CHN5
      RETURN
      END
$DATA
+195      +02+54      +01+7854    -00+3       -00+103     +08+2588    -03PANL0001
+71       -01+1       +01+1712    -04 12  5  5  1                         0002
  1 12  1                                                                 0003
+1413     +00+1413    +00+1413    +00+1413    +00+1413    +00+1413    +00 0004
+1413     +00+1413    +00+1413    +00+1413    +00+1413    +00+1413    +00 0005
+1413     +00                                                             0005
+616      -03+616     -03+616     -03+616     -03+616     -03+616     -03 0006
+616      -03+616     -03+616     -03+616     -03+616     -03+616     -03 0008
+616      -03                                                             0007
+46       -01+46      -01+46      -01+46      -01+46      -01+46      -01 0008
```

```
+46       -01+46       -01+46       -01+46       -01+46       -01+46       -01     0011
+46       -01                                                                      0009
 13                                                                                0013
+046      -00+00       -00+616      -03+00       -03+1413     -00+00       -00     0013
 25                                                                                0015
+046      -00+00       -00+616      -03+00       -03+1413     -00+00       -00     0015
 37                                                                                0016
+046      -00+00       -00+616      -03+00       -03+1413     -00+00       -00     0017
 49  1                                                                             0018
+46       -01+0        -00+616      -03+0        -00+1413     -00+0        -00
  1  1  1                                                                          18A
+00       -00+00       -00                                                         18B
 13 49  1                                                                          019A
+2430     +04+2430     +04                                                          19B
  4  5  0                                                                          020A
+15       -00+25       -00                                                         020B
  6  7  1                                                                          020C
+1        -00+0        -00                                                         020D
 13 49  1                                                                          021A
+3333     -00+3333     -00
+0        +00+0        +00+0        +00+0        +00+0        +00+0        +00   WT0001
  1  9 11                                                                        AM30001
+0        +00+0        +00+0        +00+0        +00+0        +00+0        +00 AM30002
 77172 60 35 77                                                                   AA3 AAA
1415161718192021222324262728293031323334353638394041424344454647485051 52AA300000
5354555657585960 2 3 4 5 6 7 8 9101112 113253749 1 2 3 4 5 6 7 8 9101112AA300000
1325374960                                                                       AA300000
 16  2 22 14 21 26 22 96 27 97 24 98 27108 26109 23110 26111 28120 27121AA30001A
 24122 27133 25157 25169 28                                                      AA30001B
 16  3 22 15 21 27 22 97 27 98 24 99 27108 28109 26110 23111 26112 28121AA30002A
 27122 24123 27134 25158 25                                                      AA30002B
 16  4 22 16 21 28 22 98 27 99 24100 27109 28110 26111 23112 26113 28122AA30003A
 27123 24124 27135 25159 25                                                      AA30003B
 16  5 22 17 21 29 22 99 27100 24101 27110 28111 26112 23113 26114 28123AA30004A
 27124 24125 27136 25160 25                                                      AA30004B
 16  6 22 18 21 30 22100 27101 24102 27111 28112 26113 23114 26115 28124AA30005A
 27125 24126 27137 25161 25                                                      AA30005B
 16  7 22 19 21 31 22101 27102 24103 27112 28113 26114 23115 26116 28125AA30006A
 27126 24127 27138 25162 25                                                      AA30006B
 16  8 22 20 21 32 22102 27103 24104 27113 28114 26115 23116 26117 28126AA30007A
```

```
27127 24128 27139 25163 25                                                  AA30007B
16  9 22 21 21 33 22103 27104 24105 27114 28115 26116 23117 26118 28127AA30008A
27128 24129 27140 25164 25                                                  AA30008B
16 10 22 22 21 34 22104 27105 24106 27115 28116 26117 23118 26119 28128AA30009A
27129 24130 27141 25165 25                                                  AA30009B
15 11 22 23 21 35 22105 27106 24107 27116 28117 26118 53119 26129 27130AA30010A
24131 27142 25166 25                                                        AA30010B
12 12 22 24 21 36 22106 61107 24117 62118 60119 23130 61131 24143 25167AA30011A
25                                                                          AA30011B
16 14 22 26 21 38 22 97 25108 27109 24110 27120 26121 23122 26123 28132AA30012A
27133 24134 27145 25170 28                                                  AA30012B
16 15 22 27 21 39 22 98 25109 27110 24111 27120 28121 26122 23123 26124AA30013A
28133 27134 24135 27146 25                                                  AA30013B
16 16 22 28 21 40 22 99 25110 27111 24112 27121 28122 26123 23124 26125AA30014A
28134 27135 24136 27147 25                                                  AA30014B
16 17 22 29 21 41 22100 25111 27112 24113 27122 28123 26124 23125 26126AA30015A
28135 27136 24137 27148 25                                                  AA30015B
16 18 22 30 21 42 22101 25112 27113 24114 27123 28124 26125 23126 26127AA30016A
28136 27137 24138 27149 25                                                  AA30016B
16 19 22 31 21 43 22102 25113 27114 24115 27124 28125 26126 23127 26128AA30017A
28137 27138 24139 27150 25                                                  AA30017B
16 20 22 32 21 44 22103 25114 27115 24116 27125 28126 26127 23128 26129AA30018A
28138 27139 24140 27151 25                                                  AA30018B
16 21 22 33 21 45 22104 25115 27116 24117 27126 28127 26128 23129 26130AA30019A
28139 27140 24141 27152 25                                                  AA30019B
16 22 22 34 21 46 22105 25116 27117 24118 27127 28128 26129 23130 26131AA30020A
28140 27141 24142 27153 25                                                  AA30020B
15 23 22 35 21 47 22106 25117 27118 24119 27128 28129 26130 53131 26141AA30021A
27142 24143 27154 25                                                        AA30021B
12 24 22 36 21 48 22107 25118 61119 24129 62130 60131 23142 61143 24155AA30022A
25                                                                          AA30022B
15 26 22 38 21 50 22109 25120 27121 24122 27132 26133 52134 26135 28144AA30023A
27145 24146 27171 28                                                        AA30023B
15 27 22 39 21 51 22110 25121 27122 24123 27132 28133 26134 52135 26136AA30024A
28145 27146 24147 27                                                        AA30024B
15 28 22 40 21 52 22111 25122 27123 24124 27133 28134 26135 52136 26137AA30025A
28146 27147 24148 27                                                        AA30025B
15 29 22 41 21 53 22112 25123 27124 24125 27134 28135 26136 52137 26138AA30026A
28147 27148 24149 27                                                        AA30026B
15 30 22 42 21 54 22113 25124 27125 24126 27135 28136 26137 52138 26139AA30027A
```

```
28148 27149 24150 27                                                    AA30027B
15 31 22 43 21 55 22114 25125 27126 24127 27136 28137 26138 52139 26140AA30028A
28149 27150 24151 27                                                    AA30028B
15 32 22 44 21 56 22115 25126 27127 24128 27137 28138 26139 52140 26141AA30029A
28150 27151 24152 27                                                    AA30029B
15 33 22 45 21 57 22116 25127 27128 24129 27138 28139 26140 52141 26142AA30030A
28151 27152 24153 27                                                    AA30030B
15 34 22 46 21 58 22117 25128 27129 24130 27139 28140 26141 52142 26143AA30031A
28152 27153 24154 27                                                    AA30031B
14 35 22 47 21 59 22118 25129 27130 24131 27140 28141 26142 56143 26153AA30032A
27154 24155 27                                                          AA30032B
11 36 22 48 21 60 22119 25130 61131 24141 62142 60143 52154 61155 24    AA30033
11 38 57 50 21121 59132 61133 58134 61144 26145 23146 26147 28172 28    AA30034
11 39 57 51 21122 59133 61134 58135 61144 28145 26146 23147 26148 28    AA30035
11 40 57 52 21123 59134 61135 58136 61145 28146 26147 23148 26149 28    AA30036
11 41 57 53 21124 59135 61136 58137 61146 28147 26148 23149 26150 28    AA30037
11 42 57 54 21125 59136 61137 58138 61147 28148 26149 23150 26151 28    AA30038
11 43 57 55 21126 59137 61138 58139 61148 28149 26150 23151 26152 28    AA30039
11 44 57 56 21127 59138 61139 58140 61149 28150 26151 23152 26153 28    AA30040
11 45 57 57 21128 59139 61140 58141 61150 28151 26152 23153 26154 28    AA30041
11 46 57 58 21129 59140 61141 58142 61151 28152 26153 23154 26155 28    AA30042
10 47 57 59 21130 59141 61142 58143 61152 28153 26154 53155 26          AA30043
 8 48 57 60 21131 59142 50143 58153 62154 60155 23                      AA30044
 8 13 64 15 30 61 30 63 64108 66110  1156  1158 66                      AA30045
 8 14 64 16 30 62 30 64 64109 66111  1157  1159 66                      AA30046
 8 15 64 17 30 63 30 65 64110 66112  1158  1160 66                      AA30047
 8 16 64 18 30 64 30 66 64111 66113  1159  1161 66                      AA30048
 8 17 64 19 30 65 30 67 64112 66114  1160  1162 66                      AA30049
 8 18 64 20 30 66 30 68 64113 66115  1161  1163 66                      AA30050
 8 19 64 21 30 67 30 69 64114 66116  1162  1164 66                      AA30051
 8 20 64 22 30 68 30 70 64115 66117  1163  1165 66                      AA30052
 8 21 64 23 30 69 30 71 64116 66118  1164  1166 66                      AA30053
 8 22 64 24 30 70 30 72 64117 66119  1165  1167 66                      AA30054
 8 23 64 24 30 71 30 72 64118 66119  1166  1167 66                      AA30055
 3 96 29108  1156  1                                                    AA30056
49 13 31 14 35 15 35 16 35 17 35 18 35 19 35 20 35 21 35 22 35 23 35 24AA30057A
31 96  1 97 38 98 38 99 38100 38101 38102 38103 38104 38105 38106 38107AA30057B
 1108 29109 34110 32111 32112 32113 32114 32115 32116 32117 32118 32119AA30057C
29120  1121 38122 38123 38124 38125 38126 38127 38128 38129 38130 38131AA30057D
 1169 33                                                                AA30057E
```

```
 3108  1120 29132  1                                                    AA30058
 3120  1132 29144  1                                                    AA30059
37 49 31 50 35 51 35 52 35 53 35 54 35 55 35 56 35 57 35 58 35 59 35 60AA30060A
31132 63133 71134 71135 71136 71137 71138 71139 71140 71141 71142 71143AA30060B
63144 29145 34146 32147 32148 32149 32150 32151 32152 32153 32154 32155AA30060C
29172 33                                                              AA30060D
 3 96 29 97  1168  1                                                  AA30061
 3 96  1 97 29 98  1                                                  AA30062
 3 97  1 98 29 99  1                                                  AA30063
 3 98  1 99 29100  1                                                  AA30064
 3 99  1100 29101  1                                                  AA30065
 3100  1101 29102  1                                                  AA30066
 3101  1102 29103  1                                                  AA30067
 3102  1103 29104  1                                                  AA30068
 3103  1104 29105  1                                                  AA30069
 3104  1105 29106  1                                                  AA30070
 3105  1106 29107  1                                                  AA30071
 2106 63107 29                                                        AA30072
 4 97 66121  1168  1170 66                                            AA30073
 4109 66133  1169  1171 66                                            AA30074
 4121 66145  1170  1172 66                                            AA30075
 4133 66145  1171  1172 66                                            AA30076
 1155  1  0                                                           AA30077
60172 60 35 77                                                         AA1 AAA
1 2 3 4 5 6 7 8 910111213141516171819202122232425262728293031323334353 6AA100000
3738394041424344454647484950515253545556575859 60                     AA100000
16  1  8  2  4  3  6 13  2 14  5 25  3 61  2 62  5 73  4 74  5 78  3 90AA10001A
 5 91  6 96  7108  9156  9                                            AA10001B
16  1  4  2  8  3  4  4  6 13  5 14  2 15  5 26  3 61  5 62  2 63  5 73AA10002A
 6 79  3 97  7109  9157  9                                            AA100 2B
16  1  6  2  4  3  8  4  4  5  6 14  5 15  2 16  5 27  3 62  5 63  2 64AA100 3A
 5 80  3 98  7110  9158  9                                            AA100 3B
16  2  6  3  4  4  8  5  4  6  6 15  5 16  2 17  5 28  3 63  5 64  2 65AA100 4A
 5 81  3 99  7111  9159  9                                            AA100 4B
16  3  6  4  4  5  8  6  4  7  6 16  5 17  2 18  5 29  3 64  5 65  2 66AA100 5A
 5 82  3100  7112  9160  9                                            AA100 5B
16  4  6  5  4  6  8  7  4  8  6 17  5 18  2 19  5 30  3 65  5 66  2 67AA100 6A
 5 83  3101  7113  9161  9                                            AA100 6B
16  5  6  6  4  7  8  8  4  9  6 18  5 19  2 20  5 31  3 66  5 67  2 68AA100 7A
 5 84  3102  7114  9162  9                                            AA100 7B
```

```
16  6  6  7  4  8  8  9  4 10  6 19  5 20  2 21  5 32  3 67  5 68  2 69AA100 8A
 5 85  3103  7115  9163  9                                                AA100 8B
16  7  6  8  4  9  8 10  4 11  6 20  5 21  2 22  5 33  3 68  5 69  2 70AA100 9A
 5 86  3104  7116  9164  9                                                AA100 9B
16  8  6  9  4 10  8 11  4 12  6 21  5 22  2 23  5 34  3 69  5 70  2 71AA10010A
 5 87  3105  7117  9165  9                                               AA10010B
15  9  6 10  4 11 45 12  4 22  5 23  2 24  5 35  3 70  5 71  2 72  5 88AA10011A
 3106  7118  9166  9                                                    AA10011B
13 10 43 11 41 12  8 23 42 24  2 36  3 24  2 71 42 72  2 89  3107  7119AA10012A
 9167  9                                                               AA10012B
16  1  2  2  5 13  8 14  4 15  6 25  2 26  5 37  3 61  3 73  5 74  4 75AA10013A
 5 92  6 96  9108  7120  9                                              AA10013B
16  1  5  2  2  3  5 13  4 14  8 15  4 16  6 25  5 26  2 27  5 38  3 62AA10014A
 3 74  6 97  9109  7121  9                                              AA10014B
16  2  5  3  2  4  5 13  6 14  4 15  8 16  4 17  6 26  5 27  2 28  5 39AA10015A
 3 63  3 98  9110  7122  9                                              AA10015B
16  3  5  4  2  5  5 14  6 15  4 16  8 17  4 18  6 27  5 28  2 29  5 40AA10016A
 3 64  3 99  9111  7123  9                                              AA10016B
16  4  5  5  2  6  5 15  6 16  4 17  8 18  4 19  6 28  5 29  2 30  5 41AA10017A
 3 65  3100  9112  7124  9                                              AA10017B
16  5  5  6  2  7  5 16  6 17  4 18  8 19  4 20  6 29  5 30  2 31  5 42AA10018A
 3 66  3101  9113  7125  9                                              AA10018B
16  6  5  7  2  8  5 17  6 18  4 19  8 20  4 21  6 30  5 31  2 32  5 43AA10019A
 3 67  3102  9114  7126  9                                              AA10019B
16  7  5  8  2  9  5 18  6 19  4 20  8 21  4 22  6 31  5 32  2 33  5 44AA10020A
 3 68  3103  9115  7127  9                                              AA10020B
16  8  5  9  2 10  5 19  6 20  4 21  8 22  4 23  6 32  5 33  2 34  5 45AA10021A
 3 69  3104  9116  7128  9                                              AA10021B
16  9  5 10  2 11  5 20  6 21  4 22  8 23  4 24  6 33  5 34  2 35  5 46AA10022A
 3 70  3105  9117  7129  9                                              AA10022B
16 10  5 11  2 12  5 21  6 22  4 23 45 24  4 34  5 35  2 36  5 47  3 71AA10023A
 3106  9118  7130  9                                                    AA10023B
12 11 42 12  2 22 43 23 41 24  8 35 42 36  2 48  3 72  3107  9119  7131AA10024A
 9                                                                      AA10024B
16  1  3 13  2 14  5 25  8 26  4 27  6 37  2 38  5 49  3 74  5 75  4 76AA10025A
 5 93  6108  9120  7132  9                                              AA10025B
16  2  3 13  5 14  2 15  5 25  4 26  8 27  4 28  6 37  5 38  2 39  5 50AA10026A
 3 75  6109  9121  7133  9                                              AA10026B
16  3  3 14  5 15  2 16  5 25  6 26  4 27  8 28  4 29  6 38  5 39  2 40AA10027A
 5 51  3110  9122  7134  9                                              AA10027B
```

```
16  4  3 15  5 16  2 17  5 26  6 27  4 28  8 29  4 30  6 39  5 40  2 41AA10028A
 5 52  3111  9123  7135  9                                                AA10028B
16  5  3 16  5 17  2 18  5 27  6 28  4 29  8 30  4 31  6 40  5 41  2 42AA10029A
 5 53  3112  9124  7136  9                                                AA10029B
16  6  3 17  5 18  2 19  5 28  6 29  4 30  8 31  4 32  6 41  5 42  2 43AA10030A
 5 54  3113  9125  7137  9                                                AA10030B
16  7  3 18  5 19  2 20  5 29  6 30  4 31  8 32  4 33  6 42  5 43  2 44AA10031A
 5 55  3114  9126  7138  9                                                AA10031B
16  8  3 19  5 20  2 21  5 30  6 31  4 32  8 33  4 34  6 43  5 44  2 45AA10032A
 5 56  3115  9127  7139  9                                                AA10032B
16  9  3 20  5 21  2 22  5 31  6 32  4 33  8 34  4 35  6 44  5 45  2 46AA10033A
 5 57  3116  9128  7140  9                                                AA10033B
16 10  3 21  5 22  2 23  5 32  6 33  4 34  8 35  4 36  6 45  5 46  2 47AA10034A
 5 58  3117  9129  7141  9                                                AA10034B
15 11  3 22  5 23  2 24  5 33  6 34  4 35 45 36  4 46  5 47  2 48  5 59AA10035A
 3118  9130  7142  9                                                     AA10035B
12 12  3 23 42 24  2 34 43 35 41 36  8 47 42 48  2 60  3119  9131  7143AA10036A
 9                                                                       AA10036B
15 13  3 25  2 26  5 37 44 38  4 39  6 49  2 50  5 75  5 76  4 77  5 94AA10037A
 6120  9132  7144  9                                                     AA10037B
15 14  3 25  5 26  2 27  5 37  4 38 44 39  4 40  6 49  5 50  2 51  5 76AA10038A
 6121  9133  7145  9                                                     AA10038B
15 15  3 26  5 27  2 28  5 37  6 38  4 39 44 40  4 41  6 50  5 51  2 52AA10039A
 5122  9134  7146  9                                                     AA10039B
15 16  3 27  5 28  2 29  5 38  6 39  4 40 44 41  4 42  6 51  5 52  2 53AA10040A
 5123  9135  7147  9                                                     AA10040B
15 17  3 28  5 29  2 30  5 39  6 40  4 41 44 42  4 43  6 52  5 53  2 54AA10041A
 5124  9136  7148  9                                                     AA10041B
15 18  3 29  5 30  2 31  5 40  6 41  4 42 44 43  4 44  6 53  5 54  2 55AA10042A
 5125  9137  7149  9                                                     AA10042B
15 19  3 30  5 31  2 32  5 41  6 42  4 43 44 44  4 45  6 54  5 55  2 56AA10043A
 5126  9138  7150  9                                                     AA10043B
15 20  3 31  5 32  2 33  5 42  6 43  4 44 44 45  4 46  6 55  5 56  2 57AA10044A
 5127  9139  7151  9                                                     AA10044B
15 21  3 32  5 33  2 34  5 43  6 44  4 45 44 46  4 47  6 56  5 57  2 58AA10045A
 5128  9140  7152  9                                                     AA10045B
15 22  3 33  5 34  2 35  5 44  6 45  4 46 44 47  4 48  6 57  5 58  2 59AA10046A
 5129  9141  7153  9                                                     AA10046B
14 23  3 34  5 35  2 36  5 45  6 46  4 47 46 48  4 58  5 59  2 60  5130AA10047A
 9142  7154  9                                                           AA10047B
```

```
11 24  3 35 42 36  2 46 43 47 41 48 44 59 42 60  2131  9143  7155  9   AA10048
11 25 40 37 39 38 42 49  8 50  4 51  6 76 42 77  4 95  6132 65144  7   AA10049
11 26 40 37 42 38 39 39 42 49  4 50  8 51  4 52  6 77  6133 65145  7   AA10050
11 27 40 38 42 39 39 40 42 49  6 50  4 51  8 52  4 53  6134 65146  7   AA10051
11 28 40 39 42 40 39 41 42 50  6 51  4 52  8 53  4 54  6135 65147  7   AA10052
11 29 40 40 42 41 39 42 42 51  6 52  4 53  8 54  4 55  6136 65148  7   AA10053
11 30 40 41 42 42 39 43 42 52  6 53  4 54  8 55  4 56  6137 65149  7   AA10054
11 31 40 42 42 43 39 44 42 53  6 54  4 55  8 56  4 57  6138 65150  7   AA10055
11 32 40 43 42 44 39 45 42 54  6 55  4 56  8 57  4 58  6139 65151  7   AA10056
11 33 40 44 42 45 39 46 42 55  6 56  4 57  8 58  4 59  6140 65152  7   AA10057
11 34 40 45 42 46 39 47 42 56  6 57  4 58  8 59  4 60  6141 65153  7   AA10058
10 35 40 46 42 47 39 48 42 57  6 58  4 59 45 60  4142 65154  7         AA10059
 8 36 40 47 49 48 39 58 43 59 41 60  8143 65155  7                     AA10060
35 95 60 35                                                            AA2 AAA
1 2 3 4 5 6 7 8 9101112 1 1 2 3 4 5 6 7 8 9101112 113253749 113253749  AA200000
 9  1 10 13 36 14 67 25 66 61 12 62 11 74 67 78  1 90 11                AA2000 1
 9  2 10 13 67 14 36 15 67 26 66 61 11 62 12 63 11 79  1               AA2000 2
 9  3 10 14 67 15 36 16 67 27 66 62 11 63 12 64 11 80  1               AA2000 3
 9  4 10 15 67 16 36 17 67 28 66 63 11 64 12 65 11 81  1               AA2000 4
 9  5 10 16 67 17 36 18 67 29 66 64 11 65 12 66 11 82  1               AA2000 5
 9  6 10 17 67 18 36 19 67 30 66 65 11 66 12 67 11 83  1               AA2000 6
 9  7 10 18 67 19 36 20 67 31 66 66 11 67 12 68 11 84  1               AA2000 7
 9  8 10 19 67 20 36 21 67 32 66 67 11 68 12 69 11 85  1               AA2000 8
 9  9 10 20 67 21 36 22 67 33 66 68 11 69 12 70 11 86  1               AA2000 9
 9 10 10 21 67 22 36 23 67 34 66 69 11 70 12 71 11 87  1               AA200010
 9 11 10 22 67 23 36 24 67 35 66 70 11 71 12 72 11 88  1               AA200011
 7 12 10 23 48 24 36 36 66 71 47 72 12 89  1                           AA200012
 5  1 13 14  1 62 66 74 66 90  1                                       AA200013
 5  1 15  2 14 13  1 61  1 73 14                                       AA200014
 5  1 14  2 15  3 14 14  1 62  1                                       AA200015
 5  2 14  3 15  4 14 15  1 63  1                                       AA200016
 5  3 14  4 15  5 14 16  1 64  1                                       AA200017
 5  4 14  5 15  6 14 17  1 65  1                                       AA200018
 5  5 14  6 15  7 14 18  1 66  1                                       AA200019
 5  6 14  7 15  8 14 19  1 67  1                                       AA200020
 5  7 14  8 15  9 14 20  1 68  1                                       AA200021
 5  8 14  9 15 10 14 21  1 69  1                                       AA200022
 5  9 14 10 15 11 14 22  1 70  1                                       AA200023
 5 10 14 11 15 12 14 23  1 71  1                                       AA200024
 4 11 51 12 15 24  1 72  1                                             AA200025
```

```
9  1 16  2 69  3 66 14 37 62 37 73 18 74 17 90 17 91  1          AA200026
9  2 37 13 16 14 69 15 66 26 37 73 17 74 18 75 17 92  1          AA200027
9 14 37 25 16 26 69 27 66 38 37 74 17 75 18 76 17 93  1          AA200028
9 26 37 37 16 38 69 39 66 50 37 75 17 76 18 77 17 94  1          AA200029
7 38 55 49 16 50 69 51 66 76 54 77 18 95  1                      AA200030
5  1 20  2  1 13 19 61 19 73  1                                  AA200031
5  1 19 13 20 14  1 25 19 74  1                                  AA200032
5 13 19 25 20 26  1 37 19 75  1                                  AA200033
5 25 19 37 20 38  1 49 19 76  1                                  AA200034
4 37 70 49 20 50  1 77  1                                        AA200035
```

APPENDIX B

KEYPUNCH INPUT FORMAT AND LISTINGS OF THE SHELL TRANSIENT RESPONSE COMPUTER PROGRAMS

This appendix includes the input formats, listings and sample run data of three (3) related computer programs. The analyses of the programs are described in Section III of the subject report. The detail data are arranged according to the following order:

1. Natural Frequencies and Modes of Simply Supported Cylindrical Shell

This program provides circumferential harmonic numbers, n, axial half wave numbers, k, and the corresponding natural frequencies and modes in either print or punched cards. For the sample run, thirty lowest natural frequencies for the shell are computed and printed out in sequence. These frequencies are in the range of $n = 2 \sim 30$ and $k = 1, 3, 5, 7, \ldots 15$.

The program also provides the normalized displacement components, u, v, and w for each of the natural modes and the corresponding natural frequencies. For the sample run, values of u, v and w are printed out for 21 axial stations.

2. Transient Response for the General Stiffened Shell

This program provides the transient response solution for displacement components, u, v, and w at a given location of the shell. Two sample runs are included here.

a. Clyindrical Shell - From the data obtained by using the program, "Natural Frequencies and Modes of Simply Supported Cylindrical Shell," 18 modes for odd values of k are selected for input to this program. The print out is shown for the response of the first mode, as well as the response for 12 modes and for 18 modes.

b. Instrument Unit Structure - Data obtained from the program "General Stiffened Shell," NOR-66-201, May 1966 of this contract, are directly used as input data to the present program. Final results shown in the output data sheets are the modal summation based on nine natural modes, of the nine modes, two modes are corresponding to $n = 1$; two modes, $n = 2$; three modes, $n = 4$; and two modes, $n = 6$.

3. Natural Frequency and Modes of Mass Attached Cylindrical Shell

This program computes the natural frequencies and mode shapes of a mass attached shell structure. Natural frequencies and mode shapes are computed by using 30, 40 and 50 modes of the unloaded shell. Frequencies and mode shapes that are converged for the 50 mode case are shown here.

NATURAL FREQUENCIES AND MODES OF SIMPLY SUPPORTED CYLINDRICAL SHELL

KEY PUNCH FORM - GENERAL PURPOSE
FORM 20-708 (R.7-63)

JOB TITLE						ENGINEER	PAGE OF
Natural Frequencies and Modes of S.S. Cylindrical Shell							
DPWA SERIAL NO.	PRE.	DPD JOB NO.	DASH		FOR ORGN. NO.	ANALYST	DATE

INPUT DATA FORMAT

A	H	E	NU	RHO	L

KF	NF	KS	NKF	KINC	NS

```
$EXECUTE        IBJOB
$IBJOB          GO,MAP
$IBFTC SAMPL
      DIMENSION B(50,50),C(50,50),OM(50,50),KSTO(50),NSTO(50),
     1   OSTO(2000)
      REAL NU,LAMBDA,L,NU2                                              CILY
      READ (5,10) A,H,E,NU,RHO,L,KF,NF,KS,NKF,KINC,NS                   CILY
   10 FORMAT(6E12.8/6I3)                                                CILY
      ITER =1                                                           CILY
      NU2 =NU*NU                                                        CILY
      LAMBDA =SQRT(E/((1.-NU*NU)*RHO))                                  CILY
      AOH4 =(A/H)**4                                                    CILY
      HOL2 =(H/LAMBDA)**2                                               CILY
      CON1 =1./(12.*AOH4*HOL2)                                          CILY
      PAOL =3.1415927*A/L                                               CILY
      PAOL2 =PAOL*PAOL                                                  CILY
      PAOL4 =PAOL2*PAOL2                                                CILY
      CON2 =12.*(1.- NU2)*(A/H)**2                                      CILY
      STAT =NS                                                          CILY
      DO 90 N=2,NF                                                      CILY
      XN =N                                                             CILY
      XN2=XN*XN                                                         CILY
      DO 90 K=KS,KF,KINC                                                CILY
      XK =K                                                             CILY
      XK2=XK*XK                                                         CILY
      FAC1 =(XN2+XK2*PAOL2-1.)**2                                       CILY
      XK4=XK2*XK2                                                       CILY
      FAC2 =CON2*XK4*PAOL4/(XN2+XK2*PAOL2)**2                           CILY
      OM(N,K)=SQRT(CON1*(FAC1+FAC2))                                    CILY
      PKAOL =XK*PAOL                                                    CILY
      PKAOL2=XK2*PAOL2                                                  CILY
      PKN2=(PKAOL2+XN2)**2                                              CILY
      B(N,K) =(-NU*PKAOL2+XN2)*PKAOL/PKN2                               CILY
      C(N,K) =((2.+NU)*PKAOL2+XN2)/PKN2                                 CILY
   90 CONTINUE                                                          CILY
      WRITE (6,20)                                                      CILY
   20 FORMAT(16H1 * INPUT DATA * /)                                     CILY
      WRITE (6,25)                                                      CILY
   25 FORMAT(6X,7H RADIUS,9X,9HTHICKNESS,17X,1HE, 7X,15HPOISSON'S RATIO,CILY
```

```
C  COMPUTATION OF DEFLECTION AT EACH STATION                          CILY
      WRITE (6,36) ITER                                               CILY
   36 FORMAT(///15H MODE NUMBER * I2,2H * /)                          CILY
      WRITE (6,123)                                                   CILY
  123 FORMAT(7X,8H STATION,17X,1HU,17X,1HV,17X,1HW/)                  CILY
      SX =0.                                                          CILY
      UK=K1                                                           CILY
      DO 120 IS =1,NS1                                                CILY
      QUANT =UK*POL*SX                                                CILY
      SQ =SIN(QUANT)                                                  CILY
      U =B(N1,K1)*COS(QUANT)                                          CILY
      V =C(N1,K1)*SQ                                                  CILY
      W =SQ                                                           CILY
      WRITE (6,125) SX,U,V,W                                          CILY
      WRITE (7,128) N1,K1,U,V,W
      SX =SX+DX                                                       CILY
  120 CONTINUE                                                        CILY
  125 FORMAT(4E18.6)                                                  CILY
  128 FORMAT (2I10,3E16.6)
      KSTO(ITER) =K1
      NSTO(ITER) =N1

     111X,3HRHO,12X,6HLENGTH )                                        CILY
C  HUNT FOR THE SMALLEST OMEGA AND REARRANGE THEM IN SEQUENCE         CILY
      WRITE (6,30) A,H,E,NU,RHO,L                                     CILY
   30 FORMAT (6E18.5)                                                 CILY
      SX =L/STAT                                                      CILY
      DX =SX                                                          CILY
      POL =3.1415927/L                                                CILY
      NS1 =NS+1                                                       CILY
   32 SMALL =OM(2,1)                                                  CILY
      DO 100 N=2,NF                                                   CILY
      DO 100 K=KS,KF,KINC                                             CILY
      IF(OM(N,K).LE.SMALL) GO TO 91                                   CILY
      GO TO 100                                                       CILY
   91 N1=N                                                            CILY
      K1=K                                                            CILY
      SMALL=OM(N,K)                                                   CILY
  100 CONTINUE                                                        CILY
      WRITE (6,50) N1,K1,OM(N1,K1)                                    CILY
   50 FORMAT(1H1, 7HFOR N =I2,3X,3HK =I2,3X,11HFREQUENCY =E15.6/)     CILY
```

```
      OSTO(ITER) =OM(N1,K1)/6.283185
      OM(N1,K1) =5.E+25                                                 CILY
      ITER =ITER+1                                                      CILY
      IF(ITER.LE.NKF) GO TO 32                                          CILY
      WRITE (7,138) (NSTO(J),KSTO(J),OSTO(J),J=1,NKF)
  138 FORMAT (2I8,E18.7)
      WRITE (6,142)
  142 FORMAT (1H1 29HSEQUENCE OF FREQUENCY IN CPS /)
      WRITE (6,148)
  148 FORMAT(10X,2H N 11X,1HK 11X,4HFREQ,5X,5HORDER /)
      DO 145 I=1,NKF
  145 WRITE (6,147) NSTO(I),KSTO(I),OSTO(I),I
  147 FORMAT(2I12,E18.7,I6)
      STOP                                                              CILY
      END                                                               CILY
$DATA
+195     +02+5       -01+103     +08+3       -00+2591    -03+534     +02
 15 30  1 30  2 20
```

```
* INPUT DATA *
     RADIUS          THICKNESS                E        POISSON'S RATIO          RHO            LENGTH
     0.19500E 02       0.50000E-01       0.10300E 08       0.30000E 00       0.25910E-03       0.53400E 02
```

FOR N = 6 K = 1 FREQUENCY = 0.461578E 03

MODE NUMBER * 1 *

STATION	U	V	W
0.	0.293335E-01	0.	0.
0.267000E 01	0.289724E-01	0.438435E-02	0.156434E 00
0.534000E 01	0.278978E-01	0.866075E-02	0.309017E 00
0.801000E 01	0.261363E-01	0.127239E-01	0.453990E 00
0.106800E 02	0.237313E-01	0.164737E-01	0.587785E 00
0.133500E 02	0.207419E-01	0.198179E-01	0.707107E 00
0.160200E 02	0.172418E-01	0.226741E-01	0.809017E 00
0.186900E 02	0.133171E-01	0.249720E-01	0.891007E 00
0.213600E 02	0.906455E-02	0.266550E-01	0.951057E 00
0.240300E 02	0.458877E-02	0.276817E-01	0.987688E 00
0.267000E 02	0.134034E-08	0.280268E-01	0.100000E 01
0.293700E 02	-0.458877E-02	0.276817E-01	0.987688E 00
0.320400E 02	-0.906455E-02	0.266550E-01	0.951057E 00
0.347100E 02	-0.133171E-01	0.249720E-01	0.891007E 00
0.373800E 02	-0.172418E-01	0.226741E-01	0.809017E 00
0.400500E 02	-0.207419E-01	0.198179E-01	0.707107E 00
0.427200E 02	-0.237313E-01	0.164737E-01	0.587785E 00
0.453900E 02	-0.261363E-01	0.127239E-01	0.453991E 00
0.480600E 02	-0.278978E-01	0.866075E-02	0.309017E 00
0.507300E 02	-0.289724E-01	0.438436E-02	0.156435E 00
0.534000E 02	-0.293335E-01	0.673757E-08	0.240398E-06

FOR N =11 K = 3 FREQUENCY = 0.138754E 04

MODE NUMBER * 12 *

STATION	U	V	W
0.	0.229042E-01	0.	0.
0.267000E 01	0.204078E-01	0.381357E-02	0.453990E 00
0.534000E 01	0.134628E-01	0.679584E-02	0.809017E 00
0.801000E 01	0.358301E-02	0.829670E-02	0.987688E 00
0.106800E 02	-0.707779E-02	0.798898E-02	0.951057E 00
0.133500E 02	-0.161957E-01	0.593978E-02	0.707107E 00
0.160200E 02	-0.217832E-01	0.259578E-02	0.309017E 00
0.186900E 02	-0.226222E-01	-0.131407E-02	-0.156434E 00
0.213600E 02	-0.185299E-01	-0.493746E-02	-0.587785E 00
0.240300E 02	-0.103983E-01	-0.748456E-02	-0.891006E 00
0.267000E 02	-0.382229E-08	-0.840011E-02	-0.100000E 01
0.293700E 02	0.103983E-01	-0.748456E-02	-0.891007E 00
0.320400E 02	0.185299E-01	-0.493747E-02	-0.587785E 00
0.347100E 02	0.226222E-01	-0.131407E-02	-0.156435E 00
0.373800E 02	0.217832E-01	0.259578E-02	0.309017E 00
0.400500E 02	0.161957E-01	0.593978E-02	0.707106E 00
0.427200E 02	0.707780E-02	0.798898E-02	0.951056E 00
0.453900E 02	-0.358300E-02	0.829670E-02	0.987688E 00
0.480600E 02	-0.134627E-01	0.679584E-02	0.809017E 00
0.507300E 02	-0.204078E-01	0.381358E-02	0.453991E 00
0.534000E 02	-0.229042E-01	0.680913E-08	0.810600E-06

FOR N =13 K = 5 FREQUENCY = 0.230582E 04

MODE NUMBER * 26 *

STATION	U	V	W
0.	0.223914E-01	0.	0.
0.267000E 01	0.158331E-01	0.424417E-02	0.707107E 00
0.534000E 01	0.221569E-10	0.600216E-02	0.100000E 01
0.801000E 01	-0.158331E-01	0.424417E-02	0.707107E 00
0.106800E 02	-0.223914E-01	0.190757E-09	0.317814E-07
0.133500E 02	-0.158331E-01	-0.424417E-02	-0.707107E 00
0.160200E 02	-0.106744E-08	-0.600216E-02	-0.100000E 01
0.186900E 02	0.158331E-01	-0.424417E-02	-0.707107E 00
0.213600E 02	0.223914E-01	-0.739271E-09	-0.123167E-06
0.240300E 02	0.158331E-01	0.424417E-02	0.707107E 00
0.267000E 02	0.444833E-08	0.600216E-02	0.100000E 01
0.293700E 02	-0.158331E-01	0.424417E-02	0.707107E 00
0.320400E 02	-0.223914E-01	0.271881E-08	0.452972E-06
0.347100E 02	-0.158331E-01	-0.424417E-02	-0.707106E 00
0.373800E 02	-0.145024E-07	-0.600216E-02	-0.100000E 01
0.400500E 02	0.158331E-01	-0.424417E-02	-0.707107E 00
0.427200E 02	0.223914E-01	-0.505611E-08	-0.842381E-06
0.453900E 02	0.158331E-01	0.424416E-02	0.707106E 00
0.480600E 02	0.232218E-07	0.600216E-02	0.100000E 01
0.507300E 02	-0.158331E-01	0.424417E-02	0.707108E 00
0.534000E 02	-0.223914E-01	0.739340E-08	0.123179E-05

SEQUENCE OF FREQUENCY IN CPS

N	K	FREQ	ORDER
6	1	0.7346245E 02	1
7	1	0.7542803E 02	2
5	1	0.8743618E 02	3
8	1	0.8758063E 02	4
9	1	0.1059216E 03	5
4	1	0.1253863E 03	6
10	1	0.1284192E 03	7
11	1	0.1541813E 03	8
12	1	0.1828206E 03	9
3	1	0.2079398E 03	10
13	1	0.2141621E 03	11
11	3	0.2208343E 03	12
10	3	0.2220137E 03	13
12	3	0.2313555E 03	14
9	3	0.2378022E 03	15
14	1	0.2481226E 03	16
13	3	0.2508561E 03	17
8	3	0.2711430E 03	18
14	3	0.2771556E 03	19
15	1	0.2846603E 03	20
15	3	0.3087176E 03	21
16	1	0.3237531E 03	22
7	3	0.3256807E 03	23
16	3	0.3445400E 03	24
17	1	0.3653891E 03	25
13	5	0.3669834E 03	26
14	5	0.3708424E 03	27
12	5	0.3754184E 03	28
17	3	0.3839920E 03	29
15	5	0.3851326E 03	30

KEY PUNCH FORM - GENERAL PURPOSE
FORM 20-708 (R.7-63)

JOB TITLE	ENGINEER	PAGE
TRANSIENT RESPONSE PROGRAM		1 OF 2

DPWA SERIAL NO.	PRE.	DPD JOB NO.	DASH	FOR ORGN. NO.	ANALYST	DATE

INPUT DATA FORMAT

TIN	DELT	TEND	LAMDA	ALFA	THO
OMFC	TETA				
NM	NS	NR	NRESP	NSTAT	LOCFC
MT	ITAO				
LREP(1)	LREP(2)	*	* LREP (NRESP)		
FFCT (1)	FFCT (2)	FFCT (ITAO 1)			
ØM	NCH	*1			
Z1	Z2	Z3	Z4	FQ	*2
NX (1)	NY (1)	U (1)	V (1)	W (1)	*1
NX (2)	NY (2)	U (2)	V (2)	W (2)	*1
NX (NSTAT)	NY (NSTAT)	U (NSTAT)	V (NSTAT)	W (NSTAT)	*1
WMAX	BMAX	*2			
W (1)	U (1)	V (1)	BETA (1)	*2	

KEY PUNCH FORM - GENERAL PURPOSE
FORM 20-708 (R.7-63)

JOB TITLE	ENGINEER	PAGE
TRANSIENT RESPONSE PROGRAM		2 OF 2
DPWA SERIAL NO. / PRE. / DPD JOB NO. / DASH / FOR ORGN. NO.	ANALYST	DATE

W (2)	U (2)	V (2)	BETA (2)	*2
— — —	— — —	— — —	— — —	*2
W (NSTAT)	U (NSTAT)	V (NSTAT)	BETA (NSTAT)	*2
NSEGR AC (1)	AC (2)	— —	— —	— — — — AC (7) *2
XA	XB	HA	RHOS	NSEG KT2 *2
RHO	EN	EPHI	IX	IY RRAD *3 *2
AREA				*3 *2

*1 FOR SIMPLY SUPPORTED CYLINDRICAL SHELL (NR = 0)

*2 FOR GENERAL STIFFENED SHELL (NR ≠ 0)

*3 THESE DATA MUST BE PROVIDED FOR EACH INDIVISUAL RING STIFFENER - KT2 = 1, 2 OR NS < 0

```
$EXECUTE        IBJOB
$IBJOB
$IBFTC SHOCK
C   DYNAMIC RESPONSE OF THE INSTRUMENT UNIT DUE TO IMPACT LOADING
C                                                                       IMPT
      DIMENSION U(50),AC(7),V(50),W(50),BETA(50),DELS(100),FNCT(100),   IMPT
     1   Q(100),FU(20,100),FV(20,100),FW(20,100),LREP(10),SUMU(20,100), IMPT
     2   SUMV(20,100),SUMW(20,100),NX(50),NY(50),FFCT(100),QF(100)
      EQUIVALENCE (NCH,NX(1))                                           IMPT
      COMMON AC,NDEGR                                                   IMPT
      REAL LAMDA,LENG,IX,IY                                             IMPT
      READ (5,2) TIN,DELT,TEND,LAMDA,ALFA,THO,OMFC,TETA                 IMPT
    2 FORMAT (6E12.8)
C  NUMBER OF INCREMENT FOR TIME MUST BE LARGER THAN THAT OF SEGMENT CUTS
      READ (5,7) NM,NS,NR,NRESP,NSTAT,LOCFC,MT,ITAO                     IMPT
      READ (5,7) (LREP(I),I =1,NRESP)                                   IMPT
    7 FORMAT(10I5)                                                      IMPT
      WRITE (6,214) (LREP(I),I=1,NRESP)
  214 FORMAT(//32H1RESPONSE SOUGHT AT SEGMENT NO.  5I6 /)
      OMFC =OMFC*6.2831854
      NT =MT
      IMOD =1                                                           IMPT
      IFT =ITAO+1                                                       IMPT
      READ (5,2) (FFCT(I),I=1,IFT)                                      IMPT
      T =TIN                                                            IMPT
C                                                                       IMPT
      DO 200 J=1,NT                                                     IMPT
      QF(J) =0.
      DO 200 I=1,NRESP                                                  IMPT
      SUMU(I,J) =0.                                                     IMPT
      SUMV(I,J) =0.                                                     IMPT
      SUMW(I,J) =0.                                                     IMPT
  200 CONTINUE                                                          IMPT
      WRITE (6,210)
  210 FORMAT(1H 11HINPUT DATA /)
      WRITE (6,212) TIN,DELT,LAMDA,TEND,ALFA,THO,OMFC                   IMPT
  212 FORMAT(2X,11HT INITIAL =E14.5,3X, 6HDELT =E14.5,3X,7HLAMDA =E14.5,
     13X,6HTEND =E14.5,3X,7HALPHA =E14.5,//2X,16HTHETA OF FORCE =E14.5, IMPT
     23X,15HFORCING OMEGA =E14.5/)
      WRITE (6,610)                                                     IMPT
```

```
  610 FORMAT (/1H 29H        FORCING FUNCTIONS ARE /)                    IMPT
      WRITE (6,401) (FFCT(I),I=1,IFT)                                    IMPT
C                                                                        IMPT
C                                                                        IMPT
C                                                                        IMPT
C  NM =NUMBER OF MODES TO BE ADDED                                       IMPT
C  NS =NUMBER OF SECTIONS                                                IMPT
C  NRESP =NUMBER OF POINTS RESPONSE IS SOUGHT                            IMPT
C  NSEG =NUMBER OF SEGMENTS                                              IMPT
C  NCH =CIRCUMFERENCIAL WAVE NUMBER                                      IMPT
C  NT =NUMBER OF INCREMENTATION OF TIME                                  IMPT
C  ITAO =NUMBER OF INCREMENTAL TIME FOR THE FORCING FUNCTION             IMPT
    5 CONTINUE                                                           IMPT
      NT =MT
      IF(NR.NE.0) GO TO 400                                              IMPT
      READ (5,6) OM,NCH                                                  IMPT
      OM =OM*6.2831854                                                   IMPT
      GO TO 402
  401 FORMAT(5E15.6)                                                     IMPT
  400 READ (5,401) Z1,Z2,Z3,Z4,FQ                                        IMPT
      OM =FQ*6.2831854                                                   IMPT
      NCH =Z1                                                            IMPT
    6 FORMAT (1E12.8,I5)                                                 IMPT
  402 CONTINUE
      IF(NR) 8,9,8                                                       IMPT
    9 READ (5,10) (NX(I),NY(I),U(I),V(I),W(I),I=1,NSTAT)                 IMPT
      GO TO 17                                                           IMPT
    8 READ (5,32) WMAX,BMAX
   32 FORMAT(3E16.8)
      READ (5,4) (W(I),U(I),V(I),BETA(I),I=1,NSTAT)
   10 FORMAT(2I10,3E16.6)                                                IMPT
    4 FORMAT(4E16.8)
   17 KT1 =1                                                             IMPT
      WRITE (6,326)
  326 FORMAT(1H1)
      IF(NR.NE.0) GO TO 319                                              IMPT
      WRITE (6,218)                                                      IMPT
  218 FORMAT(//17H INPUT U V AND W /)
      WRITE (6,222) (U(I),V(I),W(I),I=1,NSTAT)                           IMPT
  222 FORMAT(3E18.6)                                                     IMPT
```

```
      GO TO 324                                                         IMPT
  319 WRITE (6,321)                                                     IMPT
      WRITE (6,323) (U(I),V(I),W(I),BETA(I),I=1,NSTAT)                  IMPT
  321 FORMAT(//25H INPUT U, V, W, AND BETA /)                           IMPT
  323 FORMAT(4E18.6)                                                    IMPT
  324 CONTINUE
      IF(NR.EQ.0) GO TO 328
      DO 202 I=1,NSTAT
      U(I) =U(I)*WMAX
      V(I) =V(I)*WMAX
      W(I) =W(I)*WMAX
      BETA(I) =BETA(I)*BMAX
  202 CONTINUE
  328 CONTINUE
      NSECT =NS                                                         IMPT
      N1 =1                                                             IMPT
      IF(NSECT) 83,500,50                                               IMPT
   83 KT1 =2                                                            IMPT
      NSECT=-NSECT                                                      IMPT
   50 K1 =1                                                             IMPT
      R3 =0.                                                            IMPT
      DO 12 I=1,NSECT                                                   IMPT
      READ (5,85) NDEGR,(AC(I2),I2=1,7)                                 IMPT
   85 FORMAT (I3,7E11.7)                                                IMPT
      READ (5,76) XA,XB,HA,RHOS,NSEG,KT2                                IMPT
   76 FORMAT (4E12.8,2I3)                                               IMPT
      RESV =XB                                                          IMPT
   77 FSEG =NSEG
      DELTX =(XB-XA)/FSEG                                               IMPT
      XA=-DELTX                                                         IMPT
      RH =RHOS*HA                                                       IMPT
      DO 14 I1 =1,NSEG                                                  IMPT
      XA=XA+DELTX                                                       IMPT
      XB=XA+DELTX/2.                                                    IMPT
      CALL YDIFF (XB,RB,YPRIME)                                         IMPT
      ANGL =ATAN(YPRIME)                                                IMPT
      DELS(K1) =DELTX/COS(ANGL)                                         IMPT
      RRH =RB*RH                                                        IMPT
      FNCT(K1) =(U(K1)*U(K1)+V(K1)*V(K1)+W(K1)*W(K1))*RRH               IMPT
      IF(I.EQ.NSECT.AND.I1.EQ.NSEG.AND.KT1.EQ.2) GO TO 15               IMPT
```

```
      IF(KT2.EQ.0) GO TO 13                                             IMPT
      IF(KT2.EQ.1.AND.I1.EQ.1) GO TO 15                                 IMPT
      IF(KT2.EQ.2) GO TO 15                                             IMPT
      GO TO 13                                                          IMPT
   15 READ (5,2)  RHO,EN,EPHI,IX,IY,RRAD,AREA                           IMPT
      R1 =(U(K1)+BETA(K1)*EN)**2+(W(K1)-BETA(K1)*EPHI)**2+V(K1)*V(K1)   IMPT
      R2 =(IX+IY)*BETA(K1)*BETA(K1)                                     IMPT
      R3=R3+(RHO*RRAD*(AREA*R1+R2))                                     IMPT
   13 K1 =K1+1                                                          IMPT
   14 CONTINUE                                                          IMPT
   12 CONTINUE                                                          IMPT
      WRITE (6,142)                                                     IMPT
  142 FORMAT(1H128H** INTERMEDIATE PRINT OUT **//9H FUNCTION)           IMPT
      WRITE (6,143) (FNCT(I),I=1,K1)                                    IMPT
  143 FORMAT(6E18.6)
      NSTA1 =NSTAT-1
C                                                                       IMPT
      CALL SHINT (FNCT,DELS,TII,NSTA1)
C                                                                       IMPT
      T =TIN                                                            IMPT
      TII =3.1415927*(TII+R3)
      WRITE (6,145) TII                                                 IMPT
  145 FORMAT(//1H 13HINTEGRATION =E15.5)
      HFL =0.5*LAMDA                                                    IMPT
      GAMA =SQRT(OM*OM-HFL*HFL)                                         IMPT
      BTCN =ALFA-HFL                                                    IMPT
C  COMPUTATION OF Q(T) FOR A FIXED TIME                                 IMPT
C                                                                       IMPT
      IT =1                                                             IMPT
      FCH =NCH                                                          IMPT
      IF(NR.NE.0) FCH =Z1                                               IMRT
      Q1 =W(LOCFC)*COS(FCH*THO)/(TII*GAMA)                              IMPT
C                                                                       IMPT
  100 CONTINUE                                                          IMPT
      TAO =0.                                                           IMPT
      QSUM =0.                                                          IMPT
      ITI =IT+1                                                         IMPT
      DO 101 I6=1,ITI                                                   IMPT
      EX =EXP(-0.5*(T-TAO))                                             IMPT
      SNF =SIN(GAMA*(T-TAO))                                            IMPT
```

```
      IF (IG.GT.IFT) GO TO 412                                          IMPT
      FST =FFCT(IG)                                                     IMPT
      GO TO 411                                                         IMPT
  412 FST =0.                                                           IMPT
  411 CONTINUE                                                          IMPT
      QF(IG) =FST*SNF*EX
      DELS(IG) =DELT
      TAO =TAO+DELT                                                     IMPT
  101 CONTINUE                                                          IMPT
C                                                                       IMPT
      IF(IT.EQ.1) GO TO 107                                             SINT
      IF(IT.LT.2) GO TO 106                                             IMPT
      CALL SHINT (QF,DELS,QSUM,IT)                                      IMPT
      Q(IT) =Q1*QSUM                                                    IMPT
      GO TO 107
  106 Q(IT) =0.
  107 IT =IT+1
      T =T+DELT                                                         IMPT
      IF(IT.LE.NT) GO TO 100                                            IMPT
      NT =NT-1
      WRITE (6,223)
  223 FORMAT(//12H VALUES OF Q/)
      WRITE (6,224) (Q(J),J=1,NT)                                       IMPT
  224 FORMAT(6E18.6)
      CNT =COS(FCH*TETA)                                                IMPT
      SNT =SIN(FCH*TETA)                                                IMPT
      DO 120 I=1,NRESP                                                  IMPT
      K =LREP(I)                                                        IMPT
      DO 120 J=1,NT                                                     IMPT
      FU(I,J) =U(K)*CNT*Q(J)                                            IMPT
      FV(I,J) =V(K)*SNT*Q(J)                                            IMPT
      FW(I,J) =W(K)*CNT*Q(J)                                            IMPT
  120 CONTINUE                                                          IMPT
      WRITE (6,125) NCH                                                 IMPT
  125 FORMAT(1H120HFOR THE WAVE NUMBER I2/)                             IMPT
      WRITE (6,126)                                                     IMPT
  126 FORMAT(14X,2H T,19X,1HU,19X,1HV,19X,1HW//)                        IMPT
      T =TIN                                                            IMPT
      DO 130 I=1,NRESP                                                  IMPT
      K =LREP(I)                                                        IMPT
```

```
      WRITE (6,132) K,TETA                                              IMPT
      DO 130 J=1,NT                                                     IMPT
      WRITE (6,135) T,  FU(I,J),FV(I,J),FW(I,J)                         IMPT
      T =T+DELT                                                         IMPT
  130 CONTINUE                                                          IMPT
  132 FORMAT(3X,24H AT LOCATION OF SEGMENT I2,3X,10HAND THETA E14.5/)   IMPT
  135 FORMAT(4E20.6)                                                    IMPT
C                                                                       IMPT
      DO 250 I=1,NRESP                                                  IMPT
      DO 250 J=1,NT                                                     IMPT
      SUMU(I,J) =SUMU(I,J)+FU(I,J)                                      IMPT
      SUMV(I,J) =SUMV(I,J)+FV(I,J)                                      IMPT
      SUMW(I,J) =SUMW(I,J)+FW(I,J)                                      IMPT
  250 CONTINUE                                                          IMPT
      T =TIN                                                            IMPT
      WRITE (6,300)                                                     IMPT
  300 FORMAT(//45H RESPONSES SUMMED UP WITH THE PREVIOUS MODES /)       IMPT
      DO 330 I=1,NRESP                                                  IMPT
      K =LREP(I)                                                        IMPT
      WRITE (6,132) K,TETA                                              IMPT
      DO 330 J=1,NT                                                     IMPT
      WRITE (6,135) T,SUMU(I,J),SUMV(I,J),SUMW(I,J)                     IMPT
      T =T+DELT                                                         IMPT
  330 CONTINUE                                                          IMPT
      IF(IMOD.GE.NM) GO TO 500                                          IMPT
      IMOD =IMOD+1                                                      IMPT
      GO TO 5                                                           IMPT
  500 STOP                                                              IMPT
      END                                                               MAIN
$IBFTC DIFFR
      SUBROUTINE YDIFF (X,Y,YPRIME)                                     YDIF
      DIMENSION AC(7),COEF(2)                                           YDIF
      COMMON AC,NDEGR                                                   YDIF
C                                                                       YDIF
      Y =AC(1)                                                          YDIF
      IF (NDEGR.GE.2) GO TO 651                                         YDIF
      YSECND =0.                                                        YDIF
      IF (NDEGR.EQ.1) GO TO 650                                         YDIF
      YPRIME =0.                                                        YDIF
      RETURN                                                            YDIF
```

```
  650 YPRIME =AC(2)                                                     YDIF
      GO TO 5200                                                        YDIF
  651 YPRIME =AC(2)                                                     YDIF
      IF(X.EQ.0.) GO TO 7800                                            YDIF
      N1 =NDEGR                                                         YDIF
      DO 780 I2 =2,N1                                                   YDIF
      COEF(1)=I2                                                        YDIF
  780 YPRIME =YPRIME+COEF(1)*AC(I2+1)*X**(I2-1)                         YDIF
 7800 YSECND =2.*AC(3)                                                  YDIF
      IF (X.EQ.0.) RETURN                                               YDIF
      IF(NDEGR.EQ.2) GO TO 5200                                         YDIF
      COEF(2) =2.                                                       YDIF
      N2 =NDEGR-1                                                       YDIF
      DO 781 I2=2,N2                                                    YDIF
      COEF(1)=COEF(2)                                                   YDIF
      COEF(2)=COEF(1)+2.*FLOAT(I2)                                      YDIF
  781 YSECND =YSECND+COEF(2)*AC(I2+2)*X**(I2-1)                         YDIF
 5200 DO 649 I2=1,NDEGR                                                 YDIF
  649 Y =Y+AC(I2+1)*X**I2                                               YDIF
      RETURN                                                            YDIF
      END                                                               YDIF
$IBFTC INTEG
      SUBROUTINE SHINT (F,DH,SUM,K)                                     SINT
      DIMENSION F(100),DH(100),FP(100)
      SUM =0.                                                           SINT
      KM1=K-1                                                           SINT
      DO 2 I =1,K
      IP1=I+1                                                           SINT
      IP2=I+2                                                           SINT
      IM1=I-1                                                           SINT
      IF(I.EQ.1) GO TO 10                                               SINT
      FP(I) =0.5*((F(IP1)-F(I))/DH(I)+(F(I)-F(IM1))/DH(IM1))            SINT
      IF(I.EQ.KM1) GO TO 15                                             SINT
    7 FP(IP1) =0.5*((F(IP2)-F(IP1))/DH(IP1)+(F(IP1)-F(I))/DH(I))        SINT
C                                                                       SINT
    6 CORE =0.5*DH(I)*(F(I)+F(IP1))
      ADD =(DH(I)*DH(I)/12.)*(FP(I)-FP(IP1))                            SINT
      SUM =SUM+ADD+CORE                                                 SINT
      GO TO 2                                                           SINT
   10 FP(I) =(F(IP1)-F(I))/DH(I)                                        SINT
```

```
      GO TO 7                                                           SINT
   15 FP(IP1) =(F(IP1)-F(I))/DH(I)                                      SINT
      GO TO 6                                                           SINT
C                                                                       SINT
    2 CONTINUE                                                          SINT
      RETURN                                                            SINT
      END                                                               SINT
```

SAMPLE RUN

TRANSIENT RESPONSE OF CYLINDRICAL SHELL

```
RESPONSE SOUGHT AT SEGMENT NO.     11
INPUT DATA
 T INITIAL =   0.            DELT =   0.10000E-02   LAMDA =   0.            TEND =   0.41000E-01   ALPHA =   0.40000E 02

 THETA OF FORCE =   0.            FORCING OMEGA =   0.46158E 03

       FORCING FUNCTIONS ARE
  0.100000E 01   0.820152E 00   0.422184E 00  -0.645859E-01  -0.495665E 00
 -0.753422E 00  -0.778285E 00  -0.581129E 00  -0.234781E 00   0.151338E 00
  0.464970E 00   0.622990E 00   0.592672E 00   0.397071E 00   0.104212E 00
 -0.195603E 00  -0.417048E 00  -0.503522E 00  -0.440946E 00  -0.258476E 00
 -0.169355E-01   0.210824E 00   0.361450E 00   0.398272E 00   0.319628E 00
  0.156636E 00  -0.381236E-01  -0.207127E 00  -0.304559E 00  -0.308368E 00
 -0.224673E 00  -0.838736E-01   0.698214E-01   0.191953E 00   0.250409E 00
  0.233552E 00   0.151939E 00   0.336317E-01  -0.850916E-01  -0.170622E 00
 -0.201323E 00
```

FUNDAMENTAL MODE (1ST MODE)

INPUT U V AND W

0.293335E-01	0.	0.
0.289724E-01	0.438435E-02	0.156434E 00
0.278978E-01	0.866075E-02	0.309017E 00
0.261363E-01	0.127239E-01	0.453990E 00
0.237313E-01	0.164737E-01	0.587785E 00
0.207419E-01	0.198179E-01	0.707107E 00
0.172418E-01	0.226741E-01	0.809017E 00
0.133171E-01	0.249720E-01	0.891007E 00
0.906455E-02	0.266550E-01	0.951057E 00
0.458877E-02	0.276817E-01	0.987688E 00
0.134034E-08	0.280268E-01	0.100000E 01
-0.458877E-02	0.276817E-01	0.987688E 00
-0.906455E-02	0.266550E-01	0.951057E 00
-0.133171E-01	0.249720E-01	0.891007E 00
-0.172418E-01	0.226741E-01	0.809017E 00
-0.207419E-01	0.198179E-01	0.707107E 00
-0.237313E-01	0.164737E-01	0.587785E 00
-0.261363E-01	0.127239E-01	0.453991E 00
-0.278978E-01	0.866075E-02	0.309017E 00
-0.289724E-01	0.438436E-02	0.156435E 00
-0.293335E-01	0.673757E-08	0.240398E-06

** INTERMEDIATE PRINT OUT **

FUNCTION

0.217345E-06	0.639824E-05	0.243360E-04	0.522747E-04	0.874795E-04	0.126505E-03
0.165529E-03	0.200734E-03	0.228673E-03	0.246611E-03	0.252792E-03	0.246611E-03
0.228673E-03	0.200734E-03	0.165529E-03	0.126505E-03	0.874795E-04	0.522749E-04
0.243360E-04	0.639832E-05	-0.000000E-19			

INTEGRATION = 0.21232E-01

VALUES OF Q

-0.000000E-19	0.932778E-05	0.773718E-04	0.146131E-03	0.179613E-03	0.151204E-03
0.556460E-04	-0.873513E-04	-0.237994E-03	-0.348315E-03	-0.377374E-03	-0.304992E-03
-0.139675E-03	0.818599E-04	0.303648E-03	0.465484E-03	0.519755E-03	0.445296E-03
0.254294E-03	-0.978583E-05	-0.282822E-03	-0.496372E-03	-0.595391E-03	-0.552612E-03
-0.375823E-03	-0.106154E-03	0.192100E-03	0.447449E-03	0.598830E-03	0.610441E-03
0.480140E-03	0.239476E-03	-0.544203E-04	-0.332900E-03	-0.532210E-03	-0.608265E-03
-0.546311E-03	-0.363423E-03	-0.103550E-03	0.173404E-03	0.401408E-03	0.541057E-03
0.567741E-03	0.475249E-03				

FOR THE WAVE NUMBER 6

AT LOCATION OF SEGMENT 11 AND THETA -0.

T	U	V	W
0.	-0.	0.	-0.
0.100000E-02	0.125024E-13	-0.	0.932778E-05
0.200000E-02	0.103705E-12	-0.	0.773718E-04
0.300000E-02	0.195866E-12	-0.	0.146131E-03
0.400000E-02	0.240742E-12	-0.	0.179613E-03
0.500000E-02	0.202665E-12	-0.	0.151204E-03
0.600000E-02	0.745846E-13	-0.	0.556460E-04
0.700000E-02	-0.117080E-12	0.	-0.873513E-04
0.800000E-02	-0.318993E-12	0.	-0.237994E-03
0.900000E-02	-0.466860E-12	0.	-0.348315E-03
0.100000E-01	-0.505809E-12	0.	-0.377374E-03
0.110000E-01	-0.408793E-12	0.	-0.304992E-03
0.120000E-01	-0.187212E-12	0.	-0.139675E-03
0.130000E-01	0.109720E-12	-0.	0.818599E-04
0.140000E-01	0.406991E-12	-0.	0.303648E-03
0.150000E-01	0.623907E-12	-0.	0.465484E-03
0.160000E-01	0.696649E-12	-0.	0.519755E-03
0.170000E-01	0.596847E-12	-0.	0.445296E-03
0.180000E-01	0.340841E-12	-0.	0.254294E-03
0.190000E-01	-0.131163E-13	0.	-0.978583E-05
0.200000E-01	-0.379078E-12	0.	-0.282822E-03
0.210000E-01	-0.665308E-12	0.	-0.496372E-03
0.220000E-01	-0.798026E-12	0.	-0.595391E-03
0.230000E-01	-0.740688E-12	0.	-0.552612E-03
0.240000E-01	-0.503730E-12	0.	-0.375823E-03
0.250000E-01	-0.142282E-12	0.	-0.106154E-03
0.260000E-01	0.257480E-12	-0.	0.192100E-03
0.270000E-01	0.599734E-12	-0.	0.447449E-03
0.280000E-01	0.802636E-12	-0.	0.598830E-03
0.290000E-01	0.818199E-12	-0.	0.610441E-03
0.300000E-01	0.643551E-12	-0.	0.480140E-03
0.310000E-01	0.320980E-12	-0.	0.239476E-03
0.320000E-01	-0.729416E-13	0.	-0.544203E-04
0.330000E-01	-0.446199E-12	0.	-0.332900E-03
0.340000E-01	-0.713342E-12	0.	-0.532210E-03
0.350000E-01	-0.815282E-12	0.	-0.608265E-03
0.360000E-01	-0.732242E-12	0.	-0.546311E-03
0.370000E-01	-0.487110E-12	0.	-0.363423E-03
0.380000E-01	-0.138792E-12	0.	-0.103550E-03
0.390000E-01	0.232420E-12	-0.	0.173404E-03
0.400000E-01	0.538023E-12	-0.	0.401408E-03
0.410000E-01	0.725201E-12	-0.	0.541057E-03
0.420000E-01	0.760966E-12	-0.	0.567741E-03
0.430000E-01	0.636995E-12	-0.	0.475249E-03

RESPONSES SUMMED UP WITH THE PREVIOUS MODES
AT LOCATION OF SEGMENT 11 AND THETA -0.

0.	-0.	0.	-0.
0.100000E-02	0.125024E-13	-0.	0.932778E-05
0.200000E-02	0.103705E-12	-0.	0.773718E-04
0.300000E-02	0.195866E-12	-0.	0.146131E-03
0.400000E-02	0.240742E-12	-0.	0.179613E-03
0.500000E-02	0.202665E-12	-0.	0.151204E-03
0.600000E-02	0.745846E-13	-0.	0.556460E-04
0.700000E-02	-0.117080E-12	0.	-0.873513E-04
0.800000E-02	-0.318993E-12	0.	-0.237994E-03
0.900000E-02	-0.466860E-12	0.	-0.348315E-03
0.100000E-01	-0.505809E-12	0.	-0.377374E-03
0.110000E-01	-0.408793E-12	0.	-0.304992E-03
0.120000E-01	-0.187212E-12	0.	-0.139675E-03
0.130000E-01	0.109720E-12	-0.	0.818599E-04
0.140000E-01	0.406991E-12	-0.	0.303648E-03
0.150000E-01	0.623907E-12	-0.	0.465484E-03
0.160000E-01	0.696649E-12	-0.	0.519755E-03
0.170000E-01	0.596847E-12	-0.	0.445296E-03
0.180000E-01	0.340841E-12	-0.	0.254294E-03
0.190000E-01	-0.131163E-13	0.	-0.978583E-05
0.200000E-01	-0.379078E-12	0.	-0.282822E-03
0.210000E-01	-0.665308E-12	0.	-0.496372E-03
0.220000E-01	-0.798026E-12	0.	-0.595391E-03
0.230000E-01	-0.740688E-12	0.	-0.552612E-03
0.240000E-01	-0.503730E-12	0.	-0.375823E-03
0.250000E-01	-0.142282E-12	0.	-0.106154E-03
0.260000E-01	0.257480E-12	-0.	0.192100E-03
0.270000E-01	0.599734E-12	-0.	0.447449E-03
0.280000E-01	0.802636E-12	-0.	0.598830E-03
0.290000E-01	0.818199E-12	-0.	0.610441E-03
0.300000E-01	0.643551E-12	-0.	0.480140E-03
0.310000E-01	0.320980E-12	-0.	0.239476E-03
0.320000E-01	-0.729416E-13	0.	-0.544203E-04
0.330000E-01	-0.446199E-12	0.	-0.332900E-03
0.340000E-01	-0.713342E-12	0.	-0.532210E-03
0.350000E-01	-0.815282E-12	0.	-0.608265E-03
0.360000E-01	-0.732242E-12	0.	-0.546311E-03
0.370000E-01	-0.487110E-12	0.	-0.363423E-03
0.380000E-01	-0.138792E-12	0.	-0.103550E-03
0.390000E-01	0.232420E-12	-0.	0.173404E-03
0.400000E-01	0.538023E-12	-0.	0.401408E-03
0.410000E-01	0.725201E-12	-0.	0.541057E-03
0.420000E-01	0.760966E-12	-0.	0.567741E-03
0.430000E-01	0.636995E-12	-0.	0.475249E-03

12 TH MODE

INPUT U V AND W

0.422492E-01	0.	0.
0.376443E-01	0.934975E-02	0.453990E 00
0.248334E-01	0.166614E-01	0.809017E 00
0.660922E-02	0.203410E-01	0.987688E 00
-0.130557E-01	0.195866E-01	0.951057E 00
-0.298747E-01	0.145626E-01	0.707107E 00
-0.401813E-01	0.636408E-02	0.309017E 00
-0.417290E-01	-0.322170E-02	-0.156434E 00
-0.341803E-01	-0.121052E-01	-0.587785E 00
-0.191807E-01	-0.183499E-01	-0.891006E 00
-0.705060E-08	-0.205946E-01	-0.100000E 01
0.191807E-01	-0.183499E-01	-0.891007E 00
0.341803E-01	-0.121052E-01	-0.587785E 00
0.417290E-01	-0.322171E-02	-0.156435E 00
0.401813E-01	0.636407E-02	0.309017E 00
0.298747E-01	0.145626E-01	0.707106E 00
0.130557E-01	0.195866E-01	0.951056E 00
-0.660920E-02	0.203410E-01	0.987688E 00
-0.248334E-01	0.166614E-01	0.809017E 00
-0.376443E-01	0.934976E-02	0.453991E 00
-0.422492E-01	0.166940E-07	0.810600E-06

** INTERMEDIATE PRINT OUT **

FUNCTION

0.450878E-06	0.524412E-04	0.165550E-03	0.246527E-03	0.228613E-03	0.126576E-03
0.245386E-04	0.662382E-05	0.876009E-04	0.200710E-03	0.252700E-03	0.200710E-03
0.876009E-04	0.662390E-05	0.245386E-04	0.126575E-03	0.228612E-03	0.246527E-03
0.165550E-03	0.524415E-04	-0.000000E-19			

INTEGRATION = 0.21308E-01

VALUES OF Q

-0.000000E-19	-0.422568E-05	-0.113635E-04	0.382142E-05	-0.586285E-05	-0.103500E-04
0.858525E-05	0.304905E-05	-0.424718E-05	0.112251E-04	0.444557E-05	-0.752619E-05
0.575545E-05	0.916374E-06	-0.123152E-04	0.180270E-05	0.214209E-05	-0.971702E-05
0.515085E-05	0.786973E-05	-0.667758E-05	0.489908E-05	0.807086E-05	-0.865679E-05
0.580247E-06	0.567461E-05	-0.107361E-04	-0.152811E-05	0.749353E-05	-0.755542E-05
0.658119E-07	0.102515E-04	-0.551244E-05	-0.109428E-05	0.965211E-05	-0.628136E-05
-0.455670E-05	0.780866E-05	-0.615505E-05	-0.562301E-05	0.109379E-04	-0.213606E-05
-0.867100E-05	0.102398E-04				

FOR THE WAVE NUMBER 7

AT LOCATION OF SEGMENT 11 AND THETA -0.

T	U	V	W
0.	0.	-0.	0.
0.100000E-02	0.297936E-13	-0.	0.422568E-05
0.200000E-02	0.801194E-13	-0.	0.113635E-04
0.300000E-02	-0.269433E-13	0.	-0.382142E-05
0.400000E-02	0.413366E-13	-0.	0.586285E-05
0.500000E-02	0.729738E-13	-0.	0.103500E-04
0.600000E-02	-0.605312E-13	0.	-0.858525E-05
0.700000E-02	-0.214976E-13	0.	-0.304905E-05
0.800000E-02	0.299451E-13	-0.	0.424718E-05
0.900000E-02	-0.791440E-13	0.	-0.112251E-04
0.100000E-01	-0.313440E-13	0.	-0.444557E-05
0.110000E-01	0.530642E-13	-0.	0.752619E-05
0.120000E-01	-0.405794E-13	0.	-0.575545E-05
0.130000E-01	-0.646099E-14	0.	-0.916374E-06
0.140000E-01	0.868298E-13	-0.	0.123152E-04
0.150000E-01	-0.127101E-13	0.	-0.180270E-05
0.160000E-01	-0.151030E-13	0.	-0.214209E-05
0.170000E-01	0.685108E-13	-0.	0.971702E-05
0.180000E-01	-0.363166E-13	0.	-0.515085E-05
0.190000E-01	-0.554864E-13	0.	-0.786973E-05
0.200000E-01	0.470810E-13	-0.	0.667756E-05
0.210000E-01	-0.345415E-13	0.	-0.489908E-05
0.220000E-01	-0.569044E-13	0.	-0.807086E-05
0.230000E-01	0.610355E-13	-0.	0.865679E-05
0.240000E-01	-0.409109E-14	0.	-0.580247E-06
0.250000E-01	-0.400094E-13	0.	-0.567461E-05
0.260000E-01	0.756957E-13	-0.	0.107361E-04
0.270000E-01	0.107741E-13	-0.	0.152811E-05
0.280000E-01	-0.528339E-13	0.	-0.749353E-05
0.290000E-01	0.532703E-13	-0.	0.755542E-05
0.300000E-01	-0.464013E-15	0.	-0.658119E-07
0.310000E-01	-0.722789E-13	0.	-0.102515E-04
0.320000E-01	0.388660E-13	-0.	0.551244E-05
0.330000E-01	0.771530E-14	-0.	0.109428E-05
0.340000E-01	-0.680531E-13	0.	-0.965211E-05
0.350000E-01	0.442874E-13	-0.	0.628136E-05
0.360000E-01	0.321275E-13	-0.	0.455670E-05
0.370000E-01	-0.550558E-13	0.	-0.780866E-05
0.380000E-01	0.433968E-13	-0.	0.615505E-05
0.390000E-01	0.396456E-13	-0.	0.562301E-05
0.400000E-01	-0.771189E-13	0.	-0.109379E-04
0.410000E-01	0.150605E-13	-0.	0.213606E-05
0.420000E-01	0.611358E-13	-0.	0.867100E-05
0.430000E-01	-0.721970E-13	0.	-0.102398E-04

RESPONSES SUMMED UP WITH THE PREVIOUS MODES
AT LOCATION OF SEGMENT 11 AND THETA -0.

0.	0.	-0.	0.
0.100000E-02	0.237106E-12	-0.	0.936246E-04
0.200000E-02	0.135517E-11	-0.	0.648561E-03
0.300000E-02	0.137948E-11	0.	0.941250E-03
0.400000E-02	0.862897E-12	-0.	0.861419E-03
0.500000E-02	0.380282E-12	-0.	0.455855E-03
0.600000E-02	-0.322487E-12	0.	-0.232764E-03
0.700000E-02	-0.130185E-11	0.	-0.103806E-02
0.800000E-02	-0.220627E-11	-0.	-0.165528E-02
0.900000E-02	-0.238690E-11	0.	-0.175555E-02
0.100000E-01	-0.145750E-11	0.	-0.121734E-02
0.110000E-01	-0.681997E-13	-0.	-0.280986E-03
0.120000E-01	0.101823E-11	0.	0.680009E-03
0.130000E-01	0.176112E-11	0.	0.141761E-02
0.140000E-01	0.209425E-11	-0.	0.177933E-02
0.150000E-01	0.195912E-11	0.	0.170735E-02
0.160000E-01	0.155218E-11	0.	0.124892E-02
0.170000E-01	0.659437E-12	-0.	0.467264E-03
0.180000E-01	-0.654193E-12	0.	-0.461653E-03
0.190000E-01	-0.151686E-11	0.	-0.122921E-02
0.200000E-01	-0.185853E-11	-0.	-0.168695E-02
0.210000E-01	-0.223067E-11	0.	-0.182861E-02
0.220000E-01	-0.212898E-11	0.	-0.153800E-02
0.230000E-01	-0.111689E-11	-0.	-0.779191E-03
0.240000E-01	0.161600E-12	0.	0.218803E-03
0.250000E-01	0.137791E-11	0.	0.118348E-02
0.260000E-01	0.248906E-11	-0.	0.187061E-02
0.270000E-01	0.288257E-11	-0.	0.202060E-02
0.280000E-01	0.221831E-11	0.	0.154734E-02
0.290000E-01	0.837802E-12	-0.	0.631260E-03
0.300000E-01	-0.685051E-12	0.	-0.398635E-03
0.310000E-01	-0.176393E-11	0.	-0.121212E-02
0.320000E-01	-0.233297E-11	-0.	-0.163347E-02
0.330000E-01	-0.245724E-11	-0.	-0.160823E-02
0.340000E-01	-0.161469E-11	0.	-0.111434E-02
0.350000E-01	-0.414237E-13	-0.	-0.343661E-03
0.360000E-01	0.997425E-12	-0.	0.337047E-03
0.370000E-01	0.133834E-11	0.	0.783028E-03
0.380000E-01	0.158366E-11	-0.	0.104177E-02
0.390000E-01	0.143434E-11	-0.	0.106687E-02
0.400000E-01	0.650088E-12	0.	0.808989E-03
0.410000E-01	0.909030E-13	-0.	0.473098E-03
0.420000E-01	-0.136445E-12	-0.	0.128117E-03
0.430000E-01	-0.593298E-12	0.	-0.299708E-03

18 TH MODE

INPUT U V AND W

0.330657E-01	0.	0.
0.233810E-01	0.105181E-01	0.707107E 00
0.327195E-10	0.148748E-01	0.100000E 01
-0.233810E-01	0.105181E-01	0.707107E 00
-0.330657E-01	0.472742E-09	0.317814E-07
-0.233810E-01	-0.105181E-01	-0.707107E 00
-0.157631E-08	-0.148748E-01	-0.100000E 01
0.233810E-01	-0.105181E-01	-0.707107E 00
0.330657E-01	-0.183209E-08	-0.123167E-06
0.233810E-01	0.105181E-01	0.707107E 00
0.656892E-08	0.148748E-01	0.100000E 01
-0.233810E-01	0.105181E-01	0.707107E 00
-0.330657E-01	0.673787E-08	0.452972E-06
-0.233810E-01	-0.105181E-01	-0.707106E 00
-0.214159E-07	-0.148748E-01	-0.100000E 01
0.233809E-01	-0.105181E-01	-0.707107E 00
0.330657E-01	-0.125303E-07	-0.842381E-06
0.233810E-01	0.105181E-01	0.707106E 00
0.342919E-07	0.148748E-01	0.100000E 01
-0.233809E-01	0.105181E-01	0.707108E 00
-0.330657E-01	0.183226E-07	0.123179E-05

** INTERMEDIATE PRINT OUT **

FUNCTION

0.276170E-06	0.126463E-03	0.252649E-03	0.126463E-03	0.276170E-06	0.126463E-03
0.252649E-03	0.126463E-03	0.276170E-06	0.126463E-03	0.252649E-03	0.126463E-03
0.276170E-06	0.126462E-03	0.252649E-03	0.126463E-03	0.276170E-06	0.126462E-03
0.252649E-03	0.126463E-03	-0.000000E-19			

INTEGRATION = 0.21347E-01

VALUES OF Q

-0.000000E-19	-0.109097E-05	-0.102131E-05	-0.276692E-06	-0.342510E-05	0.158042E-05
-0.295834E-05	0.253376E-05	-0.444216E-06	0.144589E-05	0.180027E-05	-0.967668E-06
0.232468E-05	-0.283119E-05	0.145677E-05	-0.267079E-05	0.231377E-06	-0.514525E-06
-0.817434E-06	0.210306E-05	-0.158893E-05	0.322126E-05	-0.177054E-05	0.197237E-05
-0.931259E-06	-0.663195E-06	0.732295E-06	-0.266138E-05	0.216883E-05	-0.265544E-05
0.224829E-05	-0.923296E-06	0.756972E-06	0.113768E-05	-0.135891E-05	0.225557E-05
-0.265106E-05	0.200324E-05	-0.217502E-05	0.741259E-06	0.302031E-06	-0.674498E-06
0.105215E-05	-0.120876E-05				

FOR THE WAVE NUMBER 8

AT LOCATION OF SEGMENT 11 AND THETA -0.

T	U	V	W
0.	-0.	0.	-0.
0.100000E-02	-0.716653E-14	0.	-0.109097E-05
0.200000E-02	-0.670891E-14	0.	-0.102131E-05
0.300000E-02	-0.181757E-14	0.	-0.276692E-06
0.400000E-02	-0.224992E-13	0.	-0.342510E-05
0.500000E-02	0.103817E-13	-0.	0.158042E-05
0.600000E-02	-0.194331E-13	0.	-0.295834E-05
0.700000E-02	0.166441E-13	-0.	0.253376E-05
0.800000E-02	-0.291802E-14	0.	-0.444216E-06
0.900000E-02	0.949797E-14	-0.	0.144589E-05
0.100000E-01	0.118258E-13	-0.	0.180027E-05
0.110000E-01	-0.635653E-14	0.	-0.967668E-06
0.120000E-01	0.152706E-13	-0.	0.232468E-05
0.130000E-01	-0.185979E-13	0.	-0.283119E-05
0.140000E-01	0.956942E-14	-0.	0.145677E-05
0.150000E-01	-0.175442E-13	0.	-0.267079E-05
0.160000E-01	0.151990E-14	-0.	0.231377E-06
0.170000E-01	-0.337987E-14	0.	-0.514525E-06
0.180000E-01	-0.536966E-14	0.	-0.817434E-06
0.190000E-01	0.138148E-13	-0.	0.210306E-05
0.200000E-01	-0.104376E-13	0.	-0.158893E-05
0.210000E-01	0.211602E-13	-0.	0.322126E-05
0.220000E-01	-0.116306E-13	0.	-0.177054E-05
0.230000E-01	0.129564E-13	-0.	0.197237E-05
0.240000E-01	-0.611737E-14	0.	-0.931259E-06
0.250000E-01	-0.435648E-14	0.	-0.663195E-06
0.260000E-01	0.481039E-14	-0.	0.732295E-06
0.270000E-01	-0.174824E-13	0.	-0.266138E-05
0.280000E-01	0.142469E-13	-0.	0.216883E-05
0.290000E-01	-0.174433E-13	0.	-0.265544E-05
0.300000E-01	0.147689E-13	-0.	0.224829E-05
0.310000E-01	-0.606506E-14	0.	-0.923296E-06
0.320000E-01	0.497249E-14	-0.	0.756972E-06
0.330000E-01	0.747332E-14	-0.	0.113768E-05
0.340000E-01	-0.892660E-14	0.	-0.135891E-05
0.350000E-01	0.148167E-13	-0.	0.225557E-05
0.360000E-01	-0.174146E-13	0.	-0.265106E-05
0.370000E-01	0.131591E-13	-0.	0.200324E-05
0.380000E-01	-0.142875E-13	0.	-0.217502E-05
0.390000E-01	0.486927E-14	-0.	0.741259E-06
0.400000E-01	0.198402E-14	-0.	0.302031E-06
0.410000E-01	-0.443072E-14	0.	-0.674498E-06
0.420000E-01	0.691151E-14	-0.	0.105215E-05
0.430000E-01	-0.794023E-14	0.	-0.120876E-05

RESPONSES SUMMED UP WITH THE PREVIOUS MODES
AT LOCATION OF SEGMENT 11 AND THETA -0.

0.	-0.	0.	-0.
0.100000E-02	0.265296E-12	0.	0.977082E-04
0.200000E-02	0.139653E-11	0.	0.654515E-03
0.300000E-02	0.136591E-11	0.	0.939422E-03
0.400000E-02	0.959723E-12	0.	0.875360E-03
0.500000E-02	0.354656E-12	-0.	0.452133E-03
0.600000E-02	-0.290475E-12	0.	-0.227206E-03
0.700000E-02	-0.130792E-11	-0.	-0.103972E-02
0.800000E-02	-0.226630E-11	0.	-0.166290E-02
0.900000E-02	-0.235576E-11	-0.	-0.175228E-02
0.100000E-01	-0.155016E-11	-0.	-0.122961E-02
0.110000E-01	-0.321309E-13	0.	-0.276787E-03
0.120000E-01	0.994186E-12	-0.	0.677177E-03
0.130000E-01	0.175917E-11	0.	0.141705E-02
0.140000E-01	0.215848E-11	-0.	0.178861E-02
0.150000E-01	0.193019E-11	0.	0.170336E-02
0.160000E-01	0.160804E-11	-0.	0.125693E-02
0.170000E-01	0.661157E-12	0.	0.467344E-03
0.180000E-01	-0.676882E-12	0.	-0.464326E-03
0.190000E-01	-0.148538E-11	-0.	-0.122564E-02
0.200000E-01	-0.192863E-11	0.	-0.169588E-02
0.210000E-01	-0.220659E-11	-0.	-0.182640E-02
0.220000E-01	-0.215538E-11	0.	-0.154080E-02
0.230000E-01	-0.114785E-11	-0.	-0.784294E-03
0.240000E-01	0.226316E-12	0.	0.228203E-03
0.250000E-01	0.130559E-11	0.	0.117352E-02
0.260000E-01	0.258800E-11	-0.	0.188408E-02
0.270000E-01	0.283310E-11	0.	0.201447E-02
0.280000E-01	0.225690E-11	-0.	0.155201E-02
0.290000E-01	0.843425E-12	0.	0.632784E-03
0.300000E-01	-0.714869E-12	-0.	-0.403358E-03
0.310000E-01	-0.174243E-11	0.	-0.120884E-02
0.320000E-01	-0.236335E-11	-0.	-0.163793E-02
0.330000E-01	-0.247826E-11	-0.	-0.161120E-02
0.340000E-01	-0.157436E-11	0.	-0.110875E-02
0.350000E-01	-0.115915E-12	-0.	-0.354015E-03
0.360000E-01	0.108740E-11	0.	0.349484E-03
0.370000E-01	0.127115E-11	-0.	0.773893E-03
0.380000E-01	0.164208E-11	0.	0.104983E-02
0.390000E-01	0.142499E-11	-0.	0.106562E-02
0.400000E-01	0.627075E-12	-0.	0.805935E-03
0.410000E-01	0.114650E-12	0.	0.475950E-03
0.420000E-01	-0.149737E-12	-0.	0.126941E-03
0.430000E-01	-0.599976E-12	0.	-0.301424E-03

SAMPLE RUN FOR INSTRUMENT UNIT STRUCTURE

```
RESPONSE SOUGHT AT SEGMENT NO.     12
INPUT DATA
 T INITIAL =   0.            DELT =   0.10000E-02   LAMDA =   0.            TEND =   0.41000E-01   ALPHA =   0.40000E 02

 THETA OF FORCE =   0.            FORCING OMEGA =   0.54789E 03

      FORCING FUNCTIONS ARE
  0.100000E 01   0.820152E 00   0.422184E 00  -0.645859E-01  -0.495665E 00
 -0.753422E 00  -0.778285E 00  -0.581129E 00  -0.234781E 00   0.151338E 00
  0.464970E 00   0.622990E 00   0.592672E 00   0.397071E 00   0.104212E 00
 -0.195603E 00  -0.417048E 00  -0.503522E 00  -0.440946E 00  -0.258476E 00
 -0.169355E-01   0.210824E 00   0.361450E 00   0.398272E 00   0.319623E 00
  0.156636E 00  -0.381236E-01  -0.207127E 00  -0.304559E 00  -0.308368E 00
 -0.224673E 00  -0.838736E-01   0.698214E-01   0.191953E 00   0.250409E 00
  0.233552E 00   0.151939E 00   0.336317E-01  -0.850916E-01  -0.170622E 00
 -0.201323E 00
```

INPUT U, V, W, AND BETA

-0.364019E-01	-0.975416E-01	0.377846E 00	0.310211E 00
-0.355704E-01	-0.118718E 00	0.474544E 00	-0.764732E 00
-0.344444E-01	-0.139687E 00	0.556494E 00	-0.688052E 00
-0.326332E-01	-0.159656E 00	0.635008E 00	-0.651468E 00
-0.302061E-01	-0.178290E 00	0.708289E 00	-0.601011E 00
-0.272199E-01	-0.195265E 00	0.775066E 00	-0.540247E 00
-0.237383E-01	-0.210291E 00	0.834189E 00	-0.470234E 00
-0.198305E-01	-0.223114E 00	0.884654E 00	-0.392262E 00
-0.155702E-01	-0.233519E 00	0.925611E 00	-0.307610E 00
-0.110331E-01	-0.241333E 00	0.956258E 00	-0.219447E 00
-0.634338E-02	-0.246398E 00	0.979124E 00	-0.997624E-01
-0.378789E-02	-0.248586E 00	0.987975E 00	-0.758307E-01
-0.121137E-02	-0.249623E 00	0.992633E 00	-0.522090E-01
0.125540E-02	-0.249393E 00	0.100000E 01	-0.485778E-01
0.624893E-02	-0.241340E 00	0.974052E 00	0.330556E 00
0.112177E-01	-0.230217E 00	0.929688E 00	0.422164E 00
0.160670E-01	-0.216042E 00	0.873348E 00	0.525092E 00
0.206871E-01	-0.198860E 00	0.804944E 00	0.625006E 00
0.249614E-01	-0.178788E 00	0.724932E 00	0.719894E 00
0.287661E-01	-0.156017E 00	0.634075E 00	0.806941E 00
0.319702E-01	-0.130830E 00	0.533490E 00	0.883007E 00
0.344364E-01	-0.103603E 00	0.424665E 00	0.944598E 00
0.360109E-01	-0.748163E-01	0.309989E 00	0.100000E 01
0.368266E-01	-0.454092E-01	0.188251E 00	0.924387E-01

** INTERMEDIATE PRINT OUT **

FUNCTION

0.763144E-14	0.119510E-13	0.164140E-13	0.213527E-13	0.265485E-13	0.317761E-13
0.367970E-13	0.413740E-13	0.452862E-13	0.483298E-13	0.719190E-13	0.732218E-13
0.739082E-13	0.521627E-13	0.483005E-13	0.429504E-13	0.369766E-13	0.306272E-13
0.242087E-13	0.180412E-13	0.124378E-13	0.767816E-14	0.399487E-14	-0.000000E-19

INTEGRATION = 0.60324E-11

VALUES OF Q

-0.000000E-19	0.448227E 00	0.364208E 01	0.659503E 01	0.744444E 01	0.502172E 01
-0.503088E 00	-0.754830E 01	-0.136128E 02	-0.161694E 02	-0.136416E 02	-0.610530E 01
0.455830E 01	0.151483E 02	0.221350E 02	0.228423E 02	0.164250E 02	0.429778E 01
-0.101620E 02	-0.225768E 02	-0.289159E 02	-0.268080E 02	-0.163901E 02	-0.400464E 00
0.165482E 02	0.293190E 02	0.338235E 02	0.283317E 02	0.140992E 02	-0.490518E 01
-0.231178E 02	-0.350247E 02	-0.368418E 02	-0.277167E 02	-0.100702E 02	0.110470E 02
0.294111E 02	0.394717E 02	0.380368E 02	0.252828E 02	0.456695E 01	-0.176655E 02
-0.346908E 02	-0.415665E 02				

FOR THE WAVE NUMBER 4

AT LOCATION OF SEGMENT 12 AND THETA -0.

T	U	V	W
0.	0.	-0.	-0.
0.100000E-02	-0.238113E-07	0.	0.621056E-05
0.200000E-02	-0.193479E-06	0.	0.504640E-04
0.300000E-02	-0.350350E-06	0.	0.913797E-04
0.400000E-02	-0.395473E-06	0.	0.103149E-03
0.500000E-02	-0.266770E-06	0.	0.695801E-04
0.600000E-02	0.267257E-07	-0.	-0.697070E-05
0.700000E-02	0.400990E-06	-0.	-0.104588E-03
0.800000E-02	0.723157E-06	-0.	-0.188617E-03
0.900000E-02	0.858970E-06	-0.	-0.224040E-03
0.100000E-01	0.724684E-06	-0.	-0.189015E-03
0.110000E-01	0.324334E-06	-0.	-0.845941E-04
0.120000E-01	-0.242152E-06	0.	0.631591E-04
0.130000E-01	-0.804727E-06	0.	0.209892E-03
0.140000E-01	-0.117588E-05	0.	0.306699E-03
0.150000E-01	-0.121346E-05	0.	0.316499E-03
0.160000E-01	-0.872552E-06	0.	0.227583E-03
0.170000E-01	-0.228312E-06	0.	0.595494E-04
0.180000E-01	0.539841E-06	-0.	-0.140804E-03
0.190000E-01	0.119935E-05	-0.	-0.312820E-03
0.200000E-01	0.153611E-05	-0.	-0.400654E-03
0.210000E-01	0.142413E-05	-0.	-0.371448E-03
0.220000E-01	0.870697E-06	-0.	-0.227099E-03
0.230000E-01	0.212740E-07	-0.	-0.554876E-05
0.240000E-01	-0.879093E-06	0.	0.229239E-03
0.250000E-01	-0.155752E-05	0.	0.406239E-03
0.260000E-01	-0.179682E-05	0.	0.468653E-03
0.270000E-01	-0.150507E-05	0.	0.392560E-03
0.280000E-01	-0.748996E-06	0.	0.195356E-03
0.290000E-01	0.260579E-06	-0.	-0.679654E-04
0.300000E-01	0.122809E-05	-0.	-0.320316E-03
0.310000E-01	0.186062E-05	-0.	-0.485296E-03
0.320000E-01	0.195716E-05	-0.	-0.510474E-03
0.330000E-01	0.147240E-05	-0.	-0.384039E-03
0.340000E-01	0.534963E-06	-0.	-0.139531E-03
0.350000E-01	-0.586851E-06	0.	0.153065E-03
0.360000E-01	-0.156241E-05	0.	0.407515E-03
0.370000E-01	-0.209687E-05	0.	0.546913E-03
0.380000E-01	-0.202064E-05	0.	0.527032E-03
0.390000E-01	-0.134310E-05	0.	0.350314E-03
0.400000E-01	-0.242611E-06	0.	0.632789E-04
0.410000E-01	0.938448E-06	-0.	-0.244770E-03
0.420000E-01	0.184289E-05	-0.	-0.480670E-03
0.430000E-01	0.220815E-05	-0.	-0.575938E-03

RESPONSES SUMMED UP WITH THE PREVIOUS MODES
AT LOCATION OF SEGMENT 12 AND THETA -0.

0.	0.	-0.	-0.
0.100000E-02	-0.238113E-07	0.	0.621056E-05
0.200000E-02	-0.193479E-06	0.	0.504640E-04
0.300000E-02	-0.350350E-06	0.	0.913797E-04
0.400000E-02	-0.395473E-06	0.	0.103149E-03
0.500000E-02	-0.266770E-06	0.	0.695801E-04
0.600000E-02	0.267257E-07	-0.	-0.697070E-05
0.700000E-02	0.400990E-06	-0.	-0.104588E-03
0.800000E-02	0.723157E-06	-0.	-0.188617E-03
0.900000E-02	0.858970E-06	-0.	-0.224040E-03
0.100000E-01	0.724684E-06	-0.	-0.189015E-03
0.110000E-01	0.324334E-06	-0.	-0.845941E-04
0.120000E-01	-0.242152E-06	0.	0.631591E-04
0.130000E-01	-0.804727E-06	0.	0.209892E-03
0.140000E-01	-0.117588E-05	0.	0.306699E-03
0.150000E-01	-0.121346E-05	0.	0.316499E-03
0.160000E-01	-0.872552E-06	0.	0.227583E-03
0.170000E-01	-0.228312E-06	0.	0.595494E-04
0.180000E-01	0.539841E-06	-0.	-0.140804E-03
0.190000E-01	0.119935E-05	-0.	-0.312820E-03
0.200000E-01	0.153611E-05	-0.	-0.400654E-03
0.210000E-01	0.142413E-05	-0.	-0.371448E-03
0.220000E-01	0.870697E-06	-0.	-0.227099E-03
0.230000E-01	0.212740E-07	-0.	-0.554876E-05
0.240000E-01	-0.879093E-06	0.	0.229289E-03
0.250000E-01	-0.155752E-05	0.	0.406239E-03
0.260000E-01	-0.179682E-05	0.	0.468653E-03
0.270000E-01	-0.150507E-05	0.	0.392560E-03
0.280000E-01	-0.748996E-06	0.	0.195356E-03
0.290000E-01	0.260579E-06	-0.	-0.679654E-04
0.300000E-01	0.122809E-05	-0.	-0.320316E-03
0.310000E-01	0.186062E-05	-0.	-0.485296E-03
0.320000E-01	0.195716E-05	-0.	-0.510474E-03
0.330000E-01	0.147240E-05	-0.	-0.384039E-03
0.340000E-01	0.534963E-06	-0.	-0.139531E-03
0.350000E-01	-0.586851E-06	0.	0.153065E-03
0.360000E-01	-0.156241E-05	0.	0.407515E-03
0.370000E-01	-0.209687E-05	0.	0.546913E-03
0.380000E-01	-0.202064E-05	0.	0.527032E-03
0.390000E-01	-0.134310E-05	0.	0.350314E-03
0.400000E-01	-0.242611E-06	0.	0.632789E-04
0.410000E-01	0.938448E-06	-0.	-0.244770E-03
0.420000E-01	0.184289E-05	-0.	-0.480670E-03
0.430000E-01	0.220815E-05	-0.	-0.575938E-03

INPUT U, V, W, AND BETA

0.161827E 00	-0.340274E 00	0.666679E 00	0.946573E 00
0.162036E 00	-0.300335E 00	0.601662E 00	0.732761E 00
0.162018E 00	-0.260442E 00	0.521205E 00	0.743898E 00
0.162007E 00	-0.220513E 00	0.441333E 00	0.743863E 00
0.161989E 00	-0.180558E 00	0.361390E 00	0.744251E 00
0.161964E 00	-0.140584E 00	0.281415E 00	0.744487E 00
0.161927E 00	-0.100598E 00	0.201422E 00	0.744588E 00
0.161880E 00	-0.606097E-01	0.121426E 00	0.744547E 00
0.161819E 00	-0.206263E-01	0.414426E-01	0.744351E 00
0.161744E 00	0.193432E-01	-0.385090E-01	0.744160E 00
0.161659E 00	0.592895E-01	-0.118511E 00	0.740505E 00
0.161608E 00	0.891996E-01	-0.178557E 00	0.752898E 00
0.161571E 00	0.119081E 00	-0.238818E 00	0.707998E 00
0.161373E 00	0.148970E 00	-0.282115E 00	0.381904E 00
0.161306E 00	0.186015E 00	-0.347808E 00	0.702705E 00
0.161179E 00	0.223010E 00	-0.423534E 00	0.688010E 00
0.161048E 00	0.259943E 00	-0.498720E 00	0.687372E 00
0.160913E 00	0.296805E 00	-0.573783E 00	0.686004E 00
0.160778E 00	0.333588E 00	-0.648691E 00	0.684535E 00
0.160648E 00	0.370286E 00	-0.723432E 00	0.682958E 00
0.160529E 00	0.406893E 00	-0.797998E 00	0.681346E 00
0.160430E 00	0.443406E 00	-0.872350E 00	0.678874E 00
0.160370E 00	0.479822E 00	-0.947450E 00	0.688331E 00
0.159982E 00	0.516293E 00	-0.100000E 01	0.100000E 01

** INTERMEDIATE PRINT OUT **

FUNCTION

0.866682E-17	0.707098E-17	0.540512E-17	0.398506E-17	0.279976E-17	0.185017E-17
0.113666E-17	0.659474E-18	0.418658E-18	0.414078E-18	0.916952E-18	0.138415E-17
0.204234E-17	0.186726E-17	0.259081E-17	0.355249E-17	0.464923E-17	0.586995E-17
0.719900E-17	0.862096E-17	0.101206E-16	0.116820E-16	0.133113E-16	-0.000000E-19

INTEGRATION = 0.18332E-14

VALUES OF Q

-0.000000E-19	-0.468783E 01	-0.400516E 02	-0.809710E 02	-0.113121E 03	-0.123992E 03
-0.107047E 03	-0.634651E 02	-0.165019E 01	0.652268E 02	0.122870E 03	0.159609E 03
0.169234E 03	0.152177E 03	0.114852E 03	0.674352E 02	0.208439E 02	-0.162025E 02
-0.392012E 02	-0.484764E 02	-0.483220E 02	-0.450561E 02	-0.446557E 02	-0.507164E 02
-0.633302E 02	-0.791591E 02	-0.926049E 02	-0.976555E 02	-0.898145E 02	-0.675374E 02
-0.327798E 02	0.944988E 01	0.523503E 02	0.889981E 02	0.113946E 03	0.124328E 03
0.120223E 03	0.104257E 03	0.806336E 02	0.541774E 02	0.301859E 02	0.617775E 01
-0.184567E 02	-0.415592E 02				

FOR THE WAVE NUMBER 2

AT LOCATION OF SEGMENT 12 AND THETA -0.

T	U	V	W
0.	-0.	0.	0.
0.100000E-02	-0.183249E-06	0.	0.202469E-06
0.200000E-02	-0.156563E-05	0.	0.172984E-05
0.300000E-02	-0.316519E-05	0.	0.349716E-05
0.400000E-02	-0.442197E-05	0.	0.488575E-05
0.500000E-02	-0.484692E-05	0.	0.535528E-05
0.600000E-02	-0.418453E-05	0.	0.462341E-05
0.700000E-02	-0.248088E-05	0.	0.274108E-05
0.800000E-02	-0.645066E-07	0.	0.712722E-07
0.900000E-02	0.254975E-05	-0.	-0.281717E-05
0.100000E-01	0.480303E-05	-0.	-0.530679E-05
0.110000E-01	0.623920E-05	-0.	-0.689358E-05
0.120000E-01	0.661542E-05	-0.	-0.730926E-05
0.130000E-01	0.594867E-05	-0.	-0.657258E-05
0.140000E-01	0.448960E-05	-0.	-0.496048E-05
0.150000E-01	0.263607E-05	-0.	-0.291255E-05
0.160000E-01	0.814796E-06	-0.	-0.900254E-06
0.170000E-01	-0.633362E-06	0.	0.699791E-06
0.180000E-01	-0.153239E-05	0.	0.169311E-05
0.190000E-01	-0.189496E-05	0.	0.209371E-05
0.200000E-01	-0.188893E-05	0.	0.208704E-05
0.210000E-01	-0.176126E-05	0.	0.194599E-05
0.220000E-01	-0.174561E-05	0.	0.192870E-05
0.230000E-01	-0.198253E-05	0.	0.219046E-05
0.240000E-01	-0.247561E-05	0.	0.273525E-05
0.250000E-01	-0.309436E-05	0.	0.341891E-05
0.260000E-01	-0.361997E-05	0.	0.399964E-05
0.270000E-01	-0.381740E-05	0.	0.421778E-05
0.280000E-01	-0.351089E-05	0.	0.387912E-05
0.290000E-01	-0.264007E-05	0.	0.291696E-05
0.300000E-01	-0.128138E-05	0.	0.141577E-05
0.310000E-01	0.369400E-06	-0.	-0.408144E-06
0.320000E-01	0.204640E-05	-0.	-0.226103E-05
0.330000E-01	0.347898E-05	-0.	-0.384386E-05
0.340000E-01	0.445420E-05	-0.	-0.492137E-05
0.350000E-01	0.486004E-05	-0.	-0.536977E-05
0.360000E-01	0.469958E-05	-0.	-0.519248E-05
0.370000E-01	0.407547E-05	-0.	-0.450291E-05
0.380000E-01	0.315200E-05	-0.	-0.348259E-05
0.390000E-01	0.211782E-05	-0.	-0.233994E-05
0.400000E-01	0.117998E-05	-0.	-0.130374E-05
0.410000E-01	0.241491E-06	-0.	-0.266819E-06
0.420000E-01	-0.721480E-06	0.	0.797151E-06
0.430000E-01	-0.162457E-05	0.	0.179496E-05

RESPONSES SUMMED UP WITH THE PREVIOUS MODES
AT LOCATION OF SEGMENT 12 AND THETA -0.

0.	-0.	0.	0.
0.100000E-02	-0.415181E-05	0.	0.611102E-04
0.200000E-02	-0.322999E-04	0.	0.464978E-03
0.300000E-02	-0.317425E-04	0.	0.548518E-03
0.400000E-02	-0.298135E-05	0.	0.311864E-03
0.500000E-02	0.187780E-04	0.	0.421008E-04
0.600000E-02	0.963398E-05	0.	-0.426495E-04
0.700000E-02	-0.120270E-04	0.	-0.194055E-04
0.800000E-02	-0.135489E-04	0.	-0.149841E-03
0.900000E-02	0.100376E-04	-0.	-0.427159E-03
0.100000E-01	0.320723E-04	-0.	-0.528054E-03
0.110000E-01	0.282822E-04	-0.	-0.262617E-03
0.120000E-01	0.663380E-05	-0.	0.209933E-03
0.130000E-01	-0.492269E-05	-0.	0.522590E-03
0.140000E-01	0.640699E-05	-0.	0.468305E-03
0.150000E-01	0.230399E-04	-0.	0.199137E-03
0.160000E-01	0.217552E-04	-0.	-0.597909E-04
0.170000E-01	0.457778E-05	0.	-0.227191E-03
0.180000E-01	-0.742641E-05	0.	-0.385899E-03
0.190000E-01	-0.125831E-05	0.	-0.604851E-03
0.200000E-01	0.131694E-04	0.	-0.725534E-03
0.210000E-01	0.153612E-04	0.	-0.545714E-03
0.220000E-01	0.103850E-05	0.	-0.119708E-03
0.230000E-01	-0.134434E-04	0.	0.290490E-03
0.240000E-01	-0.129886E-04	0.	0.480064E-03
0.250000E-01	-0.199843E-05	0.	0.407981E-03
0.260000E-01	0.281475E-05	0.	0.227362E-03
0.270000E-01	-0.504779E-05	0.	0.992351E-04
0.280000E-01	-0.154600E-04	0.	-0.358341E-04
0.290000E-01	-0.155218E-04	0.	-0.239582E-03
0.300000E-01	-0.497434E-05	0.	-0.416731E-03
0.310000E-01	0.303650E-05	-0.	-0.449529E-03
0.320000E-01	-0.849160E-06	-0.	-0.280858E-03
0.330000E-01	-0.103444E-04	-0.	0.760680E-05
0.340000E-01	-0.131029E-04	-0.	0.227525E-03
0.350000E-01	-0.679363E-05	-0.	0.312369E-03
0.360000E-01	-0.584448E-06	-0.	0.340206E-03
0.370000E-01	-0.267319E-05	-0.	0.384811E-03
0.380000E-01	-0.111832E-04	-0.	0.432683E-03
0.390000E-01	-0.600869E-05	-0.	0.283047E-03
0.400000E-01	-0.614722E-05	-0.	0.147601E-03
0.410000E-01	-0.595933E-05	-0.	0.184913E-04
0.420000E-01	-0.630696E-05	0.	-0.936695E-04
0.430000E-01	-0.692474E-05	0.	-0.175731E-03

NATURAL FREQUENCY AND MODES OF MASS ATTACHED CYLINDRICAL SHELL

KEY PUNCH FORM - GENERAL PURPOSE
FORM 20-708 (R.7-63)

JOB TITLE					ENGINEER	PAGE OF
NATURAL FREQUENCY AND MODE OF MASS ATTACHED CYLINDER						
DPWA SERIAL NO.	PRE.	DPD JOB NO.	DASH	FOR ORGN. NO.	ANALYST	DATE

A	C	H	RHO	XL	THL
THI	AMASS	INC	N MODE		
IMOD	I I NC				
N (1)	K (1)		OM (1)		
N (2)	K (2)		OM (2)		
— —	— —		— —		
N (N MODE)	K (N MODE)		OM (N MODE)		

```
$EXECUTE        IBJOB
$IBJOB          60,MAP
$IBFTC MAIN
      DIMENSION GUESS(60,1),VECTR(60,3),EIGV(3),TEMP(700),TM(60,120),   IMP2
     1  NAKSR(3),NAKDR(3),ITRS(10),N(60),K(60),OM(60),B(60),C(60),T(60),IMP2
     2  CSN(60),SNN(60),CSK(60),SNK(60),U(20,2),V(20,2),W(20,2),XS(20)
      DATA PI,PNU/3.1415927,0.3/                                        IMP2
      READ (5,50) A,CL,H,RHO,XL,THL,THI,AMASS,INC,NMODE                 IMP2
   50 FORMAT(6E12.8/2E12.8,2I5)                                         IMP2
      READ(5,36) IMOD,IINC                                              IMP2
      DO 32 I=1,NMODE                                                   IMP2
      READ (5,36)  N(I),K(I),OM(I)                                      IMP2
      OM(I) =OM(I)*6.283185                                             IMP2
   32 CONTINUE                                                          IMP2
   36 FORMAT(2I8,E18.7)                                                 IMP2
C                                                                       IMP2
      CRITH =THL+PI/2.                                                  IMPT
      PLRAH =PI*CL*A*RHO*H/2.                                           IMP2
      LEIG =1                                                           IMP2
      DO 100 I=1,NMODE                                                  IMP2
      SN =N(I)                                                          IMP2
      SK =K(I)                                                          IMP2
      ALPK =A*PI*SK/CL                                                  IMP2
      ALPK2 =ALPK*ALPK                                                  IMP2
      SN2 =SN*SN                                                        IMP2
      BDEN =(ALPK2+SN2)**2                                              IMP2
      B(I) =(-PNU*ALPK2+SN2)*ALPK/BDEN                                  IMP2
      C(I) =((2.+PNU)*ALPK2+SN2)*SN/BDEN                                IMP2
      T(I) =PLRAH*(B(I)*B(I)+C(I)*C(I)+1.)                              IMP2
      TN =THL*SN                                                        IMP2
      ALPKX =ALPK*XL                                                    IMP2
      CSN(I) =COS(TN)                                                   IMP2
      SNN(I) =SIN(TN)                                                   IMP2
      CSK(I) =COS(ALPKX)                                                IMP2
      SNK(I) =SIN(ALPKX)                                                IMP2
  100 CONTINUE                                                          IMP2
C                                                                       IMP2
      DO 120 I=1,NMODE                                                  IMP2
      DO 120 J=1,NMODE                                                  IMP2
      F1 =B(I)*B(J)*CSN(I)*CSN(J)*CSK(I)*CSK(J)                         IMP2
```

```
      F2=(C(I)*C(J)*SNN(I)*SNN(J)+CSN(I)*CSN(J))*SNK(J)*SNK(I)          IMP2
      TM(I,J) =AMASS*(F1+F2)                                            IMP2
      IF(I.EQ.J) TM(I,J) =TM(I,J)+T(I)                                  IMP2
C                                                                       IMP2
  120 CONTINUE                                                          IMP2
C  INVERTING THE DIAGONAL MATRIX T(I)                                   IMP2
C                                                                       IMP2
      OM2 =OM(1)*OM(1)                                                  IMP2
      DO 130 I=1,NMODE                                                  IMP2
  130 T(I) =1./(T(I)*OM(I)*OM(I))                                       IMP2
      DO 140 I=1,NMODE                                                  IMP2
      DO 140 J=1,NMODE                                                  IMP2
  140 TM(I,J) =TM(I,J)*T(I)*OM2
      WRITE (6,135)                                                     IMP2
  135 FORMAT(20H1 ** EIGENMATRIX ** /)                                  IMP2
      DO 137 I=1,NMODE                                                  IMP2
      WRITE (6,136) I                                                   IMP2
  137 WRITE (6,138) (TM(I,J),J=1,NMODE)                                 IMP2
  136 FORMAT( 9H ROW NO. I3 / )                                         IMP2
      NC =1                                                             IMP2
C  CALLING EIGENVALUES ROUTINE - MITER                                  IMP2
C                                                                       IMP2
      LMODE =IMOD                                                       IMP2
  138 FORMAT (8E15.5)                                                   IMP2
      IF(LMODE.GT.NMODE) GO TO 622                                      IMPT
      GO TO 625                                                         IMP2
  622 LMODE =NMODE                                                      IMP2
  625 LX =LMODE
      WRITE (6,520) LMODE,LX                                            IMP2
  520 FORMAT(1H128HSOLUTION FOR EIGENMATRIX OF I2,3HBY I2 //)           IMP2
      MAXR =60                                                          IMP2
      EPSP =0.                                                          IMP2
      EPDP =0.                                                          IMP2
      NITRSP =60                                                        IMP2
      NITRDP =300                                                       IMP2
      RSP =0.8                                                          IMP2
      RDP =0.8                                                          IMP2
      NTAPE =4                                                          IMP2
      KMODE =2                                                          IMP2
      N1 =LMODE
```

```
      NGUES =0
      NTAPEI =6                                                         IMP2
      CALL MITERS (TM,GUESS,NGUES,N1,KMODE,MAXR,NC,EPSP,EPDP,NAKSR,     IMP2
     1  NAKDR,NITRSP,NITRDP,RSP,RDP,IR,TEMP,VECTR,EIGV,ITRS,NTAPE,      IMP2
     2  NTAPEI)                                                         IMP2
      IF(LEIG.GT.1) GO TO 176                                           IMP2
      WRITE (6,155)                                                     IMP2
  155 FORMAT(1H151HDEFLECTIONS OF CYLINDRICAL SHELL WITH MASS ATTACHED )IMP2
      WRITE (6,150)                                                     IMP2
  150 FORMAT(17H ** INPUT DATA ** /)                                    IMP2
      WRITE (6,160)                                                     IMP2
      WRITE (6,165) A,CL,H,RHO,XL,THL,AMASS,NMODE                       IMP2
  165 FORMAT(7E15.5,8X,I2)                                              IMP2
  160 FORMAT(9X,1HA 10X,6HLENGTH13X,1HH12X,3HRHO 14X,2HXL12X,3HTHL11X,  IMP2
     1   4HMASS 12X,5HNMODE /)                                          IMP2
      WRITE (6,170)                                                     IMP2
      WRITE (6,175) (N(I),K(I),OM(I),I=1,NMODE)                         IMP2
  170 FORMAT (//18H INPUT N, K, OMEGA /)                                IMP2
  175 FORMAT (3X,2I4,E14.5,3X,2I4,E14.5,3X,2I4,E14.5,3X,2I4,E14.5)      IMP2
      NSTA =INC                                                         IMP2
      STA =NSTA                                                         IMP2
      KSTA =NSTA+1                                                      IMPT
  176 CRIT =CL/A                                                        IMP2
      J2 =1                                                             IMP2
      PAL =PI*A/CL                                                      IMP2
      XINC =CL/(A*STA)                                                  IMP2
      X =0.                                                             IMP2
      THETA =THL                                                        IMP2
      KST =1                                                            IMP2
      KY=0
  179 CONTINUE                                                          IMPT
      IF(J2.GE.2) GO TO 166                                             IMP2
      WRITE (6,200) THETA                                               IMPT
      DO 62 KJ =1,KMODE                                                 IMPT
   62 EIGV(KJ) =SQRT(OM2/EIGV(KJ))/(2.*PI)                              IMPT
      WRITE (6,64)(EIGV(KJ),KJ=1,KMODE)                                 IMPT
   64 FORMAT(/16H ** FREQ.IN CPS E14.5 /16X,E14.5 /)                    IMPT
      GO TO 168                                                         IMPT
  166 IF(KST.EQ.1) WRITE(6,276) X                                       IMPT
      IF(KST.EQ.1) WRITE(6,277)
```

```
277 FORMAT(6X,6H THETA 16X,1HU 17X,1HV 16X,1HW /)
    XS(KST) =THETA                                                    IMPT
168 CONTINUE
    IF(J2.GE.2) GO TO 180                                             IMP2
    WRITE (6,205)                                                     IMP2
205 FORMAT(///26H ** DEFLECTIONS AT THETA =E14.5 /)                   IMP2
180 CONTINUE                                                          IMP2
    IF(J2.EQ.I) XS(KST) =X                                            IMPT
    DO 185 I=1,LMODE                                                  IMP2
    SN =N(I)                                                          IMP2
    SK =K(I)                                                          IMP2
    TN =SN*THETA                                                      IMP2
    PALX =SK*PAL*X                                                    IMP2
    CSN(I) =COS(TN)*SIN(PALX)                                         IMP2
    CSK(I) =COS(PALX)*COS(TN)*B(I)                                    IMP2
185 SNN(I) =SIN(TN)*SIN(PALX)*C(I)                                    IMP2
C                                                                     IMP2
    DO 190 I1=1,KMODE                                                 IMP2
    U(KST,I1)=0.
    V(KST,I1)=0.
    W(KST,I1)=0.
    DO 195 J1=1,LMODE                                                 IMPT
    U(KST,I1) =U(KST,I1)+VECTR(J1,I1)*CSK(J1)                         IMP2
    V(KST,I1) =V(KST,I1)+VECTR(J1,I1)*SNN(J1)                         IMP2
    W(KST,I1) =W(KST,I1)+VECTR(J1,I1)*CSN(J1)                         IMP2
195 CONTINUE                                                          IMPT
190 CONTINUE                                                          IMPT
    IF(KST.EQ.KSTA) GO TO 191
    GO TO 203
191 ILUP =1
217 BIGW =ABS(W(1,ILUP))
    DO 192 KT=2,KST                                                   IMP2
    IF(ABS(W(KT,ILUP)).LE.BIGW) GO TO 192
    BIGW =ABS(W(KT,ILUP))
192 CONTINUE
194 DO 193 KX=1,KST                                                   IMPT
    U(KX,ILUP) =U(KX,ILUP)/BIGW
    V(KX,ILUP) =V(KX,ILUP)/BIGW
    W(KX,ILUP) =W(KX,ILUP)/BIGW
193 CONTINUE                                                          IMPT
```

```
      WRITE (6,212) ILUP
      WRITE (6,210) (XS(I),U(I,ILUP),V(I,ILUP),W(I,ILUP),I=1,KST)
      ILUP =ILUP+1
      IF(ILUP.LE.KMODE) GO TO 217
  212 FORMAT(1H0 3X,15H * MODE NUMBER I2,2H */)
  203 CONTINUE                                                          IMPT
      IF(J2.GE.3) GO TO 500                                             IMP2
      IF(J2.EQ.2) GO TO 300                                             IMPT
  205 FORMAT(12X,2H X 16X,1HU 17X,1HV 16X,1HW /)                        IMPT
  210 FORMAT(4E18.7)                                                    IMPT
      X =X+XINC                                                         IMPT
      KST =KST+1
      IF(KST.LE.KSTA) GO TO 180                                         IMPT
      KST =1
      X =XL                                                             IMPT
      THETA =THI                                                        IMP2
      J2 =J2+1                                                          IMPT
      GO TO 179                                                         IMPT
  300 X =XL                                                             IMPT
      KY =KY+1
      THETA =THETA+PI/STA                                               IMP2
      KST =KST+1
      IF(KST.EQ.KSTA) GO TO 350                                         IMPT
      GO TO 179                                                         IMPT
  350 J2=J2+1                                                           IMPT
      GO TO 179                                                         IMPT
  500 J2 =1                                                             IMP2
      LEIG =LEIG+1
      LMODE =LMODE+IINC                                                 IMP2
      KST =1
      IF(LMODE.LE.NMODE) GO TO 625                                      IMP2
  276 FORMAT(///35H CIRCUMFERENTIAL DEFLECTIONS AT X =E14.6)
      STOP                                                              IMP2
      END                                                               IMP2
```

DEFLECTIONS OF CYLINDRICAL SHELL WITH MASS ATTACHED
** INPUT DATA **

A	LENGTH	H	RHO	XL	THL	MASS	NMODE
0.19500E 02	0.53400E 02	0.50000E-01	0.25910E-03	0.13700E 01	0.	0.25900E-02	50

INPUT N, K, OMEGA

6	1	0.46158E 03	7	1	0.47393E 03	5	1	0.54938E 03	8	1	0.55029E 03
9	1	0.66553E 03	4	1	0.78783E 03	10	1	0.80688E 03	11	1	0.96875E 03
12	1	0.11487E 04	3	1	0.13065E 04	13	1	0.13456E 04	11	3	0.13875E 04
10	3	0.13950E 04	12	3	0.14536E 04	9	3	0.14942E 04	14	1	0.15590E 04
13	3	0.15762E 04	8	3	0.17036E 04	14	3	0.17414E 04	15	1	0.17886E 04
15	3	0.19397E 04	16	1	0.20342E 04	7	3	0.20463E 04	16	3	0.21648E 04
17	1	0.22958E 04	13	5	0.23058E 04	14	5	0.23301E 04	12	5	0.23588E 04
17	3	0.24127E 04	15	5	0.24199E 04	11	5	0.24999E 04	2	1	0.25315E 04
6	3	0.25584E 04	16	5	0.25638E 04	18	1	0.25734E 04	18	3	0.26809E 04
10	5	0.27391E 04	17	5	0.27521E 04	19	1	0.28668E 04	19	3	0.29679E 04
18	5	0.29768E 04	9	5	0.30864E 04	20	1	0.31762E 04	15	7	0.32290E 04
19	5	0.32320E 04	14	7	0.32628E 04	16	7	0.32646E 04	20	3	0.32727E 04
5	3	0.32993E 04	17	7	0.33616E 04						

** EIGENMATRIX **

ROW NO. 1

0.11188E 01	0.11877E 00	0.11877E 00	0.11877E 00	0.11877E 00	0.11877E 00	0.11877E 00	0.11877E 00
0.11877E 00	0.11877E 00	0.11877E 00	-0.11877E 00	-0.11877E 00	-0.11877E 00	-0.11877E 00	0.11877E 00
-0.11877E 00	-0.11877E 00	-0.11877E 00	0.11877E 00	-0.11877E 00	0.11877E 00	-0.11877E 00	-0.11877E 00
0.11877E 00	0.11876E 00	0.11876E 00	0.11876E 00	-0.11877E 00	0.11876E 00	0.11876E 00	0.11877E 00
-0.11877E 00	0.11876E 00	0.11877E 00	-0.11877E 00	0.11876E 00	0.11876E 00	0.11877E 00	-0.11877E 00
0.11876E 00	0.11876E 00	0.11877E 00	-0.11876E 00	0.11876E 00	-0.11876E 00	-0.11876E 00	-0.11877E 00
-0.11877E 00	-0.11876E 00						

ROW NO. 2

0.11354E 00	0.10621E 01	0.11354E 00	0.11354E 00	0.11354E 00	0.11354E 00	0.11354E 00	0.11354E 00
0.11354E 00	0.11354E 00	0.11354E 00	-0.11353E 00	-0.11353E 00	-0.11353E 00	-0.11353E 00	0.11354E 00
-0.11353E 00	-0.11353E 00	-0.11353E 00	0.11354E 00	-0.11353E 00	0.11354E 00	-0.11353E 00	-0.11353E 00
0.11354E 00	0.11353E 00	0.11353E 00	0.11353E 00	-0.11353E 00	0.11353E 00	0.11353E 00	0.11354E 00
-0.11353E 00	0.11353E 00	0.11354E 00	-0.11353E 00	0.11353E 00	0.11353E 00	0.11354E 00	-0.11353E 00
0.11353E 00	0.11353E 00	0.11354E 00	-0.11353E 00	0.11353E 00	-0.11353E 00	-0.11353E 00	-0.11353E 00
-0.11353E 00	-0.11353E 00						

ROW NO. 3

0.82755E-01	0.82755E-01	0.79866E 00	0.82755E-01	0.82755E-01	0.82755E-01	0.82755E-01	0.82755E-01
0.82755E-01	0.82755E-01	0.82755E-01	-0.82755E-01	-0.82755E-01	-0.82755E-01	-0.82755E-01	0.82755E-01
-0.82755E-01	-0.82755E-01	-0.82755E-01	0.82755E-01	-0.82755E-01	0.82755E-01	-0.82755E-01	-0.82755E-01
0.82755E-01	0.82754E-01	0.82754E-01	0.82754E-01	-0.82755E-01	0.82754E-01	0.82754E-01	0.82755E-01
-0.82755E-01	0.82754E-01	0.82755E-01	-0.82755E-01	0.82754E-01	0.82754E-01	0.82755E-01	-0.82755E-01
0.82754E-01	0.82754E-01	0.82755E-01	-0.82753E-01	0.82754E-01	-0.82753E-01	-0.82753E-01	-0.82755E-01
-0.82755E-01	-0.82753E-01						

ROW NO. 4

0.84635E-01	0.84635E-01	0.84635E-01	0.78922E 00	0.84635E-01	0.84635E-01	0.84635E-01	0.84635E-0
0.84635E-01	0.84635E-01	0.84635E-01	-0.84634E-01	-0.84634E-01	-0.84634E-01	-0.84634E-01	0.84635E-0
-0.84634E-01	-0.84634E-01	-0.84634E-01	0.84635E-01	-0.84634E-01	0.84635E-01	-0.84634E-01	-0.84634E-01
0.84635E-01	0.84634E-01	0.84634E-01	0.84634E-01	-0.84634E-01	0.84634E-01	0.84634E-01	0.84635E-01
-0.84634E-01	0.84634E-01	0.84635E-01	-0.84634E-01	0.84634E-01	0.84634E-01	0.84635E-01	-0.84634E-01
0.84634E-01	0.84634E-01	0.84635E-01	-0.84633E-01	0.84634E-01	-0.84633E-01	-0.84633E-01	-0.84634E-01
-0.84634E-01	-0.84633E-01						

ROW NO. 5

0.58059E-01	0.58059E-01	0.58059E-01	0.58059E-01	0.53908E 00	0.58059E-01	0.58059E-01	0.58059E-01
0.58059E-01	0.58059E-01	0.58059E-01	-0.58059E-01	-0.58059E-01	-0.58059E-01	-0.58059E-01	0.58059E-01
-0.58059E-01	-0.58059E-01	-0.58059E-01	0.58059E-01	-0.58059E-01	0.58059E-01	-0.58059E-01	-0.58059E-01
0.58059E-01	0.58059E-01	0.58059E-01	0.58059E-01	-0.58059E-01	0.58059E-01	0.58059E-01	0.58059E-01
-0.58059E-01	0.58059E-01	0.58059E-01	-0.58059E-01	0.58059E-01	0.58059E-01	0.58059E-01	-0.58059E-01
0.58059E-01	0.58059E-01	0.58059E-01	-0.58058E-01	0.58059E-01	-0.58058E-01	-0.58058E-01	-0.58059E-01
-0.58059E-01	-0.58058E-01						

ROW NO. 6

0.39285E-01	0.39285E-01	0.39285E-01	0.39285E-01	0.39285E-01	0.39255E 00	0.39285E-01	0.39285E-01
0.39285E-01	0.39285E-01	0.39285E-01	-0.39285E-01	-0.39285E-01	-0.39285E-01	-0.39285E-01	0.39285E-01
-0.39285E-01	-0.39285E-01	-0.39285E-01	0.39285E-01	-0.39285E-01	0.39285E-01	-0.39285E-01	-0.39285E-01
0.39285E-01	0.39285E-01	0.39285E-01	0.39285E-01	-0.39285E-01	0.39285E-01	0.39285E-01	0.39285E-01
-0.39285E-01	0.39285E-01	0.39285E-01	-0.39285E-01	0.39285E-01	0.39285E-01	0.39285E-01	-0.39285E-01
0.39285E-01	0.39285E-01	0.39285E-01	-0.39285E-01	0.39285E-01	-0.39285E-01	-0.39285E-01	-0.39285E-01
-0.39285E-01	-0.39285E-01						

ROW NO. 7

0.39594E-01	0.39594E-01	0.39594E-01	0.39594E-01	0.39594E-01	0.39594E-01	0.36684E 00	0.39594E-01
0.39594E-01	0.39594E-01	0.39594E-01	-0.39594E-01	-0.39594E-01	-0.39594E-01	-0.39594E-01	0.39594E-01
-0.39594E-01	-0.39594E-01	-0.39594E-01	0.39594E-01	-0.39594E-01	0.39594E-01	-0.39594E-01	-0.39594E-01
0.39594E-01	0.39594E-01	0.39594E-01	0.39594E-01	-0.39594E-01	0.39594E-01	0.39594E-01	0.39594E-01
-0.39594E-01	0.39594E-01	0.39594E-01	-0.39594E-01	0.39594E-01	0.39594E-01	0.39594E-01	-0.39594E-01
0.39594E-01	0.39594E-01	0.39594E-01	-0.39593E-01	0.39594E-01	-0.39593E-01	-0.39593E-01	-0.39594E-01
-0.39594E-01	-0.39593E-01						

ROW NO. 8

0.27517E-01	0.27517E-01	0.27517E-01	0.27517E-01	0.27517E-01	0.27517E-01	0.27517E-01	0.25454E 00
0.27517E-01	0.27517E-01	0.27517E-01	-0.27517E-01	-0.27517E-01	-0.27517E-01	-0.27517E-01	0.27517E-01
-0.27517E-01	-0.27517E-01	-0.27517E-01	0.27517E-01	-0.27517E-01	0.27517E-01	-0.27517E-01	-0.27517E-01
0.27517E-01	0.27517E-01	0.27517E-01	0.27517E-01	-0.27517E-01	0.27517E-01	0.27517E-01	0.27517E-01
-0.27517E-01	0.27517E-01	0.27517E-01	-0.27517E-01	0.27517E-01	0.27517E-01	0.27517E-01	-0.27517E-01
0.27517E-01	0.27517E-01	0.27517E-01	-0.27516E-01	0.27517E-01	-0.27516E-01	-0.27516E-01	-0.27517E-01
-0.27517E-01	-0.27516E-01						

ROW NO. 9

0.19597E-01	0.19597E-01	0.19597E-01	0.19597E-01	0.19597E-01	0.19597E-01	0.19597E-01	0.19597E-01
0.19106E 00	0.19597E-01	0.19597E-01	-0.19597E-01	-0.19597E-01	-0.19597E-01	-0.19597E-01	0.19597E-01
-0.19597E-01	-0.19597E-01	-0.19597E-01	0.19597E-01	-0.19597E-01	0.19597E-01	-0.19597E-01	-0.19597E-01
0.19597E-01	0.19597E-01	0.19597E-01	0.19597E-01	-0.19597E-01	0.19597E-01	0.19597E-01	0.19597E-01
-0.19597E-01	0.19597E-01	0.19597E-01	-0.19597E-01	0.19597E-01	0.19597E-01	0.19597E-01	-0.19597E-01
0.19597E-01	0.19597E-01	0.19597E-01	-0.19597E-01	0.19597E-01	-0.19597E-01	-0.19597E-01	-0.19597E-01
-0.19597E-01	-0.19597E-01						

ROW NO. 10

0.13578E-01	0.13578E-01	0.13578E-01	0.13578E-01	0.13578E-01	0.13578E-01	0.13578E-01	0.13578E-01
0.13578E-01	0.13839E 00	0.13578E-01	-0.13578E-01	-0.13578E-01	-0.13578E-01	-0.13578E-01	0.13578E-01
-0.13578E-01	-0.13578E-01	-0.13578E-01	0.13578E-01	-0.13578E-01	0.13578E-01	-0.13578E-01	-0.13578E-01
0.13578E-01	0.13578E-01	0.13578E-01	0.13578E-01	-0.13578E-01	0.13578E-01	0.13578E-01	0.13578E-01
-0.13578E-01	0.13578E-01	0.13578E-01	-0.13578E-01	0.13578E-01	0.13578E-01	0.13578E-01	-0.13578E-01
0.13578E-01	0.13578E-01	0.13578E-01	-0.13578E-01	0.13578E-01	-0.13578E-01	-0.13578E-01	-0.13578E-01
-0.13578E-01	-0.13578E-01						

ROW NO. 11

0.14296E-01	0.14296E-01	0.14296E-01	0.14296E-01	0.14296E-01	0.14296E-01	0.14296E-01	0.14296E-01
0.14296E-01	0.14296E-01	0.13196E 00	-0.14296E-01	-0.14296E-01	-0.14296E-01	-0.14296E-01	0.14296E-01
-0.14296E-01	-0.14296E-01	-0.14296E-01	0.14296E-01	-0.14296E-01	0.14296E-01	-0.14296E-01	-0.14296E-01
0.14296E-01	0.14296E-01	0.14296E-01	0.14296E-01	-0.14296E-01	0.14296E-01	0.14296E-01	0.14296E-01
-0.14296E-01	0.14296E-01	0.14296E-01	-0.14296E-01	0.14296E-01	0.14296E-01	0.14296E-01	-0.14296E-01
0.14296E-01	0.14296E-01	0.14296E-01	-0.14296E-01	0.14296E-01	-0.14296E-01	-0.14296E-01	-0.14296E-01
-0.14296E-01	-0.14296E-01						

ROW NO. 12

-0.13404E-01	-0.13404E-01	-0.13404E-01	-0.13404E-01	-0.13404E-01	-0.13404E-01	-0.13404E-01	-0.13404E-01
-0.13404E-01	-0.13404E-01	-0.13404E-01	0.12407E 00	0.13404E-01	0.13404E-01	0.13404E-01	-0.13404E-01
0.13404E-01	0.13404E-01	0.13404E-01	-0.13404E-01	0.13404E-01	-0.13404E-01	0.13404E-01	0.13404E-01
-0.13404E-01	-0.13404E-01	-0.13404E-01	-0.13404E-01	0.13404E-01	-0.13404E-01	-0.13404E-01	-0.13404E-01
0.13404E-01	-0.13404E-01	-0.13404E-01	0.13404E-01	-0.13404E-01	-0.13404E-01	-0.13404E-01	0.13404E-01
-0.13404E-01	-0.13404E-01	-0.13404E-01	0.13404E-01	-0.13404E-01	0.13404E-01	0.13404E-01	0.13404E-01
0.13404E-01	0.13404E-01						

ROW NO. 13

-0.13236E-01	-0.13236E-01	-0.13236E-01	-0.13236E-01	-0.13236E-01	-0.13236E-01	-0.13236E-01	-0.13236E-01
-0.13236E-01	-0.13236E-01	-0.13236E-01	0.13236E-01	0.12273E 00	0.13236E-01	0.13236E-01	-0.13236E-01
0.13236E-01	0.13236E-01	0.13236E-01	-0.13236E-01	0.13236E-01	-0.13236E-01	0.13236E-01	0.13236E-01
-0.13236E-01	-0.13236E-01	-0.13236E-01	-0.13236E-01	0.13236E-01	-0.13236E-01	-0.13236E-01	-0.13236E-01
0.13236E-01	-0.13236E-01	-0.13236E-01	0.13236E-01	-0.13236E-01	-0.13236E-01	-0.13236E-01	0.13236E-01
-0.13236E-01	-0.13236E-01	-0.13236E-01	0.13236E-01	-0.13236E-01	0.13236E-01	0.13236E-01	0.13236E-01
0.13236E-01	0.13236E-01						

ROW NO. 14

-0.12231E-01	-0.12231E-01	-0.12231E-01	-0.12231E-01	-0.12231E-01	-0.12231E-01	-0.12231E-01	-0.12231E-01
-0.12231E-01	-0.12231E-01	-0.12231E-01	0.12231E-01	0.12231E-01	0.11306E 00	0.12231E-01	-0.12231E-01
0.12231E-01	0.12231E-01	0.12231E-01	-0.12231E-01	0.12231E-01	-0.12231E-01	0.12231E-01	0.12231E-01
-0.12231E-01	-0.12231E-01	-0.12231E-01	-0.12231E-01	0.12231E-01	-0.12231E-01	-0.12231E-01	-0.12231E-01
0.12231E-01	-0.12231E-01	-0.12231E-01	0.12231E-01	-0.12231E-01	-0.12231E-01	-0.12231E-01	0.12231E-01
-0.12231E-01	-0.12231E-01	-0.12231E-01	0.12231E-01	-0.12231E-01	0.12231E-01	0.12231E-01	0.12231E-01
0.12231E-01	0.12231E-01						

ROW NO. 15

-0.11506E-01	-0.11506E-01	-0.11506E-01	-0.11506E-01	-0.11506E-01	-0.11506E-01	-0.11506E-01	-0.11506E-01
-0.11506E-01	-0.11506E-01	-0.11506E-01	0.11506E-01	0.11506E-01	0.11506E-01	0.10694E 00	-0.11506E-01
0.11506E-01	0.11506E-01	0.11506E-01	-0.11506E-01	0.11506E-01	-0.11506E-01	0.11506E-01	0.11506E-01
-0.11506E-01	-0.11506E-01	-0.11506E-01	-0.11506E-01	0.11506E-01	-0.11506E-01	-0.11506E-01	-0.11506E-01
0.11506E-01	-0.11506E-01	-0.11506E-01	0.11506E-01	-0.11506E-01	-0.11506E-01	-0.11506E-01	0.11506E-01
-0.11506E-01	-0.11506E-01	-0.11506E-01	0.11506E-01	-0.11506E-01	0.11506E-01	0.11506E-01	0.11506E-01
0.11506E-01	0.11506E-01						

ROW NO. 16

0.10659E-01	0.10659E-01	0.10659E-01	0.10659E-01	0.10659E-01	0.10659E-01	0.10659E-01	0.10659E-01
0.10659E-01	0.10659E-01	0.10659E-01	-0.10659E-01	-0.10659E-01	-0.10659E-01	-0.10659E-01	0.98319E-01
-0.10659E-01	-0.10659E-01	-0.10659E-01	0.10659E-01	-0.10659E-01	0.10659E-01	-0.10659E-01	-0.10659E-01
0.10659E-01	0.10659E-01	0.10659E-01	0.10659E-01	-0.10659E-01	0.10659E-01	0.10659E-01	0.10659E-01
-0.10659E-01	0.10659E-01	0.10659E-01	-0.10659E-01	0.10659E-01	0.10659E-01	0.10659E-01	-0.10659E-01
0.10659E-01	0.10659E-01	0.10659E-01	-0.10659E-01	0.10659E-01	-0.10659E-01	-0.10659E-01	-0.10659E-01
-0.10659E-01	-0.10659E-01						

ROW NO. 17

-0.10416E-01	-0.10416E-01	-0.10416E-01	-0.10416E-01	-0.10416E-01	-0.10416E-01	-0.10416E-01	-0.10416E-01
-0.10416E-01	-0.10416E-01	-0.10416E-01	0.10415E-01	0.10415E-01	0.10415E-01	0.10415E-01	-0.10416E-01
0.96175E-01	0.10415E-01	0.10415E-01	-0.10416E-01	0.10415E-01	-0.10416E-01	0.10415E-01	0.10415E-01
-0.10416E-01	-0.10415E-01	-0.10415E-01	-0.10415E-01	0.10415E-01	-0.10415E-01	-0.10415E-01	-0.10416E-01
0.10415E-01	-0.10415E-01	-0.10416E-01	0.10415E-01	-0.10415E-01	-0.10415E-01	-0.10416E-01	0.10415E-01
-0.10415E-01	-0.10415E-01	-0.10416E-01	0.10415E-01	-0.10415E-01	0.10415E-01	0.10415E-01	0.10415E-01
0.10415E-01	0.10415E-01						

ROW NO. 18

-0.88187E-02	-0.88187E-02	-0.88187E-02	-0.88187E-02	-0.88187E-02	-0.88187E-02	-0.88187E-02	-0.88187E-02
-0.88187E-02	-0.88187E-02	-0.88187E-02	0.88186E-02	0.88186E-02	0.88186E-02	0.88186E-02	-0.88187E-02
0.88186E-02	0.92225E-01	0.88186E-02	-0.88187E-02	0.88186E-02	-0.88187E-02	0.88186E-02	0.88186E-02
-0.88187E-02	-0.88186E-02	-0.88186E-02	-0.88186E-02	0.88186E-02	-0.88186E-02	-0.88186E-02	-0.88187E-02
0.88186E-02	-0.88186E-02	-0.88187E-02	0.88186E-02	-0.88186E-02	-0.88186E-02	-0.88187E-02	0.88186E-02
-0.88186E-02	-0.88186E-02	-0.88187E-02	0.88185E-02	-0.88186E-02	0.88185E-02	0.88185E-02	0.88186E-02
0.88186E-02	0.88185E-02						

ROW NO. 19

-0.85404E-02	-0.85404E-02	-0.85404E-02	-0.85404E-02	-0.85404E-02	-0.85404E-02	-0.85404E-02	-0.85404E-02
-0.85404E-02	-0.85404E-02	-0.85404E-02	0.85404E-02	0.85404E-02	0.85404E-02	0.85404E-02	-0.85404E-02
0.85404E-02	0.85404E-02	0.78796E-01	-0.85404E-02	0.85404E-02	-0.85404E-02	0.85404E-02	0.85404E-02
-0.85404E-02	-0.85403E-02	-0.85403E-02	-0.85403E-02	0.85404E-02	-0.85403E-02	-0.85403E-02	-0.85404E-02
0.85404E-02	-0.85403E-02	-0.85404E-02	0.85404E-02	-0.85403E-02	-0.85403E-02	-0.85404E-02	0.85404E-02
-0.85403E-02	-0.85403E-02	-0.85404E-02	0.85403E-02	-0.85403E-02	0.85403E-02	0.85403E-02	0.85404E-02
0.85404E-02	0.85403E-02						

ROW NO. 20

0.81040E-02	0.81040E-02	0.81040E-02	0.81040E-02	0.81040E-02	0.81040E-02	0.81040E-02	0.81040E-02
0.81040E-02	0.81040E-02	0.81040E-02	-0.81040E-02	-0.81040E-02	-0.81040E-02	-0.81040E-02	0.81040E-02
-0.81040E-02	-0.81040E-02	-0.81040E-02	0.74704E-01	-0.81040E-02	0.81040E-02	-0.81040E-02	-0.81040E-02
0.81040E-02	0.81039E-02	0.81039E-02	0.81039E-02	-0.81040E-02	0.81039E-02	0.81039E-02	0.81040E-02
-0.81040E-02	0.81039E-02	0.81040E-02	-0.81040E-02	0.81039E-02	0.81039E-02	0.81040E-02	-0.81040E-02
0.81039E-02	0.81039E-02	0.81040E-02	-0.81039E-02	0.81039E-02	-0.81039E-02	-0.81039E-02	-0.81040E-02
-0.81040E-02	-0.81039E-02						

ROW NO. 21

-0.68885E-02	-0.68885E-02	-0.68885E-02	-0.68885E-02	-0.68885E-02	-0.68885E-02	-0.68885E-02	-0.68885E-02
-0.68885E-02	-0.68885E-02	-0.68885E-02	0.68884E-02	0.68884E-02	0.68884E-02	0.68884E-02	-0.68885E-02
0.68884E-02	0.68884E-02	0.68884E-02	-0.68885E-02	0.63513E-01	-0.68885E-02	0.68884E-02	0.68884E-02
-0.68885E-02	-0.68884E-02	-0.68884E-02	-0.68884E-02	0.68884E-02	-0.68884E-02	-0.68884E-02	-0.68885E-02
0.68884E-02	-0.68884E-02	-0.68885E-02	0.68884E-02	-0.68884E-02	-0.68884E-02	-0.68885E-02	0.68884E-02
-0.68884E-02	-0.68884E-02	-0.68885E-02	0.68883E-02	-0.68884E-02	0.68883E-02	0.68883E-02	0.68884E-02
0.68884E-02	0.68883E-02						

ROW NO. 22

0.62685E-02	0.62685E-02	0.62685E-02	0.62685E-02	0.62685E-02	0.62685E-02	0.62685E-02	0.62685E-02
0.62685E-02	0.62685E-02	0.62685E-02	-0.62685E-02	-0.62685E-02	-0.62685E-02	-0.62685E-02	0.62685E-02
-0.62685E-02	-0.62685E-02	-0.62685E-02	0.62685E-02	-0.62685E-02	0.57756E-01	-0.62685E-02	-0.62685E-02
0.62685E-02	0.62684E-02	0.62684E-02	0.62684E-02	-0.62685E-02	0.62684E-02	0.62684E-02	0.62685E-02
-0.62685E-02	0.62684E-02	0.62685E-02	-0.62685E-02	0.62684E-02	0.62684E-02	0.62685E-02	-0.62685E-02
0.62684E-02	0.62684E-02	0.62685E-02	-0.62684E-02	0.62684E-02	-0.62684E-02	-0.62684E-02	-0.62685E-02
-0.62685E-02	-0.62684E-02						

ROW NO. 23

-0.60816E-02	-0.60816E-02	-0.60816E-02	-0.60816E-02	-0.60816E-02	-0.60816E-02	-0.60816E-02	-0.60816E-02
-0.60816E-02	-0.60816E-02	-0.60816E-02	0.60816E-02	0.60816E-02	0.60816E-02	0.60816E-02	-0.60816E-02
0.60816E-02	0.60816E-02	0.60816E-02	-0.60816E-02	0.60816E-02	-0.60816E-02	0.56962E-01	0.60816E-02
-0.60816E-02	-0.60816E-02	-0.60816E-02	-0.60816E-02	0.60816E-02	-0.60816E-02	-0.60816E-02	-0.60816E-02
0.60816E-02	-0.60816E-02	-0.60816E-02	0.60816E-02	-0.60816E-02	-0.60816E-02	-0.60816E-02	0.60816E-02
-0.60816E-02	-0.60816E-02	-0.60816E-02	0.60815E-02	-0.60816E-02	0.60815E-02	0.60815E-02	0.60816E-02
0.60815E-02	0.60815E-02						

ROW NO. 24

-0.55338E-02	-0.55338E-02	-0.55338E-02	-0.55338E-02	-0.55338E-02	-0.55338E-02	-0.55338E-02	-0.55338E-02
-0.55338E-02	-0.55338E-02	-0.55338E-02	0.55338E-02	0.55338E-02	0.55338E-02	0.55338E-02	-0.55338E-02
0.55338E-02	0.55338E-02	0.55338E-02	-0.55338E-02	0.55338E-02	-0.55338E-02	0.55338E-02	0.50996E-01
-0.55338E-02	-0.55338E-02	-0.55338E-02	-0.55338E-02	0.55338E-02	-0.55338E-02	-0.55338E-02	-0.55338E-02
0.55338E-02	-0.55338E-02	-0.55338E-02	0.55338E-02	-0.55338E-02	-0.55338E-02	-0.55338E-02	0.55338E-02
-0.55338E-02	-0.55338E-02	-0.55338E-02	0.55337E-02	-0.55338E-02	0.55337E-02	0.55337E-02	0.55338E-02
0.55338E-02	0.55337E-02						

ROW NO. 25

0.49235E-02	0.49235E-02	0.49235E-02	0.49235E-02	0.49235E-02	0.49235E-02	0.49235E-02	0.49235E-02
0.49235E-02	0.49235E-02	0.49235E-02	-0.49235E-02	-0.49235E-02	-0.49235E-02	-0.49235E-02	0.49235E-02
-0.49235E-02	-0.49235E-02	-0.49235E-02	0.49235E-02	-0.49235E-02	0.49235E-02	-0.49235E-02	-0.49235E-02
0.45346E-01	0.49235E-02	0.49235E-02	0.49235E-02	-0.49235E-02	0.49235E-02	0.49235E-02	0.49235E-02
-0.49235E-02	0.49235E-02	0.49235E-02	-0.49235E-02	0.49235E-02	0.49235E-02	0.49235E-02	-0.49235E-02
0.49235E-02	0.49235E-02	0.49235E-02	-0.49234E-02	0.49235E-02	-0.49234E-02	-0.49234E-02	-0.49235E-02
-0.49235E-02	-0.49234E-02						

ROW NO. 26

0.48657E-02	0.48657E-02	0.48657E-02	0.48657E-02	0.48657E-02	0.48657E-02	0.48657E-02	0.48657E-02
0.48657E-02	0.48657E-02	0.48657E-02	-0.48657E-02	-0.48657E-02	-0.48657E-02	-0.48657E-02	0.48657E-02
-0.48657E-02	-0.48657E-02	-0.48657E-02	0.48657E-02	-0.48657E-02	0.48657E-02	-0.48657E-02	-0.48657E-02
0.48657E-02	0.44937E-01	0.48657E-02	0.48657E-02	-0.48657E-02	0.48657E-02	0.48657E-02	0.48657E-02
-0.48657E-02	0.48657E-02	0.48657E-02	-0.48657E-02	0.48657E-02	0.48657E-02	0.48657E-02	-0.48657E-02
0.48657E-02	0.48657E-02	0.48657E-02	-0.48656E-02	0.48657E-02	-0.48656E-02	-0.48656E-02	-0.48657E-02
-0.48657E-02	-0.48656E-02						

ROW NO. 27

0.47693E-02	0.47693E-02	0.47693E-02	0.47693E-02	0.47693E-02	0.47693E-02	0.47693E-02	0.47693E-02
0.47693E-02	0.47693E-02	0.47693E-02	-0.47693E-02	-0.47693E-02	-0.47693E-02	-0.47693E-02	0.47693E-02
-0.47693E-02	-0.47693E-02	-0.47693E-02	0.47693E-02	-0.47693E-02	0.47693E-02	-0.47693E-02	-0.47693E-02
0.47693E-02	0.47692E-02	0.44011E-01	0.47692E-02	-0.47693E-02	0.47692E-02	0.47692E-02	0.47693E-02
-0.47693E-02	0.47692E-02	0.47693E-02	-0.47692E-02	0.47692E-02	0.47692E-02	0.47693E-02	-0.47693E-02
0.47692E-02	0.47692E-02	0.47693E-02	-0.47692E-02	0.47692E-02	-0.47692E-02	-0.47692E-02	-0.47693E-02
-0.47693E-02	-0.47692E-02						

ROW NO. 28

0.46444E-02	0.46444E-02	0.46444E-02	0.46444E-02	0.46444E-02	0.46444E-02	0.46444E-02	0.46444E-02
0.46444E-02	0.46444E-02	0.46444E-02	-0.46444E-02	-0.46444E-02	-0.46444E-02	-0.46444E-02	0.46444E-02
-0.46444E-02	-0.46444E-02	-0.46444E-02	0.46444E-02	-0.46444E-02	0.46444E-02	-0.46444E-02	-0.46444E-02
0.46444E-02	0.46444E-02	0.46444E-02	0.42936E-01	-0.46444E-02	0.46444E-02	0.46444E-02	0.46444E-02
-0.46444E-02	0.46444E-02	0.46444E-02	-0.46444E-02	0.46444E-02	0.46444E-02	0.46444E-02	-0.46444E-02
0.46444E-02	0.46444E-02	0.46444E-02	-0.46443E-02	0.46444E-02	-0.46443E-02	-0.46443E-02	-0.46444E-02
-0.46444E-02	-0.46443E-02						

ROW NO. 29

-0.44573E-02	-0.44573E-02	-0.44573E-02	-0.44573E-02	-0.44573E-02	-0.44573E-02	-0.44573E-02	-0.44573E-02
-0.44573E-02	-0.44573E-02	-0.44573E-02	0.44573E-02	0.44573E-02	0.44573E-02	0.44573E-02	-0.44573E-02
0.44573E-02	0.44573E-02	0.44573E-02	-0.44573E-02	0.44573E-02	-0.44573E-02	0.44573E-02	0.44573E-02
-0.44573E-02	-0.44572E-02	-0.44572E-02	-0.44572E-02	0.41058E-01	-0.44572E-02	-0.44572E-02	-0.44573E-02
0.44573E-02	-0.44572E-02	-0.44573E-02	0.44573E-02	-0.44572E-02	-0.44572E-02	-0.44573E-02	0.44573E-02
-0.44572E-02	-0.44572E-02	-0.44573E-02	0.44572E-02	-0.44572E-02	0.44572E-02	0.44572E-02	0.44573E-02
0.44573E-02	0.44572E-02						

ROW NO. 30

0.44252E-02	0.44252E-02	0.44252E-02	0.44252E-02	0.44252E-02	0.44252E-02	0.44252E-02	0.44252E-02
0.44252E-02	0.44252E-02	0.44252E-02	-0.44252E-02	-0.44252E-02	-0.44252E-02	-0.44252E-02	0.44252E-02
-0.44252E-02	-0.44252E-02	-0.44252E-02	0.44252E-02	-0.44252E-02	0.44252E-02	-0.44252E-02	-0.44252E-02
0.44252E-02	0.44251E-02	0.44251E-02	0.44251E-02	-0.44252E-02	0.40809E-01	0.44251E-02	0.44252E-02
-0.44252E-02	0.44251E-02	0.44252E-02	-0.44252E-02	0.44251E-02	0.44251E-02	0.44252E-02	-0.44252E-02
0.44251E-02	0.44251E-02	0.44252E-02	-0.44251E-02	0.44251E-02	-0.44251E-02	-0.44251E-02	-0.44252E-02
-0.44252E-02	-0.44251E-02						

ROW NO. 31

0.41292E-02	0.41292E-02	0.41292E-02	0.41292E-02	0.41292E-02	0.41292E-02	0.41292E-02	0.41292E-02
0.41292E-02	0.41292E-02	0.41292E-02	-0.41292E-02	-0.41292E-02	-0.41292E-02	-0.41292E-02	0.41292E-02
-0.41292E-02	-0.41292E-02	-0.41292E-02	0.41292E-02	-0.41292E-02	0.41292E-02	-0.41292E-02	-0.41292E-02
0.41292E-02	0.41292E-02	0.41292E-02	0.41292E-02	-0.41292E-02	0.41292E-02	0.38219E-01	0.41292E-02
-0.41292E-02	0.41292E-02	0.41292E-02	-0.41292E-02	0.41292E-02	0.41292E-02	0.41292E-02	-0.41292E-02
0.41292E-02	0.41292E-02	0.41292E-02	-0.41292E-02	0.41292E-02	-0.41292E-02	-0.41292E-02	-0.41292E-02
-0.41292E-02	-0.41292E-02						

ROW NO. 32

0.32027E-02	0.32027E-02	0.32027E-02	0.32027E-02	0.32027E-02	0.32027E-02	0.32027E-02	0.32027E-02
0.32027E-02	0.32027E-02	0.32027E-02	-0.32027E-02	-0.32027E-02	-0.32027E-02	-0.32027E-02	0.32027E-02
-0.32027E-02	-0.32027E-02	-0.32027E-02	0.32027E-02	-0.32027E-02	0.32027E-02	-0.32027E-02	-0.32027E-02
0.32027E-02	0.32027E-02	0.32027E-02	0.32027E-02	-0.32027E-02	0.32027E-02	0.32027E-02	0.36447E-01
-0.32027E-02	0.32027E-02	0.32027E-02	-0.32027E-02	0.32027E-02	0.32027E-02	0.32027E-02	-0.32027E-02
0.32027E-02	0.32027E-02	0.32027E-02	-0.32027E-02	0.32027E-02	-0.32027E-02	-0.32027E-02	-0.32027E-02
-0.32027E-02	-0.32027E-02						

ROW NO. 33

-0.38630E-02	-0.38630E-02	-0.38630E-02	-0.38630E-02	-0.38630E-02	-0.38630E-02	-0.38630E-02	-0.38630E-02
-0.38630E-02	-0.38630E-02	-0.38630E-02	0.38630E-02	0.38630E-02	0.38630E-02	0.38630E-02	-0.38630E-02
0.38630E-02	0.38630E-02	0.38630E-02	-0.38630E-02	0.38630E-02	-0.38630E-02	0.38630E-02	0.38630E-02
-0.38630E-02	-0.38630E-02	-0.38630E-02	-0.38630E-02	0.38630E-02	-0.38630E-02	-0.38630E-02	-0.38630E-02
0.36412E-01	-0.38630E-02	-0.38630E-02	0.38630E-02	-0.38630E-02	-0.38630E-02	-0.38630E-02	0.38630E-02
-0.38630E-02	-0.38630E-02	-0.38630E-02	0.38630E-02	-0.38630E-02	0.38630E-02	0.38630E-02	0.38630E-02
0.38630E-02	0.38630E-02						

ROW NO. 34

0.39446E-02	0.39446E-02	0.39446E-02	0.39446E-02	0.39446E-02	0.39446E-02	0.39446E-02	0.39446E-02
0.39446E-02	0.39446E-02	0.39446E-02	-0.39446E-02	-0.39446E-02	-0.39446E-02	-0.39446E-02	0.39446E-02
-0.39446E-02	-0.39446E-02	-0.39446E-02	0.39446E-02	-0.39446E-02	0.39446E-02	-0.39446E-02	-0.39446E-02
0.39446E-02	0.39445E-02	0.39445E-02	0.39445E-02	-0.39446E-02	0.39445E-02	0.39445E-02	0.39446E-02
-0.39446E-02	0.36357E-01	0.39446E-02	-0.39446E-02	0.39445E-02	0.39445E-02	0.39446E-02	-0.39446E-02
0.39445E-02	0.39445E-02	0.39446E-02	-0.39445E-02	0.39445E-02	-0.39445E-02	-0.39445E-02	-0.39446E-02
-0.39446E-02	-0.39445E-02						

ROW NO. 35

0.39202E-02	0.39202E-02	0.39202E-02	0.39202E-02	0.39202E-02	0.39202E-02	0.39202E-02	0.39202E-02
0.39202E-02	0.39202E-02	0.39202E-02	-0.39202E-02	-0.39202E-02	-0.39202E-02	-0.39202E-02	0.39202E-02
-0.39202E-02	-0.39202E-02	-0.39202E-02	0.39202E-02	-0.39202E-02	0.39202E-02	-0.39202E-02	-0.39202E-02
0.39202E-02	0.39202E-02	0.39202E-02	0.39202E-02	-0.39202E-02	0.39202E-02	0.39202E-02	0.39202E-02
-0.39202E-02	0.39202E-02	0.36093E-01	-0.39202E-02	0.39202E-02	0.39202E-02	0.39202E-02	-0.39202E-02
0.39202E-02	0.39202E-02	0.39202E-02	-0.39202E-02	0.39202E-02	-0.39202E-02	-0.39202E-02	-0.39202E-02
-0.39202E-02	-0.39202E-02						

ROW NO. 36

-0.36115E-02	-0.36115E-02	-0.36115E-02	-0.36115E-02	-0.36115E-02	-0.36115E-02	-0.36115E-02	-0.36115E-02
-0.36115E-02	-0.36115E-02	-0.36115E-02	0.36115E-02	0.36115E-02	0.36115E-02	0.36115E-02	-0.36115E-02
0.36115E-02	0.36115E-02	0.36115E-02	-0.36115E-02	0.36115E-02	-0.36115E-02	0.36115E-02	0.36115E-02
-0.36115E-02	-0.36115E-02	-0.36115E-02	-0.36115E-02	0.36115E-02	-0.36115E-02	-0.36115E-02	-0.36115E-02
0.36115E-02	-0.36115E-02	-0.36115E-02	0.33255E-01	-0.36115E-02	-0.36115E-02	-0.36115E-02	0.36115E-02
-0.36115E-02	-0.36115E-02	-0.36115E-02	0.36114E-02	-0.36115E-02	0.36114E-02	0.36114E-02	0.36115E-02
0.36115E-02	0.36114E-02						

ROW NO. 37

0.34340E-02	0.34340E-02	0.34340E-02	0.34340E-02	0.34340E-02	0.34340E-02	0.34340E-02	0.34340E-02
0.34340E-02	0.34340E-02	0.34340E-02	-0.34340E-02	-0.34340E-02	-0.34340E-02	-0.34340E-02	0.34340E-02
-0.34340E-02	-0.34340E-02	-0.34340E-02	0.34340E-02	-0.34340E-02	0.34340E-02	-0.34340E-02	-0.34340E-02
0.34340E-02	0.34339E-02	0.34339E-02	0.34339E-02	-0.34340E-02	0.34339E-02	0.34339E-02	0.34340E-02
-0.34340E-02	0.34339E-02	0.34340E-02	-0.34340E-02	0.31831E-01	0.34339E-02	0.34340E-02	-0.34340E-02
0.34339E-02	0.34339E-02	0.34340E-02	-0.34339E-02	0.34339E-02	-0.34339E-02	-0.34339E-02	-0.34340E-02
-0.34340E-02	-0.34339E-02						

ROW NO. 38

0.34251E-02	0.34251E-02	0.34251E-02	0.34251E-02	0.34251E-02	0.34251E-02	0.34251E-02	0.34251E-02
0.34251E-02	0.34251E-02	0.34251E-02	-0.34251E-02	-0.34251E-02	-0.34251E-02	-0.34251E-02	0.34251E-02
-0.34251E-02	-0.34251E-02	-0.34251E-02	0.34251E-02	-0.34251E-02	0.34251E-02	-0.34251E-02	-0.34251E-02
0.34251E-02	0.34251E-02	0.34251E-02	0.34251E-02	-0.34251E-02	0.34251E-02	0.34251E-02	0.34251E-02
-0.34251E-02	0.34251E-02	0.34251E-02	-0.34251E-02	0.34251E-02	0.31555E-01	0.34251E-02	-0.34251E-02
0.34251E-02	0.34251E-02	0.34251E-02	-0.34250E-02	0.34251E-02	-0.34250E-02	-0.34250E-02	-0.34251E-02
-0.34251E-02	-0.34250E-02						

ROW NO. 39

0.31597E-02	0.31597E-02	0.31597E-02	0.31597E-02	0.31597E-02	0.31597E-02	0.31597E-02	0.31597E-02
0.31597E-02	0.31597E-02	0.31597E-02	-0.31597E-02	-0.31597E-02	-0.31597E-02	-0.31597E-02	0.31597E-02
-0.31597E-02	-0.31597E-02	-0.31597E-02	0.31597E-02	-0.31597E-02	0.31597E-02	-0.31597E-02	-0.31597E-02
0.31597E-02	0.31597E-02	0.31597E-02	0.31597E-02	-0.31597E-02	0.31597E-02	0.31597E-02	0.31597E-02
-0.31597E-02	0.31597E-02	0.31597E-02	-0.31597E-02	0.31597E-02	0.31597E-02	0.29083E-01	-0.31597E-02
0.31597E-02	0.31597E-02	0.31597E-02	-0.31597E-02	0.31597E-02	-0.31597E-02	-0.31597E-02	-0.31597E-02
-0.31597E-02	-0.31597E-02						

ROW NO. 40

-0.29478E-02	-0.29478E-02	-0.29478E-02	-0.29478E-02	-0.29478E-02	-0.29478E-02	-0.29478E-02	-0.29478E-02
-0.29478E-02	-0.29478E-02	-0.29478E-02	0.29478E-02	0.29478E-02	0.29478E-02	0.29478E-02	-0.29478E-02
0.29478E-02	0.29478E-02	0.29478E-02	-0.29478E-02	0.29478E-02	-0.29478E-02	0.29478E-02	0.29478E-02
-0.29478E-02	-0.29477E-02	-0.29477E-02	-0.29477E-02	0.29478E-02	-0.29477E-02	-0.29477E-02	-0.29478E-02
0.29478E-02	-0.29477E-02	-0.29478E-02	0.29478E-02	-0.29477E-02	-0.29477E-02	-0.29478E-02	0.27135E-01
-0.29477E-02	-0.29477E-02	-0.29478E-02	0.29477E-02	-0.29477E-02	0.29477E-02	0.29477E-02	0.29478E-02
0.29478E-02	0.29477E-02						

ROW NO. 41

0.29288E-02	0.29288E-02	0.29288E-02	0.29288E-02	0.29288E-02	0.29288E-02	0.29288E-02	0.29288E-02
0.29288E-02	0.29288E-02	0.29288E-02	-0.29288E-02	-0.29288E-02	-0.29288E-02	-0.29288E-02	0.29288E-02
-0.29288E-02	-0.29288E-02	-0.29288E-02	0.29288E-02	-0.29288E-02	0.29288E-02	-0.29288E-02	-0.29288E-02
0.29288E-02	0.29288E-02	0.29288E-02	0.29288E-02	-0.29288E-02	0.29288E-02	0.29288E-02	0.29288E-02
-0.29288E-02	0.29288E-02	0.29288E-02	-0.29288E-02	0.29288E-02	0.29288E-02	0.29288E-02	-0.29288E-02
0.26972E-01	0.29288E-02	0.29288E-02	-0.29287E-02	0.29288E-02	-0.29287E-02	-0.29287E-02	-0.29288E-02
-0.29288E-02	-0.29287E-02						

ROW NO. 42

0.26992E-02	0.26992E-02	0.26992E-02	0.26992E-02	0.26992E-02	0.26992E-02	0.26992E-02	0.26992E-02
0.26992E-02	0.26992E-02	0.26992E-02	-0.26991E-02	-0.26991E-02	-0.26991E-02	-0.26991E-02	0.26992E-02
-0.26991E-02	-0.26991E-02	-0.26991E-02	0.26992E-02	-0.26991E-02	0.26992E-02	-0.26991E-02	-0.26991E-02
0.26992E-02	0.26991E-02	0.26991E-02	0.26991E-02	-0.26991E-02	0.26991E-02	0.26991E-02	0.26992E-02
-0.26991E-02	0.26991E-02	0.26992E-02	-0.26991E-02	0.26991E-02	0.26991E-02	0.26992E-02	-0.26991E-02
0.26991E-02	0.25065E-01	0.26992E-02	-0.26991E-02	0.26991E-02	-0.26991E-02	-0.26991E-02	-0.26991E-02
-0.26991E-02	-0.26991E-02						

ROW NO. 43

0.25749E-02	0.25749E-02	0.25749E-02	0.25749E-02	0.25749E-02	0.25749E-02	0.25749E-02	0.25749E-02
0.25749E-02	0.25749E-02	0.25749E-02	-0.25749E-02	-0.25749E-02	-0.25749E-02	-0.25749E-02	0.25749E-02
-0.25749E-02	-0.25749E-02	-0.25749E-02	0.25749E-02	-0.25749E-02	0.25749E-02	-0.25749E-02	-0.25749E-02
0.25749E-02	0.25749E-02	0.25749E-02	0.25749E-02	-0.25749E-02	0.25749E-02	0.25749E-02	0.25749E-02
-0.25749E-02	0.25749E-02	0.25749E-02	-0.25749E-02	0.25749E-02	0.25749E-02	0.25749E-02	-0.25749E-02
0.25749E-02	0.25749E-02	0.23695E-01	-0.25749E-02	0.25749E-02	-0.25749E-02	-0.25749E-02	-0.25749E-02
-0.25749E-02	-0.25749E-02						

ROW NO. 44

-0.24855E-02	-0.24855E-02	-0.24855E-02	-0.24855E-02	-0.24855E-02	-0.24855E-02	-0.24855E-02	-0.24855E-02
-0.24855E-02	-0.24855E-02	-0.24855E-02	0.24855E-02	0.24855E-02	0.24855E-02	0.24855E-02	-0.24855E-02
0.24855E-02	0.24855E-02	0.24855E-02	-0.24855E-02	0.24855E-02	-0.24855E-02	0.24855E-02	0.24855E-02
-0.24855E-02	-0.24854E-02	-0.24854E-02	-0.24854E-02	0.24855E-02	-0.24854E-02	-0.24854E-02	-0.24855E-02
0.24855E-02	-0.24854E-02	-0.24855E-02	0.24855E-02	-0.24854E-02	-0.24854E-02	-0.24855E-02	0.24855E-02
-0.24854E-02	-0.24854E-02	-0.24855E-02	0.22919E-01	-0.24854E-02	0.24854E-02	0.24854E-02	0.24855E-02
0.24855E-02	0.24854E-02						

ROW NO. 45

0.24853E-02	0.24853E-02	0.24853E-02	0.24853E-02	0.24853E-02	0.24853E-02	0.24853E-02	0.24853E-02
0.24853E-02	0.24853E-02	0.24853E-02	-0.24853E-02	-0.24853E-02	-0.24853E-02	-0.24853E-02	0.24853E-02
-0.24853E-02	-0.24853E-02	-0.24853E-02	0.24853E-02	-0.24853E-02	0.24853E-02	-0.24853E-02	-0.24853E-02
0.24853E-02	0.24853E-02	0.24853E-02	0.24853E-02	-0.24853E-02	0.24853E-02	0.24853E-02	0.24853E-02
-0.24853E-02	0.24853E-02	0.24853E-02	-0.24853E-02	0.24853E-02	0.24853E-02	0.24853E-02	-0.24853E-02
0.24853E-02	0.24853E-02	0.24853E-02	-0.24853E-02	0.22881E-01	-0.24853E-02	-0.24853E-02	-0.24853E-02
-0.24853E-02	-0.24853E-02						

ROW NO. 46

-0.24328E-02	-0.24328E-02	-0.24328E-02	-0.24328E-02	-0.24328E-02	-0.24328E-02	-0.24328E-02	-0.24328E-02
-0.24328E-02	-0.24328E-02	-0.24328E-02	0.24327E-02	0.24327E-02	0.24327E-02	0.24327E-02	-0.24328E-02
0.24327E-02	0.24327E-02	0.24327E-02	-0.24328E-02	0.24327E-02	-0.24328E-02	0.24327E-02	0.24327E-02
-0.24328E-02	-0.24327E-02	-0.24327E-02	-0.24327E-02	0.24327E-02	-0.24327E-02	-0.24327E-02	-0.24328E-02
0.24327E-02	-0.24327E-02	-0.24328E-02	0.24327E-02	-0.24327E-02	-0.24327E-02	-0.24328E-02	0.24327E-02
-0.24327E-02	-0.24327E-02	-0.24328E-02	0.24327E-02	-0.24327E-02	0.22446E-01	0.24327E-02	0.24327E-02
0.24327E-02	0.24327E-02						

ROW NO. 47

-0.24329E-02	-0.24329E-02	-0.24329E-02	-0.24329E-02	-0.24329E-02	-0.24329E-02	-0.24329E-02	-0.24329E-02
-0.24329E-02	-0.24329E-02	-0.24329E-02	0.24329E-02	0.24329E-02	0.24329E-02	0.24329E-02	-0.24329E-02
0.24329E-02	0.24329E-02	0.24329E-02	-0.24329E-02	0.24329E-02	-0.24329E-02	0.24329E-02	0.24329E-02
-0.24329E-02	-0.24328E-02	-0.24328E-02	-0.24328E-02	0.24329E-02	-0.24328E-02	-0.24328E-02	-0.24329E-02
0.24329E-02	-0.24328E-02	-0.24329E-02	0.24329E-02	-0.24328E-02	-0.24328E-02	-0.24329E-02	0.24329E-02
-0.24328E-02	-0.24328E-02	-0.24329E-02	0.24328E-02	-0.24328E-02	0.24328E-02	0.22423E-01	0.24329E-02
0.24329E-02	0.24328E-02						

ROW NO. 48

-0.24249E-02	-0.24249E-02	-0.24249E-02	-0.24249E-02	-0.24249E-02	-0.24249E-02	-0.24249E-02	-0.24249E-02
-0.24249E-02	-0.24249E-02	-0.24249E-02	0.24249E-02	0.24249E-02	0.24249E-02	0.24249E-02	-0.24249E-02
0.24249E-02	0.24249E-02	0.24249E-02	-0.24249E-02	0.24249E-02	-0.24249E-02	0.24249E-02	0.24249E-02
-0.24249E-02	-0.24249E-02	-0.24249E-02	-0.24249E-02	0.24249E-02	-0.24249E-02	-0.24249E-02	-0.24249E-02
0.24249E-02	-0.24249E-02	-0.24249E-02	0.24249E-02	-0.24249E-02	-0.24249E-02	-0.24249E-02	0.24249E-02
-0.24249E-02	-0.24249E-02	-0.24249E-02	0.24249E-02	-0.24249E-02	0.24249E-02	0.24249E-02	0.22316E-01
0.24249E-02	0.24249E-02						

ROW NO. 49

-0.23003E-02	-0.23003E-02	-0.23003E-02	-0.23003E-02	-0.23003E-02	-0.23003E-02	-0.23003E-02	-0.23003E-02
-0.23003E-02	-0.23003E-02	-0.23003E-02	0.23003E-02	0.23003E-02	0.23003E-02	0.23003E-02	-0.23003E-02
0.23003E-02	0.23003E-02	0.23003E-02	-0.23003E-02	0.23003E-02	-0.23003E-02	0.23003E-02	0.23003E-02
-0.23003E-02	-0.23003E-02	-0.23003E-02	-0.23003E-02	0.23003E-02	-0.23003E-02	-0.23003E-02	-0.23003E-02
0.23003E-02	-0.23003E-02	-0.23003E-02	0.23003E-02	-0.23003E-02	-0.23003E-02	-0.23003E-02	0.23003E-02
-0.23003E-02	-0.23003E-02	-0.23003E-02	0.23003E-02	-0.23003E-02	0.23003E-02	0.23003E-02	0.23003E-02
0.21873E-01	0.23003E-02						

ROW NO. 50

-0.22956E-02	-0.22956E-02	-0.22956E-02	-0.22956E-02	-0.22956E-02	-0.22956E-02	-0.22956E-02	-0.22956E-02
-0.22956E-02	-0.22956E-02	-0.22956E-02	0.22956E-02	0.22956E-02	0.22956E-02	0.22956E-02	-0.22956E-02
0.22956E-02	0.22956E-02	0.22956E-02	-0.22956E-02	0.22956E-02	-0.22956E-02	0.22956E-02	0.22956E-02
-0.22956E-02	-0.22956E-02	-0.22956E-02	-0.22956E-02	0.22956E-02	-0.22956E-02	-0.22956E-02	-0.22956E-02
0.22956E-02	-0.22956E-02	-0.22956E-02	0.22956E-02	-0.22956E-02	-0.22956E-02	-0.22956E-02	0.22956E-02
-0.22956E-02	-0.22956E-02	-0.22956E-02	0.22956E-02	-0.22956E-02	0.22956E-02	0.22956E-02	0.22956E-02
0.22956E-02	0.21150E-01						

SOLUTION FOR EIGENMATRIX OF 50BY 50

MODE	EIGENVALUE	ITERATIONS S.P.	D.P.	AITKENS S.P.	D.P.
1	0.14632137E 01	14	0	3	0
2	0.97404109E 00	60	15	0	0

EIGENVECTORS

	COLUMN 1	COLUMN 2	COLUMN
1	0.10000000E 01	0.10000000E 01	
2	0.85882065E 00	-0.97101007E 00	
3	0.42622349E 00	-0.67465298E-01	
4	0.43191709E 00	-0.67748424E-01	
5	0.23050754E 00	-0.25732379E-01	
6	0.13593487E 00	-0.13472417E-01	
7	0.13561053E 00	-0.13330225E-01	
8	0.85974974E-01	-0.79274047E-02	
9	0.58739844E-01	-0.52746073E-02	
10	0.38199861E-01	-0.33061244E-02	
11	0.40627330E-01	-0.35396921E-02	
12	-0.39158454E-01	0.34642019E-02	
13	-0.38214273E-01	0.33569345E-02	
14	-0.34644440E-01	0.30142553E-02	
15	-0.32893230E-01	0.28734552E-02	
16	0.29442091E-01	-0.25232467E-02	
17	-0.29535093E-01	0.25686657E-02	
18	-0.25102125E-01	0.21883519E-02	
19	-0.23944507E-01	0.20695918E-02	
20	0.22725602E-01	-0.19658848E-02	
21	-0.19025182E-01	0.16313144E-02	
22	0.17306819E-01	-0.14850397E-02	
23	-0.16375299E-01	0.13850636E-02	
24	-0.14635256E-01	0.12244624E-02	
25	0.13435072E-01	-0.11446725E-02	
26	0.13658878E-01	-0.11818676E-02	
27	0.15621589E-01	-0.14476206E-02	
28	0.15277757E-01	-0.14169677E-02	
29	-0.80664203E-02	0.50305144E-03	
30	0.15803813E-01	-0.15128574E-02	
31	0.11706947E-01	-0.10190189E-02	
32	0.89413845E-02	-0.77101984E-03	
33	-0.10728772E-01	0.92195591E-03	
34	0.10784300E-01	-0.91996184E-03	
35	0.11154525E-01	-0.97227283E-03	
36	-0.98543558E-02	0.83978637E-03	
37	0.96495283E-02	-0.83424302E-03	
38	0.93360423E-02	-0.79516845E-03	
39	0.10823664E-01	-0.10232199E-02	
40	-0.81609217E-02	0.70091221E-03	
41	0.80926457E-02	-0.69333031E-03	
42	0.73963042E-02	-0.63154771E-03	
43	0.72938958E-02	-0.63426694E-03	
44	-0.68016087E-02	0.58036949E-03	
45	0.70082628E-02	-0.60794386E-03	
46	-0.66554364E-02	0.56781142E-03	
47	-0.68277984E-02	0.59077388E-03	
48	-0.66335159E-02	0.56591677E-03	
49	-0.64573991E-02	0.55881572E-03	
50	-0.62752842E-02	0.53515856E-03	

CHECK EIGENVALUES AND EIGENVECTORS

0.14632137E 01 0.97404118E 00

	COLUMN 1	COLUMN 2	COLUMN
1	0.10000000E 01	0.10000000E 01	
2	0.85882071E 00	-0.97100934E 00	
3	0.42622355E 00	-0.67464978E-01	
4	0.43191713E 00	-0.67748056E-01	
5	0.23050755E 00	-0.25732264E-01	
6	0.13593488E 00	-0.13472338E-01	
7	0.13561059E 00	-0.13330164E-01	
8	0.85974979E-01	-0.79273517E-02	
9	0.58739849E-01	-0.52745784E-02	
10	0.38199863E-01	-0.33061051E-02	
11	0.40627333E-01	-0.35396767E-02	
12	-0.39158456E-01	0.34641835E-02	
13	-0.38214281E-01	0.33569197E-02	
14	-0.34644443E-01	0.30142359E-02	
15	-0.32893232E-01	0.28734409E-02	
16	0.29442093E-01	-0.25232298E-02	
17	-0.29535094E-01	0.25686522E-02	
18	-0.25102126E-01	0.21883388E-02	
19	-0.23944509E-01	0.20695803E-02	
20	0.22725603E-01	-0.19658701E-02	
21	-0.19025183E-01	0.16313064E-02	
22	0.17306820E-01	-0.14850294E-02	
23	-0.16375300E-01	0.13850569E-02	
24	-0.14635257E-01	0.12244538E-02	
25	0.13435074E-01	-0.11446651E-02	
26	0.13656879E-01	-0.11818598E-02	
27	0.15621590E-01	-0.14476129E-02	
28	0.15277758E-01	-0.14169592E-02	
29	-0.80664216E-02	0.50304671E-03	
30	0.15803814E-01	-0.15128495E-02	
31	0.11706948E-01	-0.10190128E-02	
32	0.89413851E-02	-0.77101562E-03	
33	-0.10728773E-01	0.92195057E-03	
34	0.10784301E-01	-0.91995630E-03	
35	0.11154526E-01	-0.97226799E-03	
36	-0.98543565E-02	0.83978193E-03	
37	0.96495295E-02	-0.83423829E-03	
38	0.93360430E-02	-0.79516370E-03	
39	0.10823665E-01	-0.10232152E-02	
40	-0.81609221E-02	0.70090812E-03	
41	0.80926461E-02	-0.69332590E-03	
42	0.73963046E-02	-0.63154398E-03	
43	0.72938961E-02	-0.63426283E-03	
44	-0.68016092E-02	0.58036559E-03	
45	0.70082632E-02	-0.60793958E-03	
46	-0.66554368E-02	0.56780809E-03	
47	-0.68277990E-02	0.59076954E-03	
48	-0.66335163E-02	0.56591348E-03	
49	-0.64573996E-02	0.55881156E-03	
50	-0.62752846E-02	0.53515533E-03	

** DEFLECTIONS AT THETA = 0.

** FREQ.IN CPS 0.60731E 02
0.74435E 02

X	U	V	W
* MODE NUMBER 1 *			
0.	0.2156827E-01	-0.	-0.
0.1521368E 00	0.2132365E-01	-0.	0.1306088E 00
0.3042735E 00	0.2059060E-01	-0.	0.2585745E 00
0.4564103E 00	0.1941309E-01	0.	0.3798555E 00
0.6085470E 00	0.1789512E-01	0.	0.4938636E 00
0.7606838E 00	0.1605713E-01	0.	0.6082210E 00
0.9128205E 00	0.1365120E-01	-0.	0.7319357E 00
0.1064957E 01	0.1023243E-01	-0.	0.8589744E 00
0.1217094E 01	0.5562546E-02	0.	0.9605347E 00
0.1369231E 01	0.1459937E-08	0.	0.1000000E 01
0.1521367E 01	-0.5562544E-02	0.	0.9605347E 00
0.1673504E 01	-0.1023243E-01	-0.	0.8589745E 00
0.1825641E 01	-0.1365120E-01	-0.	0.7319359E 00
0.1977778E 01	-0.1605713E-01	0.	0.6082211E 00
0.2129914E 01	-0.1789512E-01	0.	0.4938637E 00
0.2282051E 01	-0.1941310E-01	0.	0.3798556E 00
0.2434188E 01	-0.2059060E-01	-0.	0.2585746E 00
0.2586325E 01	-0.2132365E-01	-0.	0.1306089E 00
0.2738461E 01	-0.2156827E-01	-0.	0.1169375E-06
* MODE NUMBER 2 *			
0.	0.1131616E-01	0.	0.
0.1521368E 00	0.1102895E-01	0.	-0.1096557E 00
0.3042735E 00	0.1017769E-01	0.	-0.2171141E 00
0.4564103E 00	0.8737139E-02	-0.	-0.3186764E 00
0.6085470E 00	0.6634509E-02	-0.	-0.4165223E 00
0.7606838E 00	0.3974061E-02	-0.	-0.5253181E 00
0.9128205E 00	0.1310564E-02	0.	-0.6611493E 00
0.1064957E 01	-0.4752302E-03	0.	-0.8162974E 00
0.1217094E 01	-0.8043363E-03	-0.	-0.9476982E 00
0.1369231E 01	-0.2073886E-09	-0.	-0.1000000E 01
0.1521367E 01	0.8043355E-03	-0.	-0.9476982E 00
0.1673504E 01	0.4752310E-03	0.	-0.8162975E 00
0.1825641E 01	-0.1310562E-02	0.	-0.6611494E 00
0.1977778E 01	-0.3974059E-02	-0.	-0.5253182E 00
0.2129914E 01	-0.6634506E-02	-0.	-0.4165223E 00
0.2282051E 01	-0.8737135E-02	-0.	-0.3186764E 00
0.2434188E 01	-0.1017769E-01	0.	-0.2171142E 00
0.2586325E 01	-0.1102895E-01	0.	-0.1096558E 00
0.2738461E 01	-0.1131616E-01	0.	-0.1007634E-06

CIRCUMFERENTIAL DEFLECTIONS AT X = 0.137000E 01

THETA	U	V	W
* MODE NUMBER 1 *			
-0.3141593E 01	-0.7887064E-06	-0.4359693E-08	0.2674892E-01
-0.2967060E 01	-0.4923795E-06	0.4152535E-02	0.1792333E-01
-0.2792527E 01	0.3222766E-06	0.5623501E-02	-0.3730739E-02
-0.2617994E 01	0.7047845E-06	0.2369230E-02	-0.3198064E-01
-0.2443461E 01	0.1075790E-05	-0.4953857E-02	-0.4568009E-01
-0.2268928E 01	-0.6605414E-06	-0.9985683E-02	-0.1385671E-02
-0.2094395E 01	-0.2028895E-05	-0.4200095E-02	0.6532119E-01
-0.1919862E 01	-0.1449150E-05	0.1054190E-01	0.8595974E-01
-0.1745329E 01	0.1100597E-05	0.1928176E-01	-0.1167383E-03
-0.1570796E 01	0.3867311E-05	0.7589414E-02	-0.1344260E 00
-0.1396263E 01	0.2599485E-05	-0.2175842E-01	-0.1610198E 00
-0.1221730E 01	-0.2997460E-05	-0.3610435E-01	0.2158372E-01
-0.1047197E 01	-0.6821299E-05	-0.9338764E-02	0.2745675E 00
-0.8726645E 00	-0.4464778E-05	0.4606423E-01	0.2907929E 00
-0.6981315E 00	0.5478416E-05	0.7053747E-01	-0.6636030E-01
-0.5235986E 00	0.1339179E-04	0.1485559E-01	-0.5253977E 00
-0.3490657E 00	0.1139171E-04	-0.8478165E-01	-0.5114933E 00
-0.1745328E 00	-0.6128298E-05	-0.1235744E 00	0.2120690E 00
0.1639128E-06	-0.2899005E-04	0.1652384E-06	0.1000000E 01
* MODE NUMBER 2 *			
-0.3141593E 01	-0.2320664E-04	-0.4980232E-07	0.1000000E 01
-0.2967060E 01	-0.1032787E-04	0.1412406E 00	0.4335212E 00
-0.2792527E 01	0.1372274E-04	0.1232216E 00	-0.6123379E 00
-0.2617994E 01	0.2208688E-04	-0.3026290E-01	-0.9423715E 00
-0.2443461E 01	0.6021088E-05	-0.1433687E 00	-0.2111234E 00
-0.2268928E 01	-0.1536175E-04	-0.9344190E-01	0.7060234E 00
-0.2094395E 01	-0.1865430E-04	0.5311170E-01	0.7781323E 00
-0.1919862E 01	-0.1954501E-05	0.1282026E 00	-0.2837560E-02
-0.1745329E 01	0.1482582E-04	0.5832441E-01	-0.6900052E 00
-0.1570796E 01	0.1381539E-04	-0.6317139E-01	-0.5413830E 00
-0.1396263E 01	-0.1095975E-05	-0.9845424E-01	0.1619371E 00
-0.1221730E 01	-0.1189993E-04	-0.2544019E-01	0.5607061E 00
-0.1047197E 01	-0.8516657E-05	0.5684808E-01	0.2778478E 00
-0.8726645E 00	0.2296305E-05	0.5915394E-01	-0.2280920E 00
-0.6981315E 00	0.7320015E-05	0.1175383E-02	-0.3416823E 00
-0.5235986E 00	0.3628047E-05	-0.3558204E-01	-0.4337646E-01
-0.3490657E 00	-0.2012483E-05	-0.1921754E-01	0.1841333E 00
-0.1745328E 00	-0.2592258E-05	0.8002378E-02	0.6921634E-01
0.1639128E-06	0.6055350E-06	-0.1910805E-07	-0.1166164E 00

JOB 5587 COMP/ASSMBL TIME 0.006 HRS., EXECUTION TIME 0.024 HRS.

APPENDIX C

INPUT DATA FORMAT, PROGRAM LISTING, AND TYPICAL OUTPUT DATA OF THE ACOUSTIC RESPONSE COMPUTER PROGRAM

DATA INPUT FORMAT

The program predicts the power spectral density of the acoustic response of a shell structure. The input data to the program include the shell modal data in the form of the generalized masses and the generalized forces, the acoustic input power spectrum, and the frequencies at which the response spectral density is to be computed. If the responses at more than one station are sought, an identical number of sets of W data $\left[= \overline{w}\,(s) \cos n\theta\right]$ is to be provided to the program. Responses can be sought for different values of damping constant "GAMMA" by providing a number of input data sets with the desired values of "GAMMA". The following is a table defining the input data. The balance of the Appendix consists of the input format, computer program listing, and typical output data. The detail analysis of the program is presented in Section IV of the subject report.

DEFINITIONS

GAMMA	Damping constant, (Non-dimensional)
L	Total number of stations in the frequency domain where spectral density is computed, (ND)
N	Number of natural modes. (ND)
NSTAT	Number of sets of deflections w, (ND)
OMNAT	Natural frequency (cps)
B	Generalized force (lb.)
AMAS	Generalized mass (lb. in. sec^2)
OMEGA	Forcing frequency (cps)
PHIP	Input spectral density ($lb^2/in^4/cps$)
W	$= \overline{w}\,(s) \cos n\theta$

KEY PUNCH FORM - GENERAL PURPOSE
FORM 20-708 (R.7-63)

JOB TITLE					ENGINEER	PAGE
Acoustic Response Program						1 OF 1
DPWA SERIAL NO.	PRE.	DPD JOB NO.	DASH	FOR ORGN. NO.	ANALYST	DATE

INPUT DATA FORMAT

GAMMA	L	N	*	* NSTAT				
OMNAT (1)	OMNAT (2)	-----	-----	-----	OMNAT (N)			
B (1)	B (2)	-----	-----	-----	B (N)			
AMAS (1)	AMAS (2)	-----	-----	-----	AMAS (N)			
OMEGA (1)	OMEGA (2)	-----	-----	-----	OMEGA (L)			
PHIP (1)	PHIP (2)	-----	-----	-----	PHIP (L)			
W (1)	W (2)	-----	-----	-----	W (N)	*		

* NSTAT sets of W data can be stacked one after another

```
$EXECUTE        IBJOB
$IBJOB YAMANE   GO,MAP
$IBFTC MAIN
C  ACOUSTIC RESPONSE PROGRAM
C                                                                       ACST
C  N = TOTAL NUMBER OF NATURAL MODES                                    ACST
C  L = TOTAL NUMBER OF STATIONS IN THE FREQUENCY DOMAIN WHERE PHIG ARE  ACST
C      COMPUTED                                                         ACST
C  PHIP = INPUT SPECTRAL DENSITY                                        ACST
C  GAMMA =DAMPING COEFFICIENT                                           ACST
C  AMAS = GENERALIZED MASS                                              ACST
C  OMNAT =NATURAL          FREQUENCY                                    ACST
C
C                                                                       ACST
      DIMENSION OMNAT(10),OMEGA(45),AMAS(10),B(10),BIGC(45,10,10),      ACST
     1  BIGD(45,10,10),AFACT(45,10),W(10),PHIP(45),BIGA(45,10),PHIG(45)
C
      NGAM =1                                                           ACST
    3 READ (5,10) GAMMA,L,N,NSTAT                                       ACST
      WRITE (6,210)                                                     ACST
  210 FORMAT(18H1** INPUT DATA **,/)                                    ACST
      WRITE (6,215) GAMMA,L,N,NSTAT                                     ACST
  215 FORMAT(8H GAMMA =E14.6,18H     NO.OF FREQ. =I2,19H     NO. OF MODEACST
     1S =I2,19H     NO. OF STAT. =I2,/)                                 ACST
   10 FORMAT(1E12.8,3I3)                                                ACST
   15 FORMAT(6E12.8)
      READ (5,15) (OMNAT(I),I=1,N)
      READ (5,15) (B(I),I=1,N)                                          ACST
      READ (5,15) (AMAS(I),I=1,N)                                       ACST
      READ (5,15) (OMEGA(I),I=1,L)                                      ACST
      IF(NGAM.GT.1) GO TO 242                                           ACST
      WRITE (6,225) (B(I),I=1,N)                                        ACST
  225 FORMAT(10H ** BS ** /6E18.6/6E18.6/6E18.6)                        ACST
      WRITE (6,230) (AMAS(I),I=1,N)                                     ACST
  230 FORMAT(18H GENERALIZED MASS /6E18.6/6E18.6/6E18.6)                ACST
      WRITE (6,220) (OMNAT(I),I=1,N)                                    ACST
  220 FORMAT(19H NATURAL FREQUENCY /6E18.6/6E18.6/6E18.6)               ACST
      WRITE (6,240) (OMEGA(I),I=1,L)                                    ACST
  240 FORMAT(14H FORCING FREQ /6E18.6/6E18.6/6E18.6/6E18.6/6E18.6/6E18.6ACST
     1/6E18.6/6E18.6)
      GBAR =386.064
C
C  FIRSTLY TO COMPUTE BIGC AND BIGD                                     ACST
C                                                                       ACST
  242 CONTINUE                                                          ACST
```

```
      GAM2 =GAMMA*GAMMA
      DO 100 I=1,L                                                      ACST
      DO 100 J=1,N                                                      ACST
      DO 100 K=1,N                                                      ACST
      ROMK =OMMAT(K)/OMEGA(I)                                           ACST
      ROMK2 =ROMK*ROMK                                                  ACST
      ROMJ =OMMAT(J)/OMEGA(I)                                           ACST
      ROMJ2 =ROMJ*ROMJ                                                  ACST
      BIGC(I,J,K) =(ROMK2-1.)*(ROMJ2-1.)&4.*GAM2*ROMK*ROMJ              ACST
      BIGD(I,J,K) =2.*GAMMA*(ROMK*(ROMJ2-1.)-ROMJ*(ROMK2-1.))           ACST
      IF(J.GT.1) GO TO 100                                              ACST
      ROM12 =(ROMK2-1.)**2                                              ACST
      ROMGAM=4.*GAM2*ROMK2                                              ACST
      AFACT(I,K) =B(K)/(AMAS(K)*GBAR*(ROM12&ROMGAM))                    ACST
  100 CONTINUE                                                          ACST
      ISTAT =1                                                          ACST
C                                                                       ACST
C                                                                       ACST
      READ (5,15) (PHIP(I1),I1=1,L)                                     ACST
  110 READ (5,15) (W(I2),I2=1,N)                                        ACST
      IF(NGAM.GT.1) GO TO 175                                           ACST
      WRITE (6,131)                                                     ACST
      WRITE (6,132) (PHIP(I1),I1=1,L)
      WRITE (6,133)
      WRITE (6,132) (W(I2),I2=1,N)
133   FORMAT(//22H ** W*COS(N.THETA) ** /)
  131 FORMAT (//11H ** PHIP ** /)
  132 FORMAT (6E18.6)
C
C                                                                       ACST
  175 CONTINUE                                                          ACST
      DO 120 I=1,L                                                      ACST
      DO 120 K=1,N                                                      ACST
  120 BIGA(I,K) =W(K)*AFACT(I,K)                                        ACST
      DO 160 I=1,L                                                      ACST
      SUM1=0.                                                           ACST
      SUM2=0.                                                           ACST
      DO 150 J=1,N                                                      ACST
      DO 150 K=1,N                                                      ACST
      SUM1 =SUM1&BIGA(I,J)*BIGA(I,K)*BIGC(I,J,K)                        ACST
  150 SUM2 =SUM2&BIGA(I,J)*BIGA(I,K)*BIGD(I,J,K)                        ACST
      SUM =SQRT(SUM1*SUM1&SUM2*SUM2)                                    ACST
      PHIG(I) =SUM*PHIP(I)                                              ACST
  160 CONTINUE                                                          ACST
      WRITE (6,200) ISTAT                                               ACST
```

```
  200 FORMAT(///29H SPECTRAL DENSITY AT STATION I2 /)                    ACST
      WRITE (6,205) (PHIG(I),I=1,L)                                      ACST
  205 FORMAT(6E18.6)                                                     ACST
      ISTAT =ISTAT&1                                                     ACST
C                                                                        ACST
      IF(ISTAT.LE.NSTAT) GO TO 110                                       ACST
C                                                                        ACST
      NGAM =NGAM&1                                                       ACST
      GO TO 3                                                            ACST
      END                                                                ACST
$DATA
&32      -02 39  9  1
&228     &02&426     &02&8725    &02&105     &03&1888    &03&3066    &03NATF0001
&3485    &03&11032   &00&15      &02                                    NATF0002
&488     &03-716     &02-995     &02&359     &02-926     &01-176     &02B   0001
&147     &02&1453    &04&117     &03                                    B   0002
&377     -01&243     -01&290     -01&263     -01&1985    -01&192     -01MASS0001
&218     -01&902     -01&693     -01                                    MASS0002
&20      &02&22      &02&228     &02&235     &02&34      &02&42      &02FFRQ0001
&426     &02&44      &02&50      &02&60      &02&66      &02&70      &02FFRQ0002
&72      &02&82      &02&85      &02&872     &02&90      &02&95      &02FFRQ0003
&100     &03&105     &03&107     &03&130     &03&150     &03&175     &03FFRQ0004
&188     &03&1888    &03&200     &03&220     &03&235     &03&250     &03FFRQ0005
&290     &03&300     &03&3066    &03&320     &03&340     &03&3485    &03FFRQ0006
&360     &03&390     &03&430     &03                                    FFRQ0007
&44      -06&36      -06&31      -06&29      -06&14      -06&25      -06PHIP0001
&29      -06&82      -06&10      -05&10      -04&25      -04&22      -04PHIP0002
&25      -04&14      -04&20      -04&21      -04&24      -04&27      -04PHIP0003
&21      -04&14      -04&15      -04&2       -04&10      -04&13      -04PHIP0004
&90      -05&95      -05&95      -05&14      -04&82      -05&12      -04PHIP0005
&65      -05&95      -05&65      -05&6       -05&4       -05&3       -05PHIP0006
&2       -05&14      -05&56      -05                                    PHIP0007
&786     -00-209     -00&99      -00&984     -00&21      -00-408     -00W   0001
-753     &00&9885    &00-234     -01                                    W   0002
&40      -02 39  9  1
&228     &02&426     &02&8725    &02&105     &03&1888    &03&3066    &03NATF0001
&3485    &03&11032   &00&15      &02                                    NATF0002
&488     &03-716     &02-995     &02&359     &02-926     &01-176     &02B   0001
&147     &02&1453    &04&117     &03                                    B   0002
&377     -01&243     -01&290     -01&263     -01&1985    -01&192     -01MASS0001
&218     -01&902     -01&693     -01                                    MASS0002
&20      &02&22      &02&228     &02&235     &02&34      &02&42      &02FFRQ0001
&426     &02&44      &02&50      &02&60      &02&66      &02&70      &02FFRQ0002
&72      &02&82      &02&85      &02&872     &02&90      &02&95      &02FFRQ0003
&100     &03&105     &03&107     &03&130     &03&150     &03&175     &03FFRQ0004
```

```
&188     &03&1888    &03&200     &03&220     &03&235     &03&250     &03FFRQ0005
&290     &03&300     &03&3066    &03&320     &03&340     &03&3485    &03FFRQ0006
&360     &03&390     &03&430     &03                                     FFRQ0007
&44      -06&36      -06&31      -06&29      -06&14      -06&25      -06PHIP0001
&29      -06&82      -06&10      -05&10      -04&25      -04&22      -04PHIP0002
&25      -04&14      -04&20      -04&21      -04&24      -04&27      -04PHIP0003
&21      -04&14      -04&15      -04&2       -04&10      -04&13      -04PHIP0004
&90      -05&95      -05&95      -05&14      -04&82      -05&12      -04PHIP0005
&65      -05&95      -05&65      -05&6       -05&4       -05&3       -05PHIP0006
&2       -05&14      -05&56      -05                                     PHIP0007
&786     -00-209     -00&99      -00&984     -00&21      -00-408     -00W    0001
-753     &00&9885    &00-234     -01                                     W    0002
&50      -02 39   9   1
&228     &02&426     &02&8725    &02&105     &03&1888    &03&3066    &03NATF0001
&3485    &03&11032   &00&15      &02                                     NATF0002
&488     &03-716     &02-995     &02&359     &02-926     &01-176     &02B    0001
&147     &02&1453    &04&117     &03                                     B    0002
&377     -01&243     -01&290     -01&263     -01&1985    -01&192     -01MASS0001
&218     -01&902     -01&693     -01                                     MASS0002
&20      &02&22      &02&228     &02&235     &02&34      &02&42      &02FFRQ0001
&426     &02&44      &02&50      &02&60      &02&66      &02&70      &02FFRQ0002
&72      &02&82      &02&85      &02&872     &02&90      &02&95      &02FFRQ0003
&100     &03&105     &03&107     &03&130     &03&150     &03&175     &03FFRQ0004
&188     &03&1888    &03&200     &03&220     &03&235     &03&250     &03FFRQ0005
&290     &03&300     &03&3066    &03&320     &03&340     &03&3485    &03FFRQ0006
&360     &03&390     &03&430     &03                                     FFRQ0007
&44      -06&36      -06&31      -06&29      -06&14      -06&25      -06PHIP0001
&29      -06&82      -06&10      -05&10      -04&25      -04&22      -04PHIP0002
&25      -04&14      -04&20      -04&21      -04&24      -04&27      -04PHIP0003
&21      -04&14      -04&15      -04&2       -04&10      -04&13      -04PHIP0004
&90      -05&95      -05&95      -05&14      -04&82      -05&12      -04PHIP0005
&65      -05&95      -05&65      -05&6       -05&4       -05&3       -05PHIP0006
&2       -05&14      -05&56      -05                                     PHIP0007
&786     -00-209     -00&99      -00&984     -00&21      -00-408     -00W    0001
-753     &00&9885    &00-234     -01                                     W    0002
```

```
** INPUT DATA **
GAMMA =  0.320000E-02     NO.OF FREQ. =39     NO. OF MODES = 9     NO. OF STAT. = 1
** BS **
     0.488000E 03     -0.716000E 02     -0.995000E 02      0.359000E 02     -0.926000E 01     -0.176000E 02
     0.147000E 02      0.145300E 04      0.117000E 03
GENERALIZED MASS
     0.377000E-01      0.243000E-01      0.290000E-01      0.263000E-01      0.198500E-01      0.192000E-01
     0.218000E-01      0.902000E-01      0.693000E-01
NATURAL FREQUENCY
     0.228000E 02      0.426000E 02      0.872500E 02      0.105000E 03      0.188800E 03      0.306600E 03
     0.348500E 03      0.110320E 00      0.150000E 02
FORCING FREQ
     0.200000E 02      0.220000E 02      0.228000E 02      0.235000E 02      0.340000E 02      0.420000E 02
     0.426000E 02      0.440000E 02      0.500000E 02      0.600000E 02      0.660000E 02      0.700000E 02
     0.720000E 02      0.820000E 02      0.850000E 02      0.872000E 02      0.900000E 02      0.950000E 02
     0.100000E 03      0.105000E 03      0.107000E 03      0.130000E 03      0.150000E 03      0.175000E 03
     0.188000E 03      0.188800E 03      0.200000E 03      0.220000E 03      0.235000E 03      0.250000E 03
     0.290000E 03      0.300000E 03      0.306600E 03      0.320000E 03      0.340000E 03      0.348500E 03
     0.360000E 03      0.390000E 03      0.430000E 03


** PHIP **
     0.440000E-06      0.360000E-06      0.310000E-06      0.290000E-06      0.140000E-06      0.250000E-06
     0.290000E-06      0.820000E-06      0.100000E-05      0.100000E-04      0.250000E-04      0.220000E-04
     0.250000E-04      0.140000E-04      0.200000E-04      0.210000E-04      0.240000E-04      0.270000E-04
     0.210000E-04      0.140000E-04      0.150000E-04      0.200000E-04      0.100000E-04      0.130000E-04
     0.900000E-05      0.950000E-05      0.950000E-05      0.140000E-04      0.820000E-05      0.120000E-04
     0.650000E-05      0.950000E-05      0.650000E-05      0.600000E-05      0.400000E-05      0.300000E-05
     0.200000E-05      0.140000E-05      0.560000E-05


** W*COS(N.THETA) **
     0.786000E 00     -0.209000E 00      0.990000E 00      0.984000E 00      0.210000E 00     -0.408000E 00
    -0.753000E 00      0.988500E 00     -0.234000E-01


SPECTRAL DENSITY AT STATION  1
     0.973517E-03      0.354362E-01      0.525688E 01      0.688463E-01      0.105903E-02      0.228949E-03
     0.199017E-01      0.898716E-02      0.697639E-02      0.662441E-01      0.173591E 00      0.163858E 00
     0.196326E 00      0.247472E 00      0.103572E 01      0.391247E 02      0.169957E 00      0.761150E-04
     0.440743E-04      0.415575E 01      0.280199E 00      0.828050E-01      0.407135E-01      0.547471E-01
     0.628662E-01      0.530788E-01      0.354139E-01      0.544874E-01      0.320720E-01      0.467976E-01
     0.218230E-01      0.198914E-01      0.178531E 00      0.404128E-01      0.354046E-01      0.140265E 00
     0.426419E-02      0.493526E-02      0.212011E-01
```

** INPUT DATA **
GAMMA = 0.400000E-02 NO.OF FREQ. =39 NO. OF MODES = 9 NO. OF STAT. = 1

SPECTRAL DENSITY AT STATION 1

0.973438E-03	0.352809E-01	0.336459E 01	0.684233E-01	0.106901E-02	0.266405E-03
0.134164E-01	0.896676E-02	0.697614E-02	0.662432E-01	0.173587E 00	0.163851E 00
0.196313E 00	0.247190E 00	0.102781E 01	0.253496E 02	0.169386E 00	0.110924E-03
0.684499E-04	0.266633E 01	0.276243E 00	0.828031E-01	0.407133E-01	0.547445E-01
0.583419E-01	0.477025E-01	0.354187E-01	0.544879E-01	0.320722E-01	0.467980E-01
0.218347E-01	0.201553E-01	0.124915E 00	0.403725E-01	0.352469E-01	0.946550E-01
0.428887E-02	0.493573E-02	0.212014E-01			

** INPUT DATA **
GAMMA = 0.500000E-02 NO.OF FREQ. =39 NO. OF MODES = 9 NO. OF STAT. = 1

SPECTRAL DENSITY AT STATION 1

0.973313E-03	0.350411E-01	0.215353E 01	0.677727E-01	0.106898E-02	0.321109E-03
0.926581E-02	0.893533E-02	0.697577E-02	0.662418E-01	0.173581E 00	0.163840E 00
0.196294E 00	0.246752E 00	0.101572E 01	0.163686E 02	0.168508E 00	0.165362E-03
0.106578E-03	0.171311E 01	0.270302E 00	0.828003E-01	0.407131E-01	0.547405E-01
0.536975E-01	0.442617E-01	0.354260E-01	0.544886E-01	0.320725E-01	0.467985E-01
0.218528E-01	0.205554E-01	0.906001E-01	0.403100E-01	0.350063E-01	0.654640E-01
0.432690E-02	0.493646E-02	0.212018E-01			