N67-35222

N67-35222
NASA CR 65681

HOUSTON RESEARCH INSTITUTE, INC.

DESIGN AND ENGINEERING — RESEARCH AND DEVELOPMENT — ECONOMICS AND MARKETING

6001 GULF FREEWAY • HOUSTON, TEXAS 77023 • 713 WALNUT 8-5001

FINAL REPORT

TASK ORDER NUMBER 6

EXAMINATION OF THE CHEMISTRY INVOLVED IN ANODIC OXIDATION OF SILVER IN THE SYSTEM - SILVER:OXYGEN:INHIBITED GLYCOL/WATER SOLUTION

Contract NAS 9-6698

July 28, 1967

Prepared by

Dr. H. S. Nagaraja Setty
Houston Research Institute, Inc.
6001 Gulf Freeway
Houston, Texas 77023

for

Joseph N. Kotanchik, ES
Dr. W. R. Downs, ES
Structure and Mechanics Division
NASA Manned Spacecraft Center
Houston, Texas 77058

[redacted]

[redacted]

FOREWORD

A study of the examination of the chemistry involved in the system, silver:oxygen:RS89a was conducted by Houston Research Institute, Inc., 6001 Gulf Freeway, Houston, Texas 77023, in accordance with Contract NAS 9-6698-Task No. 6.

NASA's technical monitor was Dr. W. R. Downs of Structure and Mechanics Division.

The study was conducted during the period 22 June 1967 to 28 July 1967. The original data is retained in Laboratory Notebook 21.

Respectfully submitted,

HOUSTON RESEARCH INSTITUTE, INC.

H. S. Nagaraja Setty

Approved by:

B. E. Norris
Houston Research Institute, Inc.

ABSTRACT

Over 50 papers, reports, and books were obtained and studied in order to get an insight into the chemistry involved during electrolysis of RS89a solution using silver covered copper wire.

Electrolyses were conducted under several different conditions and types of electrodes and electrolytes using 27 volts d.c. potential. The anode deposit obtained in each case was analyzed for elemental composition. From the results, it was concluded that the major product of electrolysis was oxides of metal (silver/or copper). The metal amines were also formed and their amount was limited by the availability of triethanolamine phosphate in the electrolyte. The generation of sparks and smoke during electrolysis were recorded photographically.

TABLE OF CONTENTS

		Page
I.	PURPOSE AND SCOPE	1
II.	LITERATURE SURVEY	3
	A. Anodic Oxidation of Silver	3
	B. Anodic Oxidation of Organic Compounds	4
	C. Mechanism of Anodic Oxidation	5
	D. Glow-Discharge Electrolysis	7
	E. Other Pertinent Reactions	8
III.	EXPERIMENTAL	9
	A. Apparatus	9
	B. Procedure	9
	C. Analytical	13
IV.	SUMMARY OF EXPERIMENTAL RESULTS	14
	A. Electrolysis	14
	B. Photographic	16
V.	DISCUSSION OF THE RESULTS	17
	A. Electrolysis	17
	B. Photographic	19
VI.	CONCLUSIONS	22
VII.	LITERATURE CITED	24
APPENDIX		
A.	REACTION SCHEME (PROPOSED BY DR. DOWNS, NASA-MSC)	26

LIST OF FIGURES

Figure		Page
1.	SCHEMATIC DIAGRAM - ELECTROLYSIS APPARATUS	10
2.	PETRIDISH BOTTOM - ELECTROLYSIS CELL	11
3.	PHOTOGRAPH OF THE LABORATORY SET-UP	12
4.	PHOTOGRAPH OF THE BLACK DEPOSIT, AS IT STARTS	20
5.	PHOTOGRAPH OF THE BLACK DEPOSIT, AS ELECTROLYSIS IS COMPLETED	21

LIST OF TABLES

Table		Page
I.	COMPOSITION AND PHYSICAL CHARACTERISTICS OF THE ANODE DEPOSIT, AND EXPERIMENTAL CONDITIONS	15
II.	POSSIBLE PRODUCTS AND THEIR THEORETICAL ELEMENTAL COMPOSITION	18

HOUSTON RESEARCH INSTITUTE, INC.
DESIGN AND ENGINEERING — RESEARCH AND DEVELOPMENT — ECONOMICS AND MARKETING
6001 GULF FREEWAY · HOUSTON, TEXAS 77023 · 713 WALNUT 8-5001

FINAL REPORT

TASK ORDER NUMBER 6

Contract NAS 9-6698

EXAMINATION OF THE CHEMISTRY INVOLVED IN ANOMIC OXIDATION OF SILVER IN THE SYSTEM - SILVER:OXYGEN:INHIBITED GLYCOL/WATER SOLUTION

July 28, 1967

I. PURPOSE AND SCOPE

The purpose of this work was to investigate the chemistry involved in the system, silver:oxygen:RS89a. RS89a is an inhibited glycol/water solution, used as transport fluid in various environmental control systems for spacecraft and aircraft; it has the following composition:

566.00	gms.	ethylene glycol
339.50	gms.	distilled water
14.18	gms.	triethanol amine phosphate (TEAP)
1.41	gms.	sod. mercaptobenzothiazole (50% solution) (NACAP)
921.09	gms.	Total

Silver-covered copper wire carrying a d.c. potential has been found to produce sparks and a black deposit when contacted by RS89a.

The scope of this investigation shall cover:

1) A literature survey (Chemical Abstracts, late edition chemistry texts, and Chemical Abstracts reference sources);

2) Laboratory production of the aforementioned black deposit by conducting an electrolysis using pure

silver immersed in RS89a under pure oxygen atmosphere;

3) A chemical analysis of the deposit to establish its composition, using standard gravimetric techniques for carbon, nitrogen, silver, oxygen and hydrogen;

4) Photographic recording (still and 16 mm movie photography) of laboratory arrangement and significant observations; and

5) Documentation.

The following materials and services will be supplied by NASA:

1) RS89a Solution (not to exceed 3 litres)
2) Silver-covered copper wire (not to exceed 20 linear ft., 20/22 gage standard aircraft cable)
3) Photographic coverage.

II. LITERATURE SURVEY

Chemical Abstracts, from January, 1957, to June, 1967, were searched under the following key words: Anodic Oxidation, Silver, Copper, Glycol, TEAP, NACAP, Mercaptans, fulminates and dehydration (of glycol in presence of silver and silver oxide). Several late edition chemistry text books were also searched. The results of the literature search is reviewed.

Literature was searched also for free energy of formation data for the reaction scheme presented in Appendix A, with the results indicated therein.

LITERATURE:

A. Anodic Oxidation of Silver: Luther and Pokorny (1) obtained an extensive silver surface by plating the metal on to platinized platinum (fine platinum powder) and polarized this anodically at a small constant current in N. NaOH, and obtained a graph of potential against time. Under these circumstances the polarization was very prolonged, and two definite arrests prior to oxygen evolution were observed. From a knowledge of the amount of silver present and the quantities of electricity passed at each stage, it was concluded that the silver was first oxidized quantitatively and reversibly to Ag_2O, and this in turn to AgO. No higher oxide was formed before oxygen was evolved. It was suggested that in acid solution and in the electrolysis of silver salts, a higher oxide, possibly Ag_2O_3, might be anodically produced. The anodic products obtained in the electrolysis of solutions of silver salts have been examined by numerous investigators (2). In general, peroxy salts, the compositions of which have been variously interpreted, are obtained; but there is some evidence that they contain a higher oxide than AgO. It has been suggested that this may also be formed in alkaline solution, under special conditions (3).

Hickling and Taylor (4) have investigated the anodic polarization of silver by the oscillographic method which records the variation of potential with quantity of electricity passed prior to oxygen evolution. The oscillograms show that silver in alkaline solution gives a characteristic anodic polarization track in which three definite stages can be detected:

a) An initial steep rise of potential corresponding to the charging of double layer.

b) A long step in which the potential rises slowly and non-linearly corresponding to the formation of Ag_2O on the silver surface.

c) A shorter, well-defined step from which the potential rises ultimately to that of oxygen evolution, corresponding to the formation of an oxide of silver higher than AgO, possibly Ag_2O_3. This may decompose to give AgO by interaction with the previously formed Ag_2O as follows:

$$Ag_2O_3 + Ag_2O = 4AgO$$

It has been shown that, although AgO is produced, the oxygen content of this material may be significantly higher than that indicated by the formula AgO (5). This is particularly true when long term constant-potential charging is used. This non-stoichiometry is interpreted as due to adsorption of oxygen by the electrode during the process in which AgO is formed (6). In other words, oxygen is adsorbed on AgO.

B. <u>Anodic Oxidation of Organic Compounds</u>: Electrochemical reactions are not confined to simple oxidation and reduction. They also include any type of process that can be performed chemically, such as substitution and group removal, bond fission, and dimerization. More recent examples are the oxidation of paraffins (7) to CO_2 at a temperature as low as 45°C; cellulose (8) to CO_2 at well below 100°C; ethylene (9)

to acetaldehyde; decarboxylation of sodium acetate (9); methoxylation of 2,6-dimethoxypyridine and N-Methylpyrrole (10); aromatic substitution by cyanide ion (11); and preparation of cobalt (III) complexes (12).

C. Mechanism of Anodic Oxidation. Anodic oxidation produces a situation similar to cathodic organic reductions, wherein two general pathways of direct electron transfer or of indirect electrochemical hydrogenation by adsorbed H atoms produced by discharge from the solution have formany years been recognized (13-15). Anodic reaction pathway may be one in which direct electron withdrawal with subsequent reaction of the resulting free radical ion, or free radical with the solvent, occurs. Alternatively, anodic oxidation may be one in which surface oxides (or adsorbed oxygen-containing species, e.g., OH or O) are produced in a charge-transfer step from species in the solution or from the solvent, and then react in the steady-state with substrate reductant either diffusing to the surface or co-adsorbed at the electrode surface. These two types of process were first discussed by Fichter and by Perkin (16, 17) for some hydroxylation, halogenation, and pseudo halogenation reactions with benzene and other organic substrates. More recently, this type of reaction has been considered in anodic hydrocarbon oxidation mechanisms (18, 19) and in the electrochemical oxidation of formate ion (20). The presence of adsorbed O species can also be responsible for initial passivation effects, as suggested by Kolotyrkin (21) and treated by Breiter, et al (22). When the surface coverage by 'O' species is potential dependent (as it usually is), this gives rise to kinetic inhibition effects which manifest themselves in the current-potential curve as a reversal which is most marked in processes such as dissolution of iron, but also arises in anodic oxidations of hydrogen and organic substrates. This type of effect was first treated by Nord (23), developed by

Bagotskii and Vasilev (24, 25), and treated in detail for a variety of reaction mechanisms by Gilroy and Conway (20) in terms of the adsorption isotherm for the inhibiting species. The latter authors also showed that self-inhibition effects with reversal of current-potential relations can occur in the absence of co-adsorbed oxides when the products of a reaction step (e.g., in formate oxidation) occupy more sites than the reactant. Passivity effects in hydrocarbon oxidation through involvement of adsorbed O have also been proposed by Bockris, et al (19). Their mechanism of the effect involves changes in the type of surface oxide species present (24). The importance of conductance changes in the oxide film in passivation of metals (e.g., Ni) has been stressed by Bockris and Reddy (26) on the basis of interpretations of ellipsometric measurements and this must be considered an important advance (25) in the experimental understanding of the onset of effective passivity in metal dissolution. Such effects, however, are probably not necessarily involved in passivation of those anodic oxidation reactions which do not involve metal dissolution.

In most organic oxidation reactions in which passivation effects have been indicated, little attempt has been made until recently to characterize (in relation to the kinetics) the nature and extent of adsorption of the passivating species, e.g., by electrochemical transient techniques. Conway, et al (24, 27) have examined comparatively the potentiostatic current-potential behavior for anodic oxidations of several simple substances: formate ion in aqueous KOH; hydrazine in acid and alkaline solutions; ammonia in alkaline (KOH) solution; and C_2H_4 and C_3H_8 in perchloric and phosphoric acids. The kinetic behavior has been related to determinations both of the extent of surface oxide coverage as a function of potential and the corresponding H atom accommodations at more cathodic potentials evaluated by use of the differential

galvanostatic charging method from potentiostatically controlled anodic potentials.

D. Glow Discharge Electrolysis. The glow-discharge electrolysis of a variety of aqueous electrolytes has been investigated (28—30). It has been shown that, with the anode in the vapor phase, current is carried to the liquid surface by gaseous ions (31). These are accelerated in the cathode fall of approximately 415 v which occurs within 0.05 cm. of the water surface, and they enter the solution with energies which the experimental results suggest are of the order of 100 ev. Thus in addition to bringing about oxidation by charge transfer, they may also cause dissociation of water molecules, and the process is analogous to the action of an ionizing radiation where the energies of the bombarding particles are relatively small but where the dose rate can be extremely high. Thus in the primary reaction zone in the glow spot interaction of the gaseous ions with solvent molecules might be expected to produce dissociation by collision

$$H_2O \longrightarrow H_2O^+ + e^- \longrightarrow OH + H^+ + e^- \qquad (a)$$

or possibly

$$H_2O \longrightarrow OH + H \qquad (b)$$

and to produce also 1 equivalent of OH per faraday by charge transference

$$H_2O^+{}_{gas} + H_2O_{liq.} \longrightarrow OH + H_2O^+ \qquad (c)$$

Within this primary zone, interaction of the radicals among themselves is likely to be governed very largely by spatial considerations and is not amenable to treatment by conventional kinetics. However, once the active species have diffused out it should be possible to consider their reactions by ordinary kinetic methods. The OH radical may be expected to oxidize any suitable substrate S by the general reaction

$$OH + S \longrightarrow S^+ + OH^- \qquad (d)$$

In an inert electrolyte hydrogen peroxide is always formed, and this may be represented by the dimerization

$$2\ OH \longrightarrow H_2O_2 \qquad (e)$$

In addition there will be a back reaction which may be represented

$$OH + H \longrightarrow H_2O \qquad (f)$$

Thus oxidation by glow-discharge electrolysis on this scheme will be determined by the competition of reactions (d), (e), and (f).

The experimental results agree with the above scheme whereby 7-8 equivalents of OH radical are formed for each faraday of electricity passed, and the proportions of the products formed depend upon the competition of the various possible reactions of these radicals.

Glow discharge electrolysis of electrolyte solutions in liquid ammonia (32) yields mainly hydrazine, which is similar to hydrogen peroxide, indicating a similar mechanism is operative in non-aqueous electrolyte media.

E. Other Pertinent Reactions. The complex formation of silver with mono-, di-, and triethanolamine (MEA, DEA and TEA, respectively) has been studied (33). The complex $(Ag(XEA)_p)^+$, p = 1,2 and 3 was formed in aqueous-alcohol solutions except that in 60-100% ethanol the complex p = 1 did not form with TEA. The stability of the complexes increased with alcohol concentration, especially at alcohol concentration greater than 80 wt.%.

III. EXPERIMENTAL

A. Apparatus

The apparatus consists of an electrolysis cell, a bank of dry batteries, a volt-ammeter (Simpson 270), and a source of pure, dry oxygen, all arranged as shown in Figure 1.

Electrolysis cell consists of either a 50 ml. glass beaker (Figure 1) or a petri dish bottom (Figure 2). The dry batteries were tapped to give a potential of 27 volts (d.c.). The volt-ammeter enabled reading of the voltage or the current at will. Figure 3 is a photograph of the laboratory set-up.

B. Procedure

The experimental procedure is straightforward. A clean beaker (50 ml) is filled with 45 ml of the electrolyte (RS89a). A terminal strip carrying the electrodes (silver covered copper) are then laid across on top of the beaker and connected to the terminals of a battery. A 2-litre pyrex beaker was inverted over the 50 ml beaker so as to enclose the oxygen inlet as shown in Figure 1. Next, oxygen was allowed to flow, providing an atmosphere of oxygen. The switch then was turned on and electrolysis started. Electrolysis was observed constantly until the hydrogen evolution at the cathode ceased completely. The anode deposit was shaken loose to start the electrolysis again. This was repeated 3 or 4 times, until the hydrogen evolution at the cathode became very sluggish. Then, the switch was turned off, oxygen flow stopped, and the electrolyte was filtered using a Whatman 41H filter paper. The filtrate was discarded. The electrolysis was repeated with fresh electrolyte and electrodes until enough anode deposit was obtained, sufficient for chemical analysis and combustibility test. The anode deposit was dried in air at 130-140°F. Observations were noted at the end of each experiment.

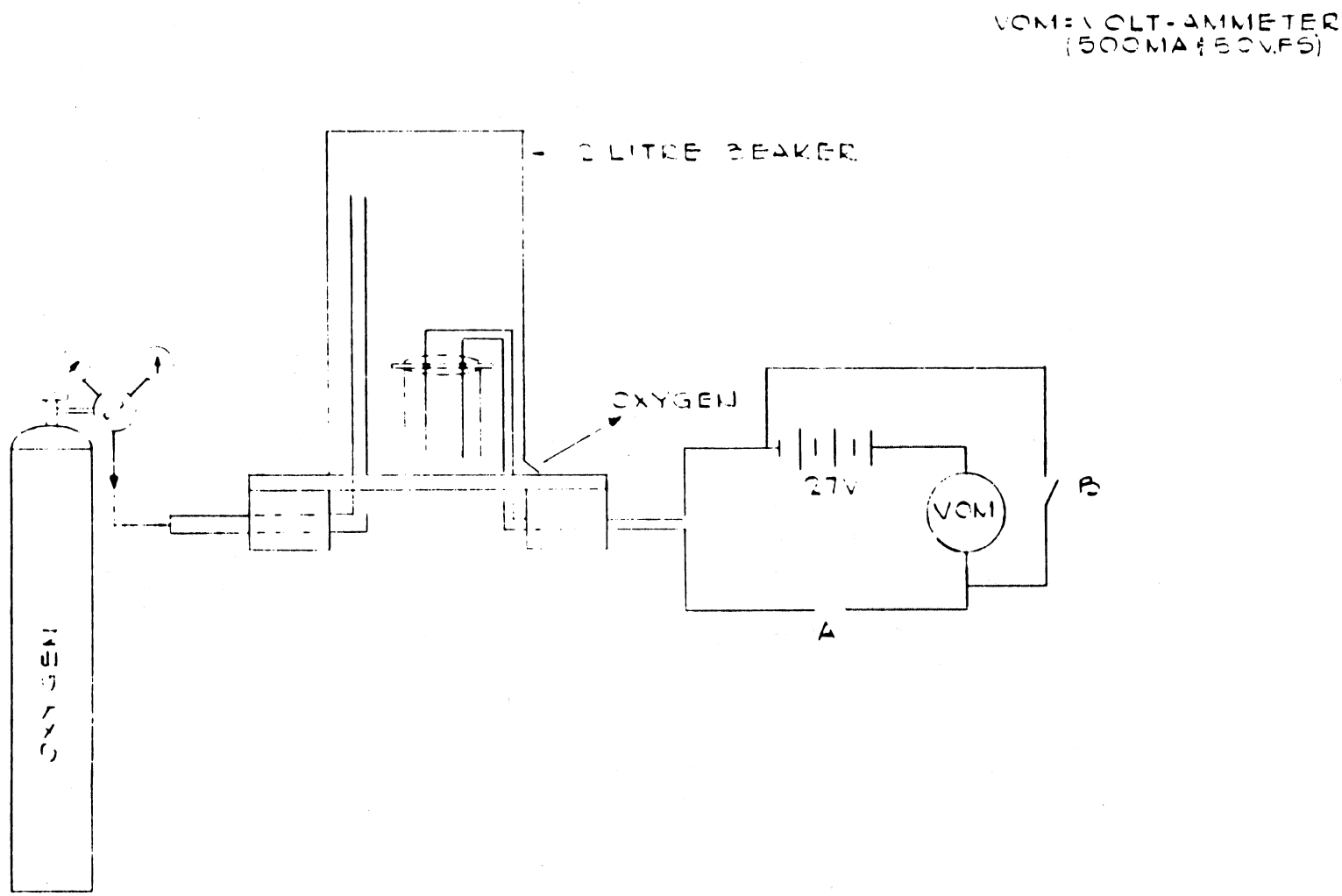

FIG 1 - SCHEMATIC DIAGRAM ELECTROLYSIS APPARATUS

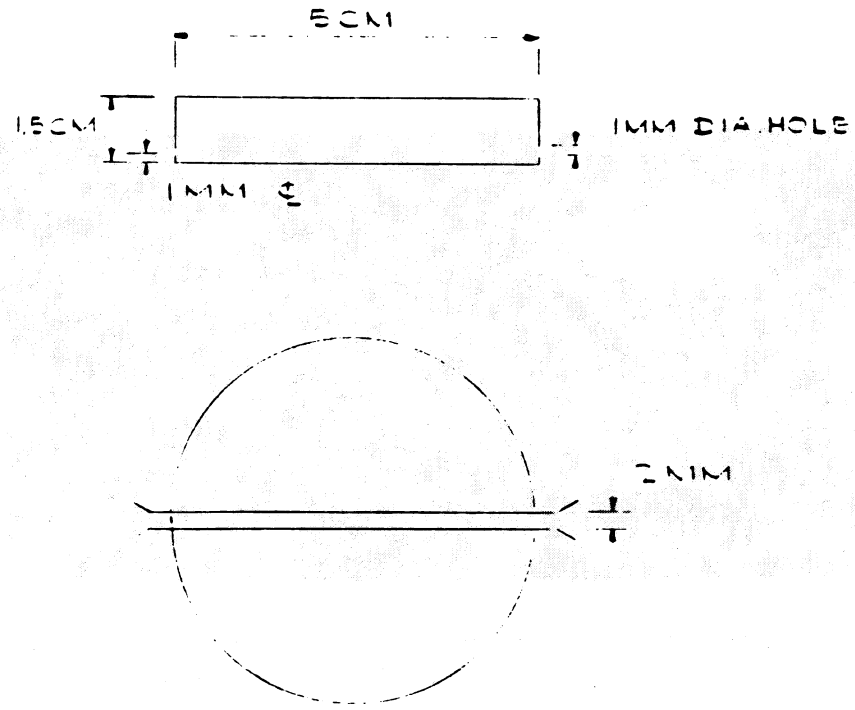

FIG 2 - PETRI DISH BOTTOM ELECTROLYSIS CELL

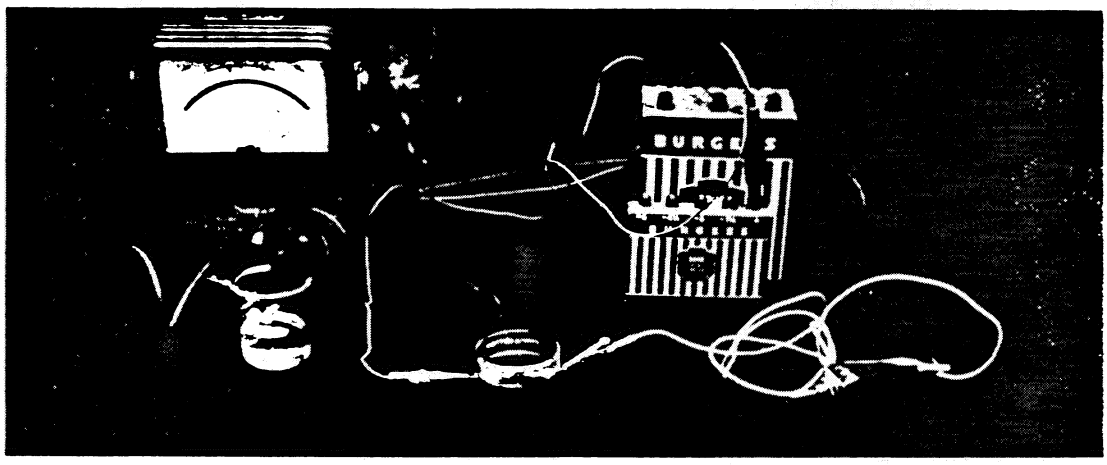

FIGURE 3. PHOTOGRAPH OF THE LABORATORY SET-UP
(Shown without oxygen enclosure)

When the petri dish served as electrolysis cell, the electrodes were passed through the diametrically opposite holes, so that the electrodes lay flat on the bottom of the dish. The ends of the electrodes were bent to prevent shorting and slipping. The electrodes were then connected to the battery terminals, and a few drops of electrolyte placed along the length and at the center of the electrodes, so that they were half submerged in the electrolyte. A 2-litre beaker was then inverted over the petri dish and oxygen flow and electrolysis started as before. The anode deposit was collected and dried.

C. Analytical

Carbon, hydrogen and oxygen were determined by the usual combustion techniques. Nitrogen was determined by the microkjedahl's method. Silver and copper were determined by polarographic titration; atomic absorption spectrometry gave inconsistent results.

The analyses were run in duplicate. The results are given in Section IV.

IV. SUMMARY OF EXPERIMENTAL RESULTS

A. Electrolysis

Five deposits were produced in the laboratory, all under different experimental conditions. The physical characteristics of the deposits and their chemical composition are presented in Table I, along with experimental conditions.

Three deposits (samples 1-3) were produced using a 50 ml beaker as electrolysis cell. The electrolysis proceeded smoothly, and no smoke or sparks were observed. The deposits were either yellow or green colored, with very little of the black deposit present. Oxygen atmosphere had very little influence, if any, on the electrolysis. However, bubbling oxygen through the electrolyte suppressed the electrolysis reaction as noted by sluggish hydrogen liberation at the cathode and deposit not building up at the anode.

Two deposits (samples 4-5) were produced using a petri dish as the electrolysis cell. The electrolysis was attended by evolution of smoke and sparks. When silver covered copper wires were used as electrodes, the smoke was produced in about 10-20 minutes; shorter time was required when the electrodes were as close as 1 mm. The sparks were short-lived and feeble. However, sparks were visible to the naked eye when the room lights were turned off. When pure silver wires were used as electrodes, a vigorous reaction starts giving out copious smoke; the sparks were stronger than before but too short-lived for photographic recording.

The electrolysis experiments with a petri dish gave black deposit, probably because half the surface of the electrode was exposed to atmosphere and in intimate contact with oxygen.

TABLE I

COMPOSITION AND PHYSICAL CHARACTERISTICS
OF THE ANODE DEPOSIT, AND EXPERIMENTAL CONDITIONS ‡

Sample No.	Anode	Cathode	Color	Composition, Wt.%					
				C	H	N	O	Silver	Copper
1	Ag-Cu	Ag-Cu	Green*	10.6	2.44	0.76	11.58	2.93	71.69
2	Ag-Cu	Ag-Cu	Greenish Yellow	20.57	2.22	3.19	13.29	0.71	62.10
3	Cu	Ag-Cu	Yellow	30.93	2.18	4.57	8.04	1.19	53.19
4	Ag-Cu[a]	Ag-Cu	Black	9.67	1.09	1.20	18.84	27.43	41.77
5	Ag[a]	Ag	Black	1.64	0.16	0.36	6.36	91.26	0.12

‡ Electrolyte used - RS89a; all the deposits were found to be not combustible.

* Exclusively anode scrapings

a) Petri dish experiments

The electrolysis experiments with petri dish using a mixture of glycol and distilled water and pure silver electrodes were revealing. The reaction was vigorous and produced smoke. The sparks generated were long-lived and permitted photographic recording.

The sparks appeared to originate from the anode.

Certain observations were made on the amount of current flowing through the system. The ammeter readings were noted as a function of time. For the first 2-1/2 minutes after the electrolysis commenced, the current reading dropped from 12 MA to 6 MA. Current was maintained at 6 MA for about three minutes, when it gradually but quickly increased to 45 MA. This change was coincident with smoke evolution and rapid reaction. The current fluctuations after this stage could not be recorded very well as the fluctuations were rapid, going occasionally to beyond 100 MA readings. But most of the time, the fluctuations confined between 20 and 60 MA reading.

B. Photographic

In all, three rolls of motion films were shot; the first roll was shot on Ag/glycol + H_2O/Ag system, the second and third rolls are identical and were shot on Ag/RS89a/Ag, Ag-Cu/RS89a/Ag-Cu and Ag-Cu/glycol + H_2O/Ag-Cu systems. All these film were taken on f2.8, 90 mm. Nikon Analyzer. The identifying numbers on these rolls are S67-382, S67-386 and S67-388 respectively. Several still pictures were also taken of the black deposit.

V. DISCUSSION OF THE RESULTS

A. Electrolysis

The analyses presented in Table I show the presence of C, H, O, N, Ag/or copper in all the deposits, indicating that certain amine compounds are also produced along with the metal oxides. Metal oxides appear to be the major products because the amine formation is limited by the triethanol amine phosphate content of RS89a.

Sample 5, which contains only a trace of copper, and Sample 3, which contains only a trace of silver, show a striking difference in the amount of carbon, H, O, and N. The deposit containing copper contains much larger amounts of these elements. A closer examination reveals that this is true of all the deposits containing copper. It is concluded that copper forms significant amounts of stable amine complexes, and silver does not. Silver amines probably dissociate giving metal ligands which are oxidized to the oxide. One analysis (Sample 5) seems to support this, since the ratio of Ag/O found is almost the same as that expected of Ag_2O. Silver amines may deposit an explosive precipitate of silver azide or silver fulminate as the literature (34, 35) points out. These compounds are so explosive that their existence is encountered only in solution.

In Table II, various silver and copper compounds likely to be formed during electrolysis of RS89a have been listed. These compounds are described in the literature (33, 36). Table II also shows molecular weights and elemental composition. The encountering of intense sparks and smoke for the system Ag/glycol + H_2O/Ag can be explained as follows:

As soon as the electrolysis commences, the passage of a small current produces the evolution of gas bubbles at the anode, and Ohm's law is obeyed with a relatively small cell

TABLE II

POSSIBLE PRODUCTS AND THEIR THEORETICAL ELEMENTAL COMPOSITION

		Elemental Composition, %					
	Molecular Wt.	C	H	N	O	Ag	Cu
AgN_3	149.88	-	-	28.0	-	72.00	-
AgOCN	149.88	8.01	-	9.29	10.7	72.00	-
$Ag\ N(C_2H_4OH)_3\ _3OH$	571.88	37.75	8.04	7.34	28.05	18.82	-
$Ag\ N(C_2H_4OH)_3\ _2OH$	422.88	34.05	7.34	6.62	26.54	25.45	-
Ag_2O	231.76	-	-	-	6.8	93.2	-
AgO	123.88				12.9	87.1	
Ag_2C_2	239.76	9.9				90.1	
$Cu(N_3)_2$	147.54	-	-	56.9	-		43.1
$Cu(OCN)_2$	147.54	16.25	-	18.95	21.7	-	43.1
$Cu\ N(C_2H_4OH)_3\ _4(OH)_2$	693.54	41.6	8.94	8.08	32.3	-	9.18
CuO	79.54	-	-	-	20.4	-	79.6
Cu_2O	143.10				11.2		88.8
Cu_2C_2	151.10	15.7	-	-	-	-	84.3

voltage set-up. However, when a sufficiently large current is passed (as noticed during the experiments) the electrolysis become rapid with vigorous gas and smoke evolution, and a turbulent movement of the solution around the electrode (refer films). Increase in resistance may cause the current flow to build to a critical value to produce the sparks, which may be a blue flame. This phenomenon has been observed (26) and needs further study for conclusive delineation.

B. Photographic

The photographic results as recorded on Roll No. S67-382 are clear proof of generation of sparks and smoke in the system Ag/glycol + H_2O/Ag. In Roll No. S67-386 and S67-388 attempts to record the sparks in other electrolysis systems were made but in vain. Figures 4 and 5 show black deposit at the beginning and at the end of the electrolysis.

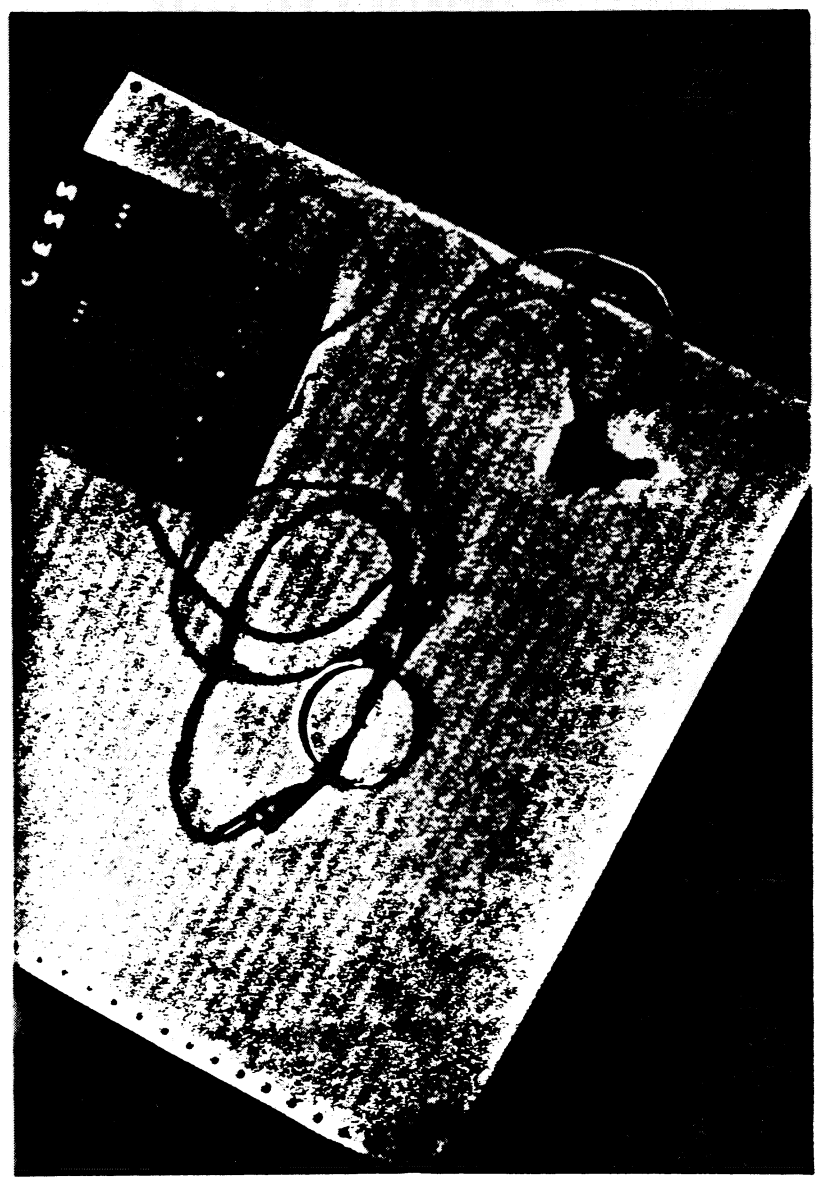

FIGURE 4. PHOTOGRAPH OF THE BLACK DEPOSIT, AS IT STARTS

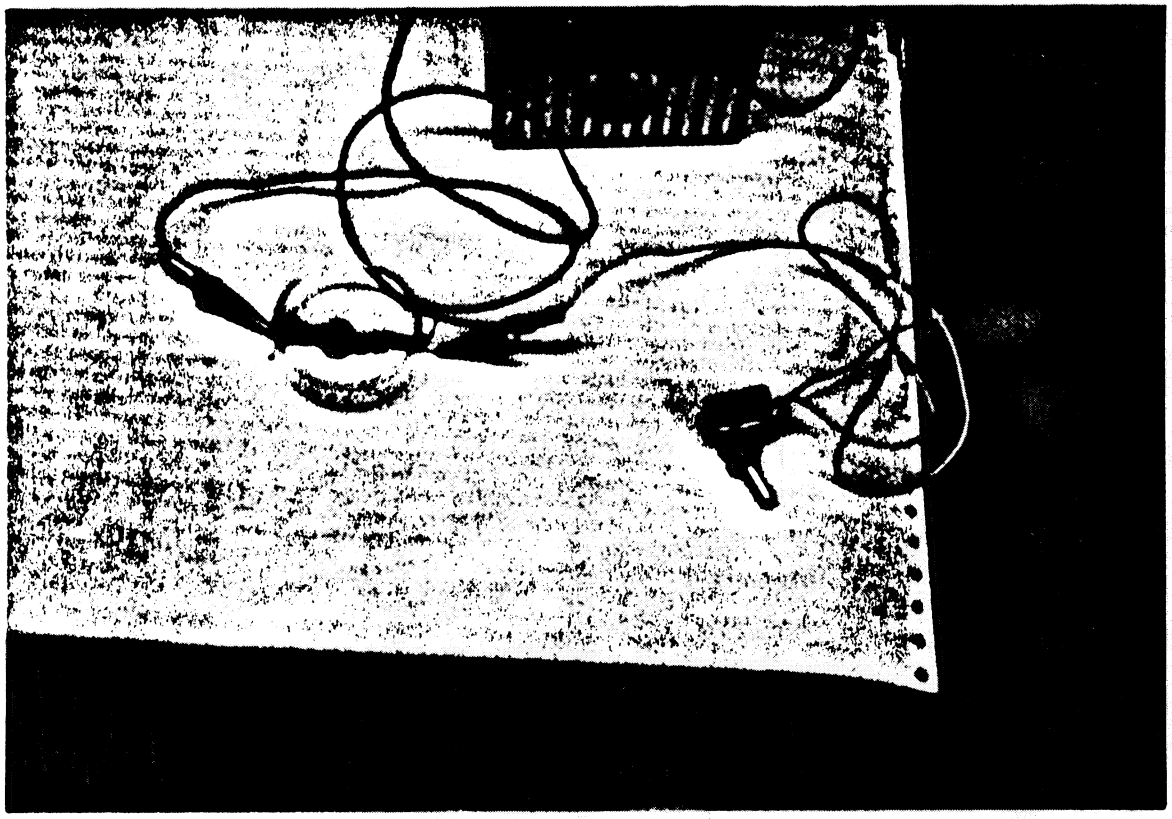

FIGURE 5. PHOTOGRAPH OF THE BLACK DEPOSIT, AS ELECTROLYSIS IS COMPLETED

VI. CONCLUSIONS

The following mechanism is proposed based on the observed results. The main reaction is the formation of metal oxide and hydroxide, and subsequent formation of metal amine complexes with triethanolamine phosphate present.

At the Anode:

$$Ag \longrightarrow Ag^{+} + e$$

$$Cu \longrightarrow Cu^{+} + e$$

$$2Ag^{+} + 2OH^{-} \longrightarrow Ag_2O + H_2O$$

$$Cu^{+} + 2OH^{-} \longrightarrow CuO + H_2O + e$$

At the Cathode:

$$2AgOH + 6N(C_2H_4OH)_3 \longrightarrow 2Ag\left[N(C_2H_4OH)_3\right]_3OH$$

$$2AgOH + 4N(C_2H_4OH)_3 \longrightarrow 2Ag\left[N(C_2H_4OH)_3\right]_2OH$$

$$Cu(OH)_2 + 4N(C_2H_4OH)3 \longrightarrow Cu\left[N(C_2H_4OH)_3\right]_4(OH)_2$$

Side reactions can be expected to occur which involve either the products formed in the main reaction or primary reactants.

At the Anode:

$$\begin{array}{l} CH_2OH \\ | \\ CH_2OH \end{array} + Ag_2O \longrightarrow \begin{array}{l} CH_2 \\ | \quad > O \\ CH_2 \end{array} + 2AgOH$$

$$\begin{array}{l} CH_2 \\ | \quad > O + H_2 \longrightarrow H_2O + C_2H_4 \\ CH_2 \end{array}$$

At the Cathode:

$$C_2H_4O + H_2^{+} + e \longrightarrow C_2H_4 + H_2O$$

$$C_2H_4 + 3O_2 \longrightarrow 2CO_2 + 2H_2O$$

$$Ag_2O + 4NH_4OH \longrightarrow 2Ag(NH_3)_2OH + 3H_2O$$

$$Ag\left[N(C_2H_4OH)_3\right]_nOH \longrightarrow Ag(NH_3)_nOH + (3xn)\ C_2H_4O$$

where n = 2 or 3

$$C_2H_4O + H_2 \longrightarrow C_2H_4 + H_2O$$

$$C_2H_4 + 3O_2 \longrightarrow 2CO_2 + 2H_2O$$

$$C_2H_4 + 2M \longrightarrow M_2C_2 + H_2$$

M = Ag or Cu

VII. LITERATURE CITED

1. Luther and Pokorny, Z. Anorg. Chem., 57, 290 (1908).

2. Brown, M. J., J. Physic. Chem., 20, 680 (1916).

3. Jirsa, F., Z. Elektrochem., 25, 146 (1919).

4. Hickling, A. and Taylor, D., Discussions of Faraday Society, 1, 277 (1947).

5. Dirkse, T. P., J. Electrochem. Soc., 106, 920 (1959).

6. Dirkse, T. P. and L. A. Vander Lugt, Tech. Rept. No. 13 on Contract Nonr 1682(01), October 1, 1961, Calvin College, Grand Rapids, Michigan.

7. Young, G. J. and R. B. Rozelle, 'Fuel Cells', Vol. 2, Chapter 16, Reinhold, New York, 1963.

8. Bockris, J. O'M., B. J. Piersma and E. Gileadi, Electrochimica Acta, 9, 1329 (1964).

9. Goodridge, F., Chem & Process Engg., 47, 121 (1966).

10. Weinberg, N. L. and E. A. Brown, J. Org. Chem., 31, 4054 (1966).

11. Parker, V. D. and B. E. Burgert, Tetrahedron Letters, No. 45, 4065 (1965).

12. Blaedel, W. J. and M. A. Evenson, Inorg. Chem., 5, 944 (1966).

13. Von Stackelberg, M. and T. Weber, Z. Elektrochem., 56, 806 (1952).

14. Bruner, M. and S. J. Dluska, Bull. Acad. Science, Crakow, 691 (1907).

15. Bockris, J. O'M.,"Modern Aspects of Electrochemistry", Vol. I, Butterworth, London (1954).

16. Fichter, F. and M. Stocker, Ber., 47, 2003 (1914).

17. Perkin, F. M., Chem. News, 91, 55 (1905); ibid, 92, 66 (1905).

18. Wroblowa, H., B. J. Piersma, and J. O'M. Bockris, J. Electroanal. Chem., 6, 401 (1963).

19. Bockris, J. O'M., H. Wroblowa, E. Gileadi, and B. J. Piersma, Trans. Faraday Soc., 61, 2531 (1965).

20. Gilroy, D. and B. E. Conway, J. Phys. Chem., 69, 1259 (1965).

21. Kolotyrkin, Y. M., Z. Elektrochem., 62, 664 (1958).

22. Breiter, M., K. Franke, and C. A. Knorr, ibid, 63, 226 (1959).

23. Nord, H. Acta Chem. Scand., 18, 681 (1964).

24. Bagotskii, V. S. and Y. B. Vasilev, Electrochem. Acta, 9, 869 (1964).

25. Gileadi, E. and B. E. Conway, "Modern Aspects of Electrochemistry", Vol. III, Butterworth, London (1964).

26. Bockris, J. O'M. and A. Reddy, J. Chem. Phys., 42, 2046 (1965).

27. Conway, B. E., N. Marincic, D. Gilroy, and E. Rudd, J. Electrochem. Soc., 113, 1144 (1966).

28. Davies, R. A. and A. Hickling, J. Chem. Soc. (London), p. 3595 (1952).

29. Hickling, A., and J. K. Linacre, ibid, p. 711 (1954).

30. Denaro, A. R. and A. Hickling, J. Electrochem. Soc., 105, 265 (1958).

31. Dewhurst, Flagg, and Watson, ibid, 106, 366 (1959).

32. Hickling, A and G. R. Newns, J. Chem. Soc. (Lond.), 5177 (1961).

33. Migal, P. K. and K. T. Ploae, Zh. Neorgan. Khim. 10(11), 2517 (1965).

34. Green, E., Chemistry & Industry (London), p. 943 (1965).

35. Haigt, G. P., Jr., J. Chem. Education, 42, p. 468 (1965).

36. Thorne, P. C. L., and E. R. Roberts, Fritz Ephraim, Inorganic Chemistry, Inter Science, N. Y. (1954).

APPENDIX

APPENDIX A

REACTION SCHEME

(Proposed by Dr. Downs of NASA-MSC)

At the Anode:

$$2Ag + 2OH^- \longrightarrow Ag_2O + H_2O$$

ΔF_f^o, (Kcals/mole)	0.0	-37.595	-2.586	-56.69

$$\begin{array}{l} CH_2OH \\ | \\ CH_2OH \end{array} \xrightarrow{Ag_2O} \begin{array}{l} CH_2 \\ | \quad \diagdown O \\ CH_2 \end{array} + 2AgOH$$

ΔF_f^o	-76.44	-6.94(g)	Not Available

At the Cathode:

$$\begin{array}{l} CH_2 \\ | \quad \diagdown O \\ CH_2 \end{array} + H_2^+ + e \longrightarrow C_2H_4 + H_2O$$

ΔF_f^o	-6.94(g)	Not Available	16.282(g)	-56.69

$$C_2H_4 + 3O_2 \longrightarrow 2H_2O + 2CO_2$$

ΔF_f^o	16.282(g)	0.0	-56.69	-94.2598(g)

$$AgOH + 2N(C_2H_4OH)_3 \longrightarrow Ag(NH_3)_2OH + 6(C_2H_4O)$$

ΔF_f^o	Not Available	Not Available	-6.94

$$4Ag(NH_3)_2OH + 2\begin{array}{l} CH_2 \\ | \quad \diagdown O \\ CH_2 \end{array} \longrightarrow 2Ag_2N_2C_2O_2 + 2NH_4OH + 2NH_3 + 10H_2$$

ΔF_f^o	Not Available		Not Available	-63.05
				-3.903(g)