ENGINEERING DEPARTMENT

TECHNICAL REPORT

TR-RE-CCSD-FO-1120-3

March 31, 1967

SATURN IB PROGRAM

TEST REPORT
FOR

GLOBE VALVE, 2-INCH, 6000 PSIG

Control Components, Inc. Model No. 445

NASA Drawing Number 75M14693 PGLV-1

FACILITY FORM 602

N67-37022 (ACCESSION NUMBER)

(THRU)

80 (PAGES)

0 (CODE)

CR-88620 (NASA CR OR TMX OR AD NUMBER)

15 (CATEGORY)

SPACE DIVISION CHRYSLER CORPORATION

TEST REPORT

FOR

GLOBE VALVE, 2-INCH, 6000 PSIG

Control Components, Inc. Model No. 445

NASA Drawing Number 75M14693 PGLV-1

ABSTRACT

This report presents the results of tests performed on one specimen of the Globe Valve 75M14693-PGLV-1. The following tests were performed:

1. Receiving Inspection
2. Proof Pressure
3. Functional
4. Flow
5. Surge
6. Low Temperature
7. High Temperature
8. Sand and Dust
9. Salt Fog
10. Cycle
11. Seat Erosion
12. Burst

The specimen's performance was in accordance with the specification requirements of NASA Specification Number 75M14693-PGLV-1.

TR-RE-CCSD-FO-1120-3

TEST REPORT

FOR

GLOBE VALVE, 2-INCH, 6000 PSIG

Control Components, Inc. Model No. 445

NASA Drawing Number 75M14693 PGLV-1

March 31, 1967

CHRYSLER CORPORATION SPACE DIVISION - NEW ORLEANS, LOUISIANA

FOREWORD

The tests reported herein were conducted for the John F. Kennedy Space Center by Chrysler Corporation Space Division (CCSD), New Orleans, Louisiana. This document was prepared by CCSD under contract NAS 8-4016, Part VII, CWO 271620.

TABLE OF CONTENTS

Section		Page
I	INTRODUCTION	1-1
II	RECEIVING INSPECTION	2-1
III	PROOF PRESSURE TEST	3-1
IV	FUNCTIONAL TEST	4-1
V	FLOW TEST	5-1
VI	SURGE TEST	6-1
VII	LOW TEMPERATURE TEST	7-1
VIII	HIGH TEMPERATURE TEST	8-1
IX	SAND AND DUST TEST	9-1
X	SALT FOG TEST	10-1
XI	CYCLE TEST	11-1
XII	SEAT EROSION	12-1
XIII	BURST TEST	13-1
Appendix		
I	SAND AND DUST TEST REPORT	I-I
II	TEST REPORT - TEST NUMBER H40122	II-I

LIST OF ILLUSTRATIONS

Figure		Page
FRONTISPIECE		vii
3-1	PROOF PRESSURE AND BURST TEST SCHEMATIC	3-3
3-2	PROOF PRESSURE AND BURST TEST SETUP - GENERAL	3-4
3-3	PROOF PRESSURE AND BURST TEST SETUP - VALVE ONLY	3-5
4-1	FUNCTIONAL TEST SCHEMATIC	4-7
4-2	FUNCTIONAL TEST SETUP	4-8
5-1	FLOW TEST SCHEMATIC	5-6
5-2	FLOW TEST SETUP	5-7
5-3	PRESSURE VERSUS FLOW RATE	5-8
6-1	SURGE TEST SCHEMATIC	6-5
6-2	SURGE TEST SETUP — VALVE ONLY	6-6
6-3	SURGE TEST SETUP - INSTRUMENTATION	6-7
6-4	TYPICAL SURGE WAVEFORM	6-8
9-1	SAND AND DUST TEST SETUP	9-4
10-1	SALT FOG TEST SETUP	10-4
11-1	CYCLE TEST SCHEMATIC	11-8
11-1A	CYCLE TEST ELECTRICAL SCHEMATIC	11-9
11-2	CYCLE TEST SETUP	11-10
12-1	SEAT EROSION TEST SCHEMATIC	12-4

LIST OF TABLES

Table		Page
2-1	SPECIMEN NOMENCLATURE	2-1
2-2	SPECIMEN DIMENSIONS	2-1
3-1	PROOF PRESSURE AND BURST TEST EQUIPMENT LIST	3-2
3-2	PROOF PRESSURE TEST DATA	3-2
4-1	FUNCTIONAL TEST EQUIPMENT LIST	4-4
4-2	FUNCTIONAL TEST DATA	4-6
4-3	LEAKAGE DATA OBTAINED DURING FUNCTIONAL TEST	4-6
5-1	FLOW TEST EQUIPMENT LIST	5-3
5-2	FLOW TEST DATA	5-4
5-3	FUNCTIONAL TEST DATA OBTAINED BEFORE FLOW TEST	5-5
5-4	LEAKAGE DATA OBTAINED DURING FUNCTIONAL TEST PERFORMED BEFORE FLOW TEST	5-5
5-5	DATA OBTAINED AFTER FLOW TEST	5-5
5-6	LEAKAGE DATA OBTAINED DURING FUNCTIONAL TEST PERFORMED AFTER FLOW TEST	5-5
6-1	SURGE TEST EQUIPMENT LIST	6-3
6-2	FUNCTIONAL TEST DATA OBTAINED AFTER SURGE TEST	6-4
6-3	LEAKAGE DATA OBTAINED DURING FUNCTIONAL TEST PERFORMED AFTER SURGE TEST	6-4
7-1	FUNCTIONAL TEST DATA OBTAINED BEFORE LOW TEMPERATURE TEST	7-2
7-2	LEAKAGE DATA OBTAINED DURING FUNCTIONAL BEFORE LOW TEMPERATURE TEST	7-2
7-3	FUNCTIONAL TEST DATA OBTAINED AT -20°F	7-3
7-4	LEAKAGE DATA OBTAINED DURING FUNCTIONAL TEST AT -20°F.	7-3
7-5	FUNCTIONAL TEST DATA OBTAINED AT AMBIENT TEMPERATURE (POST-LOW TEMPERATURE)	7-3
7-6	LEAKAGE DATA OBTAINED DURING FUNCTIONAL TEST AT AMBIENT TEMPERATURE (POST-LOW TEMPERATURE).	7-3

LIST OF TABLES (CONTINUED)

Table		Page
8-1	FUNCTIONAL TEST DATA OBTAINED AT 140°F.	8-3
8-2	LEAKAGE DATA OBTAINED DURING FUNCTIONAL TEST AT 140°F . .	8-3
8-3	FUNCTIONAL TEST DATA OBTAINED AT AMBIENT TEMPERATURE (POST-HIGH TEMPERATURE)	8-3
8-4	LEAKAGE DATA OBTAINED DURING FUNCTIONAL TEST AT AMBIENT TEMPERATURE (POST-HIGH TEMPERATURE)	8-3
9-1	FUNCTIONAL TEST DATA OBTAINED AFTER SAND AND DUST TEST	9-3
9-2	LEAKAGE DATA OBTAINED DURING FUNCTIONAL TEST AFTER SAND AND DUST TEST.	9-3
10-1	FUNCTIONAL TEST DATA OBTAINED AFTER SALT FOG TEST	10-3
10-2	LEAKAGE DATA OBTAINED DURING FUNCTIONAL TEST PERFORMED AFTER SALT FOG TEST	10-3
11-1	CYCLE TEST EQUIPMENT LIST	11-3
11-1A	CYCLE TEST ELECTRICAL EQUIPMENT LIST.	11-5
11-2	FUNCTIONAL TEST DATA OBTAINED AFTER 50 CYCLES	11-6
11-3	LEAKAGE DATA OBTAINED DURING FUNCTIONAL TEST AFTER 50 CYCLES.	11-6
11-4	FUNCTIONAL TEST DATA OBTAINED AFTER 100 CYCLES.	11-6
11-5	LEAKAGE DATA OBTAINED DURING FUNCTIONAL TEST AFTER 100 CYCLES.	11-6
11-6	FUNCTIONAL TEST DATA OBTAINED AFTER 500 CYCLES.	11-7
11-7	LEAKAGE DATA OBTAINED DURING FUNCTIONAL TEST AFTER 500 CYCLES.	11-7
11-8	FUNCTIONAL TEST DATA OBTAINED AFTER 1000 CYCLES	11-7
11-9	LEAKAGE DATA OBTAINED DURING FUNCTIONAL TEST AFTER 1000 CYCLES	11-7
12-1	SEAT EROSION TEST EQUIPMENT LIST.	12-3
13-1	BURST TEST	13-1

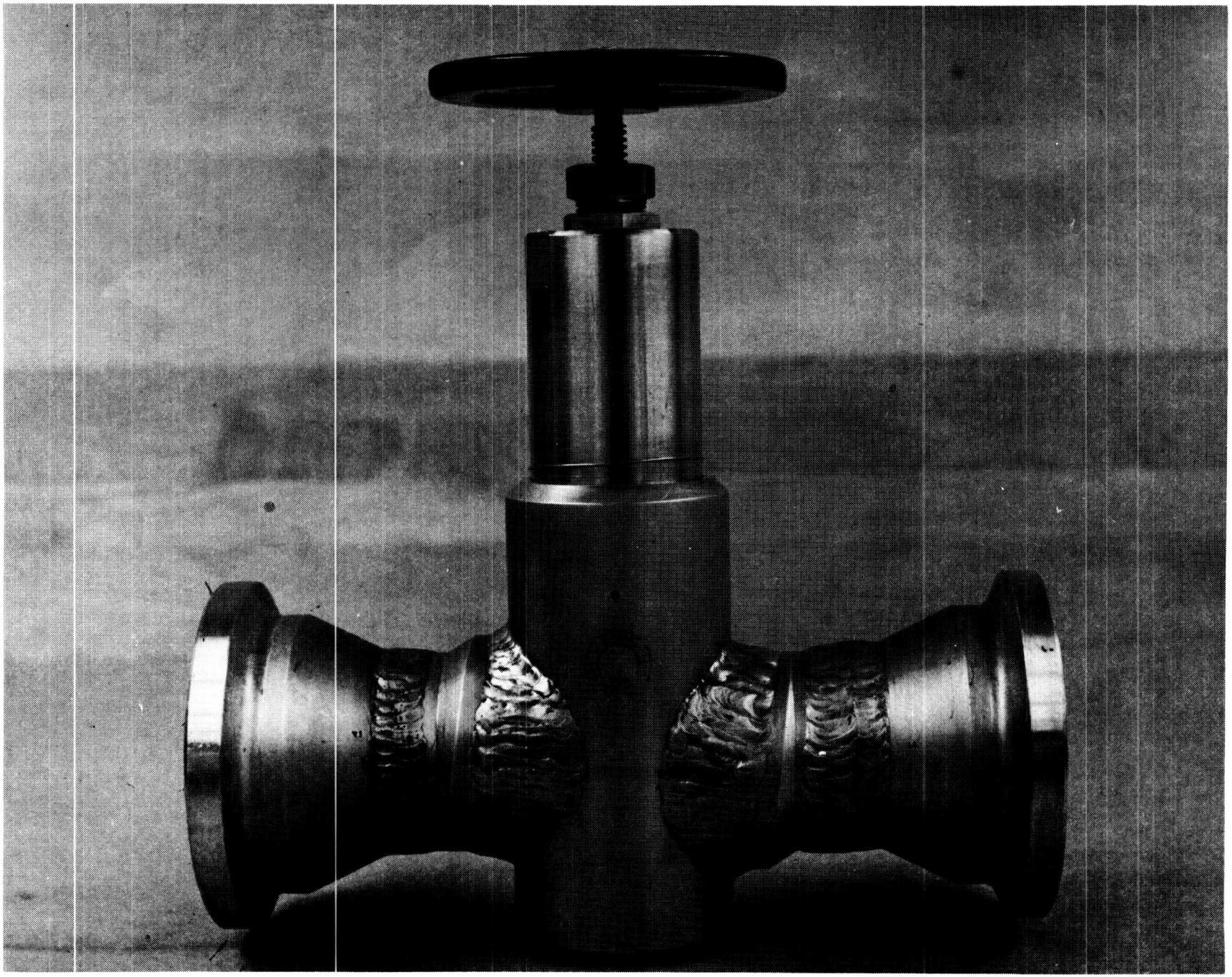

Globe Valve 75M14693 PGLV-1, 2-inch

CHECK SHEET

FOR

GLOBE VALVE, 2-INCH, 6000 PSIG

MANUFACTURER: Control Components, Inc.
MANUFACTURER'S MODEL NUMBER: 445
NASA DRAWING NUMBER: 75M14693 PGLV-1
TESTING AGENCY: Chrysler Corporation Space Division, New Orleans, Louisiana
AUTHORIZING AGENCY: NASA KSC

I. FUNCTIONAL REQUIREMENTS

A.	OPERATING MEDIUM:	GN_2, GH_2
B.	OPERATING PRESSURE:	6000 psig
C.	PROOF PRESSURE:	11,000 psig
D.	BURST PRESSURE:	24,000 psig
E.	VALVE CAPACITY (Cv):	22.0 (desired)
F.	LEAKAGE:	Bubble tight below 6000 psig
G.	VALVE STEM TORQUE MAXIMUM:	
	1. Breakaway -	100 ft-lb with 6000 psig above seat
	2. Running -	50 ft-lb
	3. Seating -	100 ft-lb against 6000 psig

II. CONSTRUCTION

A.	BODY MATERIAL:	304L cres.
B.	PORT DIAMETER:	2 inches
C.	END FITTING:	2-inch XXS Grayloc hub inlet and outlet
D.	SEALS:	Teflon
E.	SEAT:	Teflon
F.	FACE TO FACE:	12 inches

III. ENVIRONMENTAL CHARACTERISTICS

A. OPERATING TEMPERATURE RANGE: -20° to +140°F

IV. SPECIAL REQUIREMENTS

A. CLEANING SPECIFICATION: 10M01671 Level IV

V. LOCATION AND USE: Used in the Pneumatic Supply System of Saturn IB ground support equipment at Launch Complexes 34 and 37B. Proposed for use in GH_2 system.

TEST SUMMARY

GLOBE VALVE 2-INCH, 6000 PSIG,

75M14693 PGLV-1

Environment	Units	Operational Boundary	Test Objective	Test Results	Remarks
Receiving Inspection		NASA drawing 75M14693 PGLV-1	Visually and dimensionally inspect for compliance with NASA drawing 75M14693 PGLV-1	Satisfactory	No visible defects. No specifications or workmanship deficiencies.
Proof Pressure		11,000 psig	Check for leakage and distortion	Satisfactory	No leakage or visible damage
Functional		6000 psig a. Breakaway: 100 ft-lb b. Running: 50 ft-lb c. Seating 100 ft-lb	Check inlet and outlet port leakage and operating torque	Satisfactory	No leakage. Breakaway and running torques did not exceed the maximum values
Flow Test		Desired Cv is 22.0	Determine the Cv of the valve	Satisfactory	Average Cv was 20.8 for a range of 39 to 159 gpm
Surge Test		0 to 6000 psig in milliseconds Ten cycles closed; ten cycles partially open	Determine if specimen operation is impaired by surge	Satisfactory	The specimen was not impaired by surge
Low Temperature		-20 (+0, -4)°F	Determine if the environment causes degradation or deformation	Satisfactory	No leakage or damage
High Temperature		140 (+4, -0)°F		Satisfactory	No leakage or damage
Sand and Dust		KSC-STD-164D Section XVI	Determine if sand particles can cause specimen malfunction	Satisfactory	The specimen was not affected by the sand and dust environment
Salt Fog		KSC-STD-164D Section XVII	Determine the corrosive resistance of the specimen	Satisfactory	The only corrosion noted was the operating hand wheel

TEST SUMMARY (Continued)

Environment	Units	Operational Boundary	Test Objective	Test Results	Remarks
Cycle		Opening and closing valve with inlet pressurized to 6000 psig; 1000 cycles	Determine if the environment causes degradation or deformation on a cumulative basis	Satisfactory	No. degradation or deformation occurred
Seat Erosion		Flow GH_2 for 120 Hours at one SCFM with 6000 psig inlet pressure	Determine if valve seat of the specimen deteriorates	Satisfactory	No degradation or deterioration occurred
Burst		24,00 psig, hydrostatic	Determine the structural integrity of the specimen	Satisfactory	No leakage or distortion occurred

SECTION I

INTRODUCTION

1.1 SCOPE

This report presents the results of tests performed on one speciment of Globe Valve 75M14693 PGLV-1 to determine if the valve meets the operational and environmental requirements for John F. Kennedy Space Center Launch Complex 37. A summary of the test results is presented on pages ix and x.

1.2 ITEM DESCRIPTION

Globe Valve 75M14693 PGLV-1 has a 2-inch nominal size inlet port. It has a design operating pressure of 6000 psig and is rated for use with nitrogen and hydrogen.

1.3 APPLICABLE DOCUMENTS

The following documents contain the test requirements for Globe Valve 75M14693 PGLV-1:

a. KSC-STD-164 (D), Standard Environmental Test Method

b. Component Specification 75M14693 PGLV-1

c. Cleaning Standard MSFC-STD-164 (D)

d. Test Plan CCSD-FO-1120-1F

e. Test Procedure CCSD-FO-1120-2F

SECTION II

RECEIVING INSPECTION

2.1 TEST REQUIREMENTS

The specimen shall be visually and dimensionally inspected for conformance with the applicable specifications prior to testing.

2.2 TEST PROCEDURE

A visual and dimensional inspection of the specimen was performed to determine compliance with NASA drawing 75M14693 PGLV-1 and the applicable vendor drawing to the extent possible without disassembly of the test specimen. At the same time, the test specimen was also inspected for poor workmanship and manufacturing defects.

2.3 TEST RESULTS

The specimen complied with NASA drawing 75M14693 PGLV-1 and the applicable vendor drawing. No evidence of poor workmanship or manufacturing defects was observed.

2.4 TEST DATA

The data presented in tables 2-1 and 2-2 were recorded during the inspection.

Table 2-1. Specimen Nomenclature

Name	Control Components Inc. 2-Inch Globe Valve
Size	2-inch
Manufacturer's Drawing No.	MV 445-40G20

Table 2-2. Specimen Dimensions

	Dimensions (inches)	
	Drawing	Actual
Height, Overall (closed)	9.875	13.3
Height, Overall (open)	11.0	12.17
Width, Flange to Flange	12.0	12.0
Grayloc Outside Diameter	5.0	5.0
Grayloc Bore	1.77	1.75
Operating Wheel Diameter	18.0	5.0

SECTION III

PROOF PRESSURE TEST

3.1 TEST REQUIREMENTS

3.1.1 The test specimen shall be subjected to a proof pressure of 11,000 psig.

3.1.2 The pressure shall be applied simultaneously to the specimen inlet and outlet ports with the valve in the opened position and shall be maintained for 5 minutes.

3.1.3 Leakage shall be monitored during this test.

3.2 TEST PROCEDURE

3.2.1 The test setup was assembled as shown in figures 3-1 and 3-2 utilizing the equipment listed in table 3-1.

3.2.2 Hand valve 4 and the specimen were opened and after the system was filled with deionized water, all entrapped air was bled from the system.

3.2.3 Hand valve 4 was closed.

3.2.4 Hand pump 2 was used to pressurize the specimen to 11,000 psig as indicated on pressure gage 3. Proof pressure was maintained for 5 minutes while the specimen was monitored for external leakage.

3.2.5 Hand valve 4 was opened slowly to vent the pressure. The specimen was then examined for distortion.

3.2.6 All data were recorded.

3.3 TEST RESULTS

During the proof pressure test, valve stem leakage developed at 2000 psig with the valve in the open position.

The torque of the stem packing jam nut was checked and found to be approximately 350 inch-pounds. The jam nut was torqued to the required 800 inch-pounds and the specimen was subsequently pressurized to 11,000 psig and there was no evidence of leakage or distortion.

3.4 TEST DATA

The data presented in table 3-2 were recorded during the test.

Table 3-1. Proof Pressure and Burst Test Equipment List

Item No.	Item	Manufacturer	Model/ Part No.	Serial No.	Remarks
1	Test Specimen	Control Components Inc.	445		Globe valve, 2-inch
2	Hand Pump	Sprague	NA	300-16-	0-to 30,000-psig
3	Hydrostatic Pressure Gage	Astra	NA	NASA 011893 -A	0-to 100,000 -psig ±1% FS Cal date 4-30-67
4	Hand Valve	Aminco	5011A	NA	1/4-inch
5	Water Reservoir	CCSD	NA	NA	Deionized water
6	Burst Chamber	CCSD	NA	NA	

Table 3-2. Proof Pressure Test Data

Pressure	11,000 psig for 5 minutes
Leakage	None
Distortion	None

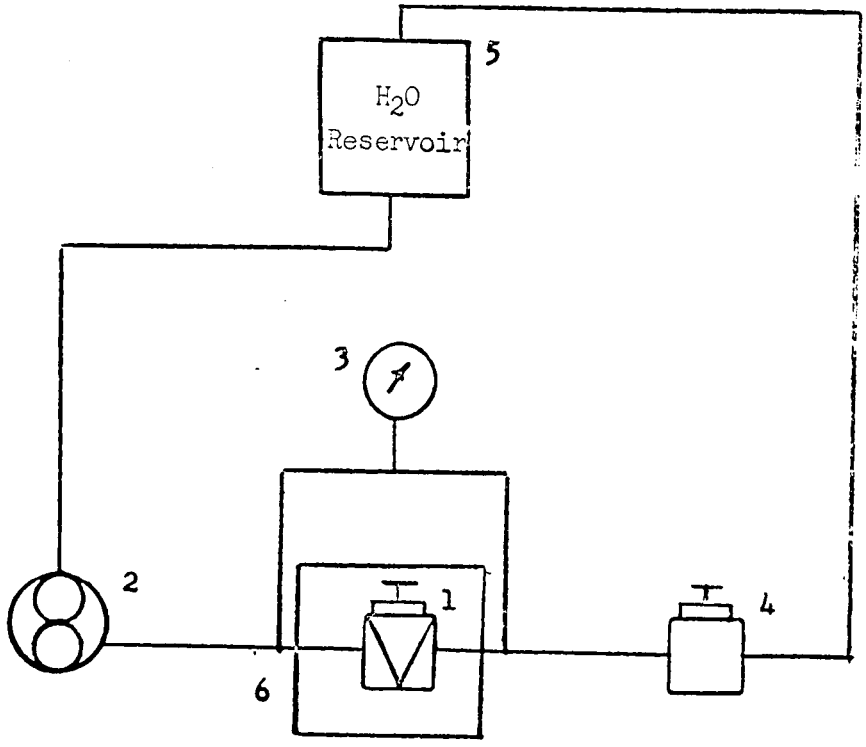

Note: All lines 1/4-inch.
Refer to table 3-1 for item identification.

Figure 3-1. Proof Pressure and Burst Test Schematic

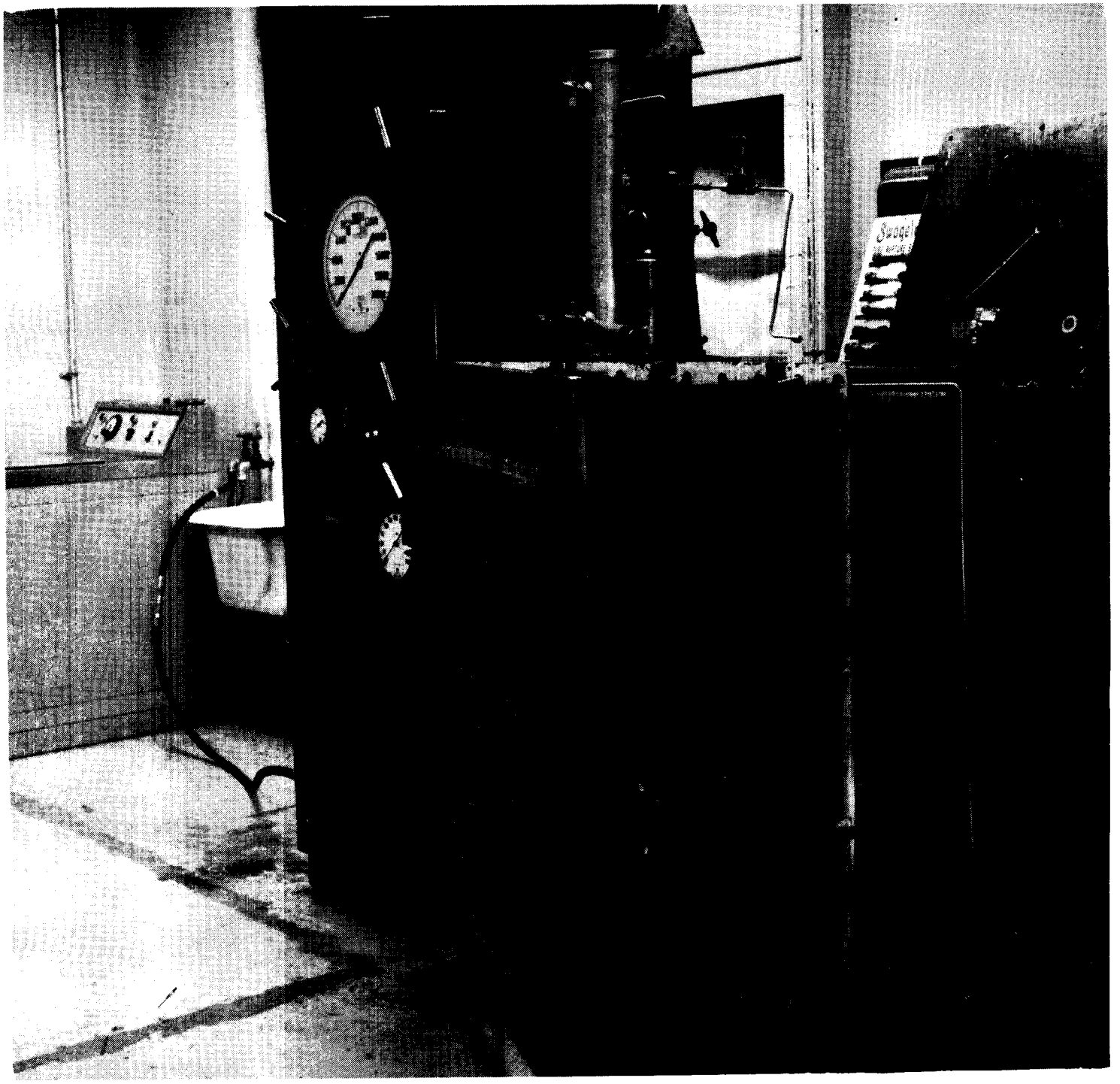

Figure 3-2. Proof Pressure and Burst Test Setup - General

Figure 3-3. Proof Pressure and Burst Test Setup - Valve only

SECTION IV

FUNCTIONAL TEST

4.1 TEST REQUIREMENTS

4.1.1 The test specimen shall be inspected for leakage with the outlet port of the specimen pressurized to 6000 psig, specimen closed, and the inlet port vented. Leakage shall be recorded.

4.1.2 The test specimen shall be inspected for leakage with the inlet port of the specimen pressurized to 6000 psig, specimen closed, and the outlet port vented. Leakage shall be recorded.

4.1.3 The opening, closing, and normal running torque of the valve shall be determined with the inlet port pressurized to 6000 psig and then relieved to zero psig. All data shall be recorded.

4.1.4 Procedures described in 4.1.1 and 4.1.2 each shall be repeated once for the initial functional test and performed once for all subsequent functional tests. Procedures described in 4.1.3 shall be performed 10 times initially and three times for all subsequent functional tests.

4.2 TEST PROCEDURE

4.2.1 The test setup as shown in figures 4-1 and 4-2 was assembled using the equipment listed in table 4-1 except for thermocouple 17 and thermal chamber 18. Flexible hose 20 (port A) was connected to the outlet port of the specimen and flexible hose 21 (port B) was connected to the inlet port.

4.2.2 The hand wheel of the test specimen was replaced with torque wrench 13 which was used to close the test specimen with a maximum seating torque of 100 foot-pounds.

4.2.3 All regulators were adjusted for zero outlet pressure and all hand valves were closed.

4.2.4 Hand valve 3 was opened and the supply pressure was read on gage 5.

4.2.5 Regulator 6 was adjusted to establish 6000 psig on pressure gage 7.

4.2.6 Hand valve 10 was opened and tank 12 was observed for evidence of leakage.

4.2.7 Regulator 6 was adjusted for zero outlet pressure and hand valve 8 was opened to vent the specimen.

4.2.8 Hand valves 8 and 10 were closed. Flexible hose 20 (port A) was connected to the inlet port of the specimen and flexible hose 21 (port B) was connected to the outlet port.

4.2.9 The procedures described in 4.2.5 through 4.2.8 were repeated.

4.2.10 Regulator 6 was slowly adjusted to apply 6000-psig pressure to the specimen.

4.2.11 The breakaway torque of the specimen was determined by measuring the maximum torque required to unseat the specimen.

4.2.12 After the breakaway torque was measured, the specimen was completely opened and the running torque was measured from breakaway until the specimen was fully opened.

4.2.13 The running torque was also measured in the closing direction.

4.2.14 Hand valve 9 was opened and closed to vent the outlet pressure of the specimen. Hand valve 10 was then opened.

4.2.15 The specimen was slowly opened until bubbles appeared in water tank 12. While the specimen was slowly being closed, the torque required to stop the bubbles was measured. This was the closing torque for the specimen at operating pressure.

4.2.16 Regulator 6 and hand valve 10 were closed.

4.2.17 Hand valves 8 and 9 were opened and closed to vent the specimen.

4.2.18 The procedures described in 4.2.11 through 4.2.13 were repeated to determine breakaway and running torque values for the unpressurized specimen.

4.2.19 Flexible hose 20 (port A) was disconnected and capped. Flexible hose 19 (port C) was connected to the inlet port of the specimen.

4.2.20 Regulator 6 was adjusted to establish 25 psig on pressure gage 7 and hand valve 14 was opened.

4.2.21 Regulator 15 was adjusted to establish a 2-psig reading on pressure gage 16 and hand valve 10 was opened.

4.2.22 The test specimen was slowly opened until bubbles appeared in water tank 12.

4.2.23 The test specimen was slowly closed. The closing torque required to stop the bubbles was measured. This was the closing torque for the specimen when the specimen was unpressurized.

4.2.24 Regulators 6 and 15 were closed and hand valve 8 was opened to vent the supply pressure.

4.2.25 Hand valves 8, 10, and 14 were closed.

4.2.26 Flexible hose 19 (port C) was disconnected and port A of flexible hose 20 was uncapped and connected to the inlet of the specimen.

4.2.27 The test specimen was closed using a maximum seating torque of 100 foot-pounds.

4.2.28 The procedures described in 4.2.10 through 4.2.21 were performed ten times. The procedures described in 4.2.1 through 4.2.10 were repeated once for the initial functional test.

4.2.29 For all subsequent tests, the procedures described in 4.2.10 through 4.2.21 were performed three times and those described in 4.2.1 through 4.2.10 were performed once.

4.3 TEST RESULTS

The performance of the valve was satisfactory. No leakage, distortion, or excessive torques were noted.

4.4. TEST DATA

The data presented in tables 4-2 and 4-3 were recorded during the initial functional test.

Table 4-1. Functional Test Equipment List

Item No.	Item	Manufacturer	Model/ Part No.	Serial No.	Remarks
1	Test Specimen	Control Components Inc.	445		Globe valve, 2-inch
2	He Source	CCSD	NA	NA	7000-psig
3	Hand Valve		NA	NA	$1\frac{1}{2}$-inch (supply)
4	Filter	Microporous	4813F-2M	NA	2-micron
5	Pressure Gage	Duragauge	NA	NASA 200594-P	0-to 10,000-psig ±2% FS Cal date 3-16-67
6	Pressure Regulator	Tescom	2[illegible]-1002	1009	7000-psig inlet 0-to 7000-psig outlet
7	Pressure Gage	Duragauge	NA	NASA 200594-Q	0-to 10,000-psig, ±0.25%FS Cal date 3-16-67
8	Hand Valve	Robbins	SS[illegible]G-250-4[illegible]	NA	1/4-inch
9	Hand Valve	Robbins	SS[illegible]G-250-4[illegible]	NA	1/4-inch
10	Hand Valve	Robbins	SS[illegible]G-250-4[illegible]	NA	1/4-inch
11	Graduated Cylinder	Pyrex 400 ML	1002	NA	For leakage measurement
12	Water Tank	CCSD	NA	NA	Leakage detector
13	Torque Wrench	Armstrong	SR-100	NASA 95-1318B	Replaces hand wheel of specimen (when required)

Table 4-1. Functional Test Equipment List (Continued)

Item No.	Item	Manufacturer	Model/ Part No.	Serial No.	Remarks
14	Hand Valve	Robbins	SSKG-250-4T	NA	1/4-inch
15	Pressure Regulator	Watts	2Ax2	NA	100-psig inlet 0-to 10-psig outlet
16	Pressure Gage	Marsh	NA	95-1148B	0-to 30-psig ±0.5% FS Cal date 3-27-67
17	Thermocouple	Honeywell	NA	NA	-50 to +200°F ±2.5°F (temperature tests only)
18	Thermal Chamber	CCSD	NA	NA	-300 to 160°F (temperature tests only)
19	Flexible Hose	Aeroquip	NA	NA	
20	Flexible Hose	Aeroquip	NA	NA	
21	Flexible Hose	Aeroquip	NA	NA	

Table 4-2. Functional Test Data

Run	Applied Seating Torque (ft-lb)	Specimen Inlet Pressure (psig)	Opening Torque (ft-lb)	Running Torque (ft-lb)		Closing Torque (ft-lb)
				Opening	Closing	
1	14	6000	6	3	2	11
	14	2	6	2	1	10
2	18	6000	8	3	2	20
	18	2	5	2	1	8
3	20	6000	10	3	2	15
	20	2	5	2	1	6
4	14	6000	10	3	2	16
	14	2	2	3	1	6
5	15	6000	5	3	2	18
	15	2	3	2	1	6
6	18	6000	8	3	2	19
	18	2	2	2	1	6
7	18	6000	8	3	2	16
	18	2	2	2	1	7
8	15	6000	7	3	2	10
	15	2	2	2	1	7
9	16	6000	7	3	2	13
	16	2	2	2	1	6
10	17	6000	8	3	2	14
	17	2	2	2	1	7

Table 4-3. Leakage Data Obtained During Functional Test

Run	Applied Seating Torque (ft-lb)	Inlet Pressure (psig)	Outlet Pressure (psig)	Leakage (scim)
1	15	6000	0	0
	15	0	6000	0
2	15	6000	0	0
	15	0	6000	0

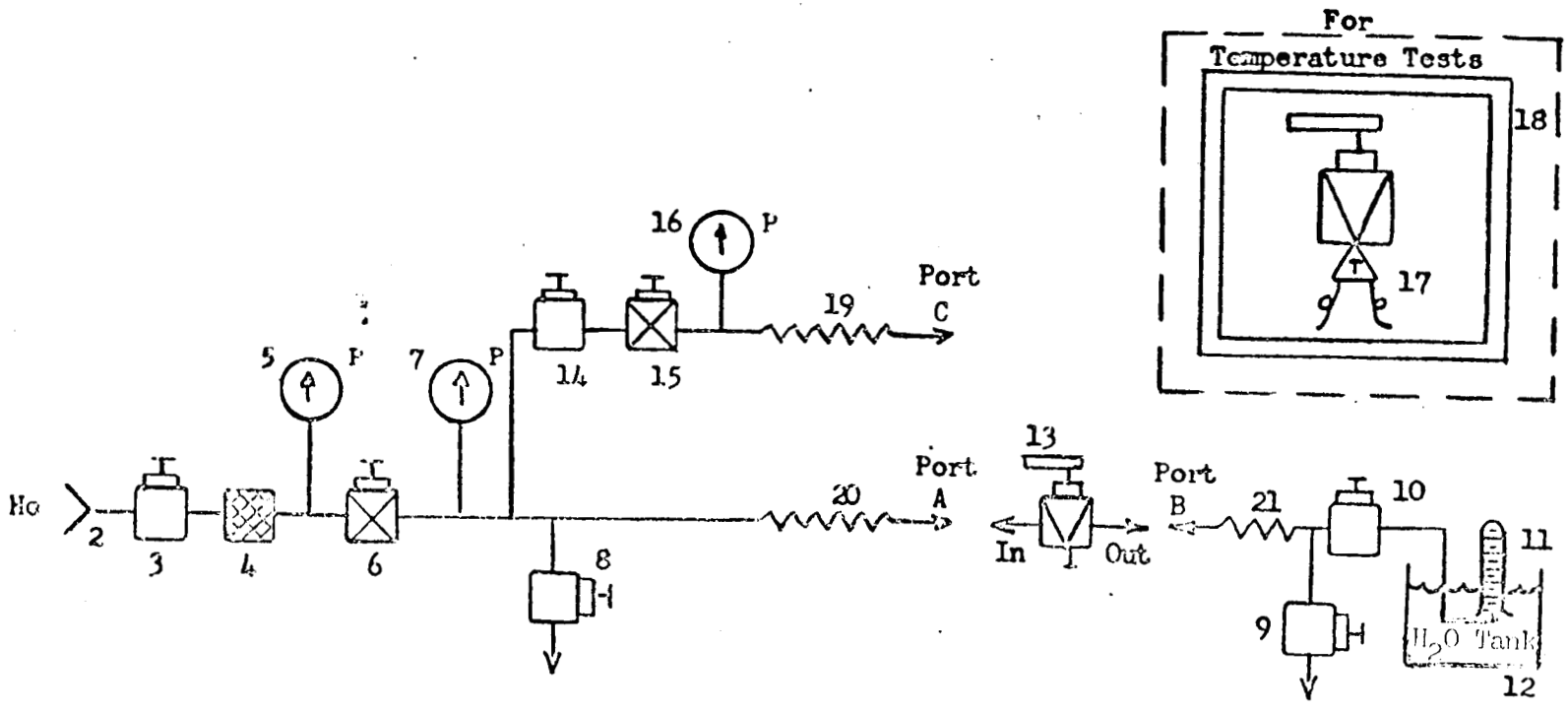

Note: All lines 1/4-inch.
Refer to table 4-1 for item identification.

Figure 4-1. Functional Test Schematic

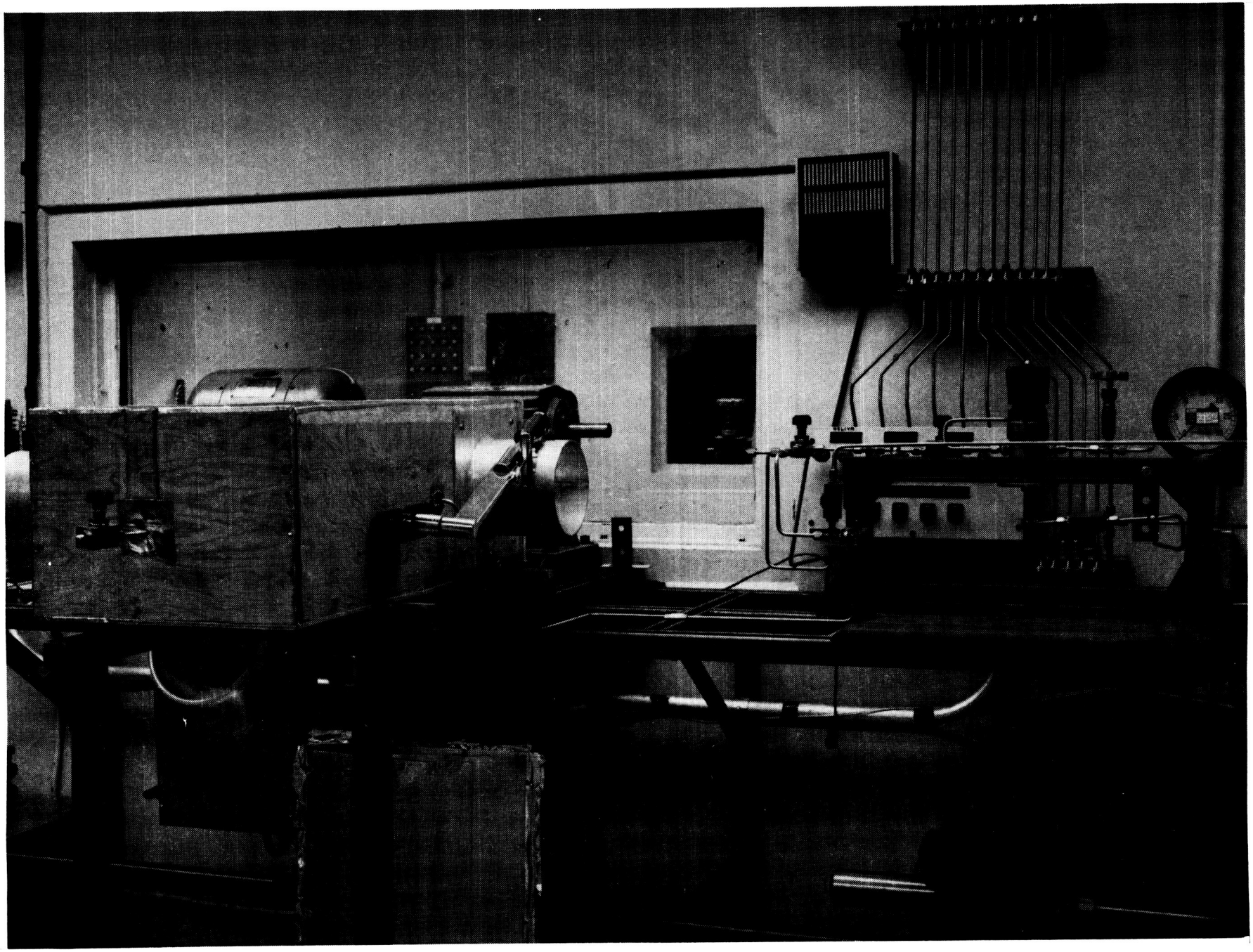

Figure 4-2. Functional Test Setup

SECTION V

FLOW TEST

5.1 TEST REQUIREMENTS

The flow coefficient, C_v, of the valve shall be determined. The desired C_v is 22.0.

5.2 TEST PROCEDURE

5.2.1 The test setup was assembled as shown in figures 5-1 and 5-2 utilizing the equipment listed in table 5-1.

5.2.2 After hand valve 4 was closed and the specimen was opened, pump 3 was started.

5.2.3 Hand valves 4 and 11 were used to adjust the flow rate of the specimen over the full range of the specimen keeping the inlet pressure constant.

5.2.4 The specimen inlet pressure and pressure drops indicated by gages 5, 6, and 7, and the water temperature indicated by thermocouple 10 were recorded for 10 flow conditions in gallons per minute.

5.3 TEST RESULTS

The flow coefficient (C_v) of the specimen averaged 20.8 when calculated over a flow range of 39 to 157 gallons per minute.

5.4 TEST DATA

5.4.1 The data recorded during the test are presented in table 5-2. Pressure drop versus flow rate is presented in figure 5-3.

5.4.2 The C_v for the specimen was computed using the following formula:

$$C_v = Q \sqrt{\frac{\rho T}{\rho \Delta P}}$$

where:

Q = measured flow rate (gpm)
ΔP = pressure drop across the specimen (psi)
ρT = density of the water at the temperature indicated by the temperature probe
ρ = density of the water at 60°F

5.4.3 Functional test data obtained prior to and following the flow test are presented in tables 5-3 and 5-5, respectively. Leakage data obtained during the functional tests performed before and after the flow test are presented in tables 5-4 and 5-6, respectively.

Table 5-1. Flow Test Equipment List

Item No.	Item	Manufacturer	Model/ Part No.	Serial No.	Remarks
1	Test Specimen	Control Components Inc.	455		Globe valve, 2-inch
2	H_2O Supply	CCSD	NA	NA	
3	Pump		NA	NA	0-to 200-gpm output, motor driven
4	Hand Valve	Williams	200 SP	NA	2-inch
5	Pressure Gage	Heise	H34951	NASA 014227	0-to 100-psig ±0.25% FS Cal date 2-3-67
6	Pressure Gage	Heise	H41044	95-1409-B	0-to 100-psig ±0.25% FS Cal date 2-3-67
7	Pressure Gage	Heise	H34952	014228	0-to 100-psig ±0.25% FS Cal date 1-2-67
8	Differential Pressure Gage	Industrial Instrument	NA	NASA 106-1110-B	0-to 30-psig ±0.25% FS Cal date 3-19-67
9	Orifice	CCSD	NA	NA	1.198-inch
10	Thermocouple	Honeywell	NA	NA	0-to 150°F ±2.5% FS
11	Hand Valve	Williams	200 SP	NA	2-inch
12	H_2O Reservoir	CCSD	NA	NA	Provide supply and return

Table 5-2. Flow Test Data

Flow (gpm)	Specimen Pressure (psig)		Tare (psi)	P (psi)	Media Temperature (°F)
	Upstream	Downstream			
39	91.5	87.4	0.2	3.9	62
55	90.8	83.2	0.1	7.5	62
68	90.5	79.2	0.1	11.2	62
79	89.8	74.6	0.0	15.3	62
88	89.5	71.5	0.2	17.8	62
96	89.2	67.9	0.3	21.0	62
107	88.6	62.2	0.2	26.2	62
124	87.8	52.3	0.3	35.2	62
139	87.2	44.1	0.4	42.7	62
152	86.7	34.4	0.5	51.8	62
159	86.0	25.0	0.8	60.2	62
152	86.4	35.3	1.3	49.8	62
139	87.0	44.3	0.4	42.3	62
124	87.5	53.3	0.3	33.9	62
107	88.2	62.6	0.4	25.2	62
96	89.0	68.1	0.3	20.6	62
88	89.2	72.1	0.1	17.0	62
79	89.5	75.7	0.2	13.6	62
68	89.8	79.4	0.2	10.2	62
55	90.1	82.8	0.1	7.2	62
39	90.5	87.0	0.1	3.4	62

Table 5-3. Functional Test Data Obtained Before Flow Test

Run	Applied Seating Torque (ft-lb)	Specimen Inlet Pressure (psig)	Opening Torque (ft-lb)	Running Torque (ft-lb)		Closing Torque (ft-lb)
				Opening	Closing	
1	15	6000	7	5	4	10
		2	5	4	4	15
2	15	6000	6	5	4	10
		2	5	4	4	15
3	15	6000	6	5	4	15
		2	5	3	4	15

Table 5-4. Leakage Data Obtained During Functional Test Performed Before Flow Test

Run	Applied Seating Torque (ft-lb)	Specimen Inlet Pressure (psig)	Specimen Outlet Pressure (psig)	Leakage (scim)
1	20	6000	0	0
	20	0	6000	0

Table 5-5. Functional Test Data Obtained After Flow Test

Run	Applied Seating Torque (ft-lb)	Specimen Inlet Pressure (psig)	Opening Torque (ft-lb)	Running Torque		Closing Torque (ft-lb)
				Opening	Closing	
1	15	6000	8	3	2	15
		2	4	2	1	20
2	15	6000	5	3	1	15
		2	4	2	1	10
3	15	6000	5	3	1	15
		2	4	2	1	10

Table 5-6. Leakage Data Obtained during Functional Test Performed After Flow Test

Run	Applied Seating Torque (ft-lb)	Specimen Inlet Pressure (psig)	Specimen Outlet Pressure (psig)	Leakage (scim)
1	20	6000	0	0
	20	0	6000	0

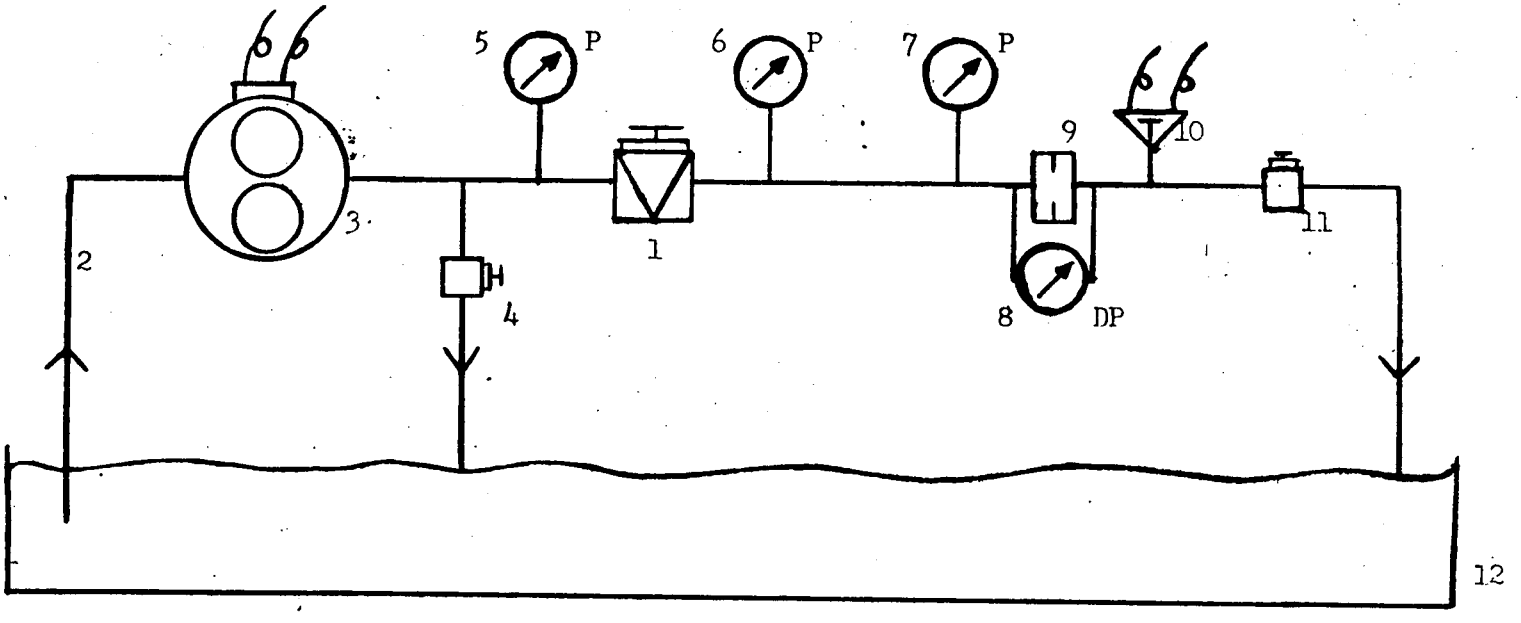

Note: All lines 2 inches.
Refer to table 5-1 for item identification.

Figure 5-1. Flow Test Schematic

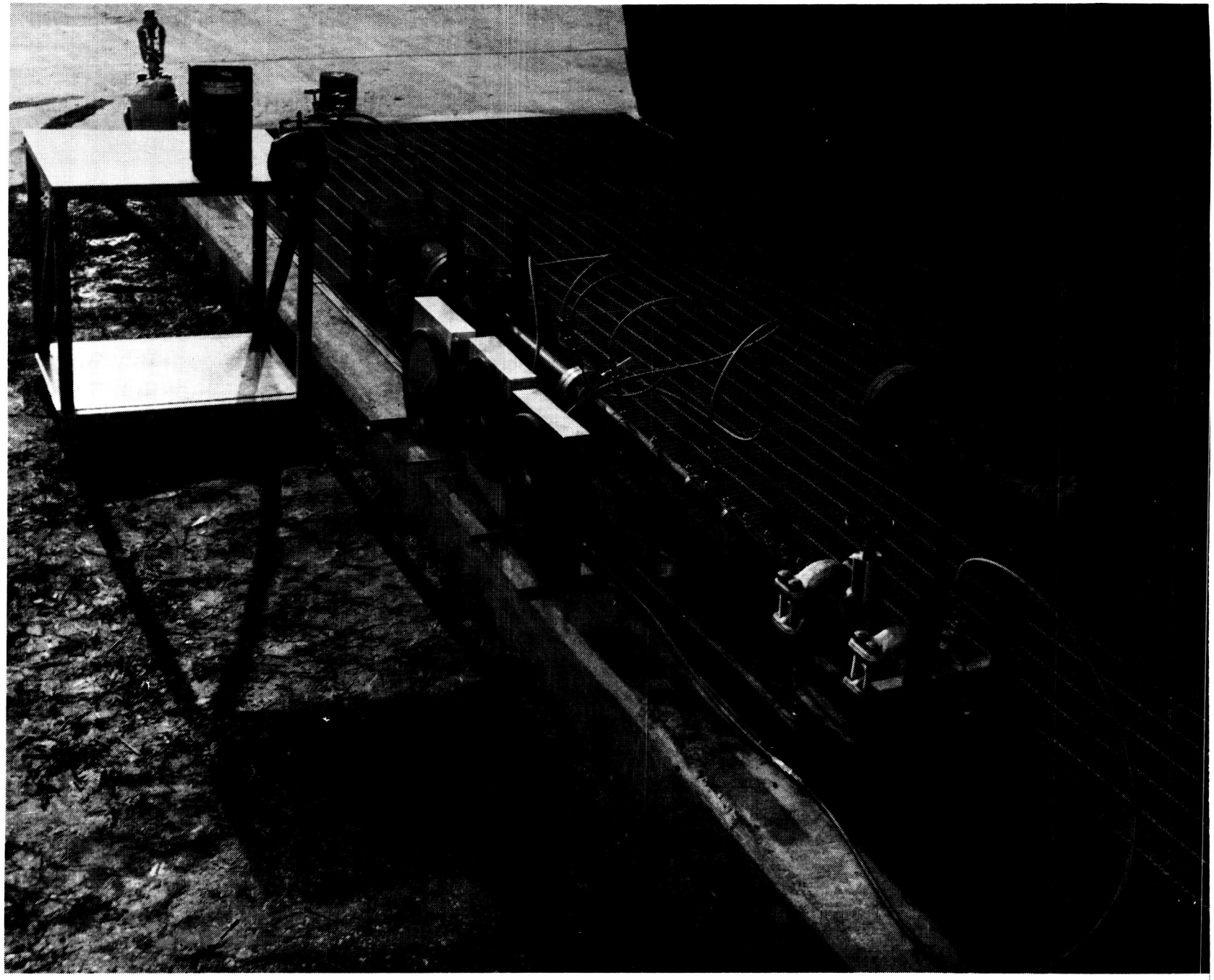

Figure 5-2. Flow Test Setup

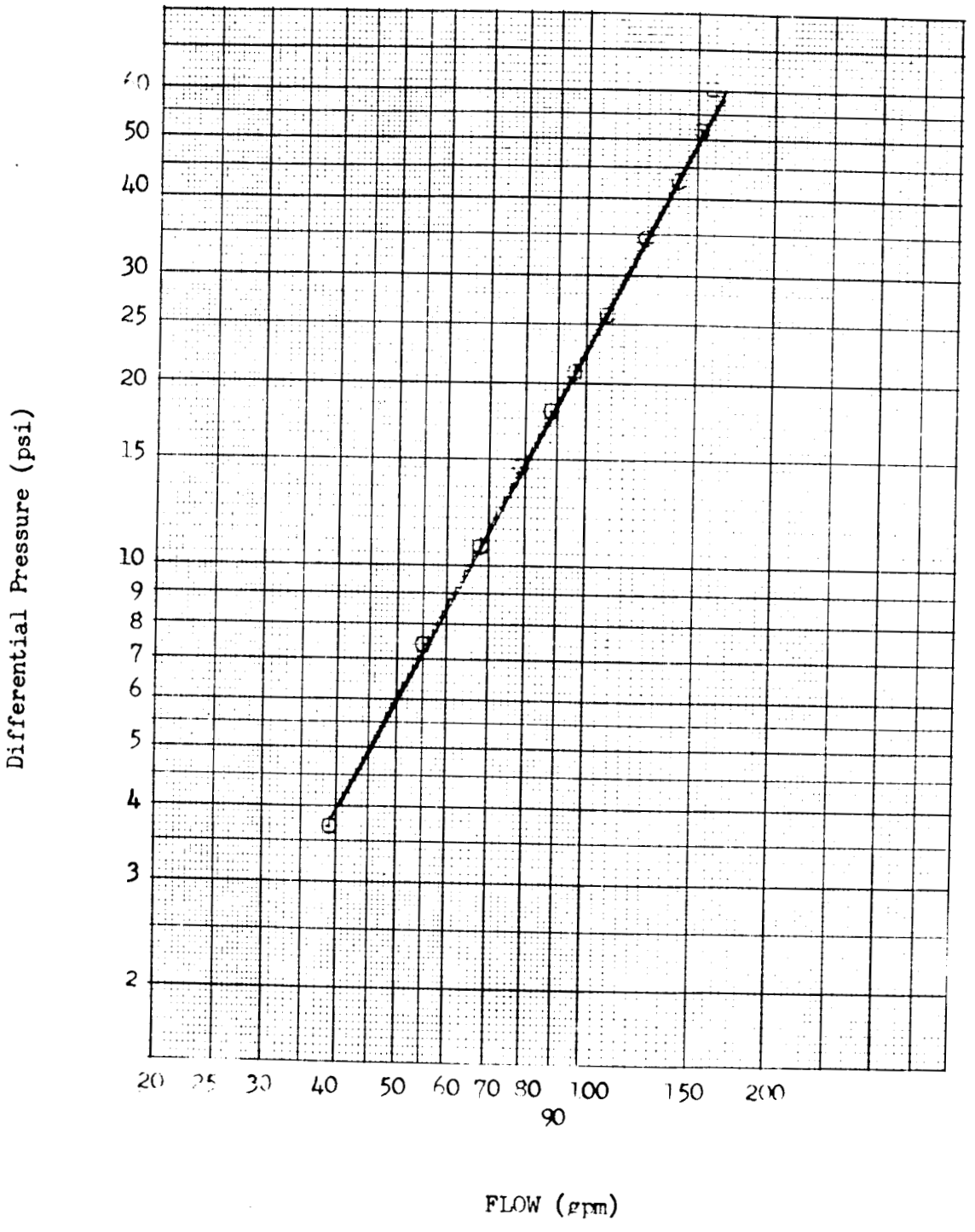

Figure 5-3. Pressure Versus Flow Rate

SECTION VI

SURGE TEST

6.1 TEST REQUIREMENTS

6.1.1 A surge test shall be performed on the test specimen.

6.1.2 The test specimen shall be pressurized in the direction of flow from zero to 6000 psig in 100 milliseconds.

6.1.3 Ten cycles shall be performed with the valve in the closed position and ten cycles shall be performed with the valve partially opened and the downstream port capped. The down-stream pressure shall be vented after each surge.

6.2 TEST PROCEDURE

6.2.1 The surge test setup was assembled as shown in figures 6-1, 6-2, and 6-3 utilizing the equipment listed in table 6-1.

6.2.2 All hand valves were closed and regulator 6 was adjusted for zero outlet pressure. Hand valve 13 was opened.

6.2.3 The test specimen was closed.

6.2.4 Hand valve 3 was opened and pressure gage 5 indicated 8000 psig.

6.2.5 Regulator 6 was adjusted to establish 6000 psig on pressure gage 7 and oscillograph 12 was started.

6.2.6 Switch 9 was closed to open the pressure port of solenoid valve 8.

6.2.7 The pressure impulse pattern on oscillograph 12 was observed to ensure that the required pressure surge was established.

6.2.8 Switch 9 was opened to close the solenoid valve 8 pressure port and to open the vent port.

6.2.9 The procedures described in 6.2.6 through 6.2.8 were performed ten times.

6.2.10 The vent port of solenoid valve 8 was capped, hand valve 13 was closed, and the test specimen was partially opened.

6.2.11 Switch 9 was closed to open the pressure port of solenoid valve 8.

6.2.12 The pressure impulse was recorded on oscillograph 12.

6.2.13 Switch 9 was opened to close solenoid valve 8.

6.2.14 Hand valve 13 was opened to vent the pressure downstream of the test specimen.

6.2.15 Hand valve 13 was closed.

6.2.16 The procedures described in 6.2.11 through 6.2.15 were performed six times.

6.3 TEST RESULTS

Ten pressure surges were performed with the valve in the closed position using GHe. The valve was surged from zero to 6000 psig in approximately 50 milliseconds. The valve was then placed in the partially open position and surged ten times using GHe.

Pressure surges were performed from zero to 6000 psig in approximately 95 milliseconds.

No leakage, malfunctions, or evidence of distortion occurred.

6.4 TEST DATA

6.4.1 A typical surge waveform as recorded during the test is shown in figure 6-4.

6.4.2 Functional test data obtained prior to and after the surge test are presented in tables 6-2 and 6-3.

Table 6-1. Surge Test Equipment List

Item No.	Item	Manufacturer	Model/ Part No.	Serial No.	Remarks
1	Test Specimen	Control Components Inc.	455		Globe valve, 2-inch
2	He or GN_2 Pressure Source	CCSD	NA	NA	8000-psig
3	Hand Valve		NA	NA	$1\frac{1}{2}$-inch(supply)
4	Filter	Microporous	4813F-2M	NA	2-micron
5	Pressure Gage	Duragauge	NA	NASA 200594-P	0-to 10,000-psig 2.5% FS Cal date 3-16-67
6	Pressure Regulator	Tescom	26-1002	1009	6000-psig inlet 0-to 6000-psig outlet
7	Pressure Gage	Duragauge	NA	NASA 200594-Q	10,000-psig ±0.25% FS Cal date 3-16-67
8	Solenoid Valve	Marotta	MV583	2896	3-way, 1/2-inch normally closed
9	Switch				2-position
10	Power Supply	Perkins	MPST28-300A	63-293	28 vdc
11	Pressure Transducer	Teledyne	176	652137	0-to 6000-psig ±0.25% FS
12	Oscillograph Recorder	CEC	5-124	NASA 017887	
13	Hand Valve	Marsh	1936	NA	1/2-inch

Table 6-2. Functional Test Data Obtained After Surge Test

Run	Applied Seating Torque (ft-lb)	Specimen Inlet Pressure (psig)	Opening Torque (ft-lb)	Running Torque (ft-lb)		Closing Torque (ft-lb)
				Opening	Closing	
1	15	6000	12	3	1	15
		2	8	2	1	10
2	15	6000	8	3	1	15
		2	5	2	1	10
3	15	6000	8	3	1	15
		2	5	3	1	10

Table 6-3. Leakage Data Obtained During Functional Test Performed After Surge Test

Run	Applied Seating Torque (ft-lb)	Specimen Inlet Pressure (psig)	Specimen Outlet Pressure (psig)	Leakage (scim)
1	25	6000	0	0
	25	0	6000	0

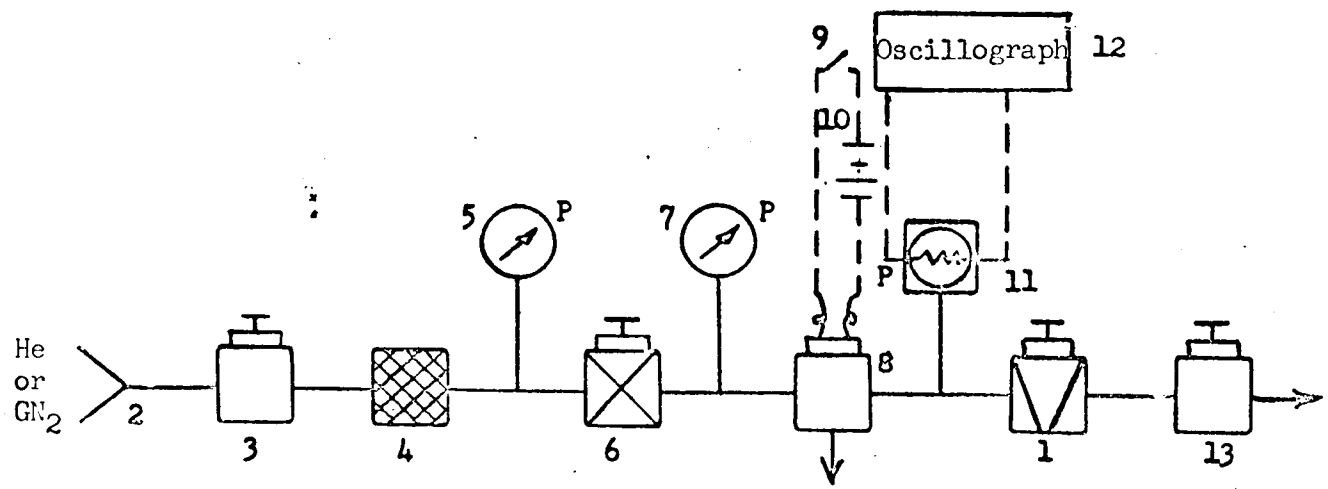

Note: All lines 1/2-inch.
Refer to table 6-1 for item identification.

Figure 6-1. Surge Test Schematic

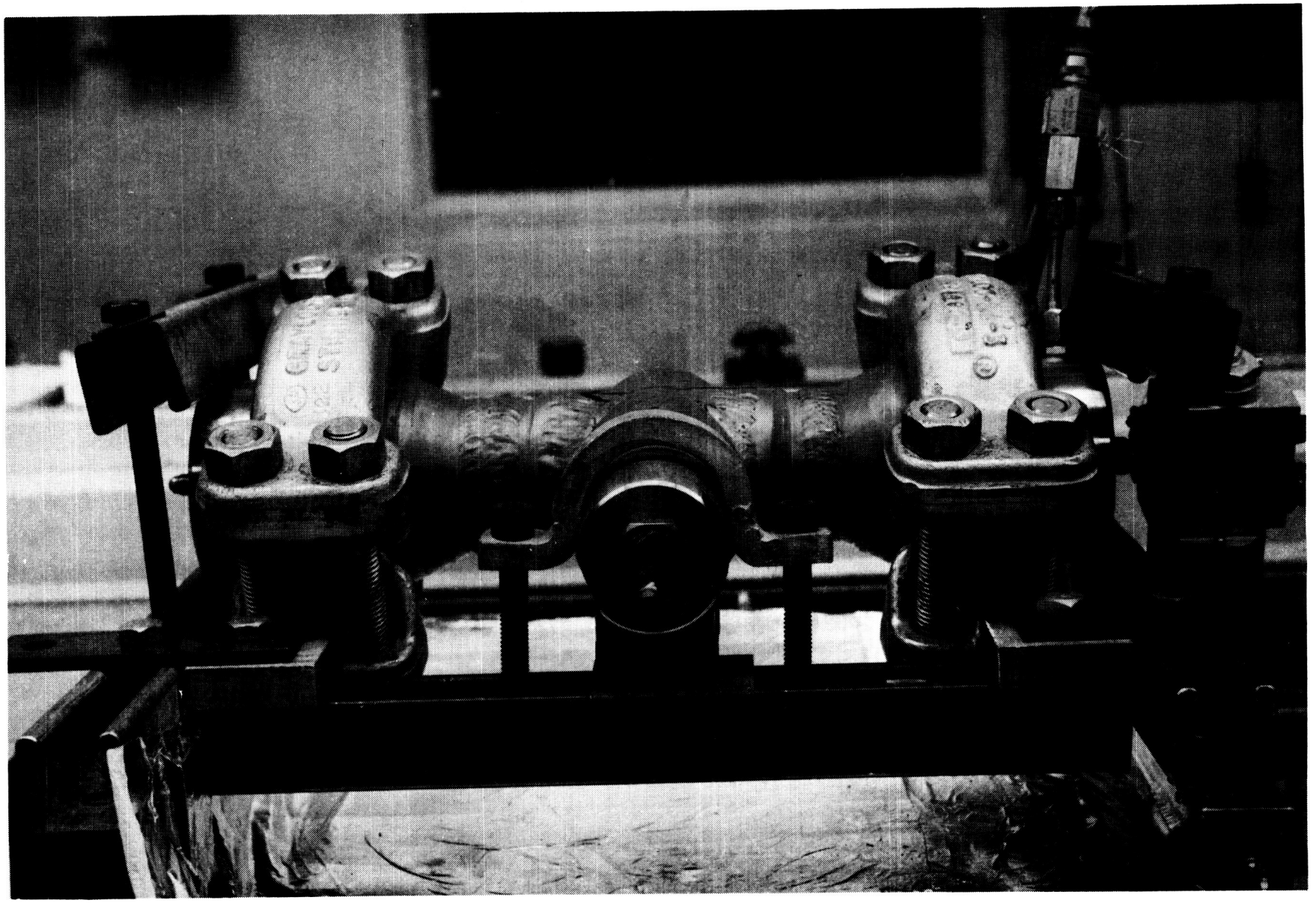

Figure 6-2. Surge Test Setup - Valve only

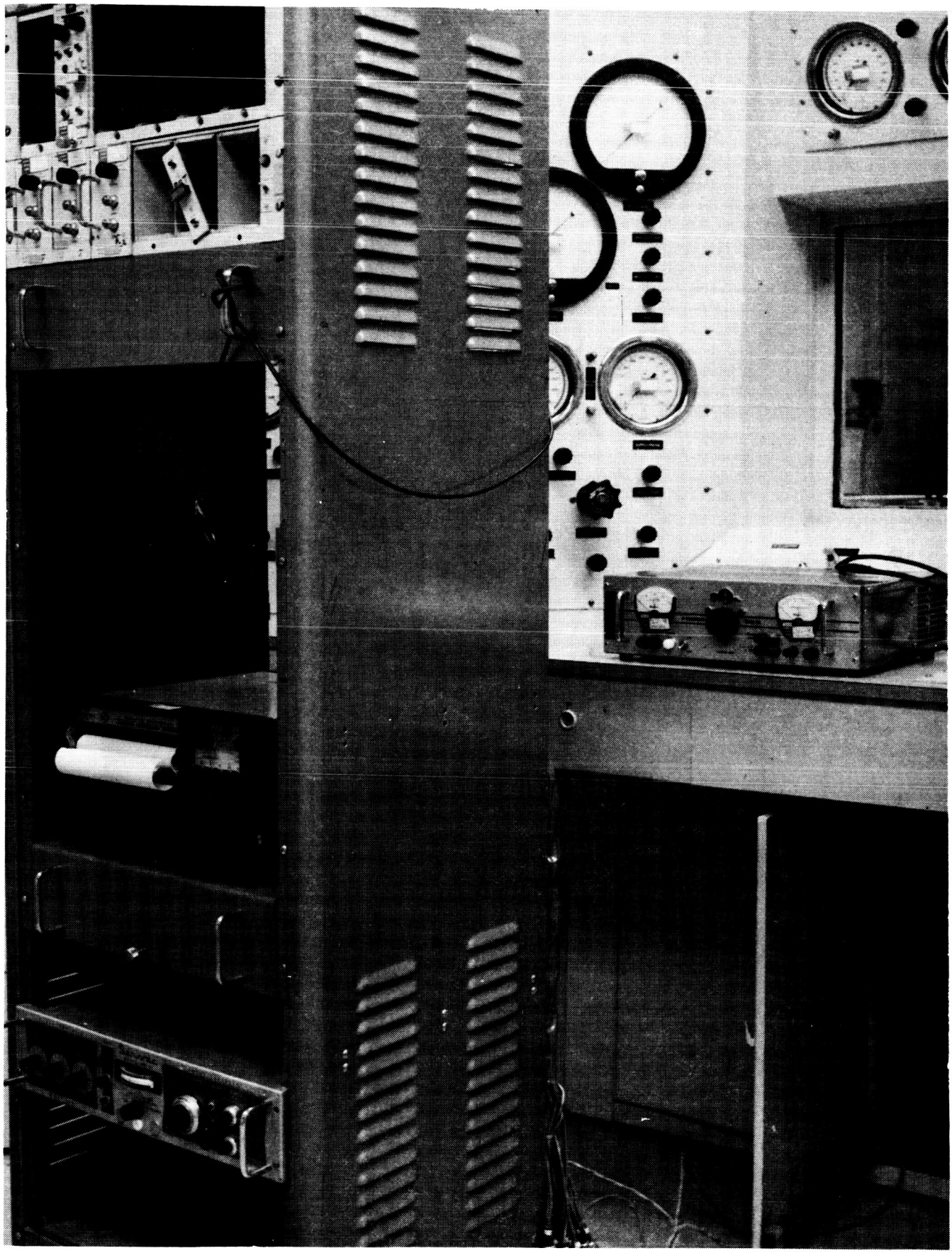

Figure 6-3. Surge Test Setup - Instrumentation

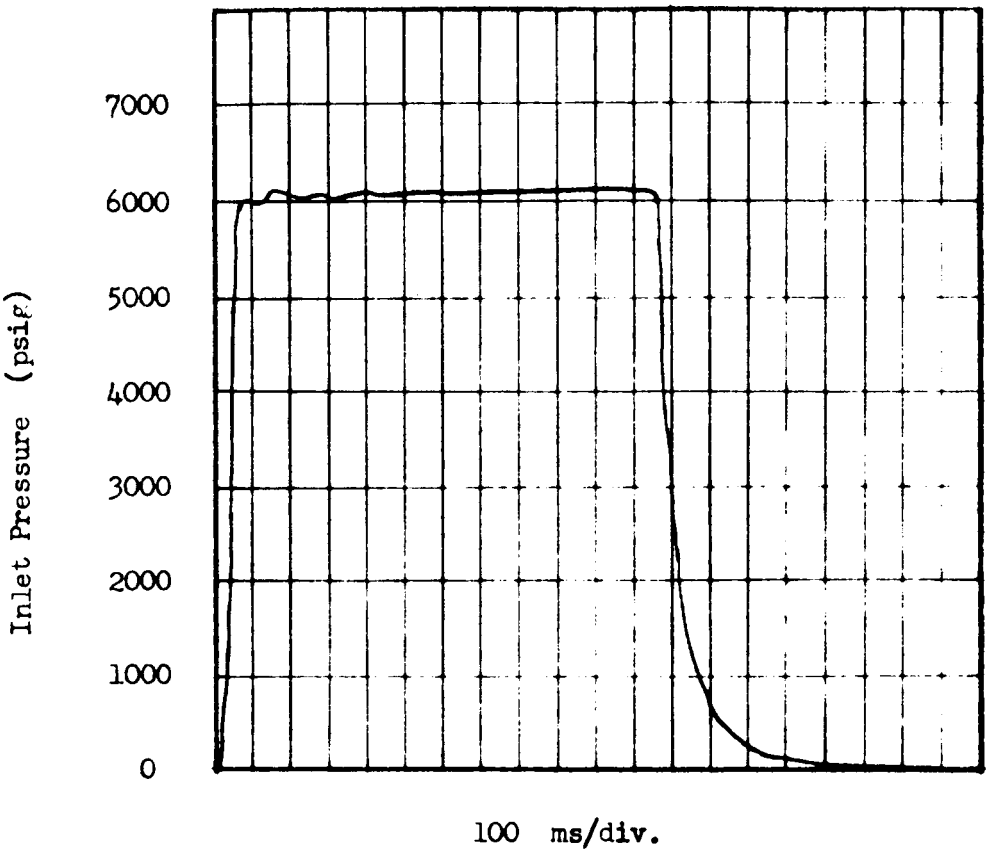

Figure 6-4. Typical Surge Waveform

SECTION VII

LOW TEMPERATURE TEST

7.1 TEST REQUIREMENTS

7.1.1 A low temperature test will be performed on the test specimen to determine whether the environment causes degradation or deformation.

7.1.2 The rated low temperature is -20 (+0, -4)°F. Maximum temperature change rate shall be 1°F per minute.

7.1.3 A functional test will be performed during this test using either GN_2 or He.

7.2 TEST PROCEDURE

7.2.1 The test specimen was placed in a low temperature chamber using the test setup shown in figures 4-1 and 4-2 and the equipment listed in table 4-1.

7.2.2 A functional test was not performed since 72 hours had not elapsed since a previous functional test.

7.2.3 Chamber 18 was cooled to -20 (+0, 04)°F with a relative humidity between 60 and 90 per cent. The maximum temperature change rate was 1°F per minute.

7.2.4 A functional test was performed when the temperature stabilized. Temperature stabilization is defined as a maximum temperature change rate of 1°F per hour as determined from the instrumentation monitoring the test specimen.

7.2.5 The chamber temperature was returned to ambient conditions upon completion of the functional test.

7.2.6 The test specimen was visually inspected and functionally tested within 1 hour following the return to room ambient conditions.

7.2.7 The test data were recorded.

7.3 TEST RESULTS

7.3.1 The results of the functional test at -20°F were satisfactory and showed no degradation of performance at low temperature.

7.3.2 The functional test completed following return to room ambient conditions was satisfactory.

7.3.3 Visual inspection revealed no abnormalities.

7.4 TEST DATA

Data recorded during the functional tests, before the low temperature test, at -20°F, and at room ambient conditions are presented in tables 7-1, 7-3, and 7-5 respectively. Leakage data are presented in tables 7-2, 7-4, and 7-6.

Table 7-1. Functional Test Data Obtained Before The Low Temperature Test

Run	Applied Seating Torque (ft-lb)	Specimen Inlet Pressure (psig)	Opening Torque (ft-lb)	Running Torque		Closing Torque (ft-lb)
				Opening	Closing	
1	15	6000	15	3	1	15
		2	7	3	1	10
2	15	6000	10	3	1	15
		2	5	3	1	10
3	15	6000	10	2	1	15
		2	4	3	1	10

Table 7-2. Leakage Data Obtained During Functional Test Before Low Temperature Test

Run	Applied Seating Torque (ft-lb)	Specimen Inlet Pressure (psig)	Specimen Outlet Pressure (psig)	Leakage (scim)
1	25	6000	0	0
	25	0	6000	0

Table 7-3. Functional Test Data Obtained at -20°F

Run	Applied Seating Torque (ft-lb)	Specimen Inlet Pressure (psig)	Opening Torque (ft-lb)	Running Torque		Closing Torque (ft-lb)
				Opening	Closing	
1	25	6000	8	3	2	30
		2	8	2	1	10
2	25	6000	10	3	2	25
		2	5	4	1	10
3	25	6000	10	4	2	25
		2	5	3	1	10

Table 7-4. Leakage Data Obtained During Functional Test at -20°F

Run	Applied Seating Torque (ft-lb)	Specimen Inlet Pressure (psig)	Specimen Outlet Pressure (psig)	Leakage (scim)
1	25	6000	0	0
	25	0	6000	0

Table 7-5. Functional Test Data Obtained at Ambient Temperature (Post-Low Temperature)

Run	Applied Seating Torque (ft-lb)	Specimen Inlet Pressure (psig)	Opening Torque (ft-lb)	Running Torque		Closing Torque (ft-lb)
				Opening	Closing	
1	25	6000	10	3	2	25
		2	10	2	1	10
2	20	6000	12	3	2	20
		2	5	2	1	10
3	20	6000	10	3	2	20
		2	5	2	1	10

Table 7-6. Leakage Data Obtained During Functional Test at Ambient Temperature (Post-Low Temperature)

Run	Applied Seating Torque (ft-lb)	Specimen Inlet Pressure (psig)	Specimen Outlet Pressure (psig)	Leakage (scim)
1	25	6000	0	0
	25	0	6000	0

SECTION VIII

HIGH TEMPERATURE TEST

8.1 TEST REQUIREMENTS

8.1.1 A high temperature test will be performed on the test specimen to determine whether the environment causes degradation or deformation.

8.1.2 The rated high temperature is 140 (+4, -0)°F.

8.1.3 A functional test shall be performed during this test using GN_2 or He.

8.2 TEST PROCEDURE

8.2.1 The test specimen was placed in a high temperature chamber using the test setup shown in figures 4-1 and 4-2 and the equipment listed in table 4-1.

8.2.2 A functional test was not performed prior to high temperature testing, since 72 hours had not elapsed since a previous functional test.

8.2.3 The chamber temperature was increased to 140 (+4, -0)°F with a relative humidity of 20 ($\pm$5) per cent. A maximum temperature change rate of 1°F per minute was used.

8.2.4 This temperature was maintained for a period of 72 hours.

8.2.5 A functional test was performed while the chamber temperature was 140°F.

8.2.6 The chamber temperature was returned to room ambient conditions following completion of the functional test at 140°F.

8.2.7 The specimen was visually inspected and functionally tested within 1 hour following the return to room ambient conditions.

8.2.8 The test data were recorded.

8.3 TEST RESULTS

8.3.1 The results of the functional test performed at 140°F were satisfactory and showed no degradation of performance at high temperature.

8.3.2 The functional test completed following return to room ambient conditions was satisfactory.

8.3.3 Visual inspection revealed no abnormalities.

8.4 TEST DATA

Data recorded during the functional tests at 140°F and at room ambient conditions are presented in tables 8-1 and 8-3, respectively.

Table 8-1. Functional Test Data Obtained at 140°F

Run	Applied Seating Torque (ft-lb)	Specimen Inlet Pressure (psig)	Opening Torque (ft-lb)	Running Torque (ft-lb)		Closing Torque (ft-lb)
				Opening	Closing	
1	15	6000	7	3	2	15
	15	2	7	2	2	10
2	15	6000	7	3	2	15
	15	2	7	2	1	10
3	15	6000	7	3	2	15
	15	2	5	2	1	10

Table 8-2. Leakage Data Obtained During Functional Test at 140°F

Run	Applied Seating Torque (ft-lb)	Inlet Pressure (psig)	Outlet Pressure (psig)	Leakage (scim)
1	15	6000	0	0
	15	0	6000	0
2				

Table 8-3. Functional Test Data Obtained at Ambient Temperature (Post-High Temperature)

Run	Applied Seating Torque (ft-lb)	Specimen Inlet Pressure (psig)	Opening Torque (ft-lb)	Running Torque (ft-lb)		Closing Torque (ft-lb)
				Opening	Closing	
1	15	6000	8	3	2	15
	15	2	5	1	1	10
2	15	6000	7	3	2	15
	15	2	5	2	1	10
3	15	6000	7	3	2	15
	15	2	5	2	1	10

Table 8-4. Leakage Data Obtained During Functional Test at Ambient Temperature (Post-High Temperature)

Run	Applied Seating Torque (ft-lb)	Inlet Pressure (psig)	Outlet Pressure (psig)	Leakage (scim)
1	15	6000	0	0
	15	0	6000	0
2				

SECTION IX

SAND AND DUST TEST

9.1 TEST REQUIREMENTS

9.1.1 A sand and dust test shall be performed on the test specimen to determine if sand particles can cause specimen malfunction.

9.1.2 The sand and dust shall meet the requirements specified in 9.1.2.1 through 1.1.2.6.

9.1.2.1 100 percent of the sand and dust shall pass through a 100-mesh screen, U.S. standard sieve series.

9.1.2.2 98 (±2) percent of the sand and dust shall pass through a 140-mesh screen, U.S. standard sieve series.

9.1.2.3 90 (±2) percent of the sand and dust shall pass through a 200-mesh screen, U.S. standard sieve series.

9.1.2.4 75 (±2) percent of the sand and dust shall pass through a 325-mesh screen, U.S. standard sieve series.

9.1.2.5 Chemical analysis of the dust shall be as follows:

Substance	Per Cent by Weight
SiO_2	97 to 99
Fe_2O_3	0 to 2
Al_2O_3	0 to 2
TiO_2	0 to 2
MgO	0 to 1
Inorganic losses	0 to 1

9.1.2.6 A test chamber capable of maintaining the temperature at 77°F and 160°F with 100-to 500-cfm air velocity available shall be used.

9.2 TEST PROCEDURE

9.2.1 The specimen inlet and outlet ports were capped. The test specimen was placed in the test chamber at ambient temperature as shown in figure 9-1.

9.2.2 The density of the sand and dust was maintained to 0.1 to 0.25 gram per cubic foot.

9.2.3 The internal temperature of the test chamber was maintained at 77°F for a period of not less than 2 hours, with an air velocity through the test chamber of 100 to 500 feet per minute.

9.2.4 Immediately following the 2-hour period, the temperature was raised to 140°F and maintained for a period of not less than 2 hours.

9.2.5 The test specimen was removed from the test chamber after the 2-hour exposure period and allowed to cool to ambient temperature.

9.2.6 The accumulated dust was carefully removed from the specimen by brushing, wiping, and shaking only. The test specimen was examined for internal sand accumulation.

9.2.7 Upon completion of the sand and dust test, a functional test was performed as specified in section IV.

9.2.8 All test data were recorded.

9.3 TEST RESULTS

The sample performance and operation was not impaired in any way and there was no evidence of malfunction during the post sand and dust functional test.

The test results are reported in Associated Testing Laboratories, Inc., Test Report No. M28-7512 which is shown in Appendix I.

9.4 TEST DATA

Data recorded during the functional test after the sand and dust test are presented in tables 9-1 and 9-2.

Table 9-1. Functional Test Data Obtained After Sand and Dust Test

Run	Applied Seating Torque (ft-lb)	Specimen Inlet Pressure (psig)	Opening Torque (ft-lb)	Running Torque (ft-lb)		Closing Torque (ft-lb)
				Opening	Closing	
1	10	6000	8	2	2	10
	10	2	4	2	1	8
2	10	6000	6	3	2	10
	10	2	4	2	1	8
3	10	6000	6	2	2	10
	10	2	4	2	1	8

Table 9-2. Leakage Data Obtained During Functional Test Performed After Sand and Dust Test

Run	Applied Seating Torque (ft-lb)	Inlet Pressure (psig)	Outlet Pressure (psig)	Leakage (scim)
1	20	6000	0	0
	20	0	6000	0
2				

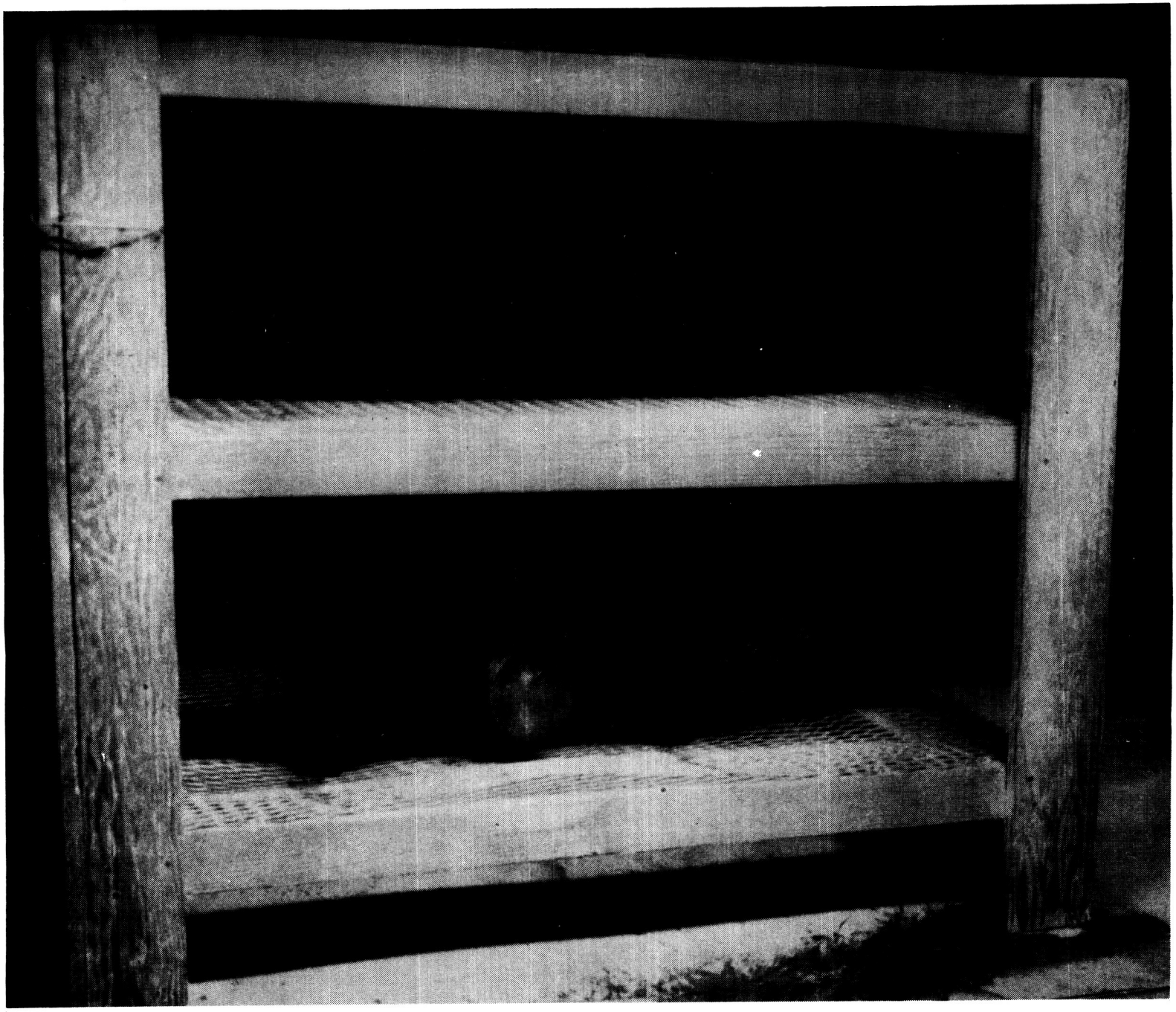

Figure 9-1. Sand and Dust Test Setup

SECTION X

SALT FOG TEST

10.1 TEST REQUIREMENTS

10.1.1 A salt fog test shall be performed per KSC-STD-164(D), section 17, to determine the corrosive resistance of the test specimen.

10.1.2 The test shall be conducted with a temperature in the exposure zone maintained at 95 (+2, -4)°F. The salt fog conditions maintained in all parts of the exposure zone shall be such that a clean fog-collecting receptacle placed at any point in the exposure zone will collect from 0.5 to 3 milliliters of solution per hour for each 80 square centimeters of horizontal collecting area (10 centimeters diameter) based on average test of at least 16 hours.

10.1.3 The salt used shall be sodium chloride containing, on the dry basis, not more than 0.1 per cent of sodium iodide and not more than 0.2 per cent of total impurities. Unless otherwise specified, a solution shall consist of 5 parts by weight of salt in 95 parts by weight of water containing not more than 200 parts per million of total solids. The solution shall be kept free from solids by filtration or decantation. The solution shall be adjusted to and maintained at a specific gravity of from 1.023 to 1.037, and a reference temperature of 95°F. The pH of the salt solution shall be so maintained that the solution atomized at 95 (+2, -4)°F and collected by the method specified in the 11.1.4 will be in the pH range of 6.5 to 7.2. Only diluted chemically pure (CP) hydrochloric acid or CP sodium hydroxide shall be used to adjust the pH.

10.1.4 The solution shall be collected by placing a minimum of two receptacles such that one is placed nearest to any nozzle and one farthest from all nozzles. Receptacles shall be placed so that they are not shielded by test items and so that no drops of solution from test items or other sources will be collected. The solution shall have the specified sodium chloride content and pH value when measured at a temperature of 95 (+2, -4)°F. The salt solution from all collection receptacles used may be combined to provide the quantity required for the measurements specified. A laboratory type hydrometer is acceptable for measurement of specific gravity. The pH measurement shall be made electrometrically using a glass electrode with a saturated potassium chloride bridge or by a colorimetric method such as bromothymol blue, provided the results are equivalent to those obtained with the electrometric method. The pH shall be measured when preparing each new solution. The measurement of both sodium chloride and pH shall be made following each test for salt fog chambers in continuous use.

10.1.5 The test chamber and all accessories shall be made of material such as rubber or plastic that will not affect the corrosiveness of the fog. The chamber should be arranged so that no direct impingement of the fog or dripping of the condensate on the test specimen occurs. Liquid which comes in contact with the test specimen shall not be returned to the salt solution reservoir. The chamber shall be properly vented to prevent pressure buildup and allow uniform distribution of salt fog.

10.1.6 Air entering the atomizer shall have a relative humidity of 85 percent and be free of impurities such as oil and dirt.

10.2 TEST PROCEDURE

10.2.1 The test specimen was visually inspected for corrosion, dirt, and oily film.

10.2.2 The inlet and outlet ports of the test specimen were capped and the specimen was placed in the test chamber as shown in figure 10-1.

10.2.3 The test chamber was operated according to the specified operating conditions for a period of 240 (±2) hours.

10.2.4 The test specimen was functionally tested at the completion of the exposure period and within 1 hour following the establishment of ambient conditions.

10.2.5 The specimen was inspected and the salt removed according to the design specification requirements.

10.2.6 All test data were recorded.

10.3 TEST RESULTS

No evidence of corrosion other than deterioration of the paint on the operating hand wheel was noted. No malfunction occurred during the post salt fog functional test.

10.4 TEST DATA

Data recorded during the functional test after the salt fog test are presented in tables 10-1 and 10-2.

Table 10-1. Functional Test Data Obtained After Salt Fog Test

Run	Applied Seating Torque (ft-lb)	Specimen Inlet Pressure(psig)	Opening Torque (ft-lb)	Running Torque		Closing Torque (ft-lb)
				Opening	Closing	
1	20	6000	8	3	2	20
		2	7	2	2	10
2	20	6000	7	3	2	20
		2	7	2	2	10
3	20	6000	7	3	2	20
		2	7	2	2	10

Table 10-2. Leakage Data Obtained During Functional Test Performed After Salt Fog Test

Run	Applied Seating Torque (ft-lb)	Specimen Inlet Pressure (psig)	Specimen Outlet Pressure (psig)	Leakage (scim)
1	20	6000	0	0
	20	0	6000	0

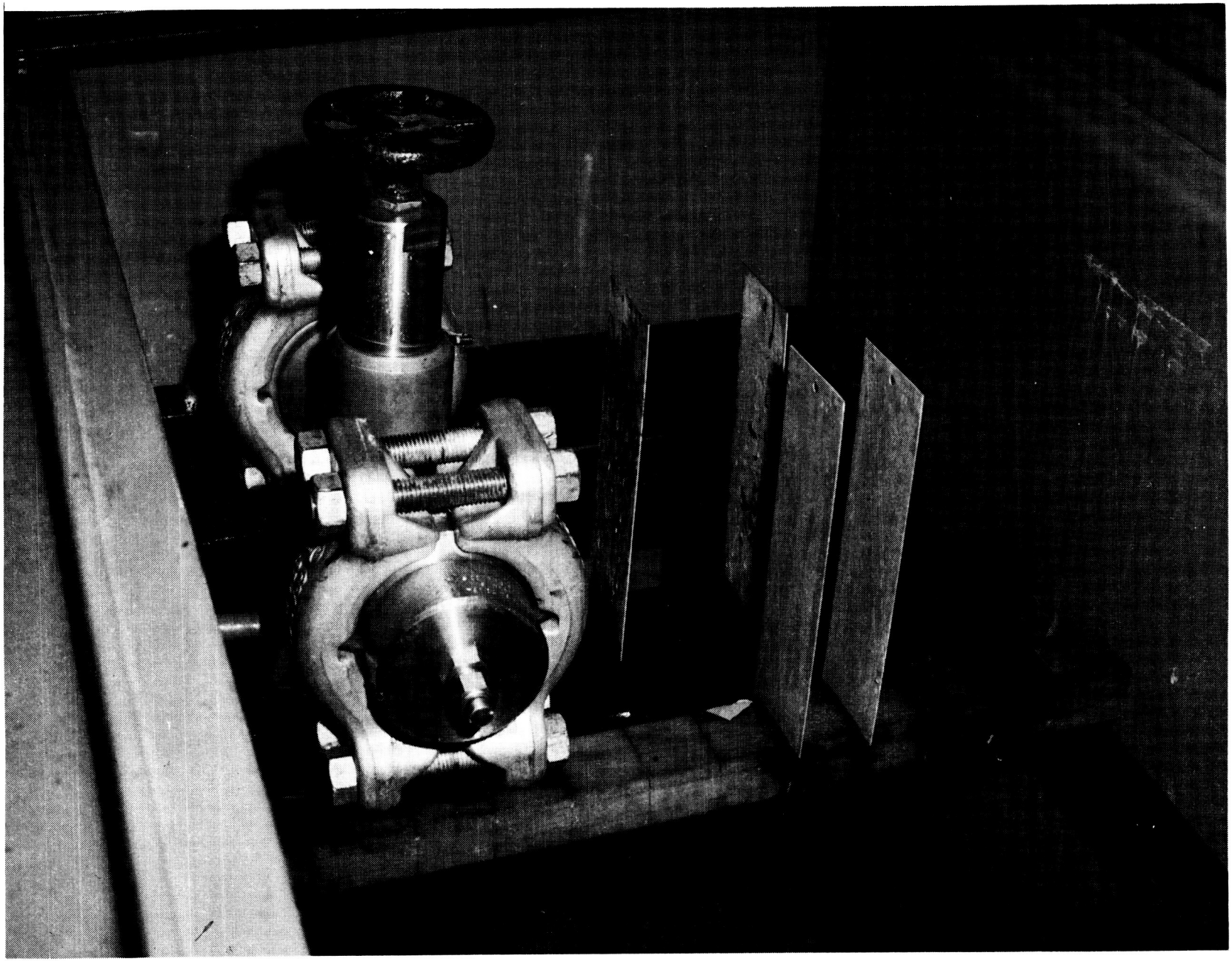

Figure 10-1. Salt Fog Test Setup

SECTION XI

CYCLE TEST

11.1 TEST REQUIREMENTS

A cycle test shall be performed on the test specimen to determine whether the environment causes degradation or deformation.

11.1.2 Each cycle shall consist of pressurizing the inlet of the specimen to 6000 psig and opening and closing the valve.

11.1.3 The downstream pressure shall be vented below 3000 psig between cycles.

11.1.4 One-thousand cycles shall be conducted with functional tests performed after 50, 100, 500, and 1000 cycles.

11.2 TEST PROCEDURE

11.2.1 The cycle test setup shown in figures 11-1, 11-1A and 11-2 was assembled utilizing the equipment listed in tables 11-1 and 11-1A.

11.2.2 All hand valves were closed and regulator 6 was adjusted for zero outlet pressure.

11.2.3 Hand valve 3 was opened and pressure gage 5 indicated 7000 psig.

11.2.4 Regulator 6 was adjusted to establish 6000 psig on pressure gage 7.

11.2.5 Timer 18 was adjusted to sequence the following events:

a. Actuate solenoid valve 9 to pressurize the specimen to 6000 psig as indicated on gage 7.

b. Actuate solenoid valve 14 to close the outlet during specimen opening and closing.

c. Signal motor 12 to open and close the specimen.

d. Deactuate solenoid valves 9 and 14 to vent downstream pressure from the specimen to below 3000 psig as indicated on gage 13.

11.2.6 Functional tests were performed after 50, 100, 500 and 1000 cycles.

11.3 TEST RESULTS

There was no evidence of degradation or deformation of the specimen and it satisfactorily completed the required 1000 cycles.

11.4 TEST DATA

Data collected during the functional tests are presented in tables 11-2, 11-4, 11-6, and 11-8. Leakage data are presented in tables 11-3, 11-5, 11-7, and 11-9.

Table 11-1. Cycle Test Equipment List

Item No.	Item	Manufacturer	Model/ Part No.	Serial No.	Remarks
1	Test Specimen	Control Components Inc.	455		Globe valve, 2-inch
2	GN_2 or He Source	CCSD	NA	NA	7000-psig
3	Hand Valve		NA	NA	1 $\frac{1}{2}$-inch(supply)
4	Filter	Microporous	4813F-2M	NA	2-micron
5	Pressure Gage	Duragauge	NA	NASA 200594-P	0-to 10,000-psig $\pm$2% FS Cal date 3-16-67
6	Regulator	Tescom	26-1002	1009	7000-psig inlet 0 to 200-psig outlet
7	Pressure Gage	Duragauge	NA	NASA 200594-Q	0-to 10,000-psig $\pm$2% FS Cal date 3-16-67
8	Hand Valve	Robbins	SSKG-250-4T	NA	1/4-inch
9	Solenoid Valve	Marotta	MV583	2915	3-way, 1/4-inch normally closed
10	Clutch	CCSD	NA	NA	Adjustable torque
11	Speed Reducer	Boston Gear	NA	R-2-506	
12	Reversible Electric Motor	Westinghouse	NA	1558730	440V AC, time delay control
13	Pressure Gage	Heise	H35841	200594M	0-to 10,00-psig $\pm$1% FS Cal date 3-16-67
14	Solenoid Valve	Marotta	MV583	912	3-way, 1/4-inch
15	Hand Valve	Robbins	SSKG-250-4T	NA	1/4-inch

Table 11-1. Cycle Test Equipment List (continued)

Item No.	Item	Manufacturer	Model/ Part No.	Serial No.	Remarks
16	Counter	Mercury	NA	NA	4-digit
17	Power Supply	Perkins	MPST 28-300A	63-293	28-vdc (NASA 009941)
18	Timer	Cramer	623	Y2389A	Cam operated

Table 11-1A. Cycle Test Electrical Equipment List

Item No.	Item	Manufacturer	Model/ Part No.	Serial No.	Remarks
	Motor, Elec.	Westinghouse	Life-Line CSP		3-hp, 44-vac, 3-phase
	Gear Drive	Boston Gear Co.	U-145-50		1750-rpm-input 35-rpm-output
	Cycle Timer	Cramer Controls	523	Y2389A	115-vac 28-vdc
	Limit Switch	Honeywell	Micro-Switch		28-vdc
	Relay, Time Delay	ESNA	ND-12QT	J57910	(Req'd - 2)
		ESNA	ND-12QT	J57909	
	Counter	General Controls	Mercury	NA	5-digits
	Switches	Und. Lab. Inc.	NA	NA	5-amp.,115-vac 20-amp.,230-vac
	Relays	Magnetic Elec. Co.	NA	NA	115-vac, 5-amp 400-ohm

Table 11-2. Functional Test Data Obtained After 50 Cycles

Run	Applied Seating Torque (ft-lb)	Specimen Inlet Pressure (psig)	Opening Torque (ft-lb)	Running Torque (ft-lb)		Closing Torque (ft-lb)
				Opening	Closing	
1	20	6000	7	2	1	20
	20	2	6	1	1	8
2	15	6000	8	2	1	15
	15	2	4	1	1	10
3	15	6000	8	3	1	15
	15	2	4	1	1	10

Table 11-3. Leakage Data Obtained During Functional Test After 50 Cycles

Run	Applied Seating Torque (ft-lb)	Inlet Pressure (psig)	Outlet Pressure (psig)	Leakage (scim)
1	15	6000	0	0
	15	0	6000	0
2				

Table 11-4. Functional Test Data Obtained After 100 Cycles

Run	Applied Seating Torque (ft-lb)	Specimen Inlet Pressure (psig)	Opening Torque (ft-lb)	Running Torque (ft-lb)		Closing Torque (ft-lb)
				Opening	Closing	
1	15	6000	7	2	1	15
	15	2	4	1	1	10
2	15	6000	6	2	1	10
	15	2	4	1	1	10
3	15	6000	6	2	1	12
	15	2	5	1	1	10

Table 11-5. Leakage Data Obtained During Functional Test After 100 Cycles

Run	Applied Seating Torque (ft-lb)	Inlet Pressure (psig)	Outlet Pressure (psig)	Leakage (scim)
1	15	6000	0	0
	15	0	6000	0
2				

Table 11-6. Functional Test Data Obtained After 500 Cycles

Run	Applied Seating Torque (ft-lb)	Specimen Inlet Pressure (psig)	Opening Torque (ft-lb)	Running Torque (ft-lb)		Closing Torque (ft-lb)
				Opening	Closing	
1	10	6000	8	3	2	10
	10	2	6	2	1	10
2	10	6000	5	3	2	10
	10	2	4	2	1	10
3	10	6000	5	3	2	10
	10	2	5	2	2	10

Table 11-7. Leakage Data Obtained During Functional Test After 500 Cycles

Run	Applied Seating Torque (ft-lb)	Inlet Pressure (psig)	Outlet Pressure (psig)	Leakage (scim)
1	15	6000	0	0
	15	0	6000	0
2				

Table 11-8. Functional Test Data Obtained After 1000 Cycles

Run	Applied Seating Torque (ft-lb)	Specimen Inlet Pressure (psig)	Opening Torque (ft-lb)	Running Torque (ft-lb)		Closing Torque (ft-lb)
				Opening	Closing	
1	15	6000	7	5	4	10
	15	2	5	4	4	15
2	15	6000	6	5	4	10
	15	2	5	4	4	15
3	15	6000	6	5	4	15
	15	2	5	3	4	15

Table 11-9. Leakage Data Obtained During Functional Test After 1000 Cycles

Run	Applied Seating Torque (ft-lb)	Inlet Pressure (psig)	Outlet Pressure (psig)	Leakage (scim)
1	20	6000	0	0
	20	0	6000	0
2				

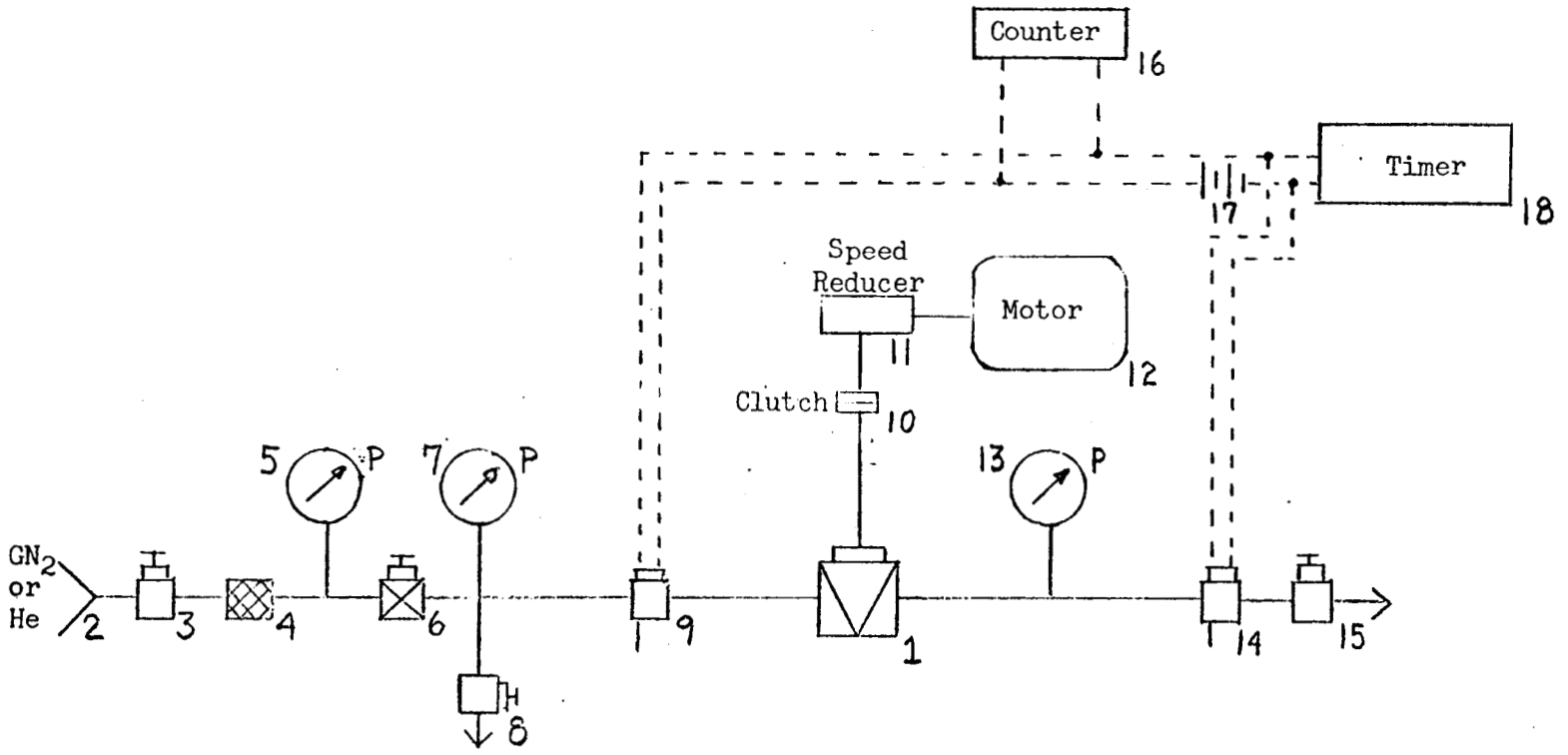

Note: All lines 1/4-inch.
Refer to table 11-1 for item identification.

Figure 11-1. Cycle Test Schematic

Note: Refer to table 11-1A for item identification.

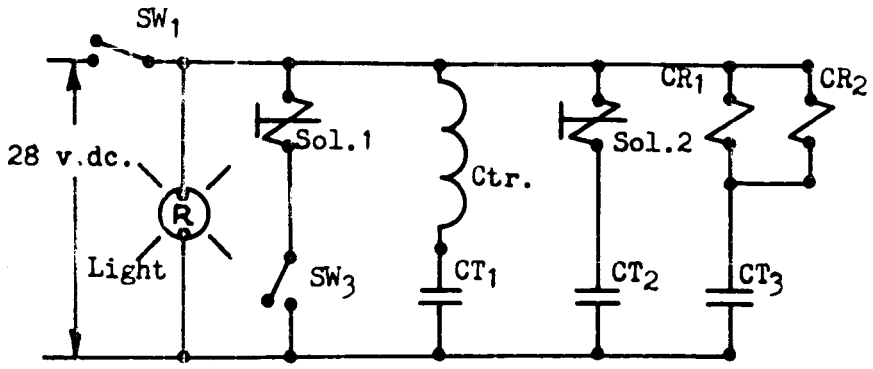

NOTE: CR_1-Set time to allow delay in open position and time to close valve. ($CR_1 > CR_2$)
CR_2-Set time delay for length of time necessary to open test specimen.
CT_1-Set cam to actuate once per cycle in any position.
CT_2-Cam actuates to vent during interval when test specimen is closed.
CT_3-Cam set so that SW_3 is actuated in the total time interval for opening, delay in the open position and closing of the valve.

Sol.1-Inlet pressure solenoid,3-way
Sol.2-Vent Solenoid, 3-way

Light-Ind.light-RED

Ctr-28v.dc.counter

CT_1;CT_2;CT_3-Tips of cycle timer-N.O.

CR_1;CR_2-Time delay relay - TOE

SW_1;SW_3-28V.dc.- ON-OFF switch.

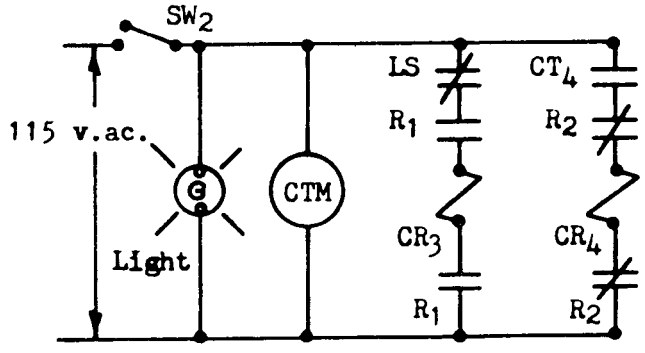

NOTE: CT_4- Setting same as CT_3.

CTM-Cycle timer motor

CT_4-Tips of cycle timer - N.O.

LS-Stroke travel limit switch - N.C.

R_1-Tips of CR_1 - N.O.
R_2-Tips of CR_2- N.C.

Light-Ind.light-GREEN

CR_3;CR_4-Coils of reverse contacts

SW_2-115 v.ac.- ON-Off switch.

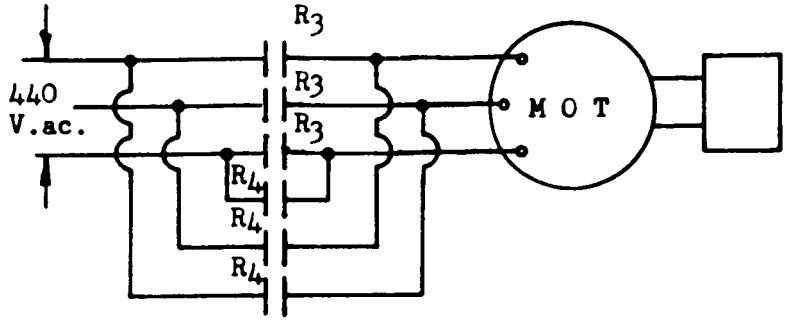

R_3- Tips of CR_3- N.O.
R_4- Tips of CR_4- N.O.

MOT-3 hp., 440 v., 3 phase, motor.

Figure 11-1A. Cycle Test Electric Schematic

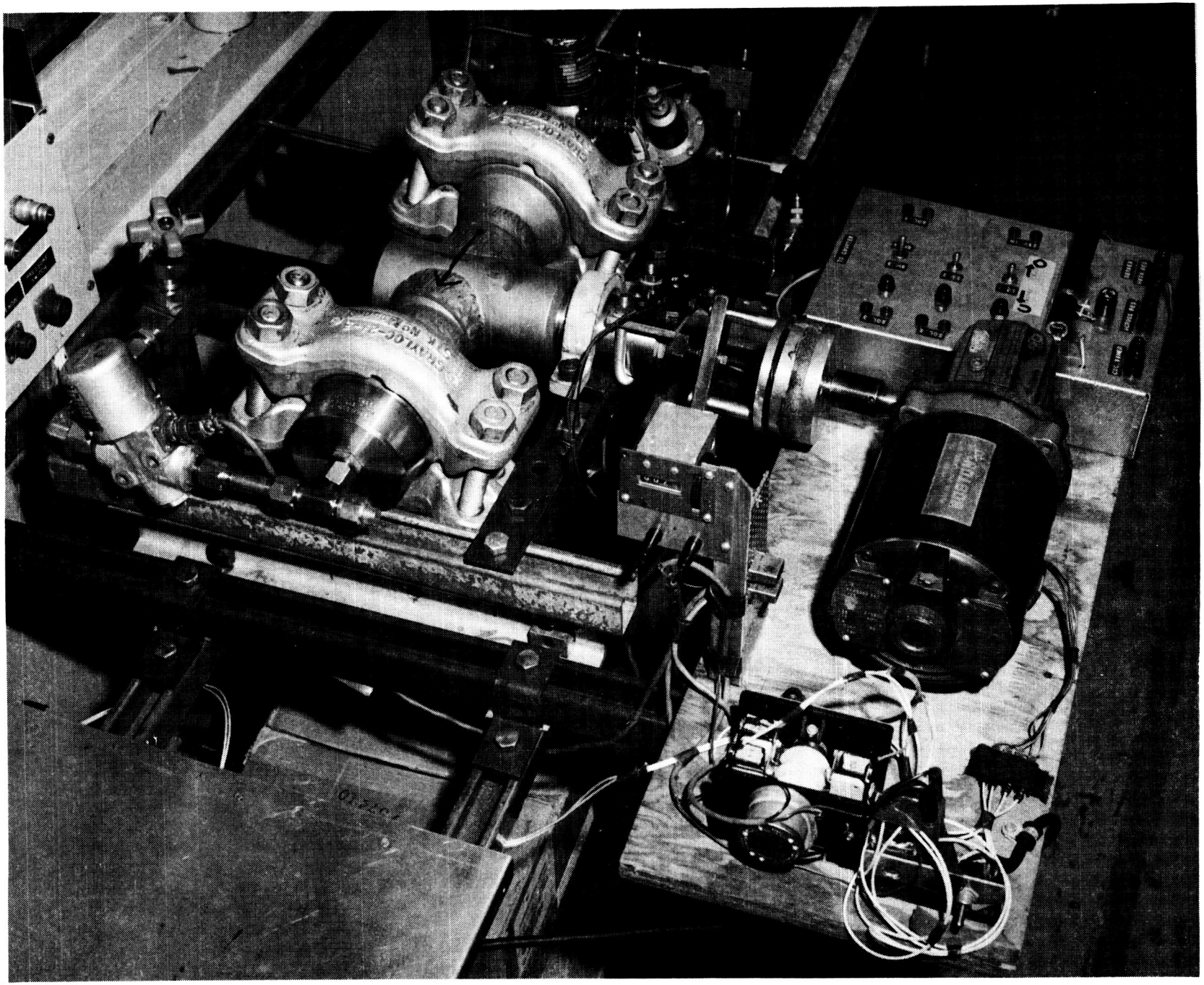

Figure 11-2. Cycle Test Setup

SECTION XII

SEAT EROSION TEST

12.1 TEST REQUIREMENTS

12.1.1 A seat erosion test shall be performed on the test specimen.

12.1.2 The specimen inlet shall be pressurized to 6000 psig. The specimen shall be adjusted to flow approximately 1 scfm of GH_2 for 120 hours with the outlet pressure maintained below 3100 psig.

12.1.3 After 30, 60, and 90 hours the procedures described in 4.2.1 through 4.2.10 of the functional test, section IV, shall be performed.

12.1.4 At the end of 120 hours, a complete functional test shall be performed. The valve seat shall be inspected for deterioration.

12.2 TEST PROCEDURE

12.2.1 The Seat erosion test was assembled as shown in figures 1 and 2 of Appendix II using equipment listed in table 12-1.

12.2.2 Hand valve 2 and the test specimen were closed and regulator 5 was adjusted for zero outlet pressure.

12.2.3 Hand valve 2 was opened.

12.2.4 The supply pressure on gage 4 was monitored.

12.2.5 Regulator 5 was adjusted to establish 6000 psig on pressure gage 6.

12.2.6 The specimen was adjusted to provide approximately 1 scfm flow and an outlet pressure below 3100 psig.

12.2.7 The conditions described in 6.2.6 were maintained for 120 hours.

12.2.8 After 30, 60, and 90 hours, the procedures described in 4.2.1 through 4.2.11 of the functional test were performed using the setup shown in figure 4-1.

12.2.9 At the end of 120 hours, a complete functional test was performed and the valve seat was inspected for deterioration.

12.3 TEST RESULTS

Functional tests were performed before and after the test and the specimen was disassembled for inspection of the main seat. No evidence of malfunction of the specimen or deterioration of its valve seat was observed.

The test results are reported in Martin Marietta Corporation Test Report Number H40122 in Appendix II.

12.4 TEST DATA

All test data recorded before, during and after the test are contained in Martin Marietta Corporation Test Report M40122 in Appendix II.

Table 12-1. Seat Erosion Test Equipment List

Item No.	Item	Manufacturer	Model/ Part No.	Serial No.	Remarks
1	Test Specimen	Control Components, Inc.	Mod. 445		2-inch globe valve
2	Hand Valve				1-1/2-inch
3	Filter				2-micron
4	Pressure Gage				0-to 10,000-psig ±2% FS
5	Pressure Regulator				7000-psig inlet 0-to 6000-psig outlet
6	Pressure Gage				0-to 10,000-psig ±0.25% FS
7	Temperature Probe				-50 to + 150°F ±2.5°F
8	Flowmeter				Calibrated nozzle or orifice; sized to flow 1 scfm of GH_2 at inlet pressure of 3000 psig
9	Pressure Gage				0-to 10,000-psig ±0.25% FS
10	GH_2 Source				7000-psig

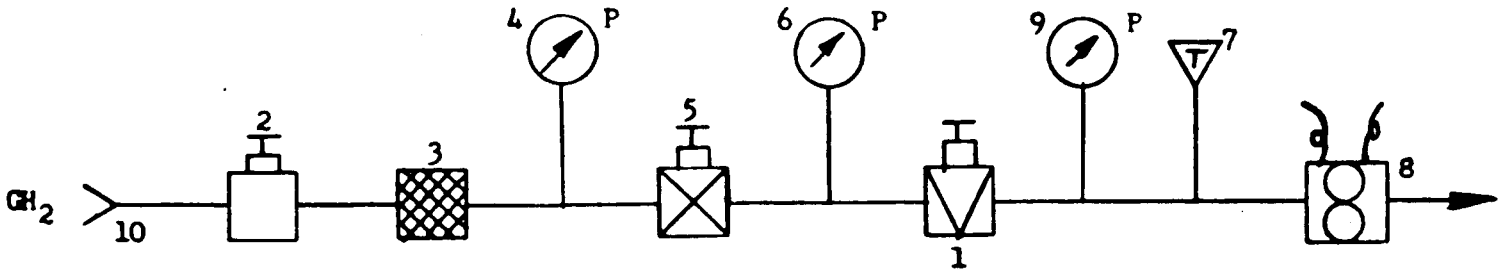

Note: All lines 1 inch.
Refer to table 12-1 for item identification.

Figure 12-1. Seat Erosion Test Schematic

SECTION XIII

BURST TEST

13.1 TEST REQUIREMENTS

13.1.1 The test specimen shall be subjected to a hydrostatic pressure of 24,000 psig to determine the structural integrity of the specimen.

13.1.2 The hydrostatic pressure shall be applied simultaneously to the specimen inlet and outlet ports when the valve is in the open position. The pressure shall be maintained for 5 minutes.

13.2 TEST PROCEDURE

13.2.1 The test setup was assembled as shown in figures 3-1 and 3-2 utilizing the equipment listed in table 3-1.

13.2.2 Hand valve 4 and the specimen were opened and after the system was filled with deionized water, all entrapped air was bled from the system.

13.2.3 Hand valve 4 was closed.

13.2.4 Hand pump 2 was used to pressurize the specimen to 24,000 psig as indicated on pressure gage 3. Proof pressure was maintained for 5 minutes while the specimen was monitored for external leakage.

13.2.5 Hand valve 4 was opened slowly to vent the pressure. The specimen was then examined for distortion.

13.2.6 All data were recorded.

13.3 TEST RESULTS

The specimen did not leak and there was no evidence of distortion.

13.4 TEST DATA

The data presented in table 13-1 were recorded during the test.

Table 13-1. Proof Pressure Test Data

Pressure	24,00 psig for 5 minutes
Leakage	None
Distortion	None

APPENDIX I

Administrative Data

1.0 Purpose of Test:

To subject the submitted Manually Operated Valve to a sand and dust test in accordance with the referenced specification.

2.0 Manufacturer: Chrysler Corporation
Space Division
Michoud Operations
New Orleans, Louisiana

3.0 Manufacturer's Type or Model No.: P/N 75M14693-PGLV-3
S/N 4789

4.0 Drawing, Specification or Exhibit: Specification KSC-STD-164(D) dated September 12, 1964

5.0 Quantity of Items Tested: One

6.0 Security Classification of Items: Unclassified

7.0 Date Test Completed: April 5, 1967

8.0 Test Conducted By: **Associated Testing Laboratories, Inc.**

9.0 Disposition of Specimens: Returned to Chrysler Corporation

10.0 Abstract:

There was no evidence of deterioration of the Manually Operated Valve as a result of the sand and dust test.

TEST PROCEDURE

The sand and dust test was conducted in accordance with Section 16 of Specification KSC-STD-164(D).

The Valve was placed in a sand and dust test chamber. The chamber temperature was increased to and maintained at +77°F for a period of two hours. At the completion of this two-hour period, the chamber temperature was increased to and maintained at +160°F for an additional two-hour period. The chamber temperature was then returned to room ambient temperature.

Throughout the entire sand and dust test, the sand and dust density within the chamber was maintained between 0.1 and 0.5 gram per cubic foot and the sand and dust velocity was maintained between 100 and 500 feet per minute. The sand and dust used in the test was of an angular structure having the characteristics described in Specification KSC-STD-164(D).

At the completion of the sand and dust test, the Valve was removed from the chamber and allowed to cool to room ambient temperature. The accumulated dust was removed from the Valve by wiping and the Valve was then visually examined for evidence of deterioration.

APPARATUS

Sand and Dust Test Chamber, manufactured by Associated Testing Laboratories, Inc., Manufacturing Division, Model SD-36-LC.

Calibration Date: 3-30-67
Calibration Due Date: 5-30-67

TEST RESULTS

Visual examination of the Valve at the completion of the sand and dust test revealed no evidence of deterioration.

APPENDIX II

TEST OBJECTIVES (CONTINUED)

Test item condition was to be evaluated before and after the seat erosion tests by means of function tests for valve leakage and operating torque requirements. Receiving Inspection of the test item was to be performed prior to testing.

TEST ARTICLE

Valve, 2" Glove, Control Components Inc.

Model 445, NASA P/N 75M14693 FGLV-1

REFERENCES

1. P.O. NOB34998-C (7-W-06080)
2. Chrysler Corp. Change #1 to P.O. NOB34998-C (7-W-06080)
3. Test Plan - H50579 - Qualification Testing of AGE Components, Martin Marietta Corporation, Denver Division, 20 Feb 1967.
4. Chrysler Corporation Space Division Test Procedure TP-RE-CCSD-FO-1120-2F.
5. Martin Marietta Corporation, Denver Division, Cold Flow Laboratory Test Procedure H40122.

TEST FIXTURE DESCRIPTION

The test fixture was built per Cold Flow drawing CFL6300197C. Test fixture schematics are presented in Figures 1 and 2 of this report.

The equipment used in the test fixture is itemized in Tables I and II for the functional and seat erosion test fixtures respectively.

The functional test fixture (Figure 1) was built in Test Cell 3,

TEST FIXTURE DESCRIPTION (CONTINUED)

The seat erosion test fixture (Figure 2) was built at the Cell 1 catch basin area.

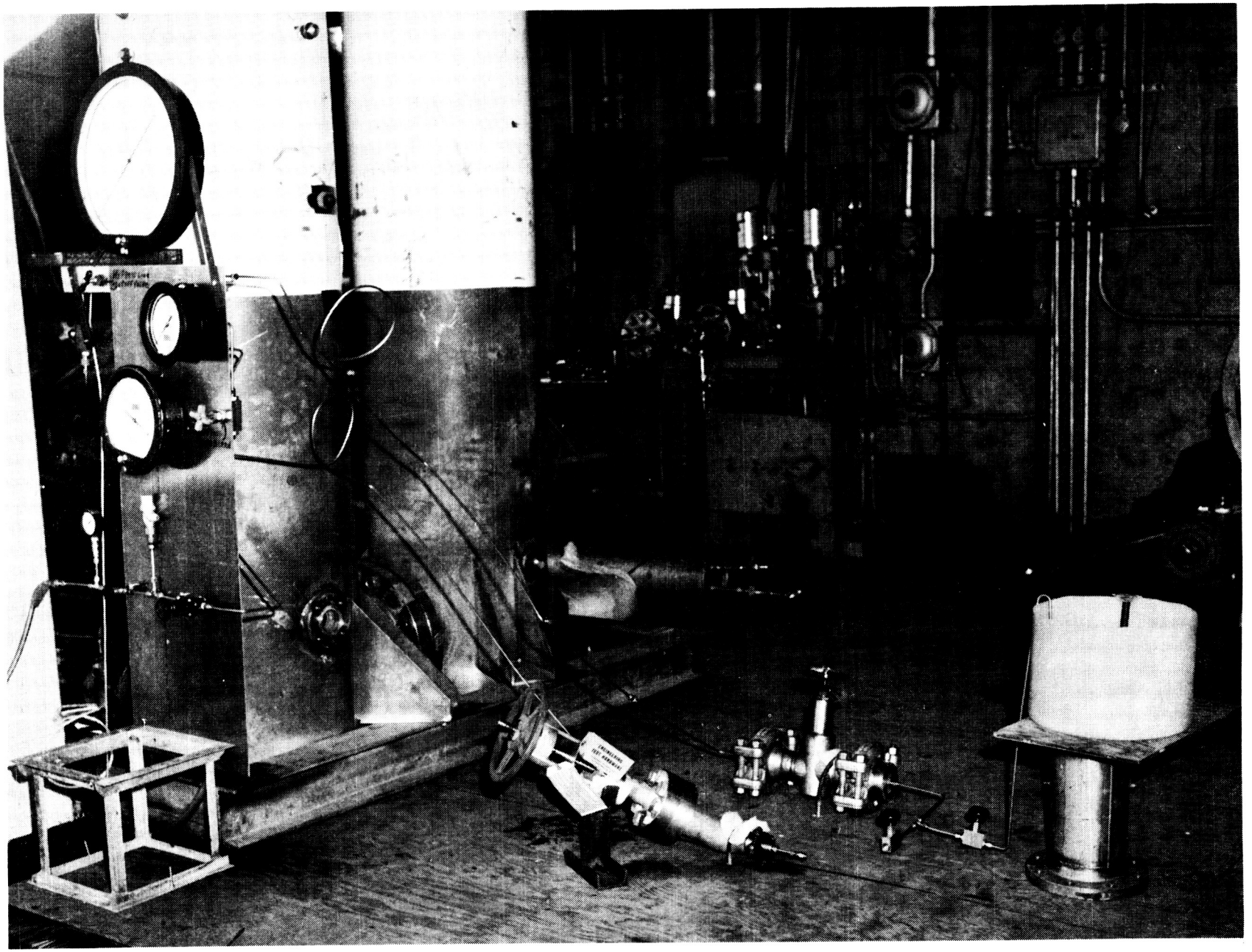

Appendix II, Figure 1. Functional Test Fixture

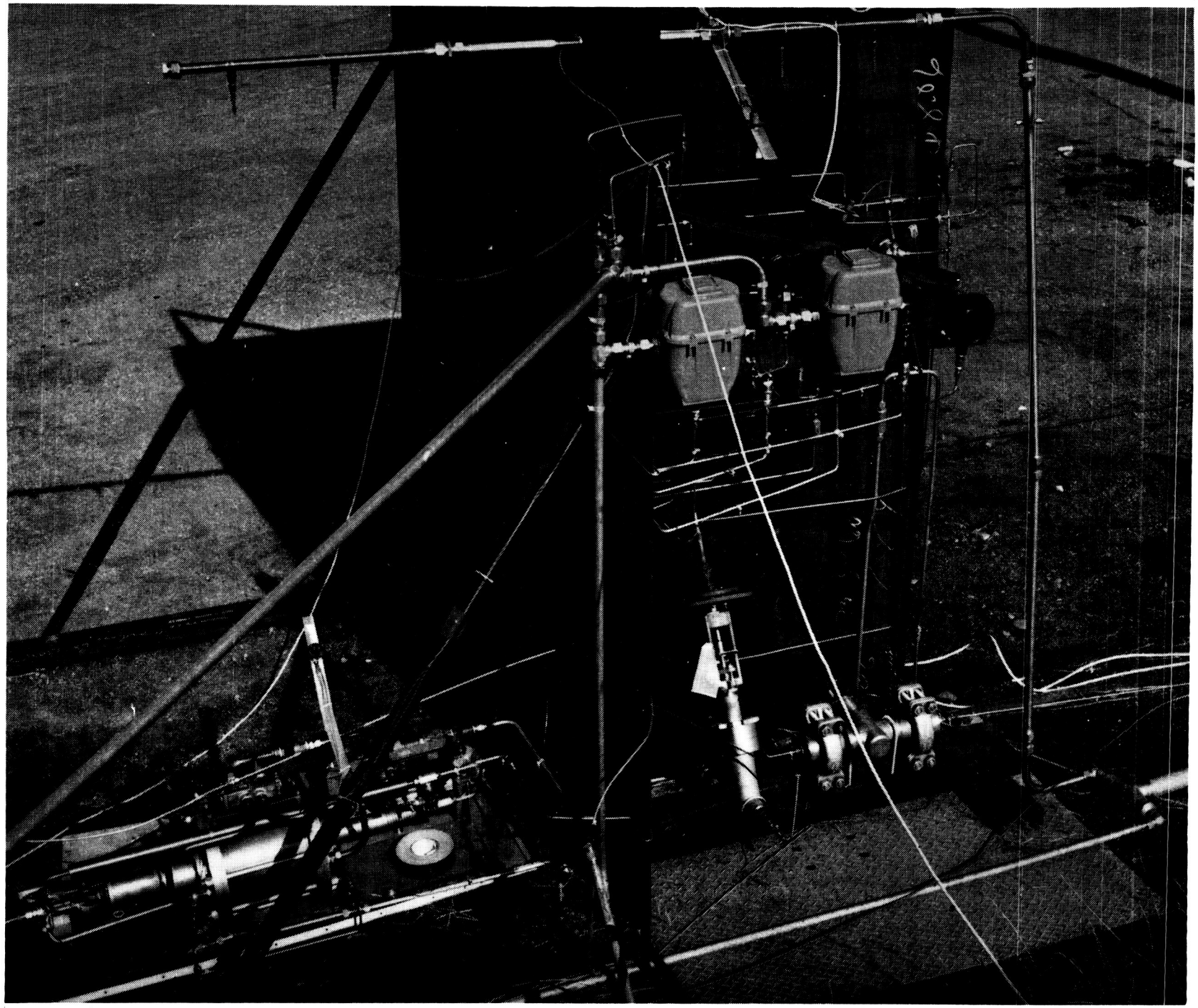

Appendix II, Figure 2. Seat Erosion Test Fixture

APPROVAL

TEST REPORT

FOR

GLOBE VALVE, 2-INCH, 6000 PSIG

Control Components, Inc. Model No. 445

NASA Drawing Number 75M14693-PGLV-1

SUBMITTED BY:

G. Collins
Test and Evaluation Section

APPROVALS:

R. W. Claunch
Program Supervisor

for
V. J. Vehko, Director
Engineering Department