N67-37263

NASA TECHNICAL MEMORANDUM

NASA TM X-53622

June 19, 1967

NASA TM X-53622

A GENERAL PROGRAM FOR THE CALCULATION OF RADIATION FROM AN INHOMOGENEOUS, NONISOBARIC, NONISOTHERMAL ROCKET EXHAUST PLUME

By Robert M. Huffaker and Marcus J. Dash
Aero-Astrodynamics Laboratory

NASA

George C. Marshall Space Flight Center, Huntsville, Alabama

REPRODUCED BY
NATIONAL TECHNICAL INFORMATION SERVICE
U.S. DEPARTMENT OF COMMERCE
SPRINGFIELD, VA. 22161

TECHNICAL MEMORANDUM X-53622

A GENERAL PROGRAM FOR THE CALCULATION OF RADIATION FROM AN INHOMOGENEOUS, NONISOBARIC, NONISOTHERMAL ROCKET EXHAUST PLUME

By

Robert M. Huffaker and Marcus J. Dash

George C. Marshall Space Flight Center

Huntsville, Alabama

ABSTRACT

This report describes a computer program for evaluating radiation from an axisymmetric gas body with water vapor, carbon dioxide, carbon monoxide, and solid carbon particles as radiating constituents, and hydrogen as a non-radiating constituent. The program uses band-averaged absorption coefficients with the Curtis-Godson method of approximating inhomogeneous gas properties. This program provides a convenient method of evaluating a great many problems of radiation from rocket exhaust plumes, but available theory is somewhat limited by simplifications in the geometry and input of the program. A more advanced program is being formulated to remove these restrictions.

NASA - GEORGE C. MARSHALL SPACE FLIGHT CENTER

NASA - GEORGE C. MARSHALL SPACE FLIGHT CENTER

Technical Memorandum X-53622

June 19, 1967

A GENERAL PROGRAM FOR THE CALCULATION OF RADIATION FROM AN INHOMOGENEOUS, NONISOBARIC, NONISOTHERMAL ROCKET EXHAUST PLUME

By

Robert M. Huffaker and Marcus J. Dash

THERMAL ENVIRONMENT BRANCH
AEROPHYSICS DIVISION
AERO-ASTRODYNAMICS LABORATORY
RESEARCH AND DEVELOPMENT OPERATIONS

TABLE OF CONTENTS

		Page
I.	INTRODUCTION	1
II.	FLOW FIELD GENERATION	2
III.	RADIANCE EQUATIONS	3
IV.	DESCRIPTION OF GEOMETRY	6
V.	OCCLUSION CAPABILITY	7
VI.	PROGRAM DESCRIPTION	10
VII.	FINE STRUCTURE EQUATIONS	16
	A. Broadening Half-Widths	16
	B. Line Density	17
VIII.	OPTIONS AND SPECIAL CAPABILITIES	18
	A. Window Option	18
	B. Test for Minimum Absorption Coefficient	19
	C. Constant Temperature Step Size	19
	D. Carbon Absorption Coefficients	20
	E. Hydrogen	20
IX.	CAPABILITIES AND LIMITATIONS	21
X.	INPUT DATA FORMAT	21

LIST OF ILLUSTRATIONS

Figure	Title	Page
1	Location of Coordinates for Gas and Occlusion.....	36
2	Geometry of Point and Plane of Interest.....	37
3	Geometry along a Conical Thrust Structure.....	38
4	Azimuthal and Longitudinal Angles.....	39
5	Calculation of Incident Radiation on Surface of a Cone.....	40
6	Application of Occlusion Capability and Angular Control Feature.....	41
7	Use of Blocking Circles to Describe Obstruction.....	42
8	Complex Obstruction.....	43
9	Application of Occlusion Capability to Analysis of a Missile Base Region.....	44
10	Program Listing.....	45-61
11	Flow Chart of Program.....	62-74
12	Window Option.....	75
13	Nozzle and Skirt Blocking Circles.....	76
14	Sample Input.....	77-89
15	Sample Output.....	90-132

LIST OF TABLES

I	Model Values for Collision Line Width Parameters.....	34
II	Carbon Absorption Coefficient Curves.....	35

DEFINITION OF SYMBOLS

Symbol	Definition
S	length
S_m	total length of line of sight
dS	element of length
ω	solid angle
θ, ϕ	variable angles, spherical coordinates
ν	wave number
λ	wavelength
ρ	density
μ_ν	absorption coefficient
$I_{b\nu}$	planck function for black body intensity
I_ν	radiant intensity
τ	transmittance
Q/A	heat flux per unit area
$\bar{k}_\nu$	band averaged absorption coefficient
D	optical path length
D_c	collision-broadened curve of growth
D_D	Doppler-broadened curve of growth
P'_ω	temperature corrected partial pressure
$\bar{\gamma}_c$	band-averaged collision broadened line half-width
$\bar{\gamma}_D$	band averaged Doppler-broadened line half-width
d	line spacing
$1/d$	line density

TECHNICAL MEMORANDUM X-53622

A GENERAL PROGRAM FOR THE CALCULATION OF RADIATION FROM AN INHOMOGENEOUS, NONISOBARIC, NONISOTHERMAL ROCKET EXHAUST PLUME

SUMMARY

This report describes a computer program for evaluating radiation from an axisymmetric gas body with water vapor, carbon dioxide, carbon monoxide, and solid carbon particles as radiating constituents, and hydrogen as a non-radiating constituent. The program uses band-averaged absorption coefficients with the Curtis-Godson method of approximating inhomogeneous gas properties. This program provides a convenient method of evaluating a great many problems of radiation from rocket exhaust plumes, but available theory is somewhat limited by simplifications in the geometry and input of the program. A more advanced program is being formulated to remove these restrictions.

I. INTRODUCTION

The phenomenon of launch vehicle base heating results from convective heat transfer from exhaust gas recirculation due to plume impingement and from radiation from the exhaust flow field itself. Considerable effort in the past has resulted in adequate methods of predicting convective heating for design purposes, but because of the extreme difficulty of simulating the radiation phenomena on a model test, no adequate experimental method yet exists for determining radiative base heating rates.

This report outlines a general procedure for calculating radiation from a single, nonisothermal, nonisobaric, inhomogeneous, multi-component exhaust plume. A computer program for performing the necessarily arduous calculations is presented, and the details necessary for its utilization are documented.

The purpose of this report is to make available to interested parties the method and computer program. No attempt is made to derive the relationships used or to justify the assumptions made. Emphasis is placed on making the program immediately usable to the reader and on relating the mechanics of the program to the equations used for the solution.

This report should also make available to a large number of people a general method for analyzing exhaust plume radiation. It is believed that the present method presents a significant step forward in the understanding of inhomogeneous radiative heat transfer.

II. FLOW FIELD GENERATION

To evaluate radiation heating from rocket exhaust plumes, two distinct operations must be performed: first, the flow field downstream of the rocket motors must be predicted, and second, the general problem of radiative transfer from inhomogeneous gas volumes must be resolved. In this section, the generation of the flow field is discussed. This report limits the discussion to single exhaust plumes; the flow field from clustered rocket motors is considerably more complex and will be treated at length in a future report.

The radiation calculation requires a knowledge of the temperature, density, and concentration of each radiating constituent at various locations in the flow field. Since the flow field is assumed to vary linearly in all properties between input points, the more points that are input, the more accurate the calculation. On the other hand, hardware requirements (i.e., computer storage) put a stringent upper limit on the number of points that can be input. By judicious choice of the points, it is believed that any flow field can be adequately described in the existing program.

The method of flow field generation is left to the option of the user. In the original application, a real gas method of characteristics program, described in reference 1, was used. This program uses thermochemical data to predict concentrations of the various radiating species for either equilibrium or frozen flow. This program gives a reasonable description of the high altitude exhaust plumes. As explained later, the radiance calculation requires input in the form of radial property data at various axial distances downstream. The ordinary method of characteristics output format is not compatible with this form of input since the data are usually printed at unevenly spaced points along characteristic lines. An advantage of the program in reference 1 is that a routine has been written for it which interpolates in the characteristic's output and writes a tape completely compatible with the input format of the radiance calculation.

It has already been mentioned that the concentration of each radiating constituent must be specified for the radiance calculation. Since no accurate theoretical methods yet exist for calculating the carbon concentration, empirical data must be used. An input card in the radiance calculation itself allows the inclusion of a constant carbon concentration.

III. RADIANCE EQUATIONS

As stated in the Introduction, this report is not intended to be a rigorous derivation of the radiance equations. Rather, it is intended to appeal to the reader's physical intuition and to act as an introduction to the basic equations used in the radiance program. The method uses the band model representation and absorption coefficients described in references 2 through 4.

The quantity

$$\rho\mu_\nu \, I_{b\nu} \, dS \tag{1}$$

is the radiant intensity emitted by an element of length "dS." If this energy passes through an intervening layer of gas of thickness "S," it is decreased by the transmittance

$$\tau(\nu,S) = e^{-\int_0^S \rho\mu_\nu \, dS'} . \tag{2}$$

If the radiation is collected from elements located along a line of sight, then the radiant intensity received by a plane normal to the line of sight would be

$$I_\nu = \int_0^{S_m} \rho\mu_\nu \, I_{b\nu} \, e^{-\int_0^S \rho\mu_\nu \, dS'} \, dS, \tag{3}$$

where S_m is the total length of the line of sight.

The spectral flux received by an area not normal to the surface from a number of lines of sight occupying a solid angle of ω is

$$\int_\omega \int_0^{S_m} \rho\mu_\nu \, I_{b\nu} \, e^{-\int_0^S \rho\mu_\nu \, dS'} \cos\theta \, dS \, d\omega, \tag{4}$$

where θ is the variable angle formed by each line of sight and the normal to the plane receiving the radiation. Equations (1) to (4) are all written for a single wave number ν equal to $1/\lambda$. Integrating over various wave numbers gives

$$\int_{\nu}\int_{\omega}\int_{S_m} \rho\mu_\nu \, I_{b\nu} \, e^{-\int_0^S \rho\mu_\nu \, dS'} \cos\theta \, dS \, d\omega \, d\nu, \tag{5}$$

and the introduction of

$$d\omega = \sin\theta \, d\phi \, d\theta \tag{6}$$

to allow integration over the spherical angles ϕ and θ instead of the solid angle $d\omega$ yields

$$\frac{Q}{A} = \int_{\phi}\int_{\theta}\int_{\nu}\int_{S_m} \rho\mu_\nu \, I_{b\nu} \, e^{-\int_0^S \rho\mu_\nu \, dS'} \cos\theta \sin\theta \, dS \, d\nu \, d\theta \, d\phi. \tag{7}$$

This equation may be rewritten in finite sum form as

$$\frac{Q}{A} = \sum_{\phi}\sum_{\theta}\left[\sum_{\nu}\sum_{S_m} - I_{b\nu}(\bar{\tau}_s - \bar{\tau}_{s-\Delta s}) \, \Delta S \, \Delta\nu\right] \sin\theta \cos\theta \, \Delta\theta \, \Delta\phi. \tag{8}$$

The transmittance $\bar{\tau}(\nu,S)$ is an average over the wave number interval $\Delta\nu$.

The evaluation of $\bar{\tau}(\nu,S)$ is based principally on two special spectroscopic concepts: (1) the molecular band model, and (2) a modified Curtis-Godson approximation. The band model, which uses as input data the averaged line strength, the averaged line spacing, and the averaged line half-width, is a random band model with an exponential intensity distribution. The band model yields an expression for the molecular radiation

within each selected spectral region of interest. The band model parameters have been determined for wave number intervals ranging from 5 to 25 cm^{-1} depending on the gaseous species considered. The use of a band model is critically important for practical calculations of gas radiation.

The Curtis-Godson approximation is a method of predicting the transmittance of inhomogeneous bases by combining the parameters that appear in the band model formulas in such a way that the parameters need be determined only for homogeneous gases. Without the Curtis-Godson, or some equally good approximation, one would have to treat each inhomogeneous gas path as a special case.

Combining the band model parameters with the Curtis-Godson approximation, the transmissivity is

$$\bar{\tau}(\nu,S) = \exp\left(-\sum_{o}^{S} D\right), \tag{9}$$

where the optical depth, D, taking into account both Doppler and collision broadening is given by

$$\sum_{o}^{S} D = \sum_{o}^{S} F \left\{1 - \left\{\left[1 - \left(\frac{\sum_{o}^{S} D_c}{\sum_{o}^{S} F}\right)^2\right]^{-2} + \left[1 - \left(\frac{\sum_{o}^{S} D_D}{\sum_{o}^{S} F}\right)^2\right]^{-2} - 1\right\}^{-1/2}\right\}^{1/2} \tag{10}$$

The incremental optical depth for the just overlapping line approximation is

$$F = k_\nu \, P'_\omega \, \Delta S. \tag{11}$$

For collision-broadened lines,

$$\sum_{o}^{S} D_c = \sum_{o}^{S} F \left[1 + \frac{\left(\sum_{o}^{S} F\right)^2}{\sum_{o}^{S} \frac{\bar{\gamma}_c'}{d} F}\right]^{-1/2} \tag{12}$$

and for Doppler-broadened lines, the optical depth is

$$\sum_{o}^{S} D_D = \frac{1.7 \sum_{o}^{S} \frac{\bar{\gamma}_D}{d} F}{\sum_{o}^{S} F} \left\{ \ln \left[1 + \left(\frac{0.589 \left(\sum_{o}^{S} F \right)^2}{\sum_{o}^{S} \frac{\bar{\gamma}_D}{d} F} \right)^2 \right] \right\}^{1/2} . \tag{13}$$

Subsequent sections of this report will refer to the above equations used in the radiance calculation.

IV. DESCRIPTION OF GEOMETRY

To numerically evaluate the heat flux to a unit area (i.e., perform the summations of equation (8)), it is necessary to geometrically relate the point area receiving the radiation (hereafter called the "point of interest" in a "plane of interest") to the flow field and to other objects which may occlude the incoming radiation. As a preliminary, it is useful to consider the generalized "picture" that the computer "sees" after the input data have been read. The machine knows there is a gas body whose dimensions and properties have been described; it has received the location and the inclination of the plane of interest; it knows the limits of the volume of space from which the point is to receive radiation; and it knows the locations and sizes of the various solid occlusions in the surrounding area.

The primary coordinate system is a 3-D Cartesian coordinate system. The Z-axis is the axis of symmetry of the gas, and the X-Y plane is located at an arbitrary distance above or below the gas as shown in figure 1. The point of interest is located spatially by its coordinates, and by the inclination of the plane with respect to the X-Y plane. To simplify the geometry of the program, the Y-coordinate is taken as 0 so that the point of interest is always in the X-Z plane; the plane containing the point of interest must be normal to the X-Z plane.

The inclination angle of the plane of interest is 0 when the normal is parallel to the Z-axis and pointed in a positive Z direction. The inclination angle is measured away from this position so that positive angles represent planes titled such that the normal intersects the Z-axis above the point of interest as shown in figure 2.

The integration of the radiation is carried out over a spherical coordinate system located at the point of interest as shown in figure 3. The azimuthal angle θ is measured from the normal which is looking outward from the surface. The longitudinal angle ϕ is measured counterclockwise on the plane of interest looking from the $\theta = 0$ direction. It is apparent that letting θ vary from 0° to 90° and letting ϕ vary from 0° to 360° encompasses the entire volume above the plane of interest. This is sketched in figure 4.

Two examples should suffice to fix these concepts in mind. Consider first a cylinder of gas as shown in figure 5. It is desired to calculate the radiation incident on the plane of interest, which in this case is the surface of a truncated cone as shown. The values of θ and ϕ necessary to accomplish this appear in the figure. Notice that it would be possible to scan the entire space above the gas since the machine assumes 0 property data where data are not input. However, since this approach would result in needless expenditure of time, it is rejected in favor of the more efficient approach.

The second example (figure 6) illustrates an advanced use of the program incorporating both the occlusion capability and the angular control feature. In this case, a complex occlusion exists between the point of interest and the gas body. Because of the occlusion capability, however, it is not necessary to attempt to control the spatial volume of integration with the angular control feature.

With the specification of the above geometrical input, the problem is defined for the computer, which now has a complete picture of the three-dimensional space in which it is to make the calculation. The geometry specification is intended to be general enough to allow the analysis of a wide variety of problems.

V. OCCLUSION CAPABILITY

As stated above, the computer program, in addition to locating the gas volume and plane of interest, also locates in space those objects which might occlude some of the incoming radiation (i.e., cast a shadow over the plane of interest).

Two restrictions are placed on the type of obstructions that may be considered: first, they must be axisymmetric, and second, they must have their axes parallel to the Z-axis. Each occlusion is described by a series of "blocking circles" whose centers lie on the axis of the obstruction and whose radii are the radii of the obstruction at that height on the obstruction axis. Further, each blocking circle is given an identification as either a "disk" or a "hole." The difference is

that a line of sight from the point of interest that strikes a disk is considered to be occluded while a line which strikes a hole is not. In addition, lines that are not within a hole are considered to be occluded. As an example, consider the obstruction sketched in figure 7. For the line of sight from point "A," four blocking circles adequately describe the obstruction. Notice, however, that if the point of interest is at "B," additional circles are necessary. This illustrates that some care must be taken in using this blockage capability.

As a further example, consider the obstruction in figure 8. This type of obstruction cannot be analyzed in a single radiation calculation because of the assumption that any hole is located in an infinite plane. The desired calculation, however, may be achieved by adding the results of two runs. The first run uses only the disks to calculate the radiation not blocked by the solid obstruction which has no hole. The second run uses only the holes to calculate the radiation coming through the hole.

The following is a step-by-step discussion of the computer procedure in analyzing the configuration shown in figure 9. This configuration is a typical missile base region with an aft skirt.

In general, when a line of sight is selected, it has a certain specified maximum length; i.e., it is terminated on a sphere centered at the point of interest. It is then tested by the following procedure:

1. Using the direction cosines of the line, the Z-coordinate of the first blocking circle, and the Z-coordinate of the point of interest, calculate the distance D1 for the first circle.

2. Check the flag for the first blocking circle. In this case, the flag designates the first circle as a disk since this circle is used to describe the nozzle.

3. Now examine Line 1-2-3. Point 3 is the point of intersection of the line and the plane of the blocking circle. D1 is the radial distance from Point 3 to the Z-axis (in this case to the point Z = 0). Now test to see if Point 3 is within the blocking circle of radius r_1; i.e., is D1 greater than, equal to, or less than r_1? For this case $D1 > r_1$ which indicates that the line is not blocked by this disk.

4. Repeat the same process for each of the blocking circles, r_2 through r_6, with a new flag being read and a new value of D1 being calculated each time. Each of these tests shows non-occlusion, as is easily seen in the illustration, figure 6.

The flag for circle 7 indicates a hole since this circle describes the vehicle skirt. Point 2 is the intersection of the line of sight with the plane of this circle. For this circle, D1 is the radial distance from Point 2 to the Z-axis.

5. Again test: Is D1 greater than, equal to, or less than r_7? Since D1 $> r_7$ this means that Point 2 lies outside the radius of the skirt, which in turn means the line of sight has penetrated the skirt and is therefore occluded. For this line the integration will be terminated at Point 2; i.e., DMIN is the distance from Point 1 to Point 2.

6. Refer now to Line 4-5-6-7. The flag for the first blocking circle again specifies a disk. Point 7 is the point of intersection of the line of sight and the plane of this circle. For this case, D1 is the distance from Point 7 to the point Z = 0. Since the blocking circle is a disk and D1 $< r_1$, this indicates that the line is occluded. This may not, however, be the point of occlusion closest to the point of interest; therefore, the next blocking circle r_2 must be tested in a similar manner with D1 the distance from Point 6 to the Z-axis. Using the same tests and also referring to figure 6, it is easily seen that this circle has also occluded the line.

7. Repeat the same process for Point 5. Since Point 5 is seen to lie outside the blocking circle r_3, the line must have been occluded between Point 5 and Point 6. To be assured of including all regions which could contribute to the radiative flux, this line is terminated at Point 6, although a small segment is inside the nozzle and unable to contribute to the flux. To be sure that the line is not occluded again at a point nearer the point of interest, the remaining blocking circles, r_4 through r_7, are tested and found not to occlude this line. Therefore, DMIN for this line is the distance from Point 4 to Point 6.

8. Refer to Line 8-9-10. Figure 6 clearly shows this line to be nonoccluded, but it must be tested for occlusion just as the other lines were. Point 9 is the point of intersection of this line with the plane of the first blocking circle. When tested, it is found to be outside the disk of radius r_1. The remaining points of intersection with the circles are tested. Since the line is not occluded by a blocking circle, it is assumed to terminate on the sphere of radius DMAX, i.e., at Point 10.

This concludes the series of tests for the occlusion capability.

VI. PROGRAM DESCRIPTION

The computer program performs the evaluation of equation (8). In figure 10, a listing of the program is presented and a flow chart is shown in figure 11. The following is a step-by-step listing of the procedure followed in the program when reading the flow field from tape. Note the complex use of running sums in the evaluation.

1. Read in a computer flag to indicate if the flow field is to be entered on tape or cards. From the same input card, read the number which specifies the flow field to be used and a number which is twice the number of constituents.

2. Transfer to the subroutine for reading the flow field and select either tape or card input. Since the tape reading is more complex, it will be described in detail.

3. Search the flow field to select the case number which matches that read in previously. Read the number of constituents, constituent names, and molecular weights listed on the tape.

4. Read in a series of scale factors which may be used to cause the input or output data to be in desirable units and to conduct parametric studies of uncertainties in the input properties.

5. Read in the names of the radiating constituents desired from the third input card. Note that each constituent name consists of two six-character alpha-numeric words.

6. Search the case to find the first constituent requested (on subsequent passes the second and third constituents) in step 5. Read from this portion of the flow field and store in memory the values for plume radius, temperature, total pressure, and mole fraction for the desired constituent at each Z-position.

7. If more than one constituent is requested, rewind the tape, loop back to Step 3, and continue until all desired constituents have been read. At Step 6 search for the next constituent listed in the input. After the flow field is read, the computation returns to the main program.

8. Scale the flow field as required and output the scaled flow field data.

9. Read, scale, and output the absorption coefficients. In storage, the absorption coefficients at a number of temperatures (NKT) are listed with the corresponding wave number and an index number. The storage takes the following form:

(J)	ENUK(J)	T(1)	T(2)	T(3) . . . . . T(NKT)
1		(First coefficient for H_2O)		
2				
.				
.				
.				
NKNU		(Last coefficient for H_2O)		
NNNU		(First coefficient for CO_2)		
.				
.				
.				
KKNU		(Last coefficient for CO_2)		
KKKU		(First coefficient for CO)		
.				
.				
.				
KNNU		(Last coefficient for CO)		

The first card in the absorption coefficient input specifies the number of temperatures (NKT), the number of wave numbers at which H_2O coefficients are given (NKNU), the total number of wave numbers for H_2O and CO_2 (KKNU), and the total number of wave numbers for H_2O, CO_2, and CO (KNNU). The second card lists the temperatures at which absorption coefficients are provided. Each of the remaining cards provides a wave number and the coefficients at each temperature for that wave number. The absorption coefficients are loaded sequentially for H_2O, CO_2, and CO.

10. Read, scale, and output the fine structure parameters (1/d) for CO_2.

11. Identify the lower and upper values of wave number for each of the gases.

12. Read and output the table describing the blocking circles, i.e., the coordinates X, Y, and Z of the center of each circle, the radius of the circle, and the flag specifying the type of blocking circle.

13. Read in the data to specify the point of interest, integral limits, and other variables whose values depend on the case under consideration.

14. Set the initial and final values of θ and $\emptyset$.

15. Convert the units of the angles from degrees to radians.

16. Calculate the direction cosines of the line of sight which is specified by θ and $\emptyset$. Using these direction cosines, calculate DMIN, the distance along the line of sight from the point of interest (XP, ZP) to the point at which the integration over S is to be terminated. This involves the occlusion tests which were discussed previously.

17. Initialize the summations.

18. Calculate values for DX, DY, and DZ and set the initial values for X, Y, and Z.

19. Increment X, Y, and Z by the amounts DX, DY, and DZ, respectively. This gives the coordinates (X, Y, Z) for the midpoint of the succeeding segment, DS, of the line of sight.

20. Test the Z-coordinate of this point to determine that it is within the Z-range of the flow field. If the value of Z at this point is less than the value of Z in the first plane of the flow field, this indicates that the line of sight has not yet intersected the exhaust plume region. The program considers no radiation contribution from any region other than that specified by the flow field; therefore, the program re-cycles through Step 19, incrementing the line of sight, until the value of Z on the line of sight indicates that the line has entered the Z-range of the flow field.

21. Calculate the radius of the point (X, Y, Z) from the Z-axis: $RW = (X^2 + Y^2)^{1/2}$.

22. Using the coordinates of the point, select from the flow field the values of the radius, temperature, total pressure, and mole fractions for the points surrounding the point under consideration.

23. Although the line of sight is now in the Z-range of the flow field, the line has not necessarily intersected the plume. Now determine if this point is within the plume by testing RW against the value for the plume radius at this point, as specified by the flow field. If this test shows the point not within the plume, the program again assumes no radiation from this segment and re-cycles to Step 19.

24. If the point is found to be within the plume, the program interpolates using the previously selected bounding values to determine the temperature (TW), total pressure (PW), and mole fractions (FW(II)).

25. Determine if a temperature step is desired. (TINPUT > 0). If it is not go to Step 31.

26. Determine if the DS step is the first step in a temperature increment. If it is the first step on a line of sight (TINDEX = -4), the program skips to Step 31. If it is the first step in a temperature increment (TINDEX = 0), the program goes to Step 27. If it is an interior step in a temperature increment (TINDEX = 1), the program goes to Step 29.

27. Check to see if the desired temperature change is exceeded on the first DS in the increment. If it is exceeded, the program skips to Step 31.

28. Initialize property sums which will be used to determine average properties for the temperature increment and go to Step 46 to increment to the next point on the line of sight.

29. Check to determine if the desired temperature step has been reached, or if the temperature slope has changed. If either of these has occurred, go to Step 31. Otherwise, continue property sums and go to Step 46.

30. If the temperature step exceeds the desired value (TINPUT) by more than 10 percent, the line of sight data are backed up one DS increment.

31. Compute average property values for the increment.

32. Compare the constituent identification associated with each partial pressure with an internal list ot identify the various partial pressures.

33. Enter a loop controlling the value of ν (wave number).

34. Initialize DMO, which will be the multiplied transmissions of all the constituents.

35. Enter a loop controlling the number of the constituent.

36. Interpolate for the constituent being considered the absorption coefficients and calculate $\bar{\gamma}_c$, $\bar{\gamma}_D$, and 1/d.

37. Calculate Planck's function and the incremental absorption F (equation (11)).

38. Accumulate sums of $(\bar{\gamma}_c/d)F$, $(\bar{\gamma}_D/d)F$, and F.

39. Evaluate D_c and D_D which are also sums over length (equations (12) and (13)).

40. Finally calculate DMO (equation (10)). Notice that exp(-DMO) is the transmittance over the line of sight to this point at this wave length for this one species.

41. If more than one constituent is to be considered, loop back to Step 34 and continue. The value of DMO calculated at the end of this new loop is added to the value calculated for the constituent before. When all the constituents have been considered, DMO is the total DMO, and exp(-DMO) is the transmittance over the line of sight to this point at this wave length but considering all species.

42. When all species have been considered, exit the species loop and calculate the total transmittance up to this point at this wave number.

43. Now calculate the difference in transmission between this segment and the previous segment. This is done by storing the previous transmittance at this wave length in an array GOLD(L) where L is controlled by the wave number loop and storing the new transmittance in GNEW(L).

44. Using these values for GOLD(L) and GNEW(L), set up the running sum for the bracketed portion of equation (8):

$$\text{SPKIDS(L)} = \text{SPKIDS(L)} - I_b(\nu) \cdot (\text{GNEW(L)} - \text{GOLD(L)}).$$

In the first segment of each line of sight, the initial value of the term SPKIDS(L) on the right is zero and GOLD(L) = 1.

45. Increment ν, loop back to Step 34, and continue. Notice that the temperature TW has not changed since the same segment of the line of sight is under consideration. This loop is controlling the wave length being considered.

46. After all wave lengths called for in the input have been considered, exit and increment S; the line of sight length, and loop back to Step 19. Notice that no subscript is kept for the S loop (as L was kept in the ν loop). The reason for this is that running sums are kept on S by simply adding values calculated at the previous S to the new values within the wave length loop. In this way storage is conserved. As an example, at any S location SPKIDS(L) contains the accumulated SPKIDS(L) over the entire line of sight up to S.

47. When the end of the line of sight is reached, the computer has stored sums for the integrand SPKIDS(L). Each of these sums is the total contribution from all segments of the line of sight due to a single wave number. These values, when multiplied by $\sin\theta \cdot \cos\theta\ \Delta\phi\ \Delta\theta\ \Delta\nu$, are stored in SLIP(L) and accumulated so that the distribution of flux versus wave number may be output at the end of the problem.

48. The total contribution from the line over all wave numbers is found by adding sums of Step 47. A running sum is maintained for this:

$$\text{SUM1} = \text{SUM1} + \text{SPKIDS(L)}.$$

This gives the total contribution from a single line of sight. Since the line is a function of θ and ϕ, this sum may be represented by $\text{SUM1}(\theta_1, \phi_1)$. This is repeated for each of the values of ϕ at this same value for θ by incrementing ϕ and returning to Step 16 until the final value of ϕ is reached.

49. A sum is now taken over all lines at constant θ with the values of ϕ represented by $\text{SUM2}(\theta_1)$ such that

$$\text{SUM2}(\theta_1) = \text{SUM1}(\theta_1,\phi_1) + \text{SUM1}(\theta_1,\phi_2) + \ldots .$$

50. The factors involving θ are now included in the integrand by $\text{SUM2}(\theta) \cdot \sin\theta \cdot \cos\theta$, and a running sum is prepared to accommodate all values of θ. This sum, which is output at each value of θ, is

$$\text{SUM3} = \text{SUM3} + \text{SUM2}(\theta) \cdot \sin\theta \cdot \cos\theta.$$

51. Increment θ, reset $\emptyset$ at its initial value, and follow the procedure beginning at Step 16. This is repeated until the final value of θ is reached.

52. When all values of θ have been used, the sum in Step 50 will be

$$SUM3 = SUM2(\theta_1) \cdot \sin \theta_1 \cdot \cos \theta_1 + SUM2(\theta_2) \cdot \sin \theta_2 \cdot \cos \theta_2 + \ldots .$$

This sum now represents the flux from all lines of sight, evaluated at all wave numbers.

53. To complete the integration, the differentials are now included, yielding

$$FLUX = SUM3 \cdot \Delta\theta \cdot \Delta\emptyset \cdot \Delta\nu.$$

54. Output FLUX.

55. If the spectral distribution has been selected, compute the wave length and spectral flux per unit wave length, and output the spectral data.

56. Return to Step 13 to read data for the next case. Cases may be stacked at the end of the program using the θ specification as the initial input card if it is not necessary to change the flow field, absorption coefficients, or blocking circles.

VII. FINE STRUCTURE EQUATIONS

The fine structure equations used to describe the collision- and Doppler-broadened line half-widths (γ_c and γ_D) and the line density (1/d) will be described in this section. These equations were taken from Model 3a of reference 3 with the exception of 1/d for water vapor which was taken from reference 6. The dimensions for the equations given are centimeters for γ_c and γ_D and 1/cm for 1/d.

A. Broadening Half-Widths

The equation for the collision-broadened half-width of species (i) with broadening gases (j) is

$$\gamma_{ci} = \sum_j \left[(\gamma_{ij})_{STP} \, P_j \left(\frac{491.76}{T}\right)^{\eta_{ij}} \right] + (\gamma^*_{ii})_{STP} \, P_i \left(\frac{491.76}{T}\right)^{\eta^*_{ij}} .$$

Here P is the partial pressure in atmospheres and T is the gas temperature in °R. The parameters $(\gamma_{ij})_{STP}$, $(\gamma^*_{ii})_{STP}$, η_{ij}, and η^*_{ij} are listed in Table I. Since the computer program was intended for exhaust plumes which are normally fuel rich and contain no nitrogen, the O_2 and N_2 broadening terms were not included. These terms will be included, however, in future improvements of the program.

The equation for the Doppler-broadened half-width of a species of molecular weight m is

$$\gamma_D = (5.94 \times 10^{-6}) \frac{\nu}{m^{1/2}} \left(\frac{T}{491.76}\right)^{1/2}$$

where the temperature is in °R.

B. Line Density

The method of computing the line density varies for each of the three radiating gases considered. For water vapor the relation is

$$1/d = a^*/\gamma^*,$$

where a^* and γ^* represent empirical values which are defined in reference 6. The measured values of a^* were approximated by the expression

$$\log_{10} a^* = B(\nu) + C(\nu) \, T^2,$$

where $B(\nu)$ and $C(\nu)$ have the values

$B(\nu)$	$C(\nu)$ $(1/°R)^2$	ν (cm^{-1})
-1.5	$.75926 \times 10^{-7}$	$\nu \leq 1600$
-1.366	$.50926 \times 10^{-7}$	$1600 < \nu \leq 2500$
-1.62	$.55556 \times 10^{-7}$	$2500 < \nu \leq 4400$
-1.77	$.52160 \times 10^{-7}$	$4400 < \nu \leq 5900$
-1.96	$.487654 \times 10^{-7}$	$\nu > 5900$

The experimental values of γ^* are evaluated from

$$\gamma^* = \left[0.44 \left(\frac{491.7}{T}\right) + 0.09 \left(\frac{491.7}{T}\right)^{1/2}\right] c^* + 0.044 \left(\frac{491.7}{T}\right)^{1/2} (1 - c^*)$$

using a polynomial approximation for the experimental variation in the water vapor mole fraction, c^*, as a function of temperature.

$$c^* = -0.1002 + 0.15567 \times 10^{-3}\, T - 0.3367 \times 10^{-7}\, T^2 + 0.49897 \times 10^{-11}\, T^3.$$

For carbon dioxide the values of 1/d are tabulated as a function of wave number and temperature and are listed in the sample calculation, figure 15.

For carbon monoxide the relation is similar to that for water vapor. It is

$$\frac{1}{d} = 0.29 \frac{(1 + e^{-2810.7/T})^{1.75}}{(1 - e^{-2810.7/T})},$$

where the temperature is in °R.

VIII. OPTIONS AND SPECIAL CAPABILITIES

The computer program has several options and special capabilities which will now be described.

A. Window Option

To make a comparison between an experimental radiative flux measurement and a theoretical flux calculation, the calculation must be made under a set of conditions identical to those used in the measurement. To allow experimental measurements of the radiative heat flux to be made, some type of measuring device, e.g., a radiometer, spectrometer, or calorimeter, is installed with its detector coincident with the point of interest. Each of these instruments contains a "window" through which the radiation must pass before it reaches the detection device. This window, which is in front of the point of interest, will thus limit

the field of view of the instrument. That is, some of the lines of sight which theoretically would strike the point of interest (the detector) would be stopped due to the boundary of the window. Therefore, to simulate the experimental conditions, each line of sight used in the theoretical calculation must be tested to insure that it reaches the detector and is not occluded by the plane of the window. This is illustrated in figure 12.

In order that the computer allow for this window restriction, a series of tests has been included in the program and hence is referred to as the "window option." These tests require data concerning the physical measurements of the window, its shape, and its perpendicular distance above the plane of the detector.

In some of the cases to be dealt with, there will be no need for the window option. (If no window is involved, the required data discussed above is omitted.) For this purpose, the window option tests are preceded by a computer flag which indicates to the computer whether the tests are to be used.

B. Test for Minimum Absorption Coefficient

The heat flux from a radiating medium depends on the absorption coefficient of the medium. If an absorption coefficient is sufficiently small, the radiative flux from this spectral region may be considered negligible. Consequently, in calculating the total radiative flux from an exhaust plume, it is prudent to neglect the insignificant radiation contributions which emanate from those portions of the spectrum with sufficiently small absorption coefficients.

For this purpose a minimum absorption coefficient HMIN is introduced. The value of HMIN is read into the computer as input data, and when a value for the absorption coefficient $\bar{k}_\nu$ is selected from the table, it is tested against HMIN. If $\bar{k}_\nu <$ HMIN, the value of $\bar{k}_\nu$ at this particular wave number is negligible. Since the radiation contributed by this segment will be insignificant, the program considers this contribution to be zero and thus eliminates the succeeding calculations with this value of $\bar{k}_\nu$. Each value of the absorption coefficients is tested in a similar manner.

C. Constant Temperature Step Size

The major variable influencing the accuracy of the integration is the temperature. It was found that, if length increments were taken in which the temperature changes were small, the result would be very close to the exact calculated answer regardless of the actual physical length of the step. This fact has been used to decrease the execution time of the program in the following manner. In Steps 25 through 32 of

PROGRAM DESCRIPTION the calculated temperature TW for the increment under consideration is compared with the temperature for the previous increment. If the temperature difference is not greater than or equal to a certain input constant, the program moves to the next length increment without going through the radiation calculation loop. This process is repeated until the desired temperature step has been reached or until the slope of the temperature changes. Then the radiation calculation is made using average properties over a length equal to the sum of the increments that have been stepped off since the last radiation calculation was made.

D. Carbon Absorption Coefficients

Carbon absorption coefficients are calculated using the polynomial curve fits listed in Table II. The basis for the carbon absorption coefficients is the data presented in reference 4, but the data in this reference only cover a range of 1μ to 4μ for temperatures of 540°R to 4680°R. These data were extrapolated to a range of 0.5μ to 10μ in reference 5, but the extension to longer and shorter wave lengths is questionable, particularly at temperatures above 3060°R. However, for most calculations, the poor approximation outside the 1μ to 4μ range was considered to be more accurate than neglecting the longer and shorter wave lengths completely.

Since the radiation is continuum (i.e., there is no band structure), evaluation of γ_c, and γ_D in Step 36 is meaningless. Thus, those steps are bypassed, and the transmittance τ is simply evaluated from the well known Beer-Lambert law.

The carbon particle concentration is input in the form of a constant mass fraction (pounds of carbon per pound of gas). If it is desired to compute the radiation from only the carbon in an oxygen/hydrocarbon plume, it is necessary to list all of the radiating gas as when the gas radiation is desired and put the input flag INPUTF = 1. This is necessary so that the gas density may be computed.

E. Hydrogen

The program assumes that the only specie of gas that exists in the exhaust plume apart from H_2O, CO_2, CO, and carbon is H_2. This is an excellent assumption for rocket exhaust plumes (either LOX-kerosene or LOX-hydrogen) but may have to be modified for other utilizations of the program. Since hydrogen is a very poor emitter, it only has importance in the radiance calculated where it contributes a term to γ_c in Step 36. In the carbon loop, the fact that hydrogen comprises the rest of the gas body (other than CO_2, CO, and H_2O) is used in computing the carbon density.

IX. CAPABILITIES AND LIMITATIONS

Since much of the above discussion has dealt with the general aspects and capabilities of the program, it would be well at this time to document the specific capabilities and limitations of the program listed in figure 10.

The program can calculate the radiation incident on a surface from a defined axisymmetric gas body. The orientation of the surface must be such that a normal to the surface or its extension through the surface is coplanar with the axis of symmetry of the gas body. The properties of the gas are arbitrary except that it is assumed to contain only H_2O, CO_2, CO, carbon and H_2, or H_2 and any one or combination of H_2O, CO_2, or CO. Note that H_2 is considered as a broadener but not as an emitter.

The program can consider radiation from any discrete volume or from a line of sight. Radiation blockage by axisymmetric occlusions may be considered. The occlusions may be arbitrarily located, but must be oriented so that their axes of symmetry are parallel to the axis of the gas body.

Gas properties are input either on cards or magnetic tape. Mole fractions of gases that are on the tape but are not recognized by the program may be called for, read from the tape, and printed out without stopping execution of the program. Any number of gas properties may be input; the program automatically truncates the flow field to a size it can store and prints out what data have been deleted. The gas properties are input as tables of temperature, pressure, and mole fractions versus radius at various axial distances.

X. INPUT DATA FORMAT

On the following pages, a complete description of all the card input data required to run the program is presented. It is restated that often (in fact, usually) the properties of the gas body are read from an input tape. If, however, card input property data are required, their format is presented on the following pages. For the tape input format, the reader should consult the program listing in figure 10.

At some time it may be desirable to calculate the radiative heat flux from the same gas body but under different boundary conditions. This means that (1) the same gas body, (2) the same absorption coefficients, and (3) the same occlusions will be used. However, either the point of interest or the integral limits or both may be changed.

It would be redundant and time-consuming to reload these three identical sets of data into the computer. The only data necessary to make another flux calculation are that data concerning the (new) integral limits and/or the location of the (new) point of interest. Therefore, the program is re-cycled to the point at which the computer is ready to receive the data concerning the integral limits and the point of interest. Inspection of the input description will show that the last seven cards contain all this information. Therefore, proper revisions in the last seven cards will allow a new flux calculation to be made for new case data.

INPUT

Program Name	Definition	Units	Card Column
	CARD NUMBER 1 (4I10)		
KA	Flag: 0 indicates flow field on cards; 1 indicates flow field on tape.	---	10
KASE	Number of flow field to be used.	---	11-20
NØN	Twice the number of constituents called for.	---	30
	CARD NUMBER 2 (7E10.0)		
SCAL	Conversion factor used to convert flow field length dimensions as required. The program requires dimensions in inches.	---	1-10
SCAL2	Conversion factor used to convert absorption coefficient dimensions to $(cm \cdot atm)^{-1}$.	$(cm \cdot atm)^{-1}$	11-20
SCAL3	Pressure conversion to lb/ft^2.	lb/ft^2	21-30
SCAL4	Temperature conversion to °R.	°R	31-40
SCAL5	Scale mole fractions.	---	41-50
SCAL6	Shape factor. This may be used with the window option to obtain the desired radiation units.	---	51-60
SCAL7	Scale 1/d.	---	61-70
	CARD NUMBER 3 (8A6 left adjust)		
KØN(I), I=1, NØN	BCD representation of the gas constituents to be considered. Each constituent is assumed to require two A6 formats so a total of four constituents may be listed.	---	1-12, 13-24, 25-36, 37-48

Program Name	Definition	Units	Card Column
	CARD NUMBER 4 (4I10)		
NKT	Number of values of T in the table of absorption coefficients. Maximum is 7.	---	10
NKNU	Number of last card to contain the absorption coefficient for the 1st constituent listed in the data statement at the beginning of the program.	---	18-20
KKNU	Number of last card to contain the absorption coefficient for the 2nd constituent.	---	28-30
KNNU	Number of last card to contain the absorption coefficient for the 3rd constituent.	---	38-40
	NOTE: Total number of absorption coefficient cards must not exceed 610.		
	CARD NUMBER 5 (7E10.0)		
TEMK(I)	Temperature values in the table of absorption coefficients.	°R	1-10, 11-20, etc.
	CARD NUMBER 6 (8E9.2)		
ENUK(J)	Wave number.	cm^{-1}	1-9
CØEF(I,J)	Absorption coefficients for the gas constituents concerned.	$cm^{-1} \cdot atm^{-1}$	10-18, 19-27, 28-36, 37-45, 46-54, 55-63, 64-72.

Program Name	Definition	Units	Card Column
	CARD NUMBER 7 (8E9.2)		
FINS(I,J)	Fine structure parameters for CO_2 given at the same wave number values as CO_2 absorption coefficients. NOTE: In the sample data list, the wave number is listed in columns 1-9, but this is not read into the machine. The temperatures and wave numbers at which the 1/d values are given must be the same as for the CO_2 absorption coefficients. The maximum number of wave numbers for 1/d is 140.	cm^{-1}	10-18, 19-27, 28-36, 37-45, 46-54, 55-63, 64-72.
	CARD NUMBER 8 (4I10)		
NC	Number of blocking circles used to describe all occlusion structures. NOTE: The maximum value for this variable is 50.	---	9-10
	CARD NUMBER 9 (4E10.0, I5)		
XI(I)	X-coordinate of the center of the ith blocking circle.	Inches	1-10
YI(I)	Y-coordinate of the center of the ith blocking circle.	Inches	11-20
ZI(I)	Z-coordinate of the center of the ith blocking circle.	Inches	21-30
RI(I)	Radius of the ith blocking circle.	Inches	31-40
KIND(I)	Occlusion flag: 0 indicates a disk; 1 indicates a hole.	---	45
	NOTE: Loop back point for a new case.		

Program Name	Definition	Units	Card Column
	CARD NUMBER 10 (7E10.0)		
THETAI	Lower limit for θ integral.	Degrees	1-10
THETAF	Upper limit for θ integral.	Degrees	11-20
DTHETA	Increment size for θ integral.	Degrees	21-30
	CARD NUMBER 11 (7E10.0)		
PHII	Lower limit for ϕ integral.	Degrees	1-10
PHIF	Upper limit for ϕ integral.	Degrees	11-20
DPHI	Increment size for ϕ integral.	Degrees	21-30
	CARD NUMBER 12 (3I6)		
IENUI	Lower limit for ν integral.	cm^{-1}	1-6
IENUF	Upper limit for ν integral.	cm^{-1}	7-12
IDENU	Increment size for ν integral.	cm^{-1}	13-18
	CARD NUMBER 13 (4E10.0, 3I5)		
DSI	Increment size for S integral.	Inches	1-10
DMAX	Upper limit for S integral (lower limit is always 0).	Inches	11-20
ØMEGA	Angle of orientation of the plane of interest.	Degrees	21-30
HMIN	Minimum test value for all absorption coefficients.	$cm^{-1} \cdot atm^{-1}$	31-40
NWIN	Flag: 0 indicates window option is omitted; 1 indicates window option is used.	---	45

Program Name	Definition	Units	Card Column
	CARD NUMBER 13 (4E10.0, 3I5) (Cont'd)		
NSPEK	Flag: 0 signals normal output format; 1 signals output as flux distribution versus wave number.	---	50
INPUTF	1 if carbon is to be considered alone; otherwise blank.	---	55
	CARD NUMBER 14 (7E10.0)		
XP	X-coordinate of the point of interest. (Y-coordinate is always considered to be 0.)	Inches	1-10
ZP	Z-coordinate of the point of interest.	Inches	11-20
	CARD NUMBER 15 (E10.0)		
TINPUT	Constant temperature step size. Use 0.0 if flux calculation is desired at each ΔS.	°R	1-10
	CARD NUMBER 16 (E10.0)		
W	Carbon mass fraction (lb. of carbon per lb of gas).	---	1-10
	CARD NUMBER 17 (7E10.0) (Used only if NWIN = 1)		
DIS	If window option is selected, this card is read. DIS is the distance from the point of interest to the window.	Inches	1-10
HT	Height of window.	Inches	11-20
WID	Width of window.	Inches	12-30

If card input for the gas properties is selected, Card Number 3 above is removed and the flow field input is placed between Cards 2 and 4. The flow field format is as follows:

Program Name	Definition	Units	Card Column
	CARD NUMBER 1 (8A6 left adjust)		
KØN(I), I=1, NON	BCD representation of the gas constituents to be considered. This is the same as Card Number 3 except for an added restriction that the constituents must appear in the same order that their mole fractions appear on the property cards.	---	1-12, 13-24, 25-36, 37-48.
	CARD NUMBER 2 (12A6)		
HDG	72 characters of alpha-numeric identification.	---	1-72
	CARD NUMBER 3 (4A6)		
BETA	24 characters of alpha-numeric identification for the flow field.	---	1-24
	CARD NUMBER 4 (E10.0, I10)		
ZZ	Coordinate of Z-cut.	Inches	1-10
NØPS	Number of points on this Z-cut.	---	19-20
	CARD NUMBER 5 (7E10.0)		
R	Distance of point from Z-axis. (First point must be R = 0.)	Inches	1-10
T	Temperature at that point.	°R	11-20
P	Pressure at that point	lb/ft^2	21-30

Program Name	Definition	Units	Card Column
	CARD NUMBER 5 (7E10.0) (Cont'd)		
F	Mole fractions of the three radiating gases in the same order as on Card Number 1.	---	31-40, 41-50, 51-60.

NOTE: This card format is repeated NOPS times until the properties at all the points on that Z-cut have been specified.

	CARD NUMBER 6 (E10.0, I10)		
ZZ	Coordinate of the second Z-cut.	Inches	1-10
NØPS	Number of points at this Z-cut.	---	20

CARD NUMBER 7 (7E10.0)

Give radial data at the second Z-cut in the same format as Cards Number 5 above.

Continue loading radial data at Z-cuts with each set of radial data preceded by a ZZ, NOPS card. When all required data have been loaded, end the flow field reading by a ZZ, NOPS card with NOPS = 0.

XI. SAMPLE CASE

The following sample case illustrates the use of the program just described. In order to demonstrate the full capabilities of the program, the case chosen is an "invented" one which does not have a real life counterpart. A rocket engine exhaust plume was chosen as the radiating gas body. The S-IVB stage with one scaled-down F-1 engine is the vehicle involved. The radiative heat flux is calculated to a point of interest located on the thrust structure of the vehicle as shown in figure 13. The constituents used are water vapor, carbon dioxide, carbon monoxide, and carbon particles.

For brevity, large angular step sizes are used in the sample case so that only 15 lines of sight are examined. Each of the lines is described by using one value of θ and one value of $\emptyset$; 5 values of θ and 3 values of $\emptyset$ are used in this sample case.

The engine nozzle is described by 14 blocking circles which are designated as disks; the vehicle skirt is described by one blocking circle (r_{15}) which is a hole. This gives a total of 15 blocking circles to be used in the tests for occlusion. Figure 13 illustrates the nozzle and skirt blocking circles for this sample case.

The table of absorption coefficients as a function of wave number and temperature contains 606 entries. Of these, the first 439 are for H_2O (the first constituent mentioned in the IDENTC data list at the start of the program), the next 132 entries are for CO_2 (the last CO_2 entry is number 571), and the last 35 are CO making the last CO card number 606 which is the last card in the table. (Notice that the order of the table is the same as the order of the IDENTC data list.)

The table of fine structure parameters contains data only for CO_2 and contains 132 cards. In the current version of the program, CO_2 is the only fine structure data tabulated. Thus, no identification is included with this table.

Following is a complete listing of the input data. Figure 14 gives a complete listing of the actual input cards as they are read into the machine.

SAMPLE CASE INPUT

Card Number	Program Name	Description
1	KA	1; flow field on tape. 7103; flow field number. 8
2	SCAL	0.5435714; flow field length dimensions are scaled down for the sample.
	SCAL2 - SCAL7	Blank; no other scale factors are required.
3	KØN(I)	C102(G), C101(G), H201(G), CARBON
4	NKT NKNN KKNU KNNU	7 439 571 606
5	TEMK(1) TEMK(2) TEMK(3) TEMK(4) TEMK(5) TEMK(6) TEMK(7)	540°R 1080°R 1800°R 2700°R 3600°R 4500°R 5400°R
6 (606 Cards)	ENUK(J), J = 1,2,3, · 606	Values of ν; ENUK(1) = 50, ..., ENUK(439) = 11000, ..., ENUK(571) = 3775, ..., ENUK(606) = 2350. All the values are listed in figure 14.
	CØEF(I,J), I = 1,2, ..., 7; J = 1,2, ..., 606	Values for $\bar{k}_\nu$; CØEF(1,1) through CØEF(7,606). These values are listed in figure 14.
7 (132 Cards)	DUM	These are the same as ENUK(440) to ENUK(571) which are read while reading the absorption coefficient table. They will not be read in as data, but they are listed in figure 14.
	FINS(I,J), I = 1,2, ..., 7; J = 1,2, ..., 132.	Values of fine structure parameters for CO_2; FINS(1,1) through FINS(7, 132). These values are not given here, but they may be found in the input list, figure 14.

Card Number	Program Name	Description
8	NC	15; number of blocking circles
9 (15 cards)	XI(I) YI(I) ZI(I) RI(I) KIND(I), I = 1,2, ..., 15	Table of blocking circle specifications (omitted here for brevity); they may be found in figure 14.
10	THETAI THETAF DTHETA	40°; lower limit 90°; upper limit 10°; increment
11	PHII PHIF DPHI	0°; lower limit 45°; upper limit 15°; increment.
12	IENUI IDNUF IDENU	50 cm^{-1}; lower limit 7500 cm^{-1}; upper limit 25 cm^{-1}; increment.
13	DSI DMAX ØMEGA HMIN NWIN NSPEK INPUTF	12 in.; increment 800 in.; upper limit 31°; inclination of plane of interest 0.0001 cm^{-1} atm^{-1}; absorption coefficient minimum test value 0; window option omitted 1; output of flux versus wave number Blank
14	XP ZP	117 in. -260 in.
15	TINPUT	100°R; constant temperature step size
16	W	0.05; carbon mass fraction
17		Omitted since window option was omitted.

XII. OUTPUT DATA FORMAT

The output data format prescribed by the program is sufficiently labeled and includes units for convenience. Since the format is self-explanatory, no detailed discussion will be given here; an examination of the sample output in figure 15 will indicate the ease with which the output format may be followed. However, for convenience the following list gives the order of the output:

1. Title page: includes flow field run number, date, flow field identification (BETA), the gas constituents considered, and case identification (HDG).

2. Flow field properties: Z-coordinate, radius, temperature, pressure, and mole fractions. Notice that the order in which the mole fractions are output follows the order of the constituent list shown above.

3. Absorption coefficient table: absorption coefficient as a function of wave number and temperature appropriately labeled as to constituent.

4. Fine structure parameter table for CO_2.

5. Blocking circle specification table: X-, Y-, and Z-coordinates of the center, radius, and type of blocking circle (flag).

6. Results: reiteration of information given on title page, coordinates of point of interest, inclination of the plane of interest, value of HMIN, value of carbon mass function, temperature step size, limits of integration and increment size, and scale factors.

7. Results: table of accumulated flux versus inclination angle θ, total flux, and time of calculation.

8. Results: if NSPEK = 1, a table of intensity versus wave length and flux versus wave number is output. The flux listed in this table is the flux per wave number increment.

NOTE: Results 6, 7, and 8 are repeated for each set of case data input to the program.

TABLE I

Model Values for the Collision Line Width Parameters

Molecule (i)	Broadener (j)	$(\gamma_{ij})_{STP}$	n_{ij}	$(\gamma^*_{ii})_{STP}$	n^*_{ii}
H_2O	H_2O	(0.09)	0.5	0.44	1.0
	N_2	0.09	0.5	0	
	O_2	0.04	0.5	0	
	H_2	(0.05)	0.5	0	
	CO_2	0.12	0.5	0	
	CO_2	(0.10)	0.5	0	
CO_2	CO_2	0.09	0.5	0	
	H_2O	(0.07)	0.5	0	
	N_2	0.07	0.5	0	
	O_2	0.06	0.5	0	
	H_2	0.08	0.5	0	
	CO_2	(0.06)	0.5	0	
CO	CO	0.05	0.5	0	
	H_2O	(0.05)	0.5	0	
	CO_2	(0.05)	0.5	0	
	H_2	0.05	0.5	0	
	N_2	0.05	0.5	0	
	O_2	0.04	0.5	0	

TABLE II

Carbon Absorption Coefficient Curves

Temperature °K	Temperature °R	A x 10^4	B x 10^1	C x 10^{-3}	D x 10^{-7}	E x 10^{-12}
300	540	-.13463853	.38710213	-.47055911	.35084341	-.79087507
600	1080	-.19909966	.42759743	-.50848071	.37144485	-.83813311
1200	2160	-.31886445	.48804827	-.52853813	.36589761	-.80385920
1700	3060	-.38870225	.53648682	-.50955662	.33136839	-.69866129
2000	3600	-.60273281	.86118469	-1.0340689	.64889548	-1.3474213
2300	4140	-.89695742	1.3577194	-1.8257443	1.1016709	-2.2102493
2600	4680	-.41368281	1.8460052	-2.9400371	1.9221795	-4.1482373

$$k_\nu = A + B\nu + C\nu^2 + D\nu^3 + E\nu^4$$

k_ν = Absorption coefficient, cm^2/gm

ν = Wave number, 1/cm.

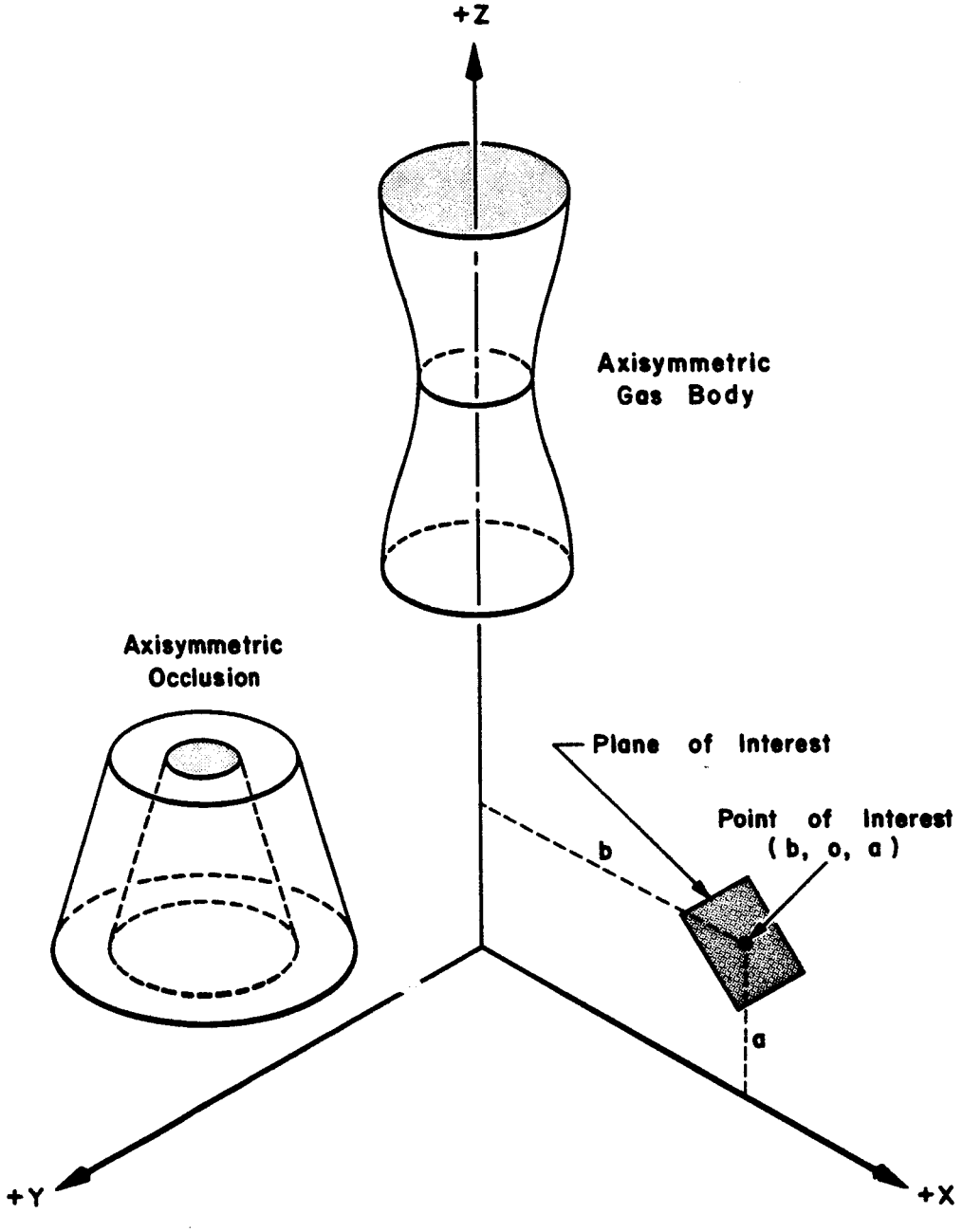

FIG. 1. COORDINATE SYSTEM FOR THE PROBLEM GEOMETRY

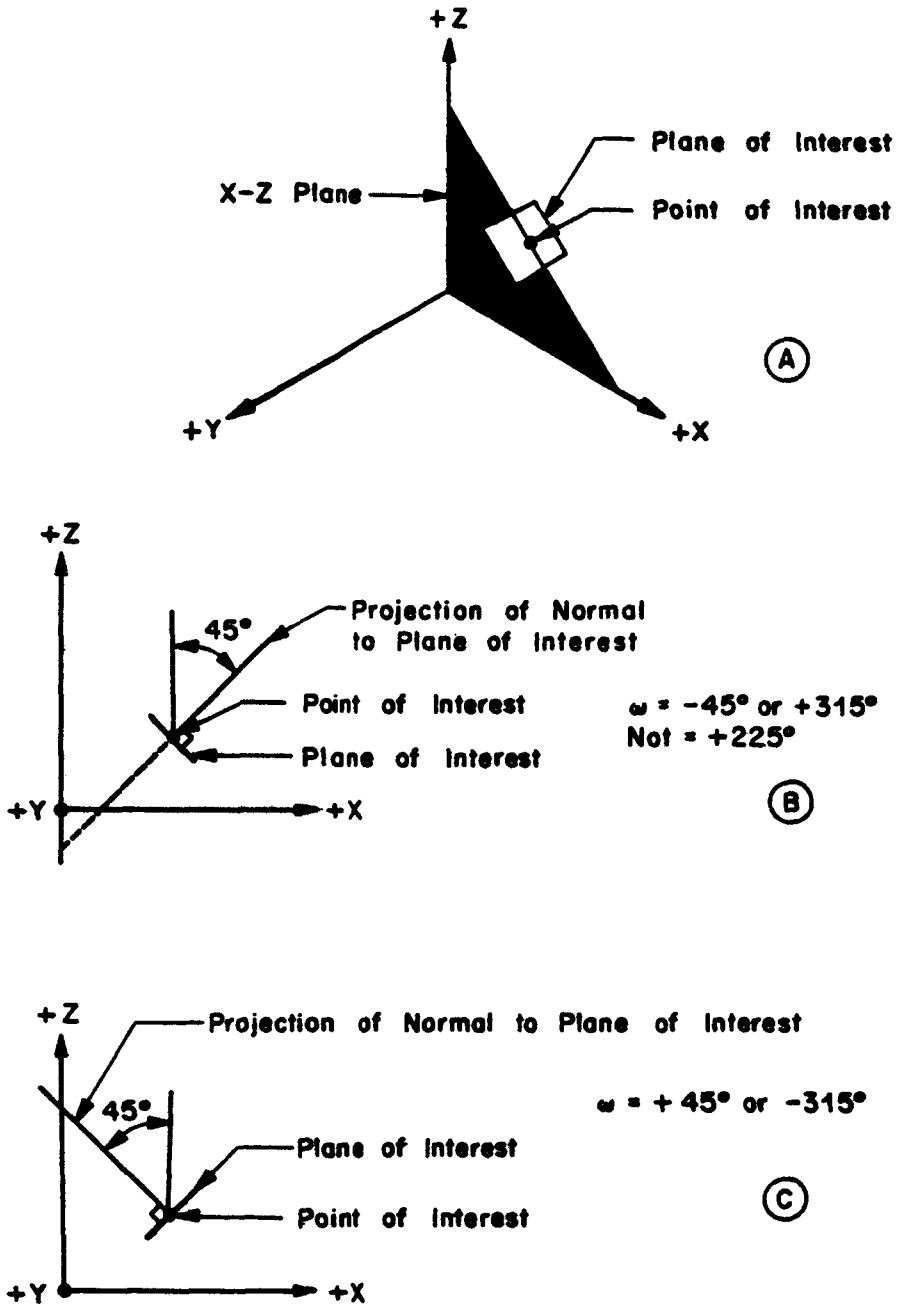

FIG. 2. ORIENTATION OF THE POINT OF INTEREST

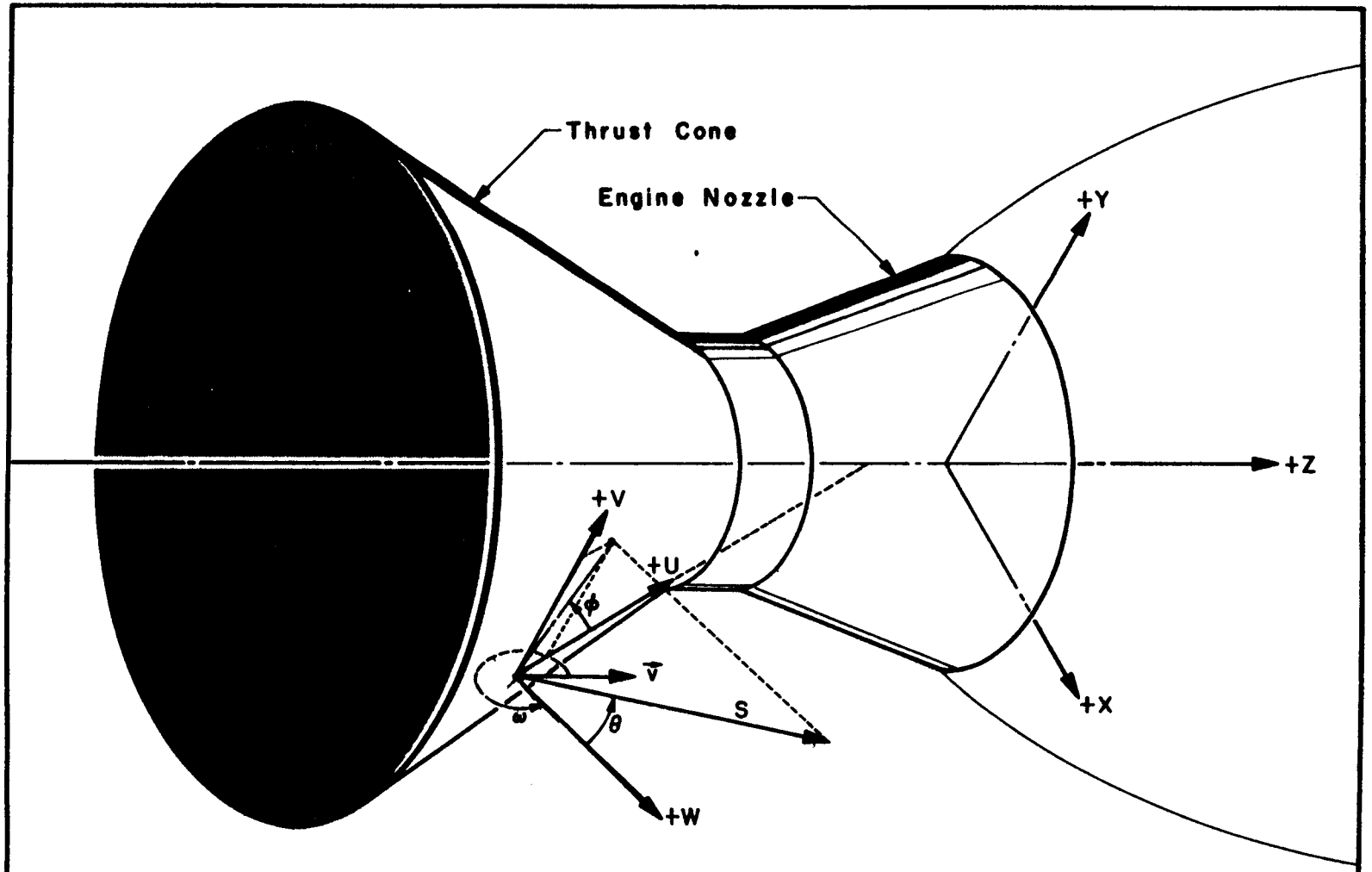

FIG. 3. COORDINATE SYSTEM FOR THE RADIATION CALCULATION

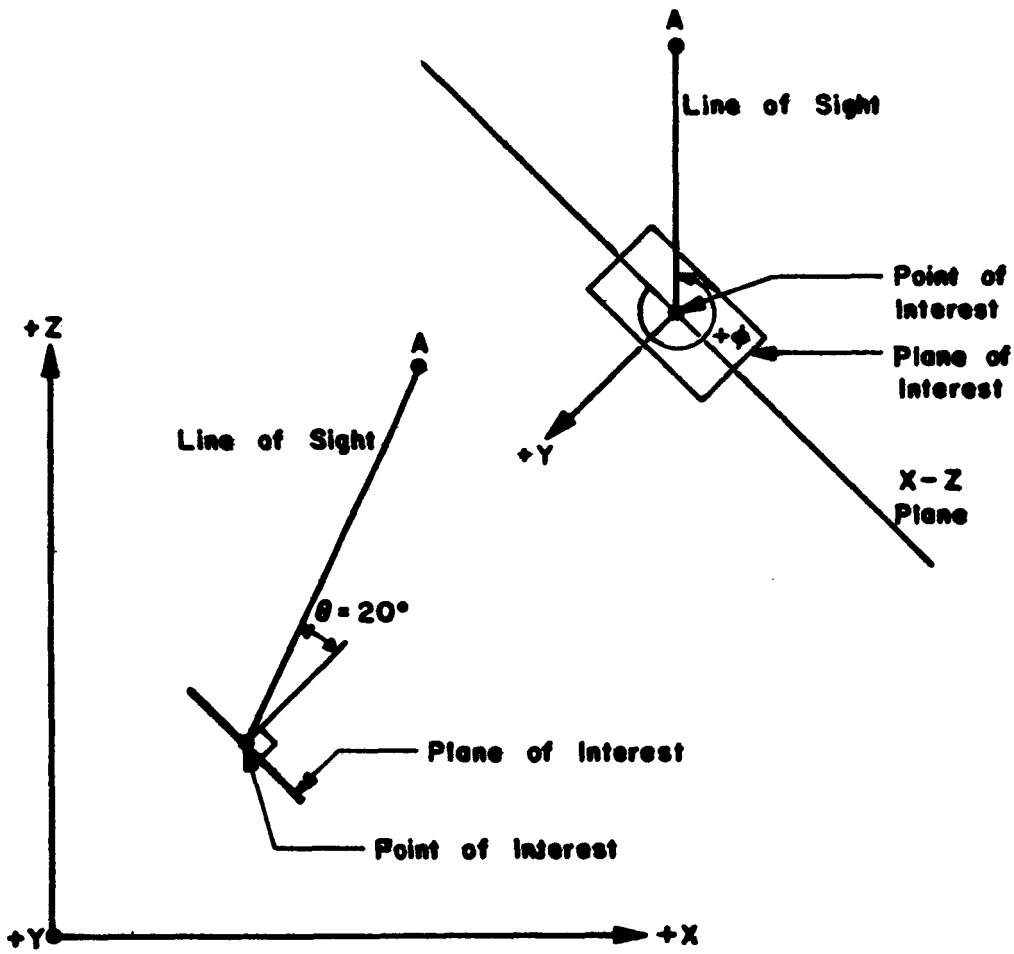

For This Line of Sight:

$\phi = 315°$ or $-45°$

$\theta = 20°$

Note That if We Fix θ and Vary ϕ, the Line of Sight Traces a Cone Whose Apex is the Point of Interest and Whose Half Angle is θ. If We Fix ϕ and Vary θ, We Generate a Plane.

FIG. 4. EXAMPLE
SHOWING SPHERICAL ANGLES θ AND ϕ

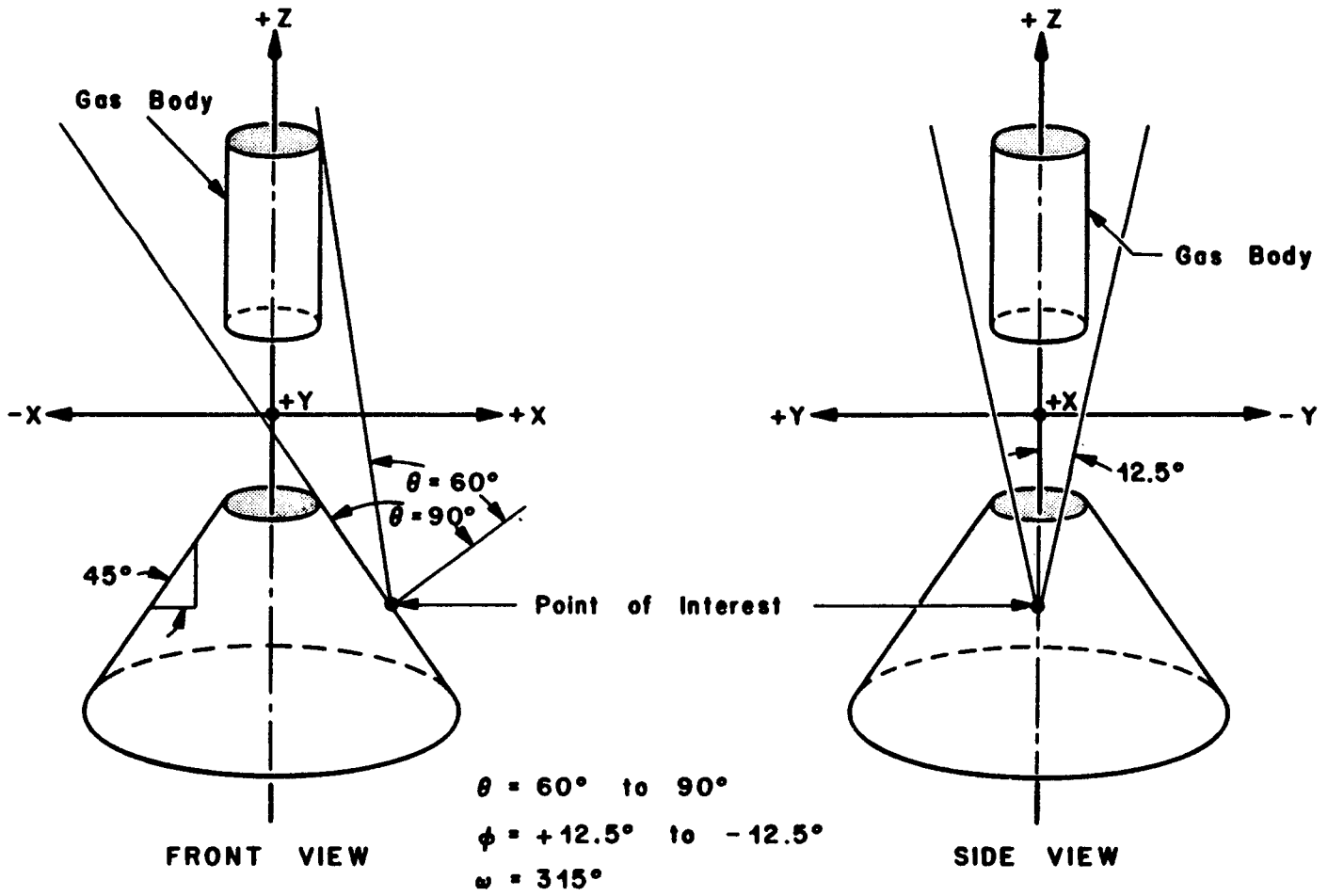

FIG. 5. CALCULATION OF INCIDENT RADIATION ON SURFACE OF A CONE

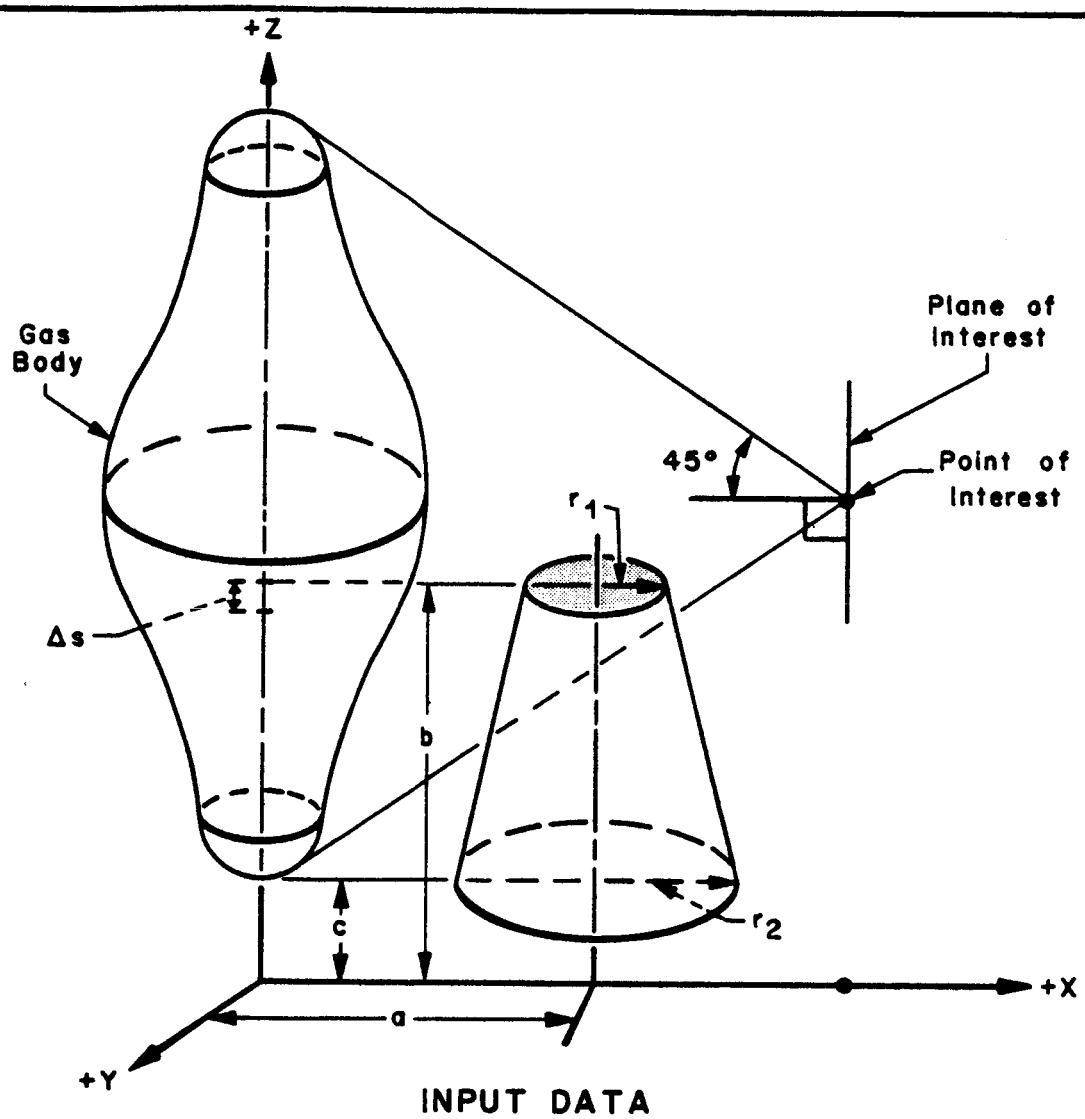

INPUT DATA

Angles					
θ 0-45° ϕ 0-360° } Scans cone with 45° half angle					
Blocking Circles					
	X	Y	Z	Radius	Type
①	a	o	b	r_1	Circle
②	a	o	b-Δs	$r_1 + \Delta r$	Circle
③	a	o	b-2Δs	$r_1 + 2\Delta r$	Circle
④	a	o	b-3Δs	$r_1 + 3\Delta r$	Circle
⑤	a	o	c	r_2	Circle

FIG. 6. APPLICATION OF OCCLUSION CAPABILITY AND ANGULAR CONTROL FEATURE

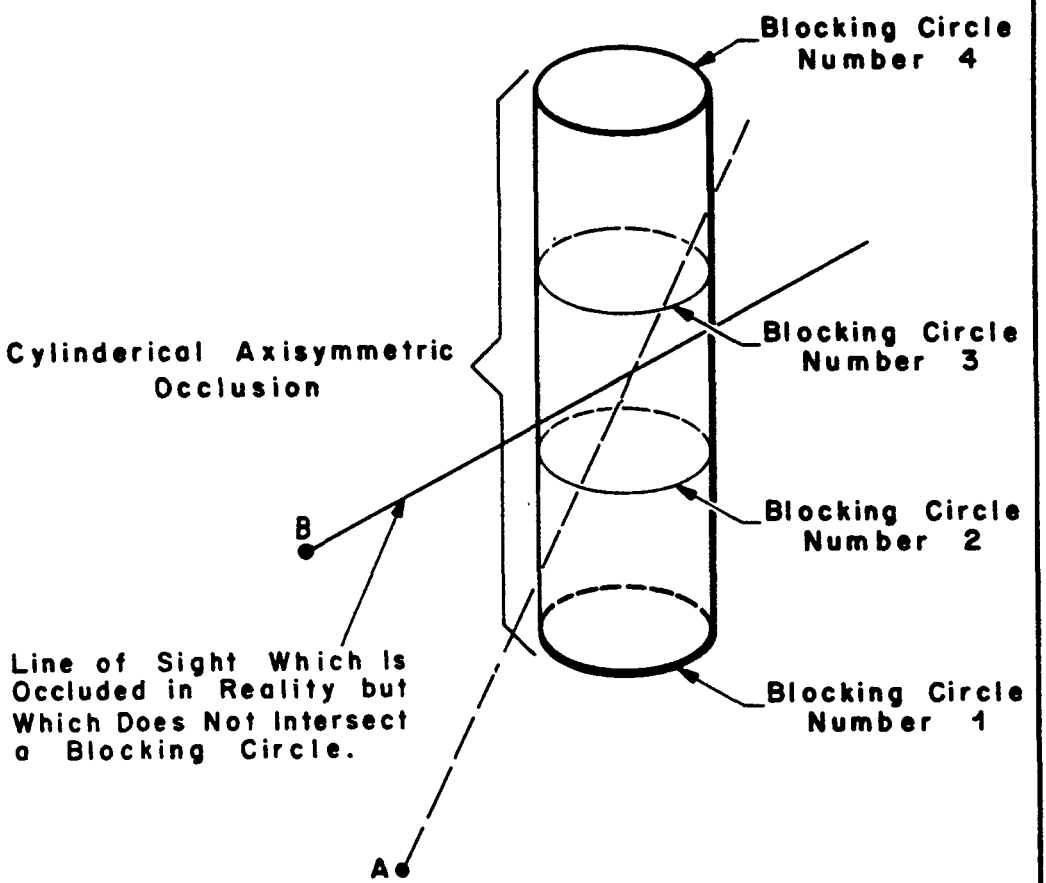

FIG. 7. USE OF BLOCKING CIRCLES TO DESCRIBE OBSTRUCTION

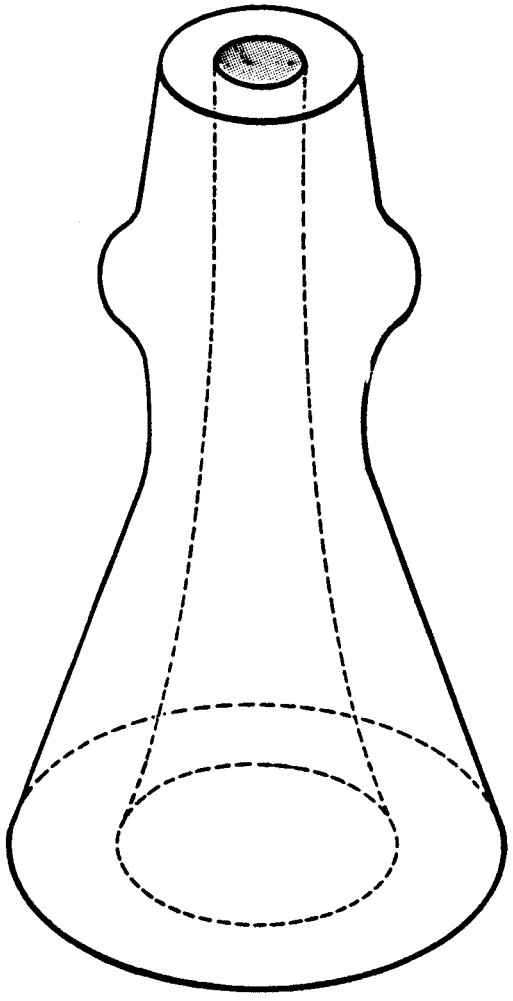

FIG. 8. COMPLEX OCCLUSION

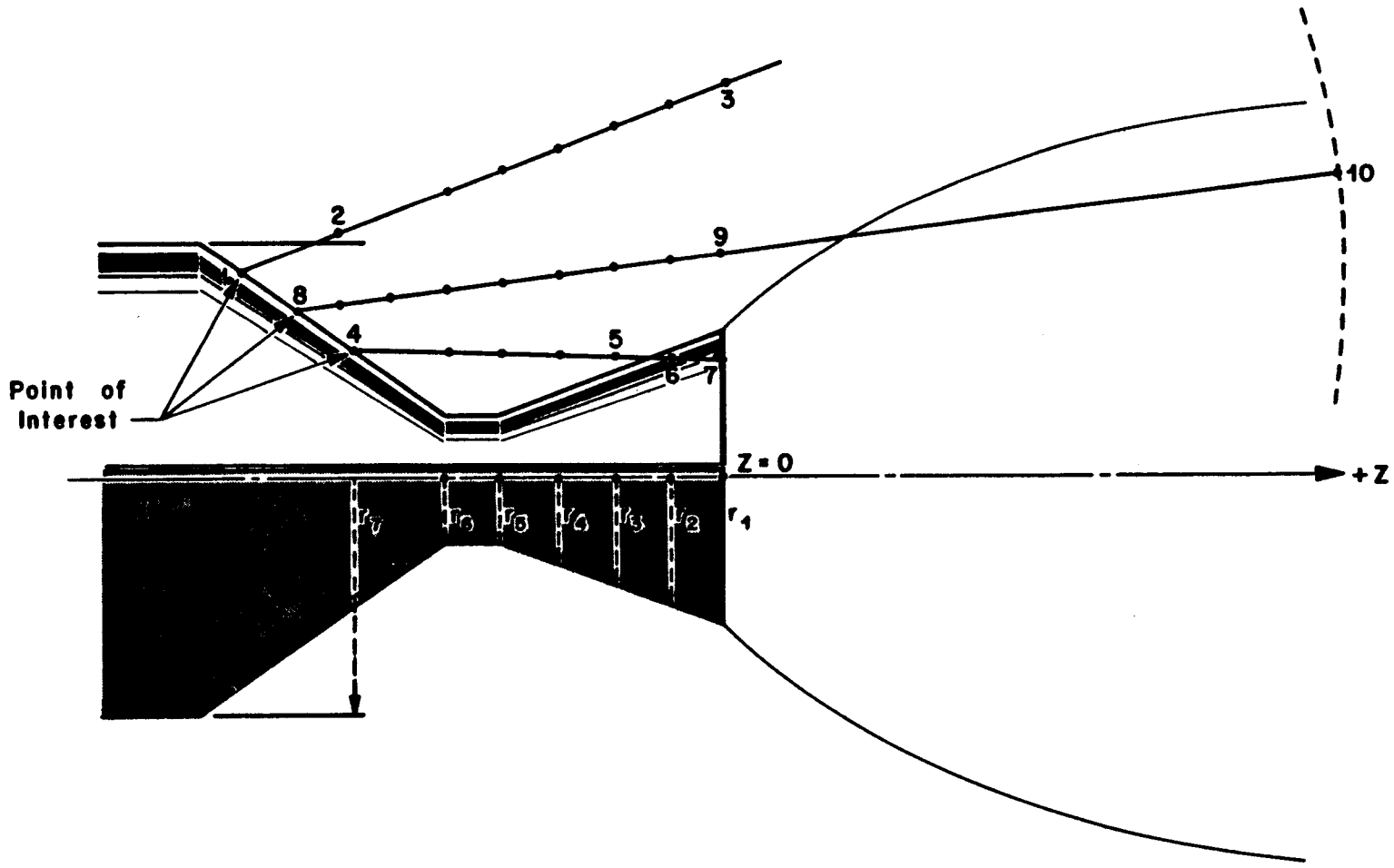

FIG. 9. APPLICATION OF OCCLUSION CAPABILITY TO ANALYSIS OF A MISSILE BASE REGION

```
$JØB            3S/P-GWIN   BIN 34 ,353883,01,12,I4ØCEP
$PAUSE          MØUNT TAPE
$EXECUTE        IBJØB
$IBJØB BIN 34   MAP
$IBFTC HUF4     DECK
C       353883  PLUME RADIANCE PRØGRAM
C       RESTRICTIØNS-
C
C           1. THE VALUES ØF NU-BAR FØR WHICH ABSØRPTIØN CØEFFICIENTS AR
C              GIVEN ARE INTEGRAL VALUES WITH CØNSTANT SPACING.
C           2. DELTA NU-BAR (SPECIFIED ØN INPUT CARD) MUST BE A MULTIPLE
C        ØF THE SPACING IN THE TABLE ØF ABSØRPTIØN CØEFFICIENTS.
C           3. THE UPPER AND LØWER LIMITS ØF NU-BAR FØR THE INTEGRATIØN
C              ARE IDENTICAL WITH TWØ VALUES FRØM THE ABØVE MENTIØNED
C              TABLE.
C
      DIMENSIØN TEMK(7), ENUK(610), CØEF(7,610)
      DIMENSIØN ZZ(16), NR(15), R(15,75), T(15,75), P(15,75), F(15,75,4
      DIMENSIØN FINS(7,140)
      DIMENSIØN XI(50), YI(50), ZI(50), RI(50), KIND(50)
      DIMENSIØN HDG(12), NUMCØN(4), BETA(4), KØNAME(20,2), CØNWT(20)
      DIMENSIØN FØ1(440), FØ2(140), FØ3(40), ACØ1(440), ACØ2(140), ACØ3
     140), ADØ1(440), ADØ2(140), ADØ3(40), GØLD(440), GNEW(440), SPKICS(
     2440), FØ4(440), QW(4)
      DIMENSIØN KØN(8), KNN(2), F11(4), F12(4), F21(4), F22(4), FW(4)
      DIMENSIØN SLIP(440), IQ1(15,75), IQ4(16), IDENTC(8)
      DIMENSIØN TEM(7), A(7,5), TAC(10), FWSUM(4), BI(5), CI(5)

      EQUIVALENCE (RWW,IQ2),(Z,IQ3), (R(1,1),IQ1(1,1)), (ZZ(1),IQ4(1))

      CØMMØN /FLDFLP/ KA,SCAL,SCAL2,SCAL3,SCAL4,SCAL5,SCAL6,SCAL7,KØN,H
     1G,BETA,ZZ,NØPS,NR,R,T,P,F,NØNN,NZ,KNN,NØN,NUMCØN,KASE,ICASE,NØCØN

      DATA HPI/1.57079633/
      DATA NRMAX,NZMAX,NCMAX,NNMAX,NTMAX/75,15,50,630,7/
      DATA (IDENTC(I),I=1,8)/6HH2Ø1(G,6H)      ,6HC1Ø2(G,6H)      ,6HC1Ø1
     1G,6H)      ,6HCARBØN,6H      /
      DATA (TEM(I),I=1,7)/540.,1080.,2160.,3060.,3600.,4140.,4680./,((A
     1L,I),I=1,5),L=1,7)/-.13463853E4,.38710213E1,-.47055911E-3,.350843
     21E-7,-.79087507E-12,-.19909966E4,.42759743E1,-.50848071E-3,.37144
     385E-7,-.83813311E-12,-.31886445E4,.48804827E1,-.52857813E-3,.3658
     4761E-7,-.80385920E-12,-.38870225E4,.53648682E1,-.50955662E-3,.331
     56839E-7,-.69866129E-12,-.60273281E4,.86118469E01,-.10340689E-2,.6
     6889548E-7,-.13474213E-11,-.89695742E4,.13577194E2,-.18257443E-2,.
     71016709E-6,-.22102493E-11,-.41368281E4,.18460052E2,-.29400671E-2,
     819221795E-6,-.41482373E-11/
      DATA (BI(I),I=1,5)/-1.5,-1.366,-1.62,-1.77,-1.967,(CI(I),I=1,5)/.
     15926E-7,.50926E-7,.55556E-7,.521605E-7,.487654E-7/
      DATA C1,C2,C3,C4/-.1002,.15567E-3,-.3367E-7,.49897E-11/

      ZERØ=0.
C     ZERØ FLØW FIELD BLØCK
      DØ 10 J=1,NRMAX
      DØ 10 I=1,NZMAX
      P(I,J)=0.0
      T(I,J)=0.0
      R(I,J)=0.0
      DØ 10 K=1,4
      F(I,J,K)=0.0
   10 CØNTINUE
      CALL SCLØCK (DATE,DUM,DUM,DUM)
```

FIG. 10. PROGRAM LISTING

```
      READ (5,1430) KA,KASE,NØN
      NØNN=NØN/2
      NØNNN=NØNN-1
      CALL FLØWTC
      IF (SCAL.EQ.0.) SCAL=1.
      IF (SCAL2.EQ.0.) SCAL2=1.
      IF (SCAL3.EQ.0.) SCAL3=1.
      IF (SCAL4.EQ.0.) SCAL4=1.
      IF (SCAL5.EQ.0.) SCAL5=1.
      IF (SCAL6.EQ.0.) SCAL6=1.
      IF (SCAL7.EQ.0.) SCAL7=1.
C     SCALE FLØW FIELD SPACIAL CØØRDINATES, IF NECESSARY.
      IF (SCAL.EQ.1..AND.SCAL3.EQ.1..AND.SCAL4.EQ.1..AND.SCAL5.EQ.1.) G
     1 TØ 40
      DØ 30 L=1,NZ
      ZZ(L)=SCAL*ZZ(L)
      M=NR(L)
      DØ 30 N=1,M
      T(L,N)=SCAL4*T(L,N)
      P(L,N)=SCAL3*P(L,N)
      DØ 20 MAC=1,NØNN
      F(L,N,MAC)=SCAL5*F(L,N,MAC)
   20 CØNTINUE
   30 R(L,N)=SCAL*R(L,N)
   40 CØNTINUE
C     ØUTPUT FLØW FIELD
      DØ 70 I=1,NZ
      NØPS=NR(I)
      J=1
   50 N=J+49
      IF (N.GT.NØPS) N=NØPS
      WRITE (6,1520) ZZ(I)
      DØ 60 L=J,N
      WRITE (6,1530) R(I,L),T(I,L),P(I,L),(F(I,L,KKKK),KKKK=1,NØNN)
   60 CØNTINUE
      IF (N.EQ.NØPS) GØ TØ 70
      J=N+1
      GØ TØ 50
   70 CØNTINUE
C     NØW LØAD TABLE ØF ABSØRPTIØN CØEFFICIENTS FRØM CARDS.
      READ (5,1430) NKT,NKNU,KKNU,KNNU
      IF (NTMAX-NKT) 80,90,90
   80 WRITE (6,1440) NTMAX
      STØP
   90 IF (NNMAX-KNNU) 100,110,110
  100 WRITE (6,1450) NNMAX
      STØP
  110 READ (5,1470) (TEMK(I),I=1,NKT)
      DØ 120 J=1,KNNU
      READ (5,1460) ENUK(J),(CØEF(I,J),I=1,NKT)
  120 CØNTINUE
C     SCALE ABSØRPTIØN CØEFFICIENTS IF NECESSARY.
      IF (SCAL2.EQ.1.) GØ TØ 140
      DØ 130 I=1,NKT
      DØ 130 J=1,KNNU
  130 CØEF(I,J)=SCAL2*CØEF(I,J)
  140 CØNTINUE
      NCØTWØ=KKNU-NKNU
      DØ 150 J=1,NCØTWØ
```

FIG. 10.
(continued)

```
      READ (5,1460) DUM,(FINS(I,J),I=1,7)
  150 CØNTINUE
      DØ 160 I=1,NKT
      DØ 160 J=1,NCØTWØ
  160 FINS(I,J)=SCAL7*FINS(I,J)
C     ØUTPUT TABLE ØF ABSØRPTIØN CØEFFICIENTS
      K3=0
      K2=0
  170 K1=K2+1
      K2=K1+6
C     K1, K2   ØRIGINALLY WRITTEN FØR WHEN NKT GREATER THAN 7
      IF (NKT-K2) 180,190,200
  180 K2=NKT
  190 K3=1
  200 LINES=1
      LØ=1
      NNNU=NKNU+1
      KKKU=KKNU+1
      DØ 250 J=1,KNNU
      LINES=LINES-1
      IF (LINES) 210,210,220
  210 LINES=50
      LI=2*LØ-1
      WRITE (6,1540) IDENTC(LI),(TEMK(M),M=K1,K2)
      GØ TØ 240
  220 IF (J.EQ.1.ØR.J.EQ.NNNU.ØR.J.EQ.KKKU) GØ TØ 230
      GØ TØ 240
  230 LØ=LØ+1
      LINES=50
      LI=2*LØ-1
      WRITE (6,1540) IDENTC(LI),(TEMK(M),M=K1,K2)
  240 WRITE (6,1550) ENUK(J),(CØEF(M,J),M=K1,K2)
  250 CØNTINUE
      IF (K3) 260,170,260
  260 CØNTINUE
      LIN=60
      DØ 280 J=1,NCØTWØ
      LIN=LIN+1
      IF (LIN.LE.50) GØ TØ 270
      LIN=0
      WRITE (6,1670) IDENTC(3),(TEMK(M),M=1,NKT)
  270 JG=J+NKNU
      WRITE (6,1560) ENUK(JG),(FINS(M,J),M=1,NKT)
  280 CØNTINUE
C     FIND LIMITS ØF ABSØRPTIØN CØEFFICIENT TABLES.
      CØN1L=ENUK(1)-25.
      IØN1L=CØN1L
      CØN1U=ENUK(NKNU)+25.
      IØN1U=CØN1U
      CØN2L=ENUK(NKNU+1)-25.
      IØN2L=CØN2L
      CØN2U=ENUK(KKNU)+25.
      IØN2U=CØN2U
      CØN3L=ENUK(KKNU+1)-25.
      IØN3L=CØN3L
      CØN3U=ENUK(KNNU)+25.
      IØN3U=CØN3U
C     LØAD TABLES DESCRIBING THE BLØCKING CIRCLES
      READ (5,1430) NC
      IF (NCMAX-NC) 290,300,300
  290 WRITE (6,1490) NCMAX
```

FIG. 10.
(continued)

```
      STØP
  300 DØ 310 I=1,NC
      READ (5,1620) XI(I),YI(I),ZI(I),RI(I),KIND(I)
  310 CØNTINUE
C     ØUTPUT BLØCKING CIRCLE SPECIFICATIØNS
      LINES=1
      DØ 340 I=1,NC
      LINES=LINES-1
      IF (LINES) 320,320,330
  320 WRITE (6,1570)
      LINES=55
  330 WRITE (6,1580) XI(I),YI(I),ZI(I),RI(I),KIND(I)
  340 CØNTINUE
      CALL SCLØCK (DUM,DUM,TNEW,DUM)
  350 YP=0.
      TØLD=TNEW
C     READ CASE DATA
      READ (5,1470) THETAI,THETAF,DTHETA
      READ (5,1470) PHII,PHIF,DPHI
      READ (5,1480) IENUI,IENUF,IDENU
      READ (5,1500) DSI,DMAX,ØMEGA,HMIN,NWIN,NSPEK,INPUTF
      READ (5,1470) XP,ZP
      READ (5,1660) TINPUT
      READ (5,1660) W
      WRITE (6,1510) KASE,DATE,(BETA(I),I=1,4),(KØN(I),I=1,NØN)
      WRITE (6,1650) (HDG(I),I=1,12)
      WRITE (6,1600) XP,YP,ZP,ØMEGA
      WRITE (6,1630) HMIN
      WRITE (6,1740) W
      WRITE (6,1750) TINPUT
      WRITE (6,1610) THETAI,THETAF,DTHETA,PHII,PHIF,DPHI,IENUI,IENUF,ID
     1NU,ZERØ,DMAX,DSI
      IF ((IENUF-IENUI)/IDENU-439) 370,370,360
  360 WRITE (6,1760)
      GØ TØ 350
  370 CØNTINUE
      DENU=IDENU
C     ADJUST LIMITS FØR CENTER-EVALUATIØN ØF ELEMENTS.
      THETAI=THETAI+.5*DTHETA
      THETAF=THETAF-.5*DTHETA
      PHII=PHII+.5*DPHI
      PHIF=PHIF-.5*DPHI
C     CØNVERT ANGLES TØ RADIANS
      THETAI=THETAI/57.2957795
      THETAF=THETAF/57.2957795
      DTHETA=DTHETA/57.2957795
      PHII=PHII/57.2957795
      PHIF=PHIF/57.2957795
      DPHI=DPHI/57.2957795
      ØMEGA=ØMEGA/57.2957795
      DØ 380 I=1,440
  380 SLIP(I)=0.
C     CØMPUTE EQUATIØN ØF PLANE ØF WINDØW, AND HIGH AND LØW VALUES ØF X
C     Y, AND Z - IF WINDØW ØPTIØN HAS BEEN SELECTED.
      WRITE (6,1680) SCAL,SCAL2,SCAL4,SCAL6,SCAL3,SCAL5,SCAL7
      IF (NWIN) 390,460,390
  390 READ (5,1470) DIS,HT,WID
      WRITE (6,1690) DIS,HT,WID
      SINØ=SIN(ØMEGA)
      CØSØ=CØS(ØMEGA)
      HHT=HT/2.
```

FIG. 10.
(continued)

```
      X1=XP-DIS*SINØ+HHT*CØSØ
      Z1=ZP+DIS*CØSØ+HHT*SINØ
      Z2=ZP+DIS*CØSØ-HHT*SINØ
      DENØ=X2*Z1-X1*Z2
      APW=(Z1-Z2)/DENØ
      CPW=(X2-X1)/DENØ
      BPW=0.
      IF (X1-X2) 400,410,410
  400 XH=X2
      XL=X1
      GØ TØ 420
  410 XH=X1
      XL=X2
  420 IF (Z1-Z2) 430,440,440
  430 ZH=Z2
      ZL=Z1
      GØ TØ 450
  440 ZH=Z1
      ZL=Z2
  450 YH=WID/2.
      YL=-YH
C     FACTØR ØF 1/10 PERCENT TØ PRECLUDE BINARY RØUNDØFF.
      XH=1.001*XH
      YH=1.001*YH
      ZH=1.001*ZH
      XL=.999*XL
      YL=.999*YL
      ZL=.999*ZL
  460 CØNTINUE
      WRITE (6,1700)

C     INTEGRATE ØVER THETA
      DENU=IDENU
      FLUFF=DTHETA*DPHI*DENU
      FLUX=0.
      THETA=THETAI
  470 SINT=SIN(THETA)
      CØST=CØS(THETA)
      SINKØ=SINT*CØST
      SANKA=FLUFF*SINKØ
      IF (ABS(SINT)-1.E-5) 1370,1370,480
  480 IF (ABS(CØST)-1.E-5) 1370,1370,490
  490 CØNTINUE

C     INTEGRATE ØVER PHI
      SUM2=0.
      PHI=PHII
C     CØMPUTE DIRECTIØN CØSINES (CØSA,CØSB,CØSG) ØF THIS RAY.
  500 SINP=SIN(PHI)
      CØSP=CØS(PHI)
      DD=SQRT(1.-SINT*SINT*SINP*SINP)
      TS1=SINT*CØSP
      PSI=ATAN2(TS1,CØST)
      DEL=HPI-ØMEGA-PSI
      CØSA=-DD*CØS(DEL)
      CØSB=SINT*SINP
      CØSG=DD*SIN(DEL)
C     CØMPUTE SLIMIT,THE DISTANCE FRØM XP,YP,ZP AT WHICH INTEGRATIØN IS
C     TØ BE TERMINATED. THIS WILL BE DETERMINED BY THE PØINT ØF INTER-
C     SECTIØN ØF THE RAY WITH EITHER THE NEAREST ØCCLUSIØN ØR THE LIMIT
C     ING SPHERE, WHICHEVER IS CLØSER. EXAMINE THE ØCCLUSIØNS FIRST.
```

FIG. 10.
(continued)

```
C       IF WINDØW ØPTIØN USED, DØES RAY PASS THRØUGH WINDØW.
        IF (NWIN) 510,570,510
C       CØMPUTE PØINT ØF INTERSECTIØN ØF RAY WITH PLANE ØF WINDØW.
  510   XINT=(1.+CPW*(CØSG*XP/CØSA-ZP))/(APW+CPW*CØSG/CØSA)
        YINT=YP+CØSB/CØSA*(XINT-XP)
        ZINT=ZP+CØSG/CØSA*(XINT-XP)
C       CHECK PØINT ØF INTERSECTIØN FØR WHETHER IT LIES WITHIN WINDØW
C       INTERIØR.
        IF (XH-XINT) 1350,520,520
  520   IF (XINT-XL) 1350,530,530
  530   IF (YH-YINT) 1350,540,540
  540   IF (YINT-YL) 1350,550,550
  550   IF (ZH-ZINT) 1350,560,560
  560   IF (ZINT-ZL) 1350,570,570
C       RAY DØES INDEED PASS THRØUGH WINDØW.
  570   CØNTINUE
C       CHECK ØCCLUSIØN LIST FØR NEAREST INTERSECTIØN, IF ANY.
        DMIN=DMAX
        DØ 620 I=1,NC
        ZA=ZI(I)
        TEM=(ZA-ZP)/CØSG
        IF (TEM) 620,620,580
  580   XA=XP+TEM*CØSA
        YA=YP+TEM*CØSB
        D1=SQRT((XA-XI(I))**2+(YA-YI(I))**2)
C       D1 IS THE DISTANCE BETWEEN THE PØINT ØF INTERSECTIØN ØF THE RAY
C       WITH THIS CIRCLE, AND THE CENTER ØF THE CIRCLE.
        IF(KIND(I))584,584,582
  582   IF (RI(I)-D1) 590,620,620
  584   IF (RI(I)-D1) 620,620,590
C       RAY IS BLØCKED BY THIS ØCCLUSIØN.
  590   D2=TEM
C       D2 IS THE DISTANCE BETWEEN THE PØINT ØF INTERSECTIØN ØF THE RAY
C       WITH THIS CIRCLE, AND THE ØBSERVATIØN PØINT.
        IF (D2) 600,620,600
  600   IF (D2-DMIN) 610,620,620
  610   DMIN=D2
  620   CØNTINUE
        S=DSI/2.
        DS=DSI
C       INITIALIZE SUMMATIØNS
        DØ 630 I=1,440
        GNEW(I)=1.
        FØ1(I)=0.
        AC01(I)=0.
        AD01(I)=0.
  630   SPKIDS(I)=0.
        DØ 640 I=1,140
        FØ2(I)=0.
        AC02(I)=0.
        AD02(I)=0.
  640   CØNTINUE
        DØ 650 I=1,40
        FØ3(I)=0.
        AC03(I)=0.
  650   AD03(I)=0.
        DØ 660 I=1,440
  660   FØ4(I)=0.
C       INITIALIZE X,Y,Z,DX,DY,DZ
        DX=DS*CØSA
        DY=DS*CØSB
```

FIG. 10.
(continued)

```
      DZ=DS*CØSG
      X=XP-DX/2.
      Y=YP-DY/2.
      Z=ZP-DZ/2.
      TINDEX=-1.
      TWSTØ=0
      JFK=1
      TWDNEW=0.0
C     INCREMENT X,Y,Z.
  670 X=X+DX
      Y=Y+DY
      Z=Z+DZ
C     BIVARIANT TABLE LØØK-UP FØR PRESSURE (PRES) AND TEMPERATURE (TEMP
      IF (Z-ZZ(1)) 700,690,690
  680 GØ TØ 1320
  690 IF (ZZ(NZ)-Z) 700,720,720
C     IF INCREMENT HAS NØT BEEN CØMPLETED BACK UP ØNE JFK
C     AND CØMPLETE INCREMENT
  700 IF (JFK-1) 680,680,710
  710 JFK=JFK-1
      GØ TØ 990
C     Z-ARGUMENT IS WITHIN RANGE ØF TABLE.
  720 DØ 722 I=2,NZ
      IF (IQ3-IQ4(I)) 730,730,722
  722 CØNTINUE
  730 Z2=ZZ(I)
      Z1=ZZ(I-1)
      I=I-1
      RW=SQRT(X*X+Y*Y)
      RWW=RW
      ZRATIØ=(Z-Z1)/(Z2-Z1)
      K=NR(I)
      DØ 740 J=2,K
      IF (IQ2-IQ1(I,J)) 750,750,740
  740 CØNTINUE
      REARDN=(RW-R(I,K))/ZRATIØ
      RWW=REARDN+R(I,K)
  750 J=J-1
      R11=R(I,J)
      T11=T(I,J)
      P11=P(I,J)
      DØ 760 II=1,NØNN
      F11(II)=F(I,J,II)
  760 CØNTINUE
      R12=R(I,J+1)
      T12=T(I,J+1)
      P12=P(I,J+1)
      DØ 770 II=1,NØNN
      F12(II)=F(I,J+1,II)
  770 CØNTINUE
      I=I+1
      K=NR(I)
      DØ 780 J=2,K
      IF (IQ2-IQ1(I,J)) 790,790,780
  780 CØNTINUE
  790 J=J-1
      R21=R(I,J)
      T21=T(I,J)
      P21=P(I,J)
      DØ 800 II=1,NØNN
      F21(II)=F(I,J,II)
```

FIG. 10.
(continued)

```
  800 CØNTINUE
      R22=R(I,J+1)
      T22=T(I,J+1)
      P22=P(I,J+1)
      DØ 810 II=1,NØNN
      F22(II)=F(I,J+1,II)
  810 CØNTINUE
      RX=R11+ZRATIØ*(R21-R11)
      RY=R12+ZRATIØ*(R22-R12)
C     CHECK FØR RW GREATER THAN PLUME BØUNDRY
      IF (RY-RW) 820,840,840
C     IF INCREMENT HAS NØT BEEN CØMPLETED BACK UP ØNE JFK AND CØMPLETE
  820 IF (JFK-1) 680,680,830
  830 JFK=JFK-1
      GØ TØ 990
  840 CØNTINUE
      RRATIØ=(RW-RX)/(RY-RX)
      FX=P11+ZRATIØ*(P21-P11)
      FY=P12+ZRATIØ*(P22-P12)
      PW=FX+RRATIØ*(FY-FX)
      FX=T11+ZRATIØ*(T21-T11)
      FY=T12+ZRATIØ*(T22-T12)
      TW=FX+RRATIØ*(FY-FX)
      DØ 850 II=1,NØNN
      FX=F11(II)+ZRATIØ*(F21(II)-F11(II))
      FY=F12(II)+ZRATIØ*(F22(II)-F12(II))
      FW(II)=FX+RRATIØ*(FY-FX)
  850 CØNTINUE
C     DETERMINE IF TEMPERATURE STEP IS DESIRED
      IF (TINPUT) 1010,1010,860
C     DETERMINE IF THIS IS THE FIRST STEP IN AN INCREMENT
  860 IF (TINDEX) 1010,870,900
C     CHECK TØ SEE IF DELTA T EXCEEDED ØN FIRST STEP
  870 IF (ABS(TW-TWSTØ)-TINPUT) 880,1010,1010
C     INITALIZE PRØPERTY SUMS
  880 PWSUM=PW
      TWSUM=TW
      DØ 890 II=1,NØNN
      FWSUM(II)=FW(II)
  890 CØNTINUE
      TINDEX=1.
      GØ TØ 950
C     CHECK FØR DELTA T, SLØPE CHANGE AND INTEGRATIØN LIMITS
  900 IF (ABS(TW-TWSTØ)-TINPUT) 920,970,910
  910 IF (ABS(TW-TWSTØ)-1.1*TINPUT) 970,970,960
  920 TWDØLD=TWDØNEW
      TWDØNEW=TW-TWSTØ
      IF (ABS(TWDØNEW).LT.ABS(TWDØLD)) GØ TØ 970
      IF (S.LT.DMIN) GØ TØ 930
      GØ TØ 970
C     INCREMENT TØ NEW PØSITIØN ØN LINE ØF SIGHT
  930 PWSUM=PWSUM+PW
      TWSUM=TWSUM+TW
      DØ 940 II=1,NØNN
      FWSUM(II)=FWSUM(II)+FW(II)
  940 CØNTINUE
  950 JFK=JFK+1
      S=S+DS
      TWØLD=TW
      GØ TØ 670
C     BACK UP-TEMPERATURE STEP TØØ LARGE
```

FIG. 10.
(continued)

```
  960 X=X-DX
      Y=Y-DY
      Z=Z-DZ
      S=S-DS
      JFK=JFK-1
      GØ TØ 990
C     CØMPLETE PRØPERTY SUMS
  970 PWSUM=PWSUM+PW
      TWSUM=TWSUM+TW
      TWØLD=TW
      DØ 980 II=1,NØHN
      FWSUM(II)=FWSUM(II)+FW(II)
  980 CØNTINUE
C     CØMPUTE AVERAGE VALUES FØR INCREMENT
  990 FJFK=JFK
      DSS=FJFK*DS
      JFK=1
      TWSTØ=TWØLD
      PW=PWSUM/FJFK
      TW=TWSUM/FJFK
      DØ 1000 II=1,NØHN
 1000 FW(II)=FWSUM(II)/FJFK
      GØ TØ 1030
C     IF INCREMENT IS ØNLY ØNE STEP
 1010 DSS=DS
      TWSTØ=TW
      DØ 1020 II=1,NØHN
      FX=F11(II)+ZRATIØ*(F21(II)-F11(II))
      FY=F12(II)+ZRATIØ*(F22(II)-F12(II))
      FW(II)=FX+RKATIØ*(FY-FX)
 1020 CØNTINUE
 1030 CØNTINUE
C     PW, TW, AND FW NØW CØNTAIN THE (TØTAL) PRESSURE, TEMPERATURE, AND
C     MØLE FRACTIØN (RESPECTIVELY) AT THE PØINT X, Y, Z.
C     CØMPUTE PARTIAL PRESSURES(CØRRECTED) FØR ALL
C     CØNSTITUENTS
      PWQRST=PW
      PW=PW*491.76/TW
      PWQ=PW
      DØ 1040 II=1,NØHN
      QW(II)=FW(II)*PW
 1040 CØNTINUE
C     IDENTIFY PARTIAL PRESSURES
      PH2Ø=0.
      PCØ2=0.
      PCØ=0.
      DØ 1070 IJK=1,NØHN
      IF (NUMCØN(IJK).NE.1) GØ TØ 1050
      PH2Ø=QW(IJK)
      GØ TØ 1070
 1050 IF (NUMCØN(IJK).NE.2) GØ TØ 1060
      PCØ2=QW(IJK)
      GØ TØ 1070
 1060 IF (NUMCØN(IJK).NE.3) GØ TØ 1070
      PCØ=QW(IJK)
 1070 CØNTINUE
      RAM=((491.76)/TW)**.5
      GAM=1./RAM
C     ØUTER LØØP CØNTRØLS NØ.
C     INITIALIZE DMØ
      DØ 1310 J=IENØI,IENØF,IDENØ
```

FIG. 10.
(continued)

```
      FFLAG=0.
      DMØ=0.
C     INNER LØØP CØNTRØLS CØNSTITUENT ØF INTEREST
      DØ 1300 IJ=1,NØNN
      IF (INPUTF.EQ.0) GØ TØ 1080
      IF (FFLAG.EQ.1.) GØ TØ 1300
      GØ TØ 1180
 1080 IF (NUMCØN(IJ).EQ.0) GØ TØ 1300
      ENU=J
C     FIND CØNSTITUENT ØF INTEREST ACCØRDING TØ IDENTC LIST.
      NUNCØN=NUMCØN(IJ)
      PH2=PWØ-PH2Ø-PCØ2-PCØ
      GØ TØ (1090,1120,1150,1180), NUNCØN
C     WATER VAPØR CALCULATE GAMMA(CØLLISIØN).
C     MAKE SURE WE ARE INSIDE RANGE ØF FIRST CØNSTITUENT CØEFF TABLE
 1090 IF (J.LE.IØN1L.ØR.J.GE.IØN1U) GØ TØ 1300
C     LØØK UP ABSØRPTIØN CØEFFICIENT.ESTABLISH LØCATIØN IN TABLE.
      I=(ENU-CØN1L)/25.
      DØ 1100 JJ=2,NKT
      IF (Tw-TEMK(JJ)) 1110,1110,1100
 1100 CØNTINUE
 1110 M1=JJ-1
      M2=JJ
      AC=CØEF(M1,I)+(CØEF(M2,I)-CØEF(M1,I))*(TW-TEMK(M1))/(TEMK(M2)-TEM
     1(M1))
C     TEST FØR MINIMUM ABSØRPTIØN CØEFFICIENT
      IF (AC.LE.HMIN) GØ TØ 1300
C     AC MULTIPLIED BY .0012 TØ CØNVERT INPUT UNITS (1/CM-ATMØS)
C     INTØ CØMPATIBLE UNITS WITH THE FLØW FIELD.
      AC=.0012*AC
      BC=GAM*(.000042517*PH2Ø+.000056689*PCØ2+.000047241*PCØ+.00020786*
     1H2Ø/GAM+.000023625*PH2)
      Pw=PH2Ø
C     CALCULATE GAMMA(DØPPLER).
      BD=1.39E-6*ENU/RAM
C     CALCULATE 1/D
      NK=1
      IF (ENU.GT.1600.) NK=2
      IF (ENU.GT.2500.) NK=3
      IF (ENU.GT.4400.) NK=4
      IF (ENU.GT.5900.) NK=5
      AST=BI(NK)+CI(NK)*TW*TW
      ASTAR=10.**AST
      THITA=(.44*RAM+.09)*RAM
      CSTAR=(((C4)*Tw+C3)*Tw+C2)*TW+C1
      GEMSTR=THITA*CSTAR+(1.-CSTAR)*RAM*.044
      DINV=ASTAR/GEMSTR
C     CALCULATE GAMMA(C)/D
      BCDI=BC*DINV
      BDDI=BD*DINV
      GØ TØ 1220
C     CØ2 SAME PRØCEDURE AS ABØVE EXCEPT TABLE LØØK UP FØR 1/D
 1120 IF (J.LE.IØN2L.ØR.J.GE.IØN2U) GØ TØ 1300
      I=((J-IØN2L)/25)+NKNU
      DØ 1130 JJ=2,NKT
      IF (TW-TEMK(JJ)) 1140,1140,1130
 1130 CØNTINUE
 1140 M1=JJ-1
      M2=JJ
      AC=CØEF(M1,I)+(CØEF(M2,I)-CØEF(M1,I))*(TW-TEMK(M1))/(TEMK(M2)-TEM
     1(M1))
```

FIG. 10.
(continued)

```
      AC=.0012*AC
      IF (AC.LE.HMIN) GØ TØ 1300
      BC=GAM*(.000042517*PCØ2+.000033068*PH2Ø+.000023620*PCØ+.0000378*P
     12)
      PW=PCØ2
      BD=.891E-6*ENU/RAM
C     TABLE LØØK UP FØR 1/D.
      I=(ENU-CØN2L)/25.
      DINV=FINS(M1,I)+(FINS(M2,I)-FINS(M1,I))*(TW-TEMK(M1))/(TEMK(M2)-T
     1MK(M1))
      BCDI=BC*DINV
      BDDI=BD*DINV
      GØ TØ 1220
C     CØ. SAME AS WATER VAPØR.
 1150 IF (J.LE.IØN3L.ØR.J.GE.IØN3U) GØ TØ 1300
      I=((J-IØN3L)/25)+KKNU
      DØ 1160 JJ=2,NKT
      IF (TW-TEMK(JJ)) 1170,1170,1160
 1160 CØNTINUE
 1170 M1=JJ-1
      M2=JJ
      AC=CØEF(M1,I)+(CØEF(M2,I)-CØEF(M1,I))*(TW-TEMK(M1))/(TEMK(M2)-TEM
     1(M1))
      AC=.0012*AC
      IF (AC.LE.HMIN) GØ TØ 1300
      BC=.000023620*GAM*(PCØ+PH2Ø+PCØ2+PH2)
      BD=1.12E-6*ENU/RAM
      PW=PCØ
      DIN=EXP(-1561.5*1.8/TW)
      DINV=(.29*(1.+DIN)**1.75)/(1.-DIN)
      DINV=DINV*SCAL
      BCDI=BC*DINV
      BDDI=BD*DINV
      GØ TØ 1220
C     CARBØN BLØCK
 1180 FFLAG=1.
      IF (J.LE.999) GØ TØ 1300
      PWQRST=PWQ
      WM=18.016*PH2Ø/PWQRST+44.01*PCØ2/PWQRST+2.016*(1.-PH2Ø/PWQRST-PCØ
     1/PWQRST-PCØ/PWQRST)+28.01*PCØ/PWQRST
      FWQQ=W/(273.2+82.07/WM)
      PW=FWQQ*PWQ
      DØ 1190 I=2,7
      IF (TW-TEM(I)) 1200,1200,1190
 1190 CØNTINUE
 1200 M1=I-1
      M2=I
      DØ 1210 L=M1,M2
 1210 TAC(L)=(((A(L,5)*ENU+A(L,4))*ENU+A(L,3))*ENU+A(L,2))*ENU+A(L,1)
      AC=TAC(M1)+(TAC(M2)-TAC(M1))*(TW-TEM(M1))/(TEM(M2)-TEM(M1))
      AC=.0012*AC
 1220 CØNTINUE
C     (1/ATMØS)*.0004725414 = SQ-FT/PØUND
C     (1/CM)*2.54 = 1/INCHES
C     THEREFØRE K(1/CM-ATMØS) IS MULTIPLIED BY .001200 TØ BE CØMPATIBLE
C     IN THE EXPRESSIØNS P*K*DS (EXPØNENT) AND P*K*I*DS*DNU*DTHETA*DPHI
C     SINCE P IS IN PØUNDS/SQ-FT AND DS IS IN INCHES.
C     CØMPUTE INTENSITY
      EYE=1.049E-12*ENU*ENU*ENU/(EXP(2.585*ENU/TW)-1.)
      PK=AC*PW*DSS
      DFØ=PK
```

FIG. 10.
(continued)

```
      GØ TØ (1230,1240,1250,1260), NUNCØN
 1230 L=(J-IENUI)/IDENU+1
      ACØ1(L)=ACØ1(L)+BCDI*DFØ
      ACØ=ACØ1(L)
      ADØ1(L)=ADØ1(L)+BDDI*DFØ
      ADØ=ADØ1(L)
      FØ1(L)=FØ1(L)+DFØ
      FØ=FØ1(L)
      GØ TØ 1270
 1240 L=(J-IØN2L)/IDENU
      ACØ2(L)=ACØ2(L)+BCDI*DFØ
      ACØ=ACØ2(L)
      ADØ2(L)=ADØ2(L)+BDDI*DFØ
      ADØ=ADØ2(L)
      FØ2(L)=FØ2(L)+DFØ
      FØ=FØ2(L)
      GØ TØ 1270
 1250 L=(J-IØN3L)/IDENU
      ACØ3(L)=ACØ3(L)+BCDI*DFØ
      ACØ=ACØ3(L)
      ADØ3(L)=ADØ3(L)+BDDI*DFØ
      ADØ=ADØ3(L)
      FØ3(L)=FØ3(L)+DFØ
      FØ=FØ3(L)
      GØ TØ 1270
C     CARBØN
 1260 L=(J-IENUI)/IDENU+1
      FØ4(L)=FØ4(L)+DFØ
      FØ=FØ4(L)
      GE2=1.E+8
      GE4=1.E+8
      GØ TØ 1290
 1270 IF (ACØ.GE.0.) GØ TØ 1280
      WRITE (6,1770) L,NUNCØN,X,Y,Z,ACØ,BC,DINV,AC,PW,DSS
 1280 DCØ=FØ/SQRT(1.+.25*FØ*FØ/ACØ)
      DDO=1.7*ADØ/FØ*SQRT(ALØG(1.+(.589*FØ*FØ/ADØ)**2))
      GE1=DCØ/FØ
      GE1=GE1*GE1
      GE2=1.-GE1
      GE2=1./GE2/GE2
      GE3=DDO/FØ
      GE3=GE3*GE3
      GE4=1.-GE3
      GE4=1./GE4/GE4
 1290 CØNTINUE
      DMØ=FØ*SQRT(1.-1./SQRT(GE2+GE4-1.))+DMØ
 1300 CØNTINUE
      IF (DMØ.LE.0.) GØ TØ 1310
      L=(J-IENUI)/IDENU+1
      GØLD(L)=GNEW(L)
      GNEW(L)=EXP(-DMØ)
      SPKIDS(L)=SPKIDS(L)-EYE*(GNEW(L)-GØLD(L))
 1310 CØNTINUE
 1320 S=S+DS
      TINDEX=0.
      TWDNEW=0.0
      IF (DMIN-S) 1330,670,670
 1330 SUM1=0.
      DØ 1340 L=IENUI,IENUF,IDENU
      I=(L-IENUI)/IDENU+1
      SLIP(I)=SLIP(I)+SPKIDS(I)*SANKA
```

FIG. 10.
(continued)

```
 1340 SUM1=SUM1+SPKIDS(I)
C     FACTØR ØF 1.00001 TØ PRECLUDE EFFECT ØF BINARY RØUND-ØFF
      SUM2=SUM2+SUM1
 1350 PHI=PHI+DPHI
      IF (1.00001*PHIF-PHI) 1360,500,500
 1360 FLUX=FLUX+SUM2*SINKØ
 1370 PART1=57.2957795*(THETA+DTHETA/2.)
      PART2=FLUX*FLUFF
      WRITE (6,1710) PART1,PART2
      THETA=THETA+DTHETA
      IF (1.00001*THETAF-THETA) 1380,470,470
C     INTEGRATIØN IS NØW CØMPLETE. FLUX CØNTAINS VALUE ØF INTEGRAL.
 1380 FLUX=FLUX*FLUFF
      WRITE (6,1590) FLUX
      CALL SECØCK (DUM,DUM,TNEW,DUM)
      ITIM=TNEW-TØLD
      WRITE (6,1640) ITIM
      IF (KA) 1390,1400,1390
 1390 REWIND 8
 1400 CØNTINUE
      IF (NSPEK.EQ.0) GØ TØ 350
      J=1
      DØ 1420 L=IENUI,IENUF,IDENU
      I=(L-IENUI)/IDENU+1
      J=J-1
      IF (J.GT.0) GØ TØ 1410
      J=50
      WRITE (6,1720)
 1410 ENU=L
      ELAM=1.E+4/ENU
      EYELAM=1.E-4*(ENU*ENU-.25*DENU*DENU)/DENU*SLIP(I)*SCAL6
      WRITE (6,1730) ELAM,EYELAM,ENU,SLIP(I)
 1420 CØNTINUE
      GØ TØ 350
C
 1430 FØRMAT (4I10)
 1440 FØRMAT (76H1*****MAXIMUM NUMBER ØF TEMPERATURES IN TABLE ØF ABSØR
     1TIØN CØEFFICIENTS IS ,I3)
 1450 FØRMAT (76H1*****MAXIMUM NUMBER ØF WAVE NUMBERS IN TABLE ØF ABSØR
     1TIØN CØEFFICIENTS IS ,I3)
 1460 FØRMAT (3E9.2)
 1470 FØRMAT (7E10.0)
 1480 FØRMAT (3I6)
 1490 FØRMAT (41H1*****NUMBER ØF BLØCKING CIRCLES EXCEEDS ,I3)
 1500 FØRMAT (4E10.0,3I5)
 1510 FØRMAT (1H1,29X,38HPLUME RADIANCE CALCULATIØN (2-D), RUN ,I8,7X,1
     1HDATE ØF RUN- ,A6,//58X20H(GENERAL RADIATIØN) ,//43X22HFIELD IDEN
     2IFICATIØN- ,4A6,//30X26HCØNSTITUENTS ØF INTEREST- ,8A6)
 1520 FØRMAT (1H1,54X,21HFLØW FIELD PRØPERTIES//56X,2HZ=,F10.4,7H INCHE
     1//17X,79HR (INCHES)     TEMP (DEG R)   TØT PRES (PSF)
     2            MØLE FRACTS/62X58HCØNSTITUENT 1  CØNSTITUENT 2  CØNSTI
     3UENT 3  CØNSTITUENT 4///)
 1530 FØRMAT (10X,7F16.6)
 1540 FØRMAT (1H1,46X,38HABSØRPTIØN CØEFFICIENTS (1/CM-1/ATMØS)//64X,1A
     1//30X14HWAVE NØ.(1/CM)15X20HTEMPERATURES (DEG R)//45X7F8.0//)
 1550 FØRMAT (30XF9.0,7X7F8.4)
 1560 FØRMAT (30X,F9.0,7X,7F8.1)
 1570 FØRMAT (1H1,57X,16HBLØCKING CIRCLES//44X1HX11X1HY11X1HZ11X1HR7X4H
     1YPE//)
 1580 FØRMAT (36X,4F12.4,4X,I2)
 1590 FØRMAT (/////51X2HF=E16.8,14H BTU/SQ-FT-SEC)
```

FIG. 10.
(continued)

```
1600 FØRMAT (//50X,32HCØØRDINATES ØF ØBSERVATIØN PØINT//57X2HX=F9.2,7H
     1INCHES/57X,2HY=F9.2,7H INCHES/57X2HZ=F9.2,7H INCHES///42X33HINCLI
     2ATIØN ØF PLANE ØF INTEREST ,F7.2,8H DEGREES)
1610 FØRMAT (//55X21HLIMITS ØF INTEGRATIØN//33X5HVARIABLE7X5HUNITS10X5
     1LØWER9X5HUPPER7X9HINCREMENT//35X5HTHETA7X3HDEGREES 3F14.3,/36X3HP
     2I8X8HDEGREES 3F14.3/34X8HWAVE NØ.6X7H1/CM   3I14/37X1HS9X8HINCHES
     3 3F14.3)
1620 FØRMAT (4E10.0,I5)
1630 FØRMAT (//30X,34HABSØRPTIØN CØEFFICIENTS LESS THAN ,F8.4,27H ARE
     1ØNSIDERED TØ BE ZERØ.)
1640 FØRMAT (///50X17HCALCULATIØN TIME ,I6,8H SECØNDS)
1650 FØRMAT (1HO29X12A6)
1660 FØRMAT (E10.0)
1670 FØRMAT (1H1,46X,38HFINE STRUCTURE PARAMETERS (1/D)        //64X,1A
     1//30X14HWAVE NØ.(1/CM)15X20HTEMPERATURES (DEG R)//45X7F8.0//)
1680 FØRMAT (//60X13HSCALE FACTØRS//30X21HFLØW FIELD DIMENSIØNS4XF12.5
     14X18HABSØRPTIØN CØEFS  F12.5,/30X23HFLØW FIELD TEMPERATURES2X,F12
     25,4X12HSHAPE FACTØR6XF12.5,/30X20HFLØW FIELD PRESSURES5X,F12.5,/3
     3X25HFLØW FIELD MØLE FRACTIØNSF12.5,/30X3H1/D22XF12.5)
1690 FØRMAT (//30X30HWINDØW ØPTIØN WAS SELECTED. D=,1PE12.5,3H H=,E12.
     1,3H W=,E12.5)
1700 FØRMAT (1H144X42HACCUMULATIØN ØF FLUX WITH RESPECT TØ THETA//55X,
     1HTHETA10X4HFLUX//)
1710 FØRMAT (52XF9.3,4X1PE15.7)
1720 FØRMAT (1H141X47HDISTRIBUTIØN ØF FLUX WITH REGARD TØ WAVE NUMBER/
     1/40X6HLAMØDA6X8HI-LAMØDA6X11HWAVE NUMBER7X4HFLUX//)
1730 FØRMAT (35XF12.4,3X1PE15.7,0PF10.1,4X1PE15.7)
1740 FØRMAT (//30X,58HTHE CARBØN MASS FRACTIØN (PØUNDS CARBØN PER PØUN
     1D GAS) IS ,F8.4)
1750 FØRMAT (//30X,23HTEMPERATURE STEP SIZE =F7.1)
1760 FØRMAT (51HONØ. ØF NØ. INCREMENTS EXCEEDS ALLØWED 440 STØRAGES//)
1770 FØRMAT (1HO,2I7,3X,3F7.1,6E15.6)
     END
$*
$IBFTC FLØWDK  DECK
      SUBRØUTINE FLØWTC
C     RØUTINE TØ READ FLØW FIELD FRØM BINARY TAPE,
C       ØR FRØM CARDS
C         353883
      DIMENSIØN KØN(8), HDG(12), BETA(4), ZZ(16), NR(15), R(15,75), T(1
     1,75), P(15,75), F(15,75,4), KNN(2), IDENTC(8), NUMCØN(4), KØNAME(
     20,2), CØNWT(20)
      CØMMØN /FLDFLP/ KA,SCAL,SCAL2,SCAL3,SCAL4,SCAL5,SCAL6,SCAL7,KØN,H
     1G,BETA,ZZ,NØPS,NR,R,T,P,F,NØNN,NZ,KNN,NØN,NUMCØN,KASE,ICASE,NØCØN
      DATA NRMAX,NZMAX,LIBCØN,ASTR/75,15,4,6H******/
      DATA (IDENTC(I),I=1,8)/6HH2Ø1'S,6H      ,6HC1Ø2(G,6H)      ,6HC1Ø1
     1G,6H)      ,6HCARBØN,6H      /
      CØDE=0.
      IF (KA) 90,10,90
C     FLØW FIELD IS TØ CØME FRØM CARDS.
   10 READ (5,470) SCAL,SCAL2,SCAL3,SCAL4,SCAL5,SCAL6,SCAL7
      READ (5,480) (KØN(I),I=1,NØN)
      READ (5,520) HDG
      READ (5,520) BETA
      WRITE (6,510) (HDG(I),I=1,12)
      WRITE (6,500) KASE,DATE,(BETA(I),I=1,4),(KØN(I),I=1,NØN)
      I=1
   20 READ (5,530) ZZ(I),NØPS
      IF (NØPS.LE.0) GØ TØ 50
      IF (NØPS.LE.NRMAX) GØ TØ 30
      WRITE (6,450) NRMAX,I,NØPS
```

FIG. 10.
(continued)

```
      NØPS=NRMAX
   30 NR(I)=NØPS
      DØ 40 L=1,NØPS
   40 READ (5,540) R(I,L),T(I,L),P(I,L),(F(I,L,KKKK),KKKK=1,NØNN)
      I=I+1
      IF (I.LE.NZMAX) GØ TØ 20
      WRITE (6,460) NZMAX
      NØPS=0
   50 NZ=I-1
      DØ 80 KKKK=1,NØNN
      DØ 60 L=1,LIBCØN
      KNN(1)=KØN(2*KKKK-1)
      KNN(2)=KØN(2*KKKK)
      IF (IDENTC(2*L-1).EQ.KNN(1).AND.IDENTC(2*L).EQ.KNN(2)) GØ TØ 70
   60 CØNTINUE
      WRITE (6,550) KNN
      NUMCØN(KKKK)=0
      GØ TØ 80
   70 NUMCØN(KKKK)=L
   80 CØNTINUE
      RETURN
C     FLØW FIELD IS TØ CØME FRØM TAPE N.
   90 DØ 430 KKKK=1,NØNN
      REWIND 8
  100 READ (8) (HDG(I),I=1,12),ICASE
      IF (KASE-ICASE) 110,180,110
C     CASE NUMBER DØES NØT MATCH. CHECK FØR END ØF TAPE.
  110 DØ 120 I=1,12
      IF (ASTR-HDG(I)) 130,120,130
  120 CØNTINUE
C     SØRRY, END ØF TAPE.
      WRITE (6,440) KASE
      STØP
C     NØT AT END ØF TAPE. SKIP TØ NEXT CASE.
  130 READ (8) (BETA(I),I=1,4)
      READ (8) NØCØN,((KØNAME(I,J),J=1,2),CØNWT(I),I=1,NØCØN)
  140 READ (8) NØPS,NØPS,NØPS,NØPS,DUM
      IF (NRMAX-NØPS) 150,160,160
  150 NØPS=NRMAX
  160 IF (NØPS) 100,100,170
  170 READ (8) (DUM,DUM,DUM,(DUM,M=1,NØCØN),L=1,NØPS)
      GØ TØ 140
C     CASE NUMBER MATCHES. PRØCEED TØ LØAD APPRØPRIATE DATA.
  180 READ (8) (BETA(I),I=1,4)
      READ (8) NØCØN,((KØNAME(I,J),J=1,2),CØNWT(I),I=1,NØCØN)
      IF (KKKK-1) 190,190,200
  190 READ (5,470) SCAL,SCAL2,SCAL3,SCAL4,SCAL5,SCAL6,SCAL7
C     SCAL IS THE CØNVERSIØN FACTØR BY WHICH THIS PRØGRAM IS TØ
C     MULTIPLY THE SPACIAL CØØRDINATES ØF THE FLØW FIELD TØ GET INCHES.
      READ (5,480) (KØN(I),I=1,NØN)
      WRITE (6,500) KASE,DATE,(BETA(I),I=1,4),(KØN(I),I=1,NØN)
      WRITE (6,510) (HDG(I),I=1,12)
  200 DØ 220 I=1,NØCØN
      KNN(1)=KØN(2*KKKK-1)
      KNN(2)=KØN(2*KKKK)
      IF (KNN(1)-KØNAME(I,1)) 220,210,220
  210 IF (KNN(2)-KØNAME(I,2)) 220,260,220
  220 CØNTINUE
C     THIS CASE DØES NØT CØNTAIN THE SPECIFIED CØNSTITUENT.
      IF (KNN(1)-IDENTC(7)) 250,230,250
  230 IF (KNN(2)-IDENTC(8)) 250,240,250
```

FIG. 10.
(continued)

```
240 NUMCØN(KKKK)=4
    GØ TØ 430
250 WRITE (6,490) KASE,(KNN(I),I=1,2)
    STØP
260 ICØN=I
    I1=ICØN-1
    I2=ICØN+1
    I=1
270 READ (8) NØPS,NØPS,NØPS,NØPS,ZZ(I)
    IF (NØPS) 400,400,280
280 IF (NRMAX-NØPS) 290,310,310
290 IF (KKKK.NE.1) GØ TØ 300
    WRITE (6,450) NRMAX,I,NØPS
300 NØPS=NRMAX
310 NR(I)=NØPS
    IF (NØCØN-1) 320,320,330
320 READ (8) (R(I,L),T(I,L),P(I,L),F(I,L,KKKK),L=1,NØPS)
    GØ TØ 380
330 IF (ICØN-1) 340,340,350
340 READ (8) (R(I,L),T(I,L),P(I,L),F(I,L,KKKK),(DUM,M=2,NØCØN),L=1,NØ
   1S)
    GØ TØ 380
350 IF (NØCØN-ICØN) 370,370,360
360 READ (8) (R(I,L),T(I,L),P(I,L),(DUM,M=1,I1),F(I,L,KKKK),(DUM,M=I2
   1NØCØN),L=1,NØPS)
    GØ TØ 380
370 READ (8) (R(I,L),T(I,L),P(I,L),(DUM,M=1,I1),F(I,L,KKKK),L=1,NØPS)
380 I=I+1
    IF (NZMAX-I) 390,270,270
390 IF (CØDE.NE.0.) GØ TØ 400
    WRITE (6,460) NZMAX
    CØDE=1.
    NØPS=0
400 NZ=I-1
    DØ 410 L=1,LIBCØN
    IF (IDENTC(2*L-1).EQ.KNN(1).AND.IDENTC(2*L).EQ.KNN(2)) GØ TØ 420
410 CØNTINUE
    WRITE (6,560) KNN
    NUMCØN(KKKK)=0
    GØ TØ 430
420 NUMCØN(KKKK)=L
430 CØNTINUE
    RETURN
C
440 FØRMAT (18H1*****SØRRY, CASE ,I10,37H IS NØT ØN THIS TAPE. RUN TE
   1MINATED.)
450 FØRMAT (55H0*****WARNING. MAXIMUM NUMBER ØF R VALUES PER Z CUT IS
   1,I3,4H. Z(,I3,6H) HAS ,I3,45H. RUN IS CØNTINUED WITH EXTRA VALUES
   2IGNØRED.)
460 FØRMAT (79H0*****WARNING. MAXIMUM NUMBER ØF Z CUTS HAS BEEN EXCEE
   1ED. Z CUTS ABØVE NUMBER ,I2,34H ARE IGNØRED. EXECUTIØN CØNTINUES.
470 FØRMAT (7E10.0)
480 FØRMAT (12A6)
490 FØRMAT (18H1*****CASE NUMBER ,I10,35H DØES NØT CØNTAIN THE CØNSTI
   1UENT -,2A6,1H-)
500 FØRMAT (1H1,29X,38HPLUME RADIANCE CALCULATIØN (2-D), RUN ,I8,7X,1
   1HDATE ØF RUN- ,A6,//58X20H(GENERAL RADIATIØN) ,/743X22HFIELD IDEN
   2IFICATIØN- ,4A6,//30X26HCØNSTITUENTS ØF INTEREST- ,8A6)
510 FØRMAT (1H029X12A6)
520 FØRMAT (12A6)
530 FØRMAT (E10.0,I10)
```

FIG. 10.
(continued)

```
540 FØRMAT (7E10.0)
550 FØRMAT (23H        THE CØNSTITUENT-2A6,80H-IS NØT RECØGNIZED BY TH
   1 PRØGRAM. EXECUTIØN CØNTINUES WITH CØNSTITUENT IGNØRED.)
560 FØRMAT (22H        THE CØNSTITUENT-2A6,81H-IS NØT RECØGNIZED BY THE
   1 PRØGRAM. EXECUTIØN CØNTINUES WITH CØNSTITUENT IGNØRED.)
    END
```

FIG. 10.
(concluded)

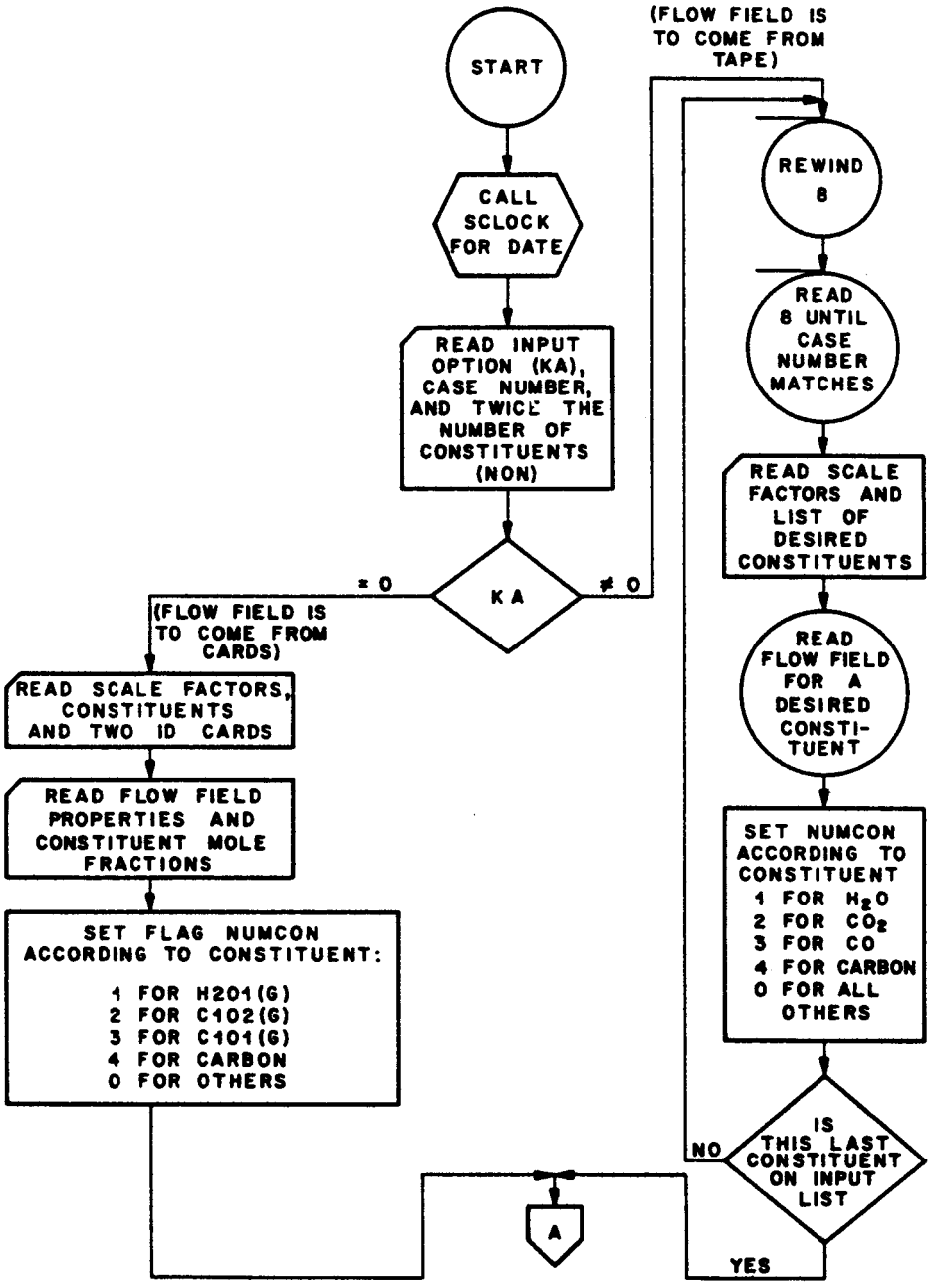

FIG. 11. FLOW CHART OF PROGRAM

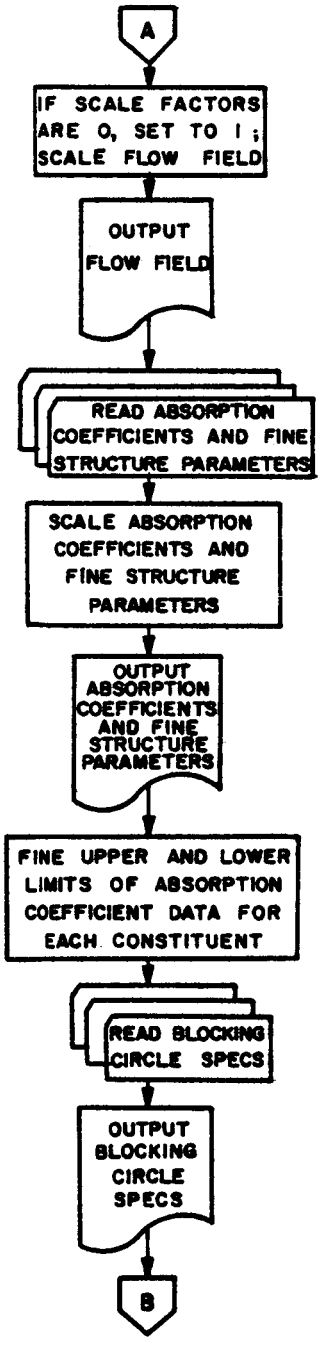

FIGURE 11
(continued)

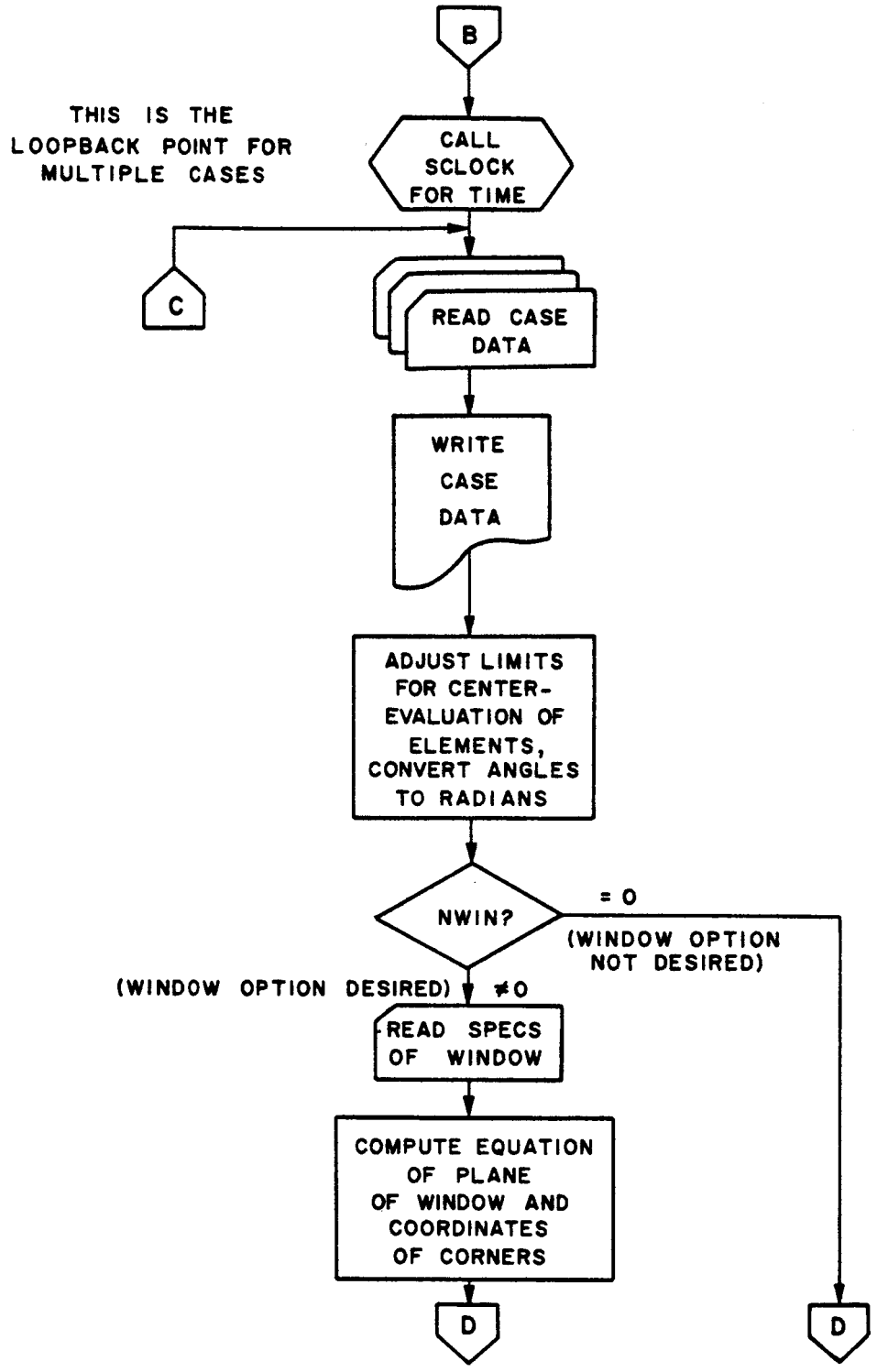

FIGURE 11
(continued)

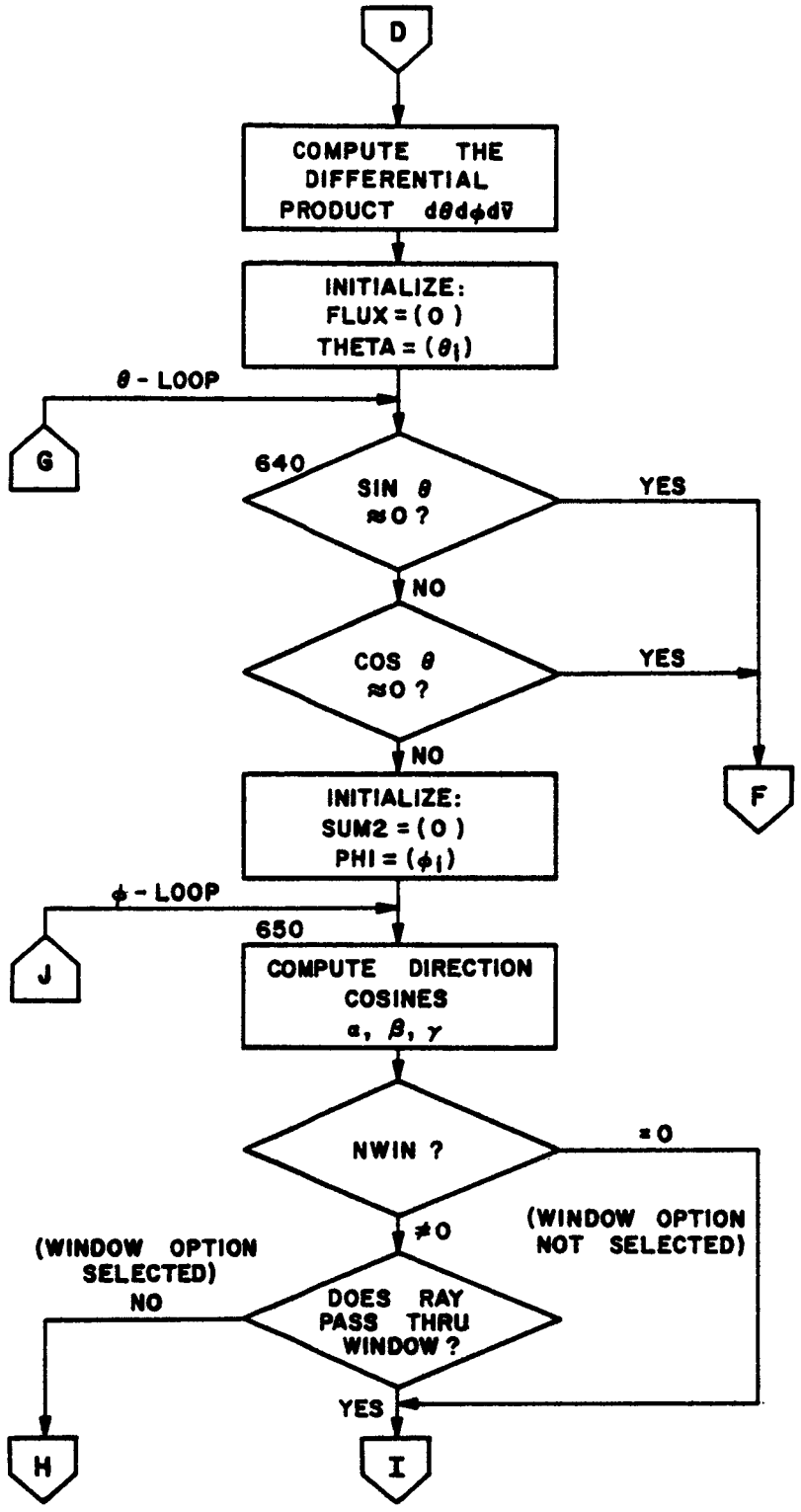

FIGURE 11
(continued)

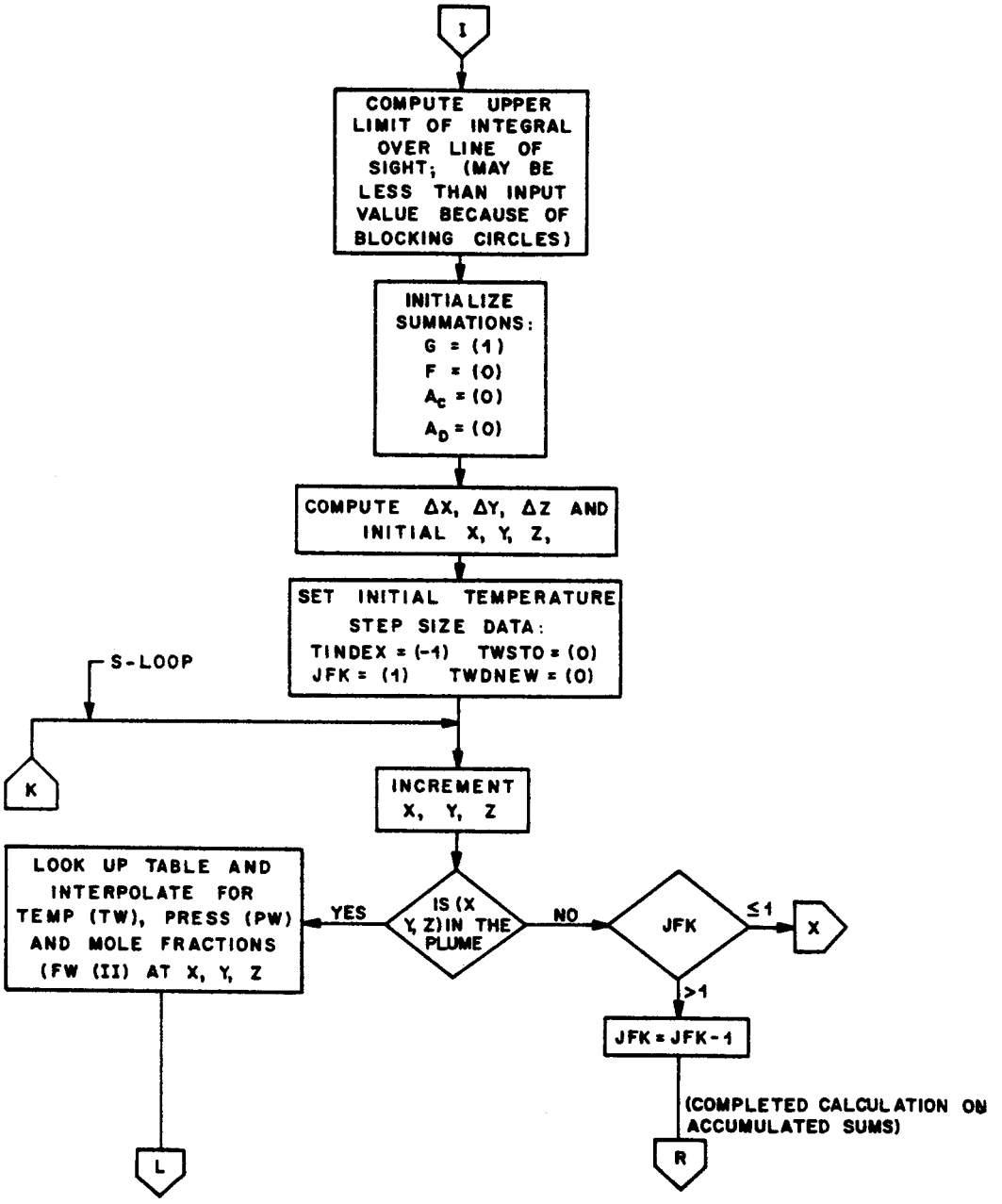

FIGURE 11
(continued)

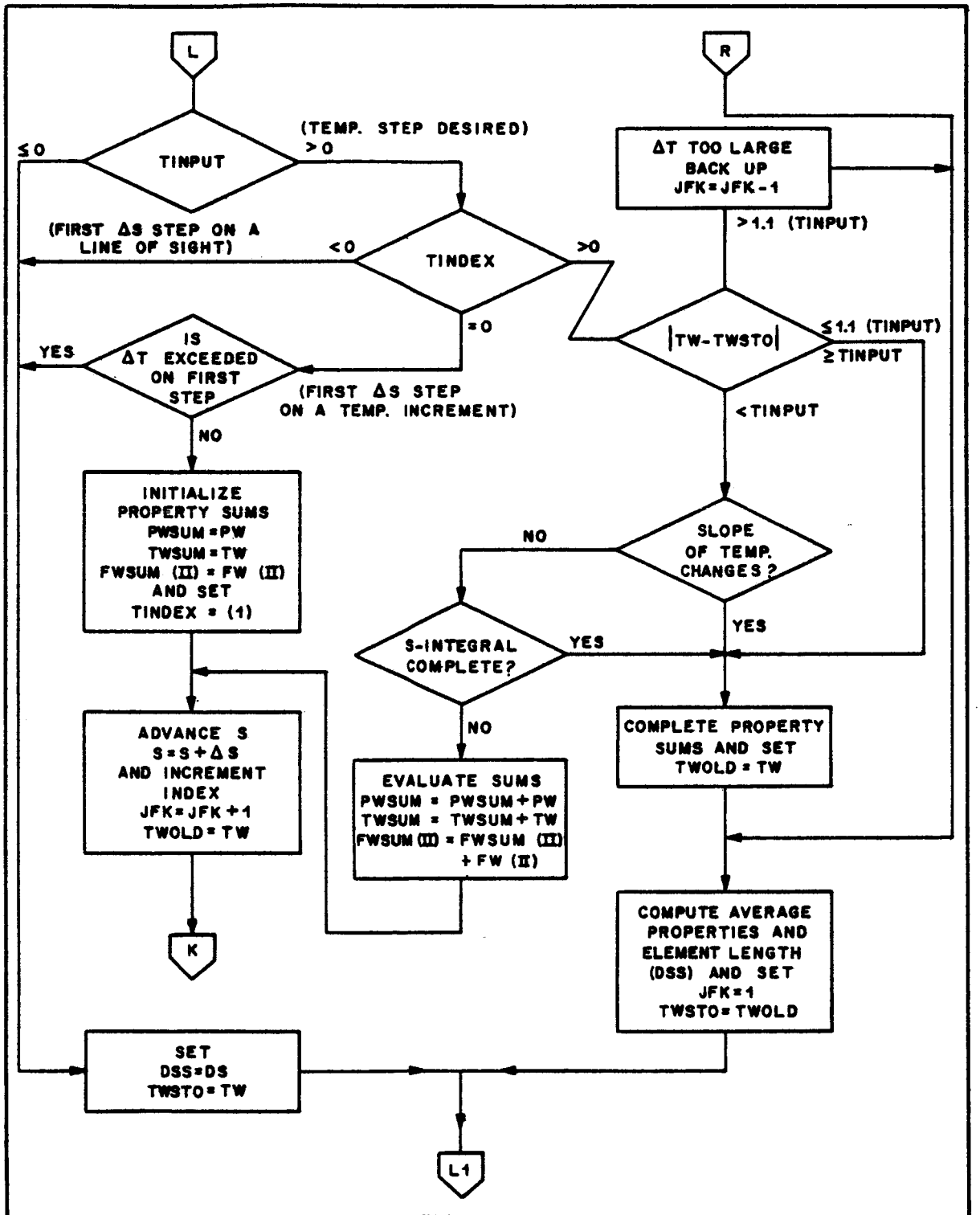

FIGURE 11
(continued)

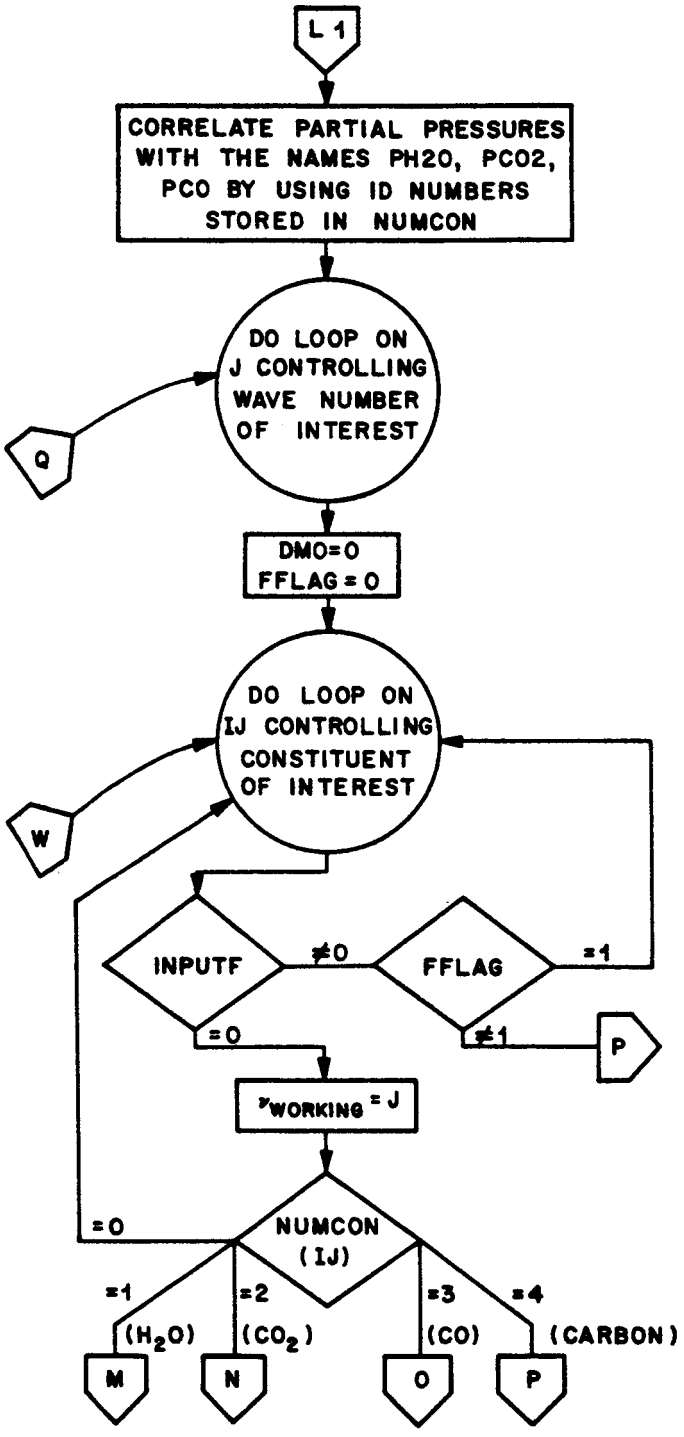

FIGURE 11
(continued)

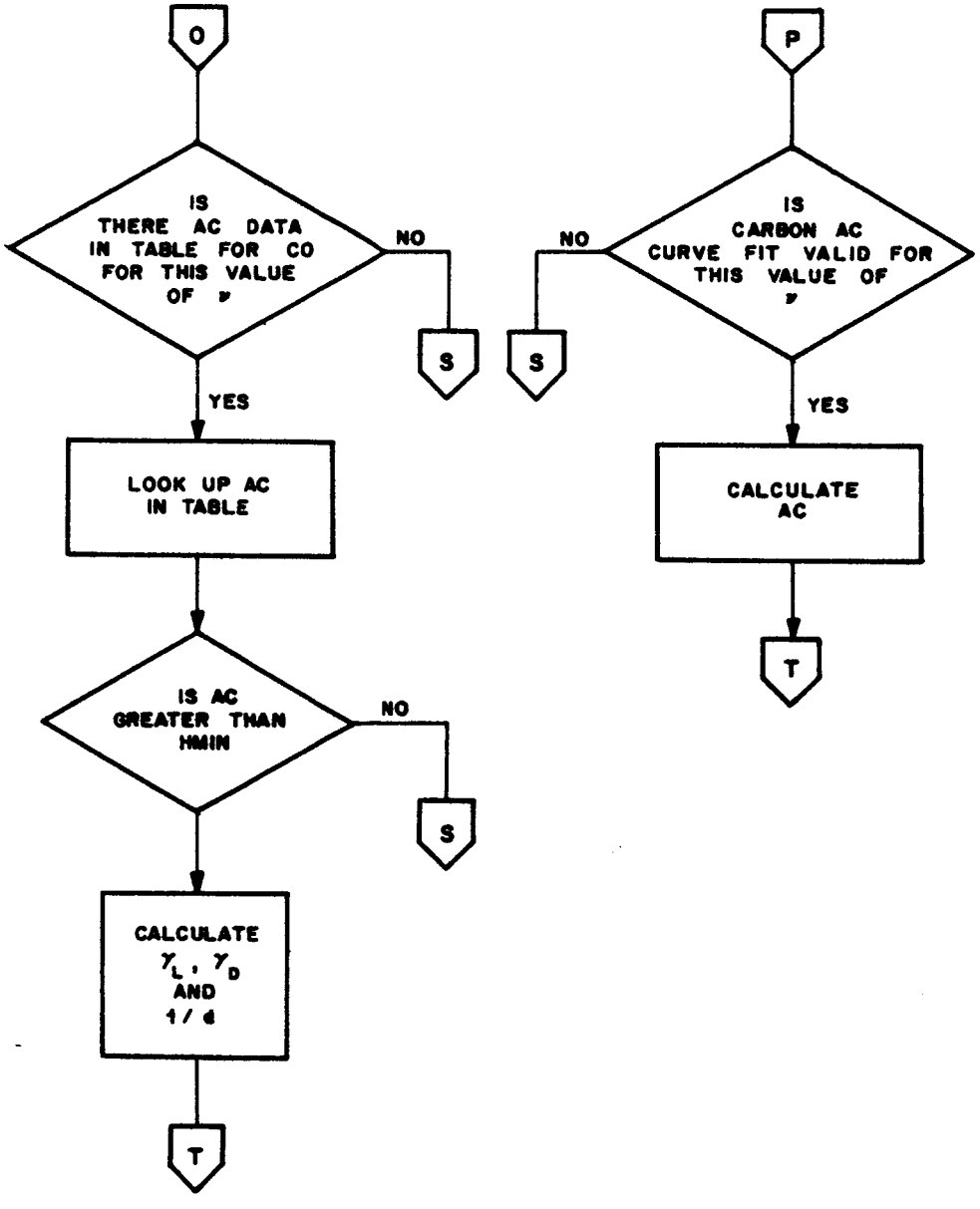

FIGURE 11
(continued)

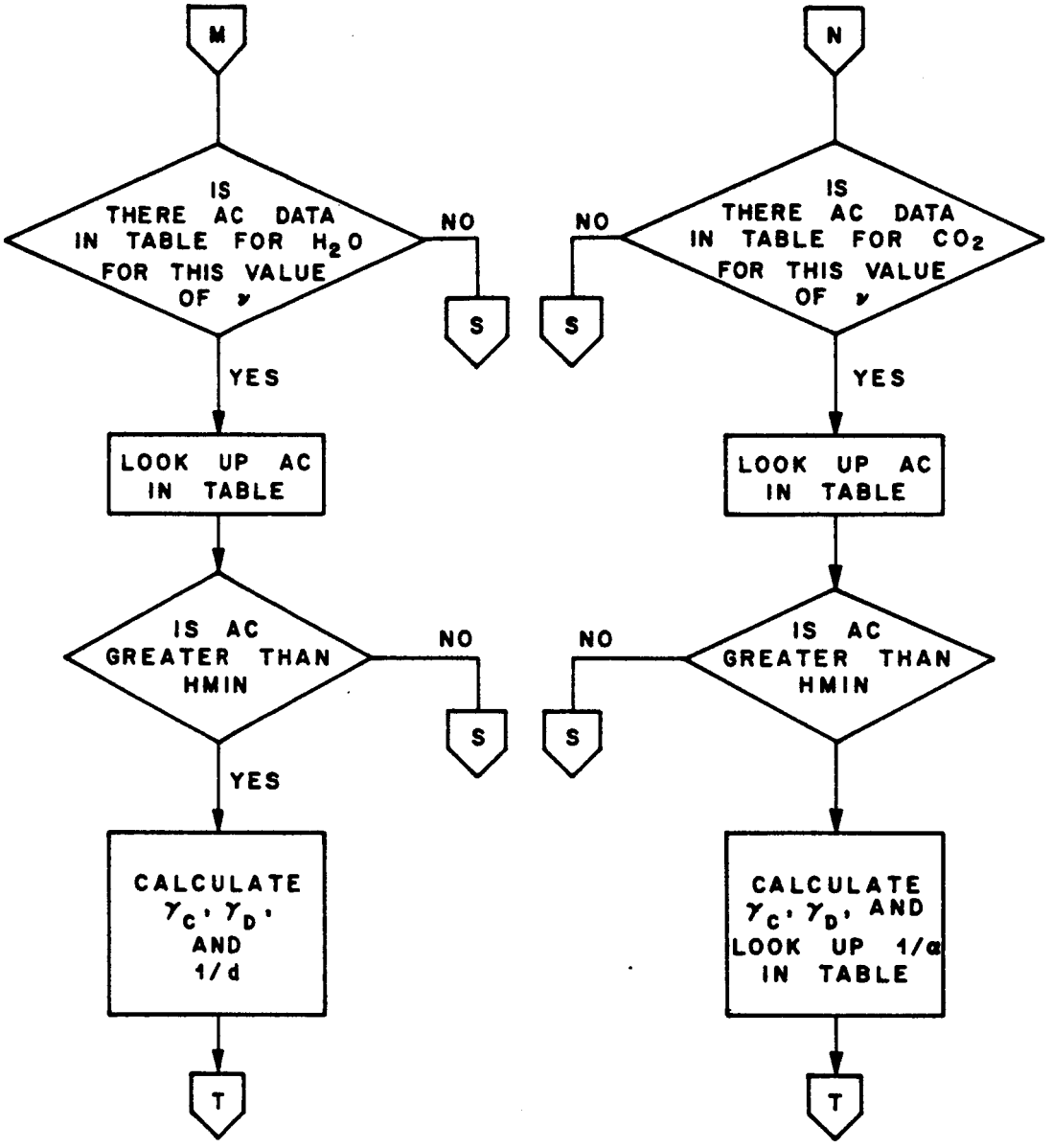

FIG. 11.
(continued)

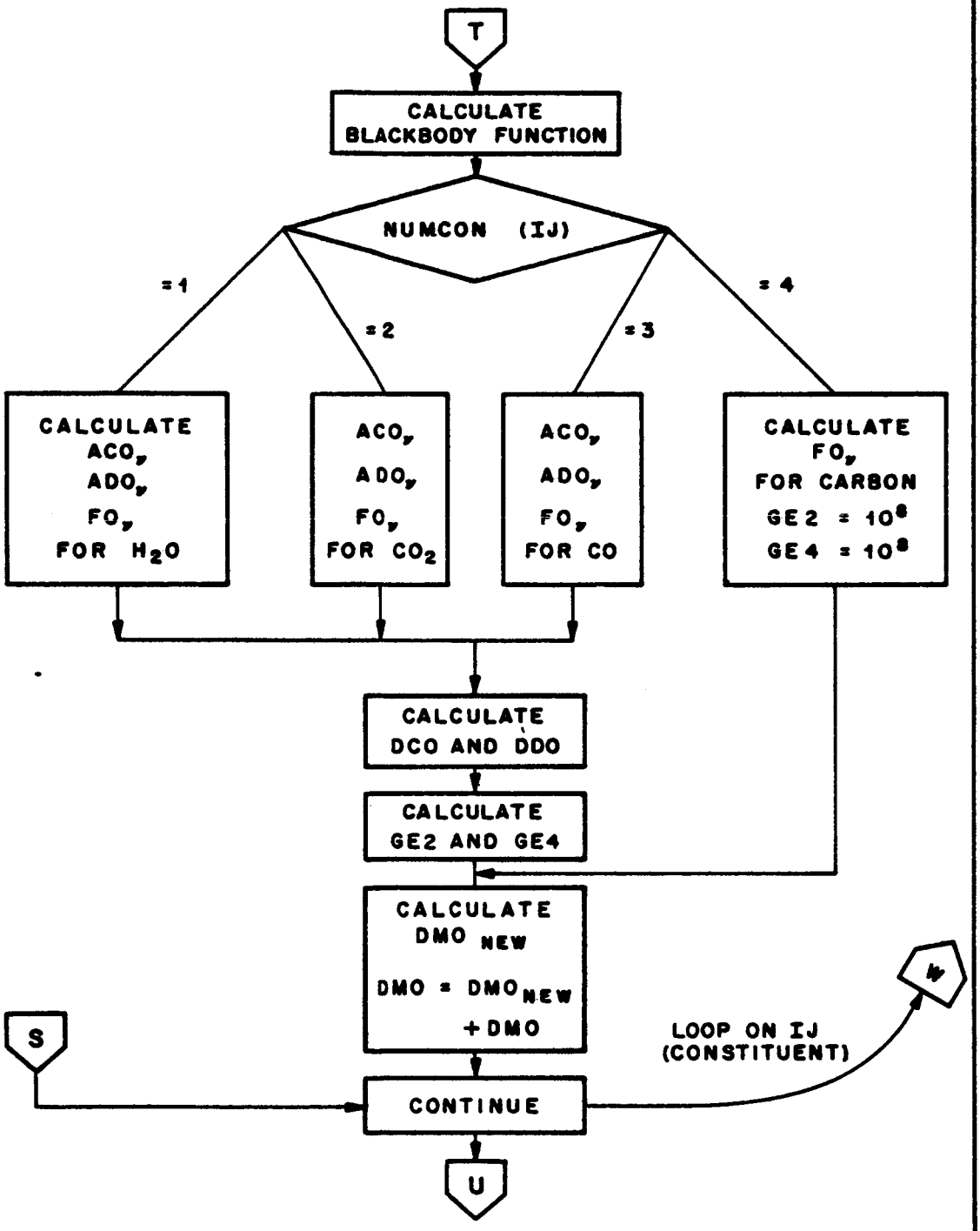

FIGURE 11
(continued)

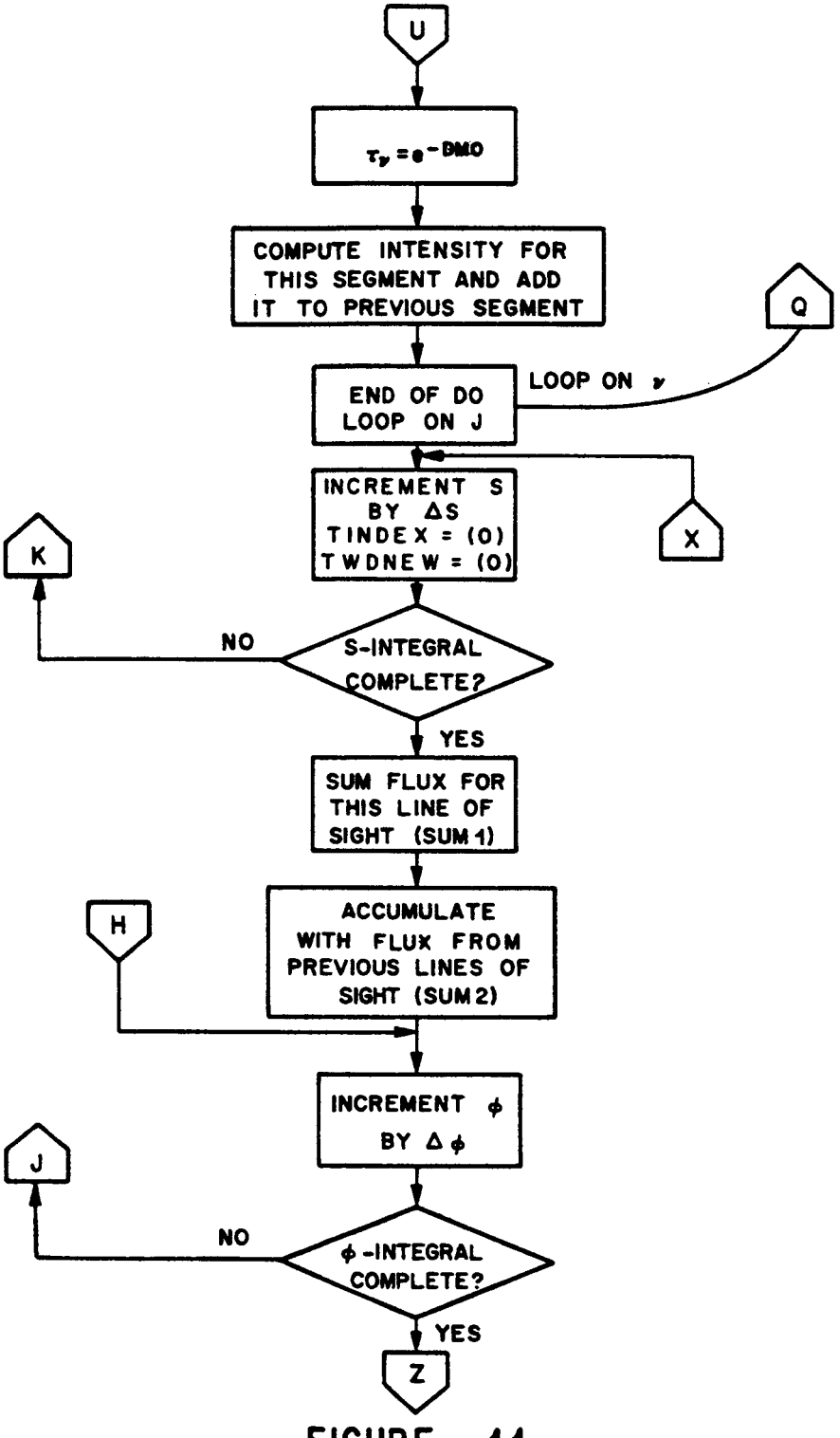

FIGURE 11
(continued)

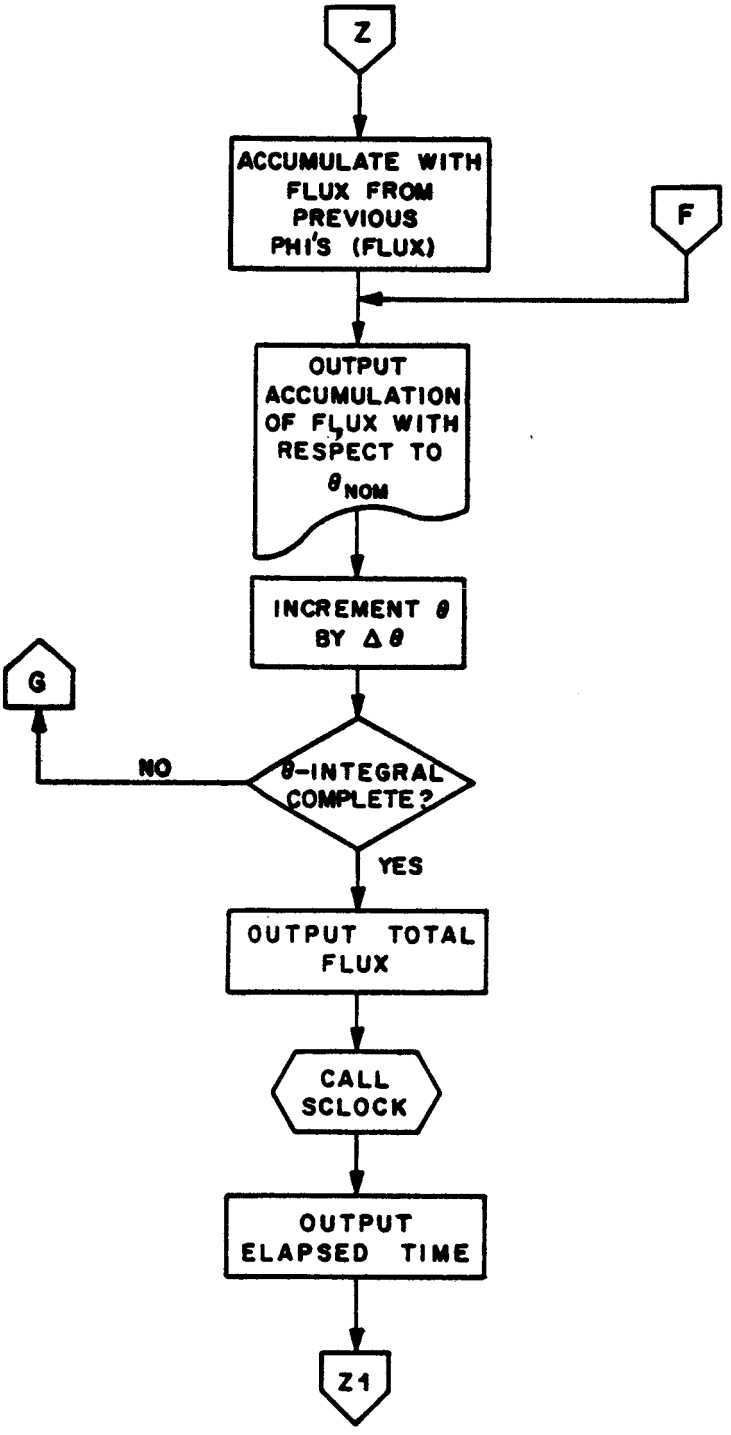

FIG. 11.
(continued)

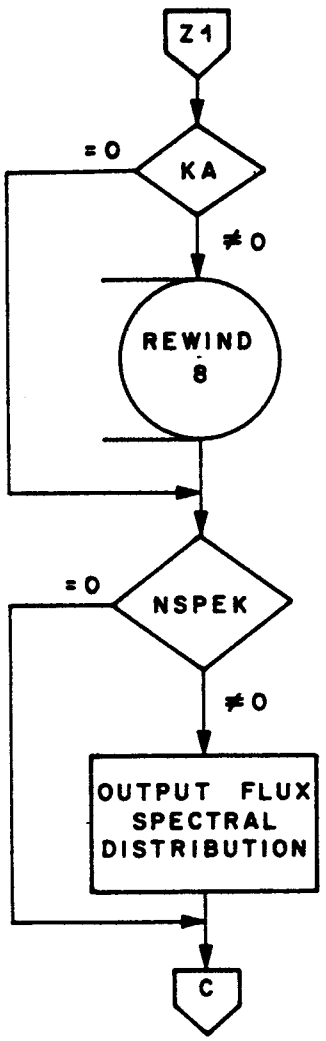

FIG. 11.
(concluded)

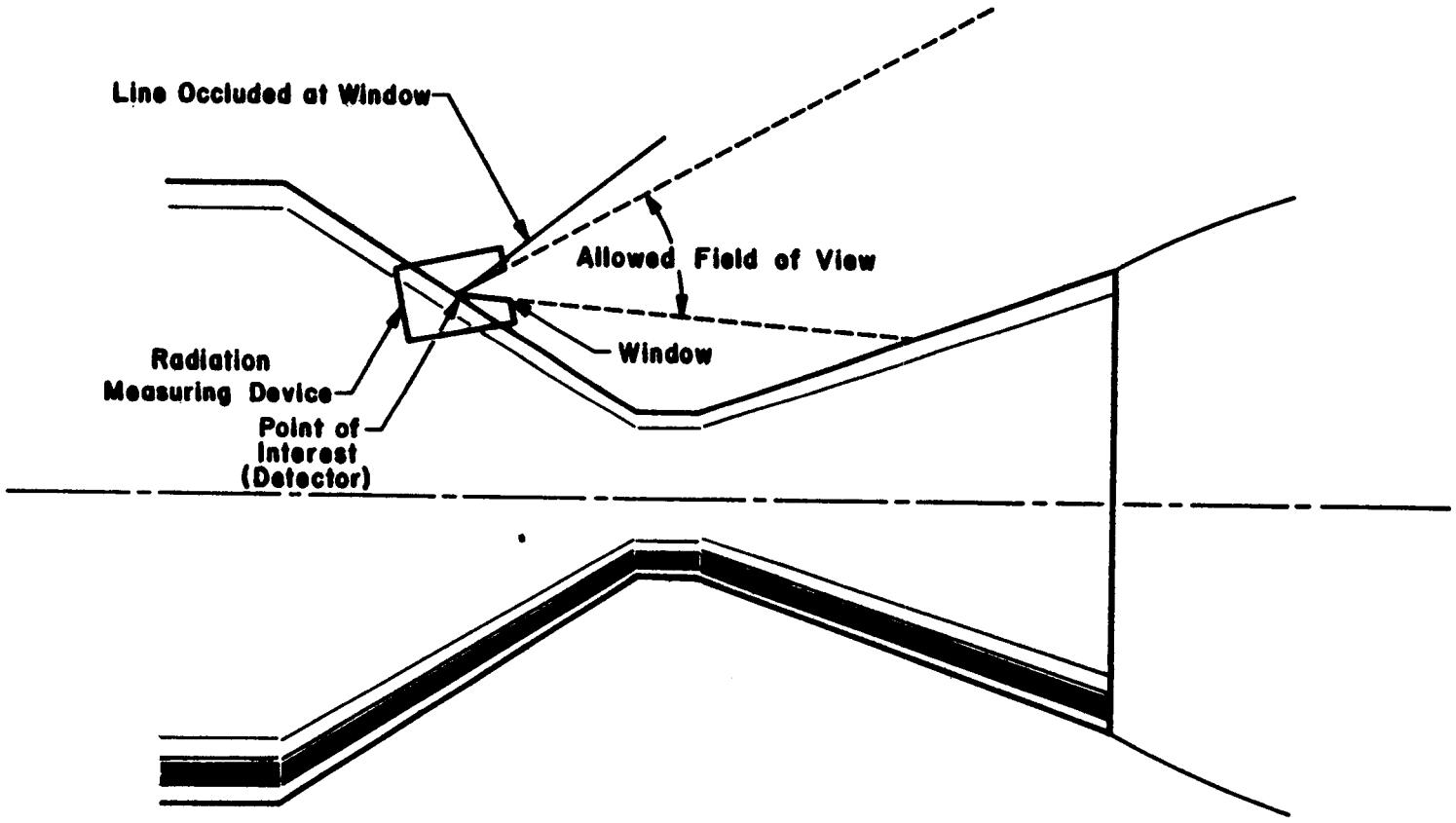

FIG. 12. WINDOW OPTION

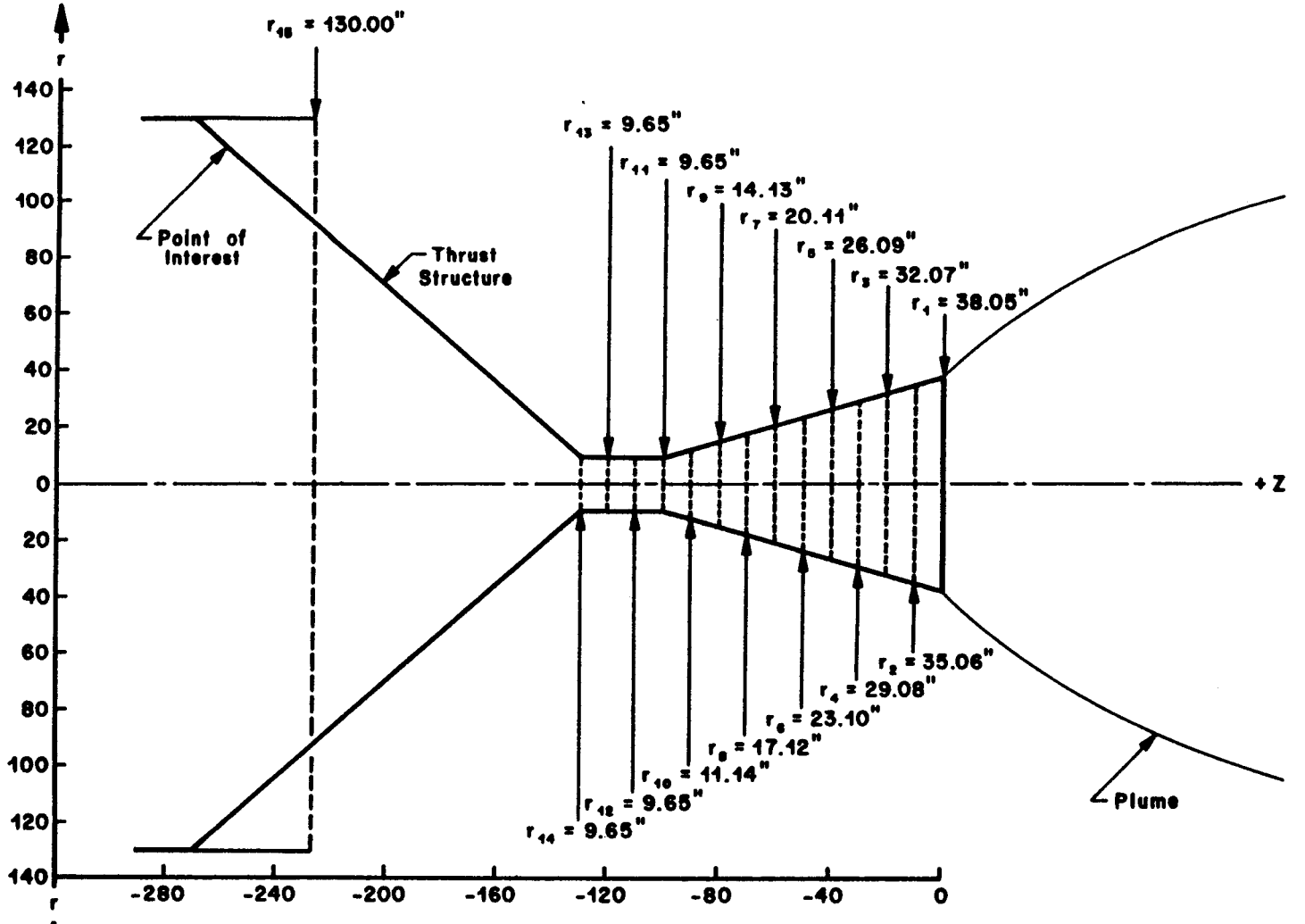

FIG. 13. NOZZLE AND SKIRT BLOCKING CIRCLES

```
$DATA
        1      50703          8
0.5435714
H201(G(      C102(G(      C101(G(      CA830N
        7        439        571        606
  540.      1080.      1300.      2700.      3600.      4500.      5400.
    50.0 9.50E-01 1.03E-01 4.20E-02 1.14E-02 4.50E-03 3.00E-03 1.90E-03
    75.0 2.08E 00 3.65E-01 1.13E-01 3.75E-02 1.95E-02 1.34E-02 6.70E-03
   100.0 3.86E 00 9.90E-01 3.00E-01 1.04E-01 5.77E-02 3.65E-02 2.11E-02
   125.0 6.50E 00 2.01E 00 6.50E-01 2.14E-01 1.28E-01 8.45E-02 5.29E-02
   150.0 8.25E 00 3.25E 00 1.21E 00 4.15E-01 2.60E-01 1.68E-01 1.09E-01
   175.0 8.70E 00 4.52E 00 1.89E 00 7.65E-01 4.50E-01 2.89E-01 1.93E-01
   200.0 8.10E 00 5.40E 00 2.61E 00 1.26E 00 6.95E-01 4.60E-01 3.09E-01
   225.0 6.82E 00 6.00E 00 3.37E 00 1.79E 00 1.01E 00 6.79E-01 4.54E-01
   250.0 4.93E 00 6.22E 00 4.07E 00 2.30E 00 1.35E 00 9.35E-01 6.20E-01
   275.0 3.16E 00 5.92E 00 4.56E 00 2.81E 00 1.72E 00 1.22E 00 8.22E-01
   300.0 1.99E 00 5.28E 00 4.79E 00 3.28E 00 2.13E 00 1.49E 00 1.04E 00
   325.0 1.13E 00 4.50E 00 4.84E 00 3.61E 00 2.49E 00 1.79E 00 1.28E 00
   350.0 5.85E-01 3.70E 00 4.71E 00 3.83E 00 2.84E 00 2.08E 00 1.54E 00
   375.0 2.93E-01 2.89E 00 4.43E 00 3.94E 00 3.12E 00 2.37E 00 1.82E 00
   400.0 1.38E-01 2.05E 00 4.00E 00 3.96E 00 3.30E 00 2.60E 00 2.07E 00
   425.0 6.20E-02 1.43E 00 3.47E 00 3.88E 00 3.41E 00 2.80E 00 2.29E 00
   450.0 2.55E-02 9.50E-01 2.92E 00 3.70E 00 3.45E 00 2.95E 00 2.48E 00
   475.0 9.40E-03 6.10E-01 2.36E 00 3.43E 00 3.42E 00 3.04E 00 2.62E 00
   500.0 3.40E-03 3.86E-01 1.88E 00 3.10E 00 3.34E 00 3.09E 00 2.73E 00
   525.0 1.05E-03 2.36E-01 1.45E 00 2.74E 00 3.19E 00 3.07E 00 2.80E 00
   550.0 3.50E-04 1.44E-01 1.10E 00 2.38E 00 3.00E 00 3.01E 00 2.83E 00
   575.0 1.26E-04 8.20E-02 8.18E-01 2.04E 00 2.76E 00 2.89E 00 2.82E 00
   600.0 4.30E-05 4.45E-02 5.98E-01 1.74E 00 2.48E 00 2.75E 00 2.77E 00
   625.0 1.50E-05 2.42E-02 4.27E-01 1.45E 00 2.22E 00 2.60E 00 2.69E 00
   650.0 5.10E-06 1.27E-02 2.94E-01 1.18E 00 1.95E 00 2.41E 00 2.58E 00
   675.0 1.70E-06 6.30E-03 2.00E-01 9.50E-01 1.69E 00 2.21E 00 2.45E 00
   700.0 5.70E-07 3.00E-03 1.34E-01 7.48E-01 1.46E 00 2.00E 00 2.29E 00
   725.0 1.95E-07 1.40E-03 9.02E-02 5.80E-01 1.24E 00 1.78E 00 2.13E 00
   750.0 6.80E-08 6.20E-04 5.90E-02 4.43E-01 1.03E 00 1.56E 00 1.96E 00
   775.0 3.85E-08 2.75E-04 4.50E-02 3.30E-01 8.45E-01 1.36E 00 1.77E 00
   800.0 6.70E-08 1.13E-04 3.55E-02 2.42E-01 6.95E-01 1.17E 00 1.59E 00
   825.0 1.13E-07 5.00E-05 2.89E-02 1.74E-01 5.60E-01 1.00E 00 1.43E 00
   850.0 1.95E-07 2.30E-05 2.45E-02 1.23E-01 4.50E-01 8.55E-01 1.26E 00
   875.0 3.28E-07 1.03E-05 2.14E-02 1.00E-01 3.57E-01 7.18E-01 1.11E 00
   900.0 5.60E-07 4.60E-06 1.89E-02 8.30E-02 2.78E-01 5.95E-01 9.55E-01
   925.0 9.50E-07 2.05E-06 1.74E-02 7.30E-02 2.39E-01 4.92E-01 8.25E-01
   950.0 1.60E-06 1.40E-06 1.66E-02 6.65E-02 2.11E-01 4.05E-01 7.05E-01
   975.0 2.75E-06 3.50E-06 1.65E-02 6.30E-02 1.95E-01 3.52E-01 6.00E-01
  1000.0 4.70E-06 8.50E-06 1.67E-02 6.20E-02 1.90E-01 3.12E-01 5.10E-01
  1025.0 8.10E-06 2.15E-05 1.75E-02 6.30E-02 1.91E-01 2.89E-01 4.25E-01
  1050.0 1.36E-05 5.70E-05 1.88E-02 6.75E-02 1.94E-01 2.81E-01 3.58E-01
  1075.0 2.35E-05 1.50E-04 2.08E-02 7.45E-02 2.02E-01 2.83E-01 3.29E-01
  1100.0 4.00E-05 3.80E-04 2.33E-02 8.65E-02 2.23E-01 3.14E-01 3.57E-01
  1125.0 6.80E-05 9.50E-04 2.68E-02 1.22E-01 2.60E-01 3.80E-01 4.49E-01
  1150.0 1.20E-04 2.45E-03 3.43E-02 1.76E-01 3.23E-01 4.56E-01 5.07E-01
  1175.0 2.00E-04 6.20E-03 6.38E-02 2.51E-01 3.98E-01 5.11E-01 5.68E-01
  1200.0 3.65E-04 1.48E-02 1.07E-01 3.30E-01 4.58E-01 5.42E-01 6.04E-01
  1225.0 6.80E-04 3.30E-02 1.66E-01 4.05E-01 4.87E-01 5.71E-01 6.32E-01
  1250.0 1.30E-03 6.35E-02 2.44E-01 4.59E-01 4.81E-01 5.52E-01 6.37E-01
  1275.0 2.50E-03 1.23E-01 3.05E-01 4.77E-01 5.02E-01 5.55E-01 6.08E-01
  1300.0 5.00E-03 2.12E-01 4.07E-01 5.47E-01 4.99E-01 5.22E-01 5.78E-01
  1325.0 1.03E-02 2.85E-01 4.89E-01 5.92E-01 4.97E-01 4.86E-01 5.54E-01
  1350.0 2.19E-02 3.28E-01 4.91E-01 5.58E-01 4.89E-01 4.85E-01 5.37E-01
  1375.0 4.85E-02 3.45E-01 5.05E-01 5.21E-01 4.77E-01 4.84E-01 5.20E-01
  1400.0 1.14E-01 3.61E-01 5.38E-01 5.63E-01 5.03E-01 5.02E-01 5.16E-01
```

FIG. 14. SAMPLE INPUT

1425.0	2.49E-01	4.60E-01	6.21E [illegible]	[illegible]-01	5.38E-01	5.38E-01	5.14E-01
1450.0	3.97E-01	5.69E-01	7.49E-01	7.68E-01	5.81E-01	5.65E-01	5.18E-01
1475.0	4.18E-01	6.27E-01	8.24E-01	8.49E-01	6.40E-01	5.94E-01	5.30E-01
1500.0	1.08E 00	1.25E 00	1.09E 00	9.40E-01	8.07E-01	6.63E-01	5.25E-01
1525.0	1.65E 00	1.55E 00	1.14E 00	6.70E-01	5.62E-01	4.83E-01	4.30E-01
1550.0	1.42E 00	6.75E-01	5.39E-01	3.49E-01	2.76E-01	2.63E-01	2.77E-01
1575.0	4.51E-01	2.02E-01	1.37E-01	1.18E-01	1.34E-01	1.56E-01	1.73E-01
1600.0	6.03E-02	5.38E-02	8.63E-02	1.12E-01	1.20E-01	1.25E-01	1.10E-01
1625.0	5.01E-01	2.52E-01	1.37E-01	1.12E-01	1.31E-01	1.35E-01	1.11E-01
1650.0	7.30E-01	4.30E-01	2.50E-01	1.91E-01	1.71E-01	1.70E-01	1.35E-01
1675.0	1.49E 00	5.06E-01	3.12E-01	2.38E-01	2.10E-01	2.01E-01	1.56E-01
1700.0	1.00E 00	5.53E-01	4.41E-01	3.40E-01	2.60E-01	2.20E-01	1.73E-01
1725.0	8.02E-01	6.58E-01	5.28E-01	4.11E-01	3.00E-01	2.40E-01	1.91E-01
1750.0	5.80E-01	5.27E-01	4.56E-01	3.78E-01	3.22E-01	2.83E-01	2.09E-01
1775.0	3.30E-01	4.03E-01	4.00E-01	3.56E-01	3.18E-01	2.70E-01	2.26E-01
1800.0	2.50E-01	3.93E-01	3.87E-01	3.42E-01	3.01E-01	2.75E-01	2.42E-01
1825.0	1.47E-01	2.49E-01	3.13E-01	3.18E-01	2.91E-01	2.68E-01	2.50E-01
1850.0	9.10E-02	2.52E-01	2.98E-01	2.95E-01	2.69E-01	2.53E-01	2.47E-01
1875.0	5.80E-02	1.58E-01	2.14E-01	2.44E-01	2.44E-01	2.45E-01	2.38E-01
1900.0	3.70E-02	1.13E-01	1.84E-01	2.18E-01	2.14E-01	2.18E-01	2.22E-01
1925.0	2.44E-02	1.08E-01	1.56E-01	1.88E-01	1.95E-01	2.00E-01	2.06E-01
1950.0	1.62E-02	6.06E-02	9.76E-02	1.41E-01	1.66E-01	1.79E-01	1.85E-01
1975.0	1.12E-02	4.25E-02	9.03E-02	1.33E-01	1.48E-01	1.56E-01	1.6[illegible]-01
2000.0	7.80E-03	4.00E-02	7.65E-02	1.12E-01	1.29E-01	1.37E-01	1.4[illegible]-01
2025.0	5.40E-03	3.52E-02	6.20E-02	8.76E-02	1.10E-01	1.18E-01	1.2[illegible]E-01
2050.0	3.80E-03	2.52E-02	4.70E-02	7.05E-02	8.88E-02	1.00E-01	1.1[illegible]E-01
2075.0	2.60E-03	1.79E-02	3.53E-02	5.46E-02	7.24E-02	8.28E-02	9.60E-02
2100.0	1.80E-03	1.23E-02	2.70E-02	4.43E-02	6.08E-02	6.86E-02	[illegible].40E-02
2125.0	1.27E-03	8.50E-03	1.99E-02	3.78E-02	5.79E-02	6.40E-02	7.25E-02
2150.0	8.80E-04	6.80E-03	1.48E-02	2.75E-02	4.49E-02	5.21E-02	6.28E-02
2175.0	6.20E-04	4.00E-03	1.04E-02	2.14E-02	3.74E-02	4.53E-02	5.30E-02
2200.0	4.80E-04	2.90E-03	8.75E-03	1.89E-02	3.29E-02	4.03E-02	4.55E-02
2225.0	4.05E-04	2.40E-03	6.65E-03	1.47E-02	2.71E-02	3.45E-02	3.98E-02
2250.0	3.86E-04	2.00E-03	5.41E-03	1.19E-02	2.27E-02	2.99E-02	3.50E-02
2275.0	3.85E-04	1.80E-03	4.75E-03	1.04E-02	1.91E-02	2.61E-02	3.12E-02
2300.0	3.90E-04	1.60E-03	4.20E-03	9.20E-03	1.68E-02	2.32E-02	2.90E-02
2325.0	4.00E-04	1.50E-03	3.87E-03	8.40E-03	1.50E-02	2.10E-02	2.75E-02
2350.0	4.15E-04	1.40E-03	3.59E-03	7.68E-03	1.34E-02	1.89E-02	2.67E-02
2375.0	4.30E-04	1.40E-03	3.42E-03	7.04E-03	1.22E-02	1.71E-02	2.59E-02
2400.0	4.55E-04	1.30E-03	3.17E-03	6.46E-03	1.11E-02	1.57E-02	2.52E-02
2425.0	4.85E-04	1.30E-03	3.00E-03	5.91E-03	1.00E-02	1.46E-02	2.51E-02
2450.0	5.15E-04	1.30E-03	2.79E-03	5.36E-03	9.13E-03	1.45E-02	2.49E-02
2475.0	5.50E-04	1.30E-03	2.56E-03	4.83E-03	8.85E-03	1.45E-02	2.47E-02
2500.0	5.95E-04	1.20E-03	2.24E-03	4.30E-03	8.80E-03	1.55E-02	2.48E-02
2525.0	6.40E-04	1.20E-03	1.99E-03	3.80E-03	8.85E-03	1.65E-02	2.49E-02
2550.0	6.80E-04	1.20E-03	1.51E-03	3.33E-03	9.04E-03	1.76E-02	2.51E-02
2575.0	7.40E-04	1.30E-03	1.58E-03	3.59E-03	9.87E-03	1.93E-02	2.53E-02
2600.0	7.95E-04	1.30E-03	1.70E-03	4.50E-03	1.05E-02	2.06E-02	2.58E-02
2625.0	8.55E-04	1.30E-03	2.53E-03	5.88E-03	1.12E-02	2.14E-02	2.63E-02
2650.0	9.10E-04	1.30E-03	3.24E-03	7.17E-03	1.24E-02	2.31E-02	2.70E-02
2675.0	9.90E-04	1.40E-03	3.06E-03	6.72E-03	1.33E-02	2.53E-02	2.80E-02
2700.0	1.06E-03	1.40E-03	3.19E-03	7.01E-03	1.37E-02	2.69E-02	2.95E-02
2725.0	1.13E-03	1.50E-03	3.42E-03	7.54E-03	1.50E-02	2.99E-02	3.18E-02
2750.0	1.22E-03	1.60E-03	3.98E-03	8.57E-03	1.67E-02	3.10E-02	3.43E-02
2775.0	1.30E-03	1.70E-03	4.13E-03	1.02E-02	1.95E-02	3.46E-02	3.78E-02
2800.0	1.45E-03	1.80E-03	4.13E-03	1.01E-02	2.14E-02	3.70E-02	4.17E-02
2825.0	1.59E-03	1.90E-03	4.36E-03	1.02E-02	2.33E-02	4.10E-02	4.59E-02
2850.0	1.74E-03	2.00E-03	5.12E-03	1.23E-02	2.67E-02	4.34E-02	5.00E-02
2875.0	1.95E-03	2.10E-03	5.39E-03	1.31E-02	2.94E-02	4.93E-02	5.50E-02
2900.0	2.13E-03	2.30E-03	5.99E-03	1.47E-02	3.27E-02	5.23E-02	6.02E-02
2925.0	2.38E-03	2.50E-03	6.04E-03	1.55E-02	3.75E-02	6.03E-02	6.65E-02

FIG. 14.
(continued)

2950.0	2.60E-03	2.70E-03	6.53E-03	1.68E-02	4.14E-02	6.69E-02	7.35E-02
2975.0	2.82E-03	3.00E-03	8.08E-03	2.12E-02	4.82E-02	7.73E-02	8.01E-02
3000.0	2.95E-03	3.30E-03	9.57E-03	2.44E-02	4.97E-02	7.69E-02	8.85E-02
3025.0	3.10E-03	3.70E-03	1.03E-02	2.73E-02	6.00E-02	9.13E-02	9.70E-02
3050.0	3.40E-03	4.00E-03	1.10E-02	3.01E-02	6.62E-02	9.72E-02	1.06E-01
3075.0	7.30E-03	4.50E-03	1.42E-02	4.00E-02	8.47E-02	1.09E-01	1.17E-01
3100.0	9.00E-03	4.80E-03	1.60E-02	4.60E-02	9.28E-02	1.19E-01	1.29E-01
3125.0	1.00E-03	5.10E-03	1.79E-02	5.40E-02	1.09E-01	1.35E-01	1.42E-01
3150.0	6.40E-04	5.50E-03	1.90E-02	5.98E-02	1.14E-01	1.49E-01	1.55E-01
3175.0	1.60E-03	6.00E-03	2.39E-02	7.95E-02	1.36E-01	1.69E-01	1.70E-01
3200.0	3.30E-03	7.00E-03	2.85E-02	9.14E-02	1.53E-01	1.85E-01	1.87E-01
3225.0	4.10E-03	8.60E-03	3.59E-02	1.05E-01	1.74E-01	2.09E-01	2.02E-01
3250.0	4.10E-03	1.03E-02	4.39E-02	1.25E-01	1.94E-01	2.28E-01	2.20E-01
3275.0	2.90E-03	1.29E-02	5.29E-02	1.47E-01	2.20E-01	2.54E-01	2.41E-01
3300.0	2.20E-03	1.61E-02	6.38E-02	1.71E-01	2.37E-01	2.63E-01	2.62E-01
3325.0	2.20E-03	2.12E-02	7.93E-02	2.01E-01	2.68E-01	2.83E-01	2.80E-01
3350.0	2.50E-03	2.85E-02	1.03E-01	2.40E-01	2.95E-01	2.95E-01	2.93E-01
3375.0	3.10E-03	3.85E-02	1.29E-01	2.72E-01	3.12E-01	3.01E-01	3.02E-01
3400.0	4.20E-03	5.40E-02	1.65E-01	3.09E-01	3.29E-01	3.07E-01	3.08E-01
3425.0	6.00E-03	7.70E-02	2.09E-01	3.43E-01	3.32E-01	3.14E-01	3.00E-01
3450.0	9.40E-03	1.17E-01	2.81E-01	3.72E-01	3.44E-01	3.03E-01	2.90E-01
3475.0	1.65E-02	1.73E-01	3.31E-01	3.85E-01	3.53E-01	3.00E-01	2.72E-01
3500.0	3.60E-02	2.58E-01	3.84E-01	3.93E-01	3.15E-01	2.88E-01	2.65E-01
3525.0	7.20E-02	3.75E-01	4.40E-01	4.09E-01	2.94E-01	2.71E-01	2.41E-01
3550.0	1.33E-01	4.01E-01	4.48E-01	3.90E-01	2.81E-01	2.57E-01	2.22E-01
3575.0	2.15E-01	5.00E-01	4.14E-01	3.41E-01	2.54E-01	2.30E-01	2.08E-01
3600.0	3.18E-01	4.50E-01	3.59E-01	2.86E-01	2.45E-01	2.19E-01	2.01E-01
3625.0	4.42E-01	4.00E-01	3.61E-01	2.79E-01	2.33E-01	2.16E-01	2.10E-01
3650.0	4.73E-01	4.05E-01	3.51E-01	2.81E-01	2.38E-01	2.19E-01	2.13E-01
3675.0	5.68E-01	5.01E-01	4.23E-01	3.15E-01	2.43E-01	2.18E-01	2.00E-01
3700.0	3.28E-01	7.08E-01	6.42E-01	4.32E-01	2.68E-01	1.89E-01	1.50E-01
3725.0	6.17E-01	8.31E-01	5.57E-01	3.20E-01	1.94E-01	1.23E-01	1.13E-01
3750.0	1.81E 00	1.96E-01	1.45E-01	1.21E-01	1.24E-01	1.07E-01	1.08E-01
3775.0	1.36E-01	1.24E-01	1.20E-01	1.19E-01	1.15E-01	1.15E-01	1.09E-01
3800.0	4.55E-01	2.98E-01	1.95E-01	1.29E-01	1.23E-01	1.12E-01	1.22E-01
3825.0	7.60E-01	5.03E-01	2.88E-01	1.54E-01	1.29E-01	1.27E-01	1.36E-01
3850.0	8.36E-01	5.84E-01	3.40E-01	1.84E-01	1.61E-01	1.46E-01	1.54E-01
3875.0	8.40E-01	7.28E-01	4.22E-01	2.36E-01	1.97E-01	1.67E-01	1.77E-01
3900.0	5.05E-01	5.00E-01	4.01E-01	2.76E-01	2.27E-01	1.92E-01	1.97E-01
3925.0	1.17E-01	4.00E-01	4.03E-01	3.15E-01	2.43E-01	2.02E-01	2.09E-01
3950.0	4.60E-02	3.00E-01	3.27E-01	2.90E-01	2.30E-01	2.02E-01	2.07E-01
3975.0	1.83E-02	2.05E-01	2.44E-01	2.35E-01	1.95E-01	1.92E-01	1.90E-01
4000.0	7.30E-03	1.35E-01	1.70E-01	1.79E-01	1.59E-01	1.68E-01	1.61E-01
4025.0	3.10E-03	7.90E-02	1.05E-01	1.24E-01	1.24E-01	1.34E-01	1.32E-01
4050.0	1.40E-03	4.15E-02	6.12E-02	8.86E-02	1.03E-01	1.06E-01	1.04E-01
4075.0	6.40E-04	1.97E-02	3.42E-02	5.94E-02	8.01E-02	8.79E-02	8.60E-02
4100.0	3.30E-04	8.60E-03	1.79E-02	3.41E-02	5.03E-02	6.10E-02	7.10E-02
4125.0	1.53E-04	3.60E-03	1.01E-02	2.22E-02	3.54E-02	4.61E-02	5.98E-02
4150.0	7.20E-05	1.50E-03	6.08E-03	1.56E-02	2.58E-02	3.36E-02	4.99E-02
4175.0	3.45E-05	6.40E-04	3.99E-03	1.30E-02	2.26E-02	2.94E-02	4.18E-02
4200.0	1.65E-05	2.60E-04	2.75E-03	1.04E-02	1.70E-02	2.34E-02	3.48E-02
4225.0	7.70E-06	1.12E-04	1.62E-03	7.75E-03	1.32E-02	1.97E-02	2.87E-02
4250.0	3.65E-06	4.80E-05	1.10E-03	6.53E-03	1.09E-02	1.66E-02	2.36E-02
4275.0	1.70E-06	2.10E-05	8.66E-04	6.44E-03	9.33E-03	1.41E-02	1.89E-02
4300.0	8.20E-07	9.00E-06	6.71E-04	6.16E-03	8.34E-03	1.22E-02	1.50E-02
4325.0	3.75E-07	3.80E-06	4.26E-04	4.66E-03	7.36E-03	1.12E-02	1.26E-02
4350.0	1.80E-07	1.65E-06	3.81E-04	4.86E-03	7.09E-03	1.05E-02	1.19E-02
4375.0	8.90E-08	7.20E-07	1.98E-04	3.74E-03	6.68E-03	1.03E-02	1.18E-02
4400.0	4.20E-08	3.00E-07	1.81E-04	3.53E-03	5.96E-03	1.00E-02	1.23E-02
4425.0	2.00E-08	1.30E-07	1.05E-04	2.90E-03	5.93E-03	9.83E-03	1.28E-02
4450.0	1.00E-08	5.70E-08	7.45E-05	2.68E-03	5.84E-03	9.91E-03	1.34E-02

FIG. 14.
(continued)

4475.0	4.00E-09	2.50E-08	6.35E-05	3.16E-03	6.43E-03	1.01E-02	1.42E-02
4500.0	2.00E-09	1.10E-08	3.95E-05	2.64E-03	6.03E-03	1.06E-02	1.51E-02
4525.0	1.00E-09	5.00E-09	2.44E-05	2.01E-03	6.13E-03	1.14E-02	1.62E-02
4550.0	4.00E-10	5.50E-09	2.17E-05	2.19E-03	6.77E-03	1.21E-02	1.73E-02
4575.0	2.00E-10	1.10E-08	3.02E-05	2.30E-03	7.55E-03	1.30E-02	1.87E-02
4600.0	1.00E-10	2.30E-08	4.39E-05	2.59E-03	7.94E-03	1.41E-02	2.02E-02
4625.0	1.00E-10	4.70E-08	5.73E-05	2.85E-03	8.28E-03	1.54E-02	2.23E-02
4650.0	1.00E-10	1.00E-07	7.77E-05	2.90E-03	9.80E-03	1.80E-02	2.46E-02
4675.0	3.00E-10	2.10E-07	1.15E-04	3.84E-03	1.05E-02	2.13E-02	2.70E-02
4700.0	9.00E-10	4.30E-07	1.62E-04	4.28E-03	1.19E-02	2.43E-02	3.00E-02
4725.0	2.00E-09	8.80E-07	2.60E-04	5.67E-03	1.39E-02	2.76E-02	3.38E-02
4750.0	5.00E-09	1.75E-06	4.06E-04	8.29E-03	1.66E-02	3.13E-02	3.70E-02
4775.0	1.00E-08	3.70E-06	7.83E-04	1.02E-02	1.86E-02	3.41E-02	3.99E-02
4800.0	2.50E-08	7.50E-06	6.66E-04	1.21E-02	2.29E-02	3.78E-02	4.22E-02
4825.0	6.30E-08	1.53E-05	1.50E-03	1.76E-02	2.58E-02	4.04E-02	4.40E-02
4850.0	1.65E-07	3.15E-05	2.33E-03	2.23E-02	3.02E-02	4.30E-02	4.58E-02
4875.0	4.15E-07	6.30E-05	3.62E-03	2.97E-02	3.58E-02	4.59E-02	4.65E-02
4900.0	1.07E-06	1.45E-04	4.75E-03	3.21E-02	4.17E-02	4.93E-02	4.73E-02
4925.0	2.75E-06	2.90E-04	6.72E-03	3.54E-02	4.50E-02	5.07E-02	4.78E-02
4950.0	6.70E-06	6.00E-04	8.57E-03	3.82E-02	4.92E-02	5.27E-02	4.78E-02
4975.0	1.65E-05	1.45E-03	1.26E-02	4.17E-02	5.03E-02	5.23E-02	4.73E-02
5000.0	4.20E-05	2.90E-03	1.76E-02	4.67E-02	5.20E-02	5.26E-02	4.60E-02
5025.0	1.15E-04	5.30E-03	2.28E-02	4.99E-02	5.23E-02	5.10E-02	4.47E-02
5050.0	3.20E-04	8.60E-03	2.84E-02	5.28E-02	5.13E-02	4.92E-02	4.30E-02
5075.0	8.20E-04	1.30E-02	3.54E-02	5.59E-02	5.00E-02	4.69E-02	4.15E-02
5100.0	2.00E-03	1.98E-02	4.15E-02	5.57E-02	4.80E-02	4.52E-02	4.00E-02
5125.0	4.30E-03	2.82E-02	4.25E-02	4.95E-02	4.51E-02	4.30E-02	3.90E-02
5150.0	9.00E-03	3.90E-02	4.53E-02	4.49E-02	4.30E-02	4.23E-02	3.85E-02
5175.0	1.80E-02	4.62E-02	4.28E-02	3.91E-02	4.03E-02	4.15E-02	3.93E-02
5200.0	3.48E-02	7.10E-02	4.46E-02	3.60E-02	3.84E-02	4.14E-02	4.05E-02
5225.0	7.18E-02	5.90E-02	4.29E-02	3.60E-02	3.76E-02	4.20E-02	4.18E-02
5250.0	1.11E-01	3.68E-02	3.46E-02	3.69E-02	4.09E-02	4.54E-02	4.34E-02
5275.0	3.29E-02	2.85E-02	3.47E-02	4.23E-02	4.61E-02	4.82E-02	4.50E-02
5300.0	2.81E-02	2.70E-02	3.93E-02	5.05E-02	5.29E-02	5.11E-02	4.62E-02
5325.0	1.21E-01	4.22E-02	5.52E-02	5.98E-02	5.72E-02	5.44E-02	4.70E-02
5350.0	1.39E-01	1.05E-01	8.50E-02	6.87E-02	5.93E-02	5.60E-02	4.80E-02
5375.0	7.74E-02	7.10E-02	6.42E-02	6.18E-02	5.56E-02	5.34E-02	4.78E-02
5400.0	8.58E-02	4.83E-02	5.24E-02	5.47E-02	5.03E-02	4.95E-02	4.60E-02
5425.0	9.85E-02	5.75E-02	5.53E-02	5.10E-02	4.51E-02	4.49E-02	4.25E-02
5450.0	9.96E-02	6.82E-02	5.66E-02	4.89E-02	4.54E-02	4.46E-02	4.00E-02
5475.0	6.80E-02	6.80E-02	5.82E-02	4.95E-02	4.60E-02	4.58E-02	4.05E-02
5500.0	3.25E-02	5.20E-02	5.18E-02	4.83E-02	4.49E-02	4.54E-02	4.18E-02
5525.0	1.50E-02	3.50E-02	4.31E-02	4.64E-02	4.52E-02	4.49E-02	4.38E-02
5550.0	6.20E-03	2.38E-02	3.42E-02	4.08E-02	4.14E-02	4.17E-02	4.20E-02
5575.0	2.70E-03	1.58E-02	2.57E-02	3.39E-02	3.66E-02	3.84E-02	4.00E-02
5600.0	1.13E-03	1.01E-02	1.83E-02	2.63E-02	3.03E-02	3.33E-02	3.60E-02
5625.0	4.60E-04	5.90E-03	1.29E-02	2.06E-02	2.47E-02	2.86E-02	3.20E-02
5650.0	1.85E-04	3.10E-03	8.72E-03	1.61E-02	2.03E-02	2.44E-02	2.80E-02
5675.0	6.60E-05	1.30E-03	5.42E-03	1.24E-02	1.66E-02	2.07E-02	2.50E-02
5700.0	2.70E-05	4.00E-04	3.07E-03	9.34E-03	1.30E-02	1.76E-02	2.20E-02
5725.0	1.10E-05	5.50E-05	1.41E-03	7.35E-03	1.02E-02	1.48E-02	1.90E-02
5750.0	4.55E-06	1.45E-05	7.57E-04	5.92E-03	8.01E-03	1.23E-02	1.70E-02
5775.0	1.88E-06	1.68E-05	6.21E-04	4.65E-03	6.11E-03	1.05E-02	1.50E-02
5800.0	6.70E-07	1.91E-05	4.76E-04	3.21E-03	4.52E-03	8.84E-03	1.30E-02
5825.0	3.25E-07	2.20E-05	4.50E-04	2.50E-03	3.44E-03	7.50E-03	1.20E-02
5850.0	1.30E-08	2.50E-05	4.27E-04	2.23E-03	2.93E-03	6.50E-03	1.05E-02
5875.0	5.80E-09	2.88E-05	3.59E-04	1.56E-03	2.36E-03	6.20E-03	9.80E-03
5900.0	2.30E-09	3.30E-05	3.82E-04	1.80E-03	2.70E-03	6.51E-03	9.40E-03
5925.0	1.00E-09	3.75E-05	4.44E-04	1.55E-03	2.82E-03	6.80E-03	9.30E-03
5950.0	4.00E-10	4.30E-05	3.16E-04	1.31E-03	3.00E-03	7.07E-03	9.25E-03
5975.0	1.50E-10	4.95E-05	3.00E-04	1.48E-03	3.02E-03	7.21E-03	9.30E-03

FIG. 14.
(continued)

6000.0	5.00E-10	5.60E-05	2.74E-04	1.12E-03	3.14E-03	7.40E-03	9.50E-03
6025.0	2.00E-10	6.45E-05	2.58E-04	1.05E-03	3.38E-03	7.49E-03	9.70E-03
6050.0	4.00E-10	7.35E-05	2.30E-04	7.92E-04	3.50E-03	7.61E-03	1.00E-02
6075.0	6.00E-10	8.50E-05	3.40E-04	1.32E-03	3.72E-03	7.79E-03	1.03E-02
6100.0	1.00E-09	9.65E-05	4.40E-04	1.81E-03	3.95E-03	7.91E-03	1.05E-02
6125.0	1.80E-09	1.13E-04	5.09E-04	1.52E-03	4.17E-03	8.14E-03	1.10E-02
6150.0	3.30E-09	1.28E-04	6.19E-04	1.84E-03	4.78E-03	8.53E-03	1.13E-02
6175.0	6.00E-09	1.47E-04	6.93E-04	1.97E-03	5.18E-03	8.98E-03	1.19E-02
6200.0	1.00E-08	1.67E-04	8.27E-04	2.72E-03	5.44E-03	9.44E-03	1.25E-02
6225.0	1.85E-08	1.91E-04	9.79E-04	3.58E-03	5.93E-03	1.00E-02	1.30E-02
6250.0	3.25E-08	2.20E-04	1.15E-03	4.43E-03	6.49E-03	1.07E-02	1.35E-02
6275.0	5.60E-08	2.50E-04	1.21E-03	4.40E-03	7.11E-03	1.13E-02	1.43E-02
6300.0	1.00E-07	2.85E-04	1.26E-03	4.58E-03	7.51E-03	1.20E-02	1.50E-02
6325.0	1.80E-07	3.30E-04	1.41E-03	5.58E-03	8.10E-03	1.28E-02	1.57E-02
6350.0	3.25E-07	3.80E-04	1.44E-03	5.02E-03	8.74E-03	1.33E-02	1.64E-02
6375.0	5.70E-07	4.30E-04	1.53E-03	4.43E-03	9.62E-03	1.42E-02	1.72E-02
6400.0	1.02E-06	4.95E-04	1.93E-03	5.03E-03	1.00E-02	1.51E-02	1.80E-02
6425.0	1.80E-06	5.65E-04	2.49E-03	7.89E-03	1.08E-02	1.58E-02	1.91E-02
6450.0	3.20E-06	6.50E-04	2.63E-03	6.27E-03	1.14E-02	1.67E-02	2.00E-02
6475.0	5.80E-06	7.45E-04	3.08E-03	7.44E-03	1.25E-02	1.77E-02	2.11E-02
6500.0	1.02E-05	8.40E-04	3.21E-03	8.41E-03	1.39E-02	1.85E-02	2.22E-02
6525.0	1.80E-05	9.80E-03	6.94E-03	8.86E-03	1.48E-02	1.97E-02	2.33E-02
6550.0	3.25E-05	1.10E-03	3.87E-03	1.07E-02	1.55E-02	2.07E-02	2.44E-02
6575.0	5.70E-05	1.30E-03	4.27E-03	1.08E-02	1.69E-02	2.17E-02	2.55E-02
6600.0	1.00E-04	1.50E-03	5.98E-03	1.32E-02	1.78E-02	2.27E-02	2.67E-02
6625.0	1.70E-04	1.70E-03	6.12E-03	1.40E-02	1.90E-02	2.37E-02	2.76E-02
6650.0	3.20E-04	1.90E-03	6.20E-03	1.43E-02	2.02E-02	2.49E-02	2.87E-02
6675.0	6.00E-04	2.20E-03	6.81E-03	1.52E-02	2.12E-02	2.60E-02	2.96E-02
6700.0	9.00E-04	2.50E-03	8.38E-03	1.72E-02	2.22E-02	2.68E-02	3.05E-02
6725.0	1.21E-03	2.80E-03	8.85E-03	1.82E-02	2.32E-02	2.74E-02	3.13E-02
6750.0	1.52E-03	3.30E-03	1.01E-02	1.96E-02	2.40E-02	2.80E-02	3.20E-02
6775.0	1.85E-03	3.70E-03	1.05E-02	2.02E-02	2.55E-02	2.88E-02	3.29E-02
6800.0	2.20E-03	4.30E-03	1.19E-02	2.18E-02	2.66E-02	2.95E-02	3.35E-02
6825.0	2.55E-03	5.00E-03	1.39E-02	2.39E-02	2.80E-02	3.01E-02	3.39E-02
6850.0	2.90E-03	5.80E-03	1.59E-02	2.70E-02	3.06E-02	3.12E-02	3.43E-02
6875.0	3.20E-03	6.70E-03	1.67E-02	2.81E-02	3.24E-02	3.23E-02	3.45E-02
6900.0	3.60E-03	8.80E-03	1.84E-02	2.84E-02	3.29E-02	3.27E-02	3.43E-02
6925.0	4.00E-03	9.20E-03	1.97E-02	2.99E-02	3.33E-02	3.30E-02	3.41E-02
6950.0	4.60E-03	1.08E-02	2.26E-02	3.26E-02	3.48E-02	3.34E-02	3.39E-02
6975.0	5.30E-03	1.28E-02	2.53E-02	3.44E-02	3.40E-02	3.27E-02	3.33E-02
7000.0	6.20E-03	1.52E-02	2.83E-02	3.60E-02	3.35E-02	3.19E-02	3.25E-02
7025.0	7.60E-03	1.82E-02	2.90E-02	3.51E-02	3.32E-02	3.10E-02	3.13E-02
7050.0	9.80E-03	2.22E-02	3.32E-02	3.75E-02	3.27E-02	2.99E-02	2.99E-02
7075.0	1.32E-02	2.71E-02	3.59E-02	3.60E-02	3.12E-02	2.84E-02	2.83E-02
7100.0	1.90E-02	3.35E-02	3.89E-02	3.52E-02	3.01E-02	2.79E-02	2.63E-02
7125.0	2.40E-02	4.32E-02	4.11E-02	3.35E-02	2.80E-02	2.61E-02	2.43E-02
7150.0	2.88E-02	5.70E-02	4.54E-02	3.22E-02	2.54E-02	2.39E-02	2.23E-02
7175.0	3.23E-02	7.40E-02	4.64E-02	3.01E-02	2.37E-02	2.19E-02	2.08E-02
7200.0	5.70E-02	8.90E-02	4.65E-02	2.80E-02	2.20E-02	2.00E-02	1.99E-02
7225.0	2.16E-01	6.80E-02	4.03E-02	2.62E-02	2.12E-02	1.93E-02	1.90E-02
7250.0	1.26E-01	4.75E-02	3.69E-02	2.68E-02	2.14E-02	1.96E-02	1.87E-02
7275.0	1.17E-02	3.69E-02	3.72E-02	3.00E-02	2.41E-02	2.09E-02	2.00E-02
7300.0	1.40E-02	3.70E-02	3.98E-02	3.29E-02	2.68E-02	2.29E-02	2.24E-02
7325.0	4.25E-02	4.18E-02	4.32E-02	3.54E-02	2.96E-02	2.52E-02	2.43E-02
7350.0	6.40E-02	4.60E-02	4.36E-02	3.51E-02	3.07E-02	2.65E-02	2.60E-02
7375.0	3.85E-02	3.85E-02	3.82E-02	3.04E-02	2.62E-02	2.33E-02	2.60E-02
7400.0	1.82E-02	1.79E-02	2.60E-02	2.59E-02	2.16E-02	1.95E-02	2.40E-02
7425.0	1.70E-02	8.10E-03	1.62E-02	1.98E-02	1.76E-02	1.67E-02	2.10E-02
7450.0	1.61E-02	3.70E-03	9.87E-03	1.50E-02	1.44E-02	1.42E-02	1.80E-02
7475.0	1.45E-02	1.70E-03	6.16E-03	1.13E-02	1.18E-02	1.18E-02	1.50E-02
7500.0	9.00E-04	1.40E-03	4.72E-03	8.22E-03	8.24E-03	8.74E-03	1.20E-02

FIG. 14.
(continued)

7525.0	0.00E-39	1.00E-03	2.72E-03	4.99E-03	5.76E-03	6.42E-03	8.00E-03
7550.0	0.00E-39	7.60E-04	2.12E-03	3.57E-03	4.01E-03	4.72E-03	6.00E-03
7575.0	0.00E-39	5.60E-04	1.50E-03	2.45E-03	3.23E-03	3.60E-03	5.00E-03
7600.0	0.00E-39	4.10E-04	9.98E-04	1.90E-03	2.57E-03	2.78E-03	4.20E-03
7625.0	0.00E-39	3.00E-04	7.43E-04	1.36E-03	2.12E-03	2.21E-03	3.70E-03
7650.0	0.00E-39	2.30E-04	6.23E-04	1.01E-03	2.71E-03	2.20E-03	3.40E-03
7675.0	0.00E-39	1.70E-04	5.31E-04	9.50E-04	2.02E-03	1.80E-03	3.20E-03
7700.0	0.00E-39	1.20E-04	3.41E-04	8.50E-04	1.33E-03	1.93E-03	3.00E-03
7725.0	0.00E-39	9.00E-05	2.69E-04	6.57E-04	1.78E-03	1.94E-03	2.90E-03
7750.0	0.00E-39	6.60E-05	1.77E-04	3.43E-04	1.56E-03	1.96E-03	2.90E-03
7775.0	0.00E-39	4.90E-05	1.46E-04	3.67E-04	1.48E-03	1.95E-03	2.91E-03
7800.0	0.00E-39	3.60E-05	1.06E-04	4.00E-04	1.59E-03	2.60E-03	2.95E-03
7825.0	0.00E-39	2.60E-05	9.00E-05	3.63E-04	1.60E-03	2.59E-03	3.00E-03
7850.0	0.00E-39	1.90E-05	7.84E-05	3.09E-04	1.47E-03	2.49E-03	3.03E-03
7875.0	0.00E-39	1.45E-05	5.70E-05	1.89E-04	1.35E-03	2.44E-03	3.10E-03
7900.0	0.00E-39	1.65E-05	6.02E-05	2.30E-04	1.41E-03	2.59E-03	3.20E-03
7925.0	0.00E-39	1.72E-05	5.64E-05	1.89E-04	1.48E-03	2.68E-03	3.30E-03
7950.0	0.00E-39	1.80E-05	6.21E-05	1.91E-04	1.64E-03	2.80E-03	3.40E-03
7975.0	0.00E-39	1.90E-05	6.65E-05	1.97E-04	1.66E-03	2.84E-03	3.55E-03
8000.0	0.00E-39	2.00E-05	6.87E-05	1.96E-04	1.52E-03	2.93E-03	3.65E-03
8025.0	0.00E-39	2.10E-05	8.15E-05	2.88E-04	1.78E-03	3.14E-03	3.80E-03
8050.0	0.00E-39	2.20E-05	9.87E-05	4.21E-04	1.89E-03	3.30E-03	4.00E-03
8075.0	0.00E-39	2.35E-05	1.15E-04	5.10E-04	2.32E-03	3.51E-03	4.10E-03
8100.0	0.00E-39	2.45E-05	1.17E-04	4.20E-04	2.49E-03	3.34E-03	4.20E-03
8125.0	0.00E-39	2.60E-05	1.43E-04	5.29E-04	2.43E-03	3.46E-03	4.40E-03
8150.0	0.00E-39	2.70E-05	1.33E-04	4.94E-04	2.29E-03	3.53E-03	4.57E-03
8175.0	0.00E-39	2.85E-05	1.68E-04	7.75E-04	2.59E-03	3.66E-03	4.68E-03
8200.0	0.00E-39	3.00E-05	1.81E-04	1.08E-03	2.76E-03	3.81E-03	4.79E-03
8225.0	0.00E-39	3.15E-05	2.14E-04	1.21E-03	3.04E-03	3.87E-03	4.85E-03
8250.0	0.00E-39	3.30E-05	2.05E-04	9.20E-04	2.92E-03	3.93E-03	4.90E-03
8275.0	0.00E-39	3.50E-05	2.62E-04	1.60E-03	3.42E-03	3.43E-03	4.99E-03
8300.0	0.00E-39	3.70E-05	2.30E-04	1.17E-03	3.62E-03	4.28E-03	5.00E-03
8325.0	0.00E-39	3.90E-05	2.40E-04	1.03E-03	3.52E-03	4.35E-03	5.01E-03
8350.0	0.00E-39	4.10E-05	2.48E-04	1.03E-03	3.64E-03	4.49E-03	5.02E-03
8375.0	0.00E-39	4.30E-05	2.82E-04	1.40E-03	3.84E-03	4.59E-03	5.01E-03
8400.0	0.00E-39	4.50E-05	3.06E-04	1.60E-03	3.97E-03	4.60E-03	5.00E-03
8425.0	0.00E-39	4.10E-05	3.03E-04	1.35E-03	3.86E-03	4.58E-03	4.99E-03
8450.0	0.00E-39	3.70E-05	3.27E-04	1.56E-03	3.94E-03	4.57E-03	4.95E-03
8475.0	0.00E-39	3.40E-05	3.11E-04	1.48E-03	3.88E-03	4.55E-03	4.90E-03
8500.0	0.00E-39	3.10E-05	2.85E-04	1.41E-03	3.69E-03	4.40E-03	4.80E-03
8525.0	0.00E-39	2.85E-05	2.98E-04	1.48E-03	3.67E-03	4.36E-03	4.75E-03
8550.0	0.00E-39	2.10E-05	2.75E-04	1.52E-03	3.69E-03	4.34E-03	4.63E-03
8575.0	0.00E-39	2.40E-05	2.72E-04	1.42E-03	3.65E-03	4.33E-03	4.55E-03
8600.0	0.00E-39	2.20E-05	2.56E-04	1.41E-03	3.64E-03	4.25E-03	4.43E-03
8625.0	0.00E-39	2.00E-05	2.62E-04	1.59E-03	3.80E-03	4.24E-03	4.33E-03
8650.0	0.00E-39	1.80E-05	2.48E-04	1.43E-03	3.61E-03	4.13E-03	4.20E-03
8675.0	0.00E-39	1.75E-05	2.18E-04	1.38E-03	3.55E-03	4.07E-03	4.08E-03
8700.0	0.00E-39	1.50E-05	1.99E-04	1.29E-03	3.39E-03	3.86E-03	3.95E-03
8725.0	0.00E-39	1.40E-05	2.01E-04	1.25E-03	3.33E-03	3.76E-03	3.80E-03
8750.0	0.00E-39	1.25E-05	1.99E-04	1.23E-03	3.21E-03	3.60E-03	3.67E-03
8775.0	0.00E-39	1.15E-05	1.67E-04	1.17E-03	3.07E-03	3.43E-03	3.51E-03
8800.0	0.00E-39	1.05E-05	1.70E-04	1.14E-03	2.96E-03	3.27E-03	3.38E-03
8825.0	0.00E-39	9.60E-06	1.54E-04	1.08E-03	2.87E-03	3.15E-03	3.23E-03
8850.0	0.00E-39	8.80E-06	1.51E-04	1.00E-03	2.69E-03	2.97E-03	3.10E-03
8875.0	0.00E-39	8.00E-06	1.51E-04	9.79E-04	2.58E-03	2.81E-03	2.95E-03
8900.0	0.00E-39	7.40E-06	1.21E-04	9.18E-04	2.44E-03	2.65E-03	2.80E-03
8925.0	0.00E-39	6.70E-06	1.25E-04	8.58E-04	2.27E-03	2.48E-03	2.68E-03
8950.0	0.00E-39	6.10E-06	1.16E-04	7.42E-04	2.08E-03	2.32E-03	2.53E-03
8975.0	0.00E-39	5.60E-06	1.00E-04	6.26E-04	1.88E-03	2.15E-03	2.40E-03
9000.0	0.00E-39	5.10E-06	8.65E-05	5.01E-04	1.62E-03	1.92E-03	2.38E-03
9025.0	0.00E-39	4.70E-06	6.96E-05	3.09E-04	1.28E-03	1.64E-03	2.18E-03

FIG. 14.
(continued)

9050.0	0.00E-39	4.30E-06	6.46E-05	2.79E-04	1.14E-03	1.49E-03	2.07E-03
9075.0	0.00E-39	3.90E-06	5.85E-05	2.52E-04	1.01E-03	1.33E-03	1.97E-03
9100.0	0.00E-39	3.60E-06	5.39E-05	2.14E-04	8.73E-04	1.18E-03	1.87E-03
9125.0	0.00E-39	3.25E-06	3.18E-05	1.56E-04	7.37E-04	1.05E-03	1.79E-03
9150.0	0.00E-39	3.00E-06	2.62E-05	2.00E-04	6.21E-04	9.71E-04	1.71E-03
9175.0	0.00E-39	2.70E-06	1.12E-05	4.01E-05	4.72E-04	8.69E-04	1.63E-03
9200.0	0.00E-39	2.50E-06	9.08E-06	3.05E-05	4.07E-04	8.07E-04	1.56E-03
9225.0	0.00E-39	2.30E-06	5.74E-06	2.11E-05	3.62E-04	7.75E-04	1.49E-03
9250.0	0.00E-39	2.40E-06	5.31E-06	2.30E-05	3.28E-04	7.90E-04	1.43E-03
9275.0	0.00E-39	2.50E-06	4.80E-06	4.80E-05	3.42E-04	1.16E-03	1.38E-03
9300.0	0.00E-39	2.60E-06	6.08E-06	5.00E-05	3.48E-04	1.11E-03	1.33E-03
9325.0	.0000E+00	.0000E+00	.0000E+00	.0000E+00	.5100E-03	.9100E-03	.1300E-02
9350.0	.0000E+00	.0000E+00	.0000E+00	.0000E+00	.5300E-03	.9000E-03	.1270E-02
9375.0	.0000E+00	.0000E+00	.0000E+00	.0000E+00	.5500E-03	.9100E-03	.1260E-02
9400.0	.0000E+00	.0000E+00	.0000E+00	.0000E+00	.5600E-03	.9100E-03	.1250E-02
9425.0	.0000E+00	.0000E+00	.0000E+00	.0000E+00	.5900E-03	.9200E-03	.1240E-02
9450.0	.0000E+00	.0000E+00	.0000E+00	.0000E+00	.6100E-03	.9300E-03	.1240E-02
9475.0	.0000E+00	.0000E+00	.0000E+00	.0000E+00	.6400E-03	.9400E-03	.1250E-02
9500.0	.0000E+00	.0000E+00	.0000E+00	.0000E+00	.6600E-03	.9600E-03	.1260E-02
9525.0	.0000E+00	.0000E+00	.0000E+00	.0000E+00	.6900E-03	.9800E-03	.1270E-02
9550.0	.0000E+00	.0000E+00	.0000E+00	.0000E+00	.7200E-03	.1000E-02	.1280E-02
9575.0	.0000E+00	.0000E+00	.0000E+00	.0000E+00	.7500E-03	.1020E-02	.1290E-02
9600.0	.0000E+00	.0000E+00	.0000E+00	.0000E+00	.7800E-03	.1040E-02	.1300E-02
9625.0	.0000E+00	.0000E+00	.0000E+00	.0000E+00	.8200E-03	.1070E-02	.1320E-02
9650.0	.0000E+00	.0000E+00	.0000E+00	.0000E+00	.8600E-03	.1100E-02	.1330E-02
9675.0	.0000E+00	.0000E+00	.0000E+00	.0000E+00	.9000E-03	.1130E-02	.1350E-02
9700.0	.0000E+00	.0000E+00	.0000E+00	.0000E+00	.9400E-03	.1160E-02	.1370E-02
9725.0	.0000E+00	.0000E+00	.0000E+00	.0000E+00	.9800E-03	.1190E-02	.1390E-02
9750.0	.0000E+00	.0000E+00	.0000E+00	.0000E+00	.1020E-02	.1210E-02	.1400E-02
9775.0	.0000E+00	.0000E+00	.0000E+00	.0000E+00	.1060E-02	.1240E-02	.1420E-02
9800.0	.0000E+00	.0000E+00	.0000E+00	.0000E+00	.1100E-02	.1270E-02	.1440E-02
9825.0	.0000E+00	.0000E+00	.0000E+00	.0000E+00	.1130E-02	.1300E-02	.1470E-02
9850.0	.0000E+00	.0000E+00	.0000E+00	.0000E+00	.1180E-02	.1330E-02	.1480E-02
9875.0	.0000E+00	.0000E+00	.0000E+00	.0000E+00	.1220E-02	.1360E-02	.1500E-02
9900.0	.0000E+00	.0000E+00	.0000E+00	.0000E+00	.1260E-02	.1390E-02	.1520E-02
9925.0	.0000E+00	.0000E+00	.0000E+00	.0000E+00	.1300E-02	.1420E-02	.1540E-02
9950.0	.0000E+00	.0000E+00	.0000E+00	.0000E+00	.1330E-02	.1450E-02	.1570E-02
9975.0	.0000E+00	.0000E+00	.0000E+00	.0000E+00	.1370E-02	.1480E-02	.1590E-02
10000.0	.0000E+00	.0000E+00	.0000E+00	.0000E+00	.1410E-02	.1510E-02	.1610E-02
10025.0	.0000E+00	.0000E+00	.0000E+00	.0000E+00	.1440E-02	.1530E-02	.1610E-02
10050.0	.0000E+00	.0000E+00	.0000E+00	.0000E+00	.1470E-02	.1540E-02	.1610E-02
10075.0	.0000E+00	.0000E+00	.0000E+00	.0000E+00	.1500E-02	.1550E-02	.1600E-02
10100.0	.0000E+00	.0000E+00	.0000E+00	.0000E+00	.1520E-02	.1560E-02	.1600E-02
10125.0	.0000E+00	.0000E+00	.0000E+00	.0000E+00	.1560E-02	.1570E-02	.1580E-02
10150.0	.0000E+00	.0000E+00	.0000E+00	.0000E+00	.1580E-02	.1570E-02	.1570E-02
10175.0	.0000E+00	.0000E+00	.0000E+00	.0000E+00	.1570E-02	.1560E-02	.1540E-02
10200.0	.0000E+00	.0000E+00	.0000E+00	.0000E+00	.1550E-02	.1530E-02	.1520E-02
10225.0	.0000E+00	.0000E+00	.0000E+00	.0000E+00	.1530E-02	.1510E-02	.1490E-02
10250.0	.0000E+00	.0000E+00	.0000E+00	.0000E+00	.1500E-02	.1480E-02	.1470E-02
10275.0	.0000E+00	.0000E+00	.0000E+00	.0000E+00	.1470E-02	.1450E-02	.1430E-02
10300.	.0000E+00	.0000E+00	.0000E+00	.0000E+00	.1430E-02	.1420E-02	.1400E-02
10325.0	.0000E+00	.0000E+00	.0000E+00	.0000E+00	.1380E-02	.1370E-02	.1370E-02
10350.0	.0000E+00	.0000E+00	.0000E+00	.0000E+00	.1330E-02	.1330E-02	.1330E-02
10375.0	.0000E+00	.0000E+00	.0000E+00	.0000E+00	.1250E-02	.1280E-02	.1310E-02
10400.0	.0000E+00	.0000E+00	.0000E+00	.0000E+00	.1200E-02	.1260E-02	.1320E-02
10425.0	.0000E+00	.0000E+00	.0000E+00	.0000E+00	.1210E-02	.1270E-02	.1330E-02
10450.0	.0000E+00	.0000E+00	.0000E+00	.0000E+00	.1250E-02	.1310E-02	.1370E-02
10475.0	.0000E+00	.0000E+00	.0000E+00	.0000E+00	.1280E-02	.1330E-02	.1390E-02
10500.0	.0000E+00	.0000E+00	.0000E+00	.0000E+00	.1330E-02	.1370E-02	.1410E-02
10525.0	.0000E+00	.0000E+00	.0000E+00	.0000E+00	.1370E-02	.1400E-02	.1430E-02
10550.0	.0000E+00	.0000E+00	.0000E+00	.0000E+00	.1400E-02	.1420E-02	.1430E-02

FIG. 14.
(continued)

10575.0	.0000E+00	.0000E+00	.0000E+00	.0000E+00	.1410E-02	.1410E-02	.1420E-02
10600.0	.0000E+00	.0000E+00	.0000E+00	.0000E+00	.1370E-02	.1370E-02	.1370E-02
10625.0	.0000E+00	.0000E+00	.0000E+00	.0000E+00	.1280E-02	.1250E-02	.1230E-02
10650.0	.0000E+00	.0000E+00	.0000E+00	.0000E+00	.1100E-02	.1090E-02	.1080E-02
10675.0	.0000E+00	.0000E+00	.0000E+00	.0000E+00	.9500E-03	.9600E-03	.9600E-03
10700.0	.0000E+00	.0000E+00	.0000E+00	.0000E+00	.8200E-03	.8300E-03	.8400E-03
10725.0	.0000E+00	.0000E+00	.0000E+00	.0000E+00	.6800E-03	.7000E-03	.7200E-03
10750.0	.0000E+00	.0000E+00	.0000E+00	.0000E+00	.5400E-03	.5800E-03	.6200E-03
10775.0	.0000E+00	.0000E+00	.0000E+00	.0000E+00	.4100E-03	.4700E-03	.5200E-03
10800.0	.0000E+00	.0000E+00	.0000E+00	.0000E+00	.3200E-03	.3800E-03	.4300E-03
10825.0	.0000E+00	.0000E+00	.0000E+00	.0000E+00	.2900E-03	.3400E-03	.3900E-03
10850.0	.0000E+00	.0000E+00	.0000E+00	.0000E+00	.2800E-03	.3200E-03	.3600E-03
10875.0	.0000E+00	.0000E+00	.0000E+00	.0000E+00	.2700E-03	.3100E-03	.3400E-03
10900.0	.0000E+00	.0000E+00	.0000E+00	.0000E+00	.2700E-03	.3000E-03	.3200E-03
10925.0	.0000E+00	.0000E+00	.0000E+00	.0000E+00	.2600E-03	.2900E-03	.3100E-03
10950.0	.0000E+00	.0000E+00	.0000E+00	.0000E+00	.2600E-03	.2800E-03	.2900E-03
10975.0	.0000E+00	.0000E+00	.0000E+00	.0000E+00	.2500E-03	.2700E-03	.2800E-03
11000.0	.0000E+00	.0000E+00	.0000E+00	.0000E+00	.2500E-03	.2500E-03	.2600E-03
500.0000	0	0	0	.0105	.0474	.0982	.1347
525.0000	0	0	0	.0380	.0909	.0877	.122
550.0000	0	0	.0245	.0970	.1761	.1808	.234
575.0000	0	.0205	.0540	.1450	.3154	.5972	.38
600.0000	.1200	.1650	.2453	.3200	.5007	.52	
625.0000	.1750	.3800	.6352	.7900	.8449	.8277	.85
650.0000	3.4500	2.8200	2.2087	1.7200	1.5026	1.4882	1.5533
675.0000	3.6000	3.1000	3.2990	2.9000	1.5118	2.7910	.195
700.0000	.5500	1.2000	1.4076	1.4700	1.4563	1.1448	.8333
725.0000	.0720	.3000	.6420	1.0000	1.2170	1.2502	1.0667
750.0000	.0230	.0780	.1915	.4100	.6640	.9534	1.3567
775.0000	0	.0140	.0771	.2050	.3351	.4543	.6067
800.0000	0	0	.0199	.0950	.1874	.2945	.4733
825.0000	0	0	0	.0510	.1040	.1456	.2993
850.0000	0	0	0	.0350	.0708	.0957	.2433
875.0000	0	0	0	.0240	.0604	.1008	.2140
900.	0.	0.	0.	0.	0.	0.	
925.	0.	0.	0.	0.	0.	0.	
950.	0.	0.	0.	0.	0.	0.	
975.	0.	0.	0.	0.	0.	0.	
1000.	0.	0.	0.	0.	0.	0.	
1025.	0.	0.	0.	0.	0.	0.	
1050.	0.	0.	0.	0.	0.	0.	
1075.	0.	0.	0.	0.	0.	0.	
1100.	0.	0.	0.	0.	0.	0.	
1125.	0.	0.	0.	0.	0.	0.	
1150.0000	0	0	0	0	0	0	0
1175.0000	0	0	0	0	0	0	0
1200.0000	0	0	0	0	0	0	0
1225.0000	0	0	0	0	0	0	0
1250.0000	0	0	0	0	0	0	0
1275.0000	0	0	0	0	0	0	0
1300.0000	0	0	0	0	0	0	0
1325.0000	0	0	0	0	0	0	0
1350.0000	0	0	0	0	0	0	0
1375.0000	0	0	0	0	0	0	0
1400.0000	0	0	0	0	0	0	0
1425.0000	0	0	0	0	0	0	0
1450.0000	0	0	0	0	0	0	0
1475.0000	0	0	0	0	0	0	0
1500.0000	0	0	0	0	0	0	0
1525.0000	0	0	0	0	0	0	0
1550.0000	0	0	0	0	0	0	0

FIG. 14.
(continued)

1575.0000	0	0	0	0	0	0	0
1600.0000	0	0	0	0	0	0	0
1625.0000	0	0	0	0	0	0	0
1650.0000	0	0	0	0	0	0	0
1675.0000	0	0	0	0	0	0	0
1700.0000	0	0	0	0	0	0	0
1725.0000	0	0	0	0	0	0	0
1750.0000	0	0	0	0	0	0	0
1775.0000	0	0	0	0	0	0	0
1800.0000	0	0	0	0	0	0	0
1825.0000	0	0	0	0	0	0	0
1850.0000	0	0	0	0	0	0	0
1875.0000	0	0	0	0	0	0	0
1900.0000	0	0	0	0	0	.0032	.0692
1925.0000	0	0	0	0	0	.0069	.1476
1950.0000	0	0	0	0	0	.0106	.2259
1975.0000	0	0	0	0	.0061	.0966	.4408
2000.0000	0	0	0	0	.0157	.1815	.6558
2025.0000	0	0	0	.0019	.0449	.4248	1.1590
2050.0000	0	0	0	.0037	.0742	.6678	1.6620
2075.0000	0	0	0	.0278	.3449	1.3288	2.6560
2100.0000	0	0	.0013	.0520	.6156	1.9899	3.6510
2125.0000	0	0	0	.2866	1.5058	3.5294	5.4830
2150.0000	0	0	0	.5212	2.3961	5.0688	7.3150
2175.0000	0	0	0	1.3720	4.3207	7.1383	8.6700
2200.	0.0	0.0	.2160	3.180	7.1236	9.718	10.66
2225.	0.0	.01767	1.2202	6.629	10.404	12.45	12.01
2250.0000	0	.2829	4.9063	11.6800	14.0028	13.8074	12.3600
2275.0000	.0206	2.8160	11.9854	17.2600	16.2874	14.4967	12.1600
2300.0000	1.8960	15.5000	21.9877	20.4200	17.4766	15.3763	13.1700
2325.0000	36.6000	35.5200	26.0571	20.3400	16.1073	12.6535	9.2910
2350.0000	11.3800	20.8200	23.6476	20.2800	14.5780	10.4754	7.1760
2375.0000	24.1000	34.3600	25.1520	14.4600	8.7566	5.4816	2.6530
2400.0000	0	0	0	0	0	0	0
2425.0000	0	0	0	0	0	0	0
2450.0000	0	0	0	0	0	0	0
2475.0000	0	0	0	0	0	0	0
2500.0000	0	0	0	0	0	0	0
2525.0000	0	0	0	0	0	0	0
2550.0000	0	0	0	0	0	0	0
2575.0000	0	0	0	0	0	0	0
2600.	0.0	0.0	0.0	0.0	0.0	0.0	0.0
2625.	0.0	0.0	0.0	0.0	0.0	0.0	0.0
2650.	0.0	0.0	0.0	0.0	0.0	0.0	0.0
2675.	0.0	0.0	0.0	0.0	0.0	0.0	0.0
2700.	0.0	0.0	0.0	0.0	0.0	0.0	0.0
2725.	0.0	0.0	0.0	0.0	0.0	0.0	0.0
2750.	0.0	0.0	0.0	0.0	0.0	0.0	0.0
2775.	0.0	0.0	0.0	0.0	0.0	0.0	0.0
2800.	0.0	0.0	0.0	0.0	0.0	0.0	0.0
2825.	0.0	0.0	0.0	0.0	0.0	0.0	0.0
2850.	0.0	0.0	0.0	0.0	0.0	0.0	0.0
2875.	0.0	0.0	0.0	0.0	0.0	0.0	0.0
2900.	0.0	0.0	0.0	0.0	0.0	0.0	0.0
2925.	0.0	0.0	0.0	0.0	0.0	0.0	0.0
2950.	0.0	0.0	0.0	0.0	0.0	0.0	0.0
2975.	0.0	0.0	0.0	0.0	0.0	0.0	0.0
3000.0	0	0	0	0	0	.0005	.0117
3025.	0.0	0.0	0.0	0.0	0.0	.00044	.0147
3050.0	0	0	0	0	0	.0010	.0203
3075.	0.0	0.0	0.0	0.0	0.0	.001	.02582

FIG. 14.
(continued)

3100.0	0	0	0	0	.0008	.0095	.0336
3125.0	0	0	0	0	.0016	.0152	.0443
3150.0	0	0	0	0	.0023	.0209	.0551
3175.	0.0	0.0	0.0	.00004	.0048	.03035	.07431
3200.0	0	0	.0003	0	.0086	.0381	.0834
3225.	0.0	0.0	0.0	.00052	.01313	.05282	.1062
3250.0	0	0	.0002	.0015	.0210	.0686	.1276
3275.	0.0	0.0	.00042	.00351	.03235	.08995	.1469
3300.0	0	0	0	.0069	.0464	.1142	.1811
3325.	0.0	0.0	0.0	.01364	.06636	.13984	.19745
3350.0	0	0	0	.0241	.0883	.1651	.2468
3375.	0.0	0.0	0.0	.04087	.11984	.1929	.23885
3400.0000	0	0	.0046	.0649	.1535	.2230	.2637
3425.0000	0	0	.0168	.1004	.2157	.2514	.3061
3450.0000	0	.0004	.0373	.1433	.2413	.3156	.3865
3475.0000	0	.0037	.0744	.1927	.2527	.2870	.3208
3500.0000	0	.0180	.1305	.2422	.2761	.3064	.3501
3525.0000	.0013	.0685	.1964	.2668	.2790	.3217	.3797
3550.0000	.0212	.1684	.2601	.2818	.2925	.3509	.4173
3575.0000	.1106	.2716	.2771	.2632	.3034	.3867	.4608
3600.0000	.6342	.4255	.2983	.2952	.3618	.4500	.5050
3625.0000	.8115	.3494	.1996	.2797	.4251	.5044	.5549
3650.0000	.0071	.1127	.2692	.4261	.4974	.5438	.5642
3675.0000	.0859	.2671	.4113	.4921	.5050	.5355	.5468
3700.0000	.8999	.6584	.5059	.4722	.4952	.5311	.5259
3725.0000	1.1590	.5998	.4612	.4953	.4867	.4513	.3845
3750.0000	.0454	.3965	.5998	.5755	.4377	.3266	.2300
3775.0000	0	0	0	0	0	0	0
1500.0000	0	0	0	0	0	.0000	.0001
1525.0000	0	0	0	0	0	.0000	.0002
1550.0000	0	0	0	0	0	.0000	.0003
1575.0000	0	0	0	0	0	.0000	.0007
1600.0000	0	0	.0000	0	.0000	.0002	.0001
1625.0000	0	0	.0000	0	.0000	.0005	.0023
1650.0000	0	0	.0000	0	.0001	.0008	.0034
1675.0000	0	0	.0000	0	.0003	.0019	.0066
1700.0000	0	0	.0000	0	.0005	.0030	.0097
1725.0000	0	0	.0000	.0001	.0015	.0065	.0178
1750.0000	0	0	.0000	.0002	.0024	.0100	.0259
1775.0000	0	0	0	.0008	.0062	.0204	.0447
1800.0000	0	0	0	.0029	.0125	.0300	.0635
1825.0000	0	0	0	.0050	.0232	.0576	.1022
1850.0000	0	0	0	.0085	.0364	.0845	.1409
1875.0000	0	0	.0019	.0251	.0761	.1434	.2092
1900.0000	0	0	.0044	.0415	.1167	.1997	.2275
1925.0000	0	.0011	.0082	.0872	.2139	.3031	.3735
1950.0000	0	.0022	.0120	.1327	.3122	.4039	.4694
1975.0000	0	.0280	.1355	.3184	.4693	.5307	.5587
2000.0000	0	.0537	.2590	.5042	.6264	.6575	.6479
2025.0000	.0088	.0220	.1030	.4853	.8445	.7149	.6878
2050.0000	.1077	.5814	.9071	.9813	.8832	.7729	.6706
2075.0000	.1099	1.0989	1.1806	.9232	.8766	.6937	.5955
2100.0000	2.0558	1.8481	1.3747	.9040	.6903	.5626	.4976
2125.0000	2.4149	1.0989	.6977	.6664	.4779	.4599	.4643
2150.0000	1.2083	.6300	.4659	.5326	.5549	.5869	.6173
2175.0000	3.5836	2.4248	1.6699	1.3056	1.1279	1.0222	.9634
2200.0000	1.4715	2.1995	2.0614	1.5938	1.4220	1.2745	1.1614
2225.0000	.1396	.8710	1.3428	1.4418	1.3340	1.2437	1.1484
2250.0000	.0023	.1399	.5167	.8596	.9428	.9519	.9317
2275.0000	0	.0069	.1110	.3033	.4688	.5530	.5984
2300.0000	0	0	.0075	.0571	.1415	.2210	.2796

FIG. 14.
(continued)

2325.0000	0	0	0	.0035	.0188	.0462	.0763
2350.0000	0	0	.0000	0	.0001	.0014	.0054
500.0000	2.5530	14.4900	107.1710	400.80001350	.03133324	.32877015	.0000
525.0000	2.5530	14.4900	107.1710	400.80001350	.03133324	.32877015	.0000
550.0000	2.5530	14.4900	107.1710	400.80001350	.03133324	.32877015	.0000
575.0000	2.5530	14.4900	107.1710	400.80001350	.03133324	.32877015	.0000
600.0000	2.5530	14.4900	107.1710	400.80001350	.03133324	.32877015	.0000
625.0000	2.5530	14.4900	107.1710	400.80001350	.03133324	.32877015	.0000
650.0000	2.5530	14.4900	107.1710	400.80001350	.03133324	.32877015	.0000
675.0000	2.5530	14.4900	107.1710	400.80001350	.03133324	.32877015	.0000
700.0000	2.5530	14.4900	107.1710	400.80001350	.03133324	.32877015	.0000
725.0000	2.5530	14.4900	107.1710	400.80001350	.03133324	.32877015	.0000
750.0000	2.5530	14.4900	107.1710	400.80001350	.03133324	.32877015	.0000
775.0000	2.5530	14.4900	107.1710	400.80001350	.03133324	.32877015	.0000
800.0000	2.5530	14.4900	107.1710	400.80001350	.03133324	.32877015	.0000
825.0000	2.5530	14.4900	107.1710	400.80001350	.03133324	.32877015	.0000
850.0000	2.5530	14.4900	107.1710	400.80001350	.03133324	.32877015	.0000
875.0000	2.5530	14.4900	107.1710	400.80001350	.03133324	.32877015	.0000
900.0000	2.5530	14.4900	107.1710	400.80001350	.03133324	.32877015	.0000
925.0000	2.5530	14.4900	107.1710	400.80001350	.03133324	.32877015	.0000
950.0000	2.5530	14.4900	107.1710	400.80001350	.03133324	.32877015	.0000
975.0000	2.5530	14.4900	107.1710	400.80001350	.03133324	.32877015	.0000
1000.0000	2.5530	14.4900	107.1710	400.80001350	.03133324	.32877015	.0000
1025.0000	2.5530	14.4900	107.1710	400.80001350	.03133324	.32877015	.0000
1050.0000	2.5530	14.4900	107.1710	400.80001350	.03133324	.32877015	.0000
1075.0000	2.5530	14.4900	107.1710	400.80001350	.03133324	.32877015	.0000
1100.0000	2.5530	14.4900	107.1710	400.80001350	.03133324	.32877015	.0000
1125.0000	2.5530	14.4900	107.1710	400.80001350	.03133324	.32877015	.0000
1150.0000	2.5530	14.4900	107.1710	400.80001350	.03133324	.32877015	.0000
1175.0000	2.5530	14.4900	107.1710	400.80001350	.03133324	.32877015	.0000
1200.0000	2.5530	14.4900	107.1710	400.80001350	.03133324	.32877015	.0000
1225.0000	2.5530	14.4900	107.1710	400.80001350	.03133324	.32877015	.0000
1250.0000	2.5530	14.4900	107.1710	400.80001350	.03133324	.32877015	.0000
1275.0000	2.5530	14.4900	107.1710	400.80001350	.03133324	.32877015	.0000
1300.0000	2.5530	14.4900	107.1710	400.80001350	.03133324	.32877015	.0000
1325.0000	2.5530	14.4900	107.1710	400.80001350	.03133324	.32877015	.0000
1350.0000	2.5530	14.4900	107.1710	400.80001350	.03133324	.32877015	.0000
1375.0000	2.5530	14.4900	107.1710	400.80001350	.03133324	.32877015	.0000
1400.0000	2.5530	14.4900	107.1710	400.80001350	.03133324	.32877015	.0000
1425.0000	2.5530	14.4900	107.1710	400.80001350	.03133324	.32877015	.0000
1450.0000	2.5530	14.4900	107.1710	400.80001350	.03133324	.32877015	.0000
1475.0000	2.5530	14.4900	107.1710	400.80001350	.03133324	.32877015	.0000
1500.0000	2.5530	14.4900	107.1710	400.80001350	.03133324	.32877015	.0000
1525.0000	2.5530	14.4900	107.1710	400.80001350	.03133324	.32877015	.0000
1550.0000	2.5530	14.4900	107.1710	400.80001350	.03133324	.32877015	.0000
1575.0000	2.5530	14.4900	107.1710	400.80001350	.03133324	.32877015	.0000
1600.0000	2.5530	14.4900	107.1710	400.80001350	.03133324	.32877015	.0000
1625.0000	2.5530	14.4900	107.1710	400.80001350	.03133324	.32877015	.0000
1650.0000	2.5530	14.4900	107.1710	400.80001350	.03133324	.32877015	.0000
1675.0000	2.5530	14.4900	107.1710	400.80001350	.03133324	.32877015	.0000
1700.0000	2.5530	14.4900	107.1710	400.80001350	.03133324	.32877015	.0000
1725.0000	2.5530	14.4900	107.1710	400.80001350	.03133324	.32877015	.0000
1750.0000	2.5530	14.4900	107.1710	400.80001350	.03133324	.32877015	.0000
1775.0000	2.5530	14.4900	107.1710	400.80001350	.03133324	.32877015	.0000
1800.0000	2.5530	14.4900	107.1710	400.80001350	.03133324	.32877015	.0000
1825.0000	2.5530	14.4900	107.1710	400.80001350	.03133324	.32877015	.0000
1850.0000	2.5530	14.4900	107.1710	400.80001350	.03133324	.32877015	.0000
1875.0000	2.5530	14.4900	107.1710	400.80001350	.03133324	.32877015	.0000
1900.0000	2.5530	14.4900	107.1710	400.80001350	.03133324	.32877015	.0000
1925.0000	2.5530	14.4900	107.1710	400.80001350	.03133324	.32877015	.0000
1950.0000	2.5530	14.4900	107.1710	400.80001350	.03133324	.32877015	.0000

FIG. 14.
(continued)

1975.0000	2.5530	14.4900	107.1710	400.8000	1350.0313	3324.3287	7015.0000
2000.0000	2.5530	14.4900	107.1710	400.8000	1350.0313	3324.3287	7015.0000
2025.0000	2.5530	14.4900	107.1710	400.8000	1354.6115	3250.7422	6305.5000
2050.0000	2.5530	14.4900	107.1710	400.8000	1362.8626	3166.7170	5373.0000
2075.0000	2.5530	14.4900	107.1710	400.8000	1360.2165	3015.3780	4402.5000
2100.0000	2.5530	14.4900	106.0994	400.8000	1325.5951	2796.5313	3582.0000
2125.0000	2.5530	14.4900	102.8630	400.8000	1212.8543	2345.2879	2928.5000
2150.0000	2.5530	14.4900	96.3945	400.8000	1044.0560	1861.9189	2313.0000
2175.0000	2.5530	14.4900	81.7405	389.5000	855.3693	1415.0125	1719.5000
2200.0000	2.5530	14.4900	74.3459	353.5000	683.3230	1019.7922	1268.0000
2225.0000	2.5530	14.1700	76.8895	257.0500	377.2051	1151.3590	8979.5000
2250.0000	2.5530	13.7300	68.3368	174.3000	346.8000	477.7375	634.3000
2275.0000	2.5105	11.7250	42.4296	140.3000	254.1168	397.0292	414.1500
2300.0000	2.2930	7.8260	68.1713	109.1000	286.2393	341.1256	415.2000
2325.0000	1.3655	5.7390	22.6346	73.3050	82.8139	116.8424	129.2000
2350.0000	2.8490	8.0050	16.5686	34.3000	39.3694	51.6021	56.0200
2375.0000	1.0945	2.0880	4.0805	7.4700	6.5407	7.1154	6.2575
2400.0000	0	0	0	0	0	0	0
2425.0000	0	0	0	0	0	0	0
2450.0000	0	0	0	0	0	0	0
2475.0000	0	0	0	0	0	0	0
2500.0000	0	0	0	0	0	0	0
2525.0000	0	0	0	0	0	0	0
2550.0000	0	0	0	0	0	0	0
2575.0000	0	0	0	0	0	0	0
2600.0000	0	0	0	0	0	0	0
2625.0000	0	0	0	0	0	0	0
2650.0000	0	0	0	0	0	0	0
2675.0000	0	0	0	0	0	0	0
2700.0000	0	0	0	0	0	0	0
2725.0000	0	0	0	0	0	0	0
2750.0000	0	0	0	0	0	0	0
2775.0000	0	0	0	0	0	0	0
2800.0000	0	0	0	0	0	0	0
2825.0000	0	0	0	0	0	0	0
2850.0000	0	0	0	0	0	0	0
2875.0000	0	0	0	0	0	0	0
2900.0000	0	0	0	0	0	0	0
2925.0000	0	0	0	0	0	0	0
2950.0000	0	0	0	0	0	0	0
2975.0000	0	0	0	0	0	0	0
3000.0000	0	0	0	0	0	0	0
3025.0000	0	0	0	0	0	0	0
3050.0000	0	0	0	0	0	0	0
3075.0000	0	0	0	0	0	0	0
3100.0000	1.2250	7.2480	49.6706	244.0000	908.3920	1551.3715	2241.0000
3125.0000	1.2250	7.2480	49.6706	244.0000	908.3920	1551.3715	2241.0000
3150.0000	1.2250	7.2480	49.6706	244.0000	908.3920	1551.3715	2241.0000
3175.0000	1.2250	7.3060	50.8050	246.6000	859.4836	1160.5305	1385.9200
3200.0000	1.2250	7.3630	52.4375	256.2000	924.9130	1525.9303	2191.7000
3225.0000	1.2250	7.4380	57.9467	270.9500	1003.1712	1659.2877	2388.2000
3250.0000	1.2250	7.5160	65.0700	306.7000	1156.4366	1916.8471	2762.7000
3275.0000	1.2355	7.6870	73.8859	359.0500	1431.9770	2388.6764	3456.5500
3300.0000	1.2540	7.9350	96.0839	427.0000	1980.7737	3351.2629	4899.0000
3325.0000	1.2975	8.2970	166.2487	533.3000	3634.1014	6314.2862	9396.8000
3350.0000	1.3700	8.7750	151.6038	662.3000	3872.2938	6767.1719	10015.80
3375.0000	1.4550	9.6140	127.7835	788.6500	4013.3414	5916.5339	8632.4000
3400.0000	1.5570	10.6800	192.4292	697.2000	4758.0004	8042.9533	9179.2000
3425.0000	1.6995	12.3000	120.4494	479.3000	2115.2506	3560.8039	5207.8000
3450.0000	1.8720	14.4900	83.1076	284.1000	803.3263	1276.3811	1793.6000
3475.0000	2.0950	17.2050	65.2228	175.1500	382.5307	576.1190	782.9000

FIG. 14.
(continued)

```
3500.0000    2.4000   17.3500   48.3638 115.0000 224.5381 328.2167 437.5000
3525.0000    2.9105   14.4950   35.5124  83.6600 157.4512 227.1599 291.1600
3550.0000    2.8940   10.3000   27.9394  64.4900 119.9758 172.9149 228.2900
3575.0000    1.9165    5.9225   29.4276  57.9500 119.0540 174.8517 235.7250
3600.0000    1.0700    3.6520   26.3659 109.1000 438.0095 730.28341057.6000
3625.0000     .7548    1.6170   54.1822 184.10001020.12111748.02952579.3500
3650.0000    1.7000    5.7390   64.3051 286.40001705.54092943.15174354.4000
3675.0000     .8216    6.5480   59.4136 270.30001638.29852830.92644191.3000
3700.0000    1.1080    6.2610   49.2759 228.4000 848.75291404.36212021.9000
3725.0000    1.8290    7.9565   40.7983 181.3500 577.6905 937.35411332.1000
3750.0000    3.6410    5.5420   14.6976  41.3600  93.2386 141.6329 193.3600
3775.0000    2.3740    4.3565         0  30.5050  59.9359  90.9551 120.4550
        15
0.         0.         0.         38.05          0
0.         0.         -20.       32.07          0
0.         0.         -10.       35.06          0
0.         0.         -30.       29.08          0
0.         0.         -40.       26.09          0
0.         0.         -50.0      23.10          0
0.         0.         -60.       20.11          0
0.         0.         -70.       17.12          0
0.         0.         -80.       14.13          0
0.         0.         -90.       11.14          0
0.         0.         -100.      9.65           0
0.         0.         -110.      9.65           0
0.         0.         -120.      9.65           0
0.         0.         -130.      9.65           0
0.         0.         -227.      130.           1
40.0       90.0        5.0
0.0        45.0        5.0
    50  7500    25
12.0       800.       310.       .0001          0    1
117.0       260.0
100.
.05

$IBSYS
$REMØVE        SYSCK1
```

FIG. 14.
(concluded)

FLØW FIELD PRØPERTIES

Z= 0.0000 INCHES

R (INCHES)	TEMP (DEG R)	TØT PRES (PSF)	MØLE FRACTS CØNSTITUENT 1	CØNSTITUENT 2	CØNSTITUENT 3	CØNSTITUENT 4
0.000000	2776.572357	221.745518	0.304824	0.181432	0.318553	0.000000
1.984036	2782.674500	224.421549	0.305129	0.181126	0.318859	0.000000
3.968071	2809.017029	236.278513	0.306440	0.179315	0.320170	0.000000
5.750985	2871.194244	266.305271	0.309472	0.176779	0.323203	0.000000
7.930707	3132.079529	432.983894	0.318423	0.167503	0.332306	0.000000
9.909307	3246.916626	529.976418	0.321839	0.163930	0.335795	0.000000
11.893342	3311.697083	592.129601	0.323702	0.161981	0.337699	0.000000
13.627335	3366.864563	649.670784	0.325254	0.160356	0.339285	0.000000
15.660292	3423.127350	713.009796	0.326807	0.158732	0.340871	0.000000
17.345363	3474.714813	775.462723	0.328204	0.157271	0.342298	0.000000
19.329399	3527.214630	843.567093	0.329601	0.155809	0.343726	0.000000
20.813349	3568.687988	900.776978	0.330688	0.154672	0.344836	0.000000
22.302734	3604.683685	952.980148	0.331620	0.153697	0.345788	0.000000
23.786684	3641.098877	1008.296402	0.332551	0.152723	0.346740	0.000000
25.471756	3684.535278	1077.702179	0.333648	0.151575	0.347861	0.000000
26.667613	3715.602631	1129.713623	0.334424	0.150763	0.348653	0.000000
28.249405	3753.276062	1195.534714	0.335355	0.149789	0.349604	0.000000
29.635512	3784.998322	1253.372879	0.336131	0.148978	0.350397	0.000000
30.728091	3810.593170	1301.697876	0.336752	0.148328	0.351031	0.000000
31.913077	3833.441254	1346.120529	0.337302	0.147753	0.351593	0.000000
33.103498	3855.508240	1390.199768	0.337830	0.147201	0.352133	0.000000
33.897112	3868.555725	1416.815659	0.338140	0.146876	0.352450	0.000000
34.690726	3881.681396	1444.424133	0.338427	0.146562	0.352751	0.000000
35.582183	3898.145630	1482.761261	0.338604	0.146260	0.353001	0.000000
36.174676	3906.126526	1501.649704	0.338690	0.146114	0.353122	0.000000
36.674762	3913.740112	1519.856323	0.338771	0.145975	0.353237	0.000000
37.071569	3920.150970	1535.330032	0.338840	0.145858	0.353334	0.000000
37.462941	3924.002014	1544.688522	0.338881	0.145788	0.353392	0.000000
37.664062	3925.286316	1547.820160	0.338895	0.145764	0.353412	0.000000
37.859747	3927.856995	1554.104507	0.338922	0.145718	0.353450	0.000000
37.963026	3930.429932	1560.415710	0.338950	0.145671	0.353489	0.000000
38.049998	3933.004272	1566.751801	0.338977	0.145624	0.353528	0.000000

FIG. 15. SAMPLE OUTPUT

FLØW FIELD PRØPERTIES

Z= 14.6764 INCHES

R (INCHES)	TEMP (DEG R)	TØT PRES (PSF)	MØLE FRACTS CØNSTITUENT 1	CØNSTITUENT 2	CØNSTITUENT 3	CØNSTITUENT 4
0.000000	2811.808899	237.564569	0.306578	0.179676	0.320308	0.000000
1.485714	2828.233643	245.246880	0.307386	0.178867	0.321116	0.000000
2.160763	2851.297913	256.376217	0.308511	0.177741	0.322241	0.000000
3.364894	2988.189270	332.521156	0.313921	0.172213	0.327706	0.000000
5.174778	3046.904236	370.899883	0.315790	0.170258	0.329615	0.000000
7.035959	3075.553619	390.906128	0.316686	0.169321	0.330530	0.000000
8.843080	3117.212585	421.572605	0.317970	0.167977	0.331843	0.000000
11.658216	3247.984589	530.955688	0.321670	0.163897	0.335827	0.000000
13.930634	3320.883240	601.408737	0.323963	0.161708	0.337965	0.000000
16.097800	3371.061890	654.230301	0.325371	0.160234	0.339404	0.000000
17.997496	3412.552155	700.732735	0.326517	0.159035	0.340575	0.000000
20.226842	3457.218506	753.797020	0.327733	0.157763	0.341817	0.000000
22.103248	3497.669525	804.661362	0.328818	0.156628	0.342926	0.000000
24.300654	3539.044525	859.572166	0.329913	0.155483	0.344044	0.000000
25.963810	3571.865936	905.289047	0.330771	0.154585	0.344921	0.000000
27.627535	3603.007416	950.495178	0.331576	0.153743	0.345744	0.000000
29.292917	3629.734375	990.757301	0.332262	0.153026	0.346444	0.000000
31.207716	3660.348999	1038.587540	0.333039	0.152212	0.347238	0.000000
32.576668	3682.192627	1073.861450	0.333590	0.151636	0.347800	0.000000
34.403721	3711.628754	1122.948013	0.334325	0.150867	0.348552	0.000000
35.987216	3665.548309	1046.895950	0.333171	0.152075	0.347372	0.000000
37.378659	3464.825653	763.154984	0.327938	0.157549	0.342027	0.000000
39.108133	3205.525146	493.149746	0.320625	0.165200	0.334555	0.000000
41.240817	2889.131989	275.524101	0.310332	0.175918	0.324062	0.000000
43.017119	2633.122925	165.947001	0.297382	0.188883	0.311110	0.000000
45.316564	2339.071564	85.992600	0.276065	0.210205	0.289793	0.000000
49.110983	1940.516052	30.344927	0.238921	0.247352	0.252648	0.000000
53.192537	1640.264740	11.196067	0.195085	0.291211	0.208789	0.000000
58.903397	1540.145370	7.553596	0.176809	0.309521	0.190479	0.000000
61.649501	1600.679260	9.611046	0.188041	0.298267	0.201733	0.000000
360.068306	1294.169876	2.273174	0.128775	0.361219	0.135656	0.000000

FIG. 15
(continued)

FLØW FIELD PRØPERTIES

Z= 29.3529 INCHES

R (INCHES)	TEMP (DEG R)	TØT PRES (PSF)	MØLE FRACTS CØNSTITUENT 1	CØNSTITUENT 2	CØNSTITUENT 3	CØNSTITUENT 4
0.000000	3520.756439	834.933502	0.329431	0.155987	0.343552	0.000000
1.400369	3567.662781	899.325310	0.330661	0.154700	0.344809	0.000000
1.573194	3428.856171	719.734032	0.326963	0.158569	0.341031	0.000000
2.694511	3286.728027	567.500618	0.322989	0.162726	0.336970	0.000000
4.290319	3223.698212	509.050468	0.321160	0.164640	0.335102	0.000000
4.893003	3210.621399	497.567001	0.320776	0.165042	0.334709	0.000000
6.029015	3193.051666	482.474007	0.320255	0.165586	0.334177	0.000000
7.833029	3183.663574	474.564884	0.319976	0.165878	0.333892	0.000000
9.744074	3187.227112	477.554375	0.320082	0.165767	0.334000	0.000000
11.697160	3209.040283	496.193081	0.320729	0.165091	0.334661	0.000000
15.147337	3306.986786	587.417458	0.323568	0.162121	0.337562	0.000000
17.731559	3360.966003	643.307442	0.325090	0.160529	0.339117	0.000000
20.106721	3397.404053	683.449936	0.326101	0.159471	0.340149	0.000000
22.194834	3429.179565	720.115150	0.326972	0.158559	0.341040	0.000000
24.642847	3463.387695	761.378822	0.327899	0.157589	0.341987	0.000000
26.729642	3490.733521	795.745071	0.328633	0.156822	0.342737	0.000000
29.171161	3518.451447	831.869675	0.329370	0.156051	0.343489	0.000000
31.035318	3540.447662	861.486931	0.329950	0.155444	0.344082	0.000000
32.905730	3527.562042	844.033623	0.329611	0.155799	0.343735	0.000000
34.894725	3397.013580	683.009117	0.326090	0.159482	0.340138	0.000000
37.434844	3223.698334	509.050568	0.321160	0.164640	0.335102	0.000000
39.461807	3082.053894	395.566566	0.316888	0.169110	0.330736	0.000000
42.531531	2863.242218	262.299881	0.309089	0.177162	0.322819	0.000000
45.618079	2640.917572	168.649075	0.297799	0.188465	0.311527	0.000000
48.607656	2443.152222	109.620072	0.284425	0.201845	0.298152	0.000000
52.515227	2204.041840	61.725345	0.264476	0.221796	0.278203	0.000000
57.676598	1927.787827	29.251579	0.237572	0.248702	0.251298	0.000000
62.381806	1730.812714	15.579870	0.210091	0.276183	0.223817	0.000000
69.110288	1514.107422	6.790208	0.171794	0.314545	0.185455	0.000000
79.186636	1552.724396	7.921825	0.179191	0.307134	0.192866	0.000000
81.868023	1600.679260	9.611046	0.188041	0.298267	0.201733	0.000000
372.253304	1288.388840	2.160328	0.128421	0.362382	0.133787	0.000000

FIG. 15.
(continued)

FLØW FIELD PRØPERTIES

Z= 48.9214 INCHES

R (INCHES)	TEMP (DEG R)	TØT PRES (PSF)	MØLE FRACTS CØNSTITUENT 1	CØNSTITUENT 2	CØNSTITUENT 3	CØNSTITUENT 4
0.000000	3489.626465	794.329430	0.328603	0.156853	0.342706	0.000000
1.433515	3502.078125	810.371201	0.328935	0.156505	0.343045	0.000000
2.947377	3494.282349	800.296860	0.328728	0.156723	0.342833	0.000000
4.890993	3484.765015	788.137604	0.328474	0.156989	0.342574	0.000000
6.874821	3472.863983	773.146965	0.328154	0.157323	0.342248	0.000000
6.874821	3472.863983	773.146965	0.326154	0.157323	0.342248	0.000000
7.182335	3396.636017	682.583076	0.326080	0.159493	0.340128	0.000000
8.335557	3339.865601	620.962143	0.324498	0.161147	0.338512	0.000000
8.844157	3324.997803	605.603500	0.324079	0.161586	0.338084	0.000000
9.854464	3302.628479	583.084946	0.323444	0.162251	0.337435	0.000000
11.558383	3279.733643	560.754593	0.322788	0.162936	0.336765	0.000000
13.467945	3266.866852	548.516785	0.322417	0.163324	0.336386	0.000000
15.565184	3269.955811	551.434547	0.322507	0.163231	0.336477	0.000000
19.764562	3333.804596	614.662865	0.324328	0.161326	0.338338	0.000000
22.760500	3362.366119	644.813232	0.325129	0.160488	0.339156	0.000000
25.440869	3382.119598	666.368202	0.325678	0.159913	0.339718	0.000000
27.810885	3386.585175	671.322189	0.325802	0.159784	0.339844	0.000000
30.713461	3278.599274	559.666733	0.322756	0.162971	0.336732	0.000000
33.389686	3176.362244	468.487705	0.319758	0.166106	0.333669	0.000000
36.751476	3041.760864	367.398952	0.315628	0.170427	0.329450	0.000000
39.567789	2927.508484	296.349350	0.311941	0.174284	0.325683	0.000000
42.590935	2800.066833	232.193930	0.305996	0.180259	0.319726	0.000000
45.959813	2659.487549	175.231596	0.298788	0.187476	0.312516	0.000000
50.339748	2481.432129	119.547302	0.287386	0.198884	0.301113	0.000000
53.959164	2344.200867	87.049404	0.276488	0.209782	0.290216	0.000000
59.595524	2140.165375	52.389196	0.258666	0.227607	0.272393	0.000000
65.503200	1948.317032	31.031444	0.239743	0.246531	0.253470	0.000000
71.340146	1782.490967	18.506925	0.217724	0.268550	0.231450	0.000000
79.536198	1596.915756	9.470713	0.187360	0.298950	0.201050	0.000000
91.149806	1388.825424	3.958276	0.145927	0.340460	0.159540	0.000000
100.691781	1515.167816	6.751885	0.171999	0.314338	0.185662	0.000000
105.885351	1600.679260	9.611046	0.188041	0.298267	0.201733	0.000000
388.499939	1280.722305	2.018575	0.127948	0.363933	0.131295	0.000000

FIG. 15.
(continued)

FLØW FIELD PRØPERTIES

Z= 73.3821 INCHES

R (INCHES)	TEMP (DEG R)	TØT PRES (PSF)	MØLE FRACTS CØNSTITUENT 1	CØNSTITUENT 2	CØNSTITUENT 3	CØNSTITUENT 4
0.000000	3519.032288	832.640854	0.329385	0.156035	0.343505	0.000000
1.326332	3529.947815	847.243011	0.329673	0.155733	0.343799	0.000000
2.763705	3522.922546	837.821091	0.329488	0.155927	0.343610	0.000000
4.815429	3524.585724	840.043839	0.329532	0.155881	0.343655	0.000000
6.271212	3510.219604	821.003296	0.329152	0.156279	0.343266	0.000000
8.493402	3513.109863	824.805199	0.329228	0.156199	0.343345	0.000000
9.905489	3503.034921	811.614655	0.328961	0.156479	0.343071	0.000000
11.751837	3485.146790	788.622414	0.328484	0.156978	0.342584	0.000000
13.248066	3412.712555	700.917625	0.326522	0.159031	0.340580	0.000000
13.248066	3412.712555	700.917625	0.326522	0.159031	0.340580	0.000000
13.248066	3412.712555	700.917625	0.326522	0.159031	0.340580	0.000000
13.912852	3366.172424	648.921440	0.325235	0.160377	0.339265	0.000000
14.300235	3351.578522	633.285904	0.324827	0.160803	0.338848	0.000000
15.134809	3326.412292	607.051102	0.324119	0.161544	0.338125	0.000000
16.678216	3297.447083	577.968422	0.323296	0.162405	0.337284	0.000000
18.550406	3273.357819	554.662720	0.322605	0.163128	0.336578	0.000000
20.796304	3249.179474	532.053093	0.321905	0.163861	0.335862	0.000000
26.124325	3126.230927	428.464840	0.318245	0.167689	0.332124	0.000000
30.079935	3025.457275	356.480618	0.315112	0.170967	0.328923	0.000000
33.759661	2924.901306	294.870869	0.311855	0.174374	0.325595	0.000000
37.202713	2829.582855	245.886854	0.307452	0.178801	0.321182	0.000000
41.529366	2708.784149	193.730478	0.301369	0.184891	0.315098	0.000000
45.600231	2596.383301	154.330540	0.295502	0.190766	0.309229	0.000000
50.737531	2462.549408	114.562138	0.285933	0.200338	0.299660	0.000000
55.085665	2351.278656	88.525131	0.277070	0.209200	0.290797	0.000000
59.832261	2232.678192	66.332332	0.267009	0.219262	0.280736	0.000000
65.146764	2104.875336	47.750328	0.255357	0.230915	0.269084	0.000000
72.417772	1947.265076	30.938130	0.239632	0.246641	0.253359	0.000000
78.448842	1829.101761	21.524665	0.224360	0.261914	0.238086	0.000000
88.148677	1660.770065	12.099847	0.198645	0.287644	0.212356	0.000000
98.653483	1513.072021	6.761245	0.171592	0.314747	0.185253	0.000000
109.515741	1378.961731	3.785856	0.143756	0.342634	0.157366	0.000000
125.070632	1313.111359	2.661673	0.129936	0.357441	0.141717	0.000000
132.517387	1600.679260	9.611046	0.188041	0.298267	0.201733	0.000000
408.808247	1271.205734	1.854459	0.127357	0.365872	0.128180	0.000000

FIG. 15.
(continued)

FLOW FIELD PROPERTIES

Z= 122.3036 INCHES

R (INCHES)	TEMP (DEG R)	TOT PRES (PSF)	MOLE FRACTS CONSTITUENT 1	CONSTITUENT 2	CONSTITUENT 3	CONSTITUENT 4
0.000000	3408.008270	695.511230	0.326393	0.159166	0.340448	0.000000
0.781502	3407.763062	695.230362	0.326386	0.159173	0.340441	0.000000
2.525390	3408.438507	696.004257	0.326404	0.159153	0.340460	0.000000
4.295442	3412.485718	700.656128	0.326516	0.159037	0.340573	0.000000
5.738823	3412.492432	700.663864	0.326516	0.159037	0.340573	0.000000
7.245237	3394.603058	680.292923	0.326024	0.159552	0.340071	0.000000
9.418113	3339.836853	620.932159	0.324498	0.161148	0.338511	0.000000
10.843455	3304.932129	585.371666	0.323509	0.162182	0.337502	0.000000
12.843279	3255.279205	537.684288	0.322082	0.163675	0.336043	0.000000
14.608142	3210.665985	497.605778	0.320777	0.165041	0.334710	0.000000
16.670881	3164.788086	458.985226	0.319412	0.166469	0.333315	0.000000
18.249417	3124.696960	427.286011	0.318199	0.167738	0.332076	0.000000
20.731597	3067.879161	385.462051	0.316447	0.169571	0.330286	0.000000
22.291204	3025.161499	356.285057	0.315103	0.170976	0.328913	0.000000
25.168436	2962.359436	316.704838	0.313084	0.173088	0.326851	0.000000
26.809068	2919.520172	291.838520	0.311677	0.174561	0.325413	0.000000
29.026490	2862.843048	262.100128	0.309070	0.177182	0.322800	0.000000
29.455367	2784.338531	225.155861	0.305213	0.181043	0.318942	0.000000
29.455367	2784.338531	225.155861	0.305213	0.181043	0.316942	0.000000
29.455367	2784.338531	225.155861	0.305213	0.181043	0.318942	0.000000
29.462534	2775.954926	221.476204	0.304793	0.181463	0.318522	0.000000
29.700944	2761.349731	215.183229	0.304057	0.182200	0.317787	0.000000
30.362831	2731.091522	202.610022	0.302518	0.183741	0.316247	0.000000
31.963534	2678.479156	182.179193	0.299789	0.186473	0.313518	0.000000
34.247518	2617.442780	160.618437	0.296537	0.189729	0.310265	0.000000
37.459792	2548.951477	138.852423	0.292469	0.193800	0.306197	0.000000
46.483850	2409.068909	101.360353	0.281736	0.204532	0.295466	0.000000
53.119545	2307.122070	79.644341	0.273403	0.212868	0.287130	0.000000
59.242492	2213.900513	63.280755	0.265353	0.220919	0.279080	0.000000
65.097350	2128.841858	50.862132	0.257612	0.228660	0.271339	0.000000
72.524399	2024.006577	38.379613	0.247492	0.238781	0.261219	0.000000
79.675329	1929.602768	29.405475	0.237765	0.246509	0.251492	0.000000
88.812341	1818.364899	20.795736	0.222651	0.263423	0.236577	0.000000
96.810326	1729.712173	15.521988	0.209925	0.276349	0.223651	0.000000
105.695634	1640.140289	11.190760	0.195063	0.291233	0.208767	0.000000
115.921918	1545.883102	7.731161	0.177899	0.308429	0.191571	0.000000
129.999411	1427.252256	4.694297	0.154187	0.332185	0.167815	0.000000
142.319229	1336.747849	3.117394	0.134222	0.352186	0.147814	0.000000
163.538063	1256.587341	1.653021	0.126456	0.368889	0.123323	0.000000
178.107305	1600.679260	9.611046	0.185041	0.298267	0.201733	0.000000
184.705763	1203.319534	0.991463	0.122958	0.380174	0.105232	0.000000
185.344860	1234.118698	1.323102	0.124995	0.373580	0.115806	0.000000
193.001072	1592.774200	9.315464	0.186607	0.299704	0.200296	0.000000
449.424858	1252.394012	1.565384	0.126171	0.369751	0.121950	0.000000

FIG. 15.
(continued)

FLOW FIELD PROPERTIES

Z= 97.8429 INCHES

R (INCHES)	TEMP (DEG R)	TOT PRES (PSF)	MOLE FRACTS CONSTITUENT 1	CONSTITUENT 2	CONSTITUENT 3	CONSTITUENT 4
0.000000	3487.288025	791.346115	0.328541	0.156918	0.342642	0.000000
0.027985	3487.290710	791.349525	0.328541	0.156918	0.342643	0.000000
2.035831	3508.973541	819.368637	0.329119	0.156314	0.343233	0.000000
3.337997	3506.241699	815.794243	0.329046	0.156390	0.343159	0.000000
5.168483	3496.209778	802.778038	0.328779	0.156669	0.342886	0.000000
6.774565	3485.336700	788.863632	0.328489	0.156973	0.342589	0.000000
8.551782	3478.143463	779.767853	0.328296	0.157174	0.342392	0.000000
9.968112	3470.469910	770.159851	0.328090	0.157390	0.342182	0.000000
12.070979	3458.334808	755.164314	0.327763	0.157732	0.341848	0.000000
13.469626	3436.288269	728.535049	0.327166	0.158357	0.341237	0.000000
15.846233	3368.089691	650.998940	0.325289	0.160321	0.339320	0.000000
17.286877	3319.446075	599.949196	0.323922	0.161750	0.337923	0.000000
19.224429	3255.187805	537.599541	0.322079	0.163678	0.336041	0.000000
20.208606	3174.519470	466.964031	0.319703	0.166164	0.333613	0.000000
20.208606	3174.519470	466.964031	0.319703	0.166164	0.333613	0.000000
20.208606	3174.519470	466.964031	0.319703	0.166164	0.333613	0.000000
20.501000	3131.223175	432.319771	0.318397	0.167530	0.332279	0.000000
20.812265	3112.310547	417.864658	0.317820	0.168134	0.331689	0.000000
21.555390	3074.855957	390.408623	0.316664	0.169343	0.330508	0.000000
23.110236	3012.234619	347.822685	0.314692	0.171407	0.328493	0.000000
25.178977	2943.344757	305.461231	0.312463	0.173739	0.326216	0.000000
27.944876	2868.166534	264.774380	0.309326	0.176924	0.323057	0.000000
35.153465	2723.469299	199.539356	0.302127	0.184133	0.315856	0.000000
40.439038	2614.905609	159.769524	0.296400	0.189866	0.310128	0.000000
45.307220	2514.049072	126.577293	0.289863	0.196407	0.303590	0.000000
49.926031	2422.843170	104.634566	0.282830	0.203440	0.296557	0.000000
55.742288	2309.711029	80.143985	0.273620	0.212651	0.287347	0.000000
61.280406	2207.437195	62.257451	0.264778	0.221493	0.278505	0.000000
68.356548	2081.517487	44.869621	0.253127	0.233146	0.266854	0.000000
74.419417	1978.775040	33.835109	0.242909	0.243365	0.256635	0.000000
81.121093	1873.323105	24.754158	0.230452	0.255821	0.244179	0.000000
88.783573	1764.662491	17.449661	0.215124	0.271150	0.228850	0.000000
99.333259	1633.793564	10.922905	0.193949	0.292349	0.207651	0.000000
108.279625	1535.187057	7.402922	0.175863	0.310469	0.189532	0.000000
122.917697	1389.201645	3.964981	0.146009	0.340377	0.159623	0.000000
139.411917	1285.967651	2.145979	0.128266	0.362879	0.132997	0.000000
155.761539	1239.656998	1.388835	0.125348	0.372412	0.117684	0.000000
156.528492	1600.679260	9.611046	0.198041	0.298267	0.201733	0.000000
429.116547	1261.763016	1.703761	0.126764	0.367811	0.125065	0.000000

FIG. 15.
(continued)

FLØW FIELD PRØPERTIES

Z= 146.7643 INCHES

R (INCHES)	TEMP (DEG R)	TØT PRES (PSF)	MØLE FRACTS CØNSTITUENT 1	CØNSTITUENT 2	CØNSTITUENT 3	CØNSTITUENT 4
0.000000	3274.432617	555.685822	0.322636	0.163096	0.336609	0.000000
0.205361	3281.836151	562.775482	0.322849	0.162873	0.336827	0.000000
0.640541	3277.653381	558.760956	0.322728	0.162999	0.336704	0.000000
1.452744	3255.493134	537.882645	0.322088	0.163669	0.336050	0.000000
2.043036	3236.763702	520.740646	0.321543	0.164239	0.335493	0.000000
3.037912	3216.851990	503.011547	0.320959	0.164850	0.334896	0.000000
4.029852	3199.707489	488.146664	0.320453	0.165380	0.334379	0.000000
5.299407	3172.599640	465.381023	0.319646	0.166224	0.333554	0.000000
6.792240	3145.961639	443.867283	0.318644	0.167062	0.332736	0.000000
8.225063	3123.013245	425.995186	0.318147	0.167792	0.332024	0.000000
10.248657	3090.006500	401.330276	0.317134	0.168852	0.330988	0.000000
12.366314	3058.324615	378.771481	0.316148	0.169883	0.329981	0.000000
14.104210	3032.418213	361.109184	0.315333	0.170736	0.329148	0.000000
15.844984	3000.769623	340.456219	0.314325	0.171790	0.326119	0.000000
18.416933	2958.553009	314.427246	0.312960	0.173218	0.326724	0.000000
20.074099	2929.889709	297.705013	0.312020	0.174202	0.325763	0.000000
22.406453	2888.612030	275.253258	0.310307	0.175943	0.324038	0.000000
24.403862	2851.157532	256.307262	0.308504	0.177748	0.322234	0.000000
26.836652	2811.111267	237.242680	0.306543	0.179711	0.320273	0.000000
28.628746	2776.159088	221.565235	0.304603	0.181453	0.318533	0.000000
31.483967	2725.398407	200.312891	0.302226	0.184033	0.315955	0.000000
33.215225	2688.603027	185.973696	0.300320	0.185942	0.314048	0.000000
36.532504	2630.625580	165.088793	0.297248	0.189018	0.310976	0.000000
38.375257	2593.622345	152.791668	0.295242	0.191026	0.308969	0.000000
40.316764	2486.431244	120.896487	0.287768	0.198502	0.301495	0.000000
40.316764	2486.431244	120.896487	0.287768	0.198502	0.301495	0.000000
40.316764	2486.431244	120.896487	0.287768	0.198502	0.301495	0.000000
40.316764	2486.431244	120.896487	0.287768	0.198502	0.301495	0.000000
40.316764	2486.431244	120.896487	0.287768	0.198502	0.301495	0.000000
40.473668	2475.693329	118.013759	0.286946	0.199325	0.300673	0.000000
41.038941	2452.479095	111.974082	0.285152	0.201118	0.298879	0.000000
42.618464	2410.446320	01.683936	0.281648	0.204422	0.295575	0.000000
45.093491	2360.073029	90.387308	0.277790	0.208481	0.291517	0.000000
48.658834	2299.080902	78.108743	0.272725	0.213546	0.286452	0.000000
59.650277	2167.702698	56.260402	0.261198	0.225074	0.274925	0.000000
67.704746	2072.215637	43.762899	0.252230	0.234043	0.265957	0.000000
75.081301	1985.317200	34.463624	0.243580	0.242693	0.257307	0.000000
82.106526	1905.690689	27.364291	0.234793	0.251481	0.248520	0.000000
91.186847	1813.153076	20.449353	0.222115	0.264159	0.235841	0.000000
100.019494	1729.292053	15.499940	0.209662	0.276412	0.223588	0.000000
111.374075	1631.616730	10.832285	0.193565	0.292733	0.207267	0.000000
121.481585	1554.345810	7.999448	0.179496	0.306828	0.193172	0.000000
132.770668	1472.911362	5.715115	0.163617	0.322736	0.177264	0.000000
145.855625	1385.666214	3.902349	0.145234	0.341154	0.158846	0.000000
164.031961	1295.593658	2.334529	0.128850	0.360941	0.136116	0.000000
180.255774	1248.469833	1.536364	0.125948	0.370576	0.120608	0.000000
197.985365	1600.679260	9.611046	0.188041	0.298267	0.201733	0.000000
198.736872	1586.569778	9.068806	0.185474	0.300839	0.199161	0.000000
207.251728	1213.879501	1.090458	0.123648	0.377891	0.108904	0.000000
210.880352	1272.322617	1.871797	0.127426	0.365643	0.128547	0.000000

FIG. 15.
(continued)

FLØW FIELD PRØPERTIES

Z= 146.7643 INCHES

R (INCHES)	TEMP (DEG R)	TØT PRES (PSF)	MØLE FRACTS CØNSTITUENT 1	CØNSTITUENT 2	CØNSTITUENT 3	CØNSTITUENT 4
219.139172	1559.239044	8.145028	0.180414	0.305908	0.194092	0.000000
469.733158	1243.098557	1.438321	0.125577	0.371691	0.118836	0.000000

FIG. 15.
(continued)

FLØW FIELD PRØPERTIES

Z= 171.2250 INCHES

R (INCHES)	TEMP (DEG R)	TØT PRES (PSF)	MØLE FRACTS CØNSTITUENT 1	CØNSTITUENT 2	CØNSTITUENT 3	CØNSTITUENT 4
0.000000	2855.637543	258.515640	0.308721	0.177530	0.322452	0.000000
1.155140	2852.656555	257.044453	0.308577	0.177675	0.322307	0.000000
2.485632	2847.799072	254.661856	0.308341	0.177911	0.322071	0.000000
4.024599	2843.108429	252.378239	0.308113	0.178140	0.321843	0.000000
5.083905	2851.926514	256.685207	0.308541	0.177710	0.322272	0.000000
7.221289	2872.716522	267.077690	0.309545	0.176705	0.323276	0.000000
7.225467	2869.947418	265.673962	0.309412	0.176839	0.323143	0.000000
7.225487	2869.947418	265.673962	0.309412	0.176839	0.323143	0.000000
7.644765	2865.844574	263.605209	0.309214	0.177037	0.322945	0.000000
8.186316	2864.614868	262.987736	0.309155	0.177096	0.322886	0.000000
9.219440	2862.462361	261.919750	0.309052	0.177199	0.322783	0.000000
9.925815	2857.611511	259.493618	0.308817	0.177435	0.322547	0.000000
11.112336	2849.731720	255.607649	0.308435	0.177817	0.322165	0.000000
12.311279	2842.031403	251.856255	0.308060	0.178192	0.321790	0.000000
13.772128	2827.300537	244.805077	0.307340	0.178913	0.321070	0.000000
15.507591	2809.767944	236.623856	0.306477	0.179777	0.320207	0.000000
17.167374	2792.459374	228.767206	0.305616	0.180637	0.319348	0.000000
19.549469	2768.366028	218.187868	0.304411	0.181845	0.318141	0.000000
22.001705	2741.615845	206.913198	0.303056	0.183202	0.316785	0.000000
24.052201	2719.987640	198.149452	0.301948	0.184312	0.315677	0.000000
26.030152	2693.938385	187.999250	0.300598	0.185663	0.314327	0.000000
28.942050	2656.035370	173.992281	0.298605	0.187659	0.312333	0.000000
30.876134	2631.962830	165.547882	0.297320	0.188946	0.311048	0.000000
33.507798	2595.967896	153.548229	0.295370	0.190898	0.309097	0.000000
35.747734	2562.765106	143.100303	0.293469	0.192781	0.307216	0.000000
38.552020	2528.111786	132.639452	0.290919	0.195351	0.304646	0.000000
40.563409	2498.452759	124.192123	0.288684	0.197586	0.302411	0.000000
43.770983	2454.058777	112.376851	0.285274	0.200996	0.299002	0.000000
45.685262	2423.671387	104.834175	0.282695	0.203375	0.296623	0.000000
49.438005	2372.191925	93.006014	0.278777	0.207494	0.292504	0.000000
51.463328	2340.808685	86.348949	0.276209	0.210062	0.289936	0.000000
52.671017	2259.220184	70.850780	0.269320	0.216951	0.283047	0.000000
52.671017	2259.220184	70.850780	0.269320	0.216951	0.283047	0.000000
52.671017	2259.220184	70.850780	0.269320	0.216951	0.283047	0.000000
52.671017	2259.220184	70.850780	0.269320	0.216951	0.283047	0.000000
52.671017	2259.220184	70.850780	0.269320	0.216951	0.283047	0.000000
52.740756	2251.045319	69.433003	0.268612	0.217659	0.282339	0.000000
53.215582	2232.812958	66.354665	0.267021	0.219250	0.280748	0.000000
54.742960	2197.683594	60.738947	0.263907	0.222365	0.277634	0.000000
57.277738	2153.151428	54.186576	0.259865	0.226407	0.273592	0.000000
61.373669	2100.227142	47.165296	0.254916	0.231356	0.268643	0.000000
74.207194	1975.570221	33.530669	0.242579	0.243695	0.256305	0.000000
83.715653	1888.252167	25.931117	0.232467	0.253807	0.246193	0.000000
92.437693	1811.275177	20.325725	0.221848	0.264425	0.235575	0.000000
100.782882	1740.499466	16.097100	0.211545	0.274729	0.225271	0.000000
111.599112	1656.648483	11.913430	0.197934	0.288356	0.211644	0.000000
122.217328	1583.060455	8.968815	0.184831	0.301483	0.198517	0.000000
135.993696	1492.750961	6.213463	0.167593	0.318753	0.181247	0.000000
148.358042	1420.296265	4.553156	0.152714	0.333660	0.166340	0.000000
162.238625	1346.455841	3.261583	0.136451	0.349953	0.150047	0.000000

FIG. 15.
(continued)

FLØW FIELD PRØPERTIES

Z= 171.2250 INCHES

R (INCHES)	TEMP (DEG R)	TØT PRES (PSF)	MØLE FRACTS CØNSTITUENT 1	CØNSTITUENT 2	CØNSTITUENT 3	CØNSTITUENT 4
178.473404	1289.762848	2.218594	0.128497	0.362113	0.134229	0.000000
201.414591	1229.877640	1.296912	0.124770	0.374484	0.114317	0.000000
215.924015	1600.679260	9.611046	0.186041	0.298267	0.201733	0.000000
216.759781	1592.563690	9.307758	0.186569	0.299743	0.200257	0.000000
218.211386	1594.325821	9.372909	0.186889	0.299422	0.200578	0.000000
222.075906	1183.968964	0.843996	0.121778	0.384419	0.098327	0.000000
225.114744	1481.353683	5.894850	0.165317	0.321033	0.178967	0.000000
228.282104	1563.476593	8.285802	0.181207	0.305114	0.194886	0.000000
233.324291	1321.686096	2.868418	0.130733	0.355690	0.144300	0.000000
245.277269	1526.641647	7.128423	0.174222	0.312112	0.187888	0.000000
490.041466	1233.876404	1.321644	0.124982	0.373631	0.115721	0.000000

FIG. 15.
(continued)

FLOW FIELD PROPERTIES

Z= 195.6857 INCHES

R (INCHES)	TEMP (DEG R)	TOT PRES (PSF)	MOLE FRACTS CONSTITUENT 1	CONSTITUENT 2	CONSTITUENT 3	CONSTITUENT 4
0.000000	2595.330292	153.342270	0.295335	0.190933	0.309063	0.000000
0.496717	2594.633545	153.117458	0.295297	0.190971	0.309024	0.000000
1.787995	2592.400299	152.398701	0.295175	0.191093	0.308902	0.000000
3.162806	2591.441223	152.090870	0.295122	0.191146	0.308850	0.000000
4.564481	2593.504639	152.753780	0.295235	0.191033	0.308963	0.000000
6.134578	2594.572571	153.097803	0.295293	0.190974	0.309021	0.000000
7.798688	2594.171204	152.968439	0.295272	0.190996	0.308999	0.000000
9.449260	2592.933136	152.569942	0.295204	0.191064	0.308931	0.000000
11.303968	2589.652344	151.518068	0.295024	0.191244	0.308752	0.000000
12.693347	2593.617767	152.790201	0.295241	0.191026	0.308969	0.000000
15.549708	2603.714417	156.068693	0.295792	0.190475	0.309520	0.000000
15.549708	2603.714417	156.066693	0.295792	0.190475	0.309520	0.000000
15.549708	2603.714417	156.068693	0.295792	0.190475	0.309520	0.000000
16.024997	2600.603436	155.117626	0.295634	0.190634	0.309361	0.000000
16.682954	2599.477966	154.686136	0.295561	0.190706	0.309269	0.000000
17.949063	2597.365387	154.000462	0.295446	0.190821	0.309174	0.000000
18.783016	2593.620300	152.791012	0.295241	0.191026	0.308969	0.000000
20.193517	2587.139099	150.716303	0.294886	0.191382	0.308614	0.000000
21.601740	2579.885590	148.421715	0.294467	0.191781	0.308215	0.000000
23.282752	2568.020447	144.729849	0.293832	0.192438	0.307559	0.000000
25.295651	2553.934662	140.372894	0.292838	0.193432	0.306565	0.000000
27.217183	2539.603973	136.036758	0.291776	0.194494	0.305503	0.000000
29.933412	2518.543457	129.864285	0.290201	0.196069	0.303929	0.000000
32.799395	2495.938660	123.496866	0.288493	0.197777	0.302220	0.000000
35.125883	2475.700623	118.015700	0.286946	0.199324	0.300673	0.000000
37.345258	2453.321411	112.188693	0.285217	0.201053	0.298944	0.000000
40.726180	2421.371826	104.280738	0.282714	0.203557	0.296441	0.000000
42.643522	2398.946930	99.008301	0.280931	0.205339	0.294658	0.000000
45.818045	2367.649109	92.017184	0.278408	0.207863	0.292135	0.000000
48.386913	2339.575867	86.096043	0.276107	0.210164	0.289834	0.000000
51.469634	2306.395233	79.504521	0.273342	0.212929	0.287069	0.000000
53.714725	2279.981018	74.558471	0.271103	0.215168	0.284830	0.000000
57.385688	2240.594727	67.654526	0.267702	0.218569	0.281429	0.000000
59.404603	2212.952515	63.129808	0.265269	0.221003	0.278996	0.000000
63.693315	2166.430054	56.076468	0.261082	0.225190	0.274809	0.000000
65.799389	2111.937744	48.650599	0.256025	0.230247	0.269752	0.000000
66.195108	2072.269287	43.769217	0.252235	0.234038	0.265962	0.000000
66.195108	2072.269287	43.769217	0.252235	0.234038	0.265962	0.000000
66.195108	2072.269287	43.769217	0.252235	0.234038	0.265962	0.000000
66.195108	2072.269287	43.769217	0.252235	0.234038	0.265962	0.000000
66.195108	2072.269287	43.769217	0.252235	0.234038	0.265962	0.000000
66.201493	2068.507446	43.327998	0.251870	0.234402	0.265597	0.000000
66.541054	2053.676361	41.623878	0.250425	0.235848	0.264152	0.000000
67.992977	2023.804596	38.358260	0.247472	0.238801	0.261199	0.000000
70.626451	1984.558411	34.390237	0.243502	0.242771	0.257229	0.000000
75.173709	1937.607463	30.092174	0.238614	0.247660	0.252341	0.000000
89.985207	1825.157466	21.254466	0.223807	0.262467	0.237533	0.000000
100.987458	1746.000519	16.397113	0.212365	0.273909	0.226091	0.000000
111.052819	1675.306091	12.776988	0.201134	0.285151	0.214849	0.000000
120.671232	1611.422256	10.021275	0.189975	0.296330	0.203670	0.000000

FIG. 15.
(continued)

FLØW FIELD PRØPERTIES

Z= 195.6857 INCHES

R (INCHES)	TEMP (DEG R)	TØT PRES (PSF)	MØLE FRACTS CØNSTITUENT 1	CØNSTITUENT 2	CØNSTITUENT 3	CØNSTITUENT 4
133.448565	1535.851456	7.422964	0.175990	0.310341	0.189659	0.000000
146.108746	1467.149292	5.576838	0.162449	0.323907	0.176093	0.000000
153.385872	1407.829163	4.309103	0.150050	0.336329	0.163671	0.000000
162.479389	1382.069611	3.839488	0.144442	0.341947	0.158053	0.000000
177.190765	1319.735397	2.875698	0.130294	0.356146	0.143833	0.000000
193.786192	1276.581390	1.975595	0.127692	0.364783	0.129932	0.000000
213.405348	1232.528503	1.328831	0.124939	0.373923	0.115220	0.000000
240.783894	1546.121170	7.722731	0.177944	0.308384	0.191616	0.000000
241.076046	1553.084488	7.944658	0.179259	0.307066	0.192934	0.000000
241.523223	1175.934052	0.781528	0.121241	0.386201	0.095458	0.000000
243.371365	1517.270554	6.857503	0.172409	0.313928	0.186072	0.000000
246.073641	1542.430252	7.606885	0.177243	0.309085	0.190915	0.000000
248.701311	1453.143326	5.221758	0.159583	0.326778	0.173222	0.000000
255.289173	1522.661224	7.012107	0.173454	0.312882	0.187118	0.000000
258.509602	1308.114853	2.567755	0.129622	0.358435	0.140130	0.000000
264.290585	1157.225922	0.635392	0.119775	0.390402	0.088851	0.000000
267.911713	1178.591766	0.785042	0.121291	0.385606	0.096515	0.000000
271.415367	1494.952332	6.244628	0.168029	0.318316	0.181684	0.000000
510.349766	1224.727386	1.214505	0.124386	0.375572	0.112607	0.000000

FIG. 15.
(continued)

FLOW FIELD PROPERTIES

Z= 220.1464 INCHES

R (INCHES)	TEMP (DEG R)	TOT PRES (PSF)	MOLE FRACTS CONSTITUENT 1	CONSTITUENT 2	CONSTITUENT 3	CONSTITUENT 4
0.000000	2409.494812	101.460318	0.281772	0.204498	0.295500	0.000000
0.737616	2408.178467	101.151616	0.281668	0.204603	0.295395	0.000000
1.966503	2406.219666	100.693682	0.281512	0.204759	0.295239	0.000000
3.236843	2403.916840	100.157500	0.281328	0.204942	0.295055	0.000000
5.005612	2405.331635	100.486635	0.281441	0.204830	0.295168	0.000000
6.472272	2405.514374	100.529215	0.281456	0.204815	0.295183	0.000000
8.305541	2405.016602	100.413272	0.281416	0.204855	0.295143	0.000000
9.608878	2403.425323	100.043356	0.281289	0.204982	0.295016	0.000000
11.256922	2402.673248	99.868919	0.281229	0.205042	0.294956	0.000000
13.173406	2403.381409	100.033164	0.281285	0.204985	0.295013	0.000000
15.199593	2402.956818	99.934660	0.281252	0.205019	0.294979	0.000000
17.134276	2400.400604	99.343312	0.281048	0.205223	0.294775	0.000000
19.279366	2395.494629	98.216410	0.280655	0.205616	0.294382	0.000000
21.036785	2398.018982	98.794930	0.280857	0.205413	0.294584	0.000000
24.629019	2403.612122	100.086721	0.281304	0.204967	0.295031	0.000000
24.629019	2403.612122	100.086721	0.281304	0.204967	0.295031	0.000000
24.629019	2403.612122	100.086721	0.281304	0.204967	0.295031	0.000000
25.158800	2400.825745	99.441465	0.281081	0.205189	0.294809	0.000000
25.924417	2398.848480	98.985642	0.280923	0.205347	0.294651	0.000000
27.406991	2395.187927	98.146304	0.280630	0.205640	0.294358	0.000000
28.394637	2391.925476	97.403184	0.280369	0.205902	0.294096	0.000000
30.083422	2386.671570	96.216152	0.279947	0.206324	0.293674	0.000000
31.760843	2380.390106	94.812567	0.279440	0.206831	0.293167	0.000000
33.636832	2369.045532	92.320219	0.278521	0.207750	0.292248	0.000000
35.892087	2354.777985	89.262295	0.277357	0.208914	0.291084	0.000000
38.146182	2342.376404	86.672293	0.276338	0.209933	0.290065	0.000000
41.260874	2322.936096	82.736609	0.274727	0.211544	0.288454	0.000000
44.472169	2300.536987	78.384986	0.272648	0.213423	0.286575	0.000000
47.184172	2282.529877	75.024440	0.271321	0.214950	0.285048	0.000000
49.680852	2262.399231	71.408504	0.269595	0.216677	0.283322	0.000000
53.430868	2231.616608	66.156654	0.266916	0.219355	0.280643	0.000000
55.817486	2210.989655	62.818199	0.265094	0.221177	0.278821	0.000000
59.192968	2183.017334	58.512927	0.262588	0.223684	0.276315	0.000000
62.009151	2156.732422	54.691017	0.260194	0.226078	0.273921	0.000000
65.440861	2125.326691	50.395587	0.257283	0.228989	0.271010	0.000000
67.996091	2102.251343	47.419338	0.255108	0.231164	0.268835	0.000000
72.054089	2065.339661	42.959287	0.251563	0.234710	0.265290	0.000000
74.212588	2040.199402	40.123432	0.249100	0.237173	0.262827	0.000000
79.052770	1997.734039	35.682882	0.244646	0.241427	0.258573	0.000000
80.674235	1918.219711	28.434013	0.236447	0.249826	0.250174	0.000000
80.674235	1918.219711	28.434013	0.236447	0.249826	0.250174	0.000000
80.674235	1918.219711	28.434013	0.236447	0.249826	0.250174	0.000000
80.674235	1918.219711	28.434013	0.236447	0.249826	0.250174	0.000000
80.674235	1918.219711	28.434013	0.236447	0.249826	0.250174	0.000000
80.674235	1918.219711	28.434013	0.236447	0.249826	0.250174	0.000000
80.674235	1918.219711	28.434013	0.236447	0.249826	0.250174	0.000000
80.870863	1906.660065	27.445846	0.234922	0.251352	0.248648	0.000000
82.258653	1882.465240	25.469507	0.231688	0.254585	0.245415	0.000000
85.032560	1849.716385	22.983646	0.227224	0.259050	0.240950	0.000000
89.884630	1807.665965	20.089859	0.221336	0.264938	0.235062	0.000000

FIG. 15.
(continued)

FLØW FIELD PRØPERTIES

Z= 220.1464 INCHES

R (INCHES)	TEMP (DEG R)	TØT PRES (PSF)	MØLE FRACTS CØNSTITUENT 1	CØNSTITUENT 2	CØNSTITUENT 3	CØNSTITUENT 4
106.789310	1704.234207	14.219592	0.206003	0.280273	0.219727	0.000000
119.294965	1631.714859	10.836356	0.193583	0.292716	0.207284	0.000000
130.627312	1566.431000	8.396103	0.181758	0.304563	0.195437	0.000000
142.059938	1509.097061	6.651019	0.170815	0.315525	0.184475	0.000000
156.781464	1437.227783	4.903110	0.156282	0.330086	0.169914	0.000000
160.590281	1401.106522	4.182129	0.148600	0.337782	0.162218	0.000000
171.341673	1373.316772	3.690050	0.142505	0.343888	0.156112	0.000000
190.423204	1305.516953	2.544599	0.129446	0.358959	0.139306	0.000000
207.435869	1266.869995	1.812370	0.127094	0.366768	0.126736	0.000000
226.715763	1226.882370	1.261688	0.124579	0.375120	0.113293	0.000000
249.792484	1182.955490	0.835874	0.121711	0.384643	0.097966	0.000000
270.002518	1487.756546	6.058058	0.166598	0.319749	0.180251	0.000000
270.627140	1464.603376	5.487495	0.161930	0.324426	0.175574	0.000000
273.935905	1492.773163	6.187854	0.167597	0.318749	0.181251	0.000000
274.200920	1416.420425	4.443381	0.151888	0.334486	0.165514	0.000000
280.642834	1329.724396	2.982383	0.132595	0.353814	0.146186	0.000000
282.296242	1483.263641	5.943040	0.165700	0.320649	0.179351	0.000000
282.460789	1172.619446	0.735241	0.120828	0.386936	0.094423	0.000000
291.904453	1205.113754	1.010977	0.123089	0.379786	0.105847	0.000000
297.553467	1464.142273	5.475595	0.161836	0.324520	0.175480	0.000000
530.658073	1215.651199	1.116120	0.123789	0.377512	0.109493	0.000000

FIG. 15.
(continued)

FLØW FIELD PRØPERTIES

Z= 243.1395 INCHES

R (INCHES)	TEMP (DEG R)	TØT PRES (PSF)	MØLE FRACTS CØNSTITUENT 1	CØNSTITUENT 2	CØNSTITUENT 3	CØNSTITUENT 4
0.000000	2261.789612	71.301274	0.269542	0.216729	0.283269	0.000000
0.816829	2259.949371	70.978392	0.269383	0.216688	0.283110	0.000000
2.169905	2263.310974	71.569123	0.269673	0.216598	0.283400	0.000000
3.403444	2264.604431	71.797489	0.269785	0.216487	0.283512	0.000000
4.684116	2264.901581	71.850039	0.269810	0.216461	0.283537	0.000000
6.012883	2264.447968	71.769834	0.269771	0.216500	0.283498	0.000000
7.394348	2263.400330	71.584879	0.269681	0.216590	0.283408	0.000000
8.865583	2262.378937	71.404932	0.269593	0.216678	0.283320	0.000000
10.924359	2262.975403	71.509974	0.269644	0.216627	0.283371	0.000000
12.603836	2262.441254	71.415901	0.269598	0.216673	0.283325	0.000000
14.357301	2261.089600	71.178313	0.269482	0.216790	0.283209	0.000000
16.186656	2258.739990	70.766848	0.269279	0.216993	0.283006	0.000000
18.133699	2258.097717	70.654716	0.269223	0.217048	0.282950	0.000000
20.351044	2257.646149	70.575964	0.269184	0.217087	0.282911	0.000000
22.689283	2255.964508	70.283323	0.269039	0.217233	0.282766	0.000000
24.908264	2252.408844	69.667846	0.268731	0.217541	0.282458	0.000000
27.397359	2247.575226	68.838261	0.268311	0.217961	0.282038	0.000000
29.477051	2248.520813	68.999908	0.268393	0.217879	0.282120	0.000000
33.747625	2249.829926	69.224212	0.268507	0.217765	0.282234	0.000000
33.747625	2249.829926	69.224212	0.268507	0.217765	0.282234	0.000000
33.747625	2249.829926	69.224212	0.268507	0.217765	0.282234	0.000000
34.338790	2247.104553	68.757915	0.268270	0.218002	0.281997	0.000000
35.218434	2244.748779	68.356932	0.268065	0.218207	0.281792	0.000000
36.954514	2240.608502	67.690528	0.267721	0.218551	0.281448	0.000000
38.098890	2237.782227	67.182340	0.267456	0.218815	0.281184	0.000000
40.035177	2232.231445	66.258354	0.266970	0.219301	0.280697	0.000000
41.942375	2225.710632	65.186252	0.266397	0.219875	0.280124	0.000000
44.038609	2214.774200	63.420139	0.265430	0.220841	0.279157	0.000000
46.564963	2200.874329	61.232322	0.264193	0.222079	0.277920	0.000000
49.126042	2189.216553	59.445518	0.263147	0.223125	0.276874	0.000000
52.618861	2170.544922	56.672979	0.261457	0.224615	0.275184	0.000000
56.221165	2148.903351	53.593121	0.259474	0.226798	0.273201	0.000000
59.263781	2131.448730	51.210413	0.257855	0.228417	0.271562	0.000000
62.029315	2112.735596	48.753177	0.256100	0.230172	0.269827	0.000000
66.208862	2083.718384	45.134816	0.253339	0.232934	0.267065	0.000000
68.807357	2063.590057	42.756753	0.251393	0.234880	0.265120	0.000000
72.562680	2037.657333	39.845454	0.248848	0.237424	0.262575	0.000000
75.676386	2013.338852	37.265159	0.246423	0.239850	0.260150	0.000000
79.488652	1983.668823	34.304365	0.243411	0.242862	0.257138	0.000000
82.221761	1961.692535	32.238183	0.241141	0.245132	0.254868	0.000000
86.747077	1928.129410	29.280493	0.237608	0.248666	0.251335	0.000000
89.086538	1906.325974	27.417715	0.234677	0.251396	0.248604	0.000000
94.310459	1866.912216	24.262526	0.229581	0.256693	0.243307	0.000000
95.017504	1803.637466	19.829275	0.220762	0.265512	0.234489	0.000000
95.017504	1803.637466	19.829275	0.220762	0.265512	0.234489	0.000000
95.017504	1803.637466	19.829275	0.220762	0.265512	0.234489	0.000000
95.017504	1803.637466	19.829275	0.220762	0.265512	0.234489	0.000000
95.017504	1803.637466	19.829275	0.220762	0.265512	0.234489	0.000000
95.017504	1803.637466	19.829275	0.220762	0.265512	0.234489	0.000000
95.017504	1803.637466	19.829275	0.220762	0.265512	0.234489	0.000000

FIG. 15
(continued)

FLØW FIELD PRØPERTIES

Z= 243.1395 INCHES

R (INCHES)	TEMP (DEG R)	TØT PRES (PSF)	MØLE FRACTS CØNSTITUENT 1	CØNSTITUENT 2	CØNSTITUENT 3	CØNSTITUENT 4
95.064710	1794.040329	19.219755	0.219389	0.266885	0.233115	0.000000
96.405658	1773.576492	17.971834	0.216428	0.269846	0.230154	0.000000
99.373328	1745.504059	16.369849	0.212291	0.273983	0.226017	0.000000
104.570882	1706.358551	14.330711	0.206356	0.279919	0.220081	0.000000
123.195189	1609.715378	9.955131	0.189669	0.296636	0.203364	0.000000
137.318632	1542.606644	7.629340	0.177277	0.309052	0.190948	0.000000
150.385559	1482.913147	5.961974	0.165631	0.320720	0.179281	0.000000
163.019884	1426.483139	4.678513	0.154024	0.332347	0.167653	0.000000
166.892426	1394.826935	4.066376	0.147237	0.339147	0.160853	0.000000
179.445396	1358.807236	3.453095	0.139255	0.347144	0.152856	0.000000
195.733963	1305.367599	2.541313	0.129438	0.358989	0.139258	0.000000
217.479942	1262.341049	1.740536	0.126814	0.367700	0.125236	0.000000
237.438034	1226.701935	1.259595	0.124567	0.375158	0.113232	0.000000
260.144939	1188.070297	0.877606	0.122051	0.383514	0.099783	0.000000
286.748737	1145.920364	0.583642	0.119199	0.392982	0.084544	0.000000
297.193401	1429.679413	4.712195	0.154697	0.331672	0.168328	0.000000
298.679794	1393.180435	4.002973	0.146877	0.339506	0.160494	0.000000
300.126431	1448.038635	5.106974	0.158529	0.327833	0.172167	0.000000
303.180702	1329.736664	2.982989	0.132597	0.353811	0.146189	0.000000
307.682884	1447.472534	5.094090	0.158412	0.327951	0.172049	0.000000
310.667873	1257.879639	1.645397	0.126519	0.368614	0.123777	0.000000
321.001385	1108.935471	0.392870	0.116294	0.401626	0.070868	0.000000
322.123272	1435.957535	4.843448	0.156015	0.330352	0.169648	0.000000
323.295620	1116.275543	0.424135	0.116859	0.399884	0.073639	0.000000
549.747887	1207.185883	1.030980	0.123228	0.379337	0.106566	0.000000

FIG. 15.
(continued)

FLØW FIELD PRØPERTIES

Z= 269.0678 INCHES

R (INCHES)	TEMP (DEG R)	TØT PRES (PSF)	MØLE FRACTS CØNSTITUENT 1	CØNSTITUENT 2	CØNSTITUENT 3	CØNSTITUENT 4
0.000000	2136.750275	51.924733	0.258349	0.227924	0.272076	0.000000
0.515310	2136.171051	51.846294	0.258295	0.227977	0.272022	0.000000
1.624216	2134.769165	51.656850	0.258164	0.226108	0.271891	0.000000
2.761321	2133.330566	51.463037	0.258030	0.228242	0.271757	0.000000
3.945544	2133.045715	51.424733	0.258004	0.228268	0.271731	0.000000
5.197330	2132.799652	51.391659	0.257981	0.228291	0.271708	0.000000
6.487856	2131.830170	51.261533	0.257891	0.228381	0.271618	0.000000
8.052395	2132.646942	51.371145	0.257967	0.228305	0.271694	0.000000
9.469605	2132.708130	51.379367	0.257973	0.228300	0.271699	0.000000
10.935208	2132.094940	51.297044	0.257915	0.228357	0.271642	0.000000
12.454625	2131.106934	51.164633	0.257823	0.228449	0.271550	0.000000
14.033977	2129.586761	50.961452	0.257681	0.228591	0.271408	0.000000
15.739628	2128.905121	50.870564	0.257618	0.228654	0.271345	0.000000
18.115593	2126.603982	50.830438	0.257590	0.228683	0.271317	0.000000
20.048121	2127.447449	50.676642	0.257482	0.228791	0.271209	0.000000
22.062023	2125.364197	50.400549	0.257287	0.228985	0.271014	0.000000
24.159940	2122.395020	50.009176	0.257009	0.229264	0.270736	0.000000
26.425318	2121.087738	49.837659	0.256886	0.229386	0.270613	0.000000
28.998906	2119.711487	49.657609	0.256757	0.229515	0.270484	0.000000
31.709274	2117.041779	49.309868	0.256506	0.229766	0.270233	0.000000
34.268032	2112.697815	48.748316	0.256097	0.230175	0.269824	0.000000
37.133058	2107.140839	48.037618	0.255572	0.230701	0.269299	0.000000
39.594973	2106.923798	48.010034	0.255551	0.230721	0.269278	0.000000
44.672915	2105.179352	47.788798	0.255386	0.230886	0.269113	0.000000
44.672915	2105.179352	47.788798	0.255386	0.230886	0.269113	0.000000
44.672915	2105.179352	47.788798	0.255386	0.230886	0.269113	0.000000
45.339737	2102.542542	47.455978	0.255136	0.231136	0.268863	0.000000
46.356972	2099.942291	47.129638	0.254889	0.231383	0.268616	0.000000
48.363651	2095.221039	46.541816	0.254439	0.231833	0.268166	0.000000
49.682822	2092.124786	46.159593	0.254144	0.232129	0.267871	0.000000
51.916608	2086.393799	45.458913	0.253595	0.232677	0.267322	0.000000
54.110999	2079.730682	44.655267	0.252955	0.233318	0.266682	0.000000
56.479138	2069.186859	43.407411	0.251936	0.234336	0.265663	0.000000
59.338729	2055.656306	41.848108	0.250619	0.235654	0.264346	0.000000
62.220082	2043.888809	40.529702	0.249464	0.236809	0.263191	0.000000
66.182345	2026.073135	38.598634	0.247698	0.238575	0.261425	0.000000
70.266473	2005.297897	36.442799	0.245613	0.240660	0.259340	0.000000
73.651065	1987.672256	34.692209	0.243821	0.242452	0.257548	0.000000
76.751171	1970.449707	33.043916	0.242050	0.244224	0.255777	0.000000
81.462517	1943.202759	30.579945	0.239205	0.247069	0.252932	0.000000
84.370700	1924.136948	26.944012	0.237182	0.249091	0.250909	0.000000
86.477102	1900.178192	26.904325	0.234961	0.252213	0.247787	0.000000
91.961236	1879.195999	25.211756	0.231247	0.255027	0.244974	0.000000
96.263529	1853.071472	23.228678	0.227686	0.258588	0.241413	0.000000
99.128009	1832.071243	21.729962	0.224775	0.261499	0.238501	0.000000
104.202329	1802.712952	19.769870	0.220631	0.265643	0.234357	0.000000
106.766278	1783.462250	18.566016	0.217864	0.268410	0.231590	0.000000
111.974999	1688.050110	13.396567	0.203292	0.282988	0.217012	0.000000
112.105077	1695.459274	13.768240	0.204537	0.281741	0.218259	0.000000
112.105077	1695.459274	13.768240	0.204537	0.281741	0.218259	0.000000

FIG. 15. (continued)

FLØW FIELD PRØPERTIES

Z= 269.0678 INCHES

R (INCHES)	TEMP (DEG R)	TØT PRES (PSF)	MØLE FRACTS CØNSTITUENT 1	CØNSTITUENT 2	CØNSTITUENT 3	CØNSTITUENT 4
112.105077	1695.459274	13.768240	0.204537	0.281741	0.218259	0.000000
112.105077	1695.459274	13.768240	0.204537	0.281741	0.218259	0.000000
112.105077	1695.459274	13.768240	0.204537	0.281741	0.218259	0.000000
112.105077	1695.459274	13.768240	0.204537	0.281741	0.218259	0.000000
112.105077	1695.459274	13.768240	0.204537	0.281741	0.218259	0.000000
112.525931	1746.169022	16.406376	0.212390	0.273884	0.226116	0.000000
113.102635	1670.053360	12.528717	0.200238	0.286048	0.213952	0.000000
116.154182	1645.681946	11.429128	0.196031	0.290263	0.209737	0.000000
122.030278	1613.700760	10.110144	0.190383	0.295921	0.204079	0.000000
143.054890	1523.131592	7.047076	0.173545	0.312791	0.187210	0.000000
158.878029	1458.429474	5.372932	0.160670	0.325690	0.174310	0.000000
173.273846	1400.691711	4.174398	0.148510	0.337872	0.162128	0.000000
173.999100	1387.791595	3.939901	0.145700	0.340687	0.159313	0.000000
187.441093	1345.402130	3.245667	0.136210	0.350195	0.149805	0.000000
206.383978	1300.403503	2.434291	0.129139	0.359978	0.137665	0.000000
225.330332	1265.126389	1.784401	0.126986	0.367127	0.126159	0.000000
250.277739	1222.769394	1.214740	0.124315	0.375996	0.111884	0.000000
272.831455	1186.536240	0.864895	0.121949	0.383852	0.099239	0.000000
298.431553	1147.539566	0.593023	0.119311	0.392611	0.085141	0.000000
327.855457	1367.813232	3.564460	0.141276	0.345117	0.154883	0.000000
328.567410	1156.701294	0.628491	0.119693	0.390521	0.088696	0.000000
329.660419	1399.741333	4.122842	0.148303	0.338077	0.161923	0.000000
330.313633	1318.861008	2.819288	0.130267	0.356311	0.143545	0.000000
335.860035	1267.411499	1.793169	0.127119	0.366650	0.126931	0.000000
336.310383	1408.499603	4.288044	0.150193	0.336184	0.163816	0.000000

FIG. 15.
(continued)

ABSØRPTIØN CØEFFICIENTS (1/CM-1/ATMØS)

H2Ø1(G

WAVE NØ.(1/CM)	TEMPERATURES (DEG R)						
	540.	1080.	1800.	2700.	3600.	4500.	5400.
50.	0.9500	0.1030	0.0420	0.0114	0.0045	0.0030	0.0019
75.	2.0800	0.3650	0.1130	0.0375	0.0195	0.0134	0.0067
100.	3.8600	0.9900	0.3000	0.1040	0.0577	0.0365	0.0211
125.	6.5000	2.0100	0.6500	0.2140	0.1280	0.0845	0.0529
150.	8.2500	3.2500	1.2100	0.4150	0.2600	0.1680	0.1090
175.	8.7000	4.5200	1.8900	0.7650	0.4500	0.2890	0.1930
200.	8.1000	5.4000	2.6100	1.2600	0.6950	0.4600	0.3090
225.	6.8200	6.0000	3.3700	1.7900	1.0100	0.6790	0.4540
250.	4.9300	6.2200	4.0700	2.3000	1.3500	0.9350	0.6200
275.	3.1600	5.9200	4.5600	2.8100	1.7200	1.2200	0.8220
300.	1.9900	5.2800	4.7900	3.2800	2.1300	1.4900	1.0400
325.	1.1300	4.5000	4.8400	3.6100	2.4900	1.7900	1.2800
350.	0.5850	3.7000	4.7100	3.8300	2.8400	2.0800	1.5400
375.	0.2930	2.8900	4.4300	3.9400	3.1200	2.3700	1.8200
400.	0.1380	2.0500	4.0000	3.9600	3.3000	2.6000	2.0700
425.	0.0620	1.4300	3.4700	3.8800	3.4100	2.8000	2.2900
450.	0.0255	0.9500	2.9200	3.7000	3.4500	2.9500	2.4800
475.	0.0094	0.6100	2.3600	3.4300	3.4200	3.0400	2.6200
500.	0.0034	0.3860	1.8800	3.1000	3.3400	3.0900	2.7300
525.	0.0011	0.2360	1.4500	2.7400	3.1900	3.0700	2.8000
550.	0.0003	0.1440	1.1000	2.3800	3.0000	3.0100	2.8300
575.	0.0001	0.0820	0.8180	2.0400	2.7600	2.8900	2.8200
600.	0.0000	0.0445	0.5980	1.7400	2.4800	2.7500	2.7700
625.	0.0000	0.0242	0.4270	1.4500	2.2200	2.6000	2.6900
650.	0.0000	0.0127	0.2940	1.1800	1.9500	2.4100	2.5800
675.	0.0000	0.0063	0.2000	0.9500	1.6900	2.2100	2.4500
700.	0.0000	0.0030	0.1340	0.7480	1.4600	2.0000	2.2900
725.	0.0000	0.0014	0.0902	0.5800	1.2400	1.7800	2.1300
750.	0.0000	0.0006	0.0590	0.4430	1.0300	1.5600	1.9600
775.	0.0000	0.0003	0.0450	0.3300	0.8450	1.3600	1.7700
800.	0.0000	0.0001	0.0355	0.2420	0.6950	1.1700	1.5900
825.	0.0000	0.0001	0.0289	0.1740	0.5600	1.0000	1.4300
850.	0.0000	0.0000	0.0245	0.1230	0.4500	0.8550	1.2600
875.	0.0000	0.0000	0.0214	0.1000	0.3570	0.7180	1.1100
900.	0.0000	0.0000	0.0189	0.0830	0.2780	0.5950	0.9550
925.	0.0000	0.0000	0.0174	0.0730	0.2390	0.4920	0.8250
950.	0.0000	0.0000	0.0166	0.0665	0.2110	0.4050	0.7050
975.	0.0000	0.0000	0.0165	0.0630	0.1950	0.3520	0.6000
1000.	0.0000	0.0000	0.0167	0.0620	0.1900	0.3120	0.5100
1025.	0.0000	0.0000	0.0175	0.0630	0.1910	0.2890	0.4250
1050.	0.0000	0.0001	0.0188	0.0675	0.1940	0.2810	0.3580
1075.	0.0000	0.0001	0.0208	0.0745	0.2020	0.2830	0.3290
1100.	0.0000	0.0004	0.0233	0.0865	0.2230	0.3140	0.3570
1125.	0.0001	0.0010	0.0268	0.1220	0.2600	0.3800	0.4490
1150.	0.0001	0.0024	0.0343	0.1760	0.3230	0.4560	0.5070
1175.	0.0002	0.0062	0.0638	0.2510	0.3980	0.5110	0.5680
1200.	0.0004	0.0148	0.1070	0.3300	0.4580	0.5420	0.6040
1225.	0.0007	0.0330	0.1660	0.4050	0.4870	0.5710	0.6320
1250.	0.0013	0.0635	0.2440	0.4590	0.4810	0.5520	0.6370
1275.	0.0025	0.1230	0.3050	0.4770	0.5020	0.5550	0.6080

FIG. 15.
(continued)

ABSØRPTIØN CØEFFICIENTS (1/CM-1/ATMØS)

H2O1(G

WAVE NØ.(1/CM)	TEMPERATURES (DEG R)						
	540.	1080.	1800.	2700.	3600.	4500.	5400.
1300.	0.0050	0.2120	0.4070	0.5470	0.4990	0.5220	0.5780
1325.	0.0103	0.2850	0.4890	0.5920	0.4970	0.4860	0.5540
1350.	0.0219	0.3280	0.4910	0.5580	0.4890	0.4850	0.5370
1375.	0.0485	0.3450	0.5050	0.5210	0.4770	0.4840	0.5200
1400.	0.1140	0.3610	0.5380	0.5630	0.5030	0.5020	0.5160
1425.	0.2490	0.4600	0.6210	0.6240	0.5380	0.5380	0.5140
1450.	0.3970	0.5690	0.7490	0.7680	0.5810	0.5650	0.5180
1475.	0.4180	0.6270	0.8240	0.8490	0.6400	0.5940	0.5300
1500.	1.0800	1.2500	1.0900	0.9400	0.8070	0.6630	0.5250
1525.	1.6500	1.5500	1.1400	0.6700	0.5620	0.4830	0.4300
1550.	1.4200	0.6750	0.5390	0.3490	0.2760	0.2630	0.2770
1575.	0.4510	0.2020	0.1370	0.1180	0.1340	0.1560	0.1730
1600.	0.0603	0.0538	0.0863	0.1120	0.1200	0.1250	0.1100
1625.	0.5010	0.2520	0.1370	0.1120	0.1310	0.1350	0.1110
1650.	0.7300	0.4300	0.2500	0.1910	0.1710	0.1700	0.1350
1675.	1.4900	0.5060	0.3120	0.2380	0.2100	0.2010	0.1560
1700.	1.0000	0.5530	0.4410	0.3400	0.2600	0.2200	0.1730
1725.	0.8020	0.6580	0.5280	0.4110	0.3000	0.2400	0.1910
1750.	0.5800	0.5270	0.4560	0.3780	0.3220	0.2830	0.2090
1775.	0.3300	0.4030	0.4000	0.3560	0.3180	0.2700	0.2260
1800.	0.2500	0.3930	0.3870	0.3420	0.3010	0.2750	0.2420
1825.	0.1470	0.2490	0.3130	0.3180	0.2910	0.2680	0.2500
1850.	0.0910	0.2520	0.2980	0.2950	0.2690	0.2530	0.2470
1875.	0.0580	0.1580	0.2140	0.2440	0.2440	0.2450	0.2380
1900.	0.0370	0.1130	0.1840	0.2180	0.2140	0.2180	0.2220
1925.	0.0244	0.1080	0.1560	0.1880	0.1950	0.2000	0.2060
1950.	0.0162	0.0606	0.0976	0.1410	0.1660	0.1790	0.1850
1975.	0.0112	0.0425	0.0903	0.1330	0.1480	0.1560	0.1660
2000.	0.0078	0.0400	0.0765	0.1120	0.1290	0.1370	0.1470
2025.	0.0054	0.0352	0.0620	0.0876	0.1100	0.1180	0.1290
2050.	0.0038	0.0252	0.0470	0.0705	0.0888	0.1000	0.1110
2075.	0.0026	0.0179	0.0353	0.0546	0.0724	0.0828	0.0960
2100.	0.0018	0.0123	0.0270	0.0443	0.0608	0.0686	0.0840
2125.	0.0013	0.0085	0.0199	0.0378	0.0579	0.0640	0.0725
2150.	0.0009	0.0068	0.0148	0.0275	0.0449	0.0521	0.0628
2175.	0.0006	0.0040	0.0104	0.0214	0.0374	0.0453	0.0530
2200.	0.0005	0.0029	0.0083	0.0189	0.0329	0.0403	0.0455
2225.	0.0004	0.0024	0.0066	0.0147	0.0271	0.0345	0.0398
2250.	0.0004	0.0020	0.0054	0.0119	0.0227	0.0299	0.0350
2275.	0.0004	0.0018	0.0048	0.0104	0.0191	0.0261	0.0312
2300.	0.0004	0.0016	0.0042	0.0092	0.0168	0.0232	0.0290
2325.	0.0004	0.0015	0.0039	0.0084	0.0150	0.0210	0.0275
2350.	0.0004	0.0014	0.0036	0.0077	0.0134	0.0189	0.0267
2375.	0.0004	0.0014	0.0034	0.0070	0.0122	0.0171	0.0259
2400.	0.0005	0.0013	0.0032	0.0065	0.0111	0.0157	0.0252
2425.	0.0005	0.0013	0.0030	0.0059	0.0100	0.0146	0.0251
2450.	0.0005	0.0013	0.0028	0.0054	0.0091	0.0145	0.0249
2475.	0.0005	0.0013	0.0026	0.0048	0.0088	0.0145	0.0247
2500.	0.0006	0.0012	0.0022	0.0043	0.0088	0.0155	0.0248
2525.	0.0006	0.0012	0.0020	0.0038	0.0088	0.0165	0.0249

FIG. 15.
(continued)

ABSØRPTIØN CØEFFICIENTS (1/CM-1/ATMØS)

H2Ø1(G

WAVE NØ.(1/CM)	TEMPERATURES (DEG R)						
	540.	1080.	1800.	2700.	3600.	4500.	5400.
2550.	0.0007	0.0012	0.0015	0.0033	0.0090	0.0176	0.0251
2575.	0.0007	0.0013	0.0016	0.0036	0.0099	0.0193	0.0253
2600.	0.0008	0.0013	0.0017	0.0045	0.0105	0.0206	0.0258
2625.	0.0009	0.0013	0.0025	0.0059	0.0112	0.0214	0.0263
2650.	0.0009	0.0013	0.0032	0.0072	0.0124	0.0231	0.0270
2675.	0.0010	0.0014	0.0031	0.0067	0.0133	0.0253	0.0280
2700.	0.0011	0.0014	0.0032	0.0070	0.0137	0.0269	0.0295
2725.	0.0011	0.0015	0.0034	0.0075	0.0150	0.0299	0.0318
2750.	0.0012	0.0016	0.0040	0.0086	0.0167	0.0310	0.0343
2775.	0.0013	0.0017	0.0041	0.0102	0.0195	0.0346	0.0378
2800.	0.0014	0.0018	0.0041	0.0101	0.0214	0.0370	0.0417
2825.	0.0016	0.0019	0.0044	0.0102	0.0233	0.0410	0.0459
2850.	0.0017	0.0020	0.0051	0.0123	0.0267	0.0434	0.0500
2875.	0.0020	0.0021	0.0054	0.0131	0.0294	0.0493	0.0550
2900.	0.0021	0.0023	0.0060	0.0147	0.0327	0.0523	0.0602
2925.	0.0024	0.0025	0.0060	0.0155	0.0375	0.0603	0.0665
2950.	0.0026	0.0027	0.0065	0.0168	0.0414	0.0669	0.0735
2975.	0.0028	0.0030	0.0081	0.0212	0.0482	0.0773	0.0801
3000.	0.0029	0.0033	0.0096	0.0244	0.0497	0.0769	0.0885
3025.	0.0031	0.0037	0.0103	0.0273	0.0600	0.0913	0.0970
3050.	0.0034	0.0040	0.0110	0.0301	0.0662	0.0972	0.1060
3075.	0.0073	0.0045	0.0142	0.0400	0.0847	0.1090	0.1170
3100.	0.0090	0.0048	0.0160	0.0460	0.0928	0.1190	0.1290
3125.	0.0010	0.0051	0.0179	0.0540	0.1090	0.1350	0.1420
3150.	0.0006	0.0055	0.0190	0.0598	0.1140	0.1490	0.1550
3175.	0.0016	0.0060	0.0239	0.0795	0.1360	0.1690	0.1700
3200.	0.0033	0.0070	0.0285	0.0914	0.1530	0.1850	0.1870
3225.	0.0041	0.0086	0.0359	0.1050	0.1740	0.2090	0.2020
3250.	0.0041	0.0103	0.0439	0.1250	0.1940	0.2280	0.2200
3275.	0.0029	0.0129	0.0529	0.1470	0.2200	0.2540	0.2410
3300.	0.0022	0.0161	0.0638	0.1710	0.2370	0.2630	0.2620
3325.	0.0022	0.0212	0.0793	0.2010	0.2680	0.2830	0.2800
3350.	0.0025	0.0285	0.1030	0.2400	0.2950	0.2950	0.2930
3375.	0.0031	0.0385	0.1290	0.2720	0.3120	0.3010	0.3020
3400.	0.0042	0.0540	0.1650	0.3090	0.3290	0.3070	0.3080
3425.	0.0060	0.0770	0.2090	0.3430	0.3320	0.3140	0.3000
3450.	0.0094	0.1170	0.2810	0.3720	0.3440	0.3030	0.2900
3475.	0.0165	0.1730	0.3310	0.3850	0.3530	0.3000	0.2720
3500.	0.0360	0.2580	0.3840	0.3930	0.3150	0.2880	0.2650
3525.	0.0720	0.3750	0.4400	0.4090	0.2940	0.2710	0.2410
3550.	0.1330	0.4010	0.4480	0.3900	0.2810	0.2570	0.2220
3575.	0.2150	0.5000	0.4140	0.3410	0.2540	0.2300	0.2080
3600.	0.3180	0.4500	0.3590	0.2860	0.2450	0.2190	0.2010
3625.	0.4420	0.4000	0.3610	0.2790	0.2330	0.2160	0.2100
3650.	0.4730	0.4050	0.3510	0.2810	0.2380	0.2190	0.2130
3675.	0.5680	0.5010	0.4230	0.3150	0.2430	0.2180	0.2000
3700.	0.3280	0.7080	0.6420	0.4320	0.2680	0.1890	0.1500
3725.	0.6170	0.8310	0.5570	0.3200	0.1940	0.1230	0.1130
3750.	1.8100	0.1960	0.1450	0.1210	0.1240	0.1070	0.1080
3775.	0.1360	0.1240	0.1200	0.1190	0.1150	0.1150	0.1090

FIG. 15.
(continued)

ABSØRPTIØN CØEFFICIENTS (1/CM-1/ATMØS)

H2Ø1(G

WAVE NØ.(1/CM)	TEMPERATURES (DEG R)						
	540.	1080.	1800.	2700.	3600.	4500.	5400.
3800.	0.4550	0.2980	0.1950	0.1290	0.1230	0.1120	0.1220
3825.	0.7600	0.5030	0.2880	0.1540	0.1290	0.1270	0.1360
3850.	0.8360	0.5840	0.3400	0.1840	0.1610	0.1460	0.1540
3875.	0.8400	0.7280	0.4220	0.2360	0.1970	0.1670	0.1770
3900.	0.5050	0.5000	0.4010	0.2760	0.2270	0.1920	0.1970
3925.	0.1170	0.4000	0.4030	0.3150	0.2430	0.2020	0.2090
3950.	0.0460	0.3000	0.3270	0.2900	0.2300	0.2020	0.2070
3975.	0.0183	0.2050	0.2440	0.2350	0.1950	0.1920	0.1900
4000.	0.0073	0.1350	0.1700	0.1790	0.1590	0.1680	0.1610
4025.	0.0031	0.0790	0.1050	0.1240	0.1240	0.1340	0.1320
4050.	0.0014	0.0415	0.0612	0.0886	0.1030	0.1060	0.1040
4075.	0.0006	0.0197	0.0342	0.0594	0.0801	0.0879	0.0860
4100.	0.0003	0.0086	0.0179	0.0341	0.0503	0.0610	0.0710
4125.	0.0002	0.0036	0.0101	0.0222	0.0354	0.0461	0.0598
4150.	0.0001	0.0015	0.0061	0.0156	0.0258	0.0336	0.0499
4175.	0.0000	0.0006	0.0040	0.0130	0.0226	0.0294	0.0418
4200.	0.0000	0.0003	0.0026	0.0104	0.0170	0.0234	0.0348
4225.	0.0000	0.0001	0.0016	0.0077	0.0132	0.0197	0.0287
4250.	0.0000	0.0000	0.0011	0.0065	0.0109	0.0166	0.0236
4275.	0.0000	0.0000	0.0009	0.0064	0.0093	0.0141	0.0189
4300.	0.0000	0.0000	0.0007	0.0062	0.0083	0.0122	0.0150
4325.	0.0000	0.0000	0.0004	0.0047	0.0074	0.0112	0.0126
4350.	0.0000	0.0000	0.0004	0.0049	0.0071	0.0105	0.0119
4375.	0.0000	0.0000	0.0002	0.0037	0.0067	0.0103	0.0118
4400.	0.0000	0.0000	0.0002	0.0035	0.0060	0.0100	0.0123
4425.	0.0000	0.0000	0.0001	0.0029	0.0059	0.0098	0.0128
4450.	0.0000	0.0000	0.0001	0.0027	0.0058	0.0099	0.0134
4475.	0.0000	0.0000	0.0001	0.0032	0.0064	0.0101	0.0142
4500.	0.0000	0.0000	0.0000	0.0026	0.0060	0.0106	0.0151
4525.	0.0000	0.0000	0.0000	0.0020	0.0061	0.0114	0.0162
4550.	0.0000	0.0000	0.0000	0.0022	0.0068	0.0121	0.0173
4575.	0.0000	0.0000	0.0000	0.0023	0.0075	0.0130	0.0187
4600.	0.0000	0.0000	0.0000	0.0026	0.0079	0.0141	0.0202
4625.	0.0000	0.0000	0.0001	0.0028	0.0083	0.0154	0.0223
4650.	0.0000	0.0000	0.0001	0.0029	0.0098	0.0180	0.0246
4675.	0.0000	0.0000	0.0001	0.0038	0.0105	0.0213	0.0270
4700.	0.0000	0.0000	0.0002	0.0043	0.0119	0.0243	0.0300
4725.	0.0000	0.0000	0.0003	0.0057	0.0139	0.0276	0.0338
4750.	0.0000	0.0000	0.0004	0.0083	0.0166	0.0313	0.0370
4775.	0.0000	0.0000	0.0008	0.0102	0.0186	0.0341	0.0399
4800.	0.0000	0.0000	0.0007	0.0121	0.0229	0.0378	0.0422
4825.	0.0000	0.0000	0.0015	0.0176	0.0256	0.0404	0.0440
4850.	0.0000	0.0000	0.0023	0.0223	0.0302	0.0430	0.0458
4875.	0.0000	0.0001	0.0036	0.0297	0.0358	0.0459	0.0465
4900.	0.0000	0.0001	0.0048	0.0321	0.0417	0.0493	0.0473
4925.	0.0000	0.0003	0.0067	0.0354	0.0450	0.0507	0.0478
4950.	0.0000	0.0006	0.0086	0.0382	0.0492	0.0527	0.0478
4975.	0.0000	0.0014	0.0126	0.0417	0.0503	0.0523	0.0473
5000.	0.0000	0.0029	0.0176	0.0467	0.0520	0.0526	0.0460
5025.	0.0001	0.0053	0.0228	0.0499	0.0523	0.0510	0.0447

FIG. 15.
(continued)

ABSØRPTIØN CØEFFICIENTS (1/CM-1/ATMØS)

H2Ø1(G

WAVE NØ.(1/CM)	TEMPERATURES (DEG R)						
	540.	1080.	1800.	2700.	3600.	4500.	5400.
5050.	0.0003	0.0086	0.0284	0.0528	0.0513	0.0492	0.0430
5075.	0.0008	0.0130	0.0354	0.0559	0.0500	0.0469	0.0415
5100.	0.0020	0.0198	0.0415	0.0557	0.0480	0.0452	0.0400
5125.	0.0043	0.0282	0.0425	0.0495	0.0451	0.0430	0.0390
5150.	0.0090	0.0390	0.0453	0.0449	0.0430	0.0423	0.0385
5175.	0.0180	0.0462	0.0428	0.0391	0.0403	0.0415	0.0393
5200.	0.0348	0.0710	0.0446	0.0360	0.0384	0.0414	0.0405
5225.	0.0718	0.0590	0.0429	0.0360	0.0376	0.0420	0.0418
5250.	0.1110	0.0368	0.0346	0.0369	0.0409	0.0454	0.0434
5275.	0.0329	0.0285	0.0347	0.0423	0.0461	0.0482	0.0450
5300.	0.0281	0.0270	0.0393	0.0505	0.0529	0.0511	0.0462
5325.	0.1210	0.0422	0.0552	0.0598	0.0572	0.0544	0.0470
5350.	0.1390	0.1050	0.0850	0.0687	0.0593	0.0560	0.0480
5375.	0.0774	0.0710	0.0642	0.0618	0.0556	0.0534	0.0478
5400.	0.0858	0.0483	0.0524	0.0547	0.0503	0.0495	0.0460
5425.	0.0985	0.0575	0.0553	0.0510	0.0451	0.0449	0.0425
5450.	0.0996	0.0682	0.0566	0.0489	0.0454	0.0446	0.0400
5475.	0.0680	0.0680	0.0582	0.0495	0.0460	0.0458	0.0405
5500.	0.0325	0.0520	0.0518	0.0483	0.0449	0.0454	0.0418
5525.	0.0150	0.0350	0.0431	0.0464	0.0452	0.0449	0.0438
5550.	0.0062	0.0238	0.0342	0.0408	0.0414	0.0417	0.0420
5575.	0.0027	0.0158	0.0257	0.0339	0.0366	0.0384	0.0400
5600.	0.0011	0.0101	0.0183	0.0263	0.0303	0.0333	0.0360
5625.	0.0005	0.0059	0.0129	0.0206	0.0247	0.0286	0.0320
5650.	0.0002	0.0031	0.0087	0.0161	0.0203	0.0244	0.0280
5675.	0.0001	0.0013	0.0054	0.0124	0.0166	0.0207	0.0250
5700.	0.0000	0.0004	0.0031	0.0093	0.0130	0.0176	0.0220
5725.	0.0000	0.0001	0.0014	0.0074	0.0102	0.0148	0.0190
5750.	0.0000	0.0000	0.0008	0.0059	0.0080	0.0123	0.0170
5775.	0.0000	0.0000	0.0006	0.0047	0.0061	0.0105	0.0150
5800.	0.0000	0.0000	0.0005	0.0032	0.0045	0.0088	0.0130
5825.	0.0000	0.0000	0.0004	0.0025	0.0034	0.0075	0.0120
5850.	0.0000	0.0000	0.0004	0.0022	0.0029	0.0065	0.0105
5875.	0.0000	0.0000	0.0004	0.0016	0.0024	0.0062	0.0098
5900.	0.0000	0.0000	0.0004	0.0018	0.0027	0.0065	0.0094
5925.	0.0000	0.0000	0.0003	0.0016	0.0028	0.0068	0.0093
5950.	0.0000	0.0000	0.0003	0.0013	0.0030	0.0071	0.0093
5975.	0.0000	0.0000	0.0003	0.0015	0.0030	0.0072	0.0093
6000.	0.0000	0.0001	0.0003	0.0011	0.0031	0.0074	0.0095
6025.	0.0000	0.0001	0.0003	0.0011	0.0034	0.0075	0.0097
6050.	0.0000	0.0001	0.0002	0.0008	0.0035	0.0076	0.0100
6075.	0.0000	0.0001	0.0003	0.0013	0.0037	0.0078	0.0103
6100.	0.0000	0.0001	0.0004	0.0018	0.0039	0.0079	0.0105
6125.	0.0000	0.0001	0.0005	0.0015	0.0042	0.0081	0.0110
6150.	0.0000	0.0001	0.0006	0.0018	0.0048	0.0085	0.0113
6175.	0.0000	0.0001	0.0007	0.0020	0.0052	0.0090	0.0119
6200.	0.0000	0.0002	0.0008	0.0027	0.0054	0.0094	0.0125
6225.	0.0000	0.0002	0.0010	0.0036	0.0059	0.0100	0.0130
6250.	0.0000	0.0002	0.0011	0.0044	0.0065	0.0107	0.0135
6275.	0.0000	0.0003	0.0012	0.0044	0.0071	0.0113	0.0143

FIG. 15.
(continued)

ABSØRPTIØN CØEFFICIENTS (1/CM-1/ATMØS)

H2Ø1(6

WAVE NØ.(1/CM)	TEMPERATURES (DEG R)						
	540.	1080.	1800.	2700.	3600.	4500.	5400.
6300.	0.0000	0.0003	0.0013	0.0046	0.0075	0.0120	0.0150
6325.	0.0000	0.0003	0.0014	0.0056	0.0081	0.0128	0.0157
6350.	0.0000	0.0004	0.0014	0.0050	0.0087	0.0133	0.0164
6375.	0.0000	0.0004	0.0015	0.0044	0.0096	0.0142	0.0172
6400.	0.0000	0.0005	0.0019	0.0050	0.0100	0.0151	0.0180
6425.	0.0000	0.0006	0.0025	0.0079	0.0108	0.0158	0.0191
6450.	0.0000	0.0007	0.0026	0.0063	0.0114	0.0167	0.0200
6475.	0.0000	0.0007	0.0031	0.0074	0.0125	0.0177	0.0211
6500.	0.0000	0.0008	0.0032	0.0084	0.0139	0.0185	0.0222
6525.	0.0000	0.0098	0.0069	0.0089	0.0148	0.0197	0.0233
6550.	0.0000	0.0011	0.0039	0.0107	0.0155	0.0207	0.0244
6575.	0.0001	0.0013	0.0043	0.0108	0.0169	0.0217	0.0255
6600.	0.0001	0.0015	0.0060	0.0132	0.0178	0.0227	0.0267
6625.	0.0002	0.0017	0.0061	0.0140	0.0190	0.0237	0.0276
6650.	0.0003	0.0019	0.0062	0.0143	0.0202	0.0249	0.0287
6675.	0.0006	0.0022	0.0066	0.0152	0.0212	0.0260	0.0296
6700.	0.0009	0.0025	0.0084	0.0172	0.0222	0.0268	0.0305
6725.	0.0012	0.0028	0.0089	0.0182	0.0232	0.0274	0.0313
6750.	0.0015	0.0033	0.0101	0.0196	0.0240	0.0280	0.0320
6775.	0.0019	0.0037	0.0105	0.0202	0.0255	0.0288	0.0329
6800.	0.0022	0.0043	0.0119	0.0218	0.0266	0.0295	0.0335
6825.	0.0026	0.0050	0.0139	0.0239	0.0280	0.0301	0.0339
6850.	0.0029	0.0058	0.0159	0.0270	0.0306	0.0312	0.0343
6875.	0.0032	0.0067	0.0167	0.0281	0.0324	0.0323	0.0345
6900.	0.0036	0.0088	0.0184	0.0284	0.0329	0.0327	0.0343
6925.	0.0040	0.0092	0.0197	0.0299	0.0333	0.0330	0.0341
6950.	0.0046	0.0108	0.0226	0.0326	0.0348	0.0334	0.0339
6975.	0.0053	0.0128	0.0253	0.0344	0.0340	0.0327	0.0333
7000.	0.0062	0.0152	0.0283	0.0360	0.0335	0.0319	0.0325
7025.	0.0076	0.0182	0.0290	0.0351	0.0332	0.0310	0.0313
7050.	0.0098	0.0222	0.0332	0.0375	0.0327	0.0299	0.0299
7075.	0.0132	0.0271	0.0359	0.0360	0.0312	0.0284	0.0283
7100.	0.0190	0.0335	0.0389	0.0352	0.0301	0.0279	0.0263
7125.	0.0240	0.0432	0.0411	0.0335	0.0280	0.0261	0.0243
7150.	0.0288	0.0570	0.0454	0.0322	0.0254	0.0239	0.0223
7175.	0.0323	0.0740	0.0464	0.0301	0.0237	0.0219	0.0208
7200.	0.0570	0.0890	0.0465	0.0280	0.0220	0.0200	0.0199
7225.	0.2160	0.0680	0.0403	0.0262	0.0212	0.0193	0.0190
7250.	0.1260	0.0475	0.0369	0.0268	0.0214	0.0196	0.0187
7275.	0.0117	0.0369	0.0372	0.0300	0.0241	0.0209	0.0200
7300.	0.0140	0.0370	0.0398	0.0329	0.0268	0.0229	0.0224
7325.	0.0425	0.0418	0.0432	0.0354	0.0296	0.0252	0.0243
7350.	0.0640	0.0460	0.0436	0.0351	0.0307	0.0265	0.0260
7375.	0.0385	0.0385	0.0382	0.0304	0.0262	0.0233	0.0260
7400.	0.0182	0.0179	0.0260	0.0259	0.0216	0.0195	0.0240
7425.	0.0170	0.0081	0.0162	0.0198	0.0176	0.0167	0.0210
7450.	0.0161	0.0037	0.0099	0.0150	0.0144	0.0142	0.0180
7475.	0.0145	0.0017	0.0062	0.0113	0.0118	0.0118	0.0150
7500.	0.0009	0.0014	0.0047	0.0082	0.0082	0.0087	0.0120
7525.	0.0000	0.0010	0.0027	0.0050	0.0058	0.0064	0.0080

FIG. 15.
(continued)

ABSØRPTIØN CØEFFICIENTS (1/CM-1/ATMØS)

H2Ø1(G

WAVE NØ.(1/CM)	TEMPERATURES (DEG R)						
	540.	1080.	1800.	2700.	3600.	4500.	5400.
7550.	0.0000	0.0008	0.0021	0.0036	0.0040	0.0047	0.0060
7575.	0.0000	0.0006	0.0015	0.0024	0.0032	0.0036	0.0050
7600.	0.0000	0.0004	0.0010	0.0019	0.0026	0.0028	0.0042
7625.	0.0000	0.0003	0.0007	0.0014	0.0021	0.0022	0.0037
7650.	0.0000	0.0002	0.0006	0.0010	0.0027	0.0022	0.0034
7675.	0.0000	0.0002	0.0005	0.0010	0.0020	0.0018	0.0032
7700.	0.0000	0.0001	0.0003	0.0008	0.0013	0.0019	0.0030
7725.	0.0000	0.0001	0.0003	0.0007	0.0018	0.0019	0.0029
7750.	0.0000	0.0001	0.0002	0.0003	0.0016	0.0020	0.0029
7775.	0.0000	0.0000	0.0001	0.0004	0.0015	0.0020	0.0029
7800.	0.0000	0.0000	0.0001	0.0004	0.0016	0.0026	0.0029
7825.	0.0000	0.0000	0.0001	0.0004	0.0016	0.0026	0.0030
7850.	0.0000	0.0000	0.0001	0.0003	0.0015	0.0025	0.0030
7875.	0.0000	0.0000	0.0001	0.0002	0.0014	0.0024	0.0031
7900.	0.0000	0.0000	0.0001	0.0002	0.0014	0.0026	0.0032
7925.	0.0000	0.0000	0.0001	0.0002	0.0015	0.0027	0.0033
7950.	0.0000	0.0000	0.0001	0.0002	0.0016	0.0028	0.0034
7975.	0.0000	0.0000	0.0001	0.0002	0.0017	0.0028	0.0035
8000.	0.0000	0.0000	0.0001	0.0002	0.0015	0.0029	0.0036
8025.	0.0000	0.0000	0.0001	0.0003	0.0018	0.0031	0.0038
8050.	0.0000	0.0000	0.0001	0.0004	0.0019	0.0033	0.0040
8075.	0.0000	0.0000	0.0001	0.0005	0.0023	0.0035	0.0041
8100.	0.0000	0.0000	0.0001	0.0004	0.0025	0.0033	0.0042
8125.	0.0000	0.0000	0.0001	0.0005	0.0024	0.0035	0.0044
8150.	0.0000	0.0000	0.0001	0.0005	0.0023	0.0035	0.0046
8175.	0.0000	0.0000	0.0002	0.0008	0.0026	0.0037	0.0047
8200.	0.0000	0.0000	0.0002	0.0011	0.0028	0.0038	0.0048
8225.	0.0000	0.0000	0.0002	0.0012	0.0030	0.0039	0.0049
8250.	0.0000	0.0000	0.0002	0.0009	0.0029	0.0039	0.0049
8275.	0.0000	0.0000	0.0003	0.0016	0.0034	0.0034	0.0050
8300.	0.0000	0.0000	0.0002	0.0012	0.0036	0.0043	0.0050
8325.	0.0000	0.0000	0.0002	0.0010	0.0035	0.0044	0.0050
8350.	0.0000	0.0000	0.0002	0.0010	0.0036	0.0045	0.0050
8375.	0.0000	0.0000	0.0003	0.0014	0.0038	0.0046	0.0050
8400.	0.0000	0.0000	0.0003	0.0016	0.0040	0.0046	0.0050
8425.	0.0000	0.0000	0.0003	0.0014	0.0039	0.0046	0.0050
8450.	0.0000	0.0000	0.0003	0.0016	0.0039	0.0046	0.0049
8475.	0.0000	0.0000	0.0003	0.0015	0.0039	0.0046	0.0049
8500.	0.0000	0.0000	0.0003	0.0014	0.0037	0.0044	0.0048
8525.	0.0000	0.0000	0.0003	0.0015	0.0037	0.0044	0.0048
8550.	0.0000	0.0000	0.0003	0.0015	0.0037	0.0043	0.0046
8575.	0.0000	0.0000	0.0003	0.0014	0.0036	0.0043	0.0046
8600.	0.0000	0.0000	0.0003	0.0014	0.0036	0.0042	0.0044
8625.	0.0000	0.0000	0.0003	0.0016	0.0038	0.0042	0.0043
8650.	0.0000	0.0000	0.0002	0.0014	0.0036	0.0041	0.0042
8675.	0.0000	0.0000	0.0002	0.0014	0.0035	0.0041	0.0041
8700.	0.0000	0.0000	0.0002	0.0013	0.0034	0.0039	0.0039
8725.	0.0000	0.0000	0.0002	0.0013	0.0033	0.0038	0.0038
8750.	0.0000	0.0000	0.0002	0.0012	0.0032	0.0036	0.0037
8775.	0.0000	0.0000	0.0002	0.0012	0.0031	0.0034	0.0035

FIG. 15.
(continued)

ABSØRPTIØN CØEFFICIENTS (1/CM-1/ATMØS)

H2Ø1(G

WAVE NØ.(1/CM)	TEMPERATURES (DEG R)						
	540.	1080.	1800.	2700.	3600.	4500.	5400.
8800.	0.0000	0.0000	0.0002	0.0011	0.0030	0.0033	0.0034
8825.	0.0000	0.0000	0.0002	0.0011	0.0029	0.0032	0.0032
8850.	0.0000	0.0000	0.0002	0.0010	0.0027	0.0030	0.0031
8875.	0.0000	0.0000	0.0002	0.0010	0.0026	0.0028	0.0029
8900.	0.0000	0.0000	0.0001	0.0009	0.0024	0.0027	0.0028
8925.	0.0000	0.0000	0.0001	0.0009	0.0023	0.0025	0.0027
8950.	0.0000	0.0000	0.0001	0.0007	0.0021	0.0023	0.0025
8975.	0.0000	0.0000	0.0001	0.0006	0.0019	0.0021	0.0024
9000.	0.0000	0.0000	0.0001	0.0005	0.0016	0.0019	0.0024
9025.	0.0000	0.0000	0.0001	0.0003	0.0013	0.0016	0.0022
9050.	0.0000	0.0000	0.0001	0.0003	0.0011	0.0015	0.0021
9075.	0.0000	0.0000	0.0001	0.0003	0.0010	0.0013	0.0020
9100.	0.0000	0.0000	0.0001	0.0002	0.0009	0.0012	0.0019
9125.	0.0000	0.0000	0.0000	0.0002	0.0007	0.0011	0.0018
9150.	0.0000	0.0000	0.0000	0.0002	0.0006	0.0010	0.0017
9175.	0.0000	0.0000	0.0000	0.0000	0.0005	0.0009	0.0016
9200.	0.0000	0.0000	0.0000	0.0000	0.0004	0.0008	0.0016
9225.	0.0000	0.0000	0.0000	0.0000	0.0004	0.0008	0.0015
9250.	0.0000	0.0000	0.0000	0.0000	0.0003	0.0008	0.0014
9275.	0.0000	0.0000	0.0000	0.0000	0.0003	0.0012	0.0014
9300.	0.0000	0.0000	0.0000	0.0001	0.0003	0.0011	0.0013
9325.	0.0000	0.0000	0.0000	0.0000	0.0005	0.0009	0.0013
9350.	0.0000	0.0000	0.0000	0.0000	0.0005	0.0009	0.0013
9375.	0.0000	0.0000	0.0000	0.0000	0.0005	0.0009	0.0013
9400.	0.0000	0.0000	0.0000	0.0000	0.0006	0.0009	0.0013
9425.	0.0000	0.0000	0.0000	0.0000	0.0006	0.0009	0.0012
9450.	0.0000	0.0000	0.0000	0.0000	0.0006	0.0009	0.0012
9475.	0.0000	0.0000	0.0000	0.0000	0.0006	0.0009	0.0013
9500.	0.0000	0.0000	0.0000	0.0000	0.0007	0.0010	0.0013
9525.	0.0000	0.0000	0.0000	0.0000	0.0007	0.0010	0.0013
9550.	0.0000	0.0000	0.0000	0.0000	0.0007	0.0010	0.0013
9575.	0.0000	0.0000	0.0000	0.0000	0.0007	0.0010	0.0013
9600.	0.0000	0.0000	0.0000	0.0000	0.0008	0.0010	0.0013
9625.	0.0000	0.0000	0.0000	0.0000	0.0008	0.0011	0.0013
9650.	0.0000	0.0000	0.0000	0.0000	0.0009	0.0011	0.0013
9675.	0.0000	0.0000	0.0000	0.0000	0.0009	0.0011	0.0014
9700.	0.0000	0.0000	0.0000	0.0000	0.0009	0.0012	0.0014
9725.	0.0000	0.0000	0.0000	0.0000	0.0010	0.0012	0.0014
9750.	0.0000	0.0000	0.0000	0.0000	0.0010	0.0012	0.0014
9775.	0.0000	0.0000	0.0000	0.0000	0.0011	0.0012	0.0014
9800.	0.0000	0.0000	0.0000	0.0000	0.0011	0.0013	0.0014
9825.	0.0000	0.0000	0.0000	0.0000	0.0011	0.0013	0.0015
9850.	0.0000	0.0000	0.0000	0.0000	0.0012	0.0013	0.0015
9875.	0.0000	0.0000	0.0000	0.0000	0.0012	0.0014	0.0015
9900.	0.0000	0.0000	0.0000	0.0000	0.0013	0.0014	0.0015
9925.	0.0000	0.0000	0.0000	0.0000	0.0013	0.0014	0.0015
9950.	0.0000	0.0000	0.0000	0.0000	0.0013	0.0014	0.0016
9975.	0.0000	0.0000	0.0000	0.0000	0.0014	0.0015	0.0016
10000.	0.0000	0.0000	0.0000	0.0000	0.0014	0.0015	0.0016
10025.	0.0000	0.0000	0.0000	0.0000	0.0014	0.0015	0.0016

FIG. 15.
(continued)

ABSØRPTIØN CØEFFICIENTS (1/CM-1/ATMØS)

H2Ø1(G

WAVE NØ.(1/CM)	TEMPERATURES (DEG R)						
	540.	1080.	1800.	2700.	3600.	4500.	5400.
10050.	0.0000	0.0000	0.0000	0.0000	0.0015	0.0015	0.0016
10075.	0.0000	0.0000	0.0000	0.0000	0.0015	0.0016	0.0016
10100.	0.0000	0.0000	0.0000	0.0000	0.0015	0.0016	0.0016
10125.	0.0000	0.0000	0.0000	0.0000	0.0016	0.0016	0.0016
10150.	0.0000	0.0000	0.0000	0.0000	0.0016	0.0016	0.0016
10175.	0.0000	0.0000	0.0000	0.0000	0.0016	0.0016	0.0015
10200.	0.0000	0.0000	0.0000	0.0000	0.0016	0.0015	0.0015
10225.	0.0000	0.0000	0.0000	0.0000	0.0015	0.0015	0.0015
10250.	0.0000	0.0000	0.0000	0.0000	0.0015	0.0015	0.0015
10275.	0.0000	0.0000	0.0000	0.0000	0.0015	0.0014	0.0014
10300.	0.0000	0.0000	0.0000	0.0000	0.0014	0.0014	0.0014
10325.	0.0000	0.0000	0.0000	0.0000	0.0014	0.0014	0.0014
10350.	0.0000	0.0000	0.0000	0.0000	0.0013	0.0013	0.0013
10375.	0.0000	0.0000	0.0000	0.0000	0.0013	0.0013	0.0013
10400.	0.0000	0.0000	0.0000	0.0000	0.0012	0.0013	0.0013
10425.	0.0000	0.0000	0.0000	0.0000	0.0012	0.0013	0.0013
10450.	0.0000	0.0000	0.0000	0.0000	0.0013	0.0013	0.0014
10475.	0.0000	0.0000	0.0000	0.0000	0.0013	0.0013	0.0014
10500.	0.0000	0.0000	0.0000	0.0000	0.0013	0.0014	0.0014
10525.	0.0000	0.0000	0.0000	0.0000	0.0014	0.0014	0.0014
10550.	0.0000	0.0000	0.0000	0.0000	0.0014	0.0014	0.0014
10575.	0.0000	0.0000	0.0000	0.0000	0.0014	0.0014	0.0014
10600.	0.0000	0.0000	0.0000	0.0000	0.0014	0.0014	0.0014
10625.	0.0000	0.0000	0.0000	0.0000	0.0013	0.0013	0.0012
10650.	0.0000	0.0000	0.0000	0.0000	0.0011	0.0011	0.0011
10675.	0.0000	0.0000	0.0000	0.0000	0.0010	0.0010	0.0010
10700.	0.0000	0.0000	0.0000	0.0000	0.0008	0.0008	0.0008
10725.	0.0000	0.0000	0.0000	0.0000	0.0007	0.0007	0.0007
10750.	0.0000	0.0000	0.0000	0.0000	0.0005	0.0006	0.0006
10775.	0.0000	0.0000	0.0000	0.0000	0.0004	0.0005	0.0005
10800.	0.0000	0.0000	0.0000	0.0000	0.0003	0.0004	0.0004
10825.	0.0000	0.0000	0.0000	0.0000	0.0003	0.0003	0.0004
10850.	0.0000	0.0000	0.0000	0.0000	0.0003	0.0003	0.0004
10875.	0.0000	0.0000	0.0000	0.0000	0.0003	0.0003	0.0003
10900.	0.0000	0.0000	0.0000	0.0000	0.0003	0.0003	0.0003
10925.	0.0000	0.0000	0.0000	0.0000	0.0003	0.0003	0.0003
10950.	0.0000	0.0000	0.0000	0.0000	0.0003	0.0003	0.0003
10975.	0.0000	0.0000	0.0000	0.0000	0.0003	0.0003	0.0003
11000.	0.0000	0.0000	0.0000	0.0000	0.0003	0.0003	0.0003

FIG. 15.
(continued)

ABSØRPTIØN CØEFFICIENTS (1/CM-1/ATMØS)

C1021G

WAVE NØ.(1/CM)	TEMPERATURES (DEG R)						
	540.	1080.	1800.	2700.	3600.	4500.	5400.
500.	0.0000	0.0000	0.0000	0.0105	0.0474	0.0982	0.1347
525.	0.0000	0.0000	0.0000	0.0380	0.0909	0.0877	0.1220
550.	0.0000	0.0000	0.0245	0.0970	0.1761	0.1808	0.2340
575.	0.0000	0.0205	0.0540	0.1450	0.3154	0.5972	0.3800
600.	0.1200	0.1650	0.2453	0.3200	0.5007	0.5200	-0.0000
625.	0.1750	0.3800	0.6352	0.7900	0.8449	0.8277	0.8500
650.	3.4500	2.8200	2.2087	1.7200	1.5026	1.4882	1.5533
675.	3.6000	3.1000	3.2990	2.9000	1.5118	2.7910	0.1950
700.	0.5500	1.2000	1.4076	1.4700	1.4563	1.1448	0.8333
725.	0.0720	0.3000	0.6420	1.0000	1.2170	1.2502	1.0667
750.	0.0230	0.0780	0.1915	0.4100	0.6640	0.9534	1.3567
775.	0.0000	0.0140	0.0771	0.2050	0.3351	0.4543	0.6067
800.	0.0000	0.0000	0.0199	0.0950	0.1874	0.2945	0.4733
825.	0.0000	0.0000	0.0000	0.0510	0.1040	0.1456	0.2993
850.	0.0000	0.0000	0.0000	0.0350	0.0708	0.0957	0.2433
875.	0.0000	0.0000	0.0000	0.0240	0.0604	0.1008	0.2140
900.	0.0000	0.0000	0.0000	0.0000	0.0000	0.0000	0.0000
925.	0.0000	0.0000	0.0000	0.0000	0.0000	0.0000	0.0000
950.	0.0000	0.0000	0.0000	0.0000	0.0000	0.0000	0.0000
975.	0.0000	0.0000	0.0000	0.0000	0.0000	0.0000	0.0000
1000.	0.0000	0.0000	0.0000	0.0000	0.0000	0.0000	0.0000
1025.	0.0000	0.0000	0.0000	0.0000	0.0000	0.0000	0.0000
1050.	0.0000	0.0000	0.0000	0.0000	0.0000	0.0000	0.0000
1075.	0.0000	0.0000	0.0000	0.0000	0.0000	0.0000	0.0000
1100.	0.0000	0.0000	0.0000	0.0000	0.0000	0.0000	0.0000
1125.	0.0000	0.0000	0.0000	0.0000	0.0000	0.0000	0.0000
1150.	0.0000	0.0000	0.0000	0.0000	0.0000	0.0000	0.0000
1175.	0.0000	0.0000	0.0000	0.0000	0.0000	0.0000	0.0000
1200.	0.0000	0.0000	0.0000	0.0000	0.0000	0.0000	0.0000
1225.	0.0000	0.0000	0.0000	0.0000	0.0000	0.0000	0.0000
1250.	0.0000	0.0000	0.0000	0.0000	0.0000	0.0000	0.0000
1275.	0.0000	0.0000	0.0000	0.0000	0.0000	0.0000	0.0000
1300.	0.0000	0.0000	0.0000	0.0000	0.0000	0.0000	0.0000
1325.	0.0000	0.0000	0.0000	0.0000	0.0000	0.0000	0.0000
1350.	0.0000	0.0000	0.0000	0.0000	0.0000	0.0000	0.0000
1375.	0.0000	0.0000	0.0000	0.0000	0.0000	0.0000	0.0000
1400.	0.0000	0.0000	0.0000	0.0000	0.0000	0.0000	0.0000
1425.	0.0000	0.0000	0.0000	0.0000	0.0000	0.0000	0.0000
1450.	0.0000	0.0000	0.0000	0.0000	0.0000	0.0000	0.0000
1475.	0.0000	0.0000	0.0000	0.0000	0.0000	0.0000	0.0000
1500.	0.0000	0.0000	0.0000	0.0000	0.0000	0.0000	0.0000
1525.	0.0000	0.0000	0.0000	0.0000	0.0000	0.0000	0.0000
1550.	0.0000	0.0000	0.0000	0.0000	0.0000	0.0000	0.0000
1575.	0.0000	0.0000	0.0000	0.0000	0.0000	0.0000	0.0000
1600.	0.0000	0.0000	0.0000	0.0000	0.0000	0.0000	0.0000
1625.	0.0000	0.0000	0.0000	0.0000	0.0000	0.0000	0.0000
1650.	0.0000	0.0000	0.0000	0.0000	0.0000	0.0000	0.0000
1675.	0.0000	0.0000	0.0000	0.0000	0.0000	0.0000	0.0000
1700.	0.0000	0.0000	0.0000	0.0000	0.0000	0.0000	0.0000
1725.	0.0000	0.0000	0.0000	0.0000	0.0000	0.0000	0.0000

FIG. 15.
(continued)

ABSØRPTIØN CØEFFICIENTS (1/CM-1/ATMØS)

CIØ2(G

WAVE NØ.(1/CM)	TEMPERATURES (DEG R)						
	540.	1080.	1800.	2700.	3600.	4500.	5400.
1750.	0.0000	0.0000	0.0000	0.0000	0.0000	0.0000	0.0000
1775.	0.0000	0.0000	0.0000	0.0000	0.0000	0.0000	0.0000
1800.	0.0000	0.0000	0.0000	0.0000	0.0000	0.0000	0.0000
1825.	0.0000	0.0000	0.0000	0.0000	0.0000	0.0000	0.0000
1850.	0.0000	0.0000	0.0000	0.0000	0.0000	0.0000	0.0000
1875.	0.0000	0.0000	0.0000	0.0000	0.0000	0.0000	0.0000
1900.	0.0000	0.0000	0.0000	0.0000	0.0000	0.0032	0.0692
1925.	0.0000	0.0000	0.0000	0.0000	0.0000	0.0069	0.1476
1950.	0.0000	0.0000	0.0000	0.0000	0.0000	0.0106	0.2259
1975.	0.0000	0.0000	0.0000	0.0000	0.0061	0.0966	0.4408
2000.	0.0000	0.0000	0.0000	0.0000	0.0157	0.1815	0.6558
2025.	0.0000	0.0000	0.0000	0.0019	0.0449	0.4248	1.1590
2050.	0.0000	0.0000	0.0000	0.0037	0.0742	0.6678	1.6620
2075.	0.0000	0.0000	0.0000	0.0278	0.3449	1.3288	2.6560
2100.	0.0000	0.0000	0.0013	0.0520	0.6156	1.9899	3.6510
2125.	0.0000	0.0000	0.0000	0.2866	1.5058	3.5294	5.4830
2150.	0.0000	0.0000	0.0000	0.5212	2.3961	5.0688	7.3150
2175.	0.0000	0.0000	0.0000	1.3720	4.3207	7.1383	8.6700
2200.	0.0000	0.0000	0.2160	3.1800	7.1236	9.7180	10.6600
2225.	0.0000	0.0177	1.2202	6.6290	10.4040	12.4500	12.0100
2250.	0.0000	0.2829	4.9063	11.6800	14.0028	13.8074	12.3600
2275.	0.0206	2.8160	11.9854	17.2600	16.2874	14.4967	12.1600
2300.	1.8960	15.5000	21.9877	20.4200	17.4766	15.3763	13.1700
2325.	36.6000	35.5200	26.0571	20.3400	16.1073	12.6535	9.2910
2350.	11.3800	20.8200	23.6476	20.2800	14.5780	10.4754	7.1760
2375.	24.1000	34.3600	25.1520	14.4600	8.7566	5.4816	2.6530
2400.	0.0000	0.0000	0.0000	0.0000	0.0000	0.0000	0.0000
2425.	0.0000	0.0000	0.0000	0.0000	0.0000	0.0000	0.0000
2450.	0.0000	0.0000	0.0000	0.0000	0.0000	0.0000	0.0000
2475.	0.0000	0.0000	0.0000	0.0000	0.0000	0.0000	0.0000
2500.	0.0000	0.0000	0.0000	0.0000	0.0000	0.0000	0.0000
2525.	0.0000	0.0000	0.0000	0.0000	0.0000	0.0000	0.0000
2550.	0.0000	0.0000	0.0000	0.0000	0.0000	0.0000	0.0000
2575.	0.0000	0.0000	0.0000	0.0000	0.0000	0.0000	0.0000
2600.	0.0000	0.0000	0.0000	0.0000	0.0000	0.0000	0.0000
2625.	0.0000	0.0000	0.0000	0.0000	0.0000	0.0000	0.0000
2650.	0.0000	0.0000	0.0000	0.0000	0.0000	0.0000	0.0000
2675.	0.0000	0.0000	0.0000	0.0000	0.0000	0.0000	0.0000
2700.	0.0000	0.0000	0.0000	0.0000	0.0000	0.0000	0.0000
2725.	0.0000	0.0000	0.0000	0.0000	0.0000	0.0000	0.0000
2750.	0.0000	0.0000	0.0000	0.0000	0.0000	0.0000	0.0000
2775.	0.0000	0.0000	0.0000	0.0000	0.0000	0.0000	0.0000
2800.	0.0000	0.0000	0.0000	0.0000	0.0000	0.0000	0.0000
2825.	0.0000	0.0000	0.0000	0.0000	0.0000	0.0000	0.0000
2850.	0.0000	0.0000	0.0000	0.0000	0.0000	0.0000	0.0000
2875.	0.0000	0.0000	0.0000	0.0000	0.0000	0.0000	0.0000
2900.	0.0000	0.0000	0.0000	0.0000	0.0000	0.0000	0.0000
2925.	0.0000	0.0000	0.0000	0.0000	0.0000	0.0000	0.0000
2950.	0.0000	0.0000	0.0000	0.0000	0.0000	0.0000	0.0000
2975.	0.0000	0.0000	0.0000	0.0000	0.0000	0.0000	0.0000

FIG. 15.
(continued)

ABSØRPTIØN CØEFFICIENTS (1/CM-1/ATMØS)

C1Ø2(G

WAVE NØ.(1/CM)	TEMPERATURES (DEG R)						
	540.	1080.	1800.	2700.	3600.	4500.	5400.
3000.	0.0000	0.0000	0.0000	0.0000	0.0000	0.0005	0.0117
3025.	0.0000	0.0000	0.0000	0.0000	0.0000	0.0004	0.0147
3050.	0.0000	0.0000	0.0000	0.0000	0.0000	0.0010	0.0203
3075.	0.0000	0.0000	0.0000	0.0000	0.0000	0.0010	0.0258
3100.	0.0000	0.0000	0.0000	0.0000	0.0008	0.0095	0.0336
3125.	0.0000	0.0000	0.0000	0.0000	0.0016	0.0152	0.0443
3150.	0.0000	0.0000	0.0000	0.0000	0.0023	0.0209	0.0551
3175.	0.0000	0.0000	0.0000	0.0000	0.0048	0.0303	0.0743
3200.	0.0000	0.0000	0.0003	0.0000	0.0086	0.0381	0.0834
3225.	0.0000	0.0000	0.0000	0.0005	0.0131	0.0528	0.1062
3250.	0.0000	0.0000	0.0002	0.0015	0.0210	0.0686	0.1276
3275.	0.0000	0.0000	0.0004	0.0035	0.0323	0.0899	0.1469
3300.	0.0000	0.0000	0.0000	0.0069	0.0464	0.1142	0.1811
3325.	0.0000	0.0000	0.0000	0.0136	0.0664	0.1398	0.1975
3350.	0.0000	0.0000	0.0000	0.0241	0.0883	0.1651	0.2468
3375.	0.0000	0.0000	0.0000	0.0409	0.1198	0.1929	0.2388
3400.	0.0000	0.0000	0.0046	0.0649	0.1535	0.2230	0.2637
3425.	0.0000	0.0000	0.0168	0.1004	0.2157	0.2514	0.3061
3450.	0.0000	0.0004	0.0373	0.1433	0.2413	0.3156	0.3865
3475.	0.0000	0.0037	0.0744	0.1927	0.2527	0.2870	0.3208
3500.	0.0000	0.0180	0.1305	0.2422	0.2761	0.3064	0.3501
3525.	0.0013	0.0685	0.1964	0.2668	0.2790	0.3217	0.3797
3550.	0.0212	0.1684	0.2601	0.2818	0.2925	0.3509	0.4173
3575.	0.1106	0.2716	0.2771	0.2632	0.3034	0.3867	0.4608
3600.	0.6342	0.4255	0.2983	0.2952	0.3618	0.4500	0.5050
3625.	0.8115	0.3494	0.1996	0.2797	0.4251	0.5044	0.5549
3650.	0.0071	0.1127	0.2692	0.4261	0.4974	0.5438	0.5642
3675.	0.0859	0.2671	0.4113	0.4921	0.5050	0.5355	0.5468
3700.	0.8999	0.6584	0.5059	0.4722	0.4952	0.5311	0.5259
3725.	1.1590	0.5998	0.4612	0.4953	0.4867	0.4513	0.3845
3750.	0.0454	0.3965	0.5998	0.5755	0.4377	0.3266	0.2300
3775.	0.0000	0.0000	0.0000	0.0000	0.0000	0.0000	0.0000

FIG. 15.
(continued)

ABSØRPTIØN CØEFFICIENTS (1/CM-1/ATMØS)

C101(G

WAVE NØ.(1/CM)	TEMPERATURES (DEG R)						
	540.	1080.	1800.	2700.	3600.	4500.	5400.
1500.	0.0000	0.0000	0.0000	0.0000	0.0000	0.0000	0.0001
1525.	0.0000	0.0000	0.0000	0.0000	0.0000	0.0000	0.0002
1550.	0.0000	0.0000	0.0000	0.0000	0.0000	0.0000	0.0003
1575.	0.0000	0.0000	0.0000	0.0000	0.0000	0.0000	0.0007
1600.	0.0000	0.0000	0.0000	0.0000	0.0000	0.0002	0.0001
1625.	0.0000	0.0000	0.0000	0.0000	0.0000	0.0005	0.0023
1650.	0.0000	0.0000	0.0000	0.0000	0.0001	0.0008	0.0034
1675.	0.0000	0.0000	0.0000	0.0000	0.0003	0.0019	0.0066
1700.	0.0000	0.0000	0.0000	0.0000	0.0005	0.0030	0.0097
1725.	0.0000	0.0000	0.0000	0.0001	0.0015	0.0065	0.0178
1750.	0.0000	0.0000	0.0000	0.0002	0.0024	0.0100	0.0259
1775.	0.0000	0.0000	0.0000	0.0008	0.0062	0.0204	0.0447
1800.	0.0000	0.0000	0.0000	0.0029	0.0125	0.0300	0.0635
1825.	0.0000	0.0000	0.0000	0.0050	0.0232	0.0576	0.1022
1850.	0.0000	0.0000	0.0000	0.0085	0.0364	0.0845	0.1409
1875.	0.0000	0.0000	0.0019	0.0251	0.0761	0.1434	0.2092
1900.	0.0000	0.0000	0.0044	0.0415	0.1167	0.1997	0.2275
1925.	0.0000	0.0011	0.0082	0.0872	0.2139	0.3031	0.3735
1950.	0.0000	0.0022	0.0120	0.1327	0.3122	0.4039	0.4694
1975.	0.0000	0.0280	0.1355	0.3184	0.4693	0.5307	0.5587
2000.	0.0000	0.0537	0.2590	0.5042	0.6264	0.6575	0.6479
2025.	0.0088	0.0220	0.1030	0.4853	0.8445	0.7149	0.6878
2050.	0.1077	0.5814	0.9071	0.9813	0.8832	0.7729	0.6706
2075.	0.1099	1.0989	1.1806	0.9232	0.8766	0.6937	0.5955
2100.	2.0558	1.8481	1.3747	0.9040	0.6903	0.5626	0.4976
2125.	2.4149	1.0989	0.6977	0.6664	0.4779	0.4599	0.4643
2150.	1.2083	0.6300	0.4659	0.5326	0.5549	0.5869	0.6173
2175.	3.5836	2.4248	1.6699	1.3056	1.1279	1.0222	0.9634
2200.	1.4715	2.1995	2.0614	1.5938	1.4220	1.2745	1.1614
2225.	0.1396	0.8710	1.3428	1.4418	1.3340	1.2437	1.1484
2250.	0.0023	0.1399	0.5167	0.8596	0.9428	0.9519	0.9317
2275.	0.0000	0.0069	0.1110	0.3033	0.4688	0.5530	0.5984
2300.	0.0000	0.0000	0.0075	0.0571	0.1415	0.2210	0.2796
2325.	0.0000	0.0000	0.0000	0.0035	0.0188	0.0462	0.0763
2350.	0.0000	0.0000	0.0000	0.0000	0.0001	0.0014	0.0054

FIG. 15.
(continued)

FINE STRUCTURE PARAMETERS (1/D)

C1Ø2(G

WAVE NØ.(1/CM)	TEMPERATURES (DEG R)						
	540.	1080.	1800.	2700.	3600.	4500.	5400.
500.	2.6	14.5	107.2	400.8	1350.0	3324.3	7015.0
525.	2.6	14.5	107.2	400.8	1350.0	3324.3	7015.0
550.	2.6	14.5	107.2	400.8	1350.0	3324.3	7015.0
575.	2.6	14.5	107.2	400.8	1350.0	3324.3	7015.0
600.	2.6	14.5	107.2	400.8	1350.0	3324.3	7015.0
625.	2.6	14.5	107.2	400.8	1350.0	3324.3	7015.0
650.	2.6	14.5	107.2	400.8	1350.0	3324.3	7015.0
675.	2.6	14.5	107.2	400.8	1350.0	3324.3	7015.0
700.	2.6	14.5	107.2	400.8	1350.0	3324.3	7015.0
725.	2.6	14.5	107.2	400.8	1350.0	3324.3	7015.0
750.	2.6	14.5	107.2	400.8	1350.0	3324.3	7015.0
775.	2.6	14.5	107.2	400.8	1350.0	3324.3	7015.0
800.	2.6	14.5	107.2	400.8	1350.0	3324.3	7015.0
825.	2.6	14.5	107.2	400.8	1350.0	3324.3	7015.0
850.	2.6	14.5	107.2	400.8	1350.0	3324.3	7015.0
875.	2.6	14.5	107.2	400.8	1350.0	3324.3	7015.0
900.	2.6	14.5	107.2	400.8	1350.0	3324.3	7015.0
925.	2.6	14.5	107.2	400.8	1350.0	3324.3	7015.0
950.	2.6	14.5	107.2	400.8	1350.0	3324.3	7015.0
975.	2.6	14.5	107.2	400.8	1350.0	3324.3	7015.0
1000.	2.6	14.5	107.2	400.8	1350.0	3324.3	7015.0
1025.	2.6	14.5	107.2	400.8	1350.0	3324.3	7015.0
1050.	2.6	14.5	107.2	400.8	1350.0	3324.3	7015.0
1075.	2.6	14.5	107.2	400.8	1350.0	3324.3	7015.0
1100.	2.6	14.5	107.2	400.8	1350.0	3324.3	7015.0
1125.	2.6	14.5	107.2	400.8	1350.0	3324.3	7015.0
1150.	2.6	14.5	107.2	400.8	1350.0	3324.3	7015.0
1175.	2.6	14.5	107.2	400.8	1350.0	3324.3	7015.0
1200.	2.6	14.5	107.2	400.8	1350.0	3324.3	7015.0
1225.	2.6	14.5	107.2	400.8	1350.0	3324.3	7015.0
1250.	2.6	14.5	107.2	400.8	1350.0	3324.3	7015.0
1275.	2.6	14.5	107.2	400.8	1350.0	3324.3	7015.0
1300.	2.6	14.5	107.2	400.8	1350.0	3324.3	7015.0
1325.	2.6	14.5	107.2	400.8	1350.0	3324.3	7015.0
1350.	2.6	14.5	107.2	400.8	1350.0	3324.3	7015.0
1375.	2.6	14.5	107.2	400.8	1350.0	3324.3	7015.0
1400.	2.6	14.5	107.2	400.8	1350.0	3324.3	7015.0
1425.	2.6	14.5	107.2	400.8	1350.0	3324.3	7015.0
1450.	2.6	14.5	107.2	400.8	1350.0	3324.3	7015.0
1475.	2.6	14.5	107.2	400.8	1350.0	3324.3	7015.0
1500.	2.6	14.5	107.2	400.8	1350.0	3324.3	7015.0
1525.	2.6	14.5	107.2	400.8	1350.0	3324.3	7015.0
1550.	2.6	14.5	107.2	400.8	1350.0	3324.3	7015.0
1575.	2.6	14.5	107.2	400.8	1350.0	3324.3	7015.0
1600.	2.6	14.5	107.2	400.8	1350.0	3324.3	7015.0
1625.	2.6	14.5	107.2	400.8	1350.0	3324.3	7015.0
1650.	2.6	14.5	107.2	400.8	1350.0	3324.3	7015.0
1675.	2.6	14.5	107.2	400.8	1350.0	3324.3	7015.0
1700.	2.6	14.5	107.2	400.8	1350.0	3324.3	7015.0
1725.	2.6	14.5	107.2	400.8	1350.0	3324.3	7015.0
1750.	2.6	14.5	107.2	400.8	1350.0	3324.3	7015.0

FIG. 15.
(continued)

FINE STRUCTURE PARAMETERS (1/C)

C1Ø2(G

WAVE NØ.(1/CM)	TEMPERATURES (DEG R)						
	540.	1080.	1800.	2700.	3600.	4500.	5400.
1775.	2.6	14.5	107.2	400.8	1350.0	3324.3	7015.0
1800.	2.6	14.5	107.2	400.8	1350.0	3324.3	7015.0
1825.	2.6	14.5	107.2	400.8	1350.0	3324.3	7015.0
1850.	2.6	14.5	107.2	400.8	1350.0	3324.3	7015.0
1875.	2.6	14.5	107.2	400.8	1350.0	3324.3	7015.0
1900.	2.6	14.5	107.2	400.8	1350.0	3324.3	7015.0
1925.	2.6	14.5	107.2	400.8	1350.0	3324.3	7015.0
1950.	2.6	14.5	107.2	400.8	1350.0	3324.3	7015.0
1975.	2.6	14.5	107.2	400.8	1350.0	3324.3	7015.0
2000.	2.6	14.5	107.2	400.8	1350.0	3324.3	7015.0
2025.	2.6	14.5	107.2	400.8	1354.6	3250.7	6305.5
2050.	2.6	14.5	107.2	400.8	1362.9	3166.7	5373.0
2075.	2.6	14.5	107.2	400.8	1360.2	3015.4	4402.5
2100.	2.6	14.5	106.1	400.8	1325.6	2796.5	3582.0
2125.	2.6	14.5	102.9	400.8	1212.9	2345.3	2928.5
2150.	2.6	14.5	96.4	400.8	1044.1	1861.9	2313.0
2175.	2.6	14.5	81.7	389.5	855.4	1415.0	1719.5
2200.	2.6	14.5	74.3	353.5	683.3	1019.8	1268.0
2225.	2.6	14.2	76.9	257.0	377.2	1151.4	8979.5
2250.	2.6	13.7	68.3	174.3	346.8	477.7	634.3
2275.	2.5	11.7	42.4	140.3	254.1	397.0	414.2
2300.	2.3	7.8	68.2	109.1	286.2	341.1	415.2
2325.	1.4	5.7	22.6	73.3	82.8	116.8	129.2
2350.	2.8	8.0	16.6	34.3	39.4	51.6	56.0
2375.	1.1	2.1	4.1	7.5	6.5	7.1	6.3
2400.	0.0	0.0	0.0	0.0	0.0	0.0	0.0
2425.	0.0	0.0	0.0	0.0	0.0	0.0	0.0
2450.	0.0	0.0	0.0	0.0	0.0	0.0	0.0
2475.	0.0	0.0	0.0	0.0	0.0	0.0	0.0
2500.	0.0	0.0	0.0	0.0	0.0	0.0	0.0
2525.	0.0	0.0	0.0	0.0	0.0	0.0	0.0
2550.	0.0	0.0	0.0	0.0	0.0	0.0	0.0
2575.	0.0	0.0	0.0	0.0	0.0	0.0	0.0
2600.	0.0	0.0	0.0	0.0	0.0	0.0	0.0
2625.	0.0	0.0	0.0	0.0	0.0	0.0	0.0
2650.	0.0	0.0	0.0	0.0	0.0	0.0	0.0
2675.	0.0	0.0	0.0	0.0	0.0	0.0	0.0
2700.	0.0	0.0	0.0	0.0	0.0	0.0	0.0
2725.	0.0	0.0	0.0	0.0	0.0	0.0	0.0
2750.	0.0	0.0	0.0	0.0	0.0	0.0	0.0
2775.	0.0	0.0	0.0	0.0	0.0	0.0	0.0
2800.	0.0	0.0	0.0	0.0	0.0	0.0	0.0
2825.	0.0	0.0	0.0	0.0	0.0	0.0	0.0
2850.	0.0	0.0	0.0	0.0	0.0	0.0	0.0
2875.	0.0	0.0	0.0	0.0	0.0	0.0	0.0
2900.	0.0	0.0	0.0	0.0	0.0	0.0	0.0
2925.	0.0	0.0	0.0	0.0	0.0	0.0	0.0
2950.	0.0	0.0	0.0	0.0	0.0	0.0	0.0
2975.	0.0	0.0	0.0	0.0	0.0	0.0	0.0
3000.	0.0	0.0	0.0	0.0	0.0	0.0	0.0
3025.	0.0	0.0	0.0	0.0	0.0	0.0	0.0

FIG. 15.
(continued)

FINE STRUCTURE PARAMETERS (1/C)

C1Ø2(G

WAVE NØ.(1/CM)	TEMPERATURES (DEG R)						
	540.	1080.	1800.	2700.	3600.	4500.	5400.
3050.	0.0	0.0	0.0	0.0	0.0	0.0	0.0
3075.	0.0	0.0	0.0	0.0	0.0	0.0	0.0
3100.	1.2	7.2	49.7	244.0	908.4	1551.4	2241.0
3125.	1.2	7.2	49.7	244.0	908.4	1551.4	2241.0
3150.	1.2	7.2	49.7	244.0	908.4	1551.4	2241.0
3175.	1.2	7.3	50.8	246.6	859.5	1160.5	1385.9
3200.	1.2	7.4	52.4	256.2	924.9	1525.9	2191.7
3225.	1.2	7.4	57.9	271.0	1003.2	1659.3	2388.2
3250.	1.2	7.5	65.1	306.7	1156.4	1916.8	2762.7
3275.	1.2	7.7	73.9	359.0	1432.0	2388.7	3456.5
3300.	1.3	7.9	96.1	427.0	1980.8	3351.3	4899.0
3325.	1.3	8.3	166.2	533.3	3634.1	6314.3	9396.8
3350.	1.4	8.8	151.6	662.3	3872.3	6767.2	10015.8
3375.	1.5	9.6	127.8	788.7	4013.3	5916.5	8632.4
3400.	1.6	10.7	192.4	697.2	4758.0	8043.0	9179.2
3425.	1.7	12.3	120.4	479.3	2115.3	3560.8	5207.8
3450.	1.9	14.5	83.1	284.1	803.3	1276.4	1793.6
3475.	2.1	17.2	65.2	175.1	362.5	576.1	782.9
3500.	2.4	17.3	48.4	115.0	224.5	328.2	437.5
3525.	2.9	14.5	35.5	83.7	157.5	227.2	291.2
3550.	2.9	10.3	27.9	64.5	120.0	172.9	228.3
3575.	1.9	5.9	29.4	57.9	119.1	174.9	235.7
3600.	1.1	3.7	26.4	109.1	438.0	730.3	1057.6
3625.	0.8	1.6	54.2	184.1	1020.1	1748.0	2579.4
3650.	1.7	5.7	64.3	286.4	1705.5	2943.2	4354.4
3675.	0.8	6.5	59.4	270.3	1638.3	2830.9	4191.3
3700.	1.1	6.3	49.3	228.4	848.8	1404.4	2021.9
3725.	1.8	8.0	40.8	181.4	577.7	937.4	1332.1
3750.	3.6	5.5	14.7	41.4	93.2	141.6	193.4
3775.	2.4	4.4	0.0	30.5	59.9	91.0	120.5

BLOCKING CIRCLES

X	Y	Z	R	TYPE
C.CCCC	C.CCCC	C.CCCC	38.C5CC	C
C.CCCC	C.CCCC	-2C.CCCC	32.C7CC	C
C.CCCC	C.CCCC	-1C.CCCC	35.C6CC	C
C.CCCC	C.CCCC	-3C.CCCC	29.C8CC	C
C.CCCC	C.CCCC	-4C.CCCC	26.C9CC	C
C.CCCC	C.CCCC	-5C.CCCC	23.1CCC	C
C.CCCC	C.CCCC	-6C.CCCC	2C.11CC	C
C.CCCC	C.CCCC	-7C.CCCC	17.12CC	C
C.CCCC	C.CCCC	-8C.CCCC	14.13CC	C
C.CCCC	C.CCCC	-9C.CCCC	11.14CC	C
C.CCCC	C.CCCC	-1CC.CCCC	9.65CC	C
C.CCCC	C.CCCC	-11C.CCCC	9.65CC	C
C.CCCC	C.CCCC	-12C.CCCC	9.65CC	C
C.CCCC	C.CCCC	-13C.CCCC	9.65CC	C
C.CCCC	C.CCCC	-227.CCCC	13C.CCCC	1

FIG. 15
(continued)

PLUME RADIANCE CALCULATIØN (2-D), RUN 60703 DATE ØF RUN- 072E67

(GENERAL RADIATIØN)

FIELD IDENTIFICATIØN- Ø2/C2H4,Ø/F=2.25,PC=1000

CØNSTITUENTS ØF INTEREST- H2Ø1(G) C1Ø2(G) C1Ø1(G) CARBØN

CAL F-1 (Ø2/C2H4,Ø/F=2.25,PC=1000) EXIT START AT 120K ALTITUDE

CØØRDINATES ØF ØBSERVATIØN PØINT

X= 117.00 INCHES
Y= 0.00 INCHES
Z= -260.00 INCHES

INCLINATIØN ØF PLANE ØF INTEREST 310.00 DEGREES

ABSØRPTIØN CØEFFICIENTS LESS THAN 0.0001 ARE CØNSIDERED TØ BE ZERØ.

THE CARBØN MASS FRACTIØN (PØUNDS CARBØN PER PØUND GAS) IS 0.0500

TEMPERATURE STEP SIZE = 100.0

LIMITS ØF INTEGRATIØN

VARIABLE	UNITS	LØWER	UPPER	INCREMENT
THETA	DEGREES	40.000	90.000	5.000
PHI	DEGREES	0.000	45.000	5.000
WAVE NØ.	1/CM	50	7500	25
S	INCHES	0.000	800.000	12.000

SCALE FACTØRS

FLØW FIELD DIMENSIØNS	0.54357	ABSØRPTIØN CØEFS	1.00000
FLØW FIELD TEMPERATURES	1.00000	SHAPE FACTØR	1.00000
FLØW FIELD PRESSURES	1.00000		
FLØW FIELD MØLE FRACTIØNS	1.00000		
1/C	1.00000		

FIG. 15.
(continued)

ACCUMULATIØN ØF FLUX WITH RESPECT TØ THETA

THETA	FLUX
45.000	7.5258488E-02
50.000	1.5762736E-01
55.000	2.2181156E-01
60.000	3.5173492E-01
65.000	5.0247250E-01
70.000	6.0608298E-01
75.000	6.6138598E-01
80.000	7.0170699E-01
85.000	7.3708996E-01
90.000	7.4493232E-01

F= 0.74493232E 00 BTU/SQ-FT-SEC

CALCULATIØN TIME 648 SECØNDS

FIG. 15.
(continued)

DISTRIBUTIØN ØF FLUX WITH REGARD TØ WAVE NUMBER

LAMBDA	I-LAMBDA	WAVE NUMBER	FLUX
200.0000	1.2584446E-09	50.0	1.3423409E-07
133.3333	1.7115284E-08	75.0	7.8241298E-07
100.0000	1.1623902E-07	100.0	2.9521021E-06
80.0000	4.6606180E-07	125.0	7.5323120E-06
66.6667	1.4155067E-06	150.0	1.5837838E-05
57.1429	3.4997508E-06	175.0	2.8715904E-05
50.0000	7.3392453E-06	200.0	4.6050167E-05
44.4444	1.3505293E-05	225.0	6.6899284E-05
40.0000	2.2536371E-05	250.0	9.0371413E-05
36.3636	3.5104404E-05	275.0	1.1628788E-04
33.3333	5.1756792E-05	300.0	1.4401890E-04
30.7692	7.2612091E-05	325.0	1.7211755E-04
28.5714	9.8164569E-05	350.0	2.0059171E-04
26.6667	1.2849943E-04	375.0	2.2869754E-04
25.0000	1.6354449E-04	400.0	2.5578807E-04
23.5294	2.0300066E-04	425.0	2.8121303E-04
22.2222	2.4627849E-04	450.0	3.0428231E-04
21.0526	2.9215531E-04	475.0	3.2394213E-04
20.0000	3.4008949E-04	500.0	3.4030219E-04
19.0476	3.8854306E-04	525.0	3.5261991E-04
18.1818	4.4663257E-04	550.0	3.6930859E-04
17.3913	5.1128958E-04	575.0	3.8679118E-04
16.6667	7.0413332E-04	600.0	4.8919380E-04
16.0000	1.0096038E-03	625.0	6.4640502E-04
15.3846	1.6234212E-03	650.0	9.6095967E-04
14.8148	2.0796080E-03	675.0	1.1414658E-03
14.2857	1.8414485E-03	700.0	9.3981424E-04
13.7931	1.6215593E-03	725.0	7.7148230E-04
13.3333	1.1511259E-03	750.0	5.1175366E-04
12.9032	7.7547011E-04	775.0	3.2286031E-04
12.5000	6.0215368E-04	800.0	2.3527372E-04
12.1212	4.9474007E-04	825.0	1.8176444E-04
11.7647	4.3421956E-04	850.0	1.5028149E-04
11.4286	4.0405716E-04	875.0	1.3196397E-04
11.1111	3.7288223E-04	900.0	1.1510931E-04
10.8108	3.6513424E-04	925.0	1.0670590E-04
10.5263	3.6564946E-04	950.0	1.0130548E-04
10.2564	3.7874740E-04	975.0	9.9621214E-05
10.0000	1.7738999E-03	1000.0	4.4354429E-04
9.7561	2.0483531E-03	1025.0	4.8748550E-04
9.5238	2.3596490E-03	1050.0	5.3514365E-04
9.3023	2.7108461E-03	1075.0	5.8652520E-04
9.0909	3.1186091E-03	1100.0	6.4442396E-04
8.8889	3.6418072E-03	1125.0	7.1945814E-04
8.6957	4.2791879E-03	1150.0	8.0901582E-04
8.5106	5.0387806E-03	1175.0	9.1251262E-04
8.3333	5.8408626E-03	1200.0	1.0141487E-03
8.1633	6.6578537E-03	1225.0	1.1092956E-03
8.0000	7.4531247E-03	1250.0	1.1926192E-03
7.8431	8.2193539E-03	1275.0	1.2641513E-03

FIG. 15.
(continued)

DISTRIBUTIØN ØF FLUX WITH REGARD TØ WAVE NUMBER

LAMBDA	I-LAMBDA	WAVE NUMBER	FLUX
7.6923	9.1540409E-03	1300.0	1.3542733E-03
7.5472	1.0061192E-02	1325.0	1.4328355E-03
7.4074	1.0773276E-02	1350.0	1.4779424E-03
7.2727	1.1509159E-02	1375.0	1.5219981E-03
7.1429	1.2537121E-02	1400.0	1.5992501E-03
7.0175	1.3709258E-02	1425.0	1.6879426E-03
6.8966	1.5166744E-02	1450.0	1.8035519E-03
6.7797	1.6493266E-02	1475.0	1.8953692E-03
6.6667	1.8106472E-02	1500.0	2.0119700E-03
6.5574	1.8375044E-02	1525.0	1.9754129E-03
6.4516	1.7548957E-02	1550.0	1.8262329E-03
6.3492	1.6610069E-02	1575.0	1.6740857E-03
6.2500	1.7487291E-02	1600.0	1.7078475E-03
6.1538	1.8778669E-02	1625.0	1.7779674E-03
6.0606	2.0787170E-02	1650.0	1.9089406E-03
5.9701	2.2500998E-02	1675.0	2.0051015E-03
5.8824	2.4648923E-02	1700.0	2.1323751E-03
5.7971	2.6574424E-02	1725.0	2.2327931E-03
5.7143	2.7779601E-02	1750.0	2.2678382E-03
5.6338	2.9030850E-02	1775.0	2.3036929E-03
5.5556	3.0401156E-02	1800.0	2.3458814E-03
5.4795	3.1637902E-02	1825.0	2.3748836E-03
5.4054	3.2990424E-02	1850.0	2.4099292E-03
5.3333	3.3996181E-02	1875.0	2.4176136E-03
5.2632	3.5451680E-02	1900.0	2.4552088E-03
5.1948	3.7274162E-02	1925.0	2.5148075E-03
5.1282	3.8734504E-02	1950.0	2.5467519E-03
5.0633	4.1328568E-02	1975.0	2.6489488E-03
5.0000	4.3600648E-02	2000.0	2.7251470E-03
4.9383	4.4722363E-02	2025.0	2.7266617E-03
4.8780	4.7960806E-02	2050.0	2.8532177E-03
4.8193	5.0545555E-02	2075.0	2.9349624E-03
4.7619	5.3215210E-02	2100.0	3.0168422E-03
4.7059	5.9016592E-02	2125.0	3.2674677E-03
4.6512	6.4428438E-02	2150.0	3.4846196E-03
4.5977	7.6193801E-02	2175.0	4.0267575E-03
4.5455	9.0783284E-02	2200.0	4.6893706E-03
4.4944	1.0363969E-01	2225.0	5.2338321E-03
4.4444	1.1255287E-01	2250.0	5.5583378E-03
4.3956	1.1750095E-01	2275.0	5.6758601E-03
4.3478	1.2272797E-01	2300.0	5.8001699E-03
4.3011	1.2398746E-01	2325.0	5.7343531E-03
4.2553	1.2513660E-01	2350.0	5.6650132E-03
4.2105	1.1478278E-01	2375.0	5.0874666E-03
4.1667	7.1032000E-02	2400.0	3.0830698E-03
4.1237	7.3342438E-02	2425.0	3.1180524E-03
4.0816	7.5683697E-02	2450.0	3.1522561E-03
4.0404	7.8057942E-02	2475.0	3.1857947E-03
4.0000	8.0461182E-02	2500.0	3.2185278E-03
3.9604	8.2893333E-02	2525.0	3.2504800E-03

FIG. 15.
(continued)

DISTRIBUTIØN ØF FLUX WITH REGARD TØ WAVE NUMBER

LAMBDA	I-LAMBDA	WAVE NUMBER	FLUX
3.9216	8.5352324E-02	2550.0	3.2815985E-03
3.8835	8.7860927E-02	2575.0	3.3127721E-03
3.8462	9.0407957E-02	2600.0	3.3435669E-03
3.8095	9.2995184E-02	2625.0	3.3740514E-03
3.7736	9.5607096E-02	2650.0	3.4036748E-03
3.7383	9.8194669E-02	2675.0	3.4307560E-03
3.7037	1.0081855E-01	2700.0	3.4575003E-03
3.6697	1.0347587E-01	2725.0	3.4838161E-03
3.6364	1.0616976E-01	2750.0	3.5098168E-03
3.6036	1.0890221E-01	2775.0	3.5355709E-03
3.5714	1.1160421E-01	2800.0	3.5588786E-03
3.5398	1.1432900E-01	2825.0	3.5815253E-03
3.5088	1.1713247E-01	2850.0	3.6052547E-03
3.4783	1.1991120E-01	2875.0	3.6268724E-03
3.4483	1.2273002E-01	2900.0	3.6484038E-03
3.4188	1.2555046E-01	2925.0	3.6687195E-03
3.3898	1.2839087E-01	2950.0	3.6883991E-03
3.3613	1.3134691E-01	2975.0	3.7101683E-03
3.3333	1.3424207E-01	3000.0	3.7290111E-03
3.3058	1.3720189E-01	3025.0	3.7484936E-03
3.2787	1.4013496E-01	3050.0	3.7661198E-03
3.2520	1.4335014E-01	3075.0	3.7901386E-03
3.2258	1.4638915E-01	3100.0	3.8083124E-03
3.2000	1.4953578E-01	3125.0	3.8281771E-03
3.1746	1.5254817E-01	3150.0	3.8435519E-03
3.1496	1.5600443E-01	3175.0	3.8689775E-03
3.1250	1.5924457E-01	3200.0	3.8878662E-03
3.1008	1.6255281E-01	3225.0	3.9073433E-03
3.0769	1.6596893E-01	3250.0	3.9283168E-03
3.0534	1.6944255E-01	3275.0	3.9495372E-03
3.0303	1.7288198E-01	3300.0	3.9688810E-03
3.0075	1.7649595E-01	3325.0	3.9911458E-03
2.9851	1.8028808E-01	3350.0	4.0162752E-03
2.9630	1.8417901E-01	3375.0	4.0423932E-03
2.9412	1.8846201E-01	3400.0	4.0757907E-03
2.9197	1.9382366E-01	3425.0	4.1307740E-03
2.8986	1.9879251E-01	3450.0	4.1754909E-03
2.8777	2.0355071E-01	3475.0	4.2141370E-03
2.8571	2.0831695E-01	3500.0	4.2514205E-03
2.8369	2.1274923E-01	3525.0	4.2805072E-03
2.8169	2.1623955E-01	3550.0	4.2896693E-03
2.7972	2.1814582E-01	3575.0	4.2671717E-03
2.7778	2.2139312E-01	3600.0	4.2707521E-03
2.7586	2.2322077E-01	3625.0	4.2468190E-03
2.7397	2.2984477E-01	3650.0	4.3131444E-03
2.7211	2.3569579E-01	3675.0	4.3629695E-03
2.7027	2.4058222E-01	3700.0	4.3934436E-03
2.6846	2.4169780E-01	3725.0	4.3547682E-03
2.6667	2.4149401E-01	3750.0	4.2932747E-03
2.6490	2.2364706E-01	3775.0	3.9235036E-03

FIG. 15.
(continued)

DISTRIBUTIØN ØF FLUX WITH REGARD TØ WAVE NUMBER

LAMBDA	I-LAMBDA	WAVE NUMBER	FLUX
2.6316	2.2685066E-01	3800.0	3.9275124E-03
2.6144	2.3031796E-01	3825.0	3.9355876E-03
2.5974	2.3382980E-01	3850.0	3.9438736E-03
2.5806	2.3773519E-01	3875.0	3.9581713E-03
2.5641	2.4099390E-01	3900.0	3.9611502E-03
2.5478	2.4415762E-01	3925.0	3.9621907E-03
2.5316	2.4595963E-01	3950.0	3.9410686E-03
2.5157	2.4703626E-01	3975.0	3.9086856E-03
2.5000	2.4793630E-01	4000.0	3.8740426E-03
2.4845	2.4868003E-01	4025.0	3.8375439E-03
2.4691	2.4986053E-01	4050.0	3.8083052E-03
2.4540	2.5113164E-01	4075.0	3.7808575E-03
2.4390	2.5238893E-01	4100.0	3.7535884E-03
2.4242	2.5413178E-01	4125.0	3.7338345E-03
2.4096	2.5606334E-01	4150.0	3.7170223E-03
2.3952	2.5816085E-01	4175.0	3.7027240E-03
2.3810	2.6020906E-01	4200.0	3.6878028E-03
2.3669	2.6224561E-01	4225.0	3.6728112E-03
2.3529	2.6431607E-01	4250.0	3.6583857E-03
2.3392	2.6640105E-01	4275.0	3.6442438E-03
2.3256	2.6845654E-01	4300.0	3.6297839E-03
2.3121	2.7044406E-01	4325.0	3.6145053E-03
2.2989	2.7246182E-01	4350.0	3.5997367E-03
2.2857	2.7440506E-01	4375.0	3.5840955E-03
2.2727	2.7634253E-01	4400.0	3.5685016E-03
2.2599	2.7824290E-01	4425.0	3.5525567E-03
2.2472	2.8012333E-01	4450.0	3.5364922E-03
2.2346	2.8200002E-01	4475.0	3.5205171E-03
2.2222	2.8380323E-01	4500.0	3.5037707E-03
2.2099	2.8557597E-01	4525.0	3.4868063E-03
2.1978	2.8734555E-01	4550.0	3.4699640E-03
2.1858	2.8908109E-01	4575.0	3.4528741E-03
2.1739	2.9078417E-01	4600.0	3.4355662E-03
2.1622	2.9245196E-01	4625.0	3.4180173E-03
2.1505	2.9409251E-01	4650.0	3.4003311E-03
2.1390	2.9571544E-01	4675.0	3.3826253E-03
2.1277	2.9729752E-01	4700.0	3.3646404E-03
2.1164	2.9888001E-01	4725.0	3.3468504E-03
2.1053	3.0046980E-01	4750.0	3.3293284E-03
2.0942	3.0199675E-01	4775.0	3.3112998E-03
2.0833	3.0350866E-01	4800.0	3.2933021E-03
2.0725	3.0507413E-01	4825.0	3.2760738E-03
2.0619	3.0659268E-01	4850.0	3.2585261E-03
2.0513	3.0815491E-01	4875.0	3.2416247E-03
2.0408	3.0954963E-01	4900.0	3.2231534E-03
2.0305	3.1090900E-01	4925.0	3.2045248E-03
2.0202	3.1222602E-01	4950.0	3.1856751E-03
2.0101	3.1350447E-01	4975.0	3.1666519E-03
2.0000	3.1478973E-01	5000.0	3.1479170E-03
1.9900	3.1598289E-01	5025.0	3.1284854E-03

FIG. 15.
(continued)

DISTRIBUTIØN ØF FLUX WITH RLGARD TØ WAVE NUMBER

LAMBDA	I-LAMBDA	WAVE NUMBER	FLUX
1.9802	3.1712197E-01	5050.0	3.1087532E-03
1.9704	3.1823127E-01	5075.0	3.0889679E-03
1.9608	3.1922124E-01	5100.0	3.0682733E-03
1.9512	3.2001499E-01	5125.0	3.0459669E-03
1.9417	3.2082265E-01	5150.0	3.0240790E-03
1.9324	3.2154015E-01	5175.0	3.0016293E-03
1.9231	3.2231028E-01	5200.0	2.9799570E-03
1.9139	3.2310900E-01	5225.0	2.9586229E-03
1.9048	3.2390370E-01	5250.0	2.9379187E-03
1.8957	3.2481628E-01	5275.0	2.9183361E-03
1.8868	3.2578135E-01	5300.0	2.8994586E-03
1.8779	3.2674538E-01	5325.0	2.8807969E-03
1.8692	3.2768324E-01	5350.0	2.8621280E-03
1.8605	3.2804924E-01	5375.0	2.8387324E-03
1.8519	3.2838971E-01	5400.0	2.8154275E-03
1.8433	3.2881847E-01	5425.0	2.7931808E-03
1.8349	3.2928830E-01	5450.0	2.7715683E-03
1.8265	3.2978332E-01	5475.0	2.7504434E-03
1.8182	3.3016575E-01	5500.0	2.7286567E-03
1.8100	3.3050491E-01	5525.0	2.7067964E-03
1.8018	3.3069876E-01	5550.0	2.6840390E-03
1.7937	3.3082265E-01	5575.0	2.6610172E-03
1.7857	3.3088540E-01	5600.0	2.6378113E-03
1.7778	3.3096818E-01	5625.0	2.6150702E-03
1.7699	3.3106033E-01	5650.0	2.5927007E-03
1.7621	3.3114881E-01	5675.0	2.5705945E-03
1.7544	3.3122567E-01	5700.0	2.5486863E-03
1.7467	3.3130722E-01	5725.0	2.5270975E-03
1.7391	3.3138125E-01	5750.0	2.5057302E-03
1.7316	3.3143365E-01	5775.0	2.4844752E-03
1.7241	3.3145519E-01	5800.0	2.4632635E-03
1.7167	3.3146935E-01	5825.0	2.4422692E-03
1.7094	3.3146944E-01	5850.0	2.4214403E-03
1.7021	3.3143052E-01	5875.0	2.4005941E-03
1.6949	3.3139174E-01	5900.0	2.3800146E-03
1.6878	3.3131088E-01	5925.0	2.3593965E-03
1.6807	3.3120229E-01	5950.0	2.3388444E-03
1.6736	3.3107300E-01	5975.0	2.3184080E-03
1.6667	3.3090501E-01	6000.0	2.2979614E-03
1.6598	3.3071674E-01	6025.0	2.2776341E-03
1.6529	3.3049593E-01	6050.0	2.2573414E-03
1.6461	3.3026603E-01	6075.0	2.2372432E-03
1.6393	3.3000834E-01	6100.0	2.2172113E-03
1.6327	3.2970752E-01	6125.0	2.1971439E-03
1.6260	3.2939667E-01	6150.0	2.1772625E-03
1.6194	3.2905393E-01	6175.0	2.1574212E-03
1.6129	3.2869704E-01	6200.0	2.1377366E-03
1.6064	3.2831876E-01	6225.0	2.1181600E-03
1.6000	3.2791553E-01	6250.0	2.0986679E-03
1.5936	3.2747023E-01	6275.0	2.0791514E-03

FIG. 15.
(continued)

DISTRIBUTIØN ØF FLUX WITH RLGARC TØ WAVE NUMBER

LAMBDA	I-LAMBDA	WAVE NUMBER	FLUX
1.5873	3.2700278E-01	6300.0	2.0597384E-03
1.5810	3.2652880E-01	6325.0	2.0405260E-03
1.5748	3.2600116E-01	6350.0	2.0212191E-03
1.5686	3.2545184E-01	6375.0	2.0020183E-03
1.5625	3.2489865E-01	6400.0	1.9830316E-03
1.5564	3.2436769E-01	6425.0	1.9644138E-03
1.5504	3.2372916E-01	6450.0	1.9453782E-03
1.5444	3.2312389E-01	6475.0	1.9267757E-03
1.5385	3.2249419E-01	6500.0	1.9082567E-03
1.5326	3.2183906E-01	6525.0	1.8898152E-03
1.5267	3.2116714E-01	6550.0	1.8715012E-03
1.5209	3.2045841E-01	6575.0	1.8531977E-03
1.5152	3.1976683E-01	6600.0	1.8352157E-03
1.5094	3.1902612E-01	6625.0	1.8171720E-03
1.5038	3.1825703E-01	6650.0	1.7991869E-03
1.4981	3.1747762E-01	6675.0	1.7813617E-03
1.4925	3.1669785E-01	6700.0	1.7637500E-03
1.4870	3.1588051E-01	6725.0	1.7461429E-03
1.4815	3.1505054E-01	6750.0	1.7286783E-03
1.4760	3.1419279E-01	6775.0	1.7112723E-03
1.4706	3.1333078E-01	6800.0	1.6940519E-03
1.4652	3.1246057E-01	6825.0	1.6769935E-03
1.4599	3.1159310E-01	6850.0	1.6601531E-03
1.4545	3.1067274E-01	6875.0	1.6432332E-03
1.4493	3.0971847E-01	6900.0	1.6263364E-03
1.4440	3.0876214E-01	6925.0	1.6096295E-03
1.4388	3.0781385E-01	6950.0	1.5931621E-03
1.4337	3.0682360E-01	6975.0	1.5766734E-03
1.4286	3.0581724E-01	7000.0	1.5602970E-03
1.4235	3.0476291E-01	7025.0	1.5438704E-03
1.4184	3.0373783E-01	7050.0	1.5277843E-03
1.4134	3.0264411E-01	7075.0	1.5115437E-03
1.4085	3.0154765E-01	7100.0	1.4954800E-03
1.4035	3.0042049E-01	7125.0	1.4794530E-03
1.3986	2.9928515E-01	7150.0	1.4635731E-03
1.3937	2.9812823E-01	7175.0	1.4477735E-03
1.3889	2.9695766E-01	7200.0	1.4320918E-03
1.3841	2.9577437E-01	7225.0	1.4165312E-03
1.3793	2.9461693E-01	7250.0	1.4012738E-03
1.3746	2.9349628E-01	7275.0	1.3863660E-03
1.3699	2.9236219E-01	7300.0	1.3715662E-03
1.3652	2.9121247E-01	7325.0	1.3568630E-03
1.3605	2.9000867E-01	7350.0	1.3420774E-03
1.3559	2.8871138E-01	7375.0	1.3270312E-03
1.3514	2.8739550E-01	7400.0	1.3120724E-03
1.3468	2.8605725E-01	7425.0	1.2971831E-03
1.3423	2.8473214E-01	7450.0	1.2825231E-03
1.3378	2.8341731E-01	7475.0	1.2680758E-03
1.3333	2.8209877E-01	7500.0	1.2537758E-03

FIG. 15.
(concluded)

REFERENCES

1. Prozan, R. J., "Development of the Method of Characteristics Solution for Supersonic Flow of an Ideal, Frozen, or Equilibrium Reacting Gas Mixture," Technical Report LMSL/HREC A782536, Lockheed Missiles and Space Co., Huntsville Research and Engineering Center, April 1966.

2. "Study of Exhaust Plume Radiation Predictions-Interim Progress Report," Contract NAS8-11363, General Dynamics Corporation, Convair Division, GD/G-DBE-66-001, January 1966.

3. "Study of Exhaust Plume Radiation Predictions - Interim Progress Report - Part II," Contract NAS8-11363, General Dynamics Corp., Convair Division, GD/C-DBE-66-001a, February 1966.

4. "Study of the Spectral Emissivity of Carbon Particles Produced by a Rocket Motor," Final Report on Contract NAS8-11455, General Dynamics Corp., Convair Division, GD/C-DBE-66-006, May 1966.

5. "Study on the Radiation and Convection Environment of the Saturn V," Summary Report on Contract NAS8-11350, Hayes International Corp., Engineering Report 1333, October 31, 1966.

6. "Study on Exhaust Plume Radiation Predictions," Final Report, Contract NAS8-11363, General Dynamics Corp., Convair Division, GD/C-DBE-66-017, December 1966.

APPROVAL NASA TM X-53622

A GENERAL PROGRAM FOR THE CALCULATION OF RADIATION FROM AN INHOMOGENEOUS, NONISOBARIC, NONISOTHERMAL ROCKET EXHAUST PLUME

by Robert M. Huffaker and Marcus J. Dash

The information in this report has been reviewed for security classification. Review of any information concerning Department of Defense or Atomic Energy Commission programs has been made by the MSFC Security Classification Officer. This report, in its entirety, has been determined to be unclassified.

This document has also been reviewed and approved for technical accuracy.

Homer B. Wilson
Chief, Thermal Environment Branch

W. K. Dahm
Chief, Aerophysics Division

E. D. Geissler
Director, Aero-Astrodynamics Laboratory