FINAL REPORT

FOR

ANALYTICAL STUDY OF THE NEED OF FREQUENCY AND TIME

Contract NAS 5-9715

FACILITY FORM 602

N67-38533
(ACCESSION NUMBER)

(THRU)

12
(PAGES)

0
(CODE)

CR-88990
(NASA CR OR TMX OR AD NUMBER)

07
(CATEGORY)

Prepared by

ITT FEDERAL LABORATORIES
Nutley, N. J.

for

National Aeronautics and Space Administration

Goddard Space Flight Center
Greenbelt, Maryland

FINAL REPORT

FOR

ANALYTICAL STUDY OF THE NEED OF FREQUENCY AND TIME

Contract NAS 5-9715

Prepared by

ITT Federal Laboratories
Nutley, N. J.

for

National Aeronautics and Space Administration
Goddard Space Flight Center
Greenbelt, Maryland

ABSTRACT

A major concern in future NASA space research is the availability of required time and frequency sources. Communication and tracking systems in use today already impose stringent requirements on stable frequency sources, with indications that future experimentation will impose even greater requirements, including accurate time synchronization. To meet a new requirement to resolve range rate to 0.01 meter/sec. the allowable error budget due to phase noise of the VCO was determined to be 9.4×10^{-3} meter/sec. To relate this requirement to oscillator stability as a function of transit and smoothing times, graphs resulting from an analysis on theoretical limitations on range and range rate tracking systems demonstrate the severe requirements on the oscillator stability. Information obtained from questionnaires and interviews, which in general showed that the present state of the art capabilities are in excess of needs, was considered inconclusive. Further discussions with NASA engineers are recommended to insure that they are aware of the affect of time and frequency on their research and to permit them to take full advantage of present and future capabilities as they become available.

TABLE OF CONTENTS

i Abstract

ii Table of Contents

iii List of Illustrations

iv List of Table

1. Introduction

2. Time and Frequency Requirements

3. Results

3.1 Questionnaire

3.2 Interview

3.2.1 General

3.2.2 Time Requirements

3.2.3 Frequency Requirements

3.3 Literature Search

3.4 Operational Equipment Survey

3.5 Survey of Theoretical Limitations on Range and Range Rate

3.5.1 Accuracy Requirements

3.5.2 Range Errors

3.5.3 Range Rate Errors

4. Conclusions and Recommendations

5. Bibliography

Appendix

I. Questionnaire (Sample)

II. Literature Search - Indexes Reviewed

III. Summary of equations used in the Survey of Theoretical Limitations

IV. Application of Theoretical Limitations on Range and Range-Rate Systems

LIST OF ILLUSTRATIONS

Figure 1. Overall Range and Range-Rate System Diagram

Figure 2. Synthesizer Modulator Block Diagram

Figure IV-1. $f_o \dot{r}_{erms}$ vs T_c

Figure IV-2. $f_o r_{erms}$ vs T_c

Figure IV-3. 70 MHz oscillator coherence time (T_c) versus smoothing time (T) to yield rms range-rate error of 0.01 met/sec.

LIST OF TABLES

Table I a. Immediate Requirements (from Questionnaire)

Table I b. Future Requirements (from Questionnaire)

Table II. Interviews

Table III a. Accuracy of AMR CW Tracking Systems

Table III b. Location of AMR CW Tracking Systems

Table III c. Uses of AMR CW Tracking Systems

Table IV a. Accuracy of AMR Pulse Radar Systems

Table IV b. Location of AMR Pulse Radar Systems

Table IV c. Uses of AMR Pulse Radar System

1. INTRODUCTION

The purpose of this study has been to determine the present and future needs of the NASA for stable time and frequency standards. The study consisted of an investigation into the various communication and tracking systems employed by the NASA in carrying out their mission, an attempt to convert system characteristics into requirements for time and/or frequency and a validation of the time and frequency needs specified by engineers and scientists within the NASA.

The methods employed in acquiring this data included questionnaires, interviews, literature search, in-house consultation, contract review, analysis of current equipment usage, and a survey of theoretical limitations on range and range-rate systems. However, no single method proved outstanding as a means for obtaining data pertinent to the study. Conclusions have been drawn based on apparent needs and also on the experience of ITTFL engineers' knowledgeable in this field.

Of particular interest is a survey made on the theoretical limitations on range and range rate systems in which errors in range and range rate systems are related to oscillator stability characteristics.

Author

This final report contains a general background on time and frequency as applicable to NASA programs, a summary of the data collected, conclusions which can be drawn from this data, and recommendations to ascertain additional information if the study is continued.

2. TIME AND FREQUENCY REQUIREMENTS

Scientists are constantly performing experiments wherein the elements of time and frequency play an important role. As the state-of-the-art in practically any field of science advances, more and more sophisticated experiments must be devised in order to prove theoretical hypotheses. The advent of the space age has been a veritable boom to scientific investigation in many fields, but the potential for scientific experimentation yet to be performed is vast. The measurement of relativistic effects as well as the precise measurement of some fundamental quantities such as, the speed of light, impose very demanding requirements on the precision of frequency sources and/or time synchronization methods.

In space research, communication and tracking systems in use today already impose stringent requirements on stable frequency sources. Future experimentation will impose even greater requirements, including accurate time synchronization. Examples of these systems follow:

(a) In deep space probles, where the probe must be tracked within a precise error, the communication system requires the use of very narrow band receivers to keep the signal-to-noise ratios high. To obtain the narrow bandwidths phase-lock loop receivers are used which require good oscillator short and long term stability.

(b) The determination of a spacecraft's orbital parameters is of prime importance. A method in use is based on making measurements of time intervals to determine range and Doppler frequency shifts to determine range-rate. To obtain precise determination of Doppler frequencies good oscillator stability is obviously a requirement. However, not so obvious is the maintenance of the required oscillator parameters during all environmental conditions. Since it takes several accurately positioned ground stations to adequately track a satellite, there also exists a

need for means whereby the ground stations can be precisely synchronized in time. In the final analysis the degree of precision to which orbital parameters are required to be known impose the requirements on the precision of frequency sources and time synchronization methods.

(c) Eventually it may be desirable to make re-entry guidance entirely independent of ground facilities. The development of onboard sensing, tracking and computation equipment that will result in orbit determinations with the accuracy possible from the ground should impose further requirements on frequency sources.

(d) The potential superiority of laser systems to RF systems for transmission of data and orbit determination offer a solution to satisfy deep-space requirements. The applications of time and frequency must be defined to insure full exploitation of optical tracking and communication.

This study has attempted to relate time and frequency to some of the systems outlined above. In some areas of investigation specific time and frequency requirements were determined, while in others only preliminary data was uncovered. In many cases the actual requirements are not known. In experimentation this is frequently due to the fact that the results cannot always be predicted. But as the information is gained from each subsequent experiment, the measurements must be more refined in order to gain more knowledge. Consequently, as space research advances, the applications of time and frequency will be continually pushed to new horizons. Therefore, as in all technologies a continuing study must be made of NASA's scientific advancements to insure that the current time and frequency state-of-the-art is fully utilized, and that basic research is performed to meet the needs of tomorrow.

3. RESULTS

3.1 QUESTIONNAIRE

The initial method for acquiring data on time and frequency requirements was through the media of a questionnaire. Questionnaires and an accompanying letter of explanation was distributed to a total of 103 engineers and scientists with the NASA, industry and other governmental agencies. Completed questionnaires were received from seven people with an additional six people transmitting letters indicating that their project had no requirements, information had been supplied verbally or that present capabilities are adequate. Three letters were returned with an indication that the addressee had left without leaving a forwarding address. In the selection of names, care was taken to see that these questionnaires were directed to people actively engaged in the field. As requested by the GSFC project manager, the circulation was limited to working engineers as opposed to supervisory management personnel.

A sample questionnaire has been included in Appendix I to show the type of information requested. A portion of the data contained in the returned forms has been summarized in Table I; Table I(a) contains the immediate requirements and Table I(b) contains the future needs. The full contents of these questionnaires are on file with the GSFC project manager.

It was anticipated that this method of data acquisition would provide a ready source of information on future requirements since those concerned with programs and experiments would be interested in seeing that the equipment needed in the field would be available. Although response to questionnaires is historically poor, an above normal response was expected to this form due to the selected distribution. Further, it was hoped that completed forms would provide us with a bridge towards reaching the experimenters who would set the requirements for the future.

However, with only a 7% return of completed forms, of which two were returned from NASA personnel and one from a NASA contractor, this method did not provide a complete cross-section of NASA needs. In particular, the questionnaire method did not provide the desired contact with scientists planning future experiments.

Some of the completed questionnaires, which are on file with the GSFC project manager, contains information pertinent to the signals which a central time and frequency source would be called upon to provide. If such a central source is planned, these forms will provide a ready reference for establishing typical requirements.

TABLE I(a)
IMMEDIATE REQUIREMENTS

Code No.	Frequency	Stability Long Term	Stability Short Term	Time Synchronization	Application
101	1280 MHz	$1x10^{-8}$/day	$1x10^{-10}$/.03 Sec.		
102	100 MHz 70 MHz 10 MHz	$100x10^{-10}$/mo " " " "	$1x10^{-10}$/ms " " " "	±1 millisec.	High speed data transfer via satellite
104	100 kHz	$5x10^{-10}$/day	$5x10^{-10}$/ Sec.	Several millisec.	Nuclear device and weapons test
105	4 MHz 16 MHz 70 MHz	$1x10^{-10}$/day $5x10^{-10}$/mo $1x10^{-6}$/mo	$1x10^{-10}$/Sec. $1x10^{-9}$/Sec. $1x10^{-9}$/2ms		
108	5 MHz 1 MHz 100 MHz	$1x10^{-10}$/day	$1x10^{-11}$/Sec. $1x10^{-10}$/.1 Sec.	1 millisec.	Goddard Range and Range Rate Unified S-Band
110	100 kHz 10 kHz 1 kHz	$2x10^{-9}$ " "	$1x10^{-9}$ " " " "	50 microsec.	Merritt Island launch area
111	2200-2300 MHz 2110-2259 MHz	$3x10^{-12}/10^{7}$ Sec	$5x10^{-12}/10^{4}$ Sec	30μsec (Station) 5μsec (Intra Range)	Deep Space Tracking

TABLE I(b)
FUTURE REQUIREMENTS

Code No.	Frequency	Stability Long Term	Stability Short Term	Time Synchronization	Application
101			$1x10^{-10}$/.03 sec.		
102				10 microsec.	
104				0.1 microsec.	Weapons test
105				100 millisec.	
106				10 millisec.	
108		$1x10^{-11}$/day	$1x10^{-11}$/sec. to $1 x10^{-12}$/sec.	10 to 50 microsec.	Satellite telemetry and tracking
110	1 MHz 100 kHz 10 kHz 1 kHz	$5x10^{-10}$ " " "	$5x10^{-10}$ " " "	1 microsec. UT-2 and AT	Merritt Island launch area
111	2200-2300 MHz 2100-2300 MHz 1700-1900 MHz	$1 \rightarrow 5x10^{-13}/10^{7}$ sec.	$1 \rightarrow 5x10^{-13}/10^{4}$ sec.	$5 \rightarrow 30$ μsec (Station) 1 μsec (Intra Range)	JPL Deep Space

3.2 INTERVIEW

3.2.1 GENERAL

In order to obtain information directly from engineers and scientists within the NASA interviews were conducted with selecter personnel. These interviews were conducted over a period of seven months extending from January to July 1965 with a total of 23 people interviewed. The interviews were conducted by ITTFL engineers with members of the GSFC Timing Section participating in some of the discussions. Table II presents a listing of the dates, places and names of the individuals who were interviewed.

3.2.2 TIME REQUIREMENTS AND CAPABILITY

To determine the capability of equipment currently in use in the field and to discuss problems with the engineers responsible for the implementation of systems to meet timing requirements, meetings were held with personnel at MSFC, KSFC, Patrick AFB and Eglin AFB. The engineers interviewed at these sites were primarily concerned with data acquisition. As a result, it was found that their requirements for time synchronization were relatively gross and that solutions which satisfy the requirements had been implemented. However, as a word of caution in drawing conclusions for this data, it must be stated that these engineers are primarily concerned with current experiments and not on space research of the future requiring advances in technology.

At the Kennedy Space Flight Center, Mr. Art Green, who is responsible for the timing on Merritt Island, is in the process of installing a system to meet the needs of about 150 users. It consists of Loran-C timing with VLF frequency tracking. When the system is completed, timing signals will be distributed via an all-cable system with a goal of 2 usec accuracy with respect to the central timing center for each of the using locations. The distribution pattern is 10's and 100's of milliseconds. The standard code format is 1000 pulses per second

TABLE II - INTERVIEWS

DATE (1965)	PLACE	INTERVIEWED	CODE	AFFILIATION
1/25	GSFC	William Poland, Alan Demmerle	544	NASA
1/26	GSFC	George Kronmiller	531	NASA
1/26	GSFC	William Galliger	623	NASA
1/26	GSFC	T. Tarashi, Phil Curby Michael Mahoney	540	NASA
1/26	GSFC	Marc Selig	545	NASA
3/24	MSFC	John Gregory, E. Gleason		NASA
3/24	MSFC	George Jarrett, James Belden		NASA
3/25	KSFC	Art Green		NASA
3/25	Patrick AFB	Roy Rice, Harry Leidke		AF
3/26	Eglin AFB	Joseph Taylor		AF
5/24	GSFC	Dr. Henry Plotkin		NASA
5/24	GSFC	Dr. Elie Bagdadhy		ADCOM
5/24	GSFC	Dr. B. Kruger		NASA
5/25	GSFC	Dr. Richard Sydnor		JPL
6/11	GSFC	Dr. N. Hess		NASA
6/11	GSFC	John Jacobi		NASA
7/21	GSFC	William Shaffer	531	NASA

with reference to UT-2. Among the timing signals distributed are time of events such as missile lift-off. However, the techniques for acquisition of such data is a major problem and requires improvement. Since the tracking and doppler radars have their own internal frequency standards the KSFC time and frequency central does not distribute a frequency standard.

At the Patrick Air Force Base discussions were held with Mr. Ray Rice and Mr. Harry Leidke on the needs for conformal timing between stations on the Atlantic Missile Range. He indicated that with WWV as a time reference, timing in the order of several millisec was attained throughout the range, except for Ascension Island where the timing accuracy was plus minus 5 millisec. The exact reason for this degradation, i.e., equipment or human error, was not disclosed. In order to improve the system, Mr. Leidke indicated that he would implement his own system using Loran and expected to achieve 150 usec accuracy using skywave reception.

Loran C signals are also used at the Eglin Air Force Base to synchronize clocks at each local site. Mr. Joseph Taylor indicated that Eglin had a considerable problem with time synchronization when signals were sent via cable from one site to another. However, with the use of Loran it was suggested that the ability to synchronize was now perhaps five years ahead of the need. In operation the local time pulse is positioned at the peak of the received Loran C signal from Jupiter, Florida. Since the results attained far surpass their 1 to 2 millisec requirement and due to the proximity of the down range stations with Jupiter, no attempt is made to either synchronize on a particular cycle of the Loran signal or to compensate for propagation delays. The results achieved are approximately 150 usec so that this simple synchronizing procedure is quite satisfactory for his purpose.

At the Marshall Space Flight Center, the data reduction center broadcasts time to about 50 customers on a telemetry channel with WWV as the time reference. Upon launch of a rocket from Cape Kennedy the count is picked up and distributed to facilitate acquisition. At a later date, the

time difference between Kennedy and MSFC is determined and corrections made prior to the reduction of the recorded data. The timing pulse rate requirements are primarily one pulse per second and two pulses per second with 100 pulses per second signals as the maximum rate which they are called upon to provide.

In discussing future needs, Mr. Jones Bulden, who has responsibility for future planning at Redstone, indicated that future plans should strive for the utmost in synchronization accuracy and resolution since it is impossible to predict what degree will be required. A value of time synchronization of 50 microseconds and frequency accuracy of $3x10^{-8}$ were considered to be reasonable future requirements.

At MSFC discussions were also held with Mr. John Gregory and Mr. E. H. Gleason. It was their consensus of opinion that the present system and procedures described above were adequate in the time and frequency region and that they could not foresee any need for improvement in the near future.

Since much of the data collected at the field sites is processed at the Goddard Space Flight Center, interviews were conducted with the personnel concerned with the analysis of data received from data collection sites. Here, the interest in time is primarily in relative time synchronization between stations in order that the data recorded on the tapes can be correlated. Of particular concern was a need for improving the method for recording a time code on the tape. An opinion was expressed by Mr. T. Tarashi, Phil Curby and Michael Mahoney of GSFC, College Park, Md. that the ability to synchronize with higher accuracy would be of little benefit unless it can be reliably recorded on tape. An area of confusion appears to be in the inconsistency in compensating for propagation delays when synchronizing time. In some cases the local operators make the adjustment, and in others Goddard makes the compensation. However, this problem area involves an operational decision and is not directly associated with this study. Mr. Alan Demmerly and Mr. William Poland, who are also concerned with this problem, indicated that present requirements for time

synchronization was several milliseconds with a possible future requirement of one millisecond absolute. This would require that the time established at each of the data collection sites be synchronized to a time standard specified by NASA and the necessary equipment installed to meet this requirement.

During these discussions Mr. Marc Selig indicated that there exists a need for a stable spaceborn clock which would provide a short term stability of 1×10^{-6}. Although specifications of their purchased oscillators state conformance to this requirement, GSFC has found that under test this part of the specification is not met. The stability considerations being affected by the severe power, weight and size restrictions.

The requirements imposed on time synchronization by tracking systems were discussed with Dr. B. Kruger at GSFC. He noted that the Unified S-Band system provides synchronization of one to two milliseconds, and predicted that the maximum requirements in the foreseeable future would be 0.1 milliseconds. The S-Band system to be implemented will be used for prime communications and tracking between a Command Module, Loran Excursion Module and the ground base equipment from the earth parking orbit to the lunar parking orbit and eventual moon touchdown. It utilizes a single carrier frequency for transmission of all tracking and communication data between the space crafts and the ground base equipment. The system transmits voice, up-data, and pseudo-random range signal to the spacecraft (2090-2120 MHz) and it receives voice, PCM TM Data, pseudo-random range and coherent Doppler range rate information from the space craft (2270-2300 MHz). In addition, when the space vehicle is in parking orbit, or when it is not required, the range and range rate information can be interchanged with either 400 kHz television information, 14.5 to 165 kHz high-frequency analog data, or 4 kHz to 12.4 kHz biomedical data and baseband voice from the astronaut's belt pack.

A further attempt was made to determine future time requirements by meeting with scientists concerned with new experiments. However, the only contact which could be established was with Dr. H. Ness. Dr. Ness described a satellite which would carry a particle accelerometer to create an artificial aurora. For this experiment an on-board clock would be required synchronized in the area of several milliseconds.

3.2.3 FREQUENCY REQUIREMENTS

In a meeting with Dr. Elie Bagdadhy of ADCOM, it was suggested that frequency requirements be characterized by three parameters: (1) a smoothing filter, (2) resolution of the phase measuring instrument and (3) the time separation between the compared samples. He noted that the actual oscillator instability is characterized by the mean-square spectral density of the instantaneous frequency perturbations and a normal peak factor for conversion from rms to peak phase fluctuation. A complete discussion on these factors is described in a paper presented by Dr. Bagdadhy at the Symposium on the Definition and Measurement of Short Term Frequency Stability entitled, Short Term Frequency Stability: Characterization, Theory and Measurement.

In an attempt to ascertain the requirements imposed on oscillator stability and phase noise by tracking systems several persons were contacted. Dr. B. Kruger of GSFC indicated that for a moon orbit an oscillator stability of 1 pp 10^{-10}/sec will yield a range rate error of 6 centimeters/sec. When pressed for the need of greater accuracy he indicated that the 6 centimeter error was sufficient but that a 1 pp 10^{-11}/sec stability would provide a desirable margin. Budget figures for sources of error in the Apollo mission were also provided as follows: (1) 0.07 feet/sec bias and (2) 0.1 feet/sec noise.

The Apollo program was also discussed with Mr. John Jacobi at GSFC, who indicated that there were no new requirements in excess of present capabilities. These capabilities, as stated in the performance specification FSGC-TDS-FS-1 for an Apollo Precision Frequency Source, will be as follows:

A. Atomic Resonators (2 required)

Long Term-----5 parts in 10^{11}/year
Short Term----3 parts in 10^{11}/sec.

B. Crystal Oscillators (2 required)

Long Term-----1 part in 10^{10}/day
Short Term----3 parts in 10^{11}/sec.

Discussions on the Deep Space Tracking Network were held with Dr. Richard Sydnor of JPL. It was pointed out that the use of phase lock receivers in deep space probes requires a high degree of phase stability in the oscillators of the ground transmitters and receivers. In this application, narrow tracking bandwidths are required to maintain a high signal-to-noise ratio over long distances and low transmitter powers. Dr. Sydnor indicated that several years ago the phase noise was limited to 6 degrees rms in a 20 Hz double sided noise bandwidth, but that it was now possible to atain 1-1/2 degrees rms in a ten hertz bandwidth. The stability of the oscillator, which is a rubidium vapor frequency standard, was given as $5x10^{-10}$ in 10 hours and $5x1o^{-11}$ in 10 minutes.

At GSFC, Mr. George C. Kronmiller discussed the requirements for an S-Band tracking system and the importance of short term stability to tracking accuracy. It was indicated that the short term frequency stability of a new procurement required as a design goal 2.5 pp 10^{-11} per second, and that in the actual procurement the requirement was surpassed since the carrier VCO was specified with a design goal of 6 degrees rms phase noise in a 20 hertz noise band. In this case measurements made on delivered equipment revealed a minimum rms phase error of 2.2 degrees, an average of 4.3 degrees and a maximum of 5.5 degrees. The design goal of the subcarrier VCO was specified as 1.5 degrees max. rms phase error in a 20 hertz noise band. Measurements indicated 1.3 degrees min, 1.7 degrees average, and 2.4 degrees max. Currently there exists at Goddard a requirement to achieve 1 degree rms phase noise in a 10 hertz noise band.

In looking further into tracking requirements at Goddard, Mr. W. Shaffer described a Range Rate Side Tone tracking system now under development with delivery scheduled for the fall of 1965. Of particular interest was the new requirement imposed on the system to resolve range

rate to 0.01 meter/sec, which is an improvement of a magnitude over the Goddard Range and Range Rate system. This requirement has been included in the analysis on Theoretical Limitations (Appendix IV). In the new system the carrier oscillator in the transmitter is a klystron operating at 70 MHz. It is multiplied up to 6 kHz for transmission to the satellite. The satellite, which will contain a traveling wave tube, responds at 4 kHz with the signal being converted down to 70 MHz in the ground receiver. The composite signal at 70 MHz looks as follows:

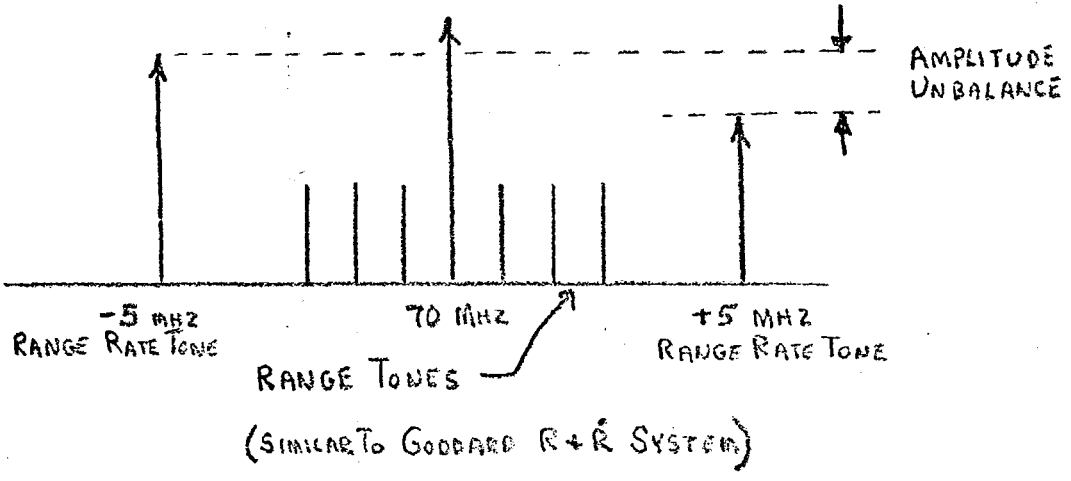

Mr. Shaffer estimated that the major errors in this system are:

1. Amplitude unbalance (4%)----------.003 meter/sec.
2. Quantizing error----------.001 meter/sec.
3. Analog to digital----------.001 meter/sec.
   (zero crossing detection)
4. Phase noise of VCO----------major error contributor

The solution for meeting the VCO stability requirements will be to provide two oscillators, one which can be pulled drastically when the satellite is in its transfer orbit, and a second when it has reached synchronous orbit.

In order to obtain data on optical tracking and their system requirements, a meeting was held with Dr. Henry Plotkin. He described a system which utilized a 20 nanosecond interrogation pulse with the time between transmit and receive of the reflected pulse accumulated in a 100 MHz counter. With this system a 1-1/2 meter uncertainty exists which can be reduced to 1 meter by smoothing of the data. For midcourse or rendezvous operations it was felt that a 1 meter accuracy was sufficient. As an indication of the present accuracy, Dr. Plotkin showed that measurements can be made to 0.1 usec which is equivalent to 30 meters. He also indicated that due to the inherent fast rise times of a laser pulse, a single laser measurement would be equivalent to the results of the smoothed range rate measurements.

3.3 LITERATURE SEARCH

During the study a literature search was made to locate reports and papers either written by NASA personnel or those associated with NASA which would describe system requirements affecting time and/or frequency. The indexes which were reviewed are listed in Appendix II. In addition to the journals covered by these indexes, the NASA Technical Notes were examined for data pertinent to the study. In addition, reference was made to such proceedings as the recent Symposiums on Frequency Control sponsored by the U.S. Army Electronics Research and Development Laboratory, and the Symposium on the Definition and Measurement of Short Term Frequency Stability co-sponsored by NASA and IEEE. A complete listing of all documents used in the study are included in the Bibliography, Section 5.

Although the reports and documents acquired through this search provided a source of general background to NASA projects and developments, they failed to provide the expected input of either needs for time and/or frequency or insight into the system requirements. In particular there was little reference to future experiments or work from which parameters could be established on which to base future needs for accurate time and stable frequencies. Since the abstracts reviewed are considered valid sources for the location of technical reports on the subjects, it is fair to assume that future experiments and plans by NASA are not reported in the technical journals surveyed.

However, several papers, especially those appearing in IEEE proceedings, which pertain to theoretical analysis of limitations in doppler measurements, sources of oscillator noise, etc., were located as part of the search and provided an important input for the survey on theoretical limitations on range and range rate systems contained in section 3.5.

Due to the lack of data collected in this first search, the NASA project manager requested that a review be made of all the contracts executed by NASA. This search was conducted by making a detailed search of some 15,000 abstracts contained in the Scientific and Technical Aerospace Reports (STAR). This review, as differentiated from the literature search, was to locate any contract which might possibly have some requirement for time or frequency. The previous search was not as general since the search was limited to specific titles such as tracking, doppler, timing, etc. Even with the broad scope of this survey only 24 contracts were found which would justify further investigation. Reports prepared under these contracts were obtained by the NASA project manager. However, after a review of these documents little data of significance to the study was obtained.

3.4 OPERATIONAL EQUIPMENT SURVEY

The Atlantic Missile Range (AMR) was examined in order to determine the types of equipment presently available for use in space missions. It was found that the AMR contains data acquisition, data processing, data reduction, timing, firing, frequency control and analysis, and range safety systems. Of interest to this study were the various types of tracking and timing systems now in use. Of particular interest were CW tracking systems such as Mistram and the Goddard Range and Range-Rate System.

Mistram realizes a 0.4-feet range error, and 0.02 feet/second range-rate error (rms) using smoothing times of 0.5-seconds at a data rate of 20-points/second. The physical layout of the system is an "L" configuration with remote stations located at baselines of 10,000 and 100,000-feet from the central station at the vertix of the "L". Microwave links connect the central station with the extremities of the long baselines. The specification for the basic oscillator in the ground transmitter was determined to be 5 parts in 10^{10} per day with a short term/drift of less than 40-degrees rms phase error in 10-milliseconds at the transmitted carrier frequency of 8.148-GHz. Timing information is provided from Cape Kennedy via the communications link. The theoretical limitations of this system are discussed in Appendix IV.

The Goddard Range and Range-Rate System is designed for worldwide tracking applications. The system measures range on the principle that any wave propagated at a given velocity undergoes a delay that depends upon the distance traversed by the wave. It measures velocity on the Doppler principle.

Figure 1 shows the entire block diagram of the range and the range system. The system operates as follows: The ground station produces a reference carrier plus sideband pairs obtained by frequency modulating the

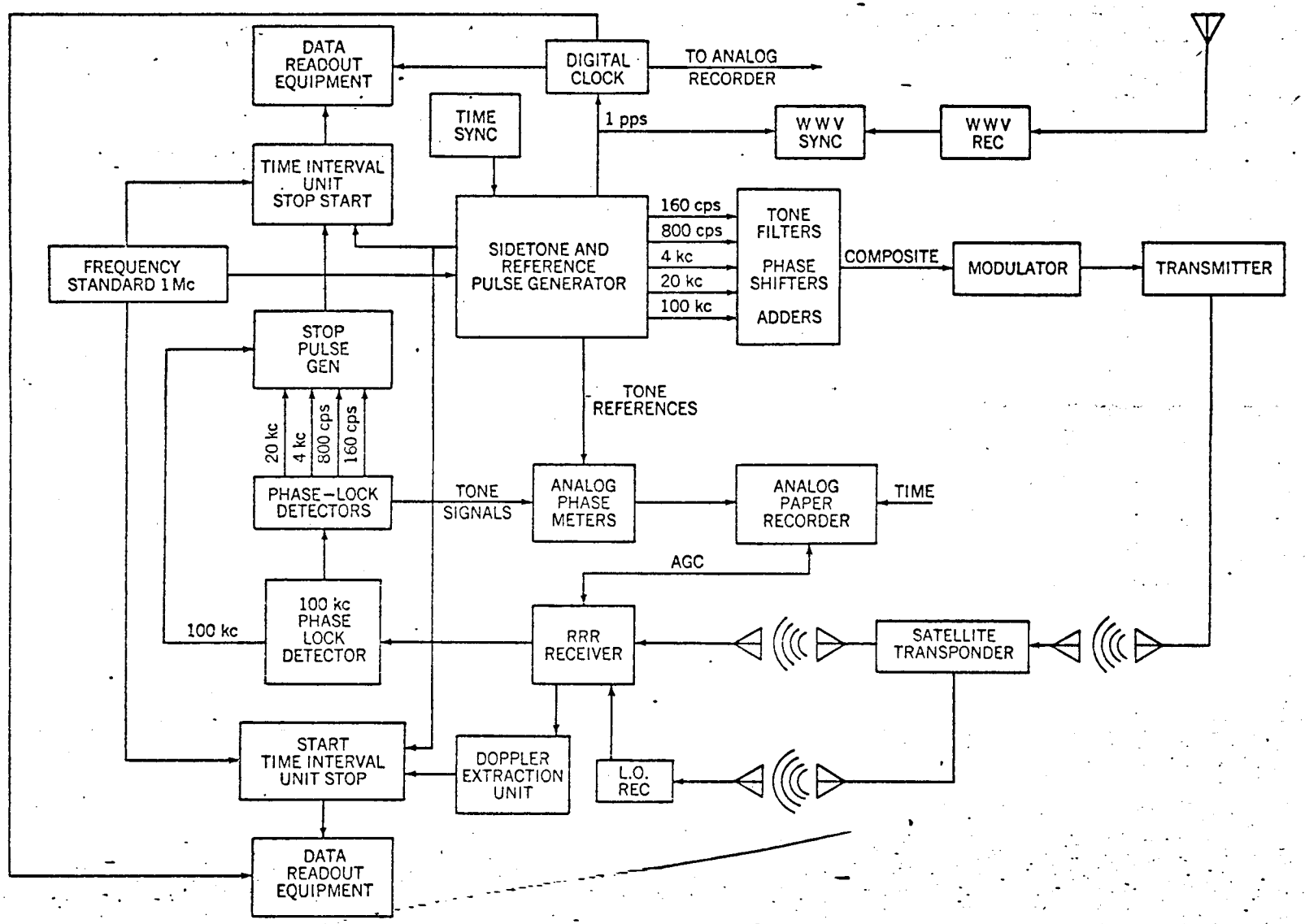

Figure 1—Overall range and range rate system diagram.

carrier with several harmonically related lower frequencies. (The lowest of these latter is further divided down to provide both a range and a Doppler reference signal at one pulse per second, which is synchronized to WWV and initiates counting of 10 MHz by the Time Interval Units.)

Through digital techniques, the phase delay of the highest frequency signal (100 kHz) in going to the satellite and back is measured to an accuracy of 1 percent (15 m) and the remaining lower frequencies (for which one wavelength is greater than the measured range) are used to resolve the ambiguity of how many whole cycle delays have occurred; the combined data constitute the range measurement.

The transmitter carrier is used in performing the range rate measurement; it is derived from the same ultrastable oscillator that provides the sidetone for the range measurement.

The carrier frequency plus sidebands are received in the satellite unit, whose bandwidth can simultaneously handle three ground stations separated approximately by 1 MHz. The transponder unit translates the received signal to a different position in the radio spectrum and acts as a booster amplifier; it has nearly enough total gain to make up for the attenuation of the path from ground to satellite.

On the ground, the translated carrier and sidebands are received in the range and range rate (RRR) receiver. Initial mixing with the ground-transmitted reference carrier and phase locking of the receiver to the latter produces a difference frequency that equals the airborne local oscillator's frequency plus its drift and one-way Doppler shift plus the two-way Doppler shift of the carrier. Simultaneously the airborne local oscillator's frequency plus its drift and one-way Doppler shifts are received in the Frequency Translation (FT) Receiver, where appropriate frequency conversion by means of phase locked oscillators results in an output that is these same frequencies plus a bias frequency. Mixing this

output with that of the RRR Receiver removes all local oscillator effects and produces a detected output that is the bias frequency plus the two-way Doppler shift of the carrier.

This detected output is sent to the Range Extraction Unit, which uses narrow band phase-locked loops to separate the ranging frequencies and improve their signal-to-noise ratios. In addition, the outputs are fed to analog phase meters, whose outputs are recorded by an analog paper recorder as a backup.

The 200-kHz-biased Doppler is fed to the Doppler Extraction Unit which is set to count 10 MHz in a second Time Interval Unit for a period equal to 6400 periods of the 200 kHz $\pm$ Doppler frequency. At 1700 MHz, the maximum Doppler expected is $\pm$120 kHz. Counting 0.1-usec units for 6400 periods of 200 kHz $\pm$ Doppler frequency produces a nonlinear measure of Doppler with an accuracy varying from approximately 0.25 to 1.0 hertz for two-way Doppler, or a nonlinear measure of range rate to an accuracy of approximately 2.2 to 9 cm/sec. The 6400 period counter is gated ON by the 10 pps from the Reference Pulse Generator, thus synchronizing the Doppler Extraction Unit to WWV. The digital outputs from both the Range and the Doppler Time Interval Units are multiplexed with the output from the Digital Clock and punched on two separate teletype punch units, producing data at 10 readings per second in teletype code.

The basic frequency standard used has a long term stability of better than 5 parts in 10^{10} per day, and a short term stability of better than 2 parts in 10^{10} per second. In addition to a 1 MHz output, the standard provides outputs of 100 kHz and 5 MHz to the synthesizer.

However, as shown in Figure 2, separate oscillators are used in the synthesizer to provide the correct carrier frequencies since in doppler measurements the short term stability of the oscillator is a prime requirement. The synthesizer contains the phase modulators where the

ITT Federal LABORATORIES
A DIV. OF INT. TEL. & TEL. CORP.

"EXCEPT AS MAY BE OTHERWISE PROVIDED BY CONTRACT, THESE DRAWINGS AND SPECIFICATIONS ARE THE PROPERTY OF ITT FEDERAL LABORATORIES, ARE ISSUED IN STRICT CONFIDENCE, AND SHALL NOT BE REPRODUCED, OR COPIED, OR USED AS THE BASIS FOR THE MANUFACTURE OR SALE OF APPARATUS WITHOUT PERMISSION."

DRAWING NUMBER

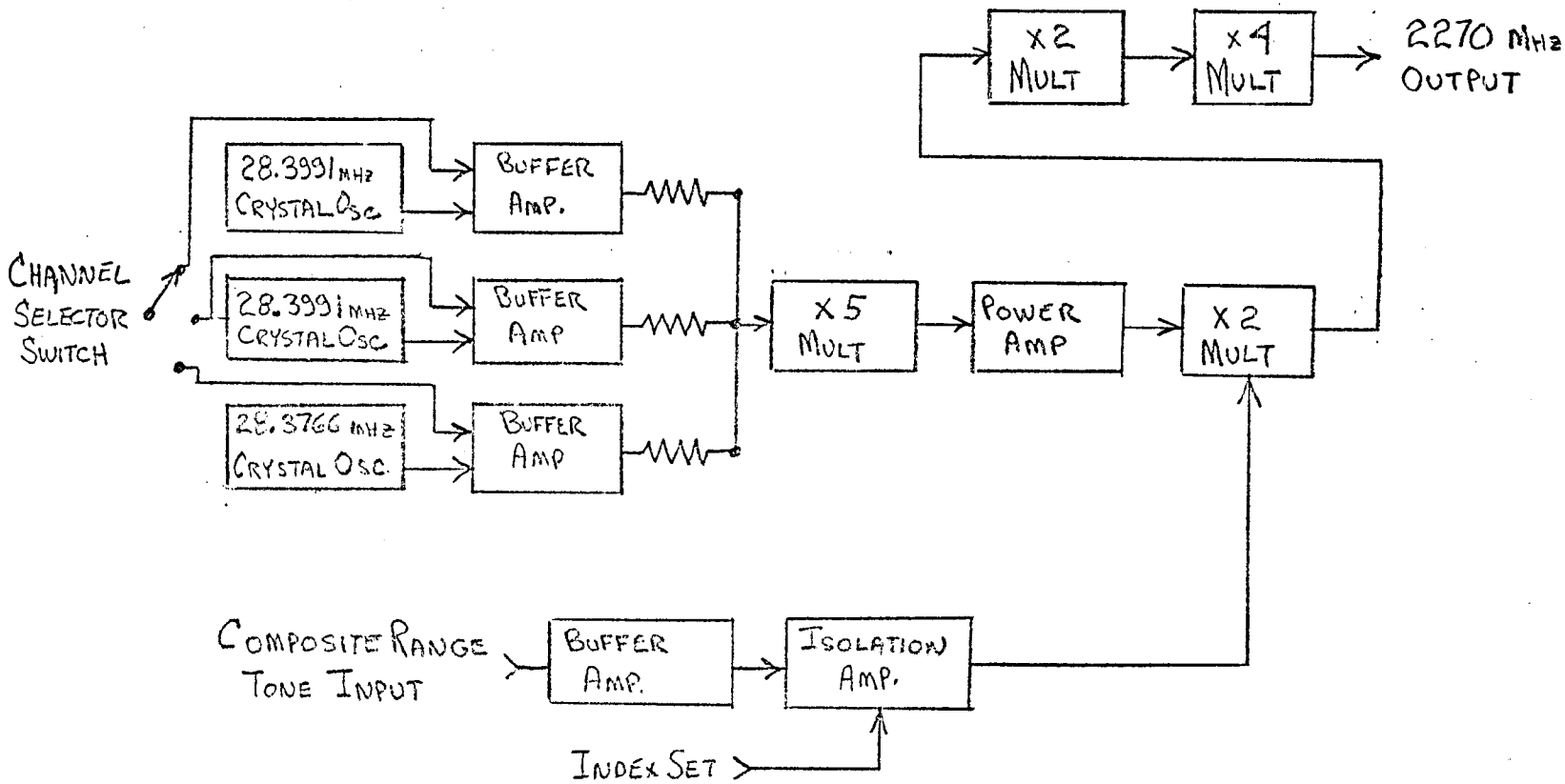

SYNTHESIZER MODULATOR BLOCK DIAGRAM

FIG 2

TOLERANCES UNLESS OTHERWISE SPECIFIED	DIMENSION	UNDER 6	6 TO 24	OVER 24
	2 PLACE DEC.	± .02	± .03	± .06
	3 PLACE DEC.	± .005	± .010	± .015
	FRACTIONS			

FIRST USED ON

PREPARED BY DATE

CHECKED BY DATE

CODE IDENT. NO. 90348

DWG. SIZE A

FIG 2

SHEET 22

OGILVIE PRESS, INC., BROOKLYN 17, N. Y. REPROVEL NO. 440M

composite ranging tones are modulated upon the carrier frequencies. Three 28.---MHz oscillators are used which exhibit good short term stability with a sacrifice in some long term stability. This stability is given as 2.5 parts rms in 10^{11} per second and 1 part rms in 10^{7} per month.

The theoretical limitations of this system is discussed in Appendix IV.

In the AMR there are also two UDOP (Ultra High Frequency Doppler) trajectory measuring systems which use a phase comparison technique. The system precision is approximately one tenth of a doppler cycle. With a carrier frequency of 900 MHz the system precision becomes about 0.1 ft.

The AMR timing system consists of a central timing station at Cape Kennedy, stations at various downrange sites and subcentral timing units for satellite range stations. Cape Kennedy and the downrange stations generate a basic clock frequency with a stability of better than 5 parts in 10^{10} per day, and an accuracy better than 1 part in 10^{9} per day. The basic frequency is then subdivided into slower repetition rates and a 24-hour recycle code is accumulated. The generators used at these stations have clocked outputs so that the leading edges of all code repetition rate pulses are coincident to within 1-microsecond. Grand Bahama Island, San Salvador and Grand Turk are referenced to Cape Kennedy over the submarine cable which transmits a synchronizing signal to keep the leading edges of all pulses generated at these stations coincident to within 40-microseconds of the Cape. Antigua and Ascension Island are synchronized directly to WWV and through long time integration. The leading edges of all pulses generated are kept coincident to within 5-milliseconds of those at Cape Kennedy.

Immediately following are tables listing the accuracies, locations, and uses of various types of CW tracking and pulse radar systems used in the Atlantic Missile Range.

TABLE III(a)

Accuracy of AMR CW Tracking Systems

SYSTEM	PARAMETERS	SYSTEMATIC ACCURACY
AZUSA Mk I	Range	30 ft.
	Direction Cosines	40 ppm
AZUSA Mk II	Range	7.8 ft.
	Direction Cosines	17.4 & 19.7 ppm
GLOTRAC	Position	100 ft.
	Velocity	0.5 fps.
MISTRAM	Range	$\pm$0.4 ft.
	Range Rate	$\pm$0.02 fps
	Range Diff.	0.03 ft. (10,000 ft. baseline)
	Range Rate Diff.	0.001 fps (10,000 ft. baseline)
		0.002 fps (100,000 ft. baseline)
UDOP	System Precision: 0.10 of doppler cycle (or approximately 0.1 ft.)	
GODDARD R & RR	Range	$\pm$15 meters
	Range Rate	$\pm$0.1 meter/sec.
	Angular Data	$\pm$0.1 Degree

TABLE III(b)

LOCATION OF AMR CW TRACKING SYSTEMS

AZUSA Mk I -- Grand Bahama Island

AZUSA Mk II -- Cape Kennedy, Florida

GLOTRAC -- a) Main Station: Cape Kennedy, Fla. (AZUSA Mk II)

b) Transmitter and Range Rate Station: San Salvador

c) Range Rate Station: Cherry Point, N. C.; Antigua, and Grand Turk Island.

d) Range Rate Station with Range Module: Bermuda

MISTRAM -- Valkaria, Florida and Eleuthera Island

UDOP -- Uprange: Cape Kennedy, Merritt Island, Playa Linda Beach, and Cocoa-Titusville Airport

Downrange: Bahamas: Walker Cay, Little Carter Cay, Great Sale Cay, Allans Cay and Bassett Cove (Grand Bahama Is.)

GODDARD R & RR -- Goddard Space Flight Center, Greenbelt, Md.

TABLE III(c)

USES OF AMR CW TRACKING SYSTEMS

AZUSA Mk I & II -- Determine successive trajectory positions of a missile-borne transponder by continuous comparison of phase differences between microwave signals transmitted to and received from the transponder.

GLOTRAC -- Makes high-accuracy measurements of target velocity and position by using data from existing CW (AZUSA Mk II) and pulse radar systems as well as newly developed range and range-rate equipment.

MISTRAM -- Determines a vehicle's position and velocity in space and provides real-time readout of this information.

UDOP -- Ultra-High Frequency Doppler developed for the Atlantic Missile Range and used to make space vehicle trajectory measurements by means of phase comparison techniques.

GODDARD R & RR -- Used to determine orbital parameters of space vehicles including those in highly elliptical orbits.

TABLE IV(a)

ACCURACY OF AMR PULSE RADAR SYSTEMS

SYSTEM	PARAMETER	SYSTEMATIC ACCURACY
AN/FPS-8	Not Determined	Not Determined
AN/FPS-16	Range	20 ft.
	Azimuth	0.20 mils
	Elevation	0.20 mils
AN/FPQ-6	Range	±3.0 yards (rms)
AN/TPQ-18	Azimuth	±0.05 mils (rms)
	Elevation	±0.05 mils (rms)
MOD II RADAR	Range	100 ft.
	Azimuth	1 mil (rms)
	Elevation	1 mil (rms)
MOD IV RADAR	Slant Range	30 ft.
	Slant Azimuth	0.2 mil
	Slant Elevation	0.2 mil
AN/MPS-25	None given	None given
TRINIDAD RADAR	Range	1 nm
	Azimuth	0.25 deg
	Elevation	0.25 deg
	Resolution between targets	230 ft.
	Range Rate	12 fps

TABLE IV(b)

LOCATION OF AMR PULSE RADAR SYSTEMS

AN/FPS-8 -- Cape Kennedy, Florida

AN/FPS-16 -- Cape Kennedy, Patrick AFB, Grand Bahama Island, San Salvador, Ascension Island, Twin Falls Victory, and East Island (Bahamas).

AN/FPQ-6 -- Antigua and Patrick AFB.

AV/TPQ-18 -- Cape Kennedy, Grand Bahama Island, Grand Turk Island, Ascension Island, and Pretoria (Africa).

MOD II RADAR -- Cape Kennedy, Grand Bahama Island, San Salvador, Grand Turk Island, Ascension Island, and Patrick AFB.

MOD IV RADAR -- Cape Kennedy, Florida

AN/MPS-25 -- Little Carter Cay (Bahamas).

TRINIDAD RADAR -- Trinidad Island.

TABLE IV(c)

USES OF AMR PULSE RADAR SYSTEMS

AN/FPS-8 -- Used as a range safety device to ensure range clearance, and to provide target acquisition data.

AN/FPS-16 -- High-precision, C-band, monopulse tracking radar designed specifically for missile instrumentation.

AN/FPQ-6 -- High-precision, C-band, monopulse tracking radar including the latest advances in radar development.

AN/TPQ-18 -- Transportable version of AN/FPQ-6.

MOD II RADAR -- Automatic angle and range tracking radar designed to provide (1) azimuth and elevation angle and range selsyn data, (2) slant range, altitude, ground range, and X-Y ground position potentiometer data, and (3) boresight camera photographs and digital encoder data. This radar is used chiefly to provide a network system to give tracking information for range safety.

MOD IV RADAR -- X-band, monopulse target tracking radar with infrared and TV/joystick angle tracking aids. The infrared provides reliable track from liftoff. It is used to provide real-time missile position display for range safety from engine ignition to about 40,000-yards on all missile launches, and to provide target acquisition data to other tracking devices.

AN/MPS-25 -- Trailer-mounted version of the AN/FPS-16.

TRINIDAD RADAR-- Tracking radar composed of an experimental L-band Millstone Hill tracker (AN/FPS-43, XW-1) and a scanner (AN/FPS-44, XW-1) is used for missile tracking in the range: 300-2700 nautical miles.

3.5 SURVEY OF THEORETICAL LIMITATIONS ON RANGE AND RANGE-RATE SYSTEMS

Space vehicle tracking systems make use of CW radar and/or sidetone ranging techniques in order to determine the distance (range) of a space vehicle from the tracking station. Doppler frequency shift measurements are made using coherent phase-locked loops in order to determine the vehicle's radial velocity (range-rate) with respect to the tracking section. These measurements together with angular data, when made by several accurately positioned ground stations simultaneously, are used to determine the orbital parameters of a space vehicle. Certainly the degree of precision to which these measurements can be made will affect the precision to which orbital parameters can be determined. Since these measurements are basically measurements of time intervals and frequencies, it is right and proper to consider theoretical limitations on range and range-rate systems as part of this study.

3.5.1 ACCURACY REQUIREMENTS

Determination of NASA requirements for precise time and frequency sources and time synchronization techniques is based on the accuracy requirements of the NASA space tracking facilities. The accuracy requirements of space tracking facilities are in turn dependent upon specific mission profiles. Mission profiles can differ one from another considerably. For example, a space probe in the vicinity of Mars allows the possibility of many transfer orbits. The one which is finally decided upon leaves room for error depending upon facilities provided in the space vehicle to effect mid-course guidance and corrections to the planned orbit. Hence, it is difficult, if not impossible, to determine in an absolute sense the accuracy requirements of space tracking facilities. But, it is safe to say that as the distances travelled by space probes increases, the requirements imposed on the accuracy of range and range-rate type data become more and more stringent. Furthermore, if the precision in long-term tracking of a space

probe can be increased, one result may be to eliminate the need for a separate mid-course navigation system on board a planetary probe and thus allow room for an increase in the vehicle's instrumented payload. In addition to this, there is a need for precise time and frequency measurements in order to measure relativistic effects. Therefore, it is proper, if not mandatory, to critically examine the errors in range and range-rate tracking systems; and, more specifically to examine that part of the errors attributable to oscillator instabilities of various types.

On the other hand, Smith and Harper (1) made a comparison between a mid-course guidance system using ground tracking measurements for navigation and a system using both ground tracking and on-board optical data. The results indicate that in both systems, the trajectory uncertainties are reduced to levels which are insignificant compared to the errors in mechanizing velocity corrections. This point further indicates that it may well be fruitless and uneconomical to develop range and range-rate systems with accuracies significantly better than presently available unless a major breakthrough in the mechanization of velocity correction is achieved. However, for the sake of completeness, the examination of range and range-rate errors in a tracking system follows.

3.5.2 RANGE ERRORS

A detailed analysis of the Goddard Range and Range-Rate System was performed under contract number NAS 5-1926 and is available in report number W2719-2-1, Revision 1, 23 November 1962, Section V.

In this analysis, range errors are grouped into two major categories, namely: 1) noise errors and 2) dynamic errors. The dynamic errors are due to Doppler and Doppler rate on a signal being tracked and contribute a bias type error to the range data. These errors are independent of oscillator instabilities and as such need not be considered in the determination of a suitable frequency source for a tracking system.

The noise errors are considered to be of two types: 1) receiver noise which consists of the receiver excess noise, the antenna and galactic noise, and any noise received and retransmitted by the spacecraft, and 2) oscillator noise associated with all oscillators involved, including those generating the input signal. The equations used to determine these errors are as follows:

1. <u>Receiver Noise</u>

$$\sigma_n = 57.3 \tan^{-1}\sqrt{\frac{N}{2S}} \approx \frac{40.5}{\sqrt{\frac{N}{S}}} \text{ for } \frac{S}{N} \text{ LARGE}$$

where:

σ_N = rms phase error, degrees

S/N = signal to noise power ratio in the two-sided noise bandwidth.

2. <u>Oscillator Noise</u>

$$\sigma_c^2 = \frac{1 + \left(\frac{\omega_N}{K}\right)^2}{4\zeta\omega_N T_{CE}}$$

where:

σ_N^2 = mean square error in radians^2

K = loop gain

ζ = damping factor

ω_N = undamped second order phase-lock loop natural frequency in radians per second

T_{CE} = equivalent coherent time representing the combined effect of all oscillators affecting loop operation

for $K \gg \omega_N$

$$\sigma_N^2 = \frac{1}{4\zeta(2B_L T_{CE})}$$

where: $2B_L$ = loop noise bandwidth

The receiver noise is a function of the signal-to-noise power ratio in the two-sided noise bandwidth only and thus contributes nothing in the way of demands for oscillator stability. However, the oscillator noise is related to the coherence time of all oscillators affecting loop operation. The coherence time is the time (usually in seconds) it takes the phase of a subject oscillator, when compared to a perfect oscillator, to drift one radian rms. This definition is attributable to Edson (2), but analysis of oscillator noise affecting phase-locked loops was performed by Develet (3).

In the Goddard Range and Range-Rate System, the error due to oscillator noise on the range tones was found to be negligible when compared to the other types of errors. The error due to receiver noise alone is more than 350 times that due to oscillator noise. Therefore, the range measurement of the system is basically limited by signal-to-noise considerations and imposes no severe requirements on oscillator stability.

3.5.3 RANGE-RATE ERRORS

Range-rate errors are classed as follows: 1) cycle counting quantization noise, 2) coherent oscillator instability, and 3) thermal and noncoherent oscillator noise. Of these, the first is independent of oscillator instability, being rather inversely related to the product of the transmitter and reference frequencies and the maximum allowable cycle counting time as follows:

$$\dot{r}_{cm} = \frac{c\,(f_t + f_{dm})^2}{2\,t_m\,(f_t - f_{dm})\,f_r\,f_t}$$

where:

$\dot{r}_{cm}$ = maximum quantization error (rms) met/sec.

c = speed of light, 3×10^8 met/sec.

f_t = Doppler bias frequency, hertz

f_{dm} = maximum 2-way doppler frequency, hertz

t_m = maximum allowable counting time, sec.

f_r = reference frequency, hertz

f_t = transmitted frequency, hertz

Even through the maximum allowable cycle counting time may be required small, the product of the transmitter and reference frequencies can be made quite large reducing the cycle counting quantization noise to almost any amount desired. Thus, this type of noise does not really enter into the stability specification of a system's oscillator.

The coherent oscillator instability and the thermal and non-coherent oscillator noise are subjects of another paper by Develet (4). In this paper, the thermal and noncoherent oscillator noise is referred to as additive white Gaussian receiver noise. This type of noise is indirectly a function of oscillator coherence time since it is related to the signal-to-noise power ratio in the phase-lock loop two-sided noise bandwidth which is in turn a function of the equivalent coherence time of all oscillators affecting loop operation. Both the carrier and sub-carrier loops must be considered. The rms range-rate error for a two-way coherent measurement due to thermal and noncoherent oscillator noise may be found from:

$$\beta = \left(\frac{\overset{\circ}{\rho}_{E_{rms}} \, \omega_c}{c \, \omega_n} \right) \left[2 \left(\frac{S}{N} \right)_2 \right]^{\frac{1}{2}}$$

where:

β = normalized range-rate error

$\overset{\circ}{\rho}_{E_{rms}}$ = rms range-rate error

ω_c = transmitted radiated frequency radians/sec.

ω_n = undamped second order phase-lock loop natural frequency, rad/sec.

c = speed of light, 3×10^8 met/sec.

$\left(\frac{S}{N} \right)_2$ = signal-to-noise power ratio in the phase-lock loop two-sided noise bandwidth

The rms value of the range-rate error due to coherent oscillator instability is shown by Develet to be related to the transmitter radiated frequency coherence time as follows:

$$\dot{\rho}_{e_{rms}} = \left(\frac{c}{\sqrt{2}\,\omega_c T}\right)\left(\frac{\tau}{T_c}\right)^{\frac{1}{2}} \qquad 0 \leq \tau \leq T,$$

$$\dot{\rho}_{e_{rms}} = \left(\frac{c}{\sqrt{2}\,\omega_c T}\right)\left(\frac{T}{T_c}\right)^{\frac{1}{2}} \qquad T \leq \tau \leq \infty$$

where:

$\dot{\rho}_{e_{rms}}$ = rms range-rate error for a two-way coherent measurement, met/sec.

c = speed of light, 3×10^8 met/sec.

ω_c = transmitter radiated frequency, radians/sec.

T = cycle-counting interval (smoothing time), seconds

τ = round trip transit time, seconds

T_c = coherence time of the transmitter radiated frequency, seconds

Thus, the range-rate error budget assigned to thermal and noncoherent oscillator noise and coherent instability can be reduced substantially by increasing the oscillator coherence time (all other factors being equal). Included in Appendix III are all the equations pertaining to this discussion.

Appendix IV contains the application of the theoretical analysis for the limitations on range and range-rate systems previously described. It includes graphs which relate the rms value of the range-rate error due to coherent oscillator instability to various system parameters and use of the data presented.

4. CONCLUSIONS AND RECOMMENDATIONS

4.1 CONCLUSIONS

The results obtained from the interviews and questionnaires indicated that in general the present state of the art capabilities for precise time and frequency are sufficient to meet NASA requirements. However, this conclusion is based on a small sampling of NASA engineers, and primarily those that are in the field responsible for current operations. The engineers at these sites can meet these local time and frequency requirements with present and/or planned implementations and, unless directed to prepare for time and frequency capability substantially in excess of these requirements they consider their present facilities as being adequate. Therefore, due to the limited number of questionnaires returned and interviews completed, the conclusion that current capabilities are sufficient must be considered as inconclusive for future planning.

To obtain the narrow bandwidths required for deep space communications and to detect Doppler frequencies used in determining range rates for tracking, phase lock loop receivers are used. These techniques require oscillators with good short term stability to minimize the error budget due to oscillator perturbations. A stringent requirement imposed in one system requirement is to resolve range rate to 0.01 meters/sec. In this case the allowable error budget due to phase noise of the VCO was calculated to be 0.0094 meters/sec. Application of the graphs plotted in Appendix D (based on the theoretical analysis) provides coherence time as a function of transit and smoothing times. As an example, for transit time of 100 sec (Venus) and smoothing time of 5 sec, the coherence time requirement is 5×10^2 seconds for the master oscillator.

The above is indicative of the increasing requirement for frequency stability. However, even though current NASA implementation may not be adequate to support some of the advanced programs, there is always the possibility that not all of these programs will become operational. Hence, as new programs are described with an impact on time and frequency care must be taken to first determine the probability that the experiment will become a reality.

The centralized time and frequency control system with distribution to users currently being implemented at Cape Kennedy, should prove economically advantageous to NASA instead of the current method of precision oscillators and comparison equipment at each using site (within one complex). This centralized technique assures each user of increased capability as the central facility is updated rather than a continuing replacement of equipment by each user. Both personnel and equipment economies can be achieved with this centralized approach and the requirements for continuous or periodic comparison and calibration by the user may be deleted. Synchronization of remote complexes is also simplified with only one time and frequency complex within a NASA facility.

It is therefore concluded that present NASA implementation of time and frequency equipment is adequate to meet identified requirements, but that further study and definition of future space research is required. These include the impact of time-frequency sources on laser system, refinements of deep space tracking and communication system, re-entry guidance system, etc. In future planning, the economic considerations and extension of requirements merit consideration of the general use of central time and frequency control within each NASA complex.

4.2 RECOMMENDATIONS

In the performance of the study several problem areas were uncovered which require consideration by personnel at GSFC. Recommendations for clarifying these areas follow:

1. In the discussions with scientists and engineers concerning their problems and/or requirements a certain amount of confusion existed in terminology and in conveying requirements and achievements between the interviewed and the interviewer. In particular the needs which engineers have are not always expressed in a language common to all. This subject was discussed with Dr. Elie Bagdadhy (see para. 3.2.3) who suggested three factors

to define a requirement for frequency. However, it appears that from the interest shown by the majority of those interviewed on the current and anticipated characteristics of time and frequency, it would be advantageous for GSFC to issue a technical note, or equivalent, on this subject. Such a report should contain definitions and explanations of terminology for frequency stability, descriptions of frequency standards, methods for time synchronization, etc. With this background NASA scientists would be encouraged to plan experiments and programs which take full advantage of the present and predicted precision time and frequency capabilities.

2. When data is collected at the various tracking sites, it is transmitted to SPACON at Goddard where it is fed into computers for determining the orbit parameter and for the processing of telemetry data. Problem areas in the reduction of this data appears to be in the responsibility for making the correct compensation for propagation delay and the techniques employed for recording time on the tapes. As the latter problem area in particular minimizes the effectiveness of providing accurate time, it is recommended that GSFC participate in further liaison with the cognizant personnel and correct these deficiencies.

3. At the Kennedy Space Flight Center it was learned that although a time synchronization technique is currently being implemented that will surpass their needs, the distribution of timed events throughout the AMR system is in need of improvement. A timed event would include an event such as liftoff. The difficulty appears to be primarily in determining the actual occurance of such an event, and its subsequent distribution to the many users. Additional investigation by FSFC is recommended to insure accurate distribution of the required time signals.

4. A method for acquiring additional information might be found in the distribution of a new questionnaire containing questions concerned with system requirements rather than time and frequency needs. This type

of questionnaire would be difficult to prepare since it must cover a variety of systems each with their unique parameters. The intent of the ITTFL interviews was to obtain such data since the interviewer had the flexibility of framing his questions to make them pertinent to the subject of the interview. The success of such a questionnaire is difficult to predict, but should be given further consideration in an attempt to collect as much data as possible from which decisions can be based.

5. During the latter months of the study a survey was made of the theoretical limitations on the Goddard Range and Range-Rate tracking system. This work defined the major contributors to errors and related the allowable errors to system parameters. This analysis showed that the major contributor to error was the phase noise of the oscillator. Therefore, in order to improve the accuracy of the system the oscillator characteristics must be improved. As a tool for specifying the required parameters, Section 3 contains graphs that relate oscillator stability with range-rate errors as a function of smoothing time and transit time. With these graphs, GSFC can establish certain criteria pertinent to the success of a program, and determine the parameters of the oscillator required.

However, two additional factors must be considered when considering the problem. These are: (1) a definition of short term stability must be established which is meaningful to both the user and the manufacturer, and (2) further improvements in oscillator stability must be matched by an improvement in the mechanization of velocity corrections on the spacecraft.

Since there are a number of other systems in use by the NASA, it is also recommended that similar types of analysis be performed on these so that theoretical limitations can be established, and the affects of improving time and frequency parameters determined.

6. A recent input from JPL indicated a requirement for relative timing of 5 to 30 usec between the stations of the network, and a relative time of less than 5 usec within a station. As time did not permit a full investigation of this requirement, it is recommended that GSFC explore it further to justify the need and determine equipment requirements for implementation.

7. Additional study is warranted in the application of lasers for communications due to their basic advantage of coherence. However, a method of phase locking two lasers must be perfected in order to use a coherent receiver. If the application of lasers falls within the scope of this study, further investigation is recommended, particularly since it has been shown that lasers will become of increasing importance to space research in future years.

5. BIBLIOGRAPHY

A. References in Section 3.5

1. Smith, G. L. and Harper, E. V., "Midcourse Guidance Using Radar Tracking and Onboard Observation Data", NASA Ames Research Center, NASA TN D-2238, April 1964.
2. Edson, W. A., "Noise in Oscillator", Proceedings of the I.R.E., August, 1960 pp 1454-1466.
3. Develet, J. A., "Fundamental Sensitivity Limitations for Second Order Phase-Lock Loops", Space Technology Laboratories, Inc., Publication No. 8616-0002-NU-000, 1 June 1961.
4. Develet, J. A., "Fundamental Accuracy Limitations in a Two-Way Coherent Doppler Measurement System", I.R.E. Transactions on Space Electronics and Telemetry, September 1961, pp 80-85.

B. General References

1. Dommerle, A., "Time Decoding for Satellite Tracking Systems", Electronic Industries, Oct. 1963
2. Seddar, J. Carl, "Preliminary Report on the Single Station Doppler-Interferometer Rocket Tracking Technique", NASA Technical Note D-1344, Jan. 1963
3. "Timing and Space Navigation with an Existing Ground Based System", NBS Report 6721, October 1960
4. "Precision Tracking of Space Vehicles", Guidance and Control, Academic Press, N. Y., 1962
5. "Guidance and Control", Astronautics and Aerospace Engineering, Nov. 1963
6. "Communications", Space-Aeronautics Research and Development Technical Handbook, 1964-1965

7. "Lasers", Space-Aeronautics Research and Development Technical Handbook, 1964-1965

8. "Deep Space Communications", Space-Aeronautics, July 1964

9. "VLF Utilization at NASA Satellite Tracking Stations", Radio Science, Vol. 68D, No. 1, Jan. 1964

10. "A VLF Timing Experiment", Radio Science, Vol. 68D, No. 11, Nov. 1964

11. "A Timing and Synchronizing System for Optical Tracking", Automatic Control, May 1963

12. Habib, E. J., Kronmiller, G. C., Engels, P. D., Franks, J. J. "Development of a Range and Range Rate Spacecraft Tracking System", NASA Technical Note TN D-2093, June 1964

13. "Satellite Tracking", John R. Rider, N. Y. 1962

14. "Real Time Optical Tracker for Satellites and Stars", Electronic News, Dec. 14, 1964

15. "Satellite Tracking and Orbit Prediction", Bell Labs Record, March 1964

16. "On the Accuracy of Satellite Position Determination", Planetary and Space Science, Jan. 1964

17. "A Navigational System Using Range Measurements from Satellites with Cooperating Ground Stations", Navigation, Autumn 1964, Vol. 11, No. 3

18. Balakrishman, A. V., "Phase Stable Oscillator for Deep Space Communications", Space Communications, McGraw-Hill, 1963

19. "On the Use of Precision Frequency Signals in Space", XIth. International Astronomical Congress, Stolkholm, Vol. 1, 1960

20. McKune, William J., "AMR Instrument Handbook, Vol. 1", Technical Documentary Report No. MTC-TDR-63-1, Feb. 1963

21. "Goddard Range and Range Rate System Design Evaluation Report", Report No. W2719-2-1, 23 Nov. 1962 (Contract No. NAS-5-1926)

22. "Specification for Apollo Timing System", Specification GSFC-TDS-TTD-1, Goddard Space Flight Center.

23. Gould, Richard G., "A Study of the Influence of Commercial Communication Requirements on the Design of Communication Satellites", Contract NAS-6-686 Final Report, SRI, California, Jan. 1962

24. Barrington, R. E. and Belrose, J. S., "Preliminary Results from the VLF Receiver Aboard Canada's Alonette Satellite", GSFC, 1962

25. Wallace, Aaron, "Study of Laser Pointing Problems" Bi-Monthly Report, Contract NASW-929, Aug-Sept 1964

26. Schwaniger, Arthur J., "Earth-Moon Transit Study Based on Ephemeris Data", Lunar Flight Study Seriew, Vol 2, George C. Marshall, Space Flight Center, Nov. 1962

27. Rechten, Eberhardt, "Lunar Communications", Technical Memorandum No. 33-133, JPL, June 1963

28. Mueller, George E., "Practical Aspects of Data Processing and Encoding for Space Communications" STL, 1963

29. Peiletier, A. R., "Vibration Testing", Section 3, RCA.

30. Stewart, J. L., "Frequency Modulation Noise in Oscillators", Proceeding of the IRE, March 1956

31. Grivet, P. and Bloquiere, A., "Nonlinear Effects of Noise in Electronic Clocks", Proceedings of the IRE, Nov. 1963

32. Durbin, Edward, "Locating and Synchronizing Flight Research Tracking Stations", Report 407, NATO, July 1962

33. Shaffer, H. W., Kohn, W. D., Boden, W. J., Kronmiller, G. C., Engels, P. D., and Habib, E. J., "The Range and Range Rate System and Data Analysis for Syncom I", NASA Technical Note TN-D-2139, June 1964

34. Hodge, W. F., Blockshear, W. T., "An Analytical Study of the Magnetic Field Encountered by Artificial Earth Satellites in Circular Orbits", NASA Technical Note TN D-2041, Feb. 1964

35. Citron, Robert and Slomon, L. H., "Baker-Nunn Photography of the Syncom II", SAO Special Report No. 156, Smithsonial Institution Astrophysical Observatory.

36. "Radio Frequency Parameters and Criteria for Instrument Timing", IRIG Document 105-63, June 1964

37. "Handbook of Timing Techniques", TCWG Document 103-63, Inter-Range Instrumentation Group, July 1964

38. Ehricke, K. A., "Methodology of Mission and Systems Synthesis of Manned Planetary Flights", Contract NAS8-5026, MSFC, July 1963

39. "Study on Optical Communications from Deep Space", Interim Progress Report, Contract NAS 9-879, Feb. 1963

40. "Analytical Solution for the Lunar Mission", Compilation Report, Contract NAS 8-11205, MSFC, July 1964

41. "Investigation of the Orbital Tracking of a Geostationary Satellite", Final Report, Contract NAS 8-1639, MSFC, Feb. 1962

42. "The Deep Space Network", Space Programs Summary No. 37-30, Vol. II, Contract NAS 7-100, JPL, Nov. 1964

43. "The Deep Space Instrumentation Facility", Space Programs Summary No. 37-23, Vol. II, Contract NAS 7-100, JPL, Sept. 1963

44. "The Deep Space Instrumentation Facility", Space Programs Summary No. 37-26, Vol. III, Contract NAS 7-100, JPL, March 1964

45. Coin, D. L., Hamilton, T. W., "Determination of Tracking Stations Locations by Doppler and Range Measurements to an Earth Satellite", Technical Report No. 32-534, JPL, Feb. 1964

46. Pines, S., and Wolf, H., "Goddard Minimum Variance Orbit Determination Program, X-640-62-191, GSFC, Oct. 1962

47. "Minimum Variance Orbit Determination Program", First Quarterly Status Report, No. 1210-0018, Contract NAS 5-3509, Sperry Rand Systems Group, Nov. 1963

48. Diede, A.H., "An Improved System for Recording the Phase and Amplitude of VLF and LF Standard Frequency Transmissions", NBS Report 8215, Jan. 1964

49. Phillips, Harry J., "World Wide Tracking and Telemetry Facilities", TPL 2461, April 1961

50. Pollack, L., Glomb, W., Gray, L., "Medium-Capacity Space Communication Terminal", Electrical Communication, Vol. 39, No. 1, 1964

51. Murray, J.A., "Frequency and Time Standard AN/URQ-13 (XN-1)", NRL Test and Evaluation Report No. 39, 12 August 1964

52. Morgan, Alvin H., "Precise Time Synchronization of Widely Separated Clocks" Technical Note No. 22, NBS= July 1959

53. Watkins, H.D., "Loran Orbiter Nears Final Configuration", Aviation Week and Space Technology, Feb. 1, 1965

54. Hibben, R.D., "NASA Studies Advanced Version of Pioneer Solar Probe" Aviation Week and Space Technology, Jan. 4, 1965

55. "NASA Seeks to Cut Flood of Space Data", Electronic Design, June 7, 1965

56. Stockwell, E. J., "Spacecraft Tracking and Data Acquisition", American Geophysical Union, Vol. 44, June 1963

57. Ward, R., "Laser Trackers for Missiles", Electronic-News, Dec. 1964

58. Tolopko, L. N., "3D Optical Track System", Electronic News, May 31, 1965

59. Miller, Barry, "Apollo Data Link May Use Microcircuits", Aviation Week and Space Technology, May 10, 1965

60. Develet, J.A., "Fundamental Accuracy Limitations in Atwo-Way Coherent Doppler Measurement System", IRE Transactions on Space Electronics and Telemetry, Sept. 1961

61. Seifert, Howard, "Solar System Survey and Fundamental Constants", Interplanetary Operations, STL, Van Nostrand Publishing Co.

62. Mullen, J.A., "Background Noise in Nonlinear Oscillators", Proc. of IRE, August 1960

63. Develet, J.A., "A Threshold Criterion for Phase-Lock Demodulation, Proc. of IEEE, February 1963.

64. Newton, R.F., "Applications of Doppler Measurements to Problems in Relativity, Space Probe, Tracking and Geodesy", Proc. of IRE, Vol. 48, April 1960.

65. Heppner, J.P., "The World Magnetic Survey", NASA Technical Note TND-2109, Jan. 1964.

66. Démmurle, A., "Error Handling in Time Decoding for Satellite Tracking Systems", Electronic Industries, Oct. 1963

67. "Interim-Proceedings of the Symposium on the Definition and Measurement of Short-Term Frequency Stability", Co-sponsored by NASA/GSFC and IEEE Technical Committee-Standards 14, Nov. 1964

68. "Proceedings of the 19th Annual Symposium on Frequency Control", U.S. Army Electronics Laboratories, Fort Monmouth, April 1965

APPENDIX INDEX

Appendix I -- Sample Questionnaire (NASA Time and Frequency Requirements)

Appendix II -- Literature Search - Indexes Reviewed

Appendix III -- Summary of Equations Used in the Survey of Theoretical Limitations

Appendix IV -- Application of Theoretical Limitations on Range and Range-Rate Systems

APPENDIX I

NASA TIME AND FREQUENCY REQUIREMENTS

To insure that the analysis of the questionnaires will not be influenced by the sources of the replies, the cover sheet of the questionnaire will not be forwarded to ITT, but will remain with the technical staff of the GSFC.

To insure uniformity of the replies, we are using the following accepted definitions:

Precision represents the average reproducibility of a frequency by individual alignment and is limited primarily by the provision of the adjustment control. Lack of precision is defined by the fractional standard deviation of frequency (time) comparisons with respect to a primary reference standard.

Accuracy is limited by errors which are inherent in the equipment and cannot be eliminated. Inaccuracy is defined as the average fractional deviation from a primary reference standard.

Stability is the freedom from change due to any cause within a given time period. Stability is expressed in parts per 10^{10} for the period of measurement. Short-term stability may be expressed in parts per 10^{10} for a millisecond, 10 milliseconds, 100 milliseconds, 1 second, or 10 seconds. Long-term stability may be expressed in parts per 10^{10} for hour(s), day(s), or month(s).

Resolution defines the acceptable tolerance with which two signals can be distinguished when one is established as the primary reference.

In the space provided for comments suggested topics may include: System, redundancy; failure rate of the system; standby equipment; method of frequency/time comparison; method used to synchronize (manual or automatic); suggested ways to improve present system; requirements foreseen; and experiments, current and planned.

If you should be willing to discuss your requirements with members of the technical staff from the GSFC or ITT please indicate:

Yes _____ Suggested date _____

No _____

Please give your:

Name: _____

Title: _____

Address: _____

Telephone: _____

Please return to: Mr. S. C. Wardrip, Code 521
Goddard Space Flight Center
Greenbelt, Maryland

I. IMMEDIATE REQUIREMENTS - FREQUENCY

Brief statement of frequency requirements imposed by present system. Additional space may be used under comments:

A. Frequency(ies) used in present system(s): (note: do not include output of freq. stds.)

(a)_____ (b)_____ (c)_____

B. Precision required:

for (a)_____ for (b)_____ for (c)_____

C. Resolution required:

for (a)_____ for (b)_____ for (c)_____

D. Accuracy required:

for (a)_____ for (b)_____ for (c)_____

E. Short-term stability required:

for (a)_____ for (b)_____ for (c)_____

F. Long-term stability required:

for (a)_____ for (b)_____ for (c)_____

G. Please specify reference standard(s) used - make and model:

1. Atomic controlled: gas cell_____
   beam tube_____
   maser_____

2. Crystal controlled: 5.0 mc/s_____
   2.5 mc/s_____
   other_____

H. Output frequency of standards used:
5.0 mc/s_____2.5 mc/s_____1.0 mc/s_____100ks/s_____ other_____.

I. Comment on the reliability of standard(s) presently used:

J. Comments:

II. IMMEDIATE REQUIREMENTS (CONT.) - TIME

Brief statement of time requirements imposed by present system:

A. Time code(s) now used such as any of the NASA or IRIG codes:

(a)_____ (b)_____ (c)_____

B. Timing pulse repetition rates required:

(d)_____ (e)_____ (f)_____ (g)_____

C. Resolution of B - i.e., detection of start of pulse:

for (d)_____ for (e)_____ for (f)_____ for (g)_____

D. Allowable jitter of B:

for (d)_____ for (e)_____ for (f)_____ for (g)_____

E. Timing pulses now derived from:

time code _____ digital clock _____ other (specify)_____

F. Smallest required epoch: _____

G. Type of redundancy used for fail safe operations: _____

_____

H. Applications (unclassified only):

I. Comments:

III. IMMEDIATE REQUIREMENTS (CONT.) - STATION TIME SYNCRHONIZATION

Brief statement of time synchronization requirements imposed by present system:

A. Accuracy achieved with respect to:

UT 2 _____ AT_____ Sidereal_____ other_____

B. Resolution required: _____

C. Relative accuracy achieved between:

station networks_____ (or) intra range_____

D. Resolution required for (C): _____

E. External synchronization reference used such as WWV, VLF, portable clock, etc.:

_____

F. Techniques used for local synchronization:

G. Frequency of corrections needed to maintain synchronization:

H. Comments:

IV. REQUIREMENTS FOR NEXT TEN YEARS - FREQUENCY

Brief statements of future requirements:

A. Frequency(ies) required: (note: do not include outputs of frequency standards)

(a)_____ (b)_____ (c)_____ (d)_____

B. Precision required:

for (a)_____ for (b)_____ for (c)_____ for (d)_____

C. Resolution required:

for (a)_____ for (b)_____ for (c)_____ for (d)_____

D. Accuracy required:

for (a)_____ for (b)_____ for (c)_____ for (d)_____

E. Short-term stability required:

for (a)_____ for (b)_____ for (c)_____ for (d)_____

F. Long-term stability required:

for (a)_____ for (b)_____ for (c)_____ for (d)_____

G. Please specify reference standards recommended:

1. Atomic controlled: gas cell_____ beam tube_____ maser_____
2. Crystal controlled: 5.0mc/s_____ 2.5 mc/s_____ other_____
   AT cut, 5th overtone

H. Output frequency of standards required:

5.0 mc/s_____ 2.5 mc/s_____ 1.0 mc/s_____ 100 ks/s_____ other _____

I. Comments:

V. REQUIREMENTS FOR NEXT TEN YEARS (CONT.) - TIME

Brief statement of future time requirements:

A. Time code(s) recommended (use additional sheet if necessary):

B. Timing pulse repetition rates required:

(a)_____ (b)_____ (c)_____ (d)_____

C. Resolution of timing pulses for B:

for (a)_____ for (b)_____ for (c)_____ for (d)_____

D. Allowable jitter of B:

for (a)_____ for (b)_____ for (c)_____ for (d)_____

E. Smallest required epoch:_____

F. Applications (unclassified only)

G. Comments:

VI. REQUIREMENTS FOR NEXT TEN YEARS (CONT.) - STATION TIME SYNCHRONIZATION

Brief statement of future time synchronization requirements:

A. Accuracy with respect to:

UT 2 _____ AT_____ Sidereal_____ other_____

B. Resolution required for (A)_____

C. Relative accuracy required between:

station networks_____ (or) intra range_____

D. Resolution required for (C):_____

E. External synchronization reference recommended:_____

_____

_____

F. Techniques recommended for local synchronization:_____

_____

_____

G. Methods of automatic synchronization considered:_____

_____

_____

_____

H. Comments:

APPENDIX II

LITERATURE SEARCH - INDEXES REVIEWED

1. Astronautics Information Abstracts
2. International Aerospace Abstracts
3. Air Force Scientific Research Bibliography
4. Applied Science and Technology Index
5. The Engineering Index
6. Instruments Abstracts
7. Science and Technical Aerospace Reports
8. Technical Abstracts Bulletin (DDC)

APPENDIX III

SUMMARY OF EQUATIONS USED IN THE SURVEY OF THEORETICAL LIMITATIONS:

1. Receiver Noise:

$$\sigma_N = 57.3 \tan^{-1}\sqrt{\frac{N}{2S}} \approx \frac{40.5}{\sqrt{\frac{S}{N}}} \quad \text{FOR } \frac{S}{N} \text{ LARGE}$$

where:

σ_N = rms phase error in degrees

S/N = signal to noise power ratio in the two-sided noise bandwidth

2. Oscillator Noise:

$$\sigma_o^2 = \frac{1 + \left(\frac{\omega_N}{K}\right)^2}{4\,\delta\,\omega_N\,T_{CE}}$$

where:

σ^2 = mean square error in radians^2

K = loop gain

δ = damping factor

ω_N = undamped second order phase lock loop natural frequency in radians per second

T_{CE} = equivalent coherence time representing the combined effect of all oscillators affecting loop operation

for $K \gg \omega_N$:

$$\sigma_N^2 = \frac{1.00}{4\,\delta\,(2B_L\,T_{CE})}$$

where: $2B_L$ = loop noise bandwidth

3. Range Rate Errors

(a). Cycle counting quantization noise

$$\dot{\rho}_{\varepsilon m} = \frac{c\,(f_b + f_{dm})^2}{2\,t_m\,(f_b - f_{dm})\,f_r\,f_t}$$

where:

$\dot{\rho}_{\varepsilon m}$ = maximum quantization error (rms) met/sec.

c = speed of light, 3 x10^8 met/sec.

f_b = doppler bias frequency, hertz

f_{dm} = maximum 2-way doppler frequency, hertz

t_m = maximum allowable counting time, sec.

f_r = reference frequency, hertz

f_t = transmitted frequency, hertz

(b). Thermal and noncoherent oscillator noise

$$\beta = \left(\frac{\dot{\rho}_{\varepsilon rms}\,\omega_c}{c\,\omega_m}\right)\left[2\left(\frac{S}{N}\right)_L\right]^{\frac{1}{2}}$$

where:

β = normalized range-rate error

$\dot{\rho}_{\varepsilon rms}$ = rms range-rate error

ω_c = transmitted radiated frequency radians/sec.

ω_m = undamped second order phase-lock loop natural frequency, rad/sec.

c = speed of light, 3 x 10^8 met/sec.

$\left(\frac{S}{N}\right)_L$ = signal-to-noise power ratio in the phase-lock loop two-sided noise bandwidth

3. Range Rate Errors (continued)

(c). Coherent oscillator instability

$$\dot{\rho}_{E_{rms}} = \left(\frac{c}{\sqrt{2}\,\omega_0 T}\right)\left(\frac{\tau}{T_c}\right)^{\frac{1}{2}} \qquad 0 \leq \tau \leq$$

$$\dot{\rho}_{E_{rms}} = \left(\frac{c}{\sqrt{2}\,\omega_0 T}\right)\left(\frac{T}{T_c}\right)^{\frac{1}{2}} \qquad T \leq \tau \leq \infty$$

where:

$\dot{\rho}_{E_{rms}}$ = rms range-rate error for a two-way coherent measurement, met/sec.

c = speed of light

ω_0 = transmitter radiated frequency, radians/sec.

T = cycle counting interval (smoothing time, sec.)

τ = round trip transit time, seconds

T_c = coherence time of the transmitter radiated frequency, sec.

(d). Total rms range-rate error

$$\dot{R}_{RT} = \sqrt{(\dot{r}_{i_1})^2 + (\dot{r}_{i_2})^2 + (\dot{r}_{i_3})^3}$$

where:

$\dot{R}_{RT}$ = total rms range-rate error

$\dot{r}_{i_1}$ = rms range-rate error due to cycle counting quantization noise

$\dot{r}_{i_2}$ = rms range-rate error due to coherent oscillator instability

$\dot{r}_{i_3}$ = rms range-rate error due to thermal and noncoherent oscillator noise

APPENDIX IV

APPLICATION OF THEORETICAL LIMITATIONS ON RANGE AND RANGE-RATE SYSTEMS

In a range and range-rate measurement system, oscillator stability requirements may be determined from the allowable errors in the range-rate measurement alone, since the range measurement is basically limited by signal-to-noise in the receiver bandwidth. The three major contributors to range-rate error are: 1) cycle counting quantization noise, 2) coherent oscillator instability, and 3) thermal and noncoherent oscillator noise. Total system error in range-rate may be calculated by taking the square-root of the sum of the squares of each of these error components, thus:

$$\dot{R}_{2T} = \sqrt{(\dot{\varepsilon}_{\dot{r}_1})^2 + (\dot{\varepsilon}_{\dot{r}_2})^2 + (\dot{\varepsilon}_{\dot{r}_3})^2}$$

where:

$\dot{R}_{2T}$ = Total rms range-rate error

$\dot{\varepsilon}_{\dot{r}_1}$ = Rms range-rate error due to cycle counting quantization noise

$\dot{\varepsilon}_{\dot{r}_2}$ = Rms range-rate error due to coherent oscillator instability

$\dot{\varepsilon}_{\dot{r}_3}$ = Rms range-rate error due to thermal and noncoherent oscillator noise.

Each of these error components may in turn be calculated from the system parameters by using the equations contained in Appendix III. On the other hand, if it is desired to determine some of the system parameters, one may arbitrarily assign error budgets to each of the contributing sources such that the total rms range-rate error falls within the requirement of the system. In this way it is possible to manipulate the error equations to yield the parameters of interest.

At the end of this section are graphs of Develet's equations relating the rms value of the range-rate error due to coherent oscillator instability

to various system parameters. Among these parameters is the coherence time of the transmitter radiated frequency. This is, in effect, a specification of oscillator stability, since the coherence time is defined by Edson (2) as the time (usually in seconds) it takes the phase of a subject oscillator when compared to a perfect oscillator to change statistically by one radian rms. If the oscillator frequency is multiplied up to the radiated frequency by a multiplier chain, the coherence time is a function of the multiplication factor and behaves in accordance with the following simple expression:

$$T_{cf_1} = N^2 T_{cf_2}$$

where:

T_{cf_1} = coherence time of the lower frequency

T_{cf_2} = coherence time of the higher frequency

N = frequency multiplication factor

One can get a fairly good estimate of the oscillator coherence time required by examining the error budget allotted to coherent oscillator instability in light of Develet's equations. Figures IV-1 and IV-2 are graphs of these equations and can be used to quickly determine the effect of coherent oscillator instability upon range-rate error.

To illustrate the use of these graphs, consider the problem of determining the range-rate error contributed by coherent oscillator instability in the Goddard Range and Range-Rate System. Assume that a measurement of range-rate is to be made at large distances so that the two-way transit time, τ, is large; and, that the smoothing time, T, is to

be kept very short in order to permit rapid determination of orbit parameters. All this is to say that the range of τ/T is $1 \leq \frac{\tau}{T} \leq \infty$. Therefore, the applicable equation is:

$$\dot{r}_{e_{rms}} = \frac{c}{\sqrt{2}\,\omega_o T}\left(\frac{T}{T_c}\right)^{\frac{1}{2}} = \frac{c}{\omega_o\sqrt{2T T_c}}$$

For the Goddard Range and Range-Rate System,

f_o = 2.271×10^9 hertz

T = 0.0655 seconds

T_c = 7.7 seconds (at f_o)

C = 3×10^8 meters/second

Substituting these values into the above equation,

$$\dot{r}_{erms} = \frac{3 \times 10^8}{2\pi \times 2.271 \times 10^9 \times 2 \times 0.0655 \times 7.7}$$

$$\dot{r}_{erms} = 0.0209 \text{ met/sec.}$$

However, instead of calculating the range-rate error directly from the equation, one could use the graph of Figure IV-2. For T_c = 7.7 seconds and T = 0.0655 seconds, one obtains:

$$f_o\,\dot{r}_{erms} = 4.8 \times 10^7 \text{ hertz x met/sec.}$$

and,

$$\dot{r}_{erms} = \frac{4.8 \times 10^7}{2.271 \times 10^9} = 0.0211 \text{ met/sec.}$$

In the case of the Mistram System, the oscillator stability is specified in terms of phase error as being less than 40-degrees rms in 10-milliseconds at the transmitter radiated frequency (8.148-GHz).

The coherence time of f_o can be calculated by direct proportion as follows:

$$T_c = 10 \times 10^{-3} \times \frac{57.3}{40} = 1.4325 \times 10^{-2} \text{ seconds}$$

The maximum range at which the system maintains full accuracy is 600-nautical miles or 1112-kilometers. Hence,

$$\tau = \frac{2R}{C} = \frac{2 \times 1112\text{-Km}}{3 \times 10^5\text{-Km/sec.}} = 7.4132 \times 10^3 \text{ seconds}$$

Assume a value for the smoothing time -- 0.5 seconds is reasonable.

$$\frac{\tau}{T} = \frac{7.4132 \times 10^{-3}}{0.5} = 1.4826 \times 10^{-2}$$

Hence, $\frac{\tau}{T}$ is in the range $0 \leq \frac{\tau}{T} \leq 1$ and one can use the graph of Figure IV-1,

$$\tau\, T_c = 7.4132 \times 10^{-3} \times 1.4325 \times 10^{-2} = 1.06 \times 10^{-4} \text{ sec.}^2$$

From the graph,

$$f_o\, \dot{r}_{erms} = 4.6 \times 10^7 \text{ hertz x met/sec.}$$

so that,

$$\dot{r}_{erms} = \frac{4.6 \times 10^7}{8.148 \times 10^9} = 5.7079 \times 10^{-3} \text{ met/sec}$$

or,

$$\dot{r}_{erms} = 0.57079 \text{ cm/sec.}$$

The Mistram System claims an accuracy in range-rate of 0.02 feet/sec. or 0.6096-cm/sec. This certainly is in close agreement with the above calculation and the difference may be explained by recalling that the above calculation is for a component of range-rate error due to coherent oscillator instability only. Allowances must also be permitted for the assumed value of smoothing time.

In a proposed range-rate sidetone tracking system, the total rms range-rate error is specified as: 0.01-meters/second. The frequencies to be used are:

Transmitter radiated frequency (f_o) = 6 GHz

Transmitter carrier oscillator frequency = 70 MHz

Transponder radiated frequency = 4 GHz

The error budget is as follows:

1. Amplitude unbalance (4%).....0.003-met/sec.
2. Quantizing error .....0.001-met/sec.
3. Analog-to-digital (zero crossing detection).....0.001-met/sec.
4. Phase noise of VCO .....major error source

$$\dot{R}_{eT} = \sqrt{(\dot{r}_{e1})^2 + (\dot{r}_{e2})^2 + \ldots\ldots + (\dot{r}_{en})^2}$$

the allowable error due to phase noise of the VCO can be calculated as: 9.434×10^{-3}-meters/second.

$$N = \frac{6 \times 10^9}{70 \times 10^6} = 85.71; \quad N^2 = 7347$$

$$f_o \, \dot{r}_{erms} = 6 \times 10^9 \times 9.434 \times 10^{-3} = 5.6604 \times 10^7 \text{ or } 5.7 \times 10^7$$

Hence, using the graphs of Figures IV-1 and IV-2, the coherence time of the transmitter radiated frequency may be readily determined for various values of the transit time and/or smoothing time. Multiplying these values of coherence time by N^2 will yield the coherence time of the 70-MHz oscillator. A plot of the required coherence time of the 70-MHz oscillator as a function of the smoothing time is shown in Figure IV-3. This graph is for three values of transit time: greater than 100-seconds (in the vicinity of Venus or Mars), 2.5-seconds (in the vicinity of the moon). and 0.25-seconds (a near synchronous satellite).

$$f_o \dot{r}_{erms} = \left[\frac{C}{2\sqrt{2}\,\pi\,T}\right]\left[\frac{\tau}{T_c}\right]^{1/2}$$

$$0 \le \frac{\tau}{T} \le 1$$

$\dot{r}_{erms}$ = Rms range-rate error (met/sec)
C = Speed of light (3×10^8 met/sec)
f_o = Transmitter radiated freq. (hertz)
T_c = Coherence time of f_o (sec)
T = Smoothing time (sec)
τ = Two-way transit time (sec)

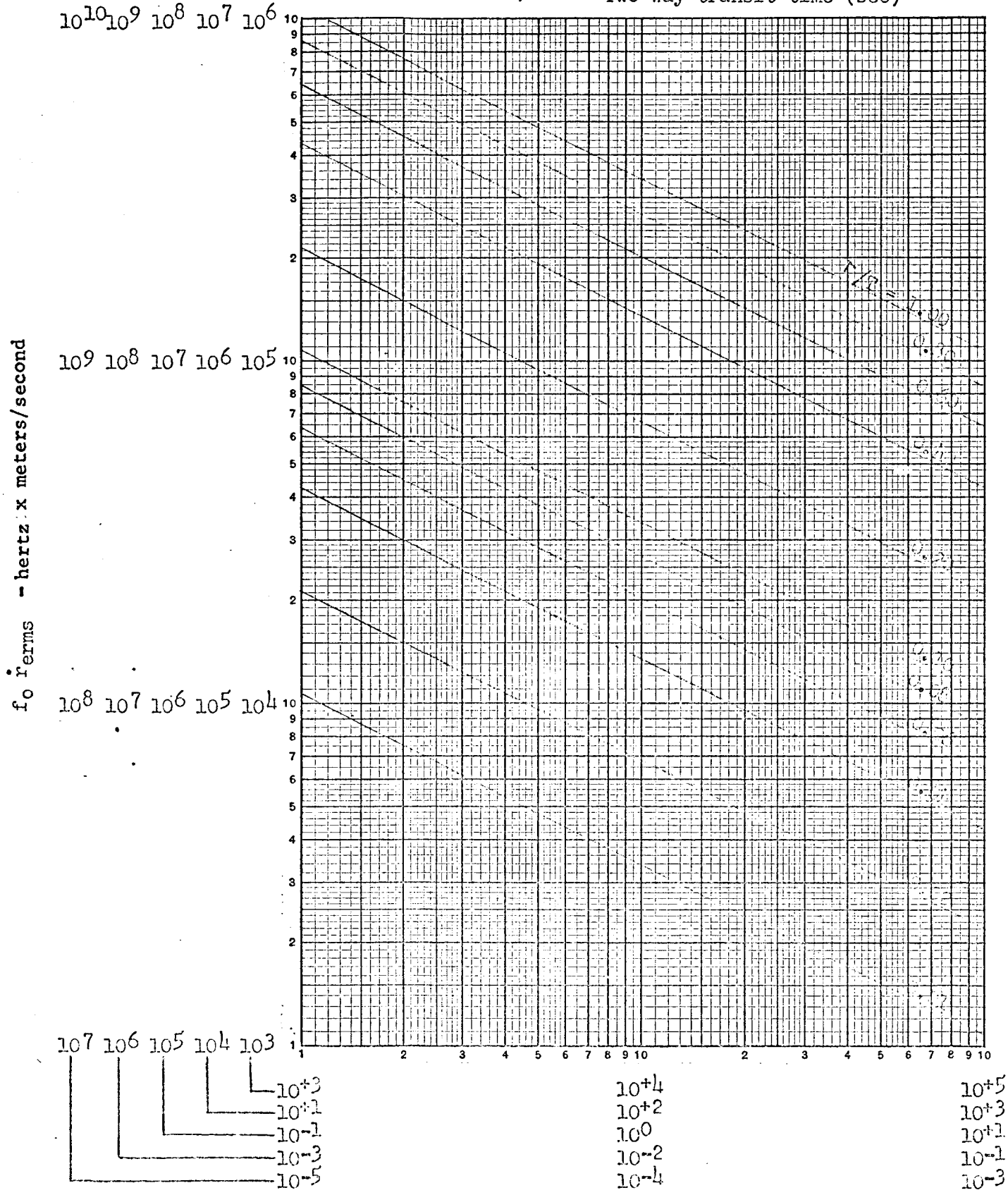

Figure IV-1

$$f_o \dot{r}_{erms} = \frac{C}{2\pi\sqrt{2\,T\,T_c}}$$

$$1 \le \frac{\tau}{T} \le \infty$$

$\dot{r}_{erms}$ = Rms range-rate error (met/sec)
C = Speed of light (3×10^8 met/sec)
f_o = Transmitter radiated freq. (hertz)
T_c = Coherence time of f_o (sec)
T = Smoothing time (sec)
τ = Two-way transit time (sec)

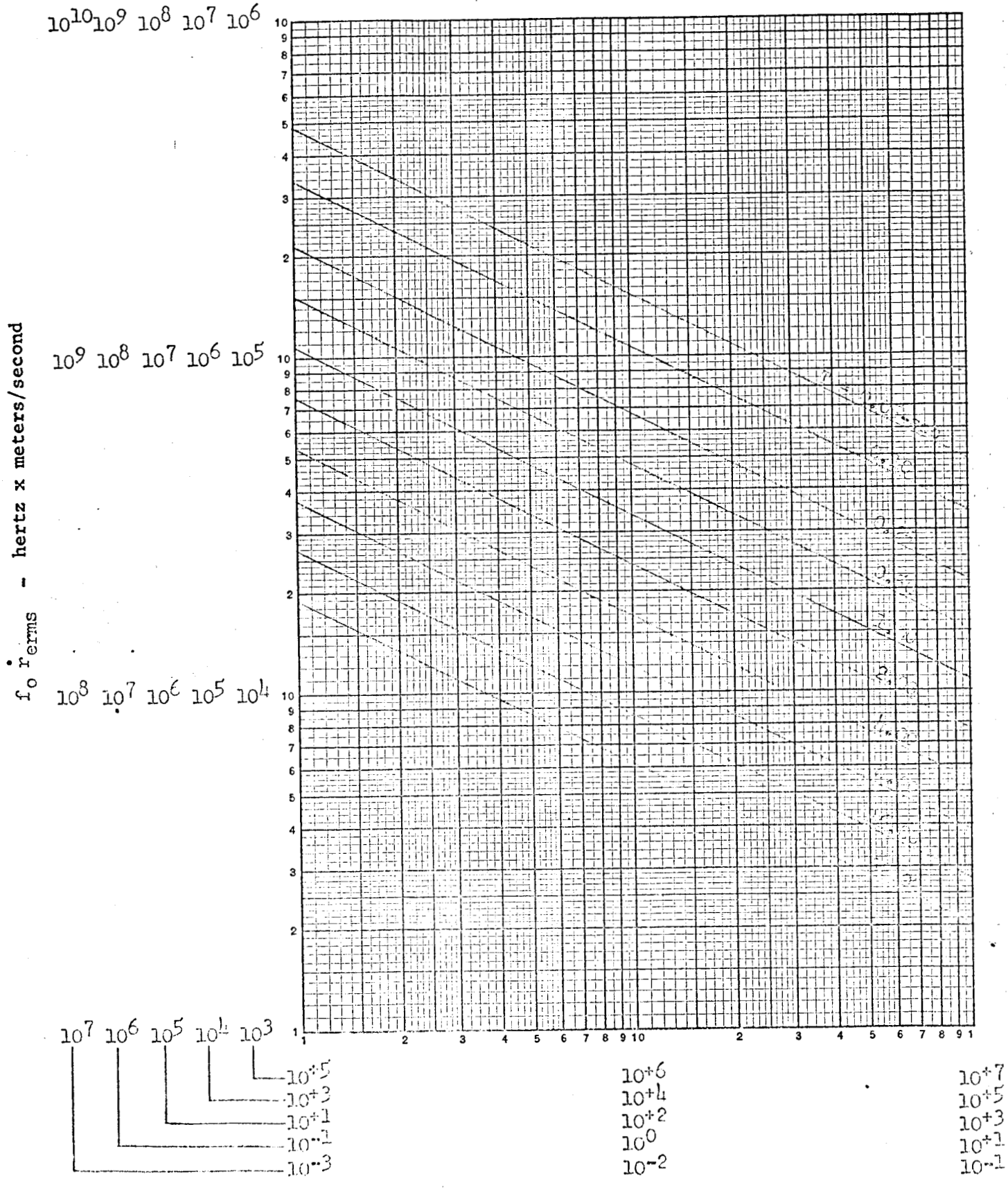

Figure IV-2

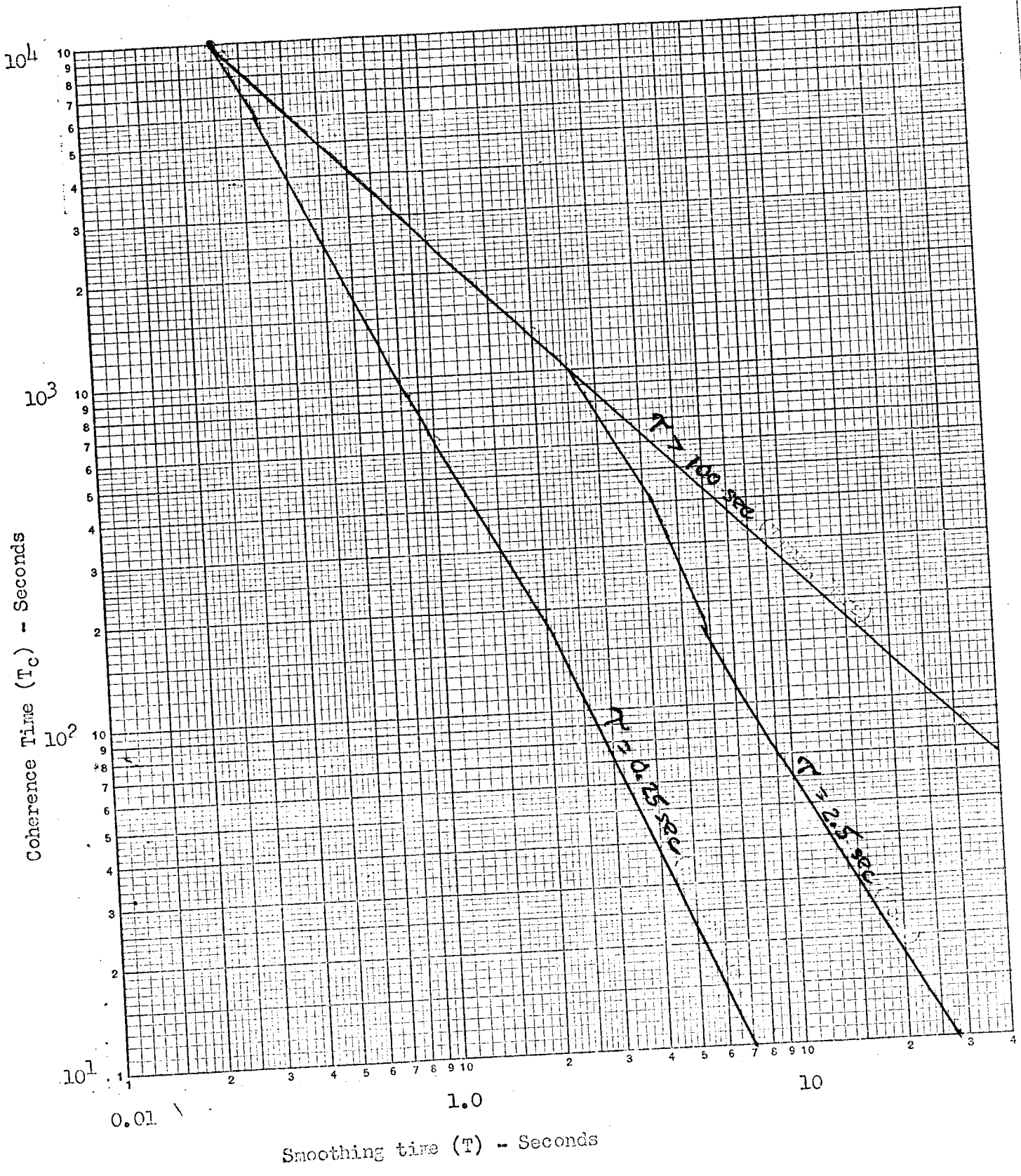

Figure IV-3. 70-MHz oscillator coherence time (T_c) versus smoothing time (T) to yield rms range-rate error of 0.01-met/sec. τ = Two-way transit time. f_o = 6-GHz.