NASA TM X-1443

FORMAC PROGRAM TO ASSIST IN THE ANALYSIS OF LINEAR CONTROL SYSTEMS USING STATE VARIABLE FEEDBACK DESIGN TECHNIQUE

By Charles R. Slivinsky, Lois T. Dellner, and Dale J. Arpasi

Lewis Research Center
Cleveland, Ohio

NATIONAL AERONAUTICS AND SPACE ADMINISTRATION

For sale by the Clearinghouse for Federal Scientific and Technical Information
Springfield, Virginia 22151 – CFSTI price $3.00

FORMAC PROGRAM TO ASSIST IN THE ANALYSIS OF LINEAR CONTROL SYSTEMS USING STATE VARIABLE FEEDBACK DESIGN TECHNIQUE

by Charles R. Slivinsky*, Lois T. Dellner, and Dale J. Arpasi

Lewis Research Center

SUMMARY

A recently developed technique for control system design utilizes the feedback of all the state variables of the system. A program written in FORMAC to facilitate this design procedure is discussed.

The program must be supplied the open-loop transfer function, properly segmented into as many parts as the order of the system. Algebraic expressions for the unknown state variable feedback coefficients (the gains through which the state variables are fed back) are then calculated. Under certain conditions that result in a set of n algebraic equations linear in the unknown feedback gains, the program accepts additional input (the transfer function describing the desired system response) and calculates the values of the feedback gains which yield this response. A root locus diagram is plotted to display system sensitivity to variations of the gain in the left-most block of the open-loop transfer function.

Several examples of the use of the program are included and a complete program listing is given in an appendix.

INTRODUCTION

An important conclusion of modern control theory is that to minimize a broad class of integral type performance indices all the state variables of the system to be controlled must be fed back (refs. 1 to 3). Recently, this conclusion has been used as the basis for a new method of linear system synthesis, called state variable feedback design technique (ref. 1). Although the method has its origin in modern control theory, the tools used are familiar to engineers acquainted only with conventional control theory - namely, the Laplace transform and the frequency domain.

---

* Graduate Associate in Research, University of Arizona, Tucson, Arizona.

A system state variable is one of a set of n linearly independent variables, which are sufficient to completely describe the behavior of the system. These variables may be time derivatives of an output variable of the system (phase variables) or actual physical variables which may or may not be measurable.

The object of the design procedure is to achieve an initially specified closed-loop response by the proper selection of the gains of amplifiers through which the state variables of the system are fed back. The task is accomplished by formulating and solving a set of algebraic equations for the numerical values of the feedback amplifier gains. For control systems whose order exceeds two or three, a good deal of effort must be expended in carrying out the computational aspects of the design. However, the nature of the synthesis method is such that a digital computer can be used to perform much of the tedious calculation. A computer program for performing this function has been developed and utilized for state variable feedback design of several servosystems.

During the following discussion, some background concerning state variable feedback design technique is given. However, it is assumed the reader will refer to references such as 1 and 4 to obtain a full understanding of the method. Our objective is not to give a thorough treatment of the design technique but to provide information pertinent to the use and limitations of the computer program.

SIMPLE EXAMPLE OF STATE VARIABLE FEEDBACK DESIGN TECHNIQUE

To initiate the discussion of both the state variable feedback design technique and the computer program, consider the system whose block diagram is shown in figure 1(a). Here, quantities designated by capital letters represent Laplace transformed quantities, that is, functions of the complex frequency variable s. The system input is $E(s)$, the state variables are $X_1(s)$, $X_2(s)$, and $X_3(s)$, and the system output is $C(s) = X_3(s)$. In the left-most block is the closed-loop gain k. For the sake of clarity, no physical interpretation is given to the variables. Note that the outputs of each of the blocks can be taken as the state variables; in other words, the natural system variables are a suitable choice for state variables.

The open-loop transfer function of the system in figure 1(a) is

$$G(s) = \frac{k(s + 3)}{s(s + 2)(s + 4)}$$

Through the use of the state variable feedback design technique, the closed-loop transfer function $(C(s)/R(s))$ of this system may be made to correspond to any comparable desired transfer function $G_{des}(s)$. The design technique requires that all state variables

be fed back through linear amplifiers as shown in figure 1(b); the gain of each amplifier (feedback coefficient) is then determined so that $C(s)/R(s) = G_{des}(s)$.

Suppose, in this case, the desired closed-loop response is

$$G_{des}(s) = \frac{14.1667(s + 3)}{(s + 5)\left[(s + 1.5)^2 + (2.5)^2\right]} \tag{1}$$

$$= \frac{14.1667(s + 3)}{s^3 + 8s^2 + 23.5s + 42.5}$$

To solve for the feedback coefficients (h_1, h_2, h_3) that allow the desired closed-loop transfer function $G_{des}(s)$ to be achieved, it is first necessary to calculate the expression for $C(s)/R(s)$ for figure 1(b). This task is facilitated by block diagram manipulation to give the block diagram shown in figure 1(c). In this figure the forward path transfer function $G(s)$ is unaltered. The feedback transfer function $H_{eq}(s)$ is the single feedback path transfer function which is equivalent to the multifeedback path arrangement of figure 1(b).

With

$$\frac{C(s)}{R(s)} = \frac{G(s)}{1 + G(s)H_{eq}(s)} \tag{2}$$

the closed-loop transfer function is found to be

$$\frac{C(s)}{R(s)} = \frac{k(s + 3)}{s^3 + [kh_1 + kh_2 + 6]s^2 + [4kh_1 + 3kh_2 + kh_3 + 8]s + 3kh_3} \tag{3}$$

In order for equations (1) and (3) to be identical, the gain k must be 14.1667 and the following equations must be satisfied:

$$kh_1 + kh_2 + 6 = 8$$

$$4kh_1 + 3kh_2 + kh_3 + 8 = 23.5$$

$$3kh_3 = 42.5$$

The feedback coefficients are, therefore,

$$h_1 = -0.329$$

$$h_2 = 0.471$$

$$h_3 = 1.000$$

To illustrate system sensitivity, a root locus diagram may be plotted.

A review of the preceding example will indicate the need for mechanizing the algebraic manipulation and numerical calculations necessary to use the state variable feedback design technique in large problems. Manual calculation of the feedback gains is tedious and open to error, even for as simple a system as discussed here. Moreover, specification of a desired closed-loop transfer function is not usually a simple task. Aspects other than the overall response of the system must be weighted in the control design. For instance, it may be desirable (1) to keep the feedback gain of a certain state variable to a minimum in the hope of eventually eliminating the necessity of measuring or generating it, or (2) to reduce system sensitivity to gain changes at some unknown distribution of the desired closed-loop poles. These aspects would require the specification of the $G_{des}(s)$ on a trial and error basis and the calculation of the feedback gains for each trial. The volume of calculation required for such an approach makes the adaptation of the design procedure to a computer almost mandatory.

PROBLEM PREPARATION

Application of the state variable technique to control system design requires that (1) the open-loop transfer function $G(s)$, describing the system to be controlled, be defined, and (2) the transfer function $G_{des}(s)$ of the desired response be specified. The use of the FORMAC program as an aid in this application places certain requirements on the form of this input data. The transfer function $G(s)$ must be expressed as

$$G(s) = \prod_{i=1}^{i=n} K_i G_i(s)$$

This means the block diagram defining the problem must have been drawn as in figure 2 where

(1) The state variables are $X_i(s)$.

(2) The constants are K_i.

(3) The rational functions $G_i(s)$ with constant coefficients are defined so that (a) the coefficient of the highest degree term in each denominator is unity and (b) the h_i are constant but unspecified gain coefficients.

The reader may object to the exclusion of polynomials in s from the feedback blocks because it is often impossible or not economically feasible to measure all the state variables of a system, but it is usually possible to generate them. Such a situation might arise for the system of figure 1(b). Here, for instance, it may not be possible to measure $X_2(s)$, but the variable can be generated from $X_1(s)$ or $X_3(s)$ as in figure 3(a) or (b). Similarly, it may be necessary to generate the state variable $X_1(s)$, as shown in figure 3(c). All of these cases can be made to conform (to the restriction placed on the h_i's) by block diagram manipulation. The case where one or more of the G_i contains a pair of complex poles can also be handled; the design of the fuel valve control system for a jet engine given in appendix A is such a case.

If the program is to continue beyond the formulation (and output) of the numerator and denominator polynomials of $H_{eq}(s)$ and $C(s)/R(s)$ to the solution for the numerical values of the h_i's, it is required that the contents of the first block $G_1(s)$ be of the form $k/(s + c)$ where c is a specified constant and k is not specified.

There are also restrictions on the form of $G_{des}(s)$:

(1) The numerator of $G_{des}(s)$ must be exactly the same as the numerator of $G(s)$ except that all constants must be specified in $G_{des}(s)$. One unspecified constant k must be contained in $G_1(s)$.

(2) The degree of the denominator of $G_{des}(s)$ must be the same as the degree of the denominator of $G(s)$ after cancellation.

(3) The coefficient of the highest degree term in the denominator of $G_{des}(s)$ must be unity.

Problems formulated as in figure 2 are ready to be solved using the computer program. In the discussion of the program, we refer to the following two types of problems:

Case I: The coefficients of the denominator polynomial of $C(s)/R(s)$ are linear in the h_i and no other unknowns appear. Such problems are those for which the time constants of $G(s)$ are all known, the number of state variables being fed back is equal to the number of poles in $G(s)$ after cancellation, and $G_1(s)$ is of the form $k/(s + c)$.

Case II: The coefficients of the denominator polynomial of $C(s)/R(s)$ are nonlinear in h_i, or contain other unknowns. The design procedure may be applied to a $G(s)$ in which one or two of the time constants are not defined; this is a Case II problem. If the number of state variables being fed back is less than the number of poles in $G(s)$ after cancellation, this is also a Case II problem.

DESCRIPTION OF THE PROGRAM

The computer program is written in FORMAC and is executed at Lewis Research Center on a 7094 II-7044 DCS. This program accepts as input (and immediately writes as output) the polynomials in s and possibly unknown time constants A and B which are the numerators and denominators of the G_i's of figure 2. The program then generates the algebraic expressions for the numerator and denominator of $H_{eq}(s)$ and of $C(s)/R(s)$. The coefficients of these four polynomials are then output. Case II type problems are terminated at this point (see Problem Preparation, Case II, p. 5), since the expressions of h_i in $H_{eq}(s)$ are either nonlinear or contain unspecified quantities (A and B).

For Case I type problems, where the expressions are linear, further input is accepted and printed out. This input must be a set of numbers, the first being a numerical value of k, the closed-loop gain in $G_1(s)$, and the remaining numbers being the numerical coefficients of the denominator of the desired transfer function $G_{des}(s)$. They are used to establish a set of simultaneous linear equations which are then solved for the numerical values of the h_i's. These feedback coefficients are printed, followed by the zeroes and poles of the closed-loop characteristic equation, by the poles of $C(s)/R(s)$ for several multiples (k') of the input value of k (where k' = [.1, .5, 1., 1.5, 2., 3., 5.]), and finally by the zeroes of $C(s)/R(s)$. A root locus diagram terminates the output for such an input set of numbers. If there are further such sets of numbers, the program will repeat the procedure described in this paragraph for each set.

PREPARATION OF INPUT DATA SHEET

Figure 4 is a blank input data sheet to be filled in according to the instructions on input data sheet instruction form (fig. 5). The first line of the input data sheet is available for a title (of not more than 79 characters). The next line must have three two-digit integers; the first (KG) is the number of blocks ($3 \leq KG \leq 10$) in the open-loop transfer function, the second (NN) is the order of the numerator of the open-loop transfer function G after cancellation, the third (ND) is the order of the denominator of the open-loop transfer function after cancellation. Case I problems must have KG = ND. For Case II problems ND may be as large as 38.

The following lines have a two-digit sequence number--from 01 through twice KG. The FORMAC expression[1] for the numerator of the first (left-most) block is followed by that for the denominator of the first block, then the numerator of the second block, etc., through the denominator of the last (right-most) block. This is all that is required for a Case II problem.

For Case I problems, further input consists of a single value for k, followed by numbered lines (01 through ND) each of which contains a coefficient of the denominator polynomial of $G_{des}(s)$ in descending order, beginning with the coefficient for the s^{ND-1} term (the coefficient for the s^{NDth} term is always unity), and on the ND^{th} line, the constant term.

Further sets of one value of K and ND coefficients may follow.

Figure 6(a) is an input data form completed for the example problem (Case I). Figure 6(b) is an input data form for a sample Case II problem $\left(G(s) = \frac{k(s + B)}{(s + 2)(s + 4)s}\right)$, created by substituting the dummy variable B into the example problem of figure 1(a) to illustrate the differences in input and output for Cases I and II.

Input data cards are punched directly from the completed input data form. For Case II problems, a single blank card follows the other cards.

DESCRIPTION OF OUTPUT

Figures 7(a) and (b) are the complete output listings from the input supplied in figures 6(a) and (b). The first page displays whatever title has been provided on the first card of the input and is followed by the information from the first group of cards with appropriate identification. Pages 2 and 3 display the coefficients of s in the four polynomials formed by the program -- the numerator and denominator of $H_{eq}(s)$ and the numerator and denominator of C(s)/R(s) -- in terms of s, the input gain k, the h_i's (feedback coefficients), and the unknown time constants A and B, if used. The output for Case II problems (fig. 7(b)) terminates at this point.

---

[1]A FORMAC expression is similar to a FORTRAN expression in that it uses * for multiplication and ** for exponentiation, etc., but it must be terminated by $.

The polynomial $s^3 + 7s^2 + 2.2s + 1.4$ is a correct FORMAC expression when written in any one of the following ways:

(1) s**3+7.*s**2+2.2*s+1.4 $

(2) s*s*s+7.*s*s+2.2*s+1.4 $

(3) ((s+7.)*s+2.2)*s+1.4 $

In figure 7(a), page 4 displays the coefficients of $G_{des}(s)$ -- all but the first of which are input, followed by the input value for CK (the closed-loop gain). The lower half of this page displays the numerical values of the h_i's that satisfy the equations defined by the input values immediately above. Page 5 displays the values of the zeroes followed by the values of the poles of the characteristic equation. The roots of this equation are then printed for each of several multiples of the input design value of k. The zeroes of C(s)/R(s) follow.

All the points on pages 5 and 6 are plotted in the root locus diagram on the last page of figure 7(a). The legend below the plot shows the number of points of each type, but they may not all appear on the plot because overprinting is not used.

If additional sets of CK and coefficients are provided, the output will repeat from page 4 through the plot for each such set.

Lewis Research Center,
National Aeronautics and Space Administration,
Cleveland, Ohio, May 10, 1967,
125-23-02-10-22.

APPENDIX A

DESIGN OF A FUEL VALVE CONTROL SYSTEM

One of the first applications of the state variable feedback technique was to a trial design of a fuel valve servomechanism for a J-85 jet engine. The engine is being used by Lewis Research Center for studying engine and inlet controls for the supersonic transport.

In order to apply the design technique, it was necessary to use a linear model of the physical system. The system transfer function for the torque motor, hydraulic servovalve, and fuel valve was found to be

$$G(s) = \left(\frac{2.5\,k}{s + 2500}\right)\left(\frac{2.262\times10^{6}s}{s^{3} + 3.669\times10^{3}s^{2} + 2.104\times10^{7}s + 1.762\times10^{10}}\right)$$

$$\left(\frac{5.769\times10^{3}}{s}\right)\left(\frac{8.483\times10^{11}}{s^{2} + 6.683\times10^{3}s + 3.28\times10^{8}}\right)\left(\frac{1}{s}\right) \qquad \text{(A1)}$$

As is evident, G(s) is a 7th order system after cancellation. This means that seven state variables will completely describe the system and, consequently, in the block diagram G(s) must contain seven blocks. The output of each of these blocks will be a state variable to be fed back. The system G(s) may be described as

$$G(s) = \prod_{i=1}^{i=7} K_i G_i(s)$$

where

$$K_1G_1(s) = \frac{2.5\,k}{s + 2500}$$

$$K_2G_2(s) = \frac{2.262\times10^{6}s^{2}}{s^{3} + 3.669\times10^{3}s^{2} + 2.104\times10^{7}s + 1.762\times10^{10}}$$

$$K_3G_3(s) = 1/s$$

$$K_4G_4(s) = 5.769\times10^3/s$$

$$K_5G_5(s) = \frac{8.483\times10^{11}s}{s^2 + 6.383\times10^3s + 3.28\times10^8}$$

$$K_6G_6(s) = 1/s$$

$$K_7G_7(s) = 1/s$$

The transfer functions $K_3G_3(s)$ and $K_6G_6(s)$ have been inserted to supply seven state variables. To maintain the same open-loop transfer function, $K_2G_2(s)$ and $K_5G_5(s)$ have been multiplied by s.

The block diagram for state variable feedback is shown in figure 8 where

R	reference input
k	servoamplifier gain

and the state variables are

I	torque motor current
$\dot{x}_f$	flapper valve velocity
x_f	flapper valve displacement
x_s	spool valve displacement
$\ddot{c}$	actuator acceleration
$\dot{c}$	actuator velocity
c	actuator position

This diagram provides enough information to fill in lines 1 to 14 on the input data sheet (fig. 9) for this problem.

The next step was the selection of the closed-loop transfer function $G_{des}(s)$ to realize a system response having a bandwidth as large as possible with a small overshoot in response to a step input. Two complex poles of the closed-loop system were chosen to be given by the transfer function

$$G_{1,des}(s) = \frac{3.28\times10^8}{s^2 + 6.683\times10^3s + 3.28\times10^8} \tag{A2}$$

Equation (A2) corresponds to part of the fixed system, equation (A1); this choice was made because the bandwidth of equation (A2) is far beyond that of the other component transfer functions of the system and so will have little effect on the system bandwidth. The remaining closed-loop pole locations were chosen after a careful study of the normalized step response and frequency response curves of reference 5. This reference gives the normalized transfer function for systems with no zeroes which cause the following performance index to be minimized:

$$I = \int_0^\infty t \cdot |e| dt \tag{A3}$$

In this performance index (the integral of time-multiplied absolute value error), e is the difference between the system response to a unit step input and the step itself. This criterion was chosen because it gave the desired transient characteristic (step response) compatible with the bandwidth requirement (frequency response).

The denominator of $G_{des}(s)$ is completed by using the fifth order polynomial in table V of reference 5. The constant numerator of $G_{des}(s)$ is now chosen so that $G_{des}(0) = 1$, assuring zero steady-state error for step inputs. This is done by letting the numerator equal the value of the denominator as $s \to 0$. Consequently, the closed-loop transfer function becomes

$$G_{des}(s) = \frac{1.025\times10^{27}}{\left(s^2 + 6.683\times10^3 s + 3.28\times10^8\right)\left(s^5 + 2.8\,\omega_o s^4 + 5\,\omega_o^2 s^3 + 5.5\,\omega_o^3 s^2 + 3.4\,\omega_o^4 s + \omega_o^5\right)} \tag{A4}$$

In equation (A4) the value of ω_o governs the system bandwidth: the value 5000 was chosen to give a system bandwidth of 600 hertz which is well beyond that of the dynamic characteristics of the engine. Substituting this value in equation (A4) gives

$$G_{des}(s) = \frac{1.025\times10^{27}}{s^7 + 2.06831\times10^4 s^6 + 5.4656\times10^8 s^5 + 6.1149\times10^{12} s^4 + 4.7720\times10^{16} s^3 + 2.4283\times10^{20} s^2 + 7.1789\times10^{23} s + 1.0250\times10^{27}}$$

as the desired closed-loop transfer function.

It is also necessary to determine the value of k (the unspecified constant in the first block of fig. 8). Since the numerators of G(s) and $G_{des}(s)$ must be equal, we set

$$2.5\,k(2.262\times10^{6})(5.769\times10^{3})(8.483\times10^{11}) = 1.027\times10^{27}$$

giving CK = 37 036.

We have now all of the information needed to complete the input data sheet (fig. 9). The complete output listing for this problem is given in figure 10.

As a check, the calculated values of the feedback gains h_i (p. 4 of fig. 10) were used in an analog computer simulation of the linearized fuel valve control system. A system bandwidth of 600 hertz and an overshoot less than 10 percent in the step response was achieved.

APPENDIX B

PROGRAM LISTING

```
$IBFMC MAIN
      SYMARG
      ATOMIC  H(10),GN(10),GD(10),S,CK,A,B
       LOGICAL CHK
      COMPLEX RGN(10)
      DIMENSION  PGN(10),PGD(10),GNN(10),GDD(10),ARRAY(13)
      DIMENSION C(40),D(40),E(40),F(40),G(40)
      DIMENSION        DS(40),FS(40),CH(40),CHCK(40)
      DIMENSION X(20, 20), R(10)
      DIMENSION DFTRN(10),HFTRN(10)
      DIMENSION DIM(130), ARL(130),PP(11),KK(14),PCK(14)
      EQUIVALENCE (KK, PCK )
      DATA PCK(4), PCK(6), PCK(8),PCK(10) /
     1        1H0,     1HX,     1H+,     1H*     /
      DIMENSION PCTG(10)
      DATA PCTG / .1, .5, 1., 1.5, 2., 3., 5., 0., 0., 0. /
      DATA JTOP / 7 /
 NLAB PARAM
     1( GN(1), GNN(1)),
     2( GN(2), GNN(2)),
     3( GN(3), GNN(3)),
     4( GN(4), GNN(4)),
     5( GN(5), GNN(5)),
     6( GN(6), GNN(6)),
     7( GN(7), GNN(7)),
     8( GN(8), GNN(8)),
     9( GN(9), GNN(9)),
     1(GN(10),GNN(10))
 DLAB PARAM
     1( GD(1), GDD(1)),
     2( GD(2), GDD(2)),
     3( GD(3), GDD(3)),
     4( GD(4), GDD(4)),
     5( GD(5), GDD(5)),
     6( GD(6), GDD(6)),
     7( GD(7), GDD(7)),
     8( GD(8), GDD(8)),
     9( GD(9), GDD(9)),
     1(GD(10),GDD(10))
 PLAB PARAM
     1( H(1), HFTRN(1) ),
     2( H(2), HFTRN(2) ),
     3( H(3), HFTRN(3) ),
     4( H(4), HFTRN(4) ) ,
     5( H(5), HFTRN(5) ),
     6( H(6), HFTRN(6 )),
     7( H(7), HFTRN(7 )),
     8( H(8), HFTRN(8 )),
     9( H(9), HFTRN(9 ) ),
     A( H(10), HFTRN(10) )
   70 DO 76 I = 1, 40
      LET C(I) = 0.0
      LET D(I) = 0.0
      LET E(I) = 0.0
      LET F(I) = 0.0
      LET G(I) = 0.0
       LET FS(I) = 0.0
   76 CONTINUE
   80 DO 90 I = 1, 10
      LET GNN(I) = 0.0
      LET GDD(I) = 0.0
      HFTRN(I) = 0.0
   90 CONTINUE
```

```
 92 READ (5,499)
 95  READ(5,498) KG,NN,ND
 96 WRITE ( 6, 499 )
    WRITE (6,501) KG,NN,ND
 98 IDATA = 0
100 DO 120 J = 1,KG
102 IDATA = IDATA + 1
    IDMIN1 = IDATA - 1
104 READ( 5, 511 ) ID1, ( ARRAY(I), I = 1, 13 )
106 IF( ID1 - IDATA ) 108,110,108
108 WRITE( 6, 513 ) IDMIN1
    GO TO 1000
110 JSTART = 0
111 LET GNN(J) = ALGCON ARRAY(1), JSTART
112 WRITE( 6, 530 ) J
    WRITE( 6, 541 ) ( ARRAY(I), I = 1, 13 )
113 IDMIN1 = IDATA
    IDATA = IDATA + 1
114 READ( 5, 511 ) ID1, ( ARRAY(I), I = 1, 13 )
115 IF( ID1 - IDATA )   108,116,108
116 JSTART = 0
117 LET GDD(J) = ALGCON ARRAY(1), JSTART
118 WRITE( 6, 551 ) J
    WRITE( 6, 541 )( ARRAY(I), I = 1, 13 )
120 CONTINUE
122 LET PGN(1)=1.
124 DO  126  J = 2,KG
    LET  PGN(J)= PGN(J-1)* GN(J)
126 CONTINUE
128 LET HEQD = PGN(KG)
    LET CRN  = GN(1)*HEQD
    LET  PGD(KG)=1.
130 DO 132 J = 2,KG
    L = KG-J+1
    LET  PGD(L) = PGD(L+1)*GD(L+1)
132 CONTINUE
134 LET CRDT1= PGD(1)* GD(1)
    LET HEQN =0.
136 DO 138 J = 1,KG
    LET HEQN = HEQN +H(J)*PGN(J)*PGD(J)
138 CONTINUE
140 LET CRDT2 = GN(1)*HEQN
    LET CRD = CRDT1+CRDT2
141  ERASE       CRDT2
142 DO 144 J = 1,KG
     ERASE PGD(J),PGN(J)
144 CONTINUE
146  LET  CRNS  = SUBST  CRN  , NLAB,DLAB
     LET CRNSE = EXPAND CRNS
     ERASE CRN,CRNS
     LET HEQDS  = SUBST HEQD  , NLAB,DLAB
     LET HEQDSE= EXPAND HEQDS
     ERASE HEQD,HEQDS
     LET CRDS   = SUBST  CRD  , NLAB,DLAB
     LET CRDSE = EXPAND CRDS
     ERASE CRD,CRDS
     LET HEQNS  = SUBST HEQN  , NLAB,DLAB
     LET HEQNSE= EXPAND HEQNS
     ERASE HEQN,HEQNS
     LET CRDT1S = SUBST CRDT1,NLAB,DLAB
     LET CDT1SE = EXPAND CRDT1S
     ERASE CRDT1,CRDT1S
148  N = 0
150  I=1
151 LET C(I) = COEFF CRDSE,S**N,V1,V2
     I = I+1
     N=V2
154  IF(N.NE.0) GO TO 151
     I=1
156 LET D(I) = COEFF CRNSE,S**N,V1,V2
     I = I+1
     N=V2
159  IF(N.NE.0) GO TO 156
```

```
      I=1
 161 LET F(I) = COEFF HEQDSE,S**N,V1,V2
      I = I+1
      N=V2
 164  IF(N.NE.0) GO TO 161
      I=1
 166 LET F(I) = COEFF HEQNSE,S**N,V1,V2
      I = I+1
      N=V2
 169  IF(N.NE.0) GO TO 166
     I = 1
 171 LET G(I) = COEFF CDT1SE, S**N, V1, V2
     I = I + 1
      N = V2
 174 IF( N .NE. 0 ) GO TO 171
      ERASE CRNSE,CRDSE,HEQNSE,HEQDSE,CDT1SE
 176 LET CHK = MATCH ID, C(1), 0.0
     IF( CHK ) GO TO 179
     LET C( ND+2 ) = C(1)
 179 LET CHK = MATCH ID, D(1), 0.0
     IF( CHK ) GO TO 182
     LET D( NN+2 ) = D(1)
 182 LET CHK = MATCH ID, E(1), 0.0
     IF( CHK ) GO TO 185
     LET E( NN+2 ) = E(1)
 185 LET CHK = MATCH ID, F(1), 0.0
     IF( CHK ) GO TO 188
     LET F( ND+1 ) = F(1)
 188 LET CHK = MATCH ID, G(1), 0.0
     IF( CHK ) GO TO 191
 190 LET G( ND + 2 ) = G(1)
 191 CALL OUT( KG, NN, ND, C, D, E, F)
1992 DO 1996 I = 1,40
1994 ERASE F(I)
1996 CONTINUE
 200 CALL R7 ( KG, CKI, R )
 210  DO 250 J=1,KG
      LET TEMP  = SUBST C(J+2),(CK,CKI)
      DO 230 K = 1,KG
      LET TEMP1 = COEFF TEMP,H(K)
      LET X(J,K) = EVAL TEMP1
      LET TEMP = SUBST TEMP,(H(K),0.0)
 230 CONTINUE
      LET R(J) = EVAL R(J)-TEMP
 250 CONTINUE
      ERASE TEMP, TEMP1
 260 CALL MATINV( X, KG, KSIG )
 262 DO 280 I1 = 1,KG
            HETRN(I1) = 0.
      DO 280 I2 = 1,KG
     HETRN(I1) = HETRN(I1) + X(I1,I2) * R(I2)
 280 CONTINUE
 282 WRITE( 6, 590 )
 284 DO 288 L = 1, KG
     WRITE( 6, 592 ) L, HETRN(L)
 288 CONTINUE
 290 INDEX = 0
8000 WRITE( 6, 906 )
8002 NLESS1 = ND - 1
     NPLUS1 = ND + 1
8006 DO 8010 J = 2,NPLUS1
     LET FS(J) = SUBST F(J), PLAB
8010 CONTINUE
8012 LET UNITY = EVAL FS(2)
8014 IF(UNITY.EQ.0.) GO TO 8050
8020 CALL FMTOFN( NLESS1, FS, DETRN )
8022 DO 8026 J = 1,NLESS1
     DETRN(J) = DETRN(J) / UNITY
8026 CONTINUE
8028  IF (NLESS1.EQ.1) GO TO 8082
8030 CALL ROOTXX( DETRN, RGN, NLESS1 )
8032 GO TO 8090
8050 NLESS1 = NLESS1-1
8052 IF(NLESS1.EQ.0) GO TO  8070
```

```
8060 DO 8064 J = 2,11
8062 LET FS(J-1) = FS(J)
8064 CONTINUE
      GO TO 8012
8070 WRITE(6,560)
      GO TO 8150
8082 RGN(1) = DFTRN(1) *(-1.)
8090 DO 8100 J = 1,NLESS1
     INDEX = INDEX + 1
     ARL( INDEX ) = REAL( RGN(J) )
     DIM( INDEX ) = AIMAG( RGN(J) )
     WRITE( 6, 902 ) ARL(INDEX), DIM(INDEX)
8100 CONTINUE
8150 WRITE( 6, 904 )
8160 CALL FMTOFN( ND, G, DFTRN )
8170 CALL ROOTXX( DFTRN, RGN, ND )
8180 DO 8200J = 1, ND
     INDEX = INDEX + 1
     ARL( INDEX ) = REAL( RGN(J) )
     DIM( INDEX ) = AIMAG( RGN(J) )
     WRITE( 6, 902 ) ARL(INDEX), DIM(INDEX)
8200 CONTINUE
8400 WRITE( 6, 908 )CKI
8402 NPLUS2 = ND + 2
8404 DO 8410 J = 2,NPLUS2
     LET CH(J) = SUBST C(J), PLAB
8410 CONTINUE
8412 DO 8470 J = 1,JTOP
     GAIN = PCTG(J) * CKI
8416 DO 8420 I = 2,NPLUS2
     LET CHCK(I) = SUBST CH(I), ( CK, GAIN )
8420 CONTINUE
8430 CALL FMTOFN( ND, CHCK, DFTRN )
8440 CALL ROOTXX( DFTRN, RGN, ND )
8450 DO 8460 K = 1,ND
     INDEX = INDEX + 1
     DIM( INDEX ) = AIMAG( RGN(K) )
     ARL( INDEX ) = REAL( RGN(K) )
     WRITE( 6, 910 ) PCTG(J), GAIN, ARL(INDEX), DIM(INDEX)
8460 CONTINUE
     WRITE ( 6, 901 )
8470 CONTINUE
8210  WRITE( 6, 900 )
8220 NPLUS2 = NN + 2
8230 DO 8234 J = 2,NPLUS2
     LET DS(J) = SUBST D(J), ( CK, 1. )
8234 CONTINUE
8238  IF (NN.EQ.0) GO TO 8270
8246 CALL FMTOFN( NN, DS, DFTRN )
      LET TEMPD = EVAL DS(2)
      DO 8247 I = 1,NN
8247 DFTRN(I) = DFTRN(I)/TEMPD
8248  IF (NN.EQ.1) GO TO 8282
8250 CALL ROOTXX( DFTRN, RGN, NN )
8252 GO TO 8290
8270 WRITE (6,560)
8272 GO TO 870
8282 RGN(1) = DFTRN(1) *(-1.)
8290 DO  8300 J = 1,NN
     INDEX = INDEX + 1
     ARL(INDEX) = REAL ( RGN(J) )
     DIM( INDEX ) = AIMAG( RGN(J) )
     WRITE( 6, 902 ) ARL(INDEX), DIM(INDEX)
8300 CONTINUE
```

```
870 PP(1) = 5.
    PP(3) = 0.
    PP(4) = 0.
    KK(1) = 7
    KK(2) = 4
    KK(3) = NLESS1
    KK(5) = ND
    KK(7) = JTOP * ND
    KK(9) = NN
    WRITE( 6, 911 )
    CALL PLOTMY( DIM, ARL, KK, PP )
    WRITE( 6, 912 ) KK(3),KK(5),KK(7),KK(9)
999 GO TO 200
498 FORMAT(3I2)
499 FORMAT(1H1,79H
4991                                                                    )
501 FORMAT( 1HL, 42X, 31HSTATE VARIABLE FEEDBACK PROGRAM /
5011        1HL, 39X, 36H------------ INPUT DATA ------------ /
5012        1HL, 19X,
5013        37H THE OPEN LOOP TRANSFER FUNCTION HAS ,I2,8H BLOCKS.   /
5014        1HK, 19X,
5015        45H THE NUMERATOR POLYNOMIAL OF C/R IS OF ORDER ,I2, 1H./
5016        1HK, 19X,
5017        47H THE DENOMINATOR POLYNOMIAL OF C/R IS OF ORDER ,I2,1H./
5018        1HK, 9X, 62HGN(I) AND GD(I) ARE THE NUMERATOR AND DENOMINA
5019TOR OF THE I-TH  /
5019  10X,40HBLOCK COUNTING FROM LEFT TO RIGHT.                        )
511 FORMAT( I2, 13A6 )
513 FORMAT(1H1,9X,24HDATA CARD FOLLOWING CARD ,I2,17H IS OUT OF ORDER.
5131)
530 FORMAT( 1HL, 9X, 3HGN(, I2, 6H)  =   )
541 FORMAT( 1H+, 20X, 13A6 )
551 FORMAT( 1HK, 9X, 3HGD(, I2, 6H)  =   )
560 FORMAT(1H0,50X,14HTHERE ARE NONE        )
590 FORMAT( 1H0/
5901 1H0,31X, 54H------------FEEDBACK COEFFICIENTS - H(I) ------------
5902/1H0 )
592 FORMAT( 1H0, 9X, 2HH(, I2, 6H)  =  , G12.5 )
900 FORMAT( 1H0 / 1H0 / 40X,
900139H------------ ZEROES OF C/R ------------ / 1H0 /
9002 12X,  9HREAL PART, 10X,14HIMAGINARY PART / 1H0 )
901 FORMAT( 1H )
902 FORMAT( 12X, G12.5, 10X, G12.5 )
904 FORMAT(1H0/1H0/31X,  63H------------ POLES OF THE CHARACTERISTIC E
9041QUATION ------------   /1H0/
9042  12X, 9HREAL PART, 10X,14HIMAGINARY PART / 1H0 )
906 FORMAT(1H1 /1H0  /  32X,   63H------------ ZEROES OF THE CHARACTER
9061ISTIC EQUATION ------------  /1H0  /
9062  12X, 9HREAL PART, 10X, 14HIMAGINARY PART / 1H0 )
908 FORMAT(1H0 /1H0 / 10X,    104H------------ ROOTS OF THE CHARACTERI
9081STIC EQUATION (POLES OF C/R) FOR VARIOUS VALUES OF GAIN ----------
9082--   /45X,     28HCK (DESIGN VALUE OF GAIN) = ,G12.5/1H0/7H O/O CK
9083,7X,4HGAIN,13X, 9HREAL PART,10X, 14HIMAGINARY PART /1H0 )
910 FORMAT( 1H , F6.2, 5X,
9101             G12.5, 7X, G12.5,10X, G12.5 )
911 FORMAT( 2HPT, 57X, 41H------------ ROOT LOCUS PLOT ------------ )
912 FORMAT(2HPL,48X,2H (,I1,3H)  ,   48HO DENOTES A ZERO OF THE CHARAC
9121TERISTIC EQUATION /
9122        2HPL,48X,2H (,I1,3H)  ,   48HX DENOTES A POLE OF THE CHARAC
9123TERISTIC EQUATION /
9124        2HPL,48X,1H( ,I2,3H)  ,   48H+ DENOTES A ROOT OF THE CHARAC
9125TERISTIC EQUATION /
9125        2HPL,48X,2H (,I1,3H)  ,   24H* DENOTES A ZERO OF C/R )
1000 STOP
     END
```

```
$IBFMC OUTNM
      SUBROUTINE OUT( N, NN, ND, C, D, E, F )
C     THIS SUBROUTINE WRITES C/R AND HEQ
      DIMENSION C(40), D(40), E(40), F(40)
      SYMARG        C,D,E,F
      DIMENSION KOUT(21)
      DIMENSION HETRN(20)
      WRITE( 6, 501 )
       GO TO  752
  700 WRITE( 6, 510 )
      NPLUS2 = NN + 2
  710 DO 720 L = 2, NPLUS2
      LPOWER = NPLUS2- L
      WRITE( 6, 521 ) LPOWER
      LET DEL = ORDER D(L), INC, FUL
      SIG = 0.
  722 LET SIG = BCDCON DEL , KOUT, 21
      WRITE( 6, 531 ) ( KOUT(J), J = 2, 21 )
  718 IF( SIG .NE. 0. ) GO TO 722
  720 CONTINUE
      WRITE( 6, 540 )
      NPLUS2 = ND + 2
      DO 750 L = 2, NPLUS2
      LPOWER = NPLUS2- L
      WRITE( 6, 521 ) LPOWER
      LET DEL = ORDER C(L), INC, FUL
      SIG = 0.
  741 LET SIG = BCDCON DEL , KOUT, 21
      WRITE( 6, 531 ) ( KOUT(J), J = 2, 21 )
  748 IF( SIG .NE. 0. ) GO TO 741
  750 CONTINUE
      RETURN
  752 WRITE( 6, 560 )
      NPLUS2 = ND + 1
      DO 770 L = 2, NPLUS2
      LPOWER = NPLUS2- L
      WRITE( 6, 521 ) LPOWER
      LET DEL = ORDER F(L), INC, FUL
      SIG = 0.
  761 LET SIG = BCDCON DEL , KOUT, 21
      WRITE( 6, 531 ) ( KOUT(J), J = 2, 21 )
  763 IF( SIG .NE. 0. ) GO TO 761
  770 CONTINUE
      WRITE( 6, 580 )
      NPLUS2 = NN + 2
      DO 790 L = 2, NPLUS2
      LPOWER = NPLUS2- L
      WRITE( 6, 521 ) LPOWER
      LET DEL = ORDER E(L), INC, FUL
      SIG = 0.
  781 LET SIG = BCDCON DEL , KOUT, 21
      WRITE( 6, 531 ) ( KOUT(J), J = 2, 21 )
  783 IF( SIG .NE. 0. ) GO TO 781
  790 CONTINUE
       GO TO 700
  501 FORMAT( 1H1 / 1H0 /
  5011              29X, 59H-------------HEQ AND C/R IN TERMS OF THE H(I)
  5012 ------------ )
  510 FORMAT( 1H1,47X,30H(NUMERATOR POLYNOMIAL OF C/R)  /1H0)
  521 FORMAT( 1HJ, 8X,19H COEFFICIENT OF S**, I2,  5H  =    )
  531 FORMAT( 36X, 16A6 )
  540 FORMAT ( 1HK /
  5401  1HK,19X, 60HCHARACTERISTIC POLYNOMIAL - (DENOMINATOR POLYNOMIAL
  5402OF C/R)  /1H0)
  560 FORMAT(1HL /1H0/
  5601              20X, 29HNUMERATOR POLYNOMIAL OF HEQ    /1H0 )
  580 FORMAT( 1H0 /
  5801          1HK,19X, 31HDENOMINATOR POLYNOMIAL OF HEQ   /1H0)      /
      END
```

```
$IBFTC RZNAM
      SUBROUTINE RZ( N, CKI, R )
C     THIS SUBROUTINE READS AND WRITES R(I) AND READS AND WRITES CK,
C     USING N = KG.
      DIMENSION R(20)
      READ( 5,530 ) CKI
      IDATA = 0
      DO 10 I = 1, N
      IDATA = IDATA + 1
      IDMIN1 = IDATA - 1
      READ( 5,520 ) ID1, R(I)
      IF( ID1 - IDATA ) 21, 10, 21
   21 WRITE( 6,522 ) IDMIN1
      GO TO 62
   10 CONTINUE
      WRITE( 6,540 ) N
      DO 50 J = 1, N
      JJ = N - J
      WRITE( 6,543 ) JJ, R(J)
   50 CONTINUE
      WRITE( 6,551 ) CKI
   60 CONTINUE
      RETURN
  520 FORMAT( I2, F13.6 )
  522 FORMAT(1H1,9X,24HDATA CARD FOLLOWING CARD ,I2,17H IS OUT OF ORDER.
  5221            )
  530 FORMAT( F15.6 )
  540 FORMAT( 1H1 /
  54011HL,31X,59H------------ DESIRED CHARACTERISTIC POLYNOMIAL --------
  5402----      /58X,7H(INPUT)
  5403 / 1H0  /
  5404          1HK, 8X, 19H COEFFICIENT OF S**, I2, 9H  =    1.0          )
  543 FORMAT( 1HK, 8X, 19H COEFFICIENT OF S**, I2, 5H  =   , G12.5       )
  551 FORMAT( 1HL, 9X, 12HGAIN CK  =   , G12.5       )
   62 STOP
      END
```

```
$IBFTC ROOTR
      SUBROUTINE ROOTXX(A,R,NN)
C SUBROUTINE TO SOLVE POLYNOMIALS WITH NO ROOTS OF ORDER .GT.2
      COMPLEX CMPLX,CONJG,CSQRT,CZERO,CONE,A11,A12,A21,
     1A22,A31,A32,S1,S2,X,DX,TC,F0,F1,F2,R
      COMPLEX X2,TEMP
      DIMENSION A(1 ),R(1 )
      EQUIVALENCE (F0,A12),(F1,A22),(F2,A31),(TC,A11)
     1,(DX,A11),(S2,A32)
      DATA CZERO,CONE/(0.0,0.0),(1.0,0.0)/
     1,MAX,EPS/35,1.0E-7/
      N=NN
      DO 30 K=1,NN
      IF(A(N).NE.0.0) GO TO 40
      N=N-1
   30 R(K)=CZERO
      RETURN
   40 IF(N.EQ.1)GO TO 150
      IF(N.EQ.2) GO TO 160
      FN=FLOAT(N)
      NP1=N+1
      NM1=N-1
      FNM1=FLOAT(NM1)
      NP1=N+1
      KS=K
      ST1=A(N-1)/A(N)
      ST2=ST1*ST1-(A(N-2)+A(N-2))/A(N)
      ASSIGN 110 TO M1
   45 IF(K.GT.NN) RETURN
      KM1=K-1
      ASSIGN 70 TO M2
      DO 120 I=1,MAX
      GO TO M2,(70,50)
   50 A12=CONE
      A22=CONE
      A32=CONE
      DO 60 I=1,NM1
      A11=A12
      A12=A(I)+X*A11
      A21=A22
      A22=A12+X*A21
      A31=A32
   60 A32=A22+X*A31
      F2=A31+A31
      F0=A(N)+X*A12
      IF(REAL(F0).EQ.0.0.AND.AIMAG(F0).EQ.0.0)GO TO 130
      S1=F1/F0
      S2=S1*S1-F2/F0
      GO TO 80
   70 X=CZERO
      S1=CMPLX(ST1,0.0)
      S2=CMPLX(ST2,0.0)
      ASSIGN 50 TO M2
   80 GO TO M1,(110,90)
   90 DO 100 I=KS,KM1
      TC=1.0/(X-R(I))
      S1=S1-TC
  100 S2=S2-TC*TC
  110 IF((REAL(S1).EQ.0.).AND.(AIMAG(S1).EQ.0.)) GO TO 115
      TC=FN/S1
      DX=TC/(1.0+CSQRT(FNM1*(TC*S2/S1-1.0)))
      GO TO 116
```

```
115 DX=FN/CSQRT(FNM1*(FN*S2))
116 X=X-DX
    IF(REAL(CABS(DX))/REAL(CABS(X)).LE.EPS)GO TO 130
120 CONTINUE
    NN=KM1
    CALL ARERR(44H SUBROUTINE ROOTXX HAS FAILED TO CONVERGE. $)
130 ASSIGN 90 TO M1
    R(K)=X
    K=K+1
    IF(AIMAG(X).EQ.0.0.OR.K.GT.NN)GO TO 45
    R(K)=CONJG(X)
    K=K+1
    GO TO 45
150 R(K)=CMPLX(-A(1),0.)
    RETURN
160 X1=-.5*A(1)
    TEMP=A(1)*A(1)-4.*A(2)
    X2=.5*CSQRT(TEMP)
    R(K  )=X1+X2
    R(K+1)=X1-X2
    RETURN
    END
```

```
$IBFMC FC2FN
      SUBROUTINE FMTOFN( NA, A, AFTRN )
      DIMENSION A(10)
      SYMARG  A
      DIMENSION AFTRN(10)
      DO 100 J = 1, NA
      LET AFTRN(J) = EVAL A( J + 2 )
  100 CONTINUE
      RETURN
      END
```

REFERENCES

1. Schultz, D. G.; and Melsa, J. L.: State Functions and Linear Control Systems. McGraw-Hill Book Co., Inc., 1967.

2. Kalman, R. E.: When is a Linear Control System Optimal? J. Basic Eng., vol. 86, no. 1, Mar. 1964, pp. 51-60.

3. Brockett, Roger W.: Poles, Zeroes, and Feedback: State Space Interpretation. IEEE Trans. on Automatic Control, vol. AC-10, no. 2, Apr. 1965, pp. 129-135.

4. Schultz, Donald G.: Control System Design by State Variable Feedback Techniques. Vol. 1, Arizona University (NASA CR-77901), July 1966.

5. Graham, D.; and Lathrop, R. C.: The Synthesis of "Optimum" Transient Response: Criteria and Standard Forms. AIEE Trans., Part II, Applications and Industry, vol. 72, no. 9, Nov. 1953, pp. 273-288.

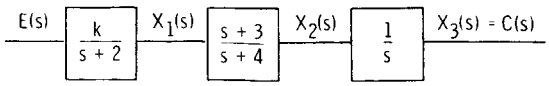

(a) Open-loop system.

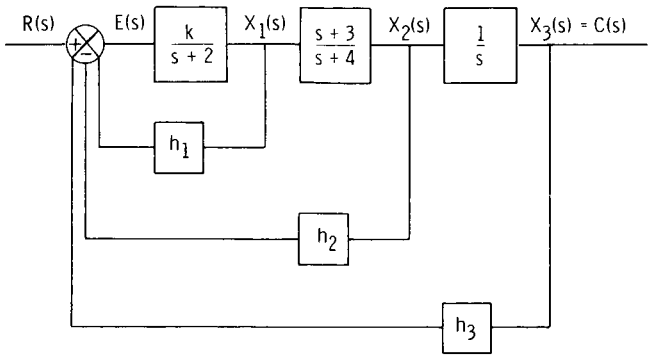

(b) Closed-loop system with state variable feedback.

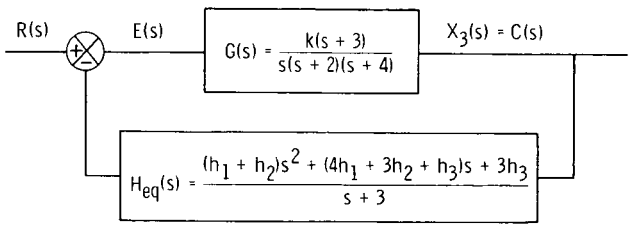

(c) Closed-loop system with equivalent feedback transfer function.

Figure 1. - Example problem.

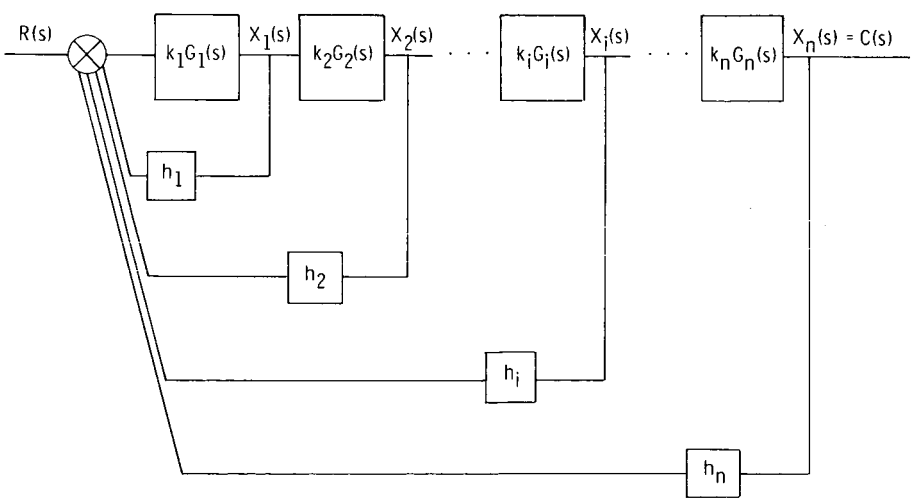

Figure 2. - Generalized block diagram for use in supplying program input data.

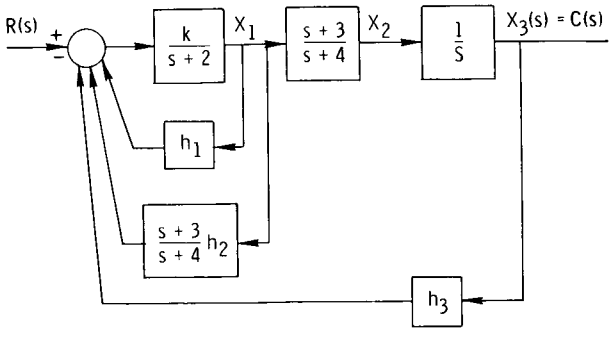

(a) Generation of $X_2(s)$ from $X_1(s)$.

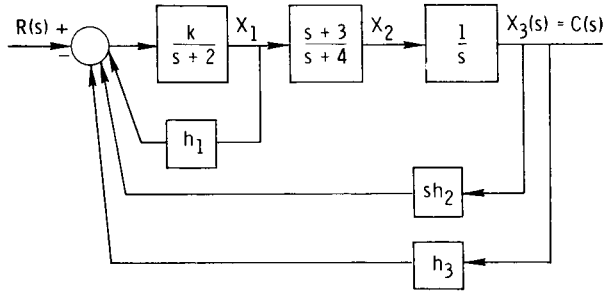

(b) Generation of $X_2(s)$ from $X_3(s)$.

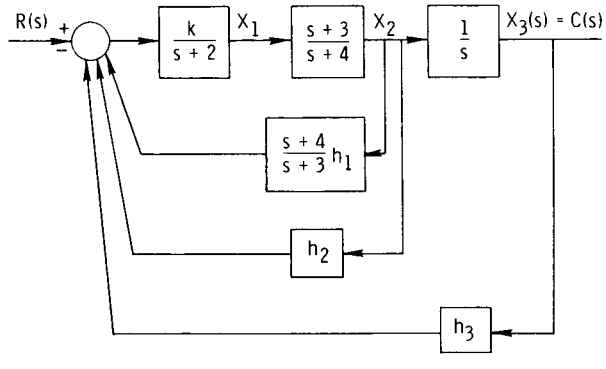

(c) Generation of $X_1(s)$ from $X_2(s)$.

Figure 3. - Generation of state variables by block diagram manipulation.

Input Data Sheet - State Variable Feedback

1 2 3 4 5 6 7 8 9 10 11 12 13 14 15 ←	16 to 80 →
Title (up to 79 characters)	
1	
KG	NN ND
0 1	
0 2	
0 3	
0 4	
0 5	
0 6	
0 7	
0 8	
0 9	
1 0	
1 1	
1 2	
1 3	
1 4	
1 5	
1 6	
1 7	
1 8	
1 9	
2 0	
±	
0 1	
0 2	
0 3	
0 4	
0 5	
0 6	
0 7	
0 8	
0 9	
1 0	

} Case I problems only

Figure 4. - Input data sheet.

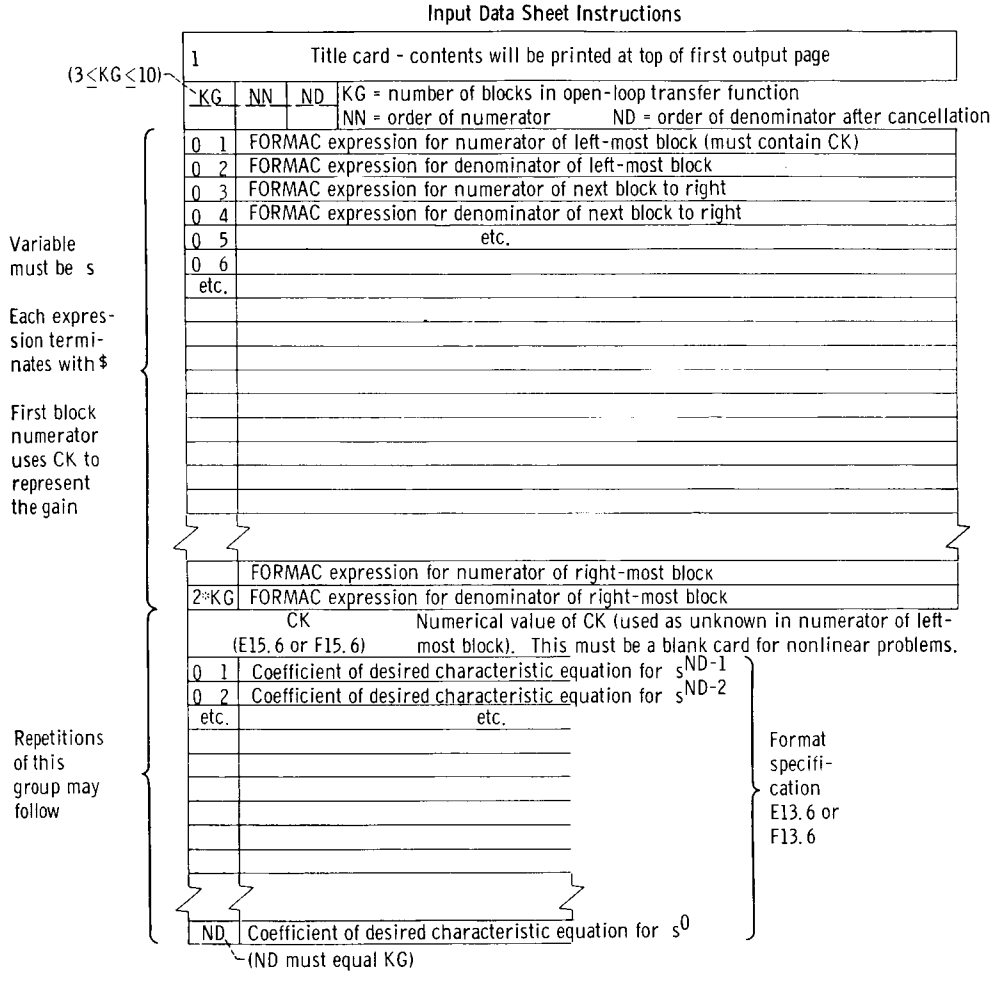

Figure 5. - Instructions for filling out input data sheet.

1 2 3 4 5 6 7 8 9 10 11 12 13 14 15 ← 16 to 80 →

Title (up to 79 characters)		
1 Example Problem Case I		
KG	NN	ND
03	01	03
01	CK$	
02	s+2.$	
03	s+3.$	
04	s+4.$	
05	1.$	
06	s$	
07		
08		
09		
10		
11		
12		
13		
14		
15		
16		
17		
18		
19		
20		
±	14.1667	
01	8	
02	23.5	
03	42.5	
04		
05		
06		
07		
08		
09		
10		

Case I problems only

(a) Case I.

Figure 6. - Example problem input data sheet.

Input Data Sheet - State Variable Feedback

1 2 3 4 5 6 7 8 9 10 11 12 13 14 15 ←	16 to 80 →
Title (up to 79 characters)	
1 Example Problem Case II	
KG / NN / ND	
03 / 01 / 03	
0 1	C K $
0 2	s r 2. $
0 3	s r B. $
0 4	s r 4. $
0 5	1. $
0 6	s $
0 7	
0 8	
0 9	
1 0	
1 1	
1 2	
1 3	
1 4	
1 5	
1 6	
1 7	
1 8	
1 9	
2 0	
±	
0 1	
0 2	
0 3	
0 4	
0 5	
0 6	
0 7	
0 8	
0 9	
1 0	

} Case I problems only

(b) Case II.

Figure 6. - Concluded.

```
EXAMPLE PROBLEM CASE I                                                                  1

                                    STATE VARIABLE FEEDBACK PROGRAM

                                 ------------ INPUT DATA ------------

                THE OPEN LOOP TRANSFER FUNCTION HAS  3 BLOCKS.

                THE NUMERATOR POLYNOMIAL OF C/R IS OF ORDER  1.

                THE DENOMINATOR POLYNOMIAL OF C/R IS OF ORDER  3.

     GN(I) AND GD(I) ARE THE NUMERATOR AND DENOMINATOR OF THE I-TH
     BLOCK COUNTING FROM LEFT TO RIGHT.

     GN( 1)  =    CK $

     GD( 1)  =    S + 2. $

     GN( 2)  =    S + 3. $

     GD( 2)  =    S + 4. $

     GN( 3)  =    1. $

     GD( 3)  =    S $
```

(a) Case I.

Figure 7. - Example problem output listing.

```
-------------HEQ AND C/R IN TERMS OF THE H(I) ------------


          NUMERATOR POLYNOMIAL OF HEQ

COEFFICIENT OF S** 2  =
                        H(1)+H(2)$

COEFFICIENT OF S** 1  =
                        4.0*H(1)+3.0*H(2)+H(3)$

COEFFICIENT OF S** 0  =
                        3.0*H(3)$


          DENOMINATOR POLYNOMIAL OF HEQ

COEFFICIENT OF S** 1  =
                        1.0$

COEFFICIENT OF S** 0  =
                        3.0$
```

(a) Continued.

Figure 7. - Continued.

```
                    (NUMERATOR POLYNOMIAL OF C/R)

COEFFICIENT OF S** 1  =
                        CK$
COEFFICIENT OF S** 0  =
                        3.0*CK$


        CHARACTERISTIC POLYNOMIAL - (DENOMINATOR POLYNOMIAL OF C/R)

COEFFICIENT OF S** 3  =
                        1.0$
COEFFICIENT OF S** 2  =
                        CK*H(1)+CK*H(2)+6.0$
COEFFICIENT OF S** 1  =
                        4.0*CK*H(1)+3.0*CK*H(2)+CK*H(3)+8.0$
COEFFICIENT OF S** 0  =
                        3.0*CK*H(3)$
```

(a) Continued.

Figure 7. - Continued.

```
------------ DESIRED CHARACTERISTIC POLYNOMIAL ------------
                          (INPUT)

COEFFICIENT OF S** 3  =   1.0
COEFFICIENT OF S** 2  =   8.00000
COEFFICIENT OF S** 1  =   23.5000
COEFFICIENT OF S** 0  =   42.5000

GAIN CK  =   14.1667

------------FEEDBACK COEFFICIENTS - H(I) ------------


H( 1)  =  -0.32941
H( 2)  =   0.47059
H( 3)  =   1.00000
```

(a) Continued.

Figure 7. - Continued.

---------- ZEROES OF THE CHARACTERISTIC EQUATION ----------

REAL PART	IMAGINARY PART
-3.87500	2.49687
-3.87500	-2.49687

---------- POLES OF THE CHARACTERISTIC EQUATION ----------

REAL PART	IMAGINARY PART
0	0
-2.00000	0
-4.00000	0

---------- ROOTS OF THE CHARACTERISTIC EQUATION (POLES OF C/R) FOR VARIOUS VALUES OF GAIN ----------
CK (DESIGN VALUE OF GAIN) = 14.1667

R/C CK	GAIN	REAL PART	IMAGINARY PART
0.10	1.41667	-0.84821	0
0.10	1.41667	-1.20966	0
0.10	1.41667	-4.14213	0
0.50	7.08335	-1.21421	1.78157
0.50	7.08335	-1.21421	-1.78157
0.50	7.08335	-4.57158	0
1.00	14.1667	-1.50000	2.50000
1.00	14.1667	-1.50000	-2.50000
1.00	14.1667	-5.00000	0
1.50	21.2500	-1.80056	2.92677
1.50	21.2500	-1.80056	-2.92677
1.50	21.2500	-5.39888	0
2.00	28.3334	-2.09816	3.20056
2.00	28.3334	-2.09816	-3.20056
2.00	28.3334	-5.80367	0
3.00	42.5001	-2.64531	3.46491
3.00	42.5001	-2.64531	-3.46491
3.00	42.5001	-6.70939	0
5.00	70.8335	-3.38401	-3.40093

(a) Continued.

Figure 7. - Continued

5.00	70.8335	-3.38401	3.40093
5.00	70.8335	-9.23199	0

---------- ZEROES OF C/R ----------

REAL PART	IMAGINARY PART
-3.00000	0

(a) Continued.

Figure 7. - Continued.

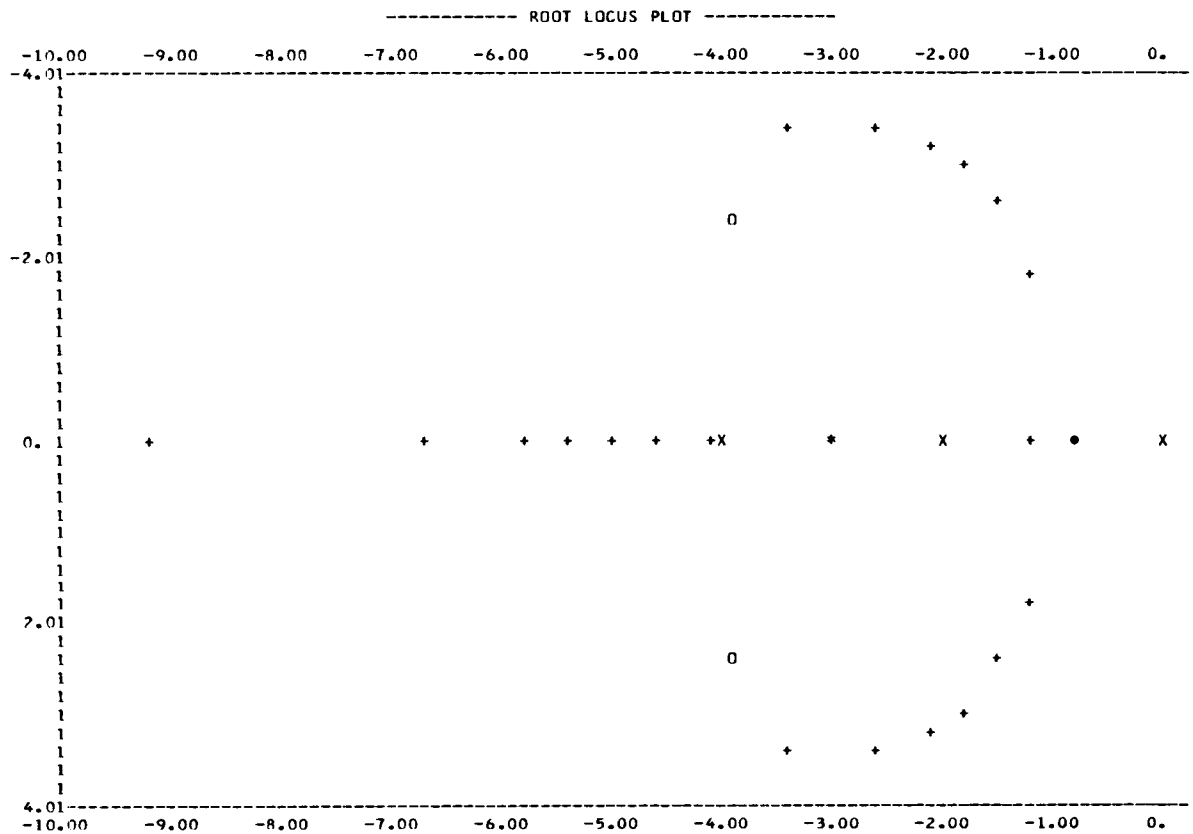

(2) O DENOTES A ZERO OF THE CHARACTERISTIC EQUATION
(3) X DENOTES A POLE OF THE CHARACTERISTIC EQUATION
(21) + DENOTES A ROOT OF THE CHARACTERISTIC EQUATION
(1) * DENOTES A ZERO OF C/R

(a) Concluded.

Figure 7. - Continued.

```
EXAMPLE PROBLEM CASE II

                                    STATE VARIABLE FEEDBACK PROGRAM

                                 ------------ INPUT DATA ------------

                 THE OPEN LOOP TRANSFER FUNCTION HAS  3 BLOCKS.

                 THE NUMERATOR POLYNOMIAL OF C/R IS OF ORDER  1.

                 THE DENOMINATOR POLYNOMIAL OF C/R IS OF ORDER  3.

      GN(I) AND GD(I) ARE THE NUMERATOR AND DENOMINATOR OF THE I-TH
      BLOCK COUNTING FROM LEFT TO RIGHT.

      GN( 1)  =    CK $

      GD( 1)  =    S + 2. $

      GN( 2)  =    S+B  $

      GD( 2)  =    S + 4. $

      GN( 3)  =    1. $

      GD( 3)  =    S $
```

(b) Case II.

Figure 7. - Continued.

```
-------------HEQ AND C/R IN TERMS OF THE H(I) ------------


          NUMERATOR POLYNOMIAL OF HEQ

COEFFICIENT OF S** 2  =
                        H(1)+H(2)$

COEFFICIENT OF S** 1  =
                        B*H(2)+4.0*H(1)+H(3)$

COEFFICIENT OF S** 0  =
                        B*H(3)$


          DENOMINATOR POLYNOMIAL OF HEQ

COEFFICIENT OF S** 1  =
                        1.0$

COEFFICIENT OF S** 0  =
                        B$
```

(b) Continued.

Figure 7. - Continued.

```
                    (NUMERATOR POLYNOMIAL OF C/R)

COEFFICIENT OF S** 1  =
                        CK$

COEFFICIENT OF S** 0  =
                        B*CK$


          CHARACTERISTIC POLYNOMIAL - (DENOMINATOR POLYNOMIAL OF C/R)

COEFFICIENT OF S** 3  =
                        1.0$

COEFFICIENT OF S** 2  =
                        CK*H(1)+CK*H(2)+6.0$

COEFFICIENT OF S** 1  =
                        B*CK*H(2)+4.0*CK*H(1)+CK*H(3)+8.0$

COEFFICIENT OF S** 0  =
                        B*CK*H(3)$
```

(b) Concluded.

Figure 7. - Concluded.

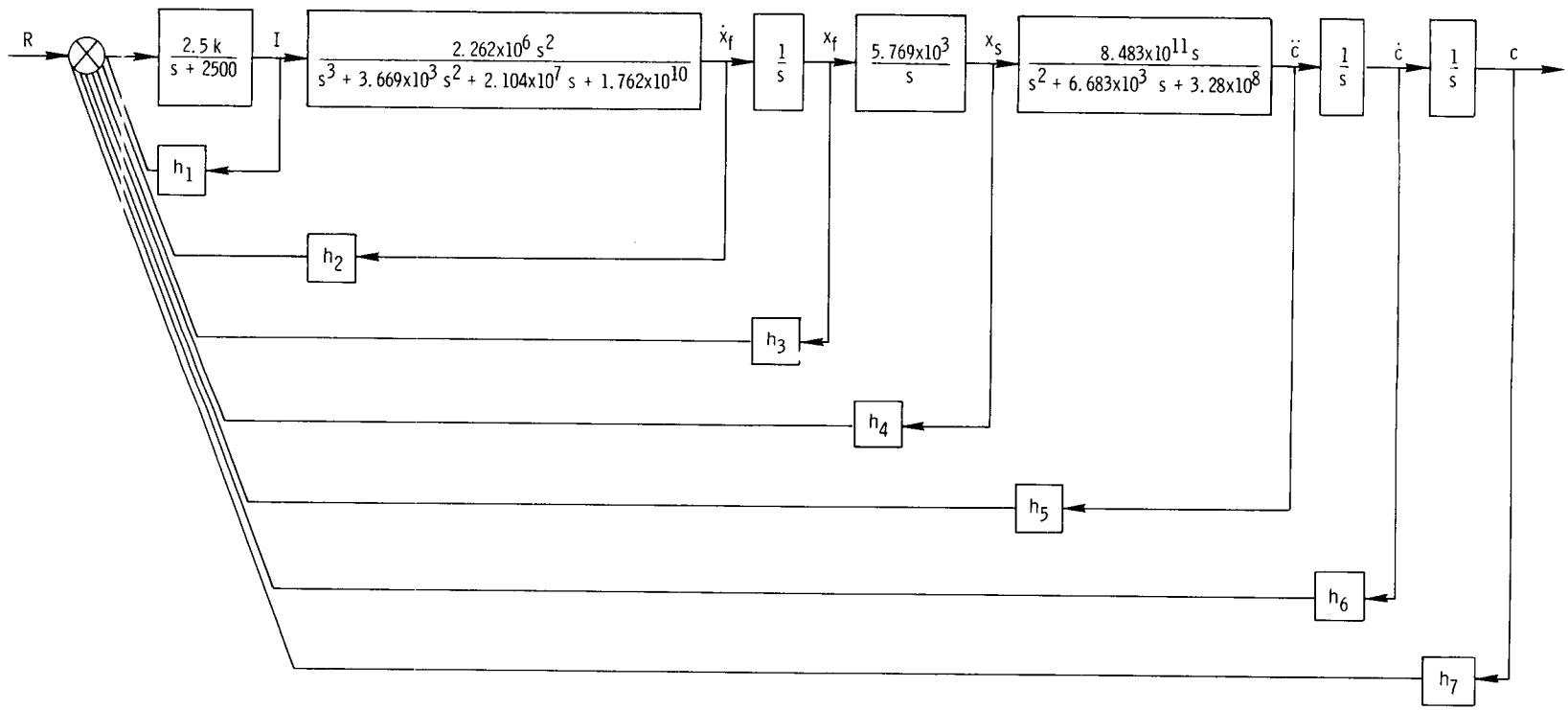

Figure 8. - Fuel valve control system showing state variable feedback.

Input Data Sheet - State Variable Feedback

1 2 3 4 5 6 7 8 9 10 11 12 13 14 15 ← 16 to 80 →

	Title (up to 79 characters)
1	Appendix A Problem

KG	NN	ND
07	00	07

01	CK * 2.5$
02	S + 2500.$
03	2.262E6 * S**2$
04	S**3+3.669E3 * S**2+2.104E7 * S+1.762E10$
05	1.$
06	S$
07	5.769E3 $
08	S$
09	8.483E11 * S $
10	S**2+6.683E3 * S+3.28E8 $
11	1.$
12	S $
13	1.$
14	S $
15	
16	
17	
18	
19	
20	

+	37036.	
01	20683.1	Case I problems only
02	.54656E9	
03	.61149E13	
04	.47720E17	
05	.24283E21	
06	.71789E24	
07	.10250E28	
08		
09		
10		

Figure 9. - Appendix A problem input data sheet.

```
APPENDIX A PROBLEM                                                                  1

                                  STATE VARIABLE FEEDBACK PROGRAM

                              ------------ INPUT DATA ------------

          THE OPEN LOOP TRANSFER FUNCTION HAS  7 BLOCKS.

          THE NUMERATOR POLYNOMIAL OF C/R IS OF ORDER  0.

          THE DENOMINATOR POLYNOMIAL OF C/R IS OF ORDER  7.

GN(I) AND GD(I) ARE THE NUMERATOR AND DENOMINATOR OF THE I-TH
BLOCK COUNTING FROM LEFT TO RIGHT.

GN( 1)  =    2.5   * CK $

GD( 1)  =    S + 2500.$

GN( 2)  =    2.262E6 * S**2 $

GD( 2)  =    S**3 + 3.669  E3 * S**2 + 2.104 E7 * S + 1.762 E10 $

GN( 3)  =    1.0 $

GD( 3)  =    S $

GN( 4)  =    5.769  E3 $

GD( 4)  =    S $

GN( 5)  =    8.483E11 * S $

GD( 5)  =    S**2 + 6.683 E3 * S + 3.28E8 $

GN( 6)  =    1.0E0 $

GD( 6)  =    S $

GN( 7)  =    1.0E0 $

GD( 7)  =    S $
```

Figure 10. - Appendix A problem output listing.

2

```
-------------HEQ AND C/R IN TERMS OF THE H(I) ------------


          NUMERATOR POLYNOMIAL OF HEQ

COEFFICIENT OF S** 6  =
                        H(1)$

COEFFICIENT OF S** 5  =
                        10352.0*H(1)+2262000.0*H(2)$

COEFFICIENT OF S** 4  =
                        3.73559922E8*H(1)+1.5116946E10*H(2)+2262000.0*H(3)$

COEFFICIENT OF S** 3  =
                        1.36166232E12*H(1)+7.41935998E14*H(2)+1.5116946E10*H(3)+1.30494779E10*H(4)$

COEFFICIENT OF S** 2  =
                        7.01887444E15*H(1)+7.41935998E14*H(3)+8.72096613E13*H(4)+1.10698721E22*H(5)$

COEFFICIENT OF S** 1  =
                        5.77935994E18*H(1)+4.28022876E18*H(4)+1.10698721E22*H(6)$

COEFFICIENT OF S** 0  =
                        1.10698721E22*H(7)$


          DENOMINATOR POLYNOMIAL OF HEQ

COEFFICIENT OF S** 0  =
                        1.10698721E22$
```

Figure 10. - Continued.

```
                    (NUMERATOR POLYNOMIAL OF C/R)

COEFFICIENT OF S** 0  =
                    2.76746802E22*CK$


          CHARACTERISTIC POLYNOMIAL - (DENOMINATOR POLYNOMIAL OF C/R)

COEFFICIENT OF S** 7  =
                    1.0$

COEFFICIENT OF S** 6  =
                    2.49999998*CK*H(1)+12852.0$

COEFFICIENT OF S** 5  =
                    25880.0*CK*H(1)+5655000.0*CK*H(2)+3.99439923E8$

COEFFICIENT OF S** 4  =
                    9.3389982E8*CK*H(1)+3.77923649E10*CK*H(2)+5655000.0*CK*H(3)+2.2955621E12$

COEFFICIENT OF S** 3  =
                    3.40415575E12*CK*H(1)+1.85483998E15*CK*H(2)+3.77923649E10*CK*H(3)+3.26236948E10*CK*H(4)+1.042303
                    03E16$
COEFFICIENT OF S** 2  =
                    1.75471861E16*CK*H(1)+1.85483998E15*CK*H(3)+2.18(24153E14*CK*H(4)+2.76746802E22*CK*H(5)+2.332654
                    58E19$
COEFFICIENT OF S** 1  =
                    1.44484E19*CK*H(1)+1.07005719E19*CK*H(4)+2.76746802E22*CK*H(6)+1.44483997E22$

COEFFICIENT OF S** 0  =
                    2.76746802E22*CK*H(7)$
```

Figure 10. - Continued.

```
------------ DESIRED CHARACTERISTIC POLYNOMIAL ------------
                          (INPUT)

COEFFICIENT OF S** 7  =   1.0
COEFFICIENT OF S** 6  =   20683.1
COEFFICIENT OF S** 5  =   0.54656E 09
COEFFICIENT OF S** 4  =   0.61149E 13
COEFFICIENT OF S** 3  =   0.47720E 17
COEFFICIENT OF S** 2  =   0.24283E 21
COEFFICIENT OF S** 1  =   0.71789E 24
COEFFICIENT OF S** 0  =   0.10250E 28

GAIN CK  =   37036.0

------------FEEDBACK COEFFICIENTS - H(I) ------------

H( 1)  =   0.84578E-01
H( 2)  =   0.31539E-03
H( 3)  =   2.16051
H( 4)  =   1.60813
H( 5)  =   0.30555E-08
H( 6)  =   0.20356E-04
H( 7)  =   1.00004
```

Figure 10. - Continued.

---------- ZEROES OF THE CHARACTERISTIC EQUATION ----------

REAL PART	IMAGINARY PART
-2739.25	-4587.53
-2739.25	4587.53
-3312.81	1732.98
-3312.81	-1732.98
-3341.46	-17799.8
-3341.46	17799.8

---------- POLES OF THE CHARACTERISTIC EQUATION ----------

REAL PART	IMAGINARY PART
0	0
-955.121	0
-2500.00	0
-1356.94	4075.12
-1356.94	-4075.12
-3341.50	-17799.8
-3341.50	17799.8

---------- ROOTS OF THE CHARACTERISTIC EQUATION (POLES OF C/R) FOR VARIOUS VALUES OF GAIN ----------
CK (DESIGN VALUE OF GAIN) = 37036.0

% CK	GAIN	REAL PART	IMAGINARY PART
0.10	3703.60	-1071.48	2169.81
0.10	3703.60	-1071.48	-2169.81
0.10	3703.60	-926.507	4146.46
0.10	3703.60	-926.507	-4146.46
0.10	3703.60	-2956.13	0
0.10	3703.60	-3341.50	-17799.8
0.10	3703.60	-3341.50	17799.8
0.50	18518.0	-2354.54	2652.13
0.50	18518.0	-2354.54	-2652.13
0.50	18518.0	-835.053	5729.71
0.50	18518.0	-835.053	-5729.71
0.50	18518.0	-3705.32	0
0.50	18518.0	-3341.52	-17799.8
0.50	18518.0	-3341.52	17799.8
1.00	37036.0	-2879.19	-2669.60

Figure 10. - Continued.

1.00	37036.0	-2879.19	2669.60
1.00	37036.0	-1882.03	-6459.81
1.00	37036.0	-1882.03	6459.81
1.00	37036.0	-4477.59	0
1.00	37036.0	-3341.54	17799.8
1.00	37036.0	-3341.54	-17799.8
1.50	55554.0	-3236.82	-2563.80
1.50	55554.0	-3236.82	2563.80
1.50	55554.0	-2889.42	6340.22
1.50	55554.0	-2889.42	-6340.22
1.50	55554.0	-5663.08	0
1.50	55554.0	-3341.55	-17799.8
1.50	55554.0	-3341.55	17799.8
2.00	74072.0	-3437.67	-2348.67
2.00	74072.0	-3437.67	2348.67
2.00	74072.0	-3396.98	5712.98
2.00	74072.0	-3396.98	-5712.98
2.00	74072.0	-8161.80	0
2.00	74072.0	-3341.55	-17799.8
2.00	74072.0	-3341.55	17799.8
3.00	0.11111E 06	-3237.85	-5001.33
3.00	0.11111E 06	-3237.85	5001.33
3.00	0.11111E 06	-3466.32	2057.59
3.00	0.11111E 06	-3466.32	-2057.59
3.00	0.11111E 06	-3341.54	-17799.8
3.00	0.11111E 06	-3341.54	17799.8
3.00	0.11111E 06	-16253.9	0
5.00	0.18518E 06	-2994.95	-4756.81
5.00	0.18518E 06	-2994.95	4756.81
5.00	0.18518E 06	-3409.79	1892.65
5.00	0.18518E 06	-3409.79	-1892.65
5.00	0.18518E 06	-3341.51	-17799.7
5.00	0.18518E 06	-3341.51	17799.7
5.00	0.18518E 06	-32515.0	0

---------- ZEROES OF C/R ----------

REAL PART	IMAGINARY PART

THERE ARE NONE

Figure 10. - Continued.

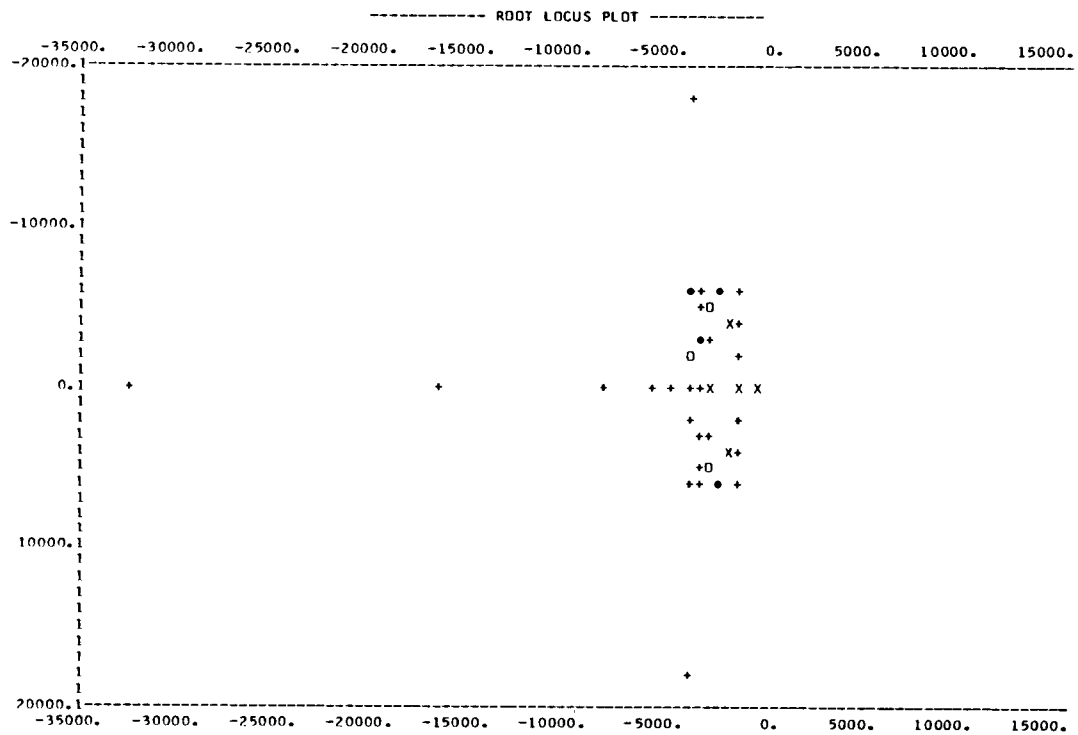

(6) O DENOTES A ZERO OF THE CHARACTERISTIC EQUATION
(7) X DENOTES A POLE OF THE CHARACTERISTIC EQUATION
(49) + DENOTES A ROOT OF THE CHARACTERISTIC EQUATION
(0) * DENOTES A ZERO OF C/R

Figure 10. - Concluded.