OAK RIDGE NATIONAL LABORATORY
operated by
UNION CARBIDE CORPORATION
NUCLEAR DIVISION
for the
U.S. ATOMIC ENERGY COMMISSION

ORNL-TM-1879

COPY NO. - 134

DATE - Aug. 18, 1967

Neutron Physics Division

FLEXI-KLUDGE - A MULTI-PARAMETER NUCLEAR SPECTRUM SUMMING SYSTEM FOR THE PDP-8

B. W. Rust† and W. R. Burrus

ABSTRACT

FLEXI-KLUDGE is a system of PDP-8 programs for the on-line accumulation and summing of multi-parameter nuclear spectra. Pulse heights from four different detectors are brought into the computer together with flags which contain coincidence, pulser, and pile-up information. Upon initialization, the operator may impose conditions for the accumulation or summing of any of the four spectra. The result is a single dimensional 2048 channel pulse height distribution. A word and a half (18 bits) are used for the count storage for each channel. Routines are provided for typing out and integrating the spectrum between limits specified by the user and for displaying the spectrum on the oscilloscope. Routines are also provided for driving a Moseley X-Y plotter which is connected in parallel with the scope. The full 2048 channels are plotted on two 11 by 14 inch graphs in the form of an inked histogram in less than a minute. The primary purpose of the FLEXI-KLUDGE system is to aid in the routine testing and setting up of multi-parameter experiments.

This work Supported by the
NATIONAL AERONAUTICS AND SPACE ADMINISTRATION
Under Order R-104(1)

†Computing Technology Center, Oak Ridge Gaseous Diffusion Plant.

NOTICE This document contains information of a preliminary nature and was prepared primarily for internal use at the Oak Ridge National Laboratory. It is subject to revision or correction and therefore does not represent a final report.

LEGAL NOTICE

This report was prepared as an account of Government sponsored work. Neither the United States, nor the Commission, nor any person acting on behalf of the Commission:

A. Makes any warranty or representation, expressed or implied, with respect to the accuracy, completeness, or usefulness of the information contained in this report, or that the use of any information, apparatus, method, or process disclosed in this report may not infringe privately owned rights; or

B. Assumes any liabilities with respect to the use of, or for damages resulting from the use of any information, apparatus, method, or process disclosed in this report.

As used in the above, "person acting on behalf of the Commission" includes any employee or contractor of the Commission, or employee of such contractor, to the extent that such employee or contractor of the Commission, or employee of such contractor prepares, disseminates, or provides access to, any information pursuant to his employment or contract with the Commission, or his employment with such contractor.

I. BRIEF DESCRIPTIONS OF THE DATA BREAK CONTROL

Data from the pulse-height analyzers enter the interface through the data break control which multiplexes 48 bits into four successive computer words. The "alert pulse" signals the computer when 48 bits are waiting to be inputted. Words are stacked in a buffer region of core whose origin and length are controlled by hardware switches. The buffer region can be either 256_{10} (400_8) or 512_{10} (1000_8) words long. If the length switches are set for a 256 word buffer then the origin switches can be set for any of the locations 0000, 0400, 1000, ... , 7400. For a 512 word buffer the possible origins are 0000, 1000, 2000, ... , 7000. The programs described in this report were originally written to use a 256 word buffer beginning in core location 1000 but they were later changed so that they use only the first 40_8 locations in this buffer leaving the remaining 340_8 locations for more programs. Switches are also available for controlling the number of words per event and these can be set for any of the numbers 1, 2, 3, or 4. These programs are designed for 4 words per event. The 4 words are referred to in the programs and in this report as words T, B, C, and D though sometimes word T may also be referred to as word G or occassionally as word A. As the 4 words for each new event come into the buffer, an address counter is counted up by 4 so that the next event will occupy the next 4 words in the buffer. This address counter works in a circular fashion so that it starts again at the beginning of the buffer when the end of it is reached. To prevent the data buffer from filling up and new events being written over all events which have not yet been processed the data break contains an up-down counter which counts up the new words coming in and can be counted down by the program as old words are taken out of the buffer and processed. If the data rate becomes fast enough that the data buffer fills up faster than the program can empty it out, then each time the buffer is completely filled with unprocessed data the up-down counter overflows and this condition stops new data from coming in until some of the old data has been removed and the up-down counter counted down by the program.

The following machine instructions are used for program control of the data break:

BADCLR Break control ADdress counter CLear -- sets the address counter to the address of the first word in the buffer region so that the buffer will start at the position given by the hardware switches.

BABLE Break enABLE in Break control -- enable the data break and allows data to start coming in.

BDISAB Break DISABle in Break control -- disables the data break and stops the data from coming in.

UDCLR Up-Down CLeaR -- clears the up-down counter and issues an accepted pulse to the interface.

UDSOFL Up-Down counter Skip on OverFLow -- causes the computer to skip the next instruction if the up-down counter is in the overflowed condition.

UDSUB1 Up-Down counter, SUB 1 -- subtracts 1 from the up-down counter.

UDSUB2 Up-Down counter, SUB 2 -- subtracts 2 from the up-down counter.

UDSUB3 Up-Down counter, SUB-3 -- subtracts 3 from the up-down counter.

All of the circuits except for the address counter are reset by the POWER CLEAR which accompanies the start switch on the computer and by the clear signal generated by the UDCLR pulse.

The four signals that the programs are concerned with are denoted T, B, C, and D. The B, C, and D signals are the digitized amplitudes of the energy loss in a series of 3 detectors in a telescope arrangement. The incident particle first goes through B, then T, then D. It is possible for the signal to stop in B or C or D but not to go through them all. The electronics are set up so as to give a constant energy loss per channel in each detector. Thus the sum of energy loss in the telescope is B + C + D. If only the first two detectors are penetrated, D = 0 so that the total energy loss is just B + C. The T signal is derived from the time that it takes for the particle to go from the target to the B Detector. This information is of interest only if the particle stops in B so that signals are not available from C and/or D.

Figure 1 is a schematic diagram of the 48 bits of input. For each 12 bit word the first bit (labelled OV) is an overflow bit. The bits labelled F1, F2, F3, etc. are flag bits and the bits labelled D1, D2, D3, etc. are data bits. The flag bits serve the following purposes:

F1 -- a coincidence flag which is set to one if the particle goes through the hole in the collimator and causes signals from both the B and C detectors,

F2 -- a coincidence flag which is set to one if the particle goes through the hole in the collimator and causes signals from the C, and D detectors thus having passed through B and C and into D,

F3 -- a flag which the logic hardware sets to one for every event so that the programs can test that bit location in the data buffer to tell whether or not an event has been inputted,

F4 -- a pile-up indicator flag which is set to one whenever two or more events are recorded within 30 microseconds of each other and would cause an invalid signal,

F5 -- an extra flag which does nothing at the present time but may be used for some other purpose later,

F6 -- a flag which is set to one for pulser events which are fixed pulse-height pulses used for checking the stability of the system.

II. OPERATING INSTRUCTIONS

The normal starting address is location 200. The program clears all the buffers and starts taking data. The scope display combines groups of two channels (i.e. 2 x 50 keV = 100 keV). The vertical scale may be changed from the keyboard. Hit 0 to give full scale of 128, 1 to give full scale of 256, 2 to give full scale of 512, etc.

Other starting locations are:

0377 -- a restart location which causes the program to clear the input buffer but not the spectrum and then to continue taking data,

Word 0 (T) Time of Flight [sometimes called (G) Garbage]

OV	F6	F4	F3	D1	D2	D3	D4	D5	D6	D7	D8

Word 1 (B) B Detector

OV	F2	F5	D1	D2	D3	D4	D5	D6	D7	D8	D9

Word 2 (C) C Detector

OV	F1	D1	D2	D3	D4	D5	D6	D7	D8	D9	D10

Word 3 (D) D Detector

OV	D1	D2	D3	D4	D5	D6	D7	D8	D9	D10	D11

Fig. 1. Schematic diagram of the four words of each event.

0177 -- an entry which enables the user to specify new flag and summing options for the program;

The options available are:

Sw. Reg. Bit 0	Proceed if Pile-up flag is 0	(U0)
Sw. Reg. Bit 1	Proceed if Pile-up flag is 1	(U1)
Sw. Reg. Bit 2	Proceed if Pulser flag is 0	(T0)
Sw. Reg. Bit 3	Proceed if Pulser flag is 1	(T1)
Sw. Reg. Bit 4	Proceed if Flag 1 is 0	(C0)
Sw. Reg. Bit 5	Proceed if Flag 1 is 1	(C1)
Sw. Reg. Bit 6	Proceed if Flag 2 is 0	(D0)
Sw. Reg. Bit 7	Proceed if Flag 2 is 1	(D1)
Sw. Reg. Bit 8	Sum Detector B	(B)
Sw. Reg. Bit 9	Sum Detector C	(C)
Sw. Reg. Bit 10	Sum Detector D	(D)

(The standard option is to ignore all flags and sum all three detectors. To change the option start the program at location 177. The program will halt. Set the key switches for the desired option and hit continue to clear all buffers and start taking data just as in a normal start.),

0100 -- an entry for printing between limits in core subject to a tolerance level (The computer halts 3 times -- for the first location to print, the last location to print, and the tolerance level to be keyed in. The program prints the contents of the memory between the specified limits in rows of ten numbers suppressing all those rows for which the sum of the numbers in the ten corresponding core locations is less than the specified tolerance. When the program is finished with the printing, the scope continuously plots the spectrum until it is stopped by the user.),

0120 -- an entry for continuously displaying the spectrum,

0460 -- an entry for summing between limits in core (The

computer stops twice for the limits to be keyed in and then prints the two limits and the sum of all the locations between them. It then stops with 7777 in the AC.),

0001 -- an entry for calibrating the Moseley plotter (The program reads the number in the switch register and positions the pen accordingly. When the number in the switch register is 1777 the pen goes to the point X = 12.725 in., Y = 9.990 in. To adjust the plotter, first set the switches to 1000 and use the zero controls to set X and Y at half scale. Then set the switches to 0000 and use the gain controls to set X and Y to zero. Repeat the above two steps until the procedure converges.),

1040 -- the entry for Moseley plotting. To use the Moseley plotter first make sure the plotter is calibrated. Then raise the pen and insert the graph paper. Start the program at 1040 and the computer will stop. Lower the pen, hit continue and the first 1048 channels will be printed out in groups of two channels with 40 groups/inch. The computer will stop after the last channel is plotted. Raise the pen, remove the graph paper and put in a new sheet leaving the pen up. Hit continue and the computer will stop again. Lower the pen and hit continue to plot the last 1048 channels. The computer will stop after plotting the last channel. Raise the pen and remove the paper. Reload the paper for the next graph leaving the pen up.

III. CORE STORAGE USED BY THE FLEXI-KLUDGE SYSTEM

Locations	Contents
0000 -- 0010	Calibration program for the Moseley plotter.
0011 -- 0017	Option switches for subroutine DETEC.
0020 -- 0044	Page zero pointer used for addressing across pages.

Locations	Contents
0045 -- 0076	Subroutine ANTFRZ (the anti-freeze subroutine).
0100 -- 0122	CALLP, the main program for calling the channel printing routine (CHPRNT).
0124 -- 0152	Subroutine INIT.
0153 -- 0176	Subroutine SET1.
0177 -- 0361	KLUDGE, the main program for data acquisition.
0362 -- 0372	Subroutine COMAND.
0374 -- 0377	Invariant points for KLUDGE.
0400 -- 0456	Subroutine SCOPE.
0460 -- 0510	SUM, the main routine for integrating over specified channels.
0511 -- 0574	Subroutine SUMM.
0575 -- 0577	Subroutine SUMP.
0600 -- 0776	Subroutine CHPRNT.
1000 -- 1037	Data buffer.
1040 -- 1046	MOE, main routine for Moseley plotting.
1047 -- 1160	Subroutine EANIE.
1161 -- 1177	Subroutine DELAY.
1200 -- 1267	Subroutine GRAPH.
1270 -- 1356	Subroutine DETEC.
1357 -- 1377	Subroutine TEST.
1400 -- 1540	Dan's CONVERT and DECODE routines, i.e. Subroutine PRINT.
1545 -- 1556	Subroutine LINEF.
1560 -- 1575	Subroutine TYPEO.
1600 -- 7577	Pulse height spectrum buffer.
	Note: When the program is first loaded, locations 1620 -- 1625 contain SCOPECAL, a straight line scope calibrating routine, but when KLUDGE is started the spectrum buffer is cleared and SCOPECAL is lost.

IV. PROGRAM DESCRIPTIONS

A. KLUDGE and ANTFRZ

KLUDGE is the main data acquisition program of the FLEXI-KLUDGE

system. When it is first started it jumps off to subroutine INIT which allows the user to specify the treatment of the various flags and to specify the detectors whose signals are to be summed in the pulse-height spectrum. After returning from INIT the program clears the 40_8 word data buffer and the spectrum buffer and initializes the hardware. The up-down counter is initially set to 1340 so that 8 events will cause an overflow in the 256 bit. The program then enters the data acquisition loop which constitutes most of the KLUDGE routine. In this main loop the program continually jumps off to subroutine ANTFRZ to check for new data in the data buffer. If ANTFRZ finds a new event it returns control to a location in KLUDGE which loads the AC with the address in the data buffer of the first word of the new event and then jumps off to subroutine DETEC which returns to KLUDGE with the AC containing the number of the channel to be incremented in the pulse-height spectrum. The pulse-height spectrum is stored in a 6000_8 word buffer beginning in location 1600 (see Fig. 2). Each channel is represented by a word and a half (18 bits) in the buffer giving 2048_{10} channels in all. Upon receiving the number of the channel to be incremented from DETEC, KLUDGE increments the corresponding 18-bit number in the buffer using the proper incrementing procedure according as the channel number is odd or even. KLUDGE then checks to see if it has reached the end of the 40-word data buffer. If it has it disables the data break, counts down the up-down counter by 40 (the up-down counter will be in the overflow condition when the program gets to the end of the data buffer and this will have stopped the data from coming in) and clears the address counter. It then enables the data break and jumps off to SCOPE to plot a channel on the oscilloscope. If the program has not reached the end of the data buffer it skips the re-initialization of the hardware and jumps to SCOPE. Whenever ANTFRZ fails to find a new event it returns control to KLUDGE in this same location where it jumps off to SCOPE. Upon returning from SCOPE, KLUDGE jumps off to COMAND to pick up any new scaling constant that might have been typed in by the user and then returns to the beginning of the loop to start the process again. If ANTFRZ ever fails to find new data in $20,000_8$ successive passes through the loop it types out

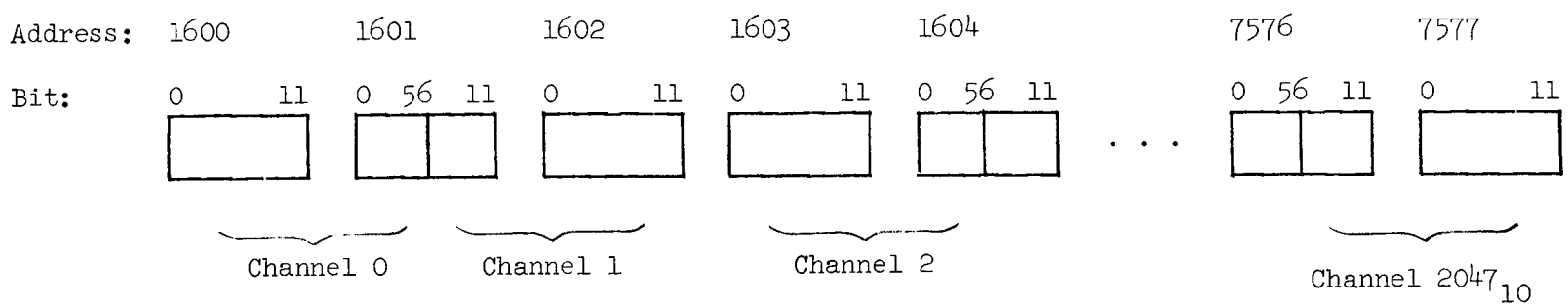

Fig. 2. Schematic Diagram of the Pulse-Height Spectrum Buffer.

an "F", rings the bell and jumps outside the loop to reinitialize everything except the spectrum buffer and then re-enters the loop.

B. INIT and SET1

INIT is a subroutine which is called by KLUDGE to enable the user to specify the flag options and to specify which of the detector signals are to be included in the sum whose spectrum is accumulated. Immediately after being called INIT stops for the user to set the switches for the desired options. The switch settings are described in the section on operating instruction. When the user sets the switches and hits continue INIT picks up the contents of the switch register and uses this to set a number of internal switches. These internal switches are:

Switch	Use
SWPILE	the pile-up flag switch,
SWPUL	the pulser flag switch,
SWFL1	the Flag 1 switch,
SWFL2	the Flag 2 switch,
SWB	the B detector switch,
SWC	the C detector switch,
SWD	the D detector switch.

INIT calls subroutine SET1 to set the first 4 of the above switches. Each of the four correspond to two keys in the switch register setting and SET1 unpacks those two keys and sets the internal switch to do whatever was specified by the key settings. If the first of the two keys is up and the second one is down the corresponding internal switch is set to +1, if the first key is down and the second key is up the switch is set to -1, and if both keys are up or if both are down the switch is set to 0. Switches SWB, SWC, and SWD are each set to 0 or +1 depending on whether the corresponding key switch is down or up. After setting all the switches described above INIT returns control to KLUDGE.

C. DETEC and TEST

DETEC is a subroutine called by KLUDGE each time a new event is found in the data buffer. Its purpose is to determine which channel

in the pulse-height spectrum should be incremented and to return this channel number to KLUDGE in the accumulator. It checks the status of the pulser flag, the pile-up flag, Flag 1, and Flag 2 for the event and takes the action specified by the flag switches which were set in subroutine INIT. To do this DETEC calls subroutine TEST four times, once for each of the above-mentioned flags. In each case, if the flag in question is 0 and the corresponding switch is -1 or if the flag is 1 and the corresponding switch is +1, TEST returns control to DETEC in a location which causes DETEC to return the highest possible channel number (2047_{10}) to KLUDGE. If all of the four flags are consistent with the switch settings specified by INIT then TEST gives a normal return to DETEC in each case and DETEC computes the channel number to return to KLUDGE by forming a sum of the signals from those detectors (B,C,D) whose corresponding switches (SWB,SWC,SWD) were set to +1 in INIT, not summing the detectors whose corresponding switches were set to 0. If there is an overflow in any of the detectors being summed or if the sum exceeds 2047_{10} (3777_8) DETEC returns 2047_{10} to KLUDGE which cause it to increment the highest possible channel.

D. SCOPE and COMAND

SCOPE is a subroutine for plotting the pulse-height spectrum. It is called periodically by KLUDGE, CALLP, and in the wait loop of TYPEO to plot a channel of the spectrum. The pulse-height spectrum contains 2048_{10} channels but the scope can plot only 1024_{10} distinct abscissas, so each time it is called SCOPE adds the next two adjacent channels and plots the sum as a single point. When the plot reaches the right hand limit of the scope it starts again at the beginning of the plot. The ordinates (counts accumulated in each pair of adjacent channels) are scaled by a scaling factor which can be changed by typing in a new one from the keyboard. All of the routines which use SCOPE also periodically call subroutine COMAND which checks to see if a new scaling constant has been typed in and which reads any such new scaling constant and stores it away in the proper location of SCOPE.

E. CALLP and CHPRNT

CALLP is the main routine for the channel print-out system. When the user starts the program at the beginning of CALLP, it disables the data break, initializes the printer, and halts for the user to key in the number of the first channel to print. When the first channel has been keyed in it halts again for the last channel mumber to be keyed in and then again for the tolerance level for printing to be keyed in. After picking up the two channel numbers and the tolerance level it jumps off to subroutine CHPRNT to do the printing. The calling sequence for CHPRNT is:

```
JMS I CHPRNT
YPOINT
CHN1
CHN2
TOLER
(CONTINUE)
```

where YPOINT is the address of the first location in the spectrum buffer, CHN1 is the number of the first channel to be printed, CHN2 is the number of the last channel to be printed, and TOLER is the tolerance level for printing. CHPRNT prints the channels between the specified limits in the following format:

DCNO CHO CH1 CH2 CH3 CH4 CH5 CH6 CH7 CH8 CH9 CH10

where DCNO is a channel number from the sequence 0, 10, 20, 30, ... and begins in the first column of the page, and CHO, CH1, ..., CH10 are the contents of channels DCNO through DCNO+9 and are printed as 6 digit numbers whose leading zeros are suppressed. If the sum of the channels in any decade is below the tolerance level then printing is suppressed for that decade. Before printing anything CHPRNT calls subroutine LINEF twice to space to a new line. CHPRNT calls subroutine SUMP which in turn calls subroutine SUMM to do the summing for each decade. For each decade whose channel sum exceeds the tolerance it calls subroutine PRINT 11 times -- once to print out the initial channel number and ten times to print the contents of the ten channels. After each decade has been

printed CHPRNT calls LINEF to space to a new line and after the last decade has been printed CHPRNT returns control to CALLP with the teleprinter spaced to a new line. When control is returned to it CALLP goes into a loop which continuously calls SCOPE and COMAND thus plotting the pulse-height spectrum until the user can decide what to do next.

F. PRINT and DECODE

PRINT is a subroutine called by CHPRNT and SUM to print out the decimal equivalents of various single and double precision machine numbers in various integer formats. If the number to be printed out is a double precision number PRINT should be called with the low order part of the number in the MQ and the high order part of the number in the AC. If the number is a single precision number it should go in the MQ and the AC should be cleared before calling PRINT. PRINT has 8 different entries, ENTRY1, ENTRY2, ENTRY3, ... , ENTRY8, each one corresponding to a different format for printing. ENTRY1 corresponds to a single digit format, ENTRY2 corresponds to a 2 digit integer format, ENTRY3 a 3 digit integer format, etc. The calling sequence for PRINT is:

```
JMS I PRINT
JMP I ENTRYn
(CONTINUE)
```

where ENTRYn is one of the eight possible entries.

Subroutine PRINT calls subroutine DECODE to convert the machine number to ASCII decimal digits and DECODE call subroutine TYPEO to print out each of the digits. DECODE operates on the principle that powers of ten in octal notation can be subtracted from an octal number to convert it to its decimal equivalent. When PRINT is called with ENTRYn in the calling sequence, the user is specifying an n-digit integer format and PRINT calls DECODE n times successively with the following calling sequences:

```
ENTRYn,    JMS        DECODE
           NNNN
           NNNN
```

```
ENTRYn-1,  JMS        DECODE
           MMMM
           MMMM
            .
            .
            .
ENTRY1,    JMS        DECODE
           7777
           7777
           (CONTINUE)
```

where NNNNNNNN is the double precision complement of 10 raised to the nth power, MMMMMMMM is the double precision complement of 10 raised to the (n-1)th power, ... , and 77777777 is of course the double precision complement of 10 raised to the zeroth power. Each time that DECODE is called from this sequence it prints out the digit of the number corresponding to that power of ten, suppressing the printing of leading zeros. If the user chooses a format that is not large enough to contain the number he wants printed, the program types out a slash (/).

PRINT and DECODE were written by Dan Putzulu (a Co-op student and a very clever fellow) and are the most subtle programs in the FLEXI-KLUDGE system. The user is cautioned against heavy-handed attempts to change these programs.

G. TYPEO and LINEF

TYPEO is a subroutine which is called by several of the programs in the FLEXI-KLUDGE system to print out characters on the teletype. It should be called with the character to be printed in the AC and it returns control to the calling program with the AC cleared. It also preserves the status of the link. TYPEO calls SCOPE in the wait loop for the teletype and also calls COMAND after emerging from the wait loop. LINEF is a subroutine which is called by various programs in the system to produce carriage returns and a line feeds on the teletype. It calls TYPEO to do the actual teletype commands. It returns to the calling program with a cleared AC and the link is preserved.

H. SUM and SUMM

SUM is the main program for integrating over specified channels. When it is first started it stops for the lower limit to be keyed in and then stops again for the upper limit. These two channel numbers are stored in invariant locations 0573 and 0574 and are picked up from these locations whenever the program needs to use them. These invariant locations are used by subroutine SUMM, the actual summing routine, and must contain the limits for summing whenever SUMM is called by programs other than SUM. The advantage of having these locations invariant is that it enables the user to change SUM and SUMM without having to change the programs on other pages which also use SUMM. After storing away the channel limits, SUM jumps off to LINEF and then jumps off to PRINT twice to print out the two limits. It then jumps to SUMM which computes the double precision sum of the contents of all the channels between the two specified in locations C1 and C2. SUMM returns control to the calling program (in this case SUM) with the low order part of the sum in the MQ and the high order part in the AC. When control is returned to SUM it jumps off to PRINT to print out the double precision sum in a 7 digit format and then stops with 7777 in the AC.

I. SUMP

SUMP is a dummy subroutine which is called by programs that want to use SUMM but which are located on other pages. Its locations are invariant (0575 - 0577) and SUMM can be changed without changing the programs on other pages which use it. Such a program must set the limits for summing in locations C1 and C2 (0573 and 0574) and then JMS to SUMP which in turn will JMS to SUMM.

J. EANIE, MOE, GRAPH, and DELAY

EANIE, MOE, GRAPH, and DELAY are a package of 4 routines for making histogram plots on a standard Moseley X-Y plotter. The Moseley plotter is connected in parallel with the standard Type 34 Oscilloscope Display through suitable isolating attenuators (with an attenuation factor of about 20 to 1). In order to plot on the Moseley plotter, the "spot" is

slowly moved across the scope. The pen on the Moseley plotter then moves in step with the "spot", except that the inertial reaction time is much greater than the deflection time of the scope. Therefore, a suitable delay is inserted after each change of Y coordinate and after each change of X coordinate so that the Moseley pen will come to rest before the next step.

In order to obtain adequate separation between channels, the full 2048 channel spectrum is plotted on two 10.00 by 13.3 inch pages of graph paper giving a total X axis length of 26.6 inches. This would result in 80 channels per inch, a spacing which would be too close to resolve visually, so that groups of two channels at a time are plotted with 40 groups per inch. This reduces the overall plotting time and is compatible with the way in which the normal oscilloscope display works so that it can use the same program steps to combine groups of two channels.

The MOE routine is the main routine of the sequence and consists of a call to EANIE for plotting the first page of graph, followed by another call to EANIE for plotting the second page.

EANIE makes a histogram of 512 bars in groups of two channels per bar. It picks up the origin of the 1024 channels to be plotted from the calling sequence in MOE and picks up the scale constant that is used in the standard oscilloscope display so that the scale of the graph will be the same as that displayed with the normal oscilloscope display. EANIE first positions the pen at the X-Y origin and halts for the paper to be inserted and the pen to be lowered. It then transfers control to GRAPH each time a step is to be added to the histogram. At the completion of the graph, a halt allows the paper to be removed and another piece inserted. If a prospective bar on the histogram is off-scale, EANIE truncates it by dropping off the high order bits so that a peak would "roll around" off the top and back onto the bottom of the graph. This tends to mess up the appearance of a graph when several plots are made on one page with different scale factors.

The GRAPH routine is responsible for moving the Moseley pen in the Y direction, then waiting for the Y motion of the pen to be completed,

then moving in the X direction, and finally waiting for the X motion to be completed. After the Y and X movements are finished, return is made to the calling sequence. In order to make the plot as rapidly as possible, a decision as to which of two delay strategies to use is made for each step. For small Y steps (when the curve is nearly flat), a fixed delay of about 15 ms is made following the Y motion and about 6 ms following the X motion. The tolerance for a small step and the Y and X delays are controlled by separate constants so that they can be easily adjusted to match the kinetics of a particular plotter. In the event of a large step which exceeds the tolerance, a variable time delay for the Y step is used depending upon the magnitude of the step. The delay length for this case is a fixed 16 ms plus an additional amount (up to about 500 ms) proportional to the Y step size. After the X step, a fixed delay of about 100 ms is introduced. The effect of this strategy is to "zip" along without much Y or X detail if the graph is changing very slowly, but to plot more deliberately in both the Y and X direction for rapidly varying plots. Two problems have been encountered. The first is that the Moseley plotter used tends to overshoot about 5% when making a step of several inches. The other is that the pen "slews" so fast on long steps that the ink does not flow uniformly. A solution to both these problems would be to generate many mini-steps which uniformly move the pen rather than a single step. The GRAPH routine was made a separate module so that this eventual refinement could be easily made.

The DELAY routine is a minimum length routine for inserting program delays into a computation. When DELAY is called, a sufficient number of steps are "looped" to kill the required time. The calling sequence is:

```
CLA
TAD N
JMS DELAY
  M
```

The value of M determines the number of repetitions of an inner loop. M = 1 produces the minimum delay and M = 7777 produces the maximum inner loop delay of about 18 ms (4095 times around). M = 0 produces 4096 times around! The number of repetitions of the inner loop is N-1. If

N = 0, the routine immediately returns with only a few cycles delay. The maximum delay that can be obtained is about a minute.

K. MOECAL

MOECAL is a simple routine which picks up the contents of the accumulator switches and loads both the X and Y buffers of the scope display system. The primary purpose is for calibration of the Moseley plotter which is connected in parallel with the scope. A time of about 18 ms is introduced between loading the buffers and looping around to read the switches again so that switching transients in the digital-to-analog converters will not occur sufficiently often to confuse the plotter. Instructions for the setting of the gain and zero controls are given in the program comments accompanying MOECAL. These instructions assume that the Moseley plotter is connected in parallel with the scope. The conventional manner of driving the scope is to use a differential input with the deflection on one side and with a "half-full-scale" signal on the other. It would simplify the calibration procedure specified for the Moseley plotter if the input were "single-ended" with the other side of the Moseley input grounded.

L. SCOPECAL

SCOPECAL is a minimum length routine for making a diagonal line on the Standard Type-34 Oscilloscope Display. First the brightness is set at the minimum level, and then the accumulator is loaded into the X and Y display buffers and the point intensified. Then the accumulator is kicked up one, and the buffers loaded again. Since the display ignores the two high order bits, the effect is to move the dot diagonally across the scope 4 times for every time the accumulator gets kicked completely around (4096 times).

ORNL DWG 67-8655

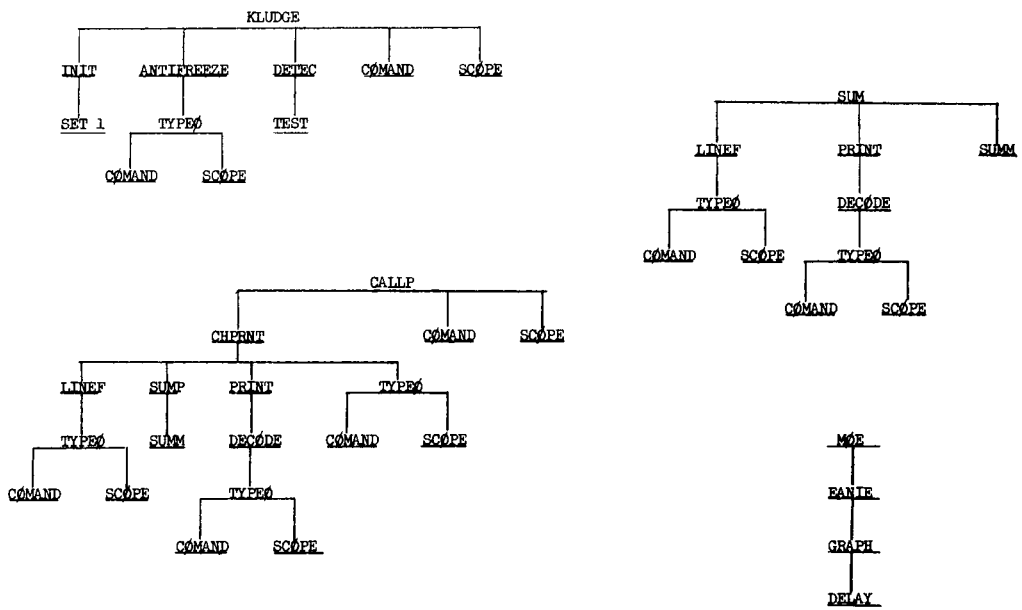

Fig. 3. Interrelations of the programs in the FLEXI-KLUDGE system.

ORNL DWG 67-8656

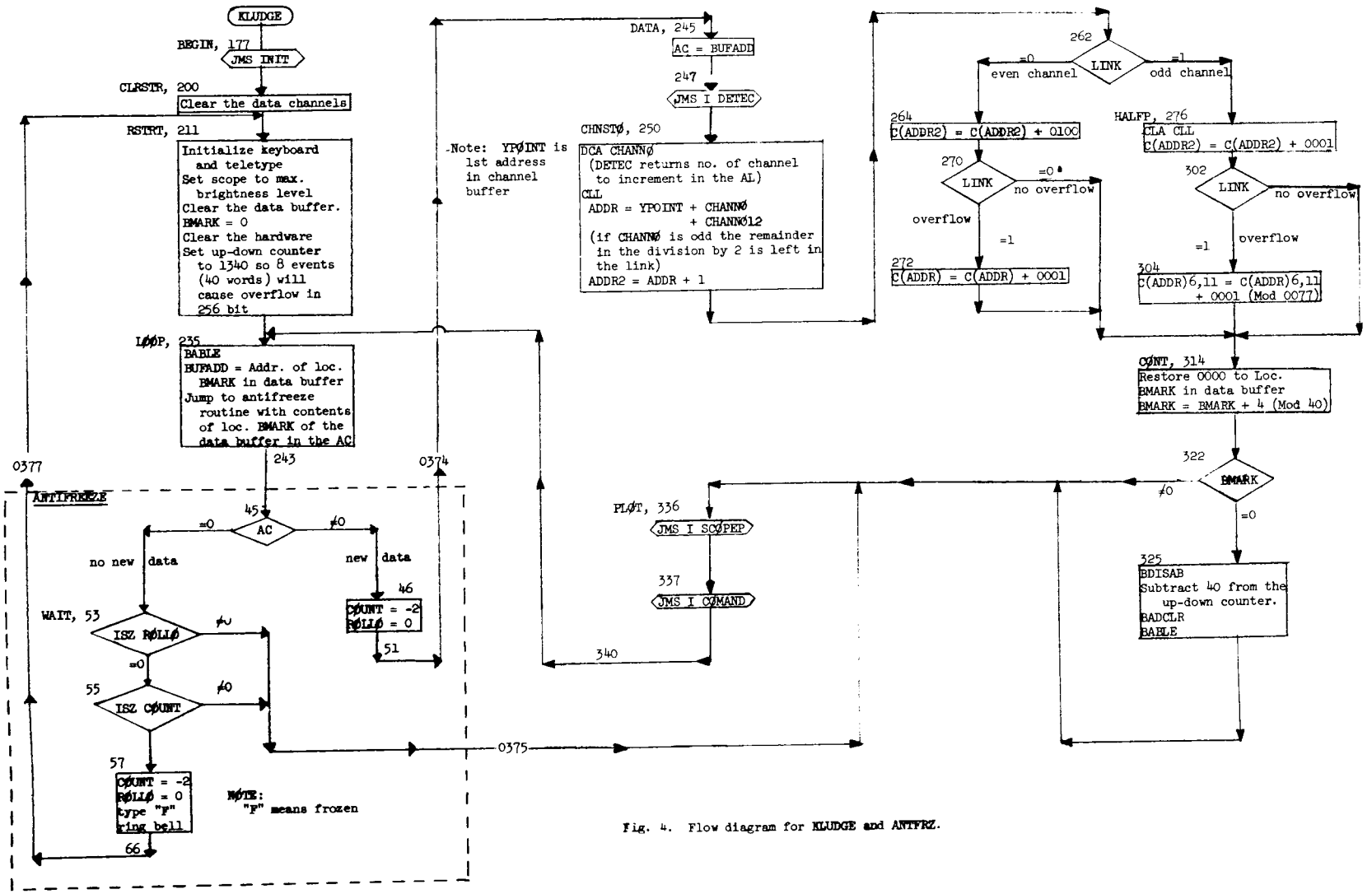

Fig. 4. Flow diagram for KLUDGE and ANTFRZ.

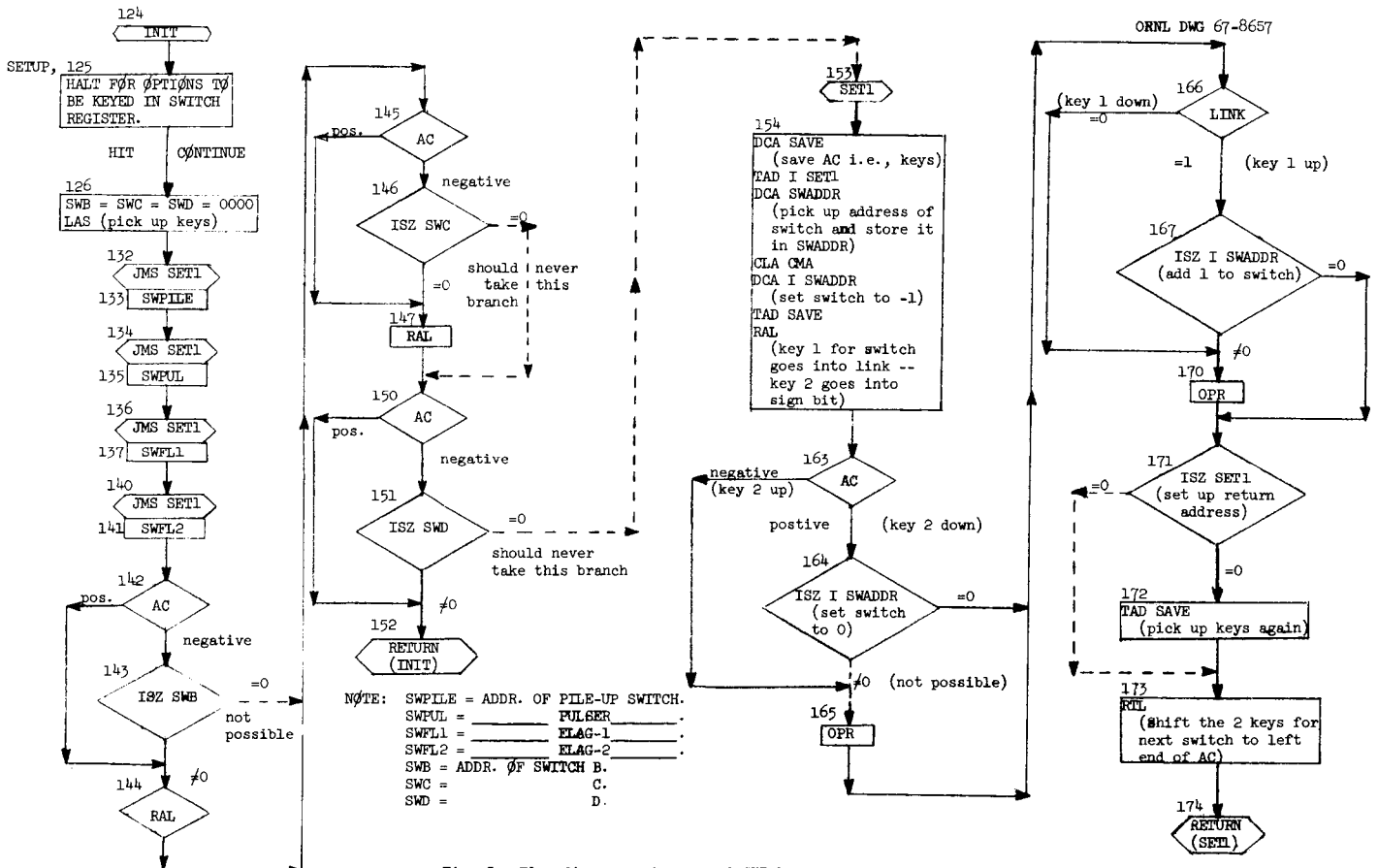

Fig. 5. Flow diagrams of INIT and SET 1.

ORNL DWG 67-8658

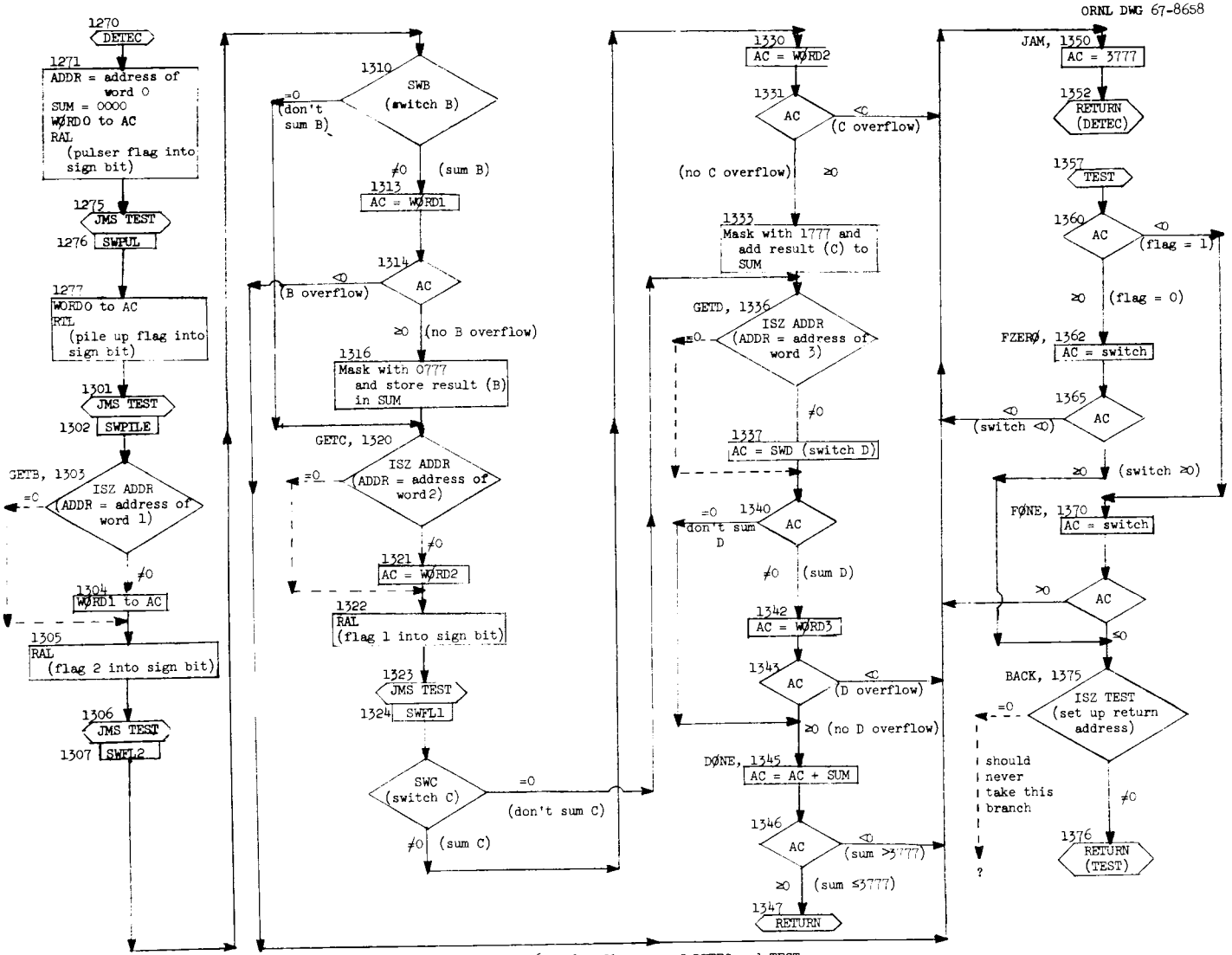

Fig. 6. Flow diagrams of DETEC and TEST.

ORNL DWG 67-8659

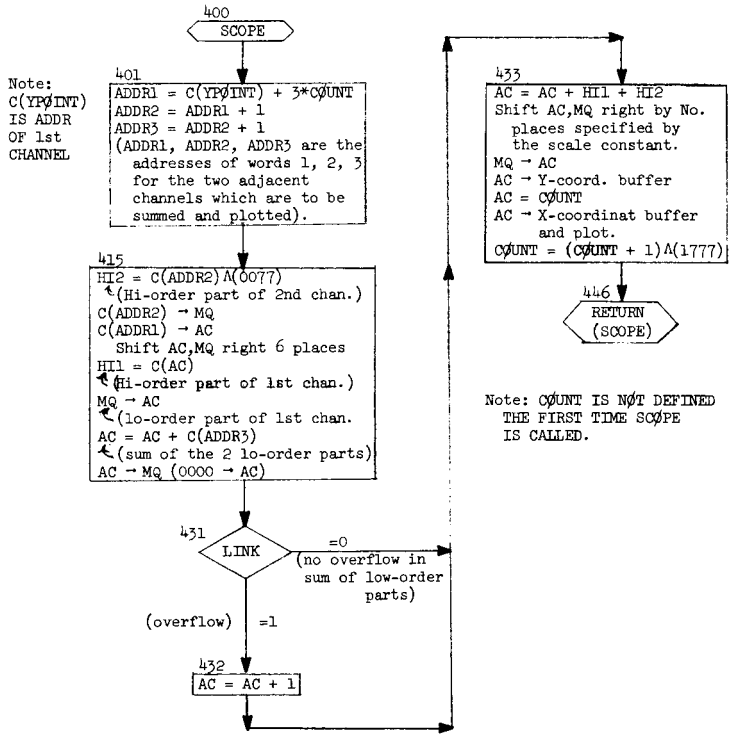

Fig 7. Flow diagram of SCØPE.

ORNL DWG 67-8660

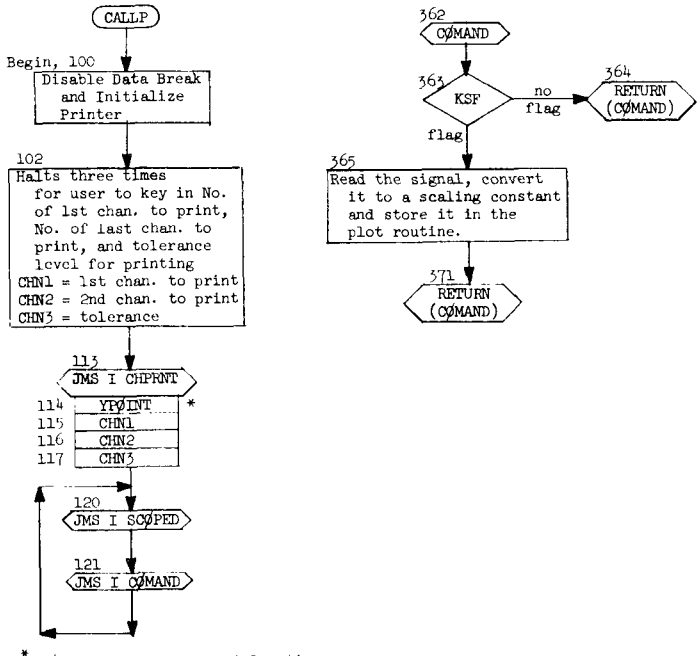

*YPØINT is address of 1st location in spectrum buffer (loc. 1600).

Fig. 8. Flow diagrams of CALLP and CØMAND.

ORNL DWG 67-8661

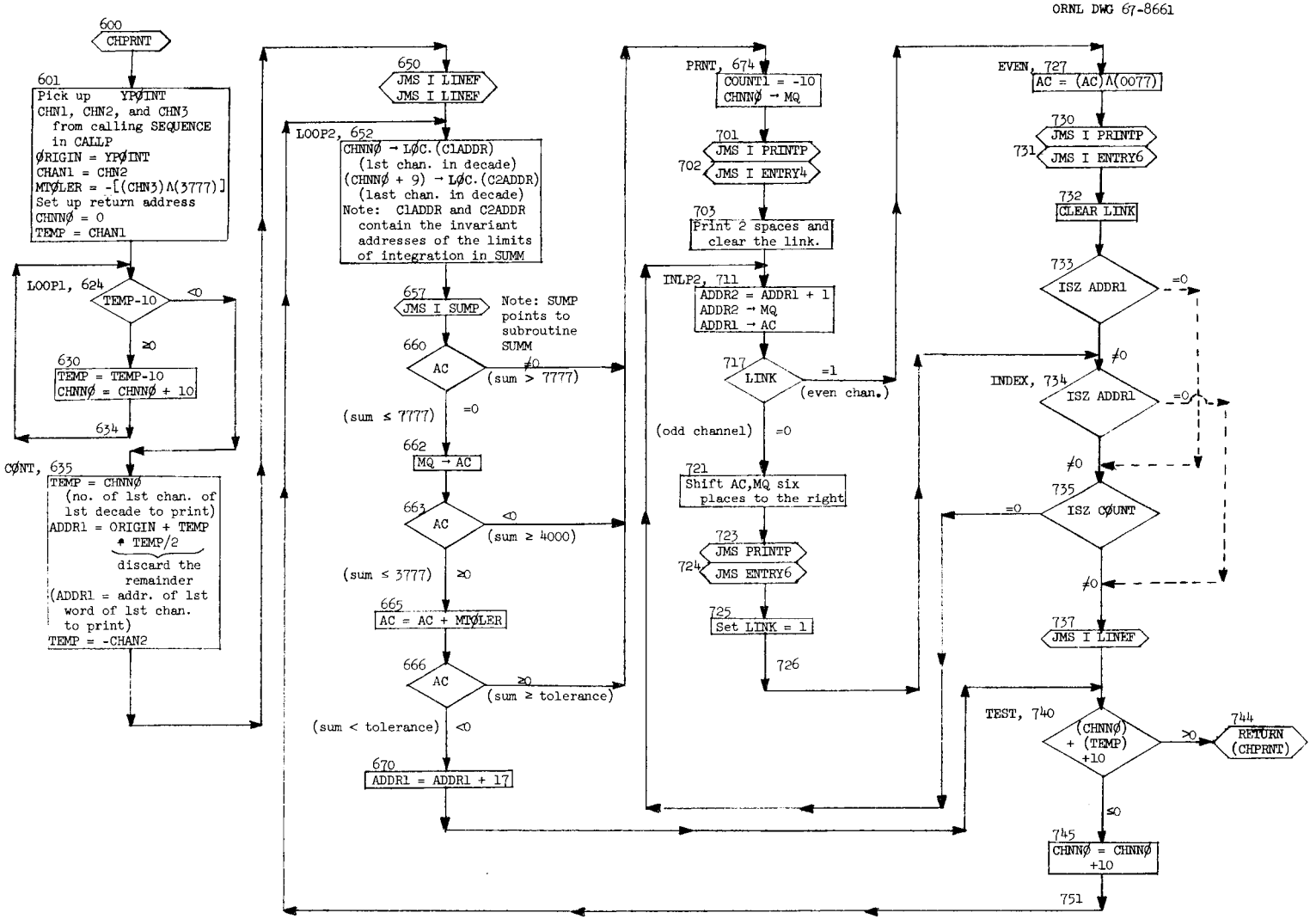

Fig. 9. Flow diagram of CHPRNT.

ORNL DWG 67-8662

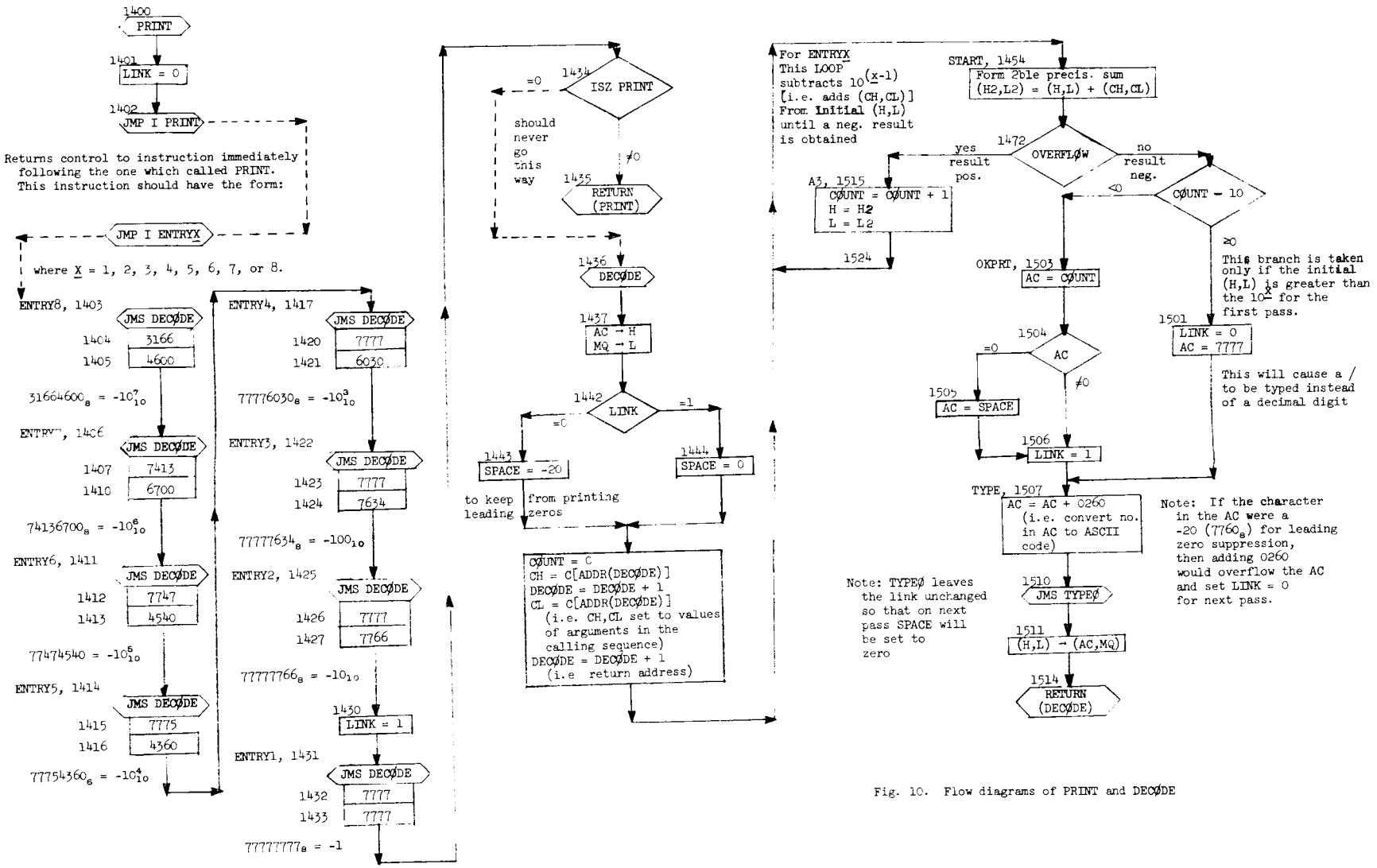

Fig. 10. Flow diagrams of PRINT and DECØDE

ORNL DWG 67-8663

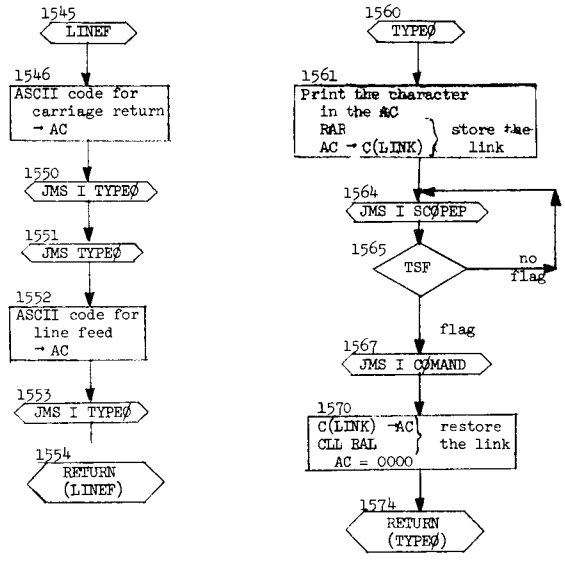

Fig. 11. Flow diagrams of LINEF and TYPEØ.

ORNL DWG 67-8664

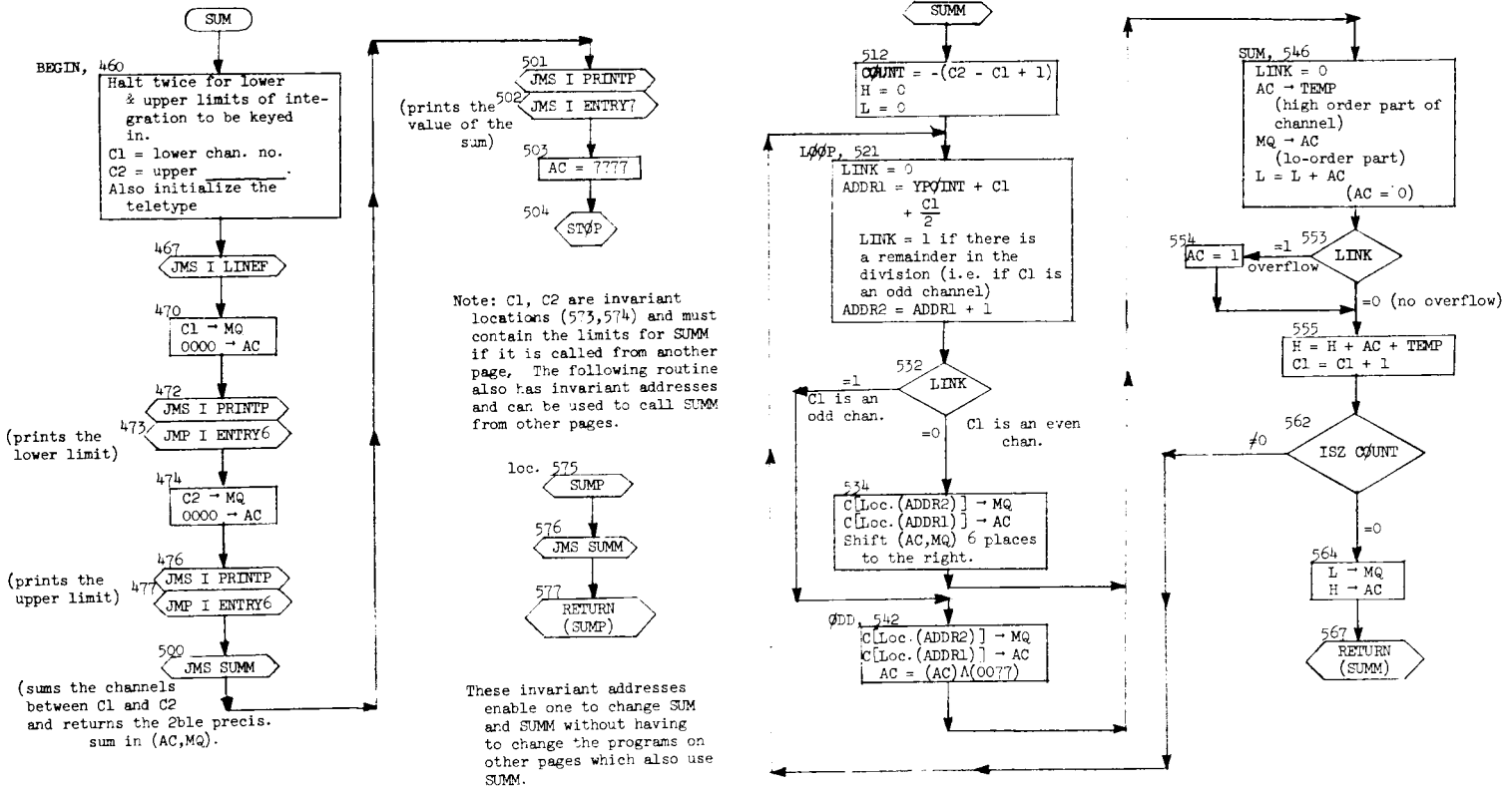

Fig. 12. Flow diagrams of SUM, SUMM, and SUMP

ORNL DWG 67-8665

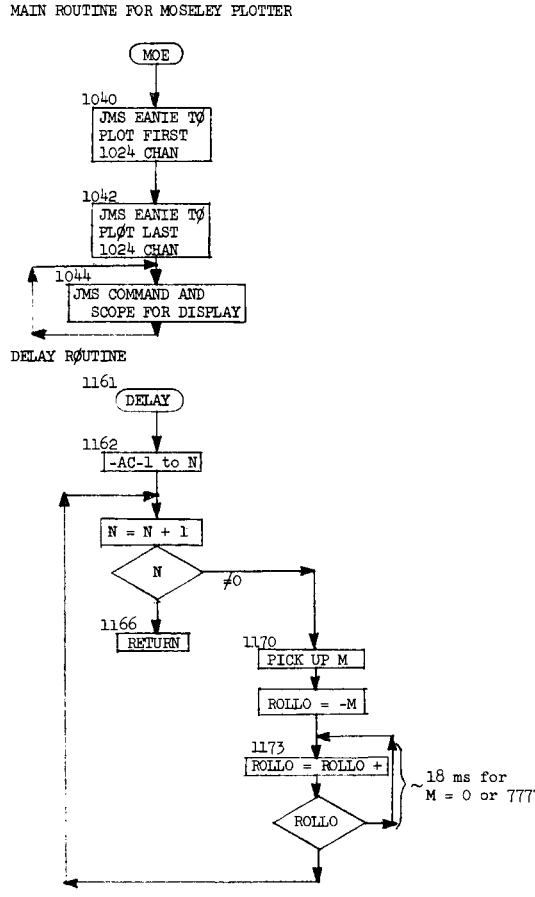

Fig. 13. Flow diagrams of MOE and DELAY.

ORNL DWG 67-8666

EANIE PLOTTING SUBROUTINE

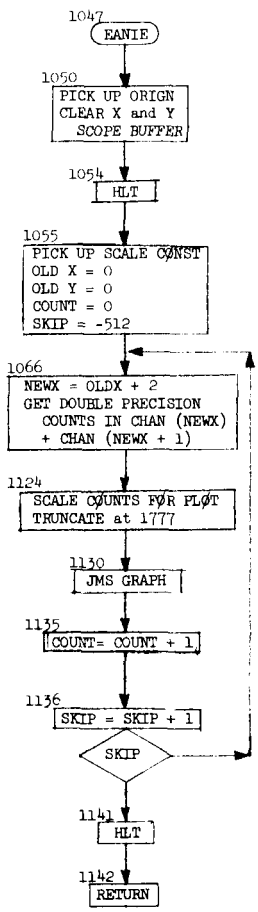

Fig. 14. Flow diagram of EANIE.

ORNL DWG 67-8667

PEN MOVING SUBROUTINE

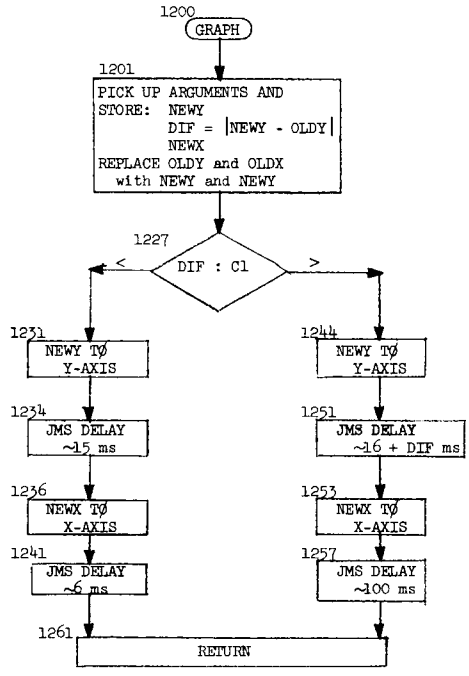

Fig. 15. Flow diagram of GRAPH.

ORNL DWG 67-8696

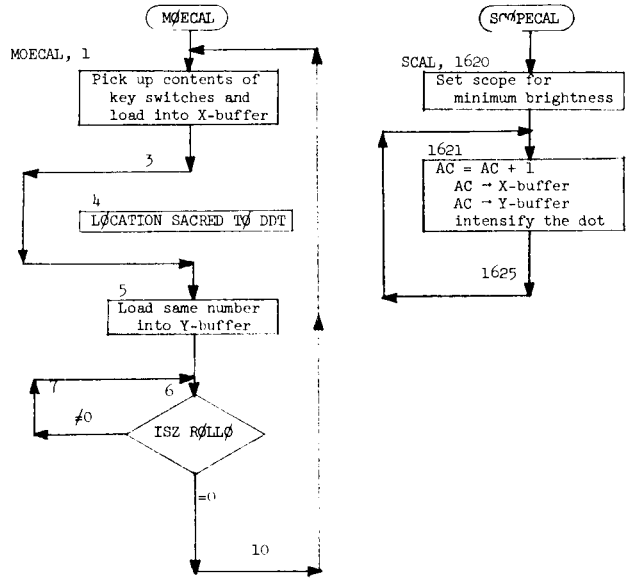

Fig. 16. Flow diagrams of MØECAL and SCØPECAL.

```
                /  MOECAL -- CALIBRATION PROGRAM FOR THE MOSELEY PLOTTER
                /  PROGRAM READS N FROM SWITCHES AND POSITIONS PEN
                /  WHEN N .EQ. 1777, THE PEN GOES TO X = 12.725 IN., Y = 9.990 IN.
                /  TO ADJUST PLOTTER, FIRST SWITCH IN N=1000(8) AND
                /                     USE ZERO CONTROLS TO SET X AND Y AT HALF SCALE.
                /
                /                     THEN SWITCH IN N = 0, AND USE
                /                     GAIN CONTROLS TO SET X AND Y ZERO.
                /  REPEAT THIS PROCEEDURE UNTIL IT CONVERGES.
                *0000
   0      0     ROLLO,  0000
   1   7604     MOECAL, LAS
   2   6053             DXL
   3   7410             SKP
   4      0             0000            /SACRED TO DDT
   5   6063             DYL
   6   2000             ISZ     ROLLO
   7   5006             JMP     .-1
  10   5001             JMP     MOECAL

SYMBOL TABLE

MOECAL        1
ROLLO         0

DUPLICATE TAGS

NONE

UNDEFINED SYMBOLS

NONE
```

```
                / OPTION SWITCHES FOR SUBROUTINE DETEC
                /
                /     THE VALUES OF THE SWITCHES CAN BE CHANGED BY THE SUBROUTINE
                /     INIT IN THE MAIN PROGRAM
                /
                *0011
  11      1     SWB,     0001     /UNLESS THE SWITCHES ARE CHANGED BY INIT
  12      1     SWC,     0001     /  THEY WILL BE SET TO ACCUMULATE AND
  13      1     SWD,     0001     /  PLOT (B+C+D) WITHOUT REGARD TO WHETHER
  14      0     SWPIL,   0000     /  THE FLAGS ARE 0 OR 1
  15      0     SWPUL,   0000
  16      0     SWFL1,   0000
  17      0     SWFL2,   0000

SYMBOL TABLE
SWB             11
SWC             12
SWD             13
SWFL1           16
SWFL2           17
SWPIL           14
SWPUL           15

DUPLICATE TAGS

NONE

UNDEFINED SYMBOLS
NONE
```

```
                /  SUPER KLUDGE SINGLE PARAMETER 18-BIT ROUTINE
                /
                / PERMANENT SYMBOLS
                /
                *0020
                /
  20    400     SCOPEP,  0400     /1ST LOC. IN SCOPE ROUTINE
  21   1600     YPOINT,  1600     /LOC. OF 1ST CHANNEL
  22   1000     BUFFP,   1000     /1ST LOC. IN BUFFER
  23    600     CHPRNT,  0600     /1ST LOC. IN CHAN. PRINT ROUTINE
  24   1400     PRINTP,  1400     /1ST LOC. OF DAN S PRINT ROUTINE
  25    200     BEGIN,   0200     /1ST LOC. IN KLUDGE ROUTINE
  26    377     RESTRT,  0377     /RESTART LOC. FOR KLUDGE ROUTINE
  27   1403     ENTRY8,  1403
  30   1406     ENTRY7,  1406
  31   1411     ENTRY6,  1411
  32   1414     ENTRY5,  1414
  33   1417     ENTRY4,  1417
  34   1422     ENTRY3,  1422
  35   1425     ENTRY2,  1425
  36   1431     ENTRY1,  1431
  37   1545     LINEF,   1545
  40   1560     TYPEO,   1560
  41   1270     DETEC,   1270
  42   1161     DELAY,   1161
  43    436     SCALE,   0436
  44    362     COMAND,   362

SYMBOL TABLE

BEGIN       25
BUFFP       22
CHPRNT      23
COMAND      44
DELAY       42
DETEC       41
ENTRY1      36
ENTRY2      35
ENTRY3      34
ENTRY4      33
ENTRY5      32
ENTRY6      31
ENTRY7      30
ENTRY8      27
LINEF       37
PRINTP      24
RESTRT      26
SCALE       43
SCOPEP      20
TYPEO       40
YPOINT      21

DUPLICATE TAGS

NONE

UNDEFINED SYMBOLS

NONE
```

```
                 /  ANTFRZ -- THE ANTIFREEZE SUBROUTINE
                 /
                 TYPEO=40
                 *0045
                 /
 45  7650  ANTFRZ, SNA CLA          /SKIP IF NEW DATA HAS ARRIVED
 46  5053          JMP      WAIT
 47  1067          TAD      MOOO2
 50  3075          DCA      COUNT
 51  3076          DCA      ROLLO
 52  5472          JMP   I  DATAP
 53  2076  WAIT,   ISZ      ROLLO
 54  5473          JMP   I  PLOTP
 55  2075          ISZ      COUNT
 56  5473          JMP   I  PLOTP
 57  1067          TAD      MOOO2
 60  3075          DCA      COUNT
 61  3076          DCA      ROLLO
 62  1070          TAD      BELL
 63  4440          JMS   I  TYPEO
 64  1071          TAD      F
 65  4440          JMS   I  TYPEO
 66  5474          JMP   I  RESTRP
 67  7776  MOOO2,  7776
 70   207  BELL,   0207            /ASCII CODE FOR BELL
 71   306  F,      0306            /ASCII CODE FOR F
 72   374  DATAP,  0374
 73   375  PLOTP,  0375
 74   377  RESTRP, 0377
 75     0  COUNT,  0               /INITIAL COUNT DETERMINES BEGINNING ANTIFREEZE
                                   / TIME
 76     0  ROLLO,  0

SYMBOL TABLE

ANTFRZ      45
BELL        70
COUNT       75
DATAP       72
F           71
MOOO2       67
PLOTP       73
RESTRP      74
ROLLO       76
TYPEO       40
WAIT        53

DUPLICATE TAGS
NONE

UNDEFINED SYMBOLS
NONE
```

```
                 / CALLP -- A PROGRAM TO CALL THE CHANNEL PRINTING ROUTINE
                 /
                 /     IMMEDIATELY AFTER BEING STARTED PROGRAM HALTS FOR
                 /      OPERATOR TO KEY IN NO. OF 1ST CHANNEL DESIRED AND
                 /      THEN HALTS AGAIN FOR NO. OF LAST FILE DESIRED
                 /      AND THEN HALTS AGAIN FOR TOLERANCE FOR PRINTING
                 /
                 /
                 CHPRNT=0023
                 YPOINT=0021
                 SCOPEP=20
                 COMAND=44
                 *0100
 100   6314      BEGIN,  BDISAB
 101   6046              TLS
 102   7402              HLT              /LOAD NO. OF 1ST CHANNEL DESIRED IN
 103   7604              LAS              /   SWITCHES AND HIT CONTINUE
 104   3115              DCA      CHN1
 105   7402              HLT              /LOAD NO. OF LAST CHAN. DESIRED
 106   7604              LAS
 107   3116              DCA      CHN2
 110   7402              HLT      /LOAD TOLERANCE FOR PRINTING
 111   7604              LAS
 112   3117              DCA      CHN3
 113   4423              JMS  I   CHPRNT
 114     21              YPOINT
 115      0      CHN1,   0000
 116      0      CHN2,   0000
 117      0      CHN3,   0000
 120   4420              JMS  I   SCOPEP
 121   4444              JMS  I   COMAND
 122   5120              JMP      .-2

SYMBOL TABLE
BEGIN        100
CHN1         115
CHN2         116
CHN3         117
CHPRNT        23
COMAND        44
SCOPEP        20
YPOINT        21

DUPLICATE TAGS
NONE

UNDEFINED SYMBOLS
NONE
```

```
                /  INIT -- THE SWITCH INITIALIZATION SUBROUTINE
                /
                *124
                SWB=11
                SWC=12
                SWD=13
                SWPILE=14
                SWPUL=15
                SWFL1=16
                SWFL2=17
                /SET UP PROGRAM OPTIONS FROM SWITCHES
                /
                /SW0     PROCEED IF PILE UP FLAG = 0
                /  1                             = 1
                /
                /  2                PULSER  FLAG = 0
                /  3                             = 1
                /
                /  4                FLAG1        = 0
                /  5                             = 1
                /
                /  6                FLAG2        = 0
                /  7                             = 1
                /
                /  8     SUM DETECTOR    B
                /  9                     C
                / 10                     D
124       0     INIT,    0000
125    7602     SETUP,   HLT CLA
126    3011             DCA SWB
127    3012             DCA SWC
130    3013             DCA SWD
131    7604             LAS
132    4153             JMS      SET1
133      14             SWPILE
134    4153             JMS      SET1
135      15             SWPUL
136    4153             JMS      SET1
137      16             SWFL1
140    4153             JMS      SET1
141      17             SWFL2
142    7510             SPA
143    2011             ISZ      SWB
144    7004             RAL
145    7510             SPA
146    2012             ISZ      SWC
147    7004             RAL
150    7510             SPA
151    2013             ISZ      SWD
152    5524             JMP  I   INIT
                /
                /SET1 ROUTINE FOR UNPACKING TWO KEYS.    TAD   KEYS
                /                                        JMS   SET1
                /ASSUMES KEYS ARE IN BITS 0 AND 1                SW
                /                                        (RETURN)
                /KEY TABLE
                /                SWITCH
                /   KEY 1 UP     .GT. 0
                /   KEY 2 UP     .LT. 0
```

```
                /   BOTH  UP     .EQ. 0
                /
153       0     SET1,     00
154    3175               DCA      SAVE
155    1553               TAD  I   SET1     /GET ADDRESS OF THE SWITCH AND STORE IT AWAY
156    3176               DCA      SWADDR
157    7240               CLA CMA
160    3576               DCA  I   SWADDR   /SET SW = -1
161    1175               TAD      SAVE
162    7004               RAL
163    7500               SMA
164    2576               ISZ  I   SWADDR   /SET SW = 0 IF KEY 2 DOWN
165    7000               OPR
166    7630               SZL CLA
167    2576               ISZ  I   SWADDR   /ADD 1 TO SW IF KEY 1 UP
170    7000               OPR
171    2153               ISZ      SET1
172    1175               TAD      SAVE
173    7006               RTL               /SET UP NEXT TWO BITS
174    5553               JMP  I   SET1
175       0     SAVE,     0000
176       0     SWADDR,   0000
                /
                /
                / KLUDGE ROUTINE -- FOR SINGLE DETECTOR SPECTRA
                /
                / THE BUFFER IS 40 (8) WORDS LONG.  ITS STARTING ADDRESS IS STORED IN
                /    LOC. BUFFP ON PAGE ZERO. (BUFFER OCCUPIES 1000-1037 IN CORE)
                /
                / THERE ARE 2048 (10) = 4000 (8) DATA CHANNELS.
                /    EACH CHANNEL OCCUPIES 18 BITS AND ALL THE
                /    CHANNELS TOGETHER OCCUPY A BLOCK OF
                /    3072 (10) = 6000 (8) CONSECUTIVE WORDS,
                /    (LOC. 1600-7577 ) AND THE 1ST ADDR. OF THE
                /    BLOCKED STORED IN LOC. YPOINT ON PAGE ZERO.
                /
                /
                SCOPEP=20
                YPOINT=21
                BUFFP=22
                ANTFRZ=45
                DETEC=41
                SCALEO=43
                COMAND=44
                /
                *177
177    4124     BEGIN,    JMS      INIT
200    7200     CLRSTR,   CLA
201    1342               TAD      M6000
202    3353               DCA      COUNT
203    1021               TAD      YPOINT
204    3354               DCA      ADDR
205    3754               DCA  I   ADDR     /CLEAR THE DATA CHANNELS
206    2354               ISZ      ADDR
207    2353               ISZ      COUNT
210    5205               JMP      .-3
                /
211    6032     RSTRT,    KCC
212    7200               CLA
213    6046               TLS
```

```
214  6077            DSB+3
215  1343            TAD      M40
216  3353            DCA      COUNT
217  1022            TAD      BUFFP
220  3354            DCA      ADDR
221  3754            DCA   I  ADDR     /CLEAR DATA BUFFER TO 0000
222  2354            ISZ      ADDR
223  2353            ISZ      COUNT
224  5221            JMP      .+3
225  3352            DCA      BMARK    /INITIALIZE BMARK TO SCAN DATA BUFFER
226  6311            BADCLR            /CLEAR THE HARDWARE
227  6324            UDCLR
230  1350            TAD      M440     /SET UP-DOWN COUNTER TO 1340 SO
231  3353            DCA      COUNT    /   7 EVENTS (34 WORDS) WILL CAUSE AN
232  6331            UDSUBI            /   OVERFLOW IN THE 256 BLT.
233  2353            ISZ      COUNT
234  5232            JMP      .-2
235  6312  LOOP,     BABLE             /START TAKING DATA
236  7200            CLA
237  1352            TAD      BMARK    /PICK UP BUFFER(I)
240  1022            TAD      BUFFP    /                 I=BMARK
241  3351            DCA      BUFADD
242  1751            TAD   I  BUFADD   /EXAMINE CONTENTS OF BUFFER(I)
243  5644            JMP   I  .+1      /JUMP TO ANTIFREEZE ROUTINE
244    45            ANTFRZ
245  7200  DATA,     CLA
246  1351            TAD      BUFADD
247  4441            JMS   I  DETEC    /JUMP TO DETECTOR SUBR, WITH LOC. OF G-SIGNAL
          /                           /  IN AC AND RETURN WITH CHAN. NO. TO
          /                           /  INCREMENT IN AC
250  3355  CHNSTO,   DCA      CHANNO
251  7100            CLL
252  1355            TAD      CHANNO   /    DIVIDE CHAN. NO. BY 2 AND
253  7010            RAR               /      DISCARD REMAINDER FOR ODD
254  1355            TAD      CHANNO
255  1021            TAD      YPOINT
256  3354            DCA      ADDR
257  1354            TAD      ADDR
260  7001            IAC
261  3357            DCA      ADDR2
262  7430            SZL
263  5276            JMP      HALFP
264  7300            CLA CLL
265  1757            TAD   I  ADDR2
266  1344            TAD      L0100
267  3757            DCA   I  ADDR2
270  7420            SNL
271  5314            JMP      CONT
272  1754            TAD   I  ADDR
273  7001            IAC
274  3754            DCA   I  ADDR
275  5314            JMP      CONT
276  7300  HALFP,    CLA CLL
277  1757            TAD   I  ADDR2
300  7001            IAC
301  3757            DCA   I  ADDR2
302  7420            SNL
303  5314            JMP      CONT
304  1754            TAD   I  ADDR
305  7001            IAC
```

```
306   341          AND     L0077
307  3356          DCA     TEMP
310  1754          TAD  I  ADDR
311   345          AND     L7700
312  1356          TAD     TEMP
313  3754          DCA  I  ADDR
314  7200  CONT,   CLA
315  3751          DCA  I  BUFADD  /RESTORE BUFFER(I) TO 0000
316  1352          TAD     BMARK   /  AND INCREMENT BMARK TO PICK
317  1347          TAD     L0004   /  UP BUFFER(I+4)
320   360          AND     L0037
321  3352          DCA     BMARK
322  1352          TAD     BMARK
323  7440          SZA
324  5336          JMP     PLOT
325  6314          BDISAB
326  1361          TAD     MIO
327  3353          DCA     COUNT
330  6333          UDSUB2
331  6333          UDSUB2
332  2353          ISZ     COUNT
333  5330          JMP     .-3
334  6311          BADCLR
335  6312          BABLE
336  4420  PLOT,   JMS  I  SCOPEP
337  4444          JMS  I  COMAND
340  5235          JMP     LOOP
           /
341    77  L0077,  0077
342  2000  M6000,  2000
343  7740  M40,      -40
344   100  L0100,  0100
345  7700  L7700,  7700
346  7774  M4,          -4
347     4  L0004,  0004
350  7340  M440,   -440
351     0  BUFADD, 0
352     0  BMARK,  0
353     0  COUNT,  0
354     0  ADDR,   0
355     0  CHANNO, 0
356     0  TEMP,   0
357     0  ADDR2,  0
360    37  L0037,  0037
361  7770  MIO,     -10
           /
           /
           /
           /
           / COMAND -- A COMMAND ROUTINE FOR CHANGING THE SCALE FACTOR FOR PLOTTING
           /
           *362
362     0  COMM,   0                 /COMMAND ROUTINE FOR CHANGEING SCALE FACTOR
363  6031          KSF                /SKIP IF A NEW SCALE CONST. HAS BEEN TYPED IN
364  5762          JMP  I  COMM
365  6036          KRB                /  READ THE NEW SCALE CONST.
366  7041          CIA
367  1372          TAD     P276
370  3443          DCA  I  SCALEO
371  5762          JMP  I  COMM
```

```
372   276   P276,   0276
            /
            *374
374   5245          JMP     DATA    /POINTERS
375   5336          JMP     PLOT
376   5200          JMP     CLRSTR
377   5211          JMP     RSTRT
            /
```

SYMBOL TABLE

ADDR	354
ADDR2	357
ANTFRZ	45
BEGIN	177
BMARK	352
BUFADD	351
BUFFP	22
CHANNO	355
CHNSTO	250
CLRSTR	200
COMAND	44
COMM	362
CONT	314
COUNT	353
DATA	245
DETEC	41
HALFP	276
INIT	124
L0004	347
L0037	360
L0077	341
L0100	344
L7700	345
LOOP	235
M10	361
M40	343
M4	346
M4400	350
M6000	342
P276	372
PLOT	336
RSTRT	211
SAVE	175
SCALEO	43
SCOPEP	20
SETI	153
SETUP	125
SWADDR	176
SWB	11
SWC	12
SWD	13
SWFL1	16
SWFL2	17
SWPILE	14
SWPUL	15
TEMP	356
YPOINT	21

DUPLICATE TAGS
NONE

```
            /SCOPE -- A ROUTINE FOR DISPLAYING ON SCOPE THE CONTENTS
            /                 OF 2048 (10) 18-BIT CHANNELS,
            /                 EACH OF THE 1024 (10) POSSIBLE X-VALUES
            /                 WILL CORRESPOND TO TWO ADJACENT
            /                 CHANNELS.  EACH PAIR OF ADJACENT
            /                 CHANNELS WILL BE SUMMED AND THIS 2BLE-
            /                 PRECISION SUM NORMALIZED TO 10 BITS SO
            /                 THAT IT DOES NOT EXCEED 1024 (10). THIS
            /                 VALUE IS PLOTTED ON THE Y-AXIS
            /
            /        THE ADDRESS OF THE 1ST WORD OF THE 1ST CHANNEL
            /          SHOULD BE CONTAINED IN LOC. YPOINT ON PAGE 0.
            /
            SCOPEP=20
            YPOINT=21
            *0400
400       0 SCOPE,   0000
401    7200          CLA
402    1247          TAD      COUNT
403    7104          CLL RAL           /MULTIPLY COUNT BY 3 AND ADD
404    1247          TAD      COUNT    /  YPOINT TO GET ADDRESS OF 1ST
405    1021          TAD      YPOINT   /  WORD OF THE 3 WORDS CONTAINING
406    3250          DCA      ADDR1    /  NEXT 2 CHANNELS
407    1250          TAD      ADDR1
410    7001          IAC
411    3251          DCA      ADDR2    /  ADDRESS OF 2ND WORD OF THE 3
412    1251          TAD      ADDR2
413    7001          IAC
414    3252          DCA      ADDR3    /  ADDRESS OF 3RD WORD OF THE 3
            /
            /                           /PICK UP THE TWO ADJACENT CHANNELS
415    1651          TAD I    ADDR2    /  AND SUM THEIR CONTENTS
416     255          AND      MASK1
417    3254          DCA      HI2      /  HI-ORDER PART OF 2ND CHANNEL
420    1651          TAD  I   ADDR2
421    7421          MQL
422    1650          TAD  I   ADDR1
423    7417          LSR                /      (LINK IS CLEARED HERE)
424       5          0005
425    3253          DCA      HI1      /  HI-ORDER PART OF 1ST CHANNEL
426    7501          MQA
427    1652          TAD  I   ADDR3    /  SUM THE TWO LO-ORDER PARTS
430    7421          MQL                /      (AC IS CLEARED)
431    7430          SZL                /    SKIP IF NO OVERFLOW
432    7001          IAC
433    1253          TAD      HI1      /  ADD THE HI-ORDER PARTS
434    1254          TAD      HI2
435    7413          SHL
436      16  SCALE,   16
437    6063          DYL                /     WE ASSUME THE SUM NEVER
440    7200          CLA                /     EXCEEDS 17 BITS.
441    1247          TAD      COUNT
442    6057          DXS
443    7001          IAC
444     256          AND      MASK2    /  COUNT MUST NOT EXCEED 1024 (10)
445    3247          DCA      COUNT
446    5600          JMP  I   SCOPE
447       0  COUNT,  0000
450       0  ADDR1,  0000
```

```
451      0  ADDR2,   0000
452      0  ADDR3,   0000
453      0  HI1,     0000
454      0  HI2,     0000
455     77  MASK1.   0077
456   1777  MASK2,   1777

SYMBOL TABLE
ADDR1       450
ADDR2       451
ADDR3       452
COUNT       447
HI1         453
HI2         454
MASK1       455
MASK2       456
SCALE       436
SCOPE       400
SCOPEP       20
YPOINT       21

DUPLICATE TAGS

NONE

UNDEFINED SYMBOLS

NONE
```

```
                /  SUM -- A ROUTINE FOR INTEGRATING BETWEEN SPECIFIED CHANNELS
                /
                /     STARTING ADDRESS = 460
                /
                /     ROUTINE HALTS TWICE FOR OPERATOR TO KEY IN THE LIMITS OF
                /      THE INTEGRATION.  THE LIMITS AND THE VALUE OF THE SUM ARE
                /      PRINTED OUT.
                /
                /     NORMAL STOP HAS 7777 IN AC.
                YPOINT=21
                PRINTP=24
                ENTRY6=31
                ENTRY7=32
                LINEF=37
                *460
460   7402      BEGIN,  HLT
461   6046              TLS
462   7604              LAS                 /KEY IN LOWER LIMIT AND HIT CONTINUE
463   3373              DCA       C1
464   7402              HLT
465   7604              LAS
466   3374              DCA       C2        /KEY IN UPPER LIMIT
467   4437              JMS   I   LINEF     /RETURN AND SKIP TO NEW LINE
470   1373              TAD       C1
471   7421              MQL
472   4424              JMS   I   PRINTP    / PRINT LOWER LIMIT
473   5431              JMP   I   ENTRY6
474   1374              TAD       C2
475   7421              MQL
476   4424              JMS   I   PRINTP    / PRINT UPPER LIMIT
477   5431              JMP   I   ENTRY6
                /
500   4311              JMS       SUMM
501   4424              JMS   I   PRINTP    /  PRINT VALUE OF INTEGRAL
502   5430              JMP   I   ENTRY7
503   7240              CLA CMA
504   7402              HLT                 / NORMAL STOP
505     77    MA0077,   0077
506      0    TEMP,     0000
507      0    ADDR1,    0000
510      0    ADDR2,    0000
                /
                /  SUMM -- SUBROUTINE FOR PERFORMING THE INTEGRATION BETWEEN 2 CHANNELS
                /
                / CHANNEL NOS. OF LOWER AND UPPER LIMITS MUST BE STORED IN C1,C2
                / THE DOUBLE PRECISION SUM IS RETURNED IN AC,MQ
                /
511      0    SUMM,     0000
512   7200              CLA
513   1374              TAD       C2
514   7040              CMA
515   1373              TAD       C1
516   3370              DCA       COUNT
517   3371              DCA       H
520   3372              DCA       L
521   7300    LOOP,     CLA CLL             /LOOP TO COMPUTE THE INTEGRAL.  C1 ALWAYS
522   1373              TAD       C1        /  CONTAINS NO. OF NEXT CHANNEL TO BE ADDED.
523   7010              RAR       /     SHIFTS A 1 INTO LINK IF CHAN. NO. IS ODD
524   1373              TAD       C1
```

```
525  1021          TAD     YPOINT
526  3307          DCA     ADDR1    /  ADDRESS OF 1ST WORD OF THE CHANNEL
527  1307          TAD     ADDR1
530  7001          IAC
531  3310          DCA     ADDR2    /  ADDRESS OF 2ND WORK OF THE CHANNEL
532  7430          SZL              /   SKIP FOR EVEN-NO, CHANNEL
533  5342          JMP     ODD
534  1710          TAD  I  ADDR2
535  7421          MQL
536  1707          TAD  I  ADDR1
537  7417          LSR
540     5          0005
541  5346          JMP     SUM
542  1710  ODD,    TAD  I  ADDR2
543  7421          MQL
544  1707          TAD  I  ADDR1
545   305          AND     MA0077
546  7100  SUM,    CLL
547  3306          DCA     TEMP     /   HI-ORDER PART OF NEXT CHAN,
550  7501          MQA
551  1372          TAD     L        /  ADD THE LO-ORDER PARTS
552  3372          DCA     L
553  7430          SZL              /  SKIP ON NO OVERFLOW
554  7001          IAC
555  1306          TAD     TEMP
556  1371          TAD     H
557  3371          DCA     H
560  2373          ISZ     C1
561  7000          NOP
562  2370          ISZ     COUNT    /  SKIP AFTER LAST CHANNEL ADDED TO INTEGRAL
563  5321          JMP     LOOP
564  1372          TAD     L
565  7421          MQL
566  1371          TAD     H
567  5711          JMP  I  SUMM
570     0  COUNT,  0000
571     0  H,      0000
572     0  L,      0000
           /
           *573
           /INVARIANT ADDRESSES FOR C1 AND C2
           /
573     0  C1,     0000
574     0  C2,     0000
           /
           /  SUMP -- A DUMMY ROUTINE POINTING TO SUMM
           /
575     0  SUMP,   0000
576  4311          JMS     SUMM
577  5775          JMP  I  SUMP
```

SYMBOL TABLE

ADDR1	507
ADDR2	510
BEGIN	460
C1	573
C2	574
COUNT	570
ENTRY6	31
ENTRY7	30

```
H          571
L          572
LINEF       37
LOOP       521
MADD77     505
ODD        542
PRINTP      24
SUM        546
SUMM       511
SUMP       575
TEMP       506
YPOINT      21

DUPLICATE TAGS

NONE

UNDEFINED SYMBOLS

NONE
```

```
          / CHPRNT -- A ROUTINE FOR PRINTING 18-BIT CHANNELS
          /
          /  CALLING SEQUENCE      JMS I PRINTP   /PAGE 0 POINTER TO THIS ROUTINE
          /                        YPOINT         /PAGE 0 POINTER TO 1ST CHANNEL
          /                        XXXX           /CHAN. NO. OF 1ST CHAN. DESIRED
          /                        XXXX           /CHAN. NO. OF 2ND CHAN. DESIRED
          /                        XXXX            /TOLERANCE FOR PRINTING
          /                        (CONTINUE)     /CONTROL RETURNED HERE
          /
          /  THE CHANNELS ARE PRINTED IN DECADES IN THE FOLLOWING FORMAT
          /
          /    YYYY   XXXXX XXXXX XXXXX XXXXX XXXXX XXXXX XXXXX XXXXX XXXXX XXXXX
          /
          /     WHERE YYYY IS A CHANNEL NO. FROM THE SEQUENCE 0,10,20,30,...
          /        AND BEGINS IN THE 1ST COL. OF THE PAGE, AND THE XXXXX ARE
          /        THE CONTENTS OF CHANNELS YYYY THRU YYYY+9.  EACH XXXXX
          /        REPRESENTS A NUMBER OF UP TO 6 DIGITS WHOSE LEADING
          /        ZEROS ARE NOT PRINTED.
          /
          /     IF SUM OF CHANNELS IN A DECADE IS BELOW TOLERANCE THEN PRINTING
          /    IS SUPPRESSED FOR THAT DECADE.
          /
          LINEF=0037
          TYPEO=0040
          PRINTP=0024
          ENTRY6=0031
          ENTRY4=0033
          *0600
          /
600     0 CHPRNT, 0000
601  7200         CLA
602  1600         TAD  I  CHPRNT
603  3352         DCA     ORIGIN  /ADDR. OF 1ST WORD OF 1ST CHANNEL
604  2200         ISZ     CHPRNT
605  1600         TAD  I  CHPRNT
606  3353         DCA     CHAN1   /NO. OF 1ST CHANNEL DESIRED
607  2200         ISZ     CHPRNT
610  1600         TAD  I  CHPRNT
611  3354         DCA     CHAN2   /NO. OF LAST CHANNEL DESIRED
612  2200         ISZ     CHPRNT
613  1600         TAD  I  CHPRNT  /TOLERANCE FOR PRINTING
614   373         AND     L3777   /TOLERANCE MUST BE BELOW 2048(10)
615  7041         CIA
616  3371         DCA     MTOLER
617  2200         ISZ     CHPRNT  /RETURN ADDRESS
620  7200         CLA
621  3355         DCA     CHNNO   / 1 INTO CHNNO
622  1353         TAD     CHAN1
623  3356         DCA     TEMP
          /
624  1356 LOOP1,  TAD     TEMP    /LOOP TO COMPUTE INITIAL CHANNEL
625  1364         TAD     M10     /  OF 1ST DECADE TO PRINT.
626  7510         SPA
627  5235         JMP     CONT
630  3356         DCA     TEMP
631  1355         TAD     CHNNO
632  1363         TAD     TEN
633  3355         DCA     CHNNO
634  5224         JMP     LOOP1
```

```
                /
635   7200   CONT,   CLA                 /UPON EMERGING FROM LOOP1 CHNNO CONTAINS
636   1355           TAD      CHNNO      /   NO. OF 1ST CHANNEL TO PRINT
637   3356           DCA      TEMP       /NOW COMPUTE ADDR. OF 1ST WORD OF
640   1356           TAD      TEMP       /   1ST CHAN. TO PRINT
641   7110           CLL RAR
642   1356           TAD      TEMP
643   1752           TAD   I  ORIGIN
644   3357           DCA      ADDR1      /  ADDR. OF 1ST WORD
645   1354           TAD      CHAN2
646   7041           CIA
647   3356           DCA      TEMP       / NEG. OF LAST CHAN. DESIRED
650   4437           JMS   I  LINEF      /   SKIP TO A NEW LINE
651   4437           JMS   I  LINEF      /     AC LEFT CLEARED
                /
652   1355   LOOP2,  TAD      CHNNO
653   3774           DCA   I  C1ADDR     /1ST CHANNEL IN DECADE
654   1355           TAD      CHNNO
655   1372           TAD      NINE
656   3775           DCA   I  C2ADDR     /LAST CHANNEL IN DECADE
657   4776           JMS   I  SUMP       /GO TO INTEGRATING ROUTINE
660   7440           SZA
661   5274           JMP      PRNT       /PRINT IF HIGH ORDER PART OF SUM IS NON ZERO
662   7501           MQA                 /LOAD LOW ORDER PART OF SUM INTO AC
663   7510           SPA
664   5274           JMP      PRNT       /  IF IT EXCEEDS 2047(10) PRINT THE DECADE
665   1371           TAD      MTOLER     /  OTHERWISE CHECK IT AGAINST TOLERANCE
666   7700           SMA CLA
667   5274           JMP      PRNT       /PRINT IF GREATER THAN TOLERANCE
670   1357           TAD      ADDR1      / IF SUM OF CHANNELS IN DECADE BELOW
671   1365           TAD      L17        /   TOLERANCE LEVEL
672   3357           DCA      ADDR1
673   5340           JMP      TEST
674   7200   PRNT,   CLA
675   1364           TAD      M10
676   3361           DCA      COUNT1
677   1355           TAD      CHNNO
700   7421           MQL
701   4424           JMS   I  PRINTP     /  PRINT CHAN. NO. OF 1ST CHAN. IN
702   5433           JMP   I  ENTRY4     /    DECADE FOLLOWED BY 2 SPACES
703   7200           CLA
704   1367           TAD      SPACE
705   4440           JMS   I  TYPEO
706   1367           TAD      SPACE
707   4440           JMS   I  TYPEO      /   LEAVES AC CLEARED
710   7100           CLL
711   1357   INLP2,  TAD      ADDR1      /  LOOP FOR PRINTING THE 10
712   7001           IAC                 /   CHANNELS IN THE DECADE
713   3360           DCA      ADDR2
714   1760           TAD   I  ADDR2
715   7421           MQL                 /  LO-ORDER PART OF CHANNEL INTO MQ
716   1757           TAD   I  ADDR1      /  HI-ORDER PART INTO AC
717   7430           SZL                 /  ZERO LINK MEANS CHAN. NO. IS ODD
720   5327           JMP      EVEN
721   7417           LSR
722      5           0005
723   4424           JMS   I  PRINTP
724   5431           JMP   I  ENTRY6
725   7120           STL
726   5334           JMP      INDEX
```

```
727   370  EVEN,   AND      MASK1
730  4424          JMS   I  PRINTP
731  5431          JMP   I  ENTRY6
732  7100          CLL
733  2357          ISZ      ADDR1
734  2357  INDEX,  ISZ      ADDR1
735  2361          ISZ      COUNT1   /  SKIP AFTER PRINTING 10 CHANNELS
736  5311          JMP      INLP2
737  4437          JMS   I  LINEF    / CARRIAGE RETURN AND LINE FEED
                                     /     AC IS CLEARED ON RETURN
740  1355  TEST,   TAD      CHNNO    / NOW CHECK TO SEE IF ALL DECADES
741  1356          TAD      TEMP     /  HAVE BEEN PRINTED
742  1363          TAD      TEN
743  7540          SMA SZA
744  5600          JMP   I  CHPRNT   / WHEN ALL DECADES HAVE BEEN PRINTED
745  7200          CLA
746  1355          TAD      CHNNO
747  1363          TAD      TEN
750  3355          DCA      CHNNO
751  5252          JMP      LOOP2
752     0  ORIGIN, 0000
753     0  CHAN1,  0000
754     0  CHAN2,  0000
755     0  CHNNO,  0000
756     0  TEMP,   0000
757     0  ADDR1,  0000
760     0  ADDR2,  0000
761     0  COUNT1, 0000
762     0  COUNT2, 0000
763    12  TEN,    0012
764  7766  M10,    7766
765    17  L17,    0017
766  7761  M15,    7761
767   240  SPACE,  0240     /ASCII CODE FOR SPACING
770    77  MASK1,  0077
771     0  MTOLER, 0000
772    11  NINE,   0011
773  3777  L3777,  3777
774   573  C1ADDR,  573
775   574  C2ADDR,  574
776   575  SUMP,    575
```

SYMBOL TABLE

ADDR1	757
ADDR2	760
C1ADDR	774
C2ADDR	775
CHAN1	753
CHAN2	754
CHNNO	755
CHPRNT	600
CONT	635
COUNT1	761
COUNT2	762
ENTRY4	33
ENTRY6	31
EVEN	727
INDEX	734
INLP2	711
L17	765

L3777	773
LINEF	37
LOOP1	624
LOOP2	652
M10	764
M15	766
MASK1	770
MTOLER	771
NINE	772
ORIGIN	752
PRINTP	24
PRNT	674
SPACE	767
SUMP	776
TEMP	756
TEN	763
TEST	740
TYPEO	40

DUPLICATE TAGS

NONE

UNDEFINED SYMBOLS

NONE

```
                 /  MOE -- MAIN ROUTINE FOR MOSELEY PLOTTING
                 BUFFP=22
                 EANIE=1047
                 COMAND=44
                 SCOPEP=20
                 *1040
1040  4247       MOE,     JMS        EANIE
1041  1600                1600
1042  4247                JMS        EANIE
1043  4600                4600
1044  4444                JMS   I    COMAND
1045  4420                JMS   I    SCOPEP
1046  5244                JMP        .-2

SYMBOL TABLE

BUFFP        22
COMAND       44
EANIE      1047
MOE        1040
SCOPEP       20

DUPLICATE TAGS

NONE

UNDEFINED SYMBOLS

NONE
```

```
                /  EANIE    GRAPHS ONE 512 SECTION OF THE 2048 WORD KLUDGE BUFFER,
                /  TAKEING TWO CHANNELS AT A TIME.
                /  CALLING SEQUENCE.....    JMS EANIE
                /                                  ORIGN
                SCALEO=43
                SHIFT=1005                  /MOSELEY JAM SUBROUTINE TO AVOID ROLL-OVER
                *1047
1047      0     EANIE,    0
1050   1647               TAD   I   EANIE
1051   3346               DCA       YPOINT
1052   6063               DYL
1053   6053               DXL
1054   7402               HLT                     /LOWER PEN AND CONTINUE
1055   7200               CLA
1056   1443               TAD   I   SCALEO
1057   3325               DCA       SCALE
1060   3334               DCA       OLDX          /OLDX = 0 AND OLDY = 0
1061   3332               DCA       OLDY
1062   3350               DCA       COUNT
1063   1345               TAD       P512          /SET UP LOOP
1064   7041               CIA
1065   3347               DCA       SKIP
1066   1334   LOOP,       TAD       OLDX        / GET NEWX = OLDX + 2
1067   1344               TAD       P2
1070   3333               DCA       NEWX
1071   1350               TAD       COUNT
1072   7104               CLL RAL               /MULTIPLY COUNT BY 3 AND ADD
1073   1350               TAD       COUNT       /  YPOINT TO GET ADDRESS OF 1ST
1074   1346               TAD       YPOINT      /  WORD OF THE 3 WORDS CONTAINING
1075   3351               DCA       ADDR1       /  NEXT 2 CHANNELS
1076   1351               TAD       ADDR1
1077   7001               IAC
1100   3352               DCA       ADDR2       /  ADDRESS OF 2ND WORD OF THE 3
1101   1352               TAD       ADDR2
1102   7001               IAC
1103   3353               DCA       ADDR3       /  ADDRESS OF 3RD WORD OF THE 3
                /
                /                               /PICK UP THE TWO ADJACENT CHANNELS
1104   1752               TAD I     ADDR2       /  AND SUM THEIR CONTENTS
1105    354               AND       MASK1
1106   3356               DCA       HI2         /  HI-ORDER PART OF 2ND CHANNEL
1107   1752               TAD   I   ADDR2
1110   7421               MQL
1111   1751               TAD   I   ADDR1
1112   7417               LSR                   /       (LINK IS CLEARED HERE)
1113      5               0005
1114   3355               DCA       HI1         /  HI-ORDER PART OF 1ST CHANNEL
1115   7501               MQA
1116   1753               TAD   I   ADDR3       /  SUM THE TWO LO-ORDER PARTS
1117   7421               MQL                   /       (AC IS CLEARED)
1120   7430               SZL                   /     SKIP IF NO OVERFLOW
1121   7001               IAC
1122   1355               TAD       HI1         /  ADD THE HI-ORDER PARTS
1123   1356               TAD       HI2
1124   7413               SHL
1125     16   SCALE,      16
1126    360               AND       L1777
1127   3331               DCA       NEWY
1130   4757               JMS   I   GRAPH
```

```
1131      0  NEWY,      00
1132      0  OLDY,      00
1133      0  NEWX,      00
1134      0  OLDX,      00
1135   2350             ISZ        COUNT
1136   2347             ISZ        SKIP
1137   5266             JMP        LOOP
1140   7200             CLA
1141   7402             HLT                    /RAISE PEN AND CONTINUE
1142   2247            ISZ      EANIE
1143   5647             JMP    I   EANIE
1144      2  P2,        2
1145    777  P512,     777
1146      0  YPOINT,    0
1147      0  SKIP,      0
1150      0  COUNT,     0
1151      0  ADDR1,      0
1152      0  ADDR2,     0
1153      0  ADDR3,     0
1154     77  MASK1,    0077
1155      0  HI1,       0
1156      0  HI2,       0
1157   1200  GRAPH,    1200
1160   1777  L1777,   1777
```

SYMBOL TABLE

```
ADDR1      1151
ADDR2      1152
ADDR3      1153
COUNT      1150
EANIE      1047
GRAPH      1157
HI1        1155
HI2        1156
L1777      1160
LOOP       1066
MASK1      1154
NEWX       1133
NEWY       1131
OLDX       1134
OLDY       1132
P2         1144
P512       1145
SCALE      1125
SCALEO       43
SHIFT      1005
SKIP       1147
YPOINT     1146
```

DUPLICATE TAGS

NONE

UNDEFINED SYMBOLS

NONE

```
                /DELAY          CLA
                /               TAD     N
                /               JMS     DELAY
                /                M
                /               (RETURN)
                /
                *1161
1161      0     DELAY,   00
1162   7040            CMA
1163   3377            DCA     N
1164   2377     LOOP,  ISZ     N
1165   5370            JMP     .+3
1166   2361            ISZ     DELAY
1167   5761            JMP   I DELAY   /RETURN WITH (AC) = 0
1170   1761            TAD   I DELAY
1171   7041            CIA
1172   3376            DCA     ROLLO
1173   2376            ISZ     ROLLO
1174   5373            JMP     .-1
1175   5364            JMP     LOOP
1176      0     ROLLO, 0000
1177      0     N,     0000

SYMBOL TABLE

DELAY      1161
LOOP       1164
N          1177
ROLLO      1176

DUPLICATE TAGS

NONE

UNDEFINED SYMBOLS

NONE
```

```
                /  GRAPH -- A POINT MOVING ROUTINE FOR THE MOSELEY PLOTTER
                /          CALLING SEQUENCE...    JMS GRAPH
                /                                   NEWY
                /                                   OLDY
                /                                   NEWX
                /                                   OLDX
                /
                /MOVES PEN FROM OLD Y TO NEW Y.  THEN OLDY = NEWY.
                /  NEXT MOVES PEN FROM OLD X TO NEW X.   THEN OLDX = NEWX.
                /  FULL SCALE = 1024(10)
                /
                DELAY=42
                *1200
1200      0     GRAPH,     0
1201   7200                CLA
1202   1600                TAD  I     GRAPH
1203   3265                DCA        NEWY
1204   1265                TAD        NEWY
1205   7041                CIA
1206   2200                ISZ GRAPH
1207   1600                TAD   I    GRAPH      /OLDX = NEWX
1210   7510                SPA
1211   7041                CIA
1212   3266                DCA        DIF
1213   1265                TAD        NEWY
1214   3600                DCA   I    GRAPH      /OLDY = NEWY
1215   2200                ISZ        GRAPH
1216   1600                TAD   I    GRAPH
1217   3267                DCA        NEWX
1220   2200                ISZ        GRAPH
1221   1267                TAD        NEWX
1222   3600                DCA   I    GRAPH      /OLDX = NEWX
1223   2200                ISZ        GRAPH      /SET UP RETURN
1224   1266                TAD        DIF        /CO PARE DIF AGAINST C1, SAY 10
1225   7041                CIA
1226   1262                TAD        C1
1227   7710               SPA CLA
1230   5244                JMP        GT
1231   1265   LT,         TAD        NEWY
1232   6063                DYL
1233   7201               CLA IAC
1234   4442               JMS  I  DELAY
1235   7000   C2,                  7000          /MINIMUM Y DELAY FOR SMALL DIF, SAY 14
1236   1267                TAD        NEWX
1237   6053                DXL
1240   7201               CLA IAC
1241   4442               JMS  I  DELAY
1242   3000   C3,                  3000          /MINIMUM X DELAY FOR SMALL DIF, SAY 14
1243   5261                JMP        BACK
1244   1265   GT,         TAD        NEWY
1245   6063                DYL
1246   7200                CLA
1247   1263                TAD        C4         /FIXED Y DELAY FOR GREAT DIF, SAY 10
1250   1266                TAD        DIF
1251   4442               JMS  I  DELAY
1252    300                300          /DELAY CONSTANT FOR HORIZONAL MOTION
1253   1267                TAD        NEWX
1254   6053                DXL
1255   7200                CLA
```

```
1256  1264            TAD      C5        /NOMINAL X DELAY FOR GREAT DIF, SAY 30
1257  4442           JMS  I   DELAY
1260   300                     300
1261  5600  BACK,    JMP  I    GRAPH
1262    10  C1,       10
1263    20  C4,       20
1264   100  C5,      100
1265     0  NEWY,      0
1266     0  DIF,       0
1267     0  NEWX,      0
```

SYMBOL TABLE

BACK	1261
C1	1262
C2	1235
C3	1242
C4	1263
C5	1264
DELAY	42
DIF	1266
GRAPH	1200
GT	1244
LT	1231
NEWX	1267
NEWY	1265

DUPLICATE TAGS

NONE

UNDEFINED SYMBOLS

NONE

```
          /  DETEC -- DETECTOR SUMMING ROUTINE FOR KLUDGE
          /              RETURNS WITH CHANNEL NUMBER IN THE AC.
          *1270
          SWB=11
          SWC=12
          SWD=13
          SWPILE=14
          SWPUL=15
          SWFL1=16
          SWFL2=17
1270    0 DETEC,  0000
1271 3353         DCA      ADDR     /ADDR OF WD=0
1272 3356         DCA      SUM
1273 1753         TAD   I  ADDR
1274 7004         RAL               /GET PULSER FLAG
1275 4357         JMS      TEST
1276   15         SWPUL             /PULSER SWITCH =
1277 1753         TAD   I  ADDR
1300 7006         RTL               /GET PILE UP FLAG
1301 4357         JMS      TEST
1302   14         SWPILE            /PILE UP SWITCH=
1303 2353 GETB,   ISZ      ADDR
1304 1753         TAD   I  ADDR
1305 7004         RAL               /GET FLAG2
1306 4357         JMS      TEST
1307   17         SWFL2             /FLAG2  SWITCH =
1310 1011         TAD      SWB
1311 7650         SNA CLA
1312 5320         JMP      GETC     /SKIP OVER B
1313 1753         TAD   I  ADDR
1314 7510         SPA
1315 5350         JMP      JAM      /B OVERFLO
1316  354         AND      L0777
1317 3356         DCA      SUM
1320 2353 GETC,   ISZ      ADDR
1321 1753         TAD   I  ADDR
1322 7004         RAL               /GET FLAG1
1323 4357         JMS      TEST
1324   16         SWFL1             /FLAG1 SWITCH
1325 1012         TAD      SWC
1326 7650         SNA CLA
1327 5336         JMP      GETD
1330 1753         TAD   I  ADDR
1331 7510         SPA
1332 5350         JMP      JAM      /C OVERFLO
1333  355         AND      L1777
1334 1356         TAD      SUM
1335 3356         DCA      SUM
1336 2353 GETD,   ISZ      ADDR
1337 1013         TAD      SWD
1340 7650         SNA CLA
1341 5345         JMP      DONE
1342 1753         TAD   I  ADDR
1343 7510         SPA
1344 5350         JMP      JAM      /D OVERFLO
1345 1356 DONE,   TAD      SUM
1346 7500         SMA               /SKIP IN CASE SUM EXCEEDS 3777(8)
1347 5670         JMP   I  DETEC
1350 7340 JAM,    CLA CMA CLL       /IN CASE THERE WAS AN OVERFLOW
```

```
1351  7010          RAR                 /  RETURN WITH 3777(8) IN THE AC.
1352  5670          JMP   I  DETEC
1353     0  ADDR,   0000
1354   777  L0777,  0777
1355  1777  L1777,  1777
1356     0  SUM,    0000
             /
             /
             /SUBROUTINE TEST
             /CALLED WITH FLAG BIT IN SIGN POSITION
             /
             /ACTION TABLE          FLAG = 0     FLAG = 1
             /
             /       SW .EQ. 0      PROCEED      PROCEED
             /          .LT. 0      JAM          PROCEED
             /          .GT. 0      PROCEED      JAM
             /
             /ASSUME  SW IS DETERMINED FROM TWO KEYS
             /
             /KEY 1 UP MEANS PROCEED IF FLAG = 0
             /    2                          = 1
             /
             /   (ONE OR BOTH SWITCHES SHOULD BE UP)
             /
             /KEY TABLE
             /                 SWITCH
             /   KEY 1 UP       .GT.0
             /   KEY 2 UP       .LT.0
             /   BOTH  UP       .EQ.0
             /
1357     0  TEST,   00
1360  7710          SPA CLA
1361  5370          JMP      FONE
1362  1757  FZERO,  TAD  I   TEST     /FLAG = 0
1363  3377          DCA      SWADDR
1364  1777          TAD  I   SWADDR
1365  7710          SPA CLA          /PROCEED IF .GE. 0
1366  5350          JMP      JAM
1367  5375          JMP      BACK
1370  1757  FONE,   TAD  I   TEST     /FLAG = 1
1371  3377          DCA      SWADDR
1372  1777          TAD  I   SWADDR
1373  7740          SMA SZA CLA      /PROCEED IF .LE. 0
1374  5350          JMP      JAM
1375  2357  BACK,   ISZ      TEST
1376  5757          JMP  I   TEST
             /
1377     0  SWADDR, 0000
```

SYMBOL TABLE

ADDR	1353
BACK	1375
DETEC	1270
DONE	1345
FONE	1370
FZERO	1362
GETB	1303
GETC	1320
GETD	1336
JAM	1350

L0777	1354
L1777	1355
SUM	1356
SWADDR	1377
SWB	11
SWC	12
SWD	13
SWFL1	16
SWFL2	17
SWPILE	14
SWPUL	15
TEST	1357

DUPLICATE TAGS

NONE

UNDEFINED SYMBOLS

NONE

```
                /  PRINT AND DECODE
                /                    (WRITTEN BY DAN PUTZULU)
                /
                TYPEO=40
                *1400
1400      0     PRINT,  0000
1401   7100             CLL
1402   5600             JMP   I   PRINT
1403   4236   ENTRY8,   JMS       DECODE
1404   3166             3166
1405   4600             4600
1406   4236   ENTRY7,   JMS       DECODE
1407   7413             7413
1410   6700             6700
1411   4236   ENTRY6,   JMS       DECODE
1412   7747             7747
1413   4540             4540
1414   4236   ENTRY5,   JMS       DECODE
1415   7775             7775
1416   4360             4360
1417   4236   ENTRY4,   JMS       DECODE
1420   7777             7777
1421   6030             6030
1422   4236   ENTRY3,   JMS       DECODE
1423   7777             7777
1424   7634             7634
1425   4236   ENTRY2,   JMS       DECODE
1426   7777             7777
1427   7766             7766
1430   7120             STL
1431   4236   ENTRY1,   JMS       DECODE
1432   7777             7777
1433   7777             7777
1434   2200             ISZ       PRINT
1435   5600             JMP   I   PRINT
                /
                /
                /                        *****DECODE*****
                /          DECODE IS AN ALGORITHM FOR CONVERSION OF OCTAL NUMBERS TO
                /        THEIR DECIMAL EQUIVALENT.  THE PROGRAM OPERATES ON THE PRIN-
                /        CIPAL THAT POWERS OF TEN IN OCTAL NOTATION CAN BE SUBTRACTED
                /        FROM AN OCTAL NUMBER THUS CONVERTING IT TO ITS DECIMAL EQUI-
                /        VALENT.  CONNECTING TWO TWELVE BIT WORDS BY MEANS OF THE
                /        LINK BIT, DECODE CAN CONVERT POSITIVE NUMBERS IN THE RANGE
                /        +00000000.GT.N(8).LT.+77777777.  DECODE PRINTS ONE DECIMAL
                /        DIGIT AT A TIME ALLOWING THE USER A CHOSE OF FORMATS.  I.E.
                /        I1 TO I8.  IF THE FORMAT THE USER CHOOSES CANNOT CONTAIN
                /        THE NUMBER, A / IS PRINTED.  THE ROUTINE RUNS CONCURRENT-
                /        LY WITH A SECOND SUBROUTINE (CONVRT) WHICH YIELDS THE
                /        COMPLEMENTS OF POWERS OF TEN IN OCTAL AND SUPPRESSES LEADING
                /        ZEROS.
1436      0     DECODE, 0
1437   3325             DCA       H
1440   7501             7501                /MQA
1441   3326             DCA       L
1442   7420             SNL
1443   1336             TAD       M20       /LINK=0, SPACE=-20
1444   3333             DCA       SPACE     /LINK=1, SPACE=0
1445   3335             DCA       COUNT
```

```
1446  1636          TAD  I  DECODE
1447  3327          DCA     CH
1450  2236          ISZ     DECODE
1451  1636          TAD  I  DECODE
1452  3330          DCA     CL
1453  2236          ISZ     DECODE
1454  7300  START,  CLA CLL
1455  1326          TAD     L
1456  1330          TAD     CL
1457  3331          DCA     L2
1460  7420          SNL
1461  5264          JMP     A1        /NO CARRY FROM WORD ONE ADDITION.
1462  7201          CLA IAC           /CARRY FROM ADDITION.
1463  3334          DCA     J
1464  7300  A1,     CLA CLL
1465  1325          TAD     H
1466  1327          TAD     CH
1467  1334          TAD     J
1470  3332          DCA     H2
1471  3334          DCA     J
1472  7430          SZL
1473  5315          JMP     A3        /CONTINUE SUBTRACTING POWER OF TEN.
1474  7100          CLL               /WRITE OUT DECIMAL DIGIT
1475  1335          TAD     COUNT
1476  1337          TAD     M12
1477  7710          SPA CLA
1500  5303          JMP     OKPRT
1501  7340          CLA CMA CLL
1502  5307          JMP     TYPE
1503  1335  OKPRT,  TAD     COUNT
1504  7450          SNA
1505  1333          TAD     SPACE
1506  7120          STL
1507  1340  TYPE,   TAD     P260
1510  4440          JMS  I  TYPEO
1511  1326          TAD     L
1512  7421          7421              /MQL
1513  1325          TAD     H
1514  5636          JMP  I  DECODE
1515  1335  A3,     TAD     COUNT
1516  7001          IAC
1517  3335          DCA     COUNT
1520  1332          TAD     H2
1521  3325          DCA     H
1522  1331          TAD     L2
1523  3326          DCA     L
1524  5254          JMP     START
1525     0  H,      0
1526     0  L,      0
1527     0  CH,     0
1530     0  CL,     0
1531     0  L2,     0
1532     0  H2,     0
1533     0  SPACE,  0
1534     0  J,      0
1535     0  COUNT,  0
1536  7760  M20,    7760
1537  7766  M12,    7766
1540   260  P260,   260
```

SYMBOL TABLE

A1	1464
A3	1515
CH	1527
CL	1530
COUNT	1535
DECODE	1436
ENTRY1	1431
ENTRY2	1425
ENTRY3	1422
ENTRY4	1417
ENTRY5	1414
ENTRY6	1411
ENTRY7	1406
ENTRY8	1403
H	1525
H2	1532
J	1534
L	1526
L2	1531
M12	1537
M20	1536
OKPRT	1503
P260	1540
PRINT	1400
SPACE	1533
START	1454
TYPE	1507
TYPEO	40

DUPLICATE TAGS

NONE

UNDEFINED SYMBOLS

NONE

```
                 /  LINEF -- CARRIAGE RETURN AND LINE FEED ROUTINE
                 /        USE TYPEO TO DO THE ACTUAL TYPING
                 /
                 TYPEO=40
                 *1545
1545      0      LINEF,  0000
1546   7200              CLA
1547   1355              TAD     CGRTN
1550   4440              JMS  I  TYPEO
1551   4440              JMS  I  TYPEO   /PROVIDES EXTRA DELAY FOR WEAK TELEPRINTER
1552   1356              TAD     LNFEED
1553   4440              JMS  I  TYPEO
1554   5745              JMP  I  LINEF
1555    215    CGRTN,   0215    /ASCII CODE FOR CARRIAGE RETURN
1556    212    LNFEED,  0212    /ASCII CODE FOR LINE FEED
```

SYMBOL TABLE

```
CGRTN      1555
LINEF      1545
LNFEED     1556
TYPEO        40
```

DUPLICATE TAGS

NONE

UNDEFINED SYMBOLS

NONE

```
                / TYPEO -- SUBROUTINE FOR TYPING OUT THE CONTENTS OF THE AC.
                /          THE LINK IS SAVED AND RESTORED AFTER TYPING
                /
                COMAND=44
                *1560
                SCOPEP=20
1560      0     TYPEO,  0
1561   6046             TLS
1562   7010             RAR
1563   3375             DCA     LINK     /SAVE THE LINK
1564   4420             JMS   I SCOPEP
1565   6041             TSF
1566   5364             JMP     .+2
1567   4444             JMS   I COMAND
1570   7200             CLA
1571   1375             TAD     LINK
1572   7104             CLL RAL          /RESTORE THE LINK
1573   7200             CLA
1574   5760             JMP   I TYPEO
1575      0     LINK,   0000
```

~~SYMBOL TABLE~~

COMAND	44
LINK	1575
SCOPEP	20
TYPEO	1560

DUPLICATE TAGS

NONE

UNDEFINED SYMBOLS

NONE

```
            *1620
            /  SCOPECAL -- A STRAIGHT LINE SCOPE CALIBRATION PROGRAM
1620  6075  SCAL,   DSB+1
1621  7001          IAC
1622  6053          DXL
1623  6063          DYL
1624  6054          DIX
1625  5221          JMP       SCAL+1
```

SYMBOL TABLE

SCAL 1620

DUPLICATE TAGS

NONE

UNDEFINED SYMBOLS

NONE

INTERNAL DISTRIBUTION

1-3. L. S. Abbott
4. C. L. Allen (CTC)
5. R. G. Alsmiller, Jr.
6. F. E. Bertrand
7. A. A. Brooks
8-10. W. R. Burrus
11. C. E. Clifford
12. G. deSaussure
13. R. E. Funderlic (CTC)
14. W. A. Gibson
15. T. A. Love
16. F. Madden
17-18. F. C. Maienschein
19. E. McDaniel
20-24. R. W. Peelle
25. F. G. Perey
26. B. W. Rust
27. E. G. Silver
28. J. W. Wachter
29. L. W. Weston
30. G. Dessauer (consultant)
31. B. C. Diven (consultant)
32. W. N. Hess (consultant)
33. M. H. Kalos (consultant)
34. L. V. Spencer (consultant)
35-36. Central Research Library
37. Document Reference Section
38-215. Laboratory Records Department
216. Laboratory Records ORNL RC
217. ORNL Patent Office

EXTERNAL DISTRIBUTION

218. P. B. Hemmig, Division of Reactor Development and Technology, U. S. Atomic Energy Commission, Washington, D. C. 20545
219. I. F. Zartman, Reactor and Development, U. S. Atomic Energy Commission, Washington, D. C. 20545
220-234. Division of Technical Information Extension (DTIE)
235. Division of Reactor Development (ORO)
236. Research and Development Div., ORO