REPORT NO. F694
31 AUGUST 1967

PART A1 PREFERRED DESIGN CONCEPT

VOYAGER CAPSULE PHASE B FINAL REPORT

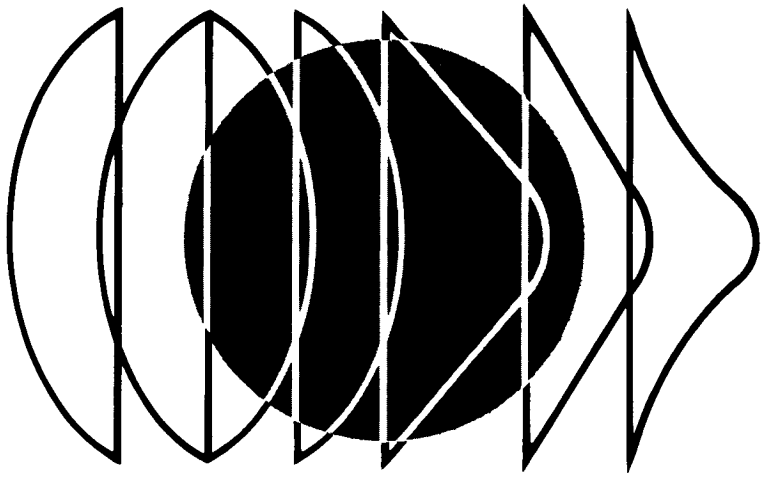

VOLUME II CAPSULE BUS SYSTEM

PREPARED FOR:
CALIFORNIA INSTITUTE OF TECHNOLOGY
JET PROPULSION LABORATORY
PASADENA, CALIFORNIA
CONTRACT NUMBER 952000

COPY NO. 22

MCDONNELL ASTRONAUTICS

REPORT ORGANIZATION

VOYAGER PHASE B FINAL REPORT

The results of the Phase B Voyager Flight Capsule study are organized into several volumes. These are:

Volume I	Summary
Volume II	Capsule Bus System
Volume III	Surface Laboratory System
Volume IV	Entry Science Package
Volume V	System Interfaces
Volume VI	Implementation

This volume, Volume II, describes the McDonnell Douglas preferred design for the Capsule Bus System. It is arranged in 5 parts, A through E, and bound in 11 separate documents, as noted below.

Part A	Preferred Design Concept	2 documents, Parts A_1 and A_2
Part B	Alternatives, Analyses, Selection	5 documents, Parts B_1, B_2, B_3, B_4 and B_5
Part C	Subsystem Functional Descriptions	2 documents, Parts C_1 and C_2
Part D	Operational Support Equipment	1 document
Part E	Reliability	1 document

In order to assist the reader in finding specific material relating to the Capsule Bus System, Figure 1 cross indexes broadly selected subject matter, at the system and subsystem level, through all volumes.

SYSTEM/SUBSYSTEM \ VOLUME II PARTS		PART A DESCRIPTION OF PREFERRED SYSTEM OBJECTIVES, MISSION, DESIGN, SUBSYSTEMS, OPERATIONS, SUPPORTING FUNCTIONS	PART B ALTERNATIVES, ANALYSIS AND SELECTION – METHODS TRADE STUDIES, OPTIMIZATION STUDIES RESULTS	PART C DETAILED DESCRIPTION OF SUBSYSTEM FUNCTIONS	PART D OPERATIONAL SUPPORT EQUIPMENT – SYSTEM, SUBSYSTEM, LAUNCH COMPLEX, MISSION, HANDLING, SOFTWARE	PART E RELIABILITY CONSTRAINTS, ANALYSIS, RESULTS, PROGRAM TESTING, CONTROL
CAPSULE BUS SYSTEM						
Mission	Objectives	1.1–Summary	2–Analysis	N/A	1–General	1–Constraints
	Profile	1.2–Summary	2–Analysis 2.4–Selection	N/A	N/A	3.1.1–Analysis
	Operations	4–Description by Phase	2.3–Analysis 2.3.7–Landing Site Select	N/A	4.4–LCE Description 4.5–MDE Description	3–Estimates
Design	General	2–Criteria Summary 3.1–Configuration	1–Study Approach 3–Functional Requirements	N/A	3.2–Concept 3.3–Summary 6.1–AHSE	4–Program Requirements 5–Component Reliability
	Standardization/Growth	2.5–Summary 11–Future	(See Specific Subsystem Below)	N/A	4.3.8-STC 4.4.8-LCE 4.5.8-MDE } Growth	N/A
	Weight	3.1.2.4–Summary 5–Breakdown	(See Specific Subsystem Below)	N/A	N/A	2.3.2–Reliability vs Weight
Interfaces (See Also Vol. V)		3.1–Summary 9.0–Operational	(See Volume V)	N/A	4.2.1,4.3.5,4.4.5, 4.5.5	N/A
Implementation (See Also Vol. VI)		10–Schedule 8.11–OSE	(See Volume VI)	N/A	(See Specific Subsystem Below)	N/A
Planetary Quarantine		7–General	(See Volume VI, C,7 Sterilization Plan)	N/A	None Required	N/A
O.S.E. (See Also Part D)		8–General (See Also–D1,D2, D3,D4)	(See D2.5-Selection Criteria, D9-Analysis, DIO - Alternatives)	(See D5-Subsystem Level Test Equipment, See Also D4, D6, D7)	Complete OSE Description	(See D4.3.6–STC D4.4.6–LCE D4.5.6–MDE)
SUBSYSTEMS						
Sterilization Canister		3.2.1.1–Description 3.1.2–Summary	5.1–Analysis	1.1	6.1.5.2,6.1.5.3, 6.1.5.6 6.1.5.8–AHSE 6.2.15–Servicing	(See Part C Sections 1.1.1.7 1.1.2.7 1.1.3.7)
Adapter		3.2.1.2–Description 3.1.2–Summary	5.2–Analysis	1.2	None Required	(See Part C, 1.2.7)

Figure 1–1

Aeroshell	3.2.1.3–Description 3.1.2–Summary	4.1–Configuration Selection 4.6–Separation 5.3.1–Structure 5.3.2–Heat Shield	1.3	None Required	(See Part C, 1.3.7)
Lander	3.2.1.4–Description 3.1.2–Summary	4.2–Configuration Selection 5.4–Analysis	1.4	6.1.5.9–Fixture	(See Part C, 1.4.7)
Telecommunications	3.2.2.1–Description	4.9–In-Flight Monitoring 5.5–Analysis	2–Telemetry 3–Radio 4–Antenna 5–Data Storage 6–Command	4.3.9.1–STC Console 5.7–Test Set	(See Part C, Sections 2.1.7, 2.2.7, 2.3.7, 3.1.7, 3.2.7, 4.5, 5.1.7, 5.2.7, 6.1.7, 6.2.7)
Power	3.2.2.2–Description	5.6–Analysis	7	4.3.9.1–STC Console 5.3–Test Set	(See Part C, Sect. 7.7)
Sequencing and Timing	3.2.2.3–Description	5.7–Analysis	8	4.3.9.1–STC Console 5.4–Test Set	(See Part C Sections 8.1.7, 8.2.7)
Guidance and Control	3.2.2.4–Description	4.7–De-orbit Attitude Reqm't. 5.8–Analysis	9	4.3.9.1–STC Console 5.5–Test Set	(See Part C, 9.7)
Radar	3.2.2.5–Description	5.9–Analysis	10	4.3.9.1–STC Console 5.6–Test Set	(See Part C, Sections 10.1.7, 10.2.7)
Aerodynamic Decelerator	3.2.3–Description	4.4–Selection 5.10–Analysis	11	None Required	(See Part C, 11.7)
Pyrotechnics	3.2.4–Description	5.11–Analysis	12	4.3.9.1–STC Console 5.9–Test Set	(See Part C, 12.7.1)
Thermal Control	3.2.5–Description	5.12–Analysis	13	4.3.9.1–STC Console 5.8–Test Set	(See Part C, 13.6)
De-orbit Propulsion	3.2.6.1–Description	5.13.1–Analysis	14	5.10–Test Set 6.1.5.10–AHSE	(See Part B, 5.13.4.5) (See Part C, 14.7)
Reaction Control	3.2.6.2–Description	5.13.2–Analysis	15	5.10–Test Set 6.2–Servicing	(See Part B, 5.13.4.5) (See Part C, 15.7)
Terminal Propulsion	3.2.6.3–Description	4.3–Configuration Selection 4.5–Terminal Deceleration 5.13.3–Analysis	16	4.3.9.1–STC Console 5.10–Test Set 6.2–Servicing	(See Part B, 5.13.4.5) (See Part C, 16.7)
Packaging and Cabling	3.2.7–Description	5.14–Analysis	17	4.3.9.8–Special Purpose Complex Equipment	Not Required

Note: Parentheses Refer Reader to Volumes/Parts Outside of the Respective Notation

TABLE OF CONTENTS

	Page
PART A PREFERRED DESIGN CONCEPT	1
SECTION 1 MISSION OBJECTIVES	1-1
1.1 Specific Mission Objectives	1-1
1.2 Mission Profile	1-2
SECTION 2 DESIGN CRITERIA, REQUIREMENTS AND CONSTRAINTS	2-1
2.1 General Considerations	2-1
2.2 Environmental Requirements	2-8
2.3 Structural Design Criteria	2-15
2.4 Electromagnetic Compatibility	2-24
2.5 Standardization and Growth Criteria	2-27
2.6 Subsystem Consideration	2-30
SECTION 3 CAPSULE BUS SYSTEM DESCRIPTION	3-1
3.1 System Configuration	3-1
3.2 Major Subsystems	3-11
3.2.1 Structural Modes	3-11
3.2.2 Electronic Equipment	3-77
3.2.3 Aerodynamic Decelerator Subsystem	3-133
3.2.4 Pyrotechnic Subsystem	3-143
3.2.5 Thermal Control	3-149
3.2.6 Propulsion Subystem	3-155
3.2.7 Packaging and Cabling	3-171
SECTION 4 MISSION OPERATIONS	4-1
4.1 Capsule Bus Mission Operations Description	4-1
4.2 Capsule Bus Subsystem Equipment Timeline	4-37
4.3 Capsule Bus Operational Contingency Modes	4-51
SECTION 5 WEIGHT DATA	5-1
5.1 Capsule Bus Weight Summary	5-1
5.2 Uncertainty Analysis	5-1
5.3 Qualification of Data	5-10
5.4 Spacecraft Mounted Equipment	5-10
5.5 Capsule Bus Items Left on the Aft Canister/Adapter After Separation	5-10

		Page
SECTION 6	SYSTEM RELIABILITY	6-1
6.1	VOYAGER Reliability Constraints	6-2
6.2	Failure Mode Effect and Criticality Analyses (FMECA)	6-3
6.3	Reliability Estimate Results	6-8
6.4	Reliability Program Requirements	6-18

This Document Consists of the Following Pages:

Title Page
i through iv
1 through 6
1-1 through 1-6
2-1 through 2-32
3-1 through 3-176
4-1 through 4-68
5-1 through 5-14
6-1 through 6-19

INTRODUCTION - The VOYAGER Program is a logical extension to the Ranger Surveyor, Lunar Orbiter, Explorer and Mariner Programs in the exploration of the solar system. The primary objective of VOYAGER is the accumulation of pertinent data on the existence and nature of extraterrestial life and on planetary surface, atmospheric and environment characteristics.

The first scheduled mission is planned for the 1973 opportunity, where two Planetary Vehicles, launched by a Saturn V, are placed in orbit about Mars. Each Planetary Vehicle consists of a Flight Spacecraft and a Flight Capsule, consisting of a Capsule Bus (CB), Entry Science Package (ESP), and a Surface Laboratory (SL). The Capsule Bus performs all deorbit, entry, and soft landing functions and is responsible for delivering the Surface Laboratory to the surface of Mars. The CB serves as a platform from which the SL conducts its Mission.

Our preferred design for the Flight Capsule is shown in the photograph on Page 2. This photograph is of our one-fourth scale demonstration model, in which the aft section of the bio-canister is made of clear plastic to permit a view of the assembled Capsule Bus Surface Laboratory and Entry Science package in the canister as it would appear for the launch and transit phases.

Figure 2 gives an artist exploded view of the Flight Capsule. The Aeroshell is a 19 foot diameter 120° cone with a spherical nose radius of 4.75 feet. The lander is 9.5 feet diameter. The Capsule Bus, SL and ESP are encased in the canister assembly to protect them from contamination after heat sterilization prior to launch. The forward canister is jettisoned in Mars orbit prior to Capsule Bus separation in preparation for the Mars entry.

We have recognized in our design that successfully meeting the objectives of the Capsule Bus System depends on meeting five major requirements beyond basic mission performance. These major requirements are:

1. Provide Design Margins in the Capsule Bus System to cope with the present uncertainty of the Martian environment. This has been accomplished by selecting subsystems with low sensitivity to variation in the environment and with a high degree of mission flexibility. An example of this is our selected legless, Uni-Disc lander with its low silhouette which provides landing stability for more severe conditions than required by the Phase B study constraints documents. For example, we have a 33% margin on c.g. height above the surface; this can be related to higher velocity of impact at the design c.g. height. Also, for flexibility our deorbit propulsion system with thrust termination feature allows Capsule Bus deorbit

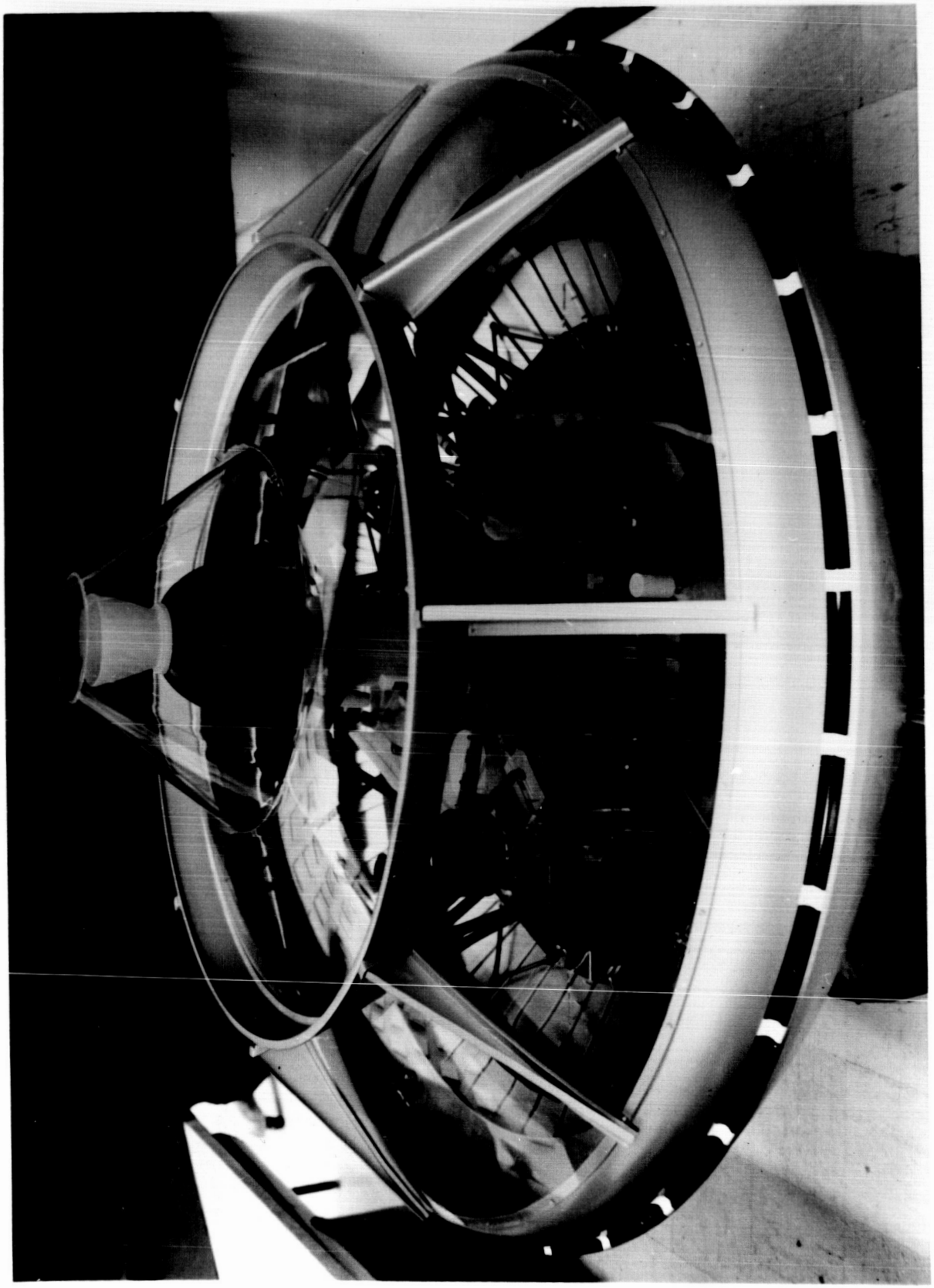

VOYAGER FLIGHT CAPSULE

CAPSULE BUS INTERIOR ARRANGEMENT

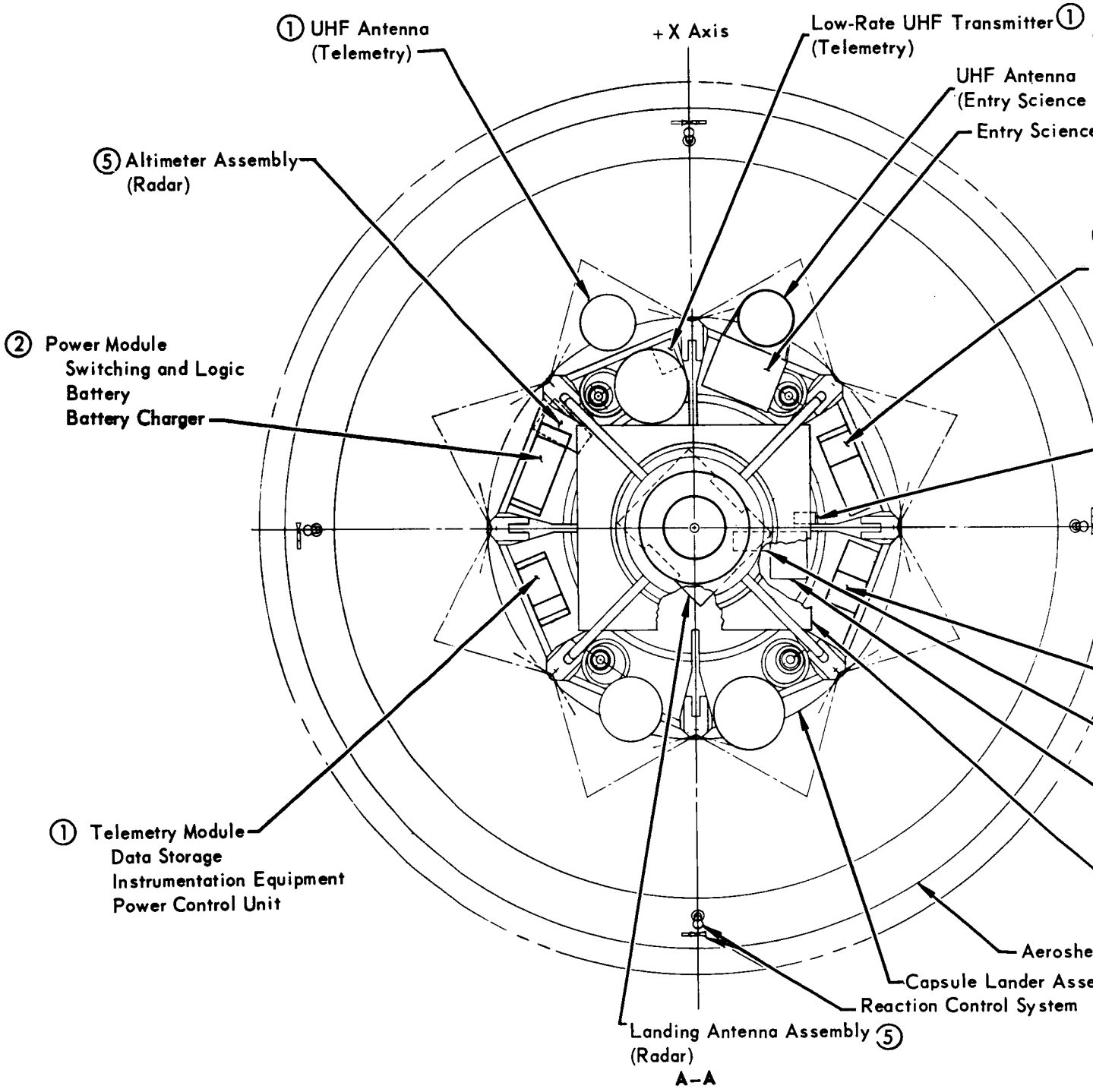

Figure 2

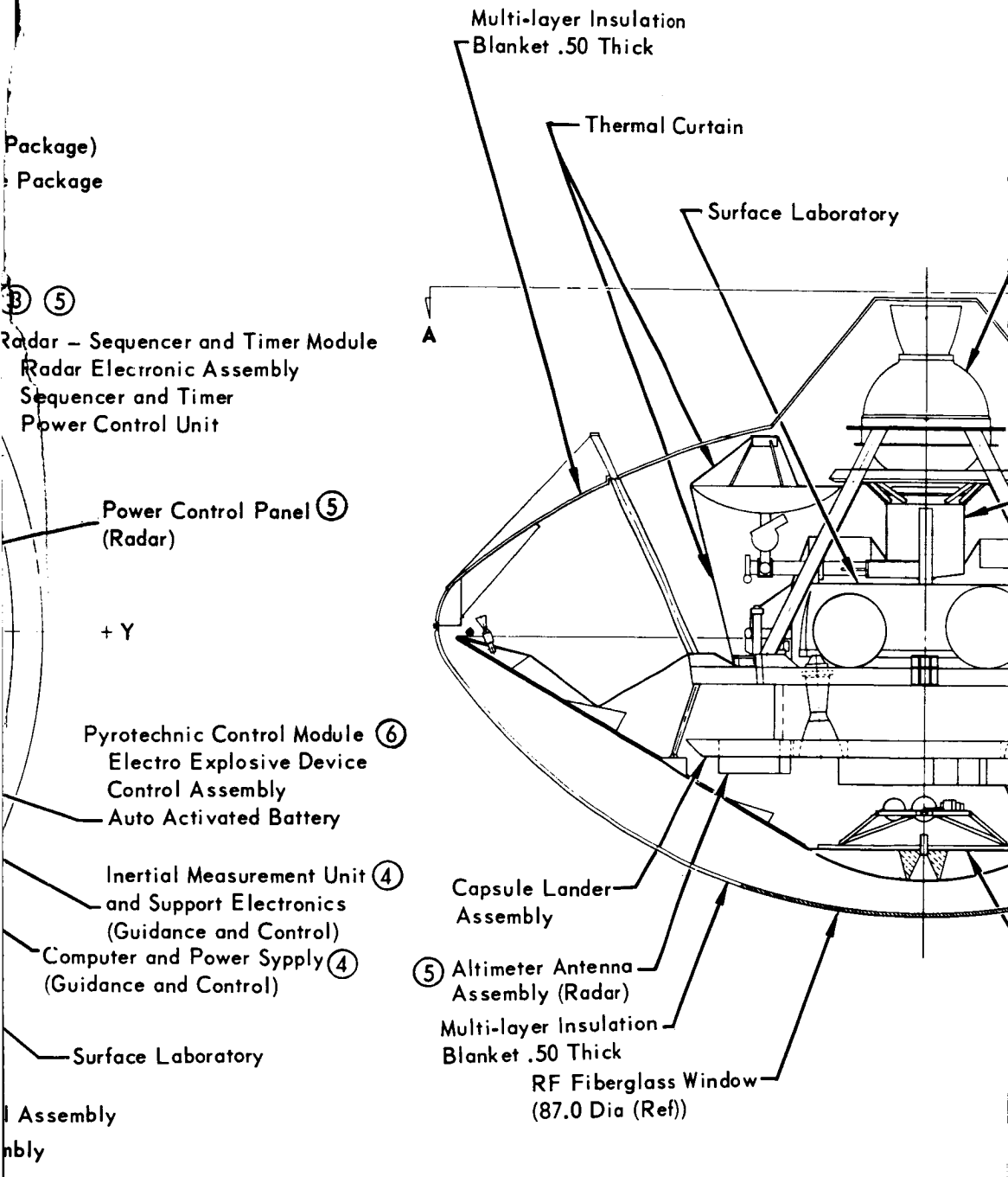
Multi-layer Insulation
Blanket .50 Thick
Thermal Curtain
Surface Laboratory
Package)
Package
③ ⑤
Radar – Sequencer and Timer Module
Radar Electronic Assembly
Sequencer and Timer
Power Control Unit
A
Power Control Panel ⑤
(Radar)
+ Y
Pyrotechnic Control Module ⑥
Electro Explosive Device
Control Assembly
Auto Activated Battery
Inertial Measurement Unit ④
and Support Electronics
(Guidance and Control)
Computer and Power Sypply ④
(Guidance and Control)
Surface Laboratory
Assembly
nbly
Capsule Lander
Assembly
⑤ Altimeter Antenna
Assembly (Radar)
Multi-layer Insulation
Blanket .50 Thick
RF Fiberglass Window
(87.0 Dia (Ref))

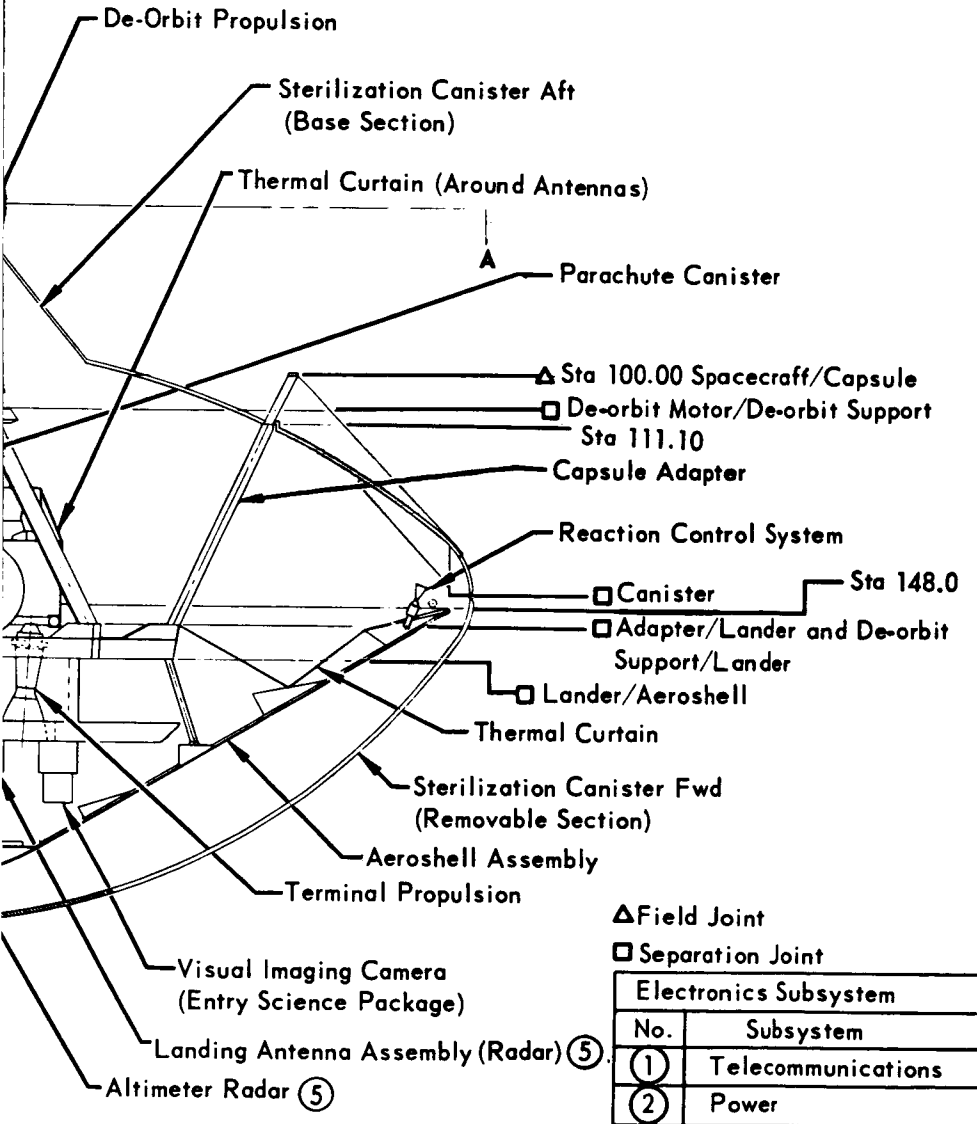

△ Field Joint

□ Separation Joint

Electronics Subsystem	
No.	Subsystem
1	Telecommunications
2	Power
3	Sequencing and Timing
4	Guidance and Control
5	Radar
6	Pyrotechnic Control

adjustments for the second Flight Capsule incorporating the environmental information determined in the first Capsule Bus descent into the Martian atmosphere.

2. Provide Simple State-of-the-Art Systems which minimize development risk, ensure compatability with the requirement of sterilization and maximize the ability to meet the launch constraints.

   This has been accomplished for example, by selecting a lander subsystem that has no articulation (such as extending legs) to prepare it for impact; it is made entirely from metallics known to be compatible with sterilization. In addition, we have selected a parachute as our aerodynamic decelerator for which the technology is now being successfully proven for the VOYAGER Program by the NASA PEPP Program. Our landing radar subsystem utilizes the LEM radar with modifications. This radar is rapidly approaching space qualification status. The remaining three Major Requirements for the Capsule Bus are:

3. Provide Simple Interfaces with other VOYAGER System such as the Flight Spacecraft, Surface Laboratory and Entry Science Package to assist in minimizing interdependent development risks. As an example, we have provided a non-ablative nose cap for the Capsule Bus to provide a gas sampling source location not contaminated by products of ablation.

4. Provide for Future Mission Growth of the Surface Laboratory, Yet Standardize the Capsule Bus to the maximum extent possible. As an example, we have postulated a six wheel rover Surface Laboratory for the 1979 mission and yet our Capsule Bus System is standardized for the future missions, 83% by major assembly count, 78% by weight and 80% by cost. As an example, our propulsion subsystems are standardized but are off-loaded for the 1973 missions.

   And last but certainly not the least, the major requirement for successfully meeting the VOYAGER objectives is to:

5. Provide Long Life Reliable Subsystems with Selected Redundancies to avoid single critical failure and provide in-flight monitoring and checkout to permit selection of the redundancy as required. For example, we have provided 83 redundancies in our selected design, of these, 63 are functional redundancies. We have avoided, through selection of these redundancies, single point failure of critical events which could cause catastrophic effect on the mission. Examples of functional redundancy

provided are in the initiation of the critical sequences of parachute deployment, Aeroshell separation and terminal propulsion ignition. Our preferred design backs-up the parachute deployment and Aeroshell separation signals by use of integrating accelerometer and the Guidance and Control computer. The terminal propulsion ignition, normally initiated by the entry altimeter, is backed up by the landing radar range signal.

The above five requirements have been satisfied throughout our preferred approach as described in Volume II. Part A, of this Volume (Volume II) presents a description of our preferred design concept of the CBS for achieving the 1973 VOYAGER Mars objective while satisfying the Constraints and requirements as imposed by JPL document SE003BB002-2A21, dated 21 June 1967. Our design meets all the Constraints and will do the mission successfully.

We approached our design concept on a total system basis, considering the Capsule Bus as only one of several operating systems necessary to accomplish the VOYAGER Mars mission. In the evolution of this design, extending over two years, complete confidence in the preferred concept has been gained by extensive static and dynamic laboratory tests, detailed simulations, and modeling work encompassing the major elements of the system. A broad spectrum of alternate configurations and subsystem designs was examined to form an effective basis for our mission success, adaptability, development risk, system performance, and cost.

We have designed into our preferred concept, provisions for post 1973 missions is particularly as regards extended life-time, increased payload, and mobility. Also, inherent is a high level of reliability, with provisions being made for graceful performance degradation even if extraordinary circumstances prevent full mission success. Insofar as possible a clean and unencumbered interface between the CB and the other systems has been maintained but the balance between simplicity and incurred penalities (e.g. effect on reliability, landed payload, weight) has also been recognized. This document, Volume II, Part A, provides an overall system description of the Capsule Bus. It succinctly answers four basic questions:

a. What are the requirements, constraints, and other guidelines which controlled the evolution of our design?

b. What is our design and how does it operate?

c. How reliable is our design and to what extent does it depend upon other systems or support functions?

d. How can our design be implemented to meet the 1973 launch opportunity?

Part A leaves to other parts of Volume II, more detailed subsystem descriptions; the rationale and analyses that support our design; the reliability analysis and OSE requirements. See the Report Organization Section preceding this introduction for cross reference to these more detailed discussions.

SECTION 1

MISSION OBJECTIVES

The VOYAGER Program is a continuation and extension of the unmanned scientific exploration of the solar system. Its primary objective is to carry out scientific investigations by instrumented vehicles which will fly by, orbit, and/or land on the planets. The objectives of the missions to Mars, beginning in 1973, are to obtain information relevant to the existence and nature of extra-terrestial life; the atmosphere, surface and body characteristics of the planet; and the planetary environment by performing unmanned experiments on the surface of and in orbit about Mars.

Implicit in the evolutionary theory of life is the proposition that the appearance of living organisms is only one chapter in the history of the planet. This view has been strengthened by the recent synthesis of biologically important compounds by applying energy to presumed primitive Earth environments. Life on Earth, however, may be unique. The opportunity to study a neighboring planet for living organisms and clues to the evolution of that planet makes the VOYAGER Project extremely important.

The primary objective of the VOYAGER Flight Capsule is to perform experiments during descent to and on the surface of the planet Mars in order to obtain information about the planetary environment, including atmospheric and surface characteristics, and about possible extraterrestrial life. The systematic study of the evolution of Mars, founded by the VOYAGER Program, will provide a vast body of new data for the physical and biological scientists, and will test the hypothesis that living organisms are a probable event in the evolution of all planetary environments whose histories resemble that of the Earth.

With this aim in mind, the VOYAGER Flight Capsule Preferred Design Concept is compatible with anticipated requirements for future missions. It accommodates a variety of science payloads, mission profiles, and trajectories; and is able to accept technological improvements with minimum redesign. Compatibility with long life and operational requirements of later missions was emphasized in the 1973 Preferred Design Concept.

1.1 SPECIFIC MISSION OBJECTIVES - The VOYAGER Project will send sterilized, unmanned spacecraft to Mars every two years, at each opportunity, beginning in 1973. The Planetary Vehicle will consist of four major components: The Flight Spacecraft, the Capsule Bus, the Entry Science Package, and the Surface Laboratory. Two Planetary Vehicles will be launched on one Saturn V launch vehicle at each opportunity.

The Flight Capsule (The Capsule Bus, the Entry Science Package, and the Surface Laboratory) of each Planetary Vehicle will be separated from the flight spacecraft while in a Mars orbit and will descend to the surface of Mars and make a soft landing. During entry, the Entry Science Package will measure the atmospheric properties and transmit the data to the Flight Spacecraft for relay to the Earth. After landing,the Surface Laboratory will operate on the Martian surface and the Flight Spacecraft will continue to operate in a Mars orbit, each for a specified period of time.

Specific goals of the VOYAGER missions are:

1) To determine the physical and chemical conditions of the Martian atmosphere and surface.
2) To investigate the pattern of Martian physical and chemical evolution.
3) To determine whether life is or has been present on Mars.
4) To determine the characteristics of that life.

These goals can be achieved by our Preferred Design concept.

The Capsule Bus System objective is to develop a standardized vehicle which will soft-land a varying scientific payload at a preselected site on the Martian surface during each mission opportunity. In order to assure a high level of success in achieving the overall VOYAGER Project objectives, it will be necessary to develop the Capsule Bus for the 1973 mission and to build on the experience gained in using it. This has a high priority in the 1973 mission, second only to placing the Planetary Vehicle in an orbit about Mars. The versatility of the McDonnell-Douglas design and the margins built into the system insures that these goals are met.

1.2 MISSION PROFILE - Selection of a mission profile for the Capsule Bus must consider three factors: (1) the permissible initial conditions provided by the Planetary Vehicle, (2) the desirable end conditions compatible with the Surface Laboratory, and (3) the objectives of the Capsule Bus. Initial studies by JPL, NASA, and McDonnell-Douglas have shown that a Saturn V launch vehicle is needed in order to provide sufficient booster capability. By launching two Planetary Vehicles on a single Saturn V, coverage of the near Mars experiments is increased, dual Capsule flights are obtained, two landing sites can be explored, and the probability of mission success is increased.

1.2.1 Planetary Vehicle Mission Profile - Two Planetary Vehicles launched from Kennedy Space Center on a single Saturn V are inserted into a 100 n.a. mi. circular orbit, Figure 1.2-1. After the nose fairing is jettisoned, the S-IVB is restarted for insertion into a helio-centric transfer trajectory to Mars. The forward Plane-

tary Vehicle is separated first, followed by jettison of the shroud and separation of the aft Planetary Vehicle. The two are completely independent of each other, but both perform essentially identical missions. Midcourse maneuvers are made during the interplanetary cruise to correct the aiming point of each Planetary Vehicle and to provide a minimum of eight days separation in arrival dates of the two vehicles.

As each Planetary Vehicle approaches Mars, the Flight Spacecraft propulsion system is fired to place it into a highly eccentric planetary orbit. By tracking the vehicle for several days, the orbit can be accurately determined. The Planetary Vehicle is then separated into two parts - the orbiting Flight Spacecraft and the Capsule Bus.

1.2.2 Capsule Bus Mission Profile - After separation from the Flight Spacecraft, the Capsule Bus is oriented to the proper attitude, and after the separation distance from the Spacecraft is sufficient, a deorbit motor is fired, Figure 1.2-2. Following a long shallow descent to the Mars atmosphere, the Capsule Bus enters at a velocity between 15,000 and 13,000 ft./sec. and then follows a ballistic path to approximately 23,000 feet altitude. An aerodynamic decelerator is deployed to further retard the velocity. A soft landing (less than 25 ft/sec vertical velocity) however, requires terminal propulsion. This propulsion system, controlled by radar, is initiated at 5,000 feet altitude and decreases the descent speed to near zero about 10 feet above the Martian surface.

This mission profile is consistent with two of the major objectives of the 1973 VOYAGER mission - to obtain data on the Martian environment during entry and landing and to standardize the systems as much as possible for future missions. Use of the out-of-orbit descent insures considerable flexibility in the mission profile. By selection of the size, location, and inclination of the orbit, a wide variety of landing sites is available, depending on the arrival conditions within the launch opportunity. Deorbit descent provides slower entry velocities than direct entry, and permits shallower entry angles. These advantages combine to provide longer flight times at lower speeds for improved atmospheric measurements and data-gathering capabilities. The soft landing reduces the design requirements for impact survival of the scientific instrumentation payload. Use of this technique reduces the direct influence of arrival conditions on the atmospheric flight and landing, and reduces the range of flight conditions that need to be compatible with deorbit descent and landing site requirements.

From launch through Mars orbit a special CB telemetry cruise commutator monitors equipment temperatures and pressures and the condition of the thermal control

and electrical power subsystems. This data provides information for assessing the equipment survival in its inactive state. An extensive subsystem activation and checkout routine is conducted just prior to Capsule separation to evaluate the CB subsystem's performance. These test results determine if the preprogrammed mission flight plan should continue or be modified. The checkout test sequence and equipment operation mode is under the control of a preprogrammed, automatic CB Test Programmer. All final CB mission updates, via Spacecraft command, are performed after these tests.

Critical equipment operational parameters of all subsystems also are monitored from Capsule separation to post-landing. Correlating this data with pre-separation checkout data allows isolation of fault causes between the interplanetary cruise and atmospheric entry environments. This data is also used for a rapid post-flight first-order flight dynamics reconstruction effort.

The Flight Capsule Preferred Design Concept discussed in the following sections of this volume was developed to fulfill these mission objectives within this mission profile. The Capsule Bus will achieve Martian entry and the Capsule Lander will achieve a soft landing on the surface. It will support the Entry Science Package and the Surface Laboratory during the mission. The Preferred Mission Profile and the Capsule Bus System is a workable means of achieving the 1973 mission goals. Sufficient flexibility and standardization has been included in our preferred design concept that missions beyond 1973 can be accommodated.

PLANETARY VEHICLE MISSION

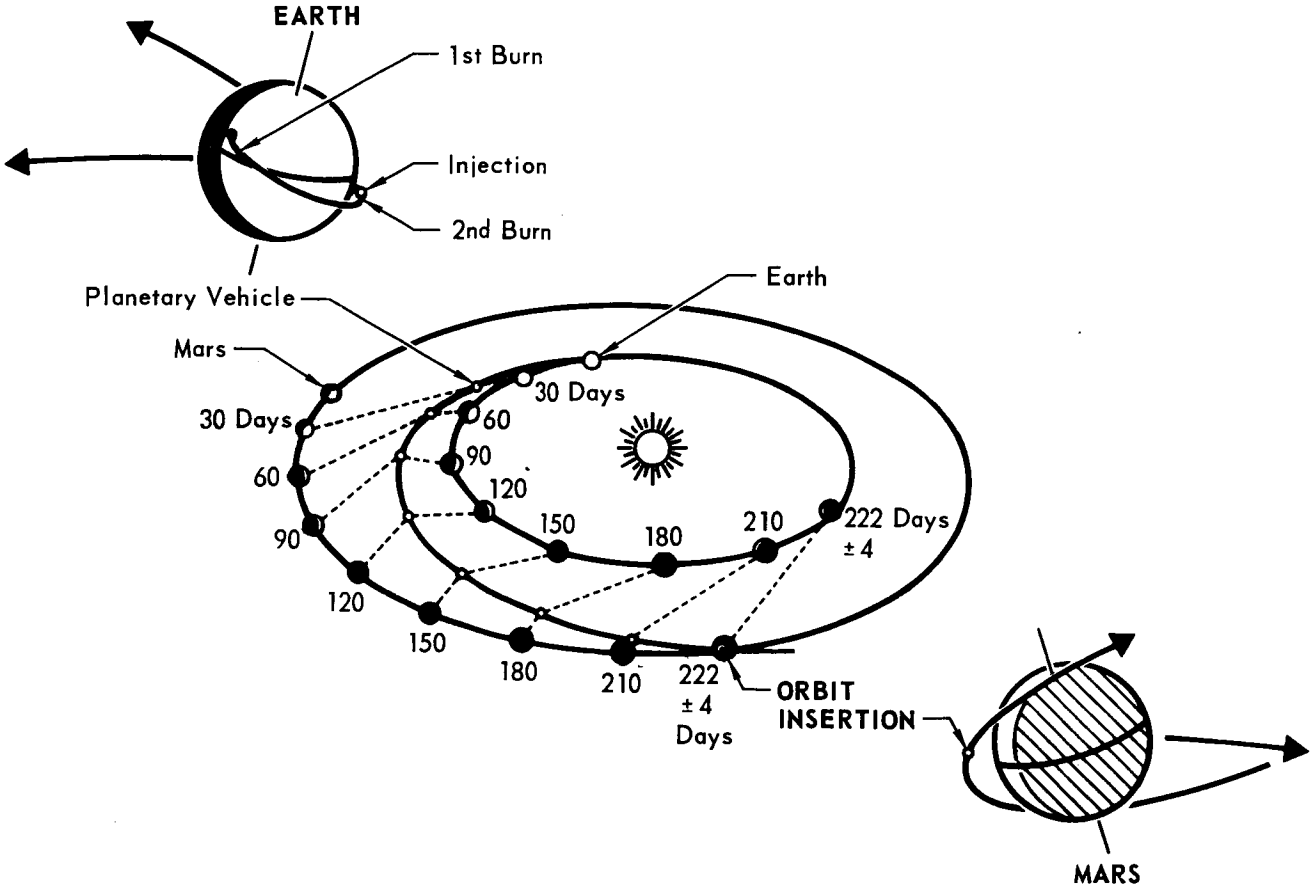

Figure 1.2–1

MAJOR VOYAGER MISSION EVENTS

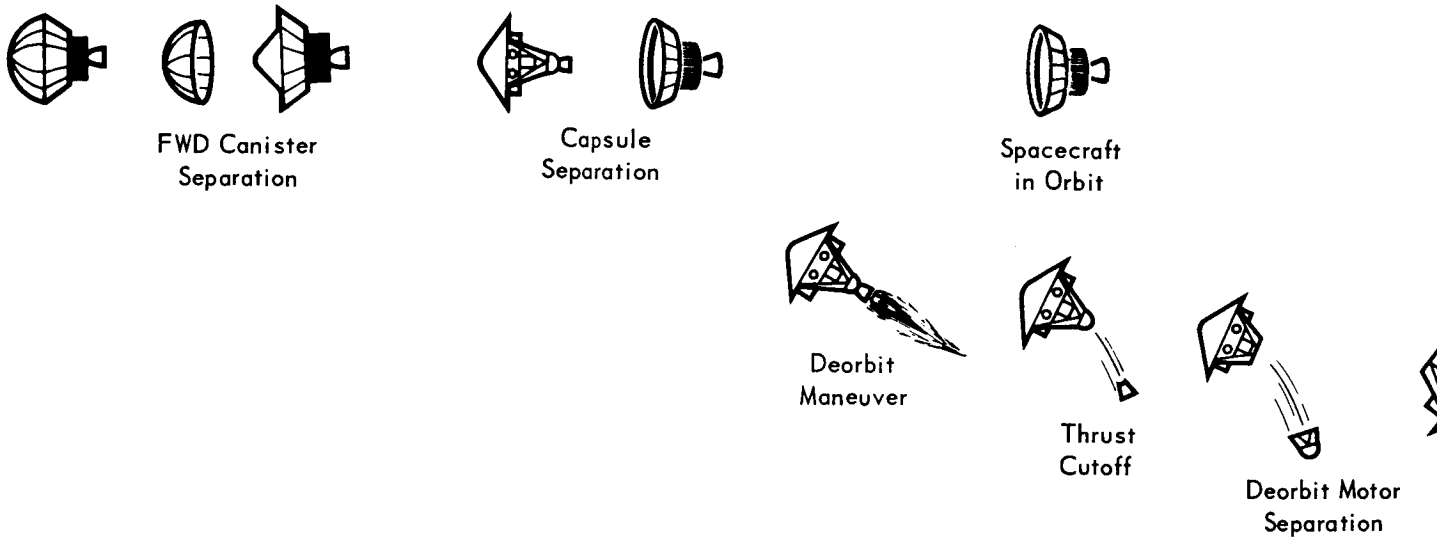

Launch Vehicle:	Liftoff Earth Orbit Heliocentric Transfer Inspection
Planetary Vehicle:	Separation Midcourse Corrections Cruise Mars Orbit Insertion Orbit Operations
Spacecraft:	Capsule Separation Orbit Operations
Capsule:	Deorbit Descent Entry
ENTRY SCIENCE PACKAGE OPERATIONS	Atmospheric Flight Aerodecelerator Aeroshell Separation Terminal Propulsion Landing Post-Landing
Surface Laboratory:	Landed Operations

Figure 1.2–2

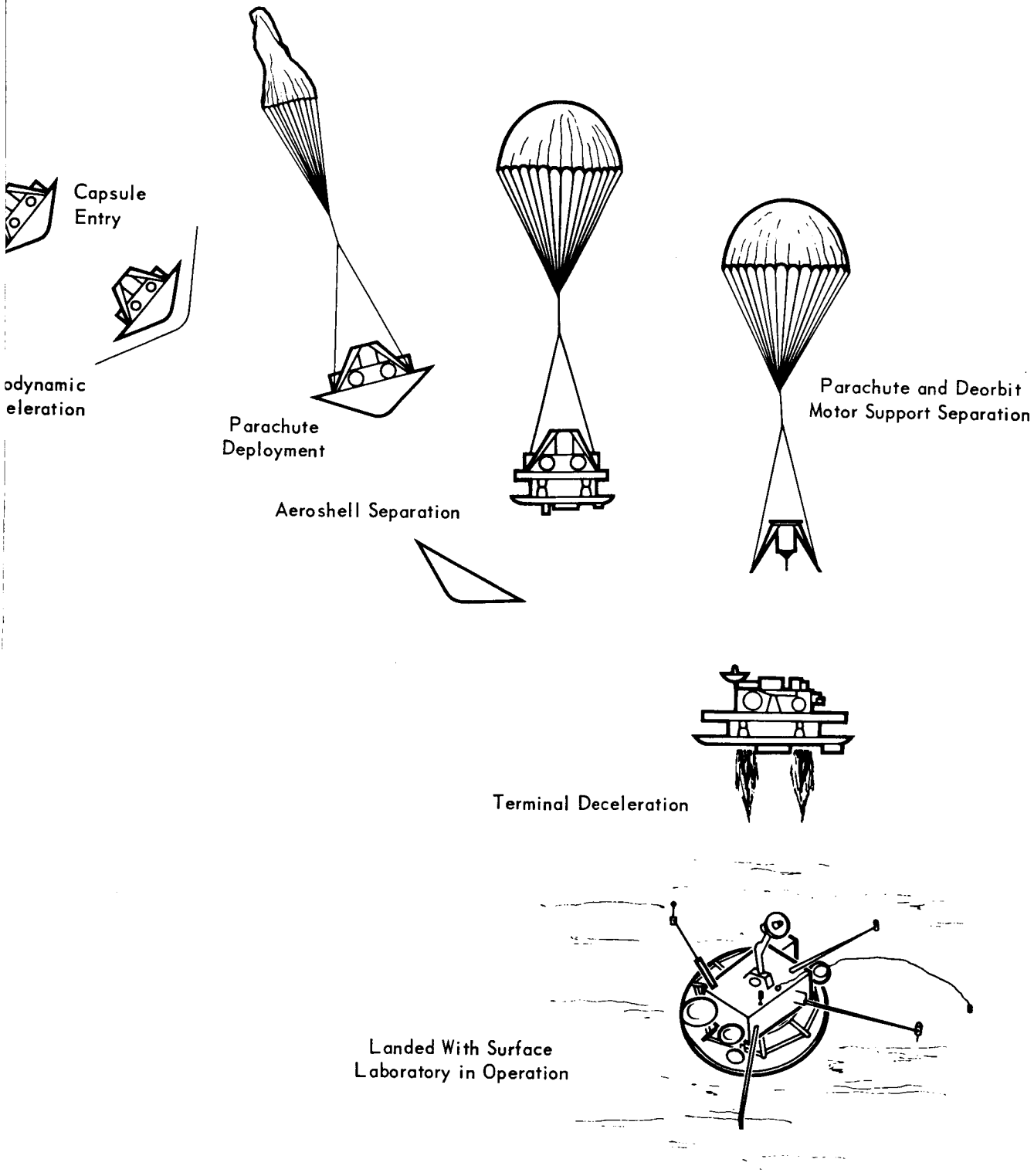
Capsule
Entry
odynamic
eleration
Parachute
Deployment
Aeroshell Separation
Parachute and Deorbit
Motor Support Separation
Terminal Deceleration
Landed With Surface
Laboratory in Operation

SECTION 2

DESIGN CRITERIA, REQUIREMENTS AND CONSTRAINTS

The requirements and constraints that have a major influence on the design of the Capsule Bus System are identified in this section. Some are taken directly from the JPL Document, "1973 VOYAGER Capsule Systems Constraints and Requirements Document" dated 12 June 1967 and are the result of system analysis. They include General Considerations, Environmental Requirements, Structural Design Criteria, Electromagnetic Compatibility, Standardization and Growth, and Subsystem Considerations.

2.1 GENERAL CONSIDERATIONS - The requirements and constraints that we consider to be the most important in the design of the Capsule Bus System are listed below:

a. Operational constraints as shown in Figure 2.1-1.

b. Launch in 1973, opportunity window shown in Figure 2.1-2.

c. A conservative engineering approach.

d. Standardization for future missions.

e. A weight of 5000 lb in 1973, increasing to 7000 lb for future missions.

f. Planning so that no single failure will have a catastrophic effect on the mission.

g. Independent, separable, and self-supporting operation for the Capsule Bus System.

h. Fully automatic operation for the Capsule Bus System.

i. Planetary Quarantine Requirements .

j. Entry within the envelope shown on Figure 2.1-3.

k. Reliability through design simplicity, using flight-demonstrated practices conservative margins, and selective redundancy.

l. Interface constraints as shown in Figure 2.1-4.

OPERATIONAL CONSTRAINTS

Launch:
- Saturn V
- Kennedy Space Flight Center
- 1973 Launch Opportunity
- 2 Identical Planetary Vehicles

Orbit:
- Out-of-Orbit Capsule Landing
- 3 to 12 Days Orbit Stay Time
- Relative Velocity Within ± .2 m/s
- 300 m Minimum Separation Distance at De-orbit Ignition

De-orbit:
- 30° Variation in Landing Location

Entry:
- Altitude = 800,000 ft
- Ballistic (Body of Revolution with c.g. on Centerline)
- Terminal Rocket Deceleration

Landing:
- Vertical Velocity < 25 ft/sec
- Horizontal Velocity < 10 ft/sec

Site:
- 15 to 30° from Terminator
- Spacecraft Pictures Within 600 km of Landing Site, Similar Lighting Conditions as Descent
- TV During Descent
- TV After Landing
- Maximum Data Before Nightfall
- ± 34° Surface Slope

SL Lifetime:
- One Mars Diurnal Cycle Plus Time to Transmit Data

Figure 2.1–1

VOYAGER MISSION CONSTRAINTS

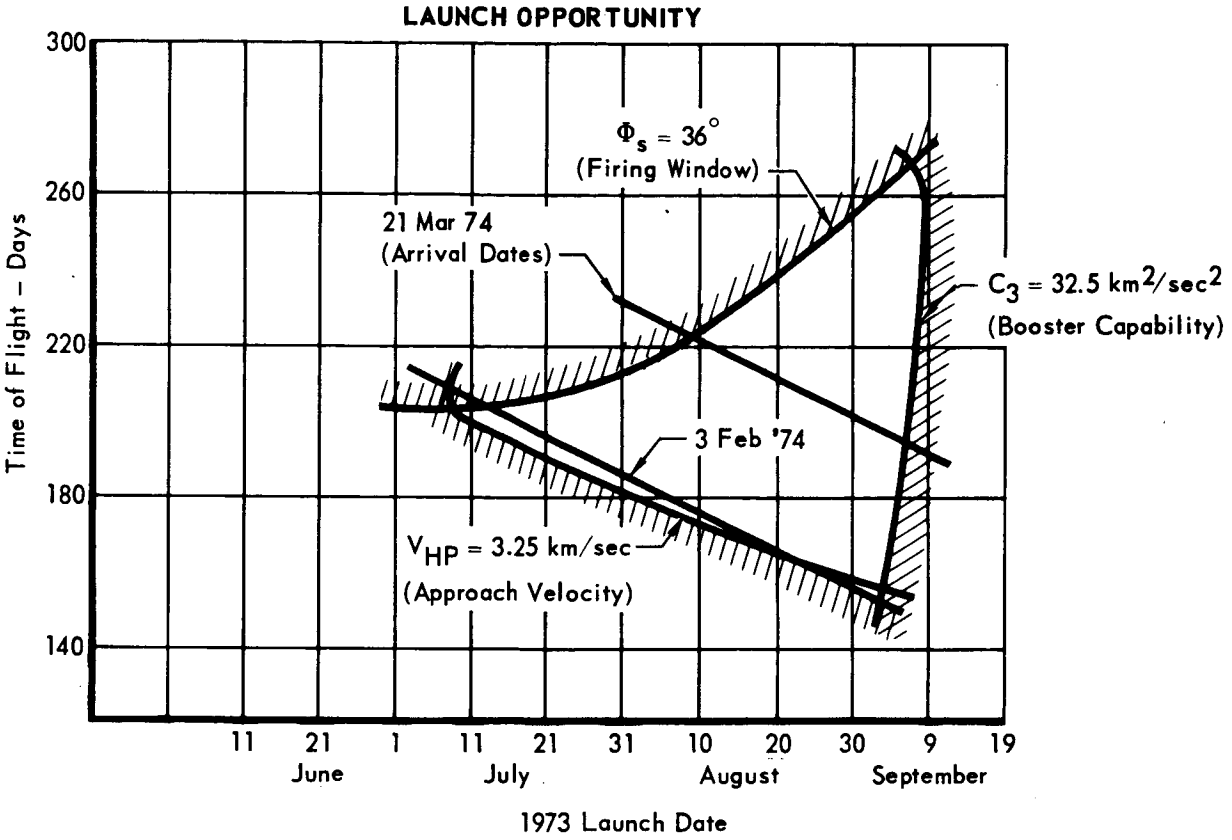

Figure 2.1–2

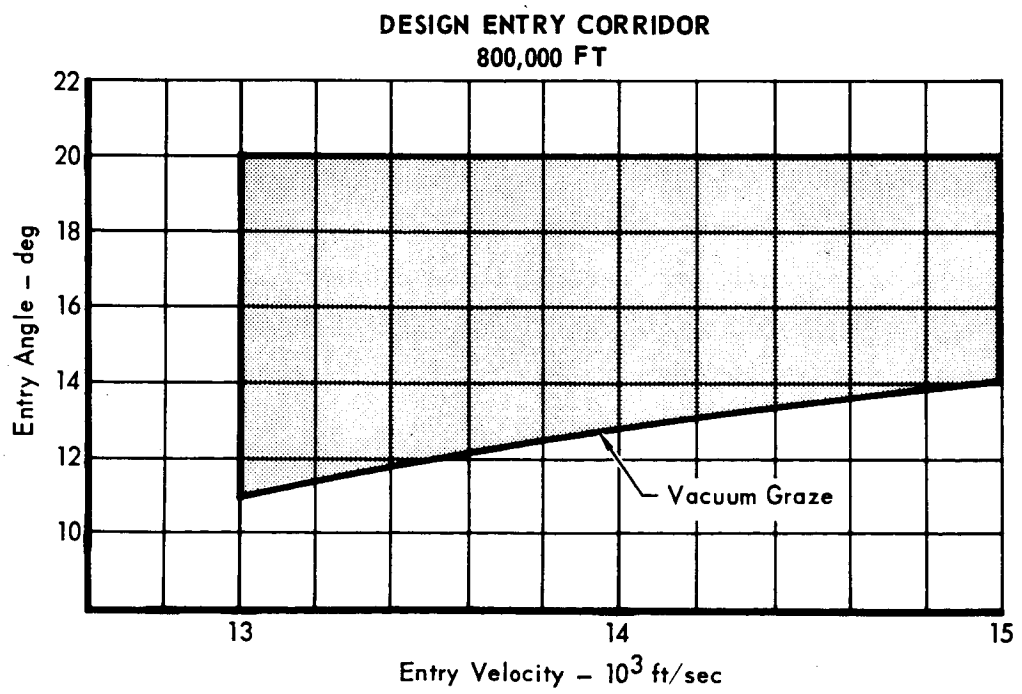

Figure 2.1–3

SYSTEM INTERFACE REQUIREMENTS AND CONSTRAINTS
CAPSULE BUS SYSTEM

CBS TO OTHER SYSTEM INTERFACES	GENERAL	ELECTRICAL	STRUCTURAL MECHANICAL	THERMAL
SLS	1. Standardization for future opportunities. 2. Provisions for SLS post 1973 opportunity changes.	Electrical Power 1. CB distributes SC power to SL during cruise with SC on/off control. 2. Switching conditions nor single failure modes allow SL to power SC. 3. CB nor ESP battery charging is inhibited with SC supplied SL power failure. No fuses. 4. SL provides CB and/or ESP backup battery power. Sequential 5. Primary commands are not supplied SL by CB; only backup commands. Data 6. CB provides SL sync and control signal for SL Engg. data routed to SC during Cruise. In-Flight Checkout 7. Control signals from CB test programmer are provided to SL test programmer. Commands 8. SC commands are routed through CB to SL. EMC 9. Conducted on radiated interference generated by CB or SL shall not degrade performance of PV. Cabling 10. Single CB to SL interface connector– qualified. 11. Interface connector shall be located with straight and free engagement of contacts and are assembled without disturbing other cabling. 12. Rigid mounted SL interface connector to SL support structures. 13. CB interface connector – flexible cable/ manual disconnection. 14. SL receptacle shall have socket contacts (compatible with all VOYAGER environments) 15. There will be single point grounds within both CB and SL.	1. Material selection – Compatibility at SL and Capsule Lander Interface. 2. Solid-bolt interface. 3. Dynamic envelope and size restriction. 4. Thermal isolation.	1. Minimize heat transfer paths across field joints. 2. Provide electrical power for SLS heaters. 3. Provide controlled temperature environment prior to landing. 4. Temperature monitoring throughout mission

Figure 2.1–4

PROPULSION	PYROTECHNIC	SCIENCE	OSE
1. Surface alteration (erosion, contamination and heating) resulting from terminal descent engine exhaust impingement on the Martian surface.	1. Products of pyrotechnic function are to be completely contained to preclude interference with science instruments. 2. CB sequencer and timer backup arms and initiates high gain S-Band antenna unlock device.	1. Post touchdown ESP operation constrain SL sequence backup command. 2. CB power down constrains SL deployables. 3. Determination of landing site contamination.	1. The SLS control room OSE shall be physically & electrically compatible with CBS controller. 2. The SLS TM shall be compatible (format, data rate, etc.) with the CB ground station. 3. The SLS shall contain sufficient test points and test point access for flight capsule integration and environmental tests. 4. The SLS and CBS contractors shall provide interface simulators to each other for compatibility testing prior to mate. 5. The SLS contractor shall provide structural attach points for SLS handling and installation at the Flight Capsule integrator's plant.

SYSTEM INTERFACE REQUIREMENTS AND CONSTRAINTS
CAPSULE BUS SYSTEM (Continued)

CBS TO OTHER SYSTEM INTERFACES	GENERAL	ELECTRICAL	STRUCTURAL MECHANICAL	THERMA
SLS (Cont.)		16. All interface circuits shall be insulated (100 megohms minimum between each conductor and all other conductors and shields connected in parallel and between each conductor and conductor shells) (20 megohms minimum between all conductors and their associated shields). 17. Interference of signals within the cabling network and interface connectors shall be minimized (by isolation per signal type with physical separation – with interface connectors and within each connector).		
ESP	1. Standardization for future opportunities.	Electrical Power 1. CB shall distribute SC power to ESP during cruise with SC on/off control. 2. Switching conditions nor single failure mode will allow ESP to power SC. 3. CB shall provide ESP to SC short circuit protection so that ESP failure will not inhibit CB or SL battery charging. No fuses. 4. Backup SL battery power shall be provided to ESP via CB in event of ESP power failure. Sequencing 5. Initiation of touchdown commands shall be supplied to ESP by CB. Data 6. ESP engr. data routes thru CB to SC during cruise. Appropriate SL sync. and control signals to be provided to ESP by CB. 7. ESP engr. and science data with sync. signal shall be routed thru CB to SC during in-flight checkout prior to FC sep. 8. ESP engr. data and flow rate science data shall be provided to CB during entry for transmission to SC via CB–SC relay link. 9. CB engr. data is provided ESP during entry for transmission to SC via ESP–SC realy link. Commands 10. SL commands are routed thru CB to ESP. Inflight Checkout 11. Control signals from CB test programmer shall be routed thru CB to ESP.	1. TV Camera looks through Aeroshell during entry and descent. 2. ESP remotely mounted packages and probes 3. TV camera field of view parallel to CB roll axis. 4. TV camera ejected prior to landing. 5. Accelerometer as close as possible to CB c.g.	1. Provide ele power for E heaters. 2. Provide con temperature ment until E shutdown. 3. Temperature ing through

Figure 2.1–4 (Continued)

Figure 2.1–4 (Continued)

AL	PROPULSION	PYROTECHNIC	SCIENCE	OSE
ctrical SP trolled environ- SP monitor- nissions.	N/A	N/A	N/A	1. Telemetry and command compatibility with ground station. 2. Test points – for integrated tests. 3. CB simulator compatibility.

SYSTEM INTERFACE REQUIREMENTS AND CONSTRAINTS
CAPSULE BUS SYSTEM (CONTINUED)

CBS TO OTHER SYSTEM INTERFACES	GENERAL	ELECTRICAL	STRUCTURAL MECHANICAL	THERM
ESP (CONTINUED)		EMC 12. Conducted or radiated interference generated by ESP or CB shall not degrade perf. of PV. Cabling 13. Interface connectors shall be located with straight and free engagement of contacts and are accessible without disturbing other cabling. 14. ESP connectors are rigidly mounted. 15. CB connectors are on flexible cabling, having manual disconnects. 16. All interface circuits shall be insulated (100 megohm minimum between each conductor and all other conductors and shields connected in parallel and between each conductor and conductor shells) (20 megohm minimum between all conductors and their associated shields). 17. ESP receptical shall have socket contacts (compatible with all Voyager environments). 18. Interference of signals within the cabling network and interface connectors shall be minimized (by isolation per signal type by physical separation – with interface connectors and within each connector).		
SCS	1. Standardization for future opportunities.	Electrical Power 1. CB accepts SC power during cruise – SC has ON/OFF control (including backup commands). 2. Switching conditions nor single failure modes allow CB to power SC. 3. SC supplies short circuit protection for SC to CB power. 4. SC supplies power to SC mounted CB eqpt. Sequencing 5. SC provides CB sequencer & timer initiation commands. Data 6. CB provides Engg. data to SC during (cruise). SC sync and control signals are provided to CB by SC.	1. Dynamic envelope and size restrictions. 2. Adapter separate from canister. 3. Clearance for adapter and Capsule Lander separation. 4. Adapter and aft canister remains on SC after separation. 5. Adapter to SC interface attachment external of canister	1. Control th face at fie 2. Thermal e with solar

Figure 2.1–4 (Continued)

AL	PROPULSION	PYROTECHNIC	SCIENCE	OSE
rmal inter- d joint. change panels.	1. Exhaust impingement on SC science instruments.	1. Products of pyrotechnic functions are to be completely contained to preclude debris interference on SC performance. 2. Explosive bolts release (CB from SC). 3. Disconnects effect flight capsule to flight spacecraft wire bundle separation. 4. SC sequencer and Timer arms Flight Capsule Canister release (same as #8 Commands).	N/A	1. The SC flyaway umbilical shall contain sufficient pins for handling Flight Capsule test data, critical analog parameters and RF coax cables for PV tests. 2. The SC contractor shall provide an interface simulator for RF and hardline compatibility testing prior to mate. 3. The SC contractors ground station shall receive, extract and route flight capsule. TM data to the flight capsule STC.

PROPULSION	PYROTECHNIC	SCIENCE	OSE
N/A	1. Pyrotechnic assemblies to be compatible with LV static and dynamic environments. 2. Firing circuits compatible with LV electromagnetic environments.	N/A	1. The LV contractor provides an access door in the shroud sufficient to allow emergency propellant dump at the pad. 2. The LV ground station shall receive and process PV TM data (including CBS) from launch to separation.
1. See item 2) OSE	1. See item 2) OSE	1. Servicing requirements for science instruments support items. 2. Special handling procedures for science instruments.	The LOS provides: 1. Ground power. 2. Explosive safe area – pyro and propellant loading and storage. 3. Hazard alarm and emergency shut down. 4. Facility cabling (A2A lines) to handle CBS data requirements. 5. OSE test and installation areas in the control room, LUT, LCC, and DSS71.
N/A	N/A	N/A	The CBS contractor shall provide: 1. MDE compatible with the DSIF. 2. CBS simulator for DSIF. 3. CBS data displays for SFOF.
N/A	N/A	1. Altitude time history – ESP data correlation. 2. CB and ESP clock signals relationship – ESP data correlation. 3. Attitude and altitude rate time history – ESP data correlation. 4. Relationship of flight path angle and attitude – ESP data correlation. 5. Update of landing time coordination prior to entry.	1. The CBS contractor shall incorporate human. factors design requirements into the MDE design.

2.2 ENVIRONMENTAL REQUIREMENTS - The JPL Environmental Predictions Document and the Capsule Systems Constraints and Requirements Document reveal several environmental requirements which are unique to the VOYAGER Project. McDonnell has already demonstrated the capability to design to more conventional Aerospace environments; consequently, our major attention in this study has been directed to these unique requirements and their effects on system design.

The unique environmental requirements for the VOYAGER program can be separated into three categories:

a. Decontamination and sterilization.

b. Deep space environment.

c. Mars and near-Mars atmospheric and surface characteristics.

Highlights of these are listed in subsequent sections.

2.2.1 Decontamination and Sterilization - This environmental constraint is considered to have the greatest single effect on system design, necessitating the review of many here-to-fore proven designs and requiring extension of the state-of-the-art for others.

Ethylene oxide (ETO) decontamination, which necessitates compatibility certification of parts and materials, is considered a most significant design constraint. Dry heat sterilization by the time-temperature cycles cited in the source documents (Paragraph 2.2.5) will also necessitate special designs and considerations. Our preferred design concept has been formulated in accordance with these requirements. The full decontamination and sterilization requirements at all levels of fabrication are found in Appendix A of this volume.

2.2.2 Deep Space Environment - Environments of major concern at this phase are pressures of 10^{-14} Torr or less, and temperatures which approach -459°F as a radiation sink.

2.2.3 Mars and Near-Mars Environment - Martian static-climatic environments of major concern at this phase are as follows:

a. Ambient temperatures from +120° to -190°F.

b. Entry, landing, and post-landing ambient design pressures are illustrated in Figure 2.2-1.

c. The atmospheric design region for Mars atmospheric density is illustrated in Figure 2.2-2.

ATMOSPHERIC PRESSURE
MODELS VM-1 THROUGH VM-10

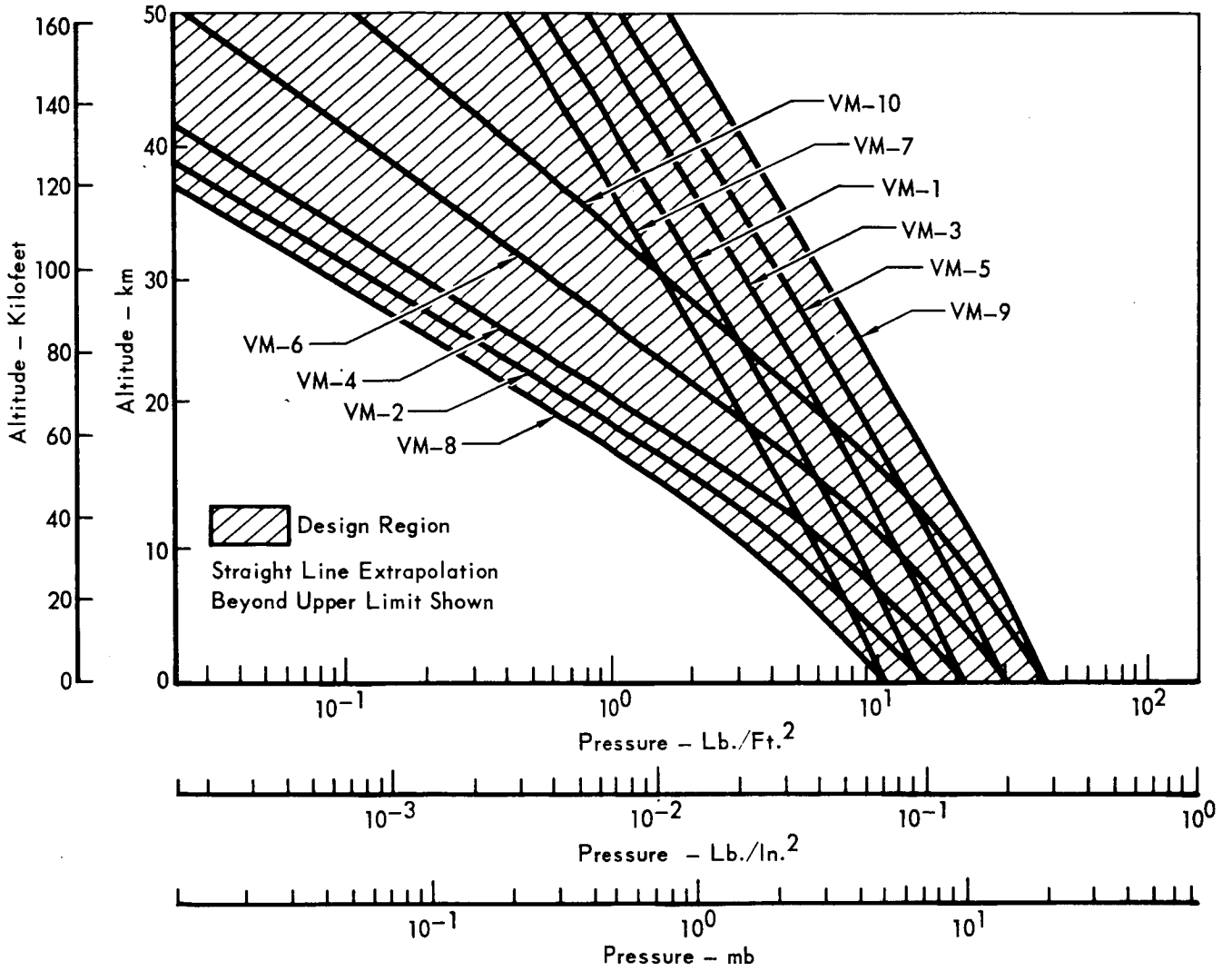

Figure 2.2-1

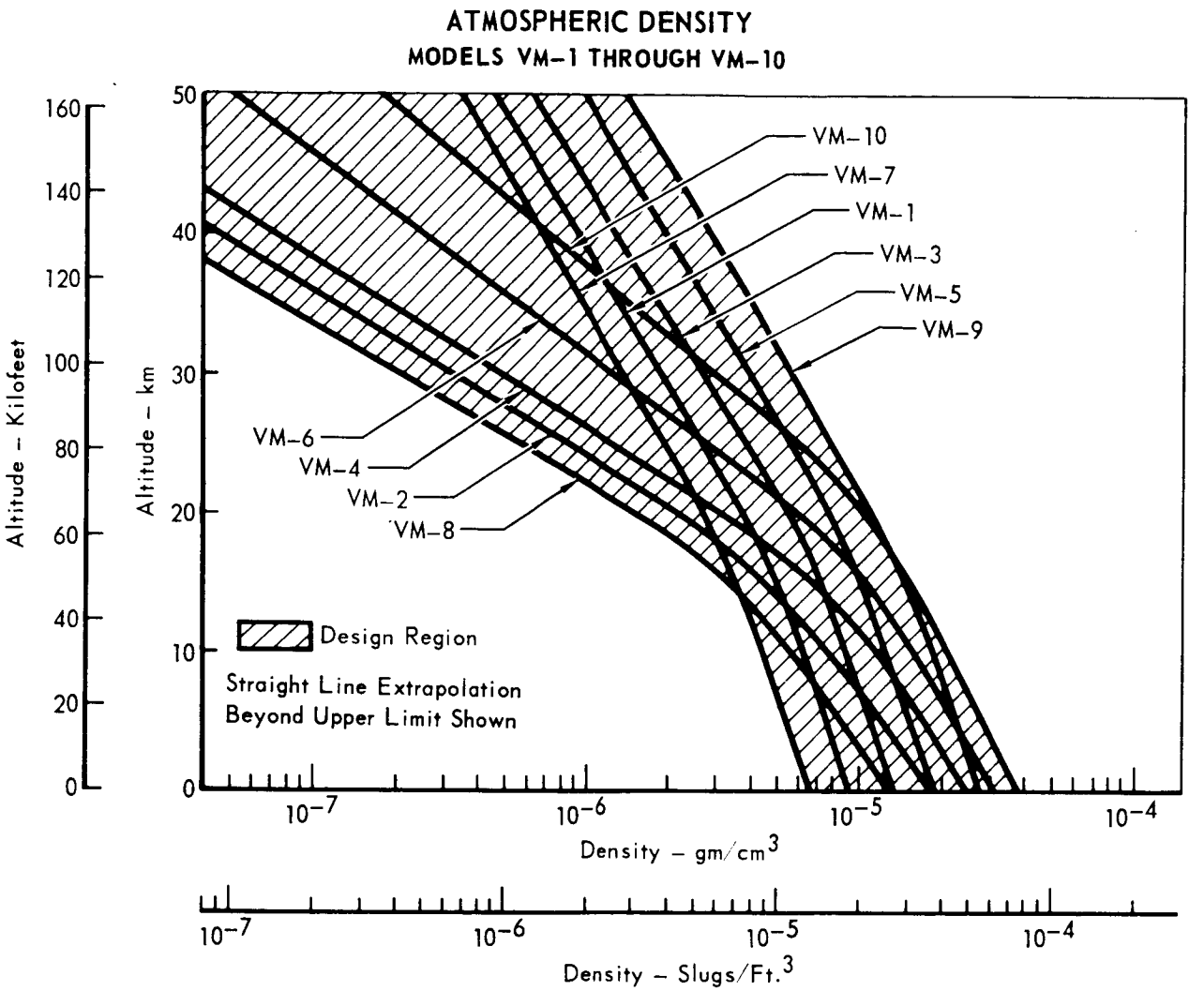
ATMOSPHERIC DENSITY
MODELS VM-1 THROUGH VM-10
Altitude - Kilofeet
Altitude - km
VM-10
VM-7
VM-1
VM-3
VM-5
VM-9
VM-6
VM-4
VM-2
VM-8
Design Region
Straight Line Extrapolation
Beyond Upper Limit Shown
Density - gm/cm3
Density - Slugs/Ft.3

Figure 2.2-2

d. Winds of three major types are considered for the 1973 Mission. These are the winds aloft (above 324 ft.) which are presented in Figure 2.2-3 for the VM-7 and VM-8 atmosphere, the gust requirements which are noted on this figure and the surface boundary layer profile which is shown in Figure 2.2-4.

e. Surface characteristics of Martian terrain that are of major concern are slopes, discontinuities, roughness, bearing capacity, and thermal characteristics, as follows:

- o Slopes with inclinations of 34 degrees to local horizontal, up to 100 meters long.
- o Discontinuities with abrupt changes in slope within $\pm$ 34 degrees of horizontal, including ridge and trough formations and conical hills and depressions formed from material that ranges from loose particles to hard rock.
- o Roughness corresponding to sand particles from 10 microns in diameter up to rocks 5 inches in diameter.
- o A bearing capacity from 6 lb/in^2 to infinity. Minimum bearing capacity can be assumed to increase at a rate of at least 10 psi/ft for the first few feet of depth.
- o Temperatures from +120°F to -190°F. Constant temperature at -190°F is possible with cloud cover. Average surface albedo for sunlight conditions of 0.05 to 0.35, with average surface emissivity of 0.85 to 1.00.

2.2.4 Environmental Design Predictions - Appendix A details the environmental design predictions in consideration of the specific environments to which VOYAGER will be subjected. These predictions will be included (as applicable) as an integral portion of the individual subsystem and component specifications and were selected to assure survival and satisfactory performance under any reasonable combination of the environmental conditions cited in source documents.

2.2.5 Source of Indicated Environmental Parametric Values - The values used to define the Capsule Bus System environment were obtained from References 2.2-1, 2.2-2, 2.2-3, 2.2-4 and 2.2-5.

ENTRY WIND PROFILE
VM-7 AND VM-8 ATMOSPHERE

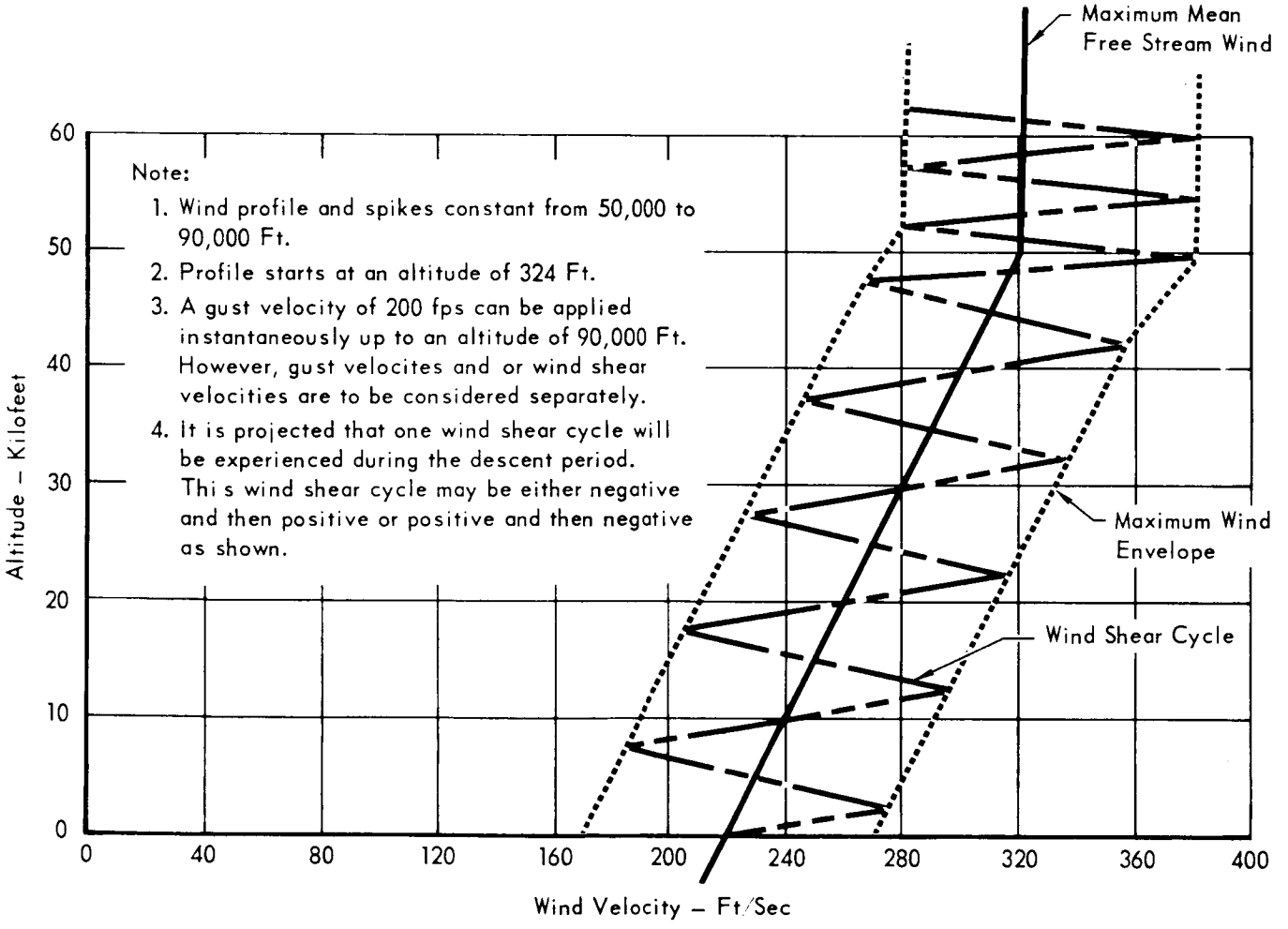

Figure 2.2–3

SURFACE BOUNDARY LAYER PROFILE
VM-7 AND VM-8 ATMOSPHERE

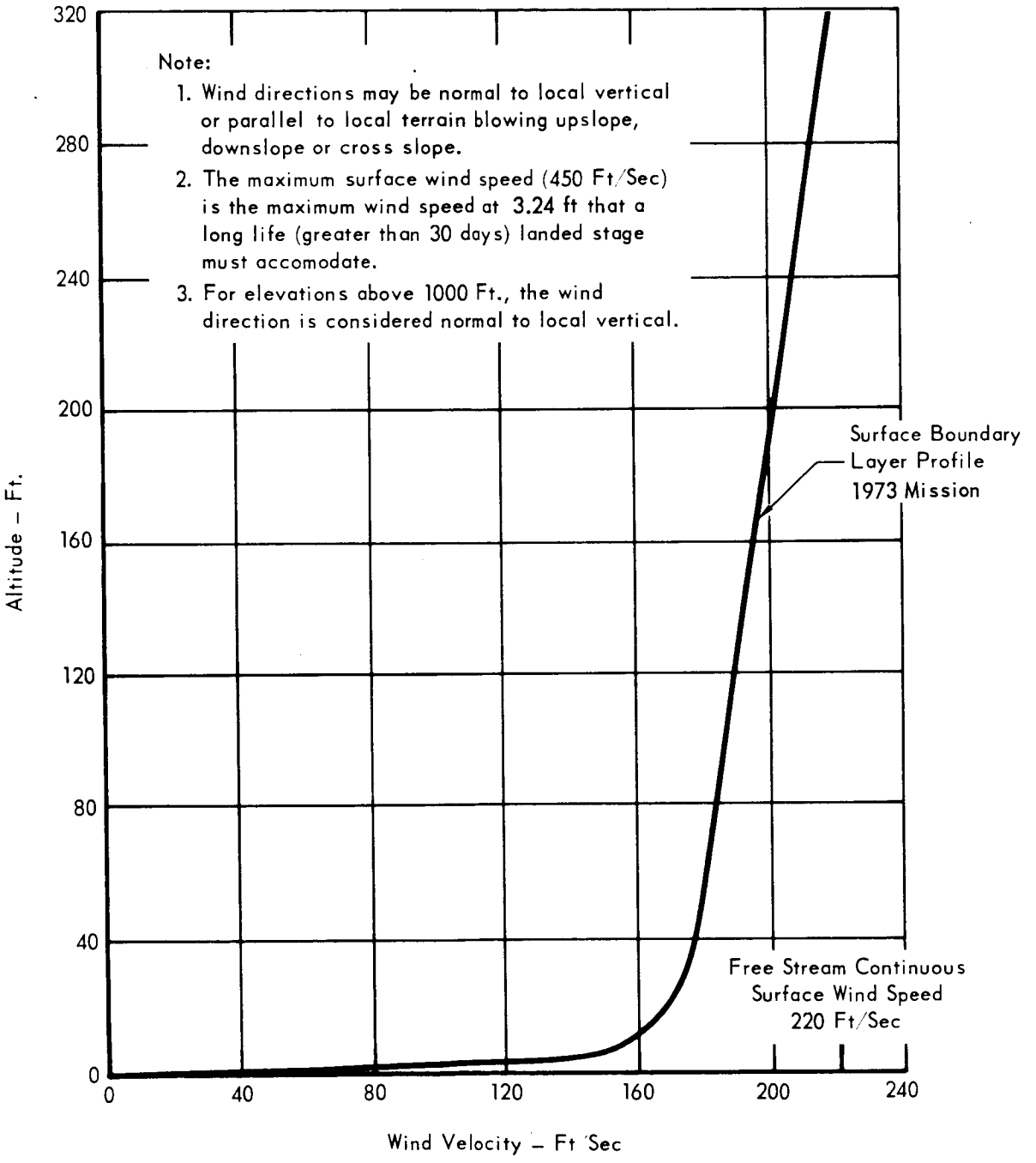

Figure 2.2–4

SECTION 2.2

REFERENCES

2.2-1	SE 003 BB 001-1B28 dated 20 October 1966	Draft VOYAGER Environmental Predictions Document
2.2-2	SE 003 BB 002-2A21 dated 12 June 1967	1973 VOYAGER Capsule System Constraints and Requirements Document
2.2-3	VOL-50503-ETS dated 12 January 1966	Environmental Specification (Decontamination and Sterilization)
2.2-4	MIL-STD-810A dated 23 June 1964	Environmental Test Methods for Aerospace and Ground Equipment
2.2-5	DA AR 705-15, C1, dated 14 October 1963	Research and Development of Material (Operation of Material Under Extreme Conditions of Environment)

2.3 STRUCTURAL DESIGN CRITERIA - The Structural design criteria have been developed from two fundamental JPL documents, References 2.3-1 and 2.3-2. These documents were considered as minimum standards and were expanded as required to support the Phase B structural activities. The resulting document, which is summarized in Appendix B provides:

a. A set of standards to be used as a basis for evaluating the structural aspects of specific designs,

b. A consistent basis for structural comparison of candidate configurations, and

c. A concise definition of structural philosophy which will be expanded during subsequent phases to produce the detailed structural design criteria required for an orderly and successful development of hardware.

This section presents only the major items of structural criteria related to the Capsule Bus.

2.3.1 Design Mass Properties - The Capsule Bus design values used in the structural analyses are shown in Figure 2.3.1-1. Detailed discussion of the derivation of these data is presented in Section 5. A ballistic parameter (m/C_DA) of 0.3 was conservatively used for the structural analyses of the 1973 preferred concept.

2.3.2 Basic Criteria - This section summarizes the items of basic criteria which were used. A summary of limit load factors for each mission phase is shown in Figure 2.3.2-1.

The Capsule Bus strength is based on the following criteria:

a. The structure shall withstand limit load with the structure at predicted temperature without detrimental deflections or yielding.

b. The structure shall withstand the following load-temperature combinations without failure: limit load with the structure at design temperature or ultimate load with the structure at predicted temperature, whichever is more critical.

The temperature factors and factors of safety are summarized in Figure 2.3.2-2. The pressurization factors used in the structural analyses are presented in Figure 2.3.2-3.

FLIGHT CAPSULE DESIGN MASS PROPERTIES
(1973 BASELINE)

MISSION PHASE	WEIGHT	C.G.	I_{YY}	I_{XX}	I_{ZZ}
	LB–EARTH	CAPSULE STA.	SLUG–FT^2		
Pre-Launch to Pre-De-Orbit	5000	147.3	2100	2150	3150
Pre-De-Orbit	4150	146.4	1300	1350	1700
Entry	3650	152.6	970	1010	1700
Aerodecelerator Deploy	3650	152.6	970	1010	1700
Terminal Propulsion Initiation	2700	150.9	425	470	770
Touchdown	2500	152.1	415	400	700

Figure 2.3.1–1

SUMMARY OF RIGID BODY LOAD FACTORS AT THE FLIGHT CAPSULE C.G.

MISSION PHASE	LIMIT LOAD FACTORS (EARTH g's)		REMARKS
	LONGITUDINAL	LATERAL	
Ground Hoisting	±2.0		Applied independently along hoisting axis; pull-off angles up to 20 degrees.
Assembly	–	±1.2	Cantilevered condition with 360 degree roll capability.
Transportation-air	±3.0	±1.5	Aircraft axis reference; vertical L.F. = ± 3.0 Not Simultaneously
Pre-launch	±2.0		Hoisting – Remarks same as Ground Phase
Launch Lift-off Max Dynamic Pressure S-IC End Boost S-IC Thrust Decay & Separation	 2.1 2.0 4.9 –1.9	 ±.65 ±.30 ±.10 ±.10	All load factors to be multiplied by 1.2 for dynamic effects.
Injection	1.5	±.25	S–IV B Second Burn
Interplanetary Cruise	1.0	±.25	Mars Orbit Insertion
Capsule De-orbit	1.1	Nil	De-orbit Propulsion
Capsule Entry $\alpha = 0$ $\alpha = 20^\circ$	–21.5 –19.4	0 ±2.2	Maximum Dynamic Pressure Condition
Capsule Terminal Deceleration Parachute Terminal Propulsion	 –5.5 –2.5	 –3.9 Nil	
Landing	–10.0 –14.0	±10.0 0	Applied simultaneously At Lander C.G.

Note: (1) Phases for which the load factors are negligable are not included.

Figure 2.3.2–1

DESIGN FACTORS

FACTORS OF SAFETY	
• Flight Conditions	1.25
• Ground Handling Conditions Potentially Hazardous to Personnel	1.50
• Emergencies in Air Transport Landing (MIL–A–8421B)	1.00
• Landing System Structure for Mars Landing Condition	1.00

TEMPERATURE FACTORS

Radiative Structures

- Predicted Temperature = Temperature determined from dispersed trajectories.
- Uncertainty Factor = 1.15
- Design Temperature = Initial Entry Temperature + (1.15 x Predicted Temperature Rise)

Ablative Structure

- Predicted Temperature = Temperature determined from dispersed trajectories.
- Uncertainty Factor = 1.25
- Design Temperature = Initial Entry Temperature + (1.25 x Predicted Temperature Rise)

Figure 2.3.2–2

PRESSURIZATION FACTORS

Operating	PROOF	BURST
• Pressurized Compartments	1.33	1.67
• Pneumatic Vessels	1.67	2.22
• Hydraulic Vessels	1.50	2.50
• Lines and Fittings	2.0	4.0
Sterilization (1)		
• Pressurized Compartments	1.05	1.25
• Pneumatic Vessels	1.25	1.50
• Hydraulic Vessels	1.25	1.50
• Lines and Fittings	1.67	2.40

Notes:

(1) Sterilization factors shall be applied to the pressure resulting from the heat of the sterilization cycle or solar heating during the pre-launch phase, whichever is more critical. The pressure shall include the effects of temperature rise, vapor pressure, and other chemical reactions of the enclosed gas or fluid that occur during the cycle.

Figure 2.3.2–3

2.3.3 Mission Phases - Structural criteria for the launch, entry and landing mission phases which are the most significant with respect to the structural definition are summarized here. Discussion of the ground, pre-launch, orbital, interplanetary cruise and other mission phases of secondary importance to structural design can be found in Appendix B.

Launch Phase - Launch phase begins with the initiation of final countdown and ends with start of S-IVB stage second burn. Saturn V design launch conditions will be used as a basis for capsule launch conditions.

Figure 2.3.3-1 presents the envelope of combinations of longitudinal and lateral load factors used for capsule design. For conditions where transient forces are significant, a factor of 1.2, applicable in any direction, was used to account for the local dynamic response of the capsule during the ascent phase, pending the results of dynamic analyses.

The design of the canister incorporates a venting system, consistent with the planetary quarantine requirements, to control canister differential pressures during ascent. A positive differential pressure, relative to the shroud internal pressure, shall be maintained during ascent. The canister and adapter shall be designed for zero pressure differential or the pressure associated with a specific venting design, whichever is more critical. The effects of internal pressure shall not be used when these effects relieve primary loads and shall be used when they add to the primary loads.

Capsule Entry - The capsule entry phase begins at 800,000 feet and ends with initiation of the terminal deceleration phase.

The combinations of initial entry velocity and flight path angles for design are presented in the V-γ entry envelope, Figure 2.1-3. Trajectories for conditions bounded by this envelope are considered to be dispersed trajectories which define the entry structural corridor.

Design entry trajectories for maximum loads and maximum total heat are presented in Part B, Section 2 for critical points on the V-γ entry envelope. The VM-3 and VM-8 atmospheres are used for maximum total heat and maximum loads, respectively.

DESIGN ENVELOPE FOR CAPSULE BUS COMBINED LIMIT LOAD FACTORS
(LAUNCH PHASE)

CONDITION NUMBER	LAUNCH VEHICLE	FLIGHT CONDITION
*1	Saturn V	Lift Off
*2	↓	Maximum Dynamic Pressure
*3	↓	S-IC End Boost
*4	Saturn V	S-IC Thrust Decay & Separation

Note:

*Dynamic factor of 1.20 in any direction to be used.

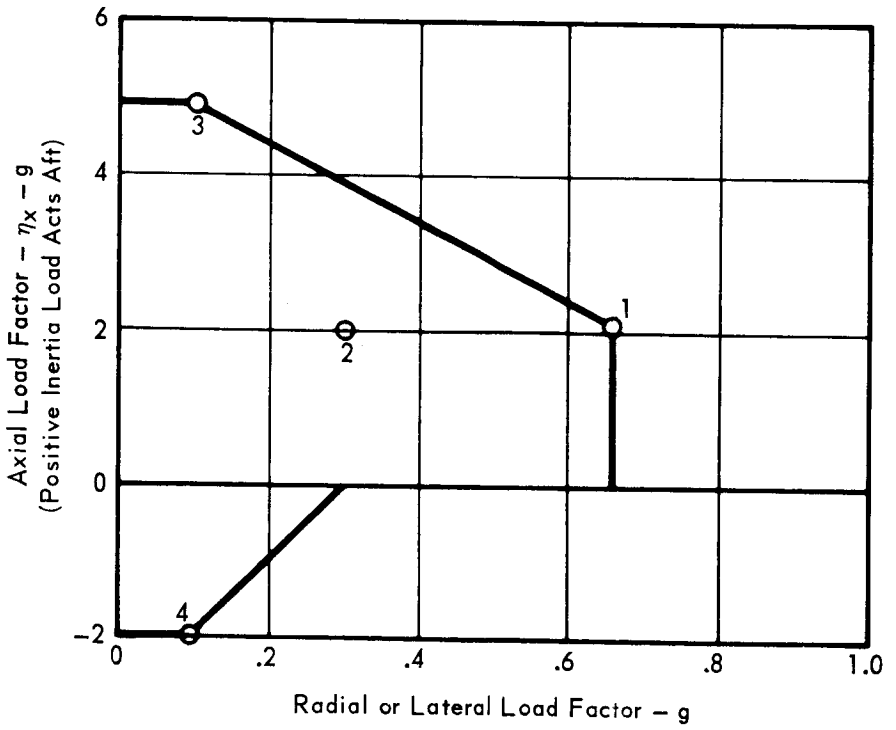

Figure 2.3.3–1

A design angle of attack of 20 degrees at maximum dynamic pressure was used for preliminary analyses. This value is intended to account for single malfunction conditions, entry anomalies, winds, and gusts, and is used with the dispersed trajectories which define the entry corridor.

Launch Phase - The launch phase begins with touchdown and ends with completion of the post-landing Capsule Bus and entry data transmission. The terrain and slopes specified in Figure 2.3.3-2 shall apply. The Lander shall be stable for touchdown on both planar and conical surfaces. The load requirements for the Surface Laboratory for landing shall not exceed the requirements imposed by prior mission phases. The Lander shall be designed for the initial conditions specified in Figure 2.3.3-2. However only one parameter shall be at the extreme, with all other parameters nominal.

LANDING PARAMETERS

INITIAL CONDITIONS	NOMINAL	EXTREME VARIATION
• Velocities		
Vertical – fps	16	±4
Horizontal – fps	±5	±5
Pitch Rate – deg/sec	0	±7
Yaw Rate – deg/sec	0	±7
• Attitudes		
Pitch – deg	0	±10
Yaw – deg	0	±10
• Surface		
Continuous Slopes – deg	±34	
*Abrupt Slope Changes – deg	±68	
Bearing Capacity – psi	6 to ∞	
Friction Coefficient	.3 to 1.0	
Surface Rocks – in.	5.0	
Length of Surface Slope	324 ft for 34 deg Slope 6480 ft for 10 deg Slope	

*Local slopes shall not exceed ±34 deg relative to the horizontal.

Figure 2.3.3–2

SECTION 2.3

REFERENCES

2.3-1	SE 003 BB 002-2A21 dated 12 June 1967	1973 VOYAGER Capsule System Constraints and Requirements Document
2.3-2	SE 002 BB 001-1B21 dated 1 January 1967	Draft, Performance and Design Requirements for the 1973 VOYAGER Mission, General Specification for

2.4 ELECTROMAGNETIC COMPATIBILITY - Interference-free operation of all VOYAGER components is ensured by employing appropriate design controls and electromagnetic interference (EMI) tests at both the equipment and system levels.

2.4.1 Control of Interference in Equipment - A Phase C Contractor's report, entitled "Equipment EMI Specifications - Project VOYAGER," is incorporated into each applicable subcontract. The report delineates all design and testing requirements that apply to electrical and electronic equipment, including the following items:

a. Conductor Shielding - A conductor shield must not be used as a conductor in conjunction with any power cable or audio frequency (0-150 kHz) conductor. Conductor shielding must not be used for low impedance audio frequency circuits where separation of circuits or twisting of conductors is deemed to be more effective. Individual return conductors must be included in the same shield with the "hot" conductor. Interconnections between RF circuits that do not employ waveguide must use coaxial cable, or balanced shielded RF cable, with a characteristic impedance no greater than 100 ohms.

b. Types of Grounds and Ground Returns - In each equipment item, separate buses must be provided for the following types of ground returns:
   - ac returns (for primary ac power),
   - dc returns (for primary dc power),
   - signal returns (for audio frequency and secondary dc power circuits).

   To isolate the primary power system from equipment circuits, dc-dc converters, having a minimum dc isolation of 1 megohm between the input and output terminals, must be used.

c. Audio Frequency Grounds - A minimum dc resistance of 1 megohm must exist between all audio frequency (0-150 kHz) input or output terminals or leads and the equipment case or enclosure. Shields of audio frequency conductors must be grounded at only one point.

d. Radio Frequency Grounds - Circuits which operate above 150 kHz may use bonded enclosures or structural members to obtain their secondary power and signal ground reference. Conductor shields, including coaxial outer conductors, must be continuous, and must be grounded to bonded enclosures or structural members at both ends and all convenient intermediate points.

Tests to determine the level of EMI generation and susceptibility are detailed in the contractor report, along with the maximum acceptable interference levels. The test procedures and limits of intereference are essentially the same as those contained in MIL-I-26600/MSC-ASPO-EMI-10A. Subcontractors are required to perform interference tests on breadboard models and production (qualification) prototypes.

2.4.2 System Electromagnetic Compatibility - System level EMC is accomplished as described in the Phase C Contractor report, "System EMC Specifications - Project VOYAGER," which is part of the VOYAGER CB requirements. The report delineates all EMC requirements for design and test of the CB including the following:

a. Grounding - A separate central ground point (CGP) must be located in each of the following system elements: Capsule Bus, Surface Laboratory System, and Entry Science Package, and must be electrically referenced together only through the mated vehicle structure. Each of the ground buses within each equipment item must be referenced independently to a CGP, and, wherever possible, must utilize the CGP of the system element in which the equipment is located. Within each of the system elements the "single point ground" concept must be followed.

b. Conductor Shield Grounds - Shields of audio frequency (0-150 kHz) conductors must not be grounded at more than one point. Shields of radio frequency (above 150 kHz) conductors must be grounded at each end and all convenient intermediate points.

c. Interfaces - Signal circuits whose source and load are referenced to different central ground points must be designed to maintain audio frequency (0-150 kHz) isolation between the central ground points at all except the operating frequencies.

d. Power Distribution - All electrical power must be distributed via a twisted pair made up of the "hot" and return lines. The power switching and distribution system must be designed to preclude the presence of dc ground loops.

e. OSE/CB Interface - All OSE power supplies which supply power to the CB must be grounded at the CB CGP. All OSE operational, calibration, and test circuitry associated with the CB, except for RF circuits, must be isolated from the OSE facility ground system, and must be terminated at the CB CGP.

f. Electroexplosive Device (EED) Firing Circuits - EED circuits must employ balanced, shielded, twisted pairs, and must be completely isolated from other electrical circuits. Each shield must be grounded at both ends and at all convenient intermediate points. Each EED case must be bonded to the vehicle structure.

g. Electrical Bonding - Both the primary structure and the secondary structural elements which support electrical and electronic equipment must be electrically bonded. Equipment that contains electrical circuits must be installed with a continuous, low impedance path from the enclosure to the structure through direct metal-to-metal contact or bond straps.

h. Circuit Classifications - Each wire must be assigned a classification code, or category, which is based on the parameters of the signal it carries. To insure against wire-to-wire coupling of interference, wires must be routed only in cables made up of compatible categories. The definitions of the categories are given in the contractor's report on System EMC Specifications.

This System EMC Specifications Report also specifies the test procedures and methods which must be used to verify the electromagnetic compatibility of the CB and Flight Capsule. This system level test program is conducted in the following three major phases:

a. Integrated Bench Test - Conducted interference tests must be performed on all breadboard equipment models as they are connected together to form the Capsule Bus' electrical system.

b. Proof Test Model (PTM) - PTM tests must be conducted to insure that adquate interference safety margins exist at critical points during all operational modes.

c. Flight Model EMC Test - EMC tests must be performed on the first production model of the CB and Flight Capsule, to verify the satisfactory duplication of the critical point safety margins established during the PTM EMC tests.

2.5 STANDARDIZATION AND GROWTH CRITERIA - An objective of the Phase B effort was to provide a 1973 Mars mission design having "built in growth" for the expected 1975, 1977, and 1979 missions by maximizing the degree of standardization. Our standardization objectives are in accordance with the 1973 VOYAGER Capsule Systems Constraints and Requirements Document, dated 12 June 1967, Paragraphs 3.1.1, 3.2.5, 3.2.7, 3.2.8, 3.4.1, 4.1.3.2, 4.1.3.3, 4.2.15.1.1, and 4.2.15.2.4. The standardization and growth design effort was conducted at the subsystem and component level. Emphasis was placed on standardizing items having long lead time and high cost. Standardization was not allowed to unduly compromise an individual mission. Weight penalties due to standardization were evaluated to insure that the 1973 mission opportunity was not compromised. The items that we consider to be the most important for standardization in the design of the Capsule Bus System are listed below.

a. Long-lead-time items
b. High cost items
c. The following delivery items (to the maximum extent practical)
   - o Sterilization Canister
   - o De-orbit maneuver equipment
   - o Entry equipment
   - o Terminal descent equipment
   - o Landing equipment
d. The spacecraft - Capsule Bus interface
e. The Capsule Bus - Surface Laboratory interface
f. The Capsule Bus - Entry Science Package interface

The standardization criteria which apply to our design are given in Figure 2.5-1.

2.5.1 Standardization Influence on Design - A fully standardized vehicle designed for the 1979 Mars mission requirements with existing Mars environmental data would be a very conservative design for the 1973 mission, and probably a conservative design for the 1979 mission, in spite of increased performance requirements. This is based on the fact that the environmental data listed in the constraints document are conservative and represent extreme conditions due to our present lack of knowledge.

CRITERIA FOR STANDARDIZATION

ITEM	CRITERIA APPLIED		REFERENCES	
	STANDARDIZE FOR 1973 – 1979	REDESIGN FOR LATER MISSIONS	JPL CONSTRAINTS DOCUMENT	THIS REPORT
● Spacecraft – Capsule Bus Interface	X		3.2.5	
● Capsule Bus – Surface Laboratory Interface	X		4.1.3.2	
● Capsule Bus – Entry Science Package Interface	X		4.1.3.3	
● Sterilization Canister	X		3.2.5, 3.2.7, 3.4.1	
● De-orbit Equipment	X		3.2.5, 3.2.7, 3.4.1	
– Electronics	X		3.2.5,, 4.2.15.2.4	
– Rocket Motor	X		3.2.5, 3.4.1	
– Propellant	Off-Load for 1973			Vol. II, Pt. B Sec 5.13.1
● Entry Equipment	X		3.2.5	Vol II, Pt A Sec 11
– Electronics	X		3.2.5, 4.2.15.2.4	Vol II, Pt B Sec 5.8
– Aeroshell (Structure and Heat Shield)	Size and Shape of Aeroshell	Evaluate design for each later mission.	3.2.8	Vol II, Pt A Sec. 11
– Aero. Decelerator				
– Reaction Control	X		3.2.5	Vol II, Pt B Sec 5.13.2
● Terminal Descent Equipment	X		3.2.5, 3.2.7, 3.4.1	
– Electronics	X		3.2.5 4.2.15.2.4	
– Rocket Engines	X	Evaluate design for each later mission.	3.2.5	
– Plumbing				Vol II, Pt A Sec 11, Vol II Pt B, Sec 5.13.3
– Tankage	X	Parallel tankage (1973 design) may be required.		
● Landing Equipment		Evaluate for each later mission	3.2.5, 3.4.1	
– Lower Base Platform	X		3.4.1	
– De-Orbit Motor Support Structure		Design will change to meet S.L. Rqmts.	3.4.1	
– Impact Attenuation Assembly		Energy absorpsion capability will change to meet mission rqmts.	3.4.1	

Figure 2.5–1

Our studies indicate a need for a compromise which results in standardized design for most of the components and subsystems and a calculated risk or redesign for a few of the subsystems. Our basic standarization philosophy is to prevent unnecessary conservatism and excessive weight penalties by designing selected subsystems (aerodynamic decelerator, heat shield, lander, and basic structure) for the 1973 requirements. Refinement of the Martian environmental design criteria can be used to provide the necessary growth.

Thus, these 1973 subsystem designs will be evaluated for each subsequent mission, using all data gathered to determine the feasibility of using the existing design. We expect that additional data gathered from the Mariner 1971, VOYAGER 1973, etc., missions will expand our knowledge sufficiently to allow more precise definition of the Martian environment. This philosophy is given in detail in Section 11.

2.5.2 Standardization Influence on Interfaces - Interface standardization increases the complexity of these interfaces and requires provision for spare paths across the interface, for requirements predicted for the 1979 mission. The spare path requirement results in increased weight and complexity; however, proper interface control procedures, utilizing interface specifications, will minimize those problems.

2.5.3 Part Standardization - Part standardization on the VOYAGER Flight Capsule has two important aspects.

a. Use of the smallest number of different parts in the VOYAGER Flight Capsule.

b. Maximize the use of common parts from opportunity to opportunity.

The McDonnell standardization philosophy assures the use of the least possible number of different parts in the design of the VOYAGER Flight Capsule. This philosophy is realized through the use of stringent controls in the design phase.

a. Parts must be selected from the VOYAGER Flight Capsule Approved Parts List.

b. Parts are added to the Approved Parts List only after McDonnell approval.

c. Parts are controlled by specification issued by McDonnell using McDonnell part numbers and formats.

The standardization of parts from opportunity to opportunity presents unique problems due to the long time period between initial design in 1968 and the completion of the final VOYAGER Flight Capsule in 1979.

a. The parts available for use in 1968 will probably undergo redesign and process change by 1979.

b. Many parts are degraded by the long storage time.

c. State-of-the-art advancement produces better parts.

The Parts Control Plan, (Ref. Vol. VI, Part C, Section 10) through the use of the manufacturers process and inspection flow diagram, enables us to evaluate and identify part manufacturers changes in design, materials and processes.

The changes in availability and state-of-the-art that will take place in the 1968-1979 time period will require some equipment redesigns and part qualifications but the control system established by McDonnell can compensate for these changes without degradation of mission reliability.

2.6 SUBSYSTEM CONSIDERATIONS - A tabulation of subsystem element considerations is given in Figure 2.6-1.

MAJOR DESIGN CONSIDERATIONS FOR CB

SYSTEM ELEMENT	MAJOR DESIGN CONSIDERATION	REMARKS	REFERENCE (1973 Voy. Capsule Systems Constraints and Req. Document 12 June 1967)
Data Storage	Accumulate – data collected during blackout period must accommodate the range of blackout durations due to uncertainties in atmosphere and choice of entries.	Use redundant bits to reduce multipath effects, and possible low margin conditions due to entry anomalies.	
	Alternate path for critical data – interleave stored data with real time data.	Relay with spacecraft	
	Provide backup for date collected during de-orbit.	Interleave data with ESP telemetry channel.	
	Magnetic core storage because it is a proven technique.		
Antenna	Coverage to compensate for trajectory and attitude uncertainties.	Symmetrical about roll axis	
	Multipath interference effects.	Requires control of pattern skirts and axial ratio	
	Circular polarization opposite to ESP antenna in the same UHF band	Minimize pattern interactions	
	Spacecraft mounted antenna requires coverage to compensate trajectory and vehicle attitude uncertainties.	• Requires max. gain and CB polarization. • Requires S/C antenna mast mounted.	
Radio	Multipath transmission environment	• Non-coherent (FSK), frequency diversity, square law combiner. • Bi-phase used to simplify sync. and gain stability.	
	Selection of relay link frequency	Use 340 and 400 MHz	
	Provide alternate path during entry and descent.	Interleave with ESP data for cooperative multichannel link.	
Landing Radar	Entry trajectories, altitude and attitude rates requirements.	Affects acquisition and tracking ability.	
	Separation concept and aeroshell design	Operation through aeroshell	
	Aeroshell lateral and vertical separation dis-	Affects possibility of locking on	

Figure 2.6–1

	tance and rates.	aeroshell instead of surface	
	Terminal descent engine design and location with respect to radar antenna location.	Affects heating rates on antennas.	
	Sterilization, OSE testing, and inflight checkout requirements.	Internal test provisions.	
Altimeter Radar	Provide altitude data without vehicle attitude or roll stabilization.	Omnidirectional antenna coverage.	
	Operate in atmospheres inhancing voltage breakdown		
	Operate behind the aeroshell through an R.F. window		
	Operate after aeroshell separation.	Use secondary antenna and near return blanking to reject the aeroshell as a target.	
	Provide altitude mark events over a wide altitude range		
Sequencer and Timer (S&T)	Provide onboard generated commands		3.3.4
	Provide ground command change capability via spacecraft		3.4.2.1
	Its state and outputs shall be non-volatile.		4.1.3.1.2.1
	Onboard sequences requires precision timer		
Guidance and Control	The angular error of the de-orbit velocity increment must be less than 0.87 degrees per axis	Most significant constraint on system performance	3.4.3.1
	Touchdown velocities		3.3.4
	Operate within specification after sterilization and storage.	Limits choice of suitable instrumentation.	3.4.3.4
	Must accept late changes in mission profile and equipment must be standardized for all missions in Voyager program.	Most significant consideration in selecting computer as preferred approach.	3.3.5
Telemetry	Provide flexibility for last minute changes	Use reprogrammable core memory	
	Large data capacity for engineering measurements.	Tape storage on spacecraft and core storage on CB during blackout.	
	Use optimum multiplexing technique for flexibility.	Use interlaced type multiplexing.	
	Provide multiple modes to insure high data efficiency.		
Packaging and Cabling	Electromagnetic compatibility		

MAJOR DESIGN CONSIDERATIONS FOR CB (Continued)

SYSTEM ELEMENT	MAJOR DESIGN CONSIDERATION	REMARKS	REFERENCE
Pyrotechnics	Remote checkout		
	Sterilization		
	Combustion products and debris	Contain within pyrodevice	
	RF shielding	40 db attenuation	4.2.12
Aeroshell Heat Shield	Predictable thermodynamic characteristics		
	Wide range of entry conditions and Mars atmospheres.	Ablative system offers greatest flexibility.	4.2.16.2.2
	Minimize outgassing products.	Reduce interaction with other subsystems.	
	Cold soak		
Lander	Mars surface condition	34° slope, discontinuities, rocks and surface bearing strength	4.1.5.3 thru 4.1.5.6
	Landing velocities	Land at less than 25 fps vertical and less than 10 fps horizontal	3.3.4
	Provide stable platform	Minimum rollover possibility	4.1.1.3
	Landing loads	Loads at landing no greater than entry loads	4.1.1.3
Adapter	Structural flexibility	No deleterious coupling with the G & C subsystem.	4.1.3.1.8
	Inflight separation joint	Located forward of the field joint	4.1.3.1.8 & 4.2.14.2.1
Sterilization Canister	Planetary quarantine and decontamination	Prevents contamination of sterile flight capsule.	3.4.2.2
	Weight	Large size, large weight contribution.	
	Separation	No contaminated surface in line-of-sight of sterile surfaces. Also no recontact.	3.4.3.4 & 3.4.2.2
	Structural flexibility	No deleterious coupling with G & C subsystem.	4.2.14.1.8
Power (Batteries)	Sterilization		
	Long term storage	Wet stand requirements.	

Figure 2.6-1 (Continued)

Power (Control)	Power system shall have minimum functional interfaces with SL/ESP and spacecraft.		
Thermal Control	Spacecraft orientation and available power for heaters.		
	Minimum insulation weight in adapter and canister.		
	Insulating materials compatible with sterilization chemical and gas types and vacuum storage.		
De-orbit Propulsion	Minimum separation distance from spacecraft.		
	Standardization of major components.		
	Open base region for CB functions after de-orbit period.		
	Sterilization heat affect on propellant materials.		
Attitude Control	Affect of sharp-edged wind gusts on aeroshell dynamic stability.		
	Influence of de-orbit pointing accuracy requirements on control deadband.		
	Sterilization affects on propellant		
Terminal Propulsion	Sterilization effects on propellant and propellant storage vessels.		
	Atmospheric variations on thrust and total impulse requirements.		
	Packaging constraints imposed by lander design.		
	Exhaust products affect on landing site.		
Aeroshell Structure	Aerodynamic characteristics	Predictable	4.2.16.2.2
	Shape	Body of revolution	4.2.16.2.1
	Weight	Significant contributor to total weight	
	Stability		4.2.16.1.2
Aerodynamic Decelerator	Compatibility with other systems	Radar altimeter, terminal descent, guidance and control, and landing radar	
	Entry trajectories	Entry velocity – gamma envelope	
	Atmosphere	Gusts, winds, and large variation in density	4.1.5.1 and 4.1.5.2
	Performance capability	Mach number, dynamic pressure, density, reefing capability.	
	Environmental	Sterilization and long term vacuum exposure.	

SECTION 3

CAPSULE BUS SYSTEM DESCRIPTION

The Capsule Bus, with the Surface Laboratory and the Entry Science Package, is attached to an adapter and installed in the Sterilization Canister to form the Flight Capsule. This Flight Capsule is mounted on a Flight Spacecraft to form a Planetary Vehicle as shown in Figure 3.1-1. Two Planetary Vehicles are mounted on the Launch Vehicle and launched into a holding orbit. Immediately after injection into the interplanetary transfer trajectory, the Planetary Vehicles are separated and independently controlled. They arrive at Mars separated by approximately eight days.

During the cruise and the subsequent Martian orbit phases, until just prior to separation from the spacecraft, the Capsule Bus is essentially a passive system, depending on the Flight Spacecraft for support. Electrical power is supplied to the Capsule Bus from the Spacecraft for battery charging and heater operation. Engineering data is collected periodically for subsystem status evaluation.

Prior to Capsule Bus separation an extensive equipment operational status check is made. This check is automatically programmed but can be altered or updated by the command link. Next, the Capsule Bus mission program is updated via the command link through the Flight Spacecraft; its memory is read out and verified. The nominal mission, programmed prior to launch, will be performed if the command link cannot update.

One hour before separation, on a signal from the Spacecraft, the Capsule Bus subsystems are activated and power is switched to internal batteries. A second Spacecraft signal starts the Capsule Bus separation sequence. Sequencing from separation through Capsule Bus shutdown after landing is completely automatic under onboard program control. A more detailed mission sequence is given in Section 4.

3.1 SYSTEM CONFIGURATION - The 1973 Flight Capsule selected as a result of this study consists of four basic modules - Sterilization Canister, Adapter, Aeroshell, and Capsule Lander, as shown in Figure 3.1-2. These Modules, plus installed support subsystems make up the Flight Capsule.

3.1.1 Design Requirements - The Flight Capsule is designed to meet the following requirements:

a. The design approach used is simple, conservative, state-of-the art; space flight proven hardware or approaches and selected redundancies are used, to achieve reliability.

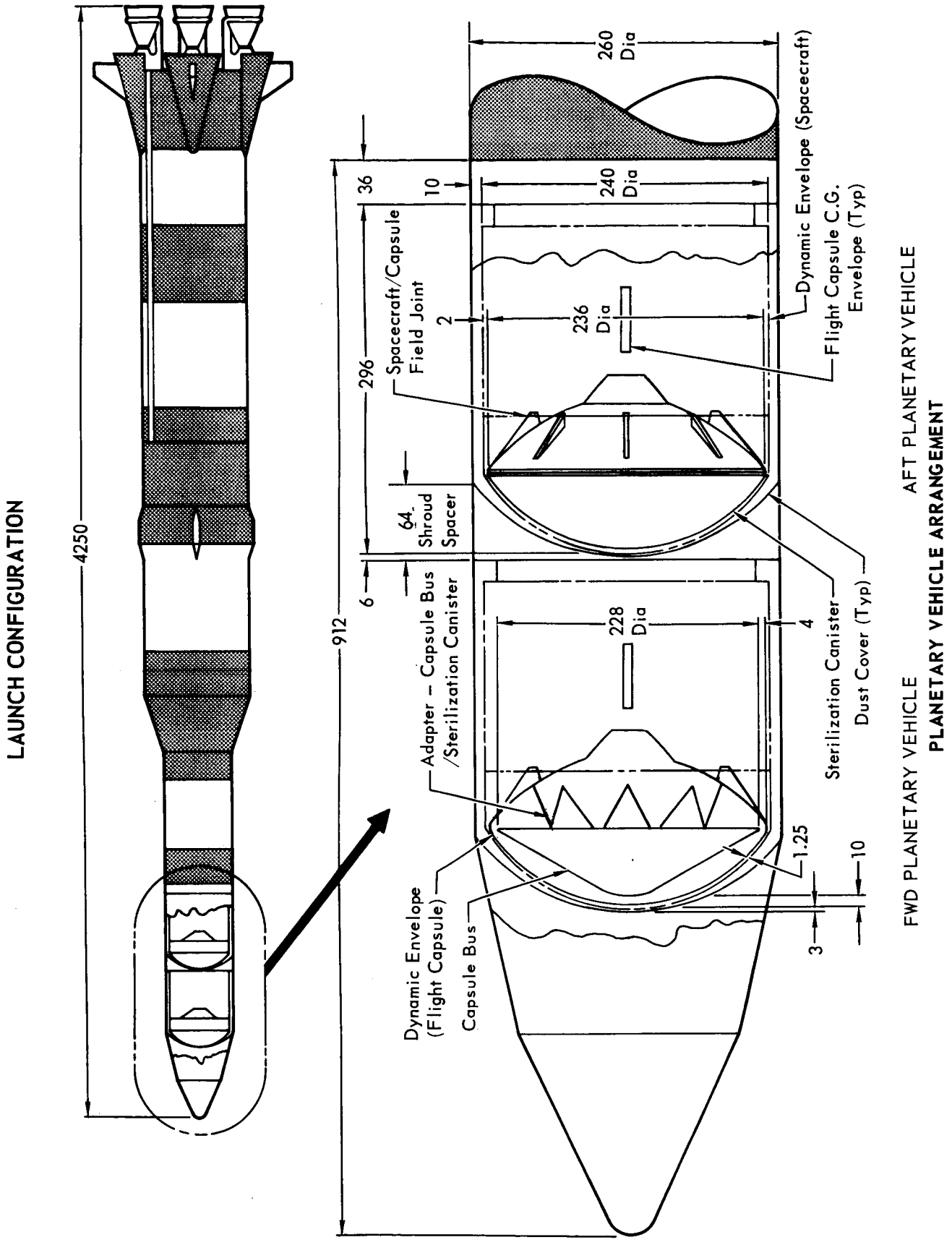
LAUNCH CONFIGURATION
4250
912
296
36
10
2
6
260 Dia
240 Dia
236 Dia
228 Dia
Spacecraft/Capsule Field Joint
64 Shroud Spacer
Adapter – Capsule Bus /Sterilization Canister
Dynamic Envelope (Spacecraft)
Flight Capsule C.G. Envelope (Typ)
Sterilization Canister
Dust Cover (Typ)
Dynamic Envelope (Flight Capsule)
Capsule Bus
1.25
4
10
3
AFT PLANETARY VEHICLE
FWD PLANETARY VEHICLE
PLANETARY VEHICLE ARRANGEMENT

Figure 3.1–1

1973 PREFERRED FLIGHT CAPSULE

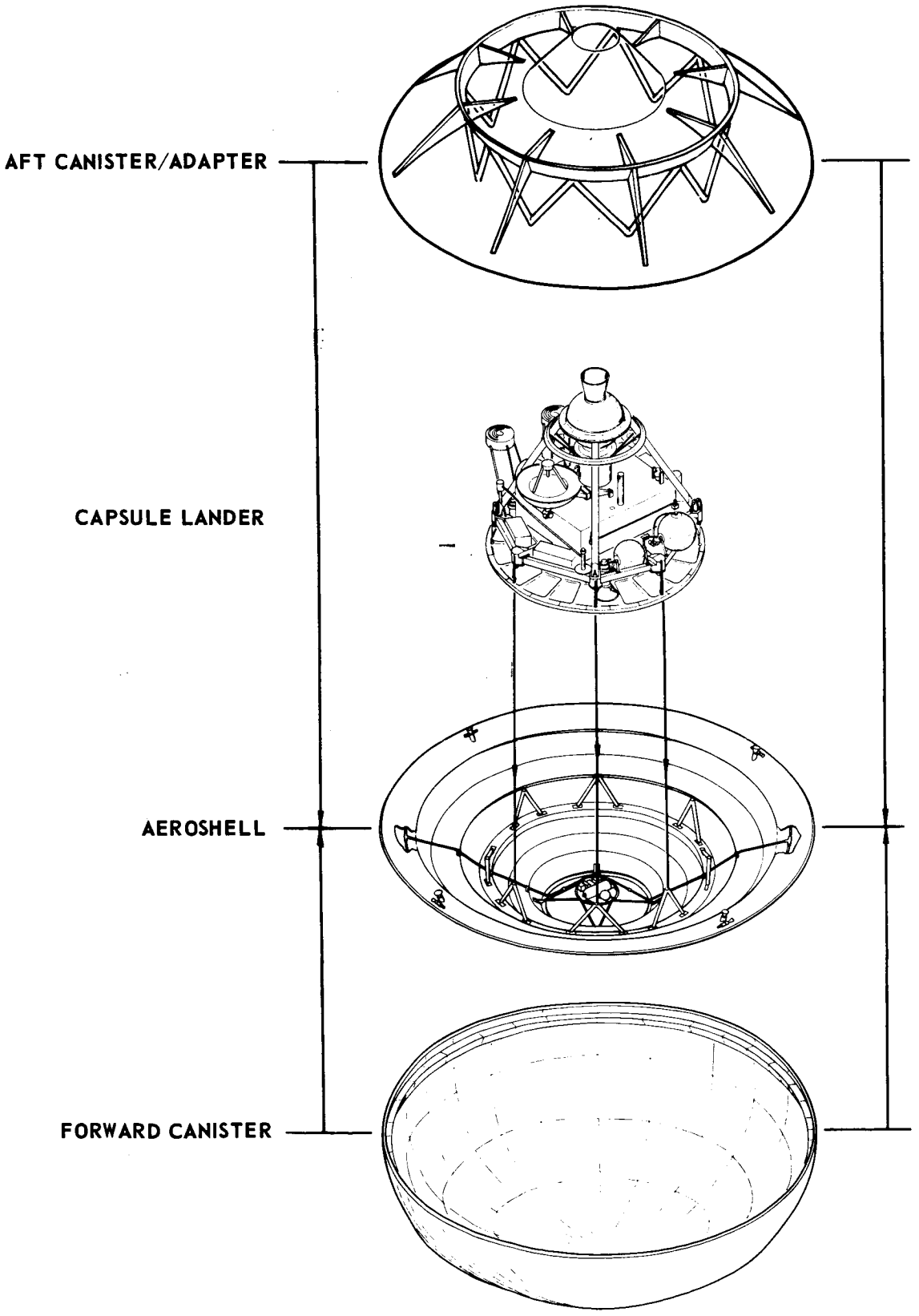

Figure 3.1-2

b. The Capsule Bus, Surface Laboratory, and the Entry Science Package are independent, separable modules.

c. The physical interface between the Capsule Bus and the Surface Laboratory is a structural field joint and a single electric connector.

d. The Capsule Bus is designed for soft landing (14 "g") in a controlled, upright attitude, for all surface conditions given in the Constraints Document.

e. Flight Capsule weight for 1973 is 5000 pounds; Flight Capsule weight for future missions is 7000 pounds.

f. In general, single failure modes are eliminated. Notable exceptions are single deorbit motor, single Aeroshell/heatshield, single parachute, and single landing system.

3.1.2 Flight Hardware - The Capsule Bus, after separating from the orbiting Flight Spacecraft, delivers the Entry Science Package into the Martian atmosphere and the Surface Laboratory to the surface of Mars. The flight hardware of the Capsule Bus System includes equipment for:

a. De-orbit

b. Attitude Control

c. Entry

d. Descent

e. Landing

It also includes a Sterilization Canister to maintain lander sterility and an Adapter, for mounting the canister to the Capsule Bus. In addition, the Capsule Bus includes mounting provisions for both the Surface Laboratory and the Entry Science Package. The general arrangement of the preferred Flight Capsule is shown in Figure 3.1-3. The major Capsule Bus subsystems are listed in Figure 3.1-4, with the functions that each must perform. The Interior Arrangement of the Capsule Bus is shown in Figure 3.1-5.

Canister - The canister is an aluminum semimonocoque structure, stiffened by rings and external stringers. The nose of the forward canister is a fiberglass, RF - transparent window, 87.0 inches in diameter, which is used for post-sterilization checkout of the radar altimeter.

The canister is released from the Capsule Bus at the major diameter plane by a Contained Explosive Separation Device. The device, which is redundant, is sandwiched between the bolt flanges on the aft and forward canister. When fired, it fails 300 bolts in tension. It also has the force to separate the canister from the Capsule Bus at more than 1.25 feet per second. A .5 inch blanket of multilayer

FLIGHT CAPSULE
GENERAL ARRANGEMENT

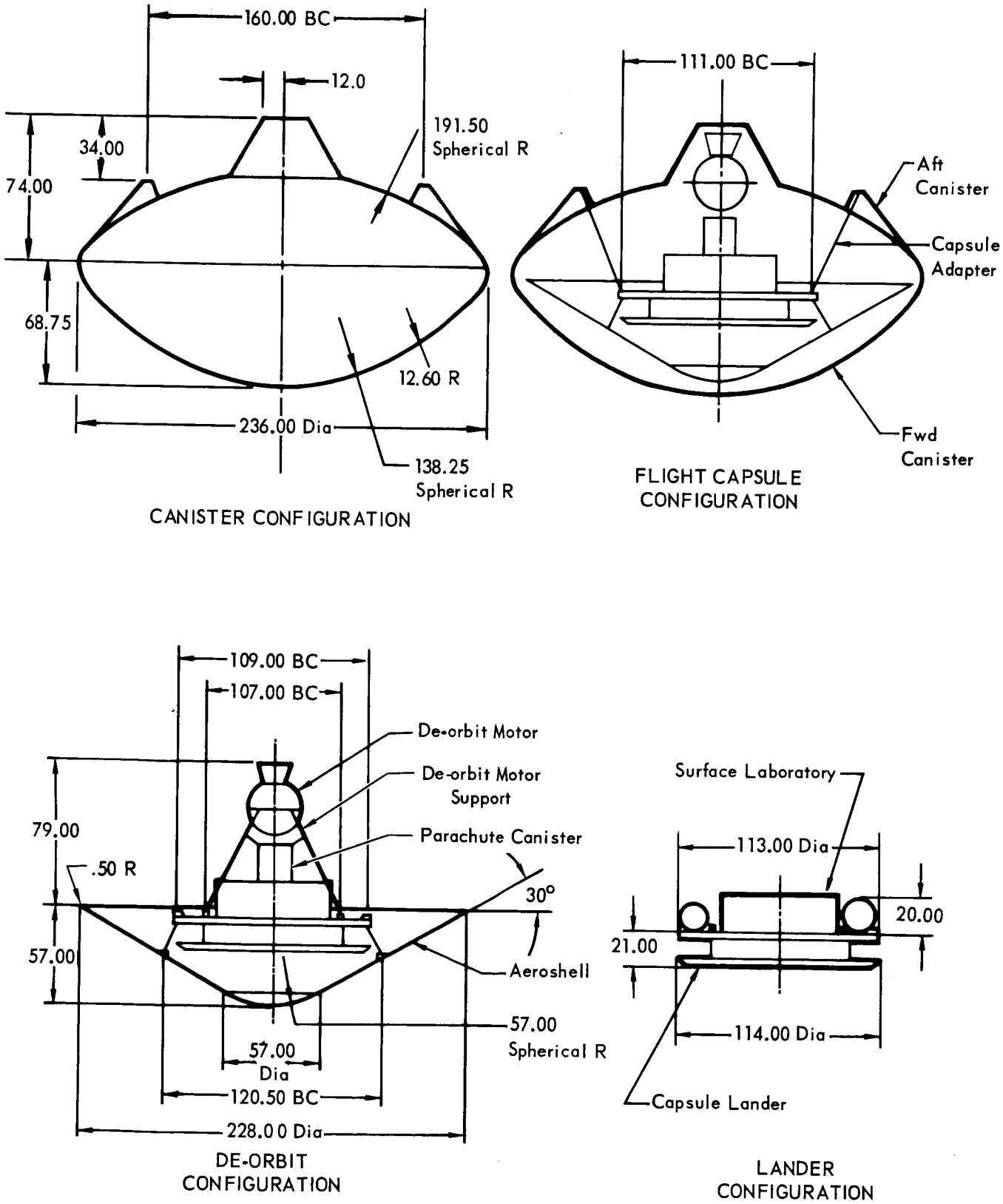

Figure 3.1-3

SUBSYSTEM FUNCTIONS

SUBSYSTEM	FUNCTION
Sterilization Canister	• Provides a physical barrier to prevent biological contamination of sterilized Flight Capsule elements • Provides protection from environmental hazards, such as thermal environment and space radiation. • Contains electrical interface to spacecraft. • Provides checkout for flight capsule after terminal sterilization. • Includes mechanisms for unsealing, opening, and separation/jettisoning from the flight capsule.
Adapter	• Provides mating and separation of the Flight Capsule to the Flight Spacecraft. • Contains support cabling and umbilical functions.
Aeroshell	• Acts as aerodynamic decelerator. • Provides structural support and thermal protection for Capsule Lander, ESP, and Surface Laboratory. • Delivers Lander, ESP and Surface Laboratory into the Mars atmosphere.
Lander	• Provides structural support for ESP and Surface Laboratory • Provides soft landing for the Surface Laboratory on the surface of Mars. • Stabilizes Surface Laboratory for operation.
Telecommunication	• Transmits engineering data to the spacecraft from before separation through landing. • Provides alternate transmission path for ESP non-video science data.
Power	• Stores, supplies, and distributes energy to subsystems.
Sequencing, Timing, and Test Programmer	• Provide sequencing and timing reference for subsystems. • Provide on-board checkout timing and sequencing.
Guidance and and Control	• Provides signals to propulsion subsystem for de-orbit maneuver and for flight capsule stabilization during orbital descent and initial entry phase. • Initiates terminal descent mode. • Controls final propulsive descent. • Provides altitude data for atmospheric measurements.
Radar	• Provides altitude and altitude rate sensing.
Aerodynamic Decelerator	• Provides additional aerodynamic drag. • Separates Capsule Lander from Aeroshell. • Separates de-orbit motor support structure from Capsule Lander.
Pyrotechnics	• Releases and separates Sterilization Canister. • Releases Capsule Bus from Flight Spacecraft. • Activates reaction control system. • Ignites de-orbit motor. • Terminates de-orbit motor thrust. • Releases and separates de-orbit motor. • Activates terminal propulsion system. • Deploys aerodecelerator. • Releases and separates Aeroshell. • Releases aerodecelerator from Capsule Bus. • Terminates terminal propulsion system.
Thermal Control	• Maintain equipment and structure temperature within their survival limits throughout all mission phases.
De-Orbit Propulsion	• Provides a retrograde velocity to de-orbit the Capsule Lander.
Reaction Control	• Provides attitude orientations, rate, and position control, from capsule/Spacecraft separation to entry. • Provides rate damping from entry to Lander/Capsule separation.
Terminal Propulsion	• Provides attitude orientation, rate and position control of Capsule Lander during final descent phase.

Figure 3.1–4

CAPSULE BUS INTERIOR ARRANGEMENT

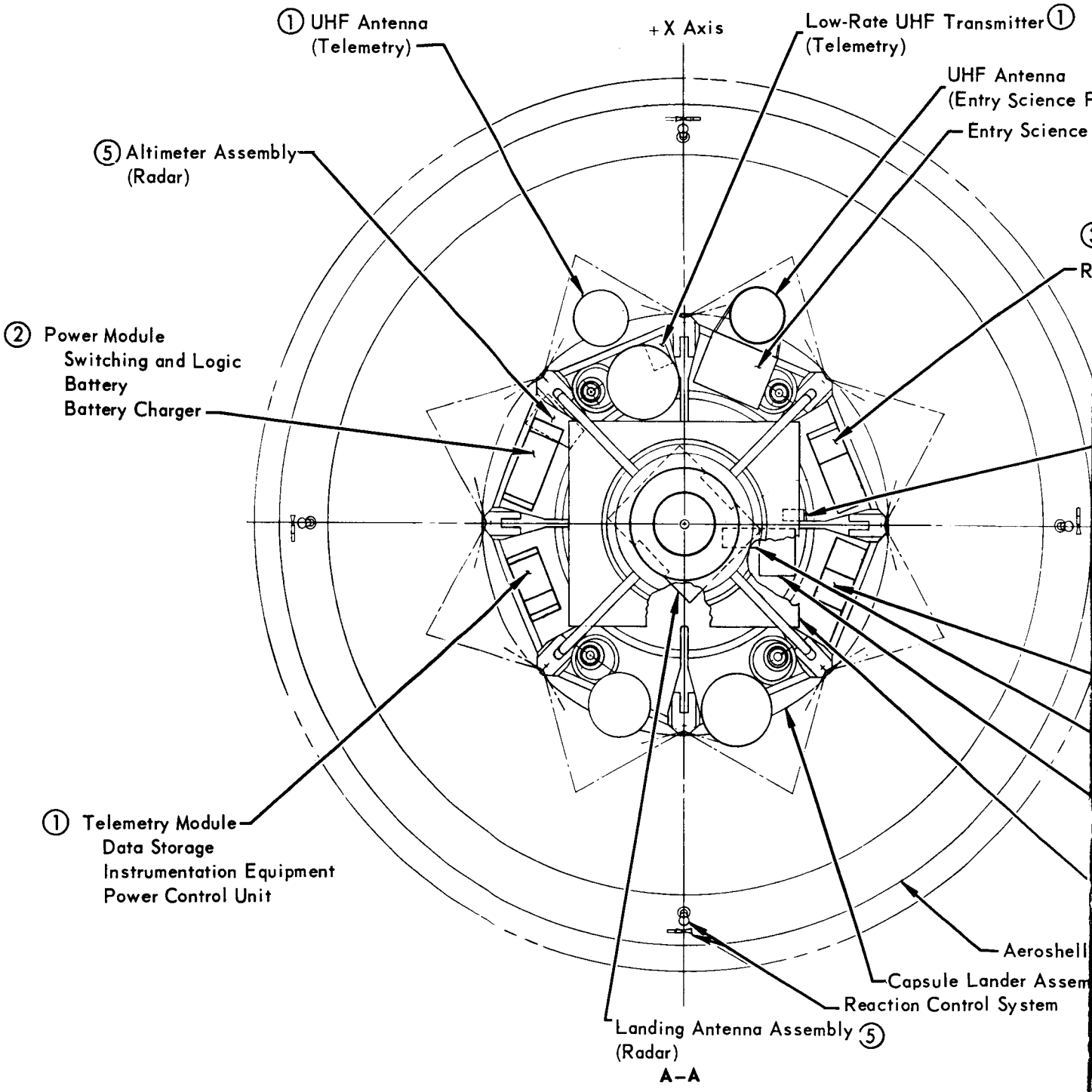

Figure 3.1–5

kage)
ckage

(5)
ar – Sequencer and Timer Module
adar Electronic Assembly
equencer and Timer
ower Control Unit

Power Control Panel (5)
(Radar)

+ Y

Pyrotechnic Control Module (6)
Electro Explosive Device
Control Assembly
Auto Activated Battery

Inertial Measurement Unit (4)
and Support Electronics
(Guidance and Control)
Computer and Power Sypply (4)
(Guidance and Control)

Surface Laboratory

Assembly
ly

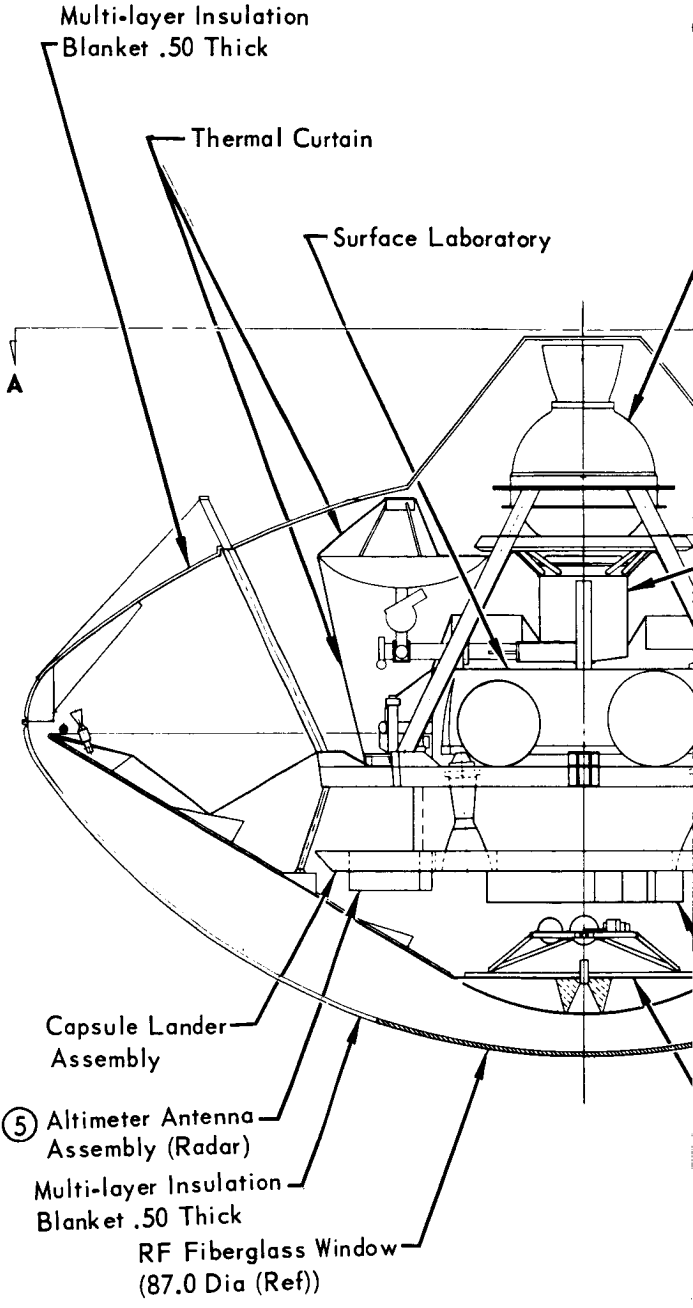

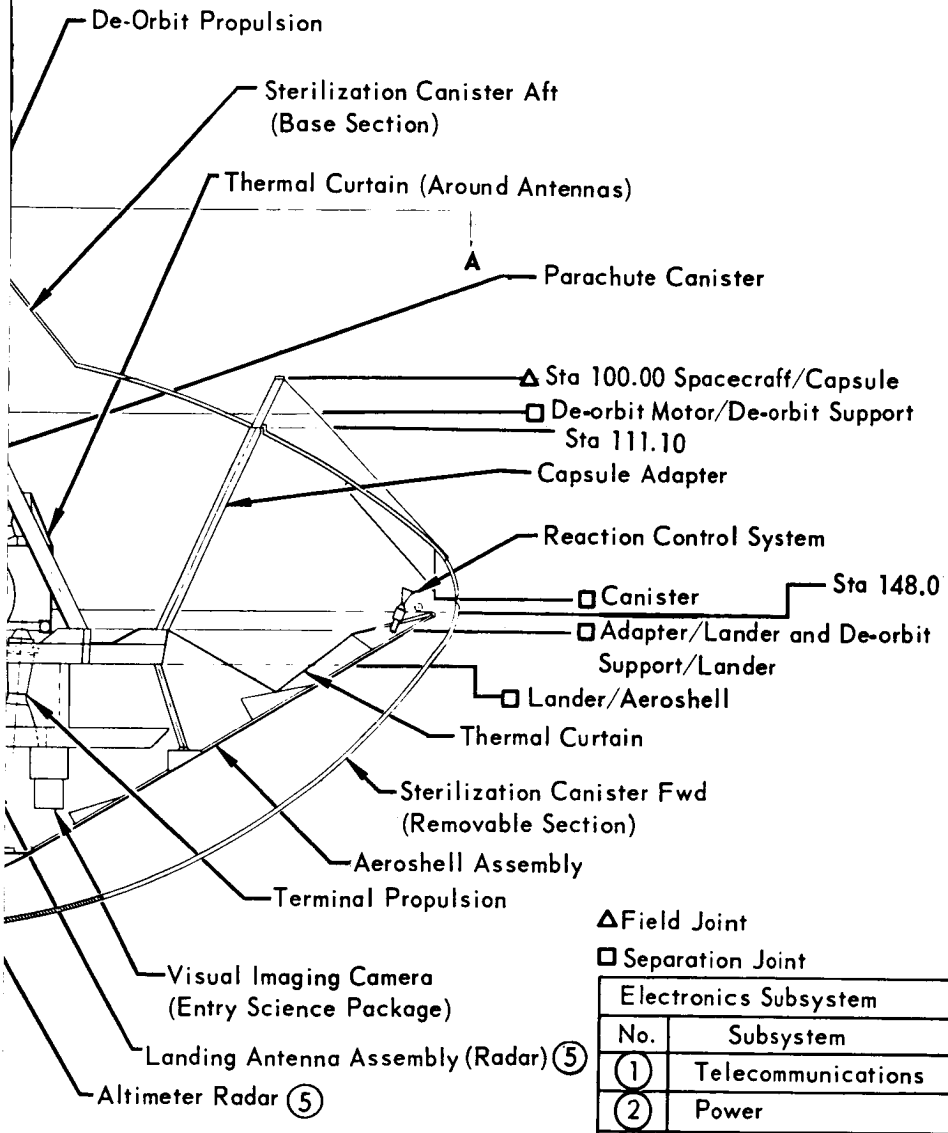

△ Field Joint

□ Separation Joint

Electronics Subsystem	
No.	Subsystem
1	Telecommunications
2	Power
3	Sequencing and Timing
4	Guidance and Control
5	Radar
6	Pyrotechnic Control

insulation is installed on the external surface of both canister sections, with a joint at the canister separation plane.

Equipment installed in the canister, in addition to the release separation subsystem includes:

a. Telemetry/Instrumentation (Components of the CBS Telemetry Subsystem)

b. Capsule Bus Inflight Checkout Programmer (Component of the CBS Sequencer and Timer)

c. Command Decoder (Component of CBS Command Subsystem)

d. Pressurizing and Venting

e. Sequencing equipment (dual programmer)

f. Electrical Power

The telementry/instrumentation equipment consists of a cruise commutator and various instrumentation. The cruise commutator acquires data on Capsule Bus subsystems throughout launch and interplanetary cruise, and multiplexes temperature, differential pressure, linear velocity, and power supply data. Separation sensors are also included.

The inflight checkout test programmer is used to check out Capsule Bus subsystems prior to separation from the spacecraft. The command decoder receives commands from the Spacecraft, decodes them, and routes them to the using subsystem.

The pressurizing and venting subsystem consists of redundant vent valves, electromechanically operated, that vent the canister during ascent and are closed by redundant differential pressure switches (ΔP = .5 psi); redundant evacuation valves to vent the canister during sterilization and during space flight; and two relief valves. Biological filters are installed in each valve to prevent recontamination through an open valve.

The dual programmer provides sequencing signals for venting, canister separation, and Capsule Lander separation. It also activates the instrumentation subsystem as required.

The electrical power subsystem consists of two silver zinc batteries, battery chargers, and converters and provides the electrical energy to operate the canister subsystems.

In addition, the canister contains the cabling link from the Flight Capsule to the Spacecraft and to the OSE.

<u>Adapter</u> - The adapter is made up of 16 tubular aluminum truss members, welded in a continuous ring. The members alternately converge in a zig-zag pattern at eight attach points on the Capsule Bus and at eight attach points on the aft canister.

These canister fittings mate with the Flight Spacecraft at eight points on a 160.0 inch bolt circle. The adapter is attached to the Capsule Bus by eight explosive bolts.

The only equipment mounted on the adapter is two parasitic antennas. These are used to check out the Capsule Bus and the Entry Science Package UHF subsystems.

Aeroshell - The Aeroshell is a single-face, corrugated titanium structure with closed triangular rings. The nose section is a combined radar altimeter antenna and ESP stagnation point instrument head which collects gas samples and measures pressure and temperature. The instrument head is a flush, 9.50 inch diameter, beryllium heat sink. The remainder of the nose cone is covered externally with a non-ablative material.

The conic segment of the Aeroshell and the upper ring are covered externally with an ablating material. This material is a foamed reinforced methyl phenyl silicone that is soft bonded to the back-up structure. A single pane, fused silca glass window is provided in the Aeroshell to allow visual imaging by the ESP prior to Aeroshell separation.

The Reaction Control System is installed in the Aeroshell. It is a pressurized, monopropellant (hydrazine) system, consisting of three groups - pressurant, fuel and thrust chamber assembly. The pressurant and fuel groups, with manifolding, valving, filtering, ports, etc., are installed as a module on the vehicle centerline behind the nose cap assembly. The thrust chamber assembly group is mounted on the base ring at four places, 90° apart. Four 22.0 lb thrust chambers are used for pitch and yaw control; four 2.0 lb thrust chambers are used for roll control.

The supports for mounting the Capsule Lander in the Aeroshell are installed on the second structure ring. Eight bipods are attached to this ring at their base and to the lander structure at their apex. Attachment at the ring includes torison springs to rotate the bipods outward upon lander release. Attachment at the lander is by explosive bolts at four points and compression preloaded sockets at four other points.

Capsule Lander - The Lander is composed of three structural elements: the foot pad, the shock attenuating ring, and the base platform.

The footpad is a 114-inch diameter disc made of titanium skin and radial beams. Cutouts in the lower surface allow the terminal propulsion motors to fire. Three stabilizing legs are mounted flush in the footpad and are spring actuated and mechanically locked to stabilize the system after landing. The radar altimeter

antenna and the landing radar antenna assembly are attached to the lower surface and are crushed on impact. The Visual Imaging Camera (ESP) is also mounted on the footpad lower surface and is pyrotechnically jettisoned prior to landing.

The impact attenuator is a 2.1 inch thick cylinder of aluminum Trussgrid; it is 13 inches high and 72 inches in diameter. It is sandwiched between the footpad and base platform and crushes on impact. The nominal, flat landing, crushing stroke is 5-6 inches for a 14 "g" landing. Eight pulley assemblies, equally spaced around the periphery, connect the footpad and base platform, preventing separation during landing impact and forcing total attenuator loading.

The base platform is made up of eight titanium radial I-beams (at 45°) and is the mounting base for the Surface Laboratory, the Entry Science Package, and the Capsule Bus Support Equipment.

The four terminal propulsion engines (with a maximum thrust of 6800 lb each) are mounted on the base platform, with nozzles flush with the footpad. The nozzles are frangible and will be crushed during landing. Terminal propulsion system tankage and the Entry Science Package are mounted on the base platform. The equipment is arranged on the platform so as to clear a rectangular symmetrically mounted Surface Laboratory and to keep the ends of the Surface Laboratory clear for radiator usage. The fuel tank and the pressurant tank are mounted on one side and the oxidizer tank and ESP are mounted opposite. The telemetry, power, and radar equipment, the sequencer and timer, and the pyrotechnic controller are located in four bays at each end of the Surface Laboratory and between the base platform beams. The IMU, the computer, and the power supply for guidance and control are mounted between the beams, inside the attenuator ring.

The de-orbit motor is supported on four struts that attach to the end of the base platform beams by explosive bolts and straddle the Surface Laboratory. The parachute canister is suspended from the same structure under the de-orbit motor and on the vehicle centerline. The parachute catapult is installed in a hole in the Surface Laboratory and bears on the base platform. The de-orbit motor and the upper section of support structure is jettisoned by explosive bolts and springs, after motor firing.

The parachute harness is tied down the outside of the lower struts and is attached to the lower base fittings. At parachute deployment the explosive bolts in the support structure are fired. The parachute then separates the lower support structure and the parachute canister/catapult from the Capsule Lander.

Thermal Curtain - The entire base area is covered by a thermal curtain, made up of gold-coated fiberglass cloth which protects the Capsule Bus during entry. This curtain is attached to the base ring, covers all stowed equipment, lies under the adapter and de-orbit motor support structure, and attaches to the parachute canister. RF - transparent windows are installed over the Capsule Bus and ESP UHF antennas. The outboard portion of the blanket remains with the Aeroshell at Capsule Lander separation. The inboard portion remains attached to the lower section of the de-orbit motor support structure and is separated at parachute separation.

3.1.3 Interfaces - The mechanical interfaces between the Capsule Bus and the Surface Laboratory, the Flight Spacecraft, and the Entry Science Package are shown on Figure 3.1-6. The major Capsule Bus subsystem interfaces are given in Figure 3.1-7.

3.1.4 Weight Summary - The preferred Capsule Bus weighs 3680 pounds of a total Flight Capsule weight of 4776 pounds. A more detailed weight summary for the preferred 1973 Capsule Bus is given in Section 5.

3.1.5 Staging Sequence - The staging sequences for the Capsule Bus from orbit to landed operation of the Surface Laboratory are pictured in Figure 3.1-8.

3.2 MAJOR SUBSYSTEMS - The flight hardware elements of the major subsystems of the Capsule Bus (Flight Hardware Elements) are discussed in this section in the following order: structural, electronic equipment, aerodynamic decelerator, pyrotechnics, thermal control, propulsion, and packaging and cabling.

3.2.1 Structural Modules - As mentioned previously, the capsule is divided into four structural modules. These modules interface at separation/staging points or at normal assembly planes. All Capsule Bus Subsystems, with the exception of the Spacecraft mounted equipment, are installed in these modules.

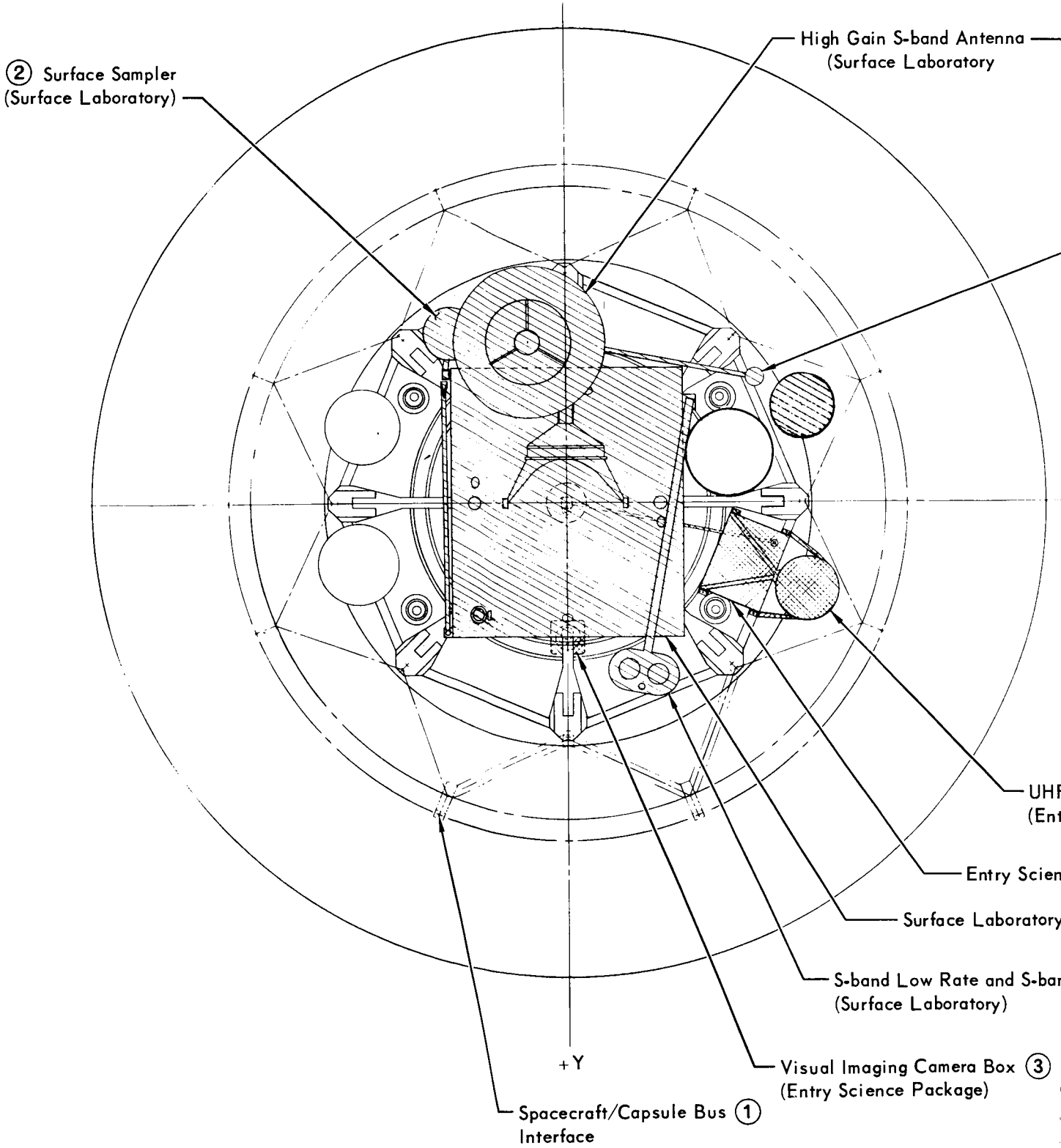
② Surface Sampler
(Surface Laboratory)
High Gain S-band Antenna
(Surface Laboratory
UHF
(Ent
Entry Scien
Surface Laboratory
S-band Low Rate and S-bar
(Surface Laboratory)
+Y
Visual Imaging Camera Box ③
(Entry Science Package)
Spacecraft/Capsule Bus ①
Interface

Figure 3.1-6

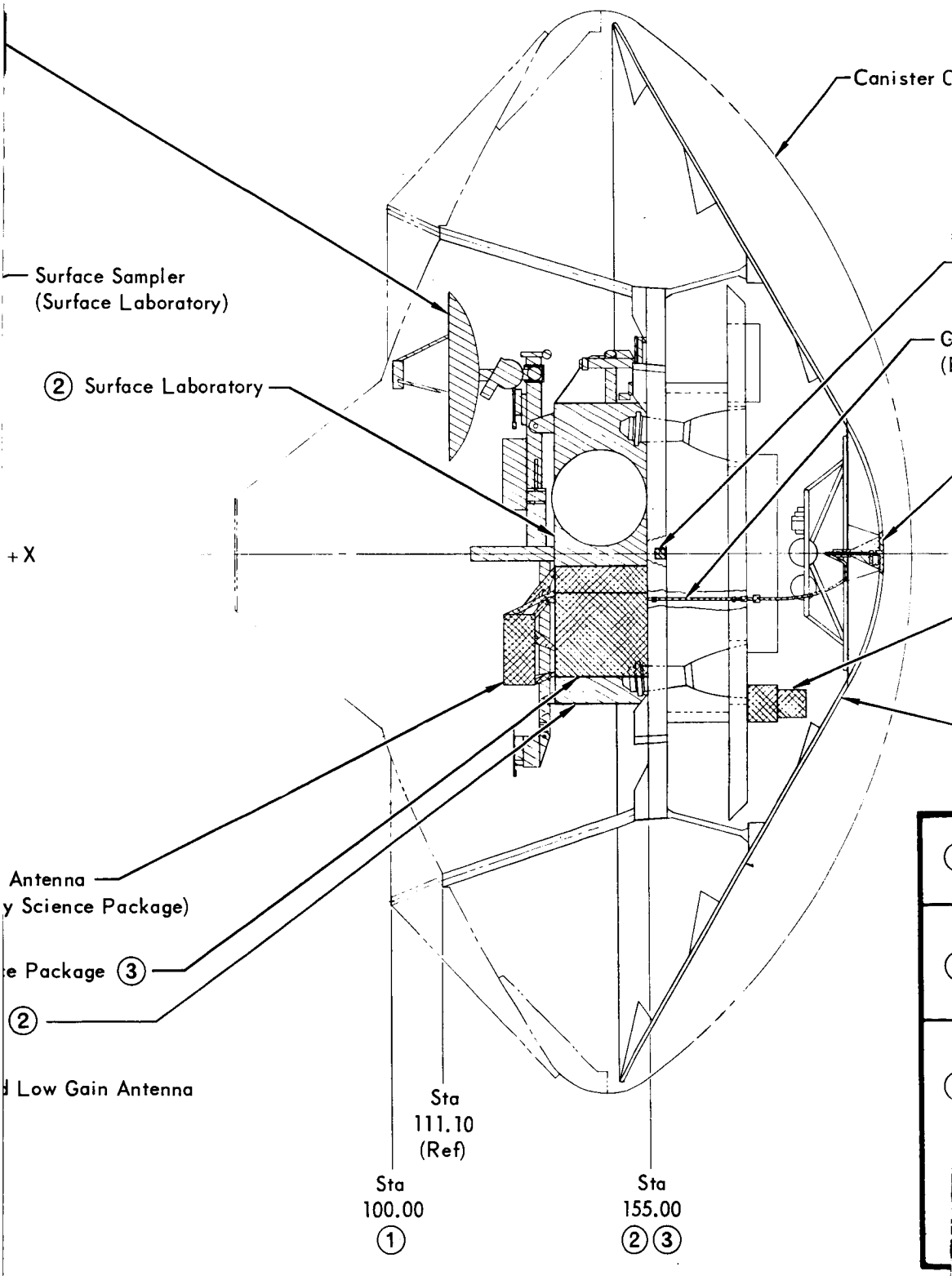
Canister C
Surface Sampler
(Surface Laboratory)
② Surface Laboratory
+X
Antenna
y Science Package)
e Package ③
②
Low Gain Antenna
Sta
111.10
(Ref)
Sta
100.00
①
Sta
155.00
②③

3-12-2

utline

Accelerometer (3)
(Entry Science Package)

as Sample Tube (3)
Entry Science Package)

Stagnation Point
Instrument Head
(Entry Science Package)

Visual Imaging Camera Box (3)
(Entry Science Package)

Capsule Bus

	INTERFACE	BOLTS REQUIRED – STATION	ELECTRICAL PLUGS
1	Capsule Bus To Spacecraft	8 fittings – one (1) bolt each on a 160.00 in. bolt circle equally spaced at Station 100.00	Five (5) electrical plugs
2	Capsule Bus To Surface Laboratory	8 fittings – two (2) bolts each at Station 155.00 Two (2) bolts at Station 155.00 for surface sampler	One (1) electrical plug
3	Capsule Bus To Entry Science Package and Equipment	4 fittings – one (1) bolt each at Station 155.00 Accelerometer – two (2) bolts at Station 159.00 Visual Imaging Camera – one (1) bolt, three (3) ball sockets at Station 176.00 Gas Sample Tube – slip joint coupling	Two (2) electrical plugs One (1) electrical plug One (1) electrical plug One (1) electrical plug

CAPSULE BUS SUBSYSTEM INTERFACES

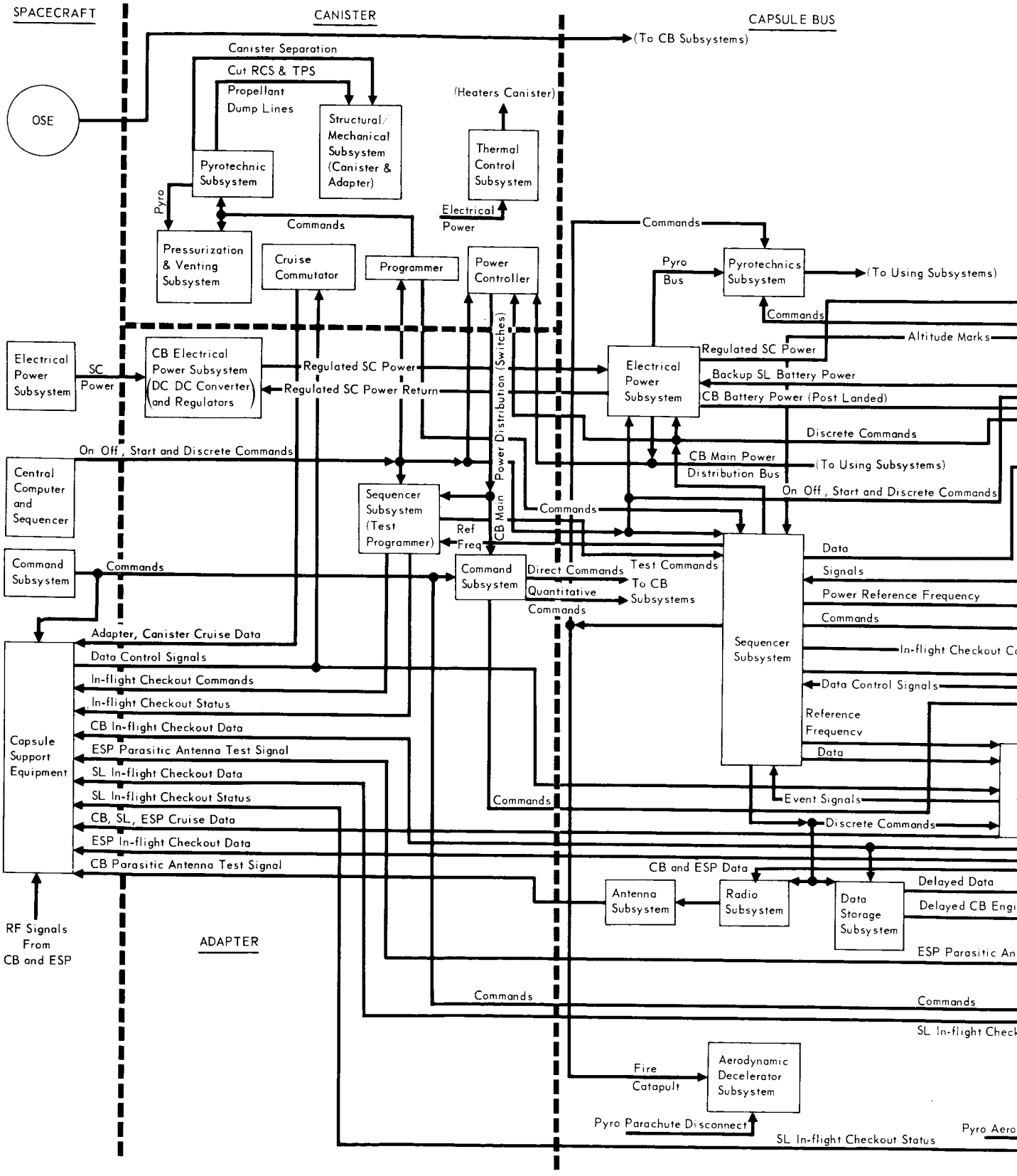

Figure 3.1-7

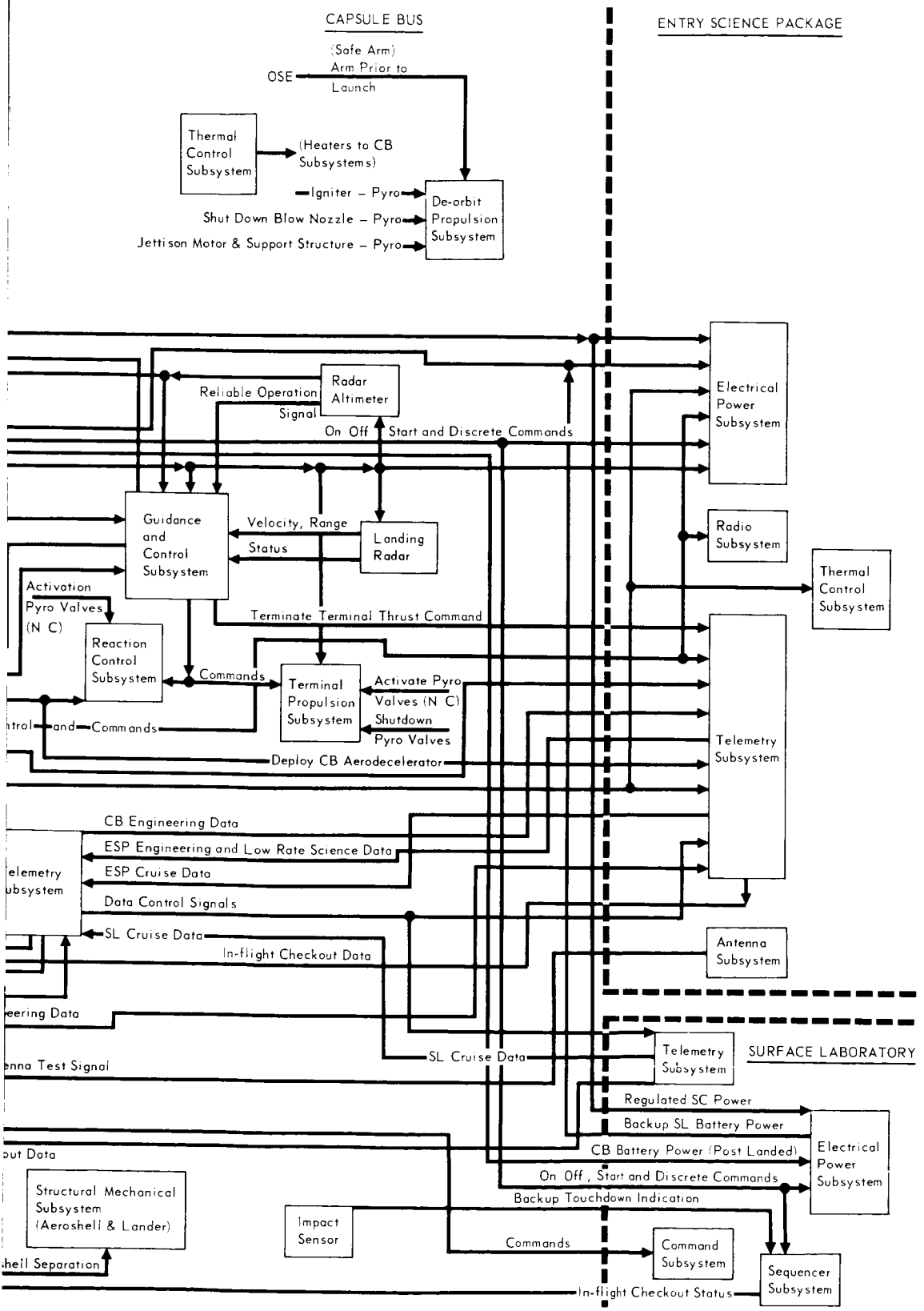
CAPSULE BUS
ENTRY SCIENCE PACKAGE
(Safe Arm)
Arm Prior to
Launch
OSE
Thermal
Control
Subsystem
(Heaters to CB
Subsystems)
Igniter – Pyro
Shut Down Blow Nozzle – Pyro
Jettison Motor & Support Structure – Pyro
De-orbit
Propulsion
Subsystem
Radar
Altimeter
Reliable Operation
Signal
On Off
Start and Discrete Commands
Electrical
Power
Subsystem
Guidance
and
Control
Subsystem
Velocity, Range
Status
Landing
Radar
Radio
Subsystem
Thermal
Control
Subsystem
Activation
Pyro Valves
(N C)
Terminate Terminal Thrust Command
Reaction
Control
Subsystem
Commands
Terminal
Propulsion
Subsystem
Activate Pyro
Valves (N C)
Shutdown
Pyro Valves
and Commands
Telemetry
Subsystem
Deploy CB Aerodecelerator
CB Engineering Data
ESP Engineering and Low Rate Science Data
ESP Cruise Data
Data Control Signals
SL Cruise Data
In-flight Checkout Data
Antenna
Subsystem
SL Cruise Data
Telemetry
Subsystem
SURFACE LABORATORY
Regulated SC Power
Backup SL Battery Power
CB Battery Power (Post Landed)
Electrical
Power
Subsystem
On Off, Start and Discrete Commands
Backup Touchdown Indication
Structural Mechanical
Subsystem
(Aeroshell & Lander)
Impact
Sensor
Commands
Command
Subsystem
Sequencer
Subsystem
In-flight Checkout Status

CAPSULE BUS STAGING SEQUENCE

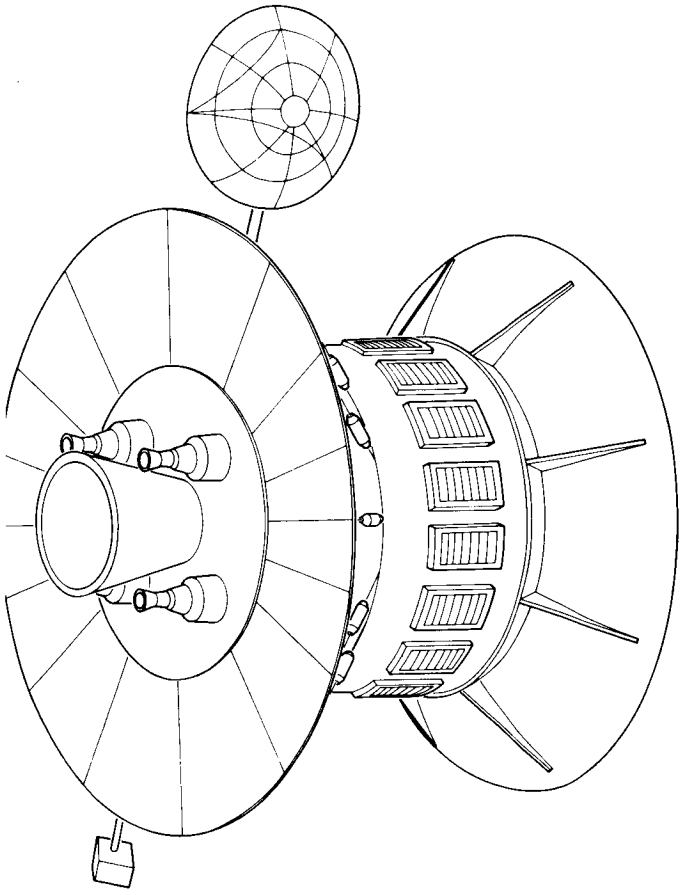

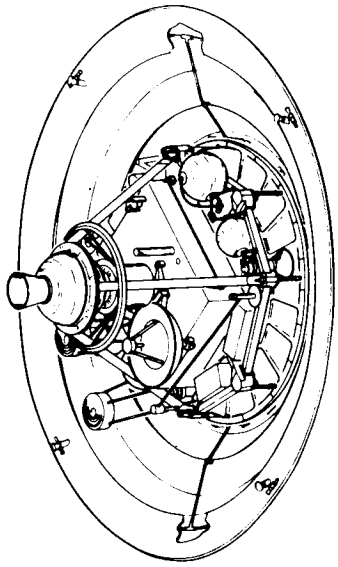

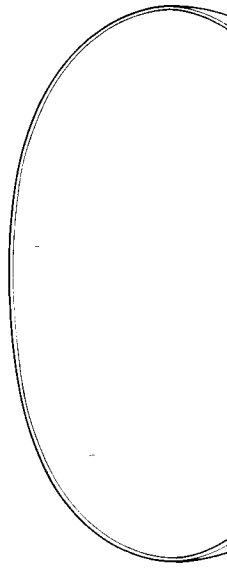

(3) SPACECRAFT IN ORBIT
- Aft Canister Remains on Spacecraft
- Adapter Remains Attached to Aft Canister.

(2) CAPSULE BUS SEPARATION
- Fire Eight Explosive Bolts at Adapter/ Capsule Lander Interface
- Operate Pitch and Yaw Thrust Chambers to Separate
- Separation Velocity = 1.25 Ft/Sec.

(1) FORWARD SEPARA
- Redundar Canister Tension
- Also Pro to Separa
- Separatio > 1.25 Ft

Figure 3.1–8

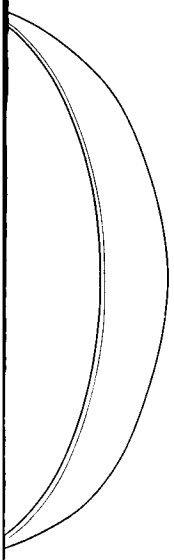

CANISTER
TION
t CESD Fails
Attach Bolts in

vides Energy
te Canister
n Velocity
/Sec

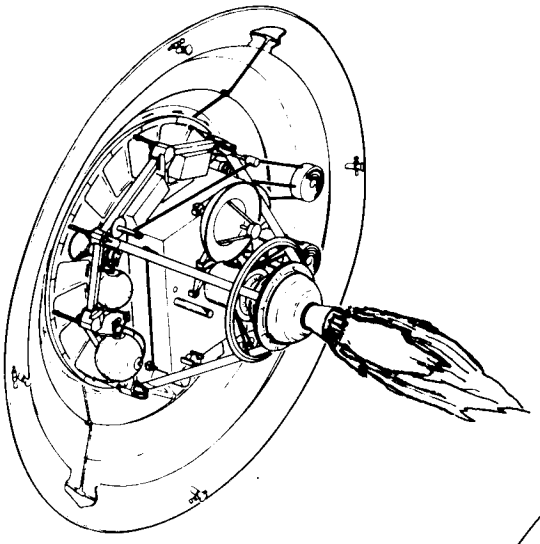

4 DEORBIT MOTOR FIRING

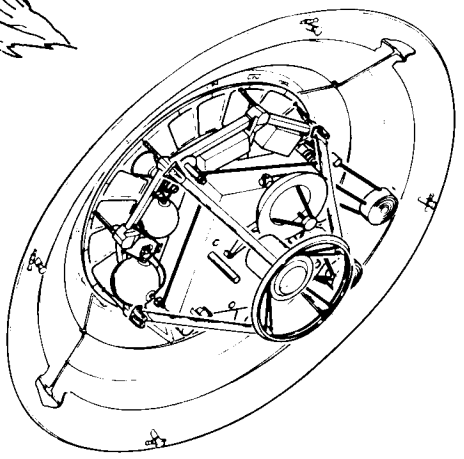

5 DEORBIT THRUST CUTOFF
- Fire One Explosive Bolts which Releases Nozzle from Case

6 DEORBIT MOTOR SEPARATION
- Fire Four Explosive Bolts to Release Spent Motor Case and Upper Support Structure
- Separated by Springs in Each Strut

CAPSULE BUS STAGING SEQUENCE
(Continued)

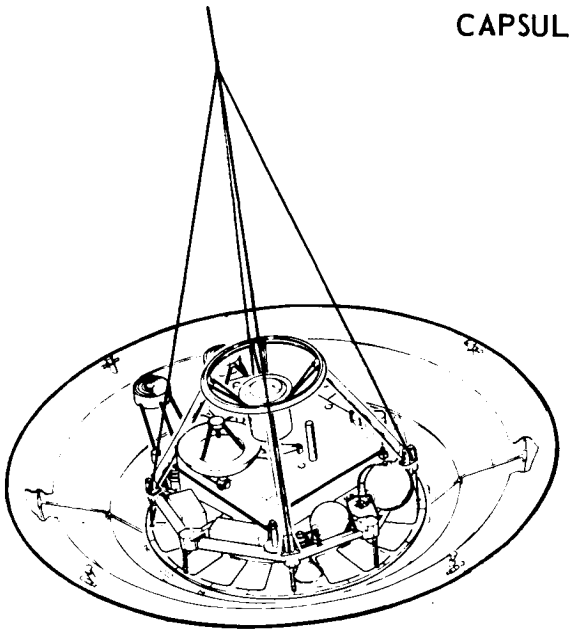

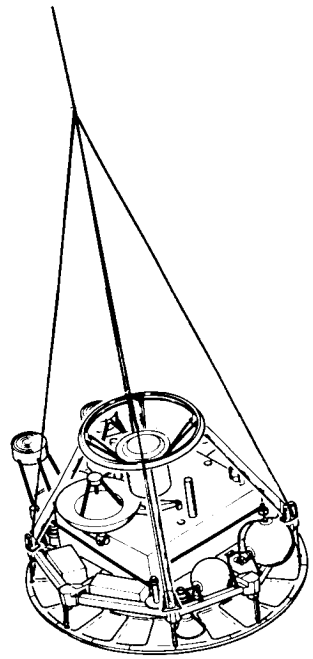

(7) PARACHUTE DEPLOYMENT
- Parachute Deployed by Catapult Firing Straight Aft § 100 FT/Sec Deploy Velocity
- Parachute Disreefed by Firing Four Pyrotechnic Actuated Reefing Cutters

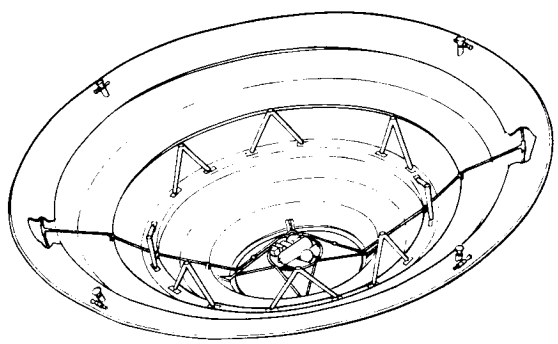

(8) AEROSHELL SEPARATION
- Fire Four Explosive Bolts at Capsule Lander Aeroshell Interface
- Sequence at 8.0 Sec After Parachute Deployment

Figure 3.1–8 (Continued)

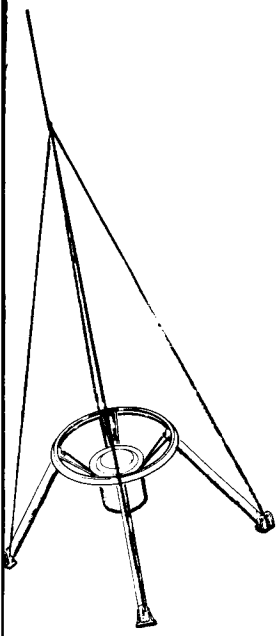

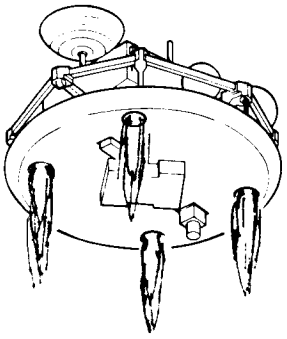

) PARACHUTE SEPARATION

- Ignite Terminal Propul System – Low Thrust
- Ignition Altitude is 5000 Feet
- After Successful Ignition, Fire Four Explosive Bolts at Base of Lower Support Structure

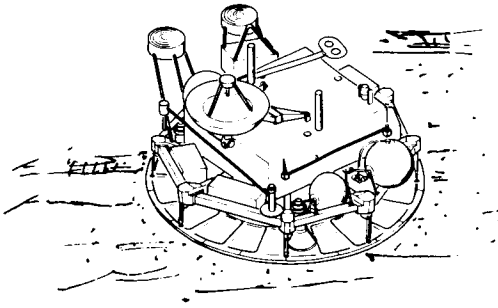

(10) LANDING

- Terminal Propulsion Terminated at 10 Feet
- Impact at $V_{v\,max}$ = 20 fps and $V_{h\,max}$ = 10 fps
- Surface Conditions Per Constraints Document
- Extend Stabilizing Legs Released by Single Bolt Cutter Spring Actuated, Mechanically Locked

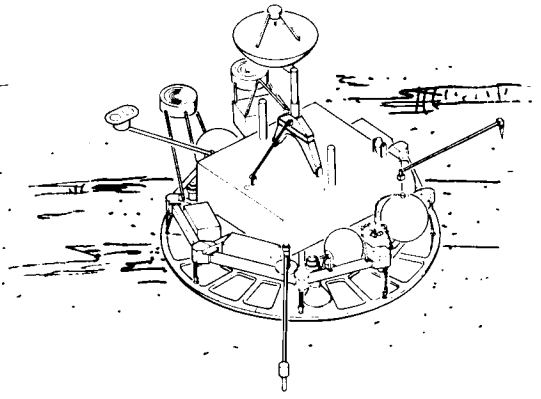

(11) LANDING OPERATION

- Capsule Bus System Shut Down
- Surface Laboratory in Operation – All Equipment Deployed.

3.2.1.1 Canister - The Sterilization Canister meets all of the VOYAGER System requirements and will protect the Capsule Bus against recontamination from terminal sterilization to Mars orbit. It will ensure within the required level of probability that the Capsule ejected to de-orbit and land on Mars will not carry a single viable organism with it.

3.2.1.1.1 Canister Structure - The structure of the canister performs the main objective of the canister assembly; it protects the Capsule Bus physically from recontamination after leaving the sterilization chamber. It completely encloses the Capsule Bus and its structural adapter to form a sealed wall against microbial contamination. The interface cone of the canister carries loads from the Canister/Adapter Interface (and the canister) to the Spacecraft Interface, thereby minimizing penetration of the canister wall. The forward section is jettisoned in Mars orbit to permit the Capsule Bus to leave the Spacecraft, de-orbit, and enter the Mars environment. The conventional, simple approaches taken in design of this state-of-the-art structure ensure that it will reliably perform its mission.

The requirements most significant in design of the structure are:

- The requirement to provide a container sealed against microbiological contamination.
- The design internal pressure (2.25 psi limit) which the container must withstand to tolerate reasonable temperature and resultant pressure variations, which, in turn, leads to severe canister shape constraints and/or structural weight penalty.
- Maximum leakage permissible (.7 cc/sec), no resupply in LV shroud
- Geometrical volume constraints of the JPL specified envelope within the launch vehicle shroud and the Aeroshell envelope within the canister.
- Dynamic characteristics of the space vehicle and resultant dynamic loading and excursions.

Major Elements - The structure is composed of four major elements or assemblies as shown in Figure 3.2.1.1-1.

The forward section is a nearly hemispherical assembly of very thin (.012) aluminum semi-monocoque construction. A fiberglass radome is provided in the center for checkout of the Capsule radar altimeter after sterilization. Lightweight radial stiffeners are located on the exterior and provide support for the super insulation blanket covering the entire exterior.

The aft section mates with the forward section at a field joint that is required for installation of the Capsule Bus in the canister. Its shape and

CANISTER STRUCTURE
PREFERRED DESIGN

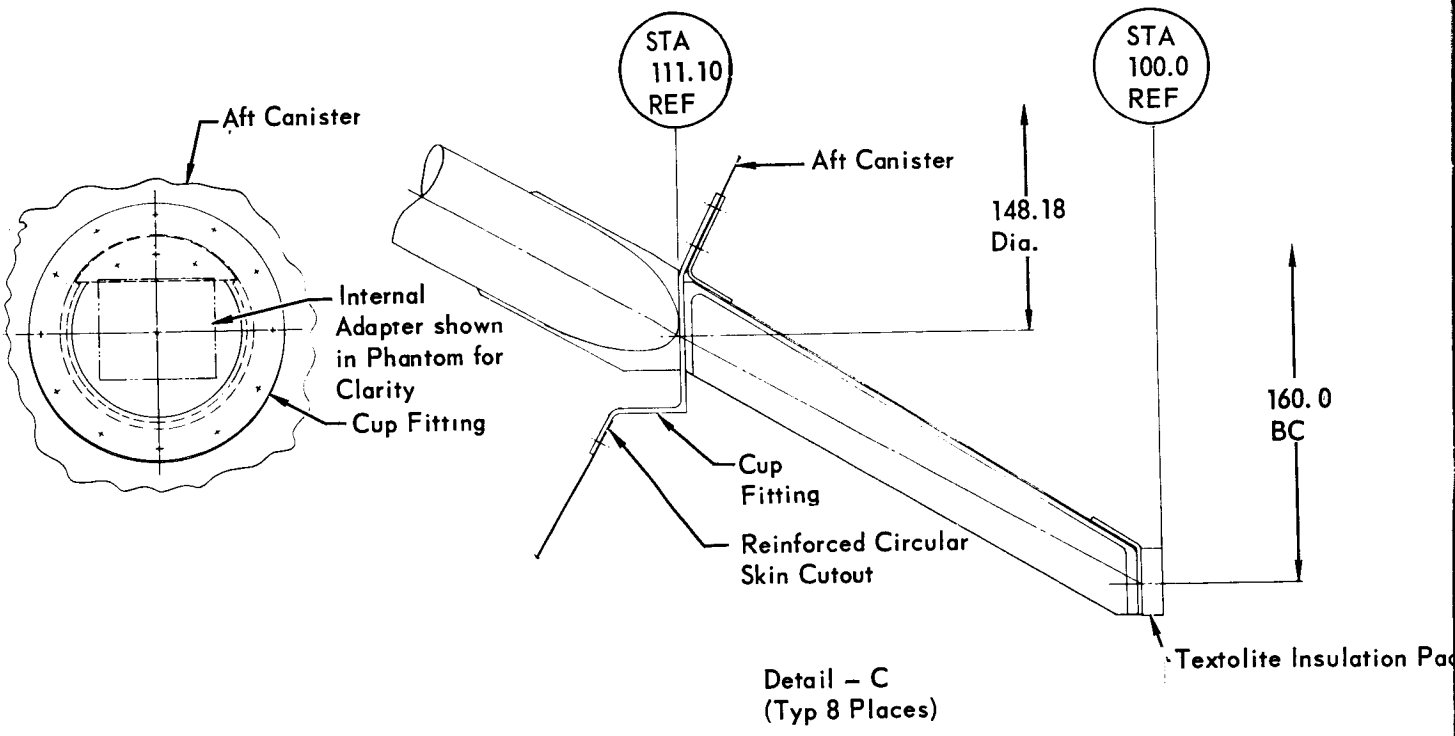

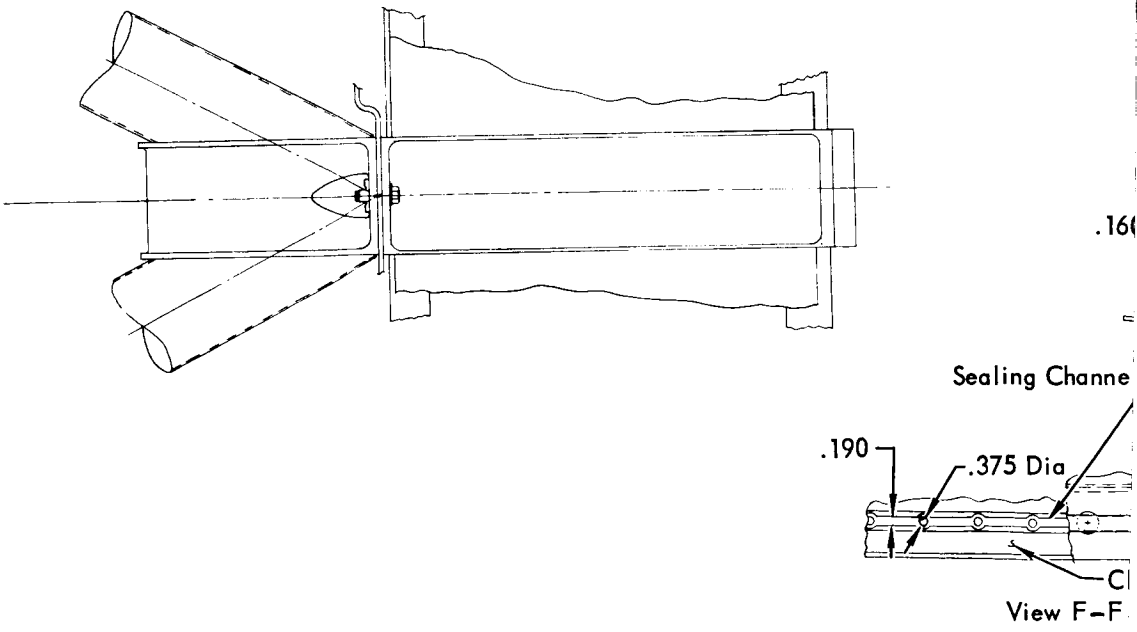

Figure 3.2.1.1–1

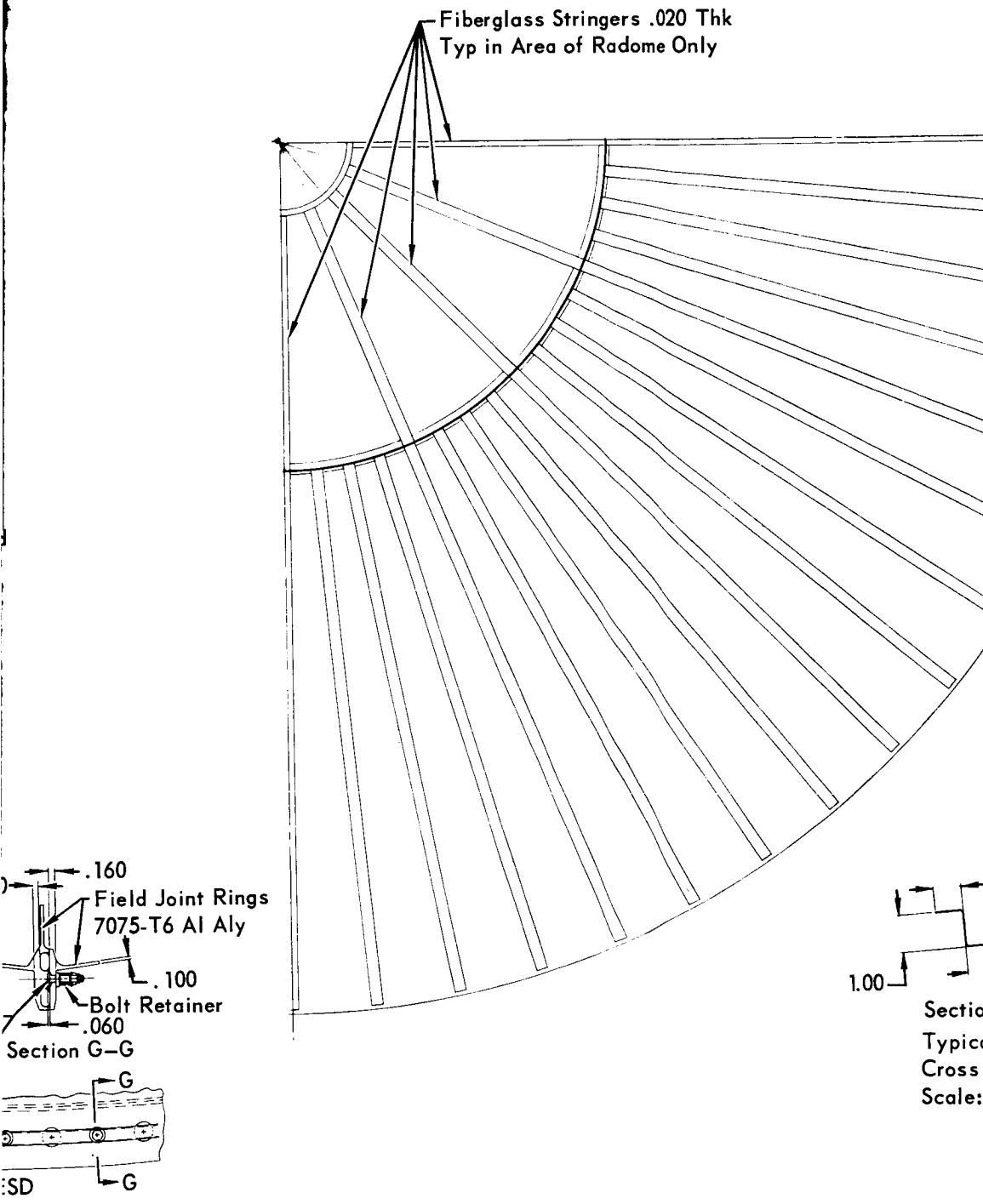
Fiberglass Stringers .020 Thk
Typ in Area of Radome Only
.160
Field Joint Rings
7075-T6 Al Aly
.100
Bolt Retainer
.060
Section G–G
G
G
1.00

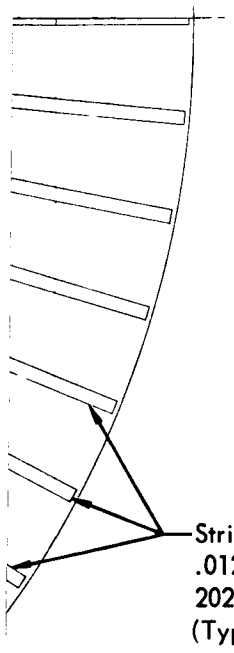

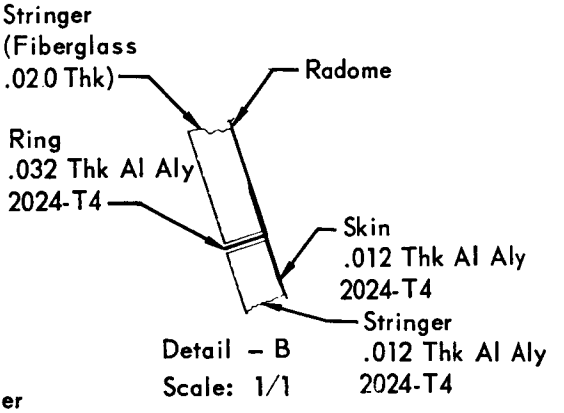

Detail – B
Scale: 1/1

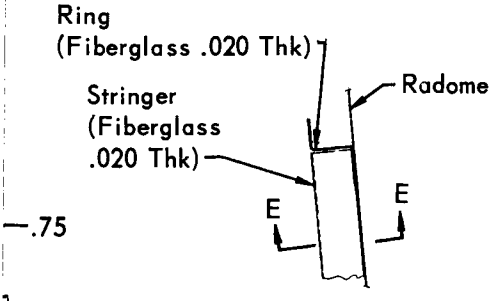

Detail – D
Scale: 1/1

n E-E
l Stringer
Section
1/1

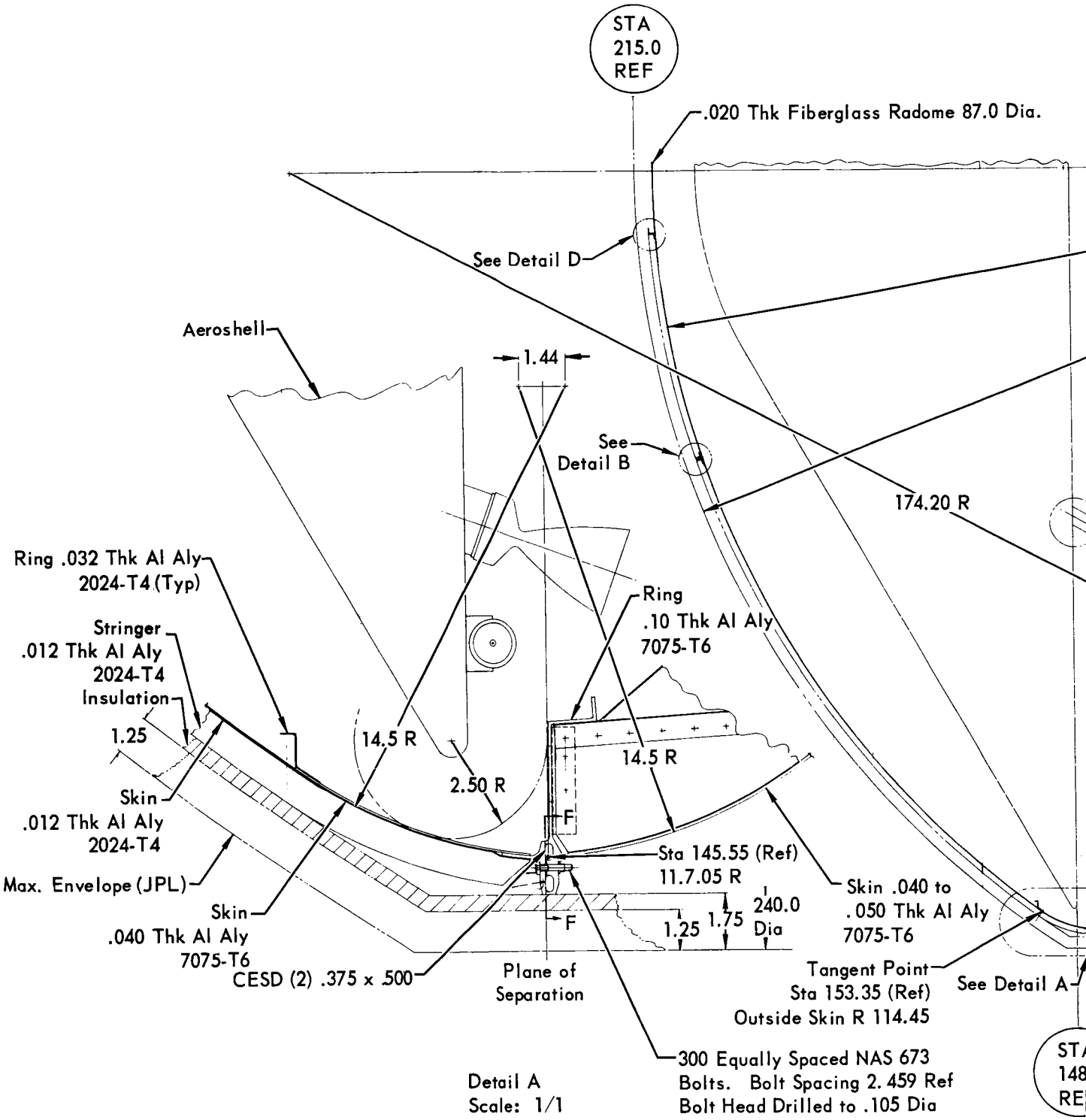

Figure 3.2.1.1-1 (Continued)

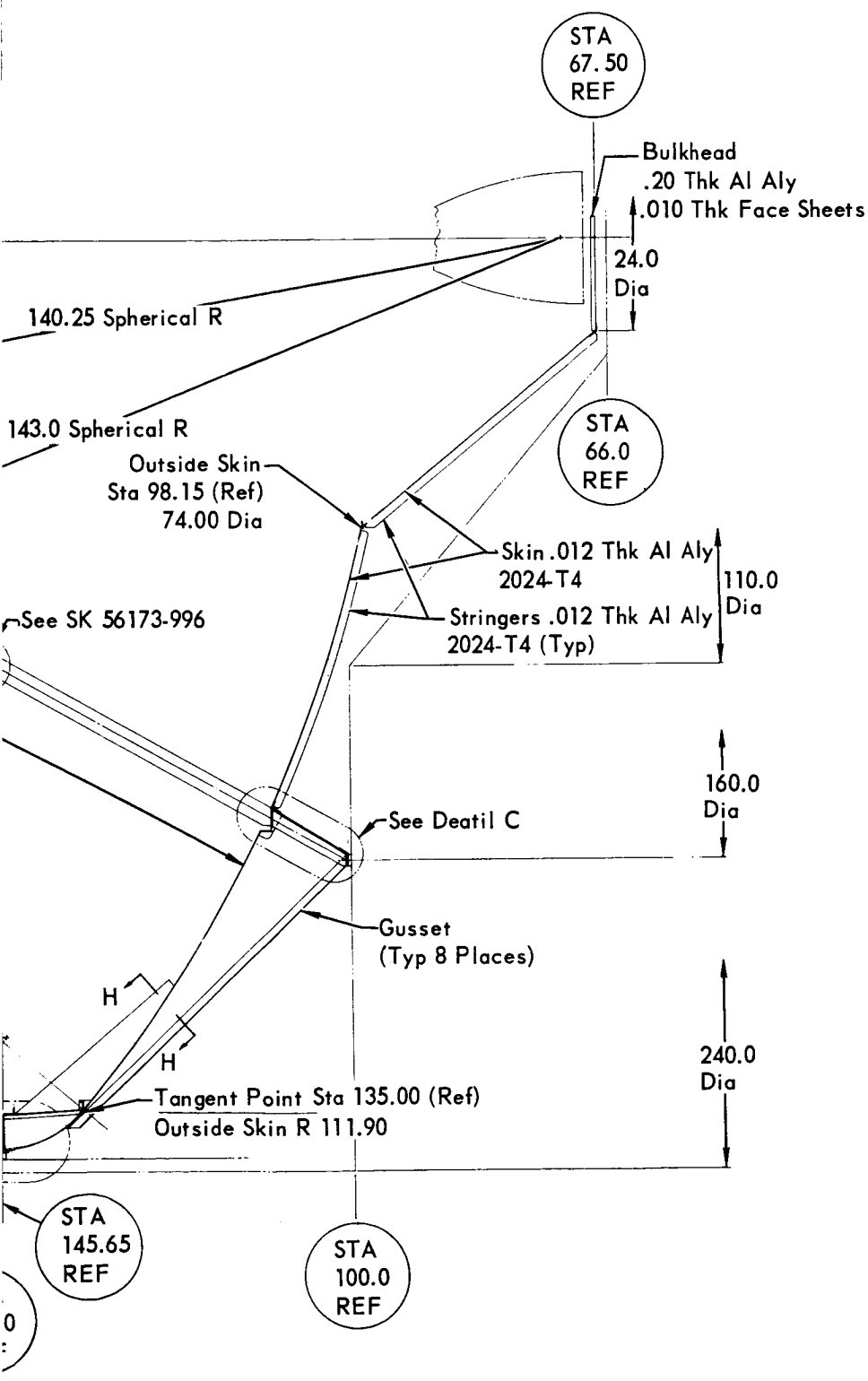

Section H-H
Scale: 1/1

3-18-2

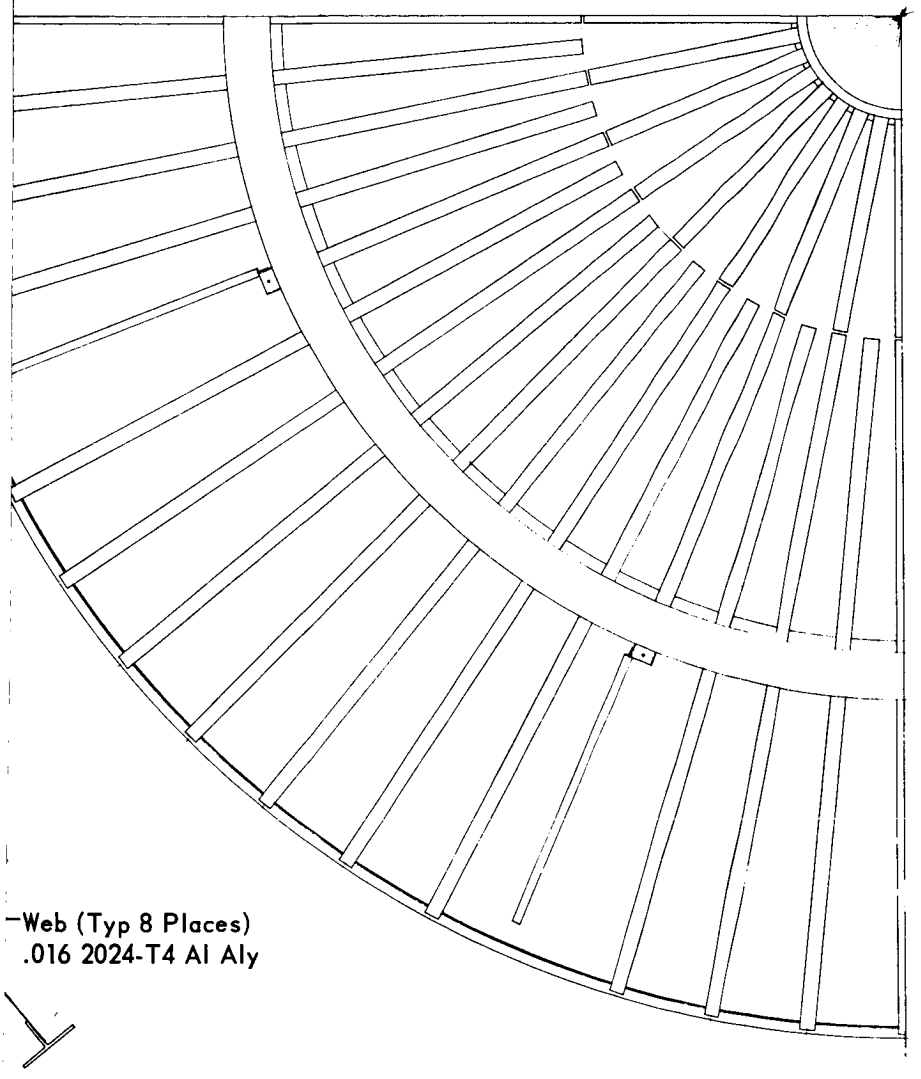

3-18-3

construction are similar to that of the forward section. It is interrupted at the center by a truncated cone (the aft closure) and further outboard by the interface cone. Most of the Electrical, Pressurization and Vent, and Separation equipment mount on or in the aft canister section.

The interface cone provides a structural transition from the Capsule Adapter interface and the canister pressure shell to the Flight Spacecraft interface. Bolts through the canister wall, at eight places, attach the Capsule Adapter to fittings on the interface cone. The other end of the same fittings is bolted to the Flight Spacecraft at the interface (capsule to Flight Spacecraft field joint).

The aft closure is a truncated conical shape that completes the pressure shell of the canister, permitting the de-orbit rocket nozzle of the Capsule Bus to protrude into the cavity specified by the JPL envelope.

Operational Description - The canister structure is built in a near spherical shape to minimize weight under the design loading condition (internal pressure) with modifications only where required - at the aft closure and near the field joint. Leakage is minimized by sealing the structural joints during assembly with RTV-560, a room temperature, curing, elastomeric sealing compound.

In operation, the structure functions are as follows:

- The capsule and its adapter are bolted together to form an assembly which is installed as a unit in the aft canister section.
- The forward section is bolted to the aft section of the canister.
- The field joint is sealed by pressure injection of RTV-560 sealant into a groove between the flange faces running circumferentially around the canister. This process will provide a positive seal with high confidence of reliability.
- The Capsule Bus System can be transported as a unit with OSE handling equipment attached at the Spacecraft interface or at the field joint.
- After sealing, the structure is protected by the OSE Gas Servicing Unit from over pressurization or negative pressure.
- The structure remains biologically sealed until canister separation occurs in the Mars orbit. No violation of the canister barrier is permitted. The OSE Unit is removed when the Planetary Vehicle is placed in the Launch Vehicle Shroud.

A summary of the trade study effort to select the preferred approach is given in Figure 3.2.1.1-2. The selected approaches indicated will result in complete compliance with the constraints with minimum complexities and weight.

CANISTER TRADE STUDY SUMMARY

AREA	SELECTED APPROACH	ALTERNATES CONSIDERED	REASONS FOR SELECTION
Canister Pressure	2.25 psi Limit	1, 3, 5, 15 psi Limit Pressurization and Vent Systems	Near Minimum Structure Weight and Near Minimum Pressurization and Venting Complexity and Weight
Forward Canister Shape	Near Spherical	Conical Modified at Maximum Diameter by Radius	Spherical is Stiffer and Allows for More Capsule Growth (Volume)
Structure Material and Configuration	Aluminum (2024–TA) Semi-Monocoque	Beryllium, Titanium, Magnesium Steel, Fiberglass Materials; Monocoque, Honeycomb, Waffle, Ring Stiffened, Axial Corrugations Construction	Selected Approach is Lightest Weight Except Beryllium, Simple and Low Cost to Develop and Build.

Figure 3.2.1.1–2

The canister structure interfaces physically with the capsule adapter and the Flight Spacecraft. It has a clearance and dynamic excursion interface with the Aeroshell and the Launch Vehicle Shroud. It provides support for the canister equipment - Separation, Electrical, and Pressurization and Vent (P&V) - and in turn is protected from over-pressurization by the P&V equipment. Mechanical interfaces with OSE are provided on the field joint ring and the Flight Spacecraft interface.

3.2.1.1.2 Separation Equipment - The Separation Equipment provides a redundant, well proven design to separate and eject the canister forward section from the aft section. The dual Confined Explosive Separation Device (CESD) selected has been proven in operational hardware in many applications by McDonnell on the Gemini and on the F-111 Crew Module. The following constraints were most important in design of the Separation equipment:

- The device must completely sever the pressure tight canister around the circumference (nearly 20 feet diameter).
- The CESD and all related debris must be retained to avoid the possibility of contaminated ejecta impacting on Mars.
- Redundancy must be maintained in all components so as to preclude the possibility of a single component failure causing mission failure.

Major elements of the Separation equipment, shown in Figure 3.2.1.1-3, are:

a. The Confined Explosive Separation Device which is installed in grooves on each side of the bolts clamping the canister forward and aft sections together. This device consists of a mild detonating cord (MDC) positioned by a teflon extrusion in a stainless steel tubing which is flattened to the shape of the groove in the field joint flange. The CESD is made up in two 180° sections sealed at each end, for each of the grooves.

b. The stimulus transfer tube, which consists of a .187 diameter tube containing an explosive for transferring the detonation to the CESD.

c. The standardized electro-explosive device (EED) which is to be used in all applications on the VOYAGER Capsule Bus System is used on the canister. It initiates on receipt of an electrical signal and detonates the stimulus transfer tube which propagates the detonation to the CESD.

d. The field joint bolts are titanium bolts with the head end drilled to the depth of the desired break point so that a predetermined breaking strength is obtained.

Operational Description - On receipt of the electrical signal from the canister electrical equipment, the EED's are detonated, followed by the stimulus.

CONFINED EXPLOSIVE SEPARATION DEVICE (CESD)

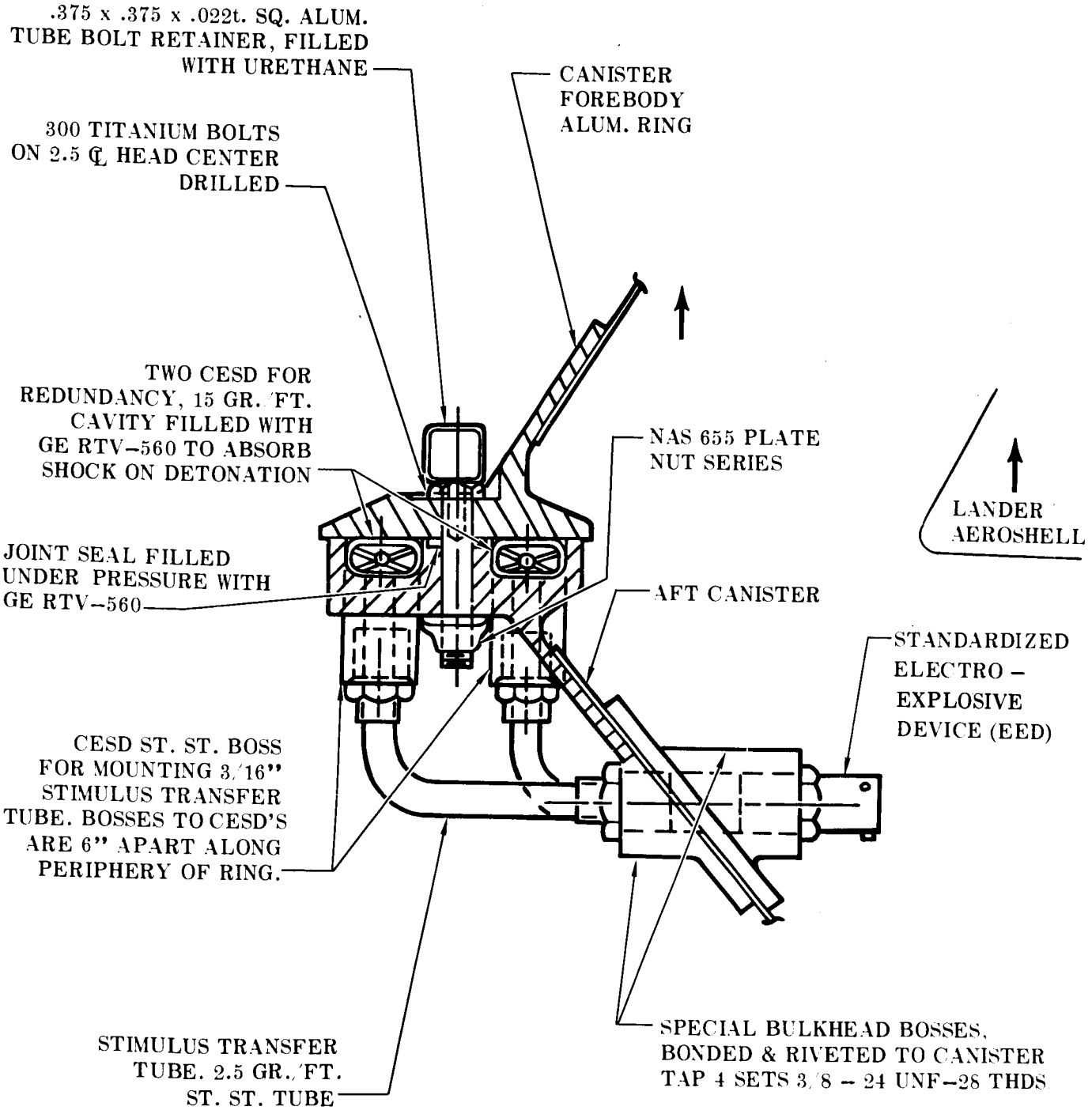

Figure 3.2.1.1-3

transfer tubes and the MDC. This detonation expands the steel tube and exerts a force between the clamped flanges of the field joint ring which causes tension on the bolts. The bolts break in tension and the forward section of the canister is ejected. Each CESD has 20% more energy than that required to break the bolts and eject the forward section. The broken bolts are constrained by a retainer from leaving the canister forward half and the nut is retained by nut plates. The canister separates at a velocity of from 1.25 to 10 fps. Analyses were conducted on the following release and ejection devices:

RELEASE DEVICES	SEPARATION DEVICES
Pyrofuse Sheet Release	Helical Springs
CESD	Negator Springs
Flat Sheet Chemical Heat Pad	Magnetic Ejection
Cold Has Collet Release	Cold Gas Bag Ejection
Shoe-lace "Hot Wire" Release	Spring Magnetic Dashpot
Subliming System	
Electron Beam Cutting	
Plasma Hot and Cold Torch	
Traveling Laser Beam	
Ultrasonic Desoldering	

Of these, among the advantages which led to its selection as the preferred design, the CESD had proven reliability and permitted retention of debris. The pyrofuse Sheet Release is recommended for further study because of potential weight-saving and lower shock advantages.

The CESD interfaces physically with the field joint rings and is retained by the aft section ring. It receives the initiation signal from the canister electrical equipment. In turn, it imposes a shock on the forward and aft canister. field joint rings and to a lesser degree on other parts of the VOYAGER System.

3.2.1.1.3 Pressurization and Vent Equipment - The Pressurization and Vent (P&V) equipment maintains the internal bio-integrity and prevents over-stressing the structure of the sterilized canister from sterilization until Capsule separation in Mars orbit. Two redundant components of each major element are incorporated as shown schematically in Figure 3.2.1.1-4 so that no single failure can have catastrophic results. This redundancy is carried into the valve systems by having filters in series to protect the open valves. The following are the most significant constraints in the design of the P&V equipment:

PRESSURIZATION & VENT SCHEMATIC

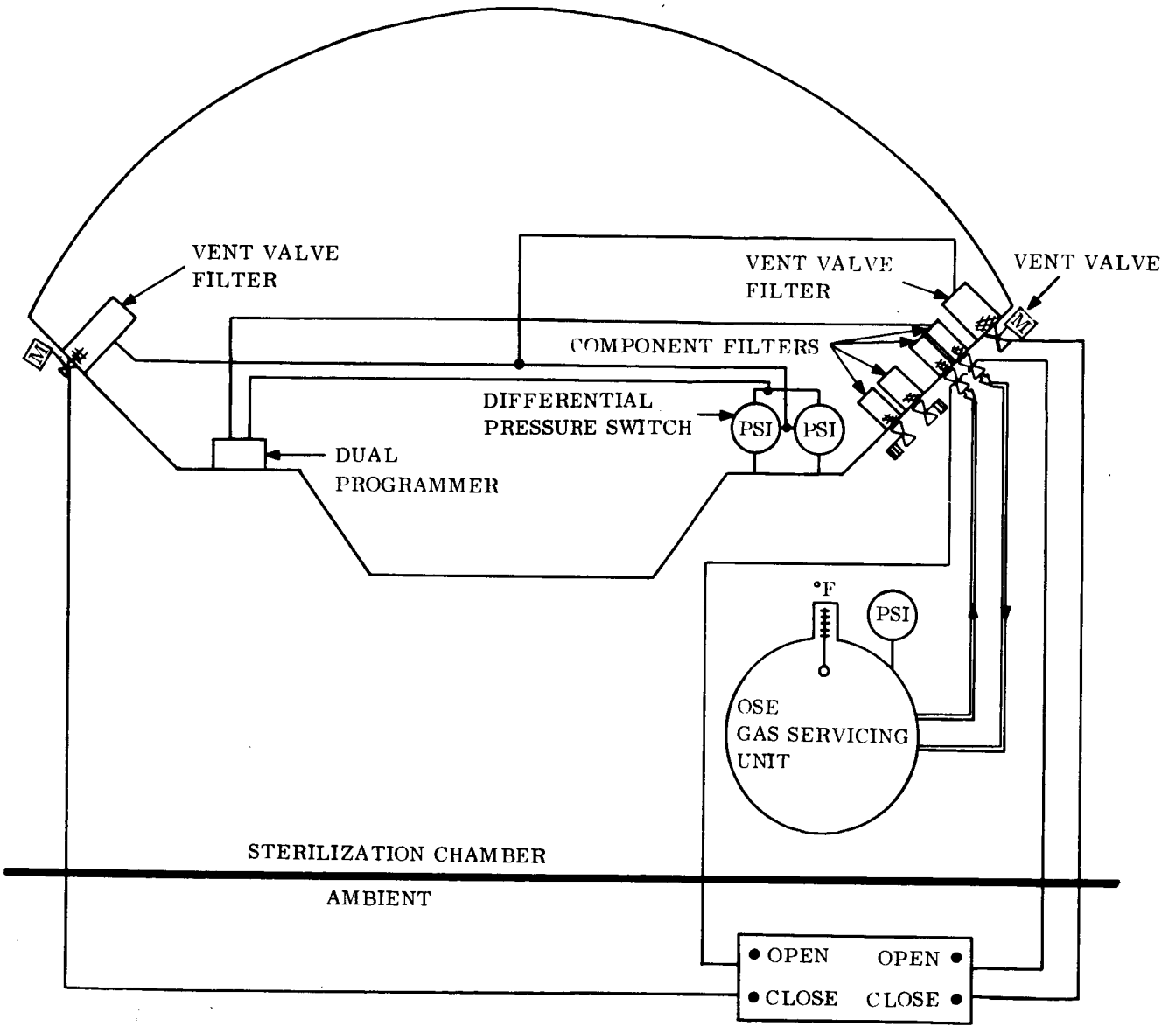

Figure 3.2.1.1-4

- The P&V equipment must maintain a sterile canister interior after terminal sterilization.
- The canister structure must be protected from pressures in excess of its design limit (2.25 psi positive and zero negative).
- Pressure inside the sealed canister must be vented during launch and ascent, and reduced to zero in Earth orbit.
- The P&V equipment must tolerate temperature variations within the selected limits (+50°F to+110°F) without venting internal gas or requiring make up gas.

Major Elements - The major elements of the P&V equipment are:

- Vent valves to accommodate a large mass flow out of the canister during launch.
- Relief valves which are pressure operated to protect the canister structure if internal pressure reaches the structural design limit (2.25 psi).
- Purge and evacuation valves which are used during decontamination and sterilization cycles on the ground. They are opened in Earth orbit and remain open to bleed off any residual pressure or outgassing.
- Biological filters placed in series with each of the above valves to protect the valve's penetration into the sterile canister interior. This barrier to recontamination is redundant with the valve to provide a double guard against recontamination.
- Differential pressure switches which provide a signal to OSE to reduce pressure on the ground, and a signal after launch to close the vent valves when differential pressure falls below .50 psi.

Operational Description - The Operational Support Equipment (OSE) Gas Servicing Unit is connected to the purge and evacuation valves as soon as the canister is closed in preparation for terminal sterilization. It maintains internal pressure above zero and below limit pressure (2.25 psi).

- During sterilization or decontamination the OSE remains connected and provides pressure control and internal circulation of decontamination or heating gases. As the canister cools the OSE maintains internal pressure above zero differential.
- During post sterilization checkout and mating with the Flight Spacecraft the OSE Unit (sterilized with the canister) remains attached until the Launch Vehicle shroud is installed. No re-attachment will be required.

- At launch, an electrical signal opens the vent valves which are closed. Again if differential pressure falls below .50 psi, the valves will close to prevent backflow through the valves.
- In Earth orbit the purge and evacuation valves are opened and remain open to bleed off any residual pressure or out-gassing.

The major trade in the P&V subsystem was the design pressure for the canister. P&V subsystems of 1, 3, 5 and 15 psi limit were analyzed. A low pressure leads to complexity and weight in the P&V and OSE while a high presure leads to severe structural weight penalty. The approach selected, a 2.25 psi limit, is near the minimum for a simple P&V and OSE design and leads to near minimum structural weight. It is based on the limitation of temperature to a range of 60°F (50°-110°F) after the Launch Vehicle shroud is installed.

3.2.1.1.4 Canister Electrical Equipment - The Canister Electrical Equipment provides the following:

- electrical power for Canister equipments
- power control
- power distribution
- separation sequencing
- control of pressurization and venting of the canister to and after launch
- instrumentation and telemetry for monitoring canister equipment performance
- interconnections of equipment, Capsule Bus, Flight Spacecraft, and OSE.

The electrical equipment consists of a dual, sealed, silver zinc battery, a dual battery charger, a power controller, a power distribution module, a dual programmer, a sensor electronics and voltage regulator unit, a cruise commutator, pyrotechnics, instrumentation, and interconnecting cabling. A block diagram is shown in Figure 3.2.1.1-5.

The dual battery provides power for pyrotechnic initiation, separation sequencing, instrumentation, and telemetry from approximately 70 minutes prior to Capsule Bus separation until 30 seconds after separation. The battery charger is a two-step float charger which maintains the battery in a charged condition during cruise. The power controller controls power supplied to electrical heaters and to the power distribution module. The power distribution module contains capacitors for pyrotechnic initiation, and switching circuits to connect the charged capacitors to the separation pyrotechnic initiators and inflight disconnect actuator.

The sensor electronics and voltage regulator unit provides the regulated power for Canister instrumentation and the cruise commutator. The cruise commutator

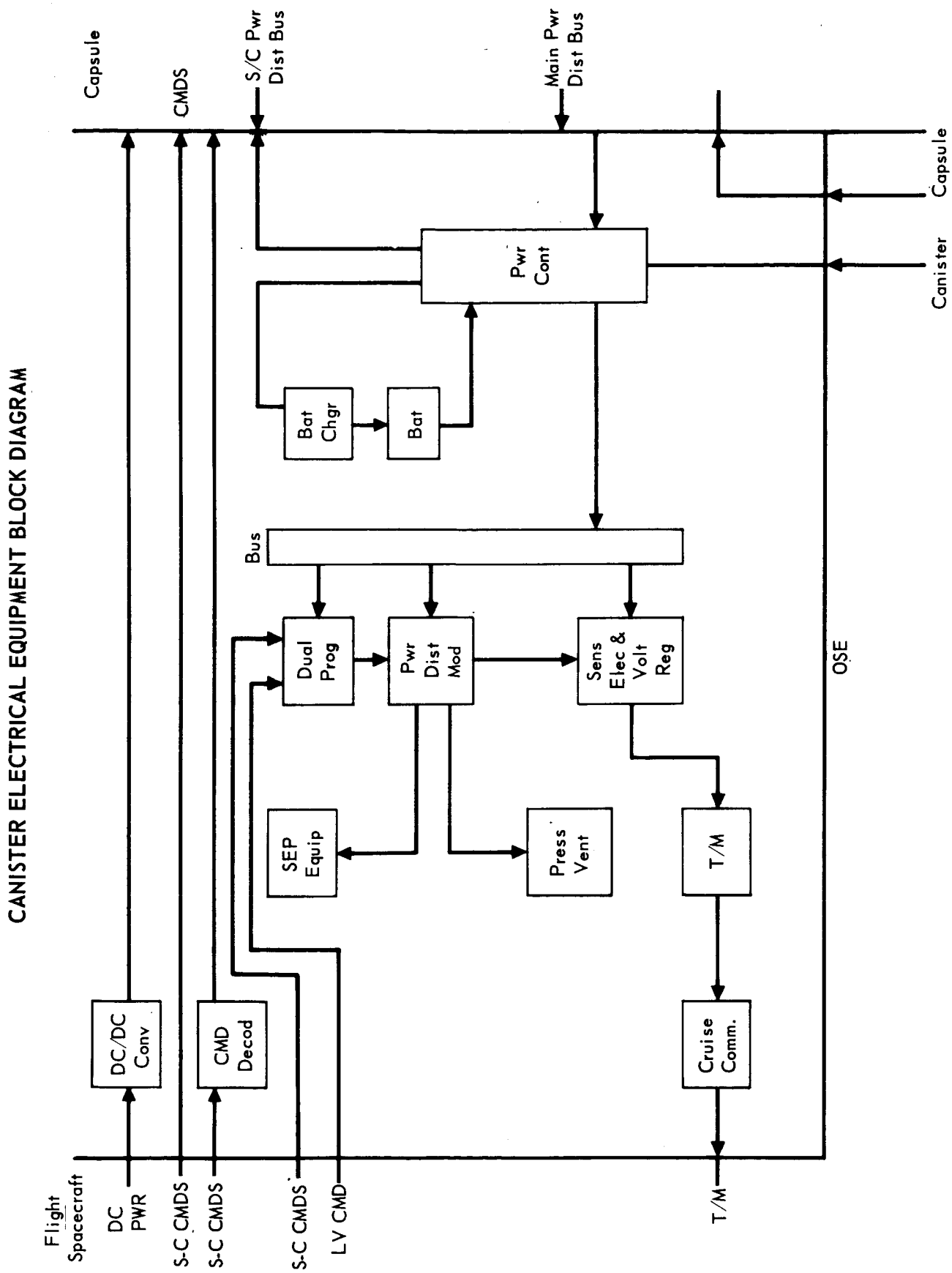

Figure 3.2.1.1–5

operates during the entire flight and provides multiplexed canister instrumentation data to the Flight Spacecraft. Pyrotechnics are provided for separation of the canister forebody and the Capsule Bus.

System Operation - Prior to launch the canister electrical equipment provides the electrical interconnection of the Operational Support Equipment (OSE) with the Capsule Bus and canister for prelaunch checkout, battery charging, and launch control. The battery is fully charged from ground power prior to launch. The power controller provides the relay switching for transferring of ground power to internal power. At launch the operating canister equipment (instrumentation, telemetry, venting, and electrical heaters) is connected to the main power distribution bus in the Capsule Bus. (See Part C Section 7.0) The battery charger is connected to the Spacecraft power distribution bus of the Capsule Bus.

A Launch Vehicle command initiates the canister venting sequence in the dual programmer at launch. When the Flight Spacecraft solar cell panels are deployed the Spacecraft power distribution bus in the Capsule Bus becomes powered. This activates the battery charger in the canister which applies charging voltage to the battery.

During cruise, power is provided from the Capsule Bus for telemetry, instrumentation, and electrical heaters in the canister. This power is provided continuously except during Spacecraft maneuvers. The battery charger is powered only when Spacecraft power is available to the Capsule Bus.

When in Mars orbit, the canister equipment is transferred to canister battery power. A Spacecraft separation command then starts the Dual Programmer to initiate the separation sequences of canister forebody release, Capsule Bus/Canister inflight disconnect separation, and Capsule Bus release.

NOTES:

(1) For an expanded functional description of the canister structure, separation assembly, pressure and venting equipment and the electrical subsystem see Part C, Section 1.1.

(2) For additional data on canister and canister equipment selection and analysis see Part B, Section 5.1.

3.2.1.2 Adapter - The adapter supports the Capsule Bus for all ground handling, launch, and flight loads. It consists of a simple truss assembly of structural tubes which interfaces at the forward end with the Capsule Bus and with the Sterilization Canister at the aft end. Loads are carried to and through the short conical section of the canister which is the structural interface with the Flight Spacecraft. The adapter is designed to install the Capsule Bus within the Canister without access doors in the Aeroshell or in the Canister. The major constraints unique to the adapter are:

- Requirement for attachment to Capsule Bus before attachment to Canister.
- Interchangeability of adapter as a total assembly.
- Requirement for accurate alignment between the inertial platform of the Capsule and that of the Flight Spacecraft.
- Requirement for thermal isolation of interface to Spacecraft Bus.

The main members of the truss are 16 aluminum tubes which are assembled in a zig-zag pattern (Figure 3.2.1.2-1) between the eight attachment points at the Capsule and the eight attachment points at the Canister. At each intersection, the tubes are welded to fittings that comprise the interface attachments.

Our preferred adapter design meets all of the VOYAGER constraints including those listed above. The design of the adapter-to-canister end fittings with fixed plate nuts on the adapter side of the joint permits the adapter to be first attached to the Capsule Bus, and then this assembly installed within the Canister aft section. Bolts, which attach the Adapter to the Canister, are installed from outside the Canister with sealing washers to complete the installation.

The adapter is made an interchangeable unit by jig drilling the interface fittings after assembly. The structural interface surfaces are accurately machined to maintain a close alignment between the Capsule Bus and Spacecraft. Thermal isolation between the Adapter and the Capsule Bus or Canister is not required since all three are in a nearly isothermal environment within the insulation blanket and by minimizing the contact surface areas. The truss type design provide the shortest and stiffest load path between the Capsule Bus and the Spacecraft. No obstructions to circulation of gases during sterilization are presented by the widely spaced tubes. The use of only eight attachment points to the Canister allows fewer support struts and fittings and results in minimum weight for this large, lightly-loaded structure.

Figure 3.2.1.2–1

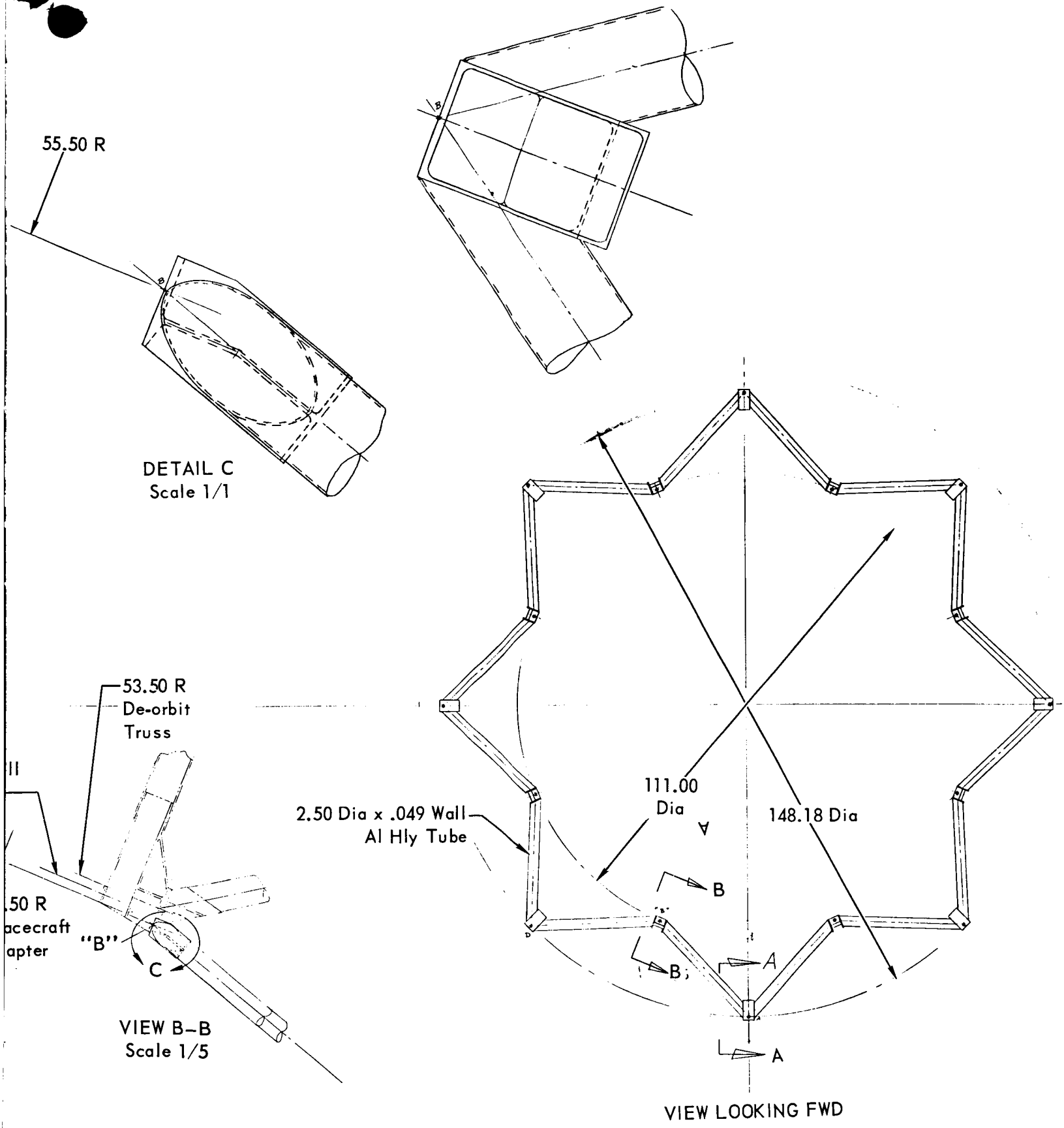
55.50 R
DETAIL C
Scale 1/1
53.50 R
De-orbit
Truss
.50 R
acecraft
apter
"B"
C
VIEW B–B
Scale 1/5
2.50 Dia x .049 Wall
Al Hly Tube
111.00
Dia
148.18 Dia
B
A
VIEW LOOKING FWD

3-30-2

This design provides for growth since Lander changes, including the installation of RTG power supplies, are unimpeded by adapter members. If geometry changes should be necessary, growth and flexibility are provided by simplicity of design. All materials and fabrication techniques are very much state-of-the-art so that changing mission requirements can be met without major development cost or schedule delay. A summary of the trade studies performed in this design is presented in Figure 3.2.1.2-2. The approach selected ensures a simple low-weight adapter which will perform the mission reliably.

NOTE 1: For Additional Justification of the Selection of the Preferred Design, Refer to Volume II, Part B, Section 5.2.

NOTE 2: For Additional Information on Adapter Functional Description, Refer to Volume II, Part C, Section 1.2.

3.2.1.3 Aeroshell - The aeroshell is the structural module of the Flight Capsule that provides the initial and major reduction in velocity prior to landing. Using aerodynamic drag in the upper atmosphere of Mars, it removes 98% of the entry velocity. It also provides thermal protection to the remainder of the Capsule Bus during entry.

3.2.1.3.1 Configuration - The Aeroshell module (Figure 3.2.1.3-1) consists of a 19 ft. base diameter, 120° sphere cone structural shell with an external heat shield. The heat shield on the conical section is an ablative type-chemically foamed, iron oxide filled methyl. phenyl. silicone reinforced with aluminum silicate fibers. This shield is soft bonded to the structural shell. The sperical nose is covered with a non-ablating heat shield of aluminosilicate fibers in a ceramic binder. The open base of the Aeroshell is protected by a thermal curtain.

The nose cap assembly is integral with the Radar Altimeter antenna and the stagnation point Instrument Head.

The Reaction Control system is also installed in the Aeroshell module. It consists of a control tankage and equipment module, mounted just aft of the nose cap, distribution lines, and thrust chamber assemblies. The thrust chambers -4@ 22 lb thrust for pitch and yaw and 4@ 2 lb thrust for roll are mounted in four packages, 90° apart, on the base ring.

- Design Constraints - The shape, size, weight, and sterilization compatibility constraints that are imposed on the Aeroshell design are discussed below.

  Shape - On the basis of extensive trade studies (reported in Part B, Section 4.1) the preferred shape is a 120° sphere cone with a sperical nose radius equal to 0.5 times the base radius and a corner radius equal to

ADAPTER TRADE STUDY SUMMARY

AREA	SELECTED APPROACH	ALTERNATES CONSIDERED	REASONS FOR SELECTION
Separate or Combined Adapter	Separate	Combined with aft canister section	Lighter weight, stiffer, simpler design
Truss or Panel (Separate Adapter)	Truss Structure	Panel construction of honeycomb, semi-monocoque, axial corrugations	Lighter weight and simpler to build
Truss Material	Aluminum Tube	Titanium, fiberglass	Lighter weight, simple to build and thermally compatible with Lander and canister

→ Decision Flow

Figure 3.2.1.2–2

AEROSHELL INTERIOR ARRANGEMENT

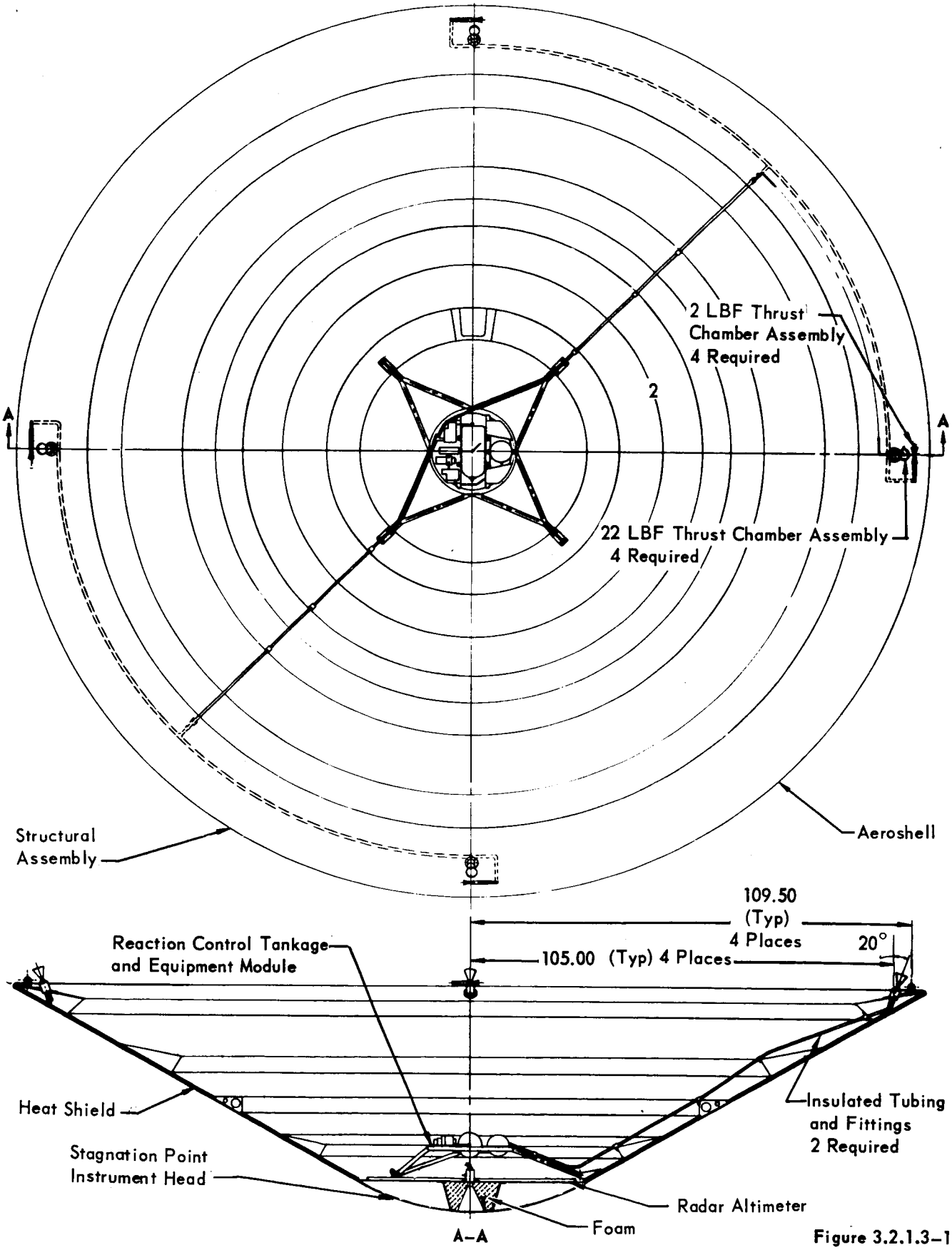

Figure 3.2.1.3–1

.005 times the base radius.

Size - The Aeroshell was made as large as possible to provide as small a ballistic coefficient (M/C_dA) as is feasible. This standardizes this configuration for use with later (heavier) missions. The maximum allowable base diameter is limited by the dynamic envelope given in JPL Document SE002BB001-1B21, dated 1 January 1967. The following constraints were considered in sizing the base diameter inside the prescribed limit:

a. Excursion allowance between Launch Vehicle and Sterilization Canister.

b. Maximum Sterilization Canister wall thickness including insulation.

c. Excursion allowance between Sterilization Canister and Aeroshell.

The base diameter chosen is 19 feet. The preferred aerodynamic shape is shown in Figure 3.2.1.3-2.

Weight - The minimum weight consistent with efficient Aeroshell structure and the highest level of confidence is desired.

Sterilization compatibility - All materials used in the preferred design must meet the constraints set forth in Section 2.2.

3.2.1.3.2 Aeroshell Structure - The selected Aeroshell structure is a thin skin Titanium ring stiffened single-faced corrugated structure. The structural arrangement is shown in Figure 3.2.1.3-3.

The functional requirements imposed on the Aeroshell Structure are to provide:

a. A structural shell which supports an ablative-type heat shield.

b. A non-ablative nose cap to complete the sphere cone shape.

c. Internal support members for Capsule Bus equipment.

d. A release/support system for the Capsule Lander.

e. An optical window for entry T.V.

o Structural shell - The structural conical shell (Figure 3.2.1.3-4) is composed of an aft section and a forward section. These are permanently joined by two continuous machined rings and two continuous doublers. Both sections are stiffened by four continuous rings, located circumferentially and approximately equally spaced.

The forward conical section is of titanium longitudinal single-faced corrugations that are stitch welded into smaller one-eighth pie-shaped panel segments. The aft conical section is similar to the forward section, being composed of eight segmented panels, similarly stitch welded together, but larger than those of the forward section. All sixteen segmented panels are joined mechanically along each longitudinal edge by eight splice joints. All internal

PREFERRED AERODYNAMIC SHAPE

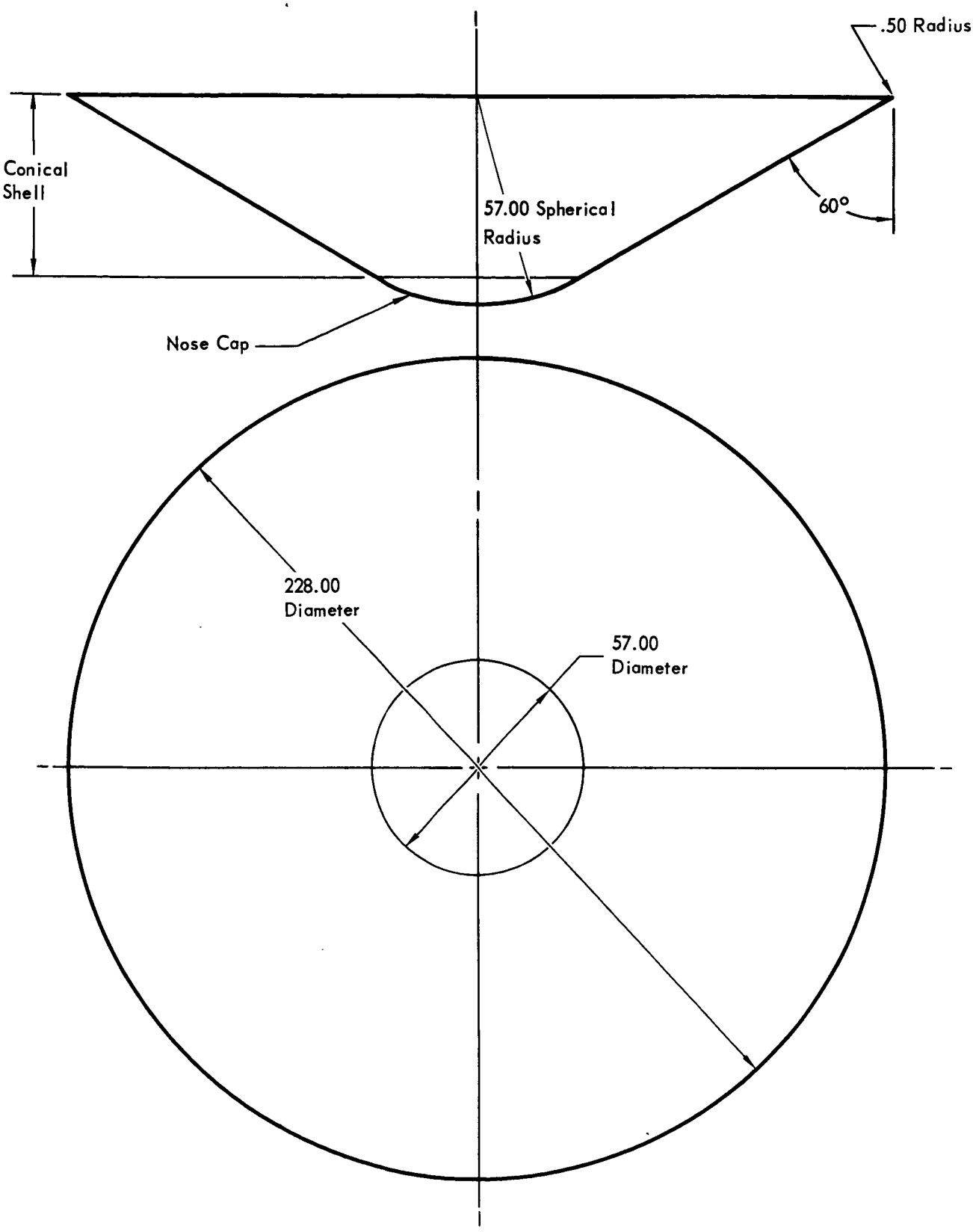

Figure 3.2.1.3–2

STRUCTURAL ARRANGEMENT – AEROSHELL

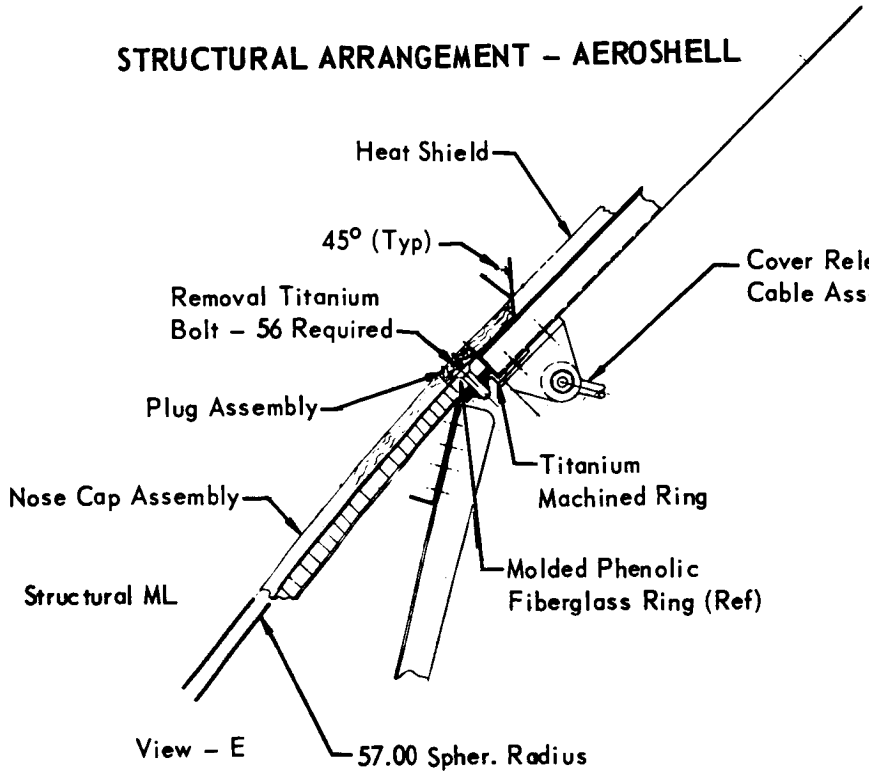

Radar Absorbing
Cover Assembly
For Radar Altim
Secondary Anten

Cover Relea
Cable Assen

See Figure
Nose Cap Assemb

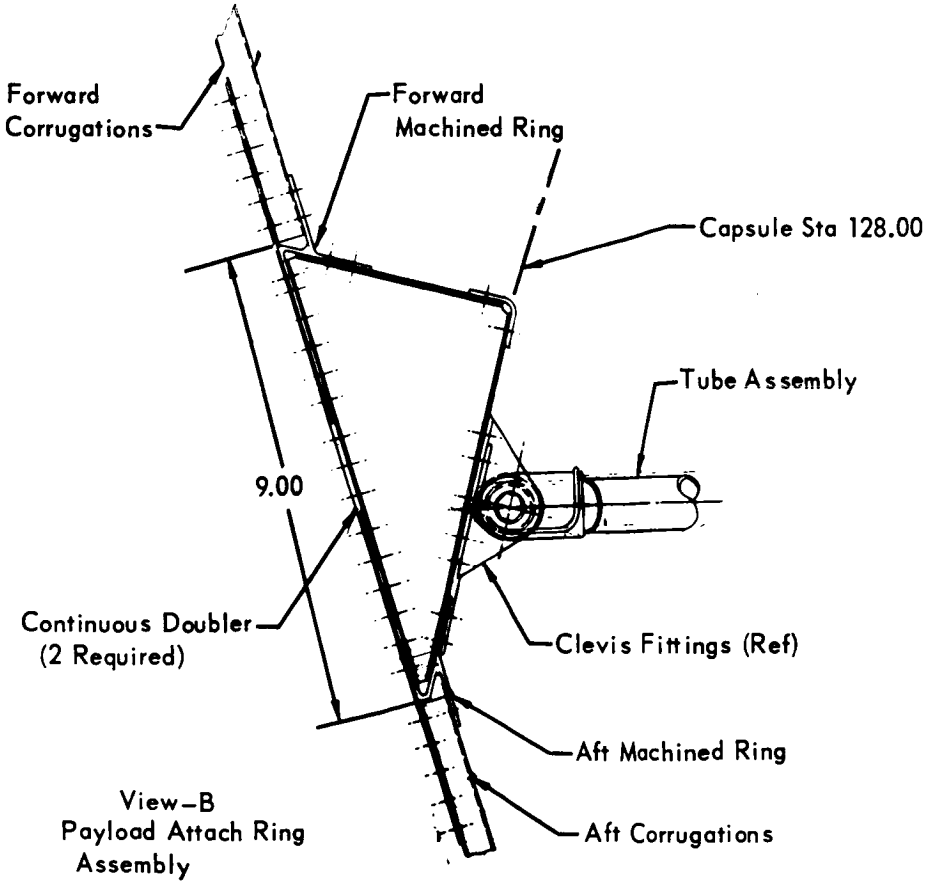

Radar Absorbing Cover
Assembly for Radar
Altimeter Primary
Antenna

Capsule Sta

Figure 3.2.1.3–3

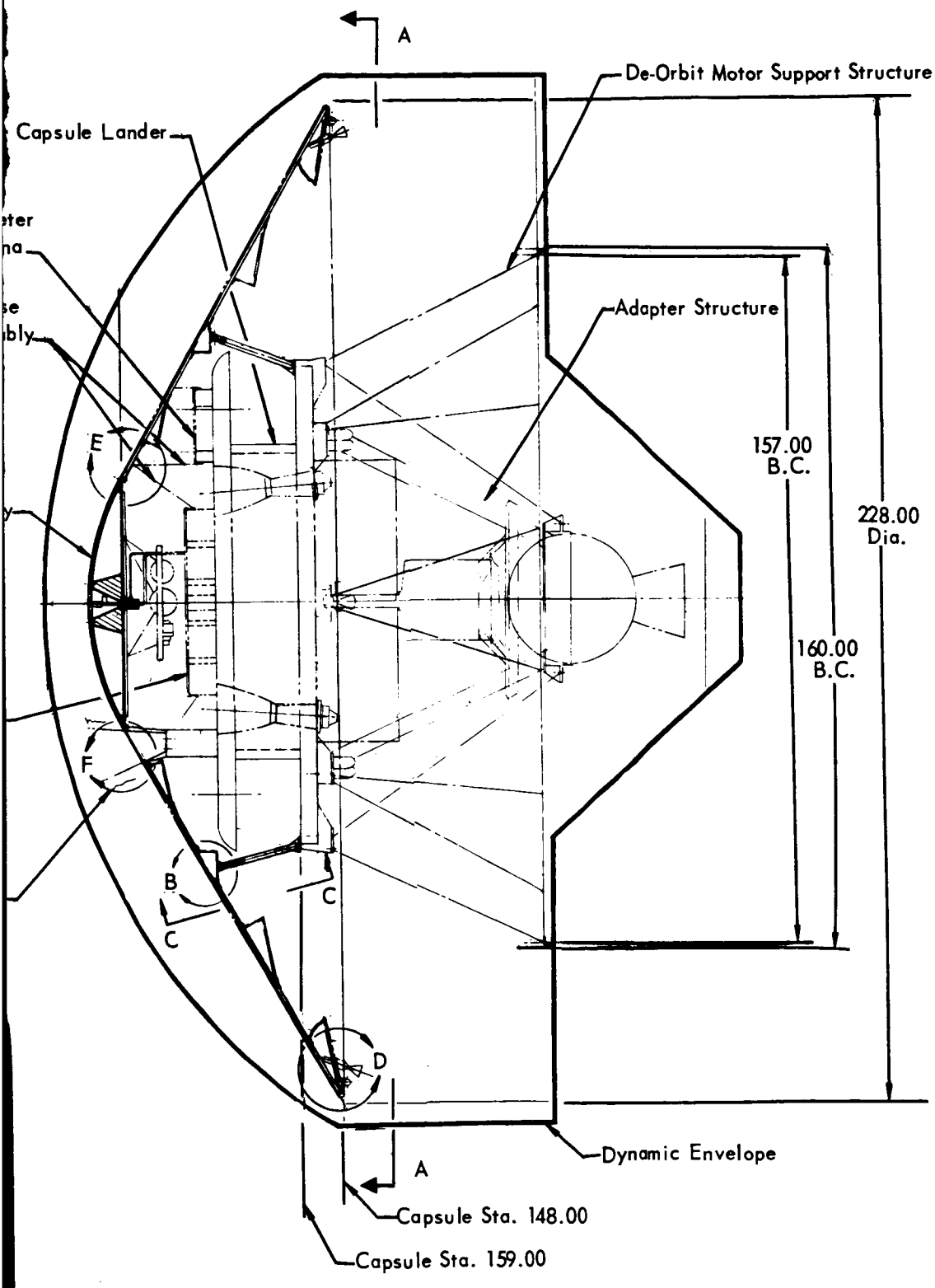
A
De-Orbit Motor Support Structure
Capsule Lander
Adapter Structure
157.00
B.C.
228.00
Dia.
160.00
B.C.
E
F
B
C
C
D
A
Dynamic Envelope
Capsule Sta. 148.00
Capsule Sta. 159.00

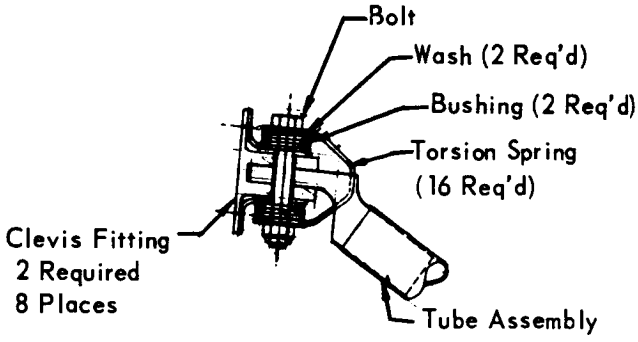

View – D
(B_1 Pod Pivot Joint)
2 Req'd
8 Places

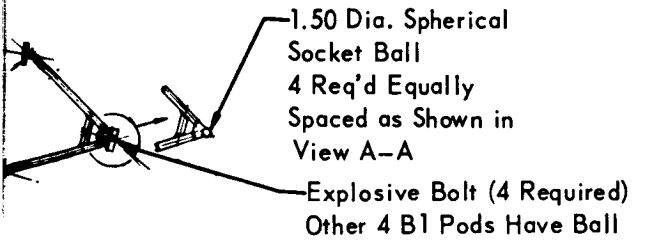

View C–C
'od Assembly (8 Places)

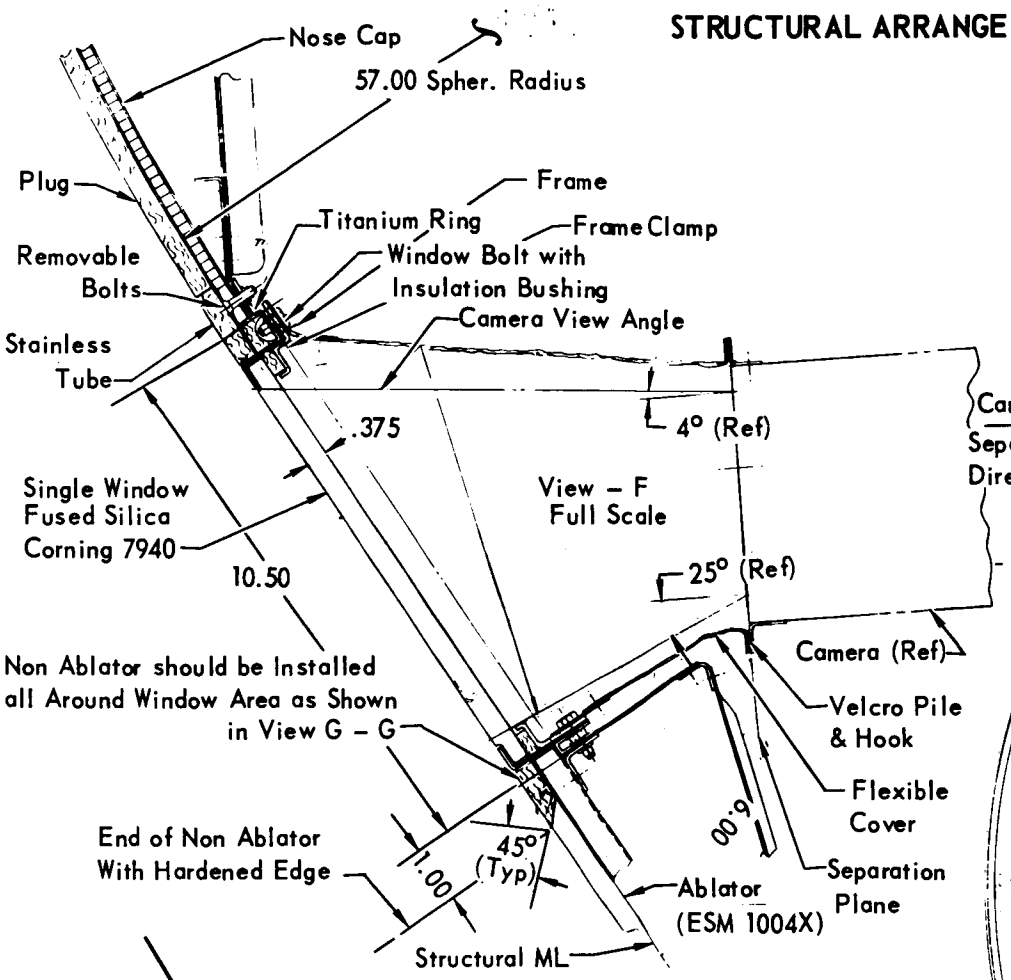

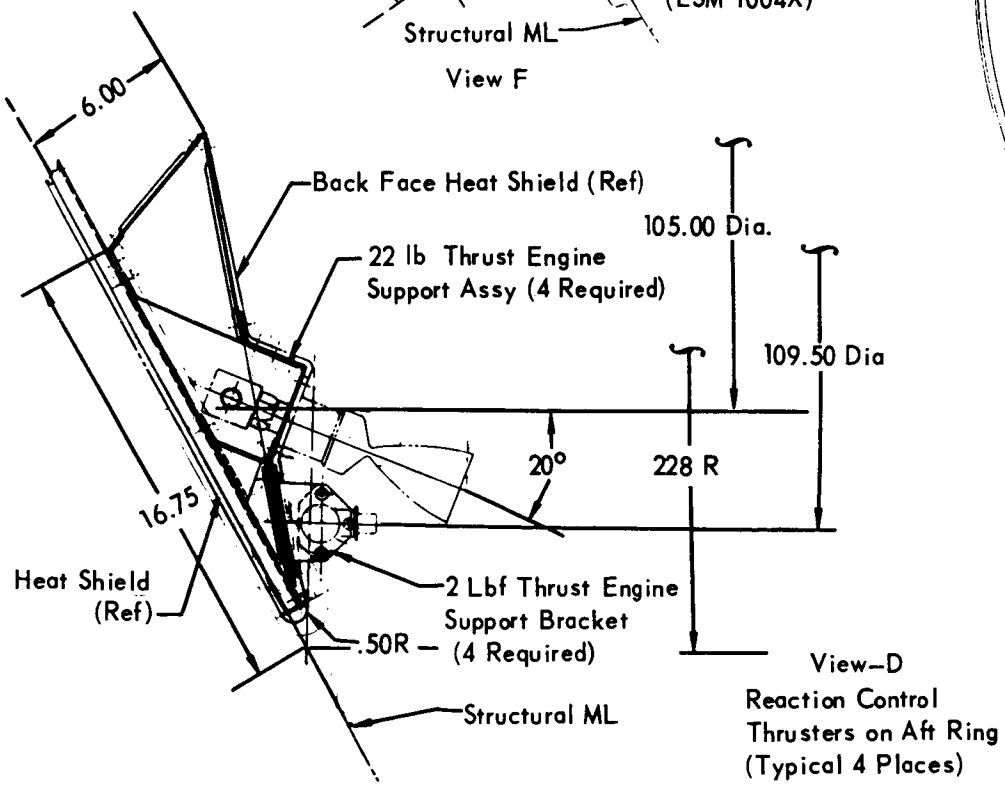

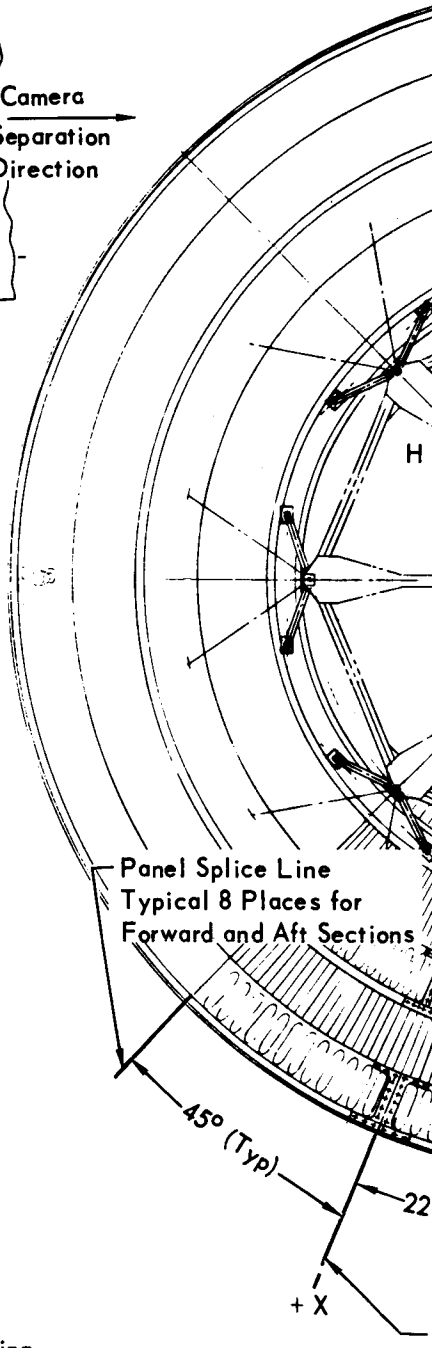

Figure 3.2.1.3–3 (Continued)

ed)

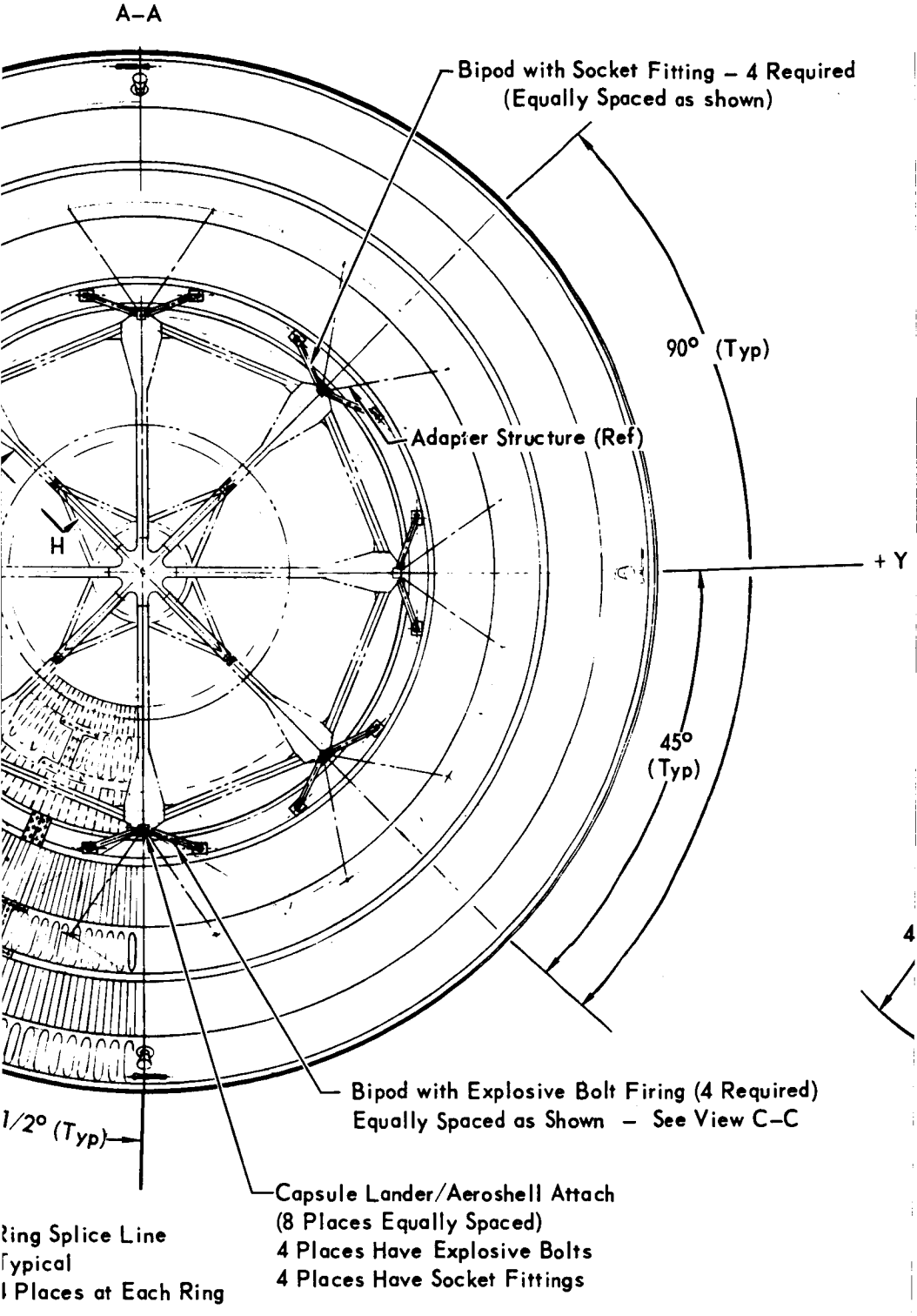
A–A
Bipod with Socket Fitting – 4 Required
(Equally Spaced as shown)
90° (Typ)
Adapter Structure (Ref)
H
+ Y
45°
(Typ)
4
Bipod with Explosive Bolt Firing (4 Required)
Equally Spaced as Shown – See View C–C
1/2° (Typ)
Capsule Lander/Aeroshell Attach
(8 Places Equally Spaced)
4 Places Have Explosive Bolts
4 Places Have Socket Fittings
Ring Splice Line
Typical
l Places at Each Ring

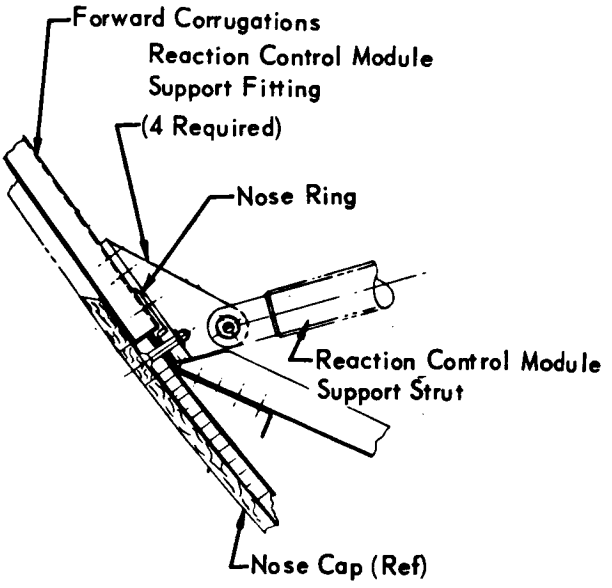

View H – H
Reaction Control Modual Support Fitting
Typ 4 Places

View G–G

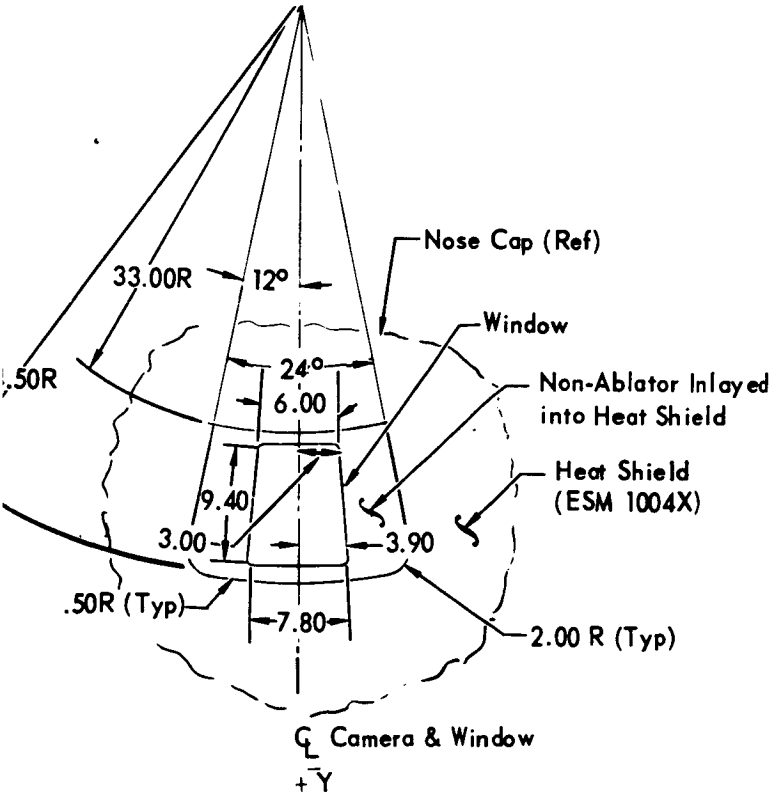

3-37-3

CONICAL SHELL

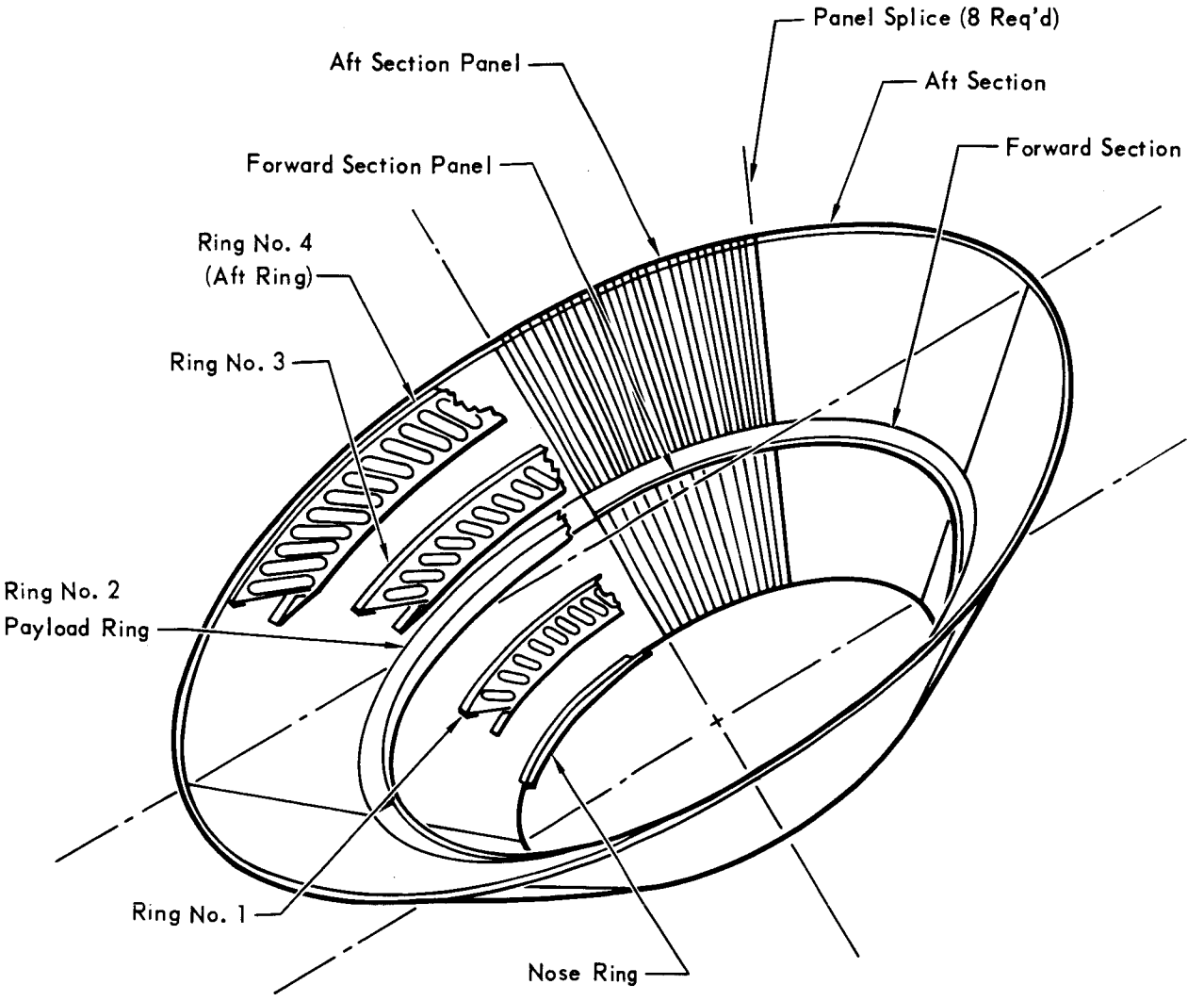

Figure 3.2.1.3–4

rings are mechanically joined to the inboard side of the corrugations.

The preferred structural shell was chosen on the basis of a major trade study that compiled a comprehensive selection of structural concepts and materials. Forty configurations of four basic structural concepts were evaluated against the following factors:

- o Structural Weight
- o Design complexity and familiarity
- o Joining characteristics
- o Inspectability
- o Accessibility
- o Volume efficiency
- o Tooling complexity
- o Development requirements
- o Modification sensitivity
- o Fabrication cost.

Material candidates were established on the basis of their properties, availability, cost, compatibility, and fabrication characteristics. The candidates considered include: aluminum, beryllium, magnesium, fiberglass, titanium, and boron filament.

The four basic structural concepts evaluted were:

a. Single-faced longitudinal corrugations with rings
b. Isotropic sandwich
c. Ring stiffened monocoque
d. Fully monocoque

The major features of the study which led to the preferred design were as follows: The fully monocoque concept was eliminated because of excessive weight and the sandwich concept was eliminated because of inspection difficulties. The ring stiffened monocoque structure, although heavier than the single-faced longitudinal corrugations with rings, was eliminated primarily because of the extensive tooling required, the difficulty of equipment mounting, and the smaller volume efficiency.

The concept using single-faced longitudinal corrugations with rings retains a high confidence level with McDonnell. It was used for the adapter section on Mercury and is being used on the Equipment Adapter Section for the Air Force Gemini program. Figure 3.2.1.3-5 summarizes the structural configuration evaluation.

AEROSHELL STRUCTURAL CONFIGURATIONS SUMMARY

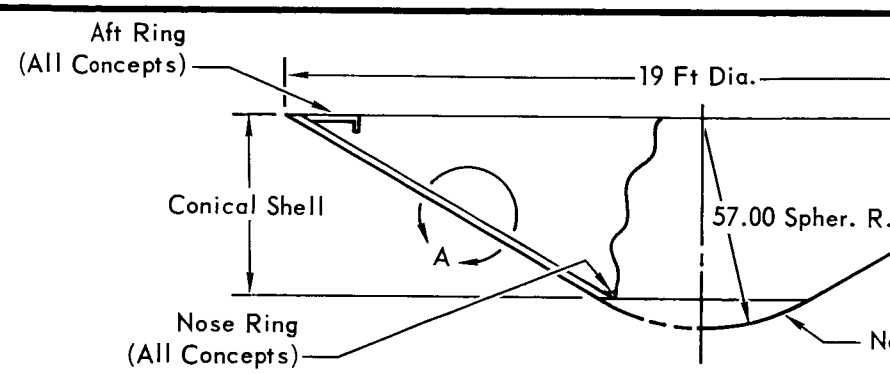

TYPE OF STRUCTURE / COMMENTS	FULLY MONOCOQUE View A	ISOTROPIC SANDWICH 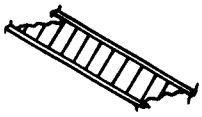 View A	RIN
Design Characteristics	• Familiar Simple Design • Best Volume Efficiency • Poor Equipment Support Capability • Easy to Increase Load Carrying Capability – Difficult to Reduce on Completed Assemblies	• Familiar Design of Average Complexity • Good Volume Efficiency • Difficult to Change Load Carrying Capability	• Unfam • Numer Volum • Basic Adapti Cut-Ou • Nomin Carryi
Fabrication Considerations	• Easy to Inspect • Simple Tooling Requirements • Good Opening and Cut-Out Capability	• Panel Sizes Limited by Facility Capability • Extremely Difficult to Inspect • Extensive Quality Control Required • Complex Tooling and Facility Requirements	• Minimu Ring J • Adapta • Easy t • Extens Ring is
Development Requirements	• Minimum	• Nominal Tooling Development	• Nomin
Modification Flexibility	• Excellent Access for Modifications	• Poor Accessibility for Modifications	• Excell Modifi
Environmental Compatibility	• Compatible	• Compatible	• Compa
Materials	• Aluminum • Fiberglass • Beryllium • Magnesium • Boron-Aluminum • Titanium • Composite	• Aluminum • Titanium • Beryllium • Fiberglass • Magnesium	• Alumir • Beryll • Magne • Titani
Weight	• Heavy	• Light	• Light

Figure 3.2.1.3–5

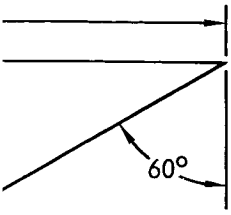

4th Choice
3rd Choice
2nd Choice
Preferred Concept

se Cap (See Vol. II B 5.3.3)

NOTES:

G STIFFENED MONOCOQUE 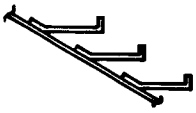 View A	SINGLE-FACED LONGITUDINAL CORRUGATIONS WITH RINGS View A 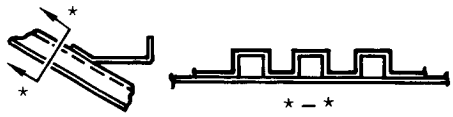
liar Complex Design us Rings Greatly Reduce Efficiency Structure Questionable for ng to Equipment Mounting and ts. lly Adaptable to Change Load- g Capability	• Simple and Familiar Design • Rings Reduce Volume Efficiency • Basic Structure Adaptable to Equiptment Support and Cut-Outs with Nominal Modification • Nominal Capability for Accepting Load-Carrying Modifications
m Skin Joints but Numerous oints ble to all Joining Techniques Inspect ive Tooling Required as Each Different	• Adaptable to All Methods of Joining • Easy to Inspect • Nominal Tooling Requirements • Nominal Tooling Developments
l Testing Developments	• Nominal Testing Developments
nt Access for ation	• Relatively Accessible for Modifications
ible	• Compatible
um um ium m	• Aluminum • Magnesium • Titanium
	• Light

3-40-2

- Nose Cap - The nose cap is located at the apex of the Aeroshell; it is a spherical segment with a radius and chord diameter of 57.0 inches. The design considerations used in selecting the preferred nose cap construction were:
  a. Aerodynamic performance - It must maintain its aerodynamic contour
  b. Structural performance - It must sustain the maximum dynamic pressure (q)
  c. Thermodynamic performance = It must dissipate the heat loads presented by maximum stagnation heat fluxes ($\dot{q}_s$)
  d. Electromagnetic performance - It must serve as an electromagnetic window (RF transparent) for the Radar Altimeter Antenna (conical monopole/ground plane)
  e. Instrumentation performance - It must provide a clean (non-ablation and non-charring) surface for the instrument head and TV Camera window.

  The preferred nose cap structural arrangement is shown in Figure 3.2.1.3-6. The load carrying structure is a honeycomb sandwich with molded-in fiberglass inserts forming a continuous ring at its periphery and a formed sheet metal ring attached to a beaded circular disc with radial stiffening angles. The sheet metal ring resists small shear loads that are produced from locally mounted equipment. The 57.0 diameter disc is the ground plane portion of the radar altimeter antenna and needs the stiffening angles to resist high loads.

  Heat protection is provided by a non-ablative material preformed to shape and bonded to the outer face sheet of the sandwich structure with a high temperature film adhesive. The outer diameter of the non-ablative material overlaps the titanium Aeroshell structure to provide a simple lap joint. Also, a modified scarf joint maintains continuity between the ablative heat shield that is applied to the conical shell, as shown in Figure 3.2.1.3-3, View E. A 9.50 inch diameter beryllium heat sink is bolted into the sandwich structure and the non-ablator to protect a small instrument tube from the high entry heat flux. The outer surface is flush. The instrument tube protrudes through the center of the heat sink to the stagnation point of the Aeroshell, where it measures temperature, pressure, and takes mass spectrometer samples.

The nose cap is installed in the structural shell by 56 bolts from the outboard side. After the bolts are torqued, plugs of non-ablative material are cemented into the counterbored holes. Removal can be accomplished by reversing this procedure.

Preferred Design Materials

Sandwich

- Face sheets - 5 plys (.020) of phenolic impregnated glass fiber cloth

NOSE-CAP ASSEMBLY

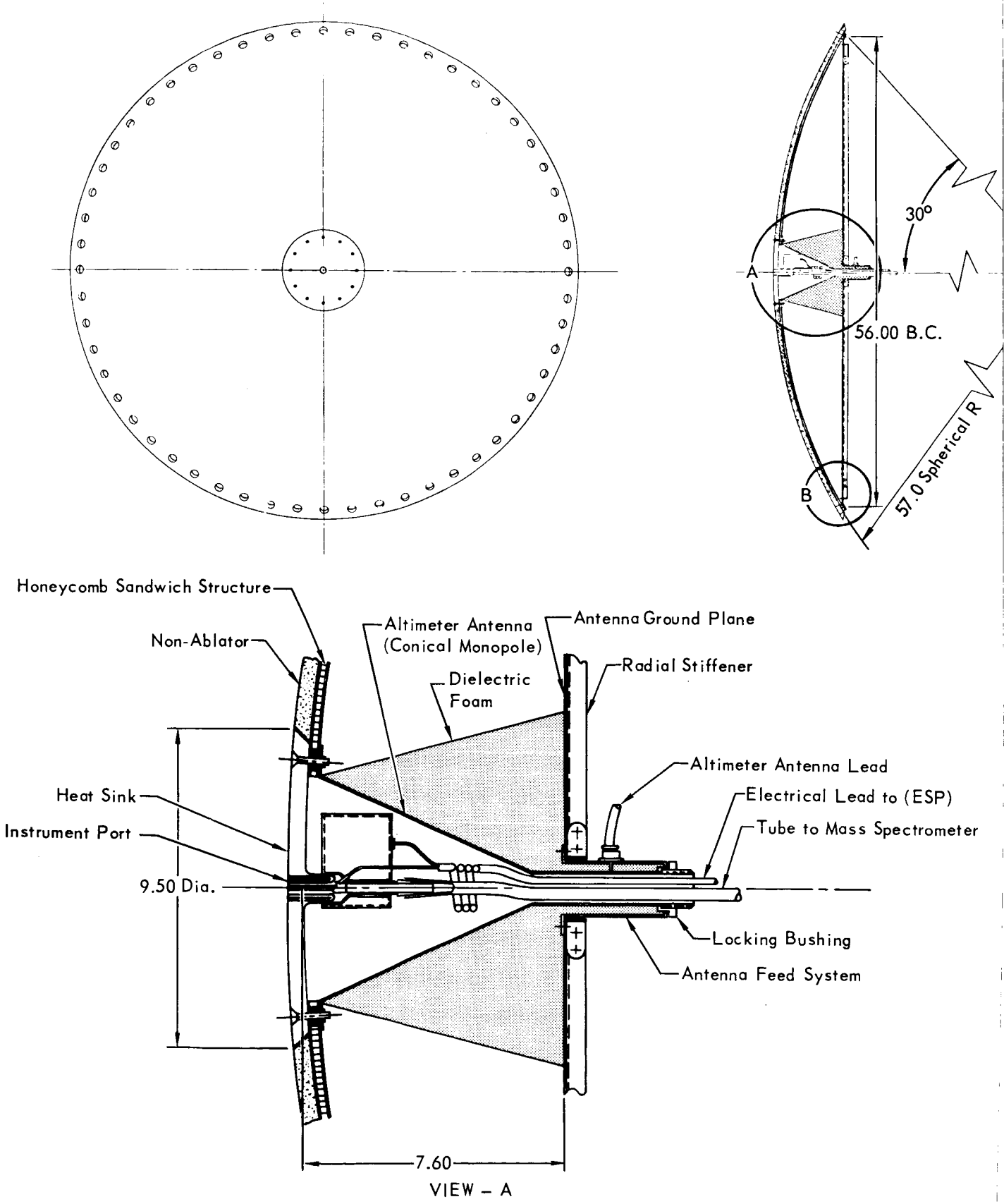

Figure 3.2.1.3–6

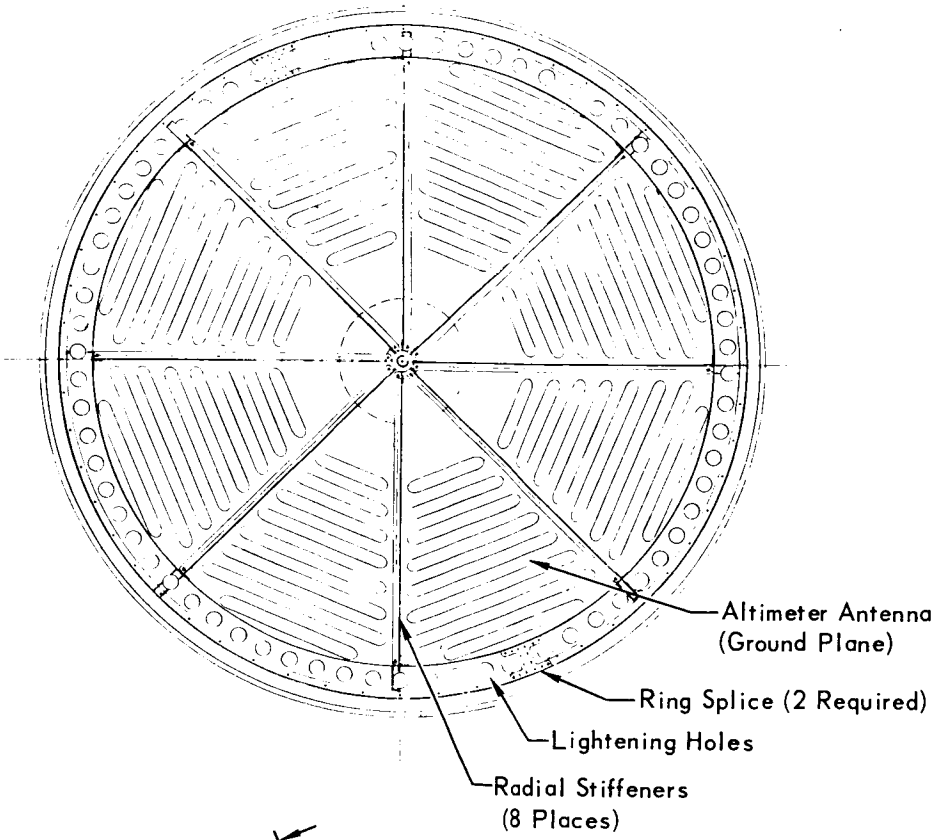
Altimeter Antenna
(Ground Plane)
Ring Splice (2 Required)
Lightening Holes
Radial Stiffeners
(8 Places)

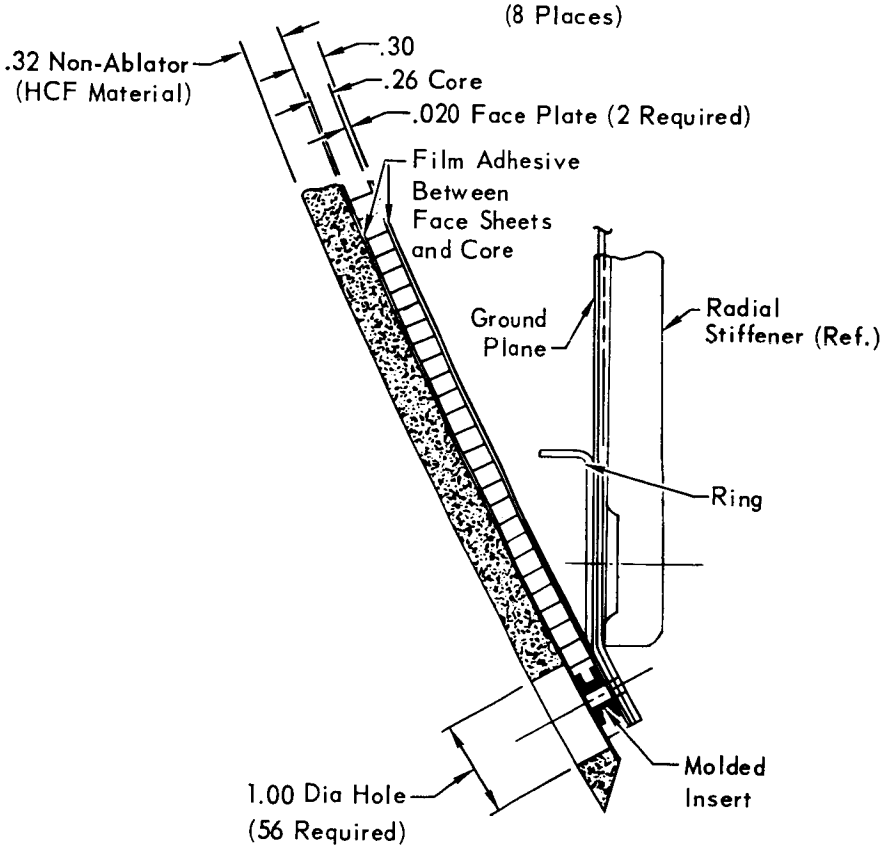
.32 Non-Ablator
(HCF Material)
.30
.26 Core
.020 Face Plate (2 Required)
Film Adhesive
Between
Face Sheets
and Core
Ground
Plane
Radial
Stiffener (Ref.)
Ring
Molded
Insert
1.00 Dia Hole
(56 Required)

VIEW – B

- o Core - Hexagonal cell phenolic fiberglass HRP .26 thick
- o Adhesive - HT 435 supported film adhesive between face sheets and core
- o Ring = Molded-in inserts

Heat Protection

- o Heat shield - Hardened aluminosilicate fiber composite (Feberfrax) with an inorganic binder
- o Adhesive - Same as sandwich (HT 435)

Heat Sink and Instrument Head - Machined beryllium (hot pressed block)

Altimeter Antenna

- o Conical Section - .040 aluminum
- o Ground Plane - .040 aluminum disc with radial stiffeners and an outer ring
- o Dielectric - Eccofoam (FPH-2)
- o Insulation _ Fiberfrax (hardened)

o Internal Support Members - Capsule Bus equipment that is located within the Aeroshell requires support structure to distribute the applied load to the shell structure without exceeding the design loading. The structural arrangement, Figure 3.2.1.3-3 shows the location and attachment of the equipment listed in the following table.

Name	Location (Capsule Station)	Method of Attachment
Capsule Lander	128.00	8 pivoting bipod struts with springs
Nose Cap	197.40	56 bolts mated to nose ring of conical shell
Primary Radar Altimeter Antenna	197.40	Bolted to nose cap substructure
Instrument Head & Heat Sink	205.00	Integral part of heat sink
Reaction Control Module	196.65	4 fittings with single bolts
22 lb Thrust Chamber Assy.	148.00	Fixed mounted to aft ring with brackets & fittings
2 lb Thrust Chamber Assy.	148.00	Fixed mounted to aft ring with brackets & fittings
Television Window with Boot	197.40 on + Y axis	Fixed mounted with frame to shell structure
Primary Radar Altimeter Antenna Absorber Cover	182.00	4 over-center release latches to radar and 4 cable assys. with fittings to shell structure

Secondary Radar Altimeter Antenna Absorber Cover	176.00	4 over-center release latches to radar and 4 cable assys. with fittings to shell structure

- Capsule Lander Support and Release - The following considerations were imposed upon the Aeroshell structure that supports the Capsule Lander:
  - The applied loads to the shell structure must be distributed circumferentially to avoid any concentrations.
  - Clearance must be allowed for Capsule Lander excursion.
  - Redundancy is required for release

The Capsule/Lander attachment interface is provided by eight bipod struts located circumferentially at sixteen equal spaces along the second ring (payload ring), as shown in Figure 3.2.1.3-3, View A-A.

Four bipods take tension, compression, and shear loads, using explosive bolts. The other four bipods take only compression and shear loads and require no attachment other than for bearing. Sixteen torsion springs pivot all eight bipods clear of the Capsule Lander at separation igniting explosive bolts through explosive stimulus transfer lines.

- Optical Window - The primary requirements for an optical transparent window are to:
  - Permit visual imaging from 800,000 ft. to Aeroshell separation.
  - Serve as a thermal cover for the TV camera.

Figure 3.2.1.3-3, View F, shows the preferred design as a trapezodial shaped window which is located on the +Y axis of the shell structure by means of a high temperature resistant frame. The window pane is fused silica (Corning No. 7940 or equal). The edges of the pane rest on gaskets of Fiberfrax and held in place by another frame. Stainless steel tubes (.093 in O.D.) located around the perimeter of the pane isolates the pane from vibration and compression loads during launch and cold soak time (cruise). The pane is installed from the inboard side of the shell as shown.

A flexible boot is attached to the inner frame to prevent outgassing products impinging on the inner window surface during sterilization. Also, a cover, which is attached to the Forward Sterilization Canister, protects the outer window surface.

Reaction Control System - Fittings and brackets are required to support equipment used for the Reaction Control System. Four 22 lb TCA's and four 2 lb TCA's are

mounted on the aft ring, equally spaced in groups of two (one 22 lb TCA and one 2 lb TCA)at the X and Y axes, as shown in Figure 3.2.1.3-1. A structural module, containing fuel, pressurant, and other components for the system, is attached to the nose ring by four bipod struts. The bipod struts are attached to the ring by four fittings that are equally spaced. This module can be installed before installing the nose cap through a 57.0 inch dia hole in the conical shell.

Notes:

1. For an expanded functional description of the Aeroshell structure see Part C, Section 1.3.1.
2. For an expanded discussion on the Aeroshell configuration selection see Part B, Section 4.1.
3. For an expanded discussion on the Aeroshell structural configuration selection and on supporting analysis on the preferred concept see Part B, Section 5.3.

3.2.1.3.3 Heat Shield - The VOYAGER Capsule heat shield is that subsystem whose prime function is to protect the Aeroshell, Surface Laboratory, and Entry Science Package from exceeding their allowable temperature limits due to aerodynamic heating encountered during entry into the Martian atmosphere. In our preferred approach this subsystem is made up of: a non-ablating, hardened Fiberfrax ceramic nose with a beryllium heat sink nose tip; the General Electric ESM 1004X silicone elastomeric shield material; and a gold coated fiberglass thermal curtain over the base of the Capsule. This subsystem configuration was selected based on a parametric environmental evaluation, Figure 3.2.1.3-7, an assessment of various approaches to the heat protection system, Figure 3.2.1.3-8, and a material trade study based on experience, data from selected testing, and consideration of all requirements and environments from raw material to the end of flight at Mars, Figures 3.2.1.3-9 and 3.2.1.3-10. These trade studies are developed in Part B, Section 5.3.2 of this volume. In selecting the heat shield the entry environment was a major constraint, however all environments preceeding entry had to be considered. These constraints are ennumerated below:

- Aerothermodynamic entry environment characterized by entry velocities from 13K to 15K fps; entry flight path angles from vacuum graze condition to -20° from the local horizon; and entry altitude from 800K feet to a terminal altitude of 10K feet; Mars' atmospheric definition via the ten VM atmospheric models varying in scale height, surface pressure, and gaseous composition; Capsule mass and geometric considerations; and

AERODYNAMIC HEATING ENVIRONMENT

- Design Environment – Determined by parametric study using calibrated planetary aerodynamic heating computer program for non-air gas composition. Range of conditions considered:

  $13k < V_e < 15k$ fps

  Vacuum Graze $\leq \gamma_e \leq -20^\circ$

  $0.15 \leq M/C_D A \leq 0.45$ slugs/ft^2

  Mar's Atmospheric Models VM–1 to VM–10

  Design Trajectory:

  Maximum Total Heating – Vacuum graze entry into VM–3 atmosphere.

  Maximum Heating Rate – Steep entry into VM–8 atmosphere.

- Additional Effects

  Equilibrium Radiation – Negligible.

  Non-equilibrium Radiation – Significant increase in end of skirt heating.

  Boundary Layer Transition – Laminar flow on current design – surface steps or $M/C_D A$ increase could induce transition, thus higher heating rates.

  Angle-of-Attack – Increases local heating and requires about 10% heat shield weight increase.

  Steps in Heat Shield Due to Manufacturing Tolerances –

  Forward Facing – Increases heating – design to eliminate.

  Aft Facing – Induce boundary layer, transition for 1973 mission late in entry – negligible effect on shield requirements.

  Surface Waviness – Shield surface follows substrate surface – Present long period waves have negligible effect on heating.

  Low Density, Non-continuous Flow, Effects – Negligible.

- Base Heating – Low Density Rates – Minimum weight thermal curtain sufficient to protect capsule from this environment.

Figure 3.2.1.3–7

SELECTED THERMAL PROTECTION APPROACH

SYSTEM	RELATIVE WEIGHT	REMARKS
Low Density Charring Ablator	1.0	Maximum degress of flexibility to accept design/ environment changes or growth considerations
Heat Sink	1.09	Taylored to design conditions – little flexibility fabrication difficulties – expensive
Radiative	1.33 – 1.76	Very hot in more severe environments Coatings could be ETO and vacuum sensitive Expensive – Some minimum gauge problems
Low Temperature Sublimer	2.0	Insufficient energy for system to operate efficiently
High Density Charring Ablator	2.0	Insufficient energy for systme to operate efficiently – Possible fabrication deve lopment problem

Figure 3.2.1.3–8

LOW DENSITY CHARRING ABLATOR EVALUATION

- Materials

Silicone Elastomers		Epoxy	Rigid	Natural
Fiber Reinforced	Honeycomb Support			
* ESM 1004X	*MDC S-20T	Apollo	MPN	Insulcork
* ESM 1030	*ESM 1030	(H/C Support)		Balsawood
	*ESM 1004X			
	**N-603			

* Chemical foam
** Syntatic foam

Bonds: Rigid – HT-424
Flexible – RTV-560

- Test Program on Select Materials
  - Ablation/char Retention Arc Tests
  - Ground Environment Compatability
  - Mechanical/Physical/Thermal Characteristics
  - Thermo Structural Compatability
  - RF Transmissivity
  - Non-Distructive Test Techniques
  - Titanium Surface Treatment/Bonding Tests

- Material Selection

Materials ranked, based on data from test program and past team flight/fabrication/design experience on similar material systems, considering the following criteria:

Criteria	Relative Criteria Weighting
Ground Environment Susceptability	3
Space Environment Susceptability	6
Thermal Efficiency	21
Thermo Structural Compatability	9
Fabricability	6
Reliability	18
Adaptability	6
Interaction with Other Subsystems	5
Cost	10
Development Risk & Lead Time	16

Final ranking showed fiber reinforced silicone elastomers best choice with honeycomb supported silicone elastomers as back-up. GE ESM 1004X selected as preferred material and MDCS-20T as back-up. These two materials sufficiently different that unanticipated problems with preferred material will not invalidate the back-up selection.

Figure 3.2.1.3–9

SUMMARY OF COMPOSITE STRUCTURES FOR THE NOSE CAP

√ Recommended Approach

COMPOSITE CONFIGURATION		MATERIALS	COMMENTS
(Brunswick)	Heatshield	Aluminum phosphate bonded fused quartz frabic. (For both heat-shield and structure)	Material properties have not been thoroughly investigated. Fabrication must also be evaluated. Will be considered further in Phase C.
	Structure		
(Whittaker)	Heatshield	Flame-sprayed alumina and alumina foam.	Composite is too heavy. Reliability and temperature limit of the brittle external skin has not been established.
	Structure	Polybenzimidazole (PBI) – fiberglass laminate.	
(McDonnell) √	Heatshield	Hardened Fiberfrax	Recommended approach. Lightweight, uses state of the art fabrication techniques and permits the greatest versatility of fabrication.
	Structure	Phenolic–fiberglass honeycomb sandwich structure.	

Figure 3.2.1.3–10

Capsule attitude control capability during entry.

- Ground and pre-entry flight environments including chemical decontamination and dry heat sterilization cycles, low temperature soak during transit, hard vacuum exposure during transit, and static/dynamic loads encountered during ascent, midcourse maneuvers, injection into the Martian orbit, etc.
- Compatibility with the Aeroshell structural subsystem by limiting the backface design temperature to 640°F, assuring that pre-bonding surface treatments do not degrade the structural properties; and being compatible with the non-flat surface encountered in a light weight design. In addition the bond will be compatible with the maximum structural design temperature of 800°F.
- Overall system requirements of local RF transparency for the radar altimeter, minimum outgassing which could degrade ESP experiments, and also space environments including radiation, meteoroids, etc. The influence of the latter environments is minimized since the heat shield is protected by the canister in transit and is only exposed during the orbital descent period of less than 6 hours.

The selected approach to the VOYAGER Capsule heat protection subsystem, including the non-ablative nose cap, is utilization of the low density charring ablator class of materials bonded to the Aeroshell structure. The preferred system is the General Electric ESM 1004X bonded with RTV 560 silicone adhesive. No thermal control coatings are required on the external surfaces. ESM 1004X is a self-supporting, chemically foamed, iron oxide filled methyl-phenyl silicone reinforced with aluminum silicate fibers and post-cured at 300°F. It has a density of 16.6 lb/ft^3 and our studies have shown that further density reduction is feasible. The ablative system offers the greatest flexibility to accommodate the range of entry variables and adaptability to growth considerations.

The design of the heat shield, Figure 3.2.1.3-11, allows for easy fabrication, handling, and final assembly. The panel sizes and patterns were selected to provide a clean interface with the ceramic nose cap and are to be an acceptable area from a manufacturing, handling, and bonding standpoint. Additional advantages of the segmented shield are that it allows for 100 percent inspection of the shield prior to bonding operations, does not require the Aeroshell for all manufacturing operations, and allows for finish machining prior to being bonded to the Aeroshell structure. Design considerations have taken into account steps between

AEROSHELL HEAT SHIELD – ESM 1004X

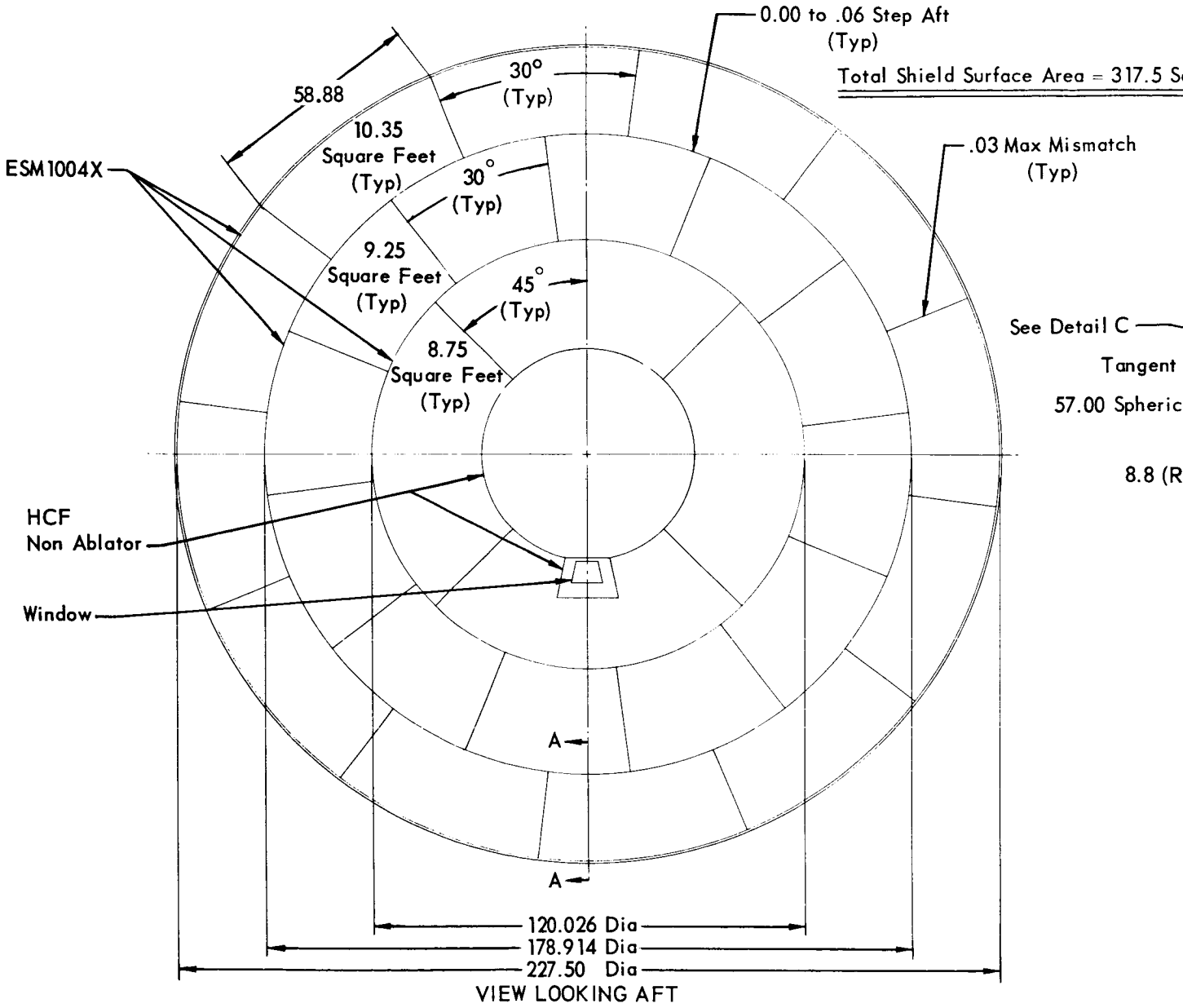

Figure 3.2.1.3–11

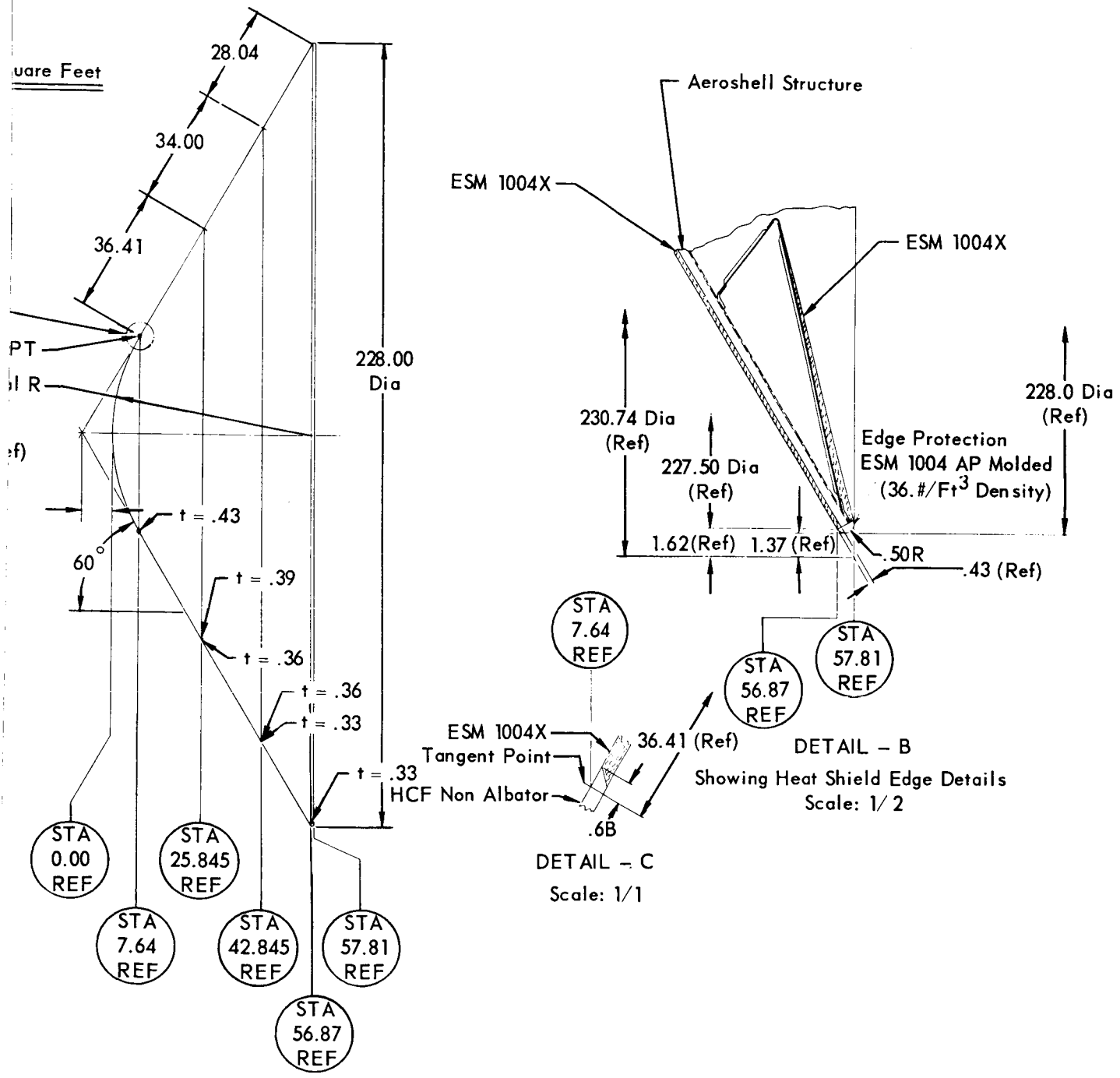
uare Feet
28.04
34.00
36.41
PT
l R
f)
228.00
Dia
t = .43
60°
t = .39
t = .36
t = .36
t = .33
t = .33
STA
0.00
REF
STA
7.64
REF
STA
25.845
REF
STA
42.845
REF
STA
57.81
REF
STA
56.87
REF
Aeroshell Structure
ESM 1004X
ESM 1004X
230.74 Dia
(Ref)
227.50 Dia
(Ref)
228.0 Dia
(Ref)
Edge Protection
ESM 1004 AP Molded
(36.#/Ft3 Density)
1.62(Ref)
1.37 (Ref)
.50R
.43 (Ref)
STA
7.64
REF
STA
56.87
REF
STA
57.81
REF
ESM 1004X
Tangent Point
HCF Non Albator
36.41 (Ref)
.6B
DETAIL – C
Scale: 1/1
DETAIL – B
Showing Heat Shield Edge Details
Scale: 1/2

3-51-2

the segmented panels, both longitudinally and circumferentially. These steps were established to be compatible with thermodynamic constraints, e.g., no forward facing steps, and their height is determined by both bond and heat shield panel thickness tolerances. In the event it is desired to eliminate or minimize these in the future this can easily be accomplished by local blending after final assembly.

Pre-cut flat ESM sheets will be used on the conic section of the heat shield. Where double curvature exsists - such as in the edge protection at the base of the vehicle - a one piece molded shape will be utilized. Segments will be butted and bonded together; the bonds are not detrimental thermally or structurally since their number, location, and manufacturing techniques are controlled and the adhesive is the same basic material as the heat shield itself. A vacuum bagging technique is used to hold the ESM material in place during the bond cure process and the final bond will be inspected by radiographic, or microwave techniques.

Inclusion of the atmosphere sampling port for the entry mass spectrometer and the optical window for the TV experiment in the fore body required assessment of this interaction with the ablator. The products of ablation would contaminate the atmospheric samples and coat the optical window, therefore, a non-ablating nose cap has been provided to eliminate this interaction.

The selected non-ablating nose cap is fabricated from Fiberfrax, a low density hardened fibrous composite consisting of aluminosilicate fibers and a ceramic binder made by the Carborundum Company, with a beryllium heat sink at the apex of the nose cap, Figure 3.2.1.3-12. A beryllium heat sink is used for the stagnation point instrument head because it permits machining the thin wall instrument inlet tubes integrally into the heat shield, thus eliminating the problem and questionable reliability of supporting fragile tubes made from high temperature ceramics or coated refractory metals. The Fiberfrax portion of the nose cap has been sized to maintain the backface temperature to a design temperature of 640°F in the anticipated range of entry environments. In addition its overall dimensions are compatible with the radar altimeter antenna view area maintaining the stagnation point on the non-ablative material, and keeping the TV window free from ablation products.

The Fiberfrax nose cap is fabricated by a vacuum casting technique in which the aluminosilicate fibers are mixed into a water based slurry with the inorganic binder and applied over a rigid nose cap shaped mold designed to provide two smooth surfaces. Vacuum is applied to extract excess water and binder, then the piece is

NOSE-CAP ASSEMBLY

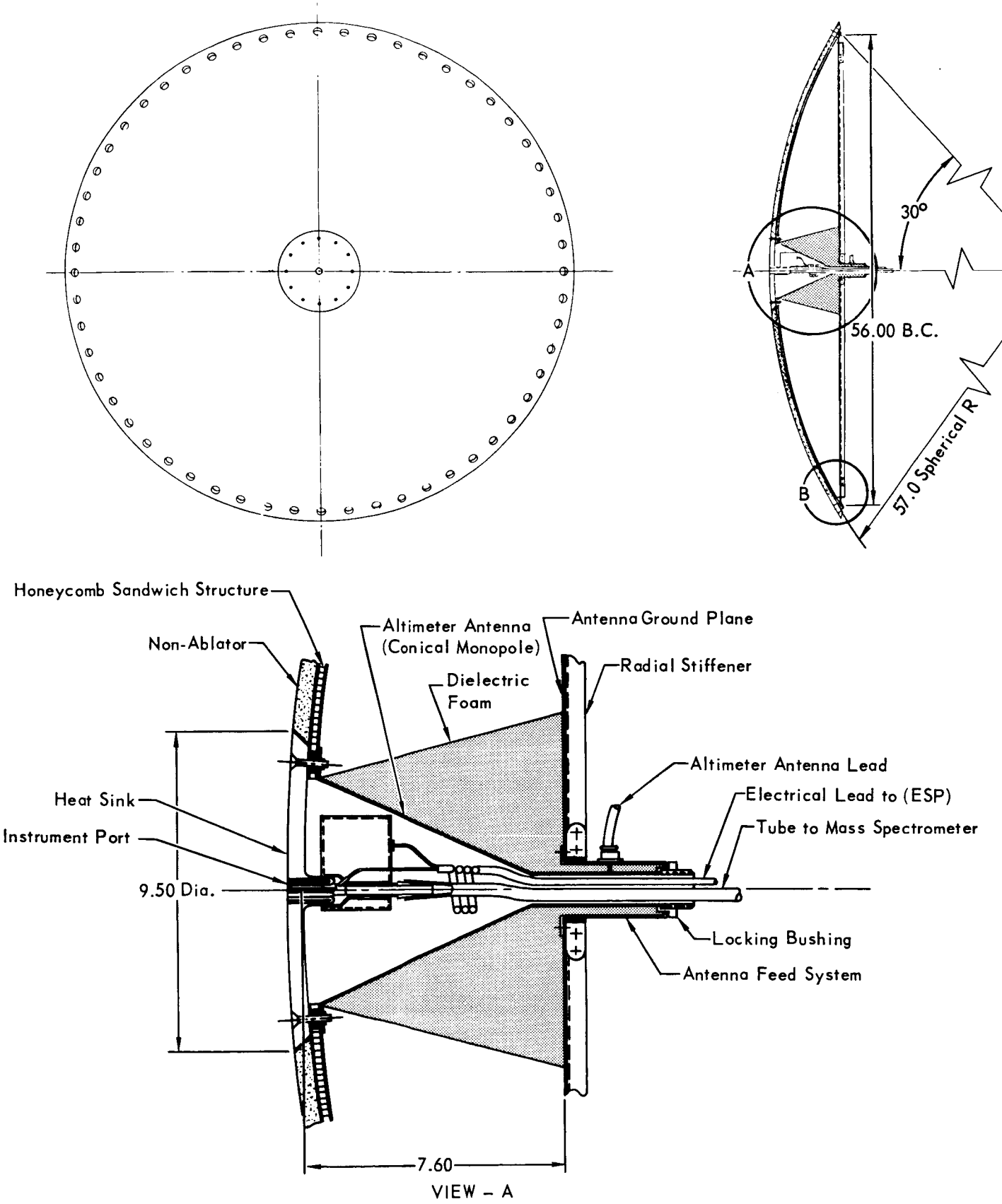

Figure 3.2.1.3-12

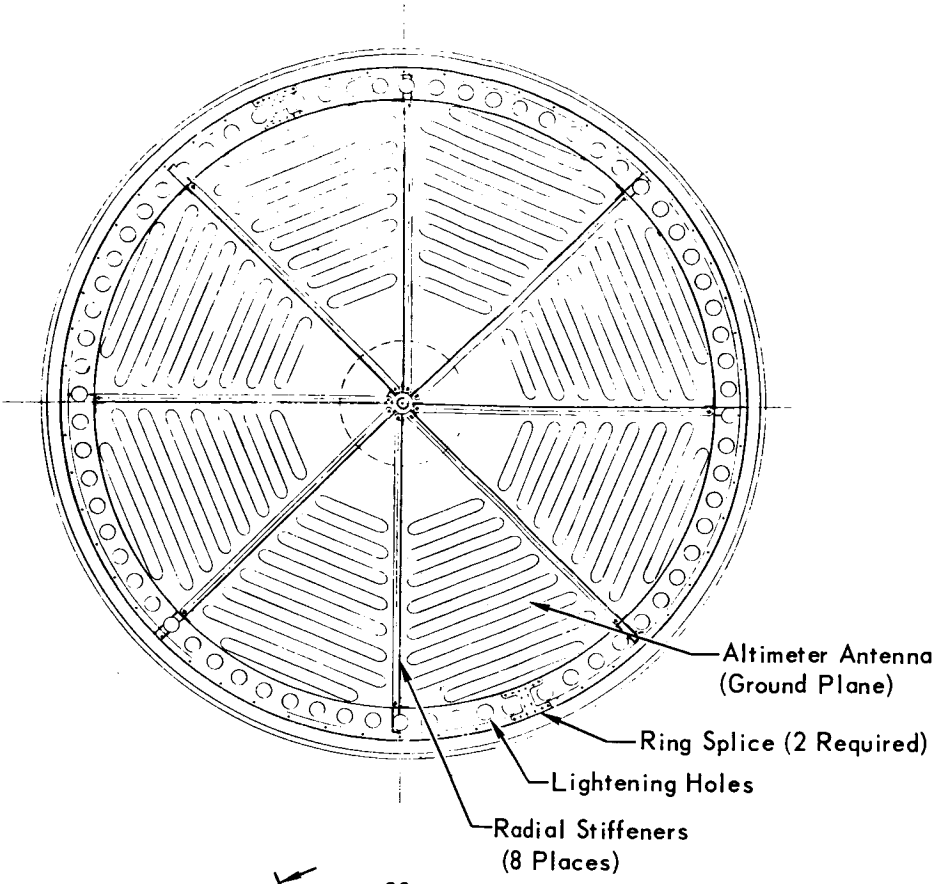
Altimeter Antenna
(Ground Plane)
Ring Splice (2 Required)
Lightening Holes
Radial Stiffeners
(8 Places)

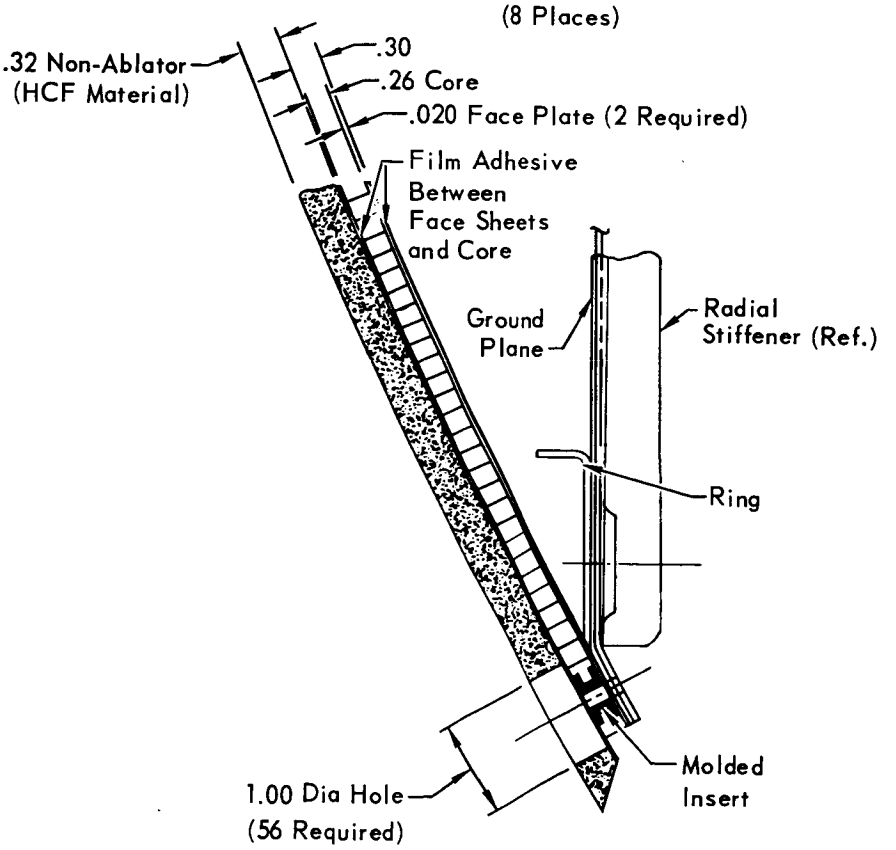
.32 Non-Ablator
(HCF Material)
.30
.26 Core
.020 Face Plate (2 Required)
Film Adhesive
Between
Face Sheets
and Core
Ground
Plane
Radial
Stiffener (Ref.)
Ring
Molded
Insert
1.00 Dia Hole
(56 Required)

VIEW – B

3-53-2

dried at 600°F. This yields a density of 25 lb/ft^3. Local areas which must be abrasion resistant are rewetted with a controlled binder system that will remain localized, and redryed. This results in a hardened area with 30 lb/ft^3 density.

The remaining portion of the heat protection system is the thermal curtain across the Capsule base. This curtain will be fabricated from rubber impregnated fiberglass cloth with a gold coating on the inside surface. This curtain serves three basic purposes; (a) protect the interior of the Capsule during retro-rocket firing, (b) minimize heat loss through the base during the orbital descent period and (c) protect the Aeroshell structure and other internal subsystems from base heating during entry. Since there are no structural functions for an aft cover, the curtain approach was selected since it is the lightest means of providing the required thermal protection. The design of the curtain is such that the outer portion remains attached to the aeroshell and the inner portion is separated from the capsule lander at parachute separation, Figure 3.2.1.3-13.

Note 1 - For additional justification of selection of preferred design concept - see Volume II, Part B, Section 5.3.2.

Note 2 - For additional information on detailed system function description - see Volume II, Part C, Section 1.3.2.

CAPSULE BUS INTERIOR ARRANGEMENT

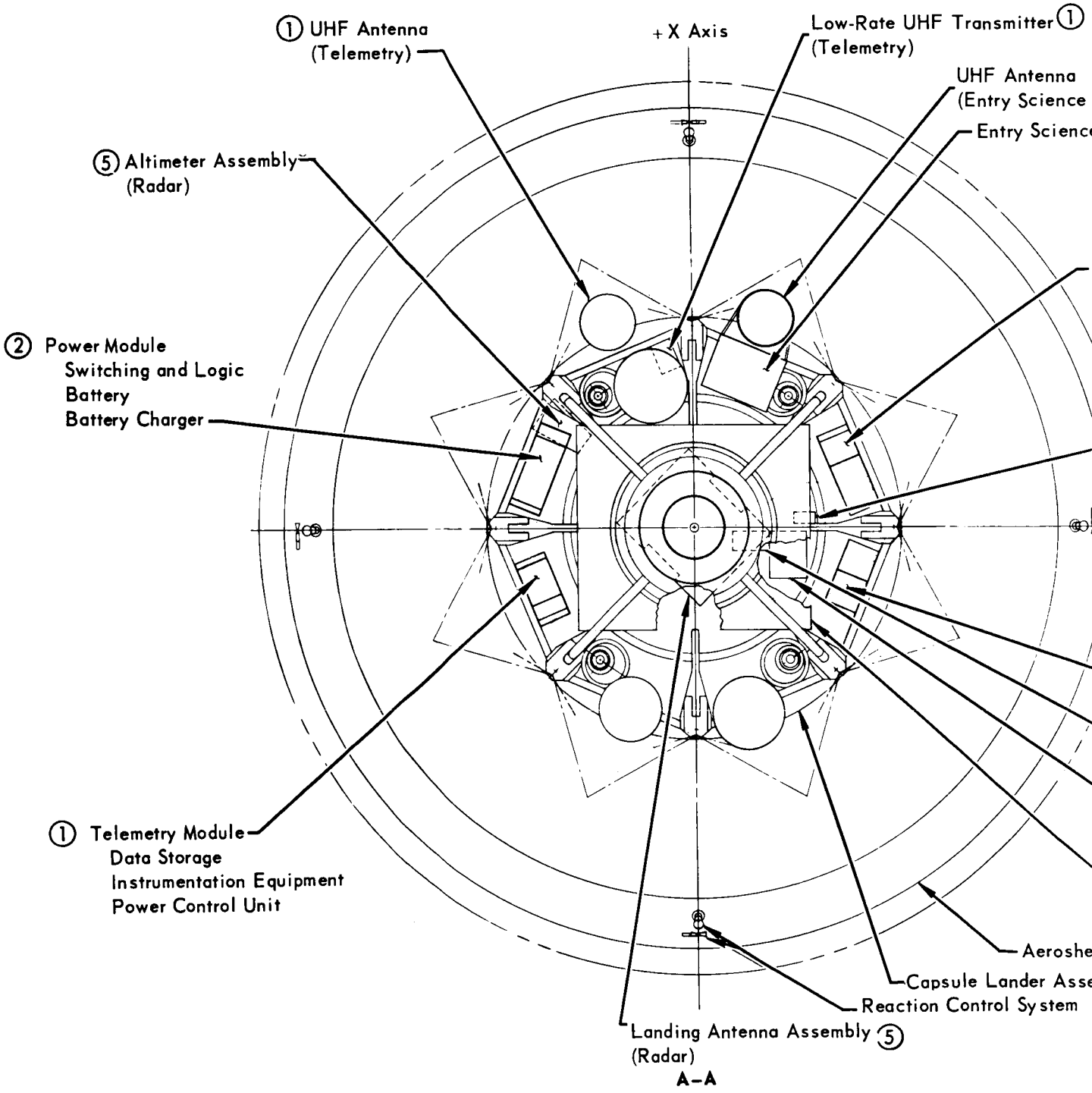

Figure 3.2.1.3–13

Package)
Package

③ ⑤
Radar – Sequencer and Timer Module
Radar Electronic Assembly
Sequencer and Timer
Power Control Unit

Power Control Panel ⑤
(Radar)

+ Y

Pyrotechnic Control Module ⑥
Electro Explosive Device
Control Assembly
Auto Activated Battery

Inertial Measurement Unit ④
and Support Electronics
(Guidance and Control)
Computer and Power Sypply ④
(Guidance and Control)

Surface Laboratory

l Assembly
nbly

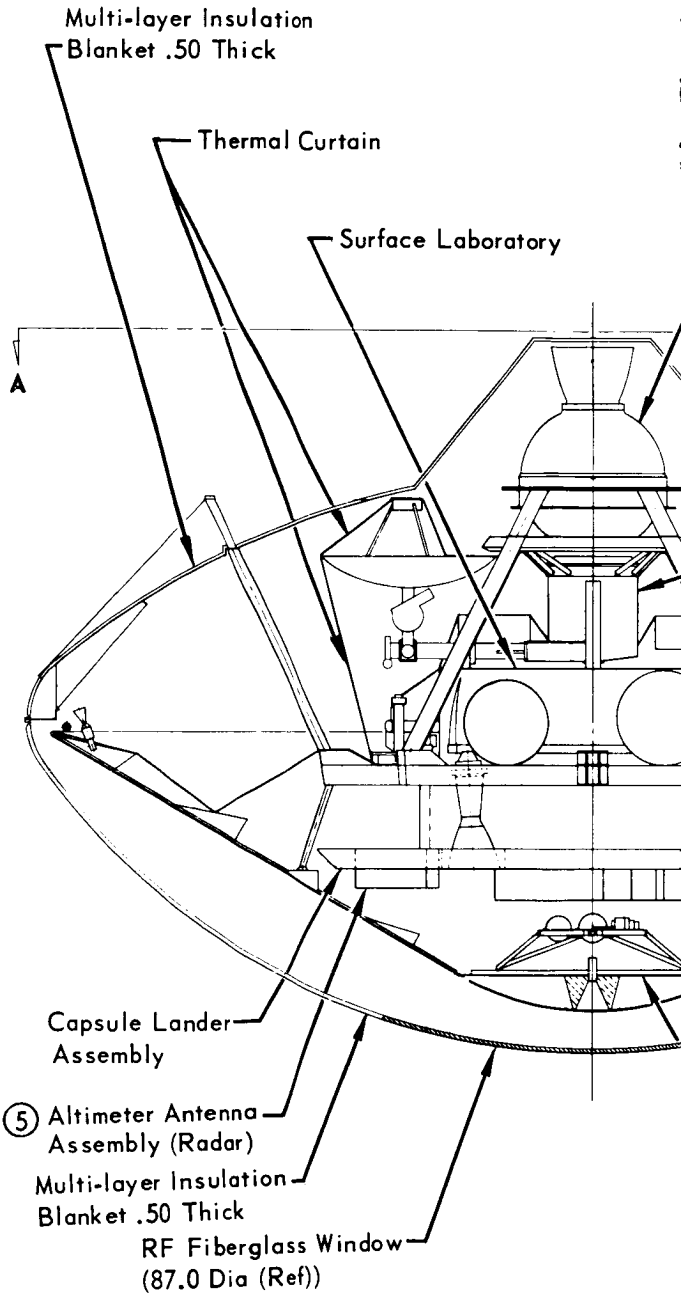

3-55-2

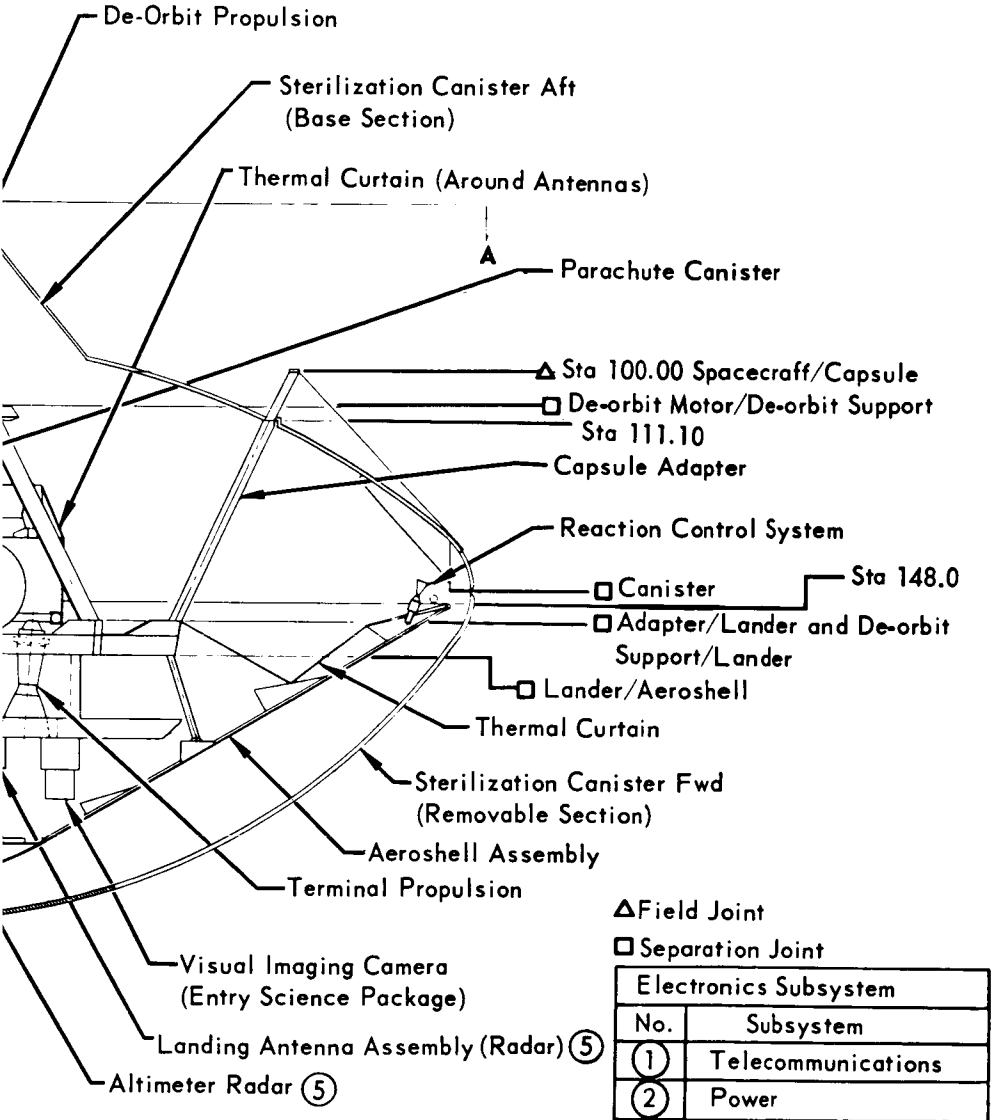

△ Field Joint

□ Separation Joint

Electronics Subsystem	
No.	Subsystem
1	Telecommunications
2	Power
3	Sequencing and Timing
4	Guidance and Control
5	Radar
6	Pyrotechnic Control

3-5-5-3

3.2.1.4 Lander - The Lander is that portion of the Capsule Bus System that is soft landed on the surface of Mars. The Uni-Disc configuration is a large flat disc having a low landing silhouette which is conducive to a low C. G. and landing stability. This shape evolved primarily from the requirement for stable landing on extreme surface slopes and contours, and the desire to maintain standardization of concept for later missions.

The Lander consists of a structural base platform to which are mounted the Surface Laboratory, the landed portion of the Entry Science Package, the terminal descent propulsion subsystem, and other Capsule Bus support subsystems required to control descent and landing. In addition, the impact attenuation subsystem is attached to the underside of the base platform. The Lander configuration is shown in Figure 3.2.1.4-1.

The following is a list of constraints, some customer imposed and some self imposed, to which the preferred configuration has been designed.

- Fit inside the 19 foot diameter Aeroshell.
- Fit sufficiently forward in the Aeroshell to maintain an aerodynamically stable C.G. position for the entry vehicle.
- Provide good structural ties and load distributions between the Aeroshell, the Lander and the adapter structure.
- Shape of Lander compatible with clean separation from Aeroshell prior to landing.
- Provide a configuration that has great versatility and growth capabilities through 1979, if possible, including full roving capabilities.
- Standardize on as many subsystems as is practical.
- Stable platform after landing is of prime importance.
- Prevent blocking of the thermal control radiating surfaces of the surface laboratory.
- An unobstructed landing radar antenna location preferably bottom center.
- A descent propulsion engine installation with ample moment arms located so as not to impinge on other parts of the Lander.
- Locate all equipments to obtain the lowest overall C.G. of the Lander to improve stability on landing.
- Simple passive type design which is easily sterilized and can function after long time exposure to a hard vacuum.
- Use all present state-of-the-art materials and techniques to minimize development risk and cost.

LANDER GENERAL ARRANGEMENT

VIEW A

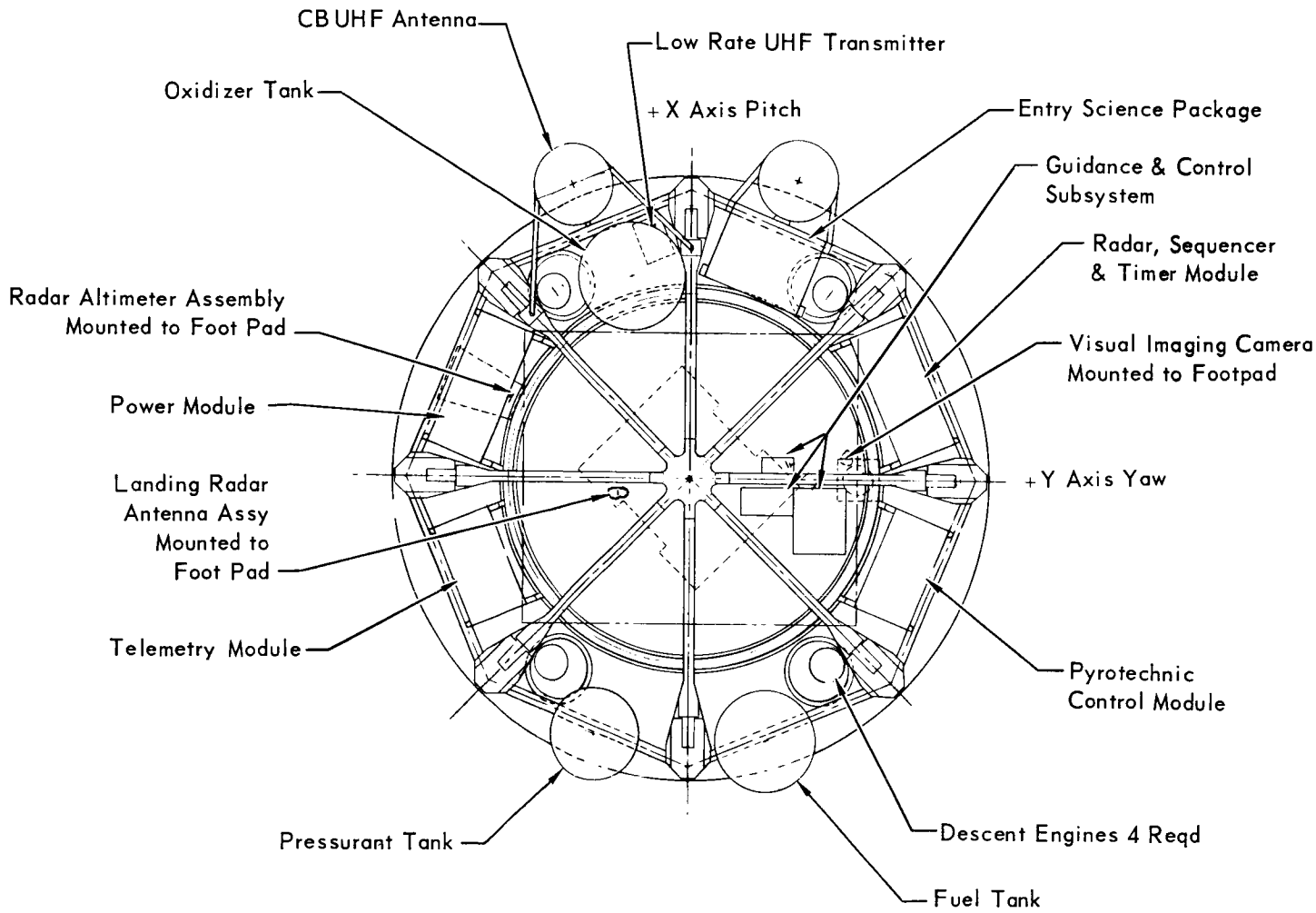

Figure 3.2.1.4-1

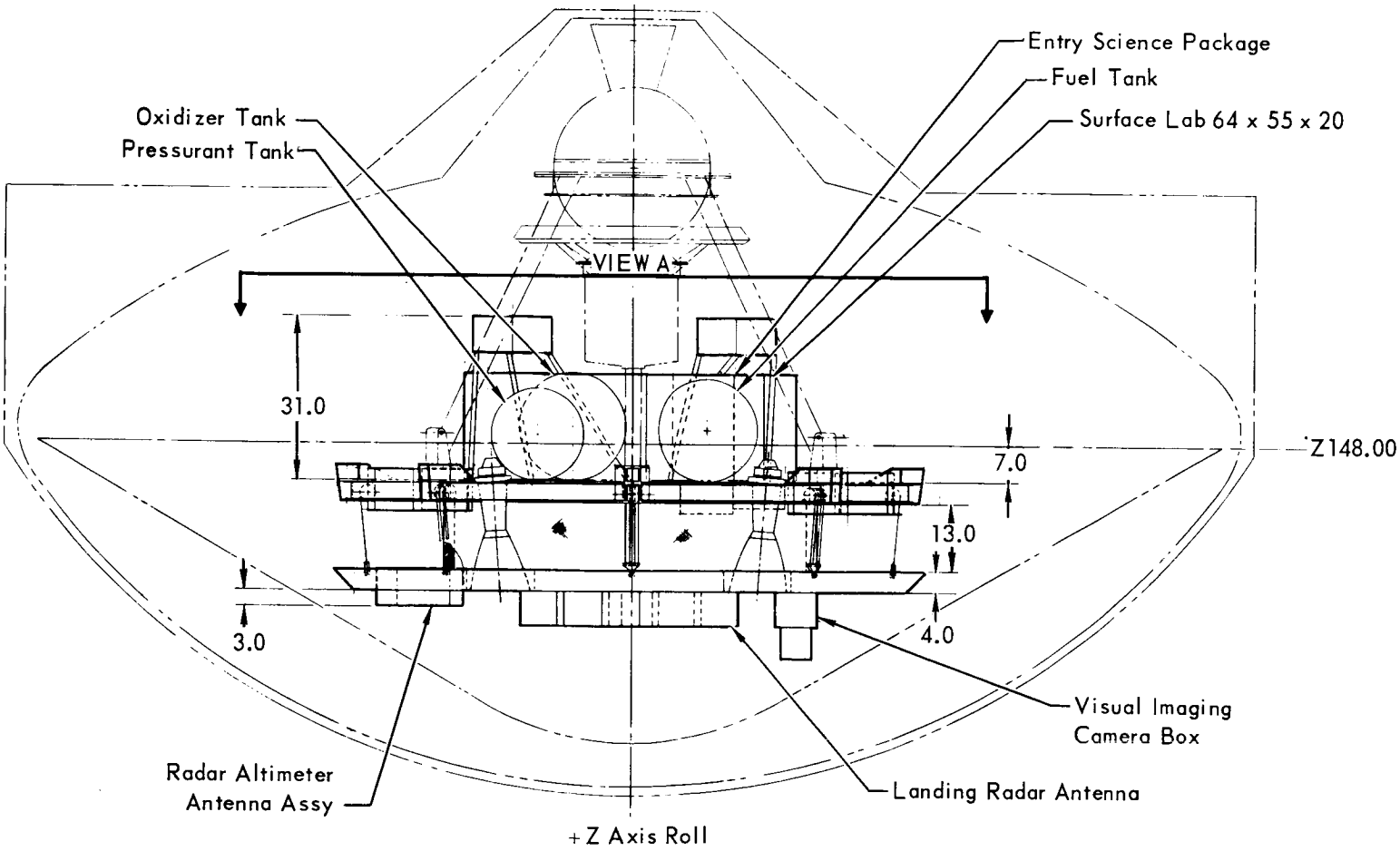

CAPSULE LANDER

LANDER GENERAL ARRANGEMENT (Continued)

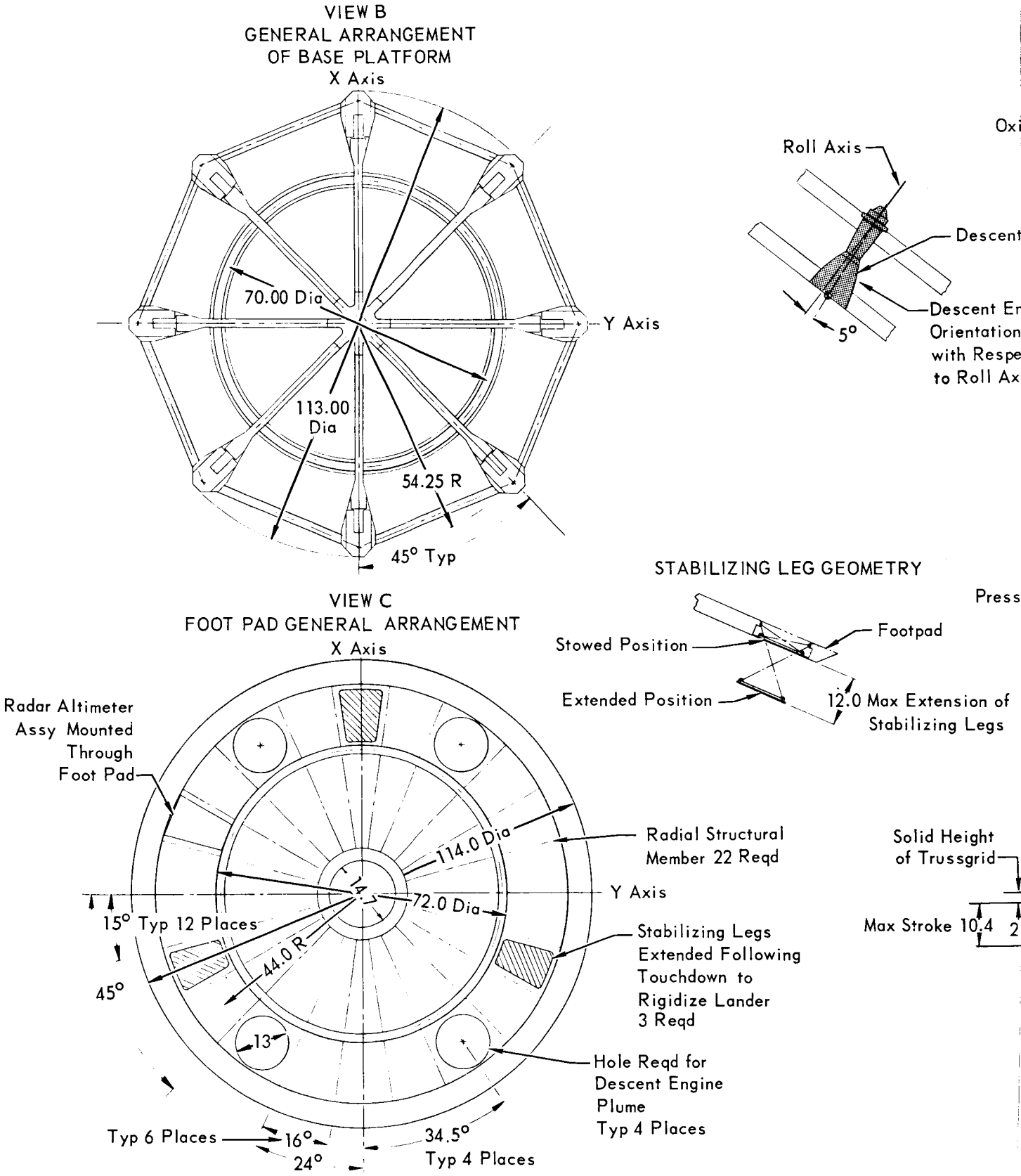

Figure 3.2.1.4–1 (Continued)

VIEW D

PROPULSION SUBSYSTEM GENERAL ARRANGEMENT

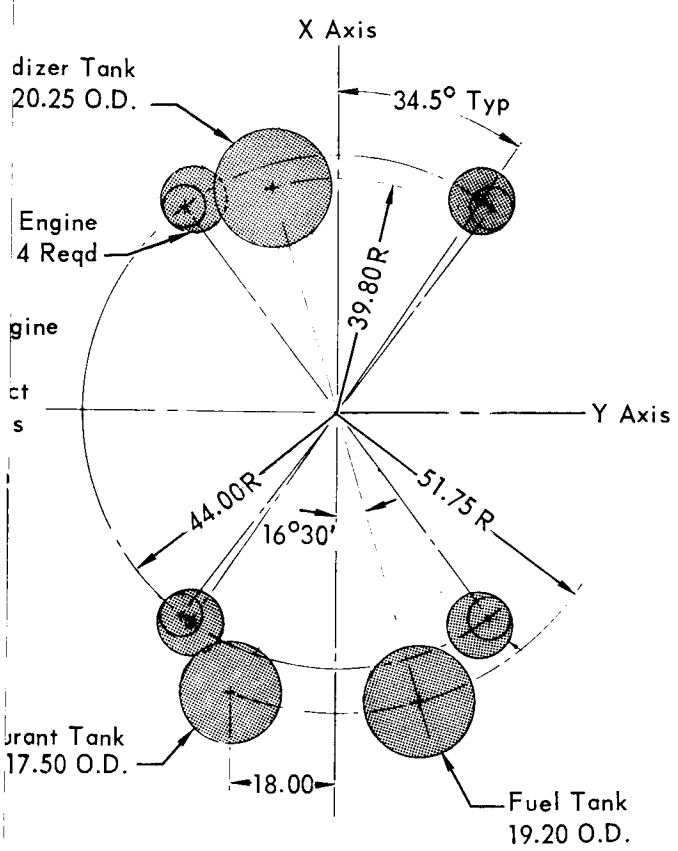

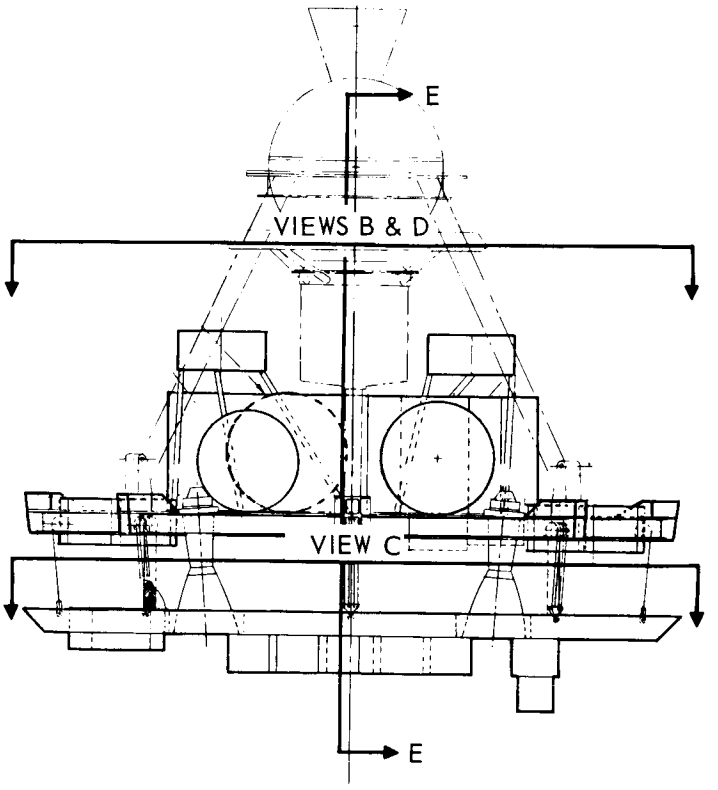

LANDER CAPSULE

VIEW E

LANDER IMPACT MECHANISM
GENERAL ARRANGEMENT

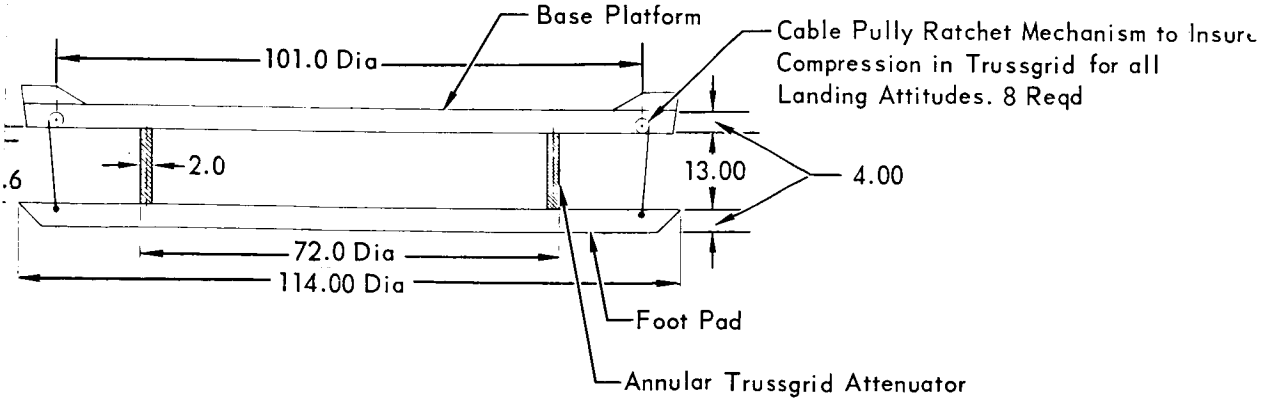

LANDER GENERAL ARRANGEMENT (Continued)

RADAR

VIEW F

TELEMETRY SUBSYSTEM GENERAL ARRANGEMENT

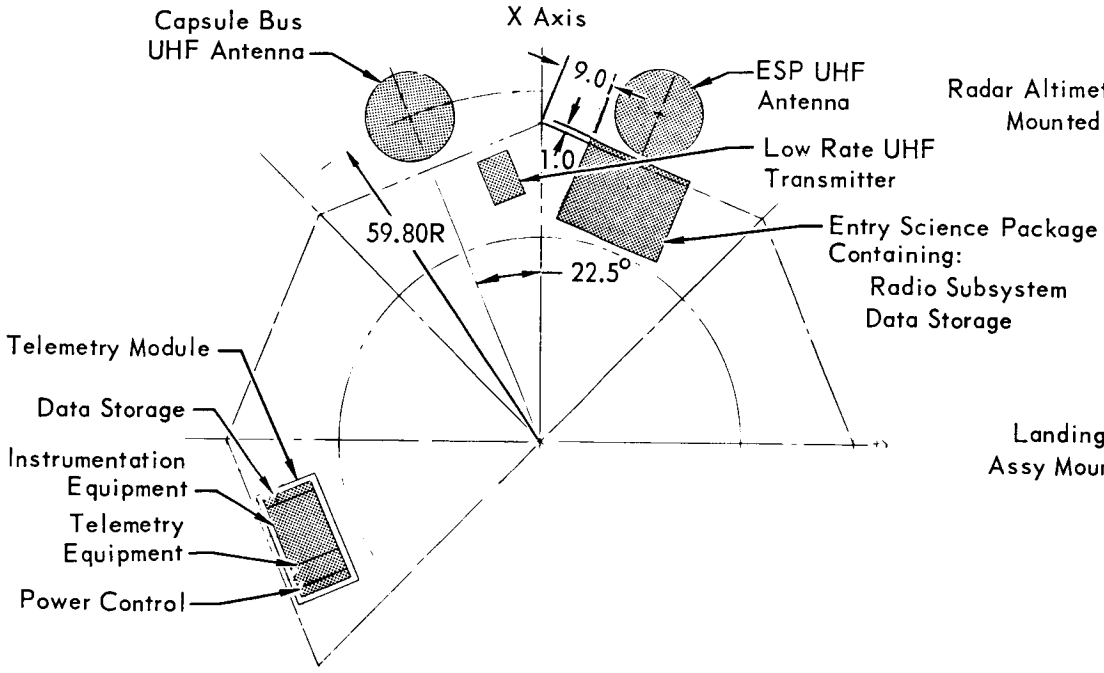

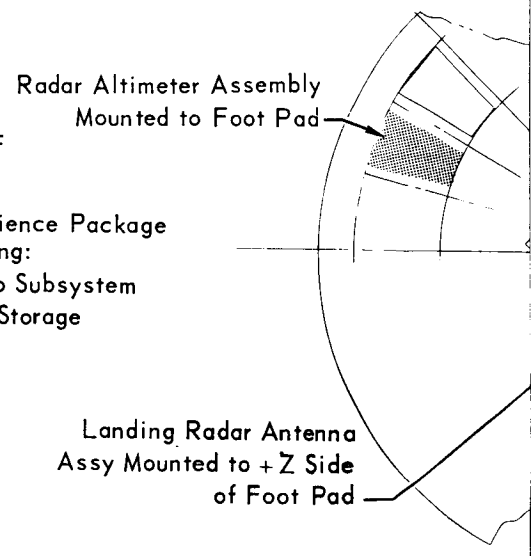

VIEW G

POWER & PYROTECHNIC CONTROL
GENERAL ARRANGEMENT

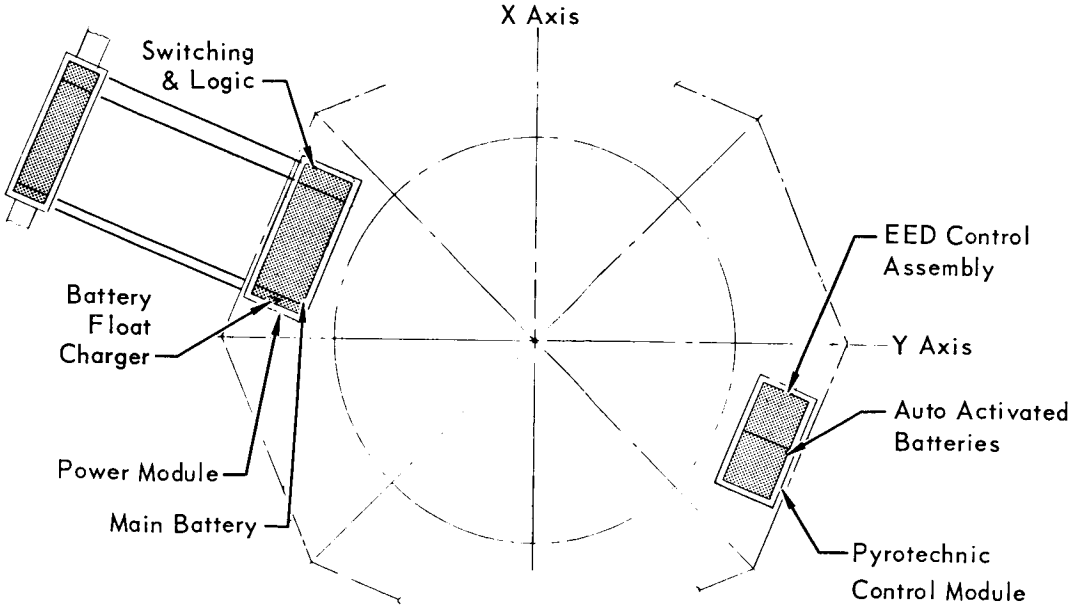

GUIDANCE
GEN

Guidance and Control
Power Control Panel

Inertial Measurement
Unit and Support
Electronics

Guidance and Control
Computer and Power Supply

Figure 3.2.1.4-1 (Continued)

VIEW H
GENERAL ARRANGEMENT

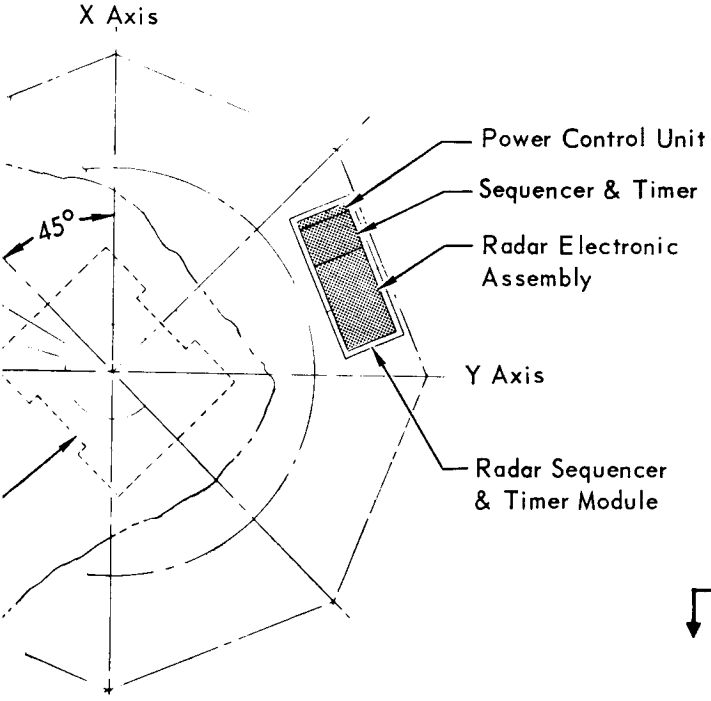

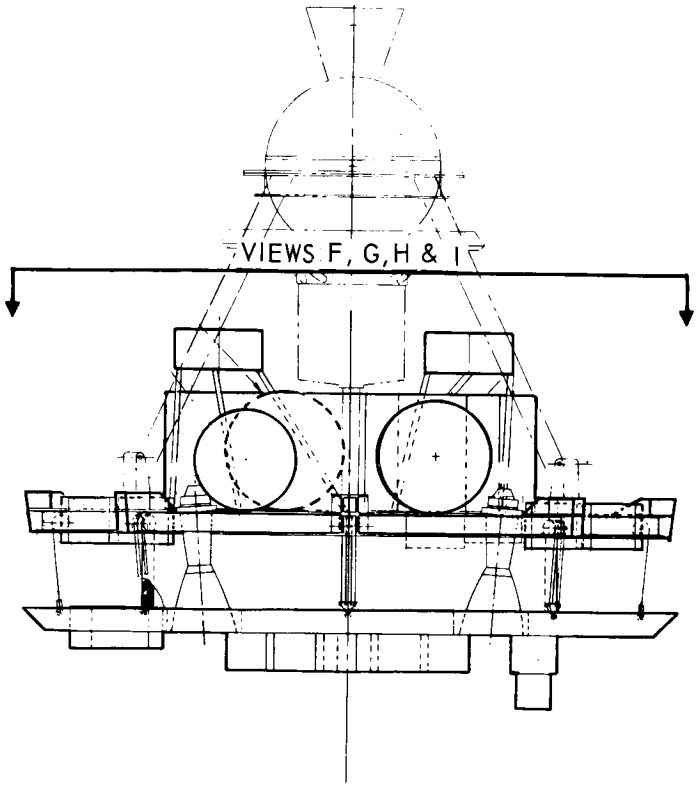

CAPSULE LANDER

VIEW I
AND CONTROL SUBSYSTEM
RAL ARRANGEMENT

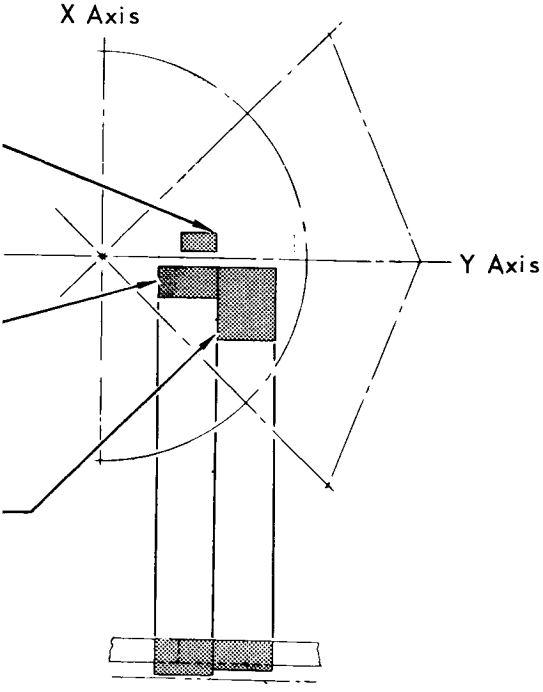

3-59-2

- Provide stability, strength and ample foot print to make successful landings on the following surfaces:

  Slopes to 34°

  Ridges with slopes ± 34° to horizontal

  Cones with slopes ± 34° to horizontal

  Surface bearing capacities of 6 psi to infinity

  Rocks of 5 in. diameter or smaller

  Vertical and horizontal velocities of 20 ft/sec and 5 ft/sec, or 16 ft/sec and 10 ft/sec respectively

  Maximum of 14 g's felt by Surface Laboratory during landing impact

Our configuration meets these constraints and will successfully accomplish the mission.

3.2.1.4.1 Physical Characteristics - The landing footpad is 114.0 inches in diameter. This pad is 4.0 inches thick with a turned-up outer lip to facilitate sliding over small obstacles. The footpad is made up of titanium radial beams, rings, and lower skin. Sufficient structural rigidity is required in this pad to uniformly distribute impact loads to the crushable attenuator when landing on one edge or on peaks and ridges. The terminal descent engine nozzles thrust downward through four 13.0 inch diameter holes in the footpad. These holes are between the radial beams of the pad at a radius of 44.0 inches.

The base platform is made up of eight titanium I-beams, 4 inches deep, with 2.5 inch caps, equally spaced in a radial spoke arrangement as shown in Figure 3.2.1.4-2. Maximum diameter is 113 inches.

The impact attenuator is installed between the landing footpad and the base platform. It is a crushabel aluminum honeycomb (Trussgrid by American Cyanamid Company or Cross-core by Hexcel Products), cylinder 13 inches high, 73 inches outside diameter and 2.1 inches wall thickness. This Trussgrid is bonded and mechanically keyed to both the footpad and the base platform through structural channel rings to insure the transfer of landing loads.

The Trussgrid used is:

- .003 thick foil
- 5052 - H339 aluminum
- 3/16 inch cell size
- 3.3 lb/ft^3 density
- 75 psi crush strength

STRUCTURE ASSEMBLY CAPSULE BUS LANDER

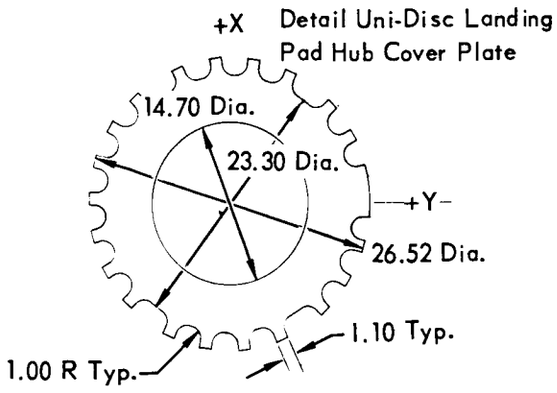

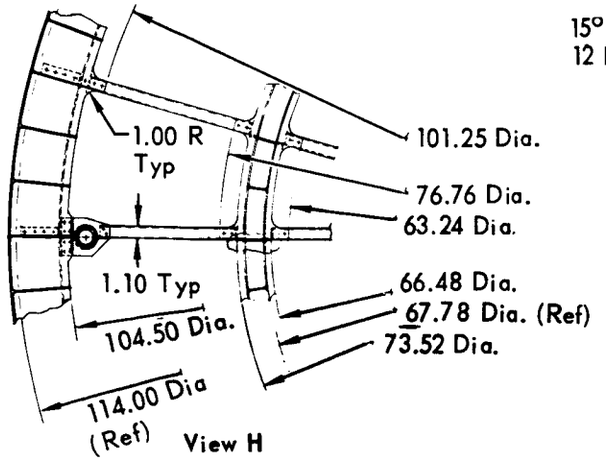

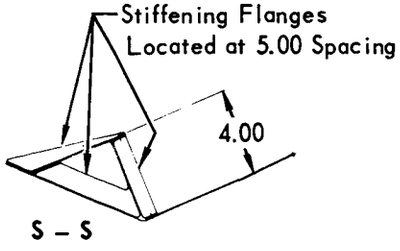

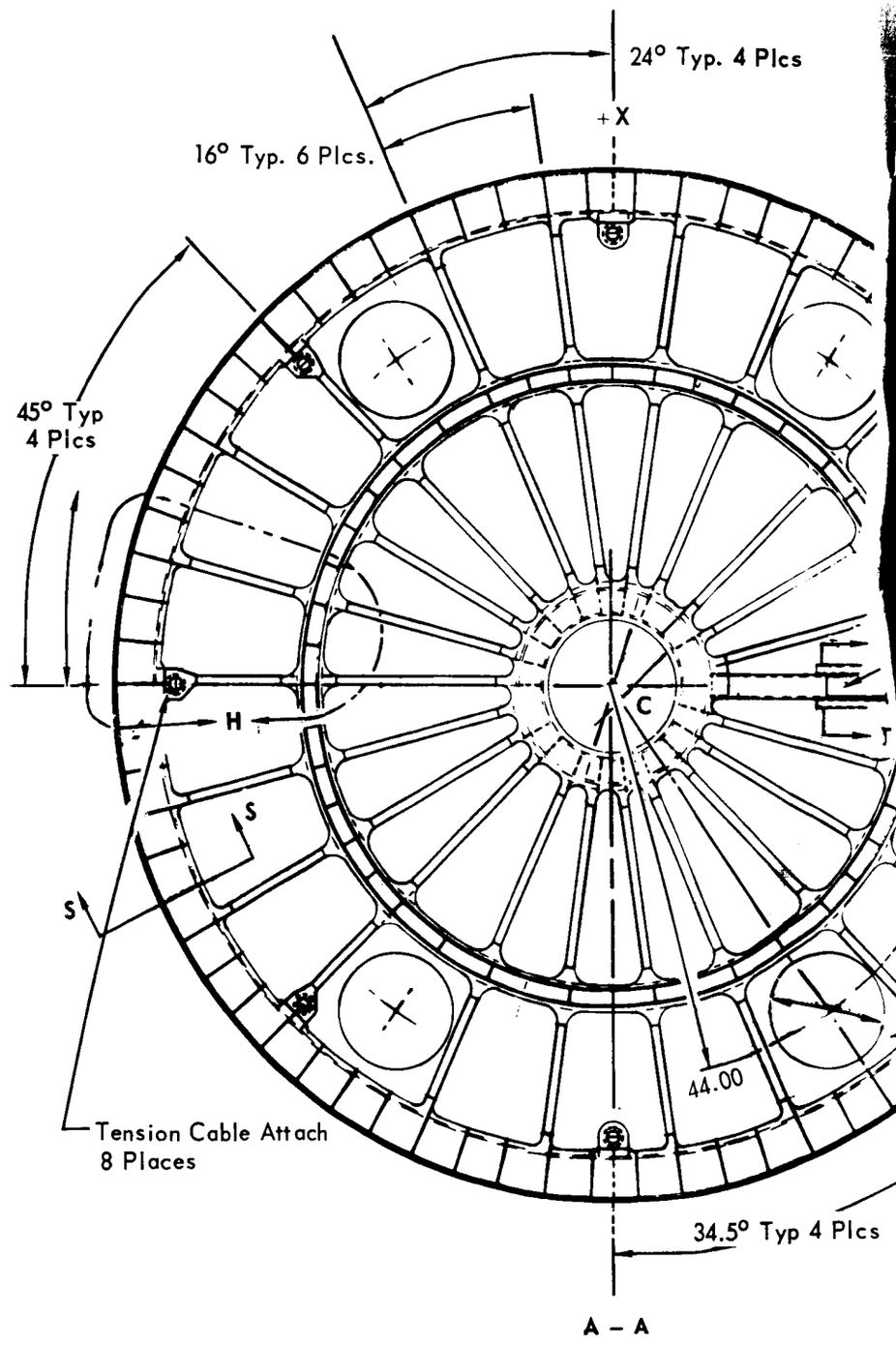

Figure 3.2.1.4–2

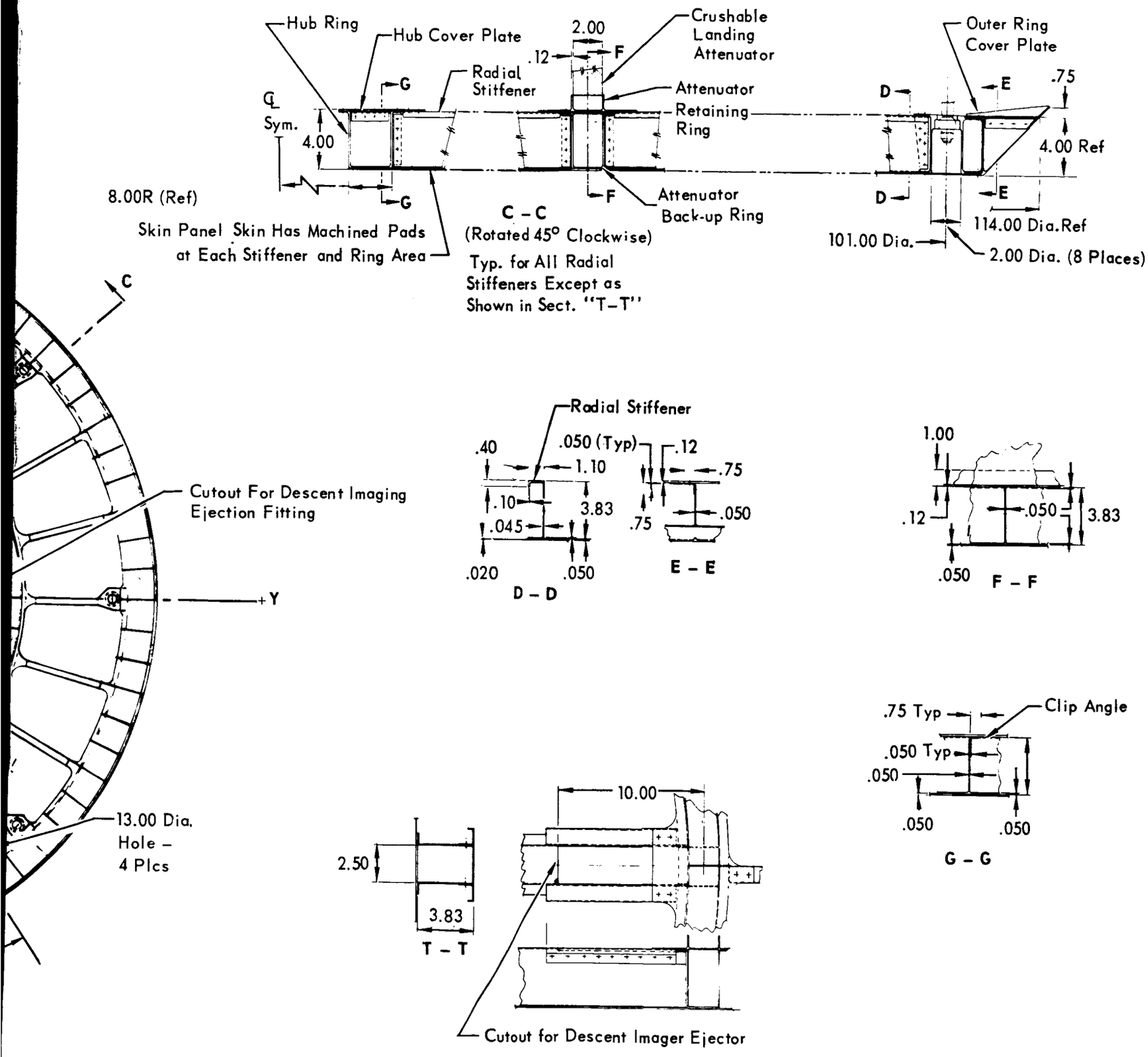
Hub Ring
Hub Cover Plate
2.00
.12
F
Crushable Landing Attenuator
Outer Ring Cover Plate
G
Radial Stiffener
Attenuator Retaining Ring
D
E
.75
℄ Sym.
4.00
4.00 Ref
8.00R (Ref)
G
F
Attenuator Back-up Ring
D
E
C – C
(Rotated 45° Clockwise)
114.00 Dia.Ref
101.00 Dia.
2.00 Dia. (8 Places)
Skin Panel Skin Has Machined Pads at Each Stiffener and Ring Area
Typ. for All Radial Stiffeners Except as Shown in Sect. "T–T"
C
Cutout For Descent Imaging Ejection Fitting
Y
13.00 Dia. Hole – 4 Plcs
Radial Stiffener
.40
.050 (Typ)
.12
1.10
.75
.10
3.83
.75
.050
.045
.020
.050
D – D
E – E
1.00
.12
.050
3.83
.050
F – F
.75 Typ
Clip Angle
.050 Typ
.050
.050
.050
G – G
10.00
2.50
3.83
T – T
Cutout for Descent Imager Ejector

361-2

STRUCTURE ASSEMBLY CAPSULE BUS LANDER (Continued)

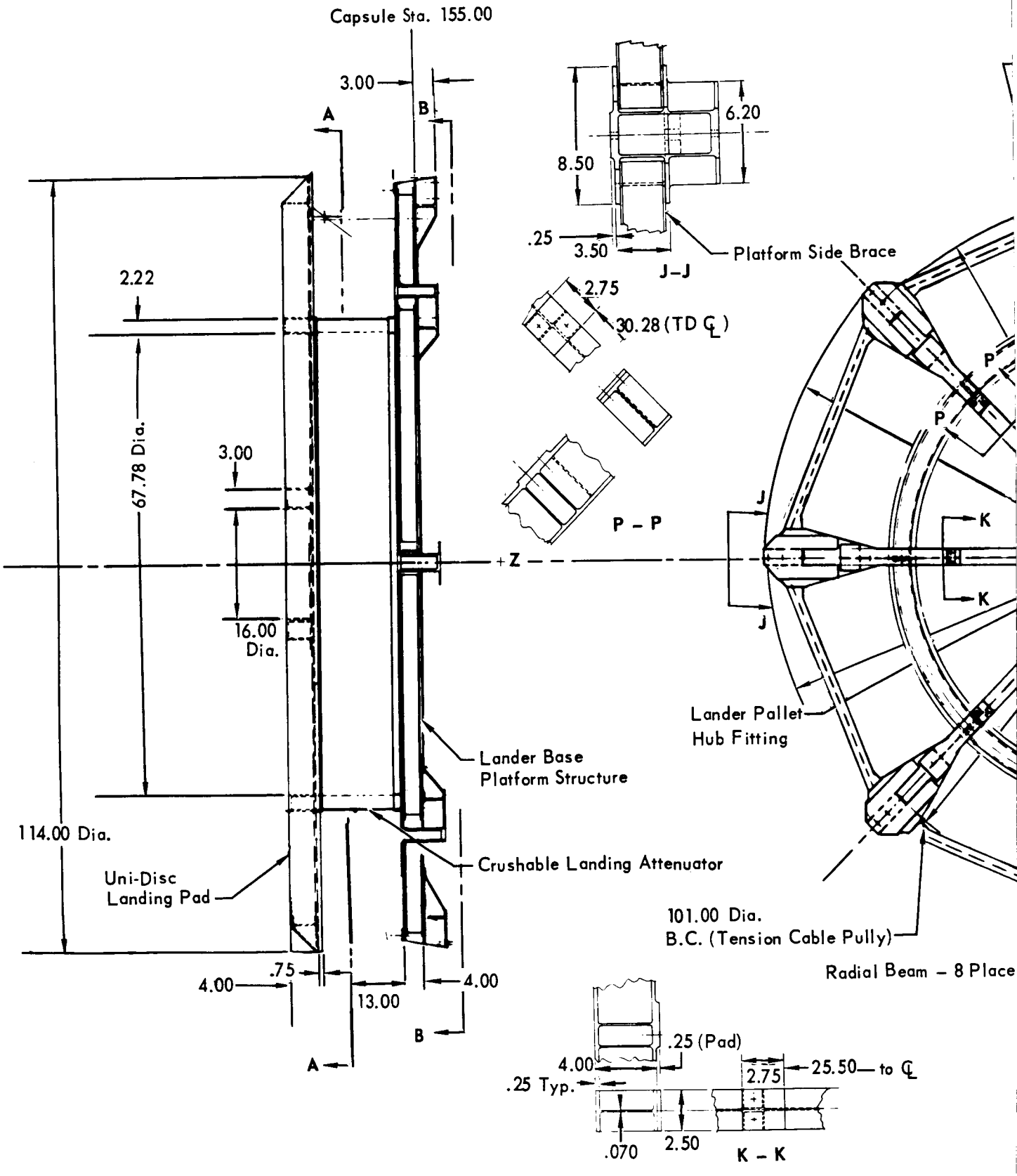

Figure 3.2.1.4–2 (Continued)

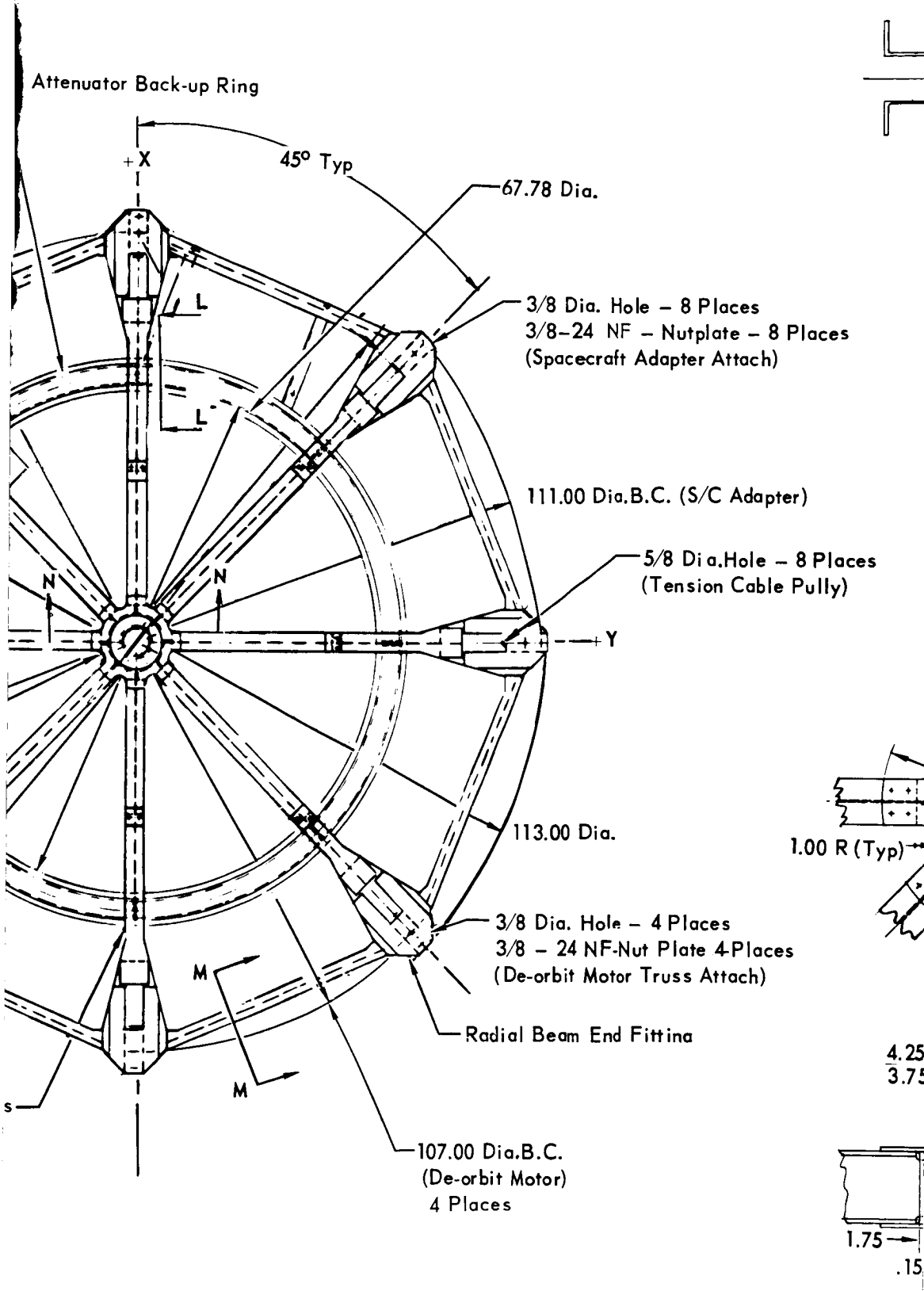
Attenuator Back-up Ring
+X
45° Typ
67.78 Dia.
3/8 Dia. Hole – 8 Places
3/8–24 NF – Nutplate – 8 Places
(Spacecraft Adapter Attach)
L
L
111.00 Dia.B.C. (S/C Adapter)
5/8 Dia.Hole – 8 Places
(Tension Cable Pully)
N
N
+Y
113.00 Dia.
1.00 R (Typ)
3/8 Dia. Hole – 4 Places
3/8 – 24 NF-Nut Plate 4-Places
(De-orbit Motor Truss Attach)
M
M
Radial Beam End Fittina
s
107.00 Dia.B.C.
(De-orbit Motor)
4 Places
4.25
3.75
1.75
.15

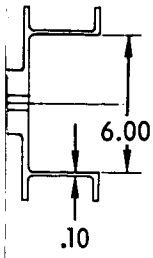
6.00
.10

R – R

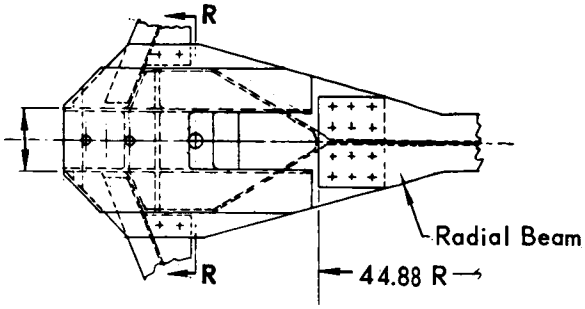
R
R
Radial Beam
44.88 R

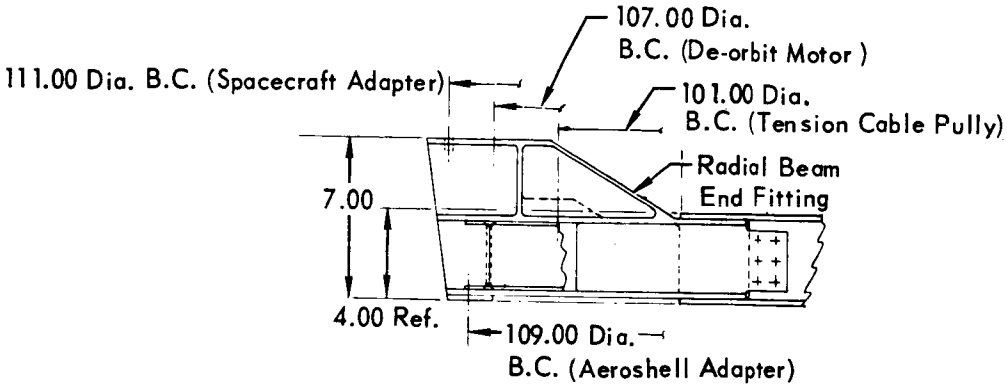
107.00 Dia.
B.C. (De-orbit Motor)
111.00 Dia. B.C. (Spacecraft Adapter)
101.00 Dia.
B.C. (Tension Cable Pully)
Radial Beam
End Fitting
7.00
4.00 Ref.
109.00 Dia.
B.C. (Aeroshell Adapter)

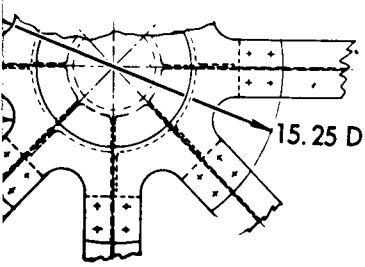
15.25 Dia.

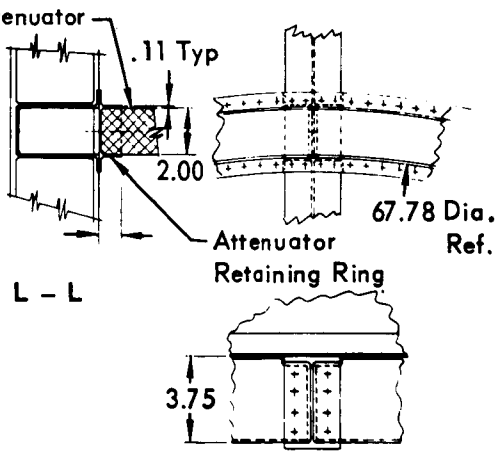
Crushable Landing Attenuator
.11 Typ
2.00
67.78 Dia.
Ref.
Attenuator
Retaining Ring
3.75

L – L

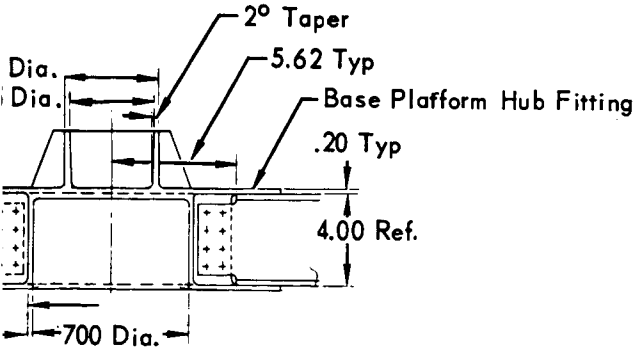
2° Taper
5.62 Typ
Dia.
Dia.
Base Plafform Hub Fitting
.20 Typ
4.00 Ref.
700 Dia.

N – N

Eight tension cable pulley assemblies are mounted to the ends of the radial I-beams of the base platform outboard of the Trussgrid attenuator. These cables tie the footpad to the base platform and serve as pivot points for the rigid footpad when it lands on the opposite edge. By forcing the footpad to rotate about this point the entire crushable attenuator is put into compression, thus eliminating tension loads across the bond between attenuator and adjoining structure. As the Trussgrid crushes, the spring loaded cable pulley assemblies take up the cable slack; one-way ratchets prevent cable lengthening. This insures a repeat attenuation capability should the Lander bounce and land on the opposite edge. In addition, this continuous snugged-up condition of the structure and the impact attenuator insures attenuation of the horizontal velocity loads through the Trussgrid. (These horizontal loads may also be dissipated, in part, through friction between the footpad and the Mars surface when sliding occurs).

The combined de-orbit motor and parachute support structure is attached to the top of the base platform straddling the Surface Laboratory, shown on Figure 3.2.1.4-3.

The support structure consists of four 3.5 inch diameter aluminum tubes 67 inches long that attach at the upper end to a 39 inch diameter machined ring. This ring supports the de-orbit motor, which is attached by three bolts to facilitate thrust alignment. The base attach points of the four primary support tubes have a spread of 76 inches. Each attach point consists of one explosive bolt and one shear pin.

Ten inches below the de-orbit motor attach ring is another structural ring. The parachute canister mounts on the Lander center line, and attaches to the lower ring by eight one inch diameter tubes. These tubes react the side and up loads of the parachute canister. The catapult loads are reacted by the base platform through bearing of the parachute catapult barrel.

There is an explosive bolt separation joint just above the lower ring at each of the four tubes. Separation force is supplied by energy stored in compression springs at each bolt. These bolts are activated to separate the de-orbit motor and the upper portion of the support structure. The remaining portion of the structure, which supports the parachute installation, is separated by activating explosive bolts at the base of each tube.

The parachute riser assembly is attached to the base of the four tubes above the mounting plane. The lower support structure, parachute canister and the thermal curtain are removed by differential drag of the parachute when the para-

PARACHUTE AND DE-ORBIT MOTOR INSTALLATION

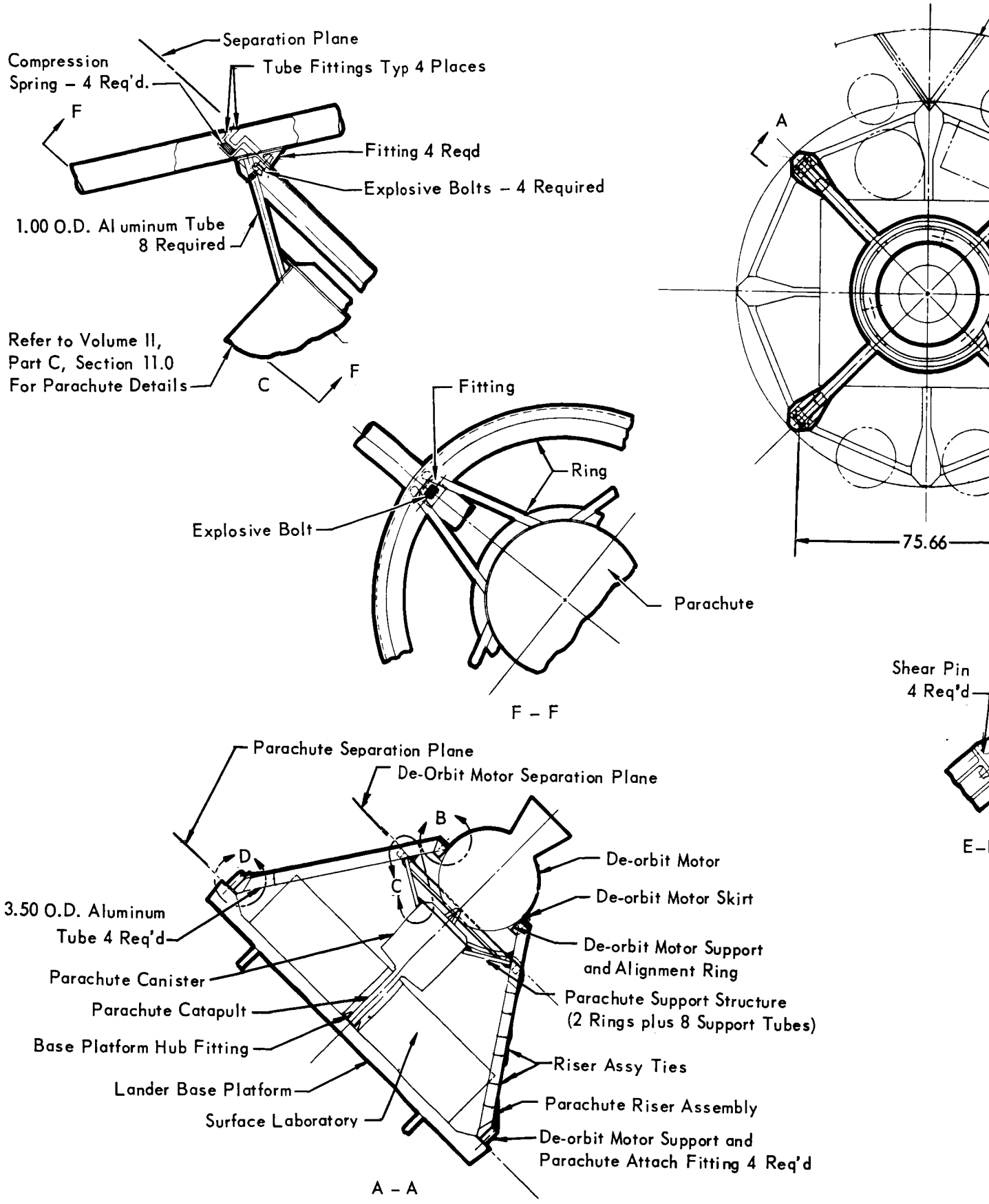

Figure 3.2.1.4–3

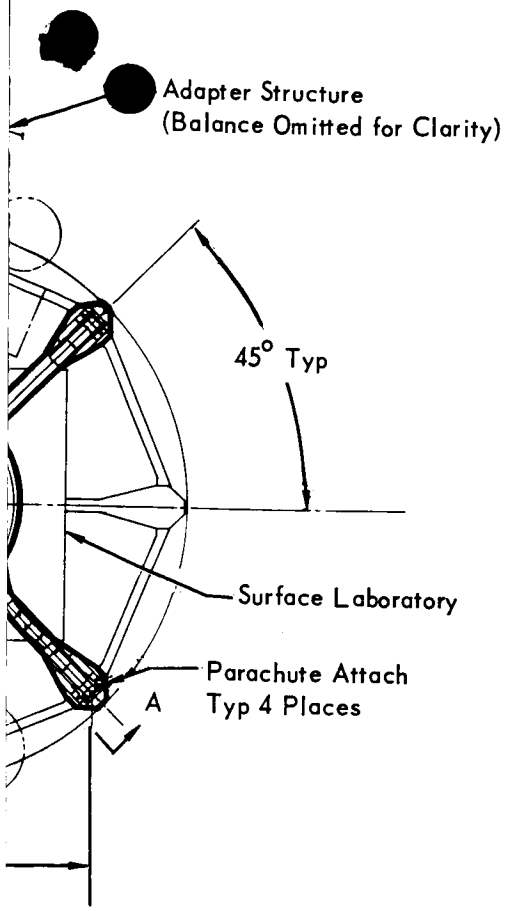
Adapter Structure
(Balance Omitted for Clarity)
45° Typ
Surface Laboratory
Parachute Attach
Typ 4 Places
A

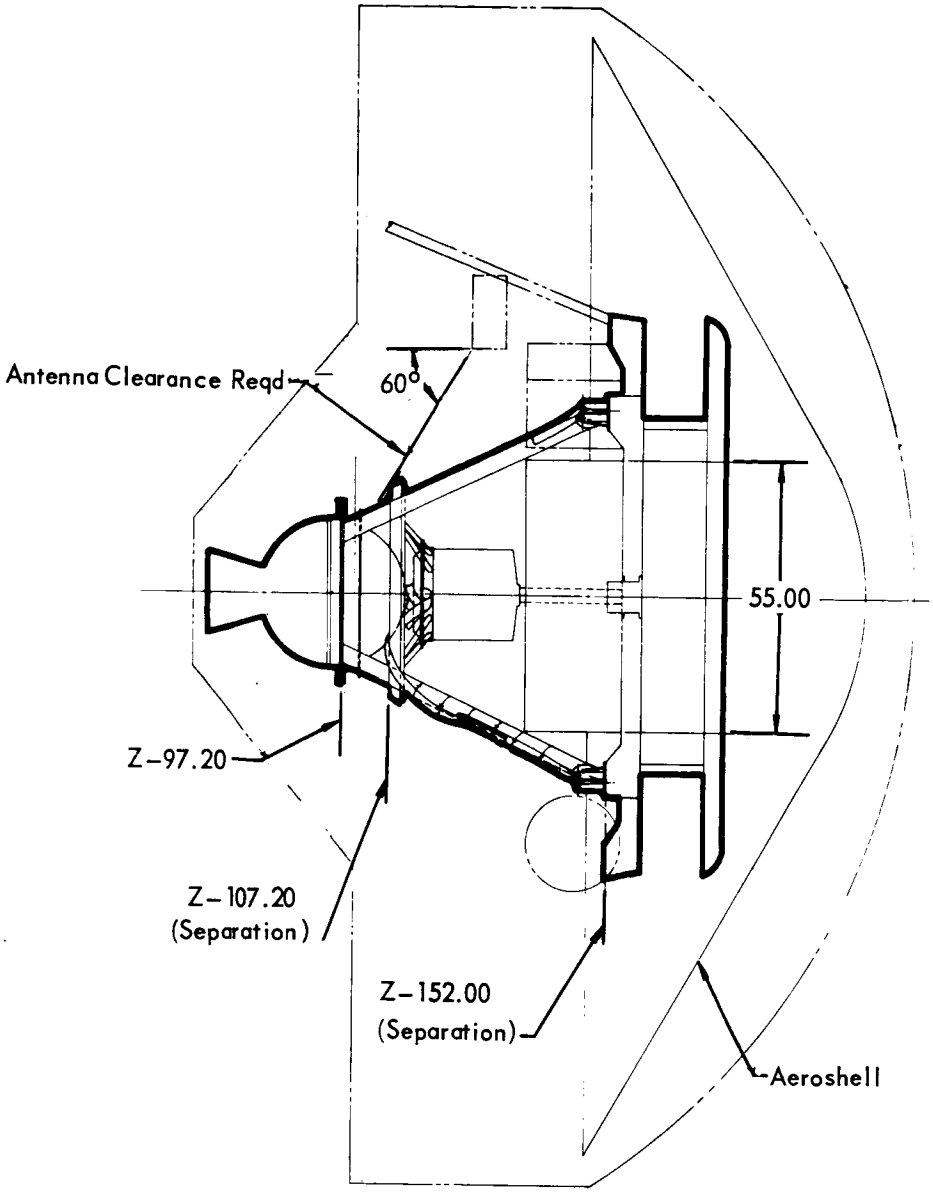
Antenna Clearance Reqd
60°
55.00
Z-97.20
Z-107.20
(Separation)
Z-152.00
(Separation)
Aeroshell

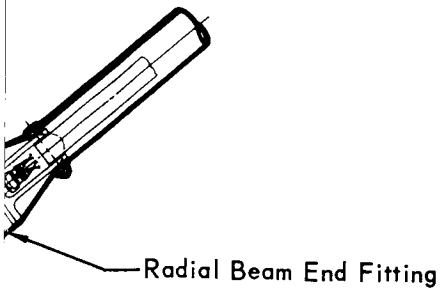
Radial Beam End Fitting

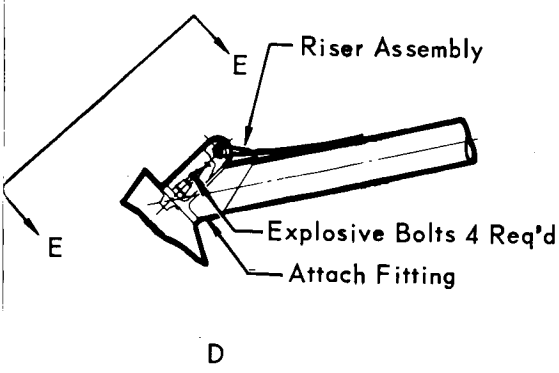
E
Riser Assembly
E
Explosive Bolts 4 Req'd
Attach Fitting
D

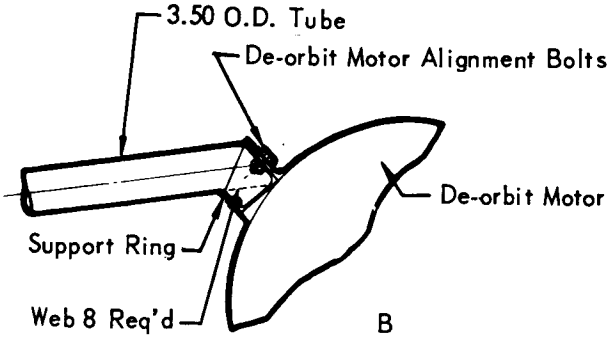
3.50 O.D. Tube
De-orbit Motor Alignment Bolts
De-orbit Motor
Support Ring
Web 8 Req'd
B

chute is released.

There are, in addition, secondary structures required to support various electronic equipment as well as the terminal descent propulsion tankage.

Eight aluminum I-beams 3.0 inches deep with 2.0 inch caps 39.0 inches long connect the ends of the eight primary radial I-beams of the base platform, forming the peripheral octagon shape.

There are four insulated equipment containers attached to the base platform between the radial I-beams and outboard of the attenuator ring backup structure. These containers have constant width and height with the length varied as required to accept various modularized equipment combinations. Figure 3.2.1.4-4 is a detail drawing of a typical container. Figure 3.2.1.4-1 shows the installation locations.

The propulsion tankage is supported by tubular aluminum struts at two locations 180° apart. The locations were dictated by usage rates and C.G. shift control. The oxidizer tank, which is the heaviest, is supported at two horizontally opposing poles. One pole is attached to a tripod capable of loads in all directions. The other pole is supported by a bipod capable of shear in one direction and up and down loads. This bipod provides the flexibility required for tank growth due to temperature pressure changes. The fuel and pressurant tanks are individually mounted in an identical manner on the opposite side of the Surface Laboratory. All the tank support struts are attached to the upper surface of the base platform.

The terminal descent motors are mounted to the radial I-beams of the base platform. The terminal descent propulsion system is shown in Figure 3.2.1.4-5.

3.2.1.4.2 Landing System Operation - At a point 10 feet above the Mars surface the terminal descent engines are cut off allowing the Lander to free fall from that height. Because of the ± 5° variation in trajectory angle and a ± 5° attitude error from uneven engine tail off, the Lander may be rotated as much as 10° from horizontal on impact. This 10° of Lander tilt, when coupled with landing on a 34° slope, imposes an equipment installation clearance line of 44° as shown on Figure 3.2.1.4-6.

In the case of a straight flat impact, at zero horizontal velocity on a level surface, the footpad distributes the loads uniformly to the crushable Trussgrid. The Trussgrid attenuator absorbs sufficient energy while stroking to reduce the loads felt by the Surface Laboratory and associated equipment during landing impact to a maximum of 14 g's.

The landing radar antenna which is mounted to the bottom center of the footpad, is crushed at impact as well as is the frangible terminal descent engine nozzles and

INSULATED CONTAINER CAPSULE BUS EQUIPMENT

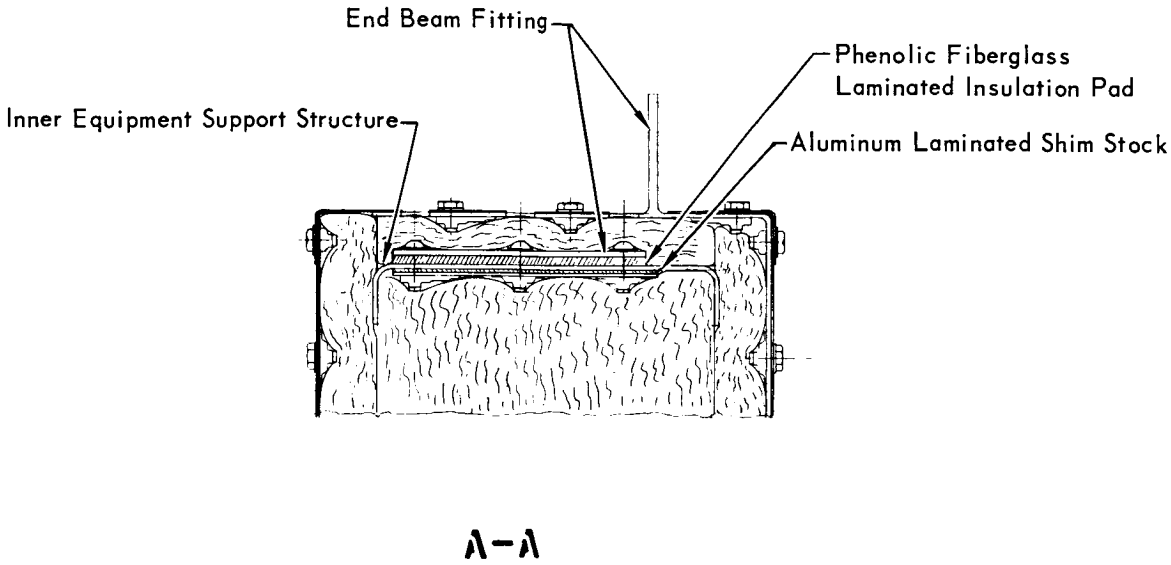

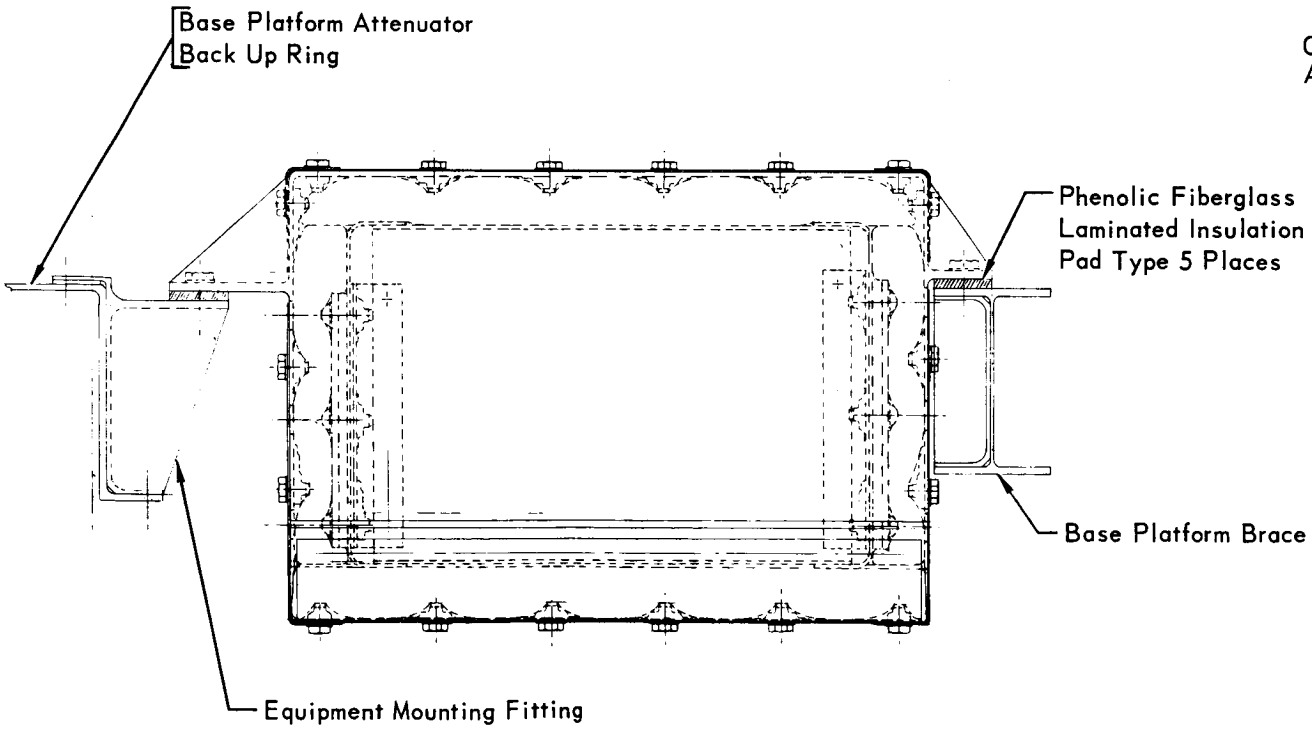

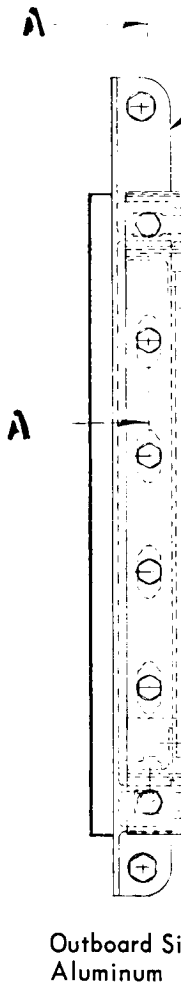

Figure 3.2.1.4-4

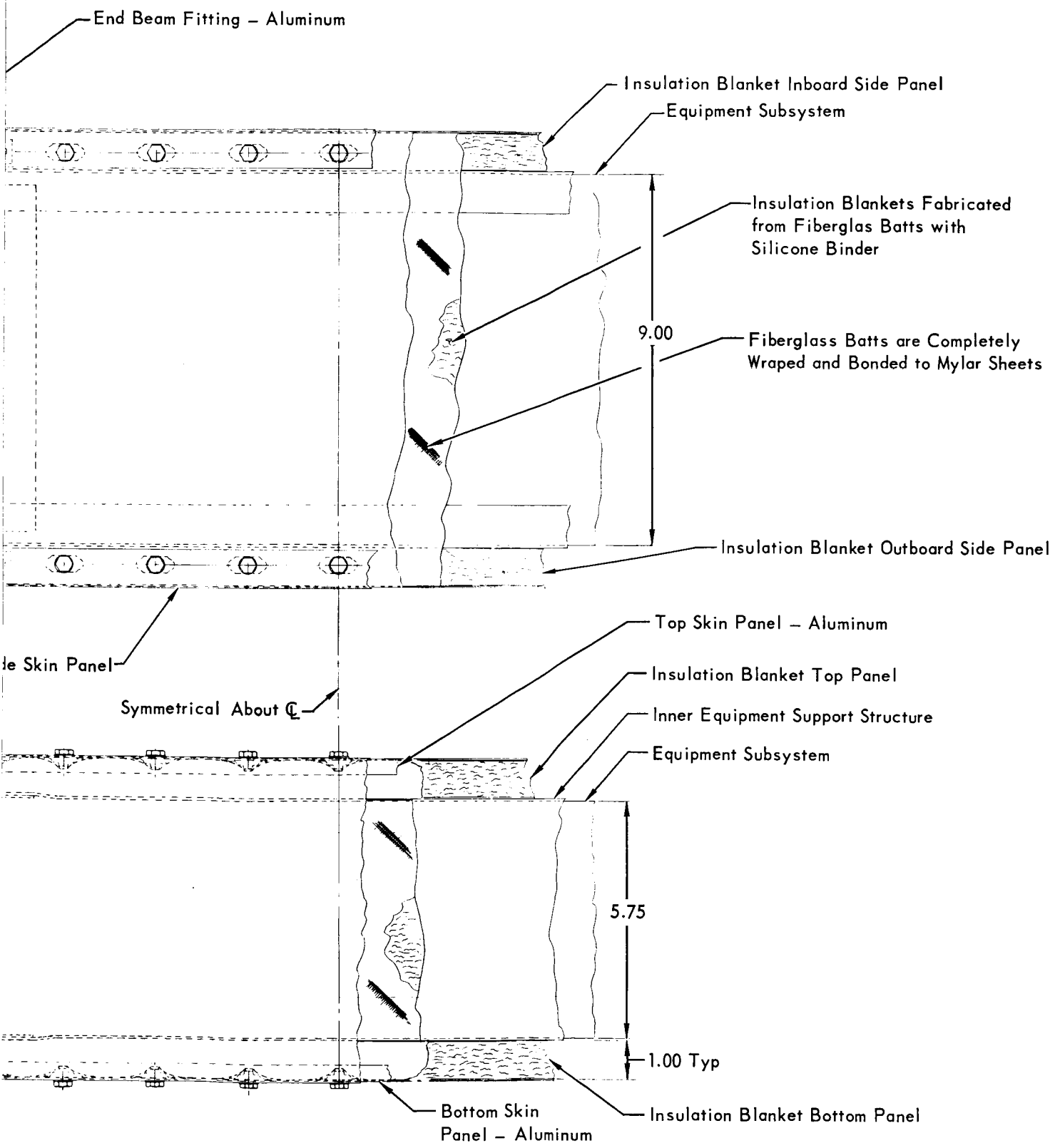
End Beam Fitting – Aluminum
Insulation Blanket Inboard Side Panel
Equipment Subsystem
Insulation Blankets Fabricated from Fiberglas Batts with Silicone Binder
9.00
Fiberglass Batts are Completely Wraped and Bonded to Mylar Sheets
Insulation Blanket Outboard Side Panel
Top Skin Panel – Aluminum
Insulation Blanket Top Panel
Inner Equipment Support Structure
Equipment Subsystem
Symmetrical About ℄
5.75
1.00 Typ
Bottom Skin Panel – Aluminum
Insulation Blanket Bottom Panel

3-66-2

TERMINAL PROPULSION SUBSYSTEM INSTALLATION

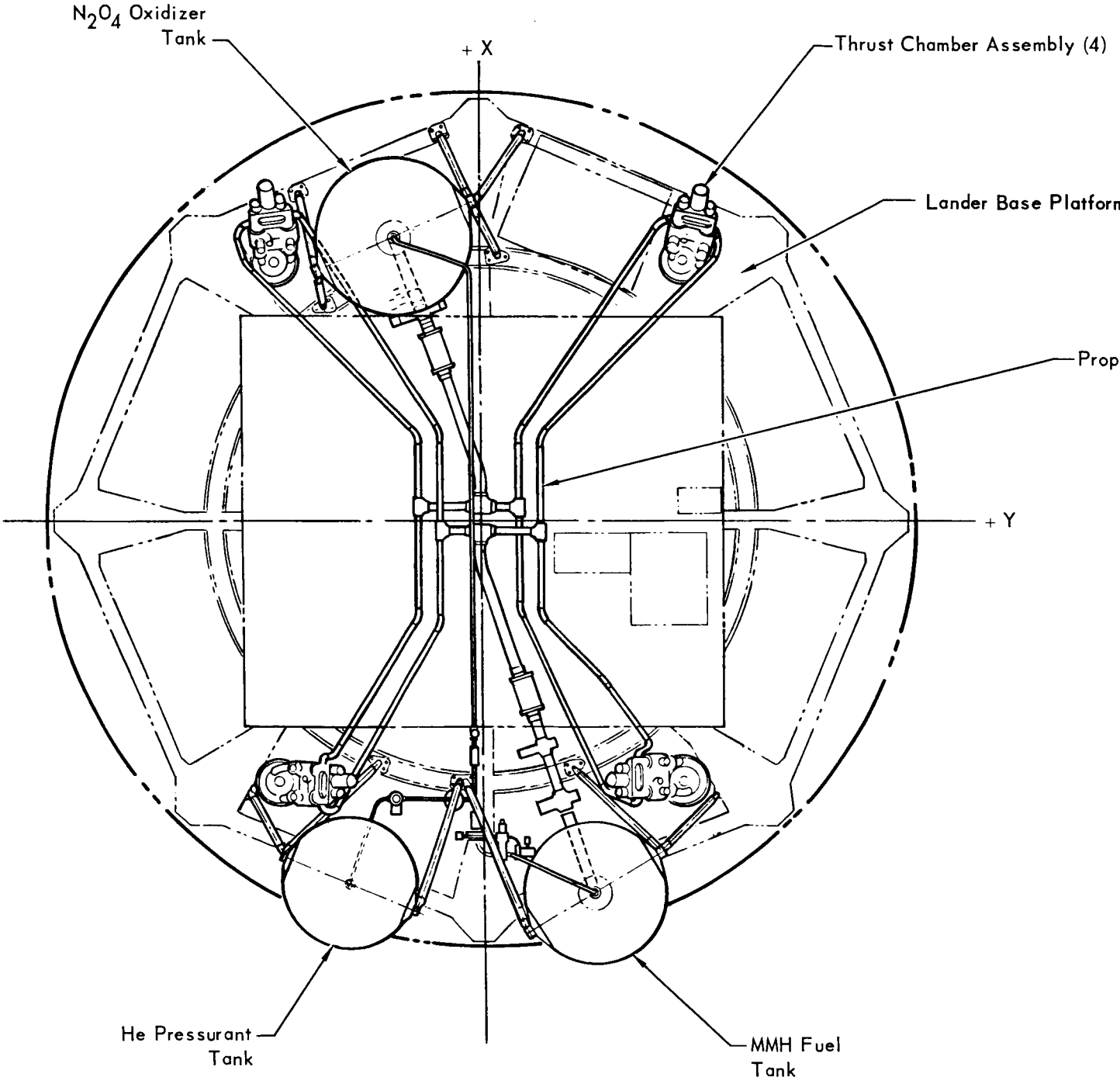

Figure 3.2.1.4–5

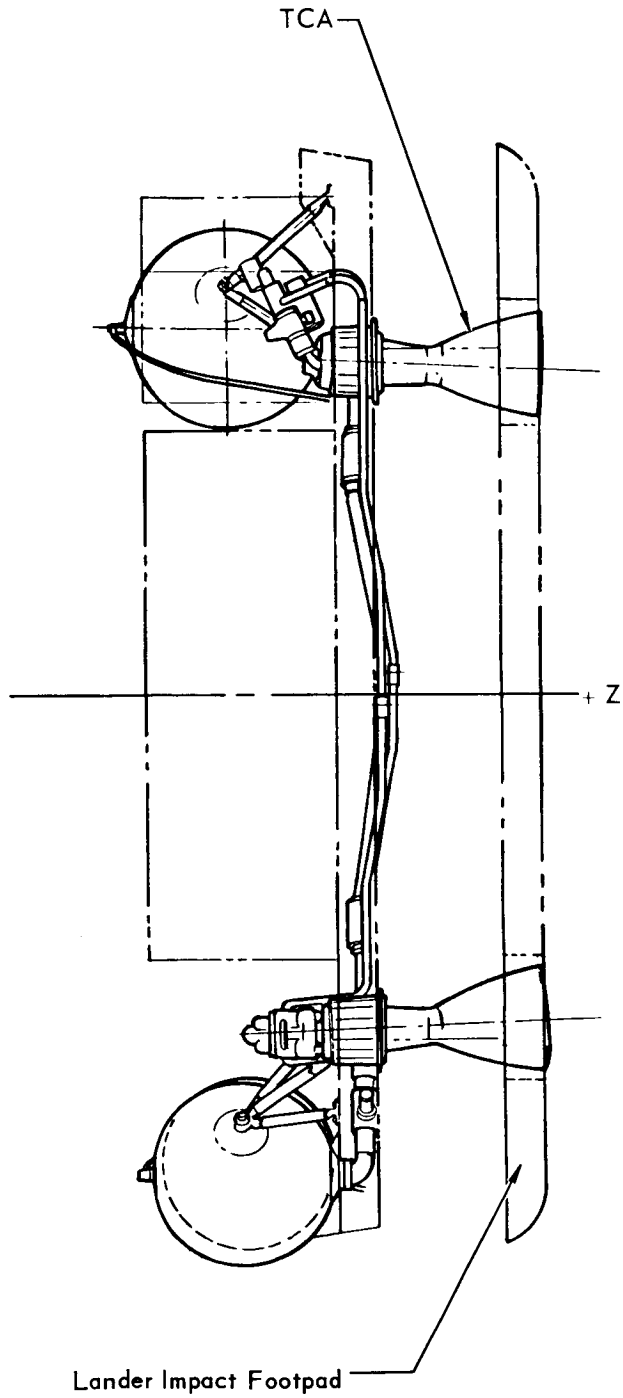

ellant Distribution Lines

3-61-2

MAXIMUM IMPACT ATTITUDE ANGLE

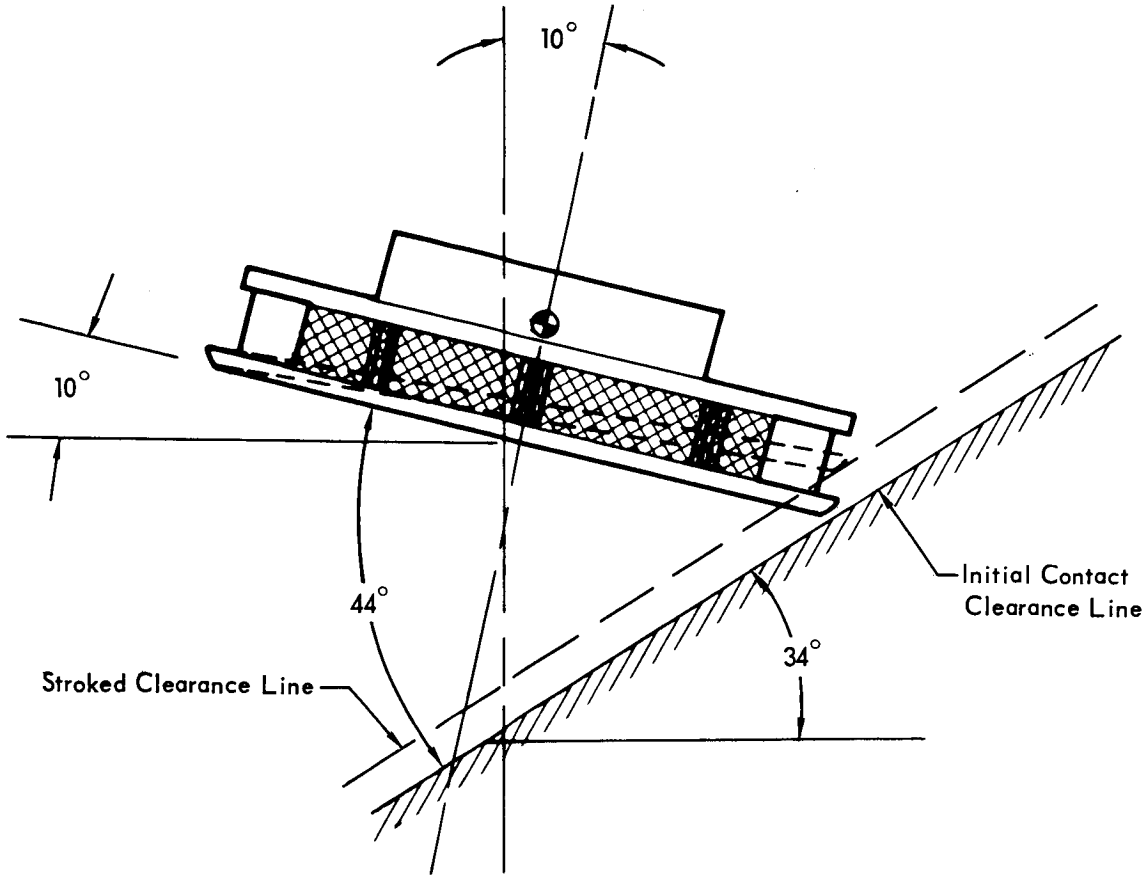

Figure 3.2.1.4–6

the radar altimeter antenna.

In the above type landing the eight tension cable assemblies serve no function and merely roll up the slack cable created by crushing the Trussgrid.

For the case of an off-center landing on a slope, ridge or peak, coupled with horizontal velocity the operation is as follows:

The off-center vertical load outboard of the attenuator ring is introduced through the footpad to the Trussgrid. Because the footpad is a stiff structure and if not restrained by the tension cable assemblies, it would begin to rotate about the Trussgrid nearest the impact point. This rotation of the footpad would put tension loads on the bond between the Trussgrid and the footpad on the side opposite the impact point. This would cause footpad/Trussgrid separation and only local crushing of the attenuator ring. Use of the tension cables prevent this separation and forces the crushable ring to compress over its entire area.

The one-way ratcheted cable pulleys keep the footpad tight against the Trussgrid and keep the system operational during subsequent bouncing or sliding.

The base platform provides a rigid structural backbone and reacts the loads introduced by the Trussgrid and the tension cables through bending in the radial I-beams.

After impact, when the Lander has come to rest, short stabilizing legs are extended to minimize Lander disturbances during the SLS landed operations. These legs are mounted flush with the underside of the impact footpad so as not to be damaged on impact or during skid out. The shoe of the stabilizer is attached to a spring loaded scissors mechanism which is held in the stowed position by a bolt extending through a pyrotechnic bolt cutter. The three stabilizers when simultaneously released extend downward until meeting a 50 pound resistance, or until they are fully extended to 12 inches. A one way ratchet mechanism locks the stabilizer at any point through it's stroke, allowing it to support its full portion of the Lander weight. Figure 3.2.1.4-7 shows the mechanical details of the landing system.

3.2.1.4.3 Interfaces - There are two separation interfaces on the Lander. These are Aeroshell to Lander, and Lander to Adapter, and are detailed below:

- Aeroshell to Lander Interface - This system consists of eight separate bipod trusses which are attached and hinged to the Aeroshell at sixteen places on the second (payload attachment) ring. These bipods are spring loaded to swing outboard to provide maximum clearance for Lander separation. The apexes of the eight bipods attach to the ends of the radial I-beams of the

PULLEY–CABLE ASSEMBLY – UNI DISC LANDER, IMPACT ATTENUATION SYSTEM

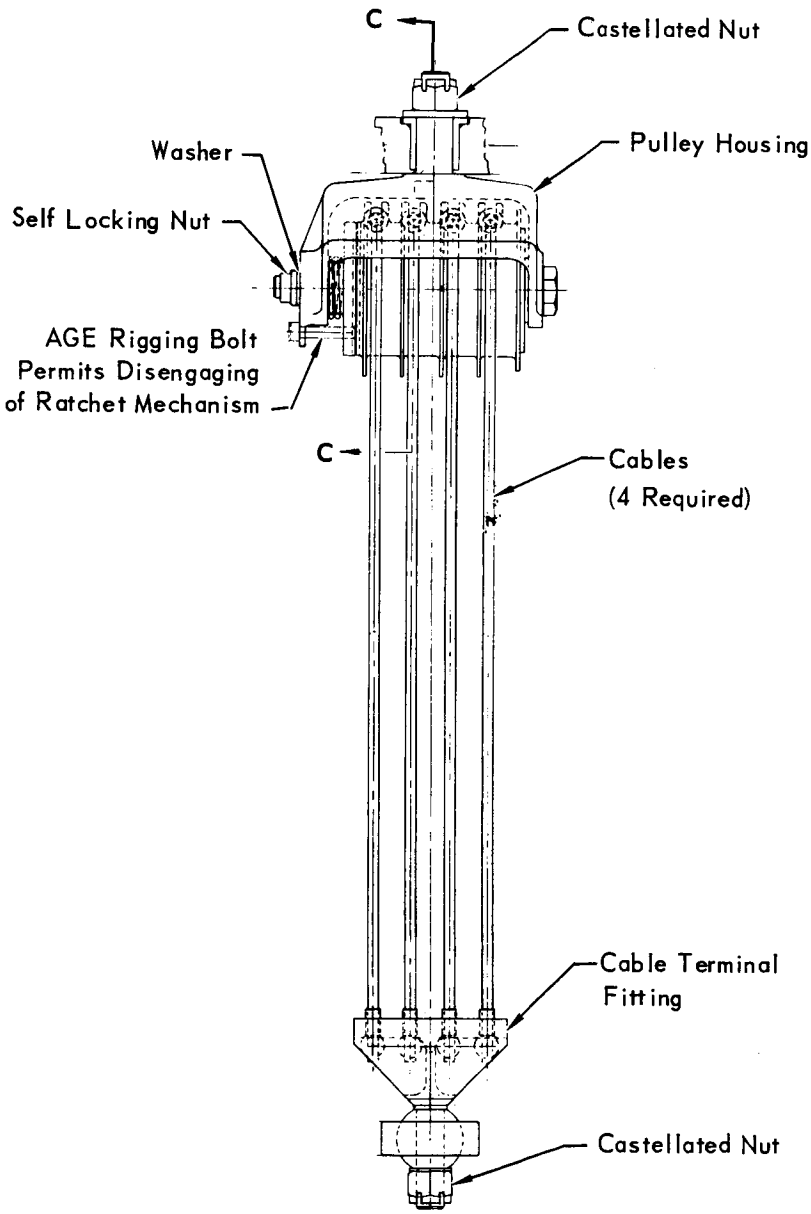

A – A

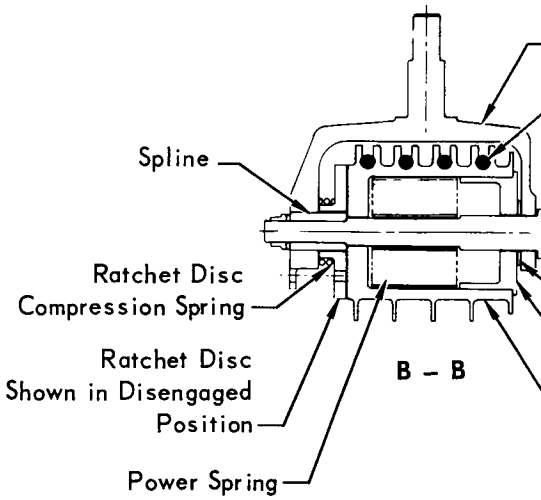

B – B

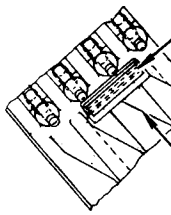

D – D

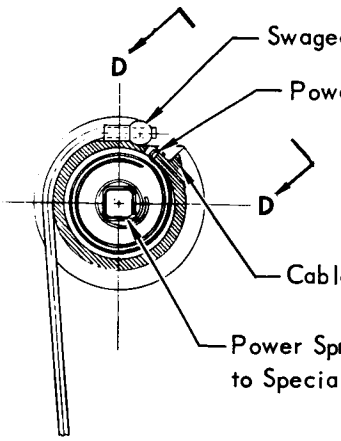

C – C

Figure 3.2.1.4–7

Pulley Housing

Cable

Special Bolt

Washer

Pulley End Hub

Pulley

Power Spring to
Pulley Attachment

Cable Guide Caming
Surface Typ. 4 Places

l Cable Ball End

r Spring Attached to Pulley

Guide Caming Surface

ing Attached
Bolt

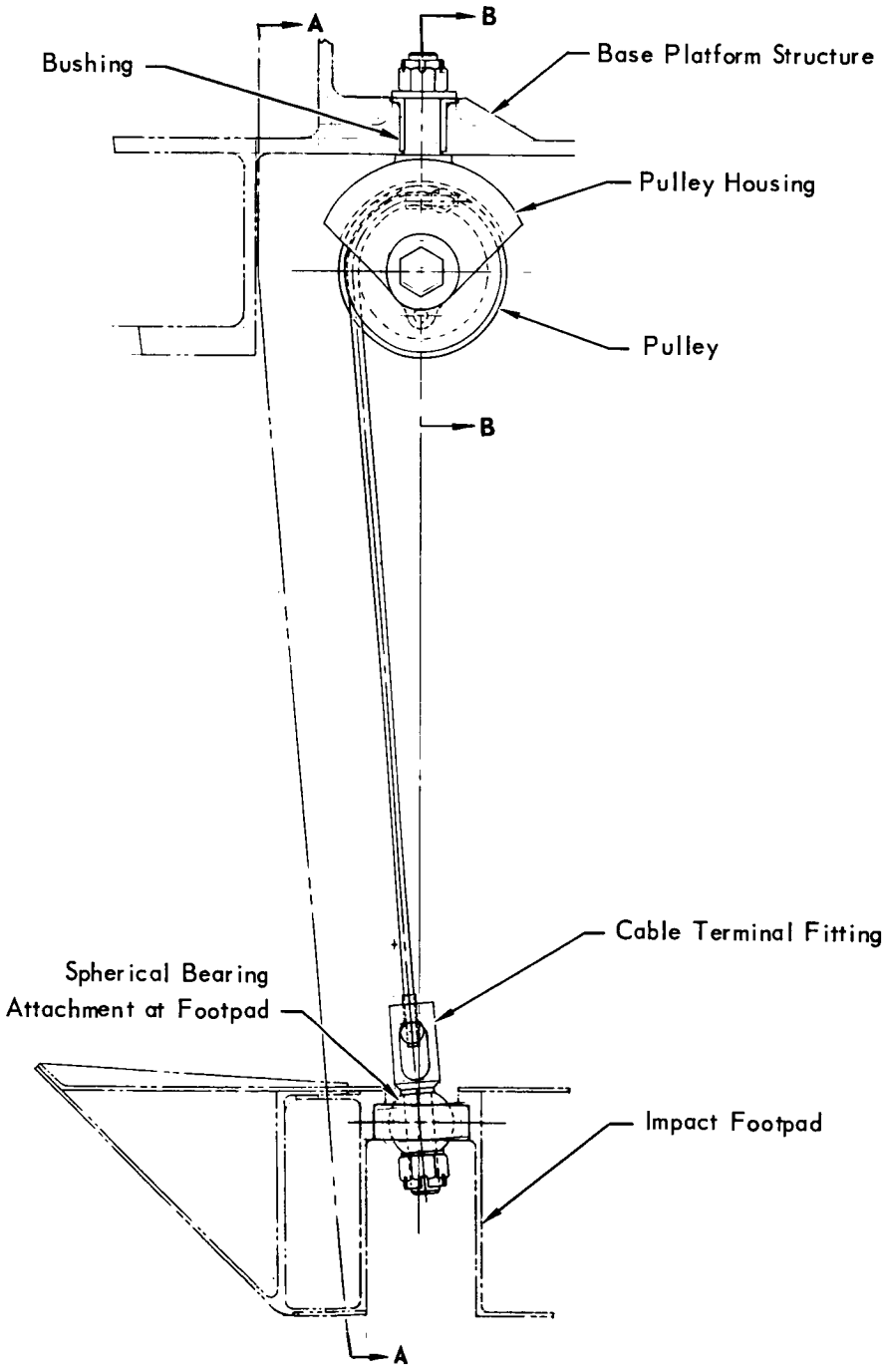

3-70-2

MECHANICAL DETAILS LANDER
STABILIZING LEG – UNI DISC CAPSULE LANDER

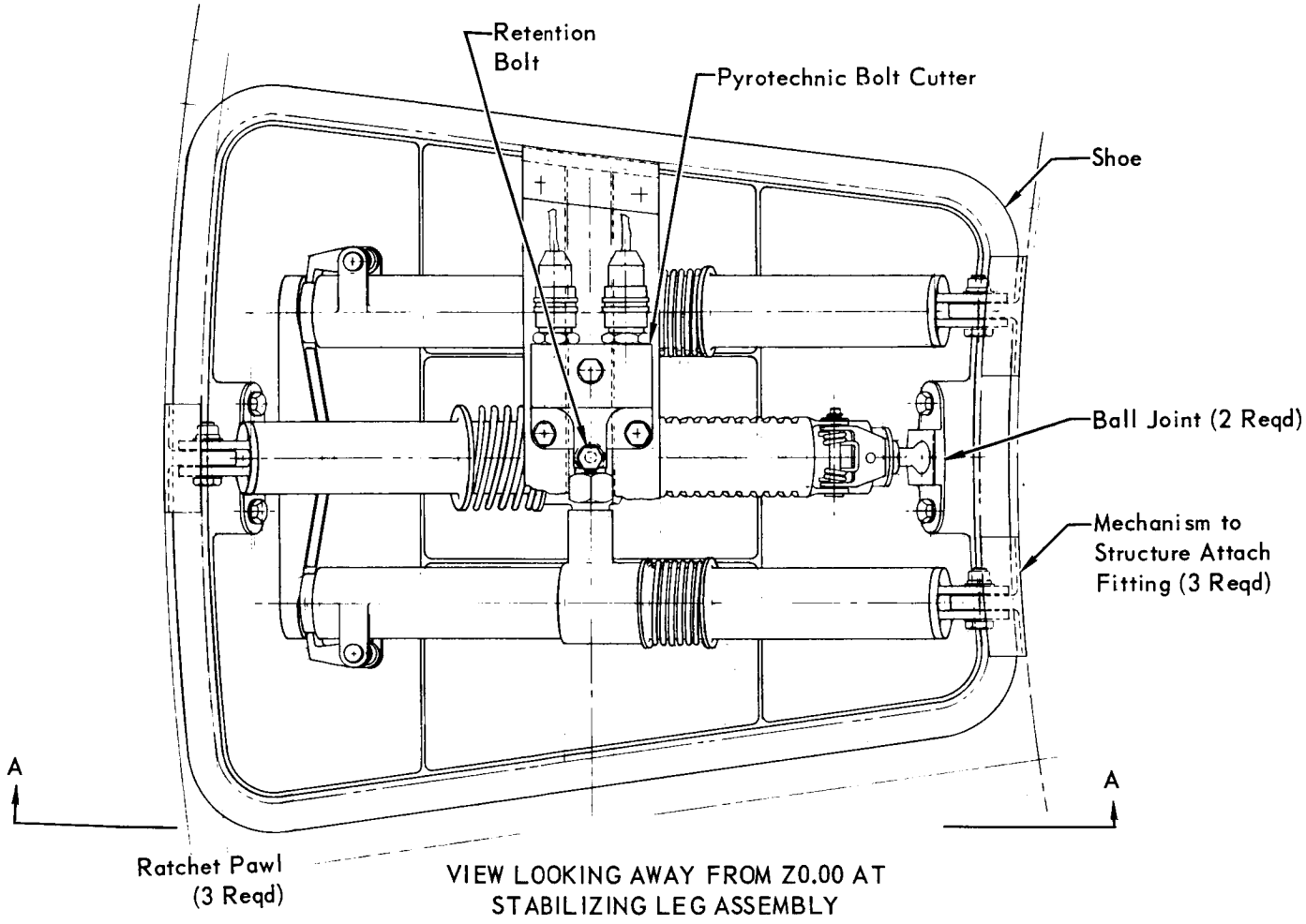

VIEW LOOKING AWAY FROM Z0.00 AT STABILIZING LEG ASSEMBLY

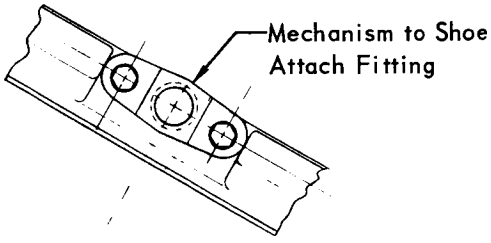

D–D

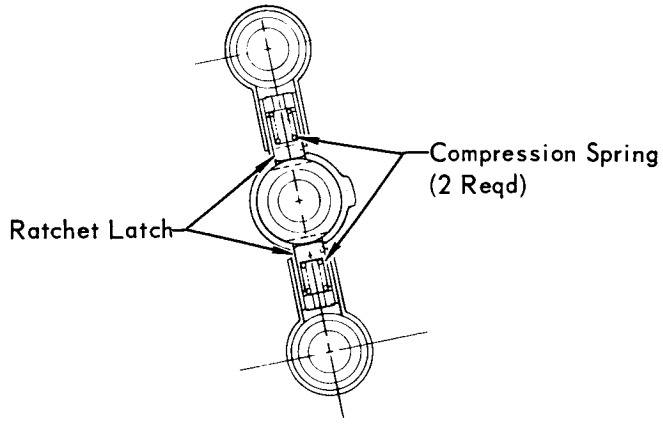

C–C
COLLAR RATCHET MECHANISM

Figure 3.2.1.4–7 (Continued)

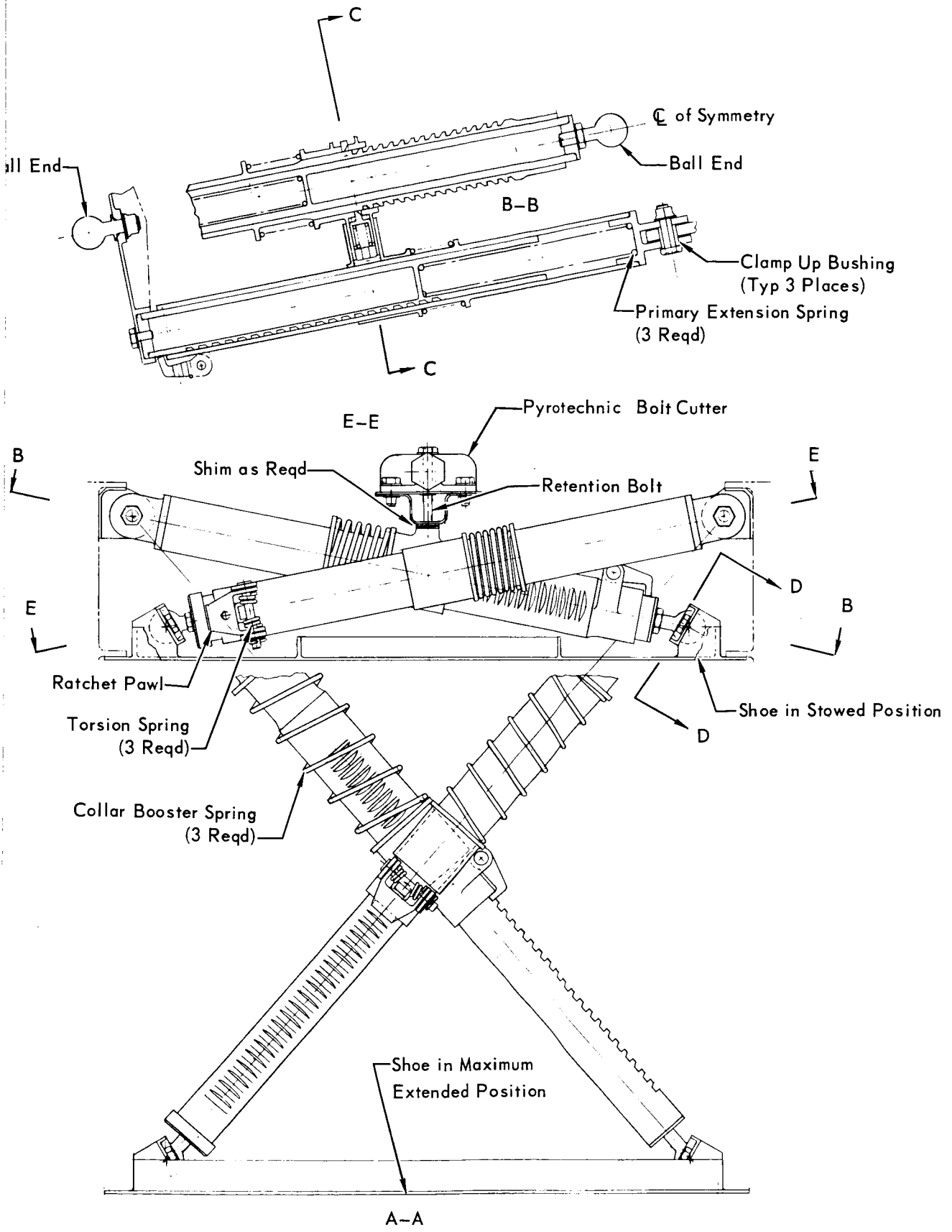
C
℄ of Symmetry
ll End
Ball End
B–B
Clamp Up Bushing
(Typ 3 Places)
Primary Extension Spring
(3 Reqd)
C
E–E
Pyrotechnic Bolt Cutter
B
Shim as Reqd
Retention Bolt
E
D
E
B
Ratchet Pawl
Torsion Spring
(3 Reqd)
Shoe in Stowed Position
D
Collar Booster Spring
(3 Reqd)
Shoe in Maximum
Extended Position
A–A

3-71-2

Lander structural base. Four of the bipods, spaced 90° apart, are tied to the Lander I-beams (by explosive bolts) to carry both tension and compression loads. The remaining four bipods have "ball" ends which are seated in sockets at the ends of the base platform I-beams and allow transmittal of compression loads only. All eight bipods are adjustable to make up for manufacturing tolerances and meet pre-load requirements. All eight bipods are capable of carrying side or shear loads in the plane of the bipod. These bipods are shown in Figure 3.2.1.4-8.

- Lander to Adapter Interface - On the upper surface of the ends of the eight primary radial I-beams of the Lander base platform structure are eight explosive bolt attach points. These bolts attach the Lander to the adapter truss section, as shown in Figure 3.2.1.4-9.
- Lander Separation - After de-orbit motor firing and jettisoning, the parachute is deployed at 23,000 feet. The parachute catapult reaction loads are carried through the remaining section of the de-orbit motor mounting truss structure. Parachute harness assembly lines are attached to the Lander base platform at the same four points as the de-orbit motor mounting truss. After the parachute is deployed, the Aeroshell to Lander interface ties are broken by firing four pyrotechnic bolts allowing the Aeroshell and Lander to be separated by differential aerodynamic drag. At an altitude of 5000 feet, 0.5 seconds after the successful starting of the terminal descent engines, the parachute is jettisoned by activating the four explosive bolts attaching the de-orbit motor support structure to the Lander. The parachute carries the de-orbit motor mounting truss and the thermal control curtain away with it.

3.2.1.4.4 Impact Sensor - The impact system incorporates a mechanical sensor to signal impact. This sensor is a probe or break wire subsystem that utilizes the stroking of the attenuator or the rotation of the tension cable pulley assemblies to initiate the function. This subsystem would be relatively rugged and unsusceptible to premature operation.

3.2.1.4.5 Alternate Configurations - Many Lander configurations were studied prior to the selection of the preferred Uni-Disc Lander. Several of the more likely candidates are shown in Figure 3.2.1.4-10, together with some characteristics of each. See Lander Configuration Trade Study (Ref. Vol. II, Part B, Section 4.2) for more detailed selection data.

AEROSHELL TO LANDER STRUCTURAL INTERFACE

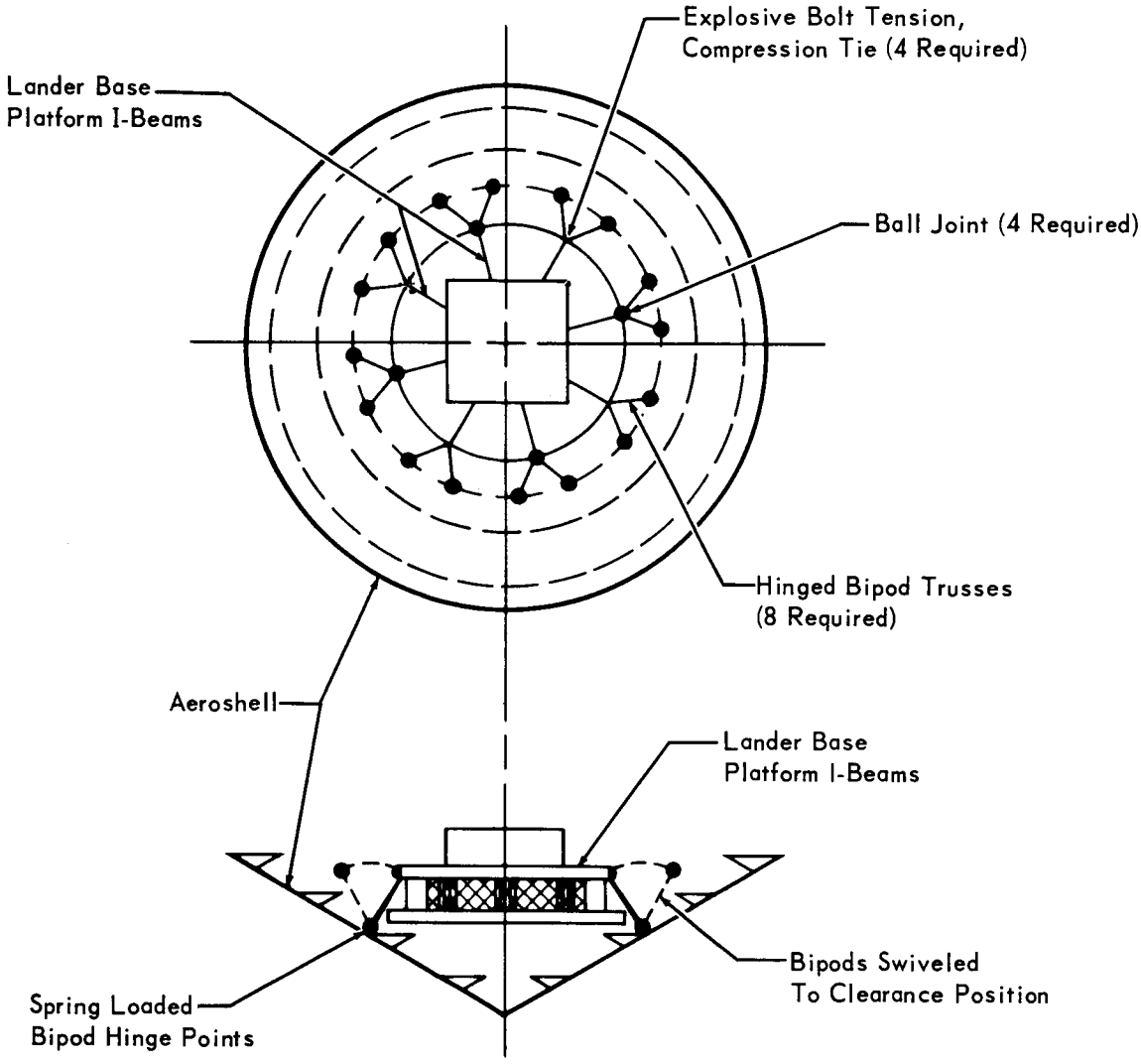

Figure 3.2.1.4–8

INTERFACE – CAPSULE BUS SYSTEM/SPACECRAFT SYSTEM

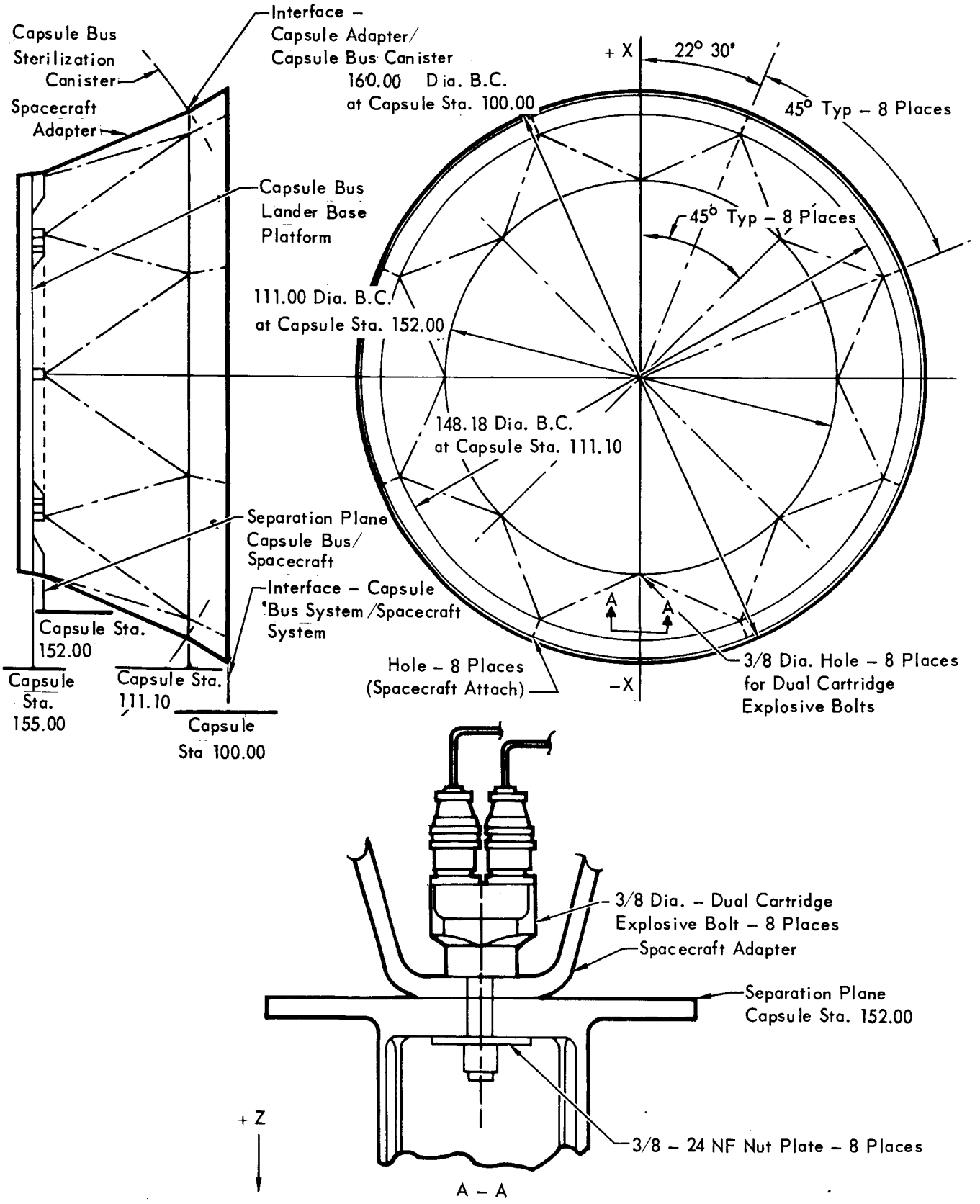

Figure 3.2.1.4–9

ALTERNATE LANDER CONFIGURATIONS SUMMARY

TYPE	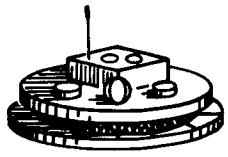 UNI-DISC (1973)	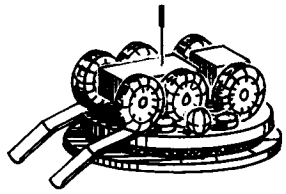 UNI-DISC (1977–1979) WITH ROVER	
LANDING MODE	Soft landing impact on bottom, no tumbling capability.	Soft landing impact on bottom, no tumbling capability.	Soft lan capabil
ENERGY ATTENUATIO METHOD	Crushing of aluminum Trussgrid ring	Crushing of aluminum Trussgrid ring	Deflect
LANDING CAPABILITY	Meets or exceeds all surface constraints.	Meets or exceeds all surface constraints.	Cannot
MOBILITY	Compatible with small Rover.	Compatible with mobile surface laboratory.	Complet
ADVANTAGES	Highly stable. Versatility of payloads. Good growth potential. Simple impact system. Good accessibility.	Highly stable. Standardized mission concept. Simple impact system. Good accessibility.	Omnidir Combin
DISADVANTAGES	Landing radar antenna and descent imaging installations. Crushing of terminal descent engine nozzles.	Landing radar antenna and descent imaging installations. Crushing of terminal descent engine nozzles.	Possibl Poor ro Excess Poor in
GENERAL COMMENTS	Best stability of any design investigated. Standardized lander concept. Very flexible system (preferred concept).	Best stability of any design investigated. Standardized lander concept. Very flexible system (preferred concept).	Poor gr Very lir

Figure 3.2.1.4–10

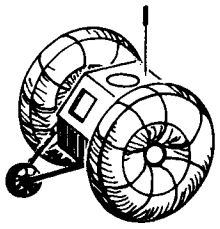 ROVER	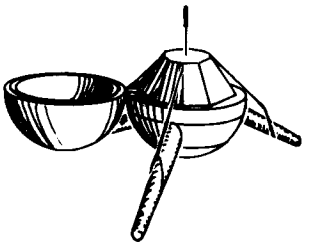 SPHERICAL	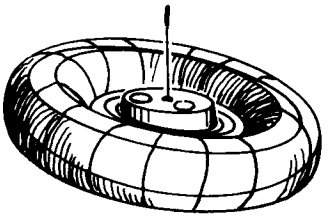 TORUS
ding impact on bottom, tumbling ty.	Hard landing. Tumbling, with subsequent righting by inflatable booms.	Soft landing. Tumbling capability.
ons of large inflatable tori.	Crushable outer layer of balsa wood or honeycomb.	Deflection of inflatable torus.
ıandle ridge and/or cone conditions.	Exceeds all surface constraints.	Can handle all surface constraints except cones.
e lander is mobile.	Not compatible with mobility.	Not compatible with mobility.
ectional landing. ɜd mobility and attenuator system.	Omnidirectional landing.	Omnidirectional landing. Gravity leveling.
e leaks. ɹting installation. ve bouncing. strument platform.	Applicable only to small payloads. Possible leaks in the inflatable booms.	Possible leaks. Cannot install RTG. Limited radiator area. Antenna/experiment deployment difficult.
ɔwth capacity. ıited mobility.	Good hard lander, small compact payloads.	Soft or hard lander for moderate size payload.

ALTERNATE LANDER CONFIGURATIONS SUMMARY (Continued)

TYPE	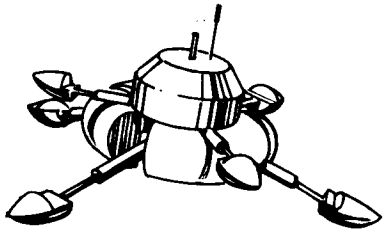 MECHANICAL OMNIDIRECTIONAL	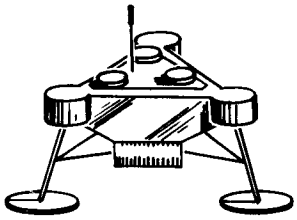 TRIANGULAR	
LANDING MODE	Soft landing. Initial impact on bottom. Tumbling with subsequent righting.	Soft landing. Initial impact on landing pads. Tumbling with subsequent righting.	Soft lan Impact No tumb
ENERGY ATTENUATION METHOD	Crushing of foam filled pads.	Crushing of material in leg strut and lateral cylinders. Crushable pads on sides, top and corners.	Crushin snubber.
LANDING CAPABILITY	Insensitive to slopes and ridges. No cones.	No ridge or cone capability. Slopes to 20°.	No ridge Slopes t
MOBILITY	Not compatible with roving capability.	Compatible with small "piggyback" rover.	Not com
ADVANTAGES	Non-inflatable omnidirectional system. Large footprint. Simple, passive impact system.	Experiments have good surface accessibility. Good antenna installation. Good RTG installation.	Gravity Highly s Minimum
DISADVANTAGES	High structural weight. Poor antenna installation. Poor routing installation. High c.g. in aeroshell.	Lander integral with SLS. Heavy. Small footprint. Poor shape to stow in aeroshell.	Small pa High c.g Poor RT Small fo
GENERAL COMMENTS	Complex righting mechanism must function after impact. No growth or flexibility.	Complex righting mechanism must function after impact. Susceptible to tumbling damage.	Most sta Limited

Figure 3.2.1.4–10 (Continued)

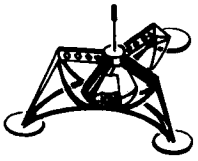 PENDULUM	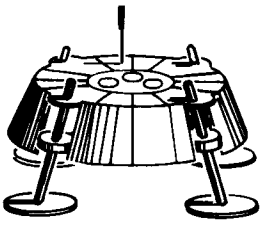 ANNULAR (FOUR LEGS)	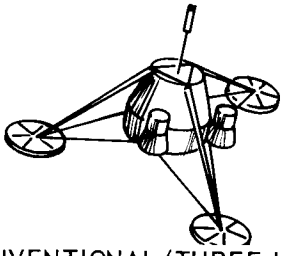 CONVENTIONAL (THREE LEGS)
ding. n landing pads. ling capability.	Soft landing. Impact on landing pads. No tumbling capability.	Soft landing. Impact on landing pads. No tumbling capability.
of material in central ball joint	Crushing of material in leg struts and support rings.	Crushing of material in cylinders of all strut members. Upper – compression only Lower – compression and tension.
or cone capability. o 40°.	34° slope, 11° cone, 32° abrupt change of slope.	No ridge or cone capability. Slopes to 20°.
patible with roving capability.	Compatible with small "piggyback" rover.	Compatible with small "piggyback" rover.
eveling. table on slopes. weight attenuator.	Most stable moment of inertia. Good experiment and radiator exposure. Large payload volume. Good RTG installation	Developed gear geometry. Good surface access.
yload volume. , in aeroshell. G installation. otprint.	Limited peaks and ridges landing capability. Heavy single strut gear (used also for leveling). Small footprint.	Very poor slope stability characteristics. High c.g. in aeroshell. Small footprint.
ible three-legged configuration. access and radiator surface area.	Incorporates all characteristics for increased stability. Limited ridge and cone landing capability.	Most commonly used gear design to date. Heavy if impact loads are not carried through the surface laboratory.

3.2.2 Electronic Equipment - The major electronic subsystems included in the Capsule Bus (CB) are power, sequencer, guidance and control, radar, telemetry, radio, data storage, and antenna subsystems. The last four of these subassemblies are classified as "telecommunications" in the sectional descriptions which follow this introduction. Figure 3.2.2-1 shows the functional relationship of these subsystems to each other and to other Planetary Vehicle (PV) subsystems.

The power subsystem energizes the electrical bus and provides regulation and isolation of Flight Spacecraft (FSC) used for capsule battery charging. It also distributes this regulated power to the CB cruise commutator and thermal control subsystem during interplanetary cruise. When FSC power is not available during this period, the cruise commutator is operated from CB battery power. Battery power can also be provided to the capsule from the Surface Laboratory (SL) in a backup mode.

The sequencer subsystem includes a Sequencer and Timer (S&T), a Test Programmer (TP), and a TP output unit. The S&T provides time-based sequential control of capsule subsystems, an on-board time reference, reference frequencies, and storage capability. The S&T synchronizes sequential functions such as turn-on/turn-off, activation and start, and mode control, and generates the controlling signals. The TP, with its output unit, initiates and controls in-flight checks which verify operational readiness of CB and Entry Science Package (ESP) subsystems.

The guidance and control subsystem (GCS) -- in conjunction with the reaction control subsystem, the de-orbit subsystem, and aerodecelerator, and the terminal propulsion subsystem maintains the velocity and attitude control necessary to achieve a soft landing on Mars. The GCS issues the cut-off signal for the de-orbit motor and firing commands for the reaction-control jets based on inertial sensor data. In addition, landing radar signals are used by the GCS to provide control commands to the descent thrusters.

The radar subsystem includes the radar altimeter and landing radar. The radar altimeter provides discrete altitude marks at selected altitudes to the CB sequencer and telemetry subsystems. The sequencer subsystem utilizes the altitude marks as signals to initiate preprogrammed sequences or functions. All altitude marks are sent to the telemetry subsystem and subsequently transmitted to Earth for monitoring and post-mission analysis. The altimeter also provides altitude data to the GCS and

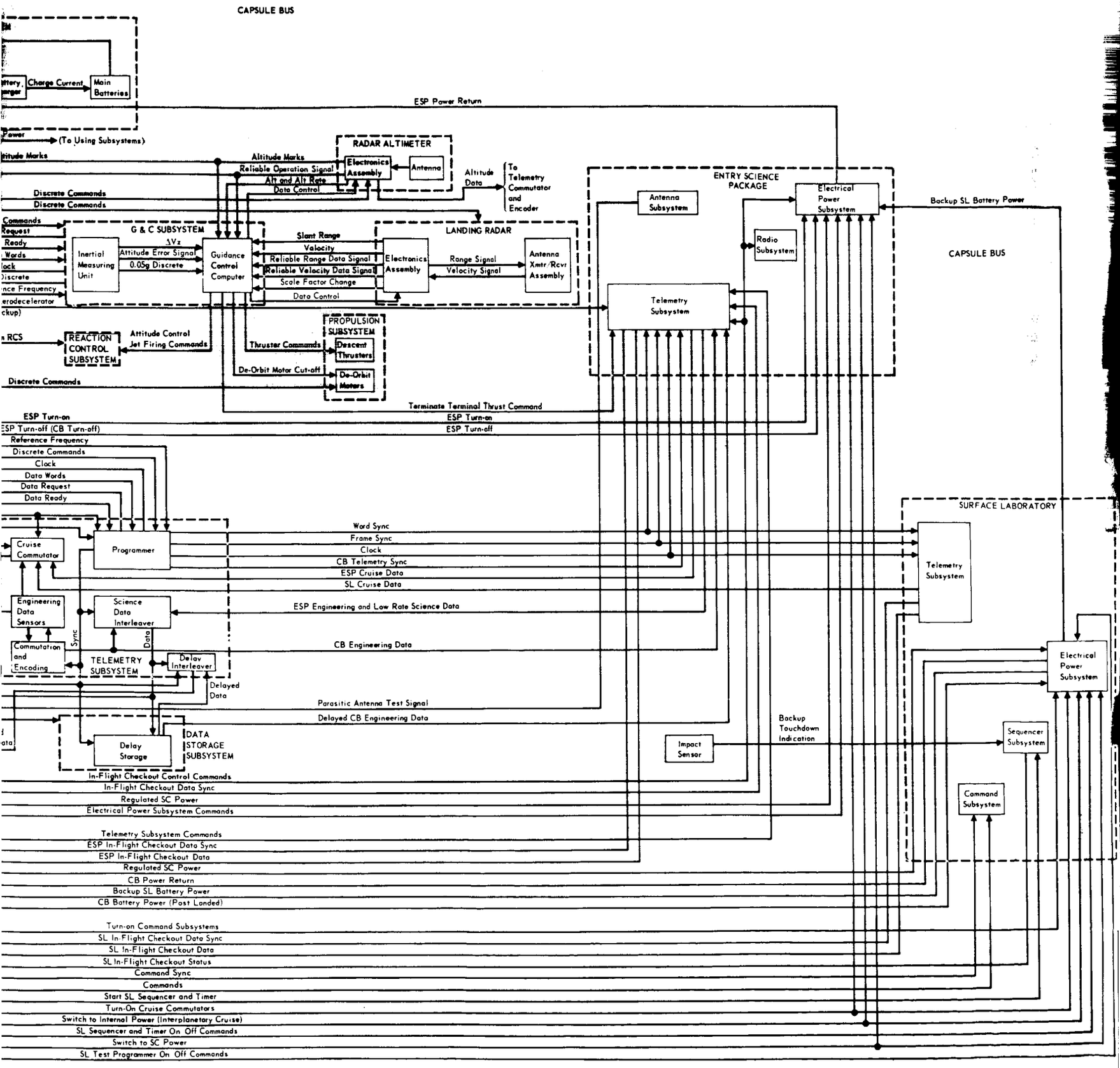
CAPSULE BUS
Charge Current
Main Batteries
ESP Power Return
(To Using Subsystems)
RADAR ALTIMETER
Altitude Marks
Reliable Operation Signal
Alt and Alt Rate
Data Control
Electronics Assembly
Antenna
Altitude Data
To Telemetry Commutator and Encoder
Discrete Commands
Discrete Commands
G & C SUBSYSTEM
Inertial Measuring Unit
ΔVz
Attitude Error Signal
0.05g Discrete
Guidance Control Computer
Slant Range
Velocity
Reliable Range Data Signal
Reliable Velocity Data Signal
Scale Factor Change
Data Control
LANDING RADAR
Electronics Assembly
Range Signal
Velocity Signal
Antenna Xmtr/Rcvr Assembly
ENTRY SCIENCE PACKAGE
Antenna Subsystem
Electrical Power Subsystem
Backup SL Battery Power
Radio Subsystem
CAPSULE BUS
Telemetry Subsystem
REACTION CONTROL SUBSYSTEM
Attitude Control Jet Firing Commands
PROPULSION SUBSYSTEM
Thruster Commands
Descent Thrusters
De-Orbit Motor Cut-off
De-Orbit Motors
Discrete Commands
Terminate Terminal Thrust Command
ESP Turn-on
ESP Turn-off (CB Turn-off)
ESP Turn-on
ESP Turn-off
Reference Frequency
Discrete Commands
Clock
Data Words
Data Request
Data Ready
SURFACE LABORATORY
Cruise Commutator
Programmer
Word Sync
Frame Sync
Clock
CB Telemetry Sync
ESP Cruise Data
SL Cruise Data
Telemetry Subsystem
Engineering Data Sensors
Science Data Interleaver
ESP Engineering and Low Rate Science Data
Sync
Data
Commutation and Encoding
TELEMETRY SUBSYSTEM
Delay Interleaver
CB Engineering Data
Delayed Data
Parasitic Antenna Test Signal
Delayed CB Engineering Data
Electrical Power Subsystem
Delay Storage
DATA STORAGE SUBSYSTEM
Impact Sensor
Backup Touchdown Indication
Sequencer Subsystem
Command Subsystem
In-Flight Checkout Control Commands
In-Flight Checkout Data Sync
Regulated SC Power
Electrical Power Subsystem Commands
Telemetry Subsystem Commands
ESP In-Flight Checkout Data Sync
ESP In-Flight Checkout Data
Regulated SC Power
CB Power Return
Backup SL Battery Power
CB Battery Power (Post Landed)
Turn-on Command Subsystems
SL In-Flight Checkout Data Sync
SL In-Flight Checkout Data
SL In-Flight Checkout Status
Command Sync
Commands
Start SL Sequencer and Timer
Turn-On Cruise Commutators
Switch to Internal Power (Interplanetary Cruise)
SL Sequencer and Timer On Off Commands
Switch to SC Power
SL Test Programmer On Off Commands

telemetry subsystems. Altitude and altitude-rate data are sent to the GCS computer as a terminal-guidance-and-control backup to the landing radar range beam. Altitude data are provided to the telemetry subsystem to permit entry science data correlation and post-mission analysis. The landing radar provides slant range and velocity vector data to the GCS. These data are used in commanding capsule orientation and axial thrust during terminal descent.

The telemetry, data storage, radio, and antenna subsystems provide the capability to acquire and transmit engineering and science data on a real and delayed time basis, and to support testing and validation of other subsystems. Prior to deorbit, engineering parameters from the CB are interleaved with cruise data from the ESP and SL and sent to the FSC for recording or real-time transmission to the Mission Operations System (MOS). After separation, and throughout descent and entry, ESP, SL, and CB data is interleaved and transmitted over dual channel FSK links to the FSC relay terminal for storage or real-time transmission to the MOS.

CAPSULE BUS ELECTRONIC SUBSYSTEM INTERFACES

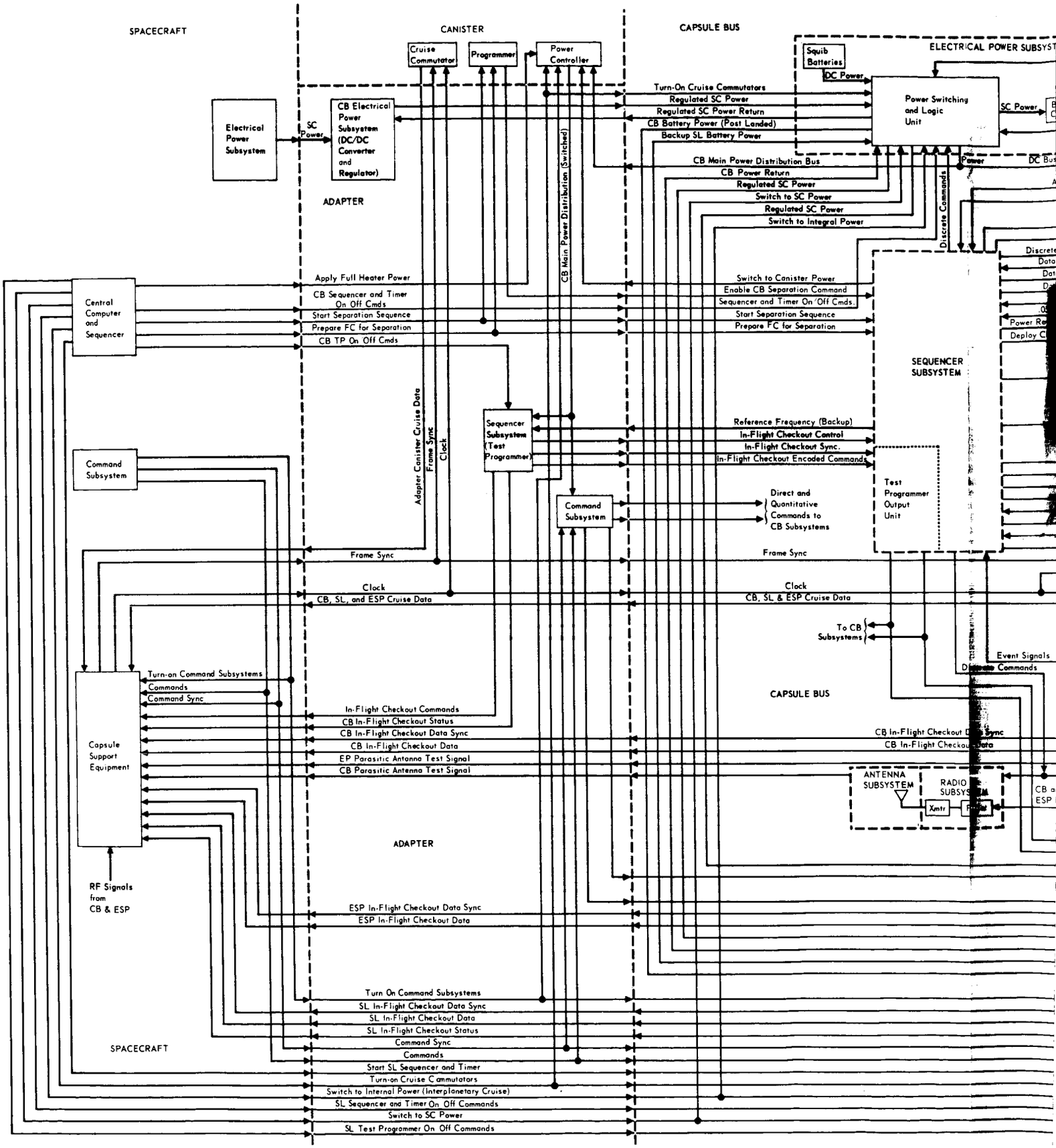

Figure 3.2.2-1

3.2.2.1 Telecommunications - The Capsule Bus Telecommunications (TCM) subsystem must be capable of returning accurate engineering data to allow evaluation of all subsystems and must also provide the controls to allow alternation of mission plans. These functions are accomplished through cooperative spacecraft subsystems which link the CBS TCM to the Deep Space Network (DSN). The subsystems which comprise the CBS TCM and their functional interrelations are shown in Figure 3.2.2.1 -1.

The TCM functions during the various mission phases are shown in Figure 3.2.2.1-2 Pre-separation CBS data is conducted via hardline to the Flight Spacecraft and then transmitted to Earth. After separation, an RF relay link is established between the CB and the CB support equipment mounted on the Spacecraft. This relay link provides diagnostic telemetry data concerning CB subsystem status, as well as limited amounts of ESP science and diagnostic data and SLS diagnostic data.

The major considerations in the design of the TCM occur during the descent and entry phases, where variable parameters, such as spacecraft orbit dimensions, de-orbit anomaly, and the Martian atmosphere, provide a broad spectrum of geometrical conditions. The antenna subsystem is constrained, therefore, to provide rather broad patterns, which limit the amount of gain that can be achieved without increasing antenna complexity. The radio subsystem also is affected by the multipath environment, the large dynamic range encountered at the receiver, and the occurrence of plasma-induced blackout during entry. The TCM design is influenced by the real-time transmission capability of the spacecraft-to-earth link. In addition, we have imposed a requirement to transmit, prior to landing, the performance data accumulated during blackout.

Trade studies concerning modulation techniques, multipath alleviation, data recovery during blackout, RF frequency, and configuration have been performed. These trade studies, listed in Figure 3.2.2.1-3 are documented in Part B, Section 5.5 of this report.

Operational Phases

- Prelaunch - During the post-encapsulation (up through prelaunch test phases), the TCM subsystems are validated through detailed tests which exercise all modes and are correlated to the pre-sterilization and pre-encapsulation test data. Specific tests are described in Volume II, Part C, Functional Descriptions. Subsequent to TCM validation, the system is configured in a test support mode and used to complete the validation of other CB subsystems. During these tests, calibration will be accomplished by comparing hardwired

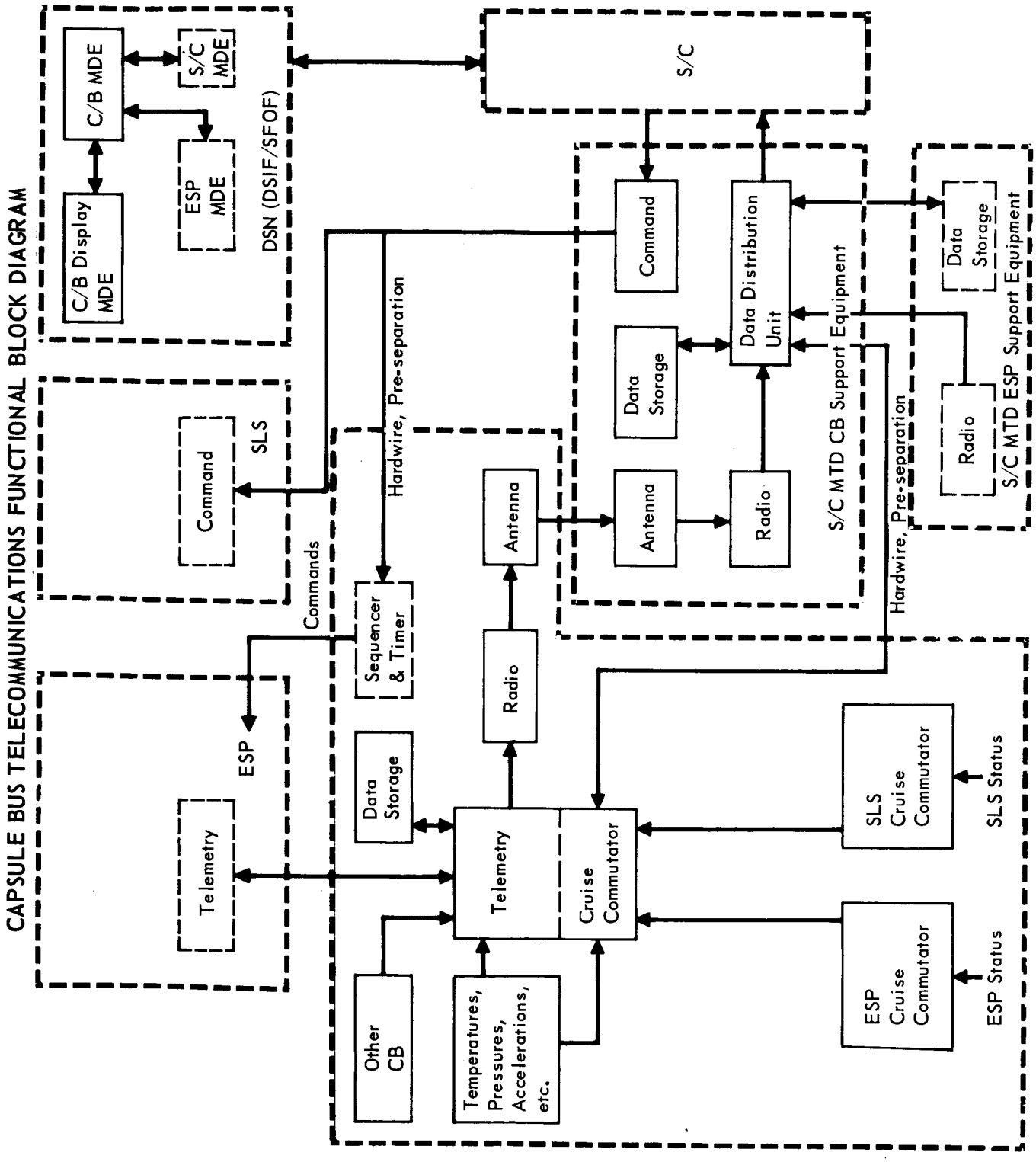

Figure 3.2.2.1–1

TCM MODES

Prelaunch – Validation	All	All subsystems up – All modes followed by an "as required" period
Launch thru Interplanetary Cruise	Cruise	Cruise commutator through DDU to S/C TM subsystem. Continuous during launch thru interplanetary trajectory injection.
Midcourse Correction(s)	Test	Fuel gauging mode. Specfic channels monitored and data stored during acceleration periods. Data dump at MOS option after completion of maneuver.
Planetary Orbit Injection	Test	TM up full, data storage during injection maneuver. Calibrate CB gyros, accel., fuel quantity, etc. Data dump at MOS option after injection.
Orbit	Cruise	Cruise Commutator operating.
Presep. Checkout	Test	All subsystems full up, all operational modes validated. Subsequently, on "as required" basis.
De-orbit and Orbital Descent	Descent	RF to S/C relay terminal
Entry	Entry	Entry mode. Starts at 800K ft. RF to S/C. ESP and SLS data interleaved. Delay storage operating.
Terminal Deceleration	Terminal	Terminal mode. Starts prior to Aeroshell sep. RF to S/C. ESP and SLS data interleaved. Ends after landing.

Figure 3.2.2.1–2

TRADE STUDY SUMMARY

DESIGN AREA	APPROACHES	REASON FOR SELECTION
Configuration	Direct to Earth $\boxed{\text{Relay via Spacecraft}}$	Power Advantage
Frequency	100 – 500 MH_3 S-Band $\boxed{\text{340 \& 400 } MH_3}$	Near Optimum, Available
Modulation	PSK/PM $\boxed{\text{FSK}}$ MFSK PCM/FM DPSK	Less Susceptible to Multipath, Simple Receiver
Synchronization	Data Channel RZ Data Channel NRZ $\boxed{\text{Data Channel Split Phase}}$ Separate Channel	Simple Synchronization Wider Tolerances
Transmitting Antenna	$\boxed{\text{Broad Beam Conical,}}$ Fan Beam Array $\boxed{\text{Roll Symetrical}}$ Offset	Simplest, Adequate Avoids need for Roll Control
Blackout Data Recovery	Programmed $\boxed{\text{Continuous Delay \& Interleave}}$ None	No External Sensors
Multipath Data Recovery	None Delay Storage Time Diversity $\boxed{\text{Frequency Diversity}}$ Time & Frequency Diversity	Simple Receiver, Adequate Performance

Figure 3.2.2.1–3

and telemetered outputs.

- Launch - During launch, most of the Capsule subsystems will be dormant and the TCM will be functioning in the cruise mode. In this mode, critical parameters, such as temperatures, pressures, and battery voltages, are monitored. This date is multiplexed with cruise data from both the Entry Science Package (ESP) and the Surface Laboratory System (SLS) and delivered to the spacecraft for recording and/or real-time transmission.
- Interplanetary Cruise - Accumulation of data during this period is controlled by the Spacecraft, either from preprogrammed instructions or upon direct command. The data is multiplexed with ESP and SLS data and delivered to the Spacecraft for recording and/or real-time transmission.
- Preseparation Validation - After injection of the Planetary Vehicle (PV) into Martian orbit, but prior to separation of the Flight Capsule, a CB validation or checkout will be performed. The TCM subsystems will be energized and exercised through the normal flight modes. It will subsequently be configured in the checkout support mode used to validate the other CB subsystems. During this test period, critical data from the ESP and SLS will be multiplexed with CB data, and the composite signal routed to the spacecraft for storage and/or real-time transmission. Provisions exist for relaying commands and instructions through the Spacecraft command system to the CB subsystems. In addition, the Spacecraft will be required to support the checkout function, to validate the normal operational control functions of the CB support elements mounted on the Spacecraft. These functions include activation of relay link receivers, mode switching, and control of the data flow paths within the Spacecraft. The CB TCM will then revert to a monitor mode while the ESP and SLS checkout functions are exercised.

  At the conclusion of this period, the CB TCM subsystems will be configured in the separation mode. During the hold period, ESP and SLS monitor data are multiplexed with CB data and forwarded to the Spacecraft for storage and/or real time transmission to the MOS.
- Separation and De-orbit - Shortly after separation, an RF relay link will be established from the CB to the Spacecraft relay terminal. Critical CB data, multiplexed with ESP and SLS status data, are transmitted over dual channel frequency shift key (FSK) links. The data stream received by the

Spacecraft will be detected and reconstructed and then simultaneously stored and routed for real-time transmission. Shortly after completion of the de-orbit maneuver, the TCM changes to the descent mode.

- Orbital Descent - The descent mode is initiated after completion of the de-orbit maneuver. It continues until the nominal start of entry at 800,000 feet. During the descent mode, ESP and SLS monitor data are interleaved with CB performance and monitor data and transmitted to the Spacecraft relay terminal. The received data stream is reconstructed and then stored and simultaneously forwarded for real-time transmission to Earth.
- Entry - The entry mode is initiated at a programmed time, corresponding to 800,000 feet altitude. In this mode, all active CB subsystems will be monitored to provide a continuous performance history. SLS monitor data are interleaved with the CB data. ESP monitor and low-rate science data are also interleaved with the CB and SLS data. The output data is transmitted by the CB, both in real time and delayed. The delayed bit stream is interleaved with the real time bit stream. The composite real time and delayed bit stream is transmitted over the dual channel FSK links to the Spacecraft relay terminal for detection and reconstruction prior to real time transmission to Earth. An additional transmission path is provided for these data by the ESP relay link, Reference Vol. IV, Part D, which also contains digital TV.

Figures 3.2.2.1-4 and 5 illustrate the calculated values of the blackout period. for various trajectories in the postulated Martian atmospheres, VM-1 through VM-10. The maximum anticipated blackout duration is less than 150 seconds. However for VM-8, the very short period between initiation of blackout and landing does not allow transmission of blackout data (which has been delayed 150 seconds) prior to impact in event of a landing system failure. Consequently, a dual delay, 50 second and 150 second, is provided to insure transmission of critical entry data before landing. Additional data are provided in Part B, Section 5.5.

During entry, the relay link suffers from interference due to energy reflected from the Martian surface. The seriousness of the interference is strongly dependent on the energy reflected from the Martian surface. The seriousness of the interference is strongly dependent on the entry trajectory, the type of antennas employed and the actual Martian reflectivity encountered. Frequency diversity is

BLACKOUT TIMES PREDICTIONS
SLOW – SHALLOW ENTRIES

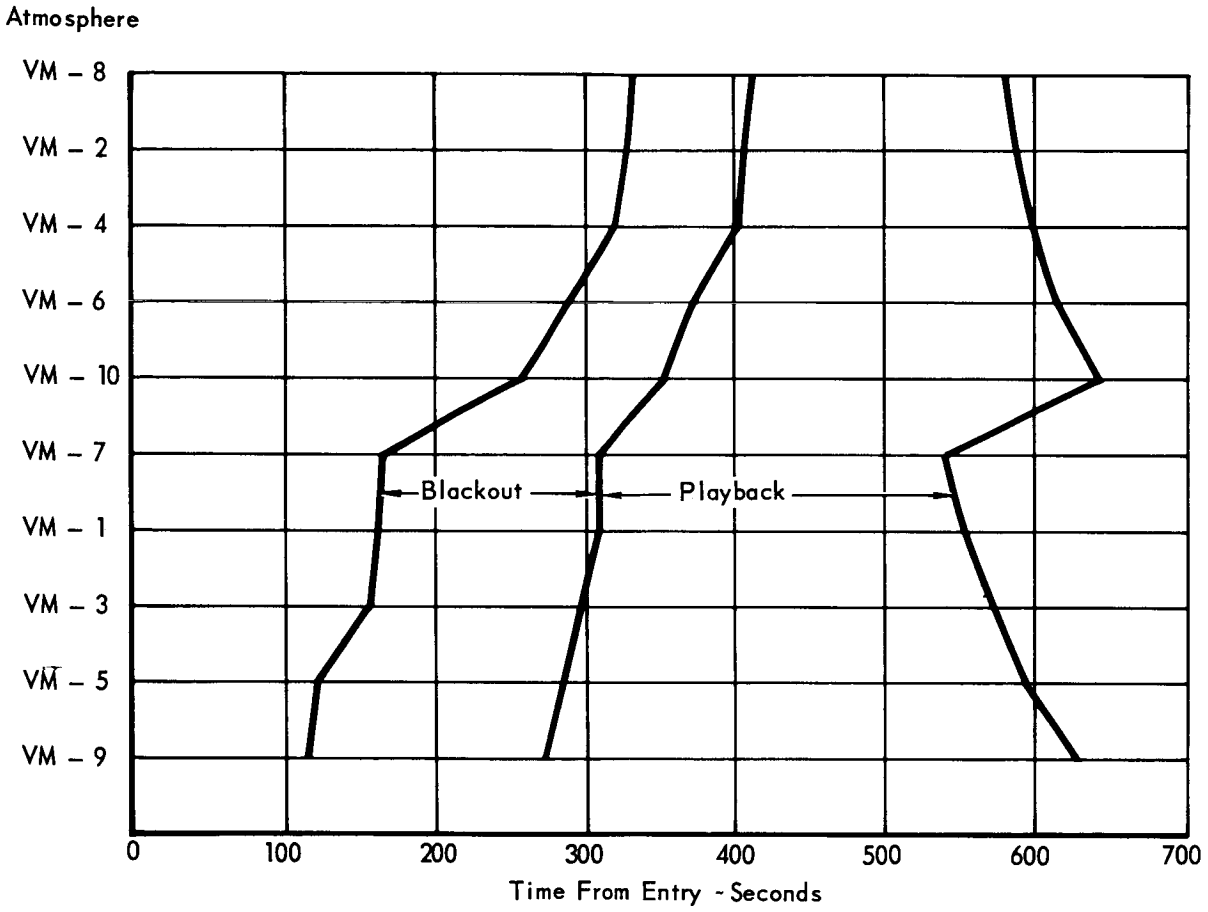

Figure 3.2.2.1–4

BLACKOUT TIMES PREDICTIONS
FAST – STEEP ENTRIES

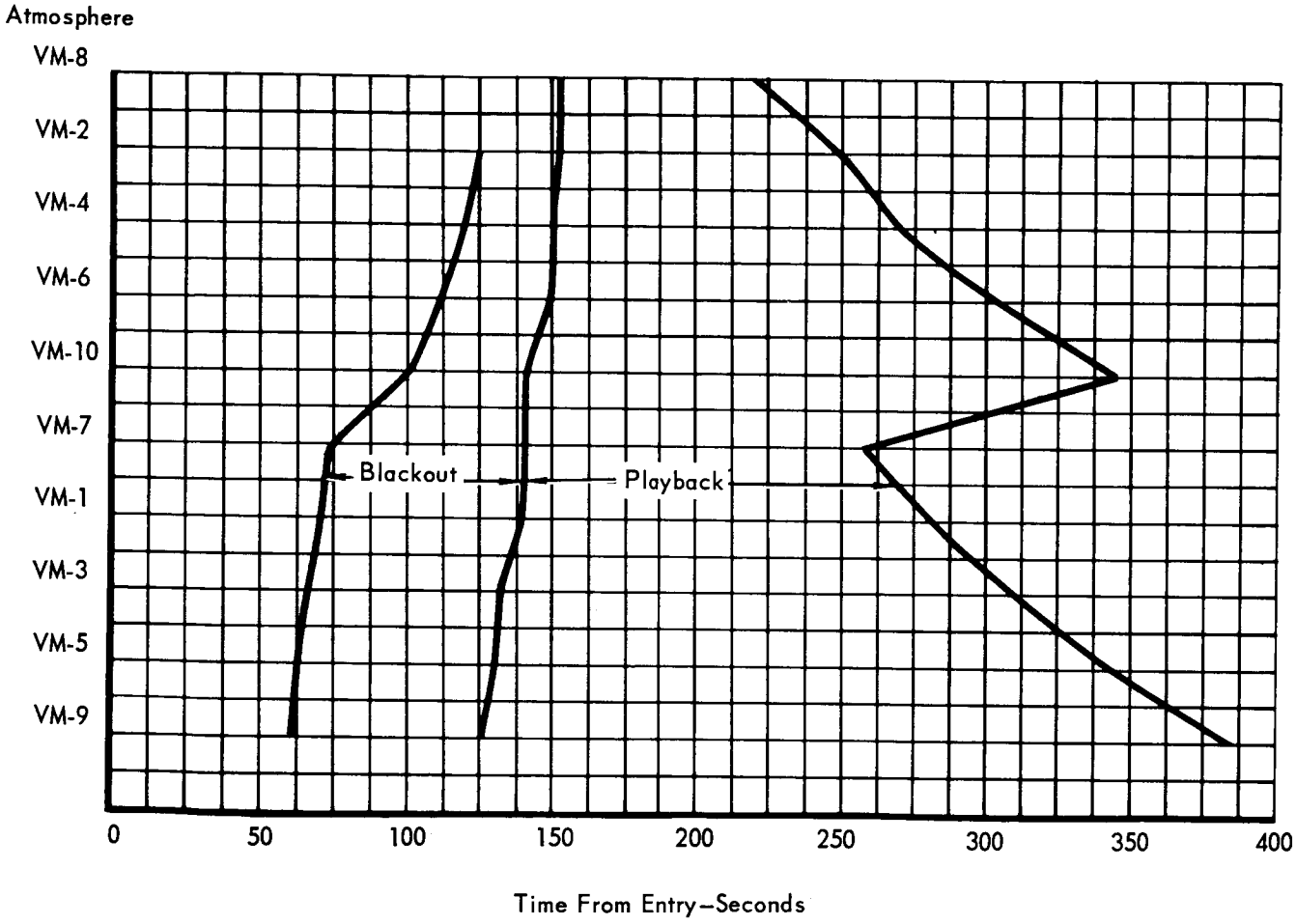

Figure 3.2.2.1–5

employed to minimize the deleterious effects of this interference. Refer to Volume II, Part B Section 5.5, for additional discussion on this topic.

- Terminal Deceleration - The terminal mode begins with separation of the CB from the Aeroshell, and ends with landing. Telecommunication during this mode is similar to that of the entry mode. Only parameter and sampling rates differ.
- Post Landing - The CB relay link continues to operate in the terminal mode after landing until the Spacecraft passes beyond the radio horizon. Shutdown occurs at a programmed time after landing, nominally 10 minutes.

Functions

- Radio Subsystem - The radio subsystem accepts the biphase coded data stream from the telemetry subsystem and uses it to frequency shift key (FSK) two 5-watt transmitters operating at 340 MHz and 400 MHz. The transmitter outputs are connected to three port circulators which provide protection from high VSWR during testing. Each circulator output feeds a pair of directional couplers which monitor forward and reflected power for output power leveling and telemetry. The two outputs are then combined in a diplexer to excite the antenna subsystem.

The two CBS receivers mounted on the Spacecraft detect the signals using wideband, noncoherent techniques. Their outputs are combined in a square-law diversity combiner and connected to the bit synchronizer, where the data are detected with a matched filter. The reconstructed data stream and bit synchronization pulses are then delivered to the data processing equipment. See Figure 3.2.2.1-6.

- Antenna Subsystem - The functional requirement of the CB antenna subsystem is to radiate the output of both CB transmitters (5 watts each) in the direction of the spacecraft. Radiation occurs from separation through descent, entry, and landing and for a brief period after landing. The descent and entry trajectories have been selected to limit the look-angles from the CB to the Spacecraft to within about 90° of the negative roll axis (-Z). Without roll stabilization, the coverage requirement then becomes essentially hemispheric.

The preferred concept for the CB antenna is a single radiator, oriented so that the radiation pattern is symmetrical about the -Z axis. The antenna is a cavity-backed spiral located on the periphery of the CB, as detailed in Part A, Section 5.5.

CAPSULE BUS RADIO SUBSYSTEM FUNCTIONAL BLOCK DIAGRAM

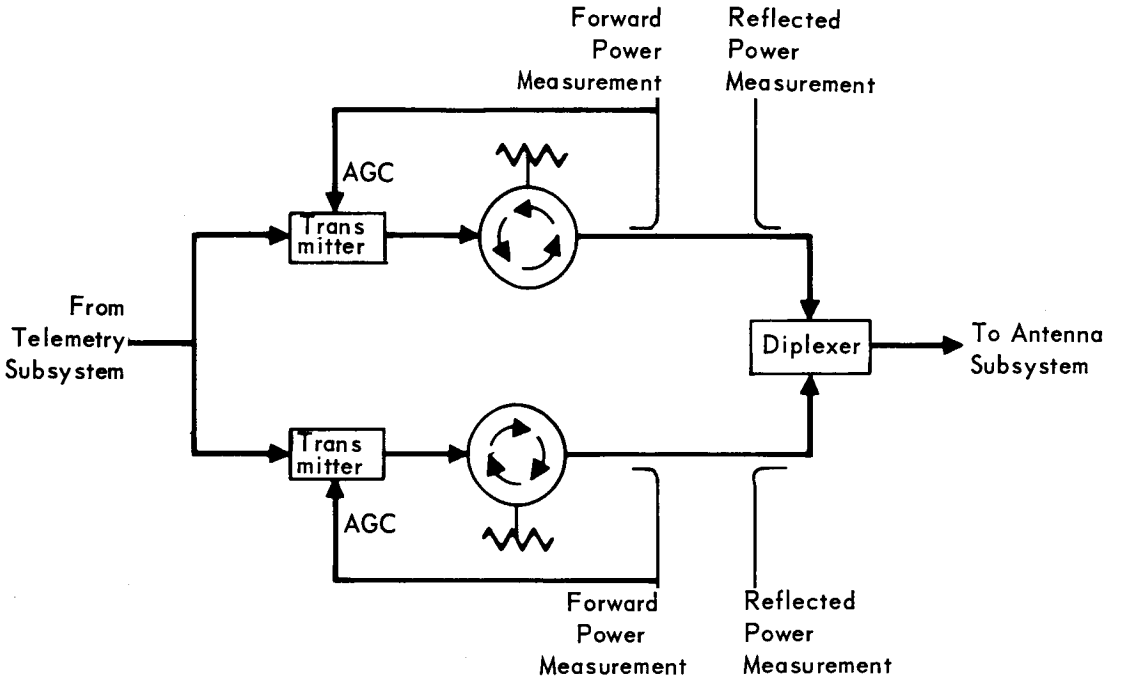

CAPSULE BUS MOUNTED RADIO EQUIPMENT

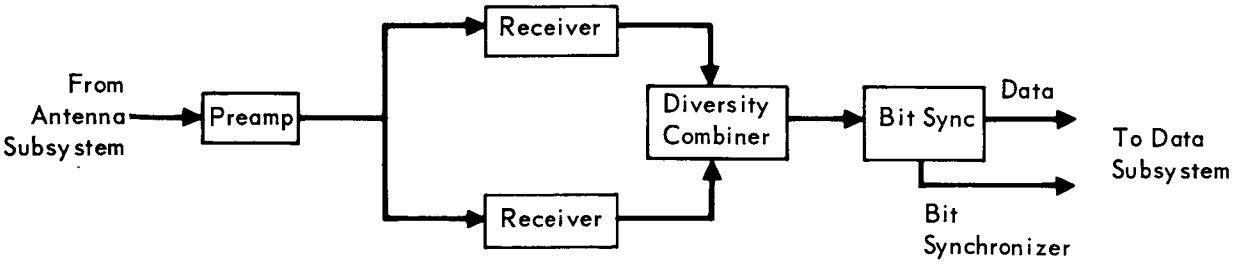

SPACECRAFT MOUNTED RADIO SUPPORT EQUIPMENT

Figure 3.2.2.1–6

The Spacecraft requires an antenna which receives transmissions from the CB. Selection of a landing site from the broad range of landing anomalies requires a broad coverage from the Spacecraft antenna in the plane of the orbit. During descent and entry, the CB, as viewed from the Spacecraft, will transverse a relatively small angle normal to the orbit plane. Narrowing the pattern in this plane is desirable because the added gain will reduce CB transmitter power requirement proportionally. Since the Spacecraft will be aligned with the Sun and Canopus, its longitudinal axis will be skewed with respect to the orbital plane. The radiation pattern required will therefore by skewed with respect to the longitudinal axis of the Spacecraft. The antenna selected is an array of biconical horns which is erected on a boom on the Spacecraft. A cardioid radiation pattern is provided in the orbital plane by proper phasing and spacing of two horns in this plane. In the normal plane the horn pattern is narrowed by addition of another pair of horns in the array. Prior to CB/FSC separation, the antenna will be extended and rotated to the chosen position, compatible with the intended de-orbit conditions. The mast axis cone and clock angle are chosen prior to launch and mechanically fixed. Inflight rotation of the antenna pattern about the mast axis is provided, however, to allow flexibility in the choice of deorbit condition, land site location, and storage provisions.

- o Telemetry Subsystem - A functional block diagram of the CB telemetry subsystem is shown in Figure 3.2.21-7. The basic functions to be performed are those of data acquisition, distribution, and formatting. Performance is controlled directly by a stored-program telemetry programmer which executes mode - switch control per CB Sequencer and Timer commands.

Data acquisition, involving data sampling, analog-to-digital conversion, and buffering, provides for sampling at multiple frequencies in accordance with required sampling rates and multiplexing formats applicable to the six operational modes. Refer to Part B, Section 5.5 for an analysis of required bit rates and mode structure. A special Cruise Commutator performs data acquisition during extended launch and interplanetary cruise periods. This enhances the probability of success of the primary telemetry subsystem by minimizing active time accumulation. The Cruise Commutator will be slaved to FSC control during interplanetary cruise and to CB control during de-orbit and entry. The primary telemetry subsystem is capable of sampling and inter-leaving analog, digital, and time-of-event occurrence data. Accuracy requirements, as shown in Section 5.5 of Part B, permit a 7-bit, analog-to-digital conversion; digital and bilevel event

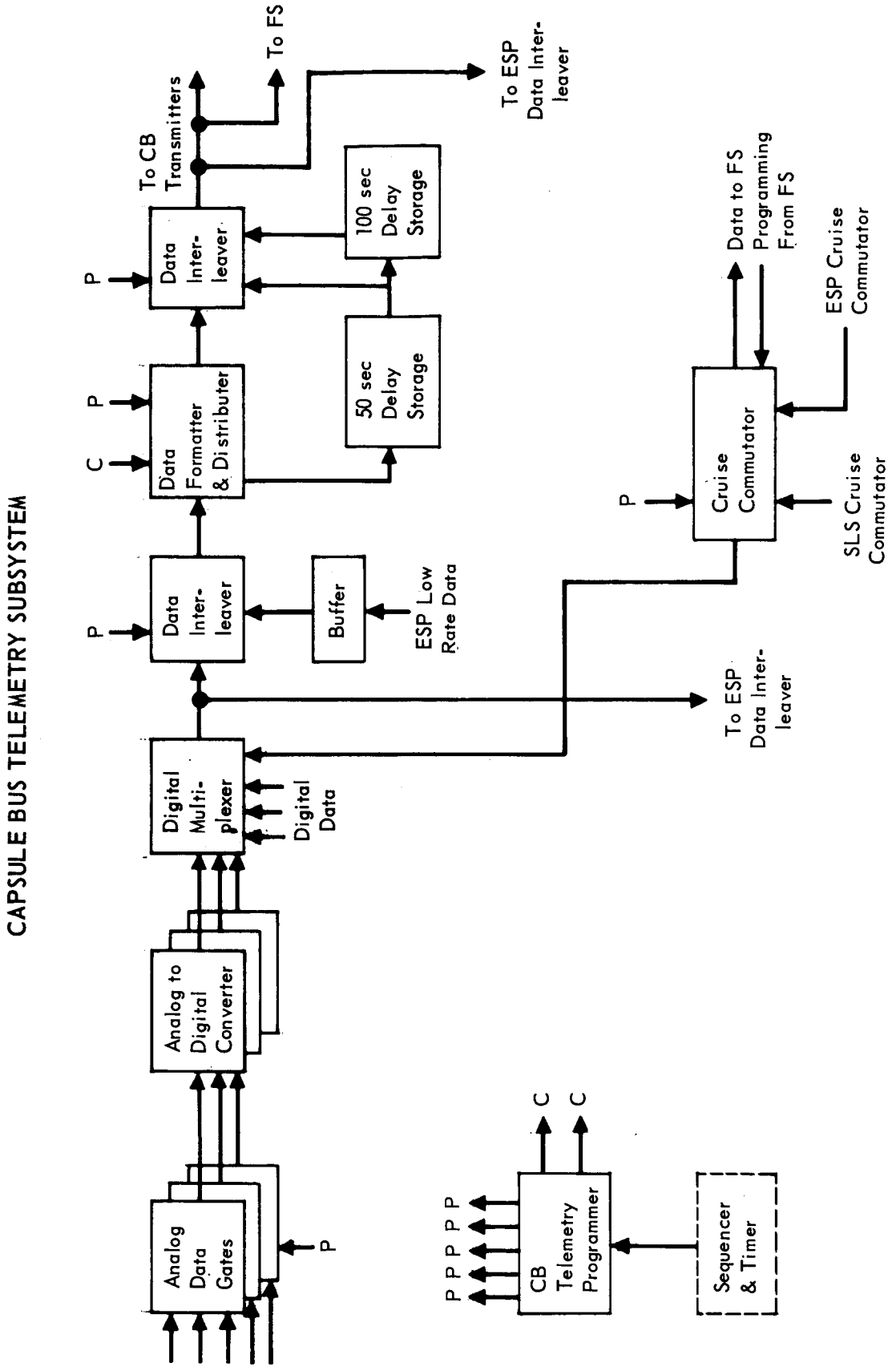

Figure 3.2.2.1-7

measurements will be assembled in compatible 7-bit words. For those events requiring time resolution of less than one sample period, event occurrence will activate a gate allowing the programmer to insert a time word into a 7-bit register for subsequent readout in its allocated frame time slot.

Data formatting is controlled by the stored-program telemetry programmer. The six formats stored in the programmer can be reprogrammed prior to flight or updated via the FSC command system before capsule separation. The resulting system is extremely versatile, capable of accepting both inter-and-intra-mission requirement changes with minimal hardware redesign. The programmable processor concept was chosen as discussed in the trade study, Part B, Section 5.5.

Data distribution and steering are also controlled by the programmer. During atmospheric entry, data at 910 BPS is applied simultaneously to a data interleaver for real time transmission and to a delay storage having taps at 50 seconds and 150 seconds. The real-time data and two delayed data streams are bit interleaved, resulting in a 2730-BPS bit rate applied to the transmitter. The 150-second delay insures continuous CB communication through the worst case Martian atmosphere and entry trajectory and also provides a second order diversity at a time when fading due to multipath is most severe. The 50-second tap insures reception of blackout data from VM-8 entries even if the terminal propulsion system fails. The 50 second delay also provides an additional order of time diversity for much of the CB data.

As shown in Figure 3.2.2.1-7 the CB and ESP data streams have been interlaced to enhance graceful degradation of both systems and provide higher orders of diversity to combat multipath degradation. All CB data at the output of the digital multiplexer are sent to the ESP to be interleaved on the ESP link. Similarily, ESP engineering and low rate science data is buffered and interleaved on the CB link. The CB data, after delay, are again interleaved on the ESP link. Thus, if multiplexers are functioning properly, two independent paths are available for transmission of the data. At first glance the system might appear to be wasteful of bandwidth because each data point is transmitted nine times with a fully operational system; however, as shown in Part B, Section 5.5, this is a gain in reliability and an enhancement of graceful degradation. For post 1973 missions, the additional link capacity is assigned to data growth.

- Command Subsystems - The command subsystem is designed to detect the synchronization and data in the signal received from the Spacecraft command detector. It then decodes the data to establish their validity (i.e.,

proper address, length, format, code, etc.), to determine the type of command received (i.e., discrete or quantitative) and to generate the signals needed to execute the command. Using these execution signals, a discrete command or a quantitative command will be issued to the using subsystem.

The command subsystem consists of a command decoder, located in the canister. The decoder supplies partially-decoded command words destined for the SLS subsystem to the SLS command decoder for further processing. The CB command decoder also supplies quantitative command words to the CB sequencer and timer and to the CB test programmer. Discrete CB commands are executed through the sequencer and timer output matrix.

- o Data Storage Subsystem - The CB Data Storage Subsystem insures uninterrupted CB diagnostic information through entry RF blackout. Studies have shown that even though it is not feasible to operationally detect when RF blackout starts and stops, it is possible to make a reliable prediction of the blackout duration. The maximum blackout interval was found to be 150 seconds for the range of atmospheres and compositions, including the effects of ablation products. The technique employed to avoid loss of entry data is to delay the data 150 seconds in a magnetic core memory and then bit interleave delayed data with real time data. This implies that the period from the end of blackout to touchdown must be more than 150 seconds, to insure that all data are transmitted before landing.

Our research shows that for the atmosphere and trajectory condition leading to a 150-second blackout the period from the end of blackout to touchdown is indeed greater than 150 seconds. However, for other entry conditions, the period from end-of-blackout to touchdown is less than this.

To cover all situations, two delay periods are provided, nominally 50 seconds and 100 seconds. The output of the 50 sec delay feeds the 100 sec delay and the delay interleaver. The output of the 100 sec delay is also fed to the interleaver, which combines the real-time bit streams with the two delayed bit streams. The 50 sec memory is a 4-wire, coincident current, "3D" stack of 20-mil lithium cores. Twenty three planes, of 2048 bits each, are used to provide 47,104 bits of storage. The 100 sec memory is similar, with 23 planes of 4096 bits each, for a total of 94,208 bits.

3.2.2.2 Electrical Power - The electrical power subsystem of the Capsule Bus provides the following:

a. Power for Capsule Bus equipment operation, from preseparation warmup to shutdown after landing.

b. Power for Capsule Bus in-flight monitoring during cruise periods when Flight Spacecraft power is not available to the Flight Capsule.

c. Regulation of the Flight Spacecraft (FSC) power provided to the Flight Capsule during cruise and isolation of the Flight Capsule (FC) grounding system from the Flight Spacecraft grounding system.

During cruise, 200 watts of Spacecraft power is utilized for in-flight monitoring of FC systems, FC battery charging, and thermal control. The Capsule Bus (CB) Electrical power subsystem provides approximately 1700 watt hours of electrical energy for equipment operation during descent to the Martian surface.

3.2.2.2.1 Equipment Description - A block diagram of the CB electrical power subsystem is shown in Figure 3.2.2.2-1. The main CB battery is a sealed, manually activated Ag-Zn battery. Two dc-to-dc converters (one redundant), located on the aft canister, regulate the raw dc power from the Spacecraft and provide isolation between the Spacecraft electrical grounding system and the FC electrical grounding system. Three automatically activated Ag-Zn batteries are used for pyrotechnic initiation and for supplying the high current required by the attitude control thrusters and descent engines. Two batteries are sufficient to satisfy these requirements. The Power Switching and Logic Unit (PS&L) contains the power distribution busses and the voltage sensing and switching logic circuits required for proper subsystem operation.

3.2.2.2.2 System Operation - During the launch phase and until the solar panels are deployed on the Spacecraft, the Flight Capsule operates on internal power. Power from the main CB battery is used for in-flight monitoring.

When raw dc power becomes available from the Spacecraft, it is regulated by the dc to dc converter and is distributed from the CB to all Flight Capsule elements for in-flight monitoring, thermal control heaters, and battery charging.

During midcourse maneuvers, Spacecraft power to the FC is turned off and the Capsule Bus switches to internal battery power to continue in-flight monitoring in the Capsule Bus and Sterilization Canister. When Spacecraft power is again available, the main CB battery is switched back into the charge mode.

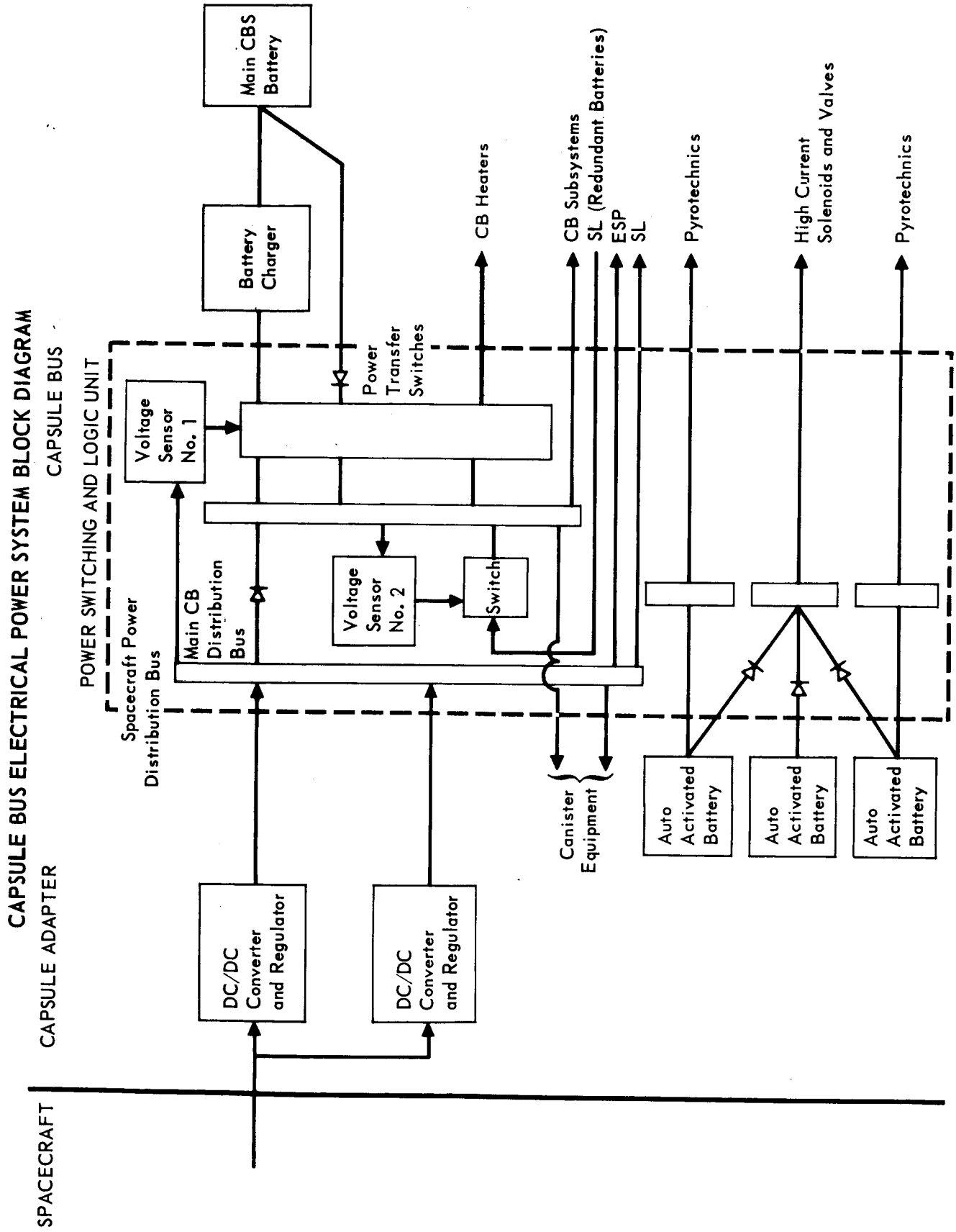

Figure 3.2.2.2-1

Preseparation checkout of the CB is performed using Spacecraft power for those tests requiring less than 175 watts. Transfer to internal power for the remainder of the tests is controlled by the test programmer. At termination of preseparation checkout, the test programmer switches the battery back into the charging mode, and power is again supplied from the Spacecraft.

The CB is switched to internal power by the CB Sequencer and Timer one hour before separation. The automatically activated batteries are activated by command from the Sequencer and Timer. Power for the squibs in these batteries is derived from capacitors charged from the main CB battery. The main CB battery provides power to the CB electronics equipment from preseparation until CB shutdown. Prior to Sequencer and Timer shutdown, power from the main CB battery is made available to the Surface Laboratory. The automatically activated batteries in the CB provide power for pyrotechnic operation (two independent batteries) and for the high-current equipment, such as the attitude control thruster drivers, the terminal deceleration engine solenoids, and flow control valves (all three batteries).

3.2.2.2.3 Major Trade Summaries - Trade studies in the Capsule Bus electrical power subsystem area included (1) the type of power source to be used, (2) methods of providing redundant battery capacity for the Capsule Bus, and (3) the grounding approach to be used in the Flight Capsule. A trade study summary is shown in Figure 3.2.2.2-2.

NOTE 1. For justification of our selection of the preferred design concept, refer to Volume II, Part B, Section 5.6.

NOTE 2. For additional description of the Electrical Power Subsystem, refer to Volume II, Part C, Section 7.0.

CB ELECTRICAL POWER SUBSYSTEM TRADE STUDY SUMMARY

STUDY	ALTERNATIVES	REASONS FOR SELECTION
Power Source	Manually Activated AgZn Battery and Auto Activated AgZn Batteries Automatically Activated AgZn Battery AgCd Battery plus Auto Activated AgZn Batteries NiCd Battery Plus Auto Activated AgZn Batteries Hydrazine Powered Turbine Alternator plus Auto Activated AgZn Hydrazine Powered Turbine Alternator	Weight No Surface Contamination
Redundant Power for CB	Redundant Battery in CB Redundant Power from SL	Weight
Alternate Grounding Approaches	Single Point Ground in FC Isolated from Spacecraft Ground Multiple Grounds in FC Isolated from Spacecraft Ground Switch from Spacecraft Ground to FC Structural Ground at FC/FSC Separation	Interface Complexity Design Flexibility Minimize EMI

Selected Alternative

Figure 3.2.2.2–2

3.2.2.3 Sequencing and Timing - The Sequencer Subsystem affords the control by which the Capsule Bus (CB) fulfills the functional requirement to be a fully automatic device throughout the CB operational mission. This subsystem performs on necessary on-board sequencing and timing, without primary Earth commands. The two major portions of the subsystem are (1) the Sequencer and Timer (S & T), and (2) the Test Programmer (TP).

Sequencer and Timer - Fulfillment of the sequential control and timing function during normal mission operations without Earth command intervention is assumed to be a prime S & T requirement. However, in-flight Earth commands are needed to update the stored S & T sequences if off-nominal Mars orbit conditions are detected, or if the prelaunch definition of these nominal Mars orbit conditions is altered after launch. In addition, during the CB mission the S & T is required to perform the following functions:

- Provide on-board time reference for time-based control of CB subsystems.
- Provide reference clock frequencies for interfacing CB subsystems, e.g., telemetry synchronization.
- Provide decoding and storage capabilities for non-real-time (delayed) commands for use as time-based control of CB subsystems. The information contained in this storage must be capable of being updated or modified both prior to launch and in-flight.
- Provide output driver/circuit closure signals as required for use as time-based control of CB subsystems.
- Insert or update adjacent subsystem time-based digital data words, e.g., the de-orbit velocity magnitude for the guidance control computer.

The Sequencer and Timer mission requrements are summarized by mission phase in Figure 3.2.2.3-1. Requirements for S & T interfaces with adjacent capsule subsystems and sensors are shown in Figure 3.2.2.3-2.

- Operating Description - The Sequencer and Timer is in effect a special purpose digital programmer (that acts on variable data with a hard wired program), and an associated master clock with subdividing counters to yield the required reference clock frequencies. The digital words stored in the memory may be inserted, verified and updated (modified) both during prelaunch checkout and prior to separation from the FSC. In general, a

CB SEQUENCER AND TIMER (S & T) MISSION REQUIREMENTS

MISSION PHASE	DURATION	INPUT SIGNALS	OUTPUT SIGNALS
Prelaunch	– Weeks	OSE Controls	S & T Test (Load Memory)
Launch/Transit	6 Months	None	None (Retain Memory)
Preseparation Checkout	30 to 90 Minutes	Test Controls	S & T Test
Preseparation Activation	230 Minutes	Update Memory as Required Preseparation Start	Verify Memory Energize CB Subsystems (16 Discretes, 10 Data Words)
Separation	20 Minutes	Separation Sensor	CB Control (3 Discretes)
Deorbit Maneuver	1 Minute	None	CB Control (7 Discretes)
Deorbit Coast	1 to 6 Hours	None	CB Control (3 Discretes)
Pre-entry	8 Minutes	None	CB Control (5 Discretes)
Entry	8 Minutes	Acceleration Sensor Radar Altimeter	CB Control (4 Discretes)
Thrust/Descent	2 Minutes	Radar Altimeter	CB Control (17 Discretes)
Post Landing Control	10 Minutes	Impact Sensor	CB Control (6 Discretes)

Figure 3.2.2.3–1

CB S & T INTERFACE DIAGRAM

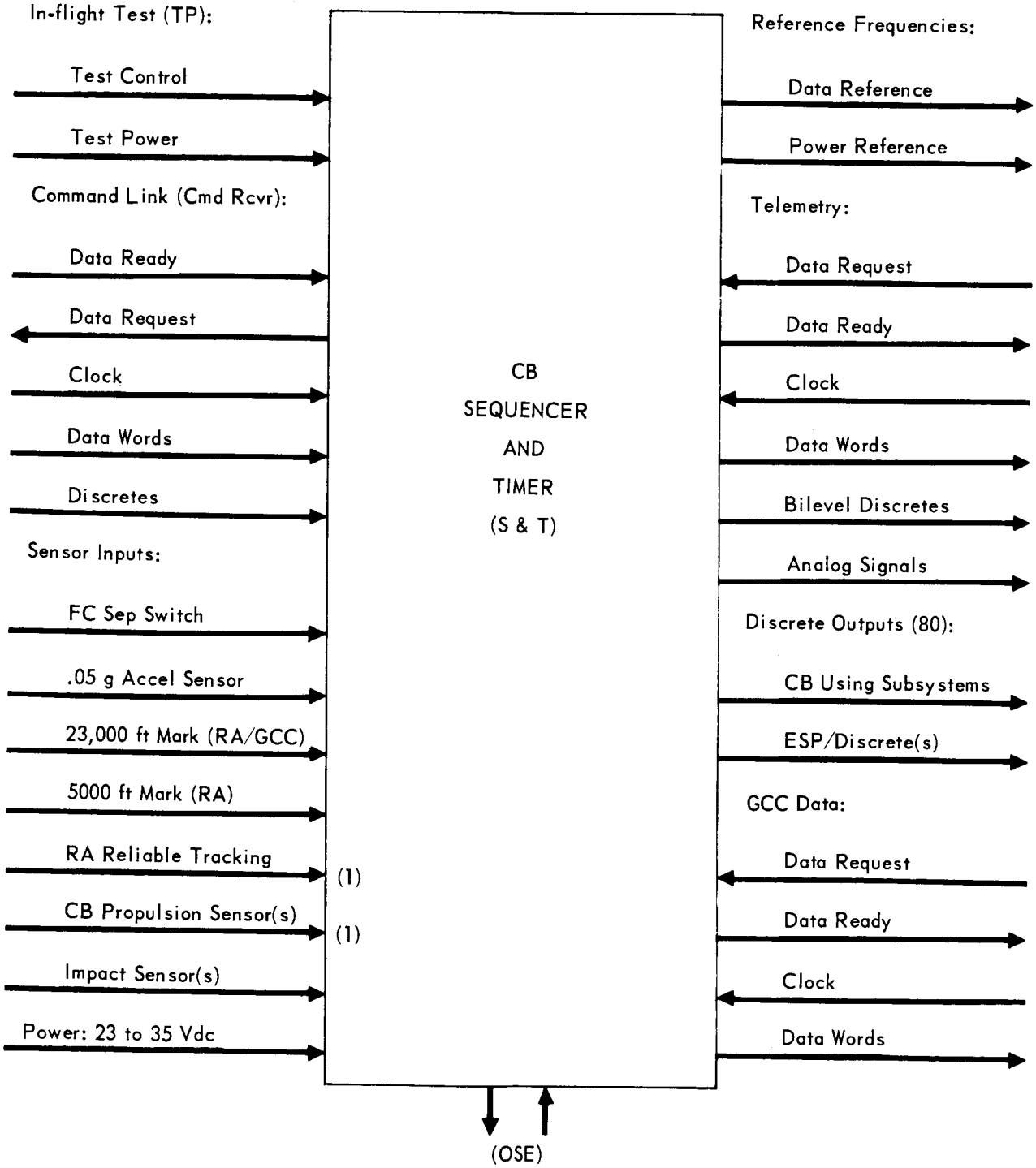

Figure 3.2.2.3–2

digital word stored in the S & T memory represents the time delay from a specified sensor input to the corresponding line driver output. After this sensor input has occurred, this word is counted down at a rate equal to the required time resolution. The instantaneous value of the data word is the time-to-go to the desired discrete output. When the word has been decremented to zero, the associated output occurs. Digital data words, on the other hand, which are not to be drcremented, are stored at a constant value until transferred to the requesting subsystems at their commands.

The S & T provides the on-board means to supply backup redundancies to the separation-to-landing mission segment, and supplies a "degraded mode capability" in the unlikely case of primary system failures, as follows:

- The pre-launch-programmed S & T parameters allow nominal mission functioning even if the Command Link cannot update for detected flight or Mars orbit anomalies.
- Temperature of the sensing de-orbit thrust motor prior to separation and via telemetry allows a back-up thrust termination time to be calculated on Earth and updated into the S & T to provide accurate thrust cutoff even if the acceleration sensor fails to detect the required de-orbit thrust magnitude.
- The S & T turns on the landing radar "as a delay" from the measured entry acceleration level if the radar altimeter does not indicate that reliable tracking has occurred.

Performance Description - The Capsule Bus S & T provides timing and sequencing control signals throughout the Flight Capsule mission as summarized in Figure 3.2.2.3-3. It is expected that the time of occurence of approximately one half of the 80 time-based stored discretes listed in Figure 3.2.2.3-3 may have to be updated or modified after launch. These discretes may be divided into fine and coarse commands, separated by magnitude and accuracy of time delays as follows:

- Fine - 0 - 30 minutes, ± 0.05 second accuracy.
- Coarse - 0 - 8 hours, ± 1 second accuracy.

Reference clock frequencies are supplied from pre-separation START until post-landing shutdown, and are presently supplied as 1.0 KHz and 38.4 KHz, +0.01% each. The digital data words provided as outputs to adjacent subsystems are up to 16 bits long, and are supplied serially as strobed by the using subsystems

CB S&T OUTPUT SUMMARY

S&T OUTPUTS (TYPE) / TO INTERFACING SUBSYSTEMS	LINE DRIVERS (BILEVEL) 1		DATA TRANSFER (DIGITAL) 2	DATA TRANSFER (ANALOG) 3
Guidance and Control	7	(11)	10	1
Power	16	(20)		
Propulsion	14	(18)		
Pyrotechnic	12	(16)		
Radar Altimeter (& Landing Radar)	3	(7)		
Telecommunications	4	(8)	130	3
Totals	56	(80)	130	4

1 Currently allocated outputs compared to those tentatively allotted (includes growth allowance or excess S&T output capacity).

2 Memory telemetry requirement to read out entire stored sequence for Earth verification includes G & C digital data.

3 Includes clock or reference frequencies, and telemetry monitoring signals.

Figure 3.2.2.3–3

at their clock rates.

Physical Characteristics - The S & T, defined in detail in Part B (section 5.7, subsystem optimization studies) and Part C (section 8, subsystem functional description) of Volume II, has the following approximate physical characteristics.

- o Size - 10" x 6" x 6" (360 in ^{3}).
- o Weight - 13 pounds
- o Power - Power dissipated in the S & T is estimated to be approximately 14 watts. This includes 4 watts in the memory, 5 watts in the non-memory circuitry, and 5 watts in the power supply. It does not include any power transmitted by the S & T and dissipated in its loads.

Major Trade Summary - The alternates studied and the major factors involved in the selection of memory storage and timing techniques are shown in Figure 3.2.2.3-4. The rationale of this trade study summary is included in Section 5.7, Part B of Volume II.

Test Programmer - The purpose of the test programmer is to establish the operational readiness of the Capsule Bus and Entry Science Package equipment prior to their utilization. The prolonged interplanetary cruise period during which this equipment is inactive in the environment of deep space necessitates an in-flight check on operational readiness. Systems designed for deep space missions of long duration include, by necessity, functional redundancy. In-flight check-out by the test programmer is designed to determine what functionally redundant capability the system still possesses so that the mission can be run using the functional path most likely to succeed. Check-out requires perturbation of the system to stimulate its operation in a manner which simulates the mission as closely as practical. In-flight monitoring of the system's reaction to the perturbation is then used to provide a closed-loop check-out. The check-out is designed to provide (1) performance analyses, (2) anomaly detection, (3) failure diagnoses and (4) calibration and end-to-end performance checks on the subsystems.

The test programmer provides various subsystems with "discretes" to control their in-flight testing. It receives inhibit signals from the subsystem under test to insure that control discretes are not generated prematurely. The testing sequence generated by the test programmer is a stored program updateable via the command link. The CB test programmer controls the testing of Entry Science Package (ESP) equipment and maintains on-off control of the Surface Laboratory test programmer. The CB test programmer is activited by the Spacecraft on earth

SEQUENCER AND TIMER (S & T) TRADE STUDY SUMMARY

S & T ELEMENT	ALTERNATE TECHNIQUES	MAJOR FACTORS FOR SELECTION
Memory Storage Technique	Magnetic Core	Non-volatile memory
	Magnetic tape/drum	Less complex
	Semiconductor devices	More reliability, smaller, lighter and consumes less power
	Advanced static magnetic devices	Survives Voyager environment/ sterilization
		Lower development cost
		Better development status
Timing Technique	Decrementing Method	Sufficient speed and accuracy
	Incrementing Method	Less complex
		More reliable
		Easier design implementation
		Best increased capacity ability
		Greater flight experience

Denotes Selected Technique

Figure 3.2.2.3–4

command. It first completes a self-test mode and then automatically steps through a pre-programmed subsystem-by-subsystem checkout sequence.

NOTE 1. For additional justification of our selection of the preferred design concept, refer to Volume II, Part B, Section 5.7.

NOTE 2. For additional description of the Sequencer Subsystem, Refer to Volume II, Part C, Section 8.0.

3.2.2.4 Guidance and Control - The individual guidance activities that result in a soft touchdown of the Capsule Lander on Mars, are summarized in Figure 3.2.2.4-1. The Lander mission starts when the Guidance and Control Subsystem (GCS) is updated by the Flight Spacecraft immediately before the Capsule Bus (CB) is released. The Capsule Bus is given a small impulse at separation which insures that it will drift clear of the Flight Spacecraft, and then is turned to point the de-orbit motor in the proper direction for the deflection maneuver. When the separation distance is 300 meters, the de-orbit motor is fired so as to put the Capsule Bus onto a descent trajectory. The CB is turned again after de-orbit to an attitude that will produce zero angle of attack at entry. Because entry may be several hours away, and because the thermal isolation of the canister has been terminated, a slow roll of four to five revolutions per hour is initiated to equalize temperatures throughout the structure. The CB trims to zero angle of attack at entry, and attitude oscillations are actively damped. The parachute is deployed at 23,000 feet, in order to decelerate the Lander to a speed acceptable to the terminal guidance program, and the Aeroshell is released at 18,000 feet. At 5,000 feet, the terminal propulsion engines are started and the Lander separates from the parachute. Lander velocity and attitude are actively controlled down to 10 feet. The engines are shut down at 10 feet, and the Lander free falls to the surface.

The principal guidance and control performance capabilities that are needed to carry out this mission sequence are:

- Maintain an attitude reference
- Stabilize the Capsule Bus at the desired attitude
- Turn the Capsule Bus to pre-programmed orientations
- Control Lander attitude and velocity

In addition, the GCS must meet several mission constraints, which include:

- The angular error of the de-orbit velocity increment must be less than 0.86 degree per axis.
- Touchdown velocity components must be less than 25 feet/second (vertical), and 10 feet/second (horizontal).
- The equipment must be sterilized and operate without adjustment after six months of transit storage.
- The GCS electronic equipment should be standardized for all missions through 1979.

MAJOR GUIDANCE AND CONTROL EVENTS

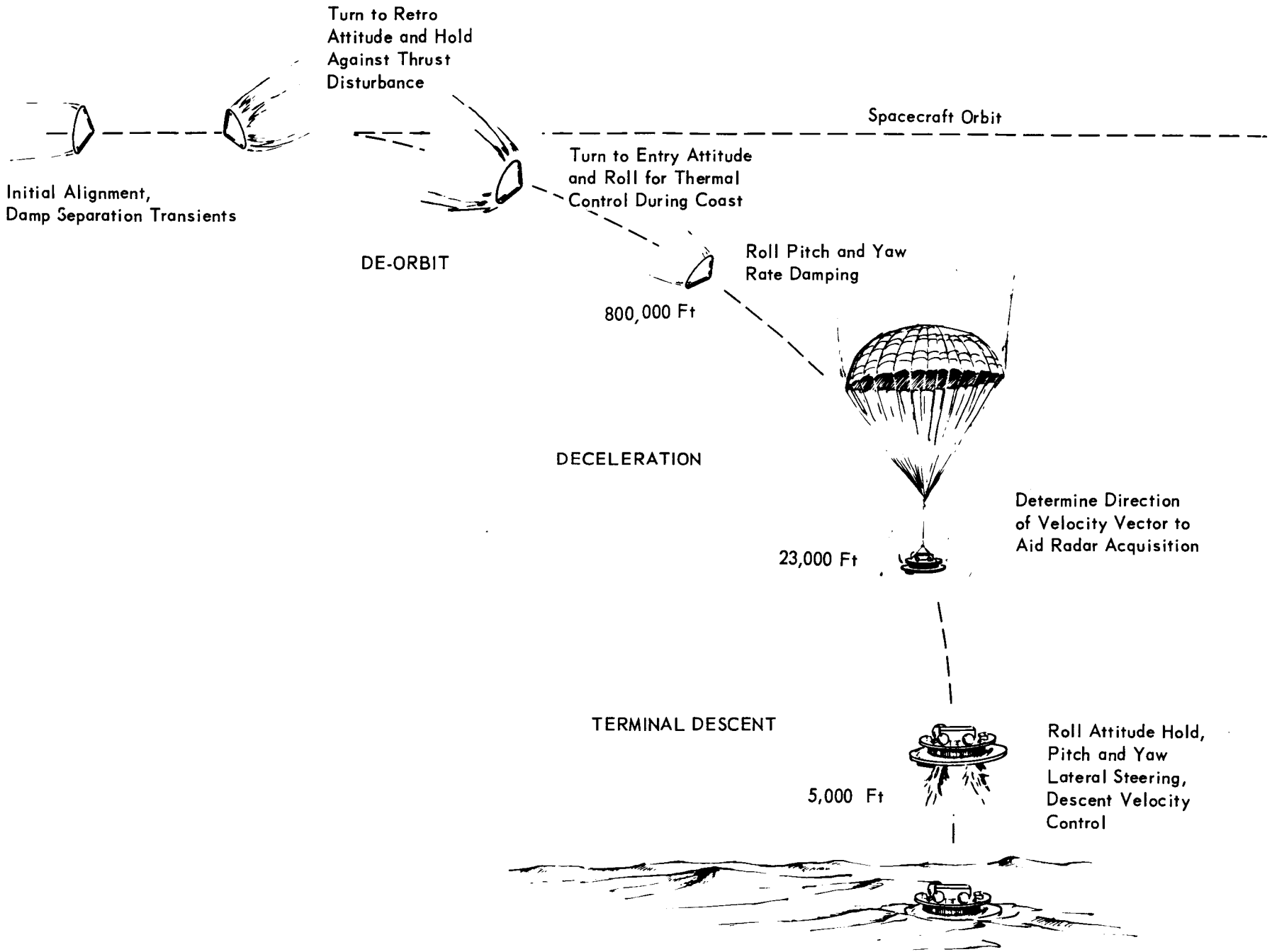

Figure 3.2.2.4–1

As the preferred Flight Capsule design evolved, other subsystems placed constraints on the GCS. These subsystems constraints are:

- o Use of RCS for separation requires inverse attitude control logic capability.
- o Selection of solid retrorocket with thrust termination capability precludes use of proportional thrust vector control and reduces useful de-orbit error budget.
- o Slow roll for thermal control requires continuous roll rate command capability.
- o Use of radar as terminal guidance system sensor constrains lateral steering loop design, and requires incorporation of acquisition mode in guidance programs.
- o Use of throttleable engines for both attitude and velocity control requires thrust signal mixing capability.

The GCS that was designed to meet these requirements and constraints uses the conventional concept of an autopilot operating on guidance sensor data to develop guidance and stabilization commands that are transmitted to the various propulsion subsystems for execution.

3.2.2.4.1 GCS Physical Characteristics - Inertial motion sensors and a digital computer are the elements that comprise the two subassemblies of the GCS. One subassembly package is the Inertial Measuring Unit (IMU), and the other is the combined Guidance and Control Computer (GCC) and Guidance Power Supply (GPS). Figure 3.2.2.4-2 summarizes their physical characteristics.

The IMU is a rigid, machined block of aluminum which holds three floated rate integrating gyros and one longitudinal (Z-axis) accelerometer. The gyros use gas spin bearings that are insensitive to the sterilization process. These bearings are similar to those of the Honeywell GG159 production gyro, which has been used in orbit, and has also been tested at sterilization temperatures. The gyros and accelerometers are pulse rebalanced to interface with the computer.

The GCC is a general purpose machine. It has an eight microsecond add time, and can accommodate a 4,000 word program. Parallel arithmetic is used throughout.

BASIC PHYSICAL CHARACTERISTICS OF THE GUIDANCE AND CONTROL SUBSYSTEM

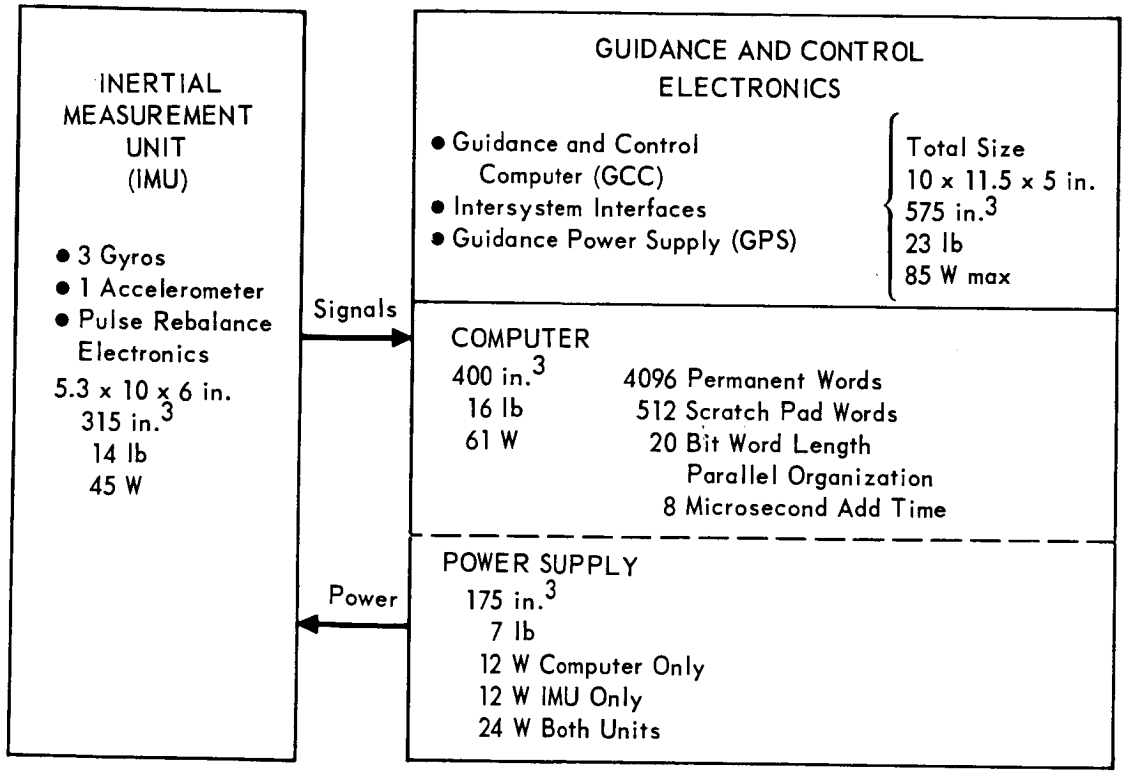

Figure 3.2.2.4–2

The power supply converts Lander dc power to the frequencies and voltage levels used by the GCS. It also regulates against power fluctuations and isolates the loading circuits from each other. The inertial sensor pulse rebalance electronics are located in the IMU. All other signal processing is accomplished within the GCC.

3.2.2.4.2 Interfaces - Total de-orbit and landing system operation includes the Radar Landing, Reaction Control, De-Orbit Propulsion, Descent Propulsion, and Sequencer and Timer Subsystems, as well as the GCS. The interfaces between the GCS and these other subsystems occur at the GCC, and are identified on Figure 3.2.2.4-3.

3.2.2.4.3 Operation During Orbit and Entry - Several attitude frames are shown in Figure 3.2.2.4-4 and are used throughout the mission.

Sun-Canopus:	This is an absolute inertial frame which establishes the initial orientation of the Flight Spacecraft and Capsule Lander body axes.
Body Frame	This is the physical orthogonal frame made up of the Lander body axes.
Inertial Reference Frame	This is a non-physical inertial frame that represents the desired current orientation of the body axes. It is initially aligned to the Sun-Canopus frame.
Computed Frame	This is the computed estimate of the current inertial frame, and is defined in terms of the current rotation existing between the computed frame and the body axes. Euler angles are used to define small rotations and direction cosines are used to describe large rotations.

The functional organization of the guidance computer program is described at the top of Figure 3.2.2.4-5. The computed frame is aligned to the inertial reference frame by setting the computed Euler angles to zero before the Capsule Bus separates from the spacecraft. After separation, departures of the Capsule Bus body axes from the inertial reference frame are sensed by the gyros, whose outputs are used to update the Euler angles. These angles are applied as attitude errors to the RCS thruster logic, which fires the thrusters, returning the

FUNCTIONAL INTERFACES OF THE GUIDANCE AND CONTROL SUBSYSTEM

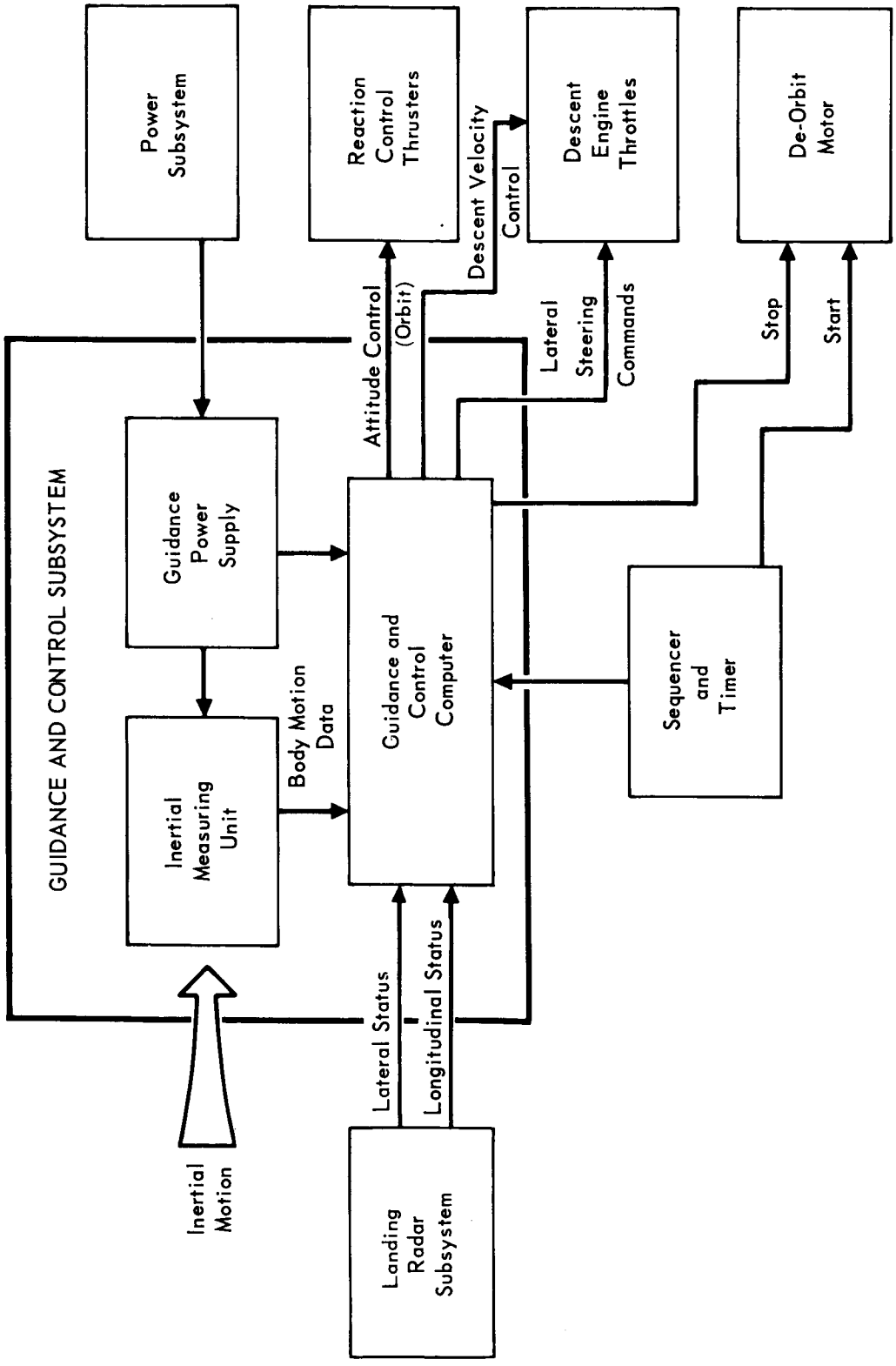

Figure 3.2.2.4-3

SIMPLIFIED REPRESENTATION OF ATTITUDE REFERENCE FRAMES

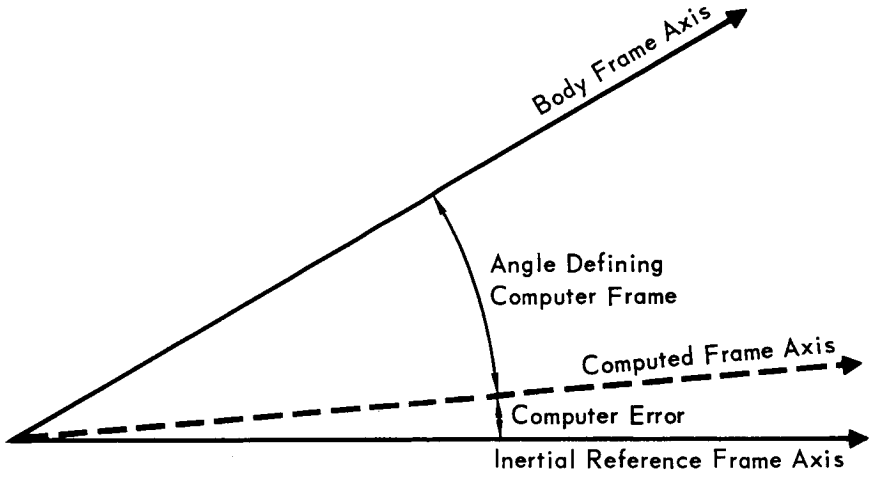

Figure 3.2.2.4–4

FUNCTIONAL ORGANIZATION OF THE GUIDANCE COMPUTER PROGRAM

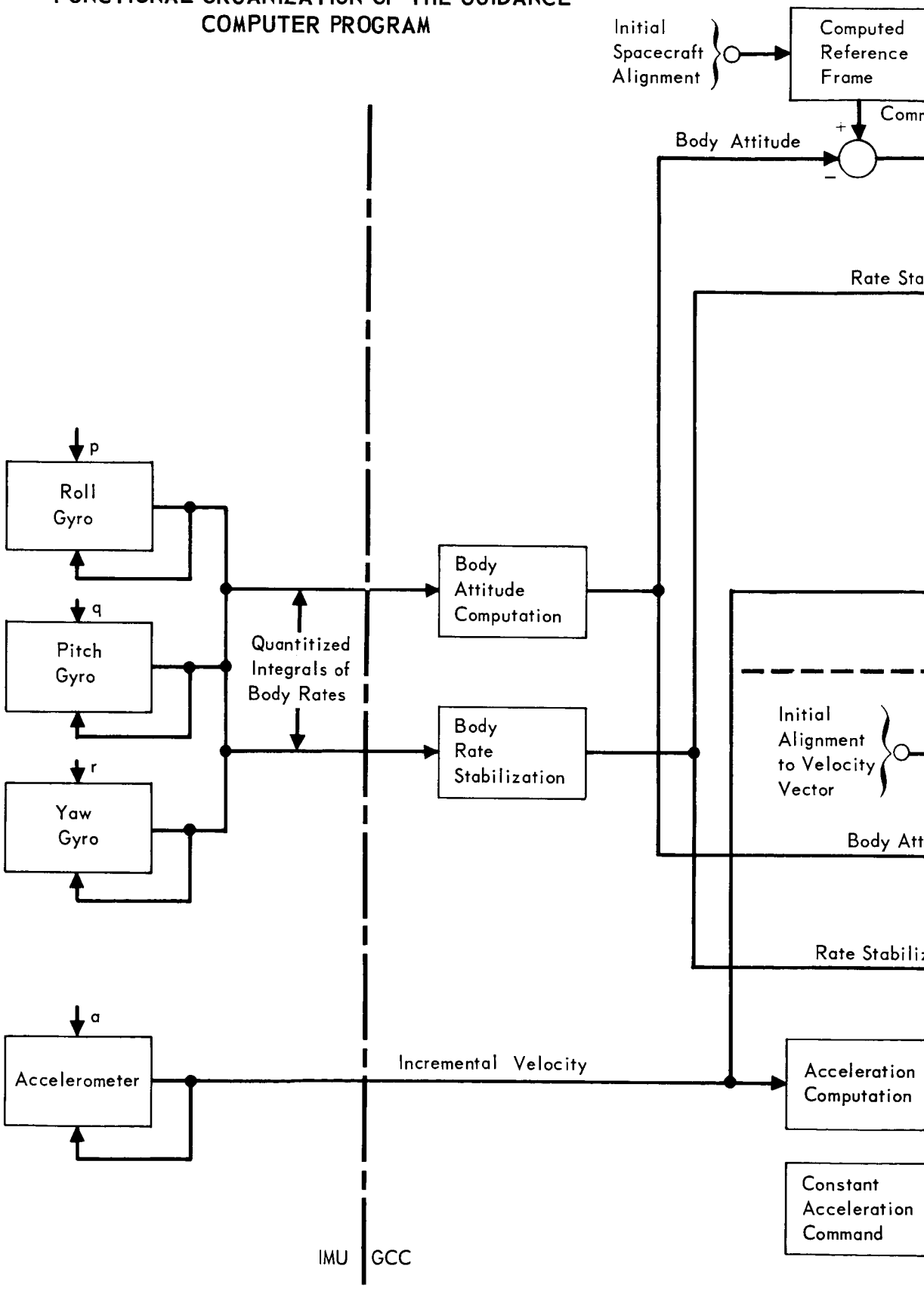

Figure 3.2.2.4–5

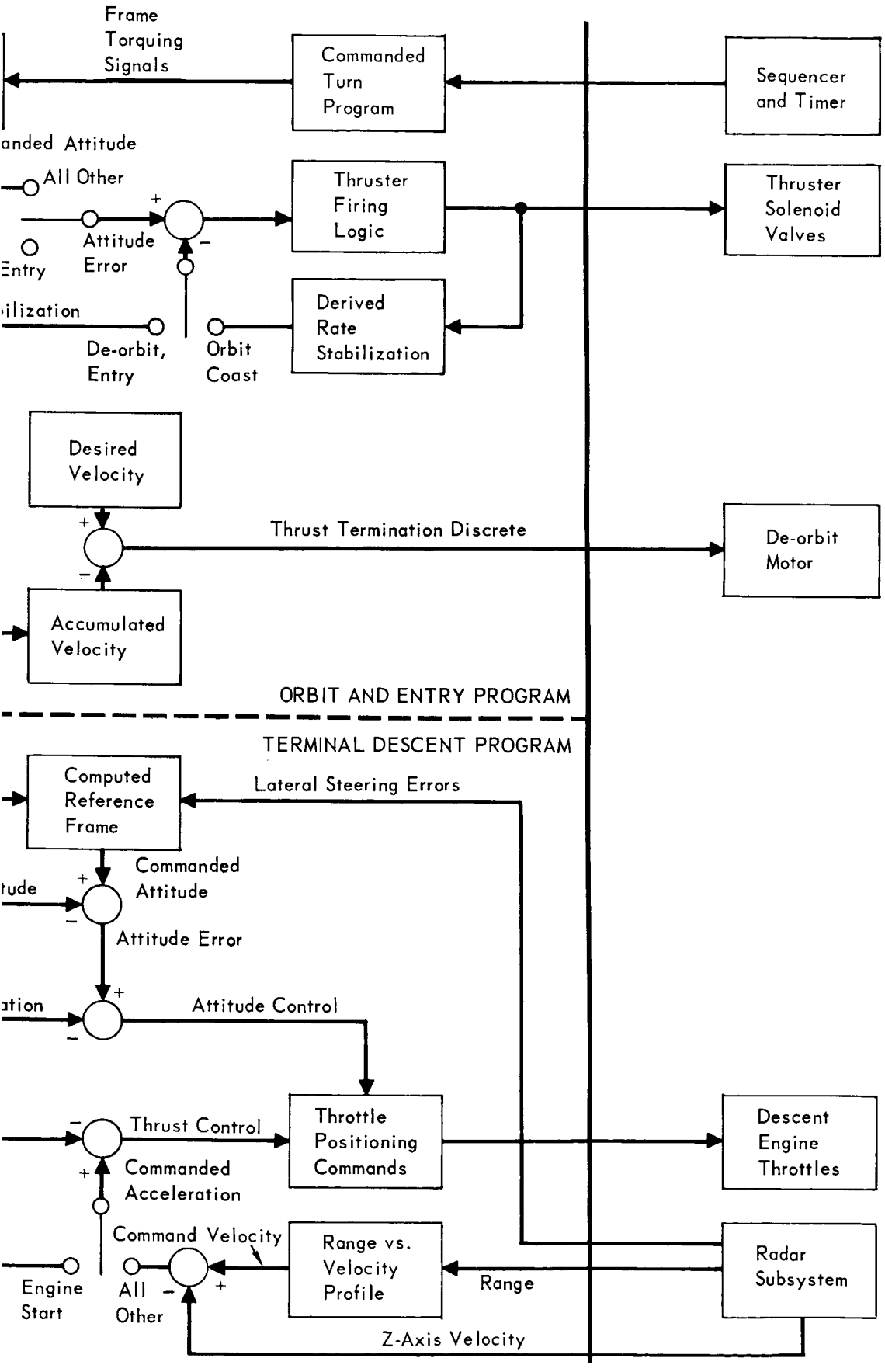
Frame
Torquing
Signals
Commanded
Turn
Program
Sequencer
and Timer
anded Attitude
All Other
Thruster
Firing
Logic
Thruster
Solenoid
Valves
Attitude
Error
Entry
ilization
Derived
Rate
Stabilization
De-orbit,
Entry
Orbit
Coast
Desired
Velocity
Thrust Termination Discrete
De-orbit
Motor
Accumulated
Velocity
ORBIT AND ENTRY PROGRAM
TERMINAL DESCENT PROGRAM
Computed
Reference
Frame
Lateral Steering Errors
Commanded
Attitude
tude
Attitude Error
ation
Attitude Control
Thrust Control
Throttle
Positioning
Commands
Descent
Engine
Throttles
Commanded
Acceleration
Command Velocity
Range vs.
Velocity
Profile
Radar
Subsystem
Engine
Start
All
Other
Range
Z-Axis Velocity

Capsule Bus to the reference attitude. Derived rate, obtained by integrating the thruster firing commands, is used for stabilization. In order to conserve power during the long descent from orbit, the derived rate and thruster firing logic are functionally self-sufficient, so that the remainder of the computer can be turned off.

Programmed turns are accomplished by torquing the computed reference frame at the desired rate. This develops an attitude error signal which, through the RCS drives the Capsule Bus, so that it will follow the computer frame to its final position. Multi-axis pointing maneuvers are carried out one axis at a time in order to reduce the computation burden. Maneuver timing is controlled by the Sequencer and Timer. True body rates sensed by the gyros are used for stabilization during de-orbit burn and during entry, because derived rate stabilization is ineffective in the presence of the high external disturbance torques that occur at these times.

Two attitude maneuver sequences are programmed by the computer, and may be updated via the Sequencer and Timer. The first maneuver orients the Capsule Bus to the de-orbit thrust attitude, and the second maneuver, which occurs immediately after the de-orbit engine burn, turns the CB to the predicted zero angle of attack entry attitude. The Capsule Bus is then rolled at a rate of three to four revolutions per hour for thermal control until entry. When the accelerometer senses 0.05g (Earth) the computer is turned on and all three control axes are rate damped. The 0.05g mark also starts the acceleration integration subroutine. When the integrated velocity reaches a pre-programmed level indicating that the Capsule has slowed to the velocity it is expected to have at parachute deployment altitude, a deployment command is issued by the computer to back up the primary deployment mark from the radar altimeter. Active control of the Flight Capsule ends when the parachute is deployed. The radar and telecommunications subsystems do not require a preferred roll orientation, so that the inertial frame reference is not maintained beyond this point in the mission. The reasons for designing the radar subsystem to be insensitive to roll are discussed in the radar trade study, Part B, Section 5.9, and a similar discussion for telecommunications is presented in Part B, Section 5.5.

3.2.2.4.4 Operation During Terminal Descent - At an altitude of approximately 18,000 feet, the parachute extracts the Capsule Lander from the Aeroshell. The terminal descent engines are ignited at 5000 feet and the Lander separates from the parachute. Active control of the Lander commences at this time. The computer descent program is functionally organized as indicated at the bottom of Figure 3.2.2.4-4. The exact Lander attitude at parachute release will not be predictable. It will depend on the amount of parachute swing and wind gust present at the instant the parachute is released. Whatever the attitude is, it is desirable to align the roll axis to the relative wind vector to aid radar acquisition. This is done as follows: Before parachute deployment, the Capsule Bus will be aerodynamically trimmed to zero angle of attack. Thus the body axes are aligned to the relative wind vector, and this reference frame is transferred to the computer by setting the attitude error angles to zero. Once this new computer frame has been established, it is rotated with filtered gyro data to follow the average direction of the Capsule Z-axis, but not the instantaneous attitude variations produced by gusts or parachute dynamics. This average direction is the direction of the relative wind vector, which is the desired reference for radar acquisition.

After the Capsule Lander is freed from the parachute, and the landing radar is locked on, a pre-programmed range-velocity profile is followed to touchdown. The Capsule Z-axis is aligned to the ground referenced velocity vector by a lateral steering loop. Lateral velocity components are measured by the landing radar and used to torque the computer reference frame in pitch and yaw. The attitude control loops cause the Capsule to follow the reference frame until the lateral velocity components are nulled, and the Z-axis is parallel to the total velocity vector. Descent engine thrust is controlled so that the Capsule velocity follows a pre-programmed range-velocity profile. Thrust modulation throttle commands are derived by the computer from radar measurements of slant range to the surface, and range rate. The four descent engines generate net thrust forces by coordinated throttle operation, and change Capsule attitude by differential throttling. Therefore, attitude and thrust commands are mixed in the proper ratio before being sent to the engine throttles. The X-axis accelerometer located in the IMU linearizes the thrust control loop.

3.2.2.4.5 Performance - The key performance values of the GCS are:

o Undisturbed reference frame drift rate (3 sigma)	1.0 degree/hour/axis
o Reference frame drift during de-orbit coast (maximum upper bound)	5 degrees/hour/axis
o Maximum allowable time from separation to de-orbit (to meet 3 sigma design goal accuracy constraint)	29 minutes
o Pitch and yaw attitude uncertainty at entry (3 sigma total)	15 degrees
o Error in measuring acceleration and velocity	Negligible
o Touchdown velocity components	
Horizontal - 34 degree slope	8.95 feet/second
Vertical	21.6 feet/second

3.2.2.4.6 Trade Summary - The preferred GCS configuration was designed after studying the candidate approaches listed in the trade summary, Figure 3.2.2.4-6. The key decision was the selection of body mounted inertial sensors over a stabilized platform. Gimballed platforms were eliminated because of mechanical complexity, limited history of long term space usage, unproven ability to survive sterilization, and lack of suitable hardware designs. By contrast, body mounted gyros have been used extensively in the past, in particular, on JPL's Mariner, Ranger, and Surveyor Spacecraft, and on the Langley Lunar Orbiter.

System electronics are designed to meet the mission performance constraints and also to provide mission planning flexibility, and equipment standardization through the last VOYAGER flight. While analog electronics can be designed to meet mission requirements with only a light performance penalty compared to a digital system, this penalty is not considered great enough to automatically reject analog electronics as a feasible approach. The major reasons for rejecting the analog approach are its lack of flexibility and standardization. In an analog system, a mission profile change means a hardware change. Hardware changes after qualification, even minor ones such as adding a resistor, have by experience, been shown to be a source of unexpected side-effects, and hence a source of unreliability.

GUIDANCE AND CONTROL SUBSYSTEM EQUIPMENT TRADE SUMMARY CHART

		SELECTED CONFIGURATION		
SELECTION CRITERIA	I STRAPDOWN IMU ANALOG ELECTRONICS	II STRAPDOWN IMU DIGITAL ELECTRONICS	III GIMBALLED IMU ANALOG ELECTRONICS	IV GIMBALLED IMU DIGITAL ELECTRONICS
Probability of Mission Success	Simplest candidate, high reliability.	High reliability. Key mission profile parameters may be changed in flight.	Lowest reliability due to mechanical complexity and use of linear circuits. Not feasible to add significant redundancy to single IMU.	Also has low reliability.
	Limited rate and attitude capability makes strapdown system more susceptible to unexpected wind and gust disturbances.		High rate capability and wide attitude limits of gimballed platform make it least sensitive of all candidates to wind and gust disturbances.	
System Performance	Pointing error less than 1.74 degrees per axis at de-orbit (3 sigma).	Less than 0.87 degrees (3 sigma).	Less than 0.87 degrees (3 sigma)	Less than 0.87 degrees (3 sigma)
	Reference frame drift rate during limit cycle is greater than 1 degree per hour by coning drift error.	1 Degree per hour plus drift due to coning.	1 Degree per hour (3 sigma)	1 Degree per hour (3 sigma)
	Smallest size, least weight and power.	12 Percent larger 20 Percent more power and weight than I.	30 Percent larger 25 Percent more power and weight than I.	25 Percent larger 20 Percent more power 25 Percent more weight than I.
Development Risk	Strapdown gyros used on Ranger, Surveyor, Mariner and Lunar Orbiter.	Digital strapdown guidance system used on PRIME vehicle.	Two axis platform used on classified space program.	Used on Gemini with analog autopilot.
	Sterilizable inertial components in development.	Digital autopilot used on BGRV		Similar concept developed for BGRV.
	Potential sterilization problem with analog electronics.	Minimum sterilization induced problems.	Platform bearings, slip rings, and inertial sensors suitable for sterilization must be developed.	Suitable platform must be developed.
Versatility	Analog electronics are inherently inflexible – changes in mission profile necessitate changes in circuitry.	Most flexible concept – both changes in mission profile and attitude freedom can be accommodated by changes to computer software.	Analog electronics are inherently inflexible.	High flexibility – software can accommodate changes in mission profile but range of attitude freedom is fixed.
Cost	Mission changes after development will significantly increase cost.	Least uncertainty in cost estimate of this approach.	Sterilizable platform development will be expensive.	Sterilizable platform development will be expensive.
	Lowest initial cost.			Highest initial cost.

Figure 3.2.2.4–6

By comparison, only the software is changed in a digital processor. This requires an accuracy and logical consistency check but not environmental requalification. It is feasible to quickly check the software after each change without endangering the calendar-fixed VOYAGER schedule. This flexibility extended to future missions means equipment standardization. Thus a digital system with sufficient reserve speed and memory capacity may be designed for a mission 12 years in the future with assurance that it will meet the mission requirements as they exist at that time.

Note 1. For additional justification of the selection of the preferred design concept, refer to Volume II, Part B, Section 5.8.

Note 2. For additional description of the guidance and control electronic equipment, refer to Volume II, Part C, Section 9.

Note 3. For additional description of the guidance and control dynamics, refer to Volume II, Part B, Section 2.3.7.

3.2.2.5 Radar Subsystem Description -

3.2.2.5.1 Constraints and Requirements - The Radar Subsystem constraints, as they relate to the mission and preferred landing concept, are summarized in Figure 3.2.2.5-1. The performance parameters required for the preferred landing concept are as follows:

- o Altitude marks for
  - (1) Subsystem turn-on and Sequencer and Timer update
  - (2) Parachute deployment (about 23,000 feet)
  - (3) Parachute release (about 5,000 feet)
- o Continuous altitude measurement for science data correlation (from 200,000 feet down)
- o Slant range for terminal control (from 5,000 feet altitude down to 10 feet)
- o Velocity vector for attitude control during terminal descent (from 5,000 feet altitude down to 10 feet, with velocities ranging from 500 feet per second to 10 feet per second)

3.2.2.5.2 Preferred Radar Configuration - The Radar Subsystem is composed of a Radar Altimeter which is used for high altitude measurements, and a Landing Radar which is used for terminal control.

Operation - The operation of the Radar Subsystem is pictured in Figure 3.2.2.5-2. The operational sequence is shown in Figure 3.2.2.5-3. The Altimeter is turned on just prior to entry to provide sufficient time for warmup.

RADAR SUBSYSTEM CONSTRAINTS

Mission Constraints

- The wide range of possible Martian atmospheres (and consequent ballistic trajectories)
- The possibility of winds (and their effect on trajectories)
- The possibility of surface dust storms
- Ground slopes and surface uncertainties
- The uncertainties in the radar backscatter model
- The requirement to prevent any catastrophic single-point failures
- The long in-flight storage required and the consequent need for in-flight checkout
- The planetary quarantine requirement and need for sterilization
- The desire to use proven techniques and equipment that have been previously space qualified

Operational Constraints

- The need for flexibility in capsule roll position
- A wide range of flight path angles experienced with entry trajectories
- The large pitch angles and angular rates incurred with a parachute, and during control transients, with and without winds
- The limited radar acquisition time
- The requirement for operation through the Aeroshell/Heat Shield
- The requirement for operation in the vicinity of rocket engines
- The possibility of entry ionization and plasma
- The requirement for operation in rarefied atmosphere of unknown constituents and the possibility of RF and high voltage breakdown
- The possibility of radar interference after Aeroshell separation
- The possibility of reflections from the lander undercarriage and resulting interference

Physical Constraints

- Vibrations, accelerations, accoustical noise, and shock
- Magnetic fields and electromagnetic radiation
- The areas available for antenna and electronic package location and allowable volume
- The weight and primary power allotment (affecting battery weight)
- Thermal loads from the Aeroshell during entry and from recirculation of engine exhausts around the base of the lander
- The high storage temperatures imposed by sterilization
- The long time in vacuum storage during interplanetary cruise
- The low storage temperatures during interplanetary cruise and orbital descent prior to entry
- The internal design of the Aeroshell as it affects radar cross section

Figure 3.2.2.5-1

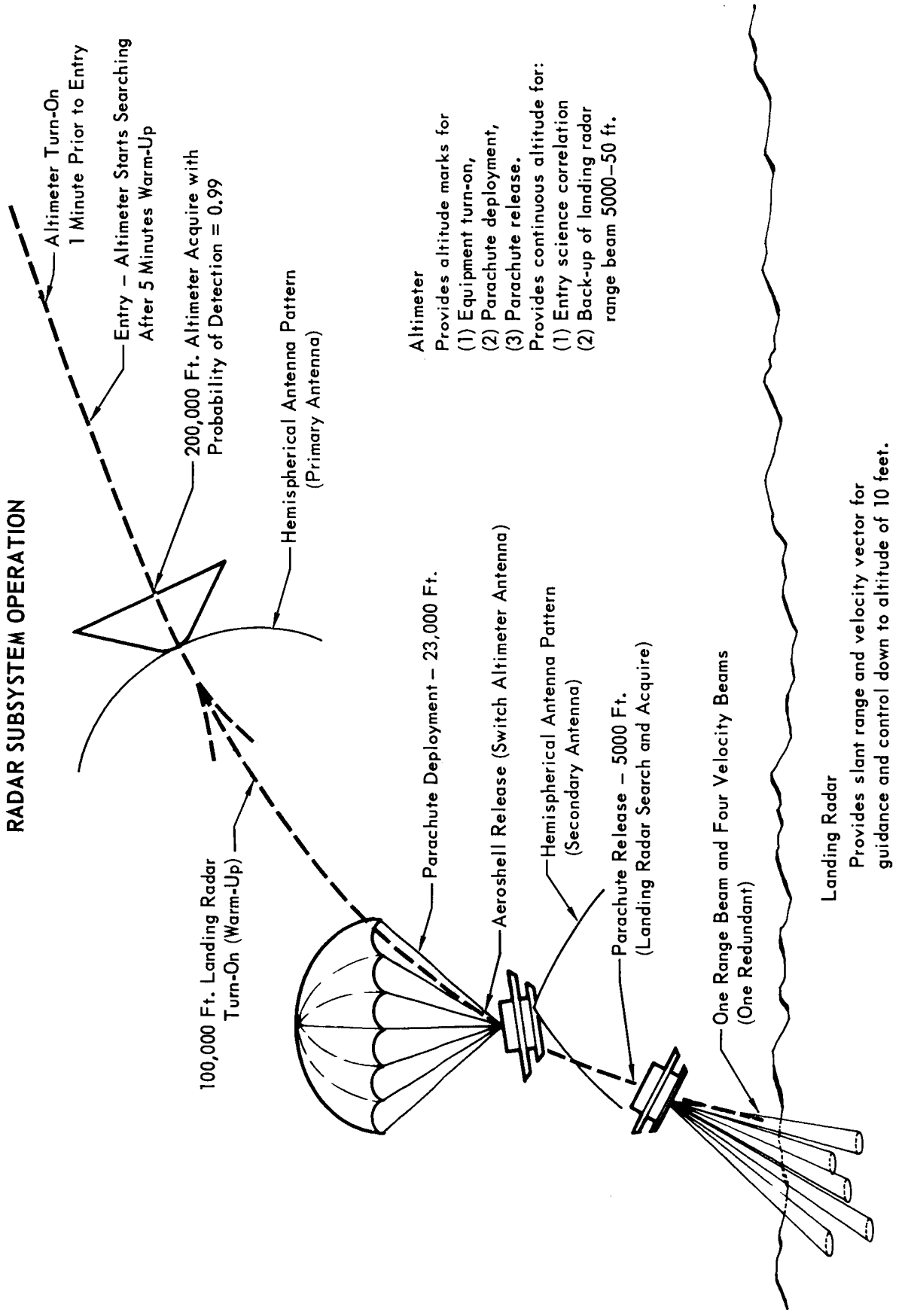

Figure 3.2.2.5–2

RADAR SUBSYSTEM OPERATIONAL SEQUENCE

CONDITION	EVENT
5 Min Prior to Entry	S&T Provides Mark to Turn-On Altimeter for Warm Up
Entry (Alt ≈ 800,000 Ft)	Altimeter Automatically Starts Searching After 1 Min Warm Up
Altitude ≈ 200,000 Ft	Altimeter Acquires Surface Return
Altitude ≈ 100,000 Ft	Altimeter Provides Mark to S & T for Landing Radar Turn-On For Warm up
Altitude = 23,000 Ft	Altimeter Provides Mark to S & T for Parachute Deployment
12 Second After Parachute Deployment	S & T Provides Mark for Aeroshell Release (Switch Altimeter to Secondary Antenna)
Altitude = 5,000 Ft	Altimeter Provides Mark to S & T For Engine Start, IMU Attitude Hold, and Parachute Release (Also Switch Altimeter to Short Range Mode)
2 Second After Engine Start	S & T Provides Mark for Landing Radar Search (G & C Commands Constant Thrust, and Attitude Inertially Stabilized by IMU)
6 Second After Engine Start	Landing Radar has Acquired in Range and Velocity. G & C Switches From IMU to Velocity Vector Attitude Control
Intercept Pre-Programmed Range vs Velocity Switching Line	G & C Switches to Pre-Programmed Trajectory Control Using Range and Vertical Velocity from Landing Radar (Still on Velocity Vector Attitude Control)
Slant Range = 2500 Ft	Landing Radar Switches to Short Range Mode
Vertical Velocity = 10 Ft/Sec (Altitude ≈ 50 Ft)	G & C Switches to IMU for Attitude Control, and Programs Constant 10 Ft/Sec Rate of Descent as Measured by Landing Radar
Altitude = 10 Ft	Landing Radar Provides Mark to S & T to Turn Off Engines (Turns Off Altimeter and Landing Radar Primary Power Also)

Figure 3.2.2.5–3

The Altimeter starts searching in altitude automatically after warm up. At an altitude of 200,000 feet, the cumulative probability that the Altimeter will have acquired the surface is greater than 0.99. The Altimeter has nearly hemispherical antenna coverage to accommodate variations in flight path angle with no requirement for roll control.

A mark from the Altimeter at 23,000 feet is used to deploy the parachute. The Aeroshell is released 12 seconds later. The lander is released from the parachute at an altitude of 5,000 feet on another mark from the Altimeter. At this time the lander is controlled in attitude by the Inertial Measuring Unit (IMU).

From an altitude of 5,000 feet, approximately 2 seconds is allowed for inertial stabilization, after which 4 seconds is allowed for Landing Radar acquisition. Inertial stabilization of the lander prior to Landing Radar search is necessary because of the large angular excursions and rates that are expected with the parachute if winds are present. After range and velocity vector acquisition, the roll axis of the lander is aligned to the velocity vector using the Landing Radar velocity vector measurement.

The Landing Radar range beam is directed along the roll axis to eliminate its sensitivity to roll position. Also, four velocity beams are employed that are symmetrically spaced around the roll axis to reduce the sensitivity to roll.

The Landing Radar must continue to measure range and velocity after acquisition through terminal descent to a minimum range of 10 feet and a minimum velocity of 10 feet per second. At a velocity of 10 feet per second, and altitude of 50 feet, attitude control is referenced to the IMU again, and a constant 10 feet per second rate of descent is maintained to an altitude of 10 feet. At 10 feet, as measured by the Landing Radar, the engines are shut off and the lander settles to the Martian surface.

During the latter portion of the terminal descent phase, Landing Radar mode switching is employed. At a slant range of 2500 feet the frequency deviation on the FM/CW range beam is increased and the range beam tracking filter bandwidth is decreased. These measures provide increased range accuracy. At a prescribed doppler frequency (or combination of doppler frequency and slant range) the velocity beam tracking filter bandwidths are also reduced, resulting in improved accuracy of the velocity measurement.

Contingency Considerations - Provisions have been incorporated for reducing the effects of single point failures.

Functional backup for deployment of the parachute at 23,000 feet is accomplished by the Guidance and Control Subsystem. The accelerometer outputs are integrated in the Guidance Computer to provide a measure of velocity. This computed velocity is used to trigger parachute deployment in the event a "reliable lock" signal is not received from the Altimeter.

The Landing Radar provides a functional backup for engine ignition and parachute release at 5,000 feet. When a reliable operate signal is not received from the Altimeter, the Landing Radar is placed in the search mode by the Sequencer and Timer shortly after Aeroshell release. The accomplishment of this backup function with no performance degradation depends on the magnitude and rates of the angular swings encountered on the parachute. If winds are present the angular rates may be too high for the range channel of the Landing Radar to acquire before an altitude of 5,000 feet is reached. Thus the parachute may be released at a lower altitude. It is expected that the swings will not be too severe, however, at an altitude of 5,000 feet if there are no winds present.

The Altimeter is switched to a short-range mode after supplying the parachute release mark at 5,000 feet. It is then operated to an altitude of 50 feet to back up the range channel of the Landing Radar. A "g" sensitive impact switch backs up the engine cut-off in the event a 10 foot range mark is not available from the Landing Radar.

The Landing Radar requires three velocity channels to measure velocity vector. Four velocity channels are provided, with three out of four selection logic employed, to provide a redundant channel for the velocity measuring function.

Equipment Selection - Non-coherent pulse modulation with leading edge tracking is preferred for the Altimeter. Along with hemispherical antenna coverage around the roll axis, this modulation technique provides the most accurate measure of absolute altitude.

The preferred Landing Radar is a modification of the landing radar developed for the Apollo Lunar Module (LM), which uses the same techniques as Surveyor. The principal modifications for VOYAGER are associated with adding a fourth redundant velocity beam. The LM radar uses three narrow antenna beams for measuring velocity vector. Velocity is derived from doppler frequency measurements, using an unmodulated carrier on each beam.

3.2.2.5.3 Altimeter Description - A complete description of the Altimeter is presented in Volume II, Part C, Section 10.1.

The Altimeter electronics assembly is mounted in the lander footpad. The primary antenna for the Altimeter (for use prior to Aeroshell separation) is a conical monopole mounted in the spherical nose of the Aeroshell. The secondary antenna (for use after Aeroshell separation) is a half-wave dipole encased in dielectric and mounted on the bottom of the electronics assembly. A RF switch mounted in the electronics assembly is used to select the proper antenna. Both antennas have near hemispherical coverage around the roll axis. A block diagram of the Altimeter is shown in Figure 3.2.2.5-4.

Two L-Band stripline cavity oscillators are employed for the transmitter (one redundant). Also, two complete, parallel, receiving channels are utilized. Each one has its own solid state local oscillator, low noise tunnel-diode RF amplifier, receiver mixer, IF amplifier, and digital leading edge tracker. A single voltage regulator/power supply is used. In addition, circuitry is included for mode selection, self test, and data conversion.

The characteristics of the Altimeter are summarized in Figure 3.2.2.5-5.

3.2.2.5.4 Landing Radar Description - A complete description of the Landing Radar is presented in Volume II, Part C, Section 10.2. A block diagram of the Landing Radar is shown in Figure 3.2.2.5-6.

The velocity sensor transmitter generates an unmodulated X-Band carrier which is divided between two transmitter arrays. Each array generates two narrow beams. Each of the resulting four transmitted beams is directed at an angle of 20° from the capsule roll axis, and the beams are located symmetrically around the roll axis. A separate receiver array is provided for each of the four velocity receivers.

All four velocity receivers are identical. Each velocity receiver contains a balanced mixer which mixes a sample of the transmitted carrier, in-phase and quadrature, with the received signal. The in-phase and quadrature mixer output signals are amplified in separate pre-amplifiers. The frequency tracker operates on the in-phase and quadrature channels to produce a signal output whose frequency is proportional (plus a reference offset) to the doppler frequency shift of the transmitted carrier for that particular beam. The in-phase and quadrature channels allow the sense of the doppler frequency (positive or negative) to be retained after the homodyne mixing process. The frequency trackers perform the search function for acquisition, as well as accomplishing the necessary filtering after acquisition.

RADAR ALTIMETER FUNCTIONAL SCHEMATIC

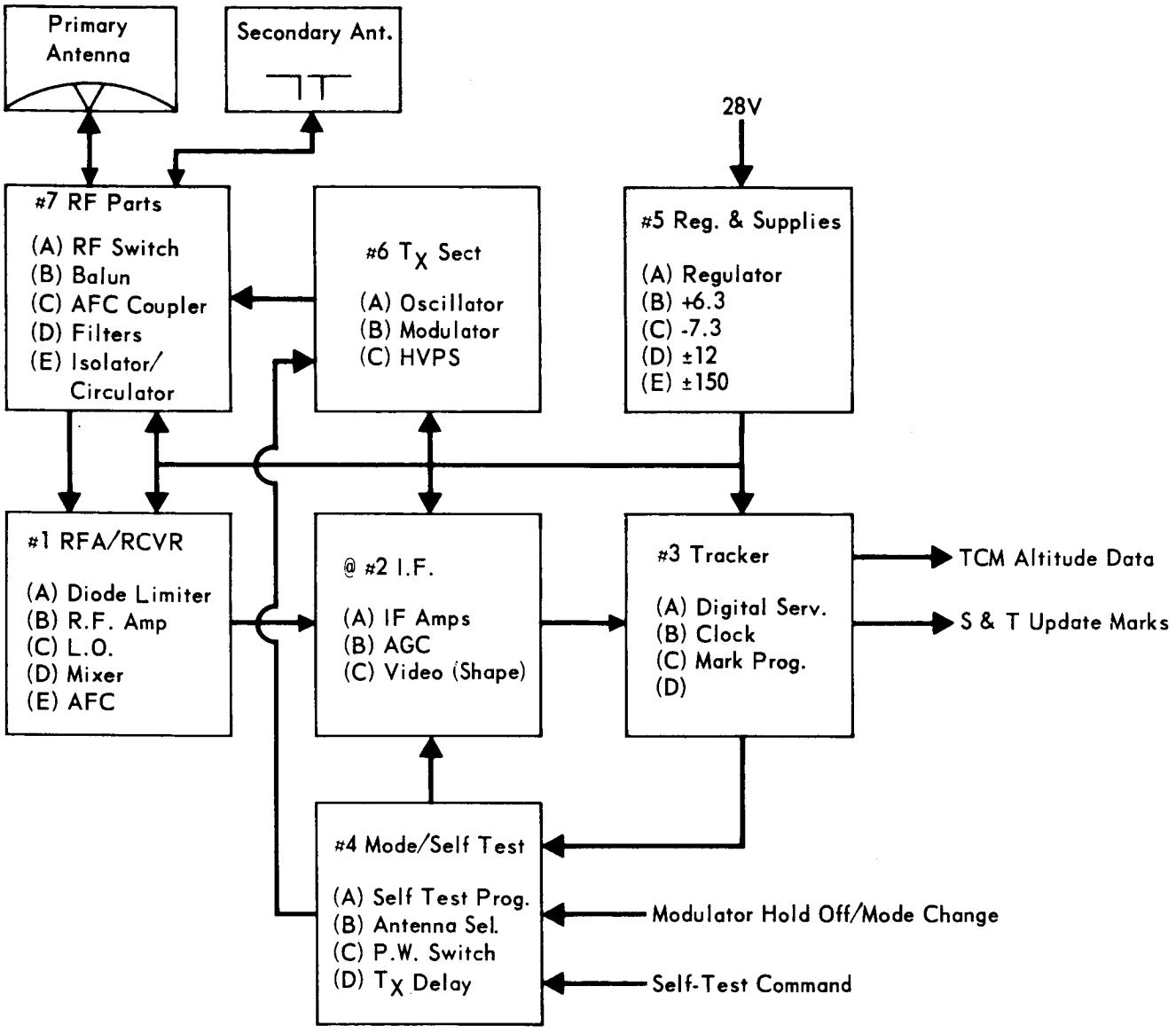

Figure 3.2.2.5-4

SUMMARY OF RADAR ALTIMETER CHARACTERISTICS

Operating Frequency	1.0 GH_z
Antenna Gain	OdB primary, 2dB secondary
Peak Transmitter Power	500 watts
Pulse Width	5 microseconds (switched to 0.1 microseconds below 5000 feet)
Pulse Repetition Rate	1000 pulse per second
Receiver Noise Figure	6 dB
IF Bandwidth	200 kHz (switched to 10 MH_z below 5,000 ft)
Acquisition Sweep Time	2 seconds
System Losses	9 dB (including Aeroshell)
Maximum Altitude	200,000 feet (.998 Cumulative P_d)
Minimum Altitude	50 ft
Accuracy (3σ)	Less than 1%, (function of altitude)
Primary Power	40 watts
Primary Antenna Weight	10 lb
Electronics and Secondary Antenna Weight	23 lb
Electronic and Secondary Antenna Size	14.5 x 7.25 x 6.75 flared to 10.5 in.
Primary Antenna Size	7.6 in. high by 6.8 in. base cone, over 57 inch diameter circular ground plane

Figure 3.2.2.5–5

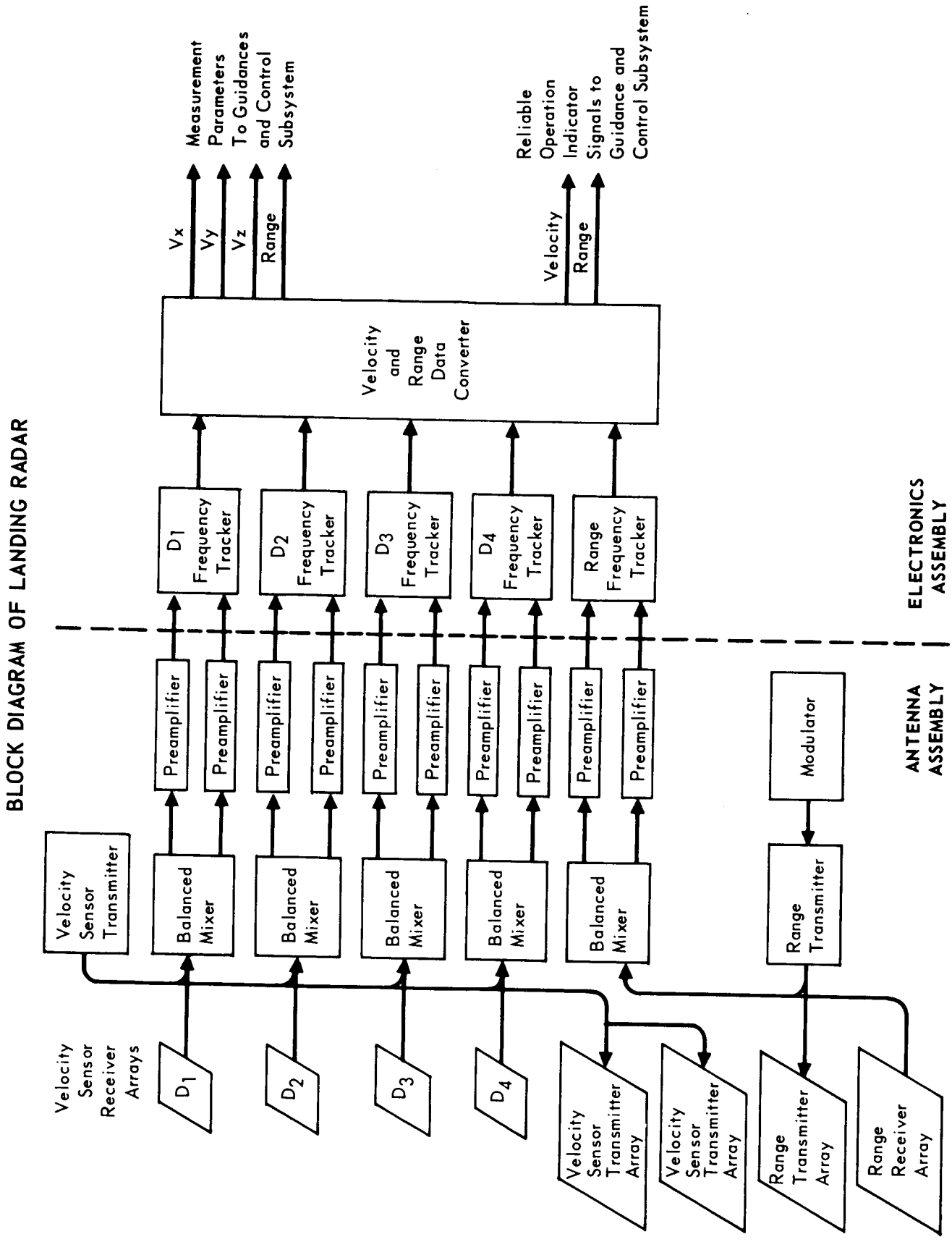

Figure 3.2.2.5–6

The output signals from the four velocity sensor frequency trackers are fed to the velocity and range data converter. Only three of the four outputs are required to generate three orthogonal velocity components in the Capsule coordinate system. Each tracker supplies a "reliable lock" signal to the data converter. Logic is incorporated in the data converter which allows the first three "reliable lock" signals to establish the processing necessary to transform these particular frequency tracker outputs into the desired V_x, V_y, and V_z components.

The range transmitter generates a linearly swept frequency modulated carrier which is transmitted by the range transmitter array antenna. The range transmitter array and range receiver array form separate narrow beams which are pointed along the Capsule roll axis. The range and velocity, transmit and receive arrays are integrated into a single antenna structure which is mounted in the center of the landing footpad.

The range receiver is very similar to the velocity receivers. A sample of the frequency modulated transmitted carrier is mixed (in-phase and quadrature) in a balanced mixer with the received signal. The two quadrature outputs are amplified in separate pre-amplifiers and fed to the range frequency tracker.

Mixing the linearly frequency modulated transmitted signal with the received signal (which is a time-delayed and doppler frequency-shifted replica of the transmitted signal) results in an output signal whose frequency is proportional to range plus velocity. The in-phase and quadrature channels are processed by the range frequency tracker to provide an output signal whose frequency is proportional to range plus velocity (plus a reference offset). Again search and acquisition is accomplished by the range frequency tracker, plus the required filtering after acquisition.

The range tracker output signal is processed in the velocity and range data converter to remove the velocity component.

The characteristics of the Landing Radar are summarized in Figure 3.2.2.5-7.

3.2.2.5.5 Interface Description - The interfaces are described in detail for the Altimeter and Landing Radar in Volume II, Part C, Section 10.1 and 10.2, respectively. A simplified interface diagram is shown in Figure 3.2.2.5-8. For clarity, OSE and Test Programmer for in-flight checkout are not shown. Also, the engineering data signals sent to the Telemetry Subsystem are omitted on the figure, along with performance verification signals from the Altimeter and Landing Radar to the Guidance and Control Computer.

SUMMARY OF LANDING RADAR CHARACTERISTICS

Range Beam Operating Frequency	9.58 GHz
Velocity Beams Operating Frequency	10.51 GHz
Range Beam Antenna Gain	26.3 dB
Velocity Beams Antenna Gain	27.9 dB
Range Antenna Beamwidth (2–way)	5.0 degrees
Velocity Antenna Beamwidths (2–way)	5.0 degrees
Range Beam Position	Along roll axis
Velocity Beam Positions	20 degrees from roll axis (corners of a square)
Range Beam Transmitter Power	106 mw
Velocity Beam Transmitter Power	35 mw per beam
Range Beam Modulation	Linear sawtooth FM
Range Beam Frequency Deviation	8MHz, R > 2500 feet 40 MHz, R < 2500 feet
Velocity Beam Modulation	None
Receiver Noise Figure	14 dB at 10KHz, increasing with decreasing frequency
Range Tracker Filter Bandwidth	5000 Hz, R > 2500 feet 1000 Hz, R < 2500 feet
Velocity Tracker Filter Bandwidth	1000 Hz, R > 2500 feet 400 Hz, R < 2500 feet
Acquisition Time (4dB SNR)	3 seconds (maximum)
Velocity Accuracy	1.5% ± 1.5 fps (Terminal phase)
Range Accuracy	1.4% ± 15 feet, R > 2500 feet 1.4% ± 5 feet, R < 2500 feet
Primary Power	145 watts
Antenna Weight	25 lb.
Electronics Assembly Weight	15 lb.
Antenna Size	32 x 28 x 6.5 in.
Electronics Assembly Size	16.5 x 7.4 x 6.75 in.

Figure 3.2.2.5–7

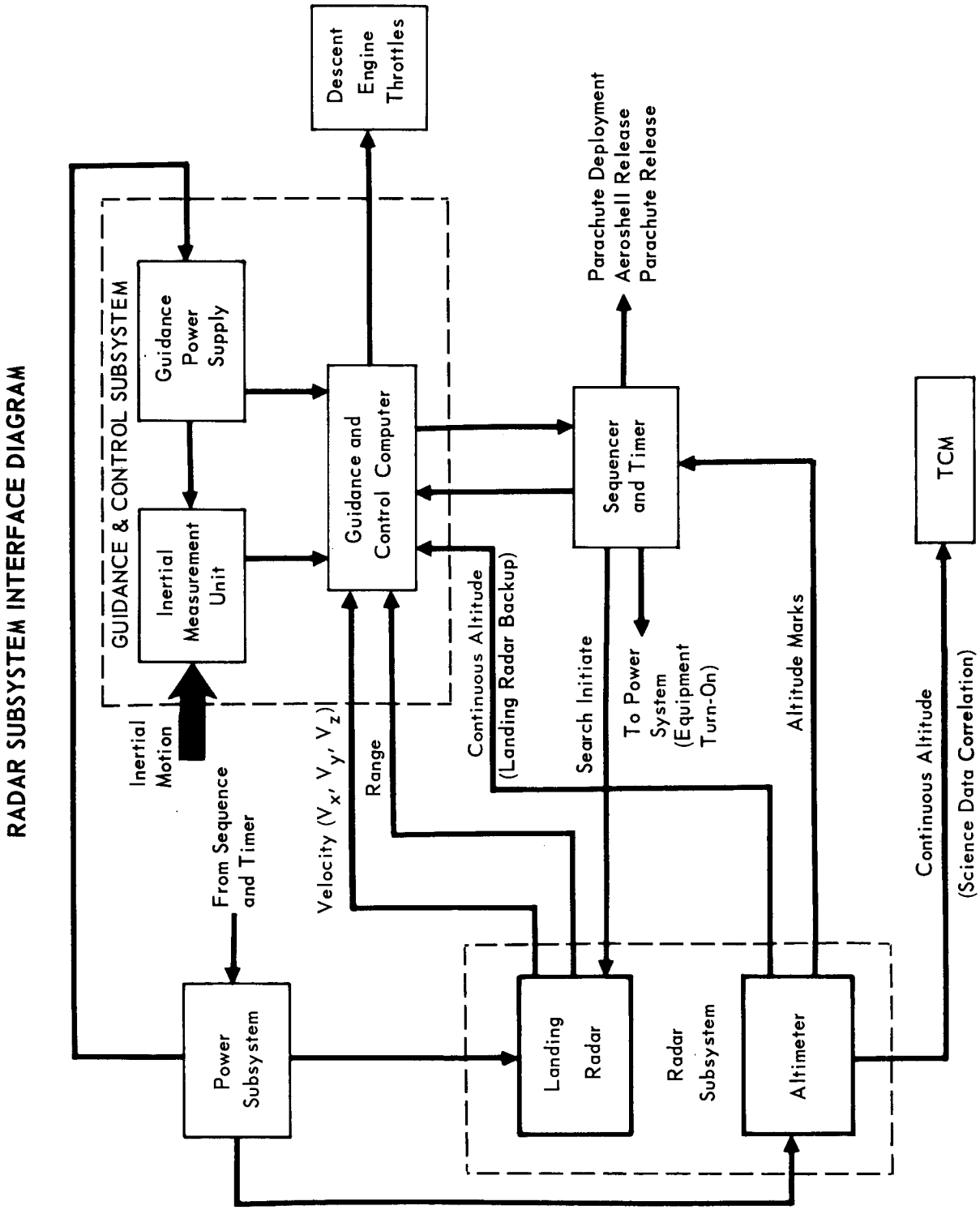

Figure 3.2.2.5–8

3.2.2.5.6 Major Alternatives - Many alternatives were considered for the radar subsystem. The approach was to (1) establish the requirements for each of the different system concepts (i.e., all the various combinations of pre-separation techniques, separation schemes, and engine configurations), (2) look at the radar subsystem alternatives for each of these system concepts, (3) reduce the number of radar subsystem alternatives by combining those with similar characteristics and (4) study each of these alternatives in depth.

In parallel with this effort, the current preferred capsule baseline configuration was studied in more detail. A preferred radar subsystem was hypothesized for the baseline and extensively exercised, using a computer simulation of the radar in conjunction with trajectories derived for the baseline. The alternatives considered in the course of the study are discussed in detail in Volume II, Part B, Section 5.9.

The following major alternatives were considered:

- Single integrated radar for all measurement functions
- Two radars - A landing radar for terminal control, plus an altimeter
- Three radars - A landing radar for terminal control, plus an altimeter used in conjunction with a ranging radar at high altitudes.

It was found that the requirements for high altitude measurement and slant range for terminal control are incompatible in a single radar without a preferred roll position and a steered beam. The three-radar configuration was considered for an adaptive descent system with no roll control. Slant range and altitude allow the flight path angle to be measured. This technique was dropped because of its overall complexity.

The Altimeter plus Landing Radar is the best choice. In this concept, the Altimeter can be optimized for providing high altitude measurements, and the Landing Radar optimized for terminal control. The major alternatives within this two radar concept are summarized in Figure 3.2.2.5-9.

Note 1: For additional justification of the selection of the preferred design concept, refer to Volume II, Part B, Section 5.9.

Note 2: For additional description of the Radar Subsystem, refer to Volume II, Part C, Section 10.0

MAJOR RADAR SUBSYSTEM ALTERNATIVES

CHARACTERISTIC	MAJOR ALTERNATIVES	MAJOR FACTORS FOR SELECTION
Altimeter Antenna Configuration	Steered Pencil Beam Switched Fan Beam **Single Element Radiator**	Limited angular coverage with no roll control, complex Need to sense roll position, complex Simplest with no roll control
Operating Frequency	20 MHz to L-Band **L-Band** Above L-Band	Total size and weight large because of required antenna size Minimum total size and weight, breakdown manageable Requires high transmitter power with potential breakdown problems
Modulation Technique	FM/CW, ICW, and PN-Coded CW **Non-Coherent Pulse**	Potential transmit/receive leakage problems, more complex Power conversion efficiency, accuracy, most highly developed
Landing Radar Velocity Beam Configuration	3 Fixed Beams **4 Fixed Beams** Scanned or Switched Beam	Less efficient for improving reliability (reliability versus weight) Reduces pitch angle sensitivity with no roll control, provides 3 out of 4 redundancy Too complex
Velocity Beam Position (4 Beams and Equal Cone Angle)	**Four Beams Spaced Symmetrically Around Roll Axis** Three Beams Spaced Symmetrically Around Roll Axis – One Beam Along Roll Axis	Simpler processing circuitry (pitch angle sensitivity equal for both configurations with worse roll and with one beam out) Pitch angle sensitivity better with worse roll (providing all beams are working)
Velocity Beam Cone Angle	Much Less than 20 Degrees **Approximately 20 Degrees** Much Greater than 20 Degrees	Better pitch angle sensitivity, unacceptable lateral velocity accuracy Acceptable pitch angle sensitivity and lateral velocity accuracy Better lateral velocity accuracy, unacceptable pitch angle sensitivity
Antenna Type	**Planar Array** Dielectric Lens	Minimum antenna depth, fewest expected development problems Potential materials problem (requires materials testing in Phase C)
Range Channel Modulation	ICW Sinusoid FM/CW **Linear FM/CW**	Simplicity, efficiency (power), less developed Process second order sideband – more complex, less efficient Simplicity, efficiency (power), enjoyed most development
Velocity Channel Modulation	**Unmodulated (CW)** Modulated Independent of Range Channel Utilize Range Channel Modulation	Simplicity, performance adequate with preferred landing concept Added complexity Velocity measurement depends on range measuring function

Figure 3.2.2.5–9

3.2.3 Aerodynamic Decelerator Subsystem - The aerodynamic decelerator subsystem provides additional atmospheric deceleration of the Capsule Lander to attain the altitude-velocity envelope required for successful initiation of the terminal descent maneuver. Our Capsule design employs a parachute as the aerodynamic decelerator device. The parachute is also used to separate the Lander from the Aeroshell.

3.2.3.1 Significant Requirements and Constraints - Several interrelated trade studies (Volume II, Part B, Sections 4.4, 4.5, and 4.6) identified the advantages of using a deployable aerodynamic decelerator to increase the probability of mission success. The terminal decelerator trade study concluded that a combination of aerodynamic and propulsive deceleration subsystems is the most efficient manner to achieve the deceleration required for a soft landing. Another trade study compared various types of Ballutes (attached, trailing, tucked-back, and Airmat Cone) and parachutes (solid and ribbon types) and concluded that a supersonic solid-type parachute was preferred. See Figure 3.2.3-1 for a summary of this study which is contained in Volume II, Part B, Section 4.4. The Aeroshell/Lander separation trade study concluded that differential aerodynamic drag was the preferred separation technique - thus enhancing the usefulness of the parachute by using it for two functions.

Volume II, Part B, Section 5.10 describes the optimization and sizing of the decelerator subsystem within the constraints imposed by mission analysis, the capabilities of interrelated subsystems, and the present state-of-the-art aerodynamic decelerator technology. The most significant constraints on the subsystem design are:

- The parachute shall not be deployed above Mach 2. The NASA Planetary Entry Parachute Program (PEPP) has very successfully demonstrated the operational feasibility of large solid-type parachutes up to Mach 1.6. McDonnell has assumed that operational capability can be extended to Mach 2, but the assumption must be proven by development testing. Feasibility or operation of our system design is not critical to this assumption since it mainly affects parachute sizing and allowable entry corridors.
- The system must be designed to perform properly under the most critical combination of entry conditions in the VM atmospheres specified by JPL.

EVALUATION OF AERODYNAMIC DECELERATORS

		SUPERSONIC RIBBON PARACHUTES	SUPERSONIC SOLID PARACHUTES	TRAILI
PROBABILITY OF MISSION SUCCESS	System Reliability	Successful operation well-proven below Mach 3.	PEPP Test have proven feasibility up to Mach 1.6.	Successful o at high altitu (M = 9.7, h =
		Reefing (if required) reduces reliability.	Reefing (if required) reduces reliability.	
	Vulnerability to Environmental Uncertainty	High vulnerability because of poor inflation stability above Mach = 2.0 – 2.5	Questionable because of operational feasibility above M = 1.6.	Low because characteristi range.
	Simplicity	Good. Compact packaging. Easily deployed.	Good. Compact packaging. Easily deployed.	Good. Compo deployed.
SYSTEM PERFORMANCE	Drag	High subsonic, decreases rapidly between Mach 1.0 and 3.0	High subsonic and transonic supersonic drag unknown above approx. M = 1.6.	Low subsoni low supersor
	Mach Operational Capability	Acceptable up to about M = 3.	Unknown above M = 1.6	Demonstrate bility up to
	Stability	Poor inflation stability. Poor payload stability under gusty environmental conditions.	Poor inflation stability. Poor payload stability under gusty environmental conditions.	Excellent in payload stab vironmental
	Weight	Low drag to weight ratio	High drag to weight ratio.	Extremely lo
DEVELOPMENT RISK	Present State of Development	Good	Dependent on PEPP results. Appears feasible.	Excellent.
	Development Requirements	Complex trailing behavior requires custom development.	Further development required beyond PEPP.	Outstanding low develop
	Development Difficulty	Complex trailing behavior can cause problems.	Believed to be average based on PEPP.	Little expec
VERSATILITY	Growth Capability	Limited by custom development and Mach operational characteristics.	Unknown. May be good depending on future developments.	Good due to tional capab
	Sensitivity to Configuration Adaptability	Good. Installation flexible.	Good. Installation flexible.	Good. Instal
COST	Flight Tests	Requires full scale tests.	Requires full scale tests.	Fewer full s cause wind system scal
	Wind Tunnel Tests	Past experience indicates full scale testing required. Wind tunnel tests of little use.	Estimated similar to ribbon parachutes.	Useful in sy duce cost of costs.
	Testing Difficulty	Can become complex on basis of past experience.	Estimated similar to ribbon parachutes.	Moderate to

Figure 3.2.3–1

NG BALLUTES	ATTACHED BALLUTES	TUCKED-BACK BALLUTES	AIRMAT CONES
peration well-proven de and Mach No. 227,000 ft)	Reliability yet to be proven. Initial auxiliary pressurization system required to initiate inflation.	Reliability yet to be proven. Initial auxiliary pressurization system required to initiate inflation.	Reliability yet to be proven. Pressurization system required to sustain inflation.
of good operational cs over wide Mach	Unknown, but should be low, similar to training Ballutes.	Unknown, but should be low, similar to trailing Ballutes.	Unknown, but should be low, similar to trailing Ballutes.
ict packaging. Easily	Poor. Complex packaging interferes with other subsystems.	Average. Packaging tolerable, but more complicated by peripheral volume requirements.	Average. Packaging tolerable, but more complicated by peripheral volume requirements.
c, high transonic, ic.	Estimated good supersonic, poor subsonic.	Estimated good supersonic, poor subsonic.	Estimated good supersonic, poor subsonic.
l operational capa- l = 10.	Estimated to be similar to trailing Ballutes.	Estimated to be similar to trailing Ballutes.	Estimated to be similar to trailing Ballutes.
lation stability. Poor ility under gusty en- conditions.	Estimated excellent inflation stability and good payload stability under gusty environmental conditions.	Estimated excellent inflation stability and good payload stability under gusty environmental conditions.	Estimated excellent inflation stability and good payload stability under gusty environmental conditions.
w drag to weight ratio.	Average drag to weight ratio.	Average drag to weight ratio.	Low drag to weight ratio.
	Unproven. Conceptual stage only.	Unproven. Conceptual stage only.	Feasibility proven.
performance indicates ient effort required.	Extensive.	Extensive.	Extensive.
ed.	Unknown.	Unknown.	Unknown.
large Mach opera- lity.	Unknown. May be good because of similarity to trailing Ballutes	Unknown. May be good because of similarity to trailing Ballutes	Unknown. May be good because of similarity to trailing Ballutes.
ation flexible.	Poor. Little lattitude in installation requirements.	Poor. Little lattitude in installation requirements.	Poor. Little lattitude in installation requirements.
ale tests required be- unnel testing aids ng.	Unknown. Believed similar to trailing Ballutes.	Unknown. Believed similar to trailing Ballutes.	Unknown. Believed similar to trailing Ballutes.
tem scaling to re- overall development	Estimated similar to trailing Ballutes.	Estimated similar to trailing Ballutes.	Estimated similar to trailing Ballutes.
ow.	Unknown because of unproven concept. Could be complex.	Unknown because of unproven concept. Could be complex.	Unknown because of unproven concept. Could be complex

3.2.3.2 Components - The major components of the aerodynamic decelerator subsystem are:

- o Parachute
- o Parachute riser assembly
- o Parachute catapult
- o Parachute deployment bag

Figure 3.2.3-2 shows the important details of the aerodynamic decelerator subsystem installation in the Flight Capsule, and Figure 3.2.3-3 shows a subsystem component breakdown. The physical characteristics of the major components are described briefly below. For a more detailed description see Volume II, Part C, Section 11.

Parachute - The parachute has a 70 ft nominal diameter (D_o) with a suspension line length of $1.4D_o$. Either a Cross, Disk-Gap-Band, or Ringsail solid cloth canopy design will be used.

The canopy illustrated in this report is a Ringsail type similar to that being tested in the NASA PEPP series. This type of canopy was chosen for the sake of illustration in our preferred Capsule. The final canopy design cannot be chosen at this time, since the purpose of the PEPP tests is to determine the best canidate for the VOYAGER aerodynamic decelerator. The PEPP tests are only about half complete, and the results do not weigh heavily in favor of any candidate, therefore more test results are needed to make a final selection.

The parachute is deployed in a reefed condition. After an 8 second reefed interval, it is disreefed and allowed to inflate to the full open condition. The reefing parameters are selected to control both the reefed and disreef opening shock loads to not more than 20,000 lb under the most critical operational conditions.

Parachute Riser Assembly - The parachute riser assembly connects the parachute to the Capsule Bus. The aerodynamic drag load produced by the parachute is transmitted through the riser to the Capsule at four riser attachment points, on the lower de-orbit motor support structure.

Parachute Catapult - The parachute catapult is located on the Capsule centerline and bears on the base platform of the Lander. It is pyrotechnically actuated and it initiates parachute deployment by ejecting the parachute deployment bag rearward from the Capsule at 100 ft/sec relative velocity. The momentum imparted to the deployment bag by the catapult completes the deployment process and strips

AERODYNAMIC DECELERATOR INSTALLATION IN FLIGHT CAPSULE

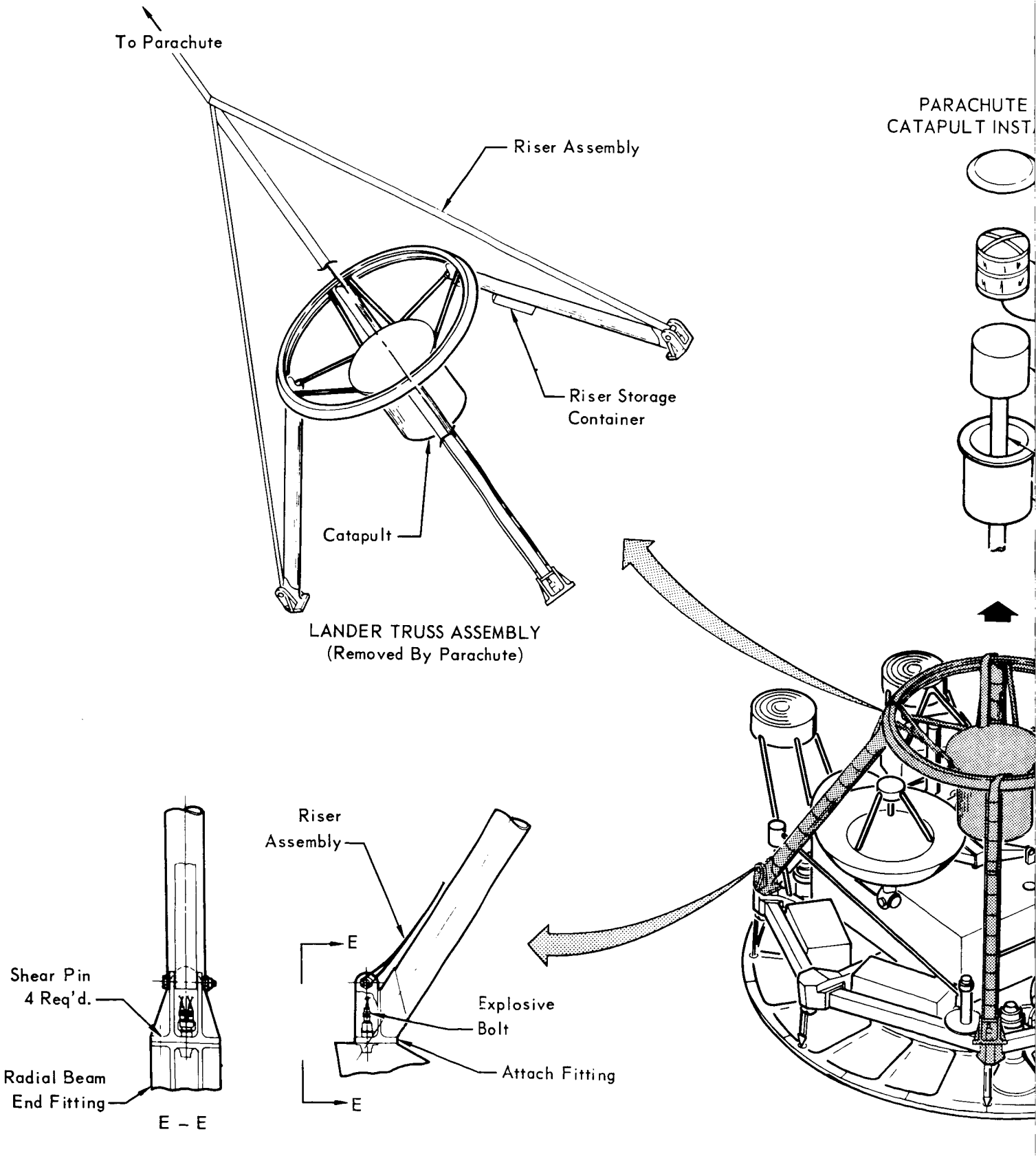

Figure 3.2.3–2

AND
ALLATION

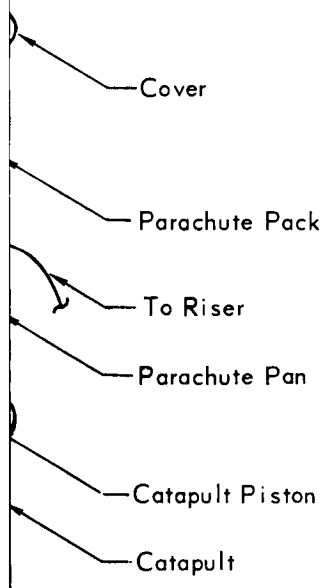

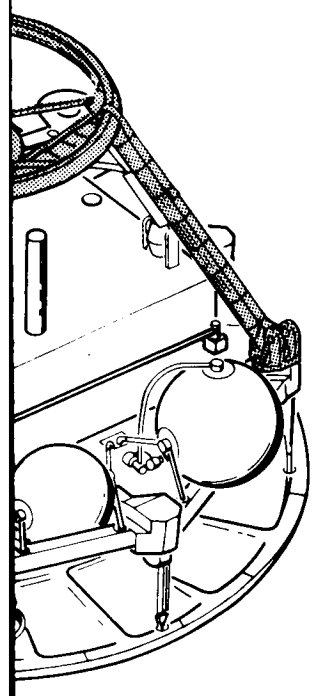

AERODYNAMIC DECELERATOR SUBSYSTEM COMPONENT BREAKDOWN

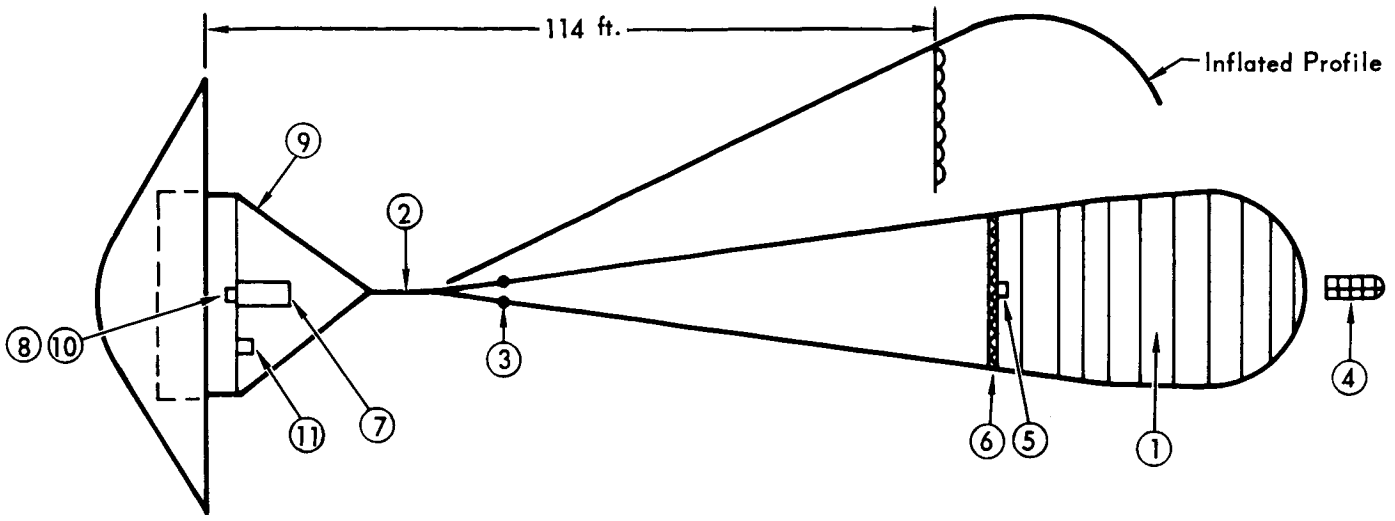

ITEM	QUANTITY	DESCRIPTION	MATERIAL
1	1	70 ft. D_o Parachute Drag Area ($C_D S_o$) = 2310 ft.^{2}	330 Nylon
2	1	Riser Assembly	20,000 lb. x 1 in. Dacron
3	4	Link	Steel
4	1	Deployment Bag	Cotton Sateen
5	3	Reefing Line Cutters	Steel, Pyrotechnic
6	1	Reefing Line	Dacron
7	1	Catapult Assembly	Aluminum Alloy
8	1	Catapult Breech	Aluminum Alloy
9	1	Catapult Cover	Aluminum Alloy
10	1	Timer (12 sec.) inComputer	
11	1	Catapult Cartridge	Pyrotechnic

Figure 3.2.3–3

the bag from the parachute without the aid of any aerodynamic forces. We prefer a catapult rather than a conventional parachute mortar for several reasons. Our experience in developing the recovery system for the F-111 A/B Crew Module showed that a catapult is lighter and more efficient. It also prevents pyrotechnic outgassing and eliminates potential parachute damage from flying debris (such as the sabot in a mortar).

Parachute Deployment Bag - The parachute is packed in the deployment bag, which is stowed within the catapult compartment until it is deployed. The parachute canopy and suspension lines are restrained within the bag in a manner that assures orderly and controlled parachute deployment.

3.2.3.3 Operation - The operational sequence is illustrated in Figure 3.2.3-4 and described in a block diagram in Figure 3.2.3-5. The aerodynamic decelerator subsystem is triggered by a signal from the radar altimeter at 23,000 feet above the Martian surface. This signal is sent simultaneously to the parachute catapult and to a 12 second time delay in the Sequencer Timer. As the parachute suspension lines become tight, before the canopy is completely out of the bag, three 8-second delay, pyrotechnic reefing cutters are initiated. After the parachute opens, it remains reefed until the reefing cutters sever the reefing line. Shortly after the parachute attains full open, the 12 second delay expires and an electrical signal is sent to the explosive bolts which release the Aeroshell/Lander attachment fittings. The Aeroshell drops away and the parachute continues to decelerate the Lander.

At 5,000 feet above the surface the radar altimeter initiates the terminal propulsion rocket motors (see Figure 3.2.3-6), and .5 seconds later, after verifying rocket motor ignition, a signal is sent to fire the four explosive bolts which attach the lower de-orbit motor support structure to the Lander. This releases the parachute from the Lander, and the parachute carries away the support structure and parachute catapult assembly.

In the event the terminal propulsion system does not function properly within .5 second after it is initiated, the parachute is not released and the propulsion system is shutdown. The Lander then descends to the Martian surface with the parachute attached.

Figure 3.2.3-7 summarizes the performance of the aerodynamic decelerator subsystem throughout its operational envelope. This figure shows maximum/minimum values of important parameters and shows what combinations of entry and atmospheric conditions cause them.

AERODYNAMIC DECELERATOR SUBSYSTEM OPERATIONAL SEQUENCE

Catapult Fire
t = 0
h = 23,000 ft

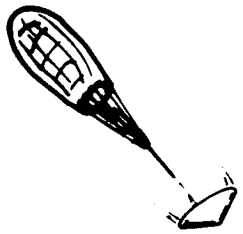

Reef Open
t = 1 sec
h = 22,300 ft (VM–7)
h = 22,600 ft (VM–10)

Full Open
t = 9 sec
h = 17,200 ft (VM–7)
h = 19,750 ft (VM–10)

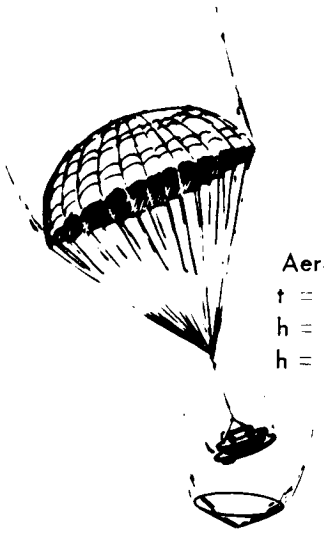

Aeroshell Release
t = 12 sec
h = 16,000 ft (VM–7)
h = 18,900 ft (VM–10)

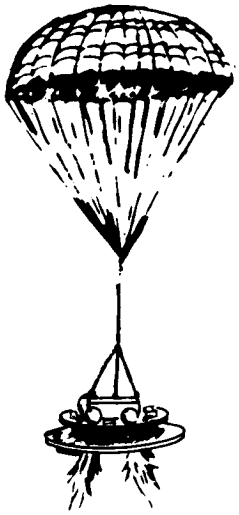

Terminal Propulsion Initiation
t = 45.2 sec (VM–7)
t = 121.5 sec (VM–10)
h = 5,000 ft

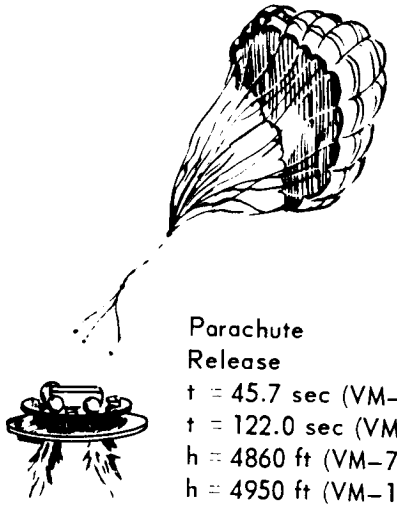

Parachute Release
t = 45.7 sec (VM–7)
t = 122.0 sec (VM–10)
h = 4860 ft (VM–7)
h = 4950 ft (VM–10)

Figure 3.2.3–4

AERODYNAMIC DECELERATOR SUBSYSTEM SEQUENCING

PARACHUTE DEPLOYMENT SEQUENCE

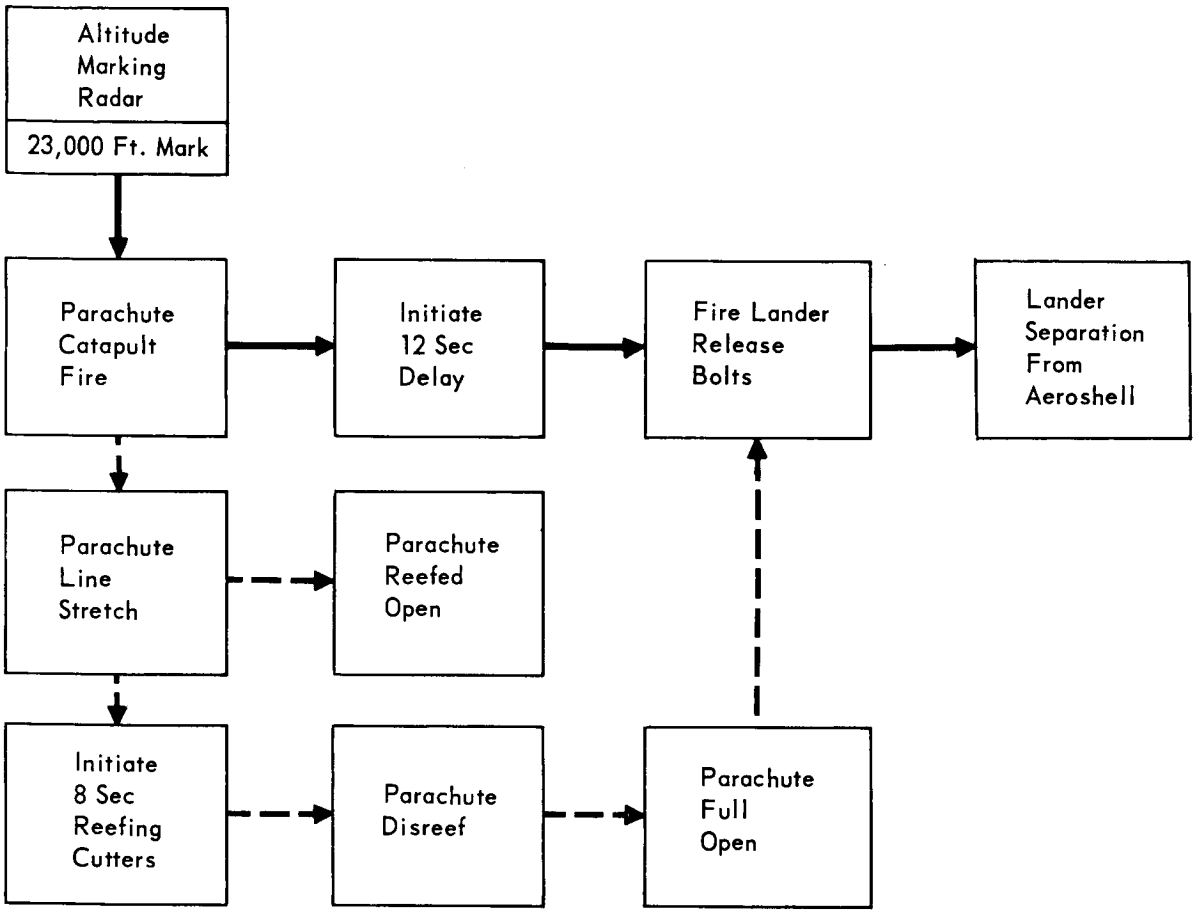

Figure 3.2.3–5

PARACHUTE DISCONNECT SEQUENCE

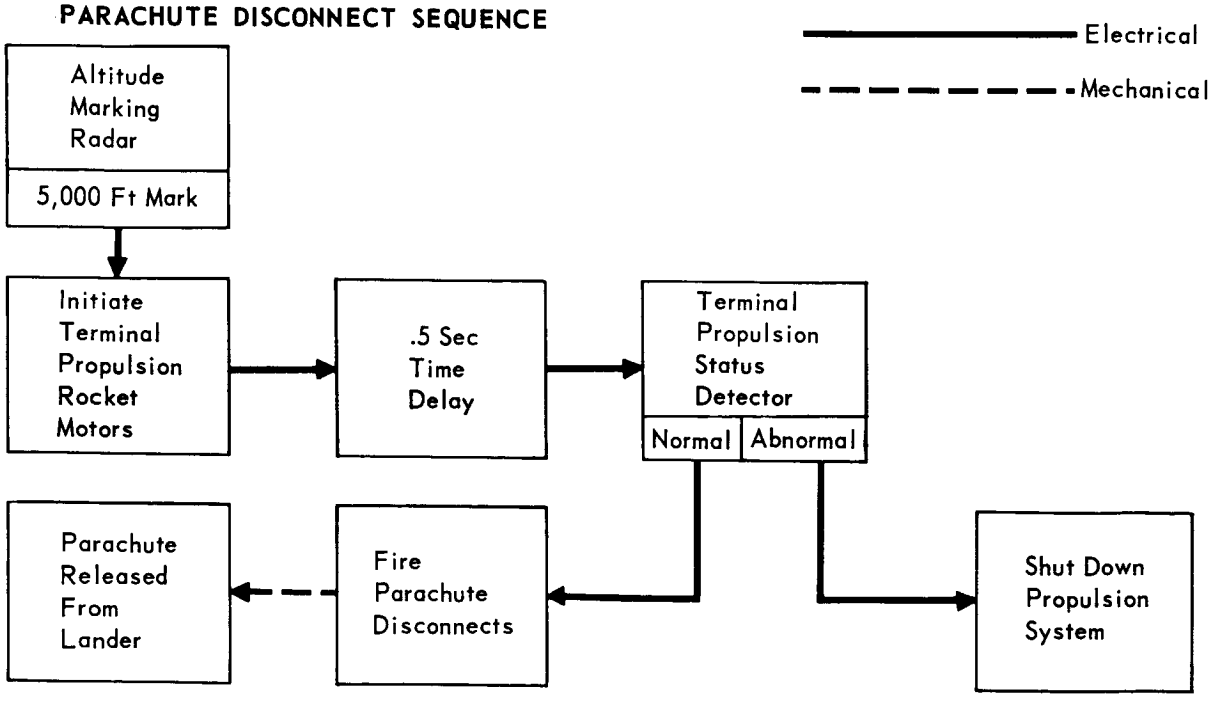

Figure 3.2.3–6

SUMMARY OF AERODYNAMIC DECELERATOR SUBSYSTEM OPERATIONAL ENVIRONMENT AND PERFORMANCE

PARAMETER	VALUE (MAXIMUM / MINIMUM)	ENTRY CONDITIONS WHICH DETERMINES CRITICAL VALUE (VM–; Ve; γ_e)
Parachute Deployment Altitude (ft)	23,000	Constant for all Entry Conditions
Mach Number at Parachute Deployment	2.0	VM–8; 13,000; –20°
	0.43	VM–9; 13,000; –20°
Dynamic Pressure at Parachute Deployment (lb/ft^2)	13.2	VM–8; 13,000; –20°
	3.65	VM–9; 13,000; –20°
Parachute Catapult Velocity (ft/sec)	100	Constant for all Entry Conditions
Parachute Reefed Opening Shock Load (lb)	18,300	VM–8; 13,000; –20°
	6,200	VM–10; 13,000; –20°
Parachute Full Open Shock Load (lb)	18,300	VM–8 13,000; –20°
	9,200	VM–10 13,000; –20°
Time from Parachute Deployment to Aeroshell/Lander Separation (sec)	12.0	Constant
Altitude at Aeroshell/Lander Separation (ft)	18,900	VM–10; 13,000; –20°
	15,600	VM–7; 13,000; –20°
Altitude at Parachute Release (ft)	5,000	Constant
Lander Velocity at 5,000 ft Terminal Propulsion Initiation (ft/sec)	283	VM–7; 13,000; –20°
	116	VM–10; 13,000; –20°
Lander Altitude When Aeroshell Impacts Martian Surface (ft)	6700	VM–10; 13,000; –20°
	4170	VM–7; 13,000; –20°
Lander Surface Impact Velocity Descending with Parachute (Terminal Propulsion Malfunction (ft/sec)	271	VM–7; 13,000; –20°
	112	VM–10; 13,000; –20°

Figure 3.2.3–7

3.2.3.4 Effect on Other Subsystems - The aerodynamic decelerator subsystem affects other subsystems in the following ways:

- It requires the radar altimeter to furnish a triggering signal at the proper parachute deployment altitude.
- It affects the terminal propulsion system sizing and propellant requirements.
- It affects the time available for post-landing transmission of data acquired by the Entry Science Package.
- The stability of the Lander during parachute descent, under the influence of winds or gusts, affects TV picture quality.

NOTE 1: For additional justification of Selection of Preferred Design Concept - see Volume II, Part B, Section 4.4 and Section 5.10.

NOTE 2: For additional information on Detailed Systems Functional Description - see Volume II, Part C, Section 11.

3.2.4 Pyrotechnic Subsystem - The pyrotechnic subsystem, Figure 3.2.4-1, is an integrated arrangement of hot gas and explosive shock operated devices. The standardized electro-explosive devices (EED's), EED control modules, and EED batteries provide sequential support functions for the CBS. Trade studies were performed to select the preferred firing circuit design and its components and to determine the preferred EED design approach.

The imposed constraints which received major consideration in determining the preferred subsystem design are listed below:

a. Primary pyrotechnic combustion or explosive detonation products and separation debris must be completely contained, both during and after pyrotechnic functioning.

b. All EED's are to be considered Category A items, as defined by AFETRM 127-1, dated 1 November 1966.

c. Standardized electrical initiation characteristics are to be used in all EED's.

d. The EED control module must contain provisions for remote checkout of the firing circuitry and installed EED's.

e. The EED's must be shorted and grounded after installation until time of firing.

f. No single failure or procedural error will cause the control module to inadvertently fire any EED's.

g. Pyrotechnic and explosive compositions must survive dry heat sterilization.

h. Redundant firing circuitry must initiate all pyrotechnic devices.

i. Constraints imposed by Section 4.2.12 of JPL Document No. PD 606-4, dated 12 June 1967, must be followed.

3.2.4.1 Equipment Description - The pyrotechnic subsystem functional schematic is shown in Figure 3.2.4-2. The power sources are automatically activated silver-zinc batteries which supply the CBS control bus. This bus distributes power to meet the high discharge loads of the CBS Reaction Control and Terminal Propulsion Subsystems. Capacitors charged from the CBS main power bus are used to activate the silver-zinc batteries one hour before Capsule Bus separation.

The necessary firing and arming relays, current-limiting resistors, battery activation capacitors, and monitoring and checkout provisions to initiate all of the CBS pyrotechnics are assembled into two redundant EED control modules.

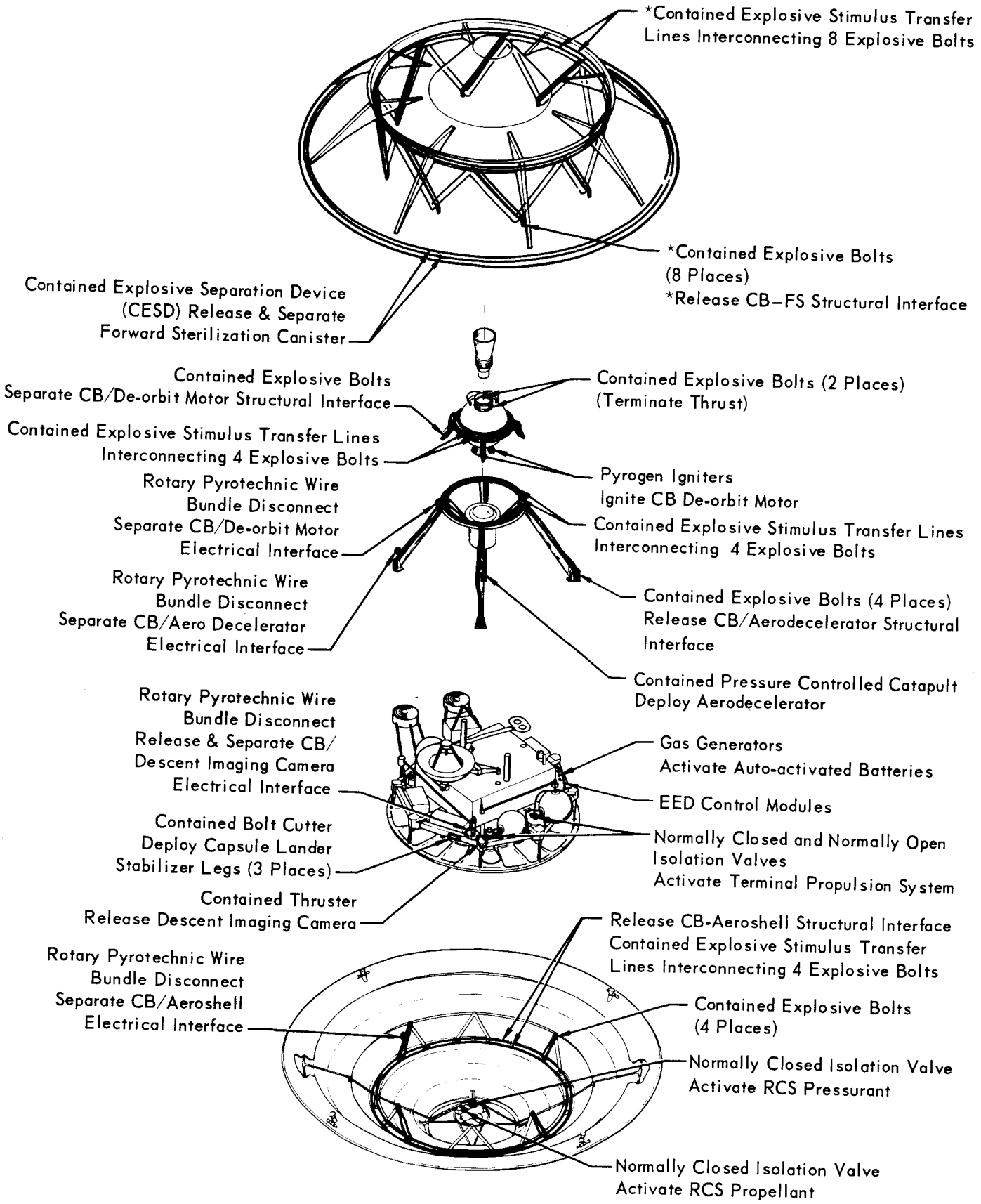
*Contained Explosive Stimulus Transfer Lines Interconnecting 8 Explosive Bolts
*Contained Explosive Bolts (8 Places)
*Release CB–FS Structural Interface
Contained Explosive Separation Device (CESD) Release & Separate Forward Sterilization Canister
Contained Explosive Bolts Separate CB/De-orbit Motor Structural Interface
Contained Explosive Bolts (2 Places) (Terminate Thrust)
Contained Explosive Stimulus Transfer Lines Interconnecting 4 Explosive Bolts
Pyrogen Igniters Ignite CB De-orbit Motor
Rotary Pyrotechnic Wire Bundle Disconnect Separate CB/De-orbit Motor Electrical Interface
Contained Explosive Stimulus Transfer Lines Interconnecting 4 Explosive Bolts
Rotary Pyrotechnic Wire Bundle Disconnect Separate CB/Aero Decelerator Electrical Interface
Contained Explosive Bolts (4 Places) Release CB/Aerodecelerator Structural Interface
Contained Pressure Controlled Catapult Deploy Aerodecelerator
Rotary Pyrotechnic Wire Bundle Disconnect Release & Separate CB/ Descent Imaging Camera Electrical Interface
Gas Generators Activate Auto-activated Batteries
EED Control Modules
Contained Bolt Cutter Deploy Capsule Lander Stabilizer Legs (3 Places)
Normally Closed and Normally Open Isolation Valves Activate Terminal Propulsion System
Contained Thruster Release Descent Imaging Camera
Release CB-Aeroshell Structural Interface Contained Explosive Stimulus Transfer Lines Interconnecting 4 Explosive Bolts
Rotary Pyrotechnic Wire Bundle Disconnect Separate CB/Aeroshell Electrical Interface
Contained Explosive Bolts (4 Places)
Normally Closed Isolation Valve Activate RCS Pressurant
Normally Closed Isolation Valve Activate RCS Propellant

Figure 3.2.4–1

CBS PYROTECHNIC MAJOR ELEMENTS FUNCTIONAL SCHEMATIC

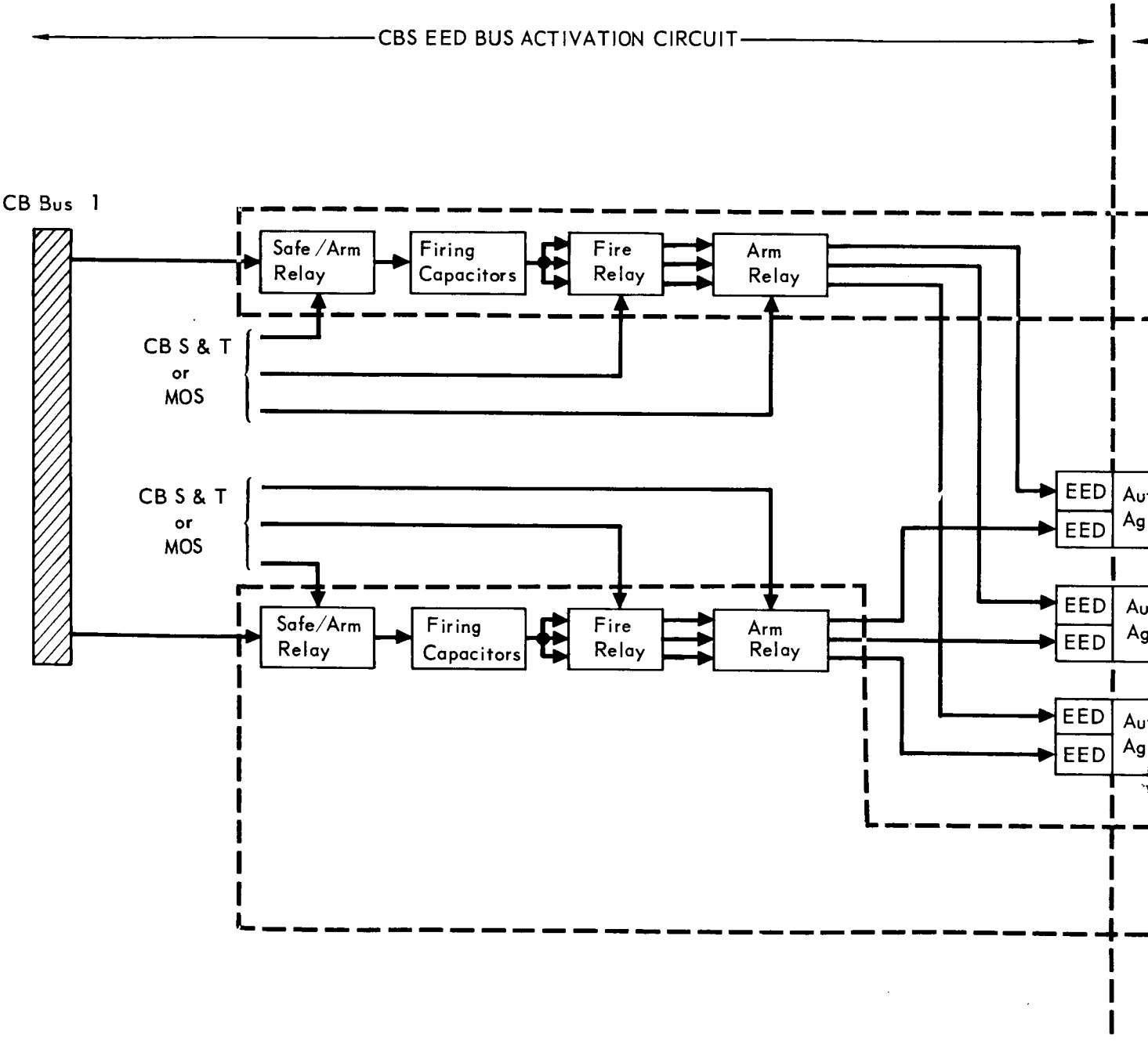

Figure 3.2.4–2

CBS TYPICAL EED FIRING CIRCUIT

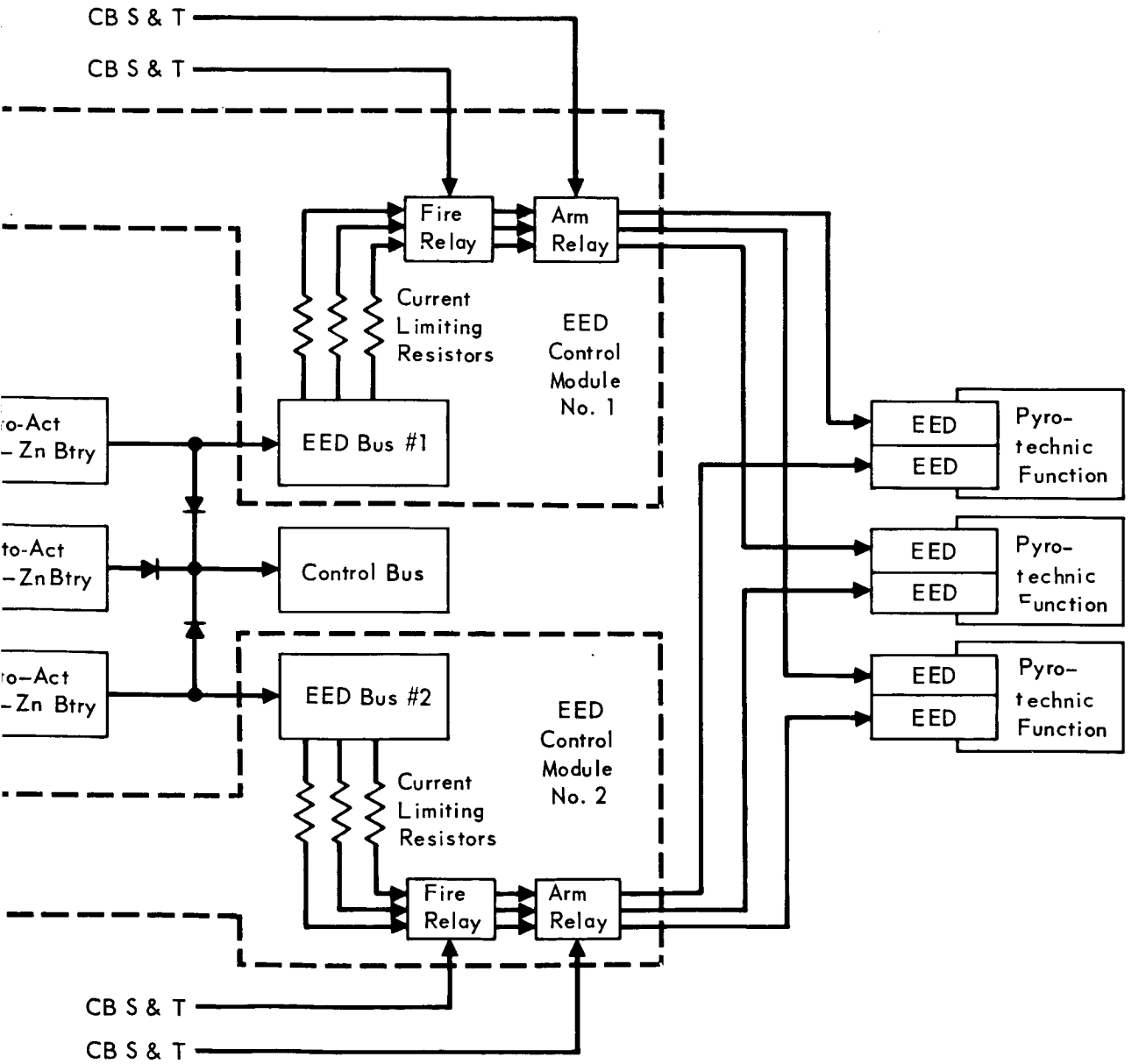

The EED's used throughout the Capsule Bus are hermetically sealed units containing a standardized electrical ignition element and the output charge required to perform the intended functions. Two EED's are installed in each device listed in Figure 3.2.4-3 to maximize reliability of the device. Structural release at multiple points in the same separation plane are interconnected with redundant explosive stimulus transfer lines. Common initiation junctions are used to obtain virtually simultaneous function between release points. Design simplicity was the prime selection criterion. McDonnell's pyrotechnic experience on the Mercury, the Gemini, the F-111 Crew Escape Module and internal projects was also valuable in selecting the specific pyrotechnic devices.

3.2.4.2 System Operation - From launch to approximately one hour prior to Capsule Bus separation, the battery activation capacitors are kept in a discharged condition. One hour before Capsule Bus separation, the safe/arm relays are energized causing the capacitors to be charged. Upon receipt of separate arm and fire commands from the Capsule Bus sequencer and timer (or MOS backup commands) the arm and fire relays will energize, discharging the capacitors through the gas generator EED's. This activates the batteries and applies power to the CBS EED busses No. 1 and 2 and the control bus. The remaining CBS EED's will be fired in a similar manner, except that the power will be supplied by these separate automatically activated batteires, instead of by capacitors. The Capsule Bus sequencer and timer will provide separate arm and fire commands to sequentially initiate the EED's during the mission sequence.

3.2.4.3 Integrated Mission Support - The preferred Capsule Bus pyrotechnic subsystem is configured to provide integrated sequential support functions, and at the same time to prevent inadvertent functioning with other subsystems. Major mission events such as canister separation, Capsule Bus separation, de-orbit, activation of Reaction Control and Terminal Propulsion Subsystems, and deployment and release of the aerodynamic decelerator depend on reliable performance of the pyrotechnic subsystem. The preferred pyrotechnic subsystem provides integrated control of EED devices that affect functioning of other subsystems:

a. Gas Generators transfer electrolyte from the reservoirs to the cells of the high discharge rate batteries of the Power Subsystem.
b. Rotary wire bundle disconnects are used at vehicle separation planes.
c. A confined explosive separation device separates the Forward Sterilization Canister from the Flight Capsule.

SEQUENTIAL MISSION EVENTS SUPPORTED BY PYROTECHNIC DEVICES

MISSION PHASE	MISSION EVENT	PYROTECHNIC DEVICES PERFORMING FUNCTION	FUNCTION	NUMBER OF EED'S INITIATED/CONTROL MODULE	SUBSYSTEM SUPPORTED	TIME OF FUNCTION	PYROTECHNIC TIME DELAY
Spacecraft–Capsule Bus Separation	Initiate Auto–Activated High Discharge Rate and EED Batteries	Gas Generators	Force Electrolyte into Auto-Activated Batteries	3	Electrical Power	T_{12} – 57 min	None
	Release and Separate Forward Sterilization Canister	CESD Separation Assembly	Remove Forward Sterilization Canister from Capsule Bus	Part of Canister Subsystem	Canister Subsystem	T_{12} – 5 min	None
	Activate Reaction Control System	Normally Closed Pyrotechnic Isolation Valve	Activate Reaction Control System Pressurant	2	Reaction Control System	T_{12} – 5 sec	None
		Normally Closed Pyrotechnic Isolation Valves	Activate Reaction Control System Propellant	1	RCS	T_{12} – 5 sec	None
	Release and Separate CB from FS	Contained Explosive Stimulus Inter-Connected Explosive Bolts	Release CB–FS Structural Interface	Part of Canister Subsystem	CBS	T_{12}	None
Capsule Bus Deorbit	Control Deorbit Propulsion Motor	Pyrogen Igniter	Ignite CB Deorbit Motor	1	Deorbit Propulsion System	T_{12} + 20 min	None
		Contained Explosive Bolts	Release Motor Nozzle (Terminate Thrust)	1	Deorbit Propulsion System	T_{13} + 32 sec	None
		Rotary Pyrotechnic Wirebundle Disconnects	Separate Deorbit Motor/CB Electrical Interface	1	CBS	T_{13}+ 40 sec	.5 Second
		Contained Explosive Stimulus Inter-Connected Explosive Bolts	Release and Separate Deorbit Motor Case and Support	2	Deorbit Propulsion System	T_{13} + 41 sec	1.5 Seconds
Capsule Entry	Activate Terminal Propulsion System (TPS)	Normally Closed Pyrotechnic Isolation Valves	Activate TPS Pressurant	3	TPS	T_{15} + 50 sec	None
		Normally Closed Pyrotechnic Isolation Valves	Activate TPS Propellant	2	TPS	T_{15} + 55 sec	5 Seconds
Capsule Terminal Deceleration	Initiate CB Terminal Descent	Contained Pressure Controlled Catapult	Deploy Aero-decelerator	1	Aerodecelerator Subsystem	T_{19}	None
	Release CB from Aeroshell	Rotary Pyrotechnic Wirebundle Disconnects	Separate CB/Aeroshell Electrical Interface	1	CBS	T_{20} – .5 sec	.5 Second
		Contained Explosive Stimulus Interconnected Explosive Bolts	Release CB/Aeroshell Structural Interface	2	CBS	T_{20}	1 Second
	Release CB from Aerodecelerator	Rotary Pyrotechnic Wire-Bundle Disconnect	Separate CB/Aero-decelerator Electrical Interface	1	CBS	T_{21} + 1 sec	.5 Second
		Contained Explosive Stimulus Interconnected Explosive Bolts	Release CB/Aero-decelerator Structural Interface	2	Capsule Lander	T_{21} + 1.6 sec	1.1 Seconds
	Release and Separate Descent Imaging Camera from CB	Rotary Pyrotechnic Wire Bundle Disconnect	Separate CB/Descent Camera Electrical Interface	1	ESP	T_{24} - 1 sec	.5 Second
		Contained Thruster	Jettison Descent Imaging Camera	1	ESP	T_{24}	1.5 Second
	Terminate TPS	Contained Explosive Stimulus Interconnected Normally Open Isolation Valves	Deactivate TPS Engines	4	Capsule Lander	T_{26}	None
Landed Capsule	Deploy Capsule Lander Stabilizer Legs	Contained Bolt Cutter	Release Stabilizer Legs from Stowed Position	3	Capsule Lander	T_{27} + 6 sec	None

Figure 3.2.4–3

d. Pyrogen igniter EED's initiate the de-orbit motor.

e. Normally closed isolation valves prevent propellant flow in fluid lines of the Reaction Control Subsystem and the Terminal Propulsion Subsystem until activated.

f. Normally open isolation valves permit propellant flow in fluid lines of the TPS until activated.

g. Explosive bolts release and separate structural interfaces.

h. Contained thrusters deploy the Aerodecelerator and other equipment modules.

Note 1. Additional information which led to the selection of the preferred design concept is found in Volume II, Part B, Section 5.11.

Note 2. Complete functional description of the pyrotechnic subsystem is found in Volume II, Part C, Section 12.0.

Note 3. Testing of pyrotechnic devices for feasibility, sterilization, long life, etc. is found in Volume VI, Part B, Sections 1.1, 1.2, and 1.3.

3.2.5 Thermal Control - The thermal control subsystem maintains structural and equipment temperatures within their allowable ranges during the entire VOYAGER mission. The techniques utilized include a combination of thermal control coatings, thermal capacitance, insulation, thermostatically controlled electrical heaters, appropriate package arrangement, and a thermal curtain.

The major constraints on the design of the Capsule Bus thermal control system are as follows:

a. The allowable temperature range for SLS internal equipment is from 50°F to 125°F. A temperature of 60°F is selected as a design point for the thermal control system.

b. A maximum of 200 watts of power is available from the Spacecraft, except during trajectory corrections when the available power is assumed to be zero watts.

c. Equipment located external to the SLS must be maintained above the average Capsule Bus temperature of -140°F during cruise and Mars orbit. These individual minimum temperature requirements range from -85°F to 60°F.

d. The Capsule Bus receives no Solar or planetary heat inputs during the cruise mission phase.

e. A design objective is to maintain the heat shield ablator above -150°F.

The preferred design of the thermal control system for the Capsule Bus employs electrical resistance heaters to generate the heat required to maintain acceptable temperatures. To minimize power requirements during the interplanetary cruise mission phase, a multilayer insulation blanket has been selected which completely surrounds the Capsule Bus. The configuration of this insulation blanket is fully described in Part C, Section 13. The installation of the blanket is shown in Figure 3.1.2-4.

The temperature ranges which various areas of the Capsule Bus may experience during various mission phases with the selected thermal control subsystem are shown in Figure 3.2.5-1. These were derived from a thermal model of a Capsule Bus/Surface Laboratory combination. A complete discussion of the Capsule Bus thermal analysis can be found in Part B, Section 5.

3.2.5.1 Pre-Launch, Launch, and Earth Orbit Phases - The primary mode of thermal control for launch and Earth orbit is to use the thermal capacitance of the equipment and the Capsule Bus structure. Thermal capacitance will also contribute to thermal control during pre-launch testing. However, studies are required during

VOYAGER MISSION TEMPERATURE RANGES
(BATTERY POWER USED IN SLS)

AREA \ MISSION PHASE	PRE-LAUNCH	LAUNCH AND EARTH ORBIT	CRUISE AND MARS ORBIT	ORBITAL DESCENT	ENTRY (800,000 ft)	POST LANDING
1	20° to 160°F	40° to 160°F	40° to 100°F	Not applicable	Not applicable	Not applicable
2	20° to 160°F	-60° to 160°F	-120° to -35°F	Not applicable	Not applicable	Not applicable
3A	20° to 160°F	-60° to 160°F	-120° to -40°F	Not applicable	Not applicable	Not applicable
3B	20° to 160°F	-60° to 160°F	-330° to -310°F	Not applicable	Not applicable	Not applicable
4A	20° to 160°F	-60° to 160°F	-140° to -50°F	-150° to 30°F	-150° to 800°F	Not applicable
4B	20° to 160°F	-60° to 160°F	-330° to -310°F	Not applicable	Not applicable	Not applicable
4C	20° to 160°F	-60° to 160°F	-120° to -40°F	-290° to -210°	-290° to 1000°F	Not applicable
5	20° to 160°F	40° to 160°F	40° to 125°F	40° to 125°F	40° to 125°F	50° to 125°F
6A	20° to 160°F	-60° to 160°F	-150° to -60°F	-100° to 80°F	1700° to 2100°	Not applicable
6B	20° to 160°F	-60° to 160°F	-330° to -310°F	Not applicable	Not applicable	Not applicable

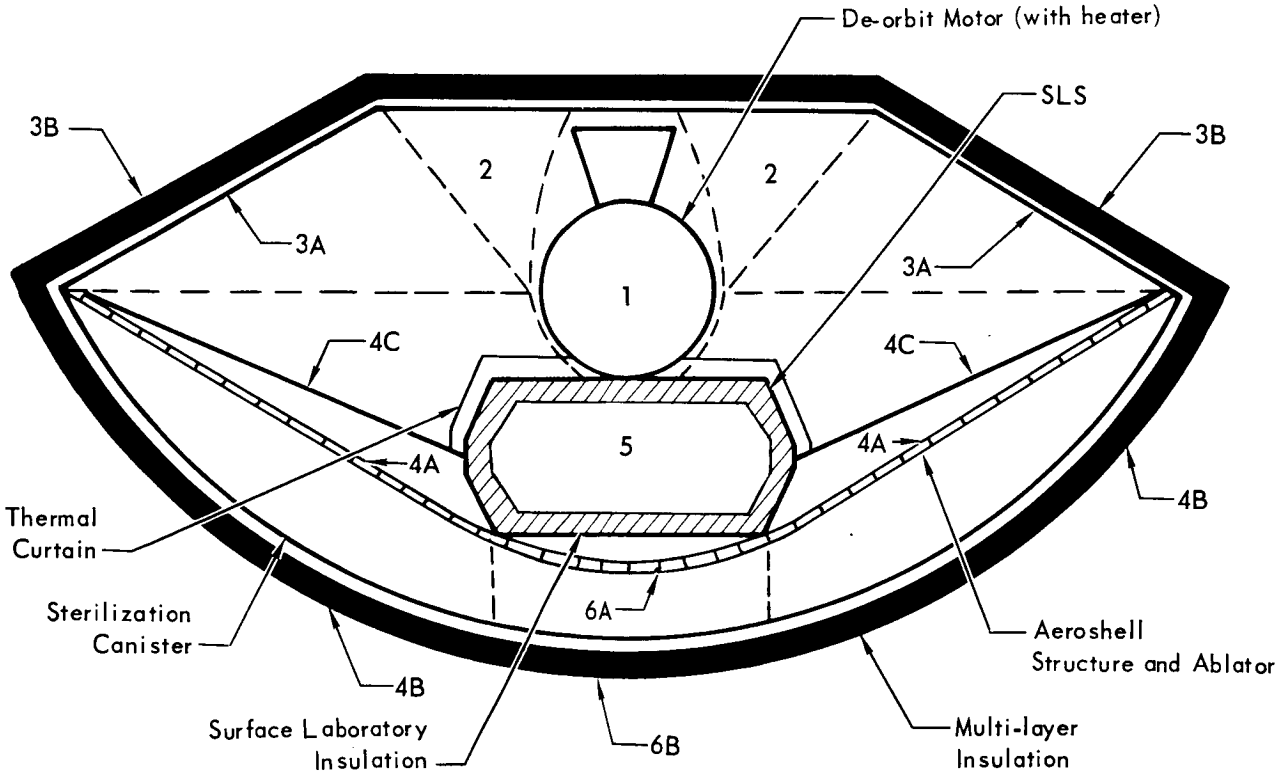

Figure 3.2.5-1

Phase C to determine if additional provisions are required for equipment cooling. This cannot be determined until detailed pre-launch test plans are formulated which outline equipment to be tested and for what length of time.

3.2.5.2 Cruise and Mars Orbit Phases - During the cruise and Mars orbit mission phases the Capsule Bus is shaded by the Spacecraft and its solar panels, except for short periods during mid-course maneuvers and Mars orbit insertion. This Spacecraft orientation results in no solar heat input to the Capsule Bus and constant heat loss to space. The temperature of the SLS and ESP internal equipment are limited to a range of 40° F to 125°F through these mission phases. The preferred design thermal control system for the Capsule Bus maintains SLS and ESP internal equipment and the deorbit motor at a temperature of 60°F. This requires 76 watts of power. Other temperature sensitive equipment installed on the Aeroshell and Sterilization Canister are provided with local insulation and thermostatically controlled electrical resistance heaters to maintain acceptable temperatures. Heater capacities and insulation thicknesses are sized to meet individual equipment requirements. The major items of this equipment are propellant storage tanks, valves, and feed lines associated with both the RCS and terminal descent propulsion subsystems. The total heater power required to maintain all external equipment at acceptable temperatures is 55 watts. The sum of these power requirements is 131 watts, and contains no safety factor. To assure mission success, an additional 20% is added to the power requirement to provide for contingencies, thus bringing the total power requirement for heating to 157 watts.

The design objective for Capsule Bus minimum structural temperatures is -150° F. This is to avoid possible degradation of the heat shield ablator. Thermal analysis of the Capsule Bus, as discussed in Part B, Section 5, indicates that there is sufficient radiation heat transfer from the deorbit motor and heat leak from the SLS, ESP, and other Capsule Bus equipment to maintain ablator temperatures above -150°F.

3.2.5.3 Orbital Descent Phase - The preferred design concept locates the multilayer insulation blanket on the external surface of the Sterilization Canister. This configuration is maintained intact throughout the Mars orbit. Just prior to deorbit maneuver, the canister and blanket are separated, exposing the heat shield ablator to the cold space environment. Analytical results, as discussed in Part B, Section 5, indicates that excessively low ablator temperatures do not occur. This is because the heat shield is without solar heat input for only 30 minutes while the separation and deorbit maneuvers are being performed. This deorbit and

separation timing sequence is discussed more completely in Part B, Section 2, Paragraph 2.3.2. After this 30 minute period the heat shield begins receiving a Solar heat input and the thermal curtain minimizes the loss of this heat from the back side of the Aeroshell. During this solar heating period the angle between the Capsule Bus roll axis and the Sun line can be as great as 50 degrees, and the coldest ablator temperature remains above -150°F. This angle may be expanded to 90 degrees if a roll rate of 3 to 4 rev/hour is imparted to the Capsule Bus to prevent a portion of the heat shield from being constantly shaded. Preliminary orbital descent studies indicate that for landings between the morning terminator and about noon, the required solar angle is achieved without additional maneuvers being required. Our preferred landing site of 25° from the morning terminator is within this constraint.

3.2.5.4 Thermal Control During Mars Atmospheric Entry - During the Mars atmospheric entry, the aft surface of the Aeroshell is exposed to convective heating. These heating rates, discussed in Part B, Paragraph 5.3.2.2.3, are sufficiently large to require that a thermal curtain be used to cover all external surfaces. This curtain has a low emissivity coating on the side facing the structure to minimize radiation heat transfer from the hot curtain to the structure. The thermal curtain installation is shown in Figure 3.1.2-4, Section 3.1.

3.2.5.5 Thermal Control Summary - The preferred design of the Capsule Bus thermal control subsystem is simple and highly reliable because it utilizes passive techneques except for the thermostatically controlled heaters. All the constraints, as outlined, are met by the selected subsystem.

NOTE:

1. The detailed analysis of the Capsule Bus thermal control system is presented in Part B, Section 5.
2. The functional description of the Capsule Bus thermal control system is in Part C, Section 13.

Igniter Assembly - The igniter assembly is essentially a small solid propellant rocket motor which is used to ignite the propellant grain of the de-orbit motor. The igniter assembly consists of a case, grain, booster pellets, pellet basket, housing flange, initiator cartridges and a safe-and-arm device. When initiated by an electrical signal, the igniter generates hot gas which is exhausted into the de-orbit motor case cavity. The hot gases provide the temperature and pressure for propellant grain ignition.

Motor Case Assembly - The motor case is formed from two titanium hemispheres that are joined by circumferential welds at the equator. One hemisphere has a mating flange for the nozzle subassembly while the other has a mating flange for the igniter subassembly. The interior of the case is insulated to reduce heat transfer during motor operation. A continuous ring skirt is attached to mate the rocket motor to the Capsule Bus substructure.

Insulation - There are four insulating components: a forward insulator, aft insulator, forward boot and aft boot. The forward insulator and aft insulator are bonded to the interior of the motor case. The forward and aft boots are partially bonded to the insulators near the equator of the motor case. The insulating material is selected to meet sterilization requirements. The forward and aft boots are used for propellant strain relief during and after sterilization heat cycles.

Propellant - After the motor case is insulated, it is lined for propellant casting. The propellant is then cast and cured in the insulated case. The propellant formulation for the de-orbit motor is a polybutadiene propellant with 84% solids (16% aluminum and 68% ammonium perchlorate). This propellant is formulated so it will meet the specific requirements of the de-orbit motor, particulary the vacuum storage and sterilization requirements. The anticipated performance of the motor is that the Capsule Bus acceleration will be essentially constant during motor firing.

Nozzle Assembly - The nozzle subassembly is a partially submerged, fixed nozzle, with a 53:1 expansion ratio. The subassembly consists of an exit cone, throat insert, throat closure, nozzle bulkhead and weatherseal. The nozzle assembly is designed to be ejected for thrust termination.

Thrust Termination - The thrust termination technique devised for the de-orbit motor is a modification of the simplest and lightest weight system currently available (release nozzle ejection system). The modification consists of capturing the thrust termination ring parts, rather than ejecting them into the Capsule Bus subsystem, to prevent damage from flying debris.

The nozzle is released by pyrotechnically activating the thrust termination ring assembly which attaches the nozzle to the motor case. Releasing the nozzle assembly causes a sudden drop in case pressure, which extinguishes the propellant.

Notes:
1. For additional justification of the selection of this preferred concept see Vol. II, Part B, Section 5.13.1.
2. For additional detailed information see subsystem functional description Vol. II, Part C, Section 14.0.

3.2.6 Propulsion Subsystem - The propulsion subsystem is divided into three major subsystems:

a. De-orbit Propulsion Subsystem,

b. Reaction Control Subsystem, and

c. Terminal Descent Propulsion Subsystem

These subsystems are individually discussed below.

3.2.6.1 De-orbit Propulsion Subsystem - The de-orbit subsystem provides the impulse required to decelerate the Capsule Bus to effect a Mars entry trajectory. The de-orbit motor is a spherical solid propellant rocket motor, with provision for thrust termination prior to burnout. The major considerations which affected the design of this subsystem are:

a. Total impulse required to provide a de-orbit velocity increment of 950 fps.

b. Sterilization of propellant and components.

c. Installation location to allow for compatible installation of antennas, parachute and science packages.

d. Mounting of the de-orbit motor to allow for adjusting the thrust axis of the motor to pass through the Capsule Bus at its center of gravity.

e. Standardization of major components.

The De-orbit Motor - The Capsule Bus contains one de-orbit motor which is 41.0 inches long and has a spherical case diameter of 30.0 inches. The de-orbit motor consists of: one motor case; one igniter assembly, consisting of an igniter and a safe-and-arm device; fixed, partially submerged, high expansion ratio nozzle; a thrust termination ring which holds the nozzle to the motor case; and an internally-perforated, case-bonded propellant grain. See Figure 3.2.6.1-1. The physical characteristics of the de-orbit motor are shown in Figure 3.2.6.1-2. The de-orbit motor interfaces with the Capsule Bus substructure and receives all but one of its commands from the Capsule Bus timer and sequencer. The other command is received from the accelerometer which provides a thrust termination command when the predetermined vehicle velocity increment is met.

The de-orbit motor is designed to provide a vacuum total impulse of 172,000 lb/sec for the 1979 mission, and is offloaded for 1973 to give 117,000 lb/sec. The motor firing duration is 28.7 sec for 1979 and 19.5 sec for 1973. The predicted average thrust is 6000 lb and the chamber pressure is 600 psia. This subsystem was chosen as a result of trade studies which have been summarized in Figure 3.2.6.1-3.

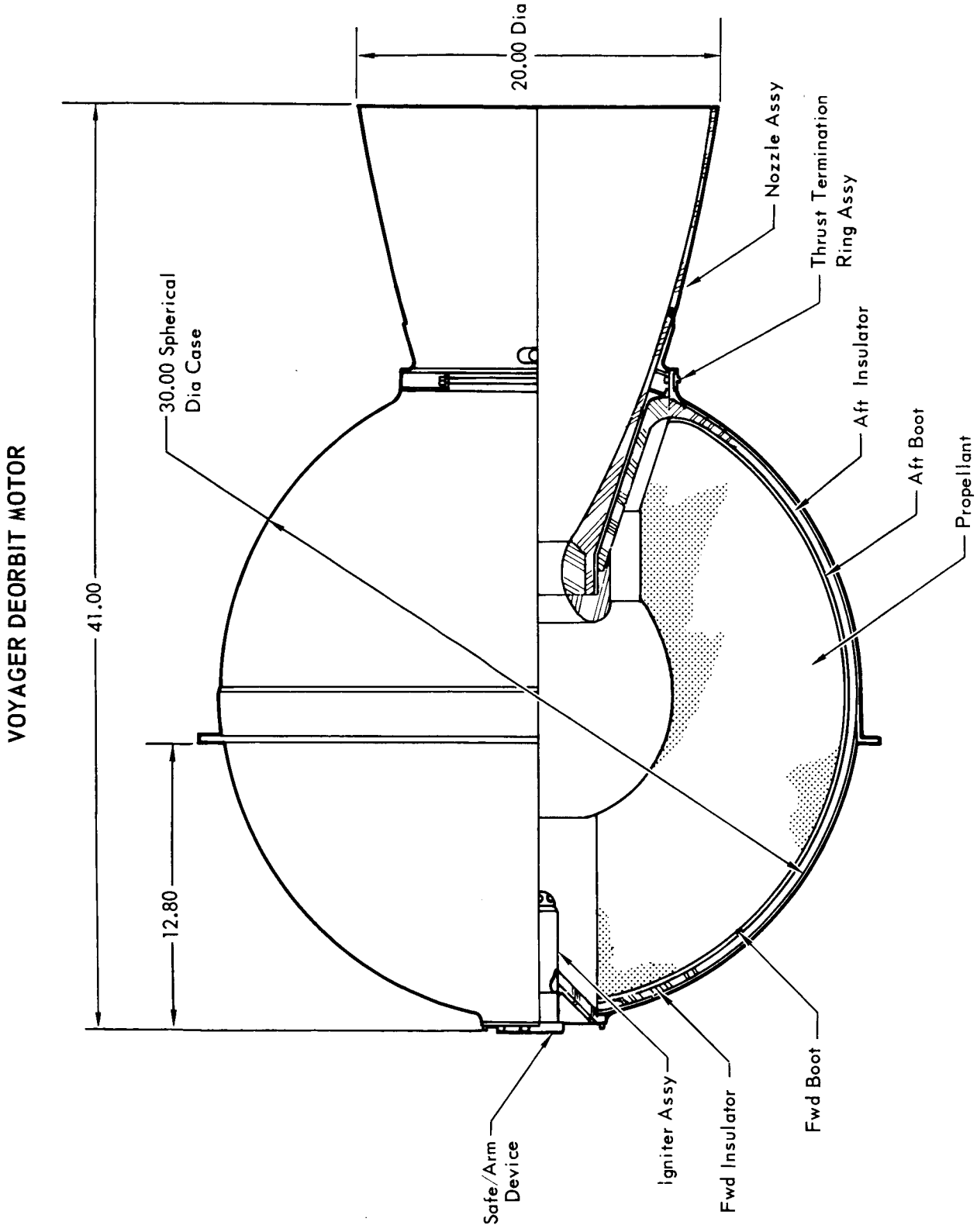

Figure 3.2.6.1-1

CHARACTERISTICS OF THE DE-ORBIT MOTOR

Motor	
Length (Over-All)	41.00 in.
Diameter (Spherical)	30.00 in.
Weight:	
Inert	70 lb
Loaded 1973	477 lb
Loaded 1979	678 lb
Case	
Type	Spherical
Material	6Al–4V Titanium
Weight	29 lb
Insulation	
Weight	12 lb
Nozzle	
Type	Ablative
Configuration	Contoured
Weight	24 lb
Expansion Ratio	53:1
Throat Diameter	2.65 in.
Exit Diameter	19.24 in.
Igniter	
Type	Pyrogen
Weight	4 lb
No. of Squibs	2
Propellant	
Type	PB (16% AL – 68% AP)
Predicted I_{sp} at 1000 psi (Vacuum)	287
Density	0.063 lbm/in.^{3}
Motor Performance	
Average Acceleration	
1973	1 g
1979	1.4 g's
Burning Time	
1973	19.5 sec
1979	28.7 sec
Average Thrust	6000 lb
Average Chamber Pressure	600 psia
Vacuum Total Impulse	
1973	117,000 lb-sec
1979	172,000 lb-sec
Volumetric Loading	
1973	54%
1979	80%

Figure 3.2.6.1–2

DE-ORBIT PROPULSION SUBSYSTEM COMPARISON SUMMARY CHART

TYPE SYSTEM	PROPELLANTS	RELIABILITY	DEVELOPMENT STATUS	WEIGHT			VERSATILITY
				1973	1979	1973 Off-Loaded	
Solid Propellant	CTPB/AP/AL	.9950	Low - Requires propellant development and full scale demonstration	460	678	477	Very versatile with thrust termination. The 1979 design can be off-loaded with minimum penalty.
Monopropellant	Hydrazine	.9940	Good – N_2H_4 and storage tank compatibility requires development for 275°F. Catalyst bed and ETO compatibility must be resolved.	632	900	655	Very versatile. Termination easily effected. Off-loading for 1973 results in low penalty.
Bipropellant	NTO/MMH	.9918	High – More propellant mat'ls compatibility testing req'd but NTO MMH propellants are thermally stable @275°F.	539	757	563	Very versatile. Termination easily effected. Off loading for 1973 results in low penalty.
Composite – Common Tanks	NTO/MMH	.9926	Same as Bipropellant	607	854	–	Versatile. Termination easily effected. However seperate tanks must be designed for the 1973 and 1979. Positive expulsion req'd.
Composite – Common Tanks and Engine	NTO MMH	.9869	Same as Bipropellant	598	841	–	Same as Composite above.

Figure 3.2.6.1–3

3.2.6.2 Reaction Control Subsystem (RCS) - The reaction control subsystem is a liquid monopropellant rocket engine subsystem which provides thrust for separation of the VOYAGER Capsule Bus from the Flight Spacecraft and attitude control of the Capsule Bus from separation through entry into the Mars atmosphere.

The RCS is designed to meet the sterilization, environmental and operational requirements of the VOYAGER mission. These requirements include:

a. Operation following ethylene oxide decontamination, heat sterilization and 43 weeks storage in the space environment during transit to Mars.

b. Operation in a vacuum under zero gravity conditions.

c. Operation to provide translational thrust for separation of the Capsule Bus from the Spacecraft Bus, and torques for attitude control of the Capsule Bus.

d. Maintenance of propellant above 40°F to prevent freezing.

The RCS uses eight fixed mount, constant thrust, radiation cooled thrust chamber assemblies (TCA's) operated in a pulsing mode to provide three axis attitude control to the Capsule Bus. Four TCA's, with 22 pounds of thrust each, provide pitch and yaw control; roll control is provided by two pairs of 2 pound thrust TCA's. The fuel used is hydrazine, a storable monopropellant, and ignition is achieved by spontaneous catalytic decomposition in the combustion chamber. The propellant is stored in a titanium bellows positive expulsion tank which is pressurized by cold gas nitrogen, that is stored at high pressure and regulated to operating pressure. Figure 3.2.6.2-1 presents the subsystem schematic diagram. Additional RCS physical and performance characteristics are shown in Figure 3.2.6.2-2.

The RCS storage tanks and control components are installed in the center of the vehicle immediately beneath the lander, and integrally attached to the Capsule Bus aeroshell. The TCA's are mounted on the aeroshell periphery. Figure 3.2.6.2-3 shows the RCS equipment placement.

RCS operation begins with an activation command 5 seconds before separation of the Capsule Bus from the Flight Spacecraft. The pressurant and propellant isolation valves are opened and the propellant tank and TCA's are pressurized to make the subsystem ready for use. At the time of Capsule Bus separation, the four pitch and yaw TCA's are fired by a command from the guidance and control electronics to give a separation velocity of 1.25 ft/sec to the Capsule Bus. Attitude control during the separation firing sequence is effected by OFF logic wherein thrust chamber(s) producing a torque in the direction of the disturbance are momentarily

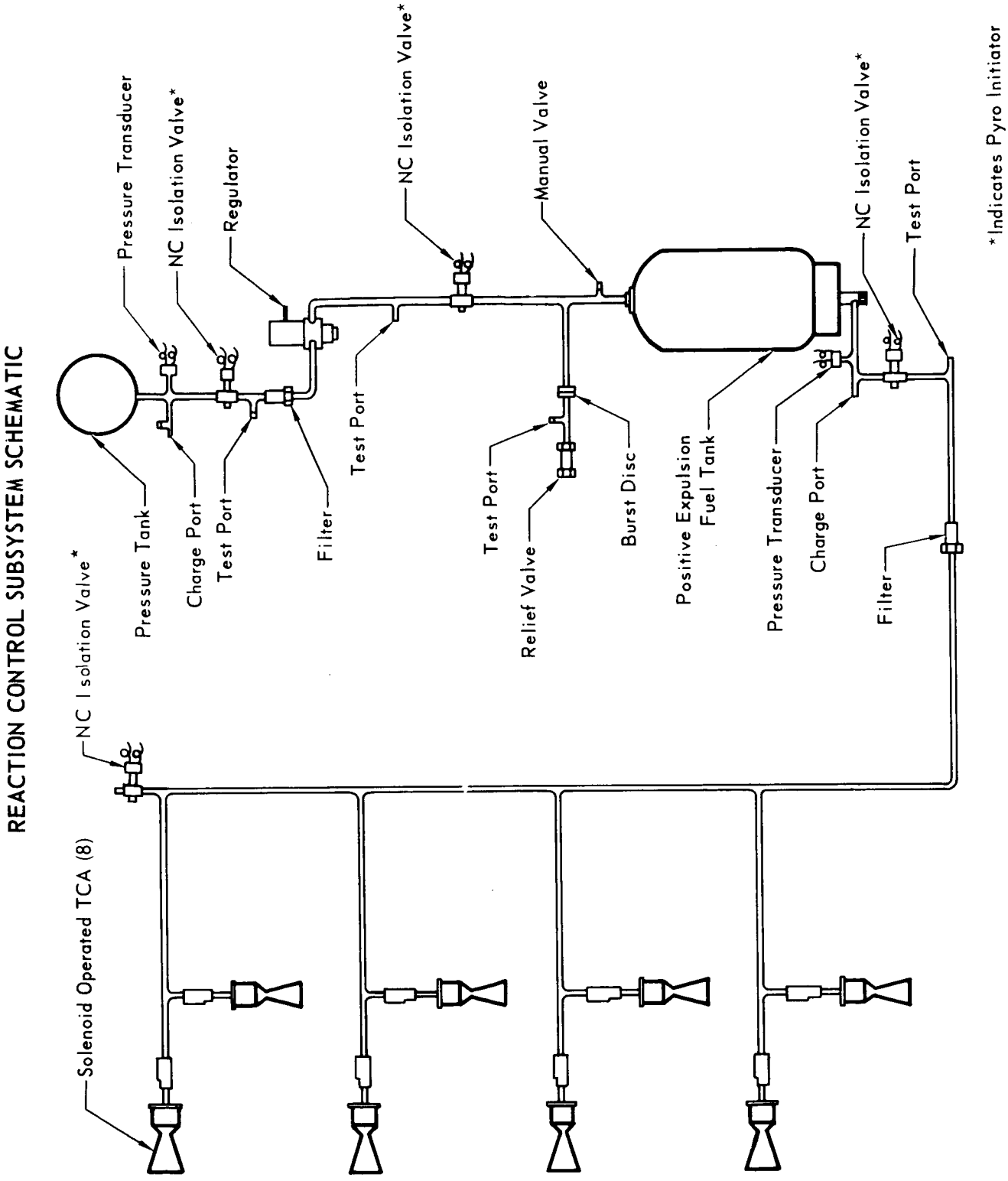

Figure 3.2.6.2–1

REACTION CONTROL SUBSYSTEM
PHYSICAL AND PERFORMANCE CHARACTERISTICS

Subsystem

Type – Monopropellant
  Propellant – Anhydrous Hydrazine
  Ignition – Catalyst, Shell 405
Pressurization – Stored Cold Gas, Regulated
  Pressurant – Nitrogen
Total Impulse, lb-sec – 1028

Thrust Chamber Assemblies

Total Number – 8
Type – Radiation Cooled, Fixed Thrust, Fixed Mount

Control Axis	PITCH	YAW	ROLL
No. of TCA's per Axis	2	2	4
No. of TCA's per Control Maneuver	1	1	2
Thrust per TCA, lb	22		2
Specific Impulse, Steady State, sec	220 min		
Minimum Impulse Pulse, lb-sec	0.22 max.		
Response, Start, Signal to 90% Thrust, sec	.020 max.		
Response, Shutdown, Signal to 10% Thrust, sec	.020 max.		
Area Ratio, ϵ	50:1		

Pressures –	CHARGE	STERILIZATION	OPERATION
Pressurant Tank	300 psia @ 70°F	4400 psia @ 275°F	400–3000 psia
Regular Inlet	14.7 psia	21 psia	400–3000 psia
Regular Outlet	14.7 psia	21 psia	300 psia
Propellant Tank	14.7 psia	27 psia	300 psia
Combustion Chamber	14.7 psia	21 psia	150 psia

Burst Disc/Relief Valve Relief Pressure – 450 psia

Weights

Subsystem Total Weight, Loaded, lb – 46.6
Propellant Weight, Loaded, lb – 7.4
Propellant Weight, Useable, lb – 6.6
Pressurant Weight, lb – 0.4

Tankage

Propellant Tank – Positive Expulsion, Metal Bellows,
  Cylindrical, Titanium
  6.1 inch dia x 12.2 inch long
Pressurant Tank – Spherical, Titanium, 4.9 inch dia

TCA Envelopes	22 lb	2 lb
Length Over-All (Including Valve)	9.3 in.	7.3 in.
Chamber Diameter	2.0 in.	1.0 in.
Nozzle Exit Diameter	2.7 in.	1.2 in.

Figure 3.2.6.2–2

RCS GENERAL ARRANGEMENT

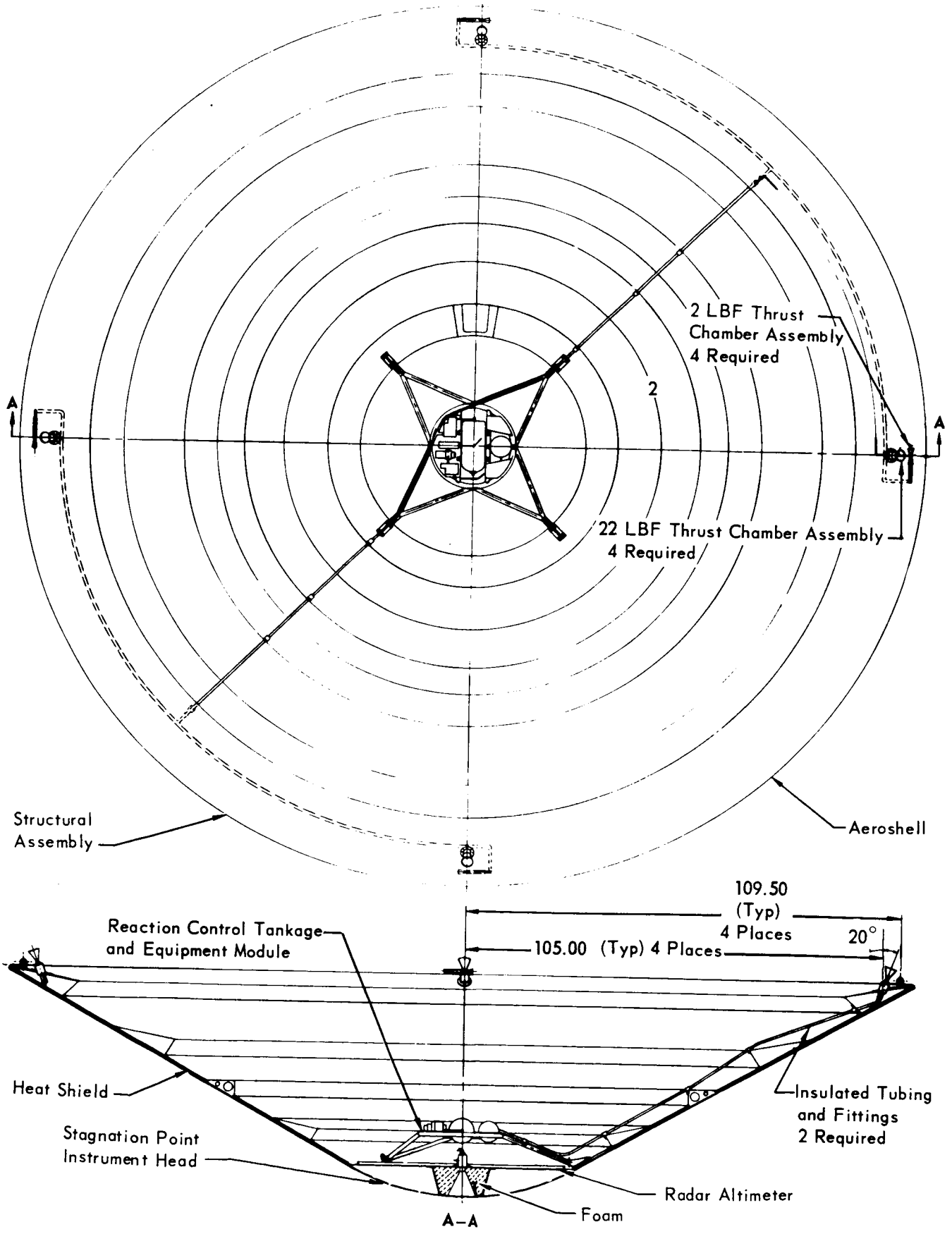

Figure 3.2.6.2–3

shut off. The subsystem responds to subsequent firing commands as needed to provide attitude control during orientation, coast, de-orbit motor firing, and atmospheric entry. During entry into the Mars atmosphere attitude rate damping is provided. The operation of the RCS is terminated 0.2 sec. before parachute deployment, at approximately 23,000 ft. The RCS is jettisoned from the lander along with the Aeroshell, at approximately 18,000 ft.

The preferred RCS concept was selected over cold gas, bipropellant and hybrids incorporating deorbit propulsion thrust vector control (TVC) subsystems as a result of the trade studies described in Part B, Section 5.13.2. A summary of these studies is shown in Figure 3.2.6.2-4.

NOTES:
1. For additional justification of the selection of this preferred design concept see Volume II, Part B, Section 5.13.2.
2. For additional detailed information see subsystem functional description Volume II, Part C, Section 15.0.

REACTION CONTROL SUMMARY – DE-ORBIT AND UNPOWERED MISSION PHASES

SELECTION CRITERIA	CANDIDATE UNPOWERED MISSION PHASE CONTROLS		
	CANDIDATE REACTION CONTROL SYSTEMS		
	MONOPROPELLANT	LIQUID BIPROPELLANT	COLD GAS
Reliability	.9934	.9897	.9967
Weight, lb*	42 to 45	50 to 52	62 to 70
Development Status	Under qualification for transtage. Sterilization will complicate design of positive expulsion device.	Well developed except for sterilizable positive expulsion device	Most developed subsystem. Minimal sterilization problems
Versatility	Small weight, volume increase provides growth capability	Small weight, volume increase provides growth capability, but increases system complexity.	Least growth capability due to large weight and volume.
Interface complexity	Propellant heating required during 9–month transit to prevent freezing.	High combustion temperature requires insulation. Propellant heating required during 9-month transit.	Low temperature exhaust eliminates heating, attenuation problems.

* Based on 1973 Mission Requirements
Variation in weights shown reflects the range of thrust levels considered in the subsystem trade studies.

Figure 3.2.6.2–4

3.2.6.3 Terminal Propulsion Subsystem - The Terminal Propulsion Subsystem (TPS) is a storable hypergolic bipropellant liquid rocket subsystem, the propellants being fed by pressurized cold gas.

The TPS provides deceleration rate--and pitch, yaw, and roll control--during the descent of the lander from 5,000 feet to 10 feet above the Martian surface.

The major components of the system are four fixed-mounted engine assemblies, their propellant feed lines, two propellant storage tanks and control devices, a pressurant gas storage tank, and the pressurant control devices. The larger of these major components are depicted in Figure 3.2.6.3-1. The TPS is shown schematically in Figure 3.2.6.3-2. Subsystem physical characteristics are summarized in Figure 3.2.6.3-3.

Prior to subsystem activation the pressurant and propellants are stored in their tanks behind leak-tight isolation valves. The propellant settles at the tank outlet during the Capsule Bus deceleration provided by the Aeroshell and the parachute. During entry of the Capsule Bus, the TPS is activated by opening the isolation valves. The pyrotechnic circuits are armed at 23,000 ft., at the same time as parachute deployment. Twelve seconds later, at Aeroshell separation, the propellant tank outlet isolation valves are opened allowing propellant flow to the engine inlets. Five seconds after that, the simultaneous opening of the pressurant isolation valves and the propellant tank inlets pressurizes the propellant manifolds. During descent, a signal from the radar altimeter, at 5,000 ft. altitude, initiates hypergolic engine ignition. Fusible wires in the engine combustion chambers signal satisfactory operation, which permits parachute release. The engine servo-actuators respond to radar and gyro signals and control the throttling valves to provide deceleration with pitch, yaw and roll control. The final descent is controlled from a descent rate of 283 ft/sec maximum at engine ignition to 5 ± 1 ft/sec at thrust termination, 10 feet above the surface of Mars.

The termination of thrust at TPS shutdown isolates the remaining pressurant and propellants in their storage systems, thereby limiting engine thrust tail-off and propellant dribble. The lander will settle the remaining 10 feet to the surface.

The major constraints affecting this preferred design, resulting in the selection of the configuration as well as the materials and fabrication methods, were the sterilization requirements, the servicing restrictions imposed by the isolation of the TPS in the sterile biological barrier, and the long period of storage in transit to a completely automatic operational sequence.

TERMINAL PROPULSION SUBSYSTEM MAJOR COMPONENTS

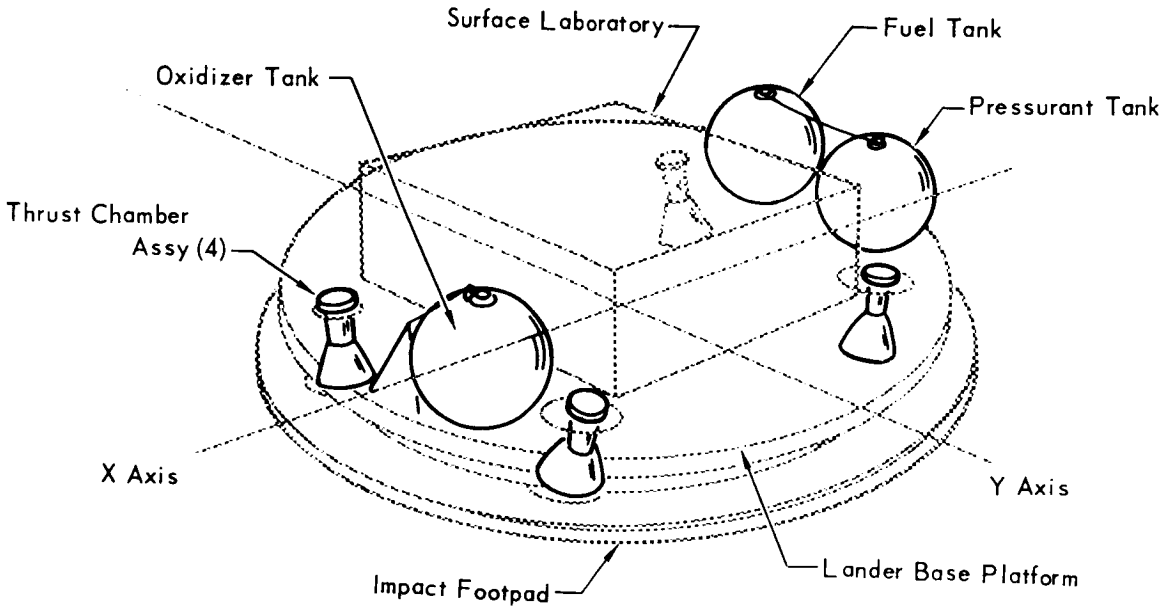

Figure 3.2.6.3–1

SCHEMATIC DIAGRAM TERMINAL DESCENT PROPULSION SUBSYSTEM – VOYAGER

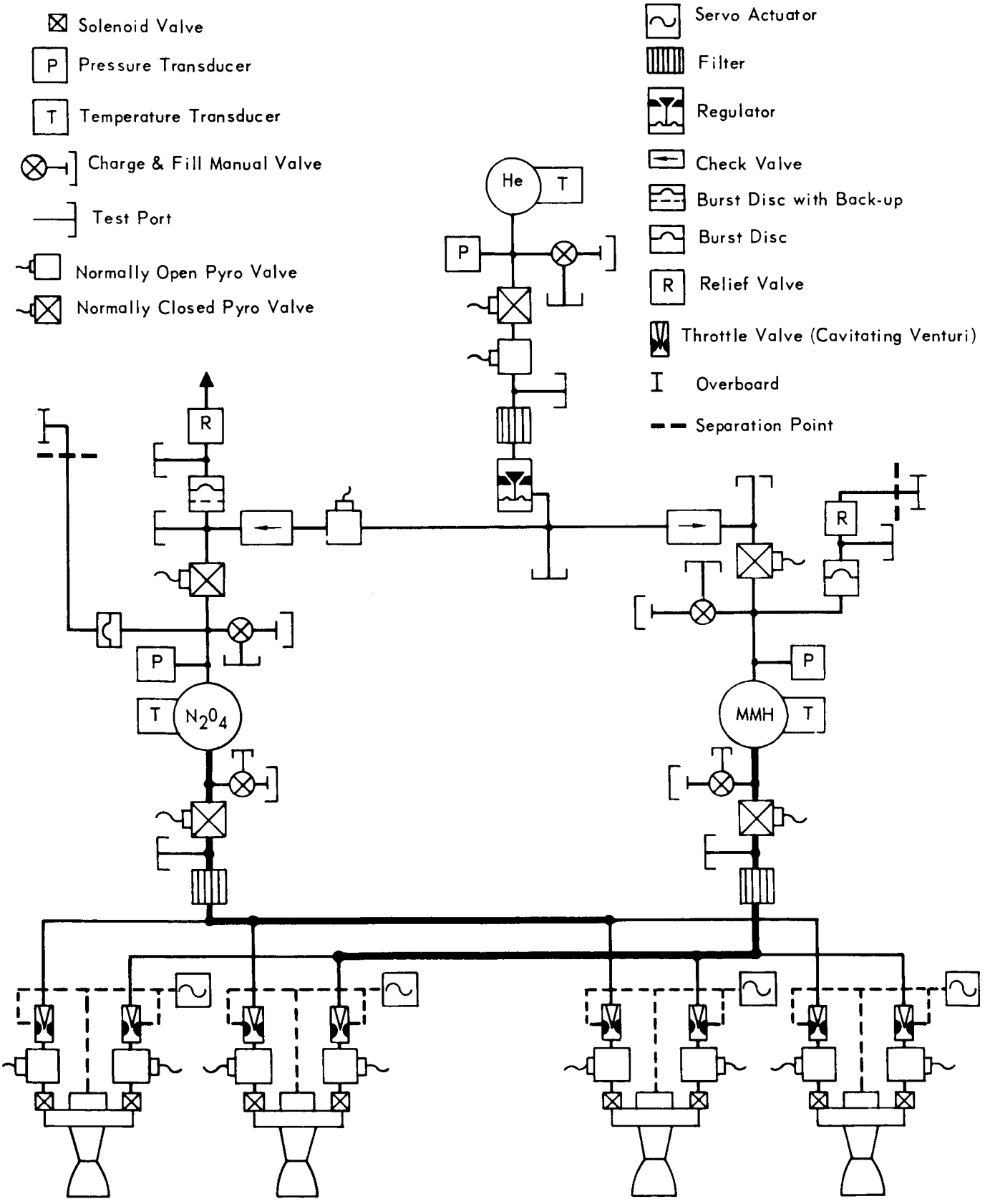

Figure 3.2.6.3–2

PHYSICAL CHARACTERISTICS & PERFORMANCE SUMMARY

ENGINES (25.0 L x 11.5 Dia. Exit Plane) Ablative Coolent	
Design Thrust Level (lb)	
Per TCA	1650 – 165
Total (4)	6600 – 660
Firing Duration Seconds (Nom.)	70
Chamber Pressure PSIA (Nom.)	300 – 30
Nozzle Area Ratio (ϵ)	30:1
PRESSURANT	
He Storage PSIA (Nom.)	3000
Tank Diameter (inches)	17.50
Volume (ft.^{3})	1.43
Weight (lb)	2.7 (Net)
PROPELLANTS	
(65,000 lb-sec I_t = 242 lb Total Propellant)	
MMH (Fuel) Storage PSIA (Nom.)	Ambient
Tank Diameter (inches)	19.20
Volume (ft.^{3})	2.02 (incl. ullage)
Weight (lb) (93 Loaded)	87 (Usable)
N_2O_4 (Oxidizer) Storage PSIA (Nom.)	Ambient
Tank Diameter (inches)	20.50
Volume (ft.^{3})	2.40 (incl. ullage)
Weight (lb) (149 Loaded)	140 (Usable)
Mixture Ratio (Oxide to Fuel)	1.6
Subsystem Total Weight, Loaded (lb)	585

Figure 3.2.6.3–3

Selection of the thrust level and the total impulse was based on the lander weight. The throttling range was required to provide the necessary control dynamics. The isolation valves in all three major groups are pyrotechnically actuated by electroexplosive devices.

Inherent in the total impulse and throttling range of the TPS is the accommodation of attitude and descent rate control through all of the Mars model atmospheres. System safety considerations have resulted in the provision for venting pressurant in the event of propellant supply overpressure. The relief valve resealing action after venting excess pressurant permits continued operation of the TPS.

Propellant can be unloaded from the system in the event of a component failure during prelaunch operations through burst discs and vents, providing propellant tank overpressure safety. The burst discs and vents discharge into an OSE propellant disposal system outside the biological barrier.

A number of TPS arrangements devised to meet the mission requirements was evaluated and the above preferred TPS design was selected. A trade study summary table is shown in Figure 3.2.6.3-4. The main considerations were (1) the overall lander configuration and (2) weight savings based on the elimination of a need for a separate gimballing system or RCS, as these controls are inherent in the selected design, which uses four canted, differentially throttleable engines.

Note 1: For Additional Justification of Selection of Preferred Design Concept - See Volume II, Part B, Section 4.4

Note 2: For Additional Detailed Information on Subsystems Functional Description - See Volume II, Part C, Section 16.0

VOYAGER 1973 BASELINE SELECTION SHEET

CANDIDATES	CHARACTERISTICS **	Devel. Risk	FACTORS				CRITERIA					Initial Choice(s)	Selection
			Radar Effects	Shape Packaging	Contam'n Potential $\left(\frac{gm}{cm^2}\right)$	Weight (lb)	Prob. of Success	System Perf. (I_{sp}) (sec)	Dev. Time (yrs)	Costs (M$)	Flexi-bility*		
1. Single liquid propellant rocket + jet vanes	†F = 7,000 lb, I_t = 80,500 lb-sec	High	Bad	Poor	.022	737	.993	288	2.5	99	Low		
2. Single liquid propellant rocket + RCS	†F = 7,000 lb, I_t = 80,500 lb-sec	High	Best	Poor	.022	694	.993	288	2.5	90	Med	X	
3. Three liquid propellant rockets, swiveling one.	F = 3 x 2330 lb, I_t = 80,500 lb-sec	Med	Good	Best	.007	705	.984	288	3.5	79	High	X	
4. Four liquid propellant rockets, fixed-canted alternately	F = 4 x 1750 lb, I_t = 80,500 lb-sec	Low	Good	Good	.007	785	.980	288	3.5	81	High	X	X
5. Six liquid propellant rockets – 1 ring	F = 6 x 1160 lb, I_t = 96,600 lb-sec	Low	Good	Good	.005	845	.997	288	3.5	81	Med	X	
6. Six liquid propellant Rockets – 2 rings	F = 6 x 1160 lb, I_t = 96,600 lb-sec or (2 x 3 x 2330) (80,500)	Med	Good	Good	.007	843	.997	288	3.5	80	High		
7. 1 Solid propellant rocket + 6 monopropellant	F = 5600 lb and 6 x 350 lb; I_t = 102,500 lb-sec	High	Bad	Poor	.007	720	.995	255/225	3.0	80	Low		

Remarks: Assumptions – (1) Ballute deceleration to thrust initiation at 600 fps or at 10,000 ft altitude; (2) active reaction control required in terminal descent; (3) Adaptive and preprogrammed modes of approach considered; and (4) Retention down to 50 ft altitude or down to touchdown investigated. (no data given here)

* Includes growth potential, insensitivity to uncertainties, and adaptability to new data.

** Typical values only.

† New engine, new development

Figure 3.2.6.3–4

3.2.7 Packaging and Cabling - Equipment required to implement the subsystem and intersystems functions of the Capsule Bus is packaged, installed, and interconnected to ensure compatibility with a variety of often competing considerations. For the Capsule Bus, the most significant considerations include:

a. Equipment thermal control.

b. Location of interfacing subassemblies and subsystems in close proximity.

c. Mechanical installation to provide accessibility for installation and replacement, and for installed checkout and tests.

d. Cabling installed as a major equipment item, rather than as a subsidiary addition, to ensure mechanical support, accessibility and flexibility.

3.2.7.1 Equipment and Cabling Installation - The Capsule Bus equipment and cabling installation is shown in Figure 3.2.7-1, which illustrates application of the following concepts:

- Location of Guidance and Control Subsystem equipment near the center of gravity.
- Location of the low rate Radio Subsystem in proximity of the UHF antenna.
- Four equipment assemblies, which are of standard height and width, mounted within four outer sectors of the Capsule Bus structure.
- Equipment cabling installed within the protected interior of the Capsule Bus structure, with the pyrotechnic cable harness routed along the top of the outer intercostal members.

Note that the Landing Radar Antenna and the Radar Altimeter are mounted on the impact foot pad to provide unrestricted field of view.

3.2.7.2 Cabling Description - The electrical cabling subsystem of the Capsule Bus is designed to use qualified standard hardware and established fabrication procedures. Fabrication procedures in the form of McDonnell Process Specifications are further discussed and tabulated in Volume II, C-17.

The basic wire bundle components selected as a result of trade studies (see Volume II B-5.14) are MIL-W-81381/1, "Kapton", wire and MIL-C-38999 connectors. Wire insulated with polymide and FED-fluorocarbon films was selected because of high temperature and ETO compatibility, low weight and volume, high resistance to abrasion and high strength. The preferred connector type utilizes rear removable crimp contacts and a potting seal. Connectors of this type are available in 40 insert arrangements of from 3 to 61 contacts in the 16 and 20 gage ratings and to 128 contacts in the high density 22 gage ratings, and feature high temperature operation, low weight and volume, and highly reliable interfacial seals.

CAPSULE BUS EQUIPMENT AND CABLING INSTALLATION

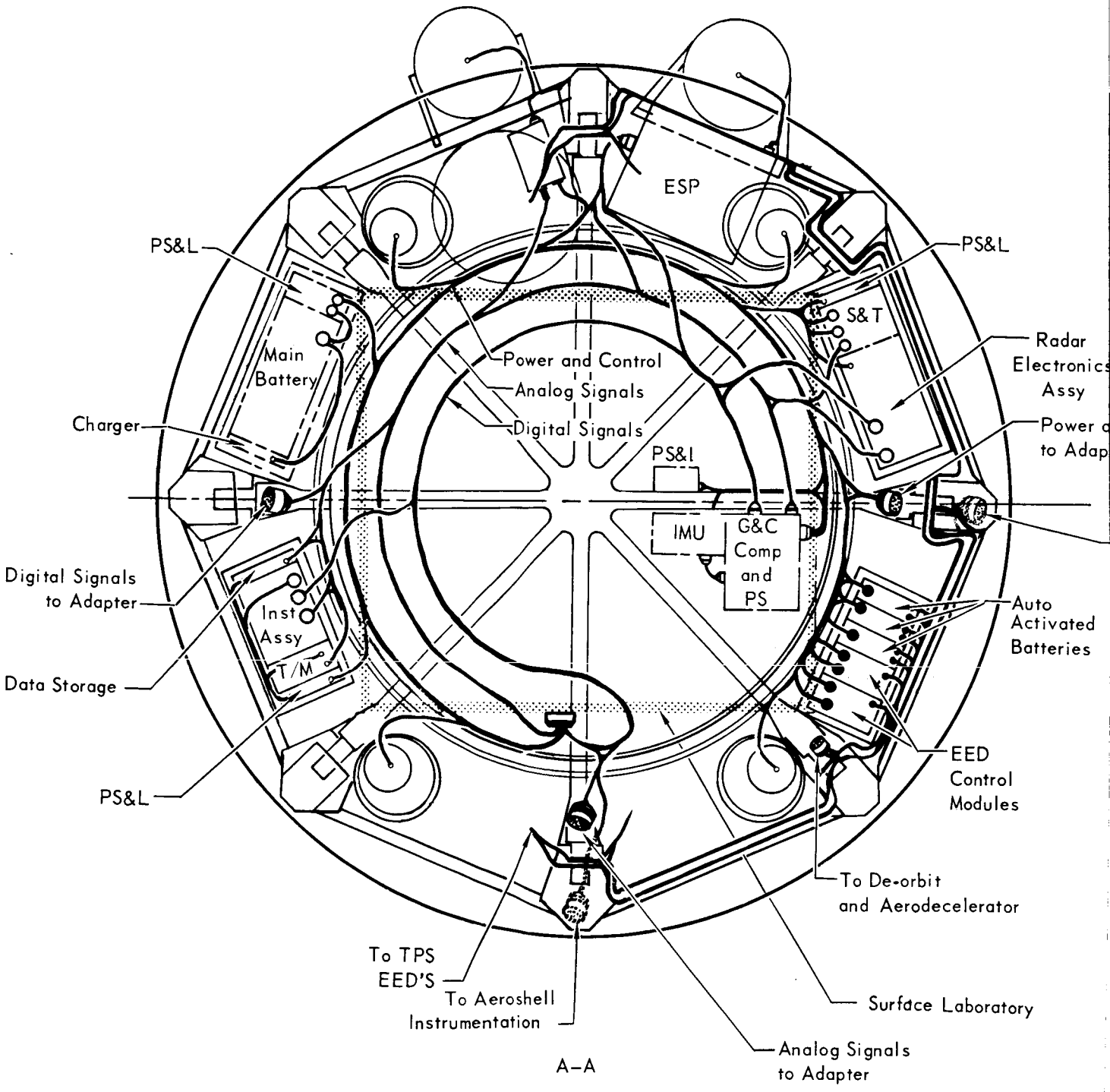

Figure 3.2.7–1

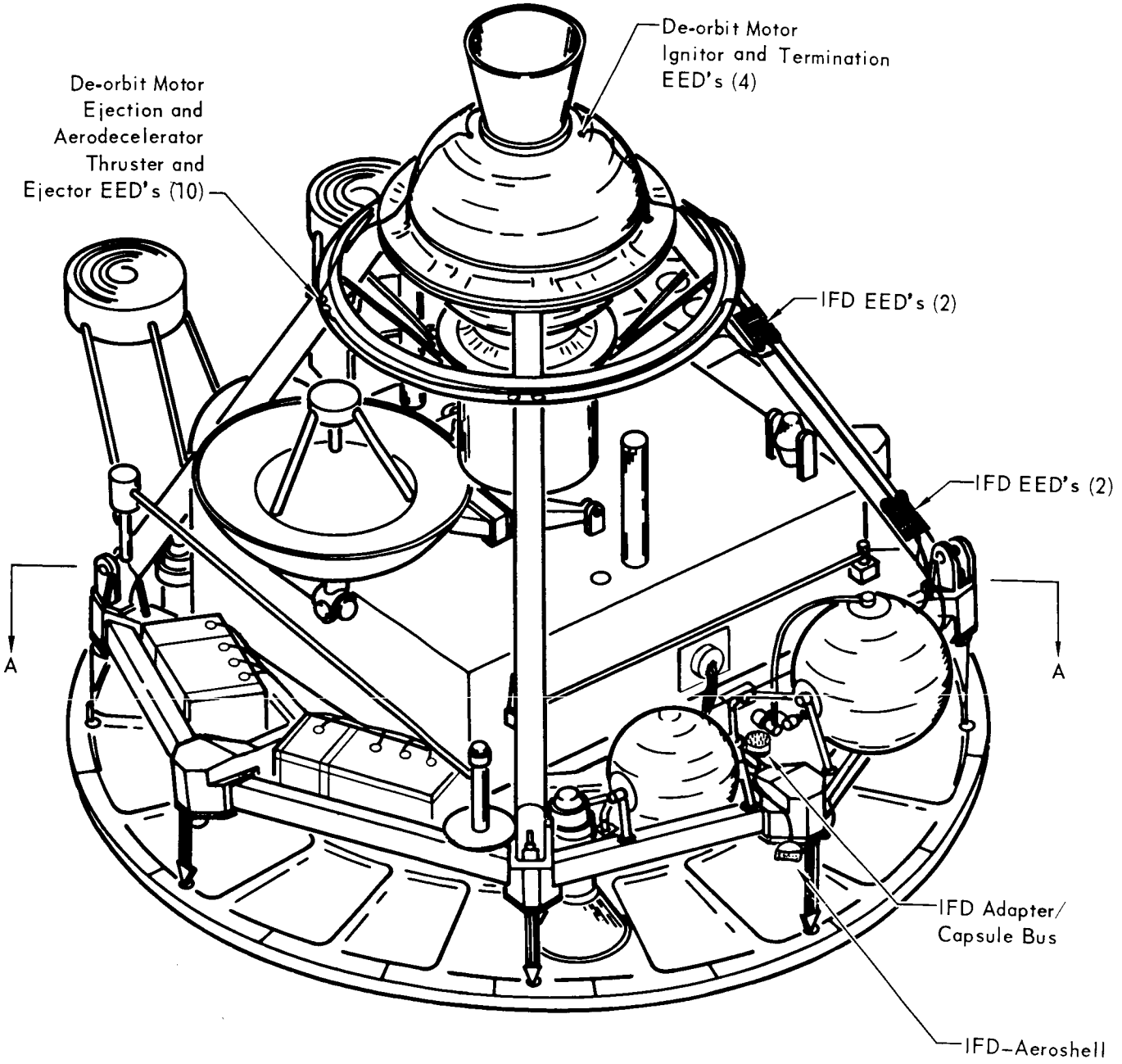
De-orbit Motor
Ignitor and Termination
EED's (4)
De-orbit Motor
Ejection and
Aerodecelerator
Thruster and
Ejector EED's (10)
IFD EED's (2)
IFD EED's (2)
To Aeroshell
Power and
Control, and
EED'S (14)
A
A
IFD Adapter/
Capsule Bus
IFD–Aeroshell

3-172-2

Equipment receptacles are sized and/or keyed to prevent mismating and are located so that straight and free engagement of the plug contacts is assured. Connectors which join the Capsule Bus and other equipment or systems, as well as all connectors carrying power, have sockets on the Capsule Bus or power side of the interface, except for the interface to the Surface Laboratory which has pins on the Capsule Bus side. Pin/socket orientations for other connectors and those carrying power in both directions will be chosen by use and location criteria.

The interconnecting cabling is entirely sealed by potting all wire terminating devices. The finished wire bundles, including potting, are tested and must pass minimum standards of insulation resistance and discontinuity resistance.

Wire bundles are supported by cushion clamps attached to equipment or cable support structure. Adequate support is provided to protect insulation from cold-flow, abrasion and handling degradation.

Wire bundle distribution trunks and connections to equipment are routed to preclude interference with other subsystems operations. Electromagnetic interference is minimized by routing wires by signal characteristics and by twisting or shielding of conductors. Signals are classified as digital, analog, power and control, and pyrotechnic firing power. Each classification of wire bundle is routed to maintain four inches between the wire bundles where possible. Where equipment installation requires the flexure of cables for connector mating, the wires are twisted during fabrication to maximize cable flexibility and reduce strain.

3.2.7.3 Packaging Description - The packaging of the Capsule Bus equipment includes both discrete black box units and modularized assemblies. The black box packaging technique is applied to those equipment items (guidance and control, radar, and radio) where location requirements largely dictated installation. Modularized assemblies are positioned in four of the structural sectors; each assembly accomodates interfacing equipment items of standard width and height (9 inches x 5.75 inches) and of variable thickness. The assemblies provide standardized attachment and uniform thermal insulation for the enclosed subassemblies.

All equipment interface connectors are the circular type and are located for ease of mating cable harness connectors; the modularized assemblies have all connectors located on the top surface for accessibility and ease of inspection.

The modularized assembly concept allows relocation of equipment if development needs arise. Such changes would impact the cabling subsystem and the assembly thermal insulation geometry; these areas are most amenable to change.

Both the black box and the modularized assembly packaging techniques are consistent with all qualified internal packaging techniques. We prefer and anticipate the maximum use of potted and encapsulated modules with welded or wire-wrapped (rather than soldered or friction type) intraconnects. The critical elements of internal packaging consist of circuitry layout, thermal control (including differential expansion) and mechanical integrity. As the equipment is developed, these items are controlled by design approval and rigorous adherence to fabrication procedures.

Regardless of whether the black box or modularized assembly packaging technique is used, a modular subdivision of assemblies will be employed. The concept is indicated in Figure 3.2.7-2 in which a black box item is composed of separable, functional modules which integrate to form one subassembly. This approach permits parallel design, individual module test, and facilitates modification and replacement.

3.2.7.4 Trade Study Summary - Trade studies were conducted on equipment form factors, internal packaging, wire, general purpose connectors, inflight disconnects, wiring design, and fabrication techniques. Figure 3.2.7-3 summarizes these studies which are further discussed in Vol. II, B 5.14, Subsystem Optimization Studies and Supporting Analysis.

Note 1. For additional description of the Packaging and Cabling of our Preferred Design, refer to Volume II, Part C, Section 17.0

MODULAR SUBASSEMBLY PACKAGING

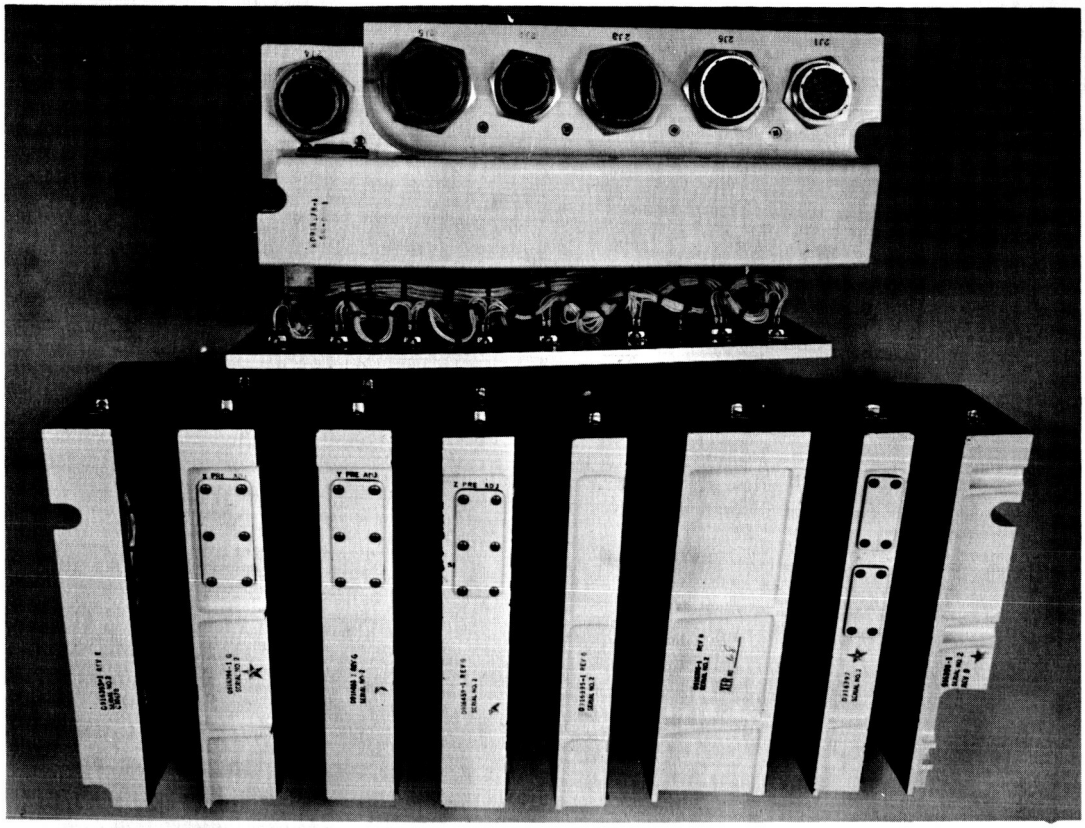

(A) MODULES SEPARATED

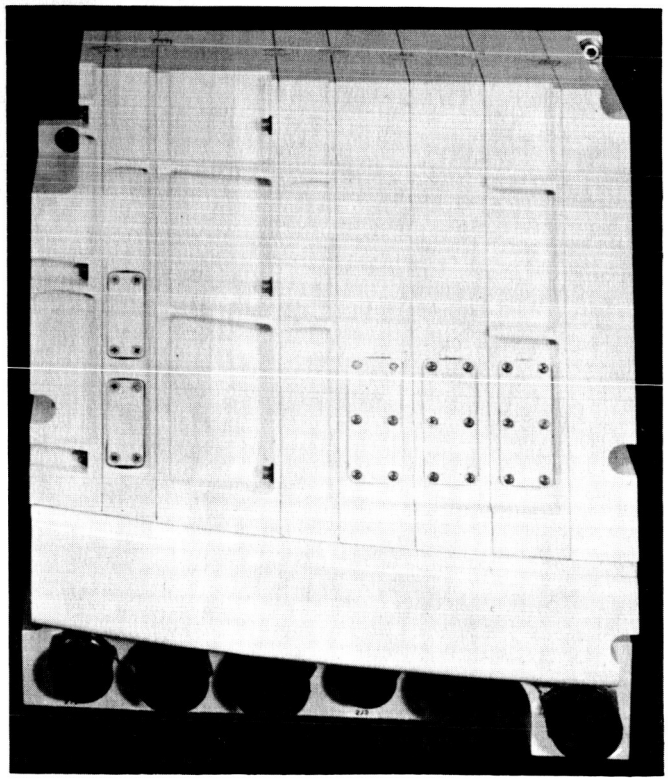

(B) ASSEMBLED

Figure 3.2.7–2

EQUIPMENT AND INTERCONNECTION TRADE STUDY SUMMARY

COMPONENT/TECHNIQUE	ALTERNATES	FACTORS FOR SELECTION
Equipment Form	**Modularized Assemblies** **Black Box**	Accessibility, flexibility test capability Guidance Equipment near C.G.
Internal Packaging	Circuit Board Modules Embedded (Cordwood) Modules Radio Frequency Packaging	Selection based on function and application and components utilized.
Wire	**MIL-W-81381/1 Kapton (7 mil)** MIL-W-81381 Kapton (5 mil) MIL-W-16878 Teflon MIL-W-81044/3 Kynar Raychem Thermorad	Compatible with ETO and heat sterilization, strong and tough, weight and volume savings.
General Purpose Connectors	**MIL-C-38999** MIL-C-26482 MIL-C-81511 NAS-1599	High temperature operation, environmental seal, low weight and volume, crimp contacts
Interconnecting Wiring		
– Seal	**Potting Seal** Grommet Seal Unsealed	Environmental sealing and mechanical support
– Contact Termination	**Crimp** Solder	Reliable wire/contact transition, removable
– Wire Covering	None Jacket Sleeving	Light weight, flexibility for modifications
– Multi terminations	**Terminal Junction Modules** Stud Terminal Strips	Low weight and volume, flexibility of terminations.

Preferred Concept

Figure 3.2.7-3

SECTION 4

MISSION OPERATIONS

The mission operations of the Capsule Bus (CB) are those activities which must be accomplished in order for the CB to fulfill its mission objectives. The CB mission objectives are detailed in Part A, Section 1 of this report.

In this section, a description of the CB mission and mission operations, a timeline of capsule subsystem equipment operation, and the contingency modes of the CB are presented and discussed.

4.1 CAPSULE BUS MISSION OPERATIONS DESCRIPTION - The following paragraphs contain a phase-by-phase description of the CB mission and the operations performed therein. The description covers the period from pre-launch (on pad) activities, through capsule landing on Mars, to Capsule Bus shutdown.

A detailed CB mission sequence, with nominal mission-event times, is presented in Figure 4-1. The sequence gives the mission events, event timing, primary-and backup-initiating sources, and the using subsystems/equipments. Spacecraft events also are listed in the sequence, but primarily for reference purposes.

4.1.1 Pre-Launch (on Pad) Phase - Before launch, the stored commands of the CB, the Entry Science Package (ESP), and the Surface Laboratory (SL) are placed into their respective memory assemblies. These commands are then verified as to their correctness in storage.

On-pad communications with the Flight Capsule (FC) are by hardline. Ground power is supplied to the FC until shortly before launch, when the FC is switched to internal power.

About two hours before liftoff, the cruise commutators of the CB, ESP, SL, and FC Adapter are turned on to their cruise modes, and correct operation of FC equipment is verified before final countdown is begun.

4.1.2 Launch Phase - The Launch Phase begins with initiation of final countdown and lasts until the S-IVB stage of the Saturn V launch vehicle is restarted for injection of the two planetary vehicles (PV's) into an Earth-to-Mars transfer trajectory.

Launch will be accomplished from Launch Complex 39 at Kennedy Space Center (KSC) using a Saturn V launch vehicle. The launch date selected as nominal for the 1973 mission is 7 August 1973.

CAPSULE BUS MISSION SEQUENCE 1973 MISSION

EVENT	SIGNAL SOURCE	SIGNAL DESTINATION	BACKUP SIGNAL	TIME	REMARKS
PRE-LAUNCH (ON PAD) TO SPACECRAFT – CAPSULE SEPARATION					
1. Insert Stored Commands in FC	LOS	FS CC&S	–	T_0 –2 days	LV = Saturn V
2. Turn on CB, ESP, SL, A/C Cruise Commutators	LOS	CB/ESP/SL/AC CC	–	T_0 –2 hrs	
3. Switch CB, ESP, SL, A/C Cruise Commutators to Cruise Mode	LOS	CB/ESP/SL/AC CC	–	T_0 –2 hrs	
4. Switch FC to Internal Power	LOS	FC Pwr.	–	T_0 –7 min.	
5. Arm De-Orbit Motor (Saft/Arm)	LOS	CB Pwr.	–	T_0 –1 min.	
6. Liftoff	–	–	–	T_0	
7. Begin FC Sterilization Canister Venting	LV	CN	LVS	T_0	
8. Transfer Canister to Evacuate Mode	LV	CN	LVS	T_0 +200 sec.	
9. Parking Orbit Insertion				T_1	$T_1 = T_0 + 713.4$ sec. 100 n. mi. parking orbit; 10 min. $< \Delta t < 90$ min.
10. Trans-Mars Injection				T_2	$T_2 = T_1 + 37.8$ min.
11. Separate Forward Planitary Vehicle				T_3	$T_3 = T_2 + 2.6$ min.
12. Separate Aft Planitary Vehicle				T_4	$T_4 = T_3 + 15$ min.
13. Switch CB to FS Power (1)	FS CC&S/ MOS	CB Pwr.		T_3 + 23 min	
14. Begin CB Battery Recharge	FS CC&S	CB Pwr.		T_3 +23 min.	Automatic recharging during remainder of mission when CB receives power from FS
15. Execute Arrival Date Separation Maneuver				T_5	$T_5 = T_2 + 6.8$ days (Start time)
16. Switch CB to Internal Power	FS CC&S	CB Pwr.	MOS	T_5 +62 min.	
17. Switch CB to FS Power	FS CC&S	CB Pwr.	MOS	T_5 +204 min.	
18. Execute First Midcourse Trajectory Correction Maneuver				T_6	$T_6 = T_2 + 30$ days (Start time)
19. Switch CB to Internal Power	FS CC & S	CB Pwr.	MOS	T_6 + 62 min	
20. Switch CB to FS Power	FS CC & S	CB Pwr.	MOS	T_6 + 204 min	
21. Execute Second Midcourse Trajectory Correction Maneuver				T_7	$T_7 = T_8$ –30 days (Start time)
22. Switch CB to Internal Power	FS CC & S	CB Pwr.	MOS	T_7 + 62 min	

Figure 4-1

23. Switch CB to FS Power	FS CC & S	CB Pwr.	MOS	T_7 + 204 min	
24. Initiate Mars – Orbit Insertion				T_8	$T_8 = T_2$ +217.2 days (Start time)
25. Switch CB to Internal Power	FS CC&S	CB Pwr.	MOS	T_8 + 62 min.	
26. Switch CB to FS Power	FS CC&S	CB Pwr.	MOS	T_8 +204 min.	
27. Initiate Mars – Orbit Trim				T_9	$T_9 = T_8$ +4 Orbits (Start time)
28. Switch CB to Internal Power	FS CC&S	CB Pwr.	MOS	T_9 +62 min.	
29. Switch CB to FS Power	FS CC&S	CB Pwr.	MOS	T_9 +204 min.	
SPACECRAFT-CAPSULE SEPARATION					
1. Apply Full Heat to Canister Equipment	FS CC&S	CN	MOS	T_{12}–35 Hr	
2. Turn on CB Test Programmer (TP)	FS CC&S	CB Pwr.	MOS	T_{10}	$T_{10} = T_{12}$– 24 Hr.
3. Turn on CB TM Subsystem	CB TP	CB Pwr.	MOS	T_{10}+5 Sec.	
4. Switch CB TM Subsystem to Check-Out Mode	CB TP	CB TM	MOS	T_{10}+6 Sec.	
5. Switch ESP, SL, CB Cruise Commutators to CB TM Control Mode	CB TP	ESP/SL/CB CC	MOS	T_{10}+7 Sec.	
6. Complete CB Testing	CB TP	–	–	T_{10}+122 Min.	
7. Turn on ESP TM Subsystem	CB TP	ESP Pwr.	MOS	T_{10}+122 Min.	
8. Switch ESP TM Subsystem to Check-Out Mode	CB TP	ESP TM	MOS	T_{10}+122.1 Min.	
9. Start ESP Testing	CB TP	–	–	T_{10}+122.2 Min.	
10. Complete ESP Testing	CB TP	–	–	T_{10}+ 129 Min.	
11. Turn off ESP TM Subsystem	CB TP	ESP Pwr.	MOS	T_{10}+129 Min.	
12. Switch ESP, SL, CB Cruise Commutators to Cruise Mode	CB TP	ESP/SL/CB CC	MOS	T_{10}+ 129 Min.	
13. Turn off CB TM Subsystem	CB TP	CB Pwr.	MOS	T_{10}+ 129 Min.	
14. Turn on SL Test Programmer (TP)	CB TP	SL Pwr.	MOS	T_{10}+129 Min.	
15. Turn off CB Test Programmer	CB TP	CB Pwr.	MOS	T_{10}+ 129 Min.	
16. Turn on SL TM Subsystem	SL TP	SL Pwr.	MOS	T_{10}+ 129 Min.	
17. Switch SL TM Subsystem to Check-Out Mode	SL TP	SL TM	MOS	T_{10}+ 129 Min.	
18. Start SL Testing	SL TP	–	–	T_{10}+129 Min.	
19. End SL Testing	SL TP	–	–	T_{10}+249 Min.	
20. Turn off SL TM Subsystem	SL TP	SL Pwr.	MOS	T_{10}+249.1 Min.	
21. Turn off SL TP	SL TP	SL Pwr.	MOS	T_{10}+249.1 Min.	

① Remaining times are given for Forward (early-arriving) PV only.

CAPSULE BUS MISSION SEQUENCE (CONT.)

EVENT	SIGNAL SOURCE	SIGNAL DESTINATION	BACKUP SIGNAL	TIME	REMARKS
22. Apply Power to CB Sequencer and Timer (S&T)	FS CC&S	CB Pwr.	MOS	T_{12}–228 Min.	
23. Update CB S&T Parameters	MOS	CB S&T	–	T_{12}–225 Min.	via the FS
24. Verify Updated CB S&T Parameters	CB S&T	MOS	–	T_{12}–195 Min.	
25. Apply Power to SL S&T	FS CC&S	SL Pwr.	MOS	T_{12}–150 Min.	
26. Update SL S&T Parameters	MOS	SL S&T	–	T_{12}–147 Min.	
27. Verify SL S&T Parameters	SL S&T	MOS	–	T_{12}–117 Min.	
28. Switch SL S&T to Stand-by	FS CC&S	SL S&T	MOS	T_{12}–72 Min.	
29. Enable SL Impact Sensors	FS CC & S	SL IS	CB RA/CB LR	T_{12} –72 min	
30. Receive Prepare-FC-for-Separation Command	MOS	FS CC&S	–	T_{12}–70 Min.	
31. Receive Prepare-FC-for-Separation Command	MOS	CN CB S&T	–	T_{12}–70 Min.	Canister Firing Module
32. Arm Canister Pyros	MOS	CN	MOS	T_{12}–70 Min.	
33. Switch FS Data Subsystem to FC Support Mode	FS CC&S	FS DS	MOS	T_{12}–68 Min.	
34. Switch CB to Internal Power	CB S&T	CB Pwr.	FS CC&S/MOS	T_{12}–64 Min.	
35. Switch SL to Internal Power	CB S&T	CB Pwr.	FS CC&S/ MOS	T_{12}–64 Min.	
36. Enable SL Power Reserve for CB	CB S & T	CB Pwr.	MOS	T_{12}–64 Min.	
37. Switch ESP to Internal Power	CB S&T	CB Pwr.	FS CC&S/ MOS	T_{12}–64 Min.	
38. Enable SL Power Reserve for ESP	CB S & T	ESP Pwr.	MOS	T_{12}–64 Min.	
39. Turn on CB Inertial Measurement Unit (IMU)					
40. Turn on Guidance and Control Computer (GCC)	CB S&T	CB Pwr.	MOS	T_{12}–62 Min.	
41. Transfer GCS Data Word(s) to GCC	CB S&T	CB GCC	MOS	T_{12}–61 Min.	
42. Activate Squib Battery No. 1	CB S&T	CB Pwr.	MOS	T_{12}–60 Min.	
43. Activate Squib Battery No. 2	CB S&T	CB Pwr.	MOS	T_{12}–59.5 Min.	
44. Activate Squib Battery No. 3	CB S&T	CB Pwr.	MOS	T_{12}–59 Min.	
45. Deploy FC UHF Receiving Antennas	FS CC&S	FS Pyro	MOS	T_{12}–59 Min.	

Figure 4–1 (Cont'd)

(FS – Mounted)					
46. Turn on Low-Rate UHF Transmitter	CB S&T	CB Pwr.	MOS	T_{12}–58 Min.	
47. Turn on Low-Rate UHF Receiver (FS – Mounted)	FS CC&S	FS Pwr.	MOS	T_{12}–58 Min.	
48. Turn on CB TM Subsystem	CB S&T	CB Pwr.	MOS	T_{12}–57 Min.	
49. Switch CB TM to De-Orbit Mode	CB S&T	CB TM	MOS	T_{12}–56.5 Min.	
50. Switch CB Cruise Commutator to CB – Control Mode	CB S&T	CB CC	MOS	T_{12}–56 Min.	
51. Switch ESP Cruise Commutator to CB – Control Mode	CB S&T	ESP CC	MOS	T_{12}–56 Min.	One Signal
52. Switch SL Cruise Commutator to CB – Control Mode	CB S&T	SL CC	MOS	T_{12}–56 Min.	
53. Verify FC Status for Separation	MOS			T_{12}–55 Min.	Δt = 34 Min.
54. Transmit Proceed-with-FC-Separation Command	MOS			T_{12}–21 Min.	
55. Switch FC Sterilization Canister to Internal Power	CB S&T	CN Pwr.	MOS	T_{12}–10 Min.	
56. Receive Proceed-with-FC-Separation Command	FS CC&S			T_{12}–6 Min.	
57. Start Separation Sequence	FS CC&S	CN DP CB S&T		T_{12}–5.1 Min.	
58. Release and Separate Forward Section of Canister	CN DP	CN Pyro	MOS	T_{11}	$T_{11} = T_{12}$–5 Min.
59. Separate Insulation from FC	CN DP	CN Pyro	MOS	T_{11}	Occurs with Can. Sep.
60. Sense Canister Separation	CN Sep Sw.	CN DP	–	T_{11}	
61. Enable FS–FC Seperation	CN Sep Sw	CN DP	CN DP	T_{11}	
62. Send Enable-CB S&T-Separation Command	CN DP	CB S&T	FS CC&S	T_{12}–15.2 Sec.	
63. Release FC from FS (Electrical)	CN DP	FC Pyro	MOS	T_{12}–15.1 Sec	
64. Charge Canister Pyro Capacitors	CN DP	CN FM	MOS	T_{12}–15 Sec	
65. Initiate CB Separation Routine	CB S&T	CB GCC		T_{12}–10 Sec.	
66. Enable RCS Solenoid Valve Driver	CB S&T	CB RCS	–	T_{12}–5 Sec.	
67. Release FC from FS (Mechanical)	CN DP	CN Pyro	MOS	T_{12}–0.5 Sec.	
68. Separate FC from FS	CB S&T	CB GCS	–	T_{12}	$T_{12} = T_9 + 7.5$ Orbits; Minimum time for nominal mission if orbit trim is performed.
69. Send "On" Bias Signal to CB RCS	CB GCS	CB RCS	–	T_{12}	
70. RCS Jets Fired	CB RCS			T_{12}	

CAPSULE BUS MISSION SEQUENCE (CONT.)

EVENT	SIGNAL SOURCE	SIGNAL DESTINATION	BACKUP SIGNAL	TIME	REMARKS
71. Sense FS–FC Separation	CB Sep. Sensor			T_{12}	
72. Sense FS–FC Separation	FS Sep. Sensor	–	–	T_{12}	
73. Verify FS–FC Separation	CB Sep. Sensor	–	–	T_{12}	
74. Verify FS–FC Separation	FS Sep. Sensor	–	–	T_{12}	
75. Start CB Post-Separation Sequence (Backup)	CB Sep. Sensor	CB S&T	–	T_{12}	Inhibit Post-Separation Se quence If FC is not Separated
76. Terminate CB RCS Jet Firing	CB S&T	CB GCS	–	T_{12}+3 Sec.	
77. Terminate Bias Signal to RCS	CB GCS	CB RCS		T_{12}+3 Sec.	
78. Start CB Post-Separation Sequence	CB S&T	–	–	T_{12}+3 Sec.	
79. Stabilize FC	CB GCS	CB RCS	–	T_{12}+4 Sec.	Δt = 20 Sec.
80. Initiate FC De-Orbit Attitude Maneuver Sequence	CB S&T	CB GCS		T_{12}+25 Sec.	
81. Set FC De-Orbit Roll Polarity	CB GCC	CB GCC		T_{12}+30 Sec.	
82. Start FC De-Orbit Roll Turn	CB GCC	CB GCC		T_{12}+1 Min.	Δt (Max) = 3 Min.
83. End FC De-Orbit Roll Turn	CB GCC	CB GCC		T_{12}+4 Min.	
84. Set FC De-Orbit Pitch Polarity	CB GCC	CB GCC		T_{12}+4.5 Min.	
85. Start FC De-Orbit Pitch Turn	CB GCC	CB GCC		T_{12}+5 Min.	Δt (Max) = 3 Min.
86. End FC De-Orbit Pitch Turn	CB GCC	CB GCC		T_{12}+8 Min.	
87. Set Second FC De-Orbit Roll Polarity	CB GCC	CB GCC		T_{12}+8.5 Min.	
88. Start Second FC De-Orbit Roll Turn	CB GCC	CB GCC		T_{12}+9 Min.	Δt (Max) = 3 Min.
89. End Second FC De-Orbit Roll Turn	CB GCC	CB GCC		T_{12}+12 Min.	
CAPSULE DE-ORBIT					
1. Initiate FC De-Orbit Velocity Routine	CB S&T	CB GCS	–	T_{12}+15 Min.	
2. Arm CB De-Orbit Motor	CB S&T	CB Pyro	–	T_{13}–5 Sec.	
3. Ignite CB De-Orbit Motor	CB GCS	CB Pyro	CB S&T	T_{13}	$T_{13} = T_{12}$+20 Min.
4. Arm CB De-Orbit Motor Thrust Terminating Pyros	CB GCS	CB Pyro	CB S&T	T_{13}	
5. Terminate CB De-Orbit Motor Thrust	CB GCS	CB Pyro	CB S&T	T_{13}+32 Sec.	"Maximum Time"
6. Arm CB De-Orbit Motor Case Release					

Figure 4–1 (Cont'd)

and Separation Mechanism	CB S&T	CB Pyro	.05g Sensor	T_{13}+35 Sec.	
7. Release Spent CB De-Orbit Motor	CB S&T	CB Pyro	.05g Sensor	T_{13}+40 Sec.	
8. Separate Spent CB De-Orbit Motor	CB Pyro	CB Prop.	CB S&T	T_{13}+40.1 Sec.	0.1 Sec. delay from (7)
CAPSULE ORBITAL DESCENT					
1. Initiate Entry Attitude Maneuver Sequence	CB S&T	CB GCC	–	T_{13}+85 Sec.	
2. Set Entry Roll Polarity	CB GCC	CB GCC	–	T_{13}+1.5 Min.	
3. Start Entry Roll Turn	CB GCC	CB GCC	–	T_{13}+2 Min.	
4. End Entry Roll Turn	CB GCC	CB GCC	–	T_{13}+5 Min.	
5. Set Entry Pitch Polarity	CB GCC	CB GCC	–	T_{13}+5.5 Min.	
6. Start Entry Pitch Polarity	CB GCC	CB GCC	–	T_{13}+6 Min.	
7. End Entry Pitch Turn	CB GCC	CB GCC	–	T_{13}+9 Min.	
8. Set Solar-Heating Roll Polarity	CB GCC	CB GCC	–	T_{13}+10 Min.	
9. Start Solar-Heating Roll	CB GCC	CB GCC	–	T_{13}+10.5 Min.	Spin 3–4 Rev./Hr.
10. Turn off CB GCC	CB S&T	CB GCC	–	T_{13}+11 Min.	
11. Coast in Entry Orientation Attitude with Solar-Heating Roll	CB GCC	CB RCS	–	–	
12. Turn on CB GCC	CB S&T	CB Pwr.	CB RA	T_{14}–8 Min.	
13. End Solar-Heating Roll	CB S&T	CB GCC	–	T_{14}–7 Min.	
CAPSULE ENTRY					
1. Turn on FS-Mounted High-Rate UHF Receiver	FS CC&S	FS Pwr.	MOS	T_{14}–10 Min.	
2. Initiate GCC Acceleration Routine	CB S&T	CB GCC	CB RA	T_{14}–7 Min.	
3. Turn on CB Radar Altimeter	CB S&T	CB RA	.05g Sensor	T_{14}–6 Min.	
4. Begin Radar Altimeter Altitude – Tracking Search	CB RA	–	–	T_{14}–5 Min.	Automatic 30–60 Sec. after (2)
5. Turn on ESP TM Subsystem	CB S&T	ESP Pwr.	.05g Sensor CB RA	T_{14}–5 Min.	
6. Switch ESP TM Subsystem to Entry Mode	CB S&T	ESP TM	.05g Sensor CB RA	T_{14}–5 Min.	

CAPSULE BUS MISSION SEQUENCE (CONT.)

EVENT	SIGNAL SOURCE	SIGNAL DESTINATION	BACKUP SIGNAL	TIME	REMARKS
7. Turn on Descent TV (Warmup)	CB S&T	ESP Pwr	.05g Sensor CB RA	T_{14}–5 Min	
8. Turn on ESP Radio Subsystem	CB S&T	ESP Pwr.	.05g Sensor CB RA	T_{14}–5 Min.	
9. Turn on ESP Data Storage Subsystem	CB S&T	ESP Pwr.	.05g Sensor CB RA	T_{14}–5 Min.	
10. Switch CB TM Subsystem to Entry Mode	CB S&T	CB TM	.05g Sensor CB RA	T_{14}–30 Sec.	
11. Entry	CB S&T	–	–	T_{14}	
12. Turn on Base Pressure Experiment	CB S&T	ESP Pwr.	.05g Sensor CB RA	T_{14}	
13. Turn on Accelerometer Experiment	CB S&T	ESP Pwr.	.05g Sensor CB RA	T_{14}	
14. Turn on Stagnation Pressure Experiment	CB S&T	ESP Pwr.	.05g Sensor CB RA	T_{14}	
15. Initiate Descent TV Camera Sequencing	CB S&T	ESP Sci	.05g Sensor CB RA	T_{14}	
16. Sense .05g CB Deceleration	CB GCS	–		T_{15}	Also backs up (2) & (4)
17. Initiate Acceleration Integrating Subroutine	.05g Sensor	CB GCS	CB RA	T_{15}	
18. Switch to 3-Axis Rate Damping	.05g Sensor	CB GCS	CB RA	T_{15}+1 Min.	
19. Initiate GCC Inertial Reference Routine	CB GCS	CB GCS	CB RA	T_{15}+1 Min.	
20. Begin Reliable CB Radar Altimeter Tracking	CB RA	–	–	T_{16}	h = 200,000 ft.
21. Turn on CB Landing Radar	CB RA	CB LR	CB S&T .05g Sensor	T_{17}	h = 100,000 ft.
CAPSULE TERMINAL DECELERATION					
1. Signal Mach 5	ESP Sensor	–	CB RA	T_{18}	h > 30,000 ft.
2. Initiate Mass Spectrometer Experiment	ESP Sensor	ESP Sci	CB RA	T_{18}	M = 5; 30 Sec. after peak Stagnation Pressure
3. Initiate Stagnation Temperature Experiment	ESP Sensor	ESP Sci	CB RA	T_{18}	
4. Initiate Base Temperature Experiment	ESP Sensor	ESP Sci	CB RA	T_{18}	
5. Update CB S&T	CB RA	CB S&T	CB AIS	T_{19}–.5 Sec.	h = 23,500 ft.
6. Disable CB RCS	CB S&T	CB Pyro	CB RA	T_{19}–2 Sec.	

Figure 4–1 (Cont'd)

7. Enable CB Parachute-Deployment Mechanism	CB S & T	CB Pyro	CB RA	$T_{10}-0.1$ Sec.	
8. Deploy CB Parachute	CB S & T	CB Pyro	CB RA	T_{19}	h = 23,000 ft., M $\leq$ 2.0
9. Arm CB Aeroshell Separation Mechanism	CB S&T	CB Pyro	CB RA	$T_{20}-1$ Sec.	
10. Initiate GCC Descent Control Mode	CB S&T	CB GCC	CB RA	$T_{20}-1$ Sec.	
11. Start Altimeter Hold Off Signal	CB S&T	CB RA	--	$T_{20}-1$ Sec.	
12. Release CB Aeroshell from CB (Electrical)	CB S&T	CB Pyro	CB RA	$T_{20}-0.2$ Sec.	
13. Release CB Aeroshell from CB (Mechanical)	CB S&T	CB Pyro	CB RA	T_{20}	
14. Separate CB Aeroshell from CB	–	–	–	T_{20}	$T_{20}=T_{19}+12$ Sec.
15. Arm TPS Pressurant and Propellant Isolation Valves	CB S&T	CB Pyro	CB RA	T_{20}	
16. Fire Terminal Propulsion Propellant Isolation Valves	CB S&T	CB Pyro	CB RA	T_{20}	
17. Switch ESP TM Subsystem to Terminal Descent Mode	CB S&T	ESP TM	CB RA	T_{20}	
18. Switch CB TM Subsystem to Terminal Descent Mode	CB S&T	CB TM	CB RA	T_{20}	
19. End Radar Altimeter Hold-Off Signal	CB S&T	CB RA	--	$T_{20}+4$ Sec.	Occurs at h > 5,000 ft.
20. Fire Terminal Propulsion Pressurant Isolation Valves	CB S&T	CB Pyro	CB RA	$T_{20}+5$ Sec.	
21. Update CB S&T	CB RA	CB S&T		$T_{21}-.5$ Sec.	Update CB S&T at h = 5100 ft.
22. Arm Parachute-Release Mechanism	CB S&T	CB Pyro	--	$T_{21}-.3$ Sec.	
23. Ignite Terminal Propulsion Motors	CB S&T	CB Prop.	CB RA/ CB LR	T_{21}	h = 5000 ft. Inertial Hold Control
24. Release CB Parachute From CB	CB Sensor	CB Pyro	CB RA CB S&T	$T_{21}+.5$ Sec.	At indication that engines are on
25. Throttle Down Terminal Thrust to .8g	CB GCC	CB Prop.	CB S&T	$T_{21}+.5$ Sec.	
26. Separate CB Parachute From CB	CB S&T	CB Pyro	--	$T_{21}+.6$ Sec.	
27. Enable CB LR Search/Track Operation	CB S&T	CB LR	CB RA	$T_{21}+2$ Sec.	
28. Begin CB Landing Radar Tracking Search	CB LR	--	--	$T_{21}+2$ Sec.	
29. Acquire Lock by Landing Radar	CB LR	--	--	$T_{21}+5$ Sec.	
30. Initiate Lateral Velocity Control	CB LR	CB GCS	--	$T_{21}+6$ Sec.	End Inertial Hold Control
31. Intercept Programmed FC Terminal Deceleration Profile	CB GCS	--	--	T_{22}	

CAPSULE BUS MISSION SEQUENCER (CONT.)

EVENT	SIGNAL SOURCE	SIGNAL DESTINATION	BACKUP SIGNAL	TIME	REMARKS
31. Switch to Variable Thrust Descent	CB GCS	CB Prop.	–	T_{22}	
32. Switch CB Landing Radar Range Scale	CB LR	CB LR	CB RA	T_{23}	h = 2500 ft.
33. Enable CB Impact Sensors	CB RA	CB IS	CB LR	T_{24}	h = 90 ft.
34. Release Descent TV Cameras	CB RA	CB Pyro	CB LR	T_{24}	
35. Begin Constant-Velocity Descent	CB GCS	CB Prop.	CB RA	T_{25}	V_z = 10 fps, h = 50 ft.
36. Switch to Inertial Attitude Control over CB	CB LR	CB GCS	CB RA	T_{25}	
37. Terminate CB Radar Altimeter Operation	CB RA	CB RA	CB LR	T_{25}	
38. Terminate CB Terminal Propulsion Motor Burn	CB LR	CB Prop.	CB IS	T_{26}	h = 10 ft.
39. Disable CB Attitude Control	CB LR	CB GCS	CB IS	T_{26}	
40. Begin Earth Transmission of Command-Link Carrier	TDAS	–	–		T_{27}–15 Min.
CAPSULE LANDING					
1. Touchdown on Surface of Mars	–	–	–	T_{27}	
2. Attenuate Landing – Impact Energy	CB LS	–	–	T_{27}	Crushable underside of CB, "Unidisc".
3. Sense Touchdown on Surface of Mars	CB IS	–	–	T_{27}	
4. Sense Touchdown on Surface of Mars	SL IS	–	–	T_{27}	
5. Update CB Sequencer and Timer	CB IS	CB S&T	SL IS/	T_{27}	
6. Terminate CB Landing Radar Operation	CB IS	CB Pwr.	SL IS	T_{27}	
7. Terminate CB GCS Operation	CR IS	CB Pwr.	SL IS	T_{27}	
8. Terminate CB Terminal Propulsion Thrust (Backup)	CB IS	CB Pwr.	SL IS	T_{27}	
9. Terminate CB Radar Altimeter Operation (Backup)	CB IS	CB Pwr.	SL IS	T_{27}	
10. Switch SL S&T to Landed Mode	SL IS	SL S&T	CB IS	T_{27}	SL S&T previously in standby mode from before FS–FC separation.
11. Turn on SL Command Receiver	SL IS	SL Pwr.	CB IS/	T_{27}	Remains on for duration of

Figure 4–1 (Cont'd)

			SL S&T		[illegible] mission
12. Turn on SL Telemetry	SL IS	SL Pwr.	CB IS/ SL S&T	T_{27}	MOS backup when availabl[illegible]
13. Turn on SL Science Data Subsystem	SL IS	SL Pwr.	CB IS/ SL S&T	T_{27}	MOS backup when available
14. Activate SL Pyrotechnic Charging Capacitor	SL IS	SL Pyro	CB IS/ SL S&T	T_{27}	
15. Switch SL TM to Day/Night Mode	SL S&T	SL TM	MOS	T_{27}+2 Sec.	MOS backup when available; Mode chosen prior to FC–FS separation.
16. Begin Transfer of SL S&T Times a) Time from Touchdown b) Time to Noon (or Time to Midnight) c) Time to Earthset (or Time to Earthrise) d) Time to Sunset (or Time to Sunrise)	SL S&T	SL SDS	–	T_{27}+t Min.	Occurs in integral minutes; times updated before FS–FC separation and anytime after 2-way communications link is established
17. Arm CB Stabilizer Legs	CB S&T	CB Pyro		T_{27}+5 Sec.	
18. Release and Extend CB Stabilizer Legs	CB S&T	CB Pyro		T_{27}+6 Sec.	
19. Release and Pivot SL Low-Gain Antenna Mast	SL S&T	SL Pyro	MOS	T_{27} + 10 Sec.	MOS backup when available
20. Turn on SL Antenna Control Subsystem	SL S&T	SL Pwr.	MOS	T_{27} + 12 Sec.	MOS backup when available
21. Unlock SL High-Gain Antenna	SL S&T	SL Pyro	MOS	T_{27}+20 Sec.	
22. Initiate High-Gain Antenna Erection and Positioning Sequence	S&T	ACS	MOS	T_{27} + 30 sec.	
23. Turn on ACS Gyros and Erection – Axis Motor	SL ACS	SL Pwr.	MOS	T_{27} + 30 Sec.	MOS backup when available
24. Turn on SL Low-Rate S-Band Transmitter	SL S&T	SL Pwr.	MOS	T_{27}+30 Sec.	Daylight Mode; MOS backup when available
25. SL Low-Rate S-Band Transmitter on Indication	SL S&T	SL TM	MOS	T_{27}+1 Min.	MOS backup when availabl e; begin transmission of 1st engineering data frame
26. Begin SL Command Receiver Earth-Signal Acquisition	SL Cmd. Rcvr.	–	–	T_{27}+ 1 Min.	MOS backup when available
27. Release Subsurface Probe	SL SDS	SL Pyro	MOS	T_{27} + 1.6 Min.	

EVENT	SIGNAL SOURCE	SIGNAL DESTINATION	BACKUP SIGNAL	TIME	REMARKS
28. Deploy Subsurface Probe	SL SDS	SL Pyro	MOS	T_{27} +1.8 Min.	
29. Release Surface Sampler	SL SDS	SL Pyro	MOS	T_{27} +2 Min.	
30. Extend Surface Sampler	SL SDS	SL Pyro	MOS	T_{27} +2.2 Min.	
31. Release Surface Sampler Mast Variable Length Control	SL SDS	SL Pyro	MOS	T_{27} +2.4 Min.	
32. Deploy In Situ Experiment Modules (4)	SL SDS	SL Pyro	MOS	T_{27} +2.6 Min.	
33. Turn on AZ–EL Electronics	SL ACS	SL Pwr.	MOS	T_{27} +8.5 Min.	
34. Connect Gyro to AZ–EL Servo	SL ACS	SL ACS	MOS	T_{27} +8.5 Min.	
35. Start ACS Gyro and Servo Turnoff Timer	SL ACS	SL Pwr.	MOS	T_{27} +8.5 Min.	
36. Begin High-Gain Antenna Gyrocompassing (Backup)	SL S&T	SL ACS	MOS	T_{27} +10 Min	Backup to (34)
37. Shut Down Entry Science Package END OF ENTRY SCIENCE PACKAGE MISSION	CB S&T	ESP Pwr.		T_{27} +10 Min.	
38. Switch CB to SL – Support Mode END OF CAPSULE BUS MISSION	CB S&T	CB Pwr.		T_{27} +11 Min.	CB batteries switched to support SL; all other CB subsystems turned off. SL cruise commutator is turned off

ABREVIATIONS

A/C – Adapter/Canister
ACS – Antenna Control Subsystem (SL)
AIS – Acceleration Integrating Subroutine (CB)
AZ-EL – Azimuth-Elevation
CB – Capsule Bus
CC – Cruise Commutator (ESP, SL, CB, A/C)
CC&S – Central Computer and Sequencer (FS)
Cmd Rcvr – Command Receiver (SL)
CN – Canister (FC)
DP – Dual Programmer (FC)
DS – Data Subsystem (FS)
ESP – Entry Science Package
FC – Flight Capsule

TIME DENOTATIONS

T_o – Liftoff
T_1 – Parking-Orbit Insertion
T_2 – Trans-Mars Injection
T_3 – Separation of Forward Planetary Vehicle
T_4 – Separation of Aft Planetary Vehicle
T_5 – Arrival Date Separation Maneuver
T_6 – First Planetary Vehicle Midcourse Trajectory Correction
T_7 – Second Planetary Vehicle Midcourse Trajectory Correction
T_8 – Mars-Orbit Insertion
T_9 – Mars-Orbit Trim
T_{10} – Pre-Separation FC Checkout
T_{11} – FC Sterilization Canister Separation

Figure 4–1 (Cont'd)

FM – Firing Module (Canister)

FS – Flight Spacecraft

GCC – Guidance and Control Computer (CB)

GCS – Guidance and Control Subsystem (CB)

IMU – Inertial Measurement Unit (CB)

IS – Impact Sensors (CB or SL)

LOS – Launch Operations System

LR – Landing Radar (CB)

LS – Landing Subsystem (CB)

LV – Launch Vehicle (Saturn V)

LVS – Launch Vehicle System

Prop. – Propulsion Subsystem (CB)

PV – Planetary Vehicle

Pwr. – Electrical Power Subsystem (FS, CB, ESP, or SL)

Pyro. – Pyrotechnic Subsystem (FS, CB, or SL)

RA – Radar Altimeter (CB)

Radio – Radio Subsystem (ESP)

RCS – Reaction Control Subsystem (CB)

Sci – Science (ESP)

SDS – Science Data Subsystem (SL)

Sep. Sensor – Separation Sensor (FC, FS or CB)

Sep. Switch – Separation Switch (CN)

SL – Surface Laboratory

S&T – Sequencer and Timer (CB or SL)

TDAS – Tracking and Data Acquisition System

TM – Telemetry Subsystem (CB, ESP, or SL)

TP – Test Programmer (CB or SL)

TPS – Terminal Propulsion Subsystem (CB)

UHF – Ultra-High Frequency

T_{12} – FS-FC Separation

T_{13} – Ignition of De-Orbit Motor

T_{14} – Mars Entry

T_{15} – Sense .05g Deceleration Level

T_{16} – Begin Radar Altimeter Tracking

T_{17} – Landing Radar Turn on

T_{18} – Sense Mach 5

T_{19} – Deploy FC Aerodecelerator (Parachute)

T_{20} – Separate FC Aeroshell

T_{21} – Ignite CB Terminal Propulsion Motors

T_{22} – Intercept Programmed FC Terminal Deceleration Profile

T_{23} – Switch CB Landing Radar Range Scale

T_{24} – Release Descent TV Cameras

T_{25} – Begin FC Constant-Velocity Descent

T_{26} – Terminate Terminal Thrust

T_{27} – Touchdown on Surface of Mars

Just before liftoff, the CB solid-propellant de-orbit motor is safe-armed. This is accomplished by actuating an electro-mechanical device which enables the de-orbit motor pyrogen igniter.

At launch, the four cruise commutators are operating in their cruise modes and draw power from their respective system's batteries.

The CB, ESP, and SL are enclosed in the FC Sterilization Canister for protection against biological contamination during ground handling and during the long interplanetary cruise.

The canister is designed to withstand a pressure differential of 3 psi. The internal pressure will be higher than the external pressure during the Saturn V S-IC first-stage burn. Just after liftoff, vents in the canister are activated to prevent the 3 psi pressure differential from being exceeded. When the pressure differential is reduced to 0.5 psi, these vents are closed.

When the Saturn V S-II second-stage outboard engines are shut down, smaller, non-breathing canister vents are opened to allow all internal gases to escape. Biological filtering is provided to maintain FC sterility during all canister venting.

For the purpose of providing a trajectory for discussion, the nominal launch parameters are presented in Figure 4-2.

At completion of the first S-IVB stage burn, the Space Vehicle is inserted into a 100 n.m. circular parking orbit. Shortly thereafter, the nose fairing is jettisoned on command from the Launch Vehicle System (LVS) on the ground

4.1.3 Injection Phase - After a short coast in the 100 n.m. circular parking orbit, the S-IVB stage is re-started and the two PV's and the S-IVB stage are injected into an Earth-to-Mars interplanetary transfer trajectory. See Part B, Section 2.4 for a discussion on the transfer trajectories.

Shortly after injection, the two PV's are separated from the spent S-IVB stage and, from this point, are operationally independent.

About two hours after injection, the spent S-IVB stage is subjected to a retro-maneuver to prevent its impacting on the planet Mars.

The nominal injection parameters for the 1973 mission are given in Figure 4-3 below.

4.1.4 Acquisition Phase - Immediately upon separation of the individual PV's from the spent S-IVB stage, the spacecraft solar panels are extended and sun acquisition begins. When the sun is acquired, the PV's automatically proceed to acquire the star Canopus.

SUMMARY OF NOMINAL LAUNCH PARAMETERS

Parameter	Value	Remarks
1. Launch Date	7 August 1973	Allows for a 30-day launch opportunity
2. Launch Latitude	28.28 deg N	KSC
3. Launch Longitude	279.50 deg	KSC
4. Launch Azimuth	115 deg	90-115 deg permitted
5. Launch Time	13 hr 8 min 10 sec	GMT on launch date
6. Launch Window	1 hr 3 min 18 sec	1 hr minimum permitted
7. Launch-to-Parking Orbit Insertion Time	11.89 min	
8. Geocentric Arc Traversed during Launch	24 deg	Approximate
9. Parking-Orbit Altitude	100 n mi	Circular orbit
10. Geocentric Arc Traversed during Parking-Orbit Coast	133 deg	Approximate
11. Parking-Orbit Coast Time	32.59 min	10-90 min permitted

Figure 4-2

With sun acquisition completed, the spacecraft switches to solar power and provides 200 watts of unregulated dc power to the capsule. When the spacecraft has passed its high-power-usage period, the capsule systems are switched from their internal power sources to FS-supplied power. The capsule systems batteries are then recharged by automatic battery float chargers.

4.1.5 Interplanetary Cruise Phase - The Interplanetary Cruise Phase for each PV begins after the vehicle is initially stabilized on its celestial attitude references, and ends about seven days prior to Mars-orbit insertion. The PV cruise is interrupted by an arrival-date-separation maneuver and one, or two, interplanetary trajectory correction maneuvers.

During the cruise period, the CB, ESP, SL, and FC Adapter cruise commutators are operated continuously. The FC data are sent to the spacecraft via hardline, and integrated with its telemetry data for transmission to Earth.

Thermal control of the FC systems during the cruise period is by means of thermostatically controlled heaters. Heaters are needed since the normal mission requires that the spacecraft shield the capsule from the sun during interplanetary cruise, except during periods of PV maneuvering.

The selected baseline parameters for both the early-arriving and late-arriving PV's are given in Figure 4-4, for the purposes of this discussion.

SUMMARY OF NOMINAL INJECTION PARAMETERS

Parameter	Value	Remarks
1. S-IVB Second Burn Time	5.18 min	
2. Geocentric Arc Traversed during Second S-IVB Burn	23.7 deg	Approximate
3. Injection Time	13 hr 57 min 50 sec	GMT from launch date
4. Injection Altitude	267.843 km	
5. Injection Declination	-27.97 deg	
6. Right Ascension of Injection	253.23 deg	
7. Inertial Speed of Injection	11.692 km/sec	
8. Injection Path Angle	6.85 deg	
9. Injection Azimuth	64.54 deg	
10. Injection Energy	16.675 km^2/sec^2	32.5 km^2/sec^2 maximum permitted
11. Hyperbolic Excess Velocity	4,083 km/sec	
12. Outgoing Asymptote Declination	32.24 deg	5-36 deg permitted
13. Outgoing Asymptote Right Ascension	143.56 deg	

Figure 4-3

The interplanetary cruise ecliptic projection of the Earth-to-Mars transfer is illustrated in Figure 4-5 for a launch date of 7 August 1973. Figure 4-6 depicts the PV distances for the selected trajectory selection, and principal PV angles are pictured in Figure 4-7.

4.1.6 Arrival Data Separation Maneuver - At approximately 6.8 days (nominal) from interplanetary transfer injection, the two Planetary Vehicles are subjected to an arrival-date-separation maneuver that separates their arrivals at Mars by at least eight days. The 8-day-arrival separation allows the data received from the early-arriving PV to be used in updating the mission of the second PV.

Just before the arrival-date-separation maneuver, the FC systems are switched from FS power to their internal batteries. After the maneuver, the FC systems are again placed on spacecraft power and their batteries recharged.

4.1.7 Interplanetary Trajectory Correction Maneuvers - Either one or two midcourse-trajectory-correction maneuvers may be necessary during the interplanetary cruise, depending on the accuracy of the arrival-date separation maneuver. These maneuvers will be essentially identical in procedure to the arrival-date-separation maneuver. The final trajectory-correction maneuver places the PV in a fly-by trajectory with

SUMMARY OF INTERPLANETARY CRUISE TRAJECTORY PARAMETERS

Parameter	Early PV	Late PV	Remarks
1. Nominal Transit Time	222 days	222 days	Before any trajectory deflection
2. Heliocentric Central Angle	151.97 deg	151.97 deg	Before any trajectory deflection
3. Inclination to Ecliptic	3.30 deg	3.30 deg	Before any trajectory deflection, must be greater than 1.0 deg.
4. Change in Arrival Time by Separation Maneuver	-4 days	+4 days	8-day-arrival separation required
5. Time of Arrival Date Separation Maneuver	T_I + 6.817 days	T_I +6.817 days	T_I = Time of injection
6. Corrected Transit Time	210.428 days	218.355 days	From separation maneuver to Mars arrival
7. Total Corrected Transit Time	217.214 days	225.206 days	From injection to Mars arrival
8. Corrected Heliocentric Central Angle	150.10 deg	153.83 deg	
9. Corrected Inclination to Ecliptic	3.05 deg	3.59 deg	
10. Number of Trajectory Correction Maneuvers	1 or 2	1 or 2	Adaptive guidance utilized
11.. Time of First Correction Maneuver	T_I + 30 days	T_I + 30 days	
12. Time of Second Correction Maneuver	T_{OI} -7 to 30 days	T_{OI} -7 to 30 days	T_{OI} = time of Mars-orbit insertion
13. Trajectory Correction Maneuver Velocity Increment	10-61 m/sec	10-42 m/sec	Based on minimum allowance and total 210 m/sec capability

Figure 4-4

PV INTERPLANETARY CRUISE ECLIPTIC PROJECTION
EARTH–TO–MARS TRANSFER

NOMINAL 1973 MISSION

Launch Date – 7 Aug 73
Arrival Date – 12 Mar 74 (Early)
20 Mar 74 (Late)

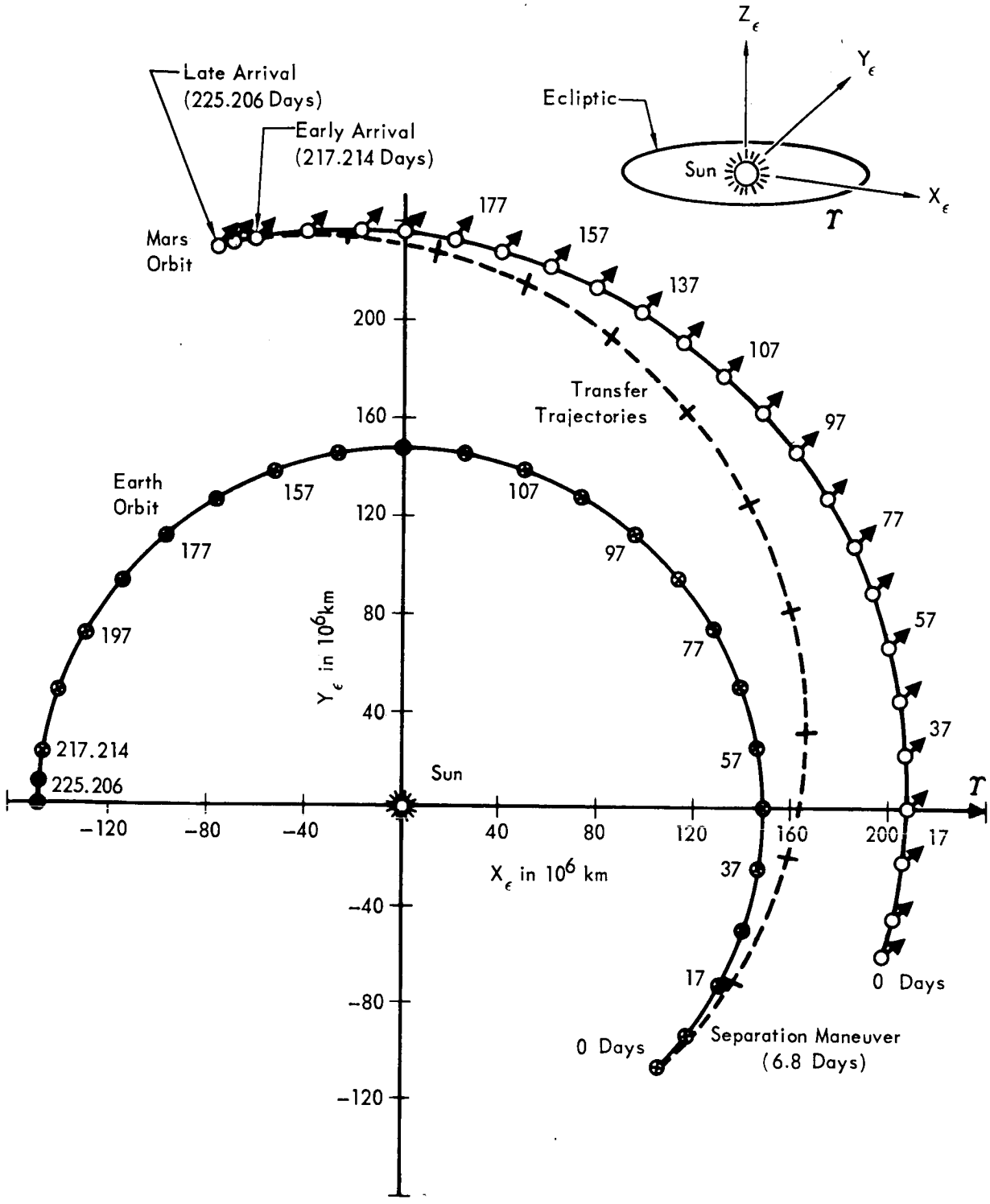

Figure 4–5

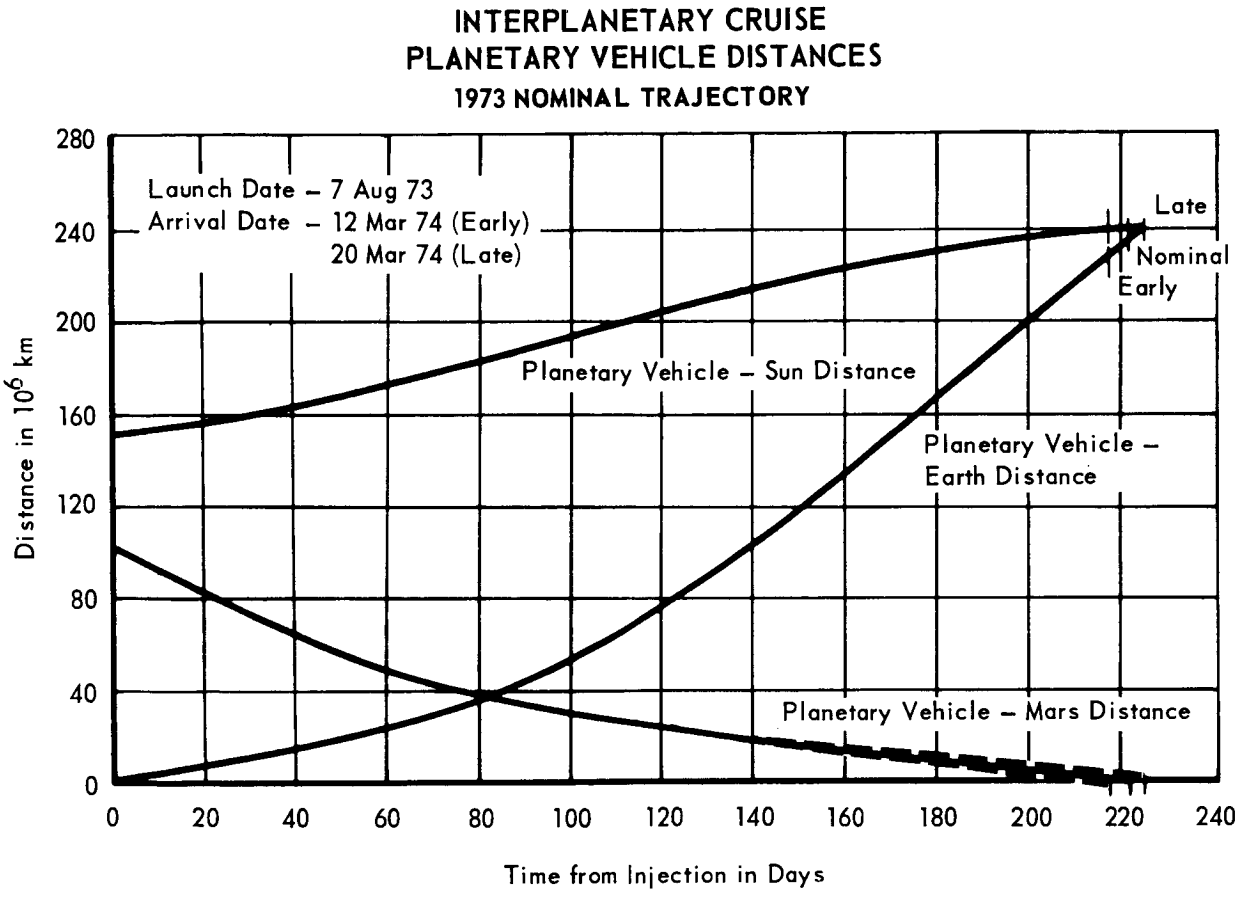
INTERPLANETARY CRUISE
PLANETARY VEHICLE DISTANCES
1973 NOMINAL TRAJECTORY
Launch Date – 7 Aug 73
Arrival Date – 12 Mar 74 (Early)
20 Mar 74 (Late)
Late
Nominal
Early
Planetary Vehicle – Sun Distance
Planetary Vehicle – Earth Distance
Planetary Vehicle – Mars Distance
Distance in 10^6 km
280
240
200
160
120
80
40
0
0
20
40
60
80
100
120
140
160
180
200
220
240
Time from Injection in Days

Figure 4–6

INTERPLANETARY CRUISE
PRINCIPAL PLANETARY VEHICLE ANGLES
1973 NOMINAL TRAJECTORY

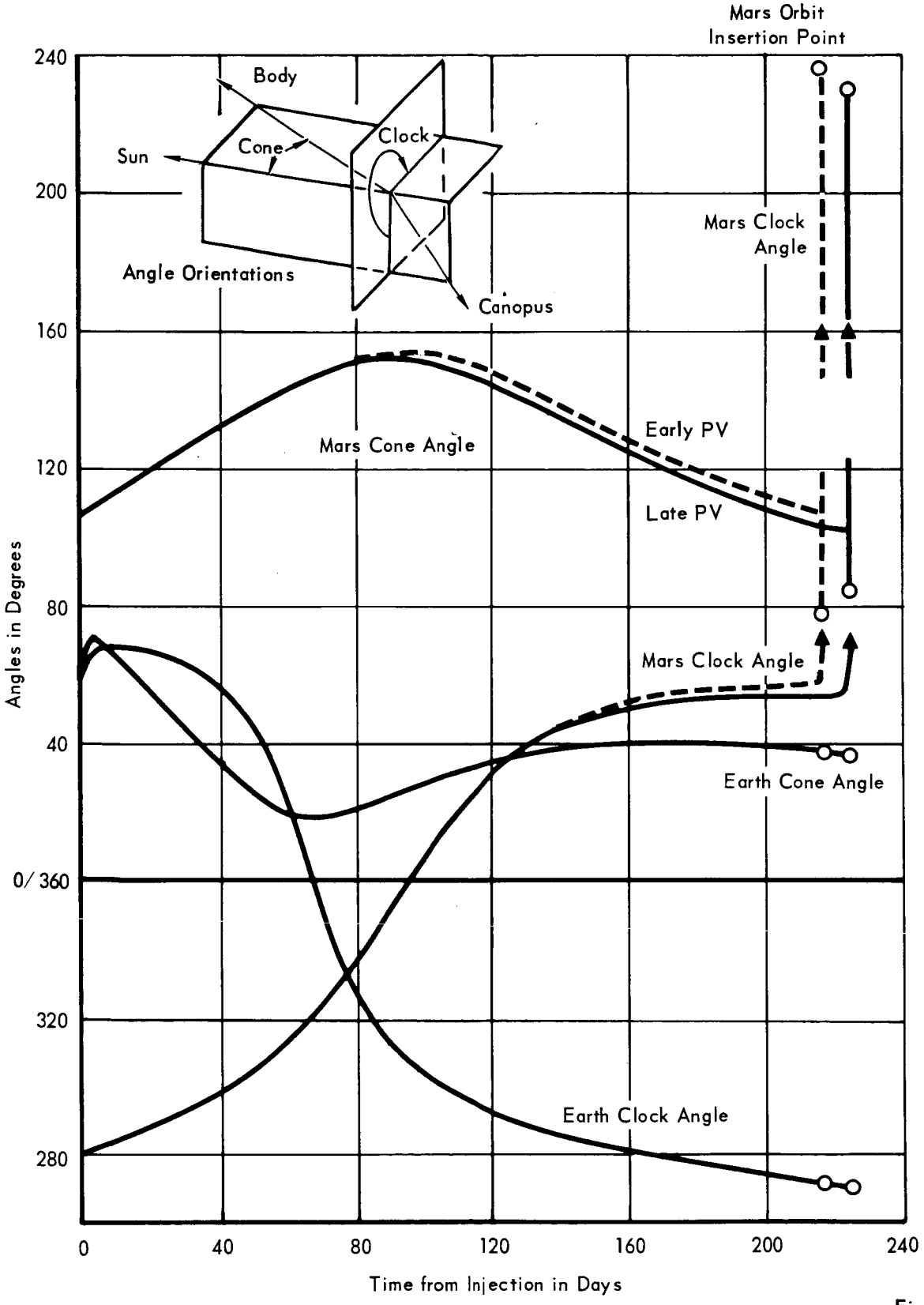

Figure 4–7

a Mars-centered periapsis consistent with the PV-orbit-insertion maneuver.

Shortly before each correction maneuver, the FC systems are removed from spacecraft power and operate off their own internal batteries. After the trajectory correction, when the sun has been re-acquired and the FS is no longer in a high-power-usage period, the FC systems are switched back onto FS power and their batteries recharged.

4.1.8 Planetary Vehicle Mars Orbit Insertion Phase - The PV Orbit Insertion Phase is initiated at a selected time between several days after the final trajectory-correction maneuver and about seven days prior to actual orbit insertion. The insertion-maneuver sequence is similar to the trajectory-correction-maneuver sequences.

The Mars-arrival portions of the PV transfer trajectories are shown in Figure 4-8, in heliocentric ecliptic coordinates. Figure 4-9 is an enlargement of the terminal part of Figure 4-8, but in areocentric ecliptic coordinates. Relative Mars-PV positions are indicated in days prior to Mars-orbit insertion. (In Figure 4-8, PV motion is shown from right to left from a point above the orbit plane of Mars.)

Figure 4-9 illustrates the orbit-insertion phase for both PV's. The orbit shown has a periapsis altitude of 1,000 km and an apoapsis altitude of 20,000 km. This orbit was chosen for computation purposes because it meets all the mission requirements. Periapse and apoapse are shown in reference.

The Orbit Insertion Phase parameters and event times are summarized in Figure 4-10. Both the early- and late-arriving PV cases are given. The parameters were determined to fulfill the requirements of the spacecraft orbit and of a capsule landing in the Syrtis Major region at 25 deg from the morning terminator. Figure 4-11 presents a three-dimensional capsule de-orbit profile for a morning-terminator landing.

Earth station view-angle histories of the PV's for the two arrival-date cases are shown in Figures 4-12 and 4-13. Insertion times are indicated on the figures.

The variation of principal (guidance) angles with orbit true anomaly is given in Figure 4-14. The variations represent the orbit during the first few days after orbit insertion.

Shortly before orbit insertion, the FC systems are removed from FS power and switched onto their own batteries. After insertion, the FC systems are switched back onto FS power and their batteries automatically recharged.

PLANETARY VEHICLE MARS ORBIT INSERTION HELIOCENTRIC ELLIPTIC COORDINATES – MARS ARRIVAL TRAJECTORIES

1973 NOMINAL TRAJECTORY

Launch Date – 7 Aug 73

Arrival Date – 12 Mar 74 (Early)

20 Mar 74 (Late)

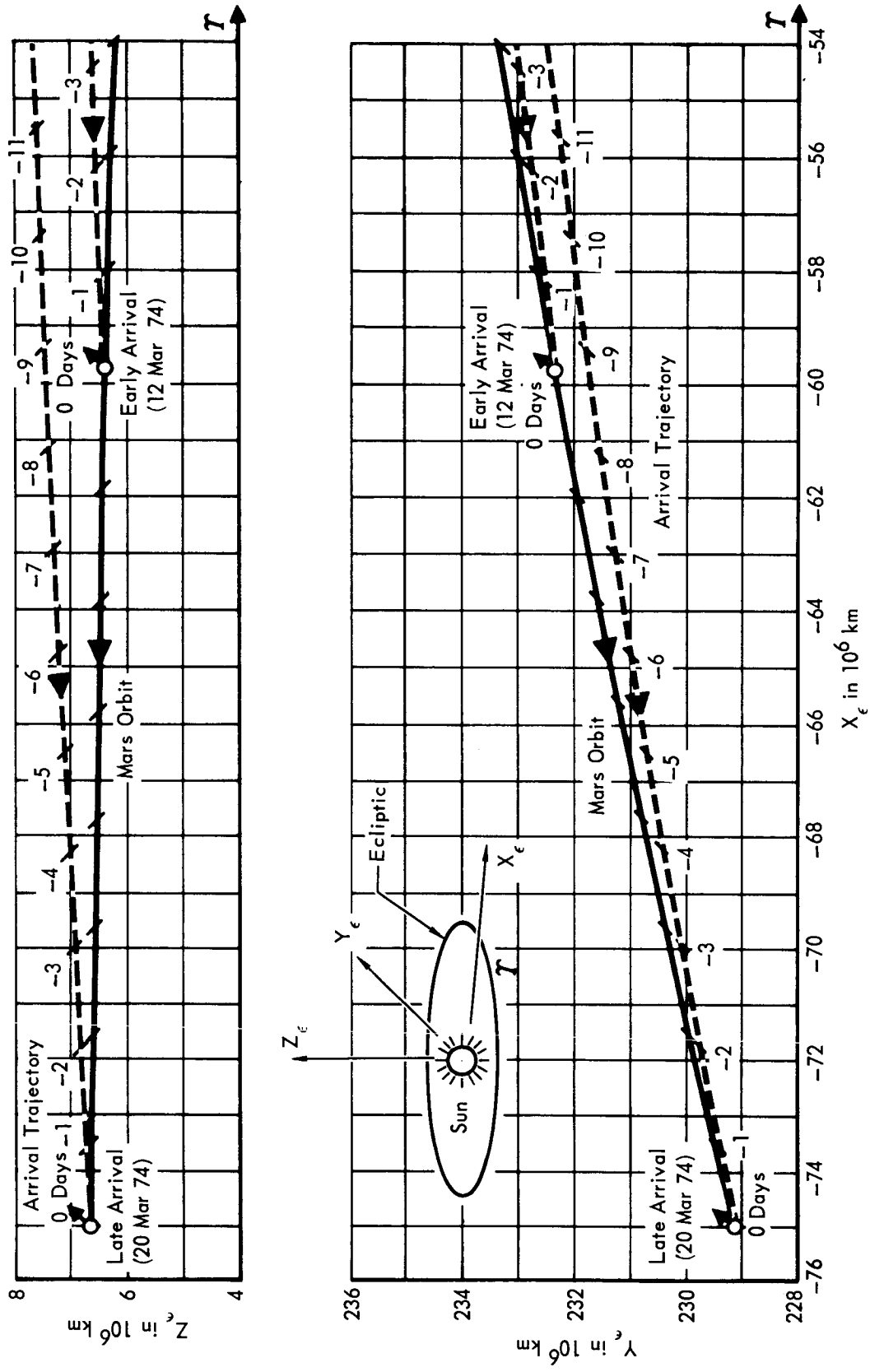

Figure 4–8

PLANETARY VEHICLE MARS ORBIT INSERTION
AREOCENTRIC ECLIPTIC COORDINATES – ARRIVAL AND ORBIT INSERTION
1973 NOMINAL TRAJECTORY

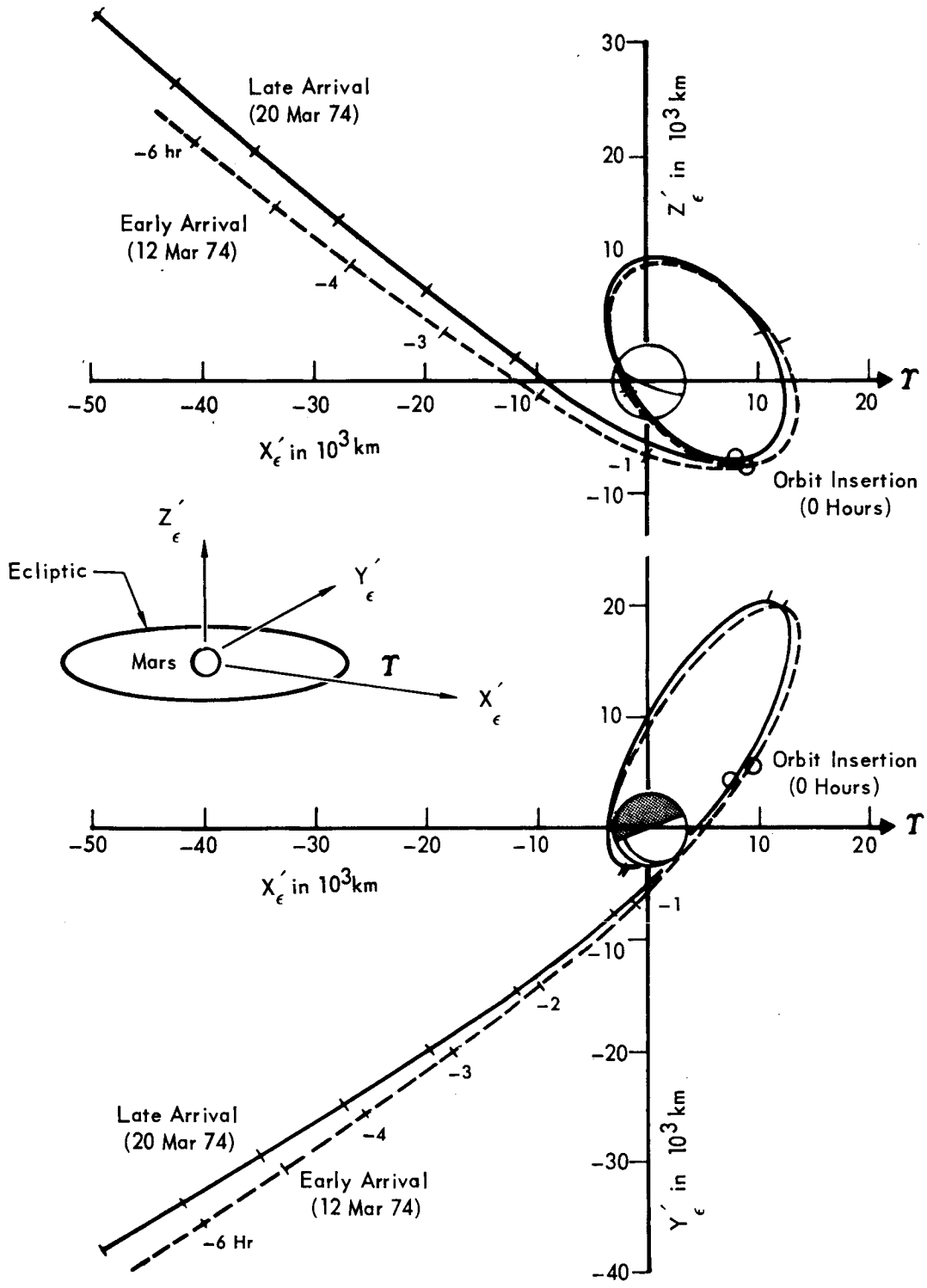

Figure 4–9

SUMMARY OF THE NOMINAL MARS ORBIT INSERTION PARAMETERS

Parameter	Value		Remarks
	Early PV	Late PV	
1. Mars Arrival Date	12 March 1974	20 March 1974	
2. Hyperbolic Excess Velocity	2.574 km/sec	2.586 km/sec	3.25 km/sec maximum permitted
3. Incoming Declination	-32.30 deg	-35.38 deg	Referred to ecliptic
4. Incoming Right Ascension	34.00 deg	31.30 deg	Earth equinox and ecliptic
5. Asymptote-Sun Angle	105.61 deg	99.77 deg	
6. Asymptote-Earth Angle	133.59 deg	126.96 deg	
7. Asymptote-Canopus Angle	54.07 deg	51.78 deg	
8. Impact Parameter	13,518.8 km	12,398.3 km	
9. Periapse Passage Time	19 hr 50 min 5 sec	18 hr 6 min 32 sec	GMT on arrival date
10. Periapse Passage Altitude	5114.00 km	5158.60 km	
11. Orbit Insertion Maneuver Timing	20 hr 35 min 23 sec	18 hr 43 min 45 sec	GMT on arrival date
12. Orbit Insertion Velocity Increment	1.763 km/sec*	1.688 km/sec	*less than 1.72 obtainable with inclination greater than 40 deg
13. Orbit Insertion Flight Path Angle	43.02 deg	42.22 deg	
14. Orbit Insertion Azimuth	51.37 deg	52.92 deg	
15. Hyperbola Anomaly	60.25 deg	60.00 deg	
16. Ellipse Anomaly	129.59 deg	121.62 deg	
17. Apsides Rotation Angle	-69.34 deg -74.98 deg	-61.62 deg -65.95 deg	Actual Reference hyperbola
18. Communications Distance	228.85×10^6 km	240.31×10^6 km	
19. Mars Orbit Inclination	40 deg	40 deg	30-deg minimum
20. Mars Orbit Ascending Node	132.38 deg	133.43 deg	
21. Mars Orbit Argument of Periapse	209.31 deg	211.20 deg	
22. Mars Orbit Period	13.802 hrs	13.803 hrs	

Figure 4-10

Parameter	Baseline Value		Remarks
	Early PV	Late PV	
23. Mars Orbit Apoapses Altitude	20,000 km	20,000 km	
24. Mars Orbit Periapses Altitude	1,000 km	1,000 km	
25. Mars Orbit Periapse Latitude	-18.56 deg	-20.47 deg	
26. Mars Orbit Initial Periapse Passage	8 hr 37 min 7 sec	7 hr 5 min 16 sec	GMT: 13 March 1974 and 21 March 1974, respectively

Figure 4-10 (Cont'd)

PLANETARY VEHICLE MARS ORBIT INSERTION THREE-DIMENSIONAL MISSION PROFILE SCHEMATIC (NOMINAL MISSION) – MORNING TERMINATOR LANDING

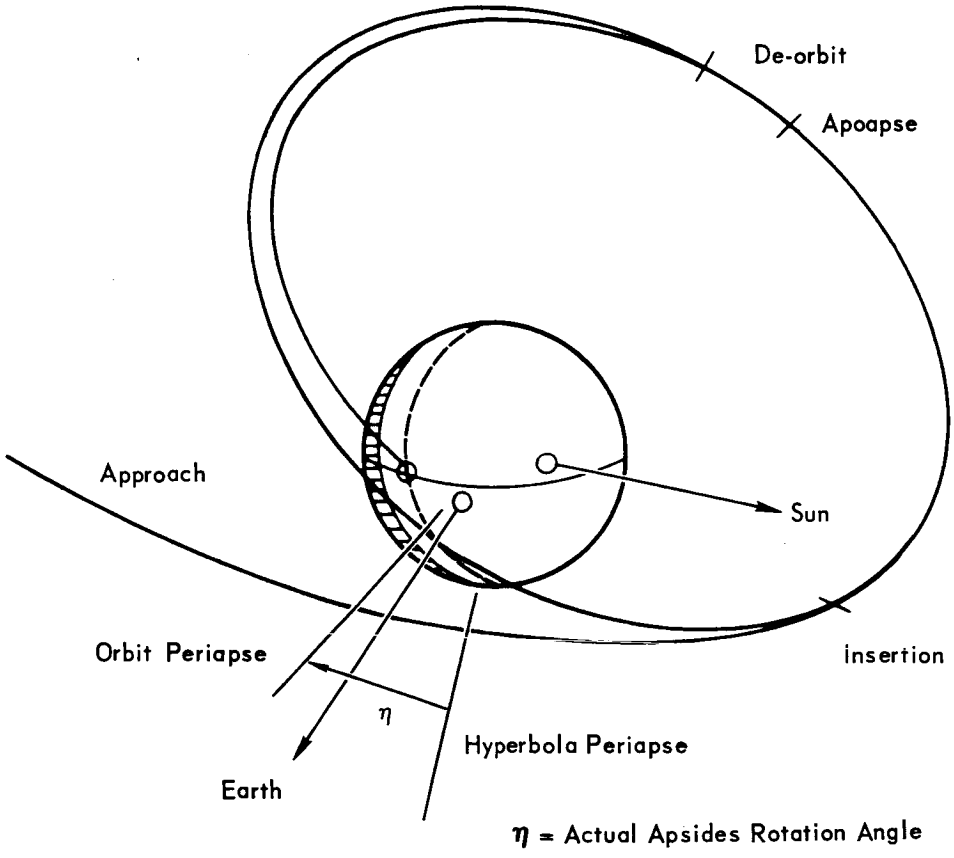

Figure 4–11

PLANETARY VEHICLE MARS ORBIT INSERTION
TRACKING STATION VIEW OF INSERTION MANEUVER (EARLY)
1973 NOMINAL TRAJECTORY

Launch Date 7 Aug 73

Arrival Date 12 Mar 74

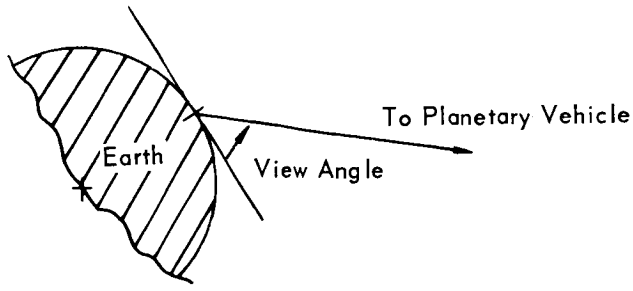

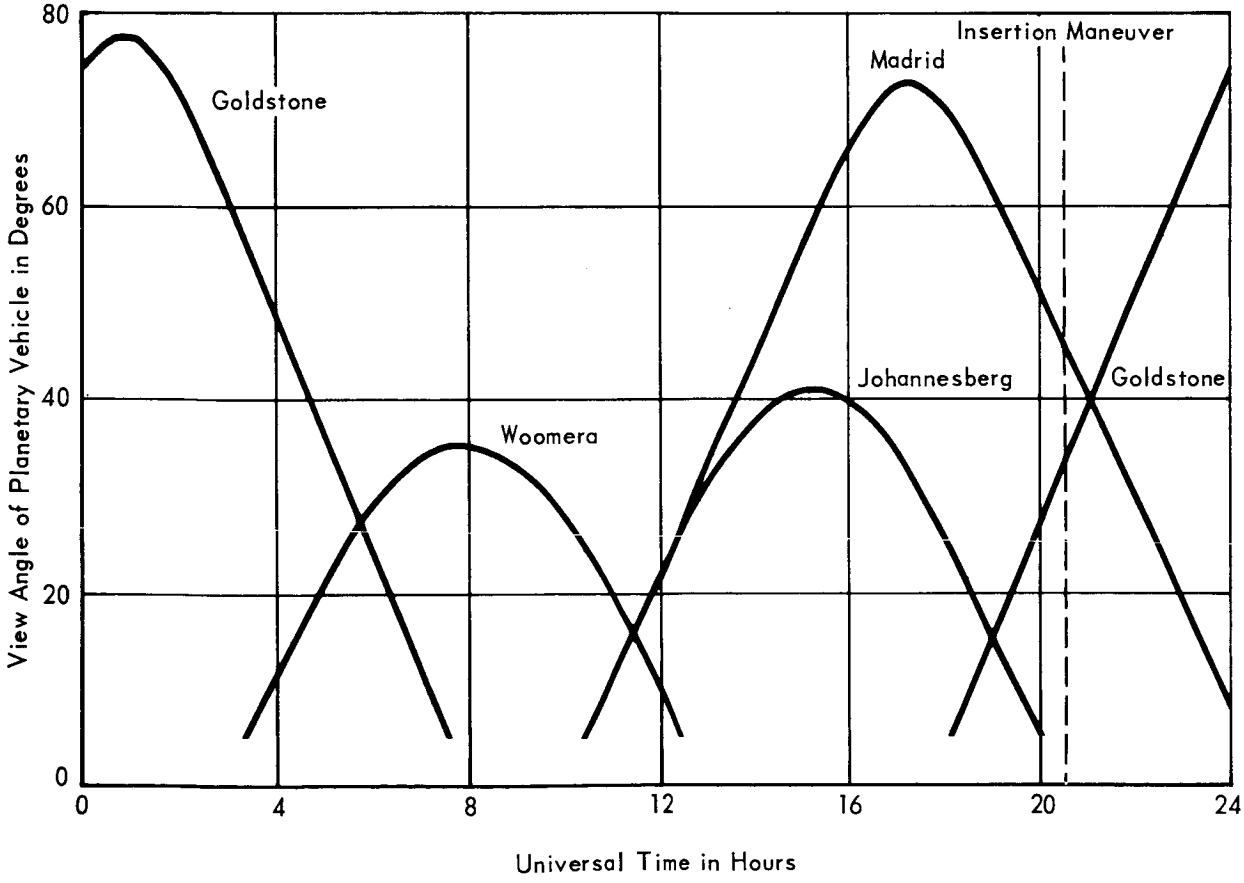

Figure 4–12

PLANETARY VEHICLE MARS ORBIT INSERTION
TRACKING STATION VIEW OF INSERTION MANEUVER (LATE)
1973 NOMINAL TRAJECTORY

Launch Date 7 Aug 73

Arrival Date 20 Mar 74

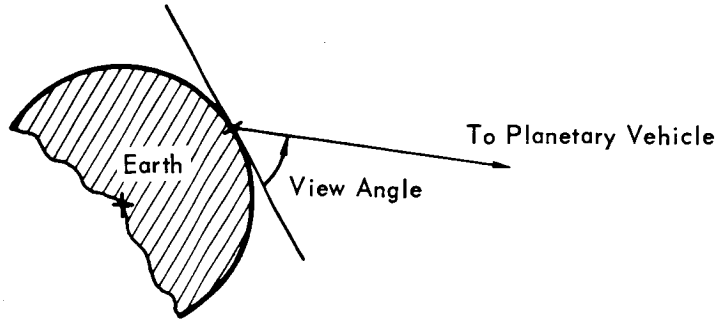

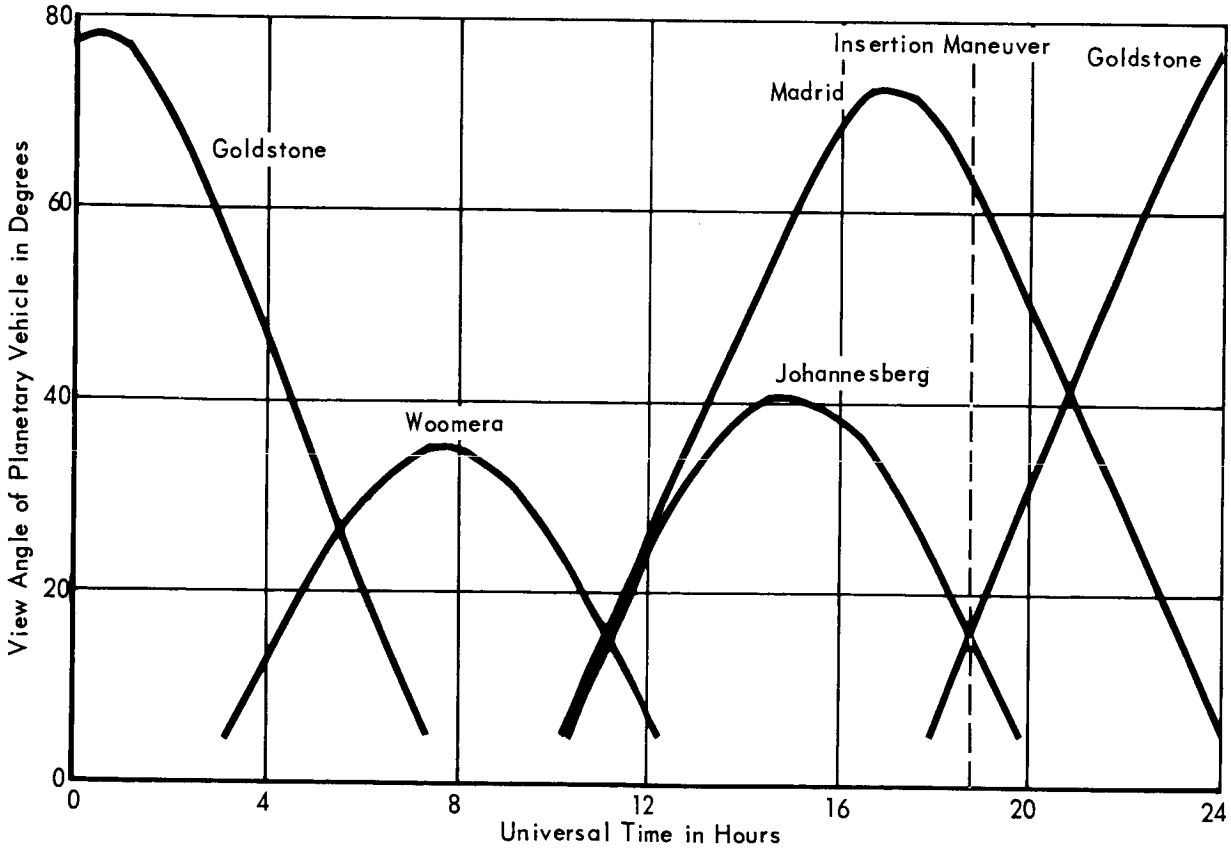

Figure 4–13

PLANETARY VEHICLE MARS ORBIT INSERTION PRINCIPAL SPACECRAFT ANGLES

NOMINAL TRAJECTORY

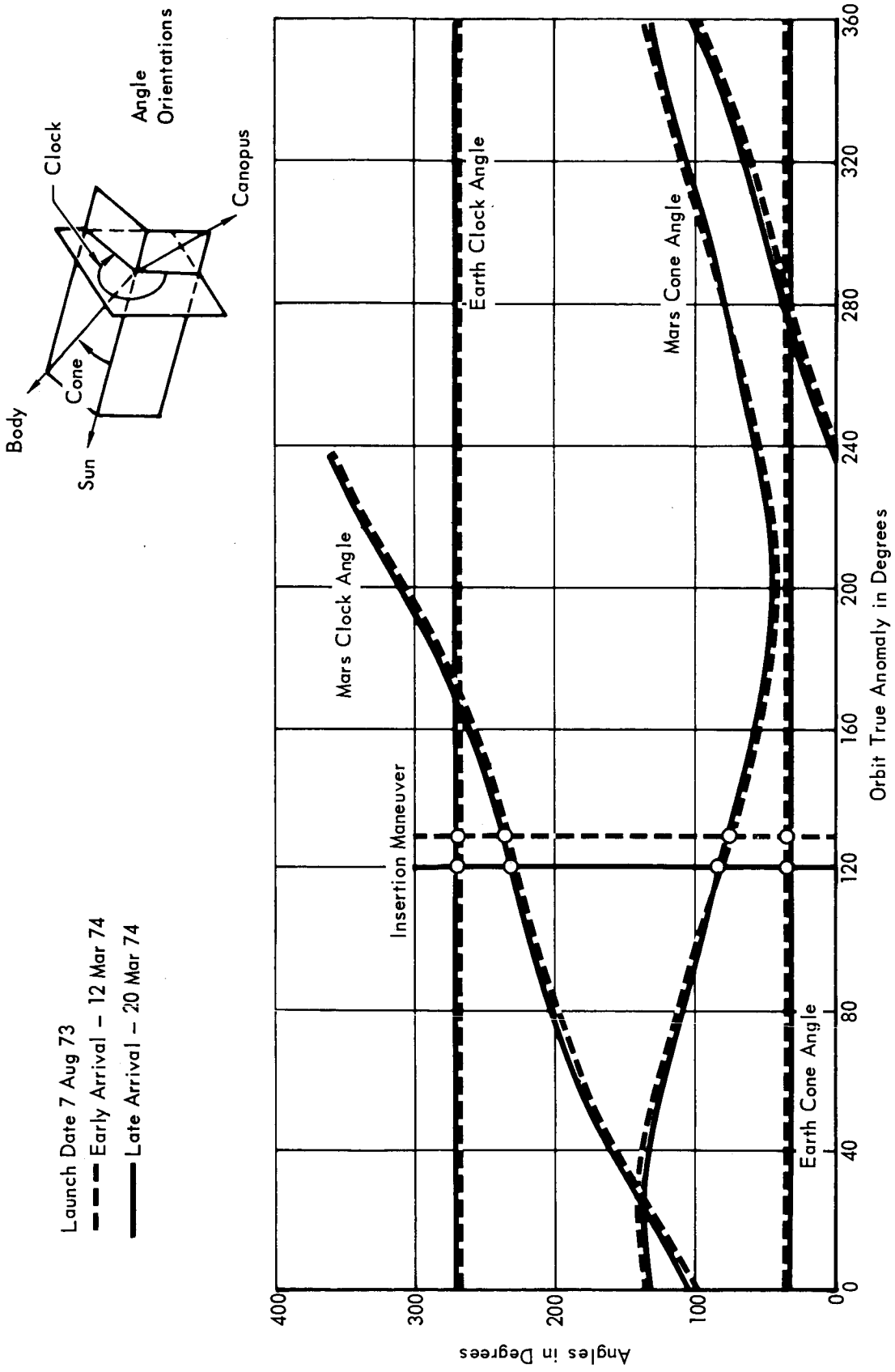

Figure 4-14

4.1.9 Pre-Separation Orbital Operations Phase - The Pre-Separation Orbital Operations Phase pertains primarily to the spacecraft. During this phase, the spacecraft begins its orbital-science operations and calibration of its equipment. This phase may include surveillance of candidate landing sites, analysis and decision, and then initiation of capsule separation from the spacecraft.

During the Pre-Separation Orbital Operations Phase, the PV is tracked from Earth and its position and orbital parameters are determined.

Figures 4-15 and 4-16 show the orbit occultation characteristics for the two PV-arrival dates. Orbit orientations where Sun, Earth, and/or Canopus occur (in terms of the argument to orbit periapse) are indicated by cross-hatching. The initial orbit orientations and orientation histories for the selected orbits also are presented (computed using first-order obtateness, J_2 = .00195).

Figures 4-15 and 4-16 show that no celestial body occultations occur during the first 30 days after Mars-orbit insertion for either PV-arrival case. This situation is desirable for both the Flight Spacecraft and the Flight Capsule missions.

During the Pre-Separation Orbital Operations Phase, the CB, ESP, SL, and FC Adapter cruise commutators are operated continuously in their cruise modes.

The FC is required to separate from the spacecraft three to twelve days after Mars-orbit insertion. However, for the selected orbit (1,000-km-periapsis altitude, 20,000-km-apoapsis altitude) at least 7.5 orbits (about 105 hrs) will be required for orbit determination. The capsule has the capability for remaining in Mars orbit for a maximum of 30 days.

4.1.10 Planetary Vehicle Orbit Trim Maneuver - An orbit-trim maneuver may be required prior to separation of the capsule from the spacecraft. The procedure for this maneuver is similar to the arrival-date-separation maneuver described in Section 4.1.6.

Orbit-determination requirements restrict the performance of an orbit-trim maneuver until at least after four orbits have been completed.

4.1.11 Spacecraft-Capsule Separation Phase - The Spacecraft-Capsule Separation Phase contains three major operations in the FC mission: (1) capsule orbital checkout, (2) Sterilization Canister separation, and (3) FS-FC separation.

One day before capsule-spacecraft separation, the CB Test Programmer is commanded "on". The CB Test Programmer then conducts extensive subsystem and subsystem-equipment operational-status checks on the CB and ESP. The SL subsystems are then subjected to similar testing by its own test programmer after

SPACECRAFT OPERATIONS ORBIT OCCULATION CHARACTERISTICS – EARLY ARRIVAL CASE

NOMINAL TRAJECTORY

Launch Date – 7 Aug 73
Arrival Date – 12 Mar 74
Orbit: 1,000–20,000 km
i = 40 deg

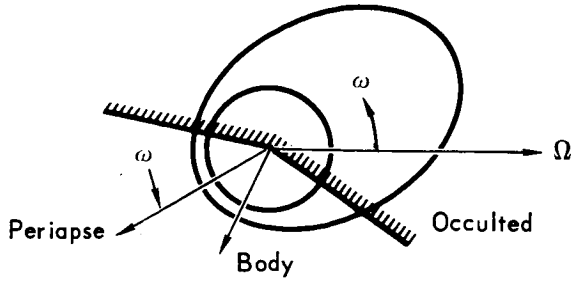

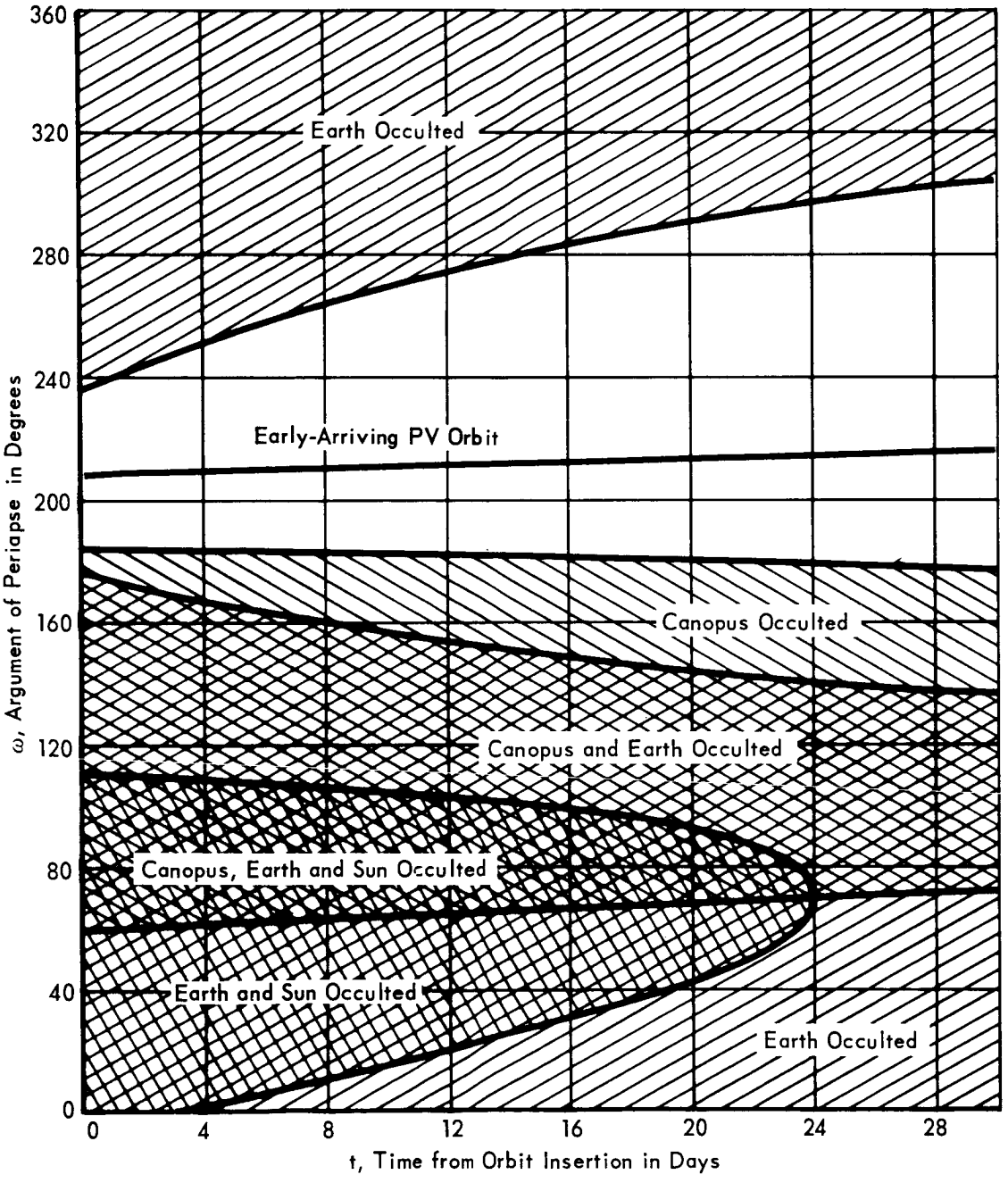

Figure 4–15

ORBIT OCCULATION CHARACTERISTICS – LATE ARRIVAL CASE

NOMINAL TRAJECTORY

Launch Date – 7 Aug 73
Arrival Date – 20 Mar 74
Orbit: 1,000–20,000 km
i = 40 deg

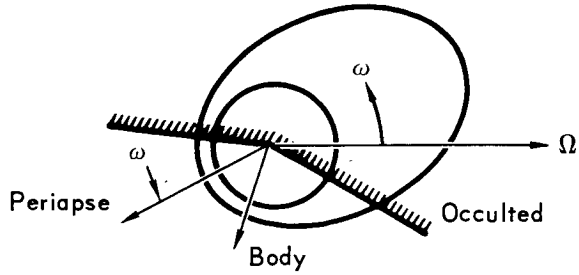

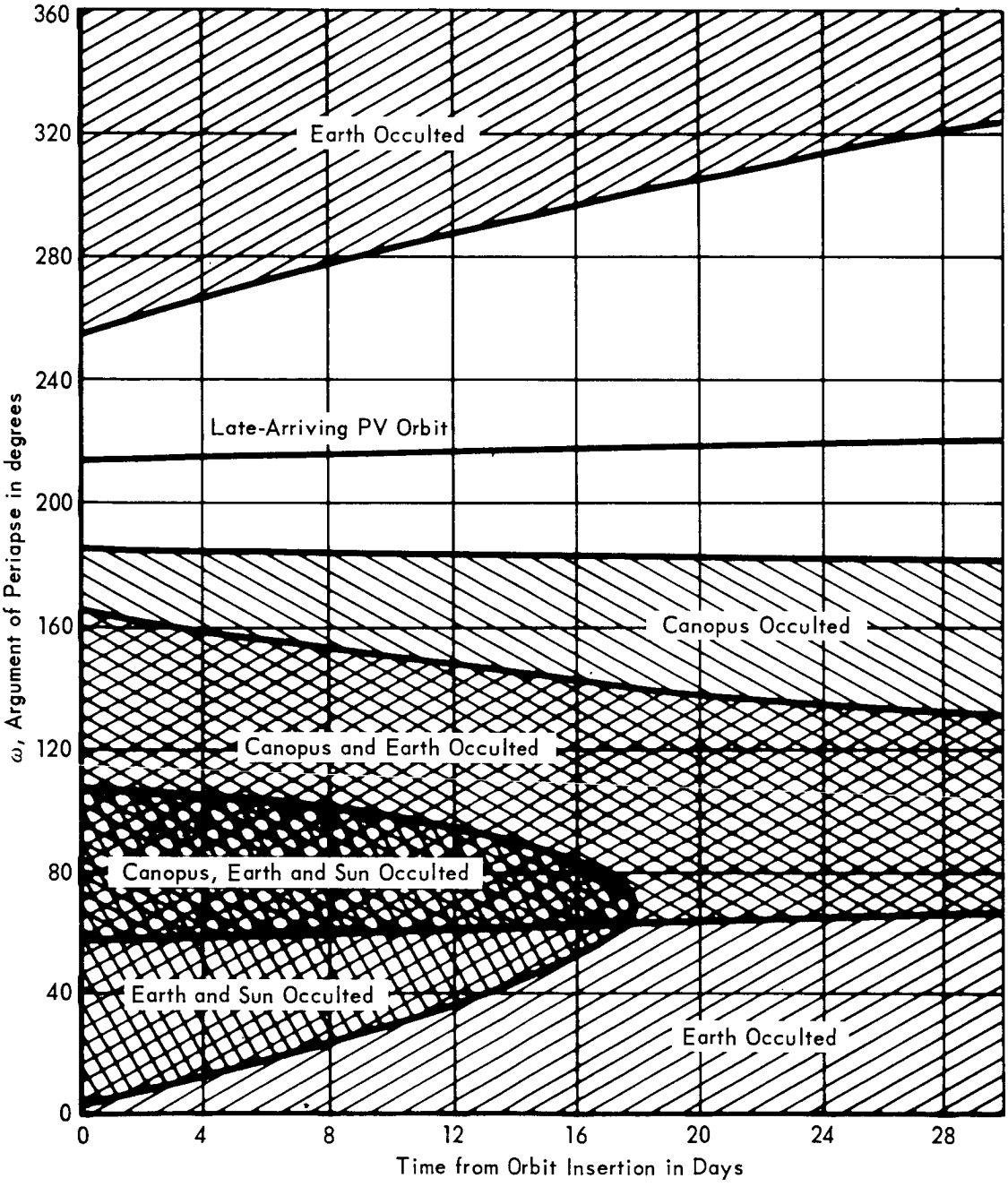

Figure 4–16

the end of the CB and ESP checkouts. These tests are monitored on the ground by the MOS, and sufficient time is allowed for MOS reaction to anomalous equipment-operation indications. This reaction may be in the form of problem assessment, employment of corrective actions, and/or determination of the resulting mission capabilities.

The FC checkout is performed utilizing both FS-provided power and FC-systems power. The CB Test Programmer is physically located in the FC adapter, whereas the SL Test Programmer is onboard the laboratory.

Immediately before the FC in-orbit checkout begins, the CB, ESP, SL, and FC Adapter cruise commutators are switched from their cruise modes to a CB-control mode. They remain in this mode for the duration of the checkout.

During the pre-separation checkout, sampling data rates for the CB, ESP, and SL are 2,730, 2,730 and 55,860, and 164/15 bps, respectively.

After the tests, the CB, ESP, SL and FC Adapter cruise commutators are switched back to their cruise modes.

The CB Sequencer and Timer (S&T) is then turned on, updated, its memory read out and verified on Earth. The CB S&T remains on from this point and awaits the ground command to begin separation sequencing.

The SL S&T is then subjected to a similar updating and ground verification and is switched to a stand-by mode. The SL S&T remains in its stand-by mode until activation at touchdown on Mars.

When the CB S&T receives the start-separation-sequence command from the MOS, it begins initiating CB subsystems in preparation for spacecraft-capsule separation. The S&T turns on the low-rate UHF transmitter, the CB telemetry subsystem, and the CB guidance and control subsystem (both the computer and the inertial measurement unit). Capsule Bus squib batteries are activated, the FC systems cruise commutators are switched to the CB-control mode, and the capsule telemetry subsystem is switched to de-orbit cruise mode (sampling rate of 273 bps). The CB S&T performs all these events about an hour before spacecraft-capsule separation to allow verification of subsystem operation by the MOS.

The CB begins sending data to the spacecraft for relay to Earth shortly after its low-rate UHF transmitter is turned on. Time-delayed parallel streams of data are transmitted to ensure a continuum of data during possible black-out periods.

The spacecraft also receives a prepare-for-capsule-separation command from the MOS, and initiates a sequence of events for support of the FC mission. The FS CC&S initiates the low-rate UHF receiver shortly before the CB S&T initiates the corresponding capsule transmitter.

At six minutes beofre scheduled separation, the spacecraft receives a command from the Earth to proceed with capsule separation. The FS CC&S relays this command to the CB S&T and the FC Sterilization Canister Dual Programmer.

The Sterilization Canister Dual Programmer consists of two dual-operating timers which initiate release and separation of the canister and electrical and mechanical release of the Flight Capsule from the spacecraft. The Dual Programmer is located on the aft section of the canister and remains in orbit with the spacecraft after separation of the canister and the capsule.

The forward section of the canister is pyrotechnically released and spring-separated from the capsule five minutes before FS-FC separation. When physical removal of the canister is sensed by a separation switch, the Dual Programmer is enabled for release of the capsule. The capsule cannot be separated if the canister is not separated.

After the canister is released from the capsule, the Dual Programmer enables the CB S&T to provide the signal for separating the capsule from the spacecraft. The Dual Programmer releases the FC and FC and the S&T separates it from the spacecraft. Separation is accomplished through use of the CB reaction control subsystem (RCS). The RCS spacecraft-pointed jets are fired for three seconds and then shut down. A separation velocity of 1.25 fps (minimum) is imparted to the capsule.

Immediately after separation from the spacecraft, the capsule is stabilized to its reference axes and then subjected to a 3-axis maneuver (roll, pitch, and roll) to orient itself for the de-orbit thrusting. The de-orbit orientation is pre-programmed into the CB guidance and control subsystem before FS-FC separation.

4.1.12 Capsule De-Orbit Phase - Twenty minutes after FS-FC separation, the capsule's solid-propellant de-orbit motor is fired. The 20-minute time increment before spacecraft capsule separation and de-orbit motor firing allows a minimum separation distance of 457 m to be attained between the two vehicles. The minimum separation distance meets the constraint that "at least 300 meters" be separating the FS from the FC at de-orbit motor firing.

In the nominal mission, the de-orbit motor is fired with a deflection angle of 0 deg, at an orbit true anamoly of 187 deg, to obtain a 345.6 fps incremental de-orbit velocity. A complete listing of the nominal FC trajectory parameters for de-orbit, orbital descent, entry, and terminal deceleration is given in Figure 4-17.

In the general case, the de-orbit motor burns long enough to give a pre-set incremental velocity. It is then shut down by pyrotechnically removing the motor nozzle. The spent de-orbit motor case is next released and jettisoned from the capsule.

SUMMARY OF CAPSULE DE-ORBIT, ORBITAL DESCENT, ENTRY, AND TERMINAL DECELERATION PARAMETERS

	Parameters	Value
1.	De-Orbit Velocity Increment	345.6 ft/sec
2.	De-Orbit Deflection Angle	0 deg
3.	De-Orbit Anomaly	187.0 deg
4.	Time from De-Orbit to Entry	326.53 min
5.	Entry Altitude	800,000 ft
6.	Entry Velocity	14,873 ft/sec
7.	Entry Flight-Path Angle	-19.0 deg
8.	Capsule Entry Anomaly	317.4 deg
9.	Spacecraft Anomaly at Capsule Entry	294.5 deg
10.	Time from Entry to Aerodecelerator Deployment	342.0 sec
11.	Atmospheric Model	VM-9
12.	Capsule Ballistic Coefficient	0.266
13.	Type of Aerodecelerator	Parachute
14.	Diameter of Aerodecelerator	70 ft
15.	Aerodecelerator-Deployment Altitude	23,000 ft
16.	Aerodecelerator-Deployment Velocity	602.4 ft/sec
17.	Time from Aerodecelerator Deployment to Terminal-Propulsion-Engine Ignition	97 sec
18.	Terminal-Propulsion Engines	4-liquid propellant
19.	Terminal-Propulsion-Engine-Ignition Altitude	5,000 ft
20.	Capsule Velocity at Terminal-Propulsion-Engine-Ignition	136.6 ft/sec
21.	Time from Terminal-Propulsion-Engine Ignition to Touchdown	47.0 sec

Figure 4-17

4.1.13 Capsule Orbital Descent Phase - After the de-orbit motor is separated, the capsule re-orients itself into a pre-programmed entry position. The entry position of the FC also provides solar incidence on its ablative heat shield, and the capsule is put into a sustained 3-4 rev/hr roll during the remainder of the orbital descent period until just before entry. The slow spin of the capsule during descent from orbit maintains the temperature of the heat shield above the -150°F limit.

4.1.14 Capsule Entry Phase - Entry occurs at an altitude of 800,000 ft from the mean Martian surface. When the capsule descends to the entry altitude (which is determined as a time from separation from the spacecraft) the CB S&T ends the solar orientation roll, initiates operation of the Entry Science Package (ESP), turns on the ESP high-rate UHF transmitter, switches the CB and ESP telemetry subsystems to their entry modes, and turns on the CB radar altimeter.

The ESP samples the Martian atmosphere during entry and descent, measures pressures and temperatures, takes descent TV pictures, and transmits its data over its high-rate (55,860 bps) UHF transmitter. A more detailed discussion of the Entry Science Package is given in Volume IV of this report.

For redundancy, the ESP low-rate (non-TV) data is also transmitted by the CB to the spacecraft for relay to Earth. In addition, the CB data is transmitted over the ESP transmitter.

At entry, when the solar orientation roll is stopped, the CB guidance and control subsystem maintains three-axis attitude control over the capsule. Initial deceleration of the FC is strictly aerodynamic. When a .05g deceleration level is reached, pitch and yaw attitude control is discontinued and three-axis attitude-rate damping is provided.

The CB radar altimeter starts highly reliable tracking at about an altitude of 200,000 feet and begins supplying altitude marks for the use of other CB equipment. At the 100,000-ft-altitude mark, the CB landing radar is turned on. The landing radar provides range and range-rate signals to the capsule during the lower-altitude portion of atmospheric descent.

An atmospheric flight time history is shown in Figure 4-18 for the capsule descent in the VM-9 atmosphere. Capsule Bus altitude, velocity, flight-path angle, and dynamic pressure are plotted as functions of time-from-entry.

4.1.15 Capsule Terminal Deceleration Phase - At an altitude of 23,000 feet, the capsule deploys a supersonic parachute. Twelve seconds later, as the capsule is descending on the parachute, the capsule aeroshell is released.

When the capsule has descended to 5,000 ft, its four terminal-propulsion motors

CAPSULE ENTRY
ATMOSPHERIC FLIGHT TIME HISTORY
PARACHUTE DIA. = 70 ft
M/C_DA = .266
VM-9 ATMOSPHERE

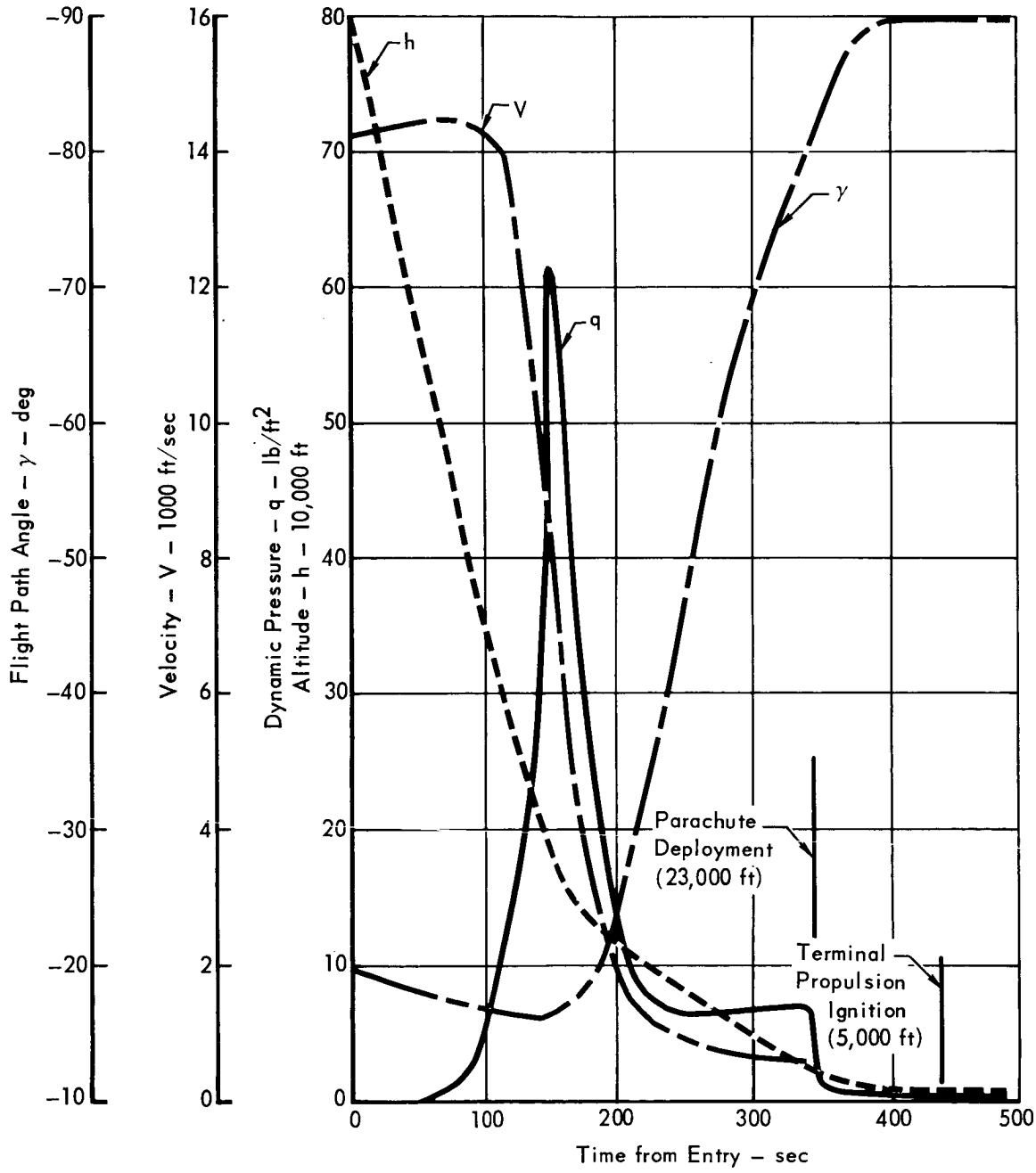

Figure 4–18

are ignited. The capsule, still under power, is then released from its parachute.

Initial thrust of the terminal-propulsion motors is at 50% maximum thrust. After 0.5 sec, the motors are throttled down to provide a 0.8 g's deceleration level until a pre-programmed descent profile is intersected.

Shortly after release of the capsule aeroshell, the CB landing radar begins to track. However, landing radar inputs are held off rom the CB guidance and control computer (GCC) until after terminal-propulsion-motor ignition. When enabled, the CB landing radar provides inputs of range and range-rate to the CB GCC. With these inputs, the GCC determines when the capsule intersects the pre-programmed descent profile and maintains the capsule on this profile until landing.

Initial attitude control over the capsule is accomplished inertially. After the lander radar inputs are allowed to reach the GCC, the capsule pitch and yaw attitude is controlled by differentially throttling of the terminal-propulsion-motors' thrust. Roll control is accomplished by the use of canted motor nozzles.

At the 2500-ft mark, the capsule landing radar effects a range-scale change for more accurate range and range-rate determinations.

At 90 feet, the radar altimeter enables the CB and SL impact sensors and initiates release of the ESP descent TV cameras to preclude damage to the CB and SL at landing.

When the capsule has descended to an altitude of 90 feet, the terminal propulsion motors provide a constant-velocity descent of 10fps. At this altitude, the radar altimeter shuts itself off.

At 10 feet, the terminal-propulsion motors are shut down and the attitude control signals to the GCC are disabled by the landing radar, and the capsule then falls free to land on the surface of Mars.

4.1.16 Capsule Landing - The Capsule Landing Phase extends from the time of capsule touchdown on the surface of Mars to the completion of post-landing CB and ESP data transmission. Capsule Bus post-touchdown operations are also performed during this phase.

For our preferred landing site, the capsule lands in view of the Goldstone, California Deep Space Station. The landing-impact energy is absorbed by a crushable pallet, called the "unidisc", located on the underside of the CB. Impact sensors shut down CB landing radar operation and activate the Surface Laboratory.

Stabilization legs are extended from the underside of the Capsule Bus to prevent tilting when SL science equipment is being deployed and the antennas are being aligned. These legs also provide CB and SL stability during periods of Martian winds.

A more detailed description of Surface Laboratory operations during this period can be found in Volume III of this report.

The CB provides numerous back-up commands to the SL to further ensure that the laboratory is operating properly before the capsule is shut down.

CB landing and engineering data is transmitted to the spacecraft while it is still in view. The spacecraft then relays the data to Earth. When all the pertinent CB and ESP data has been transmitted, the CB and ESP are shut down.

CB shutdown is programmed to occur at 11 minutes after touchdown on Mars. As the capsule turns off its subsystems, it switches its remaining power over to the Surface Laboratory.

Key parameters related to the Capsule Landing Phase are presented in Figure 4-19. The parameters are given for both the early- and late-arriving capsules. The data was computed on the basis of a capsule landing in the Syrtis Major region.

Landing-site longitude can be varied by adjusting the PV-arrival times and the FC orbital-stay times. The data presented in Figure 4-19 does not take into account the time required for PV-orbit determinations (both before and after a Mars-orbit trim). These determinations could take as long as 105 hours, precluding FC separation before this time, if a PV Mars-orbit trim occurs.

The variation of the view angle of the Earth as seen from Syrtis Major and of the Capsule Bus as seen from the Goldstone Deep Space Instrumentation Facility are shown in Figure 4-20. The view-angle variations are given for both the early- and late-arriving Flight Capsules.

The trace of the FS on the surface of Mars during FC landing and immediate post-landing operations is illustrated in Figure 4-21. Only the late-arriving-FC case is shown in the figure. The positions of the FS relative to the FC at landing, and when the FC loses sight of the FC, are included on the ground track.

SUMMARY OF CAPSULE LANDING PHASE PARAMETERS

Parameter	Parameter Value		Remarks
	Early FC	Late FC	
1. Landing Date	23 March 1974	24 March 1974	
2. Landing Site	Syrtis Major	Syrtis Major	General vicinity of
3. Landing-Site Longitude	70 deg	70 deg	
4. Landing-Site Lattitude	2.40 deg N	0.00 deg	
5. Landing Time	2 hr 46 min 8 sec	3 hr 34 min 41 sec	GMT on landing date
6. Time from Mars-Orbit Insertion to Landing	246.18 hr	80.85 hr	
7. Time from Deorbit to Landing	5.58 hr	5.58 hr	
8. CB Touchdown Velocity	16 ft/sec	16 ft/sec	
9. CB Landing Anomaly	327.5 deg	327.5 deg	From orbit peri-apse
10. Central Angle to Morning Terminator	25 deg	25 deg	
11. FS Anomaly at CB Landing	317.5 deg	317.5 deg	
12. View Angle from CB	34 deg	34 deg	
13. View Angle, FS from CB	60.9 deg	70.9 deg	
14. View Angle, Earth from CB	56.4 deg	57.3 deg	
15. View Angle, Mars from Earth	58.6 deg	49.4 deg	Above Goldstone horizon
16. Communication Distance, Earth-to-CB	243.70×10^6 km	245.25×10^6 km	
17. Daylight Hours	10.62 hr	10.50 hr	From touchdown to evening terminator
18. View Time, CB-to-FS	9.03 min	9.03 min	From touchdown to 34-deg limit
19. View Time, SL-to-Earth	5.92 hr	5.81 hr	From touchdown to 34-deg limit
20. View Time, SL-to Goldstone	3.79 hr	2.95 hr	

Figure 4-19

CAPSULE DE-ORBIT TO POST-LANDING
EARTH (GOLDSTONE) AND MARS (SYRTIS MAJOR) STATION VIEW
1973 NOMINAL TRAJECTORY

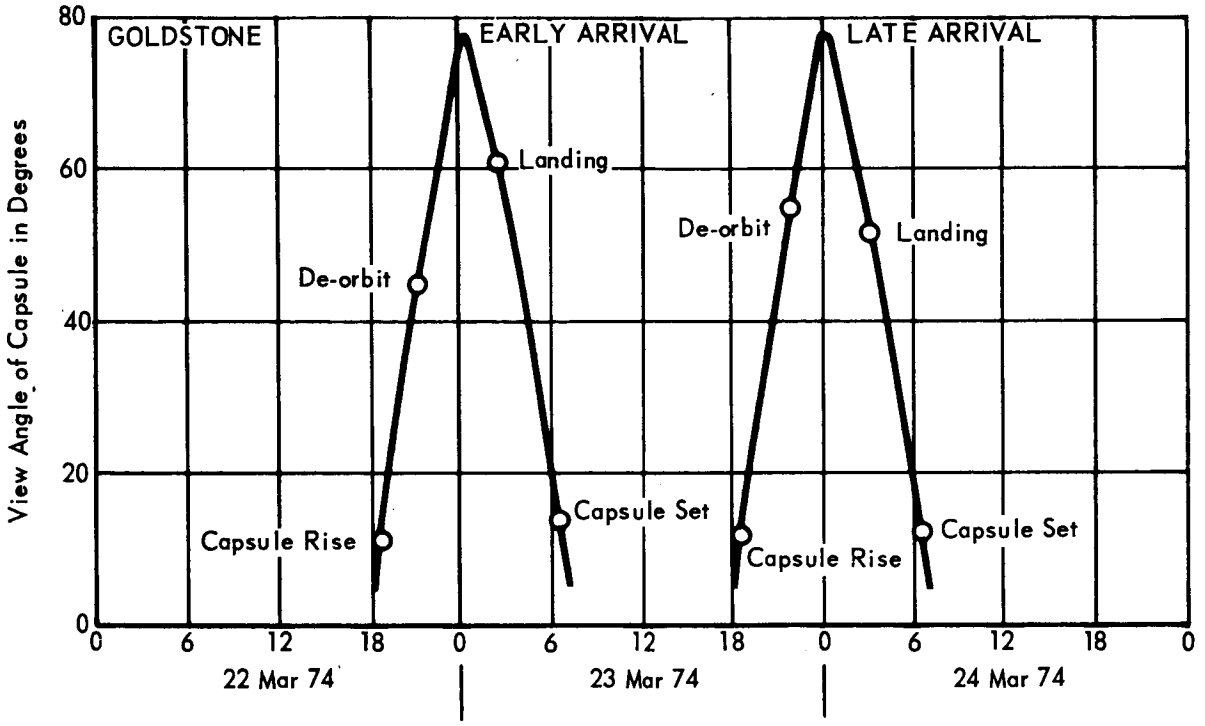

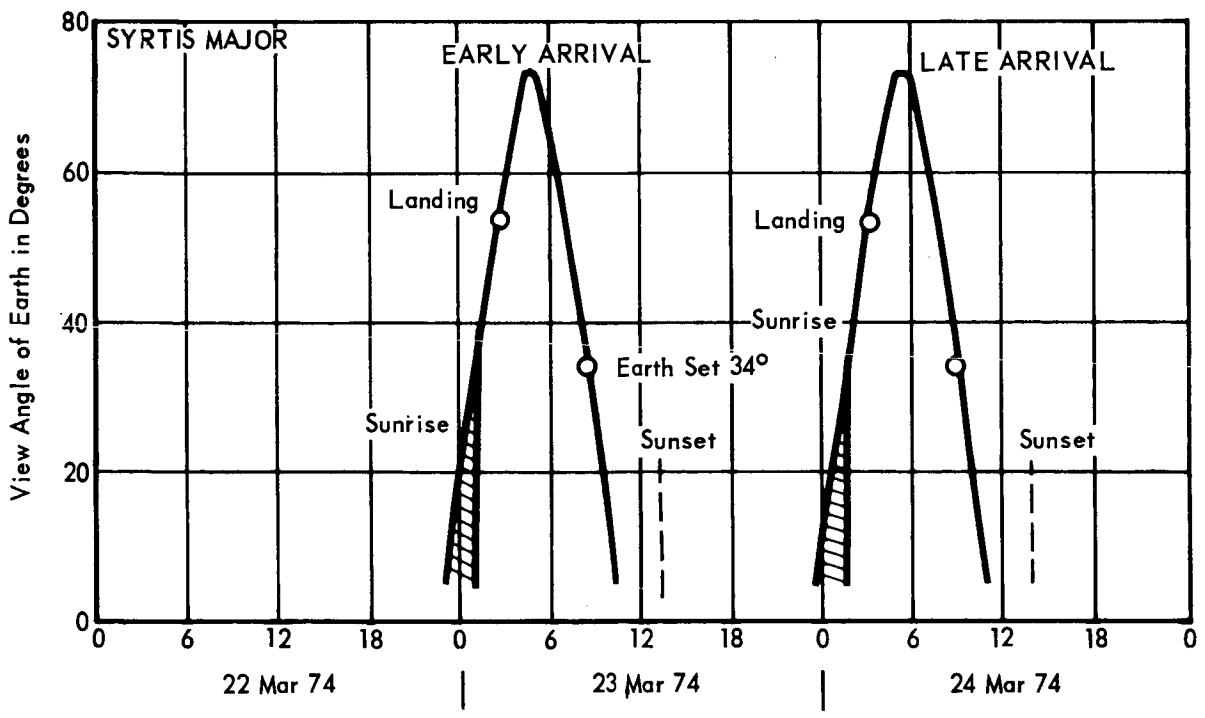

Figure 4–20

MARS SURFACE TRACK OF ORBITING SPACECRAFT SHOWING CAPSULE DE-ORBIT AND LANDING

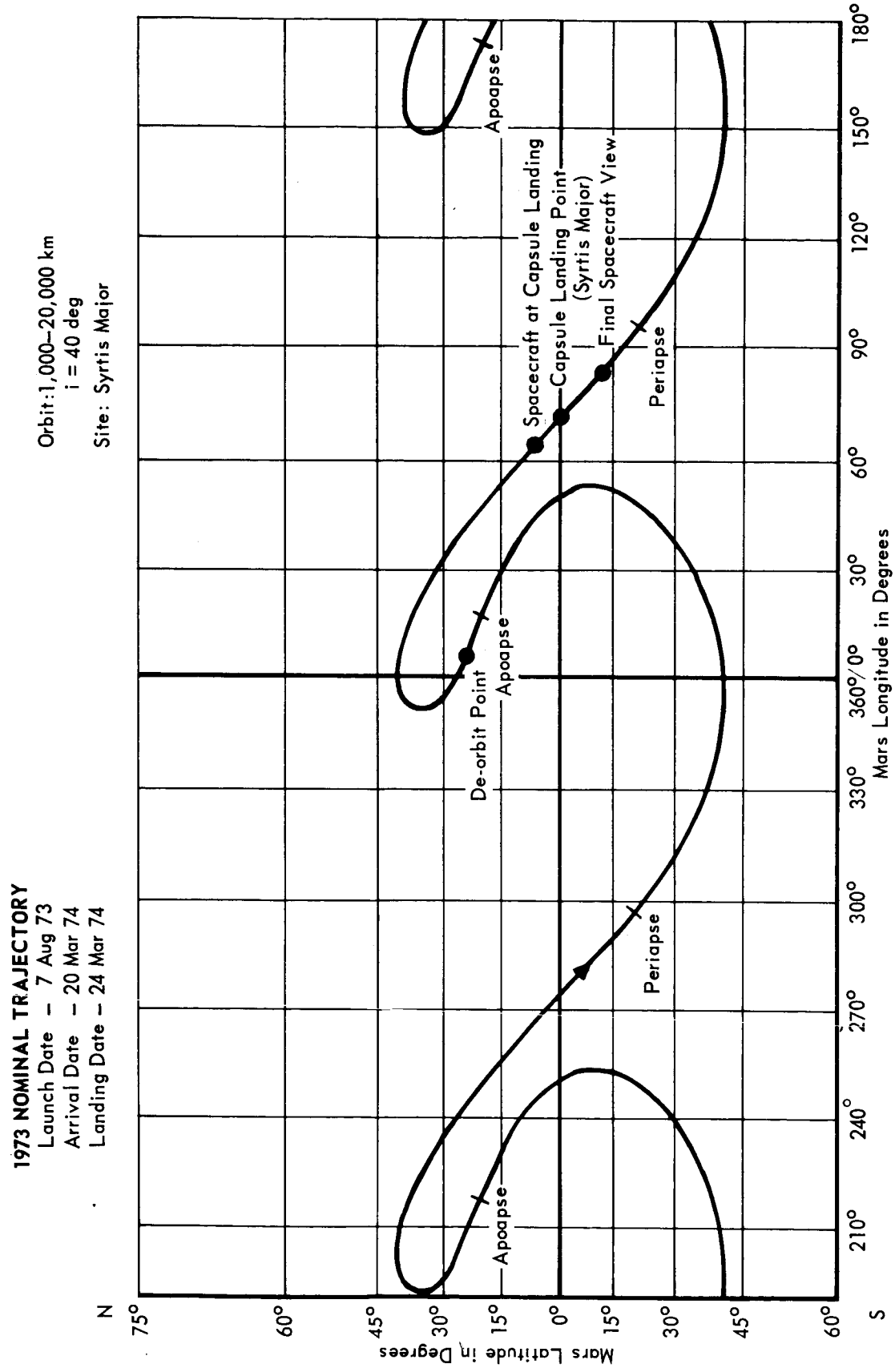

Figure 4–21

4.2 CAPSULE BUS SUBSYSTEM EQUIPMENT TIMELINE - A Capsule Bus subsystem-equipment timeline for the nominal 1973 mission is presented in Figure 4-22. The timeline illustrates the start, stop and operating times of the various CB subsystems and major assemblies. Important events and their associated times of occurrence are indicated by small, enumerated triangles and explained in the legend at the bottom of the chart.

The CB-equipment timeline gives the observer an overall picture of what equipment is operating during the mission in relation to the other CB equipment.

CAPSULE BUS EQUIPMENT OPERATION TIMELINE – A. PRE-LAUNCH (ON PAD) PHASE

	T_o – 2 Days
1. Power	
(a) Battery	
(b) Battery Charger	
(c) DC-to-DC Converter	
2. Radar	
(a) Landing Radar	
(b) Radar Altimeter	
3. Telecommunications	
(a) Low-Rate UHF Transmitter	
(b) Telemetry	
(c) Commutation	
(d) Data Storage	
(e) Low-Rate UHF Receiver (Spacecraft Mounted)	
(f) Test Programmer	
4. Sequencing	
(a) Sequencer & Timer	
5. Structural/Mechanical	
(a) Stabilization Leg Assembly	
(b) Capsule Bus Separation Assembly	
(c) Sterilization Canister Separation Assembly	
(d) Aeroshell Release Assembly	
(e) Adapter Separation Assembly	
6. Thermal Control	
(a) Heaters	
(b) Insulation	
(c) Coatings	
(d) Heat Capacitance	
7. Aerodecelerator (Parachute)	
(a) Deployment Structure & Mechanism	
(b) Release Mechanism	
8. Propulsion	
(a) De-Orbit	
(b) Terminal	
(c) Reaction Control	
9. Guidance & Control	
(a) Guidance & Control Computer	
(b) Inertial Measurement Unit	
(c) Axial Accelerometer	
(d) Power Supply	

Notes:
1. Sequencer & Timer on for Up
2. Switch Commutators to Cruise

T_o – Liftoff

Figure 4–22A

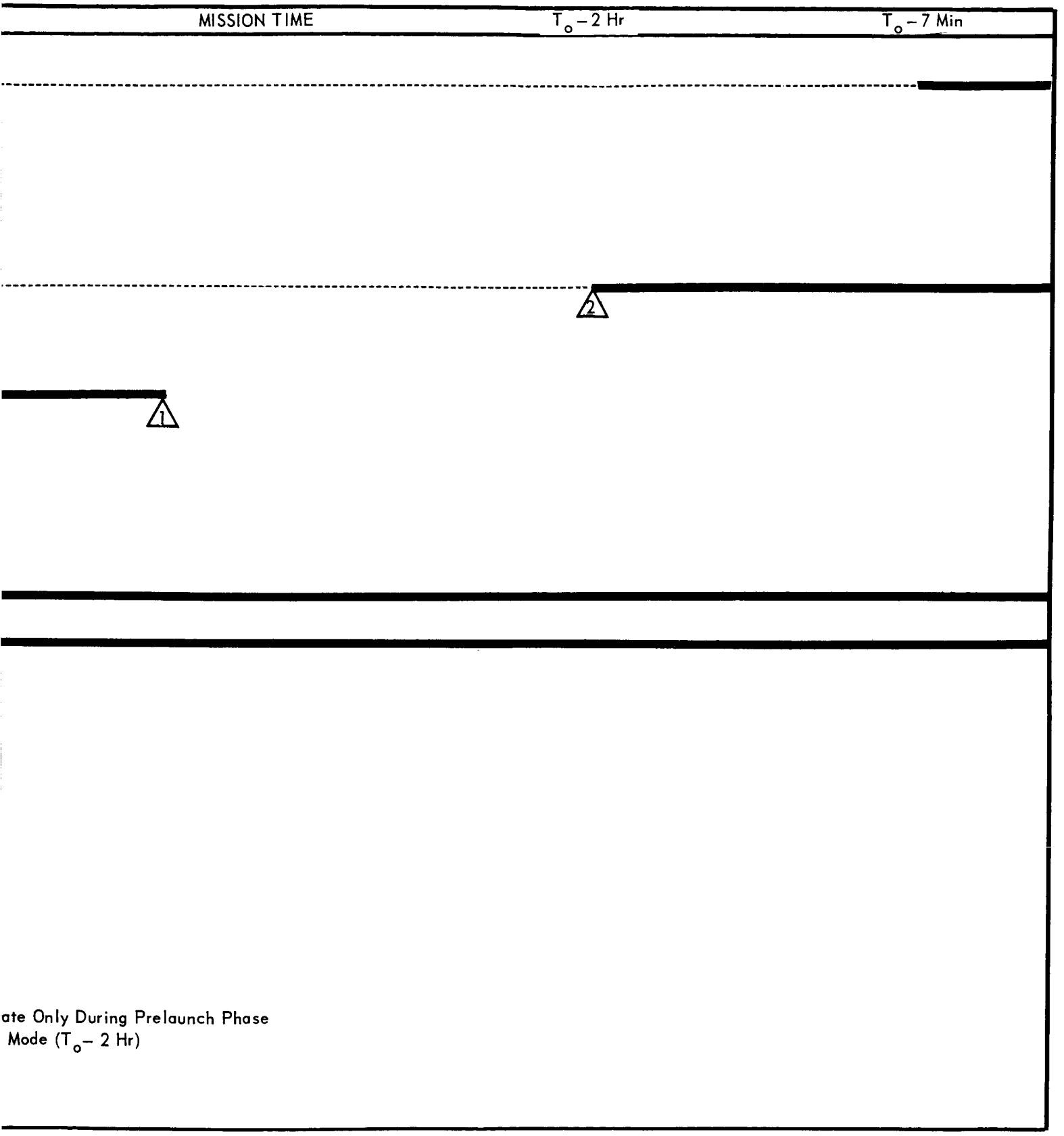

ate Only During Prelaunch Phase
Mode ($T_o - 2$ Hr)

CAPSULE BUS EQUIPMENT OPERATION TIMELINE B. LAUNCH PHASE

	T_0 – 1 MIN.,	T_0 (LIFTOFF)	T_0, + 200 SEC
1. Power			
(a) Battery			
(b) Battery Charger			
(c) DC-to-DC Converter			
2. Radar			
(a) Landing Radar			
(b) Radar Altimeter			
3. Telecommunications			
(a) Low-Rate UHF Transmitter			
(b) Telemetry			
(c) Commutation			
(d) Data Storage			
(e) Low-Rate UHF Receiver (Spacecraft Mounted)			
(f) Test Programmer			
4. Sequencing			
(a) Sequencer & Timer			
5. Structural/Mechanical			
(a) Stabilization Leg Assembly			
(b) Capsule Bus Separation Assembly			
(c) Sterilization Canister Separation Assembly			
(d) Sterilization Canister Venting Assembly			
(e) Aeroshell Release Assembly			2
(f) Adapter Separation Assembly			
6. Thermal Control			
(a) Heaters			
(b) Insulation			
(c) Coatings			
(d) Heat Capacitance			
7. Aerodecelerator (Parachute)			
(a) Deployment Structure & Mechanism			
(b) Release Mechanism			
8. Propulsion			
(a) De-Orbit	1		
(b) Terminal			
(c) Reaction Control			
9. Guidance & Control			
(a) Guidance & Control Computer			
(b) Inertial Measurement Unit			
(c) Axial Accelerometer			
(d) Power Supply			

Figure 4–22B

MISSION TIME	T_1 (PARKING-ORBIT INSERTION)	T_1 + 32.6 MIN.
	3	4
	Notes: 1 Arm CB De-orbit Motor 2 Transfer Canister to Evacuate Mode 3 $T_1 = T_0 + 713.4$ sec (Nominal) 4 End of Launch Phase (Nominal)	

CAPSULE BUS EQUIPMENT OPERATION TIMELINE C. INJECTION PHASE

	T_1 + 32.6	
1. Power		
(a) Battery		
(b) Battery Charger		
(c) DC-to-DC Converter		
2. Radar		
(a) Landing Radar		
(b) Radar Altimeter		
3. Telecommunications		
(a) Low-Rate UHF Transmitter		
(b) Telemetry		
(c) Commutation		
(d) Data Storage		
(e) Low-Rate UHF Receiver (Spacecraft Mounted)		
(f) Test Programmer		
4. Sequencing		
(a) Sequencer & Timer		
5. Structural/Mechanical		
(a) Stabilization Leg Assembly		
(b) Capsule Bus Separation Assembly		
(c) Sterilization Canister Separation Assembly		
(d) Aeroshell Release Assembly		
(e) Adapter Separation Assembly		
6. Thermal Control		
(a) Heaters		
(b) Insulation		
(c) Coatings		
(d) Heat Capacitance		
7. Aerodecelerator (Parachute)		
(a) Deployment Structure & Mechanism		
(b) Release Mechanism		
8. Propulsion		
(a) De-Orbit		
(b) Terminal		
(c) Reaction Control		
9. Guidance & Control		
(a) Guidance & Control Computer		
(b) Inertial Measurement Unit		
(c) Axial Accelerometer		
(d) Power Supply		

Figure 4–22C

MISSION TIME (MINUTES)	T_4 + 120
T_1 – Parking Orbit Insertion T_4 – Separation of Aft Planetary Vehicle	

CAPSULE BUS EQUIPMENT OPERATION TIMELINE D. ACQUISITION PHASE

	T_3	T
1. Power		
(a) Battery		
(b) Battery Charger		
(c) DC-to-DC Converter		
2. Radar		
(a) Landing Radar		
(b) Radar Altimeter		
3. Telecommunications		
(a) Low-Rate UHF Transmitter		
(b) Telemetry		
(c) Commutation		
(d) Data Storage		
(e) Low-Rate UHF Receiver (Spacecraft Mounted)		
(f) Test Programmer		
4. Sequencing		
(a) Sequencer & Timer		
5. Structural/Mechanical		
(a) Stabilization Leg Assembly		
(b) Capsule Bus Separation Assembly		
(c) Sterilization Canister Separation Assembly		
(d) Aeroshell Release Assembly		
(e) Adapter Separation Assembly		
6. Thermal Control		
(a) Heaters		
(b) Insulation		
(c) Coatings		
(d) Heat Capacitance		
7. Aerodecelerator (Parachute)		
(a) Deployment Structure & Mechanism		
(b) Release Mechanism		
8. Propulsion		
(a) De-Orbit		
(b) Terminal		
(c) Reaction Control		
9. Guidance & Control		
(a) Guidance & Control Computer		
(b) Inertial Measurement Unit		
(c) Axial Accelerometer		
(d) Power Supply		

Figure 4–22D

$_3$ + 23	MISSION TIME (MINUTES)	T_3 + 3 Hrs.
	1	

Notes:

1. Automatic Recharging During Remainder of Mission as Needed

T_3 – Separation of Forward Planetary Vehicle

CAPSULE BUS EQUIPMENT OPERATION TIMELINE E. INTERPLANETARY CRUISE

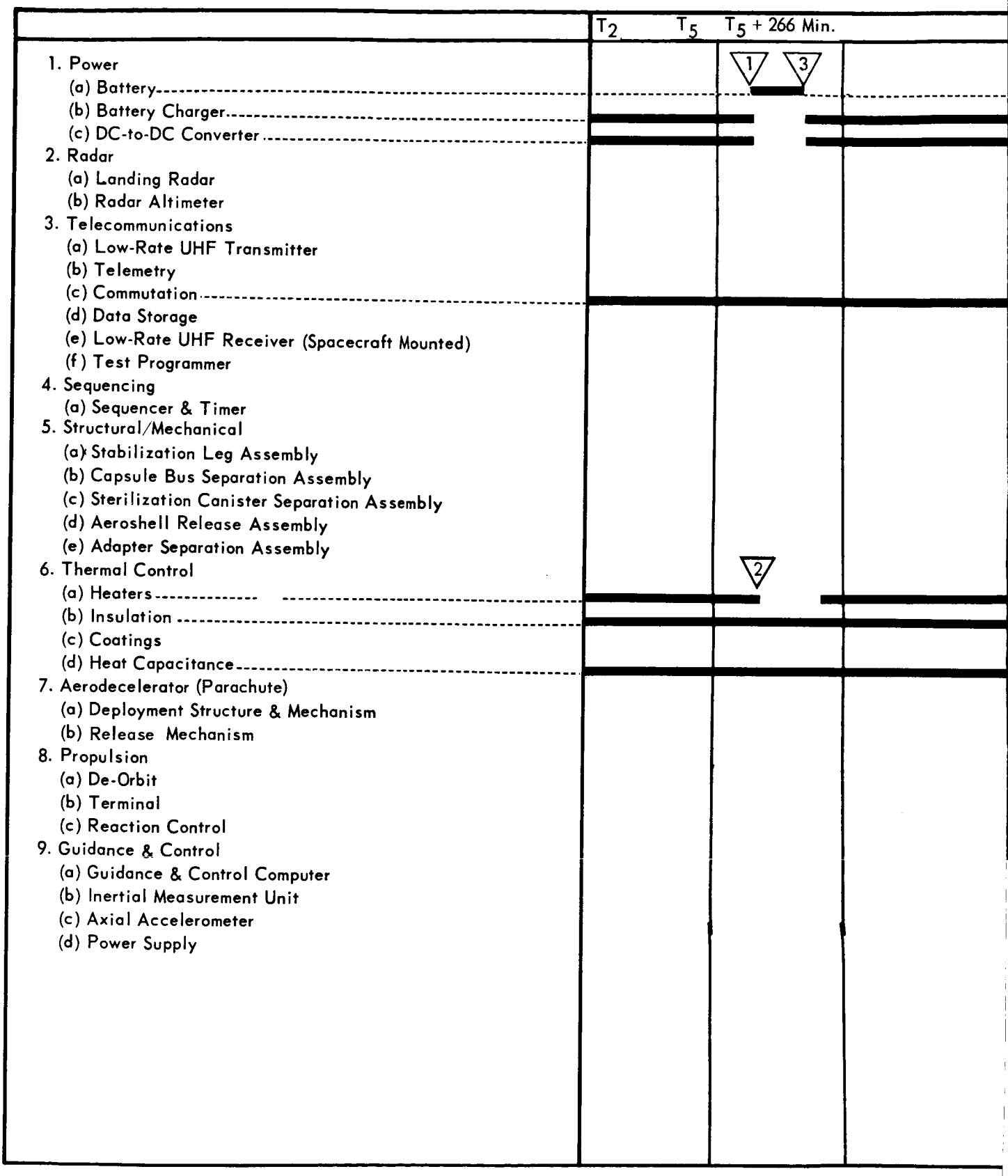

Figure 4–22E

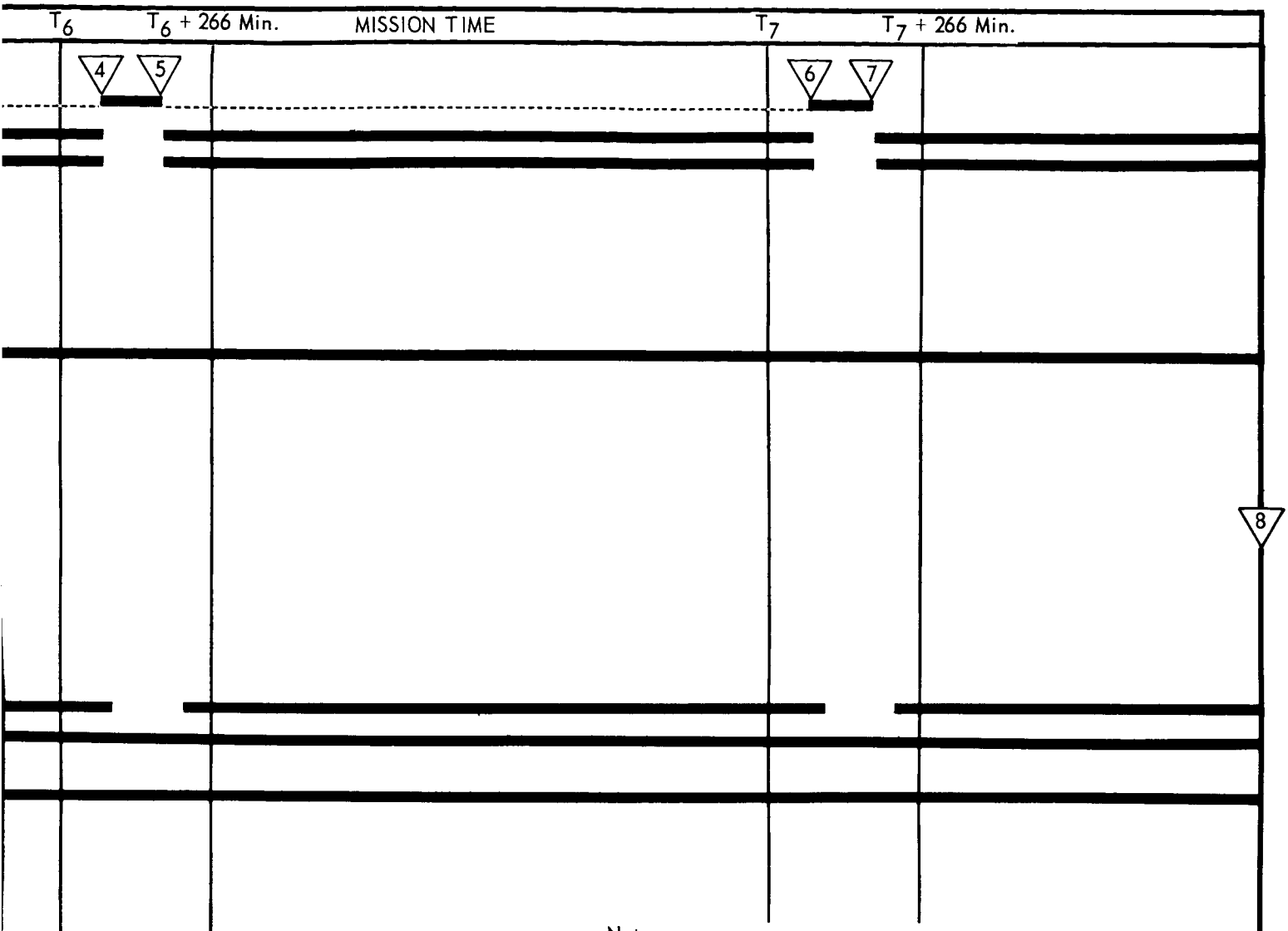

Notes:

1. T_5 + 62 Min.
2. Heaters Operate Intermittently – Thermostatically Controlled
3. T_5 + 204 Min.
4. T_6 + 62 Min.
5. T_6 + 204 Min.
6. T_7 + 62 Min.
7. T_7 + 204 Min.
8. End of Interplanetary Cruise; T_2 + 217.2 Days (Nominal)

T_2 – Injection
T_5 – Initiate Arrival Date Separation Maneuver Sequence (T_2 + 6.8 Days)
T_6 – Initiate First Midcourse Correction Maneuver Sequence (T_2 + 30 Days)
T_7 – Initiate Second Midcourse Correction Maneuver Sequence
(Mars-Orbit Insertion – 7 to 30 Days)

CAPSULE BUS EQUIPMENT OPERATION TIMELINE F. ARRIVAL DATE SEPARATION MANEUVER, INTERPLANETARY TRAJECTORY CORRECTION MANEUVERS, PLANETARY VEHICLE MARS-ORBIT INSERTION, AND PLANETARY VEHICLE ORBIT-TRIM MANEUVER

1. Power	
(a) Battery	
(b) Battery Charger	
(c) DC-to-DC Converter	
2. Radar	
(a) Landing Radar	
(b) Radar Altimeter	
3. Telecommunications	
(a) Low-Rate UHF Transmitter	
(b) Telemetry	
(c) Commutation	
(d) Data Storage	
(e) Low-Rate UHF Receiver (Spacecraft-Mounted)	
(f) Test Programmer	
4. Sequencing	
(a) Sequencer & Timer	
5. Structural/Mechanical	
(a) Stabilization Leg Assembly	
(b) Capsule Bus Separation Assembly	
(c) Sterilization Canister Separation Assembly	
(d) Aeroshell Release Assembly	
(e) Adapter Separation Assembly	
6. Thermal Control	
(a) Heaters	
(b) Insulation	
(c) Coatings	
(d) Heat Capacitance	
7. Aerodecelerator (Parachute)	
(a) Deployment Structure & Mechanism	
(b) Release Mechanism	
8. Propulsion	
(a) De-Orbit	
(b) Terminal	
(c) Reaction Control	
9. Guidance & Control	T_M – Arrival Date S
(a) Guidance & Control Computer	First Interpla
(b) Inertial Measurement Unit	Second Interp
(c) Axial Accelerometer	Planetary Vel
(d) Power Supply	Planetary Vel

Figure 4–22F

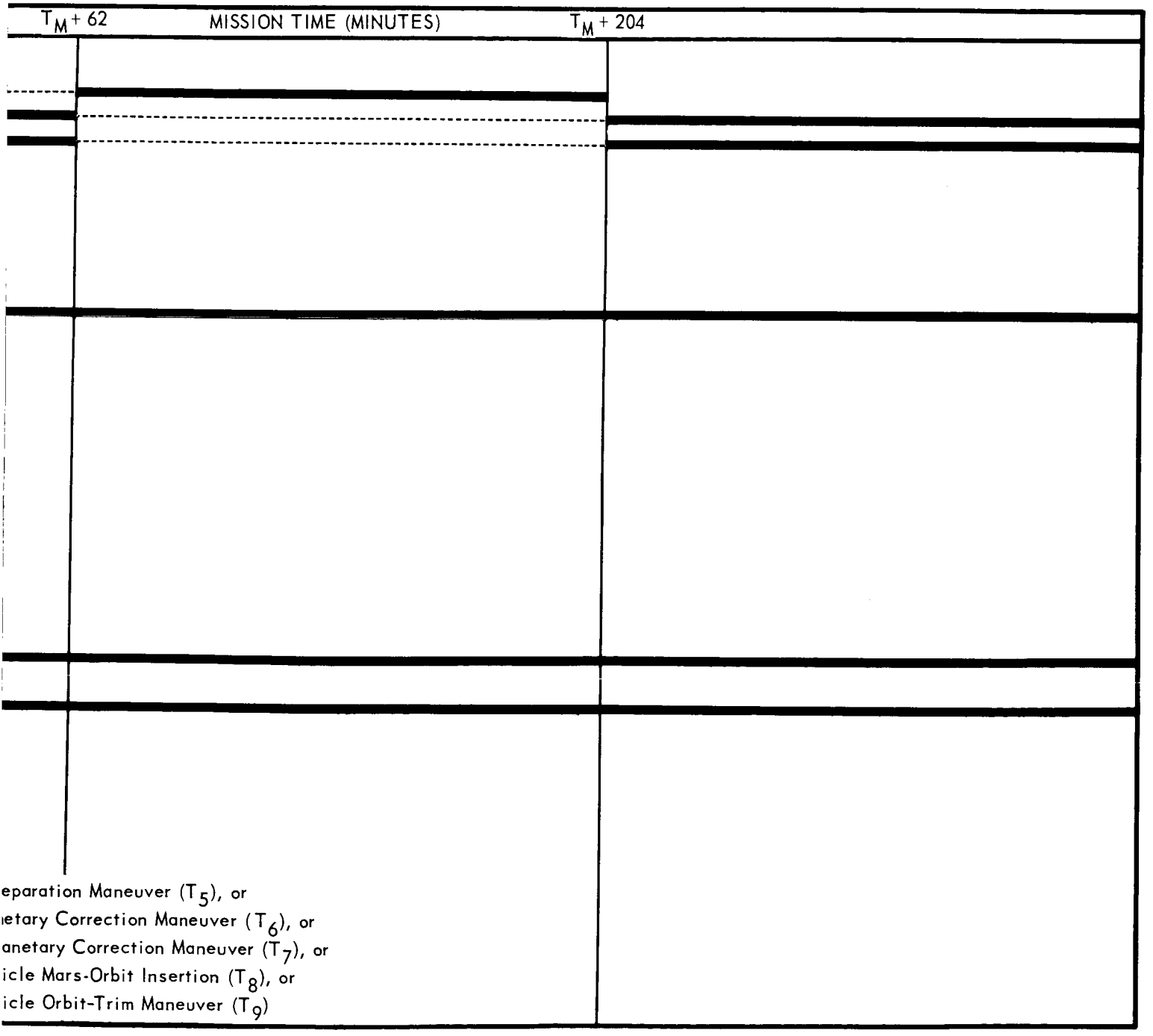
$T_M + 62$
MISSION TIME (MINUTES)
$T_M + 204$
eparation Maneuver (T_5), or
etary Correction Maneuver (T_6), or
anetary Correction Maneuver (T_7), or
icle Mars-Orbit Insertion (T_8), or
icle Orbit-Trim Maneuver (T_9)

CAPSULE BUS EQUIPMENT OPERATION TIMELINE G. PRE-SEPARATION ORBITAL OPERATIONS PHASE

	T_8 + 250	
1. Power		
(a) Battery		
(b) Battery Charger		
(c) DC-to-DC Converter		
2. Radar		
(a) Landing Radar		
(b) Radar Altimeter		
3. Telecommunications		
(a) Low-Rate UHF Transmitter		
(b) Telemetry		
(c) Commutation		
(d) Data Storage		
(e) Low-Rate UHF Receiver (Spacecraft Mounted)		
(f) Test Programmer		
4. Sequencing		
(a) Sequencer & Timer		
5. Structural/Mechanical		
(a) Stabilization Leg Assembly		
(b) Capsule Bus Separation Assembly		
(c) Sterilization Canister Separation Assembly		
(d) Aeroshell Release Assembly		
(e) Adapter Separation Assembly		
6. Thermal Control		
(a) Heaters	1	
(b) Insulation		
(c) Coatings		
(d) Heat Capacitance		
7. Aerodecelerator (Parachute)		
(a) Deployment Structure & Mechanism		
(b) Release Mechanism		
8. Propulsion		
(a) De-Orbit		
(b) Terminal		
(c) Reaction Control		
9. Guidance & Control		
(a) Guidance & Control Computer		
(b) Inertial Measurement Unit		
(c) Axial Accelerometer		
(d) Power Supply		

Figure 4–22G

MISSION TIME (MINUTES)	$T_{10} + 1$

Notes:

1. Heaters Operate Intermittently – Thermostatically Controlled

T_8 – Mars-Orbit Insertion

T_{10} – Pre-Separation FC Checkout

CAPSULE BUS EQUIPMENT OPERATION TIMELINE H. SPACECRAFT – CAPSULE SEPARATION PHASE

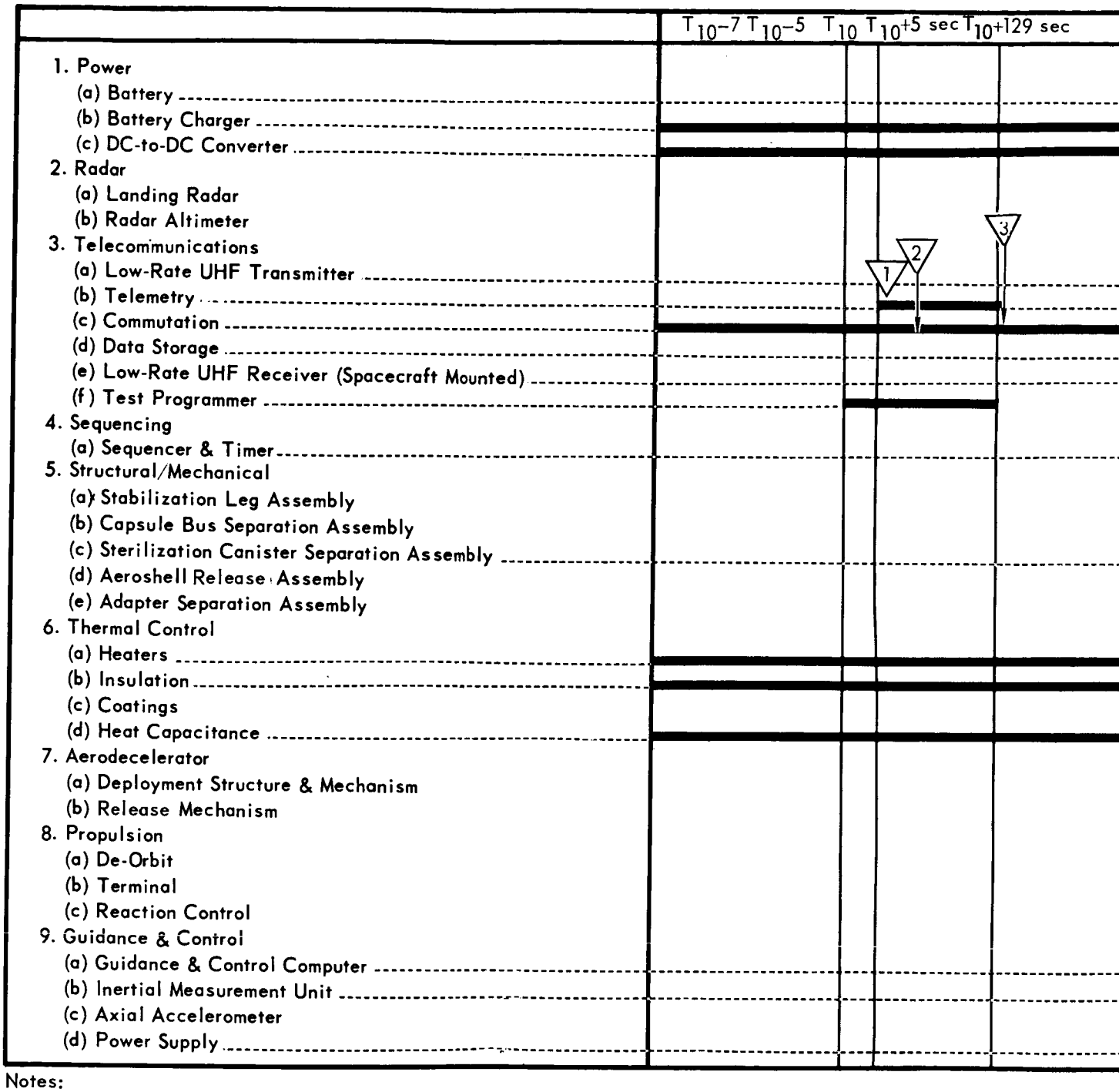

Notes:

1. Switch Telemetry Subsystem to Checkout Mode (T_{10} + 6 sec)
2. Switch Cruise Commutator to CB Telemetry Control Mode (T_{10} + 7 sec)
3. Switch Cruise Commutators to Cruise Mode (T_{10} + 300)
4. Only S & T is Powered from FC Batteries
5. Update CB S & T Parameter via FS (T_{12} – 225)
6. Switch CB to Internal Power (T_{12} – 64)
7. Transfer GCS Data Word(s) to GCC
8. Activate Squib Batteries 1, 2, & 3 at T_{12}
9. Switch Cruise Commutator to CB Telemet
10. Switch CB Telemetry to De-Orbit Cruise
11. Start Separation Sequence (T_{12} – 5.01)

Figure 4–22H

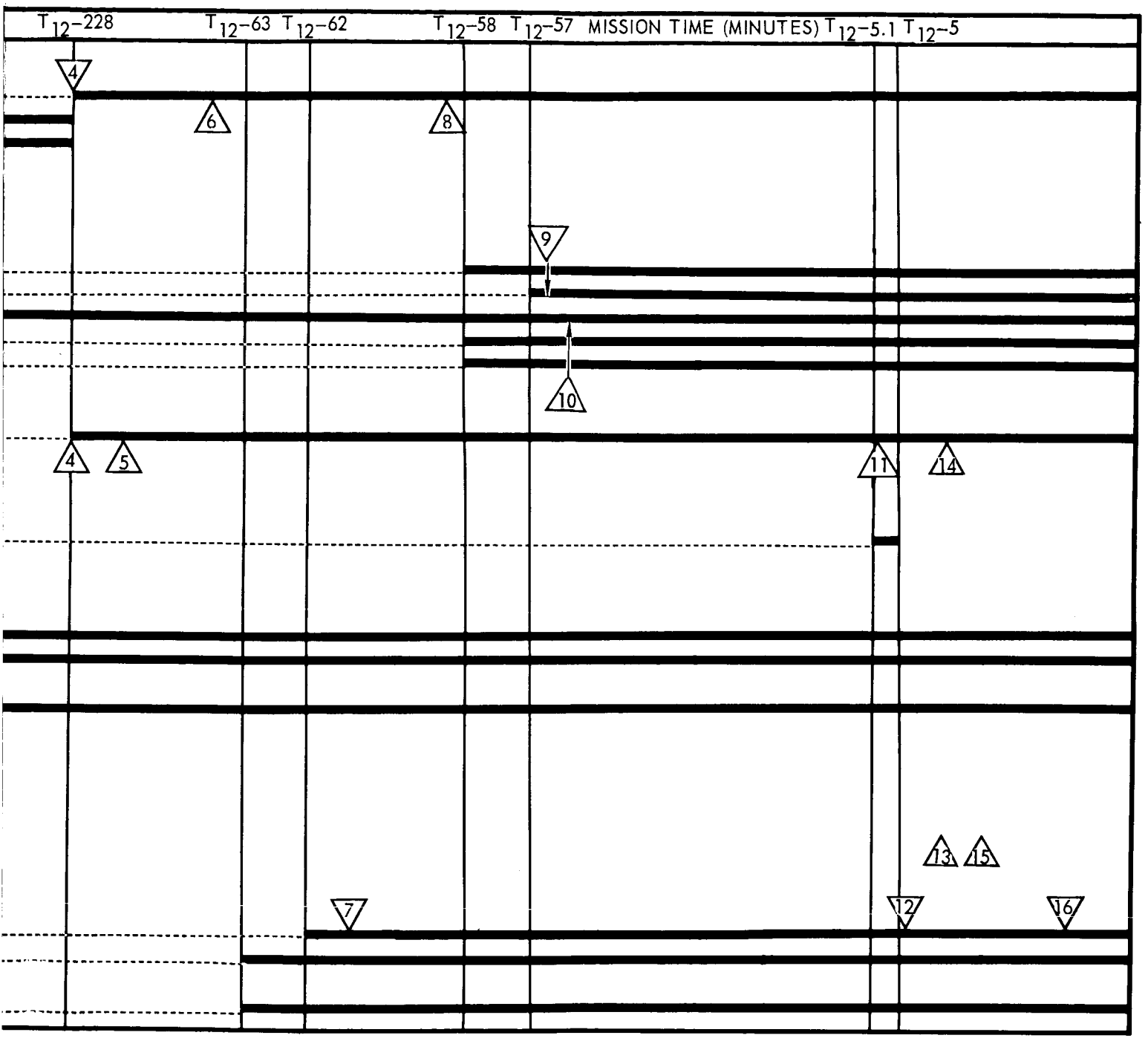

– 59, – 58.5, & – 58, respectively
y Control Mode ($T_{12}-7$)
Mode ($T_{12}-6$)

12 Initiate GCC Separation Routine ($T_{12}-30$ Sec)
13 Enable RCS Solenoid Valve Drivers ($T_{12}-5$ Sec)
14 Verify FC–FS Separation (T_{12})
Start CB S & T Post-Separation Sequence (T_{12})
15 Send "On" Bias Signal to RCS (T_{12})
16 Initiate De-Orbit Attitude Maneuver Sequence (T_{12} + 25 Sec)

T_{10} – Pre-Separation FC Checkout
T_{12} – FS–FC Separation

CAPSULE BUS EQUIPMENT OPERATION TIMELINE I. CAPSULE DE-ORBIT PHASE

1. Power	
(a) Battery	
(b) Battery Charger	
(c) DC-to-DC Converter	
2. Radar	
(a) Landing Radar	
(b) Radar Altimeter	
3. Telecommunications	
(a) Low-Rate UHF Transmitter	
(b) Telemetry	
(c) Commutation	
(d) Data Storage	
(e) Low-Rate UHF Receiver (Spacecraft Mounted)	
(f) Test Programmer	
4. Sequencing	
(a) Sequencer & Timer	
5. Structural/Mechanical	
(a) Stabilization Leg Assembly	
(b) Capsule Bus Separation Assembly	
(c) Sterilization Canister Separation Assembly	
(d) Aeroshell Release Assembly	
(e) Adapter Separation Assembly	
6. Thermal Control	
(a) Heaters	
(b) Insulation	
(c) Coatings	
(d) Heat Capacitance	
7. Aerodecelerator (Parachute)	
(a) Deployment Structure & Mechanism	
(b) Release Mechanism	
8. Propulsion	
(a) De-Orbit	
(b) Terminal	
(c) Reaction Control	
9. Guidance & Control	1
(a) Guidance & Control Computer	
(b) Inertial Measurement Unit	
(c) Axial Accelerometer	
(d) Power Supply	

Notes:

1. Initiate De-Orbit Velocity Routine (T_{12} + 15 Min)
2. Release and Separate CB De-Orbit Motor (T_{13} + 40 Sec; Δt = 0.1 Sec)

T_{12} – FC–FS Separation
T_{13} – Ignition of De-Orbit Motor

Figure 4–221

T_{13}	MISSION TIME	T_{13} + 32 Sec

△2

CAPSULE BUS EQUIPMENT OPERATION TIMELINE J. CAPSULE ORBITAL DESCENT PHASE

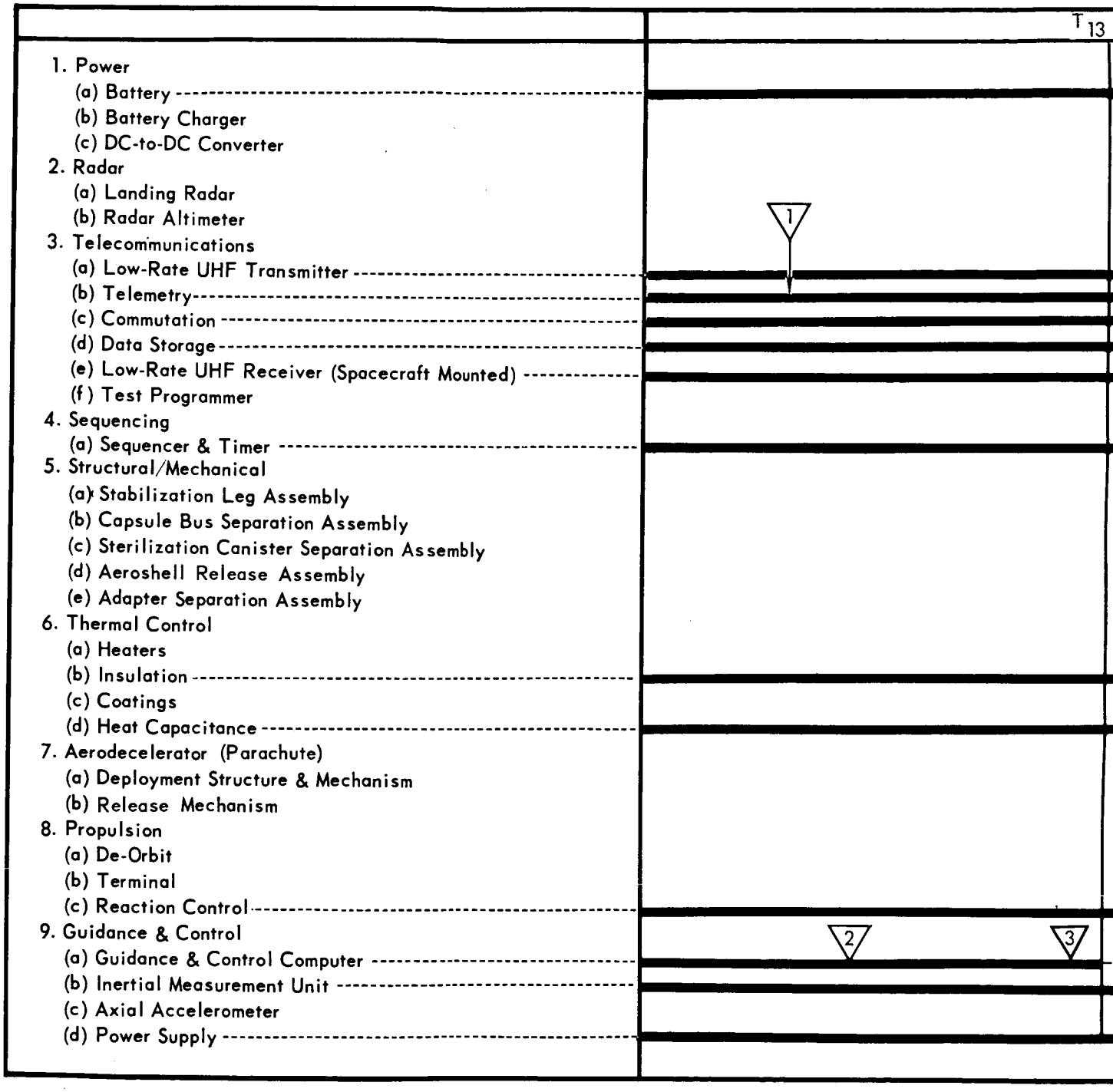

Notes:

1. Switch CB Telemetry Subsystem to De-Orbit Cruise Mode (T_{13} + 1 Min)
2. Initiate Entry Attitude Maneuver Sequence (T_{13} + 85 Sec)
3. Start Solar Heating Roll (T_{13} + 10.5 Min)
4. End Solar Heating Roll (T_{14} – 7 Min.)

T_{13} – Ignition of De-Orbit Motor
T_{14} – Mars Atmospheric Entry

Figure 4–22J

+ 11	MISSION TIME (MINUTES)	T_{14} – 8

4

4-47-2

CAPSULE BUS EQUIPMENT OPERATION TIMELINE K. CAPSULE ENTRY PHASE

	$T_{14}-7$	T_{14}
1. Power		
(a) Battery		
(b) Battery Charger		
(c) DC-to-DC Converter		
2. Radar		
(a) Landing Radar		
(b) Radar Altimeter		
3. Telecommunications		
(a) Low-Rate UHF Transmitter		
(b) Telemetry		
(c) Commutation		
(d) Data Storage		
(e) Low-Rate UHF Receiver (Spacecraft Mounted)		
(f) Test Programmer		
4. Sequencing		
(a) Sequencer & Timer		
5. Structural/Mechanical		
(a) Stabilization Leg Assembly		
(b) Capsule Bus Separation Assembly		
(c) Sterilization Canister Separation Assembly		
(d) Aeroshell Release Assembly		
(e) Adapter Separation Assembly		
6. Thermal Control		
(a) Heaters		
(b) Insulation		
(c) Coatings		
(d) Heat Capacitance		
7. Aerodecelerator (Parachute)		
(a) Deployment Structure & Mechanism		
(b) Release Mechanism		
8. Propulsion		
(a) De-Orbit		
(b) Terminal		
(c) Reaction Control		
9. Guidance & Control		
(a) Guidance & Control Computer		
(b) Inertial Measurement Unit		
(c) Axial Accelerometer		
(d) Power Supply		

Notes:

1. Switch Telemetry to Entry Mode (T_{14} – 30 Sec)
2. Sense .05g CB Deceleration (T_{15})
3. Switch to 3-Axis Rate Damping (T_{15} + 1 Min)
   Initiate Guidance & Control Computer Inertial Reference Routine (T_{15} + 1 Min)
4. Begin CB Radar Altimeter Tracking (T_{16})

Figure 4–22K

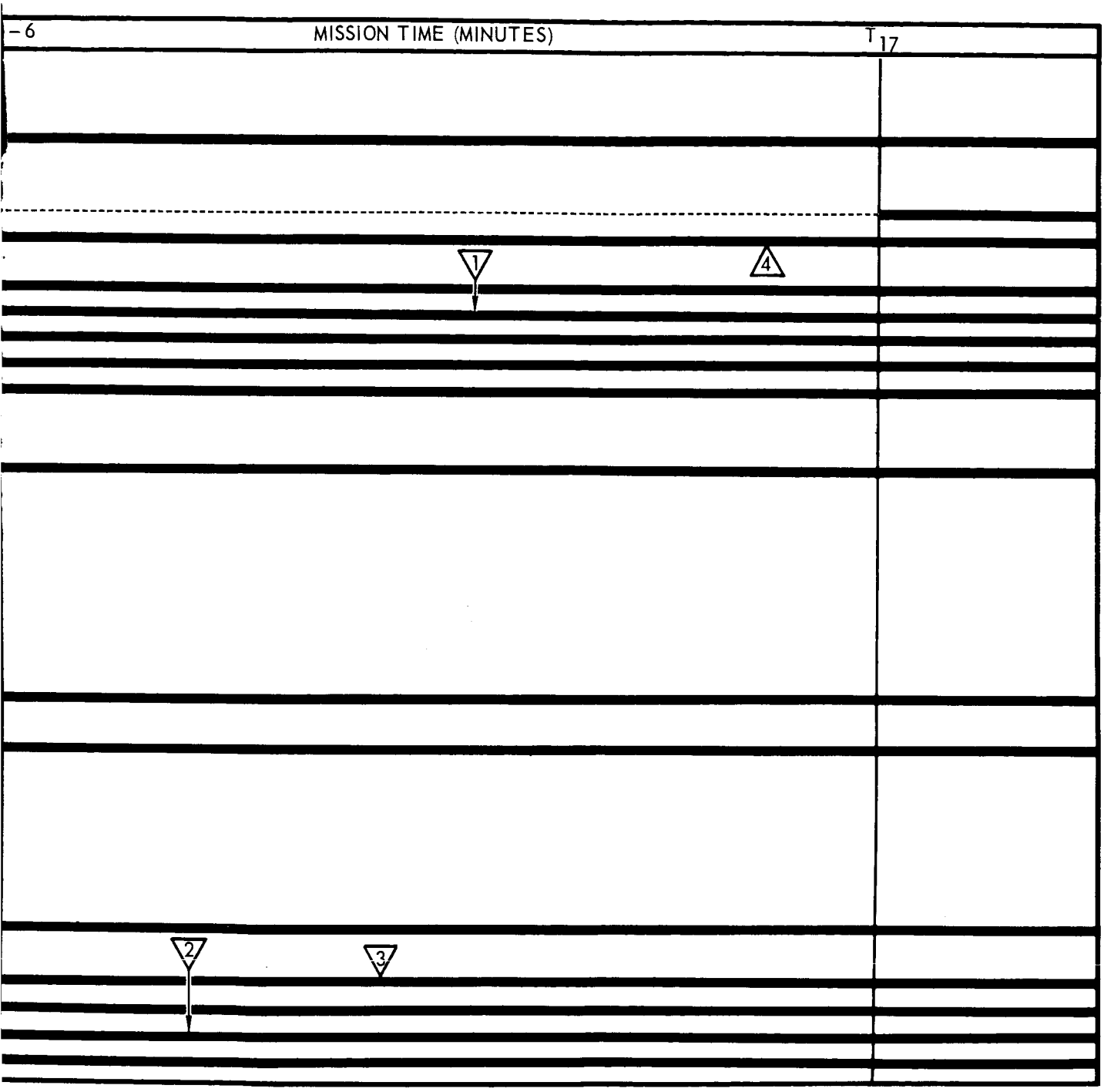

T_{14} – Mars Atmospheric Entry
T_{15} – Sense .05g Deceleration Level
T_{16} – Begin Radar Altimeter Tracking
T_{17} – Landing Radar Turn-on

4-48-2

CAPSULE BUS EQUIPMENT EQUIPMENT OPERATION TIMELINE L. CAPSULE TERMINAL DECELE

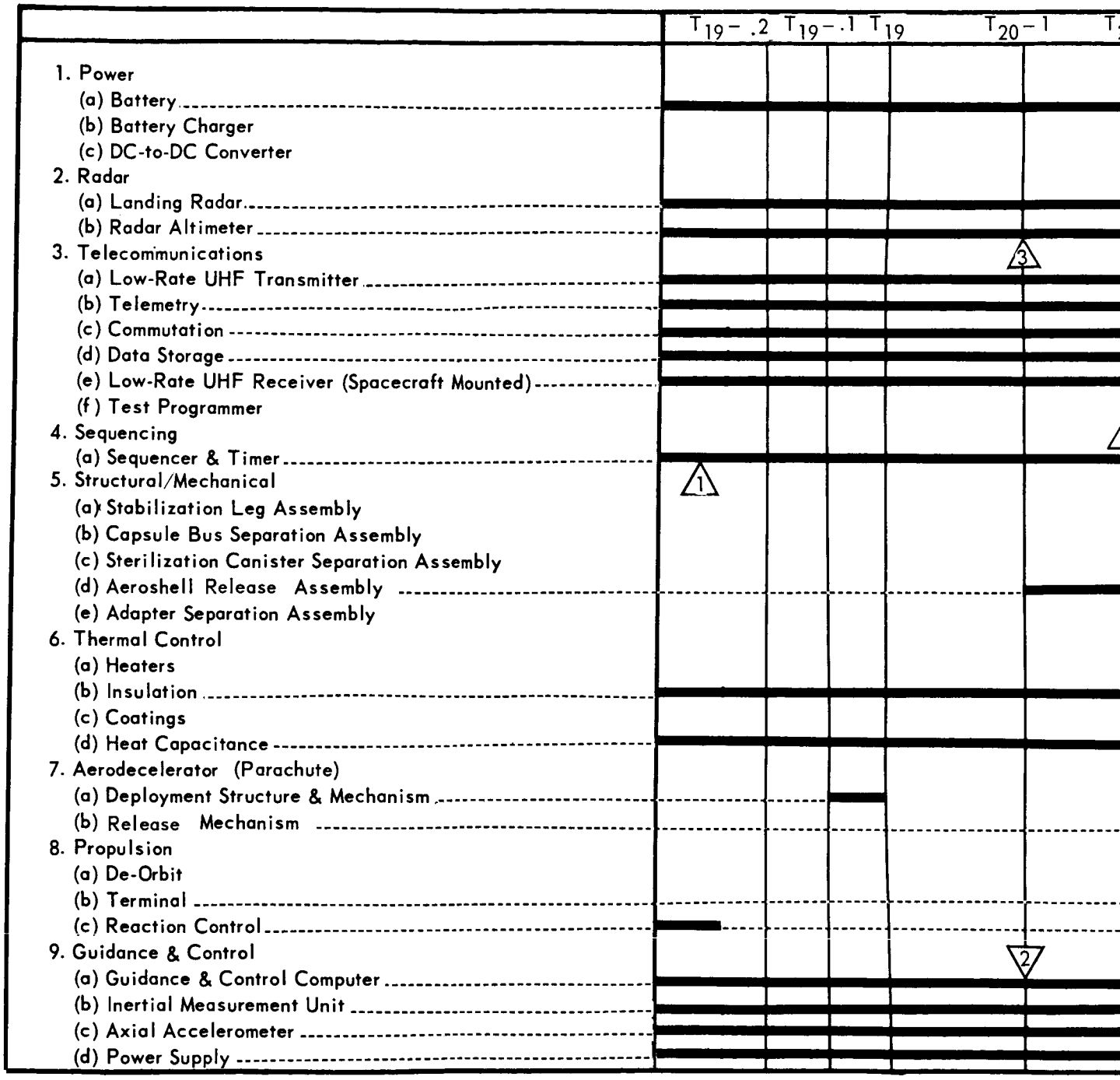

Notes:

1. Update CB S&T (T_{19} – .5)
2. Initiate GCC Descent Control Modes (T_{20} – 1)
3. Start Altimeter Holdoff Signal (T_{20} – 1)
4. Switch CB Telemetry, to Terminal Descent Mode (T_{20})
5. End Altitude Holdoff Signal (T_{20} + 4)
6. Update CB S & T (T_{21} – .5)
7. Throttle Down Terminal Thrust to .8 g (T_{21} + .5)
8. Receive Search/Track Enable Command (T_{21} + 2)
9. Acquire Lock by Landing Radar) (T_{21} + 5)
10. Initiate Lateral-Velocity Control (T_{21} + 6)
11. Switch to Variable-Thrust Descent (T_{22})
12. Switch CB Landing-Radar Range Scale (T_{23})
13. Sw
14. Be

Figure 4–22L

ATION PHASE

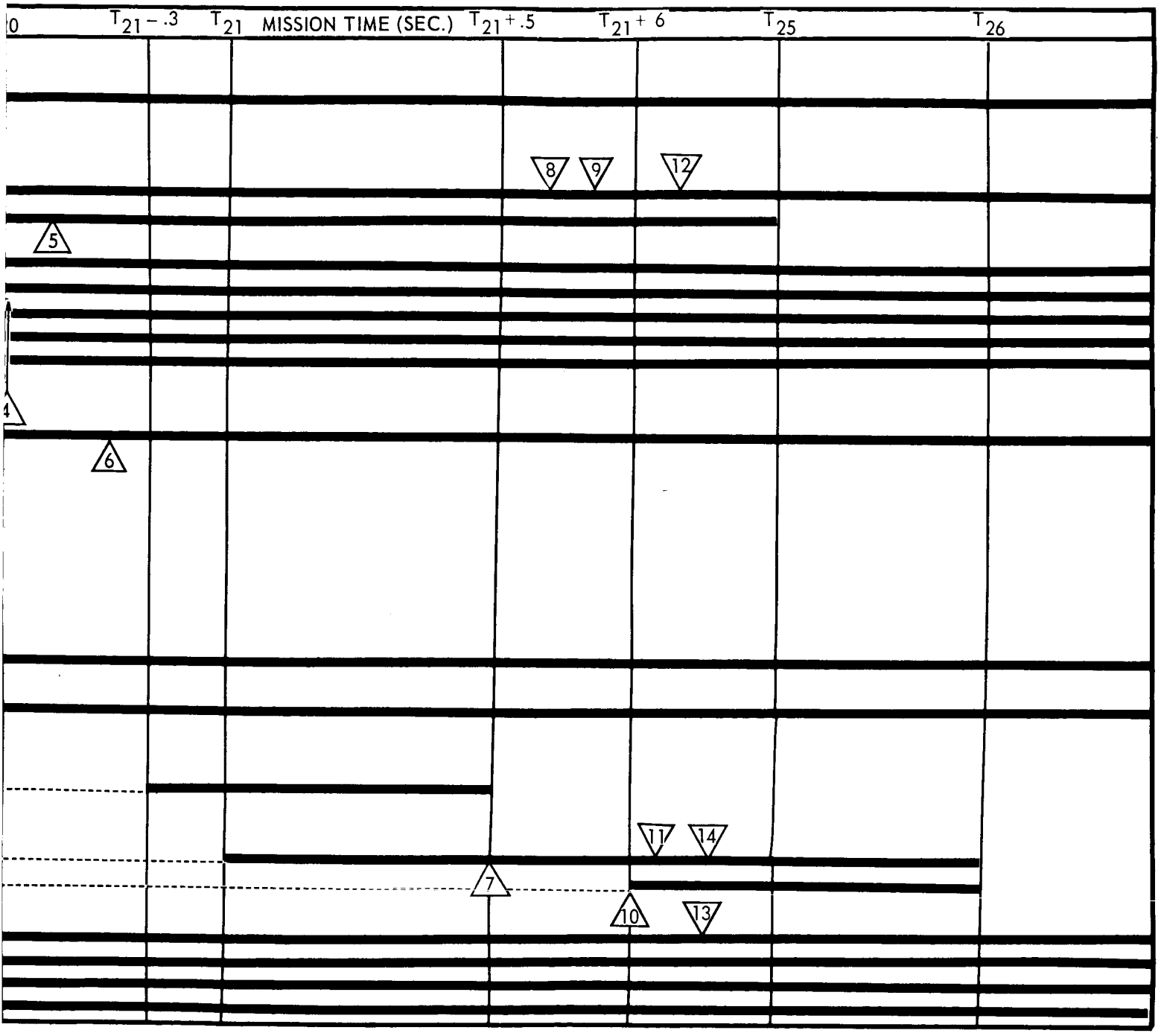

itch to Inertial Attitude Control over CB (T_{24})
gin Constant-Velocity Descent (T_{24})

T_{19} – Deploy CB Aerodecelerator (Parachute)
T_{20} – Separate CB Aeroshell
T_{21} – Ignite Terminal Propulsion Motors
T_{22} – Intercept Programmed CB Descent Profile
T_{23} – Switch Landing Radar Range Scale
T_{24} – Switch to Inertial Attitude Control Over CB
T_{25} – Begin Constant-Velocity Descent
T_{26} – Terminate Terminal Thrust

CAPSULE BUS EQUIPMENT OPERATION TIMELINE M. CAPSULE LANDING PHASE

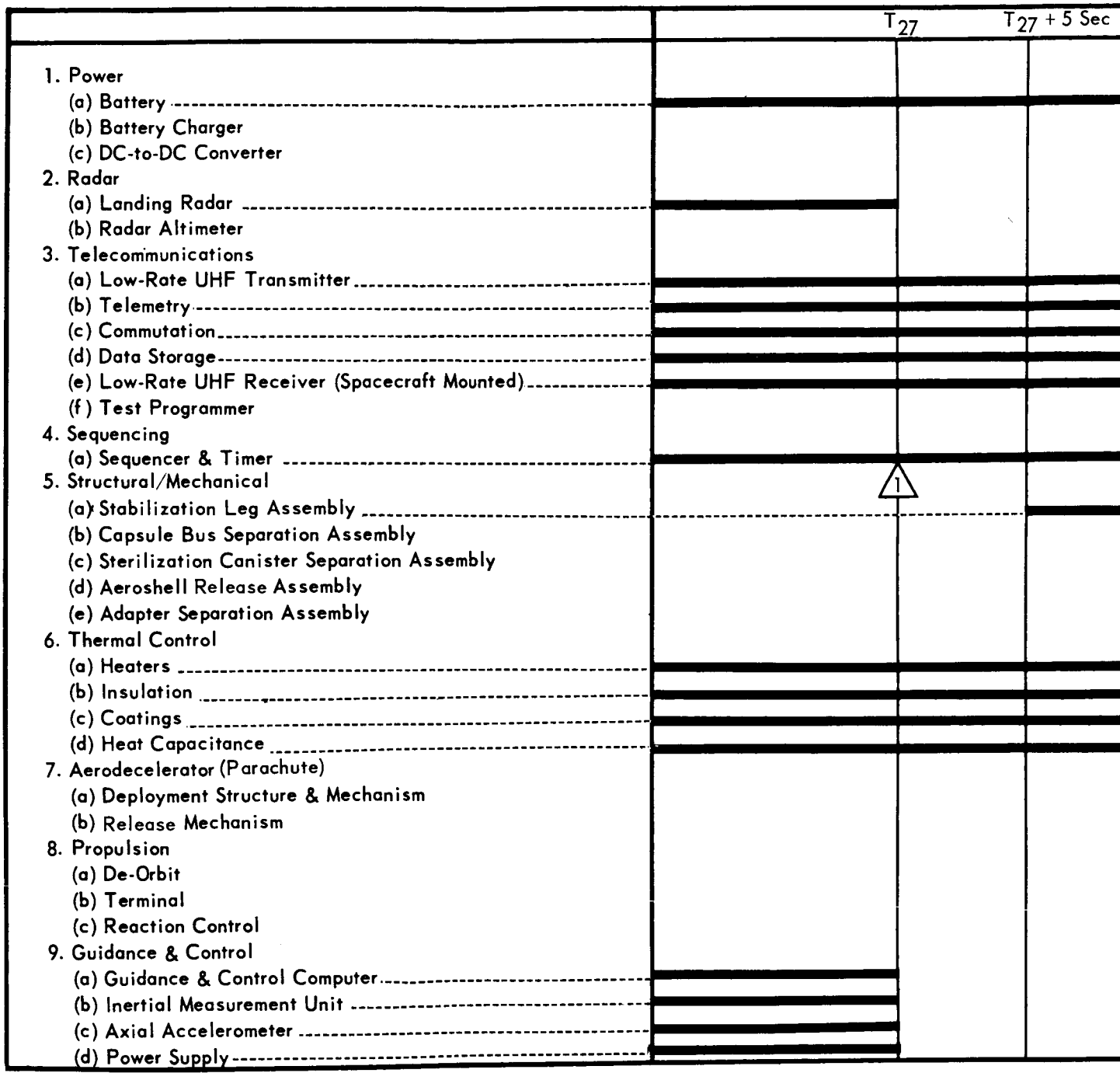

Figure 4–22M

T_{27} + 8 Sec	MISSION TIME	T_{27} + 11 Min

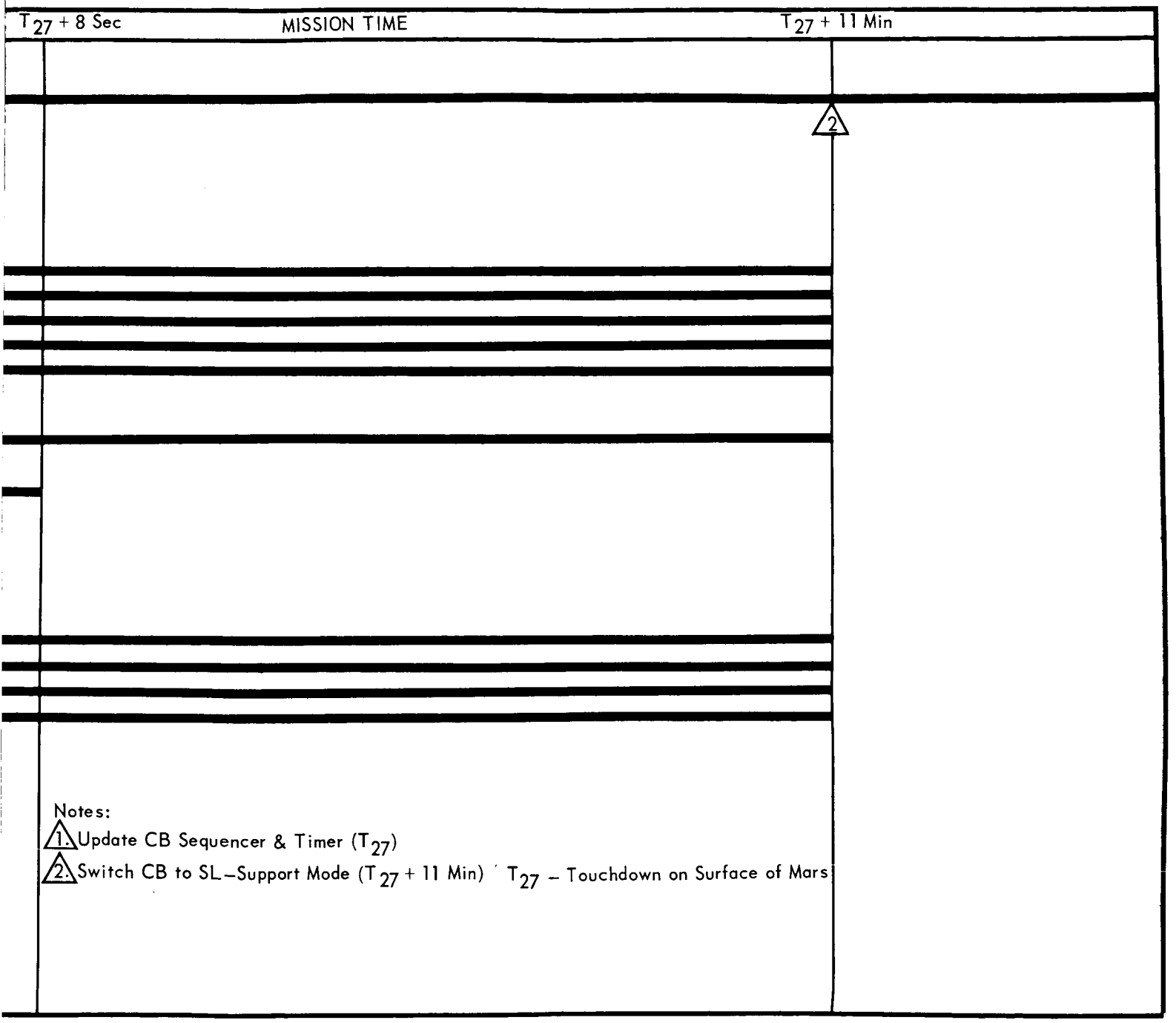

Notes:

1. Update CB Sequencer & Timer (T_{27})
2. Switch CB to SL–Support Mode (T_{27} + 11 Min) ' T_{27} – Touchdown on Surface of Mars

4.3 CAPSULE BUS OPERATIONAL CONTINGENCY MODES - In compliance with the design requirement that "no potential single failure mode shall cause a catastrophic effect on the mission", the Capsule Bus has a number of operational contingency modes incorporated into its design. The contingent/alternate paths of recourse to operational failure are illustrated in the flow chart, Figure 4-23.

The contingency-mode flow chart contains the following information:

a. A listing of the major operations in the CB mission sequence.

b. The source of the primary command for initiating the mission events.

c. The effect of an uncorrected operation anomaly on the CB mission.

d. The corrective actions which are available, by design, to back up CB operations.

e. The possible alternative actions which can be taken to offset an anomalous indication.

f. The presence of block redundancy in the CB equipment in cases where "no mission" results are possible.

An example of the use of functional redundancy in the capsule to provide a contingency mode of operation is found in the Terminal Deceleration Phase of the Capsule Bus. Here, the normal mode of operation is to turn on the CB radar altimeter at 800,000 feet, to have reliable radar altimeter tracking at 200,000 feet, and to employ the radar altimeter, in conjunction with the CB Sequencer and Timer (S&T), for initiating such CB events as:

a. Turnon of the CB alnding radar at 100,000 feet.

b. Deployment of the supersonic parachute at 23,000 feet.

c. Release and separation of the CB Aeroshell 12 seconds after parachute deployment.

d. Ignition of the CB terminal propulsion motors at 5,000 feet.

e. Release of the supersonic parachute at 0.5 second from motor ignition.

For the specific events, the CB radar altimeter and the CB S&T back up one another as initiators. However, since the CB S&T actually relies on radar altimeter altitude marks for its timing, the two initiators are not independent. Hence, an alternate path is provided.

The alternate path makes use of velocity readings from an integrating accelerometer in the CB guidance and control subsystem. When CB radar altimeter reliable signal indications are not presented to the S&T, the integrated accelerometer routine is initiated. The alternate path events then occur as follows:

a. The S&T initiates the integrated accelerometer routine.

b. At a given time from the point at which a .05 g deceleration level is sensed, the CB landing radar is turned on by the S&T.

c. At a velocity leading corresponding to an altitude of 23,000 feet, the integrating accelerometer provides a mark to the S&T and the supersonic parachute is deployed.

d. Twelve seconds from parachute deployment, the S&T releases the aeroshell from the capsule.

e. At a given time from aeroshell release, the CB landing radar will be enabled for altitude tracking.

f. At 5,000 feet, the landing radar will initiate ignition of the terminal propulsion motors and provide a mark to the S&T.

g. 0.5 seconds after motor ignition, the S&T initiates release of the parachute from the capsule.

The remaining sequence is then the same as the primary path, less radar altimeter backup.

Use of the alternate path in this case may lead to a degraded mission, since the deviation of the integrated-accelerometer-generated altitudes from true altitude can be such to cause early deployment of the supersonic parachute. Consequently, the FS-CB line-of-sight may be lost before touchdown.

The alternate path flow chart of Figure 4-23 illustrates this example and many others.

CAPSULE BUS
OPERATIONAL CONTINGENCY MODES
LIFTOFF TO END OF CAPSULE BUS MISSION

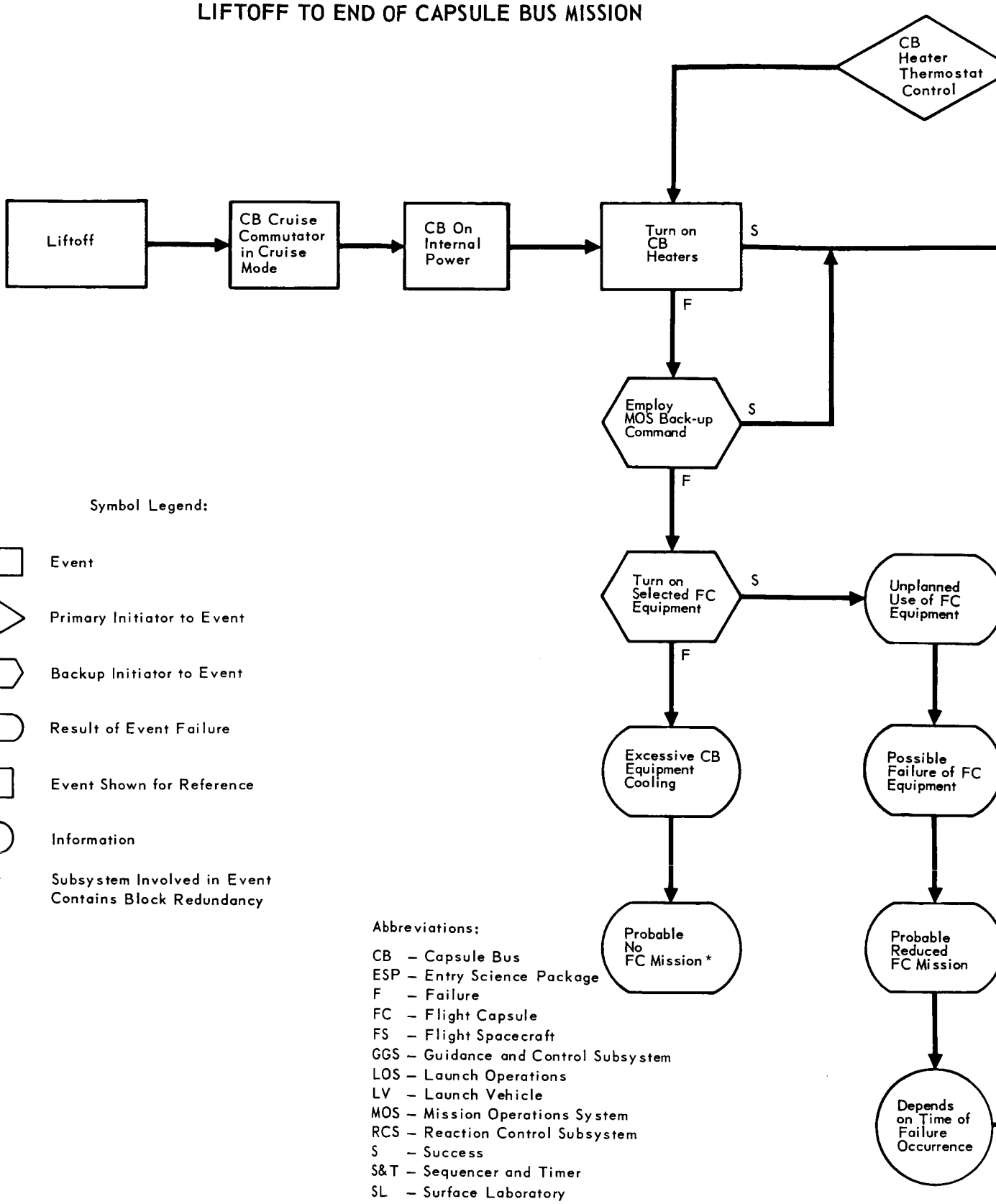

Symbol Legend:

- Event
- Primary Initiator to Event
- Backup Initiator to Event
- Result of Event Failure
- Event Shown for Reference
- Information
- * Subsystem Involved in Event Contains Block Redundancy

Abbreviations:

CB – Capsule Bus
ESP – Entry Science Package
F – Failure
FC – Flight Capsule
FS – Flight Spacecraft
GGS – Guidance and Control Subsystem
LOS – Launch Operations
LV – Launch Vehicle
MOS – Mission Operations System
RCS – Reaction Control Subsystem
S – Success
S&T – Sequencer and Timer
SL – Surface Laboratory

Figure 4–23

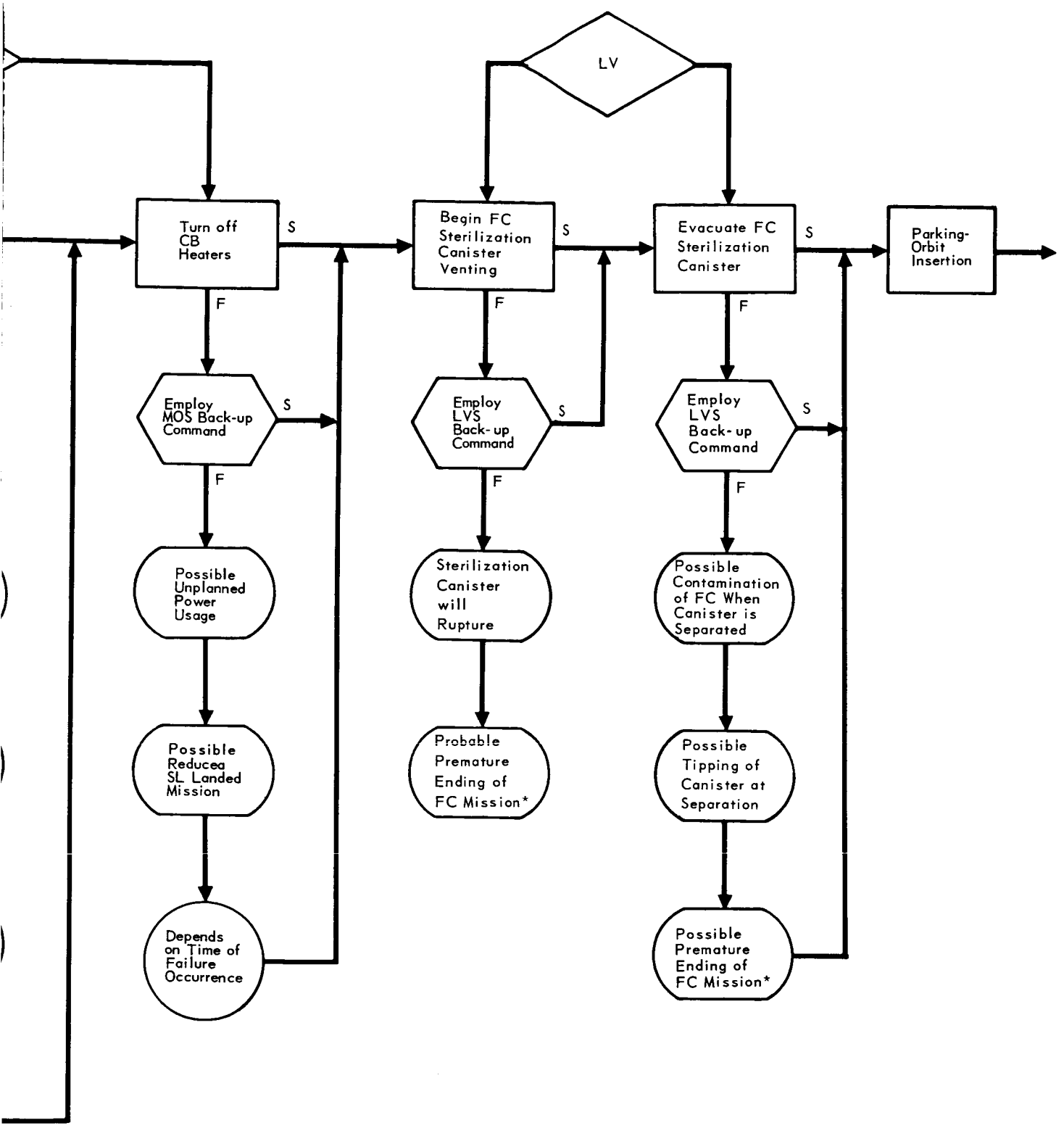
LV
Turn off CB Heaters
S
F
Employ MOS Back-up Command
S
F
Possible Unplanned Power Usage
Possible Reducea SL Landed Mission
Depends on Time of Failure Occurrence
Begin FC Sterilization Canister Venting
S
F
Employ LVS Back-up Command
S
F
Sterilization Canister will Rupture
Probable Premature Ending of FC Mission*
Evacuate FC Sterilization Canister
S
F
Employ LVS Back-up Command
S
F
Possible Contamination of FC When Canister is Separated
Possible Tipping of Canister at Separation
Possible Premature Ending of FC Mission*
Parking-Orbit Insertion

CAPSULE BUS
OPERATIONAL CONTINGENCY MODES (Continued)
LIFTOFF TO END OF CAPSULE BUS MISSION

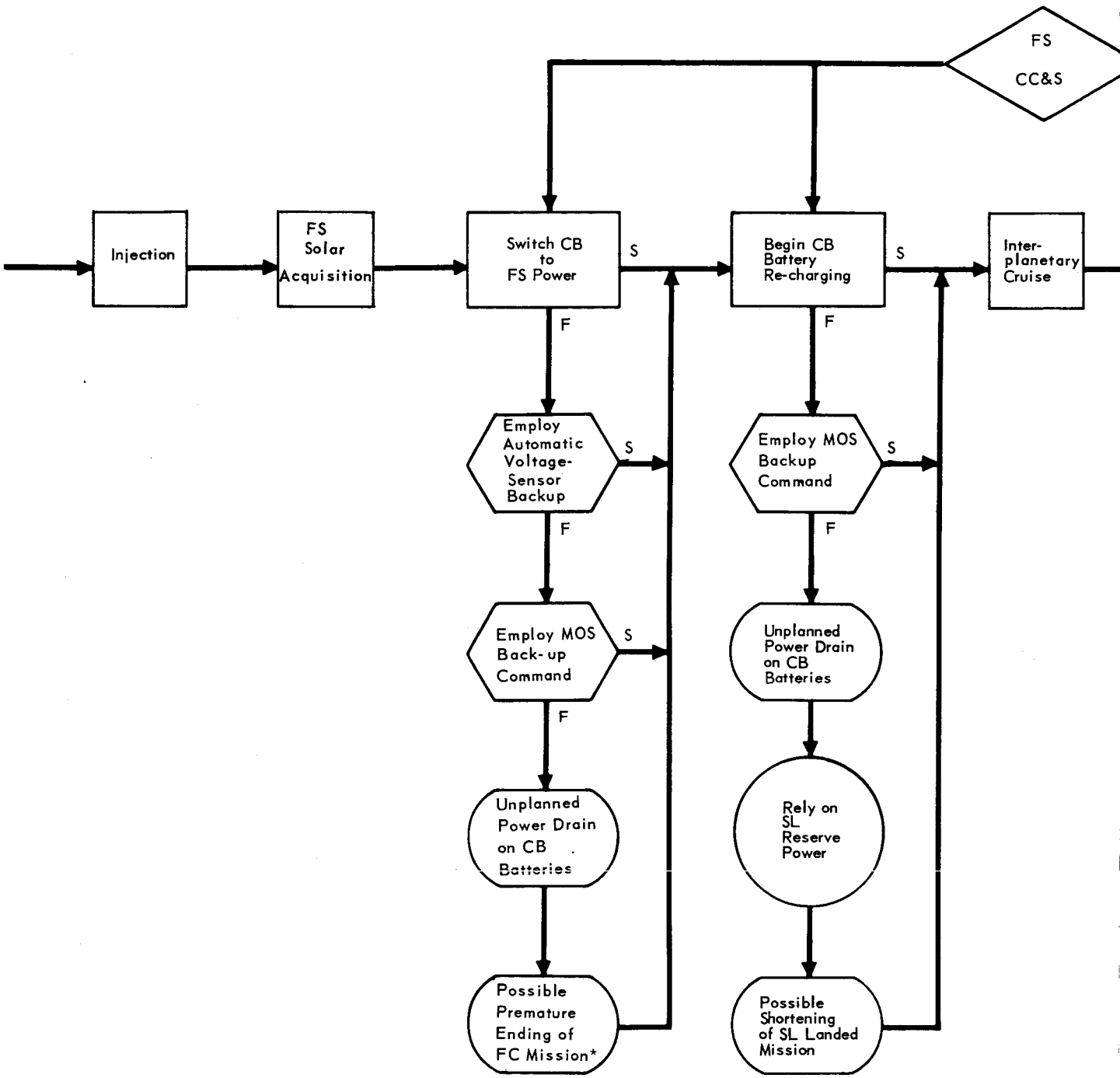

Figure 4–23 (Continued)

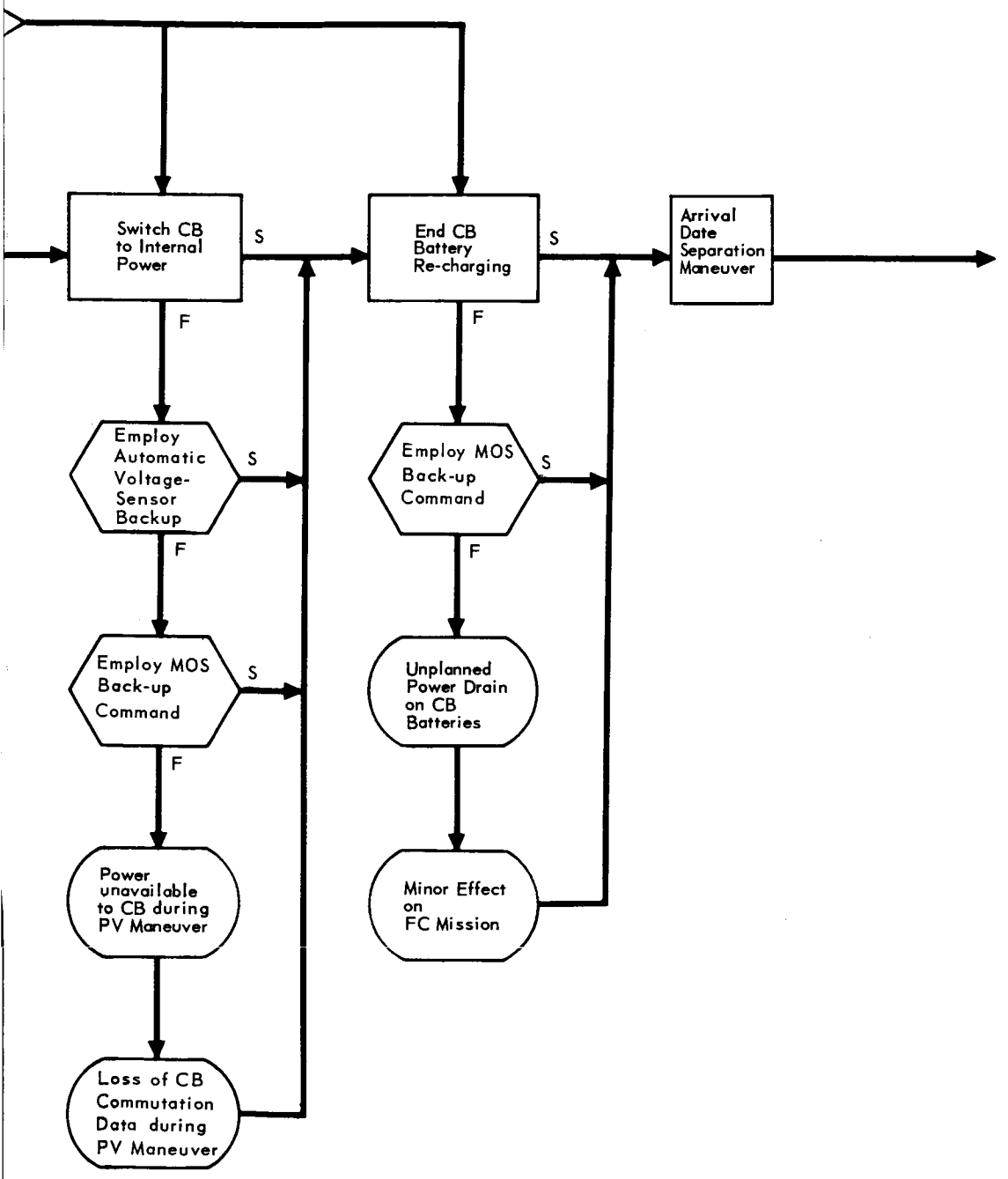
Switch CB to Internal Power
S
F
End CB Battery Re-charging
S
F
Arrival Date Separation Maneuver
Employ Automatic Voltage-Sensor Backup
S
F
Employ MOS Back-up Command
S
F
Power unavailable to CB during PV Maneuver
Loss of CB Commutation Data during PV Maneuver
Employ MOS Back-up Command
S
F
Unplanned Power Drain on CB Batteries
Minor Effect on FC Mission

CAPSULE BUS
OPERATIONAL CONTINGENCY MODES (Continued)
LIFTOFF TO END OF CAPSULE BUS MISSION

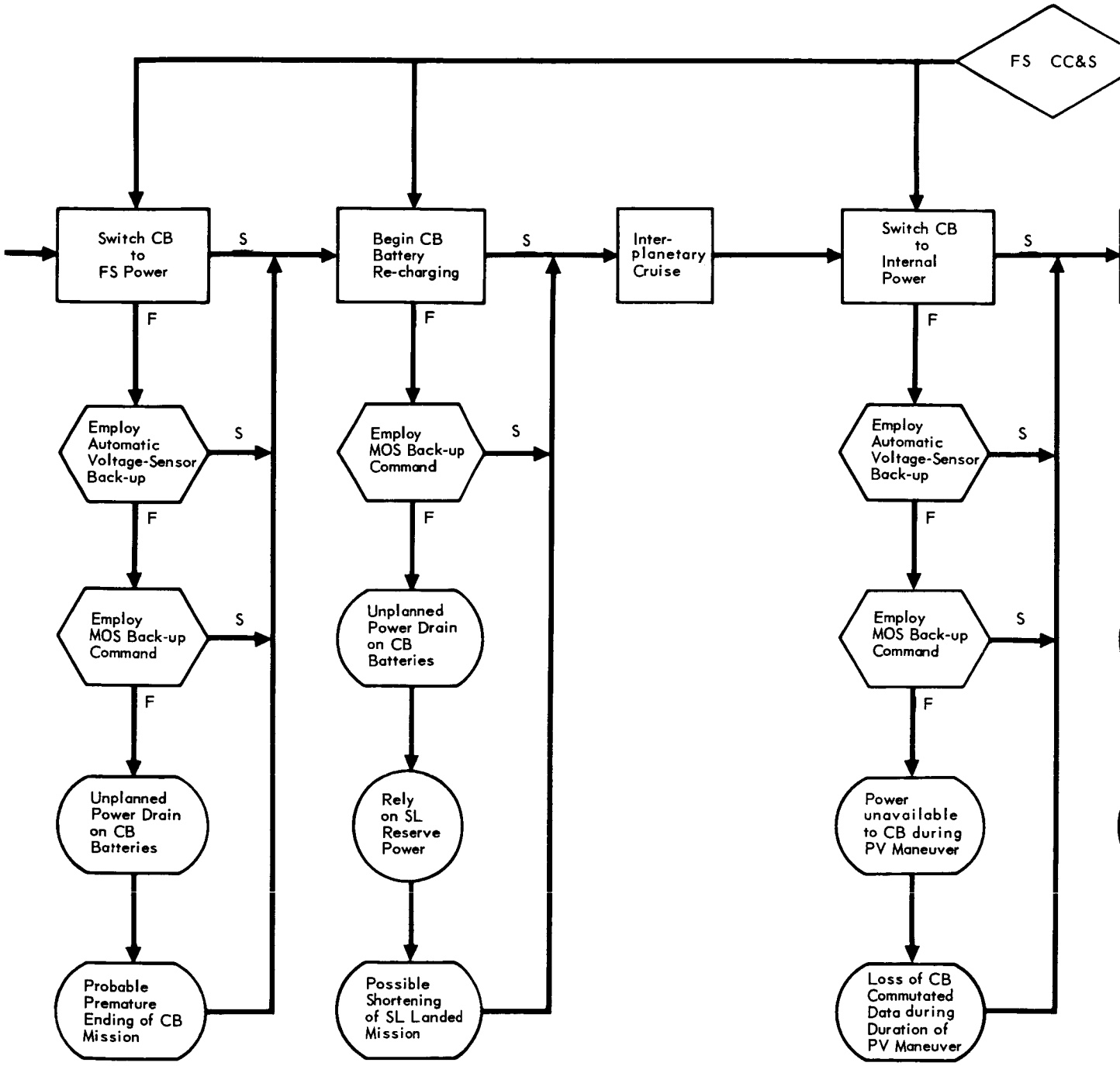

Figure 4–23 (Continued)

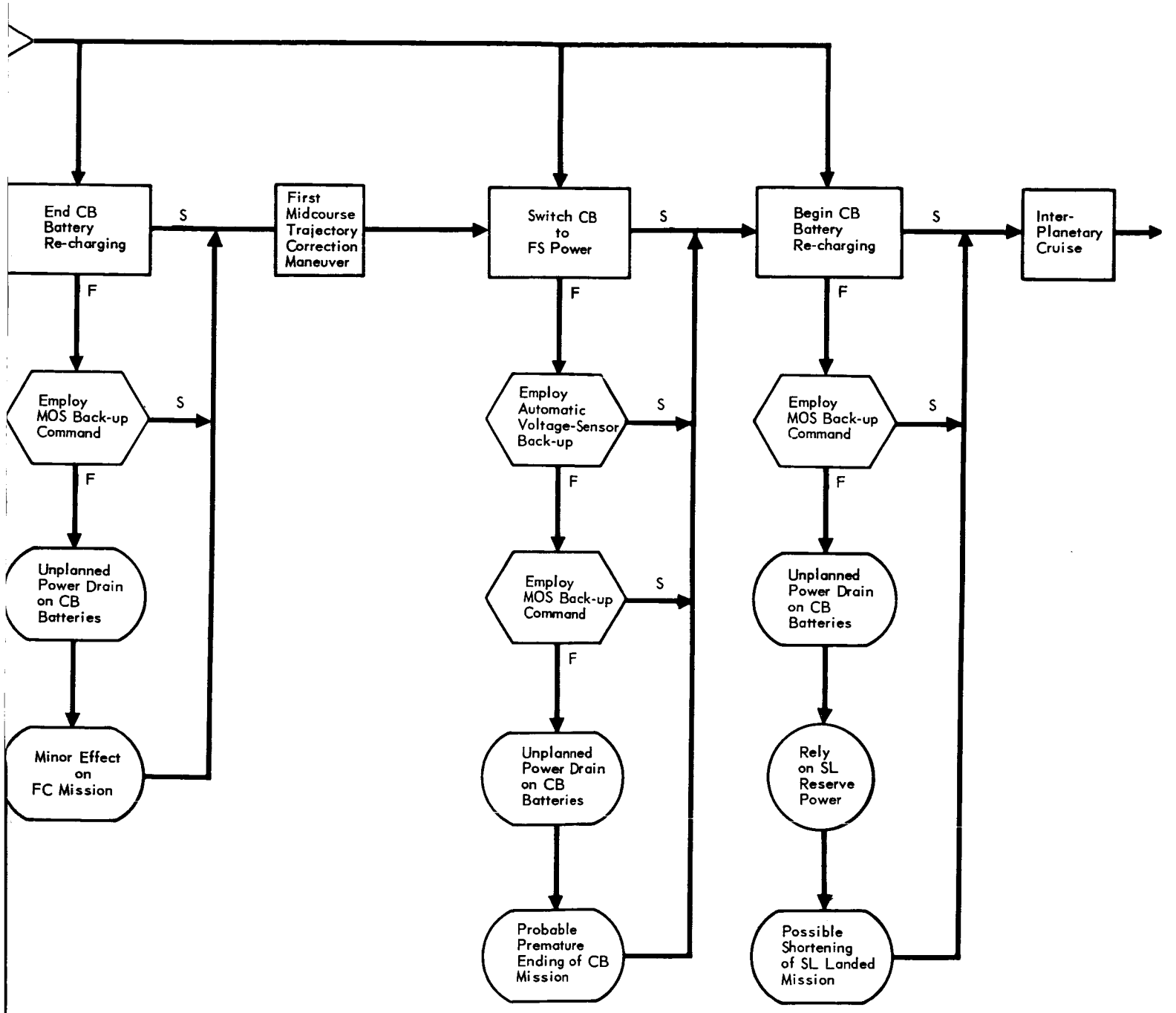
End CB Battery Re-charging
S
F
Employ MOS Back-up Command
S
F
Unplanned Power Drain on CB Batteries
Minor Effect on FC Mission
First Midcourse Trajectory Correction Maneuver
Switch CB to FS Power
S
F
Employ Automatic Voltage-Sensor Back-up
S
F
Employ MOS Back-up Command
S
F
Unplanned Power Drain on CB Batteries
Probable Premature Ending of CB Mission
Begin CB Battery Re-charging
S
F
Employ MOS Back-up Command
S
F
Unplanned Power Drain on CB Batteries
Rely on SL Reserve Power
Possible Shortening of SL Landed Mission
Inter-Planetary Cruise

4-55-2

CAPSULE BUS
OPERATIONAL CONTINGENCY MODES (Continued)
LIFTOFF TO END OF CAPSULE BUS MISSION

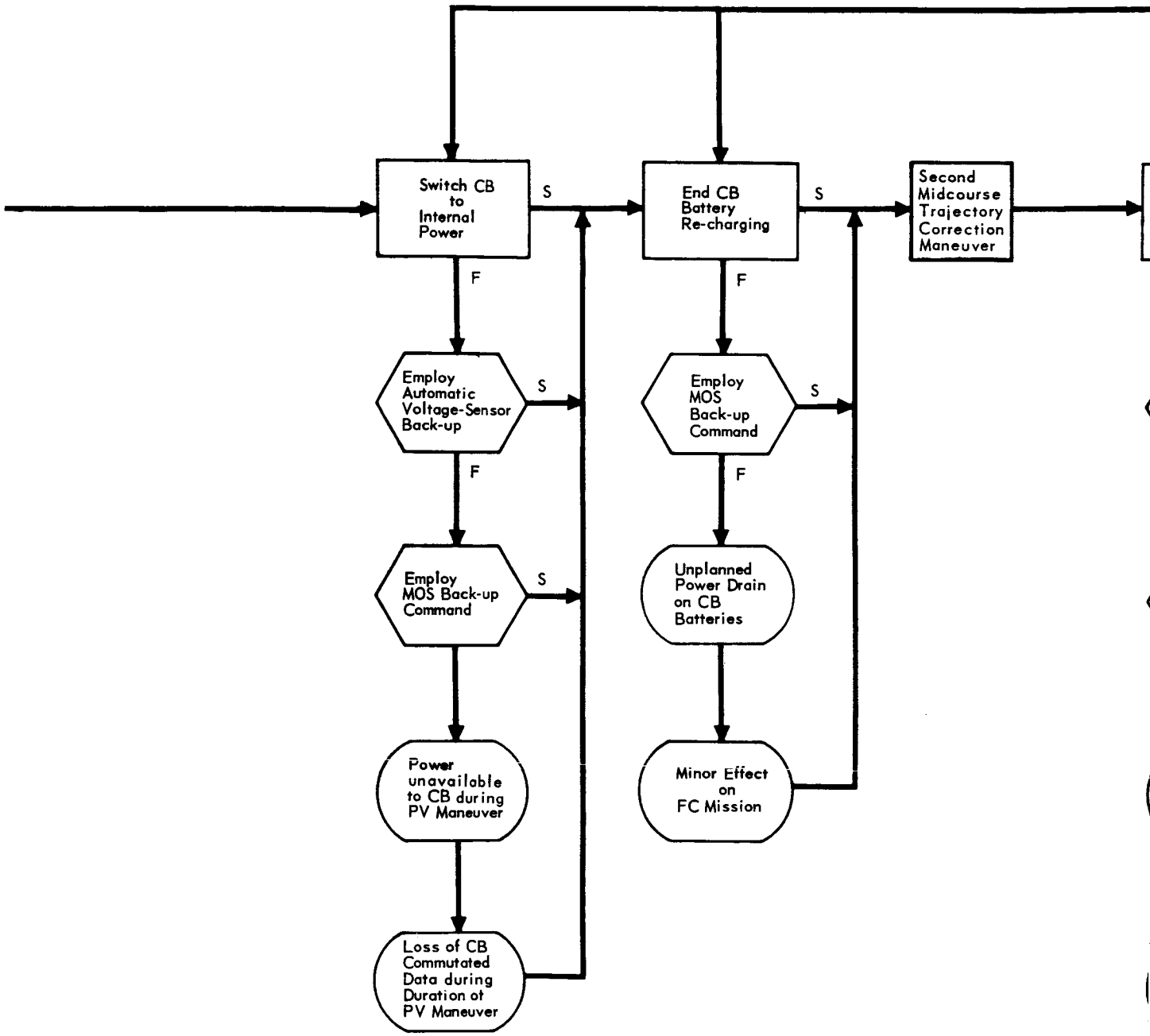

Figure 4–23 (Continued)

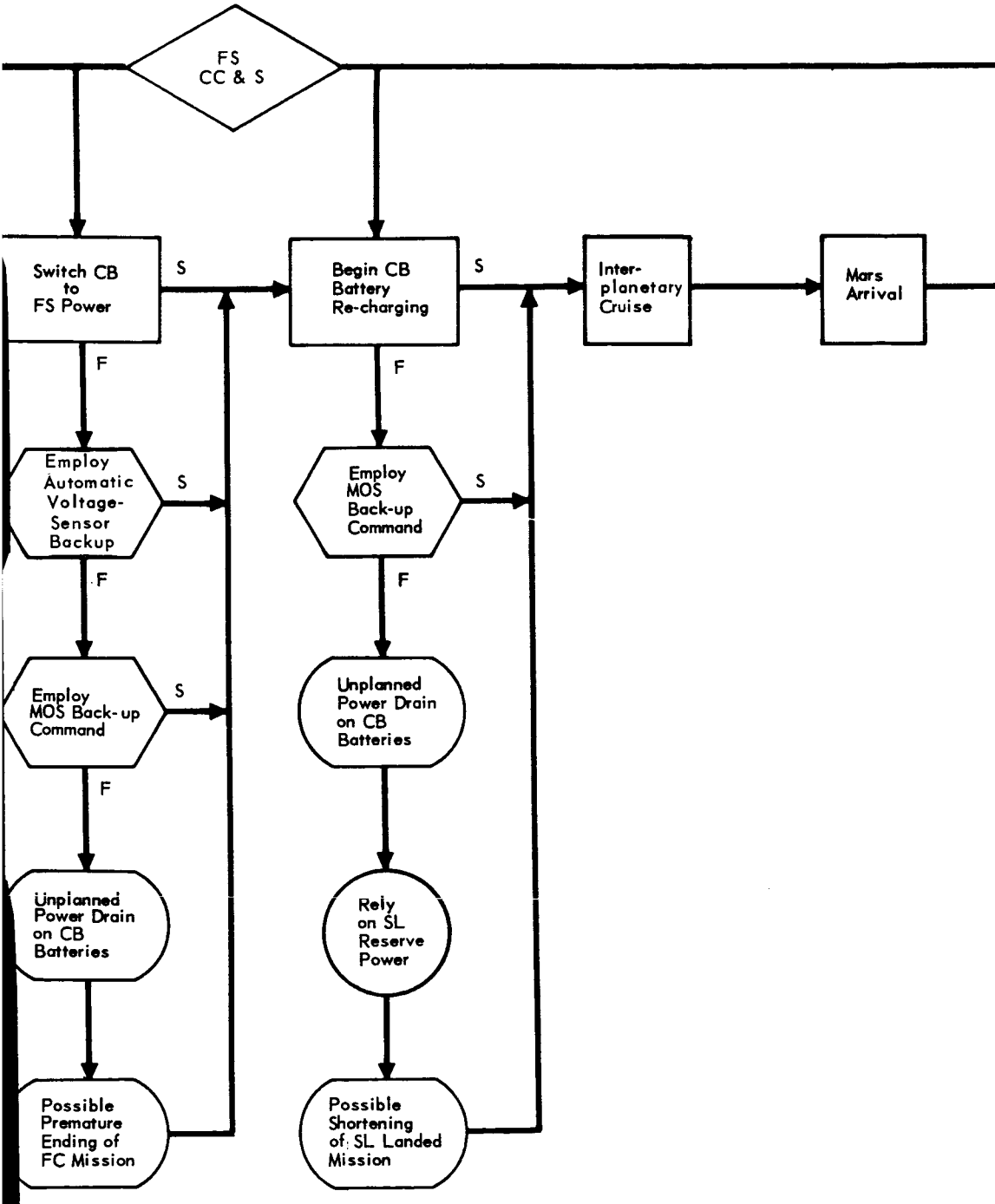
FS
CC & S
Switch CB to FS Power
S
F
Begin CB Battery Re-charging
S
F
Inter-planetary Cruise
Mars Arrival
Employ Automatic Voltage-Sensor Backup
S
F
Employ MOS Back-up Command
S
F
Unplanned Power Drain on CB Batteries
Possible Premature Ending of FC Mission
Employ MOS Back-up Command
S
F
Unplanned Power Drain on CB Batteries
Rely on SL Reserve Power
Possible Shortening of SL Landed Mission

4-56-2

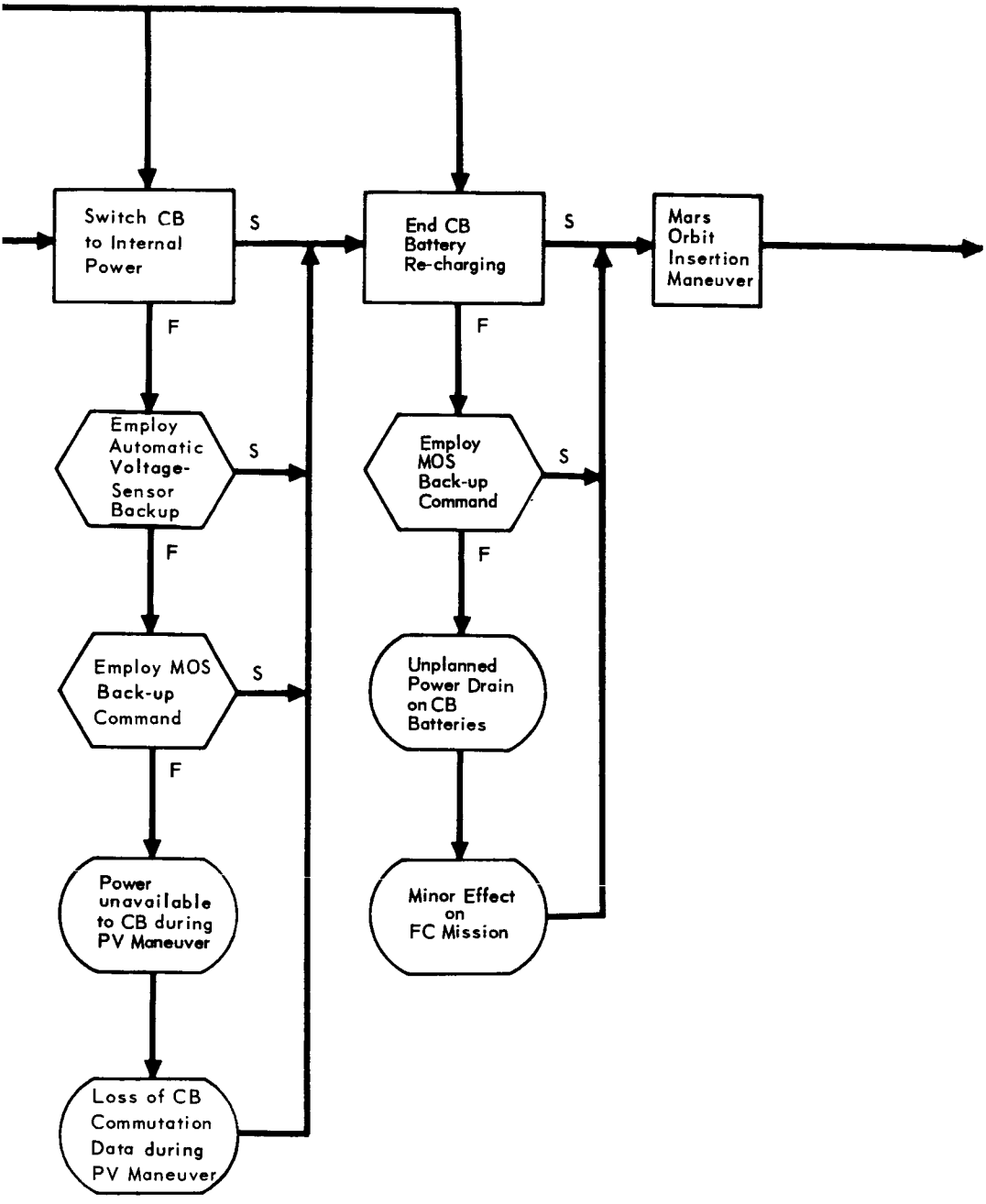
Switch CB to Internal Power
S
End CB Battery Re-charging
S
Mars Orbit Insertion Maneuver
F
F
Employ Automatic Voltage-Sensor Backup
S
Employ MOS Back-up Command
S
F
F
Employ MOS Back-up Command
S
Unplanned Power Drain on CB Batteries
F
Power unavailable to CB during PV Maneuver
Minor Effect on FC Mission
Loss of CB Commutation Data during PV Maneuver

456-3

CAPSULE BUS
OPERATIONAL CONTINGENCY MODES (Continued)
LIFTOFF TO END OF CAPSULE BUS MISSION

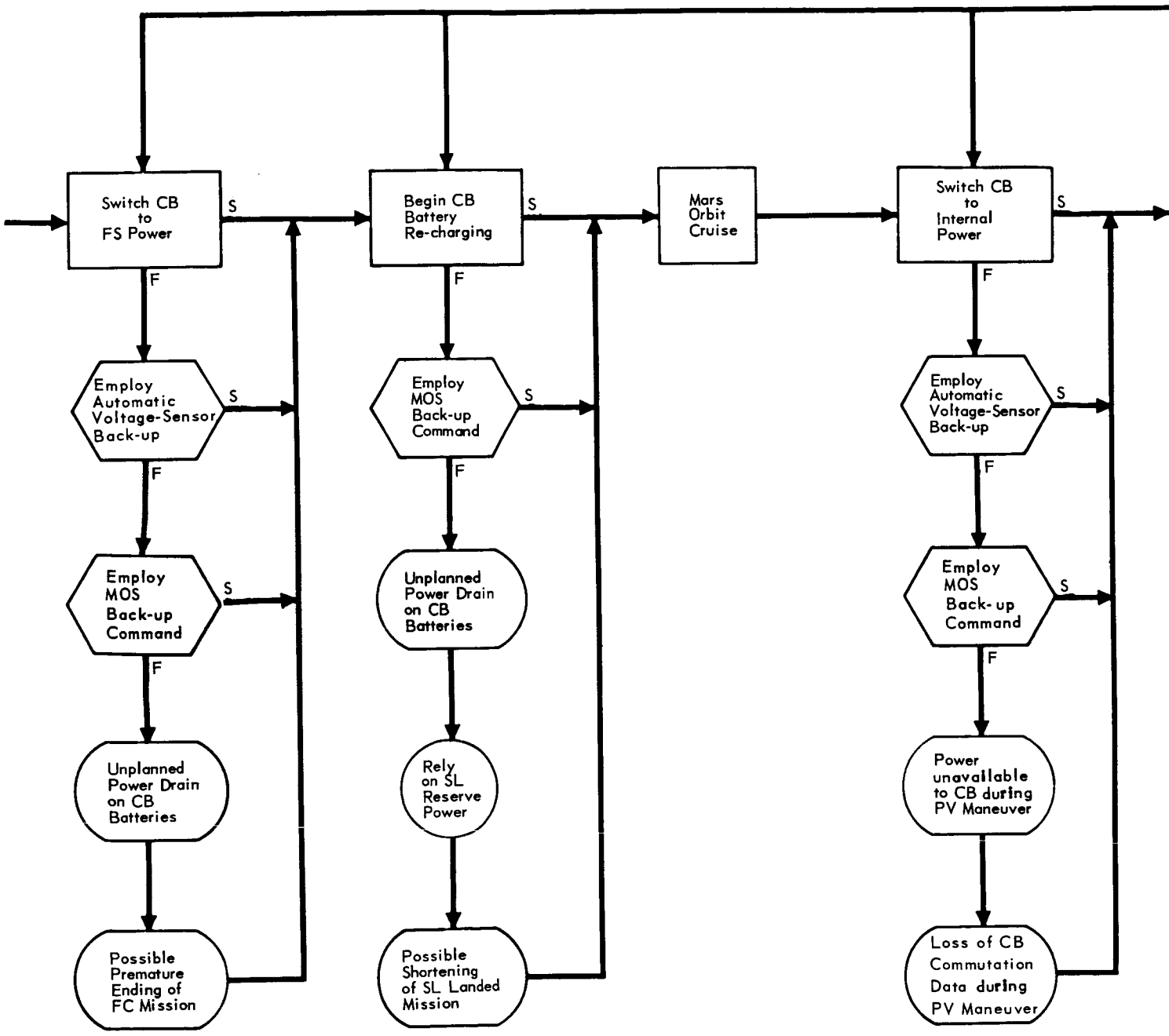

Figure 4–23 (Continued)

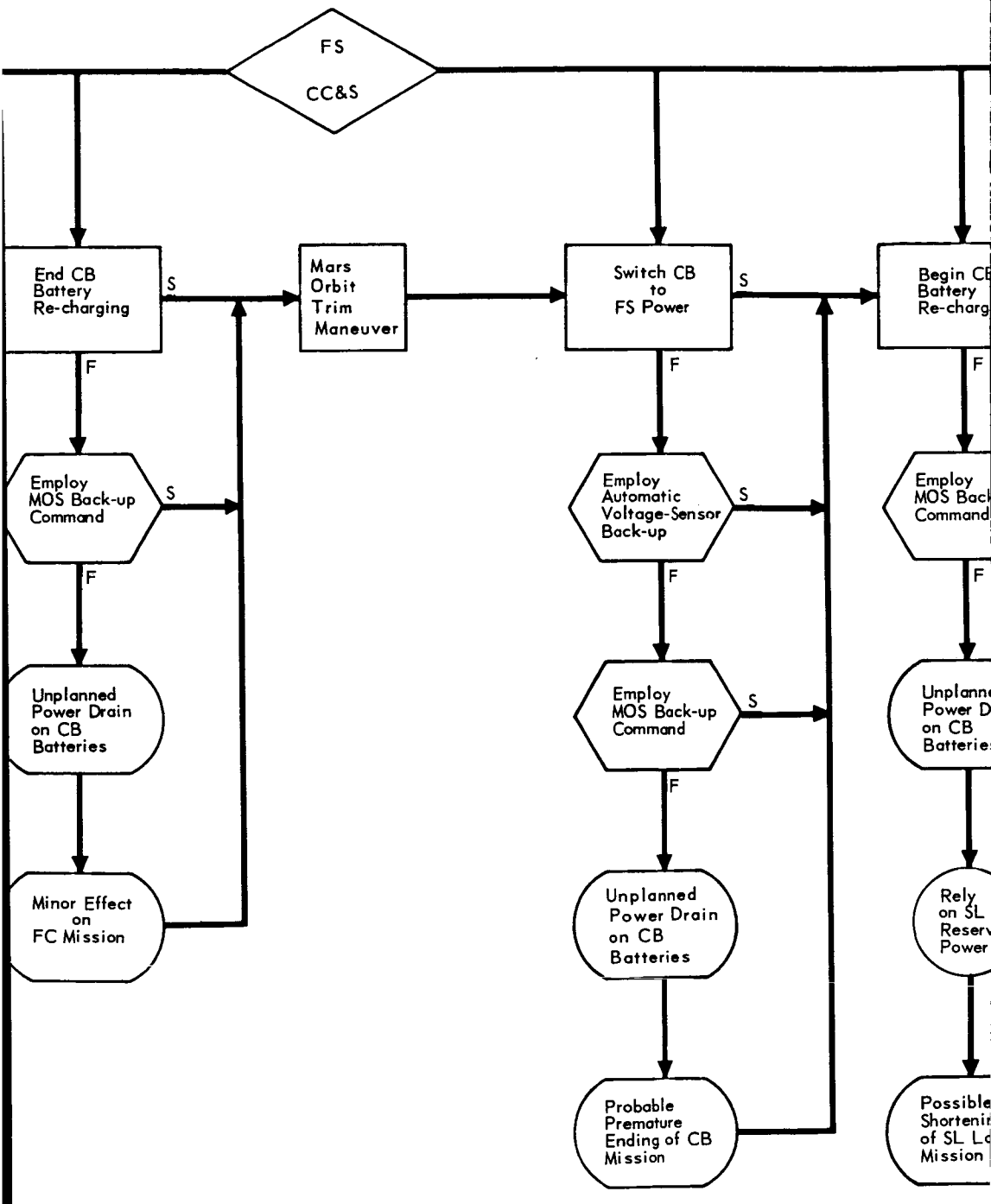
FS
CC&S
End CB Battery Re-charging
S
F
Employ MOS Back-up Command
S
F
Unplanned Power Drain on CB Batteries
Minor Effect on FC Mission
Mars Orbit Trim Maneuver
Switch CB to FS Power
S
F
Employ Automatic Voltage-Sensor Back-up
S
F
Employ MOS Back-up Command
S
F
Unplanned Power Drain on CB Batteries
Probable Premature Ending of CB Mission
Begin CB Battery Re-charg
F
Employ MOS Back Command
F
Unplanne Power D on CB Batterie
Rely on SL Reserv Power
Possible Shortenin of SL Lo Mission

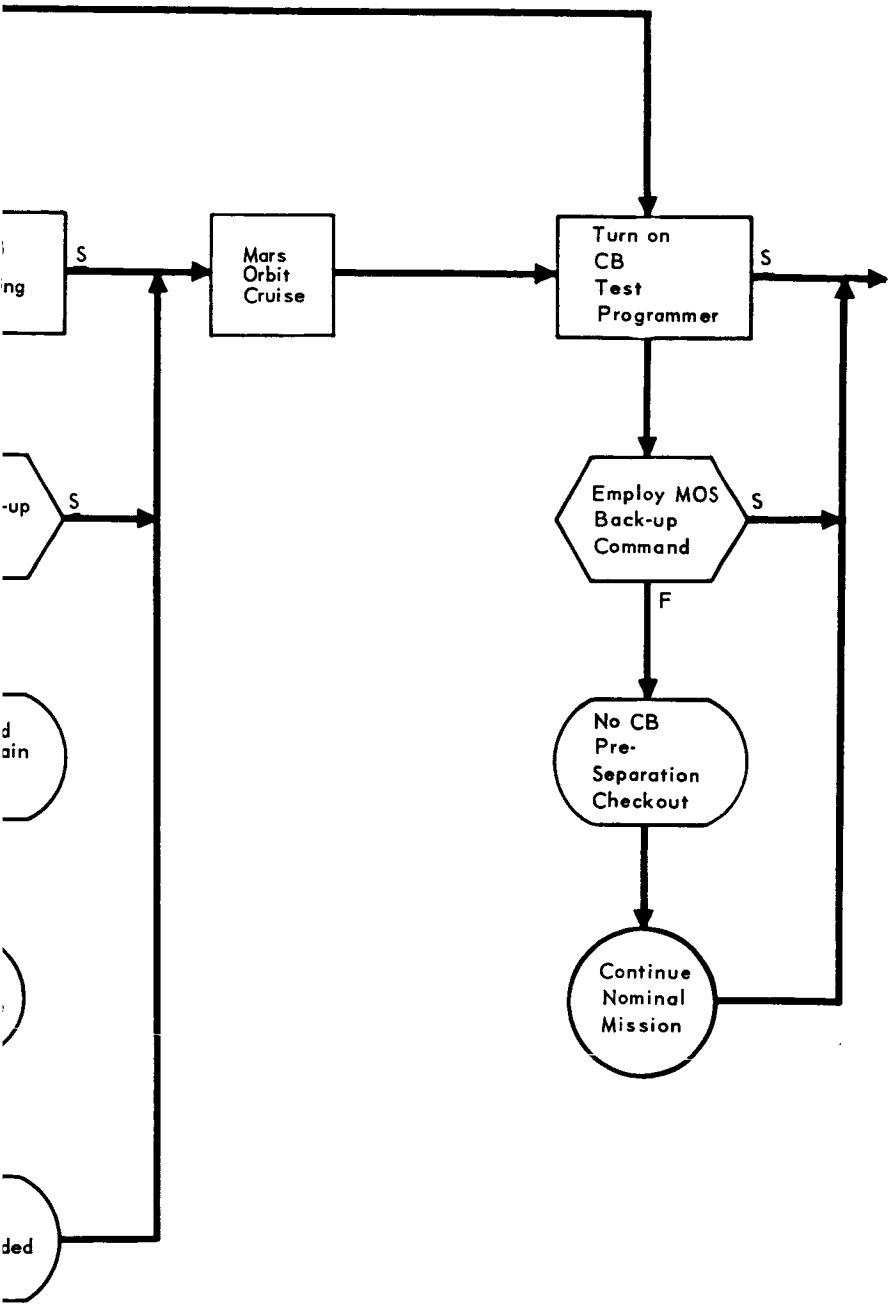
S
Mars
Orbit
Cruise
Turn on
CB
Test
Programmer
S
-up
S
Employ MOS
Back-up
Command
S
F
No CB
Pre-
Separation
Checkout
Continue
Nominal
Mission
ded

CAPSULE BUS
OPERATIONAL CONTINGENCY MODES (Continued)
LIFTOFF TO END OF CAPSULE BUS MISSION

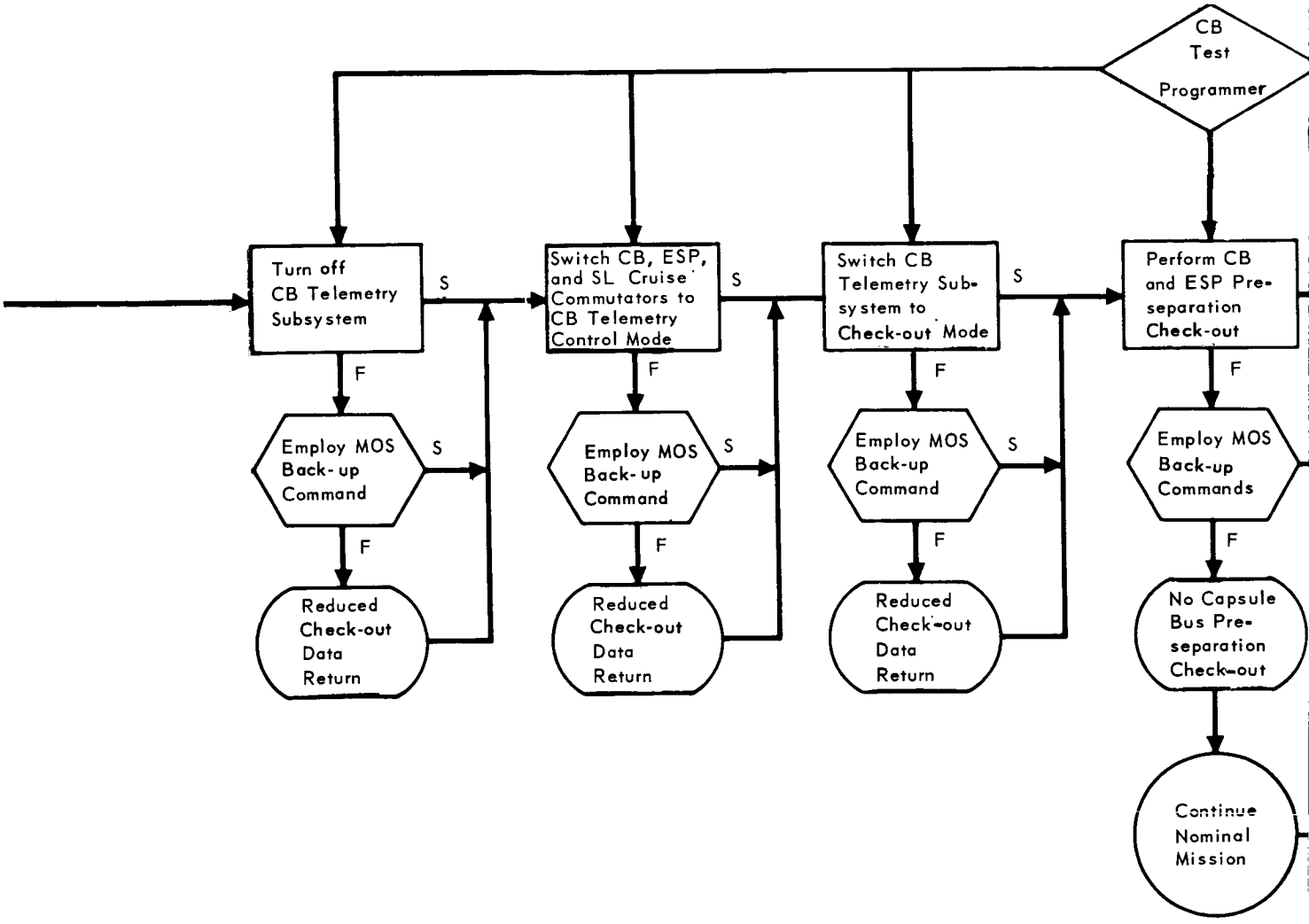

Figure 4–23 (Continued)

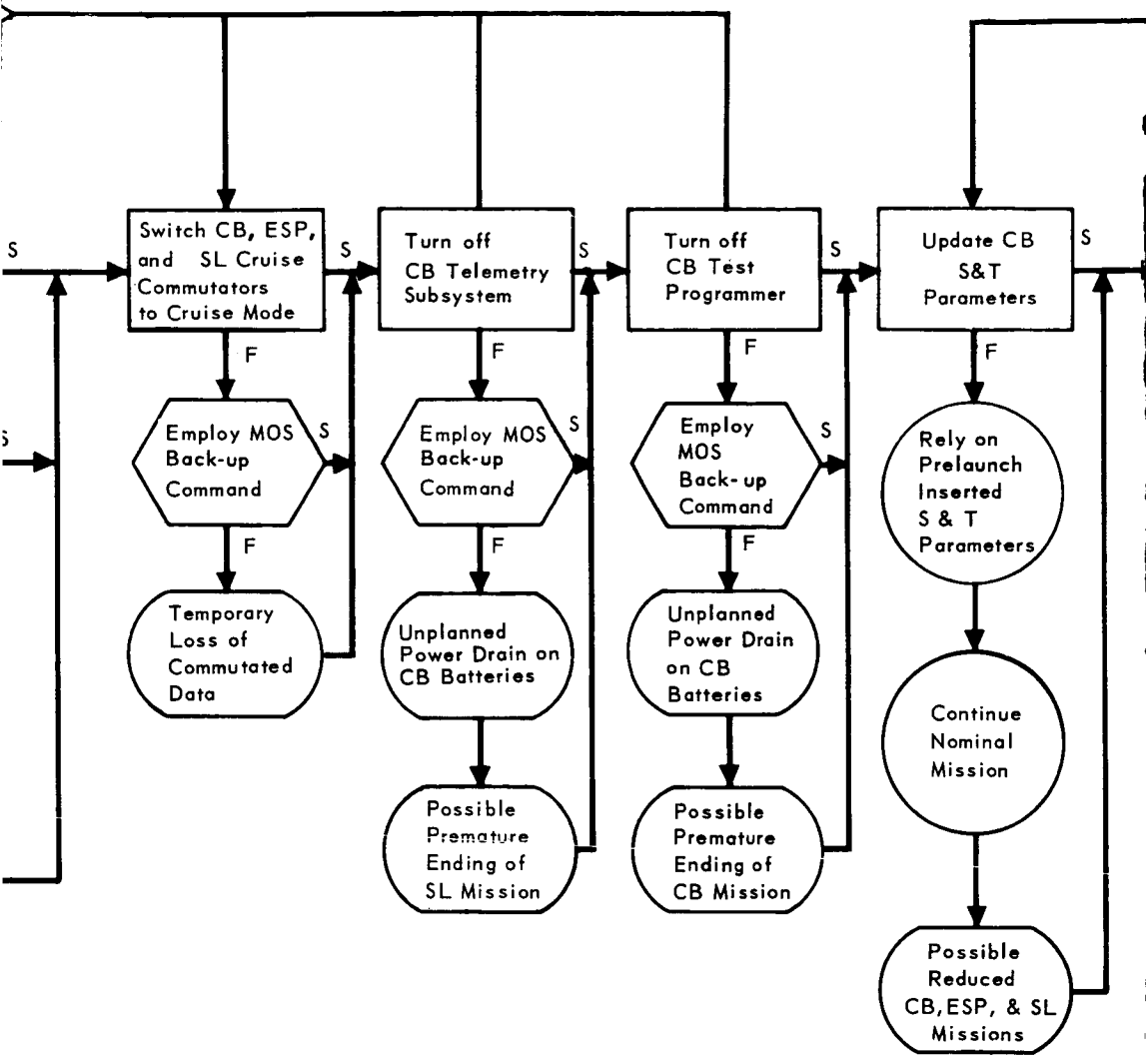
S
Switch CB, ESP, and SL Cruise Commutators to Cruise Mode
S
F
Employ MOS Back-up Command
S
F
Temporary Loss of Commutated Data
Turn off CB Telemetry Subsystem
S
F
Employ MOS Back-up Command
S
F
Unplanned Power Drain on CB Batteries
Possible Premature Ending of SL Mission
Turn off CB Test Programmer
S
F
Employ MOS Back-up Command
S
F
Unplanned Power Drain on CB Batteries
Possible Premature Ending of CB Mission
Update CB S&T Parameters
S
F
Rely on Prelaunch Inserted S & T Parameters
Continue Nominal Mission
Possible Reduced CB, ESP, & SL Missions

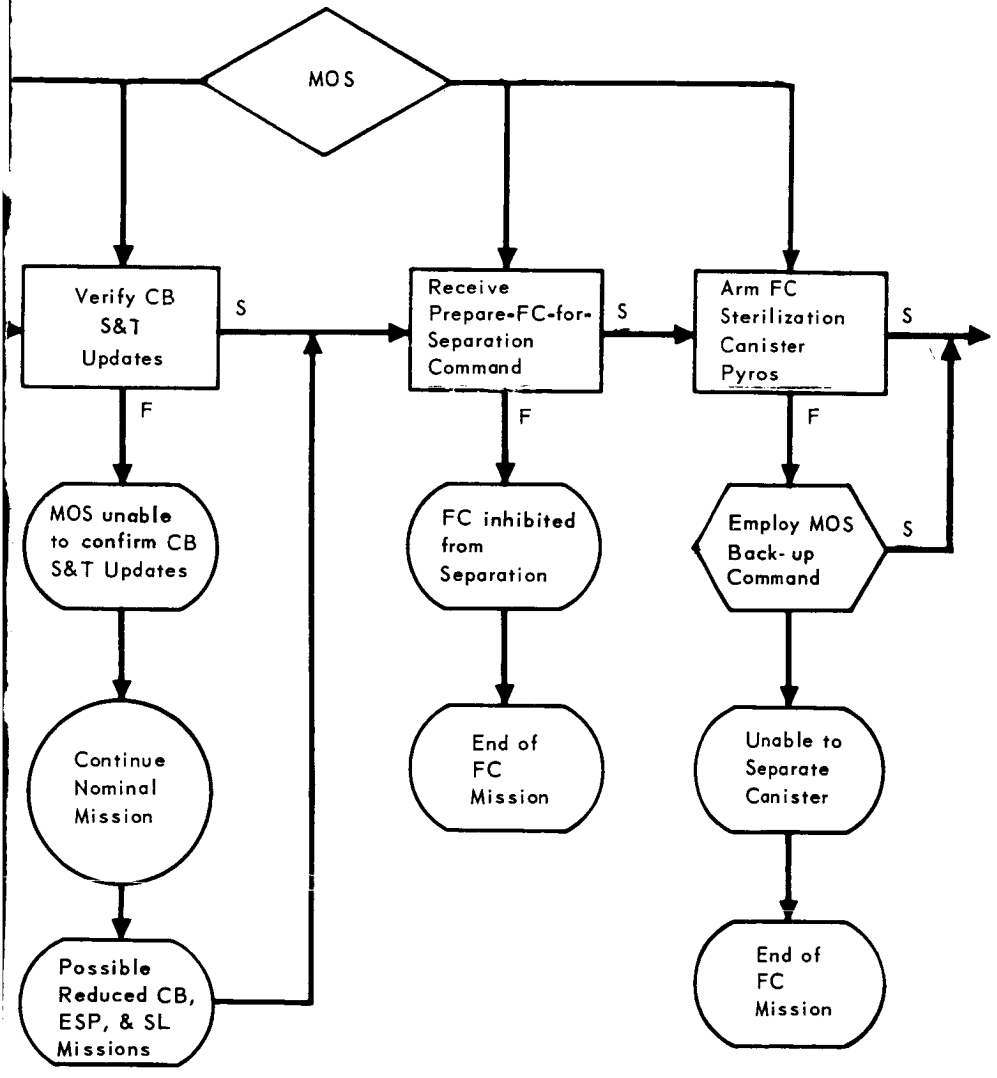
MOS
Verify CB S&T Updates
S
F
MOS unable to confirm CB S&T Updates
Continue Nominal Mission
Possible Reduced CB, ESP, & SL Missions
Receive Prepare-FC-for-Separation Command
S
F
FC inhibited from Separation
End of FC Mission
Arm FC Sterilization Canister Pyros
S
F
Employ MOS Back-up Command
S
Unable to Separate Canister
End of FC Mission

4-5853

CAPSULE BUS
OPERATIONAL CONTINGENCY MODES (Continued)
LIFTOFF TO END OF CAPSULE BUS MISSION

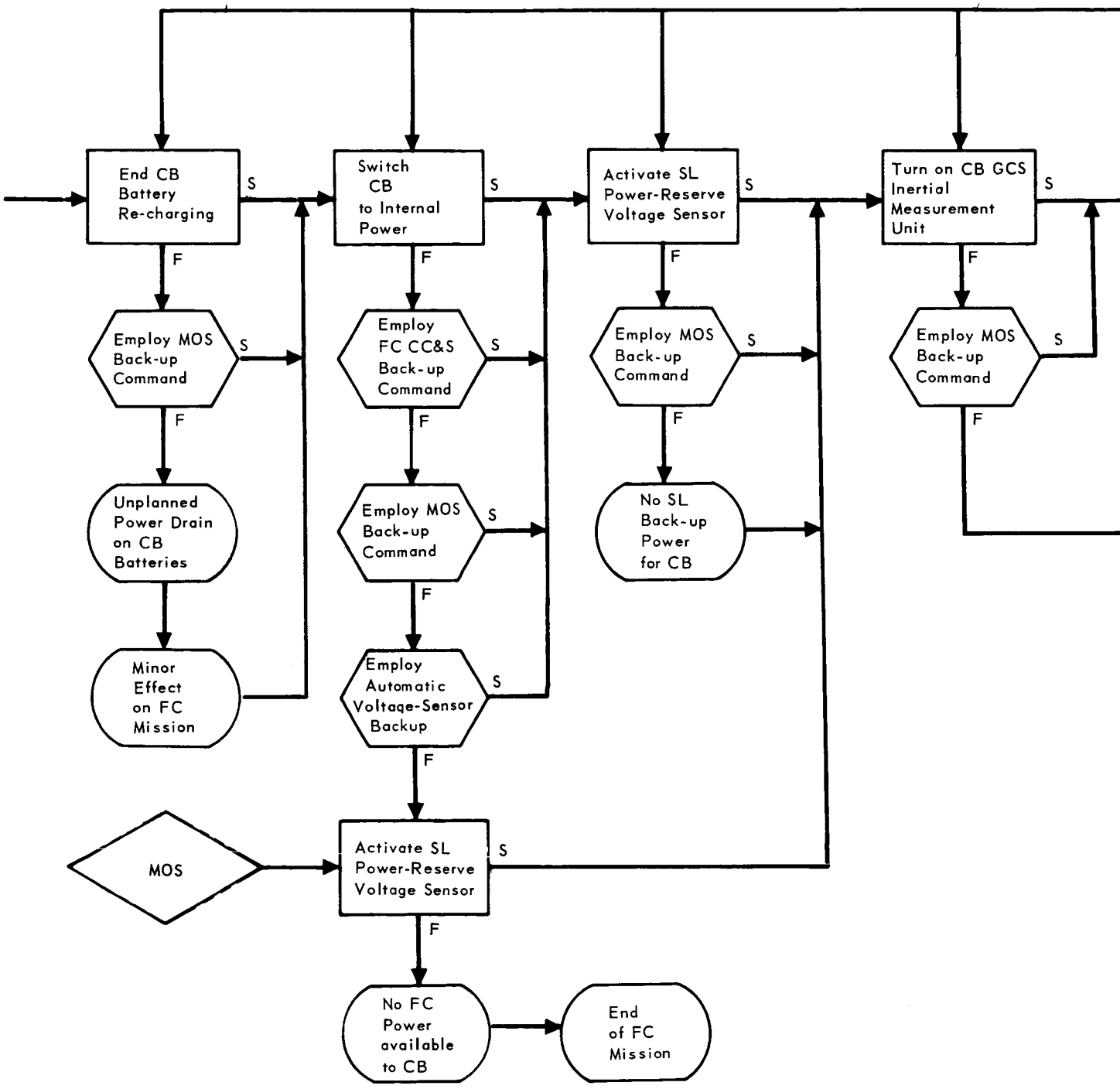

Figure 4-23 (Continued)

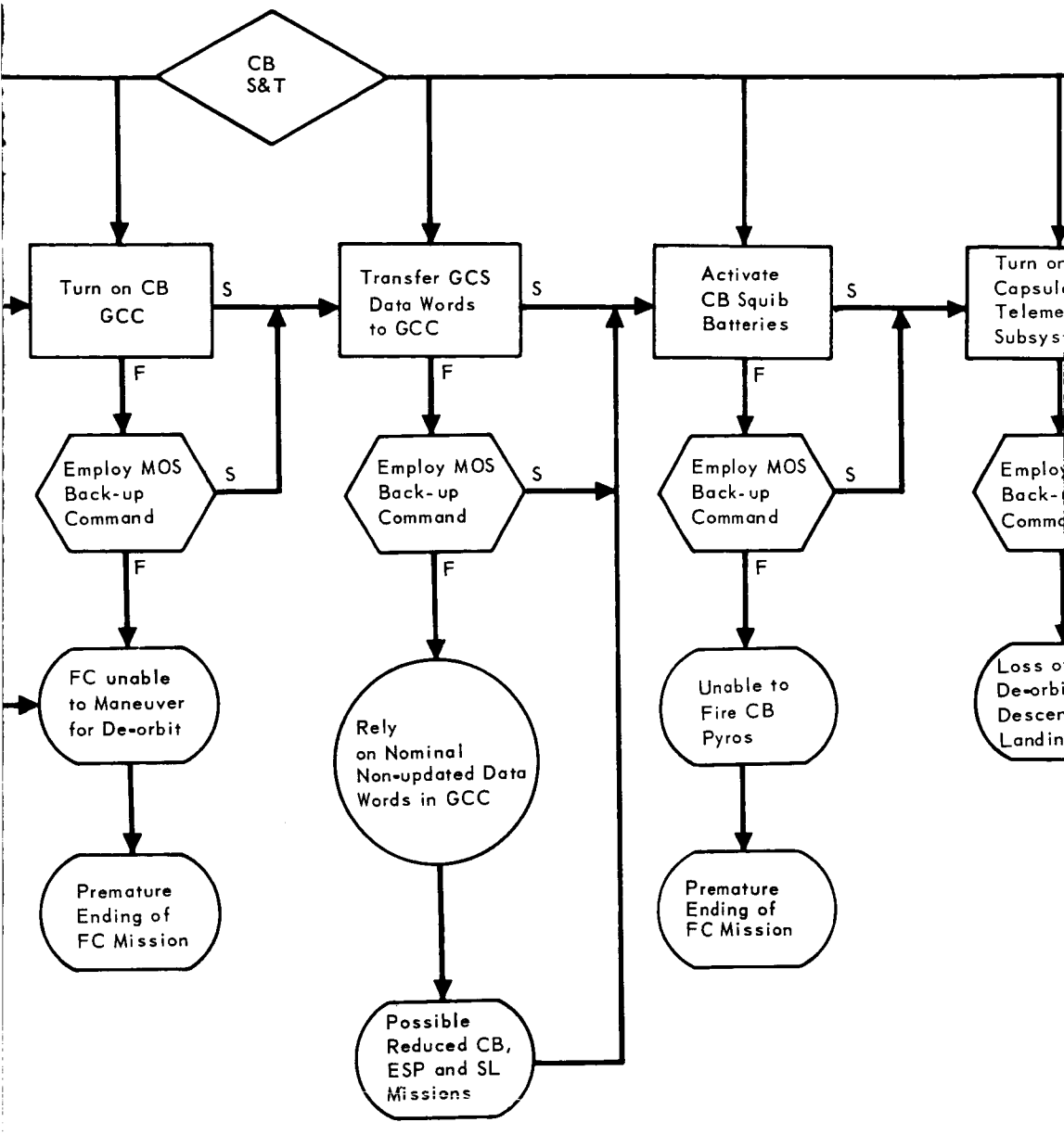
CB
S&T
Turn on CB
GCC
S
F
Employ MOS
Back-up
Command
S
F
FC unable
to Maneuver
for De-orbit
Premature
Ending of
FC Mission
Transfer GCS
Data Words
to GCC
S
F
Employ MOS
Back-up
Command
S
F
Rely
on Nominal
Non-updated Data
Words in GCC
Possible
Reduced CB,
ESP and SL
Missions
Activate
CB Squib
Batteries
S
F
Employ MOS
Back-up
Command
S
F
Unable to
Fire CB
Pyros
Premature
Ending of
FC Mission

4-59-2

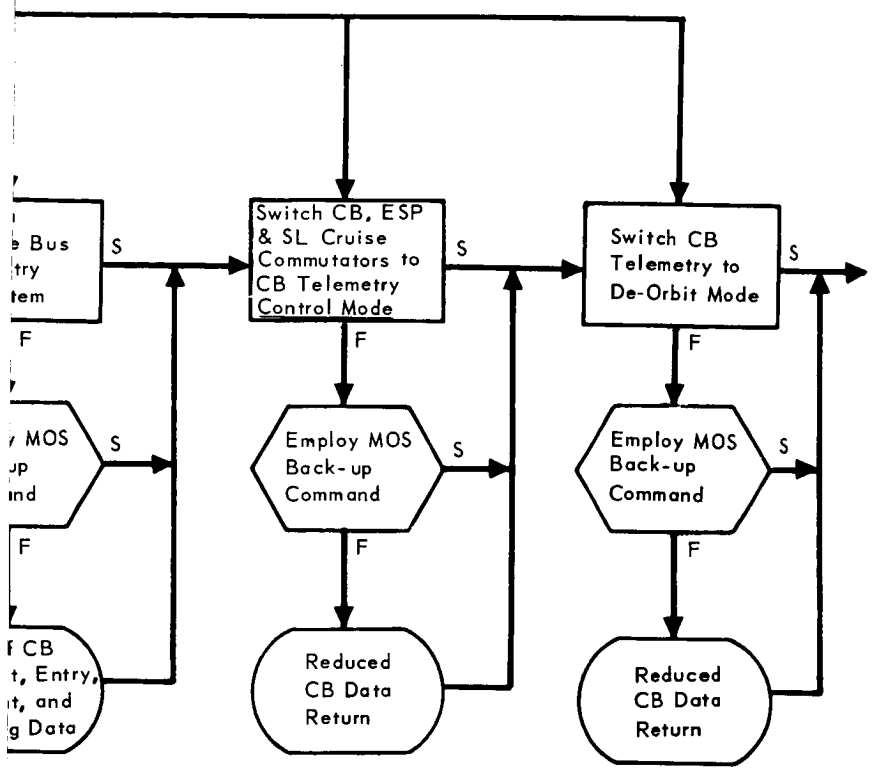
Switch CB, ESP & SL Cruise Commutators to CB Telemetry Control Mode
Switch CB Telemetry to De-Orbit Mode
Employ MOS Back-up Command
Employ MOS Back-up Command
Reduced CB Data Return
Reduced CB Data Return
S
F

CAPSULE BUS
OPERATIONAL CONTINGENCY MODES (Continued)
LIFTOFF TO END OF CAPSULE BUS MISSION

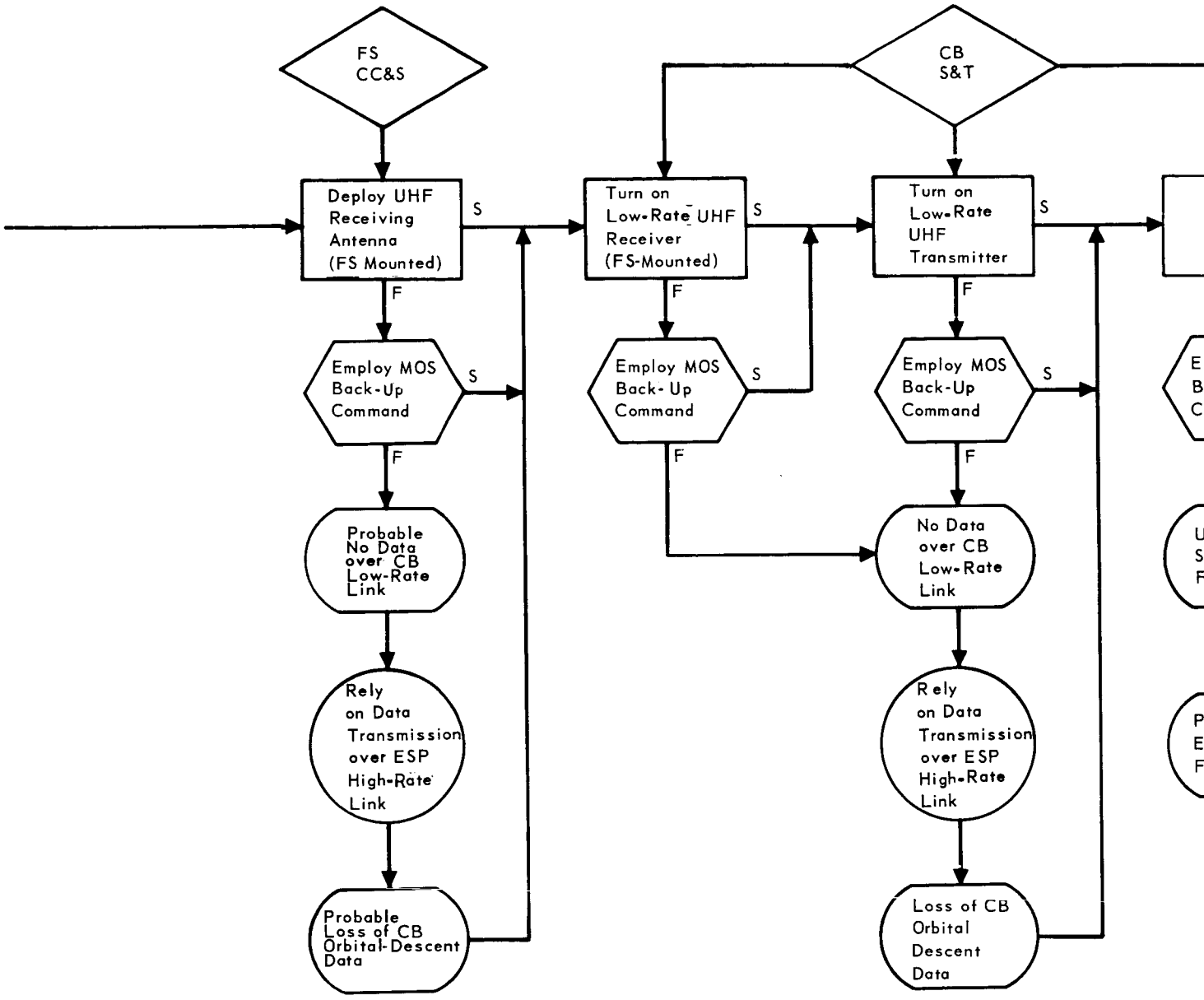

Figure 4–23 (Continued)

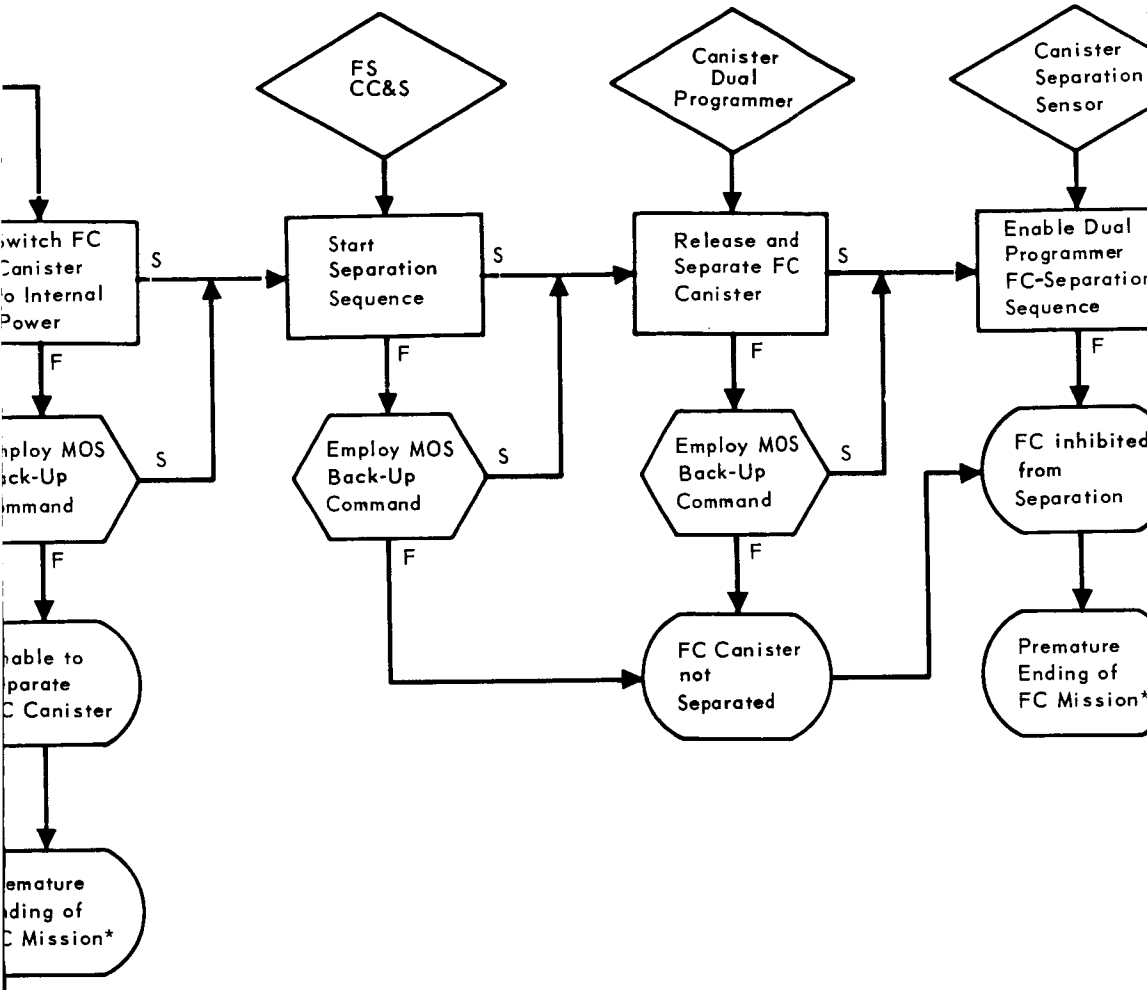
FS
CC&S
Canister
Dual
Programmer
Canister
Separation
Sensor
witch FC
Canister
o Internal
Power
S
F
Start
Separation
Sequence
S
F
Release and
Separate FC
Canister
S
F
Enable Dual
Programmer
FC-Separation
Sequence
F
nploy MOS
ck-Up
mmand
S
F
Employ MOS
Back-Up
Command
S
F
Employ MOS
Back-Up
Command
S
F
FC inhibited
from
Separation
able to
parate
C Canister
FC Canister
not
Separated
Premature
Ending of
FC Mission*
emature
ding of
C Mission*

4-60-2

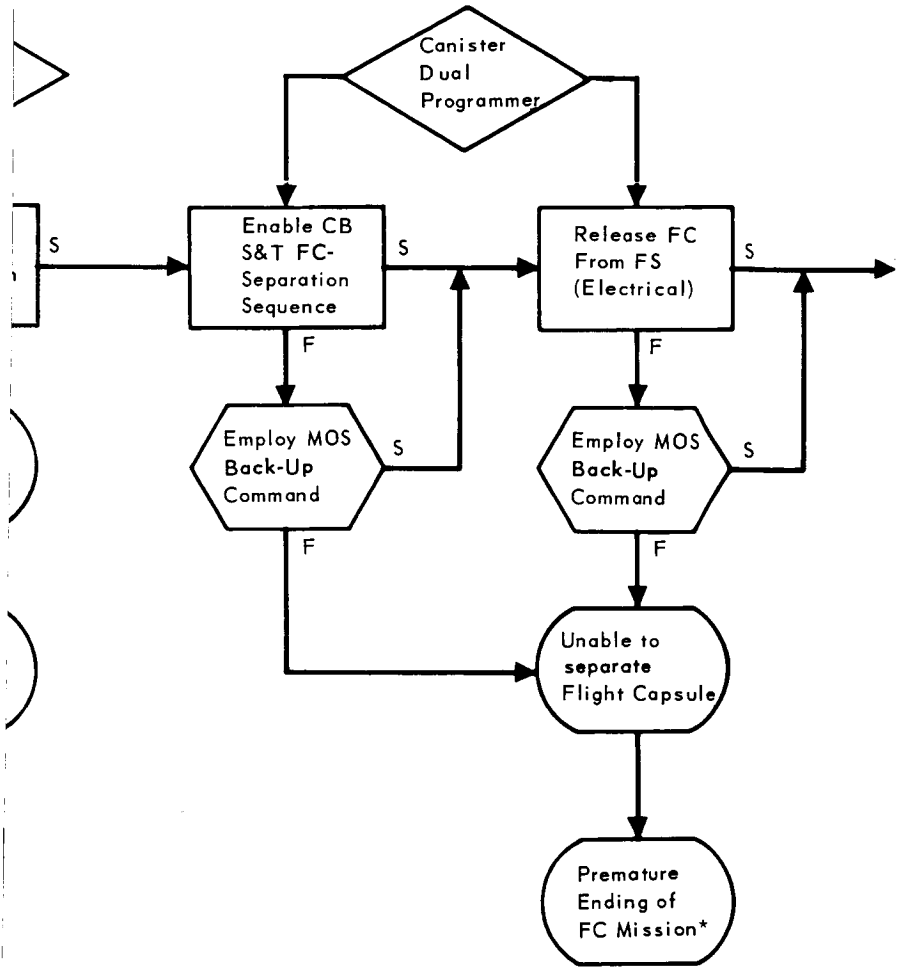
Canister
Dual
Programmer
S
Enable CB
S&T FC-
Separation
Sequence
S
Release FC
From FS
(Electrical)
S
F
F
Employ MOS
Back-Up
Command
S
Employ MOS
Back-Up
Command
S
F
F
Unable to
separate
Flight Capsule
Premature
Ending of
FC Mission*

CAPSULE BUS
OPERATIONAL CONTINGENCY MODES (Continued)
LIFTOFF TO END OF CAPSULE BUS MISSION

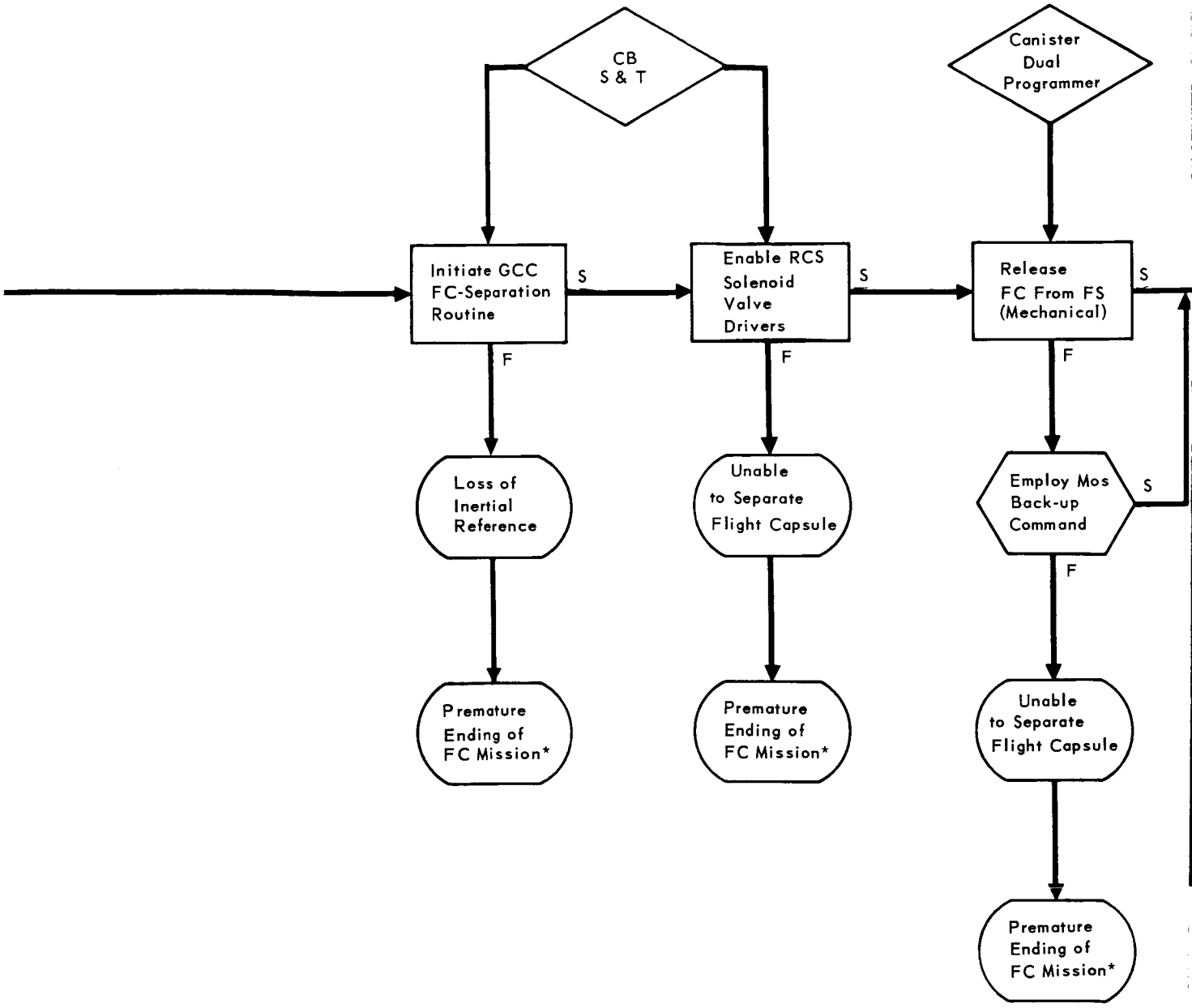

Figure 4-23 (Continued)

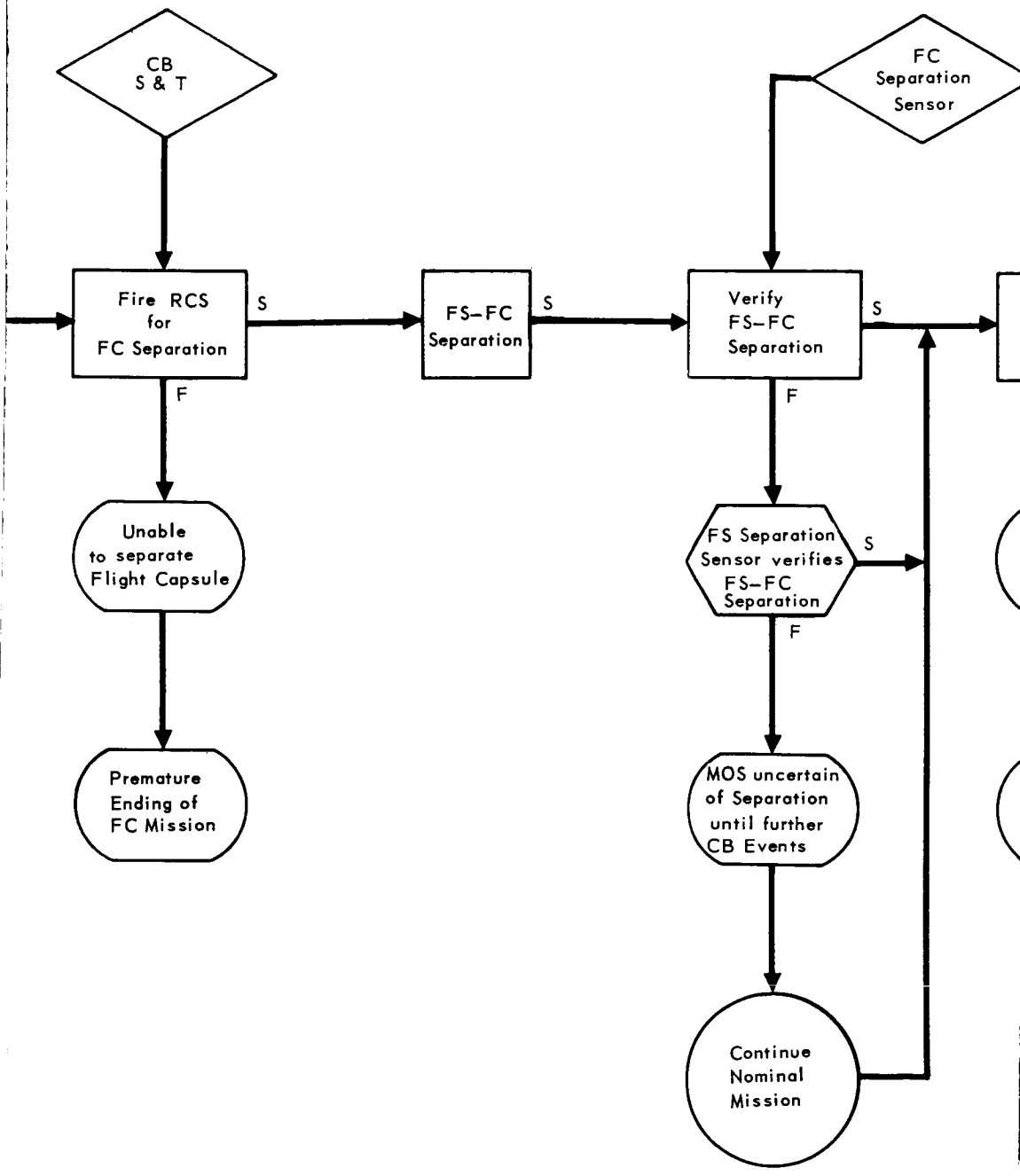
CB
S & T
FC
Separation
Sensor
Fire RCS
for
FC Separation
S
FS–FC
Separation
S
Verify
FS–FC
Separation
S
F
F
Unable
to separate
Flight Capsule
FS Separation
Sensor verifies
FS–FC
Separation
S
F
Premature
Ending of
FC Mission
MOS uncertain
of Separation
until further
CB Events
Continue
Nominal
Mission

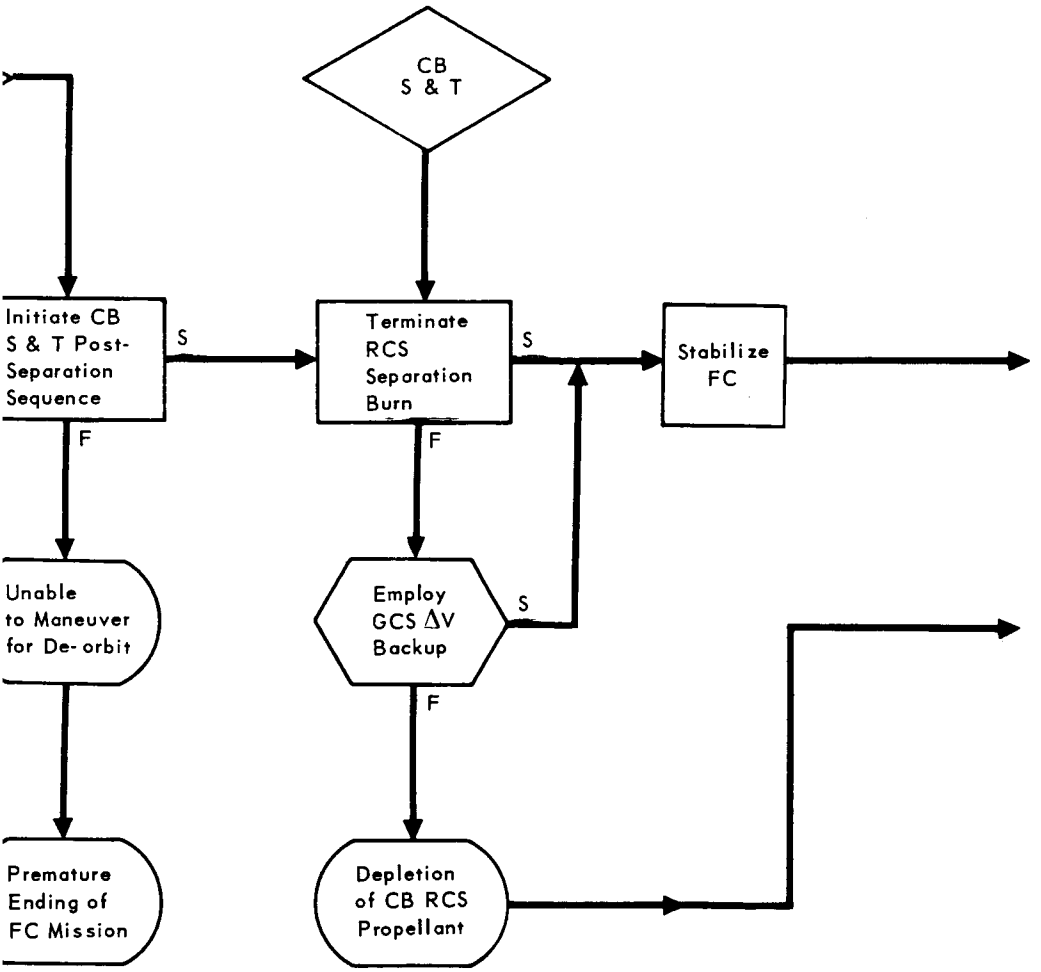
CB
S & T
Initiate CB S & T Post-Separation Sequence
S
F
Terminate RCS Separation Burn
S
F
Stabilize FC
Unable to Maneuver for De-orbit
Employ GCS ΔV Backup
S
F
Premature Ending of FC Mission
Depletion of CB RCS Propellant

CAPSULE BUS
OPERATIONAL CONTINGENCY MODES (Continued)
LIFTOFF TO END OF CAPSULE BUS MISSION

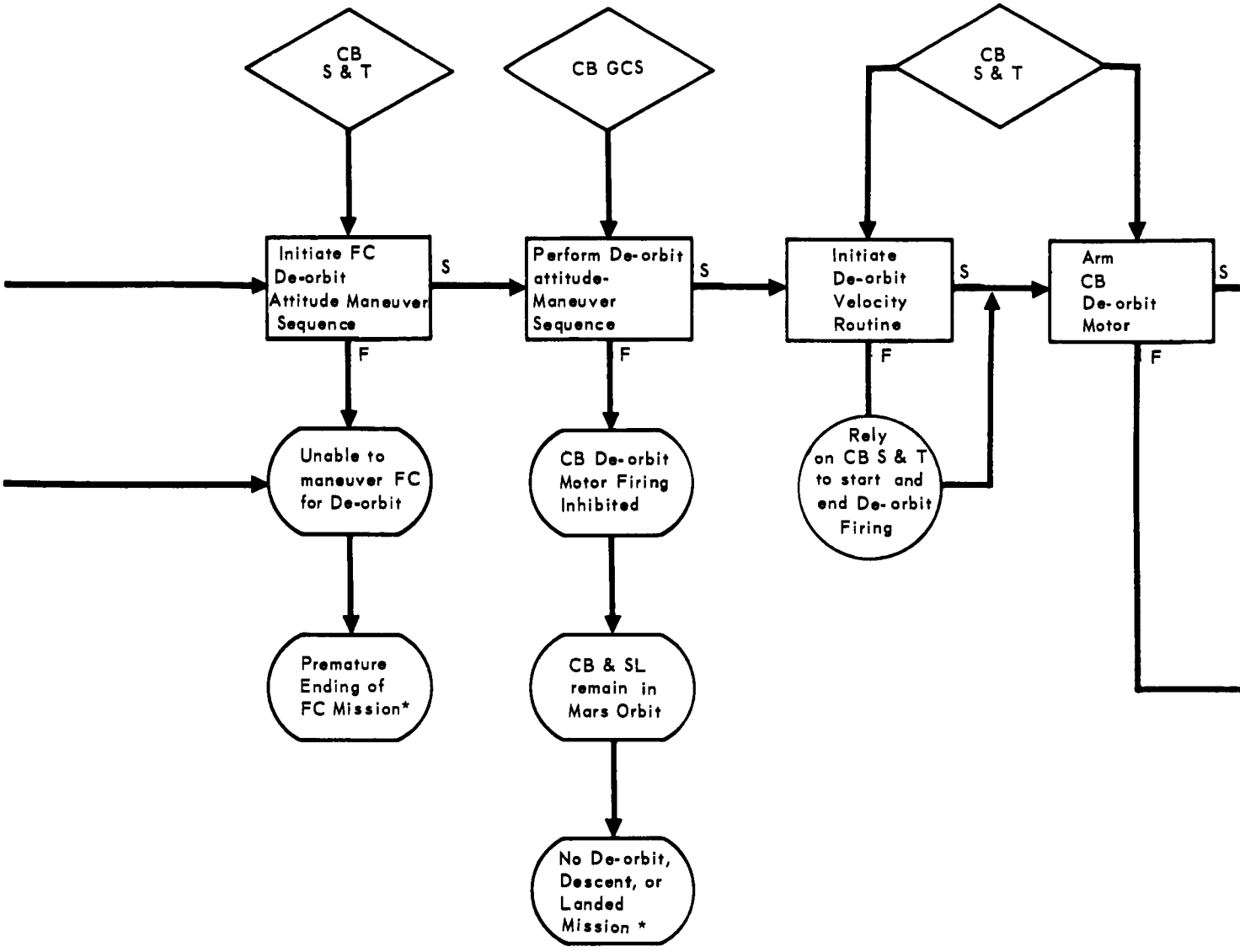

Figure 4–23 (Continued)

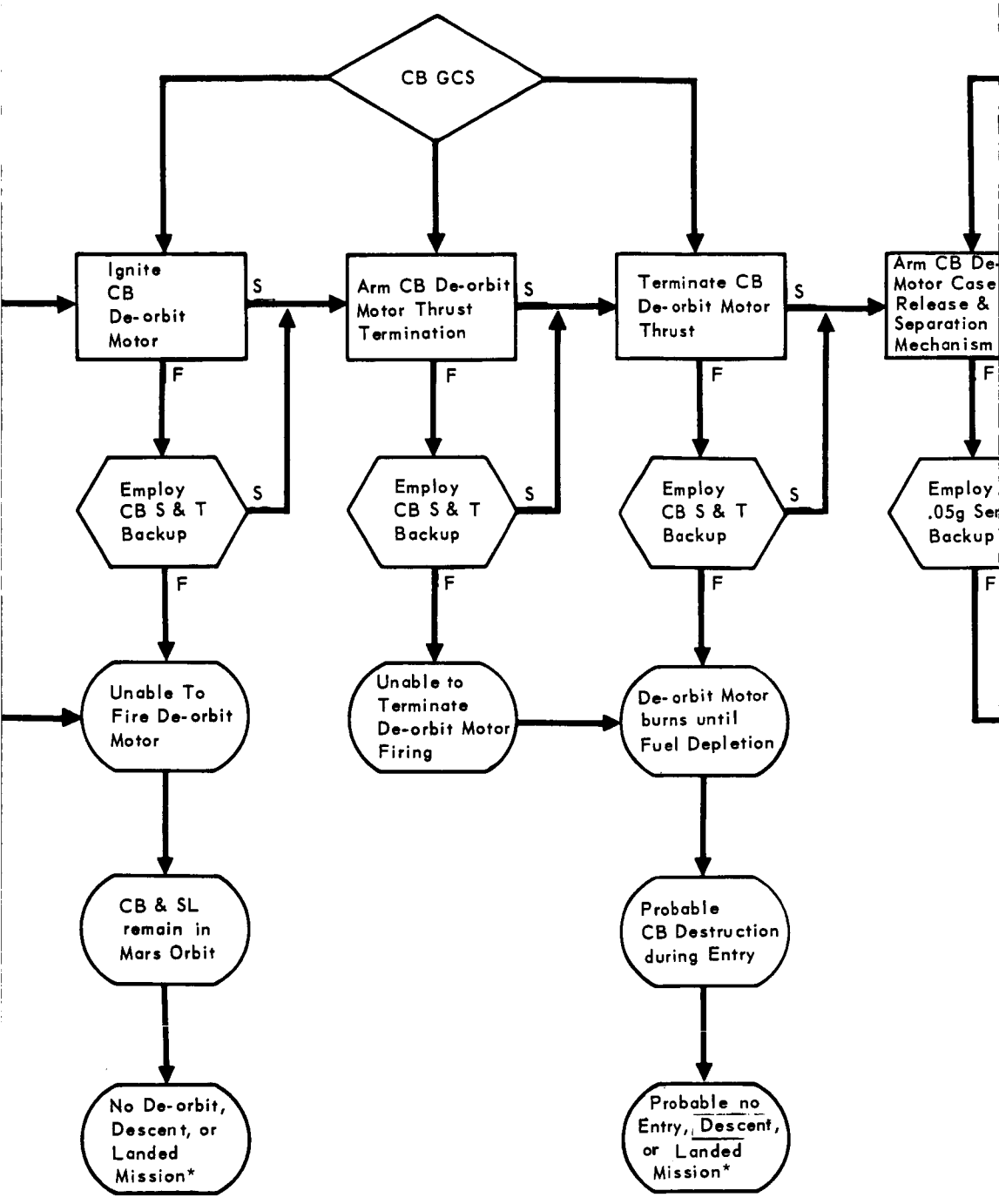
CB GCS
Ignite CB De-orbit Motor
S
F
Arm CB De-orbit Motor Thrust Termination
S
F
Terminate CB De-orbit Motor Thrust
S
F
Arm CB De- Motor Case Release & Separation Mechanism
F
Employ CB S & T Backup
S
F
Employ CB S & T Backup
S
F
Employ CB S & T Backup
S
F
Employ .05g Ser Backup
F
Unable To Fire De-orbit Motor
Unable to Terminate De-orbit Motor Firing
De-orbit Motor burns until Fuel Depletion
CB & SL remain in Mars Orbit
Probable CB Destruction during Entry
No De-orbit, Descent, or Landed Mission*
Probable no Entry, Descent, or Landed Mission*

4-62-2

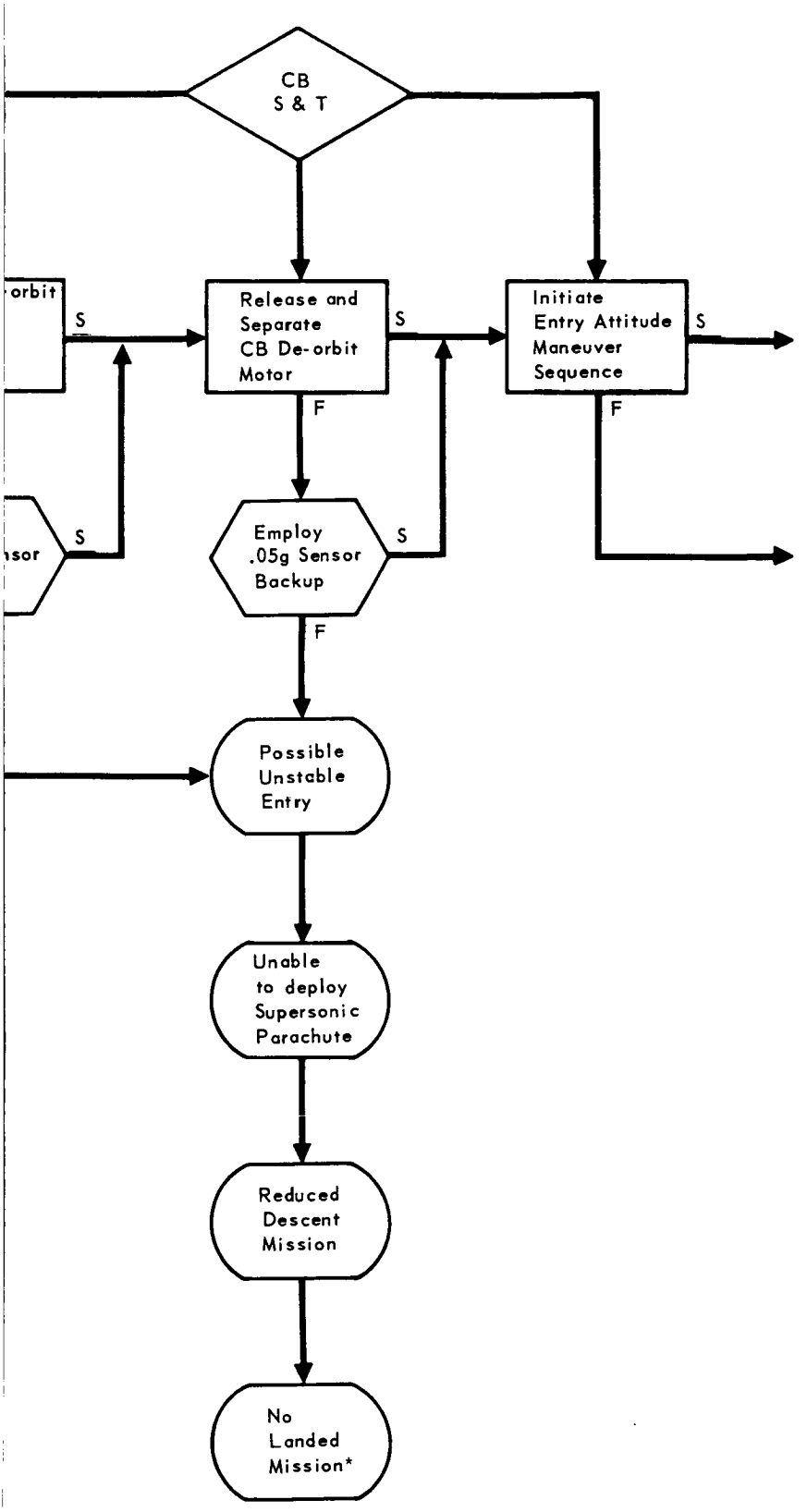
CB
S & T
orbit
S
Release and
Separate
CB De-orbit
Motor
S
Initiate
Entry Attitude
Maneuver
Sequence
S
F
F
sor
S
Employ
.05g Sensor
Backup
S
F
Possible
Unstable
Entry
Unable
to deploy
Supersonic
Parachute
Reduced
Descent
Mission
No
Landed
Mission*

CAPSULE BUS
OPERATIONAL CONTINGENCY MODES (Continued)
LIFTOFF TO END OF CAPSULE BUS MISSION

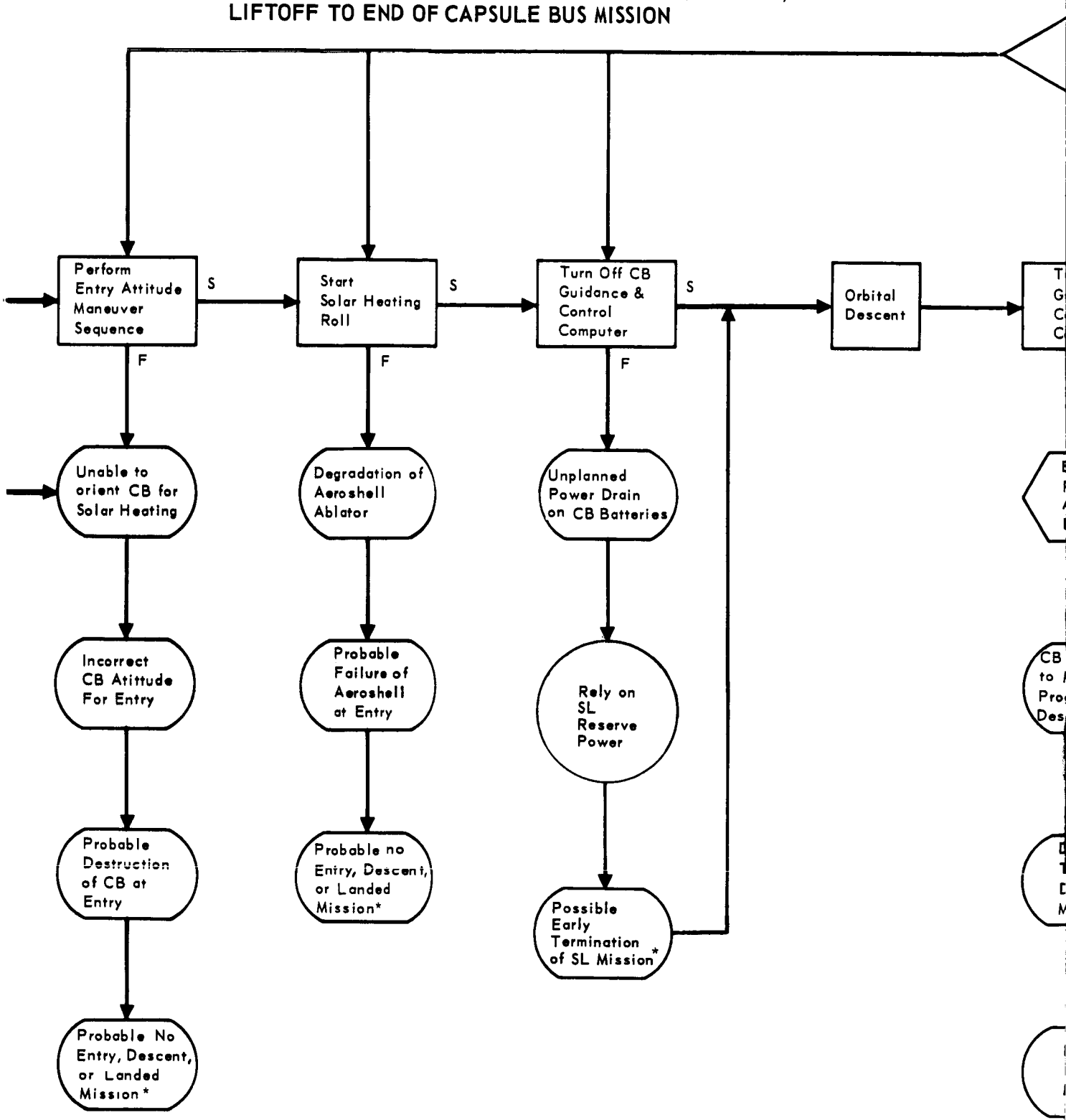

Figure 4-23 (Continued)

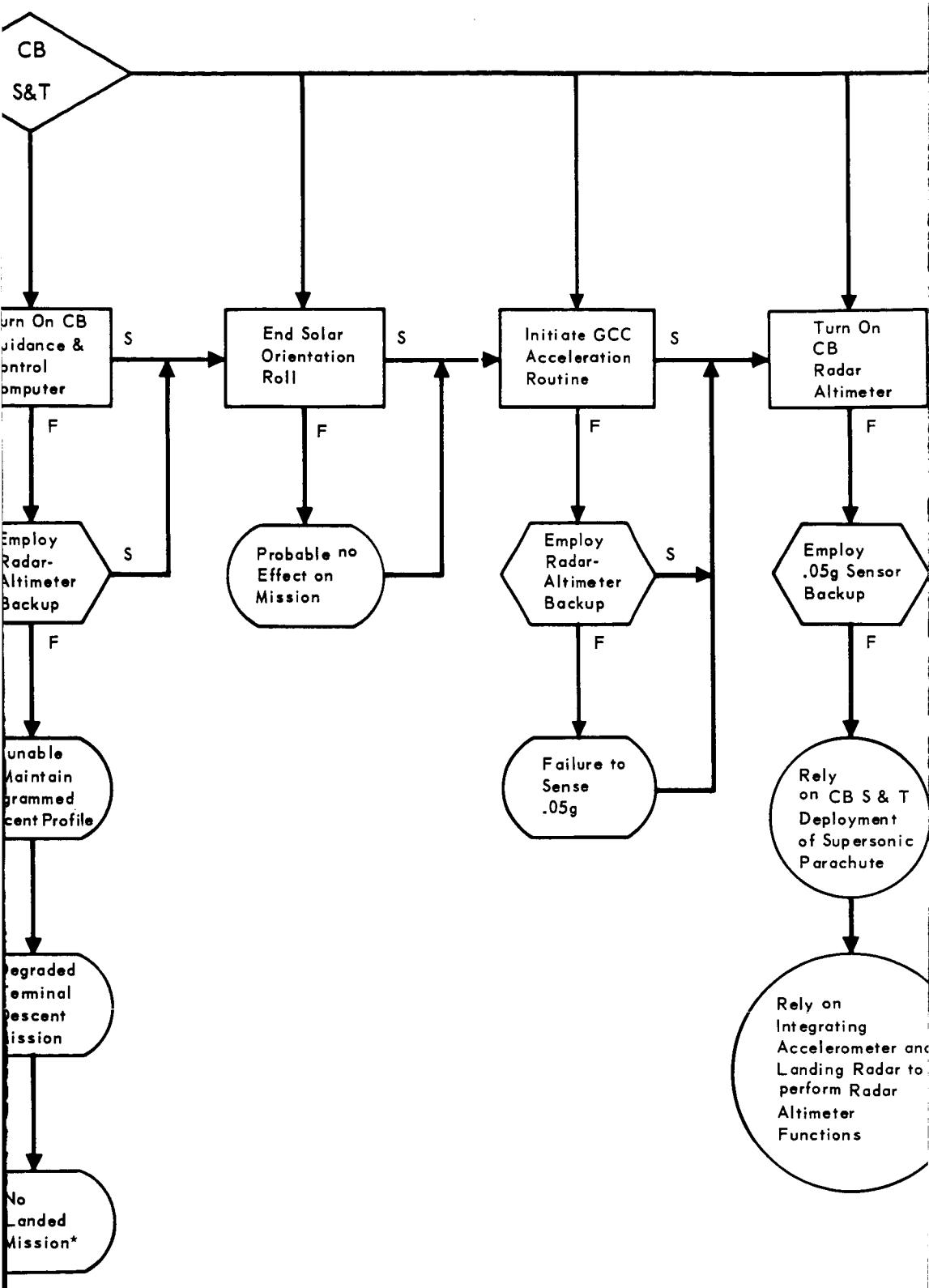
CB
S&T
urn On CB
uidance &
ontrol
omputer
S
F
End Solar
Orientation
Roll
S
F
Initiate GCC
Acceleration
Routine
S
F
Turn On
CB
Radar
Altimeter
F
Employ
Radar-
Altimeter
Backup
S
F
Probable no
Effect on
Mission
Employ
Radar-
Altimeter
Backup
S
F
Employ
.05g Sensor
Backup
F
unable
Maintain
grammed
cent Profile
Failure to
Sense
.05g
Rely
on CB S & T
Deployment
of Supersonic
Parachute
egraded
erminal
escent
ission
Rely on
Integrating
Accelerometer and
Landing Radar to
perform Radar
Altimeter
Functions
No
Landed
Mission*

4-63-2

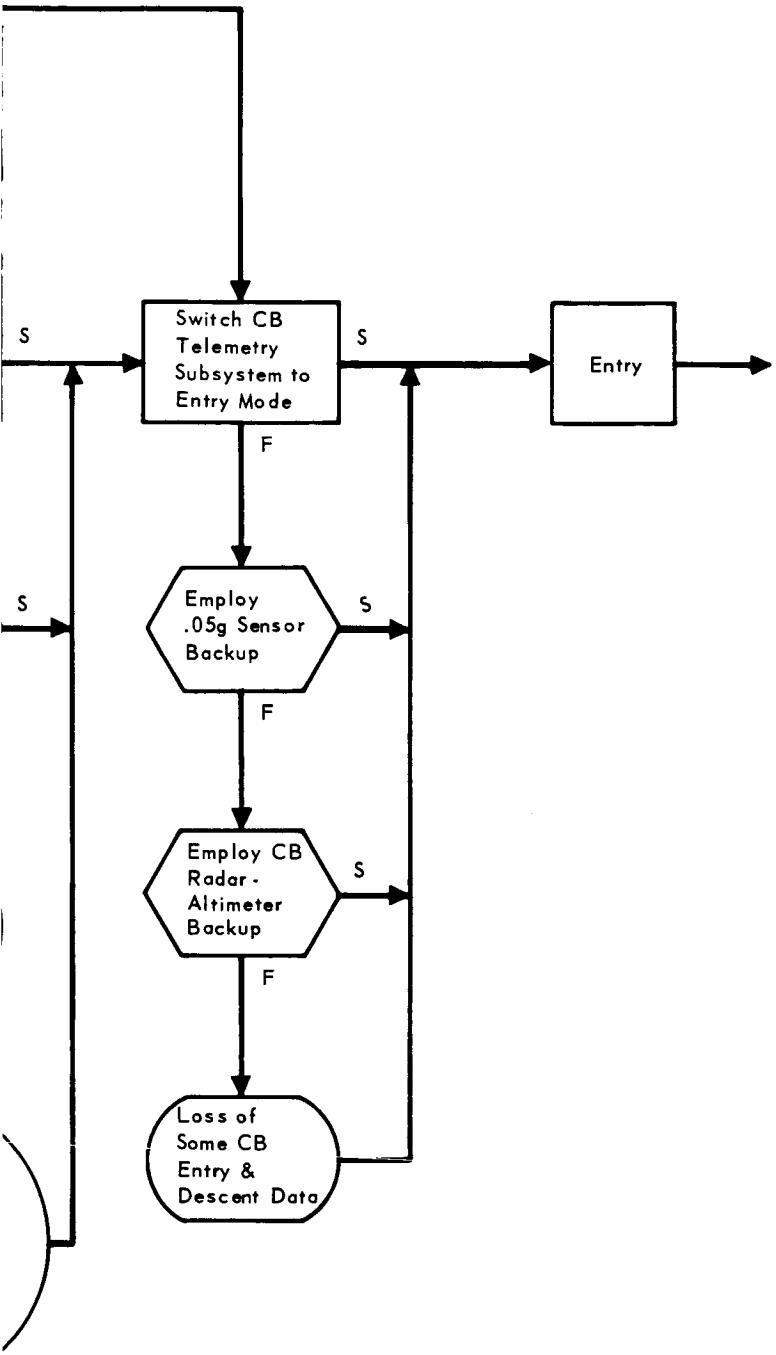
S
Switch CB Telemetry Subsystem to Entry Mode
S
Entry
F
S
Employ .05g Sensor Backup
S
F
Employ CB Radar - Altimeter Backup
S
F
Loss of Some CB Entry & Descent Data

CAPSULE BUS
OPERATIONAL CONTINGENCY MODES
LIFTOFF TO END OF CAPSULE BUS MISSION (Continued)

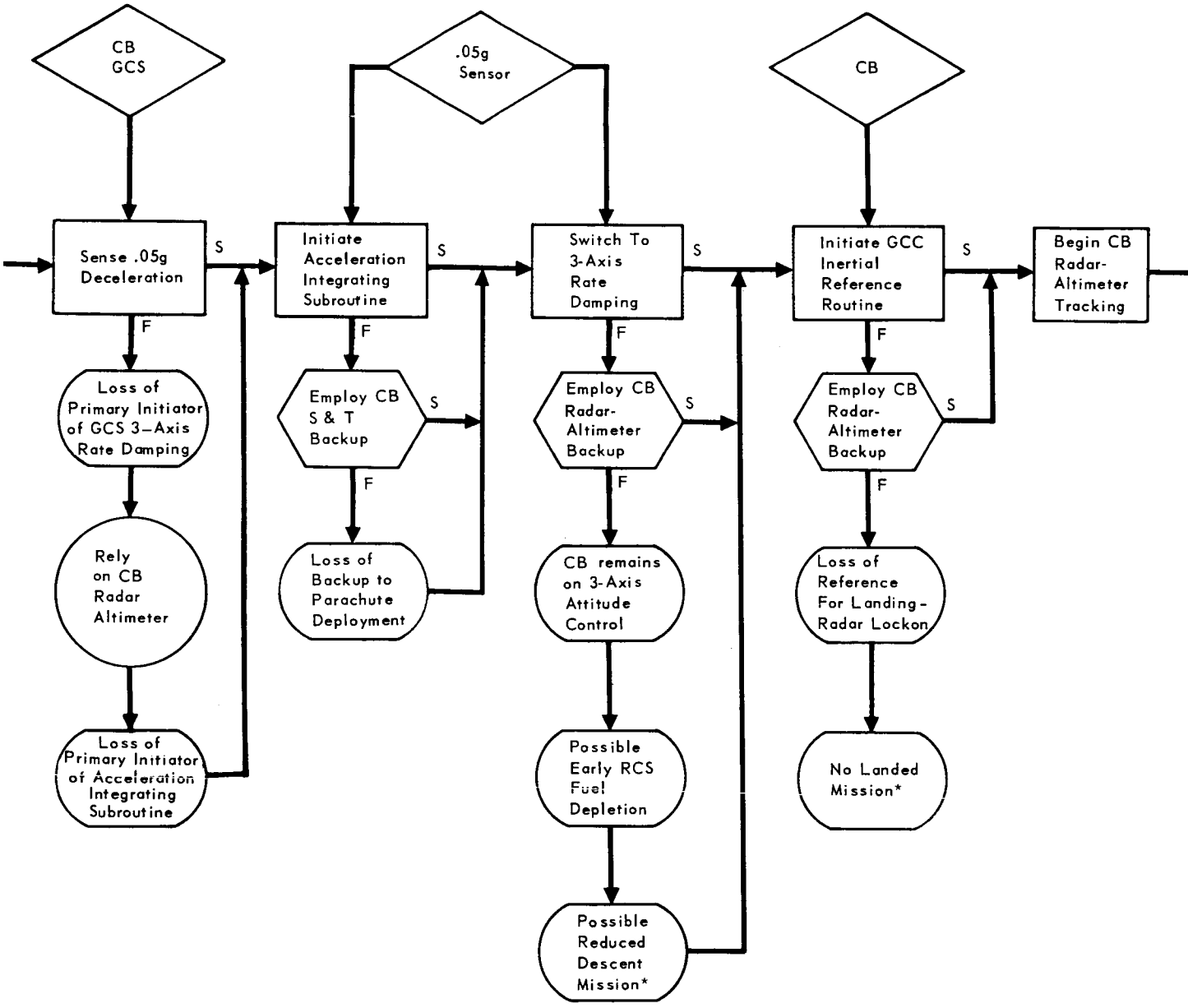

Figure 4-23 (Continued)

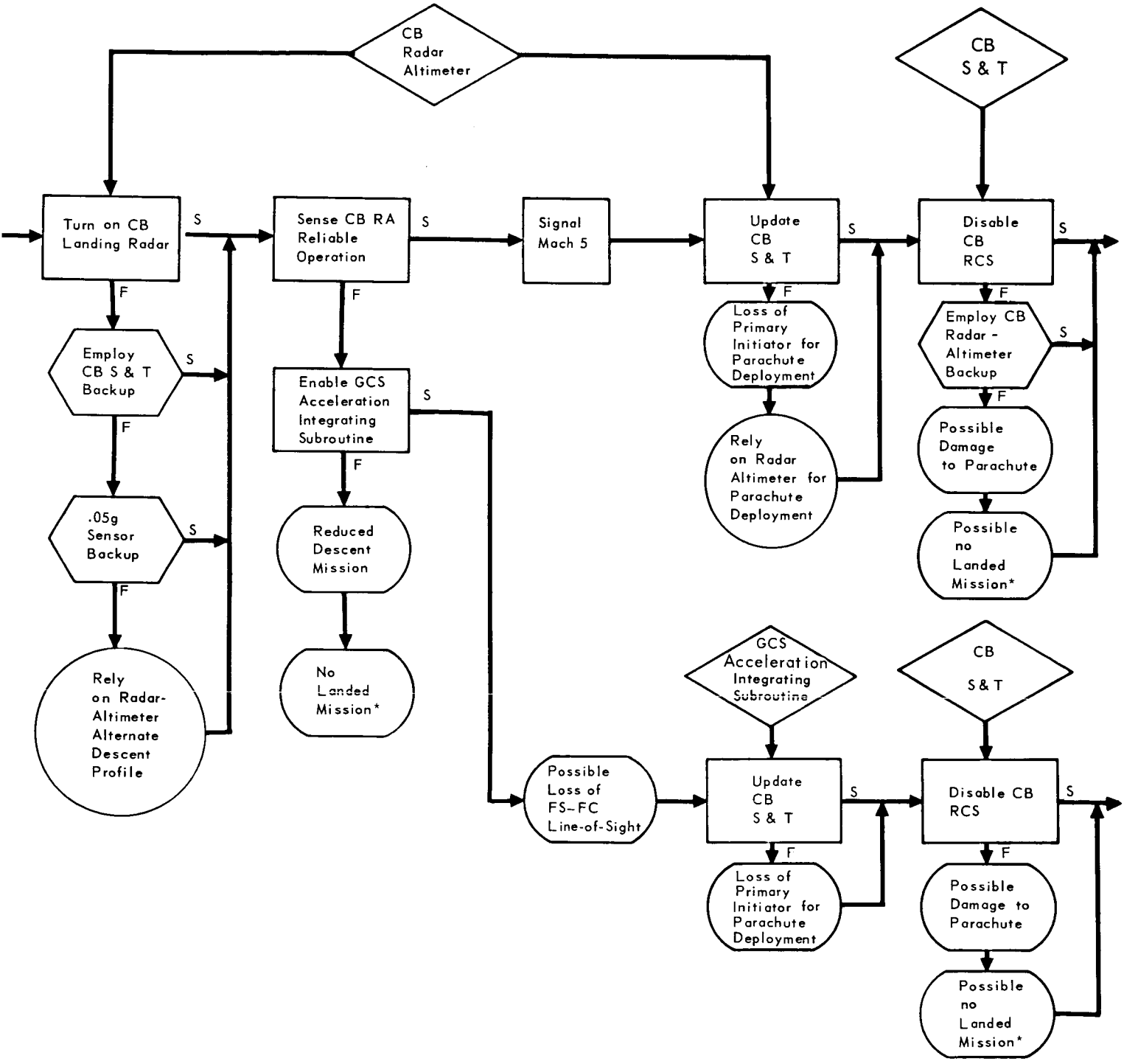
CB Radar Altimeter
CB S & T
Turn on CB Landing Radar
S
F
Employ CB S & T Backup
S
F
.05g Sensor Backup
S
F
Rely on Radar-Altimeter Alternate Descent Profile
Sense CB RA Reliable Operation
S
F
Enable GCS Acceleration Integrating Subroutine
S
F
Reduced Descent Mission
No Landed Mission*
Signal Mach 5
Update CB S & T
S
F
Loss of Primary Initiator for Parachute Deployment
Rely on Radar Altimeter for Parachute Deployment
Disable CB RCS
S
F
Employ CB Radar - Altimeter Backup
S
F
Possible Damage to Parachute
Possible no Landed Mission*
Possible Loss of FS-FC Line-of-Sight
GCS Acceleration Integrating Subroutine
Update CB S & T
S
F
Loss of Primary Initiator for Parachute Deployment
CB S & T
Disable CB RCS
S
F
Possible Damage to Parachute
Possible no Landed Mission*

4-64-2

CAPSULE BUS
OPERATIONAL CONTINGENCY MODES (Continued)
LIFTOFF TO END OF CAPSULE BUS MISSION

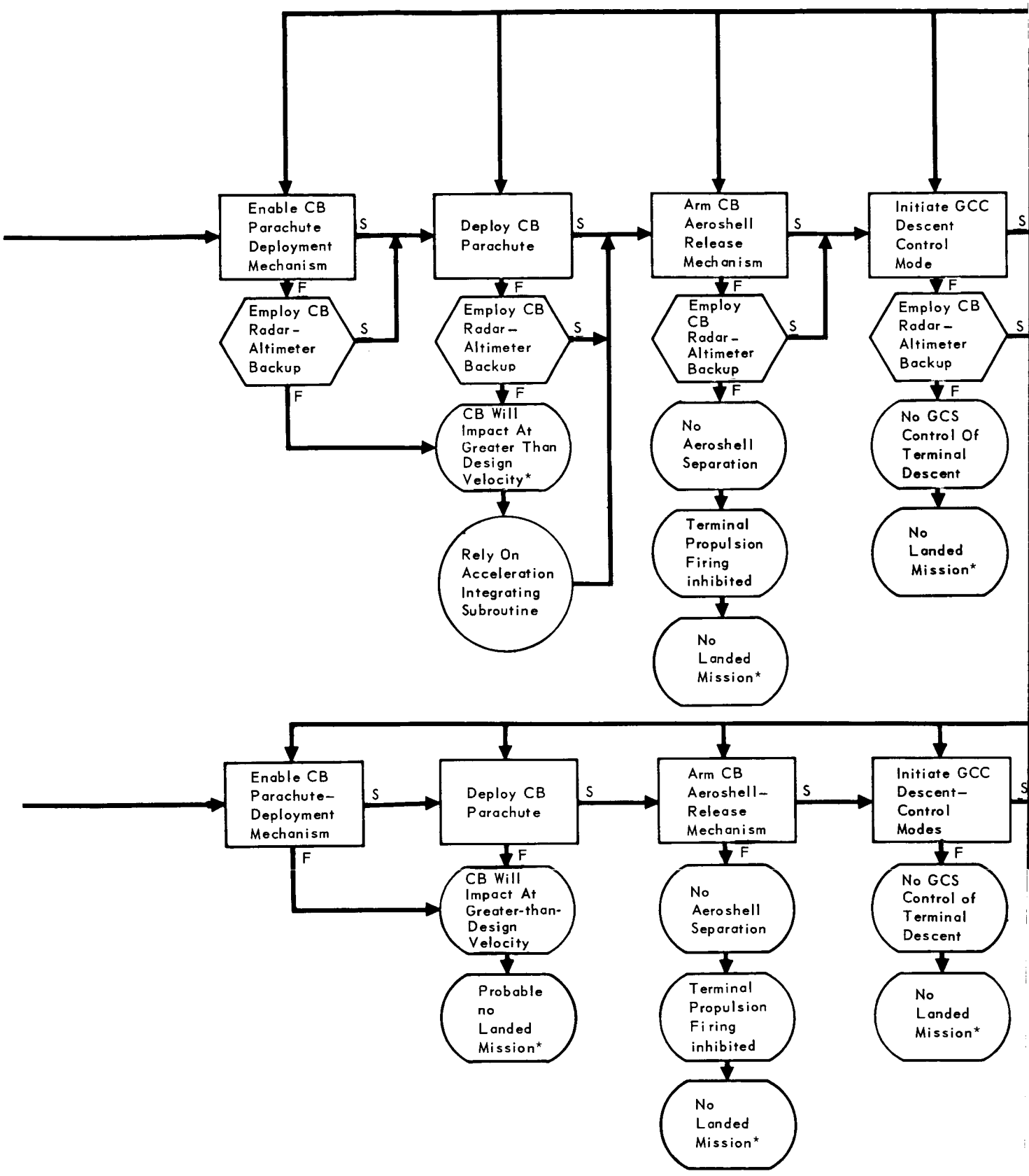

Figure 4-23 (Continued)

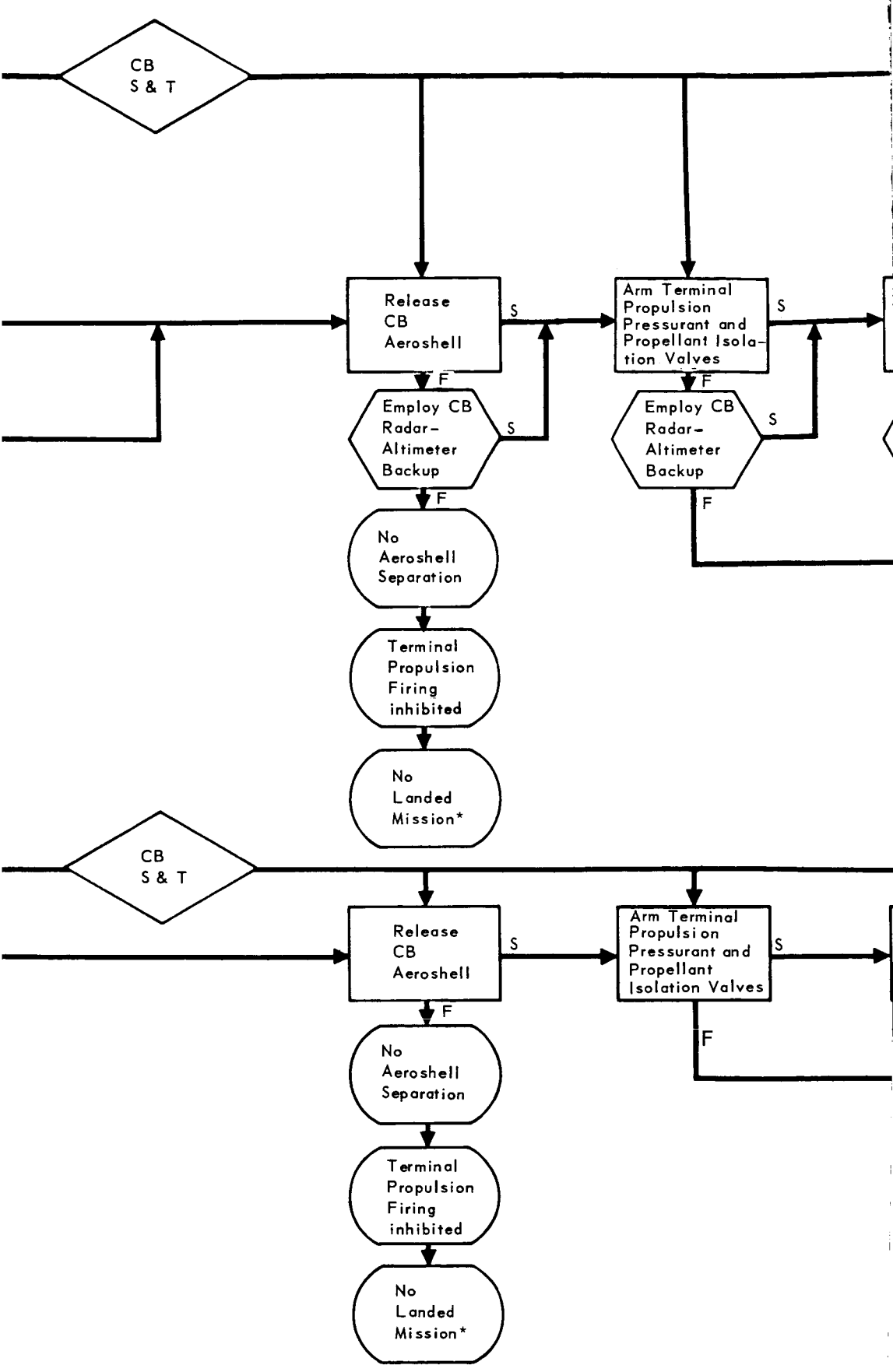
CB
S & T
Release
CB
Aeroshell
S
F
Arm Terminal
Propulsion
Pressurant and
Propellant Isola-
tion Valves
S
F
Employ CB
Radar-
Altimeter
Backup
S
F
Employ CB
Radar-
Altimeter
Backup
S
F
No
Aeroshell
Separation
Terminal
Propulsion
Firing
inhibited
No
Landed
Mission*
CB
S & T
Release
CB
Aeroshell
S
F
Arm Terminal
Propulsion
Pressurant and
Propellant
Isolation Valves
S
F
No
Aeroshell
Separation
Terminal
Propulsion
Firing
inhibited
No
Landed
Mission*

4-65-2

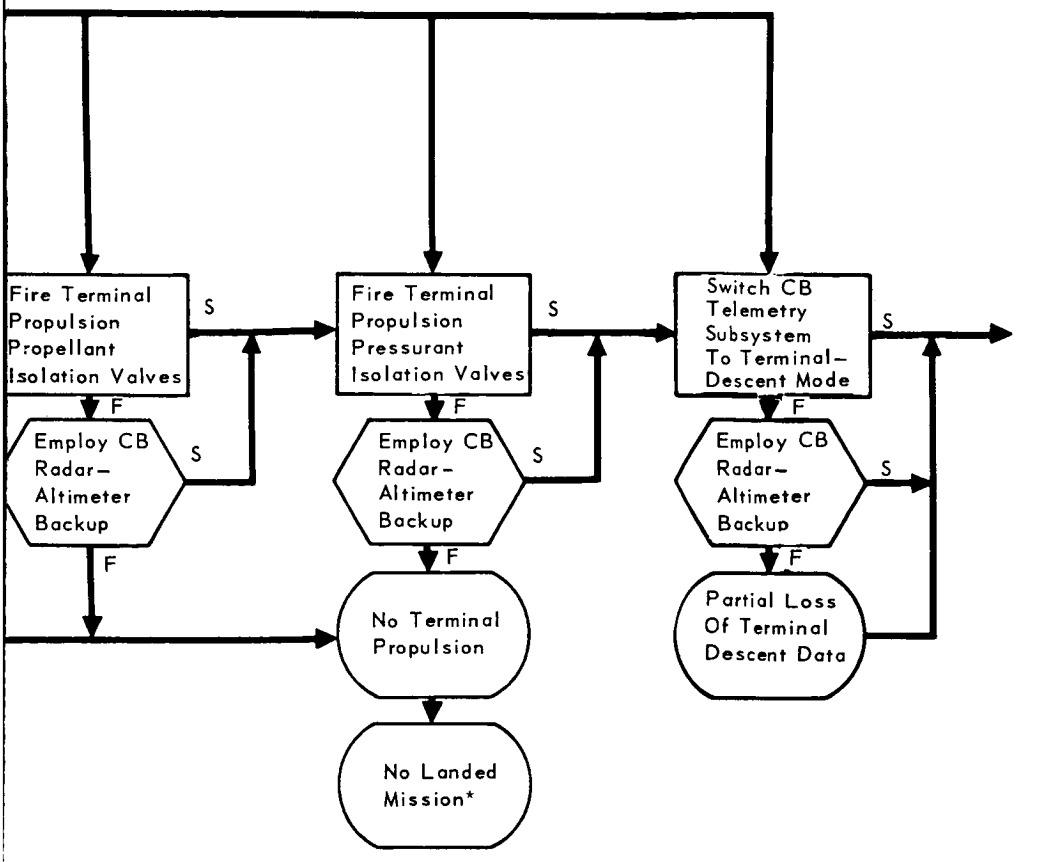
Fire Terminal Propulsion Propellant Isolation Valves
S
F
Employ CB Radar-Altimeter Backup
S
F
Fire Terminal Propulsion Pressurant Isolation Valves
S
F
Employ CB Radar-Altimeter Backup
S
F
No Terminal Propulsion
No Landed Mission*
Switch CB Telemetry Subsystem To Terminal-Descent Mode
S
F
Employ CB Radar-Altimeter Backup
S
F
Partial Loss Of Terminal Descent Data

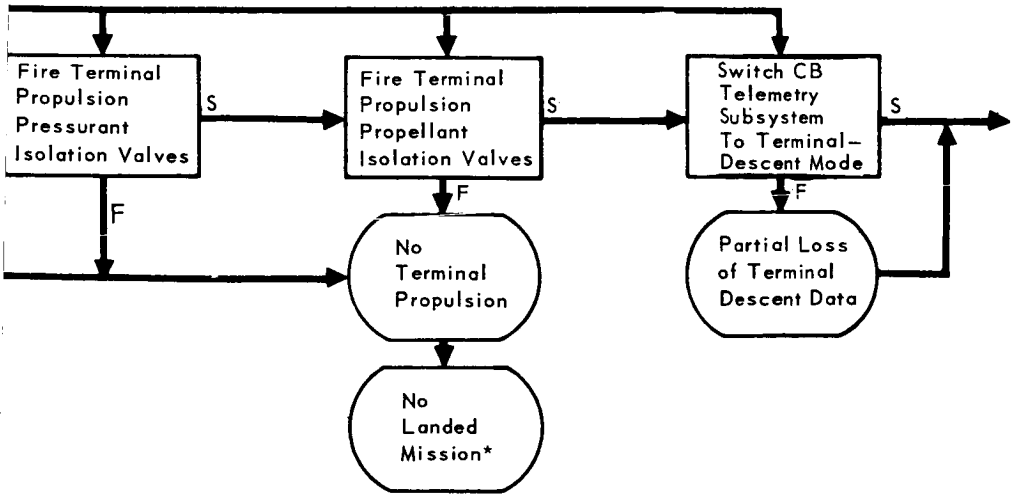
Fire Terminal Propulsion Pressurant Isolation Valves
S
F
Fire Terminal Propulsion Propellant Isolation Valves
S
F
No Terminal Propulsion
No Landed Mission*
Switch CB Telemetry Subsystem To Terminal-Descent Mode
S
F
Partial Loss of Terminal Descent Data

4-65-3

CAPSULE BUS
OPERATIONAL CONTINGENCY MODES (Continued)
LIFTOFF TO END OF CAPSULE BUS MISSION

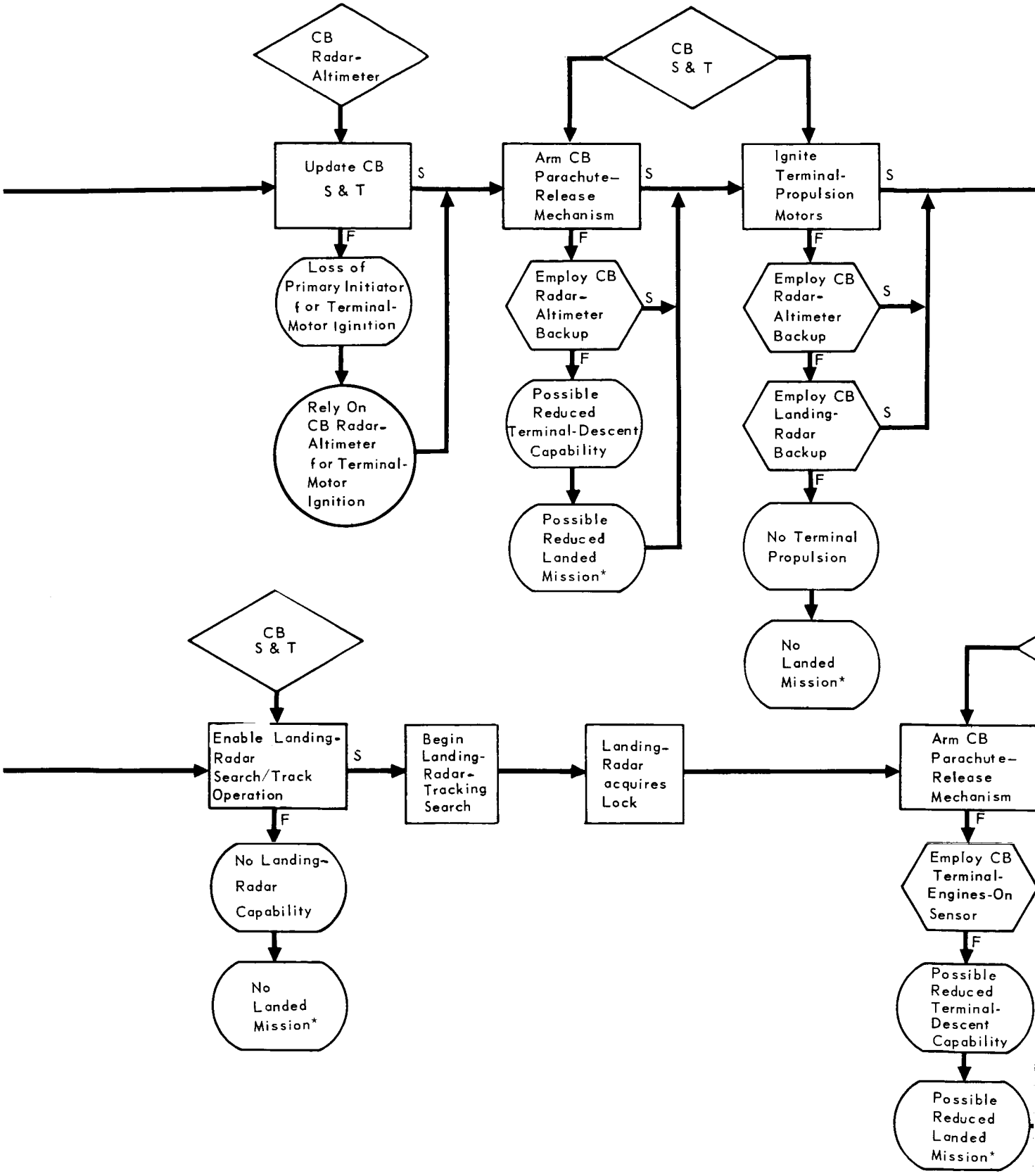

Figure 4-23 (Continued)

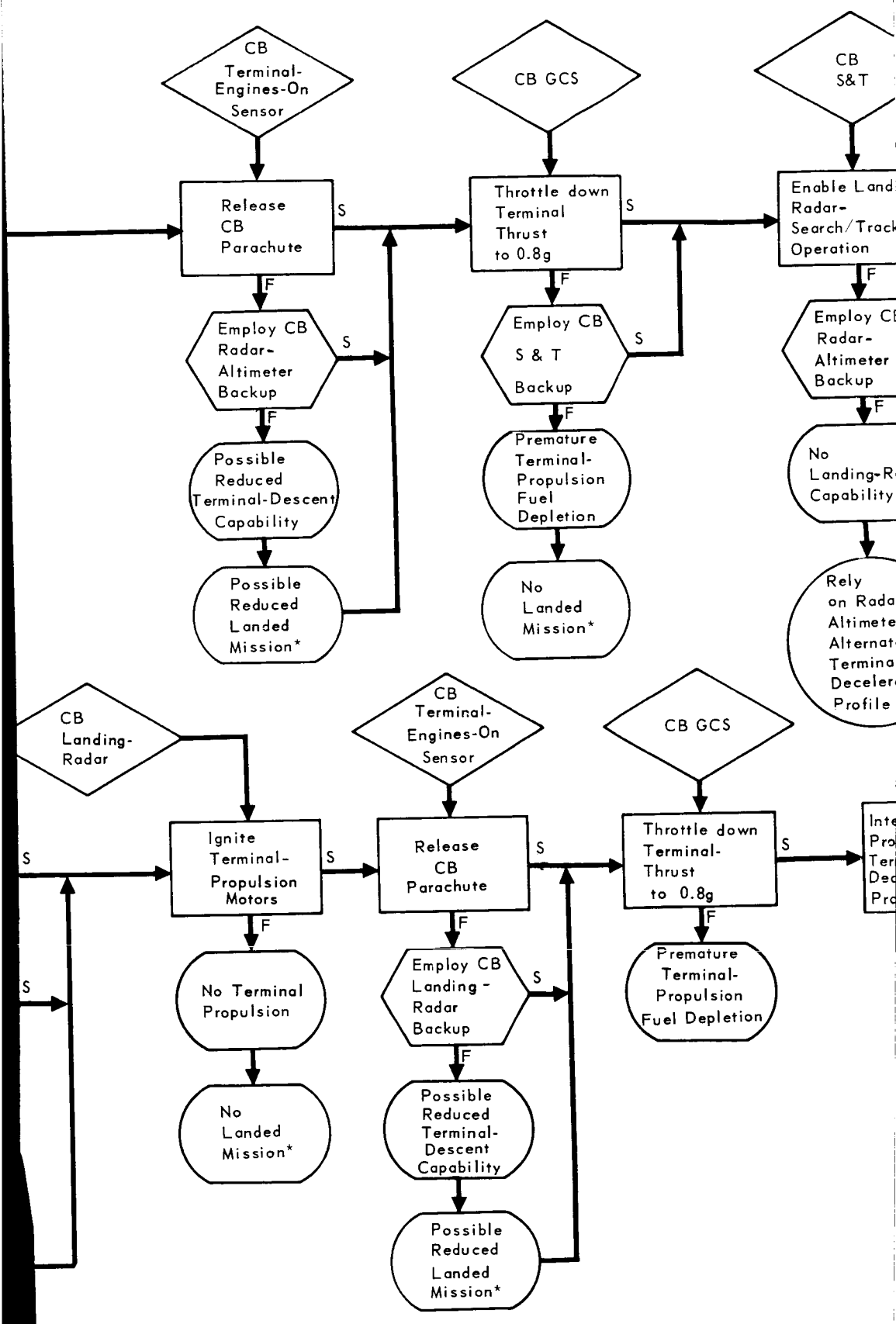
CB Terminal-Engines-On Sensor
Release CB Parachute
S
F
Employ CB Radar-Altimeter Backup
S
F
Possible Reduced Terminal-Descent Capability
Possible Reduced Landed Mission*
CB GCS
Throttle down Terminal Thrust to 0.8g
S
F
Employ CB S & T Backup
S
F
Premature Terminal-Propulsion Fuel Depletion
No Landed Mission*
CB S&T
Enable Land
Radar-Search/Track
Operation
F
Employ CB
Radar-Altimeter Backup
F
No Landing-R
Capability
Rely on Rada
Altimete
Alternat
Termina
Deceler
Profile
CB Landing-Radar
S
S
Ignite Terminal-Propulsion Motors
S
F
No Terminal Propulsion
No Landed Mission*
CB Terminal-Engines-On Sensor
Release CB Parachute
S
F
Employ CB Landing-Radar Backup
S
F
Possible Reduced Terminal-Descent Capability
Possible Reduced Landed Mission*
CB GCS
Throttle down Terminal-Thrust to 0.8g
S
F
Premature Terminal-Propulsion Fuel Depletion
Inte
Pro
Ter
Dec
Pro

4-66-2

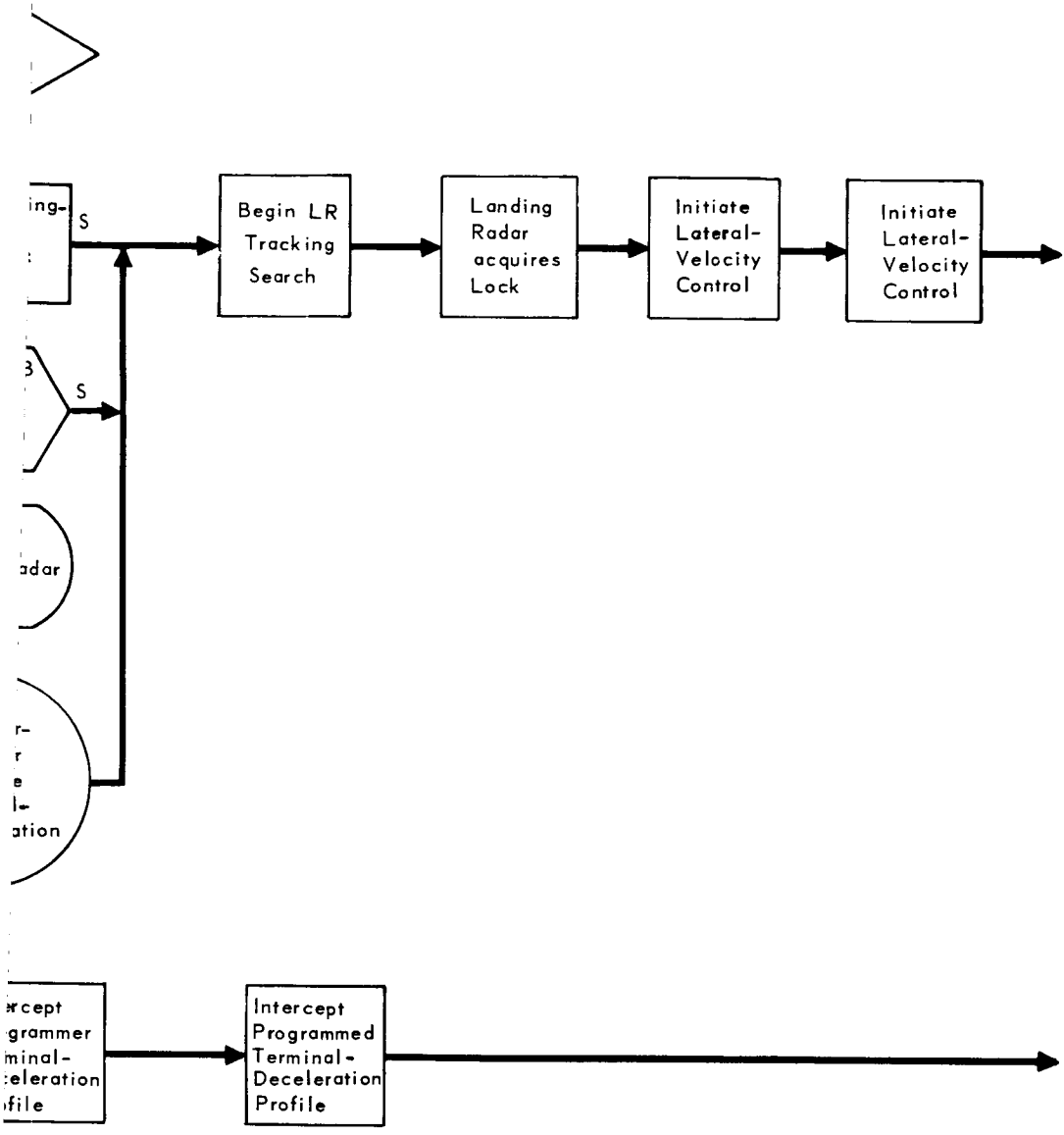
ing-
S
Begin LR Tracking Search
Landing Radar acquires Lock
Initiate Lateral-Velocity Control
Initiate Lateral-Velocity Control
S
adar
ation
rcept
grammer
minal-
eleration
file
Intercept Programmed Terminal-Deceleration Profile

CAPSULE BUS
OPERATIONAL CONTINGENCY MODES (Continued)
LIFTOFF TO END OF CAPSULE BUS MISSION

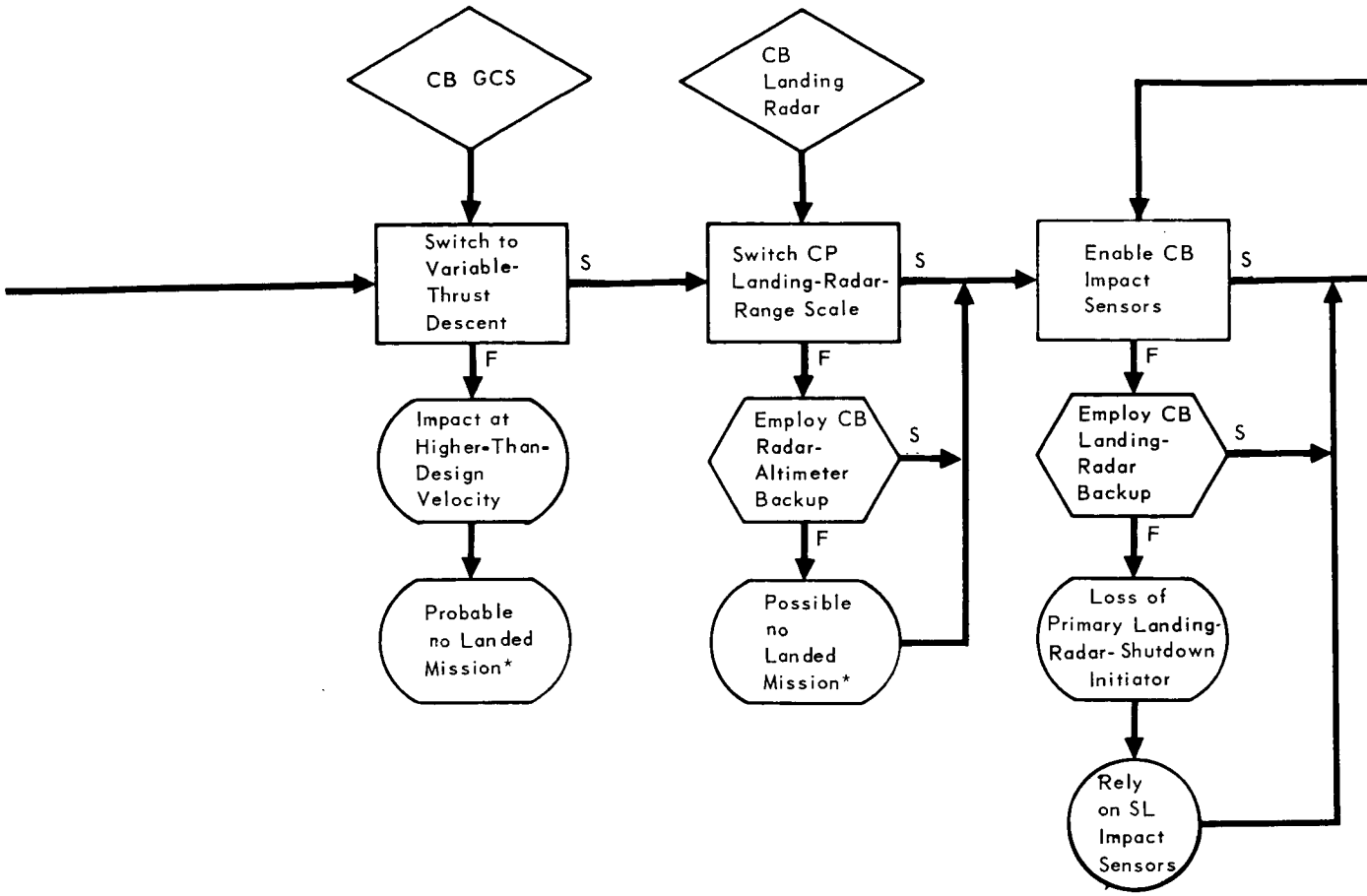

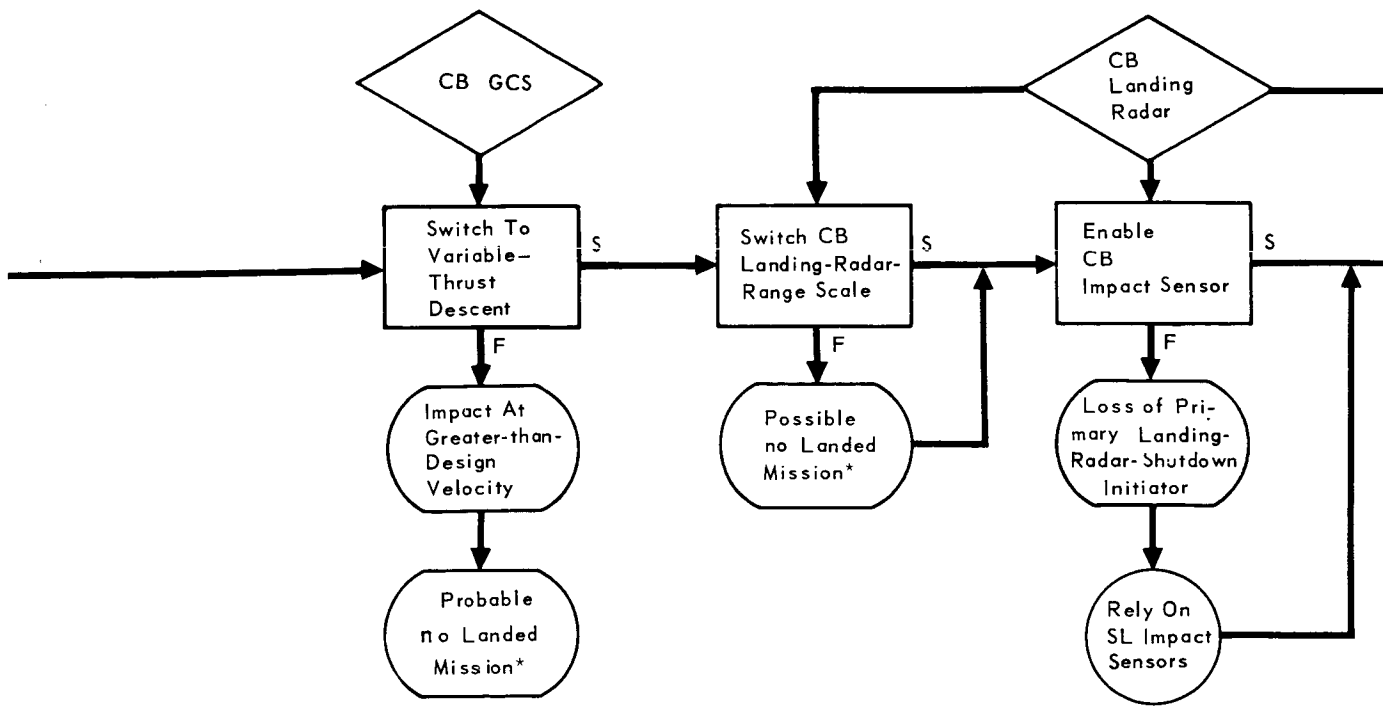

Figure 4–23 (Continued)

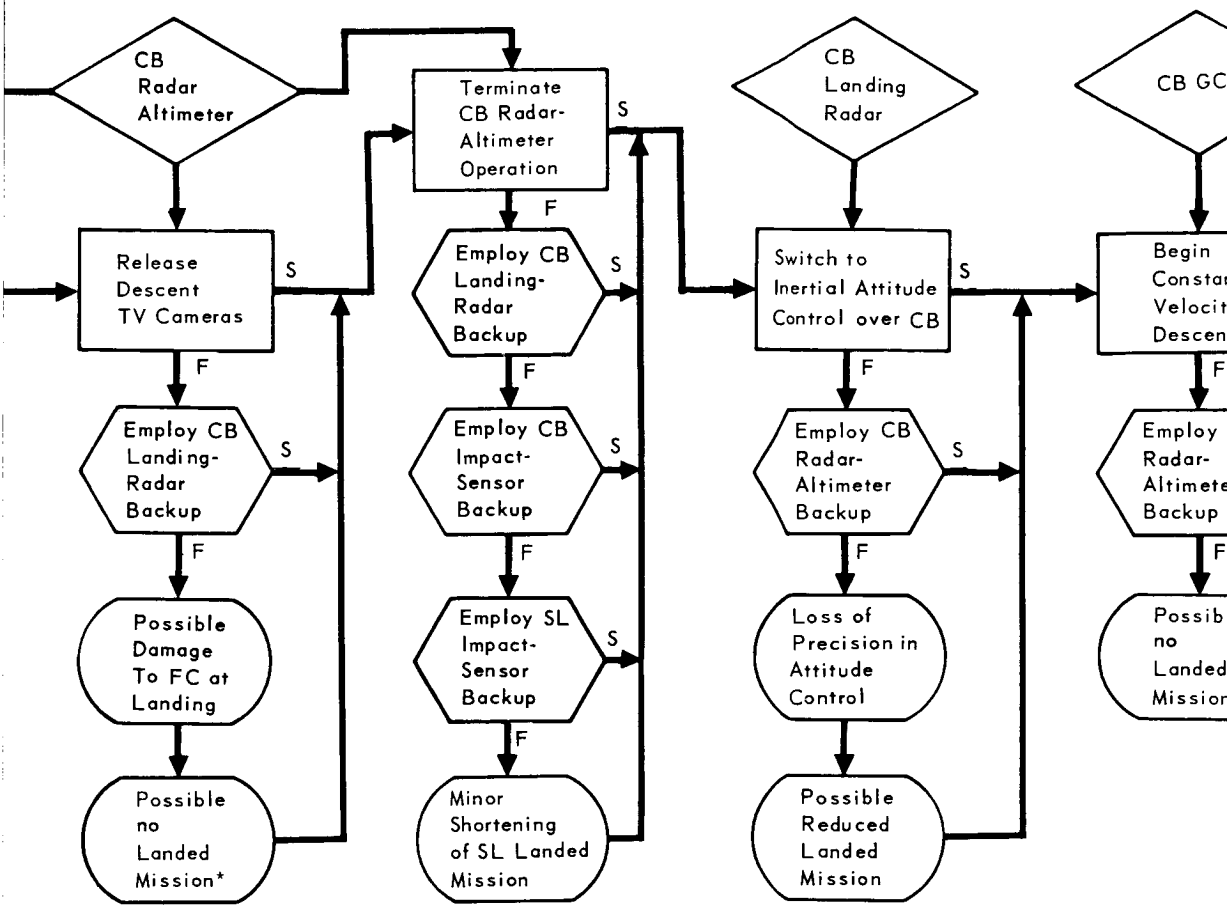
CB Radar Altimeter
Release Descent TV Cameras
S
F
Employ CB Landing-Radar Backup
S
F
Possible Damage To FC at Landing
Possible no Landed Mission*
Terminate CB Radar-Altimeter Operation
S
F
Employ CB Landing-Radar Backup
S
F
Employ CB Impact-Sensor Backup
S
F
Employ SL Impact-Sensor Backup
S
F
Minor Shortening of SL Landed Mission
CB Landing Radar
Switch to Inertial Attitude Control over CB
S
F
Employ CB Radar-Altimeter Backup
S
F
Loss of Precision in Attitude Control
Possible Reduced Landed Mission
CB GC
Begin Constar Velocit Descen
F
Employ Radar-Altimete Backup
F
Possib no Landed Mission

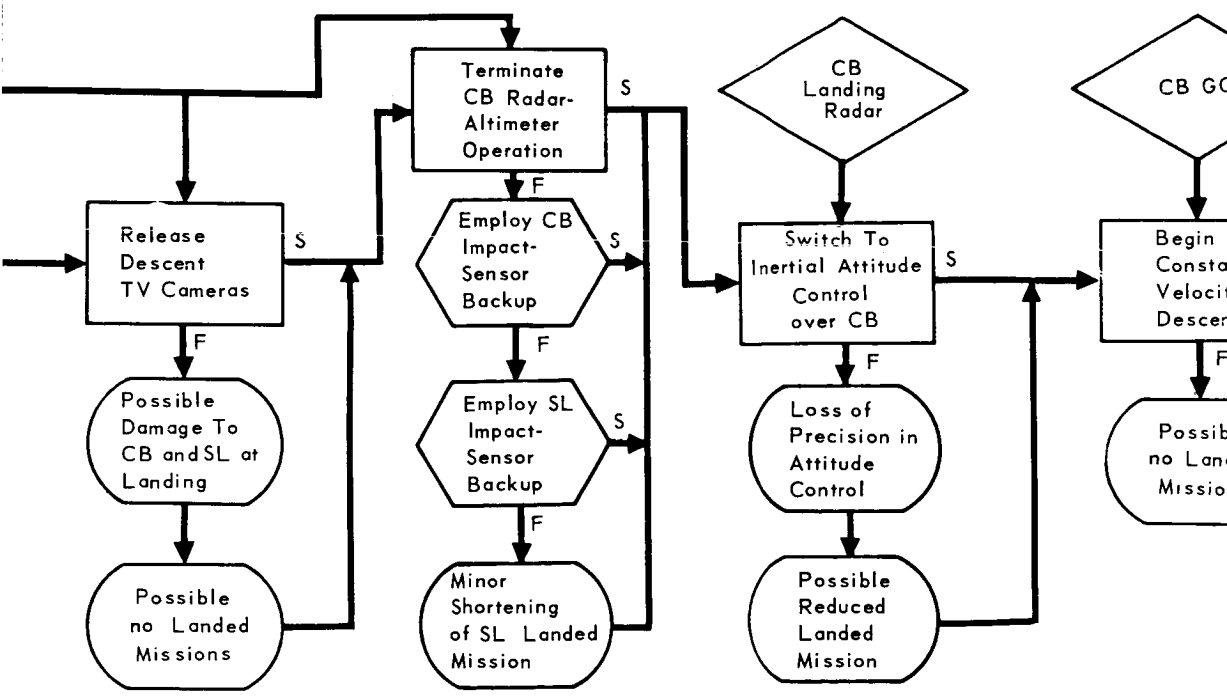
Release Descent TV Cameras
S
F
Possible Damage To CB and SL at Landing
Possible no Landed Missions
Terminate CB Radar-Altimeter Operation
S
F
Employ CB Impact-Sensor Backup
S
F
Employ SL Impact-Sensor Backup
S
F
Minor Shortening of SL Landed Mission
CB Landing Radar
Switch To Inertial Attitude Control over CB
S
F
Loss of Precision in Attitude Control
Possible Reduced Landed Mission
CB GC
Begin Consta Veloci Descer
F
Possib no Lan Missio

4-67-2

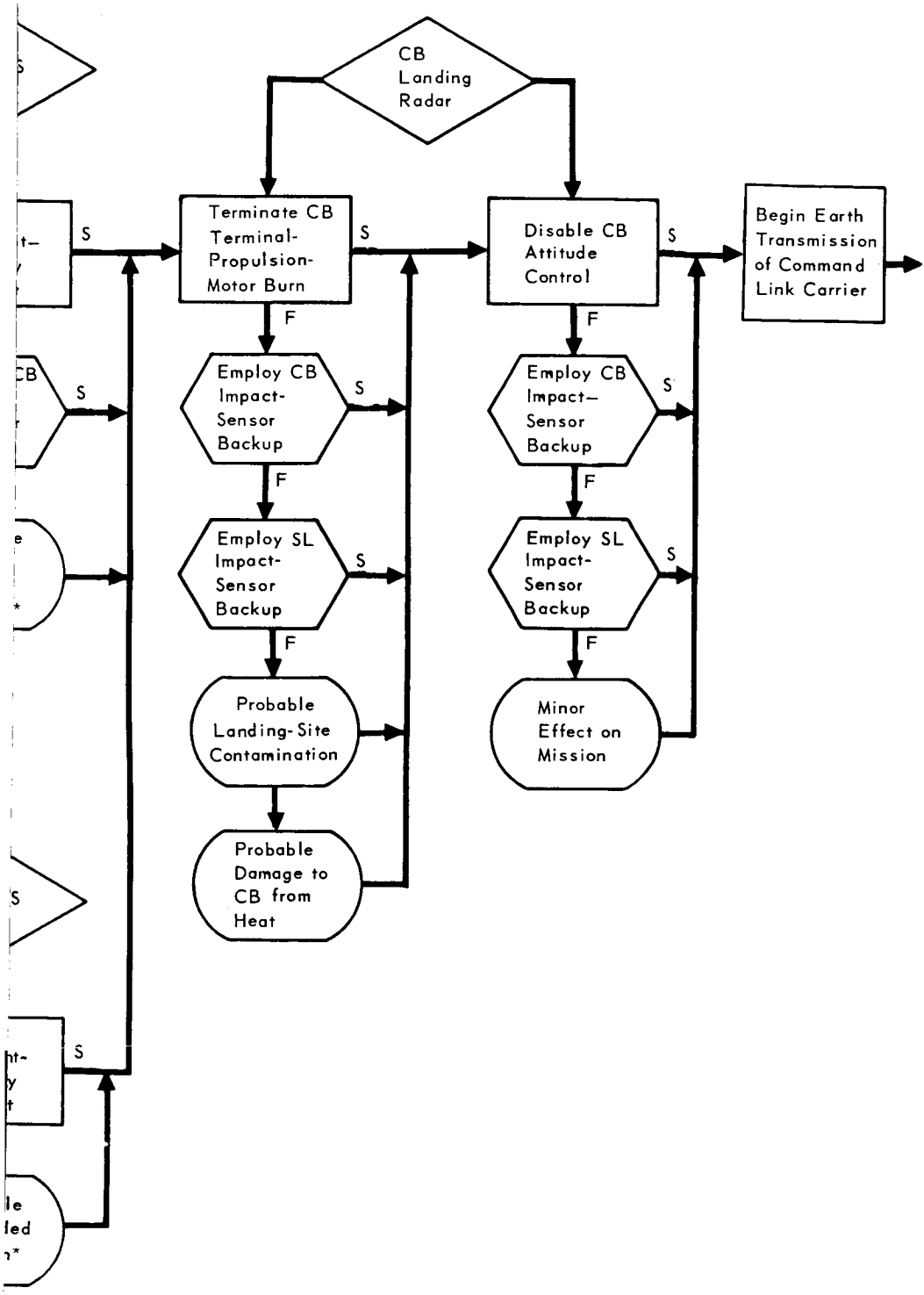
CB Landing Radar
Terminate CB Terminal-Propulsion-Motor Burn
Disable CB Attitude Control
Begin Earth Transmission of Command Link Carrier
Employ CB Impact-Sensor Backup
Employ SL Impact-Sensor Backup
Probable Landing-Site Contamination
Probable Damage to CB from Heat
Employ CB Impact-Sensor Backup
Employ SL Impact-Sensor Backup
Minor Effect on Mission
S
F

CAPSULE BUS
OPERATIONAL CONTINGENCY MODES (Continued)
LIFTOFF TO END OF CAPSULE BUS MISSION

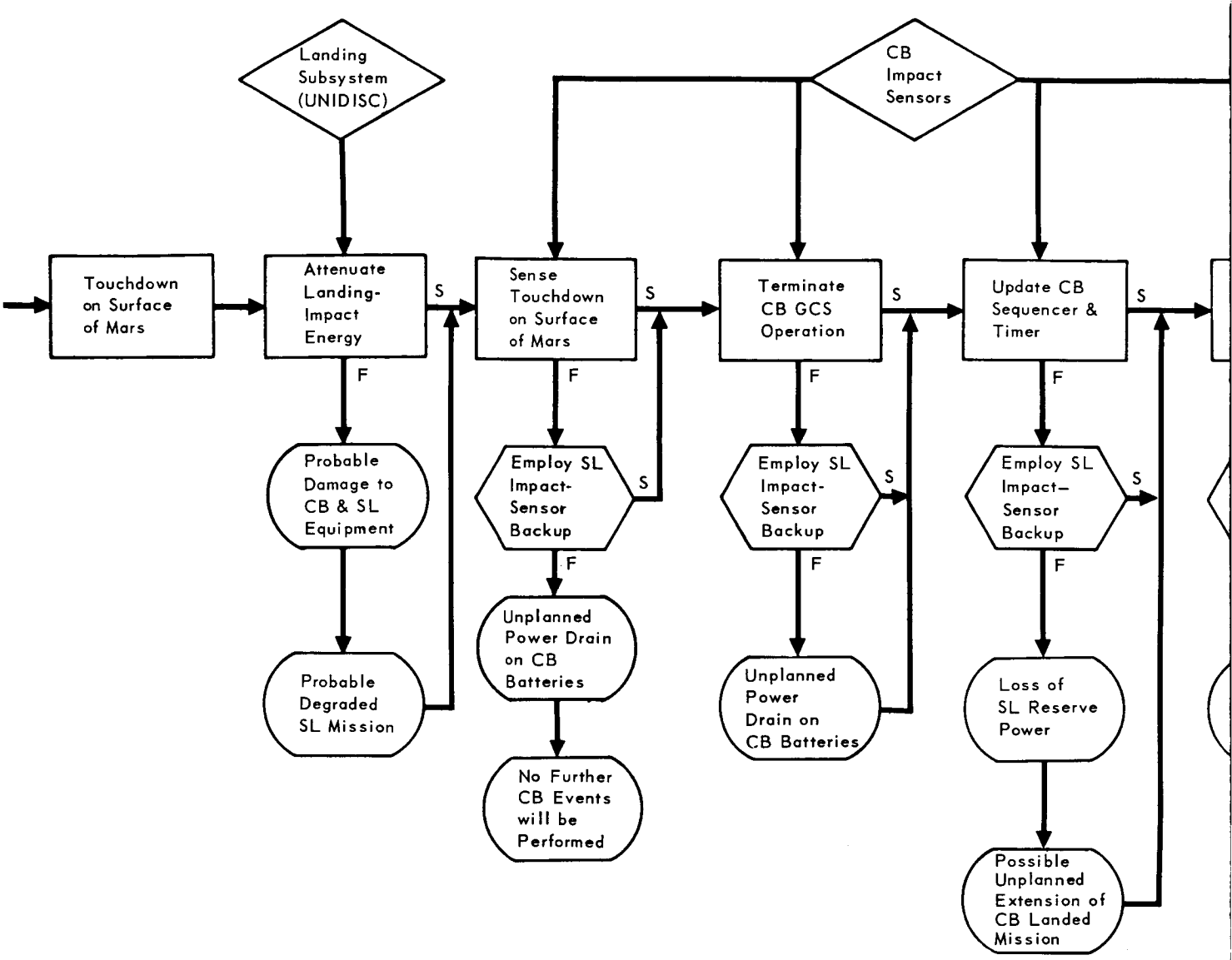

Figure 4-23 (Continued)

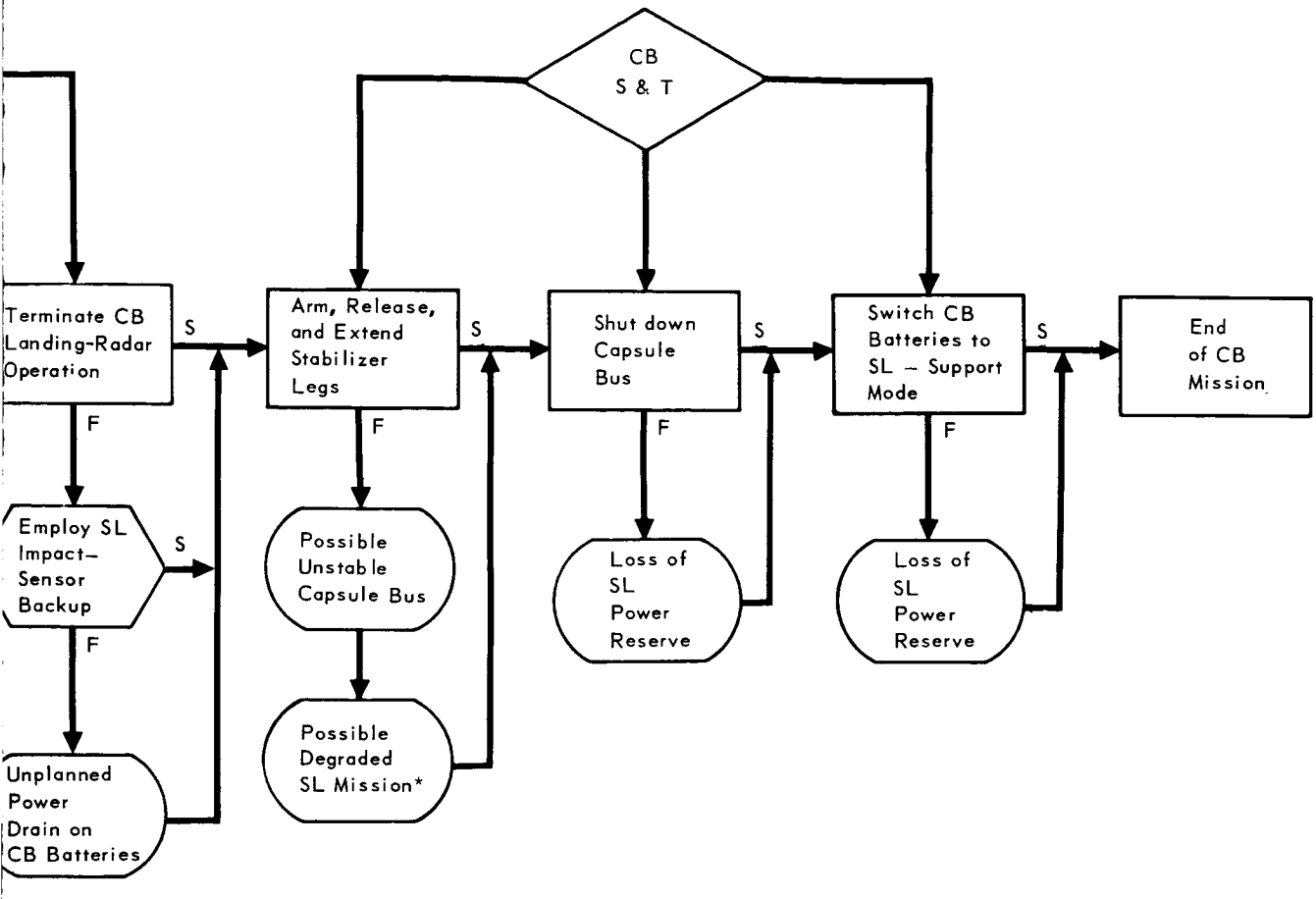
CB
S & T
Terminate CB Landing-Radar Operation
S
F
Arm, Release, and Extend Stabilizer Legs
S
F
Shut down Capsule Bus
S
F
Switch CB Batteries to SL – Support Mode
S
F
End of CB Mission
Employ SL Impact-Sensor Backup
S
F
Unplanned Power Drain on CB Batteries
Possible Unstable Capsule Bus
Possible Degraded SL Mission*
Loss of SL Power Reserve
Loss of SL Power Reserve

SECTION 5

WEIGHT DATA

Nominal weights, weight uncertainties, and substantiating data are presented in the following sections. The nominal weights are presented in Section 5.1, reflecting designs that meet the system requirements specified in this report. Empirically derived contingencies are included in the predicted nominal weights to reflect the preliminary status of the design. Statistical variations in estimation techniques, material properties, and contingencies assigned are considered in the uncertainty analysis (Section 5.2).

As long as requirements and criteria are not changed, the weight can be expected to fall within the limits specified. Specific allowances for changes in system requirements (growth) are not included. However, the total Flight Capsule nominal weight is 220 pounds below the Design Weight of 5000 pounds.

5.1 CAPSULE BUS WEIGHT SUMMARY - Group weight summaries are presented in Figure 5-1 and detail weight summaries in Figure 5-2. The weights shown are predicted nominal values. Contingencies are included, but weight uncertainties are considered separately in Section 5.2. The nominal weight of items which are included in the preferred design to improve mission success and provide standardization is presented in Figure 5-3.

5.2 UNCERTAINTY ANALYSIS - A weight uncertainty analysis was conducted to define, for the present design detail, a plus and minus tolerance on the nominal weight (or weight plus contingency) for the Capsule Bus. The actual measured weight at completion of design and manufacture would be expected to fall within this tolerance band a specified percentage of the time. Uncertainty decreases with the progress of the detail design, since greater detail is possible in the analysis and more of the contingency items are specifically analyzed. This is illustrated in Figure 5-4.

System weight uncertainty was obtained by assigning each individual component a one sigma (standard deviation) uncertainty value and statistically combining these uncertainties (root sum square). This method involved the following assumptions:

a. Component uncertainties are independent.

b. Uncertainties have a normal distribution.

c. The net weight uncertainity (σW) is

$$\sigma W = \sqrt{\sum_{i=1}^{N} (\Delta W_i)^2}$$

where ΔW_i = weight uncertainity of ith component.

CAPSULE BUS
GROUP WEIGHT SUMMARY

	LAUNCH WEIGHT	DEORBIT PROPULSION INITIATION WEIGHT	ENTRY WEIGHT	TERMINAL PROPULSION INITIATION WEIGHT	TOUCH-DOWN WEIGHT
Sterilization Canister & Adapter	543.0				
Deorbit Propulsion	523.3	523.3	18.3	18.3	18.3
Structure	908.8	889.0	889.0	527.0	527.0
Ablative Heat Shield	204.4	204.4	204.4	–	–
Temperature Control	173.9	99.9	99.9	48.0	48.0
Attitude Control	56.2	55.2	51.6	–	–
Guidance & Control	132.7	132.7	132.7	121.9	121.9
Deployable Aero Decellerator	193.8	193.8	193.8	–	–
Terminal Propulsion	576.3	576.3	576.3	576.3	357.6
Telecommunications	146.3	98.7	98.7	98.7	98.7
Sequencer & Timer	50.8	26.9	26.9	26.9	26.9
Electrical Power	170.3	123.0	123.0	123.0	123.0
Capsule Bus Total Weight	3679.8	2923.2	2414.6	1540.1	1321.4
Surface Laboratory	1096.1	1096.1	1096.1	1093.5	1093.5
Total Flight Capsule	4775.9	4019.3	3510.7	2633.6	2414.9

Figure 5–1

CAPSULE BUS DETAIL WEIGHT SUMMARY

	LAUNCH WEIGHT	DEORBIT PROPULSION INITIATION WEIGHT	ENTRY WEIGHT	TERMINAL PROPULSION INITIATION WEIGHT	TOUCH-DOWN WEIGHT
Sterilization Canister & Adapter	(543.0)	–	–	–	–
Fwd Canister Structure	–	–	–	–	–
Field Joint Ring	41.7	–	–	–	–
Field Joint Misc	5.0	–	–	–	–
Skins, Stringers, Rings	126.4	–	–	–	–
Base Canister	–	–	–	–	–
Field Joint and Separation Ring	58.6	–	–	–	–
Pyrotechnics and Field Joint Misc	47.1	–	–	–	–
Aft Canister Structure	197.6	–	–	–	–
Pressure and Vent System	29.0	–	–	–	–
Adapter Truss and Attachments	37.6	–	–	–	–
Deorbit Propulsion	(523.3)	(523.3)	(18.3)	(18.3)	(18.3)
Propellant (solid)	407.0	407.0	–	–	–
Inert Motor					
Case	29.0	29.0	–	–	–
Nozzle	24.0	24.0	–	–	–
Insulation	12.0	12.0	–	–	–
Igniter	4.0	4.0	–	–	–
Thrust Termination	15.0	15.0	–	–	–
Miscellaneous	1.0	1.0	–	–	–
Attach Ftgs. & Jettison	25.5	25.5	12.5	12.5	12.5
Wire & Wire Instl.	3.2	3.2	3.2	3.2	3.2
Pyro Switch & Relay	1.6	1.6	1.6	1.6	1.6
Pyro Miscellaneous	1.0	1.0	1.0	1.0	1.0
Structure	(908.8)	(889.0)	(889.0)	(527.0)	(527.0)
Entry Shell	(332.0)	(332.0)	(332.0)	–	–
Nose Cap (Less ceramic cover)	19.1	19.1	19.1	–	–
Conical Shell	158.9	158.9	158.9	–	–
Rings	130.0	130.0	130.0	–	–
Lander Support Structure	24.0	24.0	24.0	–	–
Lander - Impact System	(527.0)	(527.0)	(527.0)	(527.0)	(527.0)
Energy Absorber	18.0	18.0	18.0	18.0	18.0
Impact Shoe	245.0	245.0	245.0	245.0	245.0

Figure 5–2

CAPSULE BUS DETAIL WEIGHT SUMMARY (Continued)

	LAUNCH WEIGHT	DEORBIT PROPULSION INITIATION WEIGHT	ENTRY WEIGHT	TERMINAL PROPULSION INITIATION WEIGHT	TOUCH-DOWN WEIGHT
Structure (Cont.)					
Lander - Impact System (Cont.)					
Landing Platform	120.0	120.0	120.0	120.0	120.0
Radial Beams	20.0	20.0	20.0	20.0	20.0
Aeroshell, Adapter & Deorbit Truss Ftgs.	20.0	20.0	20.0	20.0	20.0
Box Beam (Radial - Inter)	33.0	33.0	33.0	33.0	33.0
Ratchet, Mech. & Ftgs.	18.0	18.0	18.0	18.0	18.0
Stabilizers - Post Impact	3.0	3.0	3.0	3.0	3.0
Fasteners and Miscellaneous	25.0	25.0	25.0	25.0	25.0
Secondary Beams, Channels, Misc.	25.0	25.0	25.0	25.0	25.0
Separation Joints - (Incl. Pyro & Circuitry)	(49.8)	(30.0)	(30.0)	–	–
Adapter-Entry Spacecraft	19.8	–	–	–	–
Aeroshell-Lander	30.0	30.0	30.0	–	–
Heat Shield	(204.4)	(204.4)	(204.4)	–	–
Ablative Material	145.1	145.1	145.1	–	–
Adhesive	24.3	24.3	24.3	–	–
Edge Ring	15.0	15.0	15.0	–	–
Ceramic Nose Cap	20.0	20.0	20.0	–	–
Temperature Control	(173.9)	(99.9)	(99.9)	(48.0)	(48.0)
Super Insulation and Attachments	71.0	–	–	–	–
Thermal Coatings	18.4	18.4	18.4	–	–
Thermal Curtain	30.0	30.0	30.0	–	–
Equipment Heaters and Misc.	3.5	2.5	2.5	2.0	2.0
Insulation on Equipment	51.0	49.0	49.0	46.0	46.0
Attitude Control	(56.2)	(55.2)	(51.6)	–	–
Propellant - Usable	6.6	5.6	2.0	–	–
- Trapped (6%)	0.8	0.8	0.8	–	–
Propellant Tank	5.0	5.0	5.0	–	–
Press Assy.	6.3	6.3	6.3	–	–
Valves, Manifolds & Tubing	7.3	7.3	7.3	–	–
T.C.A.	14.4	14.4	14.4	–	–
Mounts	6.2	6.2	6.2	–	–
Wire & Connectors	9.6	9.6	9.6	–	–

Figure 5–2 (Continued)

CAPSULE BUS DETAIL WEIGHT SUMMARY (Continued)

	LAUNCH WEIGHT	DEORBIT PROPULSION INITIATION WEIGHT	ENTRY WEIGHT	TERMINAL PROPULSION INITIATION WEIGHT	TOUCH-DOWN WEIGHT
Guidance & Control	(132.7)	(132.7)	(132.7)	(121.9)	(121.9)
Landing Radar					
Antenna Assy.	25.0	25.0	25.0	25.0	25.0
Electronics Assy.	15.0	15.0	15.0	15.0	15.0
Radar Altimeter					
Electronics (with internal antenna)	24.0	24.0	24.0	24.0	24.0
Antenna (in Aeroshell Nose Cap)					
Ber. Heat Sink	.6	.6	.6	–	–
Antenna (plate)	9.3	9.3	9.3	–	–
Cone	.4	.4	.4	–	–
Guidance & Control					
IMU & Support Elect.	14.0	14.0	14.0	14.0	14.0
Computer	16.0	16.0	16.0	16.0	16.0
Power Supply	7.0	7.0	7.0	7.0	7.0
Wiring & Connectors	15.4	15.4	15.4	14.9	14.9
Mounts & Supports	6.0	6.0	6.0	6.0	6.0
Deployable Aerodynamic Decellerator	(193.8)	(193.8)	(193.8)	–	–
Parachute Canopy and Lines	110.0	110.0	110.0	–	–
Riser	14.0	14.0	14.0	–	–
Catapult	5.6	5.6	5.6	–	–
Attachment Fittings	22.4	22.4	22.4	–	–
Special Suspension, Reefing & Disconnects (includes Circuitry)	28.4	28.4	28.4	–	–
Parachute Container	13.4	13.4	13.4	–	–
Terminal Propulsion	(576.3)	(576.3)	(576.3)	(576.3)	(357.6)
Engines (4)	90.0	90.0	90.0	90.0	90.0
Solenoid Valves (4)	36.0	36.0	36.0	36.0	36.0
Throttle Valves (8)	22.4	22.4	22.4	22.4	22.4
Servo Actuators (4)	11.7	11.7	11.7	11.7	11.7
Propellant - Usable	231.7	231.7	231.7	231.7	13.0
- Unusable 6%	14.0	14.0	14.0	14.0	14.0

Figure 5–2 (Continued)

CAPSULE BUS DETAIL WEIGHT SUMMARY (Continued)

	LAUNCH WEIGHT	DEORBIT PROPULSION INITIATION WEIGHT	ENTRY WEIGHT	TERMINAL PROPULSION INITIATION WEIGHT	TOUCH-DOWN WEIGHT
Terminal Propulsion (Cont.)					
Propellant System					
Helium	2.8	2.8	2.8	2.8	2.8
Helium Tank	28.4	28.4	28.4	28.4	28.4
Fuel Tank	10.3	10.3	10.3	10.3	10.3
Oxid. Tank	11.8	11.8	11.8	11.8	11.8
Fluid Control & Dist.	83.5	83.5	83.5	83.5	83.5
Mounts & Installations					
Engine Mounts	12.0	12.0	12.0	12.0	12.0
Helium Tank Mounts	1.9	1.9	1.9	1.9	1.9
Fuel Tank Mounts	4.2	4.2	4.2	4.2	4.2
Oxid. Tank Mounts	5.6	5.6	5.6	5.6	5.6
Wiring & Connectors	10.0	10.0	10.0	10.0	10.0
Tele-Communications	(146.3)	(98.7)	(98.7)	(98.7)	(98.7)
Telemetry Subsystem					
Cruise Commutator	1.6	–	–	–	–
Transducers & Misc.	15.9	–	–	–	–
E.S.P. Parasitic Antenna	7.0	–	–	–	–
C.B.S. Parasitic Antenna	7.0	–	–	–	–
Radio Subsystem	11.0	11.0	11.0	11.0	11.0
Antenna Subsystem	6.0	6.0	6.0	6.0	6.0
Telemetry Subsystem					
Telemetry Equipment	9.0	9.0	9.0	9.0	9.0
Instrumentation Equipment	34.0	34.0	34.0	34.0	34.0
Data Storage Subsystem	7.5	7.5	7.5	7.5	7.5
Command Decoder	0.7				
Wiring and Connectors	39.9	27.0	27.0	27.0	27.0
Mounting Provisions	6.7	4.2	4.2	4.2	4.2
Sequencer, Timer, and Test Programmer	(50.8)	(26.9)	(26.9)	(26.9)	(26.9)
Sequencing - Dual Programmer	1.5	–	–	–	–
Sequencer and Timer Subsystem	13.0	13.0	13.0	13.0	13.0
Test Programmer	10.0	–	–	–	–
Wiring and Connectors	24.5	13.0	13.0	13.0	13.0
Mounting Provisions	1.8	.9	.9	.9	.9

Figure 5–2 (Continued)

CAPSULE BUS DETAIL WEIGHT SUMMARY (Continued)

	LAUNCH WEIGHT	DEORBIT PROPULSION INITIATION WEIGHT	ENTRY WEIGHT	TERMINAL PROPULSION INITIATION WEIGHT	TOUCH-DOWN WEIGHT
Electrical Power	(170.3)	(123.0)	(123.0)	(123.0)	(123.0)
Battery	10.5	–	–	–	–
Battery Charger	1.4	–	–	–	–
Power Controller	8.0	–	–	–	–
Power Distribution Module	4.0	–	–	–	–
DC to DC Converters (2)	8.0	–	–	–	–
Battery (1)	64.0	64.0	64.0	64.0	64.0
Battery Charger	3.0	3.0	3.0	3.0	3.0
Auto Activated Batteries (3)	24.0	24.0	24.0	24.0	24.0
Power Switching and Logic Unit	11.0	11.0	11.0	11.0	11.0
Wiring and Connectors					
Batteries and Chargers	5.1	4.6	4.6	4.6	4.6
Distribution	23.0	11.0	11.0	11.0	11.0
Mounting Provisions	8.3	5.4	5.4	5.4	5.4
Capsule Bus Total Weight	3679.8	2923.2	2414.6	1540.1	1321.4

Figure 5–2 (Continued)

UTILIZATION OF WEIGHT MARGINS – ITEMS INCLUDED IN THE PREFERRED DESIGN

SYSTEM	Δ WT.	ITEM
Capsule Bus	88.1	Total weight margin utilized
	(49.0)	Total redundancies
Sterilization Canister	15.0	Redundant shielded mild detonating cord assembly – fwd canister release
Deorbit Propulsion	1.5	Dual cartridge explosive bolts – deorbit motor release
Structure	3.0	Dual cartridge explosive bolts – capsule bus/ adapter separation
	1.5	Dual cartridge explosive bolts – Aeroshell release
Guidance and Control		
Landing Radar	5.0	Redundant fourth beam
Radar Altimeter	4.3	Redundant receivers and trackers
	1.4	Redundant transmitter tubes
Deployable Aero Decelerator	1.5	Dual cartridge explosive bolts – parachute release
	.3	Redundant initiators in parachute catapult
	.3	Redundant reefing cutters
Tele-Communications	.6	Redundant adapter cruise commutator, data switches, switch drivers, and cruise encoder
	.3	Redundant CBS cruise monitor control data switches and switch drivers
	.3	Interleave low rate CBS data on ESP radio link
	.2	Redundant CBS cruise encoder
	.5	Redundant CBS cruise commutator and switching
Electrical Power	.5	Provide sensing of CBS backup need
	.8	Provide CBS backup need relay
	8.0	Redundant squib battery
	4.0	Redundant DC to DC converter regulators
	(18.3)	Standarization of missions
Deorbit Propulsion	17.0	Motor sized for 1979, off loaded for 1973
Attitude Control	1.3	Reaction control subsystem sized for 1979
	(20.0)	Additional diagnostic telemetry
Test Programmer	10.0	Programmer
	10.0	Mounting and wiring provisions
Electrical Power	(.8)	Mission Extension
	.8	Provide SLS Mission Extension Relay

Figure 5–3

IDEALIZED VARIATION OF PREDICTED MASS PROPERTY WITH DESIGN STATUS

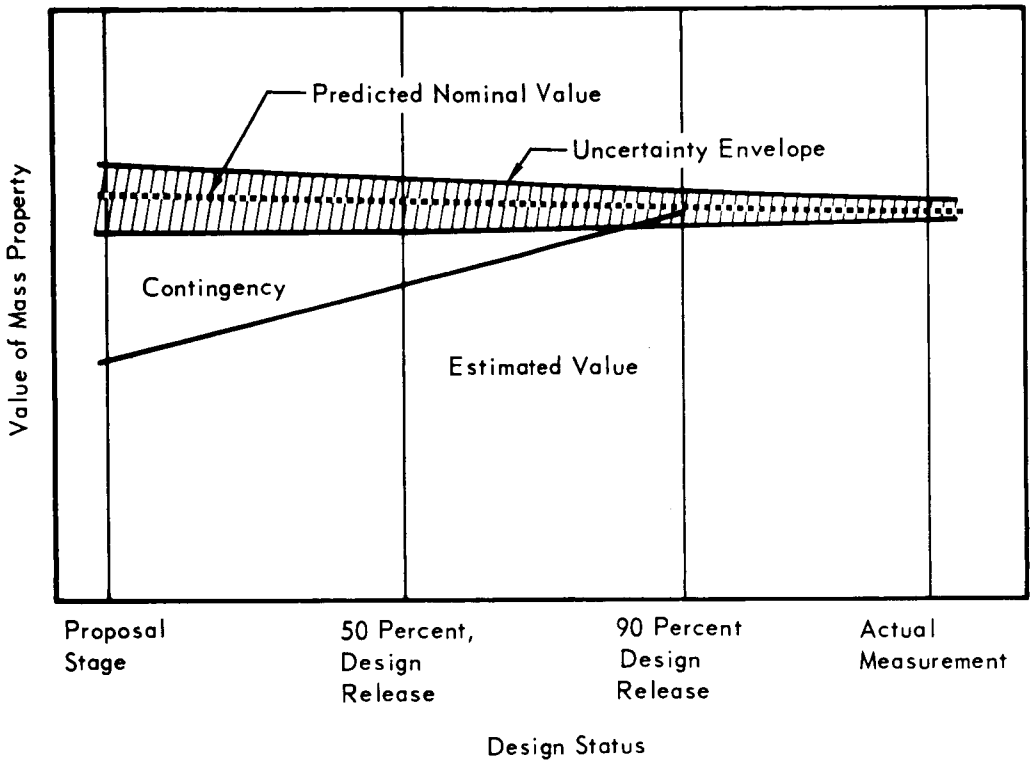

Figure 5–4

The individual uncertainties were obtained by one of two methods. For empirical estimates, the tolerance intervals of the correlated data points were used. For estimates based on preliminary design analysis, values were derived from 130 data points from previous McDonnell programs. The results are shown in Figure 5-5.

Capsule Bus uncertainties for launch, entry, and touchdown weights are shown in Figure 5-6.

5.3 QUALIFICATION OF DATA - The approaches used to predict the nominal weights presented in Section 5.1 are discussed in this section. These approaches can be summarized as follows:

a. Weight is estimated, or calculated, based on preliminary design analyses. Empirically derived contingencies are then added, considering the status of design at the time of the estimate, i.e.,preliminary layout, detail layout, "off-the-shelf", slightly modified, etc. (See Figure 5-7).

b. Weight is estimated using semi-empirical weight estimation techniques. Since these techniques include correlation with actual hardware, no additional contingency is added.

A weight estimate for a particular subsystem may involve a combination of these approaches.

In this analysis the structure, thermal control, telecommunications, sequencer and timer, test programmer and electrical power weights were derived using Approach a. (above). The wiring and connector weights were based on Mercury, ASSET, and Gemini experience, using Approach b. The equipment mounting provision weights were derived using Approach b.

The weights of pyrotechnic devices are included in the subsystem weight.

5.4 SPACECRAFT-MOUNTED EQUIPMENT - It is assumed that the spacecraft will provide space and installation provisions for the equipment included in Figure 5-8. Weights for this equipment are not included in the Flight Capsule weight.

5.5 CAPSULE BUS ITEMS LEFT ON THE AFT CANISTER/ADAPTER AFTER SEPARATION - The Performance and Design Requirements for the 1973 VOYAGER mission establish that the items remaining with the spacecraft after Capsule Bus separation should not exceed 500 pounds. Figure 5-9 lists the items remaining with the spacecraft of which 36.3 pounds are above the guideline. Our preferred design includes a simple separation joint between the forward and aft canister using highly reliable parts and a system to retain the products of separation. Using this approach, an uncomplicated forward canister is separated from the Capsule Bus System. If the customer requires conformance to the guideline and will not permit the increased

TYPICAL UNCERTAINTIES

Category	NUMBER OF SAMPLES	UNCERTAINTY (1σ)
Structure		
Detailed Layout-Stress Analyzed	42	.18
Preliminary Layout-Little or No Analysis	17	.43
Equipment		
Off the Shelf or Slightly Modified	43	.19
New Development	13	.26
System Installation	15	.45

Figure 5–5

MASS PROPERTY UNCERTAINTIES – PREFERRED DESIGN

1 STANDARD DEVIATION Δ's

CONDITION	CAPSULE BUS	TOTAL FLIGHT CAPSULE
Launch	± 256.8	± 268.5
Entry	± 192.3	± 207.7
Touchdown	± 129.5	± 151.5

Figure 5–6

TYPICAL CONTINGENCY FACTORS

DESCRIPTION	CONTINGENCY FACTOR
Structure	
Detailed Layout-Stress Analyzed	1.00
Preliminary Layout-Little or No Analysis	1.28
Equipment	
Off the Shelf or Slightly Modified	1.09
New Development	1.33
System Installation	1.32

Figure 5–7

SPACECRAFT MOUNTED EQUIPMENT

	WEIGHT (LB)
High Rate Radio Subsystem	9.0
High Rate Antenna Subsystem	1.0
High Rate Data Storage Subsystem	8.0
Directional Coupler	0.8
Attenuator	0.5
Low Rate Radio Subsystem	9.0
Low Rate Antenna Subsystem	6.0
Low Rate Data Storage Subsystem	7.0
Directional Coupler	0.8
Attenuator	0.5
Insulation Blanket (Between Spacecraft and Canister)	15.0
Total	57.6

Figure 5–8

ITEMS LEFT WITH THE SPACECRAFT

	WEIGHT (LB)
Sterilization Canister and Adapter	(369.9)
Base Canister Structure	197.6
Adapter Truss and Attachment Rings	37.6
Pressure and Vent System	29.0
Base Canister Field Joint and Separation Ring	58.6
Pyrotechnics and Field Joint Miscellaneous	47.1
Structure	(19.8)
Separation Joint – Adapter/Capsule Bus	19.8
Temperature Control	(28.0)
Super Insulation and Attachment	28.0
Tele-Communications	(47.4)
Telemetry Subsystem	
Cruise Commutator	1.6
Transducers and Miscellaneous	15.9
E.S.P. Parasitic Antenna	7.0
CIB.S. Parasitic Antenna	7.0
Command Decoder	0.7
Wiring and Connectors	12.9
Mounting Provisions	2.3
Sequencer, Timer and Test Programmer	(23.9)
Sequencing – Dual Programmer	1.5
Test Programmer	10.0
Wiring and Connectors	11.5
Mounting Provisions	0.9
Electrical Power	(47.3)
Battery	10.5
Battery Charger	1.4
Power Controller	8.0
Power Distribution Module	4.0
DC to DC Converters (2)	8.0
Wiring and Connectors	
Batteries and Chargers	0.5
Distribution	12.0
Mounting Provisions	2.9
Total Weight Left with Spacecraft	536.3
Less: Base Canister Field Joint and Separation	–58.6
Pyrotechnics and Field Joint Miscellaneous	–47.1
Plus: Field Joint Ring – Forward Canister	41.7
Field Joint Miscellaneous – Forward Canister	5.0
Total Weight – Alternate Design	477.3

Figure 5–9

residual weight, our design can be modified to reverse location of some components and remain below the 500 pounds. This would result in a more complicated separation joint, more difficulty in mating and launch checkout, and slightly less reliability.

SECTION 6

SYSTEM RELIABILITY

Reliability has been a key discipline in the VOYAGER system design for the development, integration, and selection processes of our preferred concept. "First time success" and capability for degraded mode operation were the key objectives that guided the reliability analyses. Each design concept was examined in detail to determine its contribution toward achieving these objectives. This was accomplished by utilizing four analytical and modeling techniques.

a. Failure Mode, Effect, and Criticality Analyses

b. Reliability-Weight-Effectiveness Analyses

c. Mission Effectiveness Model

d. Conceptual tradeoff studies

The most significant of these used by engineering reliability were the single-point failure modes, failure effects, and failure criticality analyses. With this technique, critical or potential single-point failure modes were identified early for the various engineering concepts. These analyses indicated the need for specific redundancies so that no potential single failure mode could have a catastrophic effect on the mission, and to assure at least a degraded mode of operation.

The selection of the specific type of redundancy (functional, multi-channel, or block) was guided by the failure criticality of the mission event or equipment function. Incorporation of specific redundancies was influenced by the availability of a prime resource-weight. The reliability-weight-effectiveness analyses resulted in the incorporation of redundancy in the most effective manner to meet the specific mission objectives. The probability of success for our Capsule Bus preferred concept is estimated at 0.830.

Recognition of equipment sensitivity to long-life storage (in transit) environment was taken into consideration in our design. Suggested design concepts were evaluated to assure their compatibility with the environments of decontamination, sterilization, and postulated Mars atmosphere and surface properties.

The study revealed that the following reliability program elements must receive increased major attention throughout the program:

a. Detailed failure mode, effect, and criticality analyses

b. Specially planned parts and materials program

c. Positive failure evaluation and corrective action

d. Comprehensive design reviews

6.1 VOYAGER RELIABILITY CONSTRAINTS - The VOYAGER reliability program constraints were identified by a study of the mission objectives, environmental requirements and predictions, mission profile analysis, total program constraints, and conceptual design studies. The results of this study emphasized the following four constraints which received major reliability attention.

a. No catastrophic single failure mode

b. Long-life storage

c. Unique environmental factors

d. Degraded mode capability

6.1.1 No Catastrophic Single Failure Mode - The VOYAGER Capsule Systems Constraints and Requirements Document specifies a design requirement that no potential single failure mode shall cause a catastrophic effect on the mission. Compliance with this requirement necessitated the idenfitication, evaluation and resolution of all potential catastrophic failure modes. This was accomplished by using results of our failure mode, effect, and criticality analyses.

6.1.2 Long-Life Storage - Conservative designs, including possible material degradation, influenced our concept selections. Specific details are discussed within the functional descriptions of each subsystem.

6.1.3 Unique Environmental Factors - The effects of decontamination, sterilization, and the Martian atmosphere and surface properties are unique to the VOYAGER program and were considered in the concept designs to minimize the resultant effect on system reliability.

The system design incorporated the estimated extremes of these characteristics (Reference Appendix A); therefore, for conditions less severe than these extremes, the probability of reliable operation is significantly increased.

6.1.4 Degraded Mode Capability - A design requirement of system and subsystem concepts was to provide for degraded mode operational capability if primary operational failures occurred. This capability has been provided throughout the design to assure at least some measure of success for unexpected circumstances. For example, the telemetry subsystem has been designed such that minimum data is lost if a portion of the subsystem becomes inoperative. Reduced power output from one or both transmitters of the Capsule Bus radio subsystem allows partial transmission and retrieval of Capsule Bus data. Specific design details are discussed within the functional descriptions of each subsystem.

6.2 FAILURE MODE EFFECTS AND CRITICALITY ANALYSES (FMECA) - Continual engineering reliability analyses were used in identifying and evaluating the failure modes and failure effects of the candidate concepts. Evaluation of the critical failure modes and their effects led to the design redundancy considerations tabulated in Figure 6-1.

6.2.1 Redundancy - Redundancy was necessary to meet the criterion that no potential single failure mode shall cause a catastrophic effect on the mission and also to assure a high level of success in achieving the mission objectives. An initial prime requirement for the Flight Capsule design was to find an optimum breakdown, arrangement, or interlacing of subsystems. By such means it was desired to have a number of subsystems provide back-up to other subsystems to achieve functional redundancy. Such benefit, although in degraded mode, is accomplished without the expense of added weight. This approach is not based on equipment duplication, but rather upon being able to accomplish the function in an alternate manner. Thus, wherever practical, functional redundancy is our preferred approach. Three types of redundancies were considered and criteria for effective allocation of these redundancies was developed.

6.2.1.1 Types of Redundancies - Three redundancy schemes were studied and utilized in the system design. Each type of redundancy has its particular advantages. The decision to use one or another required careful consideration of the particular application and its possible consequences. The types are categorized and specific examples presented below:

Alternate Path or Functional Redundancy Method - This redundancy is characterized by providing two or more physically different but functionally identical methods to accomplish a function. The prime objective in employing this method is to provide at least two separate and independent paths by which critical operations may be performed. This is preferred because it offers greater protection against generic failure modes and unknown environmental stresses. It can be designed into the system at a relatively low penalty in weight, volume, power, and system complexity.

The deployment of the aerodynamic decelerator is initiated by the Capsule Bus sequencer and timer with the Capsule Bus radar altimeter as a backup. The mechanical and electrical release of the Aeroshell is initiated by the Capsule Bus sequencer and timer with the Capsule Bus radar altimeter as backup. The ignition of the terminal propulsion motors is initiated by the radar altimeter with the landing radar as a backup.

FAILURE MODE, EFFECTS, AND CRITICALITY ANALYSIS SUMMARY

COMPONENT OR FUNCTION	FAILURE MODE	FAILURE EFFECT	CRITICAL MISSION PHASE	RECOMMENDED REDUNDANCY CONSIDERATIONS
Guidance & Control				
Accelerometer	Degraded or no ouput	Loss of Capsule Control	Terminal Descent	• Provide two accelerometers– select one during separation • Provide three accelerometers with majority rating.
Gyros	Degraded or no output	Loss of Capsule Control	Separation to Landing	• Redundant gyros, select one per pair prior to separation • 4 skewed gyros, select 3 prior to separation • 3 two degress of freedom gyros, two required
Landing Radar Velocity Sensor	Loss of velocity data	Loss of reference to velocity vector	Terminal Descent	• Provide 4 velocity channels– three required. • Provide redundant transmitters • Provide redundant trackers in each velocity channel
Radar Altimeter	Loss of altitude data	Loss of altitude triggers and reference	Entry through terminal descent	• Provide redundnat transmitter • Provide redundant receivers and trackers
Guidance & Control Computer	Degraded or no output	Loss of guidance computations	Separation through terminal descent	• Provide redundant computers • Provide redundant memories • Provide triple redundant logic circuitry
Reaction Control System				
Pressurant Isolation Pyro Valve	Fail to fire or jams in closed position	Loss of Source Pressurant to system	Separation through terminal descent	• Provide redundant isolation valve
Pressurant Regulator	Fails closed	Propellant tank would not be pressurized	Separation through terminal descent	• Provide redundant regulator
Fuel Pressurization Pyro Valve	Fails closed or jams in closed position	Propellant tank will not be pressurized	Separation through terminal descent	• Provide redundant pyro valve
Fuel Isolation Pyro Valve	Fails to fire or jams in closed position	Loss of propellant source, engines would not fire	Separation through terminal descent	• Provide redundant fuel isolation valve.
Thrust Chamber Propellant Valves	Fails closed	Loss of propellant flow to the engines	Separation through terminal descent	• Provide quad redundant valves
Terminal Propulsion				
Pressurant Isolation Pyro Valve	Fail to fire or jams in closed position	Loss of source pressurant to the system	Terminal descent	• Provide redundant isolation valve

Figure 6-1

Pressurant Regulator	Fails closed	Fuel and oxidizer tanks would not be pressurized	Terminal descent	• Provide redundant regulator
Fuel or Oxidizer Pressurization Pyro Valve	Fails to fire or jams in closed position	Fuel or oxidizer tanks would not be pressurized	Terminal descent	• Provide redundant pyro valve
Fuel Isolation Pyro Valve	Fails closed or jams in closed position	Loss of fuel supply to engines	Terminal descent	• Provide redundant valve
Oxidizer Isolation Pyro Valve	Fails closed or jams in closed position	Loss of oxidizer supply to engines	Terminal descent	• Provide redundant valve
Fuel or Oxidizer Engine Valves	Fails closed	Loss of fuel or oxidizer flow to the engines	Terminal descent	• Provide quad redundant valves
Throttling Mechanism Injector, Flow Control Valves and Actuator	Fails in deep throttle position or full thrust position	Capsule may impact at high velocity and random attitude	Terminal Descent	• Minimum redundancy can be provided by incorporating redundant drive motors in the actuator.
<u>De-Orbit Propulsion</u>				
Igniter Assembly	Fails to ignite or provide adequate thermal output	Propellent ignition failure with resultant loss of thrust	De-orbit Maneuver	• Provide dual initiators
Rocket Motor	Failure of propellant to ignite	Motor fails to provide thrust for de-orbit maneuver	De-orbit maneuver	• Remote failure mode – No redundancy consideration
<u>De-Orbit Motor Release and Separation</u>				
Explosive Bolt	Fails to break when fired (Any one of four)	De-orbit motor will not separate	Entry through terminal descent	• Provide dual cartridges in each bolt with either providing adequate energy to break the bolt.
Electrical Disconnect (Pyro Spin Off)	Fails to disengage	Incomplete separation of de-orbit motor	Entry through terminal descent	• Provide dual cartridges either providing adequate energy. • Provide lanyard back-up.
<u>Parachute Release</u>				
Explosive Bolt	Fails to break when fired(any one of four)	Parachute, catapult and support structure will not separate.	Entry through terminal descent	• Provide dual cartridges in each bolt with either providing adequate energy to break bolt
Electrical Disconnect (Pyro spin off)	Fails to disengage	Parachute, catapult and support structure will not separate unless chute drag force is sufficient to effect separation	Entry through terminal descent	• Provide dual cartridges either providing adequate energy. • Provide Lanyard back-up.
<u>Adapter/Capsule Bus Separation</u>				
Explosive Bolt	Fails to break when fired (Any one of eight)	Capsule will not separate from the adapter	Separation	• Provide dual cartridges either providing adequate energy.

COMPONENT OR FUNCTION	FAILURE MODE	FAILURE EFFECT	CRITICAL MISSION	RECOMMENDED REDUNDANCY CONSIDERATIONS
Canister Release				
Shielded Mild Detonating Cord Assembly (SMDC)	Fails to ignite or propogate	Canister fails to separate	Separation	• Provide two redundant assemblies with redundant igniter in each assembly
Lander/Aeroshell Release				
Explosive Bolt	Fails to break (Any one of four)	Aeroshell will not separate	Entry through terminal descent	• Provide dual cartridges either providing adequate energy.
Electrical Disconnect (Pyro Spin Off)	Fails to disengage	Incomplete separation of aeroshell from lander	Entry through terminal descent	• Provide dual cartridges either providing adequate energy. • Provide lanyard back-up
Aerodynamic Decelerator				
Parachute Catapult Assembly	Output charge fails to ignite	Parachute will not be deployed	Entry	• Provide redundant initiators
Parachute Assembly	Fail to disreef	Lander may impact at destructive velocity	Entry	• Provide redundant reefing cutters (one of three required)
Electrical Power				
DC–DC Converter Regulator	Short, open, or loss of regulation	Loss of S/C supplied power regulation	Interplanetary cruise	• Provide active redundant regulator with broad regulation characteristics
Main Battery	Degraded or no output	Minimum or no power to Capsule Bus systems	Separation to landing	• Provide redundant battery • Provide backup capability by using surface lab power.
Squib Battery 1 or 2	Degraded or no output	Minimum or no power to squib and solenoid functions	Separation to landing	• Provide redundant battery and incorporate diode isolation so that only 2 of 3 required.
Sequencer & Timer				
DC–DC Converter	No output	S & T fails to function	Separation through landing	• Provide redundant DC–DC converter
Master Oscillator	No output	S & T fails to function	Separation through landing	• Provide active redundant oscillators
Memory Buffer Register	Failure to allow data transfer to or from memory	Loss of all functions other than frequency generator	Separation through landing	• Provide duplexed memories and registers
Decrementers and Zero Detectors	Failure to decrement memory time-word	All time functions fail to occur	Separation through landing	• Provide triple redundant decrementer with majority voter
	Failure to detect zero	No output discretes will occur	Separation through landing	• Provide triple redundant zero detectors with majority voter
Frequency Dividers	Fails to divide	Probable failure of entire timing and control function	Separation through landing	• Provide triple redundant frequency dividers with majority voter

Figure 6–1 (Continued)

Cruise Commutator and Primary Commutator	Group, subgroup, or individual data channel inoperative	Partial loss of engineering data	Interplanetary cruise through landing	• Provide series active redundant data switches and switch drivers
Cruise Encoder and Primary Encoder	Inoperative or digital bit errors	Loss of all engineering data if inoperative	Interplanetary cruise through landing	• Provide standby redundant encoder to be switched by earth command.
Programmer	Inoperative or partial loss of sequencing and control	Loss of all engineering data if inoperative	Separation through landing	• Provide decentralization of sequencing and control functikns for minimum failure effect.
Clock Generator	Inoperative or unstable	Loss of all engineering data if inoperative	Separation through landing	• Provide redundant temperature compensated clock generator crystals
Telemetry Power Supply	Inoperative or degraded output	Loss of all engineering data if inoperative	Seperation through landing	• Provide active redundant load sharing circuit components.
Adapter Cruise Commutator and Encoder	Inoperative commutator group, subgroup, or individual data channels. Inoperative encoder or digital bit errors	Loss of adapter status monitoring throughout cruise phase	Interplanetary cruise	• Provide series active redundant data switches and switch drivers. • Provide standby redundant encoder to be switched by earth command
RT/DT Data Interleaver	No output or data mixing	Possible loss of black out data	Entry and Descent	• Provide series active redundant interleaver switches. • Interleave data with ESP radio link
CBS Data Interleaver	No output or data mixing	Loss of engineering data	Separation through landing	• Interleave capsule data on ESP radio link • Provide series active redundant interleaver switching.
S/C Mounted Data Distribution Unit	Inoperative or steering logic errors	Loss of flight capsule data	Interplanetary cruise through landing	• Provide active redundant data switches and switch drivers.
Low Rate UHF Transmitter	Degraded or no power output	Loss of CBS Engineering data	Entry to landing	• Provide redundant transmitter • Interleave data on ESP radio link
S/C Mounted UHF Radio Receiver	Inoperative or poor sensitivity	Loss of CBS Engineering data	Entry to landing	• Provide Redundant receivers • Interleave data on ESP radio link
Delay Storage	Inoperative or erroneous output	Loss of engineering data during blackout	Entry	• Interleave data on ESP radio link
S/C Mounted Tape Storage	Inoperative in record or playback mode	Loss of engineering data	Separation to landing	• Interleave data on ESP radio link

Cooperative Multi-channel Methods - This redundancy is characteristically obtained by dividing the equipment for performing the function into two or more independent portions so that, although some portion fails, the function can still be performed with minimum or no degradation. This is a second choice because no failure detection or switching features are required with this method. It is normally designed into the system at a moderate penalty in weight, volume, and power. The radar altimeter has two independent receive and tracker channels. Failure of either channel will not cause altimeter performance degradation. The landing radar has four velocity channels; including antennas, receivers, and trackers. Failure of any one velocity channel will not cause landing radar performance degradation. The data interleavers of the Capsule Bus data handling system and Entry Science Package are interfaced so that the failure of either one will not cause loss of low rate engineering and science data.

Ordinary Block or Element Redundancy Method - This redundancy is characterized by the paralleling of two identical units in which failure of the operating unit is sensed and identical equipment is switched in to accomplish the function. This type is the least desirable because both units are susceptible to the same failure modes if exposed to overstressed conditions. It also requires the addition of a detection and switching unit, and thus provides the least overall reliability improvement. In addition, parallel units with a detection and switching unit more than doubles the weight and increases power requirements. The Capsule Bus system telecommunications cruise encoder is backed up by an identical unit. Failure of the primary unit is sensed on Earth and switching to the redundant unit is accomplished by Earth command via the spacecraft radio link.

6.2.1.2 Reliability vs. Weight - The FMECA led to many alternate means for the incorporation of redundancies. However, the addition of redundancies represents a corresponding system weight increase. Thus, an initial criterion for decision on redundancy incorporation needed to be established. This criterion was a requirement for achieving maximum increase in reliability with a minimum weight increase. The preference was given the component with the lowest ratio of weight change to reliability change ($\Delta W/\Delta R$) followed by units of increasing $\Delta W/\Delta R$. Utilization of this criterion resulted in many redundancy considerations and indicated the potential reliability improvement shown in Figure 6-2.

This technique, as applied to the Capsule Bus, placed equal emphasis on the achievement of each mission objective. However, the competing characteristics of the Performance and Design Requirements for the 1973 Mission indicate that

CAPSULE BUS
RELIABILITY IMPROVEMENT VS. ADDED REDUNDANCY WEIGHT

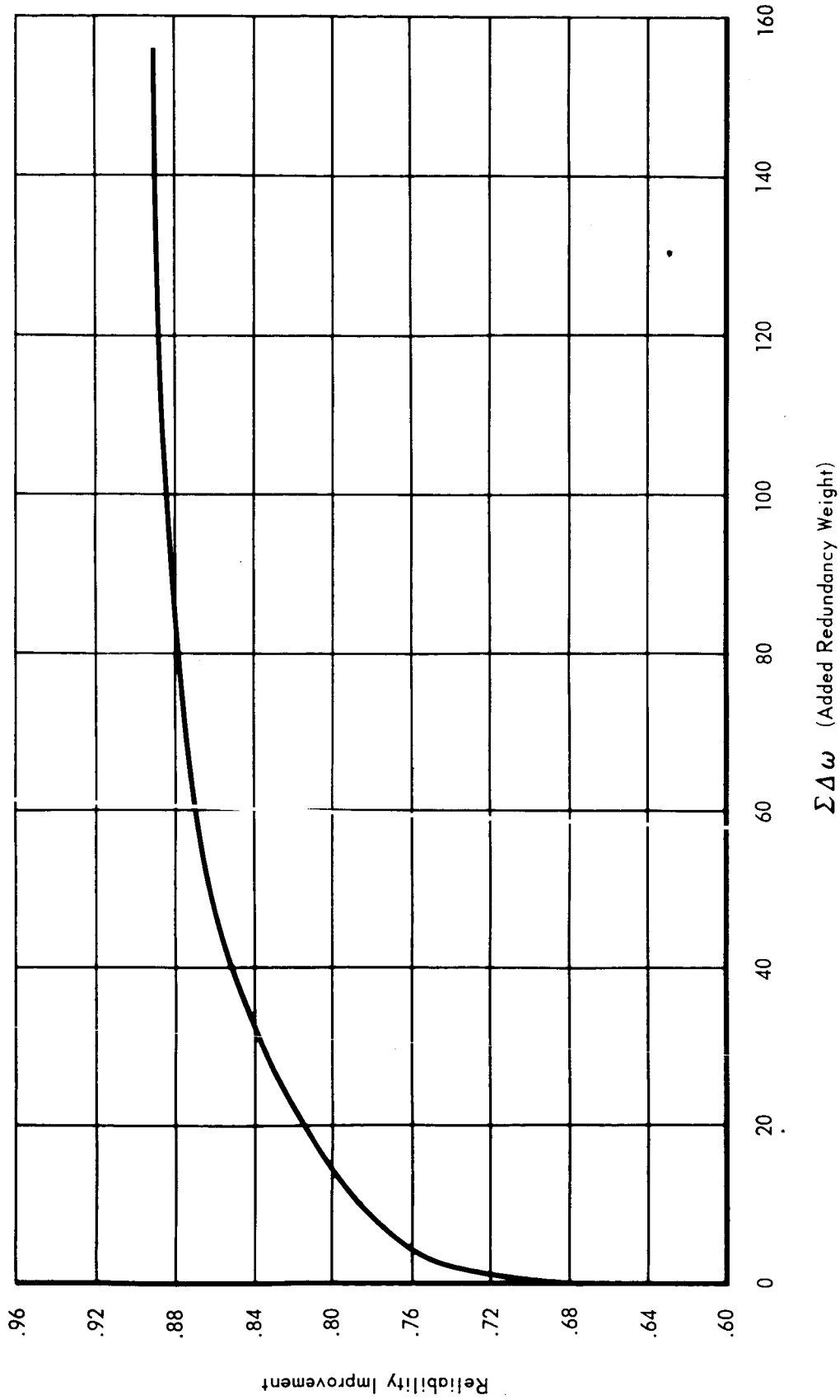

Figure 6–2

equal emphasis should not be placed on each mission objective. Therefore, another analytical technique was needed based on the priority of these objectives. Such a technique was obtained through an effectiveness analysis of the redundancy considerations.

6.2.1.3 Effectiveness Analysis - The effectiveness analysis evaluated the redundancy in terms of the achievement of mission objectives, using the equation:

$$E = V_1R_1 + V_2R_2 + V_3R_3$$

where V_1 = Value index for the achievement of landing

V_2 = Value index for the performance of Entry Science experiments:

V_3 = Value index for the performance of Landed Science experiments;

and R_1 = Reliability index for the achievment of landing

R_2 = Reliability index for the performance of Entry Science experiments

R_3 = Reliability index for the performance of Landed Science experiments

Based on the competing characteristics criterion described in the "Specification for Performance and Design Requirements for the 1973 VOYAGER Mission", it was established that the value index should have the relationship $V_1 + V_2 + V_3 = 1$ $V_1 > V_2 > V_3$. An effectiveness model is described in Part B, Section 4.10 of Volume II.

For example, based on the assignment of value indices of $V_1 = .40$, $V_2 = .35$, and $V_3 = .25$, we obtain the priority ratings for redundancy considerations tabulated in Figure 6-3. Comparisons of redundancy considerations from a reliability vs. weight analysis and an effectiveness analysis are tabulated in Figure 6-4.

6.2.2 Summary of Selected Redundancies - Engineering judgment and the effectiveness analysis results were used as the criteria for selecting the preferred system concept redundancies. The primary criterion, engineering judgment, required backup capability for the performance of all critical mission events. This capability was provided regardless of the efficiency of weight increase to reliability improvement. After providing this capability, the selection of additional equipment redundancies was guided by the effectiveness analysis. The eighty-two (82) redundancies selected for the preferred concept are tabulated in Figure 6-5. Sixty-three (63) are functional and consequently added minimal weight.

6.3 Reliability Estimate Results - The primary use of the quantitative reliability estimates has been for comparative evaluation of competing subsystem concepts, rather than to predict the actual reliability of a given concept or the preferred

CAPSULE BUS REDUNDANCY CONSIDERATIONS

(EFFECTIVENESS ANALYSIS)

ORDER OF PRIORITY	REDUNDANCY CONSIDERATION	SUBSYSTEM	TYPE
1	Active redundant DC-DC Converter Regulator	Electrical Power	Multichannel
2	Standby redundant cruise encoder	Telecommunications	Block
3	Surface laboratory power provide back-up to capsule bus power	Electrical Power	Block
4	Series active redundant cruise commutator, data switches and switch drivers	Telecommunications	Multichannel
5	Standby redundant battery float chargers	Electrical Power	Block
6	Active redundant reefing cutters for each reefing line	Staging	Multichannel
7	Multiaxis gyro sensing	Guidance & Control	Block
8	Active redundant cruise commutator relays	Electrical Power	Multichannel
9	Active redundant command decoder relays	Electrical Power	Multichannel
10	Active redundant battery charger relays	Electrical Power	Multichannel
11	Series active redundant cruise monitor control, data switches, and switch drivers	Telecommunications	Multichannel
12	Redundant velocity channel in landing radar	Guidance & Control	Multichannel
13	Series active redundant adapter cruise commutator, data switches, switch drivers, and redundant cruise encoder	Telecommunications	Multichannel & Block
14	Standby redundant guidance and control computers	Guidance & Control	Block
15	Active redundant receivers and trackers in radar altimeter	Guidance & Control	Multichannel
16	Active redundant thermostats for heater control	Thermal Control	Multichannel
17	Interleave low rate data on ESP radio link	Telecommunications	Functional
18	Dual cartridge explosive bolts for capsule bus/ adapter separation	Staging	Multichannel
19	Standby redundant accelerometers and associated electronics	Guidance & Control	Block

Figure 6-3

20	Active redundant crystal controlled oscillators	Sequencer & Timer	Multichannel
21	Dual cartridge explosive bolts for deorbit motor release	Staging	Multichannel
22	Dual cartridge explosive bolts for aeroshell release	Staging	Multichannel
23	Redundant cartridge in each of three N.C. reaction control system pyro values	Propulsion	Multichannel
24	Redundant initiators in parachute catapult	Staging	Multichannel
25	Duplex memories and memory buffer registers with error detection	Sequence & Timer	Block
26	Triple redundant frequency dividers with majority voters	Sequence & Timer	Multichannel
27	Dual cartridge explosive bolts for parachute release	Staging	Multichannel
28	Series redundant pressure regulator in the in the reaction control system	Propulsion	Multichannel
29	Standby redundant transmitter tubes in the radar altimeter	Guidance & Control	Block
30	Active redundant resistance heaters	Thermal Control	Multichannel
31	Triple redundant decrementers and zero detectors with majority voters	Sequencer & Timer	Multichannel
32	Added element redundancy to the landing radar	Guidance & Control	Block
33	Active redundant discrete output line drivers	Sequencer & Timer	Multichannel
34	Triple redundant control logic with majority voters	Sequencer & Timer	Multichannel
35	Quad redundant input power diodes	Electrical Power	Multichannel
36	Dual cartridges explosive bolts for release of stabilizer legs	Landing	Multichannel
37	Active redundant telemetry, command link, reference frequency, and digital data interfaces	Sequencer & Timer	Multichannel
38	Active redundant sensor interfaces	Sequencer & Timer	Multichannel
39	Triple redundant discrete output gates with majority voters	Sequencer & Timer	Multichannel
40	Active redundant bias voltage and logic voltage regulators	Sequencer & Timer	Multichannel

CAPSULE BUS REDUNDANCY CONSIDERATIONS (Continued)

(EFFECTIVENESS ANALYSIS)

ORDER OF PRIORITY	REDUNDANCY CONSIDERATION	SUBSYSTEM	TYPE
41	Redundancy cartridge in each of three N.C. terminal propulsion system pyro valves	Propulsion	Multichannel
42	Redundant springs for deorbit motor separation	Staging	Multichannel
43	Series redundant pressure regulator in the terminal propulsion system	Propulsion	Multichannel
44	Active redundant battery power distribution relays	Electrical Power	Multichannel
45	Redundant cartridge in each of two N.O. terminal propulsion system pyro valves.	Propulsion	Multichannel
46	Active redundant subsystem control relays	Electrical Power	Multichannel
47	Redundant reaction control system pressurant supply	Propulsion	Multichannel
48	Active redundant guidance & control system power supplies	Guidance & Control	Multichannel
49	Quad redundant reaction control system thrust chamber propellent valves	Propulsion	Multichannel
50	Redundant shielded mild detonating cord assembly for canister release	Staging	Multichannel
51	Redundant check valves in the terminal propulsion system	Propulsion	Multichannel
52	Redundant compression spring for canister separation	Staging	Multichannel
53	Active redundant heater relays (post separation)	Electrical Power	Multichannel
54	Standby redundant CRS commutator and encoder	Telecommunications	Block
55	Active redundant heater relays (pre separation)	Electrical Power	Multichannel
56	Active redundant master test programmer relays	Electrical Power	Multichannel
57	Quad redundant 0.05g switches	Guidance & Control	Multichannel
58	Standby redundant programmer	Telecommunications	Block
59	Active redundant squib batteries	Electrical Power	Multichannel
60	Parallel redundant engine valves in the terminal propulsion system	Propulsion	Multichannel
61	Active redundant main battery	Electrical Power	Multichannel
62	Active redundant (load sharing) telemetry power supply	Telecommunications	Multichannel
63	Quad redundant battery power diodes	Electrical power	Multichannel
64	Quad redundant squib battery diodes	Electrical Power	Multichannel

Figure 6–3 (Continued)

RELIABILITY vs. WEIGHT AND EFFECTIVENESS ANALYSIS
REDUNDANCY PRIORITY COMPARISON

RELIABILITY vs. WEIGHT	EFFECTIVENESS ANALYSIS	REDUNDANCY CONSIDERATION	SUBSYSTEM	TYPE
1	2	Standby Redundant Cruise Encoder	Telecommunications	Block
2	4	Series Activity Redundant Cruise Commutator, Data Switches and Switch Drivers	Telecommunications	Multi-channel
3	17	Interleaver Low Rate Data on ESP Radio Link	Telecommunications	Functional
4	11	Series Active Redundant Cruise Monitor Control, Data Switches and Switch Drivers	Telecommunications	Multi-channel
5	13	Series Active Redundant Adapter Cruise Commutator, Data Switches, Switch Drivers and Redundant Cruise Encoder	Telecommunications	Multi-channel & Block
6	3	Surface Laboratory Power Provide Backup to Capsule Bus Power	Electrical Power	Block
7	1	Active Redundant DC–DC Converter Regulator	Electrical Power	Multi-channel
8	5	Standby Redundant Battery Float Chargers	Electrical Power	Block
9	6	Active Redundant Reefing Cutters for Each Reefing Line	Staging	Multi-channel
10	54	Standby Redundant CBS Commutator and Encoder	Telecommunications	Block
11	7	Multi-axis Gyro Sensing	Guidance & Control	Block
12	8	Active Redundant Cruise Commutator Relays	Electrical Power	Multi-channel
13	9	Active Redundant Command Decoder Relays	Electrical Power	Multi-channel
14	10	Active Redundant Battery Charger Relays	Electrical Power	Multi-channel

15	58	Standby Redundant Programmer	Telecommunications	Block
16	12	Redundant Velocity Channel in Landing Radar	Guidance & Control	Multi-channel
17	14	Standby Redundant Guidance and Control Computers	Guidance & Control	Block
18	15	Active Redundant Receivers and Trackers in Radar Altimeter	Guidance & Control	Multi-channel
19	16	Active Redundant Thermostats for Heater Control	Thermal Control	Multi-channel
20	18	Dual Cartridge Explosive Bolts for Capsule Bus/Adapter Separation	Staging	Multi-channel
21	19	Standby Redundant Accelerometers and Associated Electronics	Guidance & Control	Block
22	20	Active Redundant Crystal Controlled Oscillators	Sequencer & Timer	Multi-channel
23	21	Dual Cartridge Explosive Bolts for De-orbit Motor Release	Staging	Multi-channel
24	22	Dual Cartridge Explosive Bolts for Aeroshell Release	Staging	Multi-channel
25	23	Redundant Cartridge in Each of Three NC Reaction Control System Pyro Valves Redundant Initiators in Parachute Catapult	Propulsion	Multi-channel
26	24	Redundant Initiators in Parachute Catapult	Staging	Multi-channel
27	25	Duplex Memories and Memory Buffer Registers With Error Detection Switching Logic	Sequencer & Timer	Block
28	26	Triple Redundant Frequency Dividers With Majority Voters	Sequencer & Timer	Multi-channel
29	27	Dual Cartridge Explosive Bolts for Parachute Release	Staging	Multi-channel
30	62	Active Redundant (Load Sharing) Telemetry Power Supply	Telecommunications	Multi-channel
31	28	Series Redundant Pressure Regulator in the Reaction Control System	Propulsion	Multi-channel
32	29	Standby Redundant Transmitter Tubes in the Radar Altimeter	Guidance & Control	Block

Figure 6–4

RELIABILITY vs. WEIGHT AND EFFECTIVENESS ANALYSIS (Continued)

RELIABILITY vs. WEIGHT	EFFECTIVENESS ANALYSIS	REDUNDANCY CONSIDERATION	SUBSYSTEM	TYPE
33	30	Active Redundant Resistance Heaters	Thermal Control	Multi-channel
34	36	Dual Cartridges Explosive Bolts for Release of Stabilizer Legs	Landing	Multi-channel
35	31	Triple Redundant Decrementers and Zero Detectors With Majority Voters	Sequencer & Timer	Multi-channel
36	32	Added Element Redundancy to the Landing Radar	Guidance & Control	Block
37	33	Active Redundant Discrete Output Line Drivers	Sequencer & Timer	Multi-channel
38	41	Redundant Cartridge in Each of Three NC Terminal Propulsion System Pyro Valves	Propulsion	Multi-channel
39	34	Triple Redundant Control Logic With Majority Voters	Sequencer & Timer	Multi-channel
40	35	Quad Redundant Input Power Diodes	Electrical Power	Multi-channel
41	38	Active Redundant Sensor Interfaces	Sequencer & Timer	Multi-channel
42	37	Active Redundant Telemetry, Command Link, Reference Frequency and Digital Data Interfaces	Sequencer & Timer	Multi-channel
43	43	Series Redundant Pressure Regulator in the Terminal Propulsion System	Propulsion	Multi-channel
44	39	Triple Redundant Discrete Output Gates With Majority Voters	Sequencer & Timer	Multi-channel
45	40	Active Redundant Bias Voltage and Logic Voltage Regulators	Sequencer & Timer	Multi-channel
46	45	Redundant Cartridge in Each of Two NO Terminal Propulsion System Pyro Valves	Propulsion	Multi-channel
47	42	Redundant Springs for De-orbit Motor Separation	Staging	Multi-channel
48	44	Active Redundant Battery Power Distribution Relays	Electrical Power	Multi-channel

Figure 6-4 (Continued)

49	46	Active Redundant Subsystem Control Relays	Electrical Power	Multi-channel
50	47	Redundant Reaction Control System Pressurant Supply	Propulsion	Multi-channel
51	48	Active Redundant Guidance and Control System Power Supplies	Guidance & Control	Multi-channel
52	51	Redundant Check Valves in the Terminal Propulsion System	Propulsion	Multi-channel
53	49	Quad Redundant Reaction Control System Thrust Chamber Propellant Valves	Propulsion	Multi-channel
54	50	Redundant Shielded Mild Detonating Cord Assembly for Canister Release	Staging	Multi-channel
55	52	Redundant Compression Spring for Canister Separation	Staging	Multi-channel
56	53	Active Redundant Heater Relays (Post Separation)	Electrical Power	Multi-channel
57	55	Active Redundant Heater Relays (Pre Separation)	Electrical Power	Multi-channel
58	56	Active Redundant Master Test Programmer Relays	Electrical Power	Multi-channel
59	57	Quad Redundant 0.05g Switches	Guidance & Control	Multi-channel
60	60	Parallel Redundant Engine Valves in the Terminal Propulsion System	Propulsion	Multi-channel
61	59	Active Redundant Squib Batteries	Electrical Power	Multi-channel
62	61	Active Redundant Main Bettery	Electrical Power	Multi-channel
63	63	Quad Redundant Battery Power Diodes	Electrical Power	Multi-channel
64	64	Quad Redundant Squib Battery Diodes	Electrical Power	Multi-channel

6-12-2

CAPSULE BUS SELECTED REDUNDANCIES

TYPE	EVENT	PRIMARY SOURCE	REDUNDANT SOURCE
Functional	Switch flight capsule to flight spacecraft power	Flight spacecraft central computer & sequencer	Mission operations system
	Switch flight capsule to battery power	Flight spacecraft central computer & sequencer	Mission operations system
	Turn on capsule bus test programmer	Flight spacecraft central computer & sequencer	Mission operations system
	Turn on capsule bus telemetry subsystem	Capsule bus test programmer	Mission operations system
	Turn on guidance and control inertial measuring unit	Capsule Bus sequencer and timer	Mission operations system
	Switch capsule bus telemetry subsystem to checkout mode	Capsule bus test programmer	Mission operations system
	Switch entry science package, surface laboratory and capsule bus cruise commutators to capsule bus telemetry control mode	Capsule bus test programmer	Mission operations system
	Turn on entry science package telemetry subsystem	Capsule bus test programmer	Mission operations system
	Switch entry science package telemetry subsystem to checkout mode	Capsule bus test programmer	Mission operations system
	Turn off entry science package telemetry subsystem	Capsule test programmer	Mission operations system
	Switch entry science package, capsule bus and surface laboratory cruise commutators to cruise mode	Capsule bus test programmer	Mission operations system
	Turn off capsule bus telemetry subsystem	Capsule bus test programmer	Mission operations system
	Turn on surface lab telemetry subsystem	Capsule bus test programmer	Mission operations system
	Turn on surface lab test programmer	Capsule bus test programmer	Mission operations system
	Turn off surface lab test programmer	Capsule bus test programmer	Mission operations system
	Apply power to capsule bus sequencer and timer	Flight spacecraft central computer & sequencer	Mission operations system
	Switch capsule bus, entry science package and surface lab to internal power	Capsule bus sequencer and timer	Flight spacecraft central computer and sequencer or Mission operations system
	Turn on capsule bus guidance and control subsystem computer	Capsule bus sequencer and timer	Mission operations system

Figure 6–5

CAPSULE BUS SELECTED REDUNDANCIES (Continued)

TYPE	EVENT	PRIMARY SOURCE	REDUNDANT SOURCE
Functional	Transfer guidance and control subsystem data words to guidance and control computer	Capsule bus sequencer and timer	Mission operations system
	Activate capsule bus squib battery No. 1	Capsule bus sequencer and timer	Mission operations system
	Activate capsule bus squib battery No. 2	Capsule bus sequencer and timer	Mission operations system
	Activate capsule bus squib battery No. 3	Capsule bus sequencer and timer	Mission operations system
	Turn-on Low-Rate UHF transmitter	Capsule bus sequencer and timer	Mission operations system
	Switch capsule bus telemetry subsystem to deorbit mode	Capsule bus sequencer and timer	Mission operations system
	Swtich capsule bus, surface lab and entry science package cruise commutators to capsule bus control mode	Capsule bus sequencer and timer	Mission operations system
	Switch sterilization canister to internal power	Capsule bus sequencer and timer	Mission operations system
	Release and separate forward section of canister	Canister dual programmer	Capsule bus sequencer and timer
	Separate insulation from flight capsule	Canister dual programmer	Capsule bus sequencer and timer
	Release flight capsule from flight spacecraft (electrical)	Canister dual programmer	Capsule bus sequencer and timer
	Release flight capsule from flight spacecraft (mechanical)	Canister dual programmer	Capsule bus sequencer and timer
	Terminate deorbit motor thrust	Capsule bus guidance and control computer	Capsule bus sequencer and timer
	Separate spent deorbit motor	Capsule bus pyro delay	Capsule bus sequencer and timer
	Turn on capsule bus radar altimeter	Capsule bus sequencer and timer	.05 g sensor
	Initiate capsule bus guidance a and control computer routine	Capsule bus sequencer and timer	Capsule bus radar altimeter
	Turn on entry science package telemetry subsystem, base pressure experiment, descent TV (warmup), accelerometer experiment, stagnation pressure experiment, radio subsystem, data storage subsystem and switch entry science package telemetry subsystem to entry mode	Capsule bus sequencer and timer	.05 g sensor or capsule bus radar altimeter

Figure 6–5 (Continued)

CAPSULE BUS SELECTED REDUNDANCIES (Continued)

TYPE	EVENT	PRIMARY SOURCE	REDUNDANT SOURCE
Functional	Switch capsule bus telemetry system to entry mode	Capsule bus sequencer and timer	.05 g sensor or, capsule bus radar altimeter
	Initiate descent TV camera sequencing	Capsule bus sequencer and timer	.05 g sensor or capsule bus radar altimeter
	Initiate capsule bus integrating acceleration sensing route	Capsule bus sequencer and timer	Capsule bus radar altimeter
	Arm terminal propulsion system pressurant and isolation valves	Capsule bus sequencer and timer	Capsule bus radar altimeter
	Fire terminal propulsion system pressurant isolation valves	Capsule bus sequencer and timer	Capsule bus radar altimeter
	Fire terminal propulsion system propellant isolation valves	Capsule bus sequencer and timer	Capsule bus radar altimeter
	Switch to 3-axis rate damping and initiate guidance and control computer inertial reference routine	Capsule bus guidance and control subsystem	Capsule bus radar altimeter
	Turn on capsule bus landing radar	Capsule bus radar altimeter	.05 g sensor or capsule bus integrated acceleration sensing routine
	Update capsule bus sequencer and timer based on altitude or integrated acceleration sensing	Capsule bus radar altimeter	Capsule bus integrated acceleration sensing routine
	Enable capsule bus aerodecelerator deployment mechanism	Capsule bus sequencer and timer	Capsule bus radar altimeter
	Deploy capsule bus aerodecelerator	Capsule bus sequencer and timer	Capsule bus radar altimeter
	Arm capsule bus aeroshell separation mechanism and initiate guidance and control computer descent control mode	Capsule bus sequencer and timer	Capsule bus radar altimeter
	Release capsule bus aeroshell from capsule bus (electrical)	Capsule bus sequencer and timer	Capsule bus radar altimeter
	Release capsule bus aeroshell from capsule bus (mechanical)	Capsule bus sequencer and timer	Capsule bus radar altimeter
	Separate capsule bus aeroshell from capsule bus and switch entry science package telemetry subsystem and capsule bus telemetry subsystem to terminal descent mode	Capsule bus sequencer and timer	Capsule bus radar altimeter

Figure 6–5 (Continued)

CAPSULE BUS SELECTED REDUNDANCIES (Continued)

TYPE	EVENT	PRIMARY SOURCE	REDUNDANT SOURCE
Functional	Ignite terminal propulsion motors	Capsule bus radar altimeter	Capsule bus landing radar
	Release capsule bus aerodecelerators	Capsule bus sensor	Capsule bus radar altimeter or sequencer and timer
	Throttle down terminal propulsion motors to .8 g	Capsule bus guidance and control computer	Capsule bus sequencer and timer
	Switch landing radar range scale	Capsule bus landing radar	Capsule bus radar altimeter
	Begin constant velocity descent	Capsule bus guidance and control subsystem	Capsule bus radar altimeter
	Enable capsule bus and surface lab impact sensors and release descent TV cameras	Capsule bus radar altimeter	Capsule bus landing radar
	Terminate capsule bus terminal propulsion motor burn and capsule bus attitude control electronics	Capsule bus landing radar	Capsule bus sequencer and timer or impact sensor or surface lab impact sensor
	Update capsule bus sequencer and time base on time of impact	Capsule bus impact sensor	Surface lab sequencer and timer
	Terminate capsule bus landing radar and radar altimeter operation	Capsule bus impact sensor	Capsule bus sequencer and timer or surface lab impact sensor
	Arm capsule bus stabilizer legs	Capsule bus sequencer and timer	Surface lab sequencer and timer
	Release capsule bus stabilizer legs	Capsule bus sequencer and timer	Surface lab sequencer and timer
	Extend capsule bus stabilizer legs	Capsule bus sequencer and timer	Surface lab sequencer and timer
	Shut down entry science package	Capsule bus sequencer and timer	Surface lab sequencer and timer
	Switch capsule bus to surface lab support mode	Capsule bus sequencer and timer	Surface lab sequencer and timer

Figure 6–5 (Continued)

CAPSULE BUS SELECTED REDUNDANCIES (Continued)

TYPE	SUBSYSTEM EQUIPMENT REDUNDANCIES	SUBSYSTEM
Multichannel	Active redundant DC-DC converter regulator	Electrical Power
Block	Standby redundant cruise encoder	Telecommunications
Block	Capsule bus power backed up with surface lab power	Electrical Power
Multichannel	Series active redundant cruise commutator data switches and switch drivers	Telecommunications
Multichannel	Active redundant reefing cutters for each reefing line	Staging
Multichannel	Series active redundant cruise monitor control data switches and switch drivers	Telecommunications
Multichannel	Redundant velocity channel in the landing radar	Guidance and Control
Multichannel and Block	Series active redundant adapter cruise commutator data switches and switch drivers and redundant cruise encoder	Telecommunications
Multichannel	Active redundant squib batteries (2 of 3 required)	Electrical Power
Multichannel	Active redundant receivers and trackers in radar altimeter	Guidance and Control
Functional	Capsule bus low rate data interleaved on entry science package radio link	Telecommunications
Multichannel	Dual cartridge explosive bolts for capsule bus/adapter separation	Staging
Multichannel	Dual cartridge explosive bolts for deorbit motor release	Staging
Multichannel	Dual cartridge explosive bolts for aeroshell release	Staging
Multichannel	Redundant initiators in parachute catapult	Staging
Multichannel	Dual cartridge explosive bolts for parachute release	Staging
Block	Standby redundant transmitter tubes in radar altimeter	Guidance and Control
Multichannel	Redundant shielded mild detonating cord assembly for canister release	Staging
Functional	Radar altimeter backup of landing radar range measurement	Guidance and Control

Figure 6–5 (Continued)

concept. A quantitative reliability estimate was made for all major designs trade studies, and was a major factor in many decisions. The estimates have served to highlight areas for reliability improvement and were a necessary input to the reliability vs. weight and effectiveness analysis.

A quantitative reliability estimate of the selected Capsule Bus configuration has been computed and is presented in Figure 6-6. This estimate indicates that the propulsion, telecommunications, electrical power, and guidance and control subsystems will collectively have the greatest influence on Capsule Bus reliability.

6.4 Reliability Program Requirements - The Phase B study has revealed several reliability program elements which must receive increased major emphasis throughout the program. These elements, listed earlier, are further described below:

6.4.1 Failure Mode, Effects, and Criticality Analysis - FMECA is a powerful reliability technique for highlighting potential design weakness. It must be a primary, continuing reliability task performed concurrently with the detail design and operational contingency analysis. The FMECA carried to the detail level provides the basis for design considerations which minimize mission failures or degradation.

6.4.2 Parts and Materials Program - The decontamination, sterilization, and long-life requirements demands the need for a specially planned parts and materials program. This program must provide for the selection, testing, and control of parts and materials to assure that the parts and materials meet these environmental and life requirements and do not compromise equipment reliability.

6.4.3 Failure Evaluation - Failures or performance irregularities must be expeditiously and positively identified and analyzed, followed by corrective effort.

6.4.4 Design Reviews - In depth design reviews must be conducted on all elements of the Capsule Bus system. The design review process must also place equal emphasis on the review of the operational support equipment compatibility with the system or subsystems. The compatibility must be clearly evaluated by design review to ensure that the interface design of the operational support equipment and flight equipment will not compromise the launch constraints.

VOYAGER CAPSULE BUS EQUIPMENT RELIABILITY ESTIMATE SUMMARY

SUBSYSTEM	MISSION RELIABILITY ESTIMATE
Guidance and Control	.938
Inertial Measuring Unit	
Guidance and Control Computer	
Radar Altimeter	
Landing Radar	
Telecommunication	.952
Telemetry	
Radio	
Antenna	
Command	
Data Storage	
Instrumentation	
Electrical Power	.984
Converter-Regulator	
Power Switching and Logic	
Battery Charger	
Main Battery	
Squib-Motor Batteries	
Propulsion	.962
Deorbit Propulsion	
Reaction Control	
Terminal Propulsion	
Landing	.998
Impact Attenuation	
Stabilization	
Sequencer and Timer	.993
Staging	.994
Aerodynamic Decelerator	
Separation and Release Functions	
Thermal Control	.997
Total Capsule Bus Equipment Reliability	.830

Figure 6-6