SE818-18

REPORT NO. F694

PART C1 FUNCTIONAL DESCRIPTIONS

VOYAGER CAPSULE PHASE B FINAL REPORT

VOLUME II CAPSULE BUS SYSTEM

N67-40048

(ACCESSION NUMBER)	(THRU)
275	1
(PAGES)	(CODE)
CR-89679	31
(NASA CR OR TMX OR AD NUMBER)	(CATEGORY)

FACILITY FORM 602

GPO PRICE $ _____

CFSTI PRICE(S) $ _____

Hard copy (HC) 3.00

Microfiche (MF) .65

ff 653 July 65

MCDONNELL ASTRONAUTICS

REPORT NO. F694
31 AUGUST 1967

PART C1 FUNCTIONAL DESCRIPTIONS

VOYAGER CAPSULE PHASE B FINAL REPORT

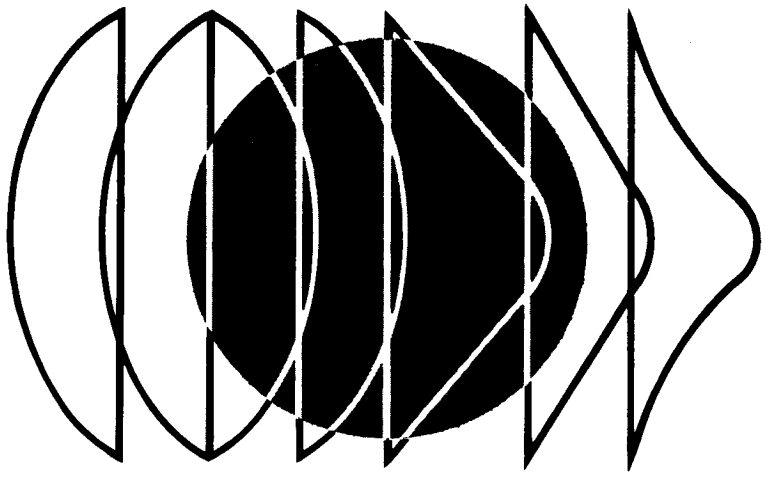

VOLUME II CAPSULE BUS SYSTEM

PREPARED FOR:
CALIFORNIA INSTITUTE OF TECHNOLOGY
JET PROPULSION LABORATORY
PASADENA, CALIFORNIA
CONTRACT NUMBER 952000

COPY NO. 6

MCDONNELL ASTRONAUTICS

REPORT ORGANIZATION

VOYAGER PHASE B FINAL REPORT

The results of the Phase B Voyager Flight Capsule study are organized into several volumes. These are:

Volume I	Summary
Volume II	Capsule Bus System
Volume III	Surface Laboratory System
Volume IV	Entry Science Package
Volume V	System Interfaces
Volume VI	Implementation

This volume, Volume II, describes the McDonnell Douglas preferred design for the Capsule Bus System. It is arranged in 5 parts, A through E, and bound in 11 separate documents, as noted below.

Part A	Preferred Design Concept	2 documents, Parts A_1 and A_2
Part B	Alternatives, Analyses, Selection	5 documents, Parts B_1, B_2, B_3, B_4 and B_5
Part C	Subsystem Functional Descriptions	2 documents, Parts C_1 and C_2
Part D	Operational Support Equipment	1 document
Part E	Reliability	1 document

In order to assist the reader in finding specific material relating to the Capsule Bus System, Figure 1 cross indexes broadly selected subject matter, at the system and subsystem level, through all volumes.

SYSTEM/SUBSYSTEM \ VOLUME II PARTS		PART A DESCRIPTION OF PREFERRED SYSTEM OBJECTIVES, MISSION, DESIGN, SUBSYSTEMS, OPERATIONS, SUPPORTING FUNCTIONS	PART B ALTERNATIVES, ANALYSIS AND SELECTION – METHODS TRADE STUDIES, OPTIMIZATION STUDIES RESULTS	PART C DETAILED DESCRIPTION OF SUBSYSTEM FUNCTIONS	PART D OPERATIONAL SUPPORT EQUIPMENT – SYSTEM, SUBSYSTEM, LAUNCH COMPLEX, MISSION, HANDLING, SOFTWARE	PART E RELIABILITY CONSTRAINTS, ANALYSIS, RESULTS, PROGRAM TESTING, CONTROL
CAPSULE BUS SYSTEM						
Mission	Objectives	1.1–Summary	2–Analysis	N/A	1–General	1–Constraints
	Profile	1.2–Summary	2–Analysis 2.4–Selection	N/A	N/A	3.1.1–Analysis
	Operations	4–Description by Phase	2.3–Analysis 2.3.7–Landing Site Select	N/A	4.4–LCE Description 4.5–MDE Description	3–Estimates
Design	General	2–Criteria Summary 3.1–Configuration	1–Study Approach 3–Functional Requirements	N/A	3.2–Concept 3.3–Summary 6.1–AHSE	4–Program Requirements 5–Component Reliability
	Standardization/Growth	2.5–Summary 11–Future	(See Specific Subsystem Below)	N/A	4.3.8-STC 4.4.8-LCE 4.5.8-MDE } Growth	N/A
	Weight	3.1.2.4–Summary 5–Breakdown	(See Specific Subsystem Below)	N/A	N/A	2.3.2–Reliability vs Weight
Interfaces (See Also Vol. V)		3.1–Summary 9.0–Operational	(See Volume V)	N/A	4.2.1,4.3.5,4.4.5, 4.5.5	N/A
Implementation (See Also Vol. VI)		10–Schedule 8.11–OSE	(See Volume VI)	N/A	(See Specific Subsystem Below)	N/A
Planetary Quarantine		7–General	(See Volume VI, C,7 Sterilization Plan)	N/A	None Required	N/A
O.S.E. (See Also Part D)		8–General (See Also–D1,D2, D3,D4)	(See D2.5-Selection Criteria, D9-Analysis, DIO - Alternatives)	(See D5-Subsystem Level Test Equipment, See Also D4, D6, D7)	Complete OSE Description	(See D4.3.6–STC D4.4.6–LCE D4.5.6–MDE)
SUBSYSTEMS						
Sterilization Canister		3.2.1.1–Description 3.1.2–Summary	5.1–Analysis	1.1	6.1.5.2,6.1.5.3, 6.1.5.6 6.1.5.8–AHSE 6.2.15–Servicing	(See Part C Sections 1.1.1.7 1.1.2.7 1.1.3.7)
Adapter		3.2.1.2–Description 3.1.2–Summary	5.2–Analysis	1.2	None Required	(See Part C, 1.2.7)
Aeroshell		3.2.1.3–Description 3.1.2–Summary	4.1–Configuration Selection 4.6–Separation	1.3	None Required	(See Part C, 1.3.7)

Figure 1

		5.3.1–Structure 5.3.2–Heat Shield			
Lander	3.2.1.4–Description 3.1.2–Summary	4.2–Configuration Selection 5.4–Analysis	1.4	6.1.5.9–Fixture	(See Part C, 1.4.7)
Telecommunications	3.2.2.1–Description	4.9–In-Flight Monitoring 5.5–Analysis	2–Telemetry 3–Radio 4–Antenna 5–Data Storage 6–Command	4.3.9.1–STC Console 5.7–Test Set	(See Part C, Sections 2.1.7, 2.2.7, 2.3.7, 3.1.7, 3.2.7, 4.5, 5.1.7, 5.2.7, 6.1.7, 6.2.7)
Power	3.2.2.2–Description	5.6–Analysis	7	4.3.9.1–STC Console 5.3–Test Set	(See Part C, Sect. 7.7)
Sequencing and Timing	3.2.2.3–Description	5.7–Analysis	8	4.3.9.1–STC Console 5.4–Test Set	(See Part C Sections 8.1.7, 8.2.7)
Guidance and Control	3.2.2.4–Description	4.7–De-orbit Attitude Reqm't. 5.8–Analysis	9	4.3.9.1–STC Console 5.5–Test Set	(See Part C, 9.7)
Radar	3.2.2.5–Description	5.9–Analysis	10	4.3.9.1–STC Console 5.6–Test Set	(See Part C, Sections 10.1.7, 10.2.7)
Aerodynamic Decelerator	3.2.3–Description	4.4–Selection 5.10–Analysis	11	None Required	(See Part C, 11.7)
Pyrotechnics	3.2.4–Description	5.11–Analysis	12	4.3.9.1–STC Console 5.9–Test Set	(See Part C, 12.7.1)
Thermal Control	3.2.5–Description	5.12–Analysis	13	4.3.9.1–STC Console 5.8–Test Set	(See Part C, 13.6)
De-orbit Propulsion	3.2.6.1–Description	5.13.1–Analysis	14	5.10–Test Set 6.1.5.10–AHSE	(See Part B, 5.13.4.5) (See Part C, 14.7)
Reaction Control	3.2.6.2–Description	5.13.2–Analysis	15	5.10–Test Set 6.2–Servicing	(See Part B, 5.13.4.5) (See Part C, 15.7)
Terminal Propulsion	3.2.6.3–Description	4.3–Configuration Selection 4.5–Terminal Deceleration 5.13.3–Analysis	16	4.3.9.1–STC Console 5.10–Test Set 6.2–Servicing	(See Part B, 5.13.4.5) (See Part C, 16.7)
Packaging and Cabling	3.2.7–Description	5.14–Analysis	17	4.3.9.8–Special Purpose Complex Equipment	Not Required

Note: Parentheses Refer Reader to Volumes/Parts Outside of the Respective Notation

TABLE OF CONTENTS

	Page
PART C SUBSYSTEM FUNCTIONAL DESCRIPTIONS	1
SECTION 1 STRUCTURAL/MECHANICAL SUBSYSTEM	1-1
1.1 Sterilization Canister	1-1
1.1.1 Sterilization Canister Structure	1-2
1.1.2 Separation Equipment	1-12
1.1.3 Presssurization and Venting Equipment	1-23
1.1.4 Canister Electrical Equipment	1-34
1.2 Adapter	1-49
1.2.1 Equipment Identification and Usage	1-49
1.2.2 Design Requirements and Constraints	1-49
1.2.3 Physical Characteristics	1-49
1.2.4 Operation	1-51
1.2.5 Performance Objectives	1-51
1.2.6 Interface Definition	1-51
1.2.7 Reliability and Safety Considerations	1-51
1.2.8 Test Requirements	1-52
1.2.9 Development Requirements	1-52
1.3 Aeroshell	1-53
1.3.1 Aeroshell Structure	1-53
1.3.2 Heat Shield	1-66
1.4 Lander	1-75
1.4.1 Equipment Identification and Usage	1-75
1.4.2 Design Requirements and Constraints	1-75
1.4.3 Physical Characteristics	1-79
1.4.4 Operation Description	1-87
1.4.5 Performance Objectives	1-89
1.4.6 Interfaces	1-89
1.4.7 Reliability Consideration	1-93
SECTION 2 TELEMETRY SUBSYSTEM	2-1
2.1 Capsule Bus Telemetry Equipment	2-1
2.1.1 Equipment Identification and Usage	2-1
2.1.2 Design Requirements and Constraints	2-5
2.1.3 Physical Characteristics	2-5

2.1.4 Operational Description 2-5
2.1.5 Performance Characteristics 2-16
2.1.6 Interfaces 2-17
2.1.7 Reliability and Safety Considerations 2-17
2.1.8 Test 2-17
2.1.9 Development Status 2-22
2.2 Spacecraft Mounted Flight Capsule Telemetry Equipment 2-23
2.2.1 Equipment Identification and Usage 2-23
2.2.2 Design Requirements and Constraints 2-23
2.2.3 Physical Characteristics 2-26
2.2.4 Operational Description 2-26
2.2.5 Performance Characteristics 2-28
2.2.6 Interfaces 2-29
2.2.7 Reliability and Safety Considerations 2-29
2.2.8 Test 2-29
2.2.9 Development Status 2-29
2.3 Telemetry Instrumentation 2-34
2.3.1 Equipment Identification and Usage 2-34
2.3.2 Design Requirements and Constraints 2-36
2.3.3 Physical Characteristics 2-39
2.3.4 Operational Description 2-41
2.3.5 Performance Characteristics 2-43
2.3.6 Interface Definition 2-44
2.3.7 Reliability Considerations 2-44
2.3.8 Test 2-46
2.3.9 Development Requirements 2-46
SECTION 3 RADIO SUBSYSTEM 3-1
3.1 Capsule Bus Radio 3-1
3.2 Spacecraft Mounted Capsule Bus Support Radio 3-18
3.2.1 Equipment Identification and Usage 3-18
3.2.2 Design Requirements and Constraints 3-18
3.2.3 Physical Characteristics 3-18
3.2.4 Operation Description 3-21
3.2.5 Performance Characteristics 3-28
3.2.6 Interface Definition 3-28

3.2.7 Mission Success Definition 3-28
3.2.8 Test 3-31
3.2.9 Development Status 3-31
SECTION 4 CAPSULE BUS ANTENNA SUBSYSTEM 4-1
4.1 CB Transmitting Antenna 4-1
4.2 Design Requirements and Constraints 4-1
4.3 Physical Characteristics 4-4
4.4 Performance Charateristics 4-6
4.5 Reliability and Safety Constraints 4-6
4.6 Test 4-11
4.7 Development Requirements 4-11
SECTION 5 DATA STORAGE SUBSYSTEM 5-1
5.1 Capsule Bus Data Storage 5-1
5.2 Spacecraft-Mounted Capsule Bus Support Data Storage 5-13
SECTION 6 CAPSULE BUS COMMAND SUBSYSTEM 6-1
6.1 Equipment Identification and Usage 6-1
6.2 Design Requirements and Constraints 6-1
6.3 Physical Characteristics 6-1
6.4 Operation Description 6-1
6.5 Performance Characteristics 6-5
6.6 Interface Definition 6-5
6.7 Reliability and Safety Consideration 6-5
6.8 Test 6-10
6.9 Development Requirements 6-10

This Document Consists of the Following Pages:

Title Page
i through v
1
1-1 through 1-98
2-1 through 2-46
3-1 through 3-34
4-1 through 4-11
5-1 through 5-21
6-1 through 6-11

PART C - SUBSYSTEM FUNCTIONAL DESCRIPTIONS

This part contains Functional Descriptions of the preferred Capsule Bus Subsystems. Separate sections have been written, in some instances, below the subsystem level, to make a more easily understood presentation.

It will be noted that an attempt was made to maintain a uniform format. However, deviations occur in both organization and content, wherever it was thought to benefit the presentation. For example, the sections on major elements of the Structural Subsystem do not lend themselves to description in functional terms, being essentially passive. As a result, emphasis was placed on physical description, related to the imposed and derived constraints.

Certain information has been provided which would ordinarily be considered outside the scope of a purely "Functional" Description. Where our analysis and investigation has led to a design incorporating well characterized or existing equipment, the details of such equipment have been included to help substantiate its selection. Also, Reliability analysis has been included for convenience in relating it to the equipment design (via functional block diagrams) for which it was derived. A brief summary of the development status of the design is presented at the end of each section for convenience in relating it to the preferred design.

SECTION 1

STRUCTURAL/MECHANICAL SUBSYSTEM

The structural/mechanical subsystem consists of the physical elements required for the support, alignment, protection, release, and separation or deployment of the Capsule Bus components from the time of the initial installation of these components until completion of their assignments in the total mission. The structure serves as the physical element for unifying the Capsule Bus Subsystem and incorporates the thermal control function. The structural elements are designed to withstand without failure the greatest anticipated loads to which they may be subjected, to be compatible with the predicted environments, and to possess the rigidity and other physical characteristics necessary to insure that no deleterious coupling and no unintentional contact between adjacent components occur. All mechanical functions are initiated by completely redundant pyrotechnic devices. The mechanical components possess the capability of providing structural continuity across the separation joints and of imparting the impulses necessary to provide the required velocity to the component being released. The major elements of the Capsule Bus structural/mechanical subsystem are:

a. Sterilization Canister
b. Adapter
c. Aeroshell
d. Lander

1.1 STERILIZATION CANISTER - The Canister preferred design described in this section will meet all of the specified constraints and will adequately protect the capsule from recontamination to the required probability level. The conventional and flight proven solutions, materials and designs will result in a reliable canister with minimum development areas, and a high confidence in meeting the inviolate launch window requirements as well as performance of the specified technical task. The trade studies led to the selection of an aluminum semi-monocoque canister formed in a shape as near spherical as possible within envelope and interface constraints. The structure, which is biologically sealed before sterilization, is protected by pressurization and vent equipment from exceeding a pressure of 2.25 psi on the ground or after launch. This pressure is based on limitation of the canister internal temperature range after sterilization to 50 degrees F to 110 degrees F in order to avoid bleeding internal gas and resultant make up problems.

The canister is divided into a forward and aft section by a field joint which provides access for installation of the capsule and other operations. Separation of the canister forward section to permit ejection of the capsule is accomplished by a redundant Confined Explosive Separation Device (CESD) which expands between the flanges of the field joint ring when detonated to break the bolts clamping the rings together.

Canister electrical equipment provides

a. power and signals for canister and capsule separation, and the pressurization and vent equipment

b. provides checkout and diagnostic information

c. interconnection among the Spacecraft Bus, Capsule Bus, and OSE, and

d. inflight disconnection from the capsule

It is not possible at this time for the Study Contractor to define the probability of recontamination associated with meteoroid puncture, so no requirements presently exist concerning the required level of meteoroid defense. Pending more definitive requirements in this area, the canister has been designed on the basis of providing a physical barrier to recontamination on the ground and during flight through the earth's atmosphere, and the conventional requirements of flight and ground loading. The penalties in weight and complexity for providing protection against meteoroid penetration have been assessed in Part B, Section 5.1 of this volume. As the planetary quarantine allocation by system becomes better defined and the contribution of meteoroid penetration to recontamination is evaluated, the need for meteoroid protection will be reviewed.

1.1.1 Sterilization Canister Structure

1.1.1.1 Equipment Identification and Usage - The sterilization canister structure as shown in Figure 1.1.1-1 is comprised of four major elements, a forward section, an aft section, an interface cone, and an aft closure. The structure, when assembled, performs the following functions:

- Provides a biologically sealed enclosure for the Capsule Bus.
- Provides a separation joint for opening the canister and ejecting the Capsule Bus.
- Transmits Capsule Bus loads from the adapter to the Spacecraft Bus.
- Provides structural support and encloses the canister equipment and canister mounted Flight Capsule equipment.
- Provides a field joint for Flight Capsule installation and other operational access.

CANISTER STRUCTURE
PREFERRED DESIGN

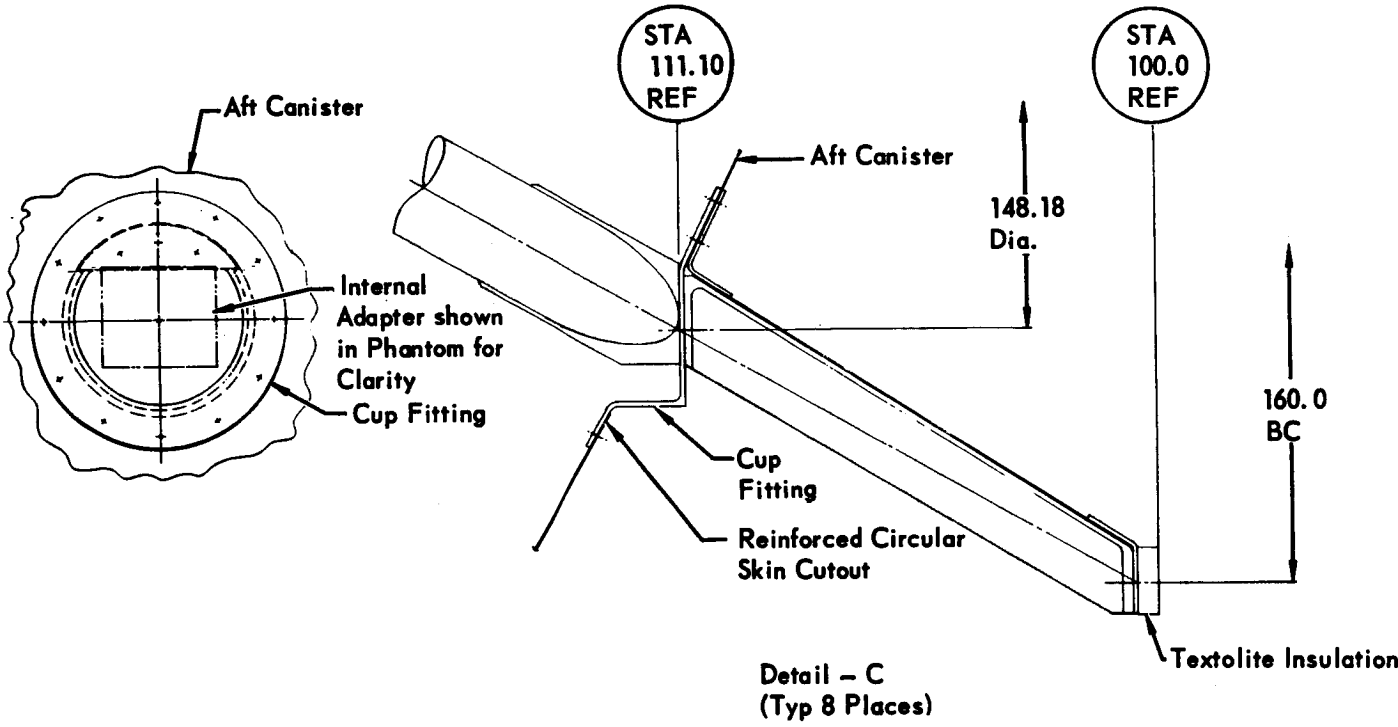

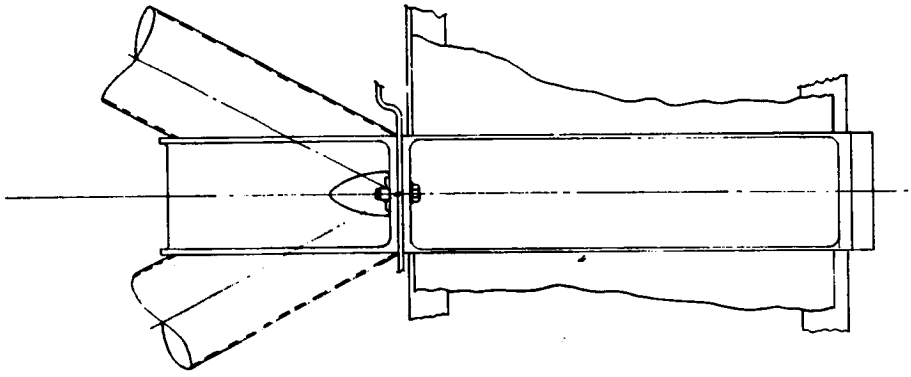

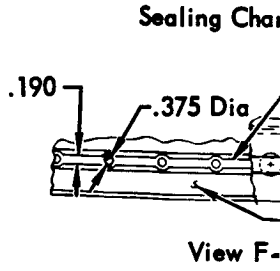

A

Figure 1.1.1–1

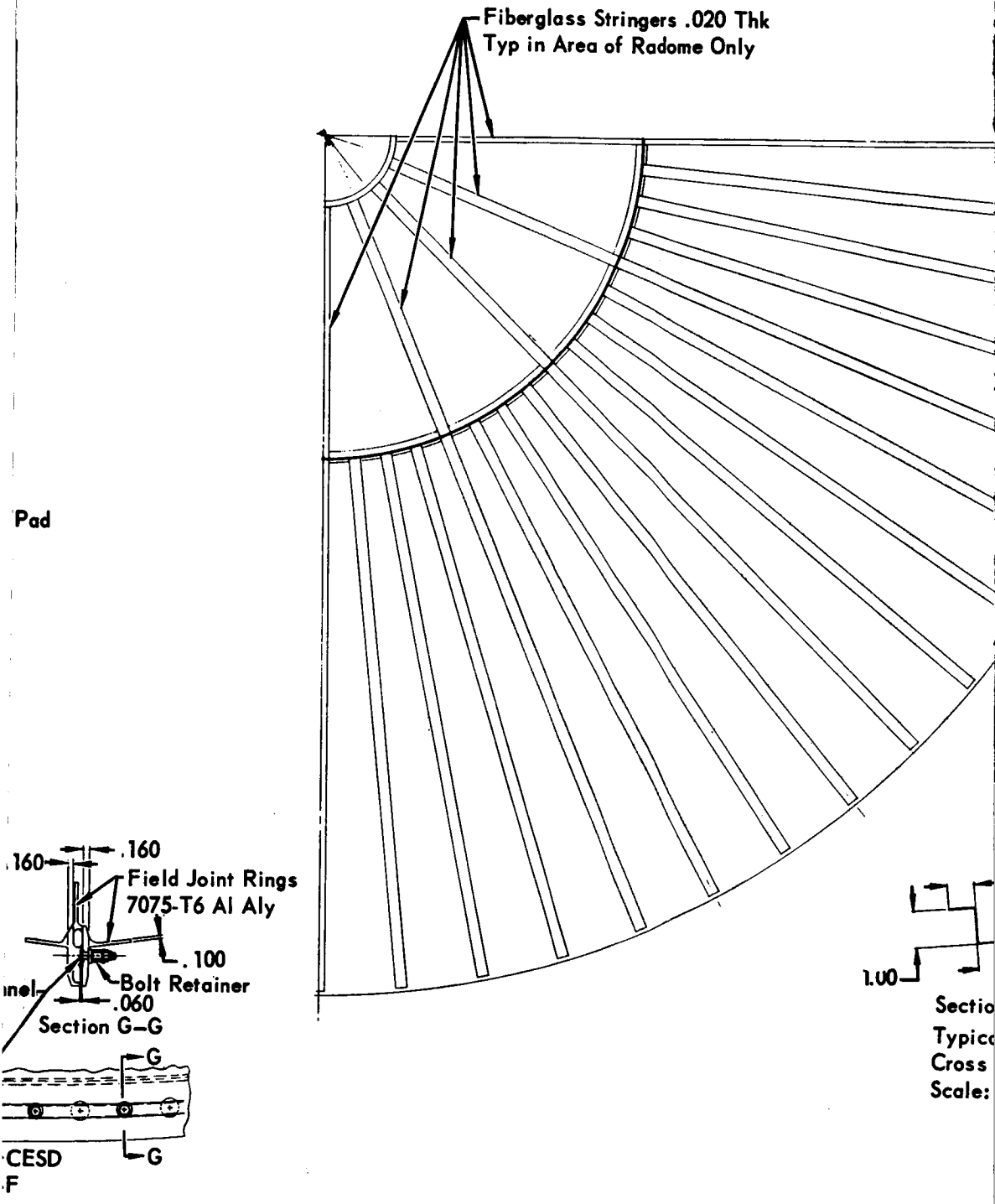
Fiberglass Stringers .020 Thk
Typ in Area of Radome Only
Pad
.160
.160
Field Joint Rings
7075-T6 Al Aly
.100
Bolt Retainer
.060
Section G–G
G
CESD
F
G
1.00
Sectio
Typic
Cross
Scale:

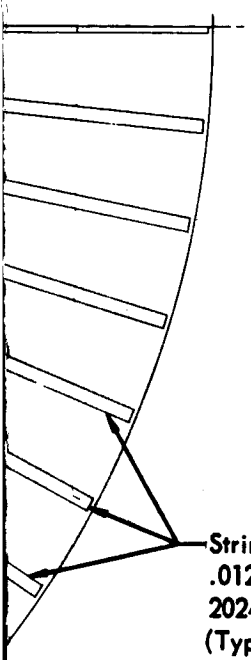

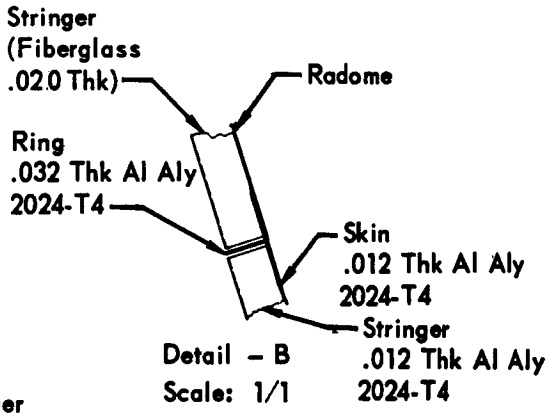

Detail – B
Scale: 1/1

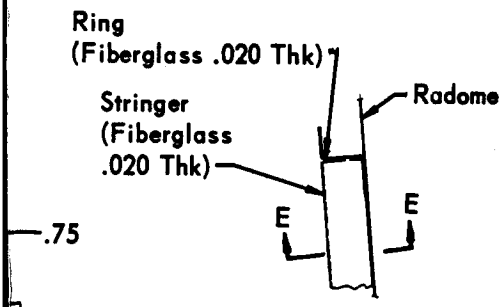

Detail – D
Scale: 1/1

n E-E
l Stringer
Section
1/1

B

CANISTER STRUCTURE
PREFERRED DESIGN (Continued)

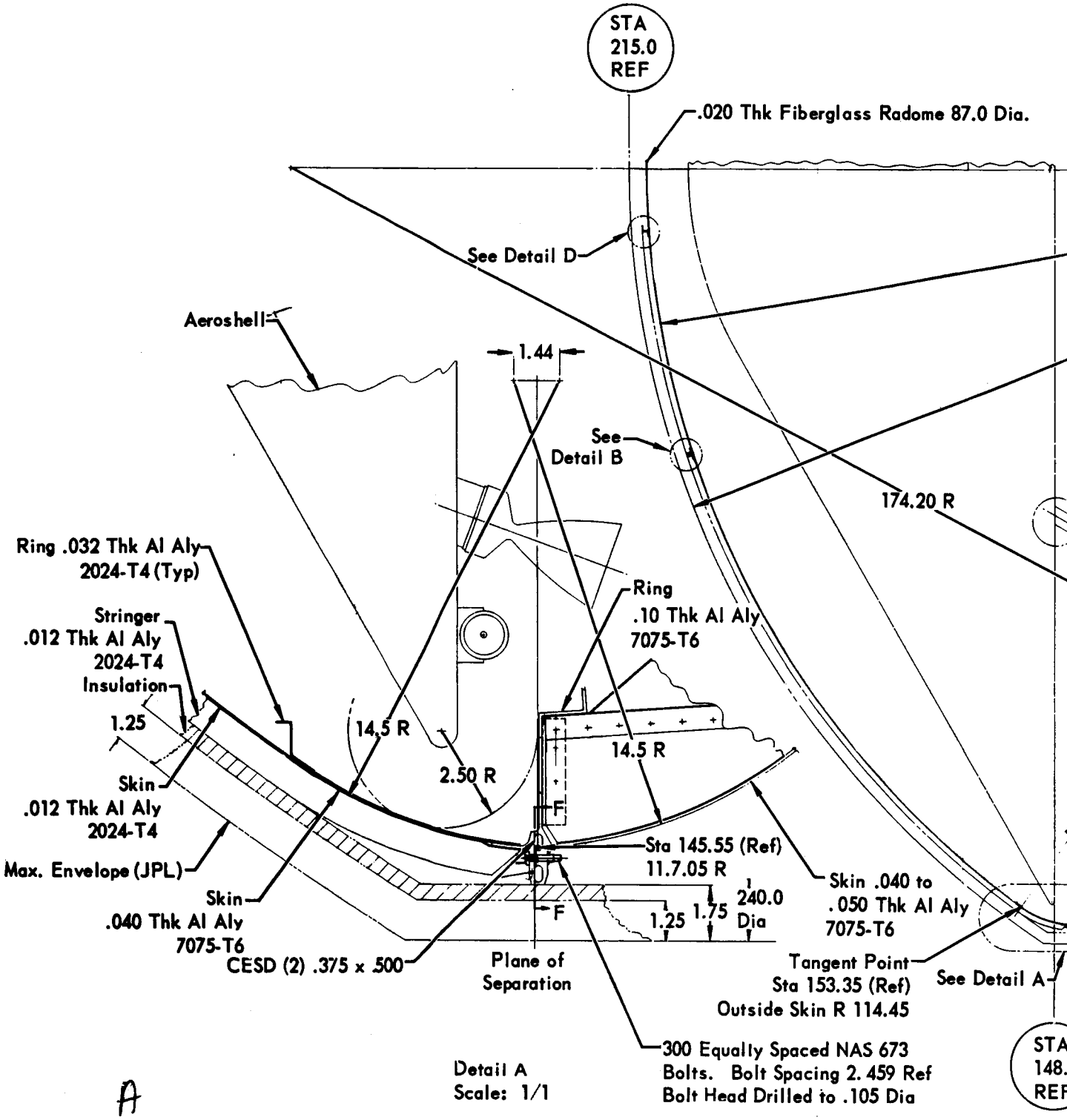

A

Figure 1.1.1-1 (Continued)

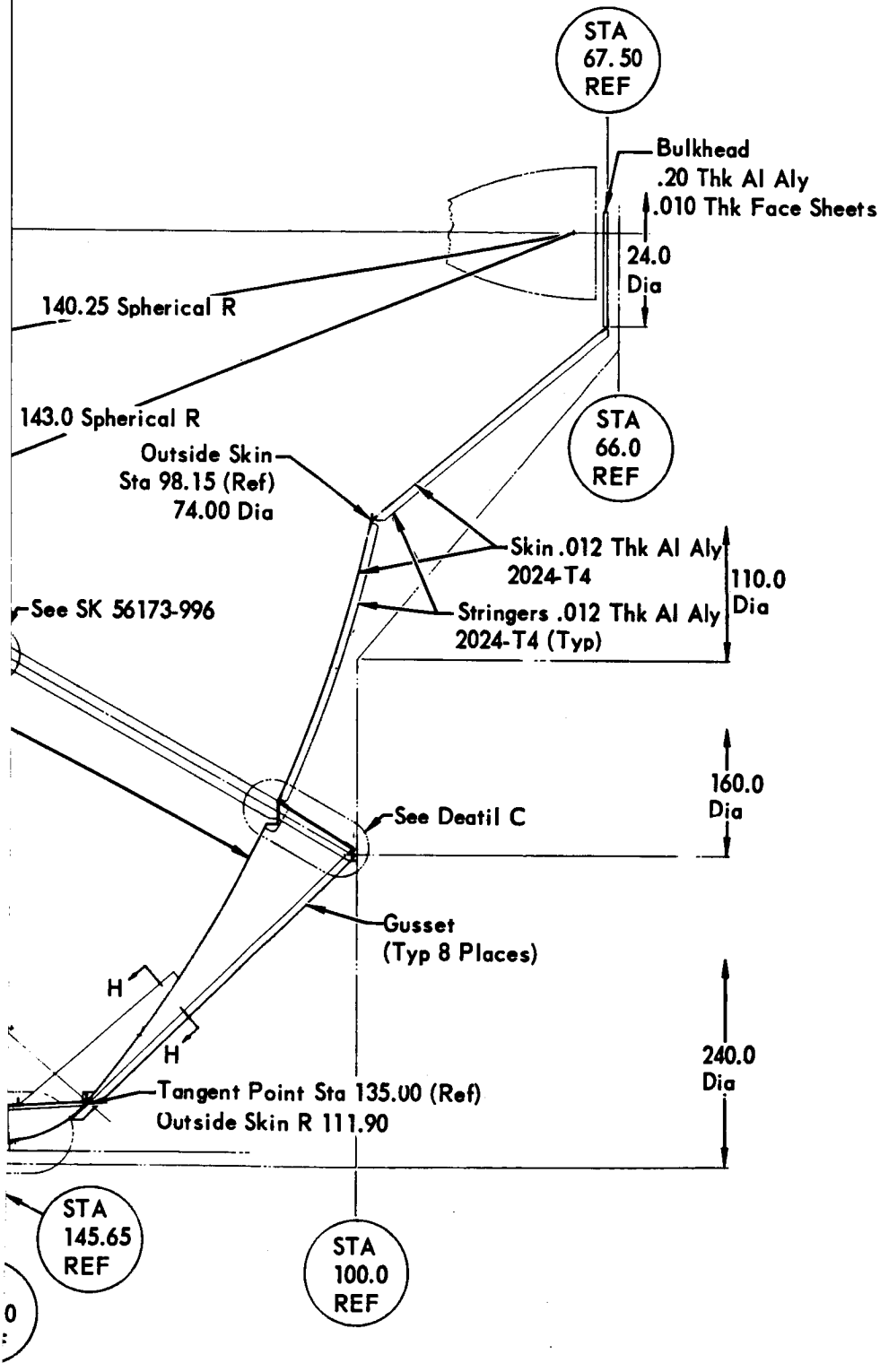

Section H-H
Scale: 1/1

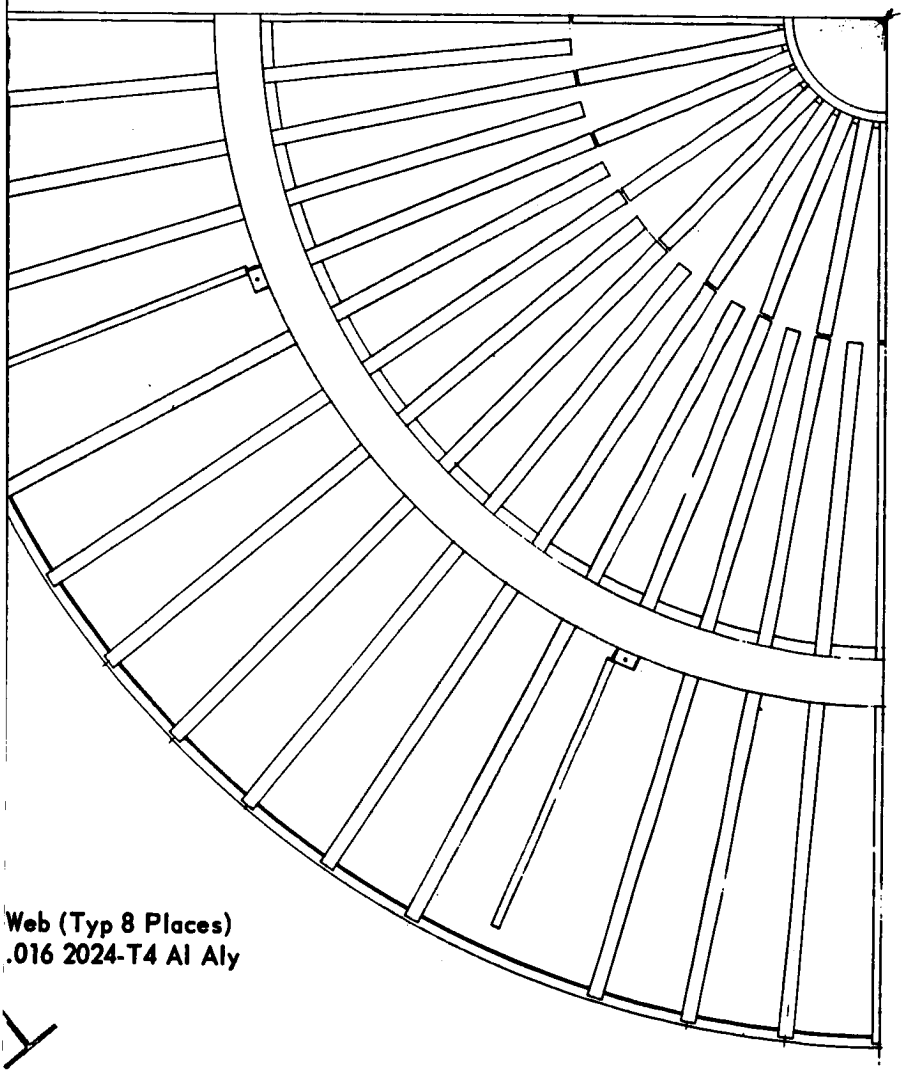

B

1-4-3

- Provides for mounting the insulation blanket.
- Provides for Flight Capsule checkout after terminal sterilization.

Forward Section - The aluminum, semi-monocoque forward section provides the required opening in the canister for the installation and removal of the Capsule Bus. The forward insulation blanket is supported by and attached to external stringers on the canister. The forward section is attached to the aft section by a circumferential field joint ring, which provides a seal at the joint. An attachment is provided on the field joint ring to accommodate OSE for handling either the forward section or the complete Flight Capsule.

Aft Section - The aluminum, semi-monocoque aft section supports the forward section for flight loads and attaches to the adapter cone at the Adapter/Canister interface. Structural mounting of the components of the pressurization and vent, harnessing, sensing, OSE test and checkout, and separation equipments are provided on the aft section. The aft section insulation blanket is supported by and attached to external stringers mounted on the aft section.

Interface Cone - The aluminum skin, rings and fittings between the aft section of the canister and the Spacecraft Bus interface (Capsule Station 100.00) comprise the interface cone. This structure carries loads from the Adapter/Canister interface and from the canister back to the Spacecraft interface. Eight fittings match with the Spacecraft interface attachments. At each of these fittings a bracket runs forward along and is attached to the canister aft section to support the canister for inertia loads.

Aft Closure - The aluminum semi-monocoque aft closure completes the aft biological barrier envelope and will provide the necessary mounting surface for the power, telemetry, inflight checkout, sequencing components and cabling. The aft closure may be made removable to provide access to the interior of the canister. Insulation is also provided on the aft closure.

1.1.1.2 Design Requirements and Constraints - The sterilization canister structure is most significantly influenced by the following constraints and requirements:

- The requirement to provide a biologically sealed container to enclose the Flight Capsule.
- The design internal pressure which the structure must contain:

  limit pressure = 2.25 psi

  burst pressure = 1.67 x limit = 3.75 psi

- The requirement to limit leakage to .70 cc/sec. (see Section 1.1.3, Pressurization and Vent Equipment.)
- The constraints of the JPL specified envelope within the Space Vehicle shroud and the Aeroshell envelope within the canister.
- The dynamic characteristics of the Space Vehicle and resultant dynamic loading and excursions.
- The requirement for thermal isolation from the Flight Spacecraft interface.
- The design ultimate flight loads (including a factor of 1.20 estimated for dynamic loading) of 7.35 g's axial and 0.98 g's lateral.

1.1.1.3 Physical Characteristics - The total weight of the structure, including installed components, is 685 pounds. This includes the weight of the external insulation but not the Capsule Bus/Adapter.

Forward Section - The forward section is 68 inches high consisting of a 140.25 inch hemispherical radius with a 14.5 inch toroidal radius blending into a 238.25 inch diameter field joint ring as shown in Figure 1.1.1-1. Riveted semi-monocoque construction is employed, using 0.012 inch thick formed skins of aluminum alloy, type 2024-T4, stiffened with external longitudinal 0.012 inch thick zee section aluminum alloy, type 2024-T4, stringers spaced a maximum of 12 inches apart. An 87 inch diameter, 0.020 inch thick fiberglass radome, also with a 140.25 spherical radium forms the pole of the forward section to permit ground checkout of the Flight Capsule radar. The radome is also stiffened with fiberglass stringers. An 0.032 inch thick, formed aluminum alloy ring, type 2024-T4, supports the transition of the 0.012 inch thick skin to 0.040 inch thick aluminum alloy, type 7075-T6, toroidal skin, which attaches to the field joint ring. Before riveting, a thin coat of RTV 560 will be applied to the faying surfaces of all jointed members and lap joints exposed to pressure. An aluminum alloy, type 7075-T6, field joint ring completes the base of the forebody. The forward section of the canister can be cantilevered from its field joint and rotated about its roll axis in any direction for OSE checkout.

Aft Section - The aft portion of the allowable envelope is reduced by the modified spherical aft section, as shown in Figure 1.1.1-1. The aft section structure continues the enclosure from the field joint aft to the interface cone and the aft closure. The configuration is 47 inches high, consisting of a 174.2 inch hemispherical radius with a 14.5 inch toroidal radius blending into a 238.25 inch diameter

field joint ring. A 74.0 inch diameter aluminum alloy, type 7075-T6, ring terminates the hemispherical portion of the aft section and provides for attachment of the aft closure. The ring and stringer semi-monocoque construction is similar to the forward section using 0.012 inch thick formed skins of aluminum alloy, type 2024-T4, stiffened with 0.012 inch thick zee section aluminum alloy, type 2024-T4, stringers circumferentially oriented at a maximum spacing of 12.0 inches. As with the forward section the more rigid stiffeners are placed on the outside of the skin to insure better sealing at the skin lap splices and uniform loading of the skin against the stiffener. The aluminum alloy, type 7075-T6, field joint separation ring provides the structural attachment between the forward and the aft sections and access to the canister interior.

The seal at this interface is critical to maintaining canister pressure to meet the maximum leakage rate permitted and thereby avoid a potential negative internal pressure and violation of the microbiological seal. For this reason, an extremely low leakage, highly reliable and predictable seal is required. The planned approach is to use a modification of the injection groove technique to seal integral fuel tank structure. The sealing compound, RTV-560 or a modification thereof, optimized to obtain desired curing properties, is injected through holes in the field joint ring after the bolts are installed. The compound flows under pressure through the groove in the aft section ring, around the bolts to seal them, and out the next hole. The first injection hole is then plugged and the process is repeated at the next hole.

The forward section is attached to the aft section by 300 titanium bolts of 3/16 inch diameter. The bolts are broken in tension for separation by redundant Confined Explosive Separation Devices (CESD) installed in grooves in the aft section field joint ring. An intermediate sheet metal ring will provide attachment for the Capsule Bus truss adapter, and the 8 bathtub fittings of the interface cone which mates with the spacecraft. Rings and stringers are also fabricated from aluminum alloy, type 2024-T4. The pressurization and venting subsystems are mounted to the wall of the aft section base. Component mounting bracketry is attached between rings to minimize skin penetrations. Doublers are used around all skin cutouts. The OSE test and checkout points are located in an accessible section on the aft section wall. All penetrations of the section wall are sealed to maintain the interior biological environment.

Interface Cone - This cone provides the transition from the canister adapter interface at Capsule Station 111.10 to the Flight Spacecraft interface at Capsule

Station 100.00. It consists of the eight aluminum fittings which carry Flight Capsule loads through to the Flight Spacecraft, rings at the canister and Flight Spacecraft and an interconnecting web to provide shear and torsional rigidity. Local built up gussets are also attached to the fittings (8 places) to pick up inertia loading from the canister. Conductive heat transfer across the interface is reduced by the use of one-half inch thick structural insulation blocks at each of the eight fittings.

Aft Closure - The aft closure completes the biological barrier envelope and consists of a conical frustum, and aft disc. The conical frustum is 30 inches long with a 74-inch large diameter and a 24 inch small diameter. The frustum is attached to a ring of the aft section. The frustum is fabricated from 0.012 inch thick aluminum alloy sheet, type 2024-T4, stiffened with stringers as on the forward and aft sections. The 0.20 inch thick 24 inch diameter end disc has 0.010 inch thick aluminum face sheets separated by aluminum honeycomb core. Power, telemetry, inflight checkout, sequencing components and cabling are mounted to bracketry on the internal face of the frustum. The aft closure may be made removable if necessary to provide interior access.

1.1.1.4 Operation - The canister and adapter are designed to provide support of the Capsule Bus in vertical or horizontal attitude on the ground. The adapter is first mated with the Capsule Bus and then the assembly is installed in the aft section of the canister. The adapter/canister attachment bolts are installed from outside the canister so that additional access doors through the biologically sealed wall are not required. One or more doors may be required for mating of electrical connectors.

After installation of the forward canister section the field joint is sealed by the injection groove process and the Flight Capsule is given a pre-sterilization checkout. In the sterilization chamber the OSE Gas Servicing Unit is attached to the canister pressurization and vent valves to provide internal circulation and pressure control. The OSE unit is sterilized with the canister and provides pressure control and make up gas (to replace leakage) until the Space Vehicle Shroud is installed over the Flight Capsule and Flight Spacecraft (and the OSE unit must be removed). After sterilization, the OSE unit will not be reconnected to the canister so a sterile connection process is not required. At all times after sterilization the canister internal temperature must be controlled within a 60 degree range (50 degrees F to 110 degrees F) in order to prevent over pressurizing the structure or venting gas which must be replaced.

Testing after sterilization will be accomplished through Spacecraft Bus interface connectors and OSE fittings on the outside of the canister. Throughout the launch, the canister will be evacuated at a rate that maintains differential pressure below structural limits by the Pressurization and Vent Equipment. During transit, the canister provides biological protection and some meteoroid protection.

1.1.1.5 Performance Objectives - The design objective of the canister is to perform the required functions, throughout its entire life, without inducing structural failures or excessive deflections or recontamination of the Capsule Bus. The structure must possess sufficient strength to withstand all load environments, both static and dynamic, without a failure. It must also possess sufficient rigidity to prevent deflections that will degrade the performance of subsystem components and to prevent adverse dynamic coupling with other systems. Deflections are considered excessive if they result in significant unintentional contact between various spacecraft components, excursions which exceed the limitations of the specified dynamic envelope, or misalignment of structure and components that affects their functional performance. Leakage must be limited to .70 cc/sec. to meet requirements of the Pressurization and Vent Equipment and the assumed 14 days in the Launch Vehicle Shroud before launch.

The forward canister envelope was maximized within the allowable JPL envelope to accommodate future growth of the internal capsule. A total clearance allowance of 1.25 inches was assumed between the canister outer surface and the allowable JPL envelope pending complete analysis to accommodate any static or dynamic excursions.

1.1.6 Interface Definition - Spacecraft - The canister provides the mechanical interface between the Flight Capsule and the Spacecraft. An eight point interface mates with the Spacecraft at Capsule Station 100.00 on a 160.00 inch bolt diameter. Thermal insulation will be provided to minimize heat flow in either direction across the Spacecraft to Flight Capsule interface. Access is provided for installation of the eight interface bolts from the canister side of the interface.

Adapter - The canister mates with Capsule Bus adapter at Capsule Station 111.10 at eight points on a 148.18 diameter bolt circle. The bolts are installed from outside the canister after the Capsule Bus is already attached to the Adapter.

OSE - Provisions are made for OSE attachments at the field joint ring for handling the canister forward section, the entire canister or the canister with the Capsule Bus installed. The canister aft section, total canister or canister with Capsule Bus installed can also be handled by OSE attachment at the Spacecraft interface

(Capsule Station 100.00). The OSE Gas Servicing Unit and Checkout Console also interface with the canister at valves and electrical connectors respectively.

Equipment Component Interfaces - The canister provides the necessary mounting structure for support of the components. Pressurization and Venting Equipment components are installed on bracketry on the aft canister. Power, telemetry, in-flight checkout, sequencing components and cabling are installed on the aft canister primarily inboard of the interface cone. Components are located to minimize radial C.G. offset, to minimize harness lengths, and to group those components that are functionally related. Harnesses are appropriately supported (See Figure 1.1.1-2). All penetrations of the canister wall are suitably reinforced and sealed to maintain the biological seal.

1.1.1.7 Reliability and Safety Considerations - The reliability and safety considerations in the design of structure, pressure vessels, lines, and fittings are given major attention. The philosophy used in the design and subsequent tests of actual hardware virtually negates the reliability and safety risk. This philosophy has been applied to the VOYAGER design.

Structure - Structural criteria are identified in terms of limit and ultimate design loads. Limit loads are those which result from the maximum expected flight or ground handling conditions. Ultimate loads are those determined by adjusting upward the limit loads by a factor of safety, 1.25 for flight conditions and 1.5 maximum for ground handling conditions which are potentially hazardous to personnel. The structural design is verified by tests to ultimate design loads of a representative item to provide the assurance that the reliability and safety risk is virtually eliminated and therefore is not approached from a statistical standpoint.

Pressure - Analagous to the structural design criteria for primary structure, the design criteria for the canister is identified in terms of proof and burst pressure. Proof pressure is the pressure which a vessel must sustain without yielding and is a produce of the maximum operating pressure and the proof factor of safety. For the canister this proof factor is 1.33. Burst factor is the pressure which a vessel must sustain without rupture. The burst pressure is a produce of the maximum operating pressure and the burst factor of safety which is 1.67 for the canister. The design of the canister is verified by a burst pressure test of representative items and a proof pressure test of all flight hardware to provide assurance that the reliability and safety risk is essentially eliminated.

CANISTER EQUIPMENT INSTALLATION

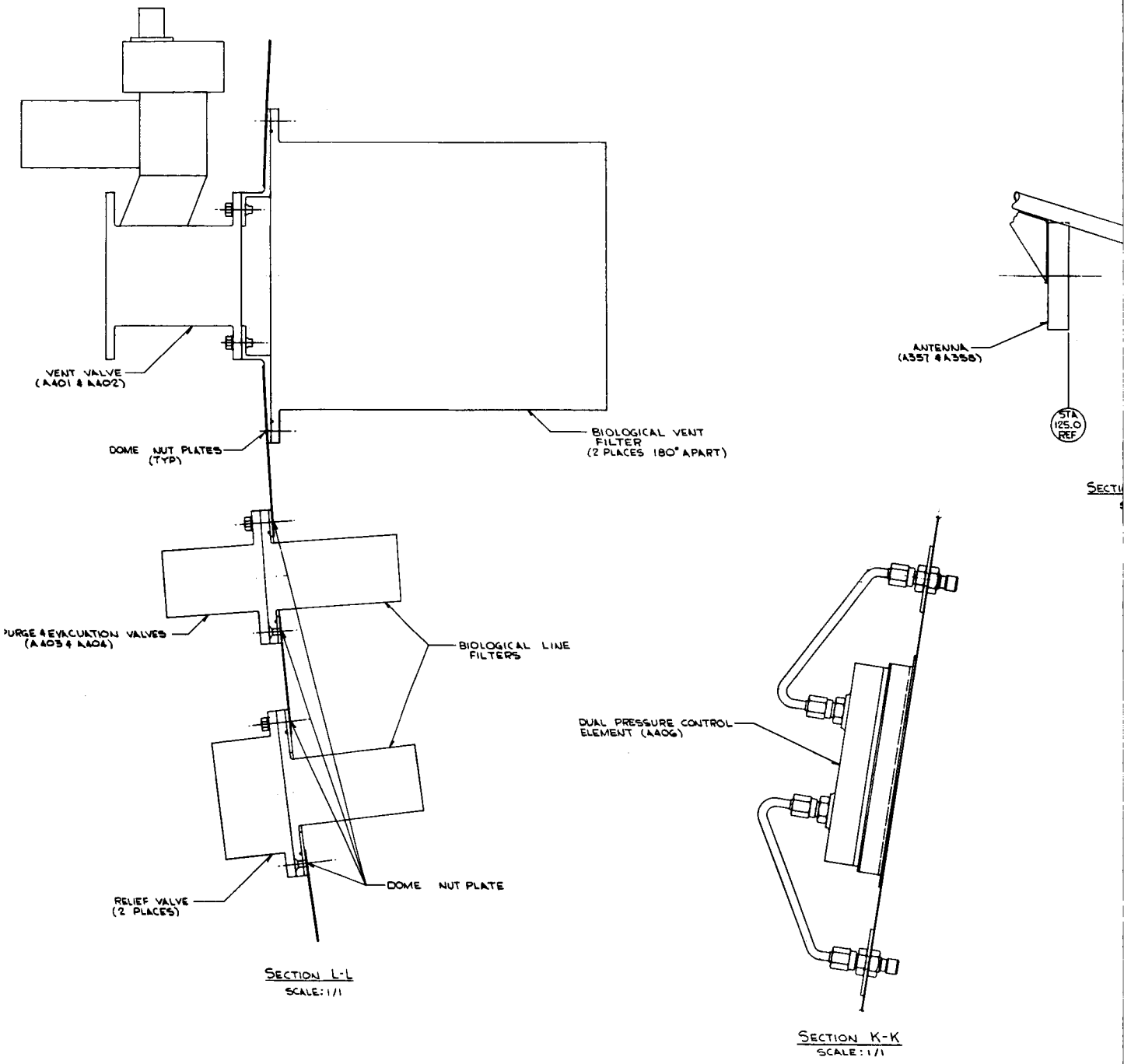

A

Figure 1.1.1-2

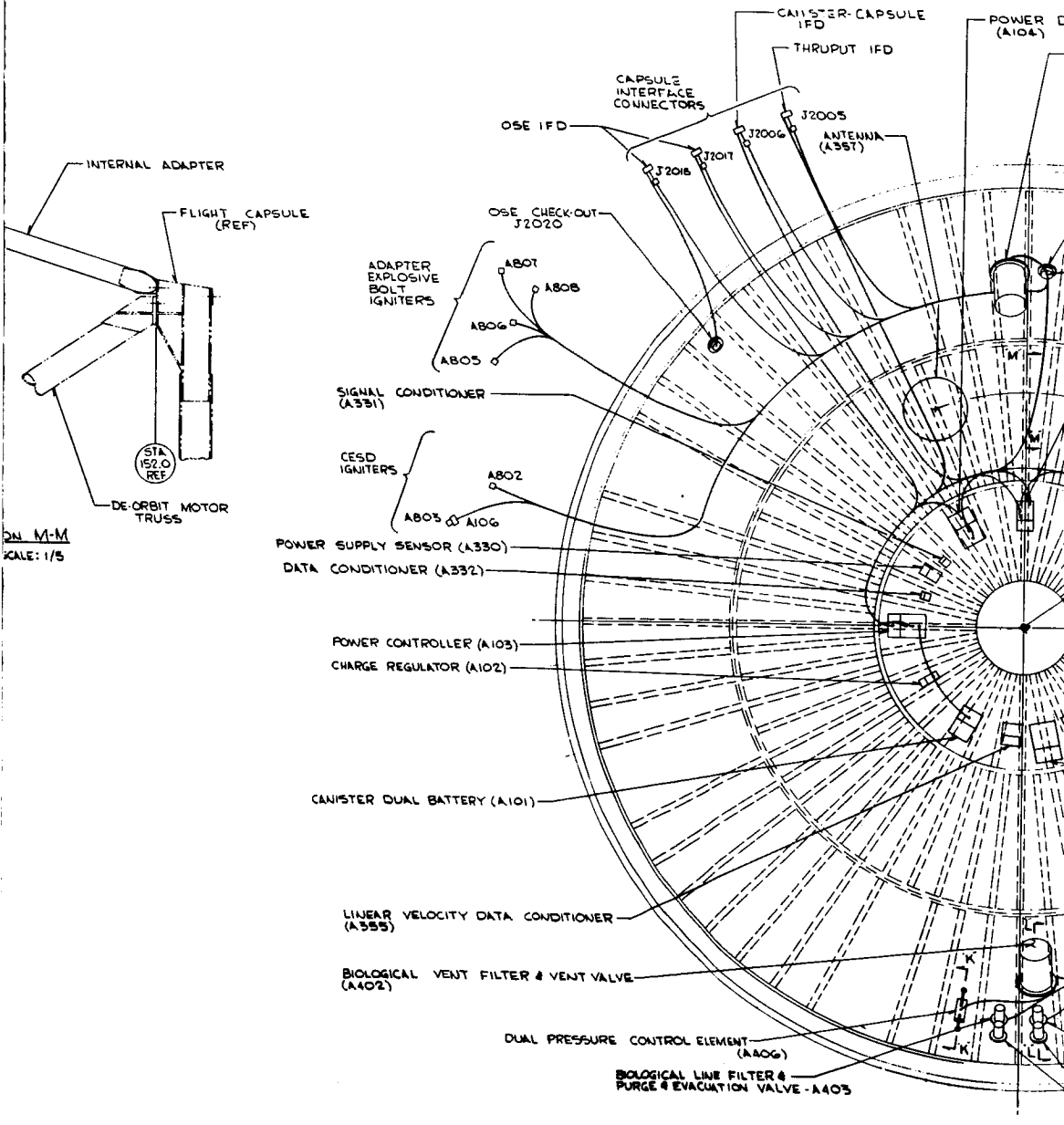
INTERNAL ADAPTER
FLIGHT CAPSULE (REF)
STA 152.0 REF
DE-ORBIT MOTOR TRUSS
ON M-M
SCALE: 1/5
CANISTER-CAPSULE IFD
THRUPUT IFD
POWER D (A104)
CAPSULE INTERFACE CONNECTORS
OSE IFD
J2005
J2006
J2017
J2018
ANTENNA (A357)
OSE CHECK-OUT J2020
ADAPTER EXPLOSIVE BOLT IGNITERS
A807
A808
A806
A805
SIGNAL CONDITIONER (A331)
CESD IGNITERS
A802
A803
A106
POWER SUPPLY SENSOR (A330)
DATA CONDITIONER (A332)
POWER CONTROLLER (A103)
CHARGE REGULATOR (A102)
CANISTER DUAL BATTERY (A101)
LINEAR VELOCITY DATA CONDITIONER (A355)
BIOLOGICAL VENT FILTER & VENT VALVE (A402)
DUAL PRESSURE CONTROL ELEMENT (A406)
BIOLOGICAL LINE FILTER & PURGE & EVACUATION VALVE - A403
M
K
L
VIEW LOOKIN
FWD CANISTE

1-11-2

ISTRIBUTION MODULE

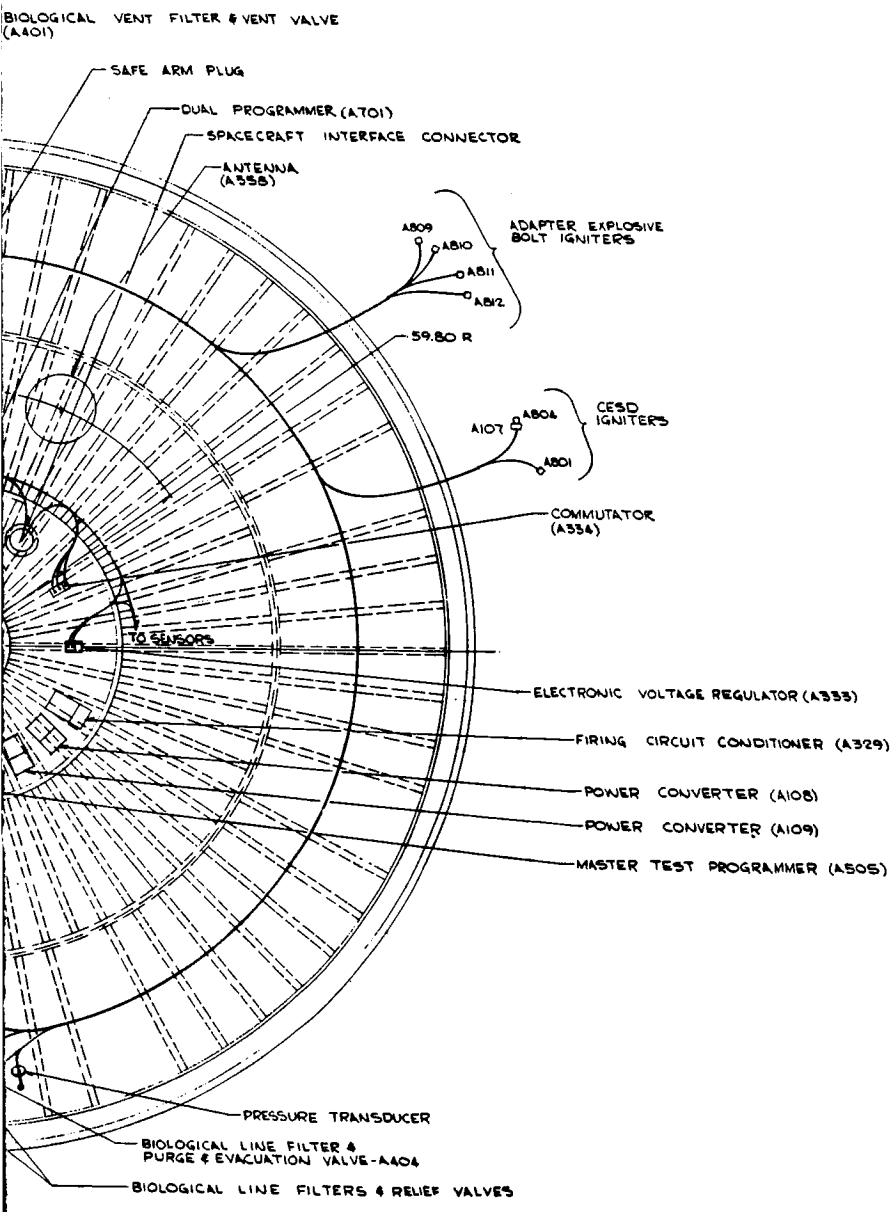

UG AFT

R NOT SHOWN

B

1-11-3

1.1.1.8 Test Requirements - Subsequent to fabrication and after sterilization, the canister structure elements will be subjected to proof pressurization and leak tests to insure a proper and continuing biological seal.

1.1.1.9 Development Requirements - The following areas require development to demonstrate the capability of the canister to meet the specified requirements.

- The field joint seal process must be developed and demonstrated to be reliable and repeatable.
- Means for sealing the structural joints and verifying the seal within the stringent leak requirements must be developed.

All other areas of the canister structure preferred approach described herein are based on well developed design and fabrication approaches.

1.1.2 Separation Equipment

1.1.2.1 Equipment Identification and Usage - The Canister Separation Equipment consists of electrical networks for the initiation of and pyrotechnic devices for separation and ejection of the Canister forebody. This equipment includes the following components as depicted on Figure 1.1.2-1.

- Confined Explosive Separation Device (CESD) (elected pyrotechnic device)
- Electro-Explosive Device (EED), Standardized Initiator
- Parallel Redundant Battery Supply
- Harness
- Measurement/Performance Sensors
- Field Joint Bolts

Confined Explosive Separation Device (CESD) - The CESD, on detonation, breaks the titanium bolts in tension at the periphery of the canister support ring by expanding between the field joint rings. A completely redundant pyrotechnic system is provided.

Electro-Explosive Device (EED) - The EED converts electrical energy into controlled explosive energy to initiate detonation in each CESD.

Parallel Redundant Battery Supply - The parallel redundant battery supply and dual programmer provide electric power to the safe-arm plug maintaining the subsystem in a safe condition. This electric power is provided during pad, prelaunch checkout, inflight transit and when the Capsule enters into Mars orbit. The batteries are in a charged condition during inflight transit and during the Mars orbit phase.

Measurement/Performance Sensors - Sensors provide performance data to the canister telemetry equipment. This data provides the resultant magnitude and direction

CANISTER SEPARATION BLOCK DIAGRAM

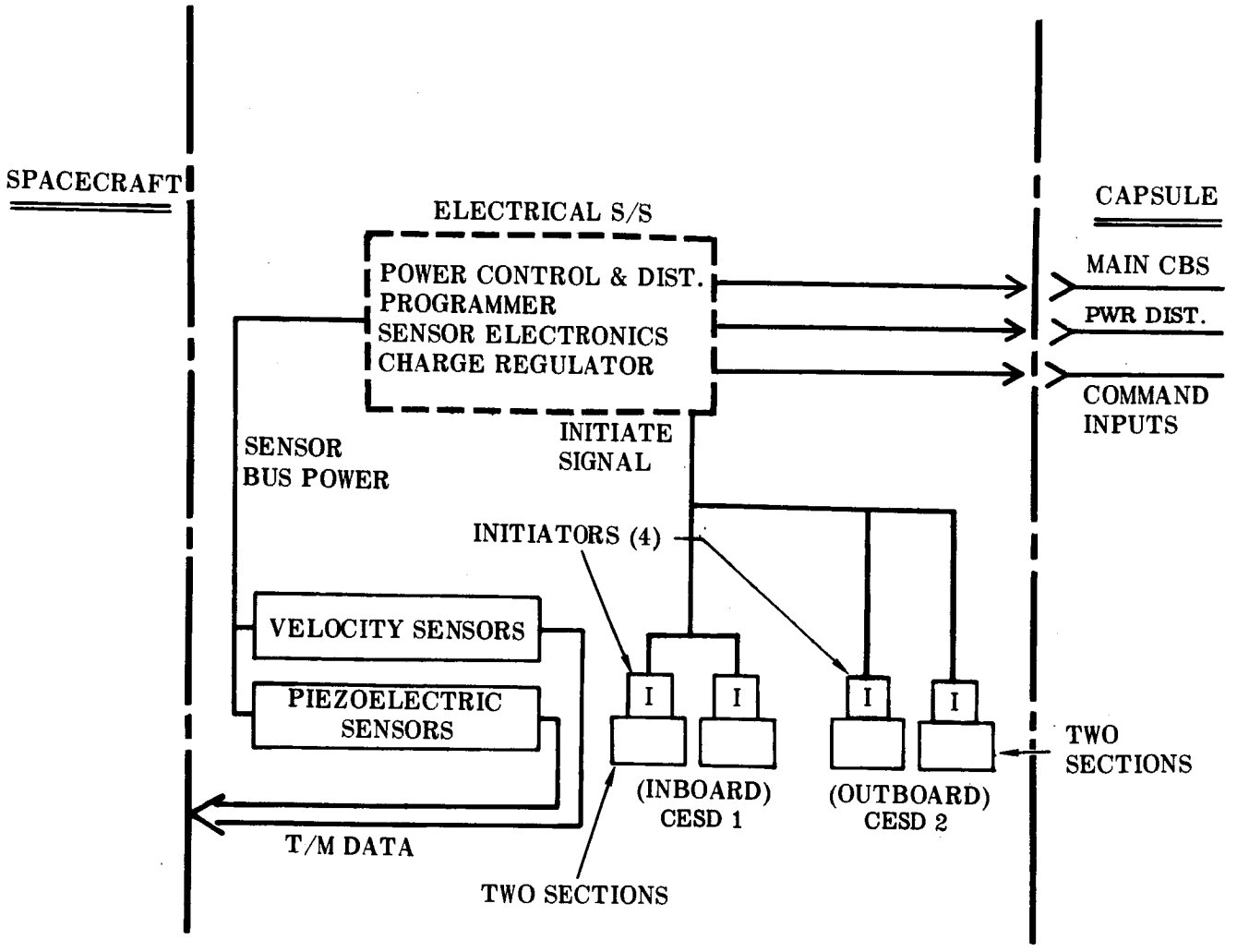

Figure 1.1.2-1

vector of the separation velocity, plus tip-off rate of the canister forebody. Piezoelectric type sensors provide maximum g-force measurements at separation.

Electrical Harness - The electrical harness, connections, and firing circuit will conform to range safety regulations as specified in AFETRM 127-1. Firing circuit electrical grounds will be isolated from other grounds.

Field Joint Bolts - The titanium bolts (approximately 300 bolts, 3/16 diameter) clamp the field joint rings together with the CESD between the flanges. The head end of the bolts are drilled to obtain a pre-determined break point and strength.

1.1.2.2 Design Requirements and Constraints - The following minimum constraints are imposed for the separation equipment.

- The CESD and related explosives must be fully contained and sealed preventing possibility of resultant debris.
- The broken titanium bolts and the CESD must be retained and remain with the aft canister section or canister forebody.
- Redundancy must be maintained in all subsystems affecting the separation equipment operation.
- Inflight Disconnects (IFD's) must not be required in the firing circuits.
- The subsystem design must permit removal of all explosives during equipment installation and storage periods. Explosives must be installed just prior to sterilization, thereby reducing ground safety hazards.
- The separation device must provide a minimum separation velocity of 1.25 feet/second.

1.1.2.3 Physical Characteristics

CESD Characteristics - The separation of the forebody canister from the aft canister at the aluminum ring interface is accomplished by detonating the CESD located on either side of the titanium bolts, causing the bolts to fail. A cross sectional view of the CESD with opposing aluminum field joint rings and clamping titanium bolts is shown in Figure 1.1.2-2. The bolts are preloaded to reduce the stroke required from the CESD to break them. The two flange rings are sealed with GE-RTV-560 injected under pressure in an annulus, to insure no leakage due to internal canister pressure which may be developed from temperature changes. A thin coating of GE-RTV-560 is injected into the annuluses in the aft canister ring prior to installation of the flattened stainless steel tube of the separation assembly. This compound performs two functions:

CONFINED EXPLOSIVE SEPARATION DEVICE (CESD)

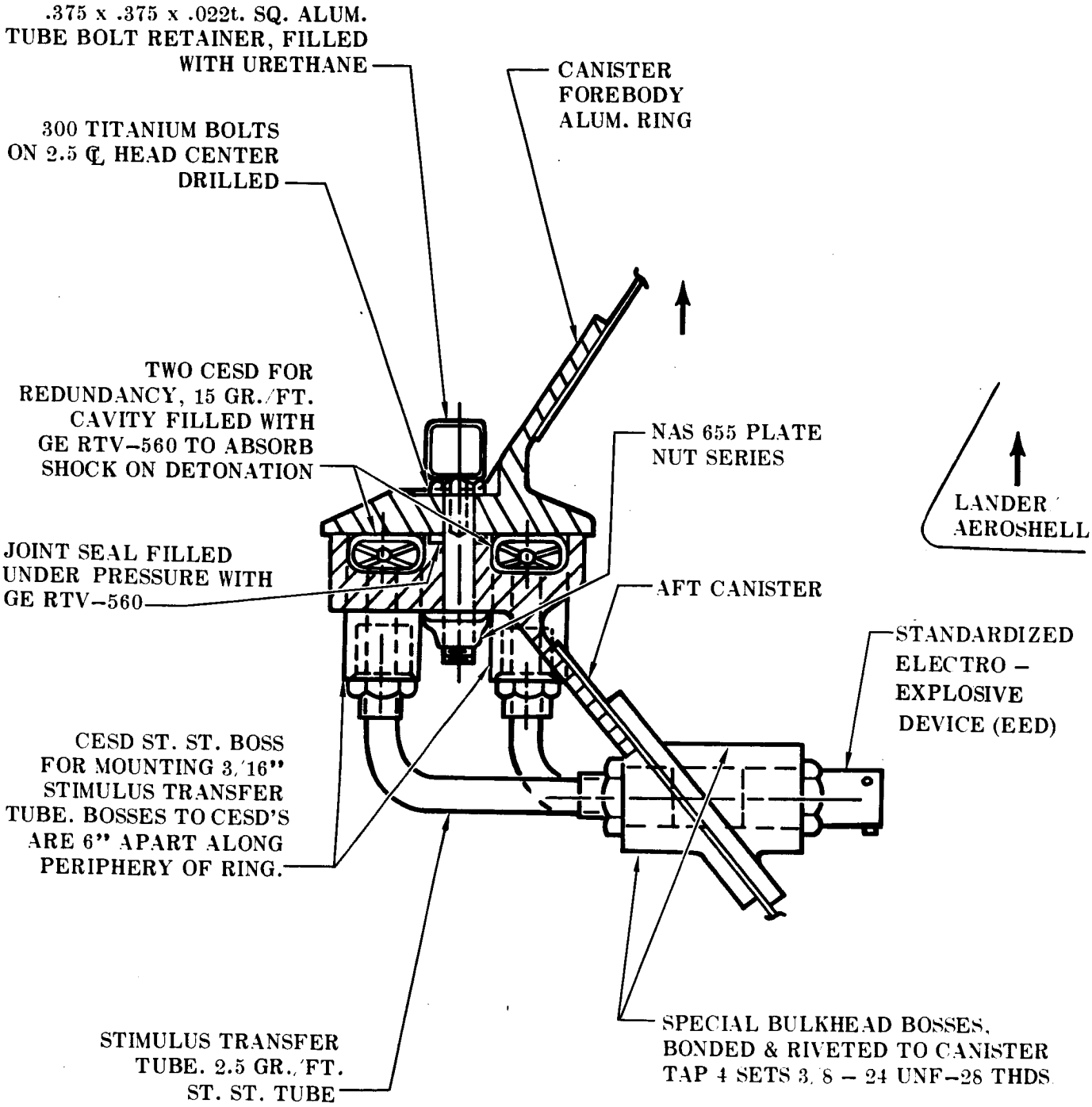

Figure 1.1.2-2

- it acts as a chock absorber when the explosive within the CESD detonates,
- it aids in retaining the CESD within the annulus after it expands on separation.

The CESD stainless steel tube receives a low temperature dry lubricant coating so that it does not shear the RTV-560 during temperature contraction and expansion because of the difference in coefficient of expansion between aluminum ring and the SMDC stainless steel tube.

The physical construction of the CESD is shown in Figure 1.1.2-3. It consists of mild detonating cord (MDC)securely positioned in the tubing by means of a Teflon extrusion used to: 1) center the MDC, 2) protect it from vibration, and 3) reduce the impact velocity on the tubing wall of metallic MDC sheathing particles produced during detonation.

The MDC and Teflon support is inserted within the stainless steel tube after it is fabricated to proper configuration and appendages have been welded. Each CESD is approximately 31.5 feet long. The ends of each are sealed as shown in Figure 1.1.2-4 by resistance welding, designed to leave a temperature expansion gap between ends of 0.6 inch at 70 degrees F. Each CESD is curved to the approximate 10 foot radius and has a stainless steel boss welded at the center, as shown in Figure 1.1.2-5. The boss permits the attachment of the explosive stimulus transfer tube which is capable of transferring the detonation from the standardized EED's located inside the aft canister, to the MDC. See Figure 1.1.2-2.

MDC Characteristics - Located inside the CESD and at the boss location is an explosive booster (HNS-I) shown in Figure 1.1.2-6 to insure the detonation of the MDC. The MDC grain loading is from 10 to 15 grains of DIPAM or HNS-II, the exact charge being determined by test.

DIPAM and HNS-I and II have been successfully tested in excess of +300 degrees F for 100 hours. There is no inherent reason to expect any problems with three twenty-four and one-half cycles of dry heat sterilization followed by a seven month -150 degrees F cold soak.

Stimulus Transfer Tube Characteristics - This design concept has been used by McDonnell and other companies for many applications requiring a sealed explosive transfer train. The grain loading is 2.5 grain/foot in an aluminum sheath and the external stainless steel tube is .187 inch diameter. At each end of the stainless steel tube there is a special 3/8-24 straight thread bolt which secures the tube to the CESD boss and correctly positions the end cap of the stimulus transfer tube directly in front of a window cut in the CESD steel tube and in line with the HNS-I

CROSS SECTION OF CESD

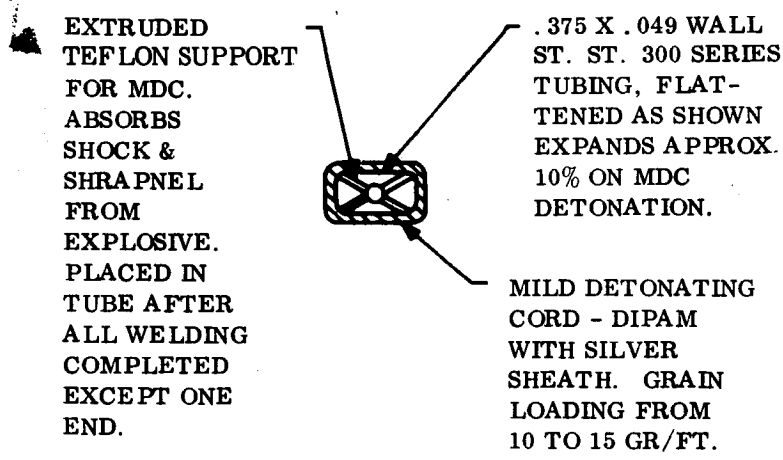

Figure 1.1.2-3

CESD END CONSTRUCTION

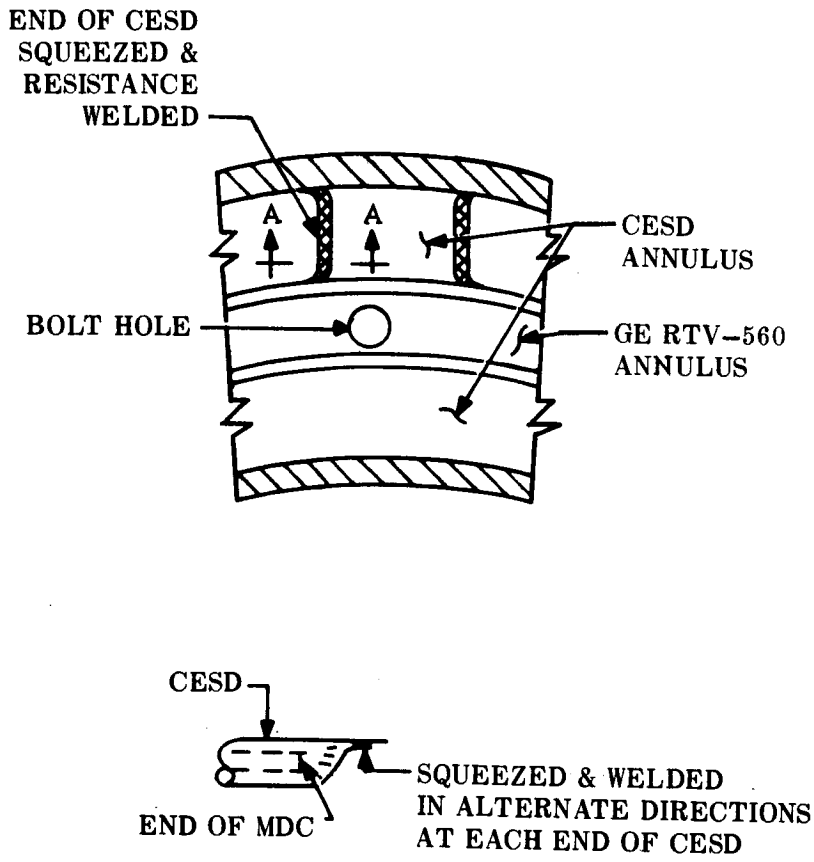

Figure 1.1.2-4

CESD BOSS CONSTRUCTION

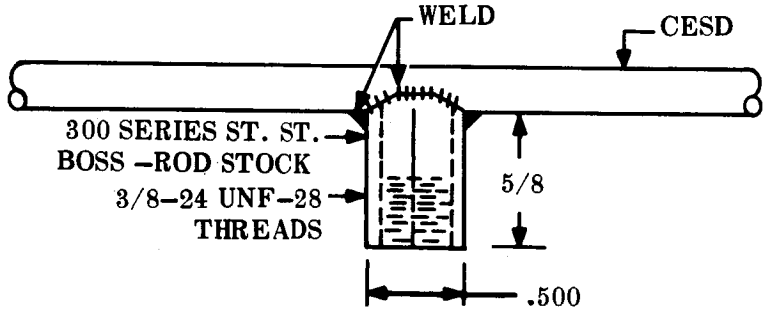

Figure 1.1.2–5

CESD BOOSTER LOCATION

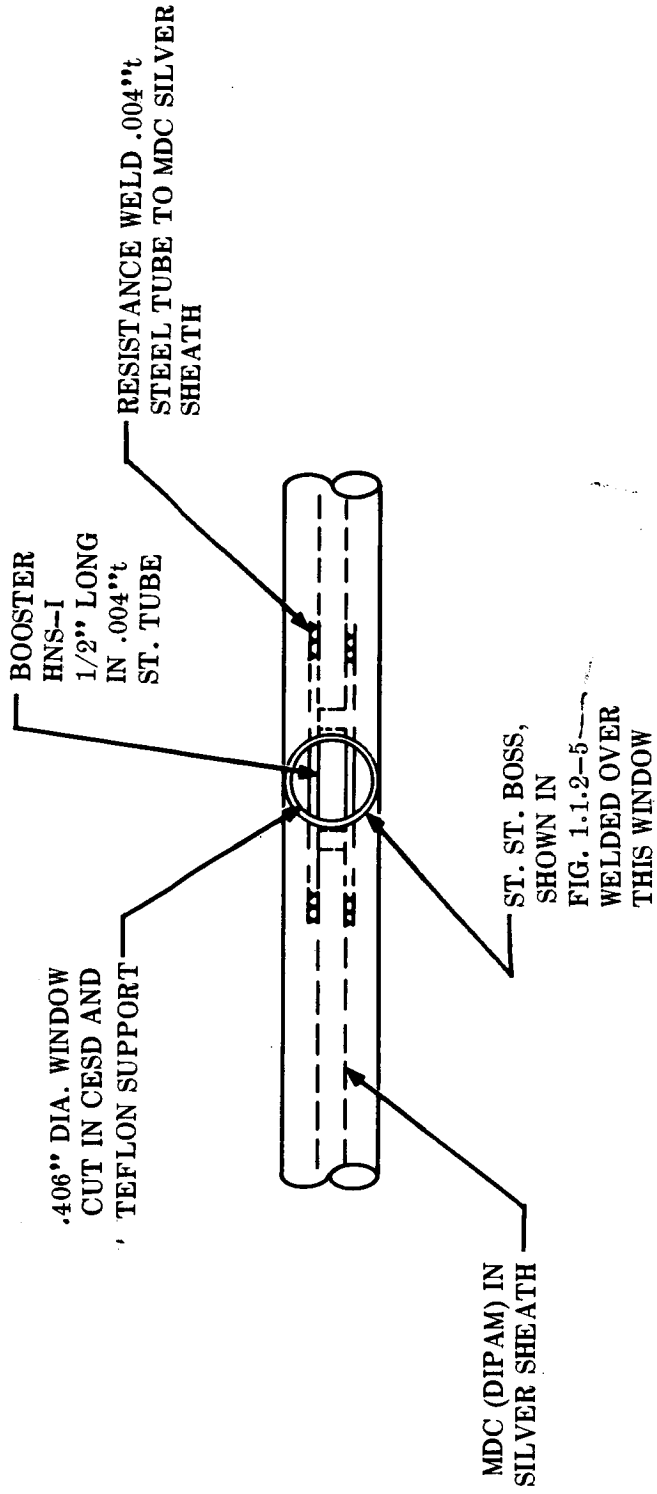

Figure 1.1.2-6

booster. Selection of the explosives is based on their use in over 250 stimulus transfer tubes on each F-111 Crew Module in a temperature environment of -65 degrees F to + 425 degrees F.

Standarized Initiator - The EED selected for separation system initiation will conform to the standardized initiator throughout the flight capsule which is defined in Volume II, Part C, Section 12.

Field Joint Bolts - The titanium 3/16 diameter bolts are made by drilling the head end of a standard NAS 673 bolt to the depth of the desired break point. The hole diameter will be based on tests to match the breaking strength with the desired load level. This technique was used by McDonnell to obtain an 1100 pound strength bolt for the Gemini program.

Bolt Retainer - To keep the top of the severed titanium bolts from leaving the canister, an aluminum square tube retainer is installed over the bolt heads, as shown in Figure 1.1.2-2. The square tubing is filled with a urethane foam to damp out the shock phenomena from the bolts. The square tubing retainer bolts are also 3/16 titanium of NAS655V series which are sufficiently torqued so the square tubing will be deflected and maintain a preload on the surface head of the bolts holding the rings together.

The lower part of the bolt will be held in place by a plate nut of NAS681 series that is anchored to the aft canister ring.

1.1.2.4 Operation Description - The use of Figure 1.1.2-2 will aid in understanding the CESD separation system operation. On receipt of the proper electrical signal from the electrical programmer, the four standardized EED's are simultaneously detonated. These initiators detonate the explosive charge in the stimulus transfer tubes. The stimulus transfer tubes immediately propagate the detonation stimulus to the HNS-I booster charge located in the CESD tube. When the explosive inside the CESD assembly explodes, it expands the stainless steel tube wall exerting a force-moment on the titanium bolts holding the canister rings together. Each CESD contains adequate explosive to break the bolts without interaction. The MDC propagates at approximately 6700 meters/second and the 150 bolts acted upon by each 31.5 feet section of CESD will be fractured in approximately .0015 second. In the event that all bolts are not severed by the explosive action of one CESD, the other gives a completely redundant explosive action and mechanical force.

McDonnell has performed a test on a one foot bolted angle section, containing five titanium 3/8 inch bolts with .105 inch diameter drilled out holes, and with

two CESD's of comparable grain loading. The test used a 5.2 pound/foot load which is comparable to the forward canister load. This mass was ejected by the two CESD's with a velocity of 6 foot/second, however the support was rigid so most of the kinetic energy was translated to the stimulated load.

1.1.2.5 Performance Objective Verification - A prime mission requirement is that the Mars planetary quarantine not be violated by contaminated VOYAGER System Components. Therefore, separation event data is required to verify the intended forward canister ejection. By use of six linear velocity transducers located at six (60 degrees apart) positions around the separation ring, a resultant magnitude and direction vector of the separation velocity of the forward canister (through the C.G.) may be determined. Tip-off rates are obtainable directly from these readings. Knowing the vector and the initial in-orbit orientation of the planetary vehicle, the lifetime/decay parameters of the forward canister may be determined and the mission requirement can be verified.

Utilizing the CESD separation device, high initial g-forces are expected. By the use of three piezoelectric sensing devices 120 degrees apart, the separation g-force may be obtained at the time of separation. This information is intended to be engineering performance data and may be used as diagnostic data if abnormal operation of any nature occurs.

1.1.2.6 Interface Definition - The CESD interfaces with the aft canister field joint ring and is retained by the forward canister flange. The stimulus transfer tubes interface with the respective bosses on the canister structure. During sterilization and checkout phases, the EED is electrically connected and protected by a safe-arm plug. The bolt head retainer interfaces with the Canister forebody.

1.1.2.7 Reliability and Safety Considerations

Reliability of Preferred CESD Separation - The reliability has been examined for single failure effects on the subsystem for both the preferred and alternate designs. By test, a single CESD provides 20 per cent surplus energy required to break the titanium bolts and eject the canister of six feet/second. Thus for the CESD design provided, no bias failure modes are present which whoud occur under the VOYAGER mission environment and thus inhibit proper functioning. The redundant application of the CESD provides high assurance that one or the other will be available for accomplishing separation. Either CESD has capability of severing the bolts with a 20 per cent surplus of energy. This also applies to the ignition devices. Since a double harness is connected to a double battery supply, for

mission failure to occur, two or more failures are required, i.e., CESD, an igniter, harnesses and batteries.

Safety - All electroexplosive devices, pyrotechnic devices, and their associated firing circuitry meet the requirements of AFETRM 127-1 Range Safety Manual. In addition, no single or common failure mode (including procedural deviation) both arms and commands the Pyrotechnic Subsystem. Power to the subsystem is blocked until the flight capsule enters the Mars orbit when it is turned on at T_{12}-70 min. The EED's meet the no-fire and static requirements of the Mission Specification and the firing circuits for all EED's meet the shielding requirements associated with Category A devices as specified in AFETRM 127-1. Because of the low sensitivity of the EED's and the shielding of the firing circuits, no problem is anticipated due to RF currents.

1.1.3 Pressurization and Venting Equipment

1.1.3.1 Equipment Identification and Usage - The Pressurization and Venting Equipment maintains the internal bio-integrity of the sterilized canister, from completion of the terminal sterilization cycle until canister/Capsule Bus separation. The Pressurization and Venting (P&V) Equipment is designed to prevent internal sterilization canister pressure from exceeding the structural design limits of 2.25 psig. This pressure control is accomplished during Space Vehicle ascent by venting the internal canister gas to ambient. The Pressurization and Venting Equipment, as shown on Figure 1.1.3-1, incorporates two of each major components so that no single failure will result in catastrophic failure. The following major components comprise the Pressurization and Venting Equipment:

- Vent valves (2 required)
- Differential pressure switch (2 required)
- Purge/evacuation valve (2 required)
- Relief valves (2 required)
- Biological filters
  - (1) Vent valve filters (2 required)
  - (2) Component filters (4 required for relief and purge/evacuation valves)

Vent Valves - The vent valves will be electromechanically operated ball or gate type valves. The vent valves when open provide a port to accomplish canister venting functions. The vent valve design incorporates a convergent nozzle into the valve outlet port. This convergent nozzle provides positive assurance of complete expulsion of canister gas without the possibilities of backflow.

PRESSURIZATION & VENT SCHEMATIC

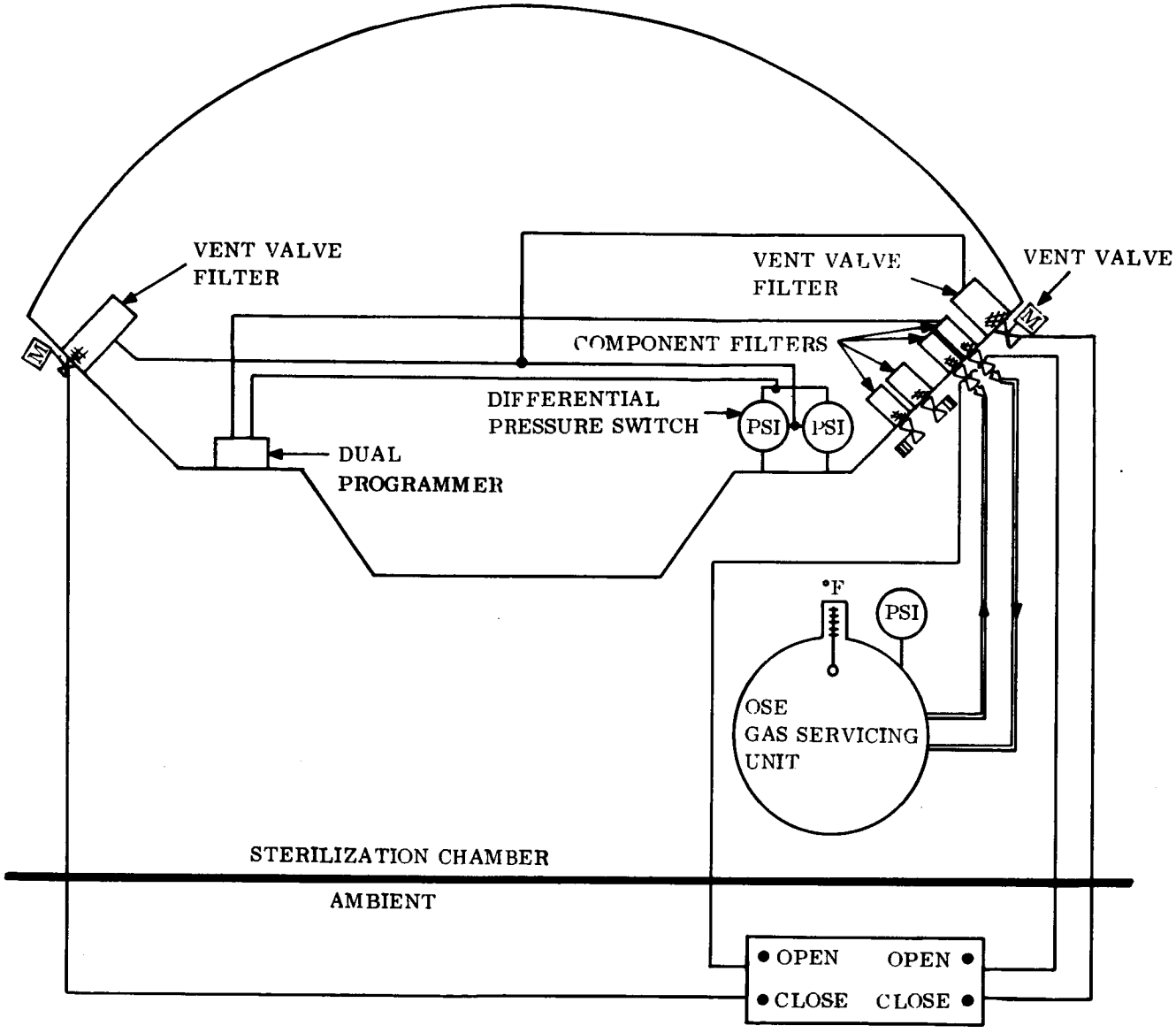

Figure 1.1.3-1

Differential Pressure Switch - The differential pressure switch provides monitoring function for differential pressures occurring between the internal canister and ambient. The differential pressure switches are connected in parallel between the vent valve solenoids and the canister dual programmer and control the operation of the vent valves.

Purge/Evacuation Valves - The purge/evacuation valves are solenoid-operated latching type valves. The purge/evacuation valves provide inlets and outlets to the sterilization canister which are necessary for testing functions, pressurizing with decontaminating gas and its carrier, and also circulation, venting and pressurization during the terminal sterilization cycle. After the Space Vehicle has exited the Earth's atmosphere the purge/evacuation valves function as exhaust ports to completely evacuate canister gas, thus maintaining vacuum in the canister throughout the cruise phase.

Biological Filters - The biological filter is designed to prevent migration of bacteria and spores into the sterilization canister. The filters, when filtering gas, have an absolute particle removal rating of 0.30 micron. The biological filters are constructed of multiple layers of inorganic fibrous material applied over an epoxy bonded to a base material. Two separate filter sizes will be required in the Pressurization and Venting Equipment. The selection of filter sizes is dictated by application, usage, and flow rates; the larger filters are for the vent valves, and the smaller component filters will be for both the relief and purge/evacuation valves.

An existing filter which meets the requirements except for qualification to environmental extremes is built by the Pall Corporation of Glen Cove, L. I., N.Y. This filter removes 100 per cent of contaminants down to .015 microns, more than an order of magnitude below the size required to provide a micro-biological filter. No inherent obstacles are anticipated in obtaining a filter which will meet the environmental extremes.

Relief Valves - The relief valves prevent over-pressurization of the Sterilization Canister as may be caused by an abnormal pneumatic operation. This is accomplished by venting excess internal gas to ambient when the pressure rises to 2.25 pound per square inch differential (psid).

1.1.3.2 Design Requirements and Constraints - The following design requirements and constraints are primary considerations governing the design of the Pressurization and Venting Equipment.

- o During decontamination and sterilization OSE connections are required.
- o The P&V Equipment must maintain a sterile canister interior after terminal sterilization
- o The canister structure must be protected from pressures in excess of it's design limits (0 psi to 2.25 psi).
- o Pressure inside the sealed canister must be vented during launch and ascent and reduced to zero in Earth orbit.
- o The P&V Equipment will require a complete redundancy of all major elements.
- o The P&V Equipment must tolerate temperature variations within the selected limits (+50 degrees F to 110 degrees F) without venting internal gas or requiring make up gas.

1.1.3.3 Physical Characteristics - The physical characteristics of the major elements comprising the Pressurization and Venting Equipment are as follows. Characteristics are based on present design evaluations which are to be considered preliminary design data.

Vent Valves -	:	1000 cfm @ inlet pressure 8.5 psi
Flow Rate	:	1 psi
Pressure Drop	:	10 watts for a duration of 3 seconds
Power Requirements	:	8 inches high x 5 inches diameter 4 inches long
Weight	:	3.5 pounds
Outlet Port	:	2.5 inch diameter
Differential Pressure Switch -		
Open	:	Below 0.5 psi
close	:	Above 0.5 psi
Power Requirements	:	None
Size	:	4 inches square x 3 inches high
Weight	:	0.5 pound
Purge/Evacuation Valve -		
Power Requirements	:	10 watts for 100 milliseconds
Size	:	1 inch diameter x 4 inches high x 3 inches long
Weight	:	1 pound
Vent Valve Filters -		
Flow Rate	:	1000 cfm @ 8.5 psi
Pressure Drop	:	0.5 - 1.0 psi maximum
Power Requirements	:	None

Size	:	6 inches diameter x 12 inches long
Weight	:	7.3 pounds
Component Filters -		
Flow Rate	:	25 scfm
Pressure Drop	:	1.5 psi maximum
Power Requirements	:	None
Size	:	2 inches diameter x 4 inches long
Weight	:	0.25 pound
Relief Valves -		
Flow Rate	:	25 scfm
Pressure Drop	:	less than 2.25 psi
Relief Pressure Set	:	2.25 $\pm$ 0.1 psi
Power Requirements	:	None
Size	:	2 inches diameter x 2 inches long
Weight	:	0.5 pound

1.1.3.4 Operation Description - The operation of the Pressurization and Venting Equipment is described in the following subparagraphs. These operation sequences are compatible with the sequential events occurring in the mission profile.

- After connecting the OSE Canister Checkout Console to the sterilization canister, a signal from the Canister Checkout Console opens the purge/evacuation valves. These valves are latched open throughout the canister decontamination cycle. At completion of the decontamination cycle, these valves close to reseal the canister.
- Prior to the sterilization cycle, the OSE Gas Servicing Unit is connected to the purge/evacuation valves. These valves are opened and the Gas Servicing Unit provides the required pressure regulation to the canister throughout the sterilization cycle.
- Just prior to completion of the sterilization cycle and during equipment cool-down, the canister is pressurized from the Gas Servicing Unit sterile gas supply. The Gas Servicing Unit maintains this canister pressurization throughout periods of storage and transportation. The Gas Servicing Unit is not disconnected from the Canister until just prior to installation of the Launch Vehicle Shroud. The purge/evacuation valves are closed before the removal of the Gas Servicing Unit. The purge/evacuation valves will not be reopened again until the Space Vehicle has left the Earth's atmosphere.

- The relief valve's integral pressure regulator provides monitoring functions to prevent internal canister pressures from exceeding 2.25 psig throughout the pressurization cycle and during Space Vehicle ascent.
- At the time of liftoff, a programmer signal is transmitted to the vent valve motor to open these valves. If the differential pressure between the internal canister and ambient drops below 0.5 psid the differential pressure switch will index, which will reverse the motor polarity and close the vent valves. When the differential pressure exceeds 0.5 psi, the pressure switch will again index causing motor polarity reversal which opens the vent valves.
- The purge/evacuation valves open when the external ambient pressure achieves an essentially 0 psi condition. These valves remain in the open position for the duration of the cruise phase to evacuate any material outgassing that may occur, thus maintaining canister vacuum.

1.1.3.5 Performance Objectives - The performance objectives of the Pressurization and Venting Equipment, as related to a typical mission profile, will be in accordance with Figure 1.1.3-2 and as described herein. Absolute internal canister pressures and the differential pressures between the canister and ambient will be as shown in Figures 1.1.3-3 and 1.1.3-4.

Decontamination Cycle - The purge/evacuation valves open at the commencement of the decontamination cycle to permit decontaminating gas to enter through one valve and the discharge of displaced gas through the other valve. In the event of an abnormal condition, such as a clogged filter or an inoperative valve, the relief valves open to prevent canister overpressurization. The relief valves provide the assurance that the internal pressure does not exceed the design pressure limit of 2.25 psig.

Sterilization Cycle - The OSE Gas Servicing Unit is connected to the purge/evacuation valves prior to commencing the sterilization process. The rate of circulating gas will be adequate to assist in heating and cooling of the canister contained Capsule Bus. The Gas Servicing Unit remains connected to the Canister to provide a supply of sterilized make-up gas to compensate for any minor leakage which may occur during transportation and periods of storage. The sterilization canister will withstand pressure variations which result from temperature changes between 50 degrees F and 110 degrees F.

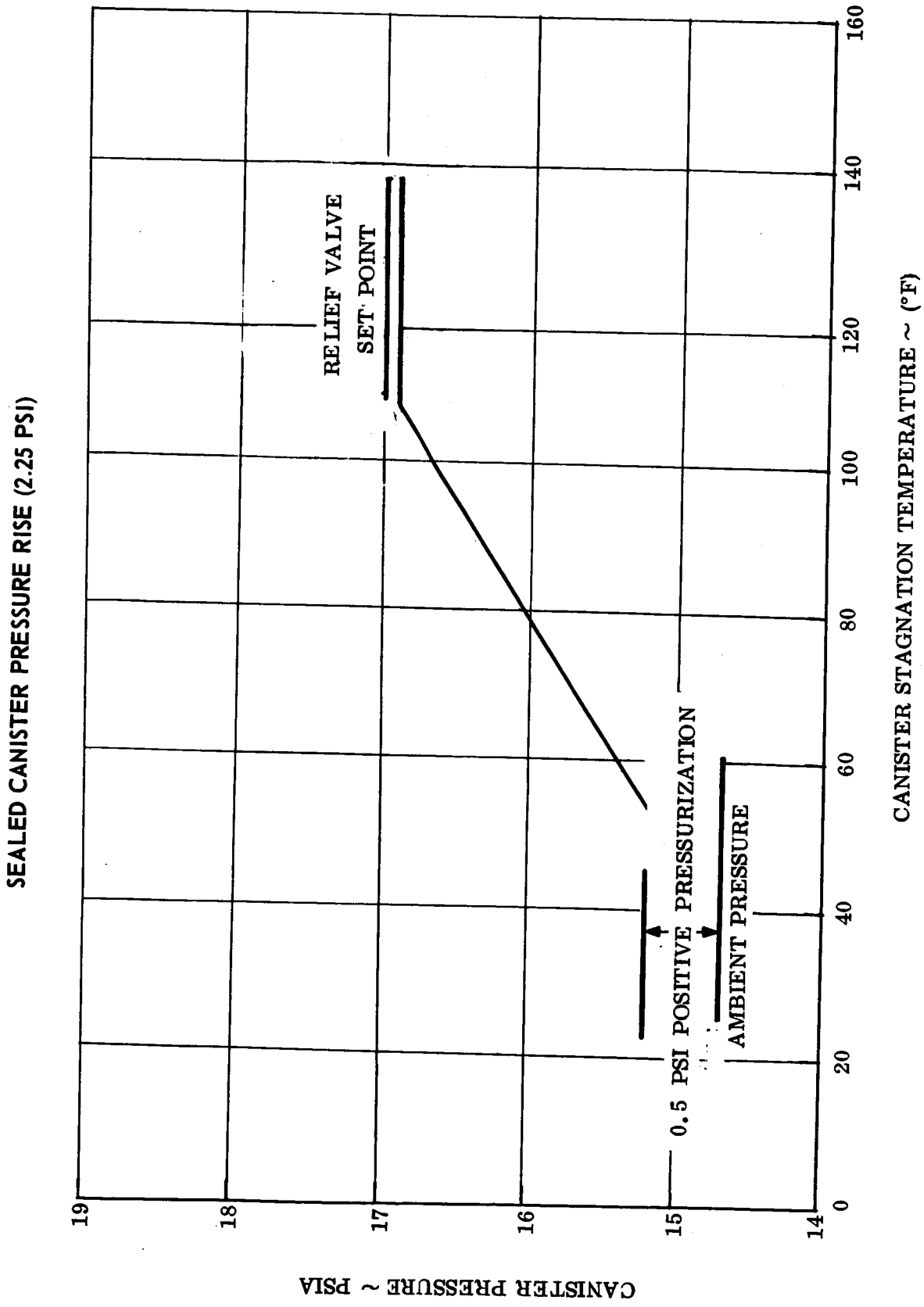
SEALED CANISTER PRESSURE RISE (2.25 PSI)
RELIEF VALVE SET POINT
0.5 PSI POSITIVE PRESSURIZATION
AMBIENT PRESSURE
CANISTER STAGNATION TEMPERATURE ~ (°F)
CANISTER PRESSURE ~ PSIA
0
20
40
60
80
100
120
140
160
14
15
16
17
18
19

Figure 1.1.3–2

CANISTER PRESSURE/TIME HISTORY

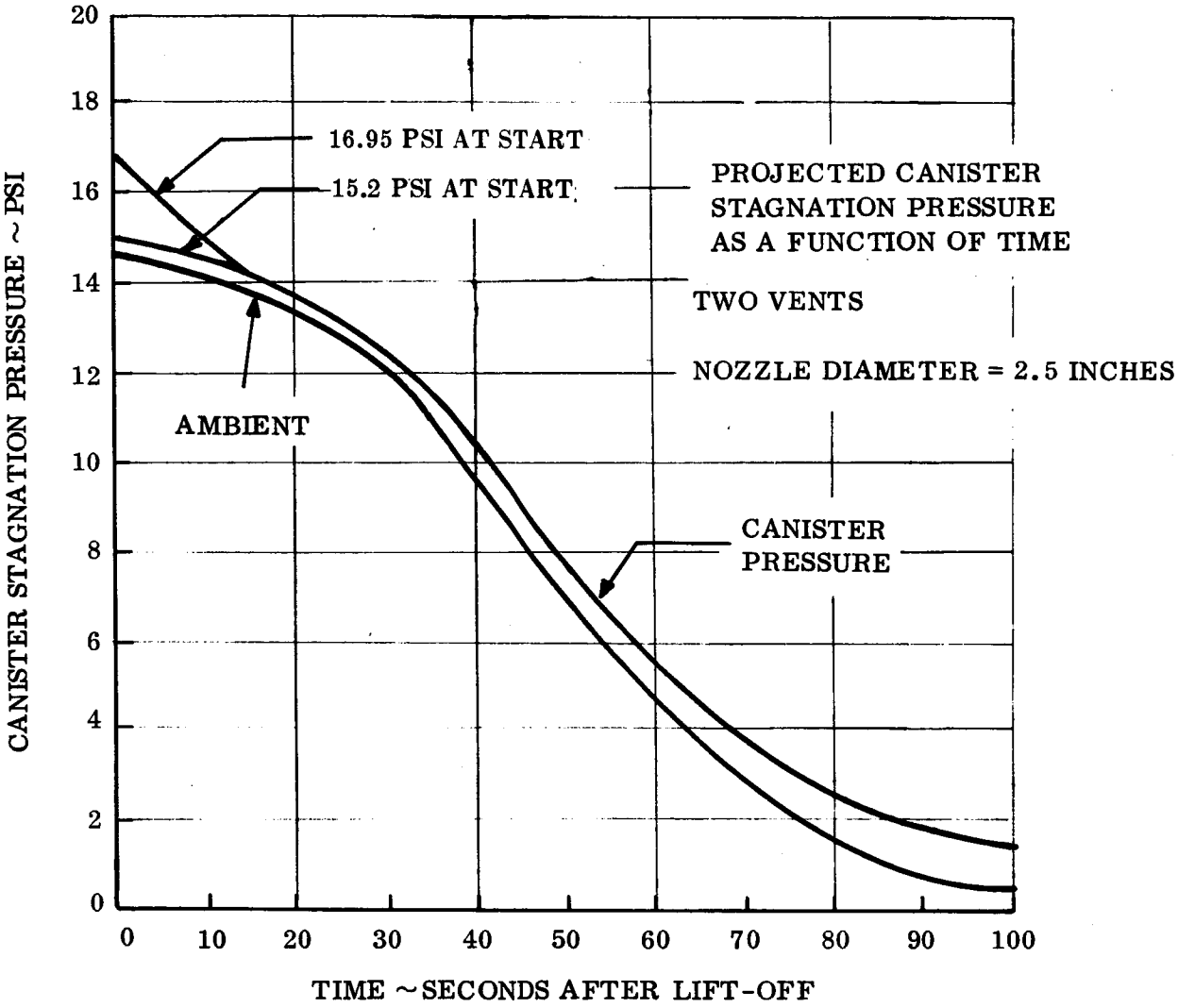

Figure 1.1.3-3

DIFFERENTIAL PRESSURE FOR TWO VENT OPERATION

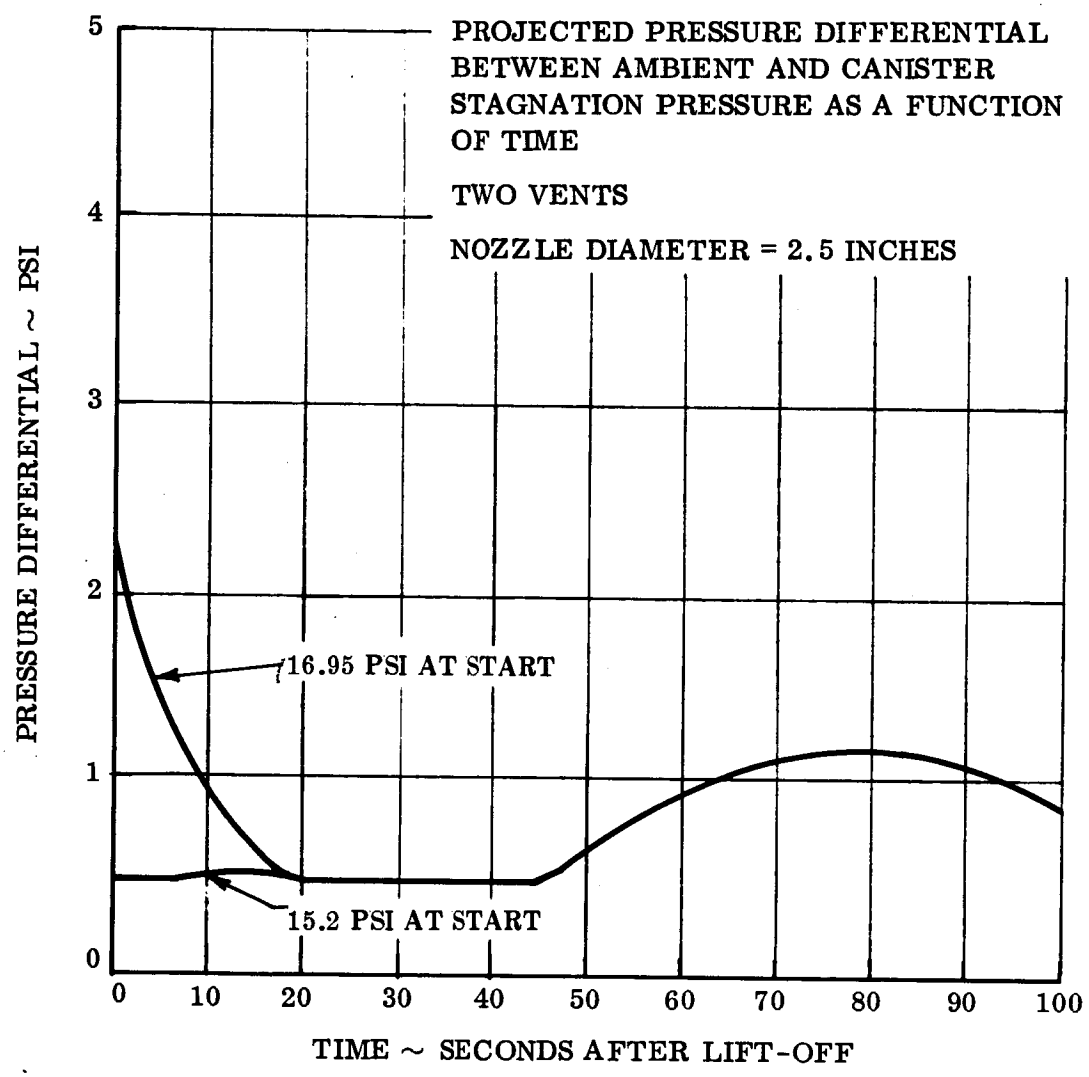

Figure 1.1.3-4

On Pad (No Access) - The design pressure limits of the sterilization canister will not be exceeded by pressure variations occurring within the temperature range of 50 degrees F to 110 degrees F.

Liftoff and Ascent - The vent valves open at liftoff commencing canister venting functions. The vent valves close during ascent, as the internal canister pressure approaches 0.5 psi differential. Operation of the vent valves during the ascent phase is controlled by the pressure switch sensed pressure differentials. The vent valves are closed as required to preserve canister bio-integrity by preventing the possibilities of backflow through the vent valves.

Earth Orbit and Cruise - The sterilization canister is fully evacuated of any pressure build-ups resulting from equipment outgassing within 13 minutes after exiting the Earth's atmosphere. This gas expulsion is accomplished through the purge/evacuation valves. The purge/evacuation valves remain open during the cruise phase to maintain internal canister vacuum should additional component ougasssing occur.

1.1.3.6 Interface Definition - Pressurization and Venting Equipment interface definition is as follows:

Interface	Definition
Sterilization Canister Structure	Provide mounting and support for components and plumbing of the Pressurization and Venting Equipment
OSE Gas Servicing Unit	Provide sterilized gas and interconnecting hose connections to Pressurization and Venting Equipment
OSE Canister Checkout Console	Provide electrical power, programmed commands, and electrical cables with connectors to actuate Pressurization and Venting Equipment
Canister Electrical System	Provide electrical power, programmed commands, and electrical cables with connectors to actuate Pressurization and Venting Equipment
Telemetry	Provide interconnecting cables, with connectors, and equipment to accept data outputs reflecting Pressurization and Venting Equipment functions.

1.1.3.7 Reliability and Safety Considerations - The reliability of this Subsystem has been examined for single effects on subsystem performance. The reliability

analysis considered failure of the equipment as occurring when the internal sterilization canister pressure exceeds the external ambient pressure above the design limits specified herein. The analysis shows that no single component failure will cause a Pressurization and Venting Equipment failure to exceed the design pressure requirements. The relief valves provide personnel and equipment safety during ground handling in the event of an abnormal pneumatic condition. Positive steps in design have been taken to ensure against recontamination through the use of biological filters as well as maintaining the positive ΔP internal to the sterilization canister. It is concluded that the design of the Pressurization and Venting Equipment provides a high reliability against recontamination throughout the required use of the sterilization canister.

1.1.3.8 Test Requirements

Prelaunch Tests - Prelaunch tests will be conducted on all functional components of the Pressurization and Venting Equipment as follows.

Functional Tests - Prior to the decontamination phase, the relief and vent valves will be cycled to assure that they are functioning properly.

Leakage Tests - After canister pressurization, each valve will be tested for evidence of leakage with the OSE Leak Detector Unit.

Temperature Pressure Monitoring - The internal canister temperature and pressure will be monitored during the anticipated 14-day on-pad time.

In-Flight Tests - The following canister conditions will be monitored during flight.

Stagnation Pressure and Temperature - The stagnation pressure/temperature, and ambient temperature/pressure relative to the sterilization canister will be monitored and transmitted by telemetry to Earth receiving stations. Monitoring sampling rates will be consistent with the canister telemetry subsystem sampling rate of one sample per second.

Development Requirements - No significant development problems are anticipated for components which comprise the Pressurization and Venting Equipment. Component concepts selected are based on component similarities which have flown and have operated successfully in other space vehicle programs.

1.1.4 Canister Electrical Equipment

1.1.4.1 Equipment Identification and Usage - The electrical equipment located within the canister consists of the following major elements.

- Power Equipment
- Sequencing Equipment
- Cabling Equipment
- Canister Telemetry Equipment

Interconnection of electrical equipment components within the canister is shown in Figure 1.1.4-1.

Power Equipment - This equipment provides electrical power to the telemetry, pressurization and venting, thermal control, sequencing, and separation equipment. The electrical inputs to the power equipment come from the Spacecraft solar cells via the Capsule Bus/Spacecraft power distribution bus. The power equipment includes the following components:

- Dual Battery
- Battery Charging Regulator
- Power Controller
- Power Distribution Module

The dual batteries and electronic equipment incorporate built-in heaters and thermostats which are a portion of the thermal control subsystem.

Battery Charging Regulator - The battery charging regulator is a transformer isolated, two-step, float charger. The charging regulator maintains the batteries in a fully charged condition from turn-on of the Spacecraft power distribution bus until internal power transfer.

The charging regulator will charge the battery at a constant voltage of 37.6 volts with current limited to 0.1 amp until it senses a reduction in the charging current to 0.05 amps. It will then reduce the voltage to 35.5 volts. In the event of power removal the charging regulator reverts back to the initial charge mode.

Dual Battery - The dual battery provides power to the various canister electrical buses through the power controller. Prior to launch, the batteries are charged by the Launch Operation System (LOS) ground equipment through the battery charging regulator. During the cruise phase, the batteries are continuously charged by the battery charger. Just prior to separation, the canister will be tranferred to internal battery power.

Power Controller - The Canister power controller provides switching functions for the various electrical buses of the canister subsystem. The power controller

PREFERRED APPROACH VOYAGER CANISTER ELECTRICAL SYSTEM

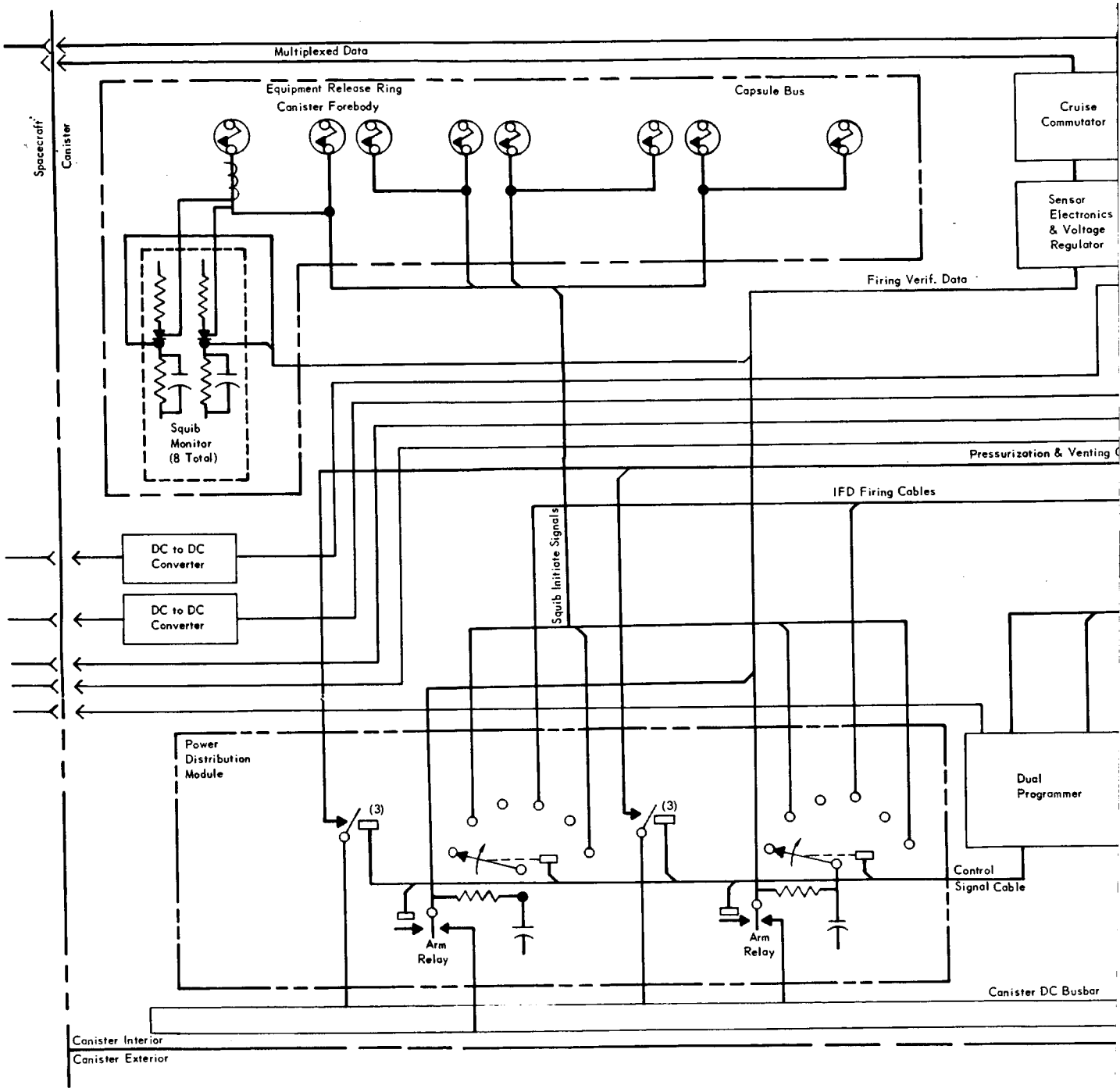

Figure 1.1.4-1

1-35-1

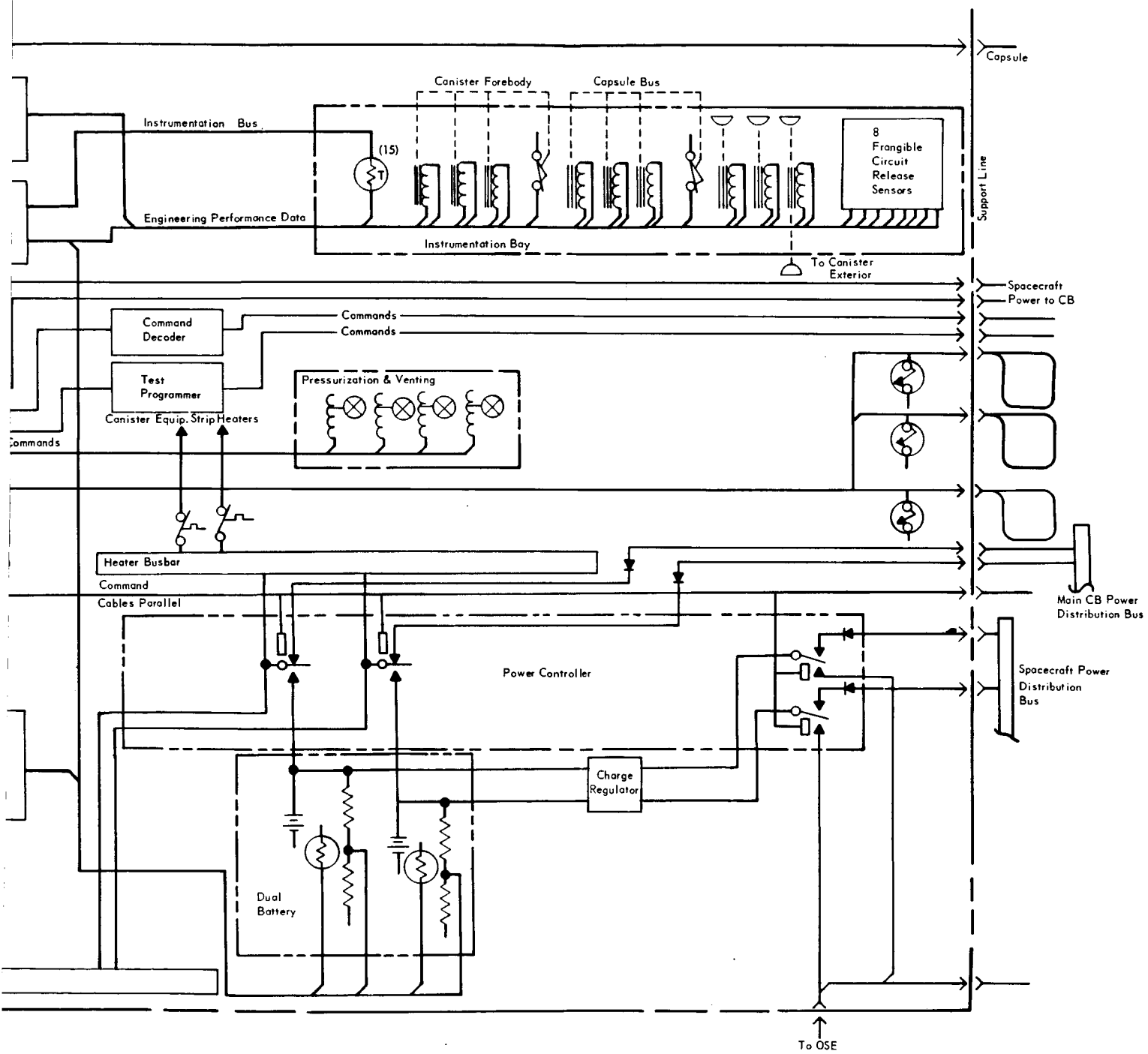
Capsule
Canister Forebody
Capsule Bus
Instrumentation Bus
(15)
8
Frangible
Circuit
Release
Sensors
Support Line
Engineering Performance Data
Instrumentation Bay
To Canister
Exterior
Spacecraft
Power to CB
Command
Decoder
Commands
Commands
Test
Programmer
Pressurization & Venting
Canister Equip. Strip Heaters
Commands
Heater Busbar
Command
Cables Parallel
Main CB Power
Distribution Bus
Power Controller
Spacecraft Power
Distribution
Bus
Charge
Regulator
Dual
Battery
To OSE

operates from commands received from one or more of the following:

- Capsule Bus Sequencer and Timer
- Spacecraft
- Canister Sequencing Subsystem

Power Distribution Module - The canister power distribution module provides switching and connection of electrical power to the cabling subsystem feeder lines for transmission to the pyrotechnics and solenoid loads. The power controller receives commands from the Launch Vehicle, Spacecraft Mission Operational System (MOS) and the canister dual programmer.

Sequencing Equipment - The canister sequencing equipment controls and times all electrically operated canister functions of the power, telemetry, pressurization and venting equipment and the pyrotechnics of the separation equipment. The sequencing equipment consists of a dual programmer which provides stored programs for timing and sequencing control. Redundant features provide for dual outputs in the event of any single element malfunction. The dual programmer employs self-contained heaters and thermostats which are part of the Thermal Control Subsystem. A Test Programmer which is part of the Capsule Bus sequencing equipment is physically located in the canister and is discussed in Volume II, Part C, Section 8.2.

Cabling - Cabling interconnects the power, telemetry, pressurization and venting, and sequencing equipment, as well as the test programmer, thermal control equipment, and pyrotechnic circuits of the separation equipment. The cabling conducts electrical power and transmits signals from the Spacecraft and Capsule Bus to various canister destinations. The cabling consists of interconnecting wire harness terminated at the following connectors:

- In-flight disconnects
- Bulkhead interface connectors
- Safe-Arm Receptacle
- Canister electrical equipment connectors

In-Flight Disconnect (IFD) - The IFD units disconnect electrical cables interconnecting the canister and the Capsule Bus. The IFD's function on the hot-wire release principle. Release current pulses for the IFD's are received from the power distribution module.

Bulkhead Interfacing Connectors - The bulkhead interfacing connectors are conventional hermetically sealed types, which provide electrical access to the sealed canister.

Safe-Arm Plug - Conventional connector plugs are equipped with jumper connections for short circuiting (safing) or through connecting (arming) the canister

equipment. These plugs provide test access to the canister internal pyrotechnics for component verification and monitoring after sterilization.

Canister Telemetry Equipment - The canister telemetry equipment includes instrumentation, status monitors, signal conditioning circuits, and a sensor power supply to provide the following performance data transmissions during prelaunch, launch, cruise and separation mission phases.

- Temperature
- Pressure
- Velocity
- Acceleration
- Voltage
- Current
- Status
- Circuit conditions

1.1.4.2 Design Requirements and Constraints

Power Equipment - The power equipment provides power, switching, control and distribution to the pressurization and venting and telemetry equipment throughout the powered flight. The power equipment provides electrical power distribution and control during the cruise phase of the flight for heating and instrumentation. Prior to separation, at internal power transfer, the canister is switched to canister power and the ground bus is transferred from the capsule ground to a canister ground. After electrical separation, the power subsystem provides electrical power to the separation and canister telemetry equipment. The following design requirements and constraints apply to the power equipment.

- Dual Battery
  - Silver zinc
  - Sterilizable
  - Minimum capacity of 170-watt hours/each section
  - Minumum operating life of 10 months
  - 19 Cells per battery
  - Redundant
- Battery Charging Regulator
  - Two step float charging
  - Current sensing
  - Redundant Circuitry
  - Sterilizable

- Power Controller

  Capability of transfer from Ground Power to Spacecraft Power

  Switching capability of 2 amps minimum

  Redundant Circuitry

  Sterilizable

- Power Distribution Module

  Supply load firing signals and isolate primary power sources

  Sterilizable

Sequencing Equipment - The sequencing equipment provides stored canister programmed data initiated by a Spacecraft command. Redundant commands are generated as a result of the Spacecraft commands.

- Dual Programmer

  Accept spacecraft commands

  Provide stored programmed data

  Provide redundant signals

  Sterilizable

Cabling - The Cabling interconnects the Sterilization Canister with the Capsule Bus, Spacecraft, and OSE. The cabling harnesses isolate, as much as possible, power lines from signal lines and comply with the following:

- Provide a means of disconnecting during flight
- Provide a safing of pyrotechnic circuits during ground handling.

Canister Telemetry Equipment - The two major constraints governing the selection of sensors and transducers are:

- Sterilization
- Range and Sensitivity
- Instrumentation - Instrumentation outputs interface with the canister commutator which has a low level input of 0-40 mv at 100 kilohms, and a high level input of 0-5 volts at 1 megohm. The range and accuracy requirements for the temperature sensors will be in accordance with the following:

Application	Range (°F)	Accuracy (±°F)	No. Req.
Surface Battery Pack	0 to 120	1	1
Surface Electronics Pack	-85 to 200	2.5	3

Surface Electronics Heat Sink	-150 to 100	2.5	3
Surface Ignitor	-300 to 150	5	2
Surface Canister	-350 to 150	1	3
Surface Adapter	0 - 150	1	3
*Surface Terminal Sterilization	240 to 320	0.5	4

*Not Telemetered

Application	Range (psid)	Accuracy (± psid)	No. Req.
Canister Differential Pressure	0 to 5	0.1	3
Vent Valve Differential Pressure	0 to 5	0.1	2

- Pressure Transducers - Monitoring of the pressure transducers occurs only during sterilization, prelaunch, and launch mission phases. Instrumentation used to monitor separation functions in accordance with the following:

Application	Range (in/sec)	Accuracy (± in/sec)	No. Req.
Canister Velocity	0-36	1	6
Capsule Velocity	0-36	1	4
Separation load*	50 to 1000g's	---	3
Capsule Separation	Event monitor	---	2

* In the case of the separation load sensor (accelerometer) and the velocity measurements, only the peak level is required.

Firing Circuit Monitoring - Monitoring of triggering pulse application to the firing circuit requires measurement of the voltage at both the source and load, and determines that the current exceeded a threshold level of 4.0 amperes, and that the pulse is present for a minimum period of 5 milliseconds. The monitoring complies with the following:

Application	Range	Accuracy	No. Req.
Source Voltage	0 to 10Vdc	±1 Vdc	12
Load Voltage	0 to 10Vdc	±1 Vdc	12
Current Threshold	4 to 9 amps	---	12
Pulse Duration	5 milliseconds	---	12

Measurement, Status Monitoring and Power Supply - Measurements are required of various D-C voltages, status monitoring of relays and a stepping switch, and a sensor regulated power supply. These equipments are in accordance with the following:

Application	Range	Accuracy	No. Req.
Heater Voltage	0 to 30Vdc	±1.5V	2
Supply Voltage	+23 to +35V	±0.1V	3
Capsule Bus voltage	+23 to +35V	±0.3V	2
Regulator Voltage	------	---	2
Signal Conditioner	Relay Status	7 relays	1
Data Conditioner		1	1
	Stepping switch	6 pos.	

Sensor Voltage Regulator - The sensor electronics voltage regulator supplies +1Vdc and 10Vdc with a regulation of 0.5% and with similar ripple requirements. The ground return is isolated from the input. The load requirement is 150mV for both the input and ground return voltages.

1.1.4.3 Physical Characteristics

Power Equipment - The physical characteristics of the power equipment components are:

- Dual Battery
  - Size: 5.3 inches high x 6 inches long x 4 inches wide
  - Volume: 127.2 cubic inches
  - Weight: 10.5 pounds
- Battery Charging Regulator
  - Size: 2 inches high x 4 inches long x 2.5 inches wide
  - Volume: 20 cubic inches
  - Weight: 0.7 pounds
- Power Controller
  - Size: 4 inches high x 10 inches long x 6 inches wide
  - Volume: 240 cubic inches
  - Weight: 8 pounds
- Power Distribution Module
  - Size: 6 inches high x 8 inches long x 5 inches wide
  - Volume: 240 cubic inches
  - Weight: 4 pounds

Sequencing Equipment - The physical characteristics of the sequencing equipment components are:

- Dual Programmer
  - Size: 3 inches high x 6 inches long x 4 inches wide

Volume: 72 cubic inches

Weight: 1.5 pounds

Cabling - The physical characteristics of the cabling are:

- Cabling Harnesses

  Weight: (less inflight disconnects) 27.5 pounds

- In-flight Disconnects

  Size: 3.1 inches diameter x 2.5 inches long

  Total Weight: 5.5 pounds for all disconnects.

1.1.4.4 Operation Description - Functional Sequences - The functional sequences of canister electrical equipment operation is in accordance with the mission profile sequence of events (See Figure 1.1.4-2) and as described below:

- Sterilization Cycle - During the terminal sterilization cycle, temperature sensors are provided to monitor and verify actual heat cycle conditions of canister equipment.
- Prelaunch - After mating but prior to the final countdown the canister ambients are monitored and the system tested by the OSE. The batteries are charged by the OSE and confidence checks are performed. Battery charging and power transfer is accomplished by OSE control lines to the power controller. After testing, the pyrotechnic arm plugs are installed.
- Launch and Powered Flight - During the launch countdown, a command by the Launch Operation System (LOS) to the power controller puts the canister on Capsule Bus main battery power. Telemetry verification is used to establish the canister operation. After the spacecraft solar cell panels are deployed, the canister battery charger receives power from the Spacecraft power distribution bus in the Capsule Bus.
- At launch, a command from the launch vehicle to the dual programmer initiates the pressurization and venting sequence. The sequence consists of vent valve opening from lift-off to a predetermined altitude. At that time the vent valve is closed and the purge/evacuation valves opened.
- Cruise Phase - The cruise commutation and canister instrumentation is powered by the main power distribution bus in the Capsule Bus throughout the flight; thus, supplying performance data continuously. The canister battery remains on the charge line throughout the cruise phase. Thermal control is maintained by thermostatically controlled heaters which are also powered by the Capsule.

CANISTER ELECTRICAL SYSTEM
MISSION PROFILE

ITEM NO.	EVENT	SOURCE	DEST	BACK-UP	TIME
1.	Sterilize	OSE	CN–DP	–	T_0 – (14 to 90 days)
2.	Final Battery Charge	LOS	CN–PC	Hold	T_0 – 3 hr
3.	Switch Battery Charge to S/C Power Distribution Bus	LOS	CN–PC	Hold	T_0 – 3 hr
4.	Turn-on CN–DS	LOS	CN–PC	Hold	T_0 – 2 hr
5.	Switch CN to CB Main Battery Distribution Power Bus	LOS	CN–PC	Hold	T_0 – 7 min
6.	Begin Venting	LV	CN–DP	LV	T_0
7.	Switch to Evacuation Mode	CN–DP	Valves	LV	T_0 + 200 sec
8.	Begin CN Battery Charge	FS–CC&S	CN–PC	MOS	T_3 + 23 min *
9.	Forebody Separation Arm	MOS	CN–PD	MOS	T_{12} – 70 min
10.	Switch CN to CN Bolt	CB–S&T	CN–PC	FS–CC&S/ MOS	T_{12} – 64 min
11.	Forebody Separation Initiate	FS–CC&S	CN–PD	MOS	T_{12} – 5.1 min
12.	Separate Forebody	CN–DP	CN–PD	MOS	T_{12} – 5.0 min
	Separate Forebody	CN–PD	Pyros	–	T_{12} – 5.0 min
13.	Sensing Forebody Separation	Sep Sens	CN–DP	–	T_{12} – 5.0 min
14.	Charge Capacitor	CN–Battery	CN–PD	–	T_{12} – 4.9 min
15.	Operate IFD's	CN–DP	CN–PD	MOS	T_{12} – 15.1 sec
	Operate IFD's	CN–PD	Pyros	–	T_{12} – 15.1 sec
16.	Charge Capacitor	CN–Battery	CN–PD	–	T_{12} – 15 sec
17.	Release Capsule	CN–DP	CN–PD	MOS	T_{12}
	Release Capsule	CN–PD	Expl Bolts	–	T_{12}
18.	Engineering Perf Data	Continuous	CN–DS	–	T_{12} + 0.5 sec
19.	CN Data Complete	CN–Battery	CN–DS	–	T_{12} + 30 sec

* Activated With Solar Acquisition

PD–Power Distribution

PC–Power Controller

DP–Dual Programmer

DS–Data System

Figure 1.1.4–2

- Separation - An ARM command signal from the Mission Operational System (MOS) to the canister distribution module, energizes storage capacitors and initiates the separation sequences. The INITIATE command signal from the Spacecraft CC&S to the dual programmer starts the timing functions and simultaneously moves the power distribution module stepping switches to the second postion transmitting firing currents to the CESD igniter for canister forebody release. The dual programmer, (after 0.3 sec), provides a command signal to more the stepping switch to the next position which provides the required current for operation of the hot-wire electrical in-flight disconnectors. A subsequent command signal from the dual programmer moves the stepping switch to the next position to recharge the storage capacitors. A command signal from the dual programmer causes the stepping switch to move to the next postion transmitting firing currents to redundant pyrotechnic initiators on the adapter explosive bolts, releasing the Capsule Bus for deorbit flight.

1.1.4.5 Performance Objectives - The performance objectives for the electrical equipment are:

- Comply with the operating limits dictated by mission profile requirements.
- Survive sterilization temperatures on non-operating basis.
- Provide monitoring for performance evaluation.
- Provide separation sequencing and power signals.
- Electrically connect the Spacecraft, Capsule Bus and canister.

Temperature Sensors - The temperature sensors, resistance temperature detector type, are incorporated in a Wheatstone Bridge circuit designed to null at the low end of the temperature range. The resultant output voltage versus temperature characteristic is estentially linear, depending on range, bridge design, and loading. Low level channels, 40 mV at full-scale, are utilized for these measurements. The sensors comply with the following physical and performance requirements:

Sensor	Platinum RTD; R_x = 100 ohms at 70^oF
Bridge Resistors	R_B = Balance resistor - R_x at low end of temperature scale
	R_1, R_2; ratio arms - approx. 10 x R_B
Power Supply	1 volt $\pm$ 0.5%
	.01 ampere approx.

Pressure Transducers - The pressure transducers are low pressure, high-temperature instruments incorporating a four-arm bridge and temperature compensation. The

transducers comply with the following physical and performance requirements:

Transducer	Differential Pressure
Range	0-5 psid
Type	Resistance strain gage unbonded
Temperature Range	-350° to 350°F
Excitation	10 V ± 0.5% .03 amp. approx.
* Output	20 mV
Output Impedance	300 ohms

* At sampling rate of 1 per second, output can be increased if desired by commutating excitation power.

Velocity Transducers - The velocity transducers are magnetic induction type. The velocity transducers self-generate a signal proportional to instantaneous velocity of the instrument magnet. The transducers are located at known points so that tip-off rates and velocities can be determined from transmitted data. Velocity sampling rates are consistent with the requirement of velocity measurements at six locations during the 0.5 inch stroke at approximately 36 inches per second. The velocity transducers comply with the following physical and performance requirements:

Transducer	Magnetic induction velocimeter
Range	0 - 36 in/sec
Nominal output	120 mV/in/sec
Nominal displacement	0.5 inches
Temperature Limits	-350° to 300°F
Excitation	None
Power	None
Impedence	2000 ohm

Accelerometers - The accelerometers measure peak acceleration forces applied at the time of canister separation. The accelerometers comply with the following physical and performance requirements:

Transducer	Piezoelectric accelerometer
Range	50 g's peak to 1000 g's peak
Nominal Output	5 mV/g
Temperature Limits	-350°F to 300°F

Linear Velocity Data Conditioner - The linear velocity data conditioner includes a power supply unit powered from the Canister bus. The output voltage is equal to the input voltage which requires high level data channels. The linear velocity

data conditioner determines peak output voltages of the linear velocity transducers and the separation load accelerometers. The data conditioner maintains these output levels for a period of one second. The sampling rate of the data conditioner is consistent with the canister telemetry subsystem. The data conditioner provides separate input and output lines to each of the nine velocity transducers and the three accelerometers.

Firing Circuit Current Sensors - The firing circuit current sensors employ the Hall-effect and are packaged into the air gap of a C type core. The sensor current conductor passes through the core center. There is no physical connection to the current carrying conductor being measured. The source voltage and voltage at the pyrotechnic initiator is measured at a sampling rate consistent with the canister telemetry subsystem of one sample per second. There are 12 sets of two sensors required to monitor the 12 firing circuits.

Firing Circuit Conditioner - The firing circuit conditioner provides separate input and output lines to each firing circuit current sensor. The firing circuit conditioner incorporates a power supply energized from the canister bus.

Signal and Data Conditioner - The signal conditioner monitors the status of seven relays. The signal conditioner provides separate input and output lines to each relay. The data conditioner monitors six positions of the stepping switch and encodes the output.

Power Supply Sensor - The power supply sensor provides measurements of the power supply voltages.

Sensor Electronic Voltage Regulator - The sensor electronic voltage regulator provides regulated power to two separate sensor strings in the canister. The regulated output voltage accuracy is 0.5 percent over a load range of 150 ma per line. Each of the two output voltages, +1 Vdc and +10 Vdc, are independently adjustable and tolerate a short or open circuit load condition. Close regulation control is accomplished with a series pass element and controlling each output line. Power conversion is DC to DC using a chopper transformer, full-wave rectifier and capacitor filters. Subsystem circuit isolation is achieved by separate windings in the chopper transformer.

1.1.4.6 Interface Definition - Interface definitions between the Canister Subsystem, Spacecraft, Capsule Bus and OSE are as shown in Figures 1.1.4-3 and 1.1.4-4.

Spacecraft/Canister - The Spacecraft/Canister interface contains the S/C to Capsule Bus functions, Spacecraft commands, Launch vehicle venting commands, and the cruise commutator data output.

CANISTER ADAPTER ELECTRICAL INTERFACE BLOCK DIAGRAM

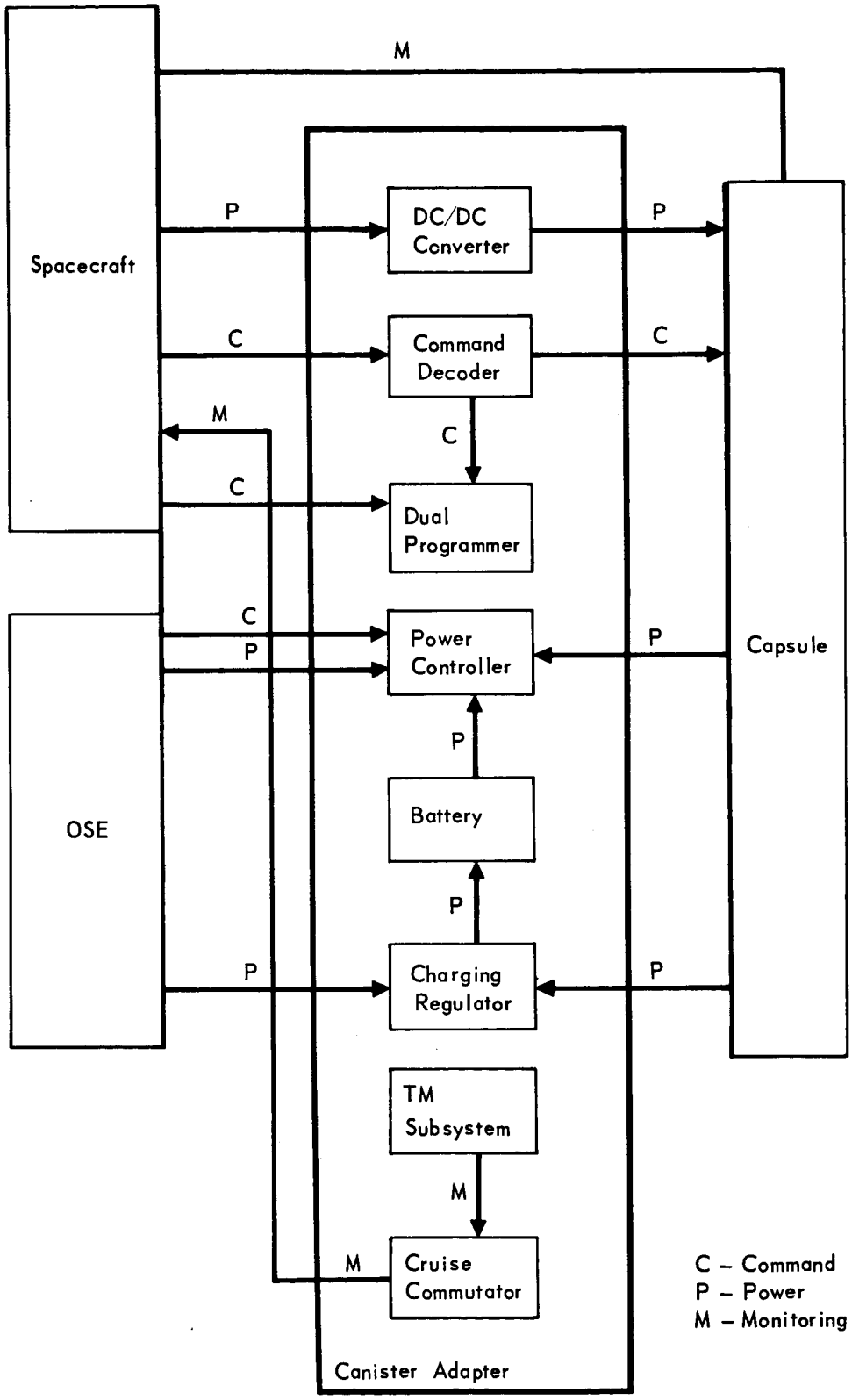

Figure 1.1.4–3

CANISTER INTERFACE DRAWING

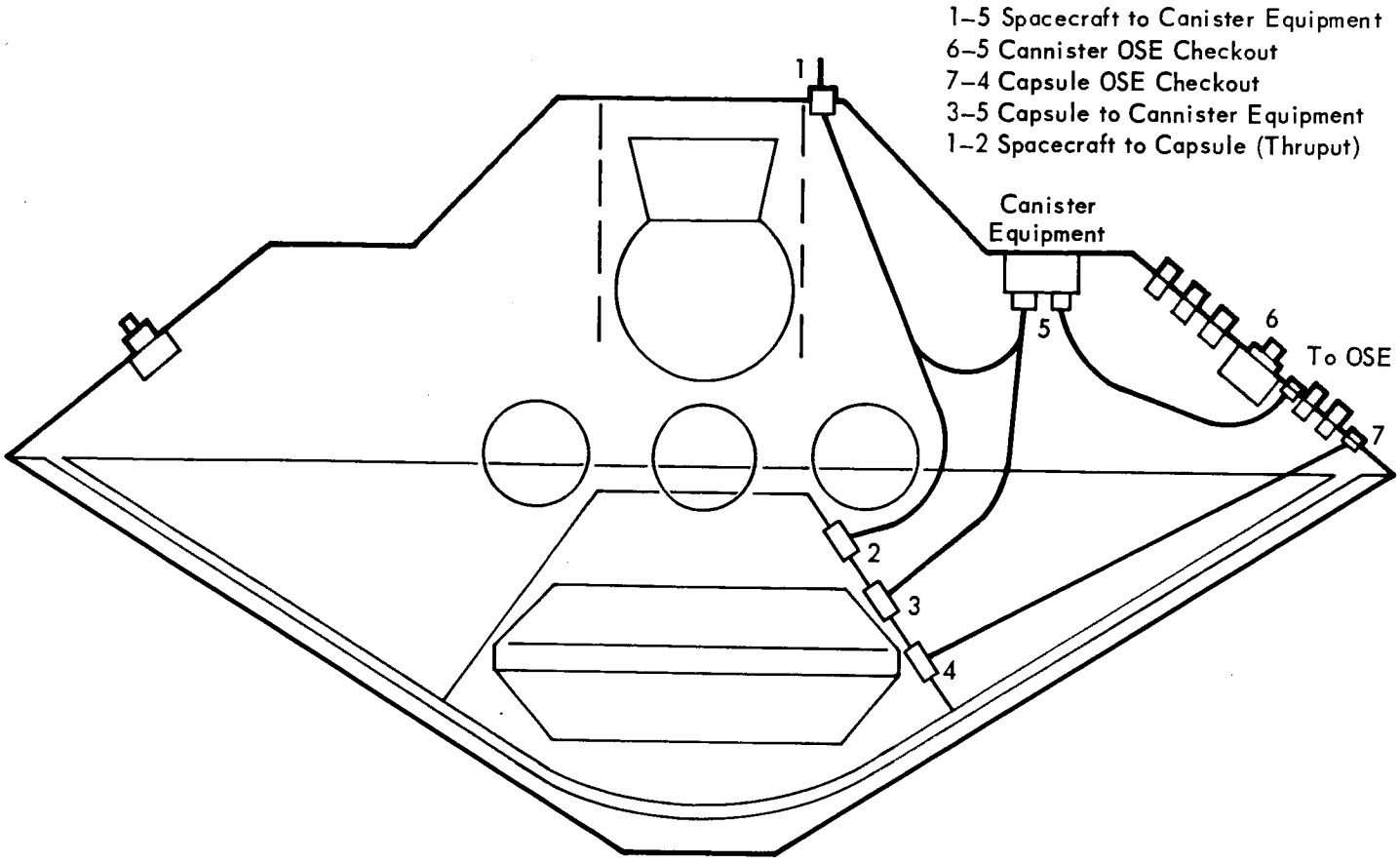

INTERFACE CONNECTOR LIST

LOCATION	INTERFACE IDENT. NUMBER	FUNCTIONAL NAME	HDWE TYPE	BIOLOGICAL* CONSTRAINTS
Spacecraft Joint to Canister	1	Canister Interior to Spacecraft	Hermetic	S–U
Aeroshell Support/Release Point from Canister	2	Capsule Bus Throughput from S/C	IFD	S–U
	3	Capsule Bus to Canister	IFD	S–S
	4	Checkout Capsule Bus to Canister	IFD	S–S
Canister Surface on Portion remaining Spacecraft	6	Canister Interior–Canister Exterior	Hermetic	S–U
	7	Ground Checkout through Canister	Hermetic Manual Disconnect	U–S
	9	Canister Equipment	Hermetic	S–S

*Note U = Unsterilized S = Sterilized

Figure 1.1.4–4

Capsule Bus/Sterilization Canister - The Capsule Bus to canister interface is an in-flight disconnect interface. The interface includes a connector containing the Spacecraft functions, a connector containing the canister functions and finally a connector containing the Capsule Bus OSE functions.

Sterilization Canister/OSE - Capsule Bus and canister equipment functions are routed through feed connectors in the canister structure to the OSE.

Safe-Arm Plugs - An accessible interface permits installation of the Safe-Arm plugs for the pyrotechnic circuit safing and test.

1.1.4.7 Reliability and Safety Considerations - To provide reliability for the electrical equipment a plan for back-up modes of operation has been implemented.

Back-Up Mode - To assure that no single potential malfunction shall have a catastrophic effect on mission performance, special design features are required. These features include independent parallel modes of operation, alternate functional paths to back-up critical items, channel crossover and redundancy.

Safety - The canister subsystem design incorporates several safety features to protect against inadvertent firing of pyrotechnic devices. All pyrotechnic circuits are routed through the safe-arm connectors which short the pyrotechnic circuits and squibs during ground handling. Pyrotechnics are armed late in the countdown just prior to launch.

1.1.4.8 Test - In addition to component test prior to assembly, the electrical system is tested prior to final canister sealing. After assembly, and before and after sterilization, an electrical confidence test is conducted. Prior to launch, the canister is checked out and monitored by the OSE Canister Checkout Console.

1.1.4.9 Development Requirements - Most of the canister electrical/electronic equipment requirements are met through techniques used on past programs and from programs currently in development. The following development areas require further analysis to ensure that components meet requirements dictated by sterilization cycle and those of the mission profile:

- Dual Battery
- Cable Insulation
- Electrical Connectors

1.2 ADAPTER

1.2.1 Equipment Identification and Usage - The Adapter functions primarily as a structural support to attach the Capsule Bus to the canister interface and the Flight Spacecraft. The Capsule Bus inertia loads throughout all phases of the mission are carried through the Adapter structure to the canister/adapter interface and through the canister interface cone to the Spacecraft Bus interface. The adapter is designed to support the Capsule Bus under launch and space operations loads, and to allow for mating or separation of the Capsule Bus to the canister. The adapter incorporates support cabling and umbilical functions, as required, for Capsule Bus/Sterilization Canister interface requirements.

The main truss as shown in Figure 1.2-1 consists of 16 tubular members joined by welded brackets into 8 attachment points at each interface. The main truss members are constructed of 6061 T-6 aluminum alloy tubing, 2.50 inches diameter; 0.049 inch wall thickness. During launch, the main truss functions as a column under acceleration axial loading. The conical geometry of the main truss provides accurate alignment and rigidity for Capsule Bus support.

1.2.2 Design Requirements and Constraints - In addition to the full spectrum of environmental criteria the following requirements are of prime significance in the design of the Adapter:

- Requirement for attachment to the Capsule Bus before attachment to the canister
- Requirement for limitations on dynamic frequencies and excursions.
- Interchangeability of the Adapter as a total assembly
- Requirement for very accurate alignment of the Flight Capsule inertial platform with that of the Flight Spacecraft
- Primary ultimate flight loads of 7.35g axial and .98 lateral including a factor of 1.20 estimated for dynamic effects.

1.2.3 Physical Characteristics - The Adapter is a completely interchangeable unit so that any Adapter can be used with any Capsule Bus or Canister.

1.2.3.1 Dimensions - The reference dimensions for the adapter structure are as follows:

- Length (between connections) - 40.90 inches
- Length (Main truss members) - 56.7 inches (theoretical)
- Bolt circle diameter:

  Adapter/Canister Interface - 148.18 inches

  Adapter/Capsule Bus Interface - 111.0 inches

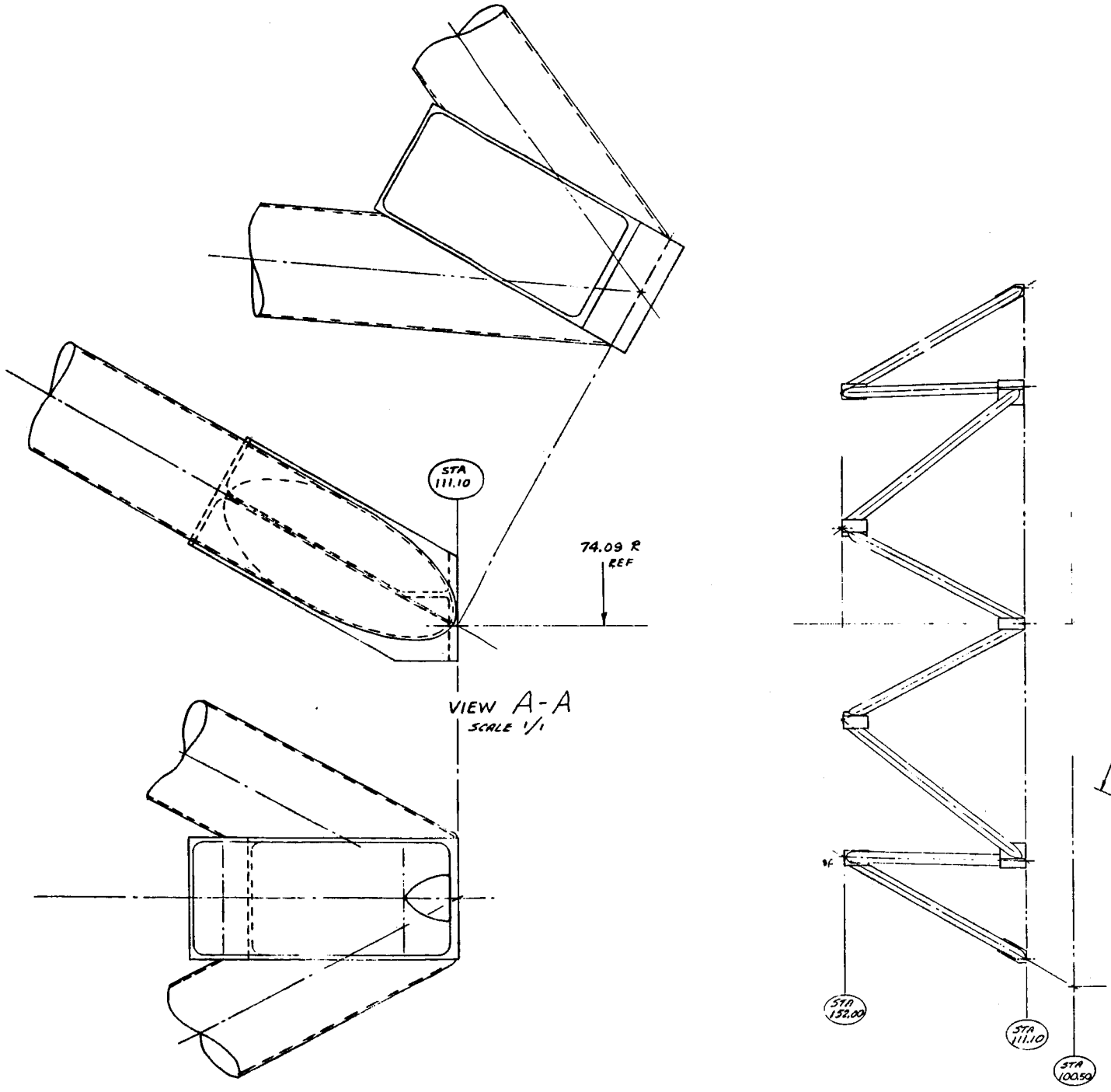
STA 111.10
74.09 R REF
VIEW A-A
SCALE 1/1
STA 132.00
STA 111.10
STA 100.50

Figure 1.2–1

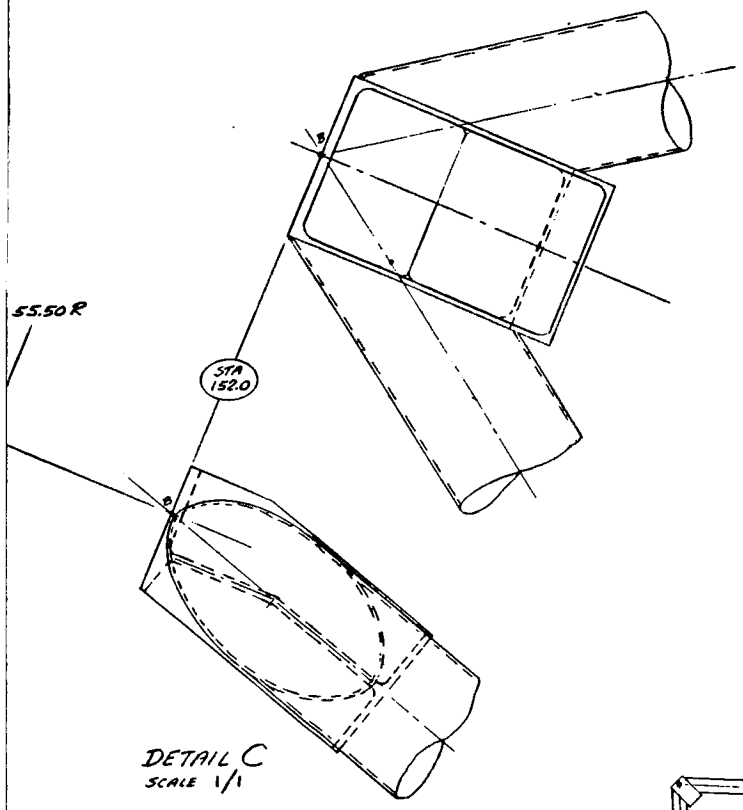

DETAIL C
SCALE 1/1

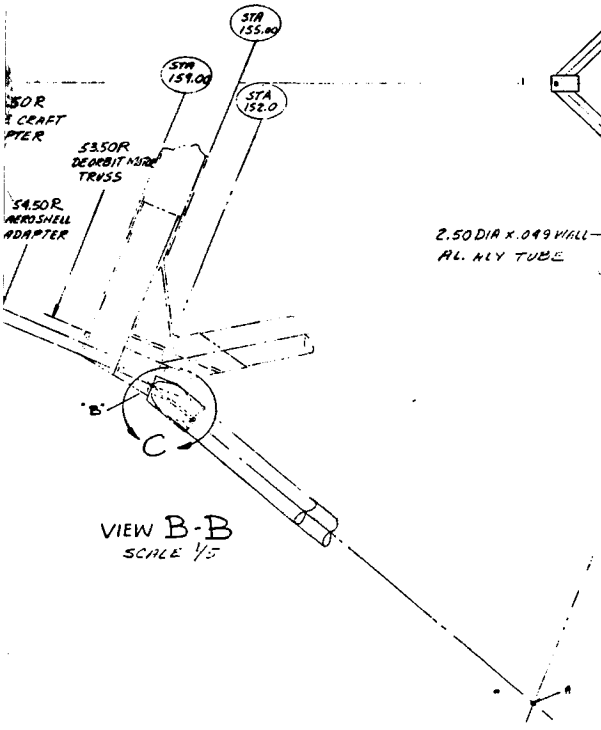

VIEW B-B
SCALE 1/5

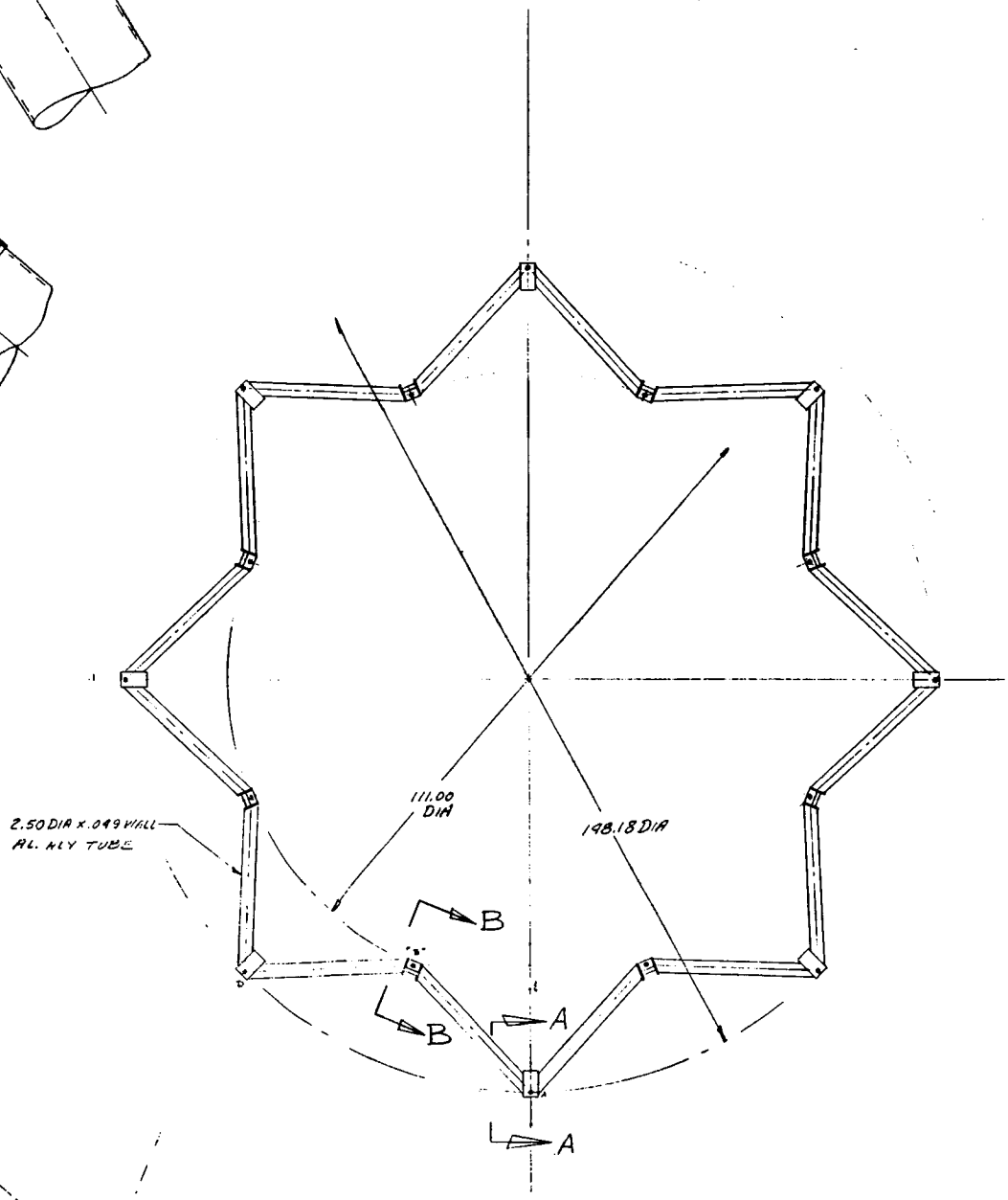

VIEW LOOKING FWD

1.2.3.2 Weight - The weight of the adapter based on the preliminary design presented is 37.6 pounds not including attachment or separation hardware. The truss type design is the lightest and stiffest approach for a large lightly loaded stucture. The attachment to the Spacecraft Bus at eight points rather than a larger number results in a saving in end fitting weight.

1.2.3.3 Dynamic Response - The dynamic characteristics of the adapter design were investigated (See Part B, Section 5.2 of this Volume). Analysis of the truss design indicates fundamental frequencies of 43 cps axially and 15 cps laterally. The mode shape corresponding to the fundamental axial and lateral frequencies of the truss structure are given in Part B, Section 5.2.

Evaluation of the adequacy of the dynamic characteristics of the structure is preliminary, however, as the launch system characteristics are not sufficiently defined at this date to permit a more comprehensive dynamic analysis. No design problems are anticipated in altering the truss design to a stiffness compatible with the mechanical impedance of the VOYAGER systems and the vibration environment of powered flight.

1.2.4 Operation - The adapter is designed to support the Capsule Bus for all flight loads and for ground loads in a vertical or horizontal attitude. The Adapter is first bolted to the Capsule Bus and then the combined assembly is installed in the aft canister section and attached from outside the canister so that access doors through the biologically sealed wall are not required. Fixed plate nuts are provided on the adapter fittings.

1.2.5 Performance Objectives - The adapter's main truss is designed to support a 4,400 pound Capsule for the translational/torsional loads imposed by ground handling, launch, maneuver and separation. Large thermal gradients are not expected to occur prior to separation.

1.2.6 Interface Definition - The Adapter interfaces on the forward end with the Capsule Bus, and on the aft end with the canister. It also provides support as required for electrical harnessing and Capsule separation components.

1.2.6.1 Capsule Bus Interface - This interface consists of eight bolts on a 111.00 inch diameter circle at Capsule Station 152.00 (52 inches forward of the Spacecraft Bus interface).

1.2.6.2 Canister Interface - This interface consists of eight bolts on a 148.18 inch diameter bolt circle at Capsule Station 111.10 (11.10 inches forward of the Spacecraft Bus interface).

1.2.7 Reliability and Safety Considerations - The reliability and safety

considerations in the design of structure are given major attention. The philosophy used in design and subsequent tests of actual hardware virtually negates the reliability and safety risk. This philosophy has been applied to the design of the adapter.

Structural criteria are identified in terms of limit and ultimate design loads. Limit loads are those which result from the maximum expected flight or ground handling conditions. Ultimate loads are those determined by adjusting upward the limit loads by a factor of safety, 1.25 for flight conditions and 1.5 maximum for ground handling conditions which are potentially hazardous to personnel. The structural design is verified by tests to ultimate design loads of a representative item to provide the assurance that the reliability and safety risk is virtually eliminated and, therefore, is not approached from a statistical standpoint.

1.2.8 Test Requirements - The Adapter design selected precludes the necessity of extensive testing. A test of ability to withstand limit load and retain alignment will be combined with the ultimate load test which will be performed to destruction to ascertain the ultimate structural character.

1.2.1.9 Development Requirements - An Adapter prototype will be constructed and tested to demonstrate capability. All of the materials are available without development. Manufacturing techniques are already standard. The material selected (6061 T6 aluminum alloy) is compatible with standard welding techniques. The only development required is in the fabrication and alignment for the specific size and geometry required for this application.

1.3 AEROSHELL - The Aeroshell consists of a structure and a heat shield.

1.3.1 Aeroshell Structure - The Aeroshell structure, which provides support for the Capsule Bus Equipment, consists of a conical shell and a spherical nose cap.

1.3.1.1 Equipment Identification and Usage - The conical shell is the major structural portion of the Aeroshell. The nose cap, also structural, completes the aerodynamic sphere-cone shape.

- o Conical Shell - is a 120 degree truncated cone with a base diameter of 19 feet (228 inches) and a nose diameter of 4.75 feet (57 inches). The cone is a ring stiffened single-faced corrugated structure consisting of a forward section and an aft section. Both sections are of similar construction and permanently joined together by the payload attachment ring. The forward section provides structural support for equipment required for entry and descent. It also provides nose cap support. The aft section provides structural support for equipment required for de-orbit, entry, descent and landing. An ablative type heat shield is bonded to its external surface.
- o The Nose Cap - is the smallest portion of the Aeroshell and when attached to the conical shell structure completes the 120 degree sphere-cone shape. The nose cap is a spherical segment with a radius of 4.75 feet (57.0 inches) and a chord diameter of 4.75 feet (57.0 inches). The nose cap maintains aerodynamic contour, provides thermodynamic heat protection and contains entry and descent equipment. A nonablative type heat shield is bonded to its external surface.

1.3.1.2 Design Requirements and Constraints

Requirements - The Aeroshell structure should meet the following requirements:

- o Growth Potential - provide for Capsule Lander weight and size growth.
- o Operational Flexibility - provide accessibility for modifications.
- o Heat Shield Compatibility - provide a good surface for bonding the heat shield. The material should be capable of utilizing the full adhesive qualities of the bonding agent. Also, the thermal expansion characteristics must be compatible.
- o Optical Transparent Window Installation - should be capable of allowing pictures to be taken through the conical shell near the nose cap by a TV camera that is mounted to the Capsule Lander. The window should protrude through the heat shield.

- o Instrument Port - requires an opening through the center of the spherical segment (stagnation point of the Aeroshell) to pick up total temperature readings, total pressure readings, and mass spectrometer samples.
- o Capsule Lander Attachment - requires internal support structure to be added to the shell structure sufficient to distribute all applied loads uniformly. A reliable method for separation should be provided.
- o Reaction Control System - requires support structure for one pressurant tank, one fuel tank, eight thrust chamber assemblies; e.g., four 22 lb. thrusters and four 4 lb. thrusters. Additional support structure should be provided for components.
- o Radar Altimeter Antenna - requires the nose cap to be radio frequency (RF) transparent. The antenna system must function in all atmospheres and in a vacuum.

Constraints - The Aeroshell structure should meet the following requirements:

- o Shape - 120° sphere cone with $R_N/R_B = 0.5$ (See Volume II, B 4.1).
- o Size - must allow clearance for the sterilization canister, insulation and excursion envelope. The maximum diameter Aeroshell that can be accommodated within these constraints is 19 feet (228 inches).
- o Weight - minimum for a 5,000 pound Flight Capsule.
- o Sterilization - materials must be compatible.

1.3.1.3 Physical Characteristics

Conical Shell - The complete conical shell includes the forward conical section, the aft conical section, five internal stiffening rings, and necessary internal support members. (See Figure 3.1.1-1)

Forward Conical Section - This is a built up conical shell with a nose radius of 4.75 feet (57 inches) and a base radius of 8.50 feet (114 inches). The shell consists of eight equal segments that are joined mechanically along their longitudinal edges by a tee splice joint as shown in Figure 1.3.1-2. Each of the eight panels have one flat sheet of .008 inch titanium and one corrugated sheet of .008 inch titanium. The two sheets are joined together by stitch welding (See Figure 1.3.1-2). Twenty-two corrugations are formed into a single panel and a total of 176 in the complete shell.

Aft Conical Section - This section is similar to the forward section. There are eight equal segments and eight tee splices. The corrugations increase to 44 for a single panel and 352 in the complete shell. The forward and aft conical

CONICAL SHELL

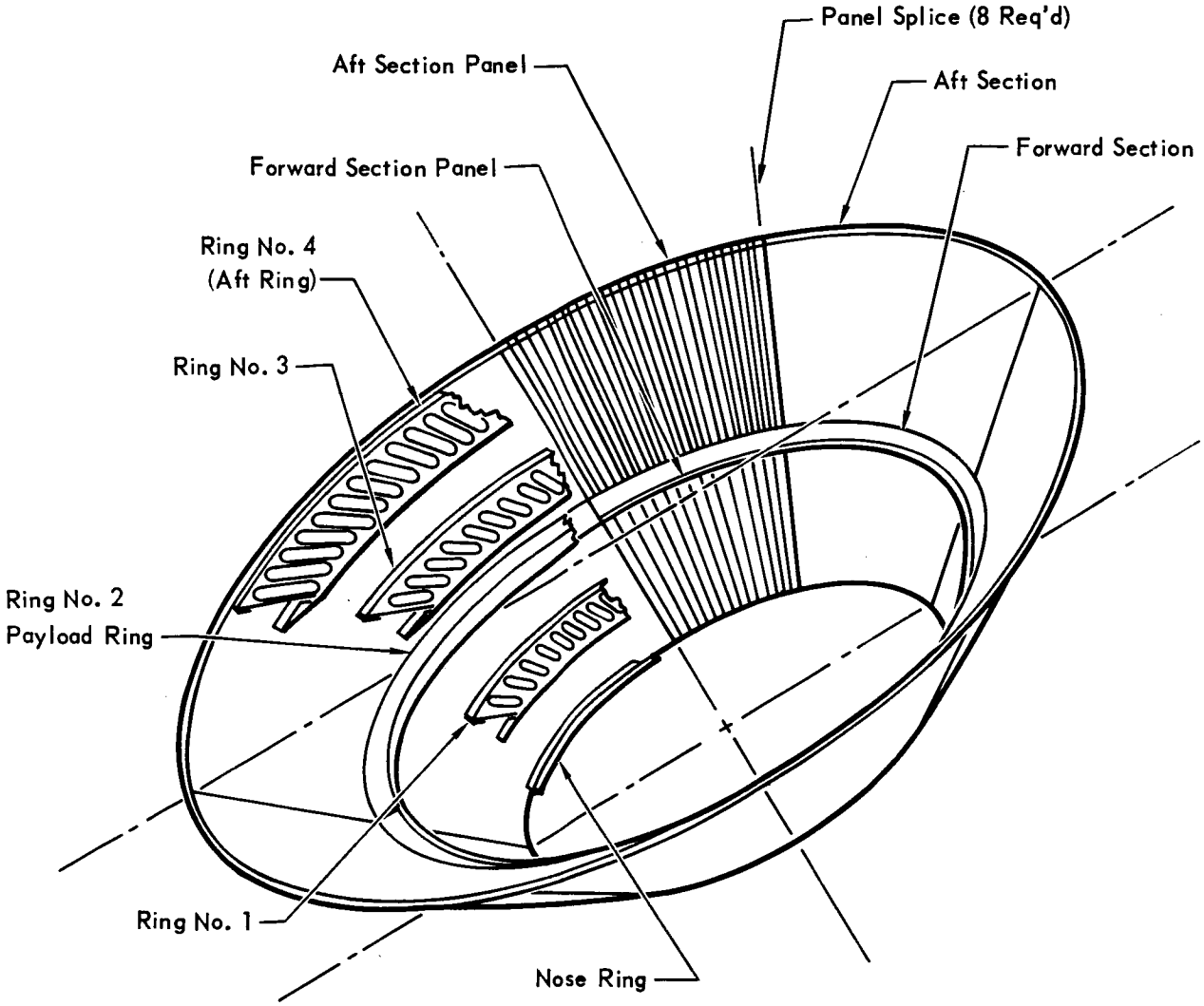

Conical Shell

Figure 1.3.1–1

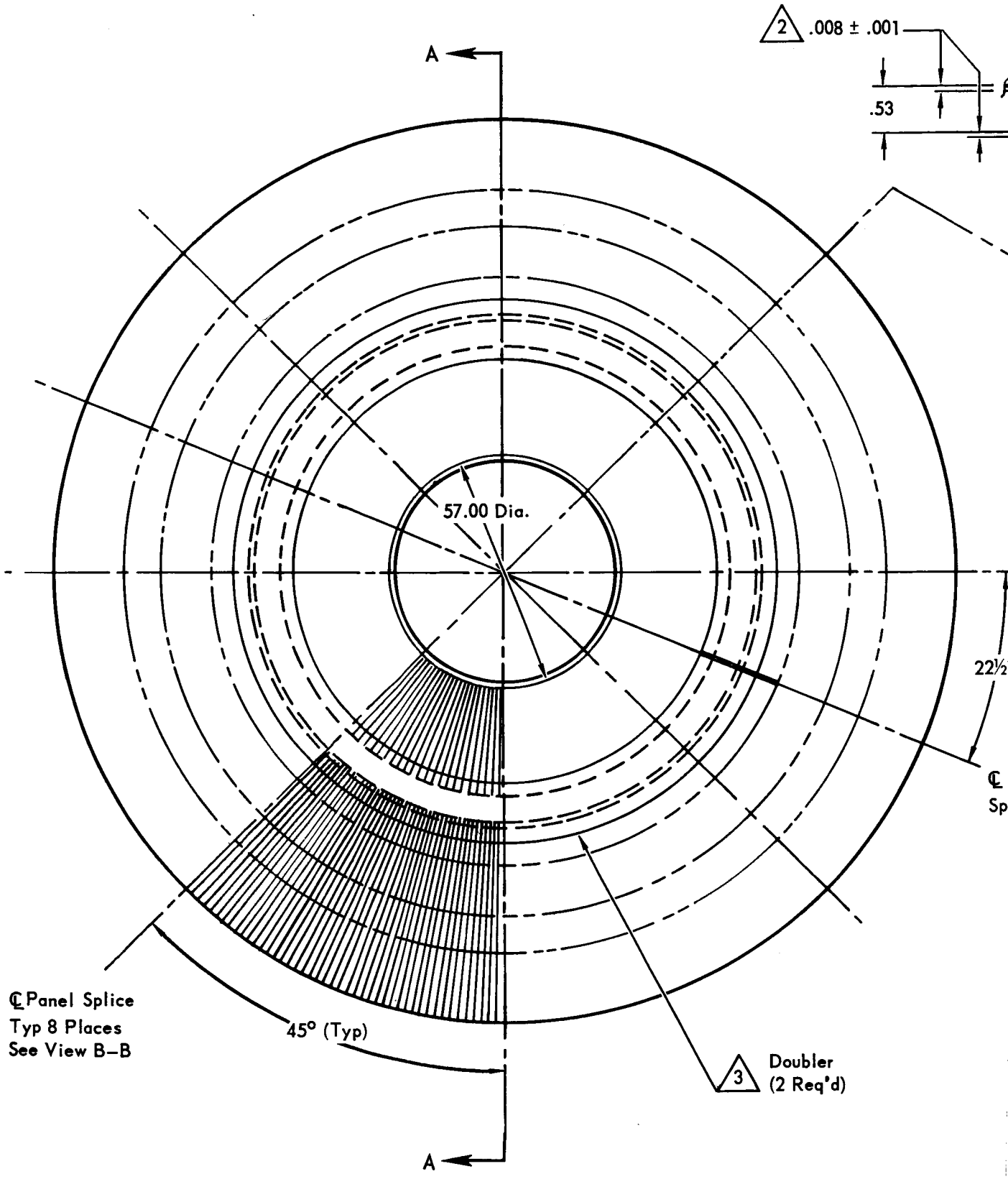
2 .008 ± .001
.53
A
57.00 Dia.
22½
℄
Sp
℄ Panel Splice
Typ 8 Places
See View B–B
45° (Typ)
3 Doubler
(2 Req'd)
A

Figure 1.3.1–2

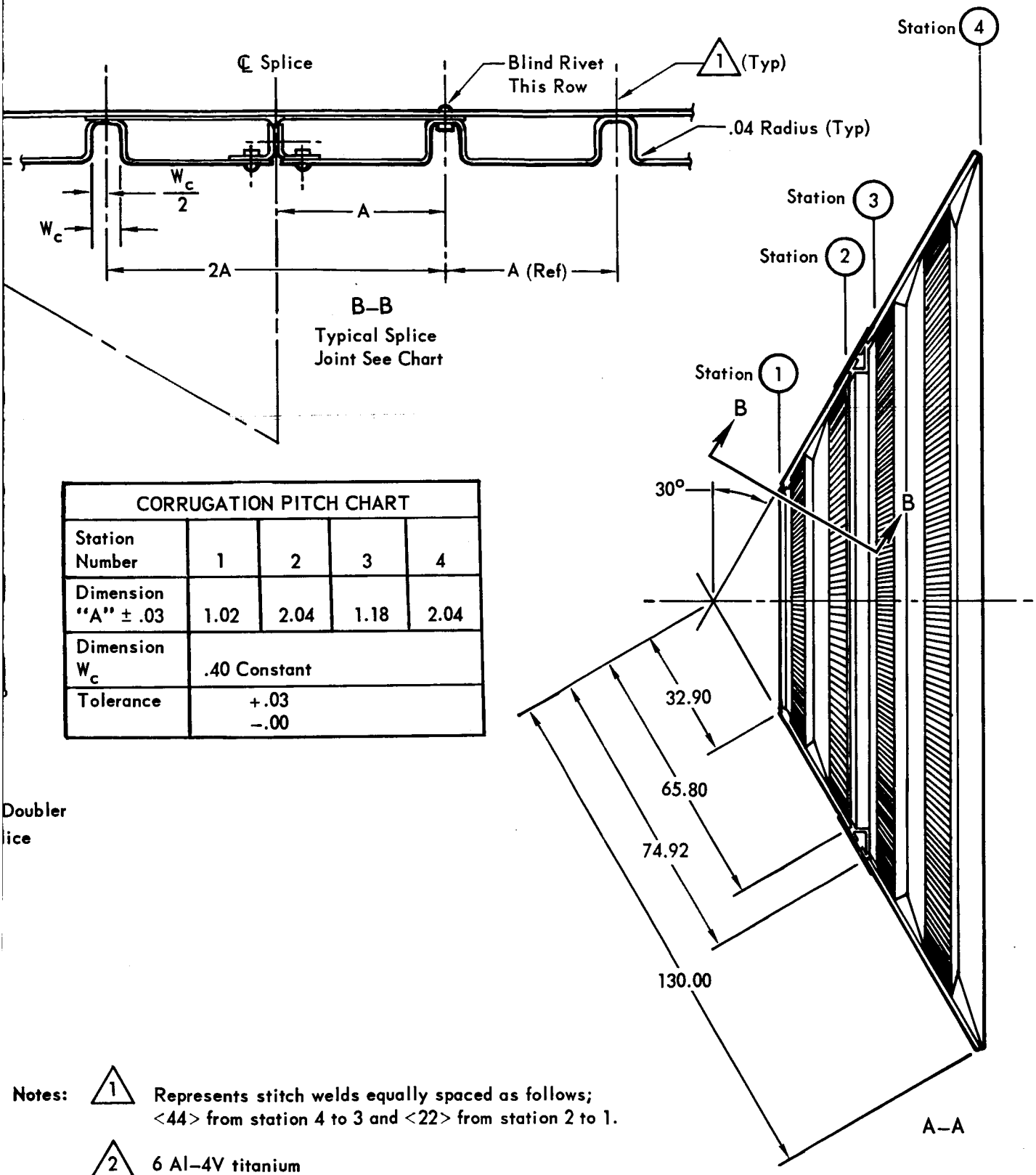

CORRUGATION PITCH CHART				
Station Number	1	2	3	4
Dimension "A" ± .03	1.02	2.04	1.18	2.04
Dimension W_c	.40 Constant			
Tolerance	+.03 −.00			

Doubler
ice

Notes:

1. Represents stitch welds equally spaced as follows; <44> from station 4 to 3 and <22> from station 2 to 1.
2. 6 Al–4V titanium
3. Riveted to panels

1-56-2

shells are jointed by two continuous machined rings and two continuous doublers. Mechanical fasteners are used throughout the joint with the small manufacturers heads on the outboard side (See Figure 1.3.1-3, View B). This joint is completed by installing additional ring segments to the standing legs of the machined rings and adding 32 equally spaced fittings back to back. Four ring caps are then installed to complete the payload ring assembly as shown in Figure 1.3.1-3, View B. Four other rings are required. One is machined and located at the nose cap attachment joint in the forward conical section as shown in Figure 1.3.1-3, View E. The other three rings are spaced as shown in sideview of Figure 1.3.1-2 and attached with blind mechanical fasteners.

Bipod Support Struts - The Capsule Lander has eight mounting points at 111.00 inch bolt circle and is mated with eight bipod struts as shown in Figure 1.3.1-3, View C-C. There are four bipods that react as compression and tension members and four that react just as compression members. Each bipod attaches to the shell structure at two points with a total of 16 points. These points are equally spaced to distribute all loading conditions uniformly into the shell structure. The 16 bipod attach points are pinned connected to 16 machined fittings that are mechanically joined to the payload attach ring as shown in Figure 1.3.1-3, View B. The bipods are pivoted clear of the Capsule Lander during separation by torsion springs located at each fitting as shown in Figure 1.3.1-3, View D. The separation occurs from four explosive bolts ignited through a set of explosive stimulus lines. The bipods are of simple design, construction and installation.

Optical Transparent Window Installation - The window required for the entry TV camera installation is shown in Figure 1.3.1-3, View F, and View G-G. A windowpane made from the fused silica (Corning 7940 or equal) is supported by a machined refractory metal frame that is bolted to the adjacent titanium panel on three sides and to the nose ring at the other side. The window is held firmly against the frame by another frame and hardened fiberfrax gaskets. A gap of .093 inch around the window is occupied by a .093 inch diameter stainless tube to prevent window shift. The tube will deflect elastically during long term cold soak and expand during entry heating.

Nose Cap - As shown in Figure 1.3.1-4, the nose is a spherical segment. The load carrying structure is of sandwich construction using phenolic fiberglass. A fiberglass ring having a 56.00 inch diameter bolt circle mates the nose cap structure to the nose ring as shown in Figure 1.3.1-3, View E. The sandwich construction consists of two .020 inch face sheet laminations and .26 inch thick core. HT-435

STRUCTURAL ARRANGEMENT – AEROSHELL

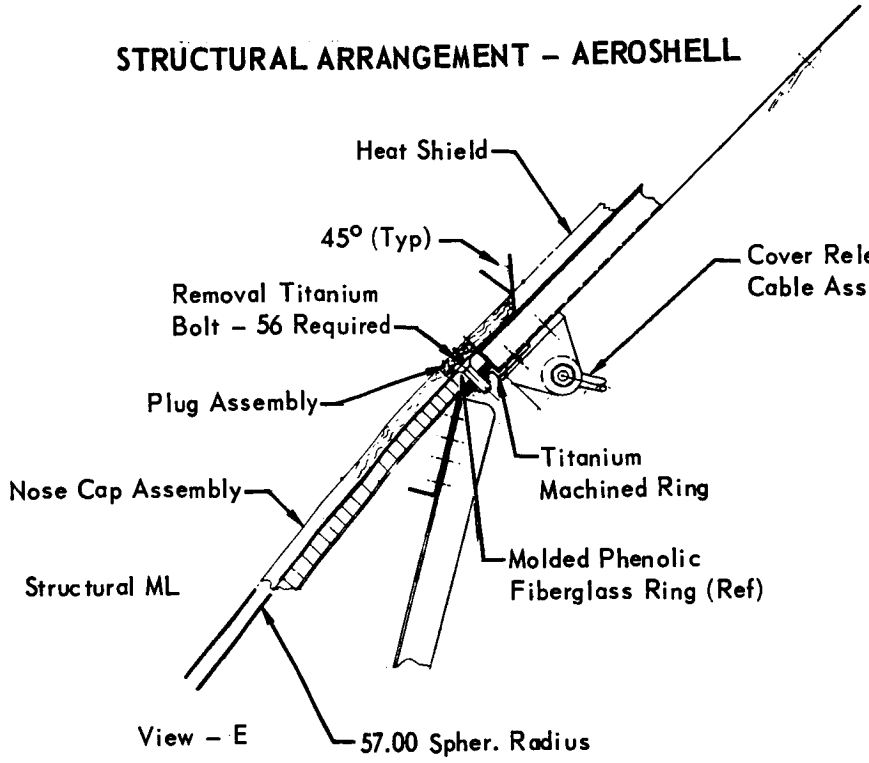

Radar Absorbing
Cover Assembly
For Radar Altimet
Secondary Antenn

Cover Release
Cable Assemb

See Figure
Nose Cap Assembly-

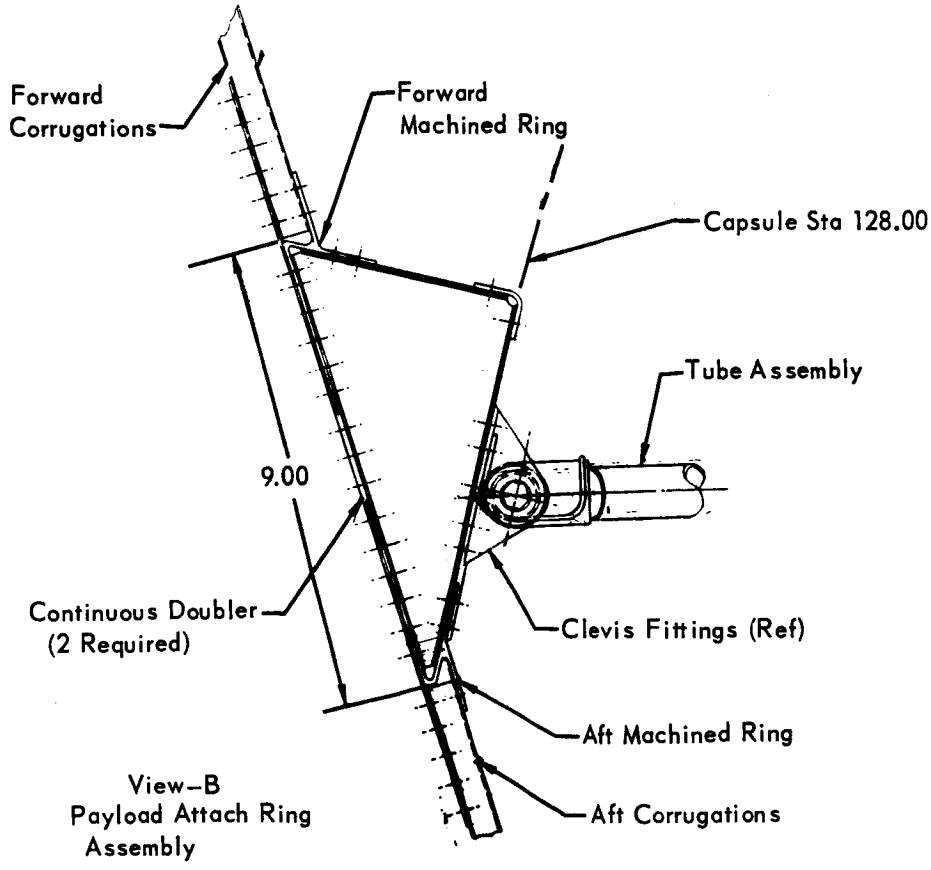

Radar Absorbing Cover
Assembly for Radar
Altimeter Primary
Antenna

Capsule Sta

A

Figure 1.3.1–3

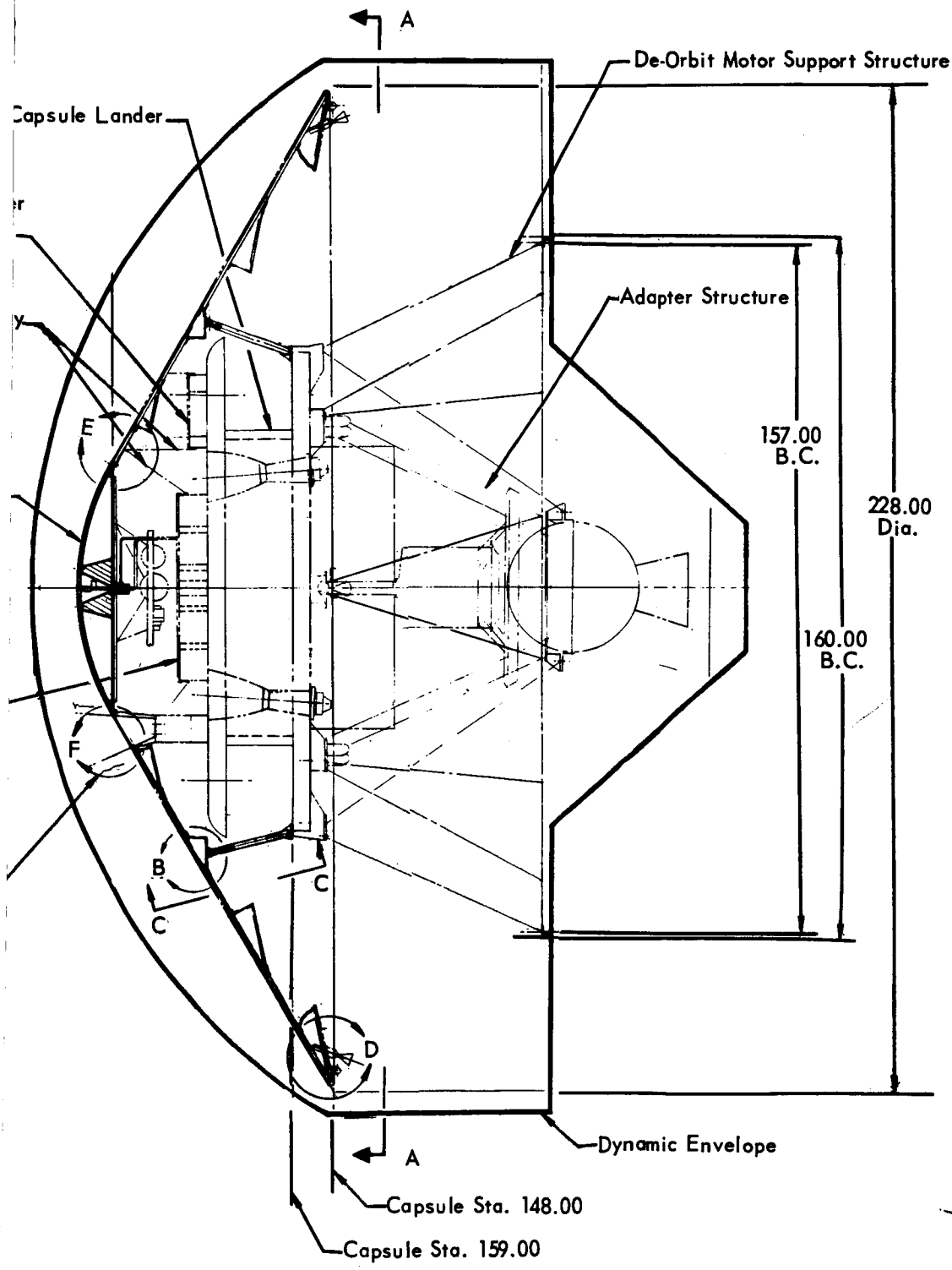
A
De-Orbit Motor Support Structure
Capsule Lander
Adapter Structure
E
157.00
B.C.
228.00
Dia.
160.00
B.C.
F
B
C
C
D
A
Dynamic Envelope
Capsule Sta. 148.00
Capsule Sta. 159.00

Bipod

1-58-2

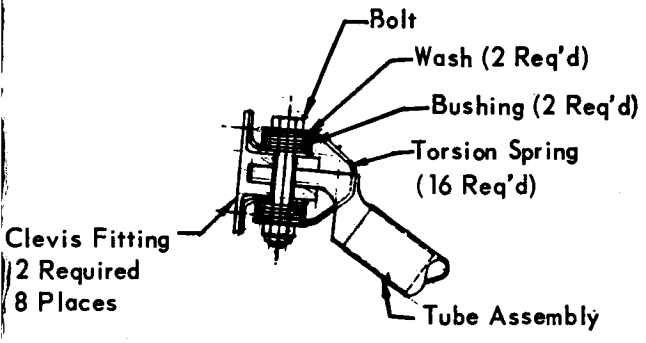

View – D
(B_1 Pod Pivot Joint)
2 Req'd
8 Places

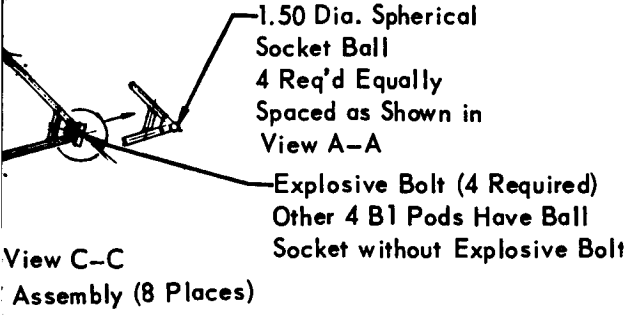

View C–C
Assembly (8 Places)

B 1-58-3

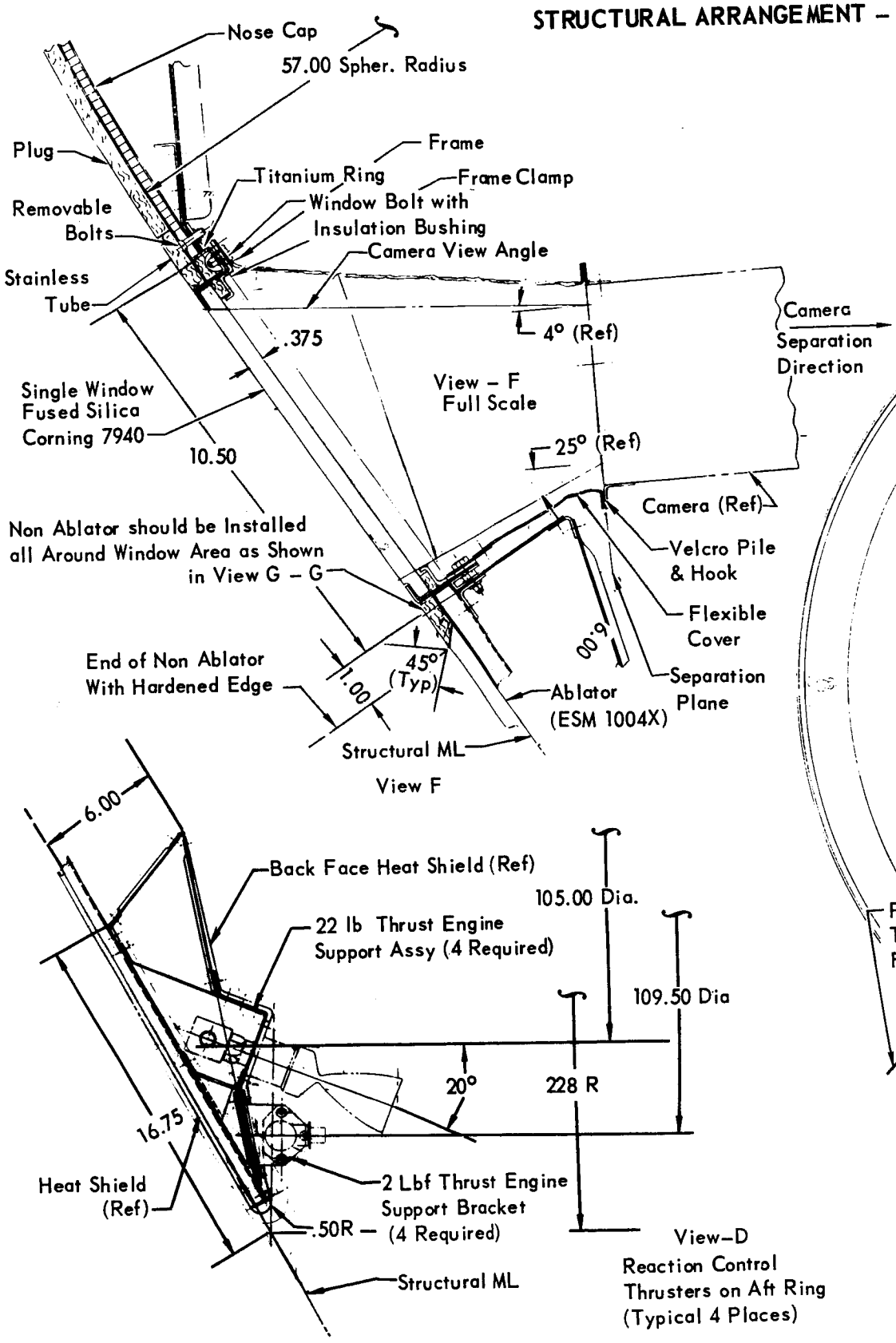

A

Figure 1.3.1–3 (Continued)

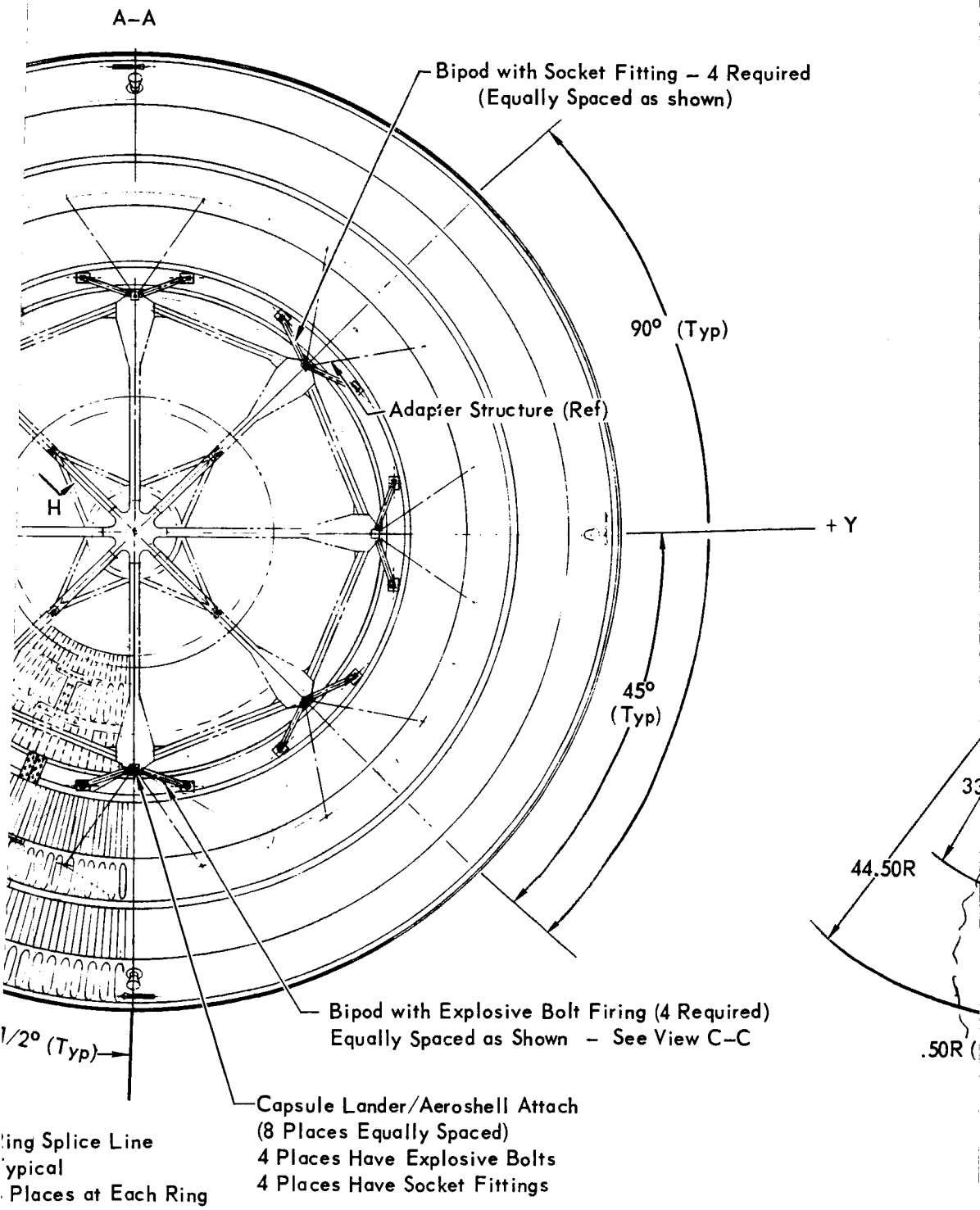
A–A
Bipod with Socket Fitting – 4 Required
(Equally Spaced as shown)
90° (Typ)
Adapter Structure (Ref)
H
+ Y
45°
(Typ)
44.50R
Bipod with Explosive Bolt Firing (4 Required)
Equally Spaced as Shown – See View C–C
1/2° (Typ)
Capsule Lander/Aeroshell Attach
(8 Places Equally Spaced)
4 Places Have Explosive Bolts
4 Places Have Socket Fittings
ing Splice Line
ypical
Places at Each Ring

1-59-2

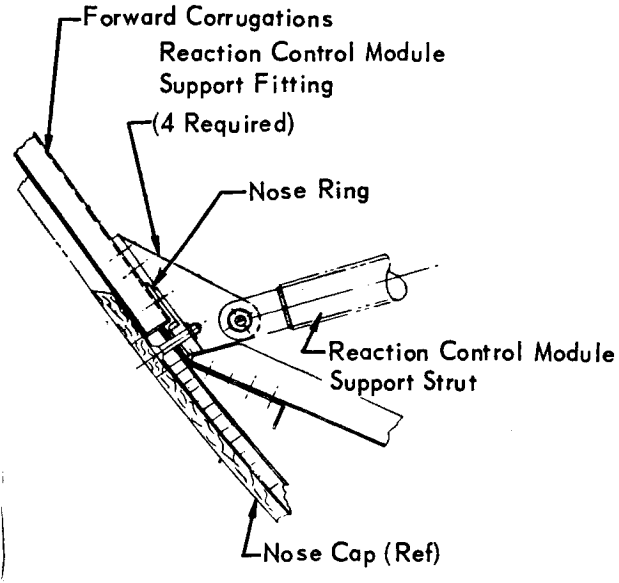

View H – H
Reaction Control Modual Support Fitting
Typ 4 Places

View G–G

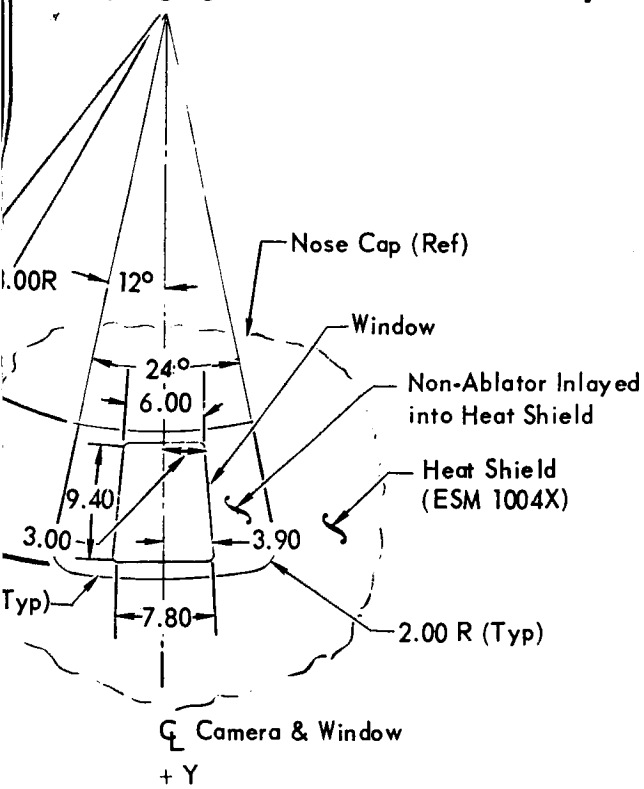

B

1-59-3

NOSE-CAP ASSEMBLY

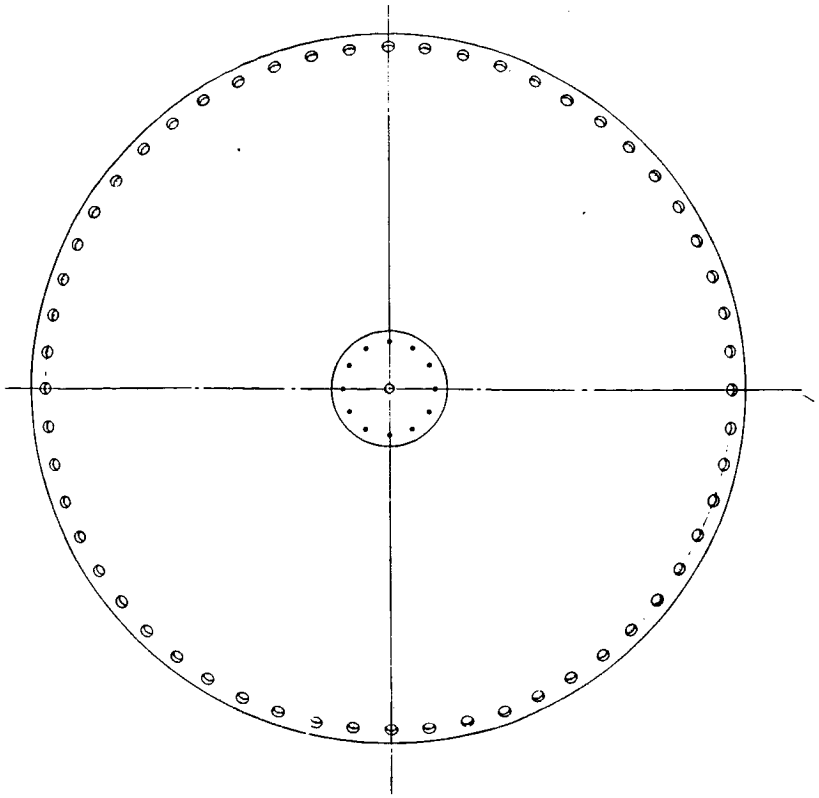

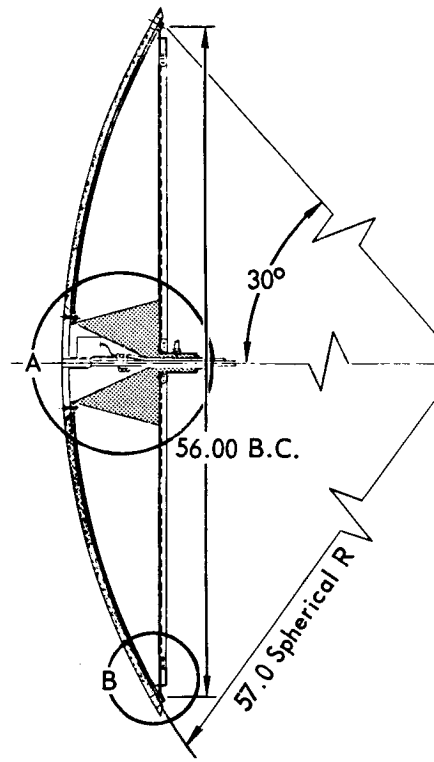

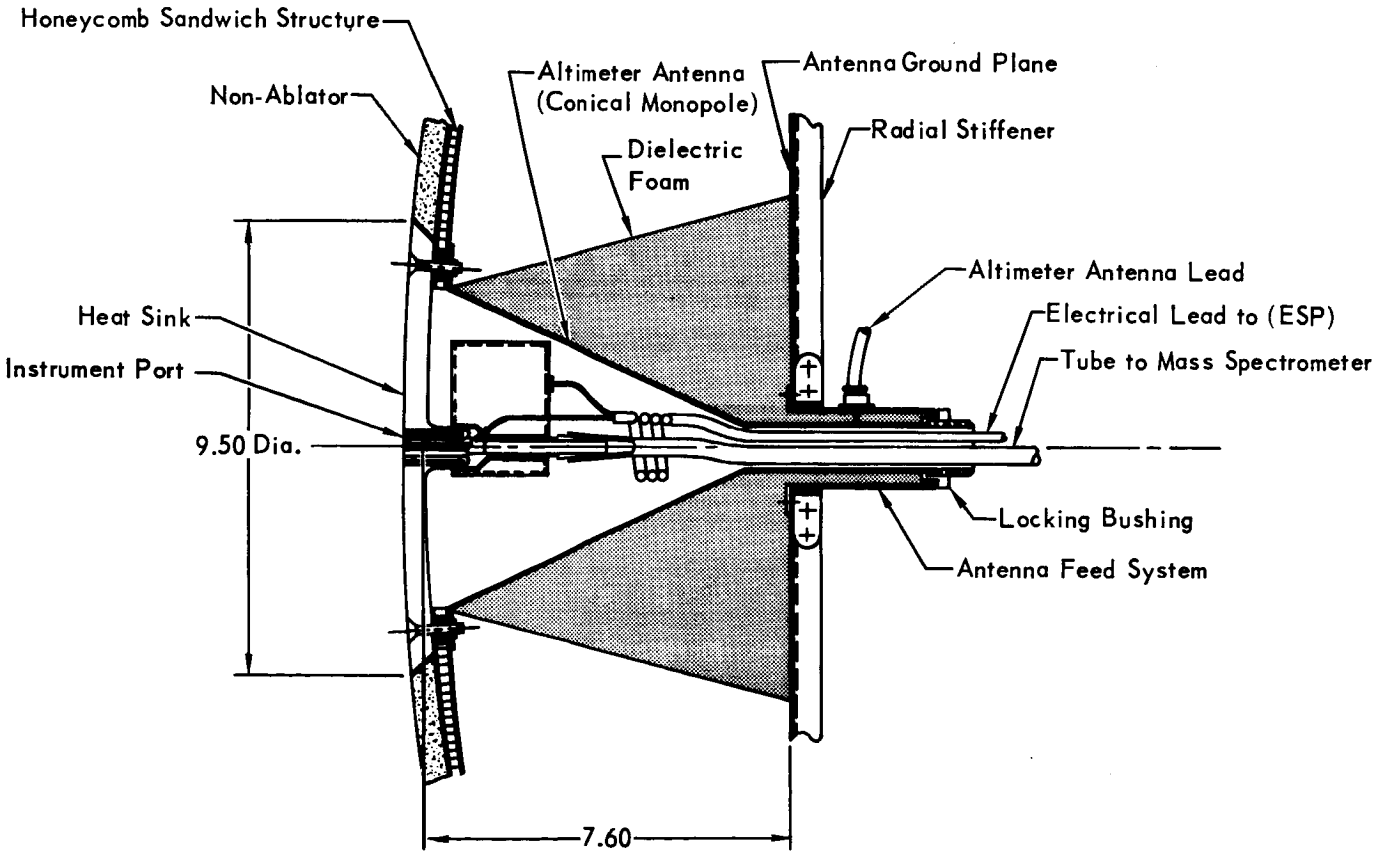

VIEW – A

Figure 1.3.1–4

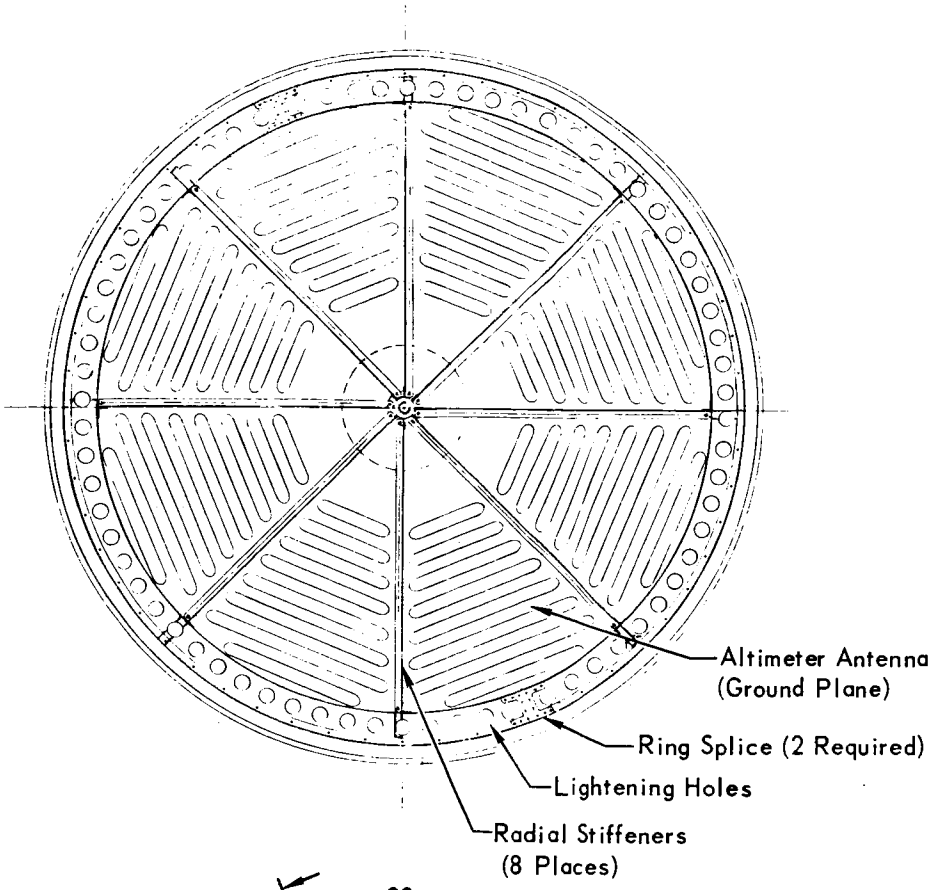
Altimeter Antenna
(Ground Plane)
Ring Splice (2 Required)
Lightening Holes
Radial Stiffeners
(8 Places)

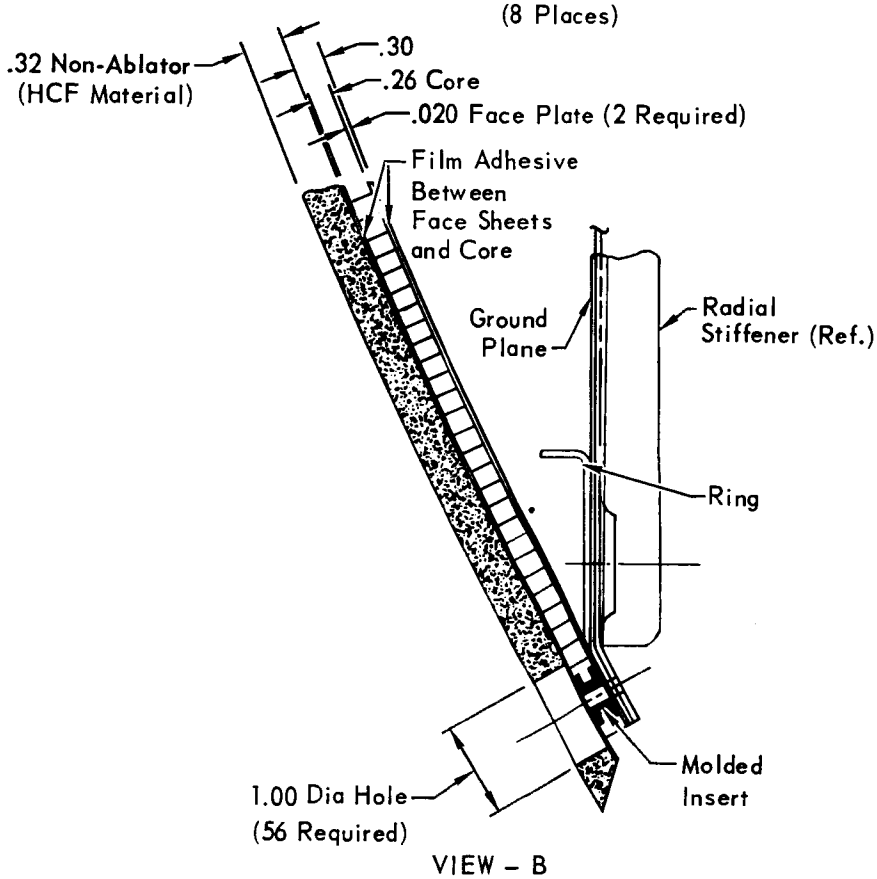
.32 Non-Ablator
(HCF Material)
.30
.26 Core
.020 Face Plate (2 Required)
Film Adhesive
Between
Face Sheets
and Core
Ground
Plane
Radial
Stiffener (Ref.)
Ring
Molded
Insert
1.00 Dia Hole
(56 Required)

VIEW – B

1-60-2

adhesive in sheet form is layed between each face sheet and core. The non-ablative material, an allminosilicate fiber composite hardened with a ceramic binder, is also bonded to the phenolic fiberglass face sheet of the sandwich substructure with HT-435.

The instrument head imposes the use of a heat sink on the stagnation point. The heat sink is a 9.50 inch diameter circular disc machined from beryllium. The disc accommodates the instrument head and is bolted to the sandwich substructure.

The Radar Altimeter antenna is a conical monopole type with a ground plane. The 130 degree cone is .040 inch aluminum and fastens to the heat sink with mechanical fasteners through Fiberfrax insulation washers. The ground plane is also .040 inch aluminum. A low density dielectric material is installed around the 130 degree cone to prevent antenna breakdown.

1.3.1.4 Operation Description - The Aeroshell structure supports the equipment, including the heat shield, which is required for entry, descent, and landing, and provides the 120° sphere cone shape required for the Aeroshell to act as an aerodynamic decelerator.

1.3.1.5 Performance Objectives - The Aeroshell structure shall be capable of handling all applied loads presented by the Capsule Lander, Entry Science Package, the Surface Laboratory, and other system components at entry.

1.3.1.6 Interface Definition - There are three structural interfaces that mate with the Aeroshell structure.

- o Nose Cap (Figure 1.3.1-4)
- o Capsule Lander (Figure 1.3.1-3, View C-C)
- o Entry Television Camera Window (Figure 1.3.1-3, View F)

1.3.1.7 Reliability Considerations - Reliability considerations in the design of structural assemblies are given major attention. A design philosophy adopted and proven on previous McDonnell spacecraft designs virtually negates the reliability risk for structural members.

Structural criteria are identified in terms of limit and ultimate design loads. Limit loads are those which result from the maximum flight or ground handling conditions. Ultimate loads are those determined by adjusting the limit loads upward by a factor of safety, normally 1.25 for flight conditions and 1.5 maximum for ground handling conditions which are potentially hazardous to personnel.

Structural design, and positive verification by test to this ultimate design load, provides the assurance that the reliability risk is virtually eliminated and, therefore, not approached from a statistical probabilistic standpoint. This applies to the structural portion of this subsystem only. The Aeroshell/Lander separation

assembly is considered a part of this subsystem and has been the subject of a reliability analysis.

Reliability Estimate - The functioning components in the Aeroshell/Lander separation assembly are depicted in a reliability logic diagram included as Figure 1.3.1-5. The estimated reliabilities of the individual components are as follows:

COMPONENT	RELIABILITY
Initiator (EED)	.9998
Explosive Stimulus Ring (r Strands)	.9996
Cartridge, Bolt or Disconnect	.9998
Explosive Bolt (Less Cartridges)	.99995
Electrical Disconnect, Spin-Off (Less Cartridges)	.9999

Applying these component reliabilities, the reliability of the separation function was calculated to be R = .9997.

Failure Mode, Effect and Criticality Analyses - A failure mode, effect and criticality analyses was conducted for the Aeroshell/Lander separation assembly, and the results are presented in Figure 1.3.1-6. Each failure mode is categorized according to the effect on the following mission objectives:

- Achievement of flight capsule landing.
- Performance of entry science experiments.
- Performance of landed science experiments.
- Retrieval of engineering data.

The failure categories are defined as follows:

CATEGORY	EFFECT
1	No effect on mission objective.
2	Degrading effect on mission objective.
3	Possible catastrophic effect on mission objective.

Categories listed as 1/2, 2/3, 1/3, etc., indicate that the effect of the failure may vary between these categories.

Reliability Improvement Considerations - Although considered a highly reliable function, the reliability could be improved if deemed necessary by two redundancy considerations.

The first and most desirable change would be to provide a lanyard actuated back-up for the pyroactuated electrical disconnect.

The second change would be to incorporate an explosive nut as a back-up

RELIABILITY LOGIC DIAGRAM – AEROSHELL MODULE

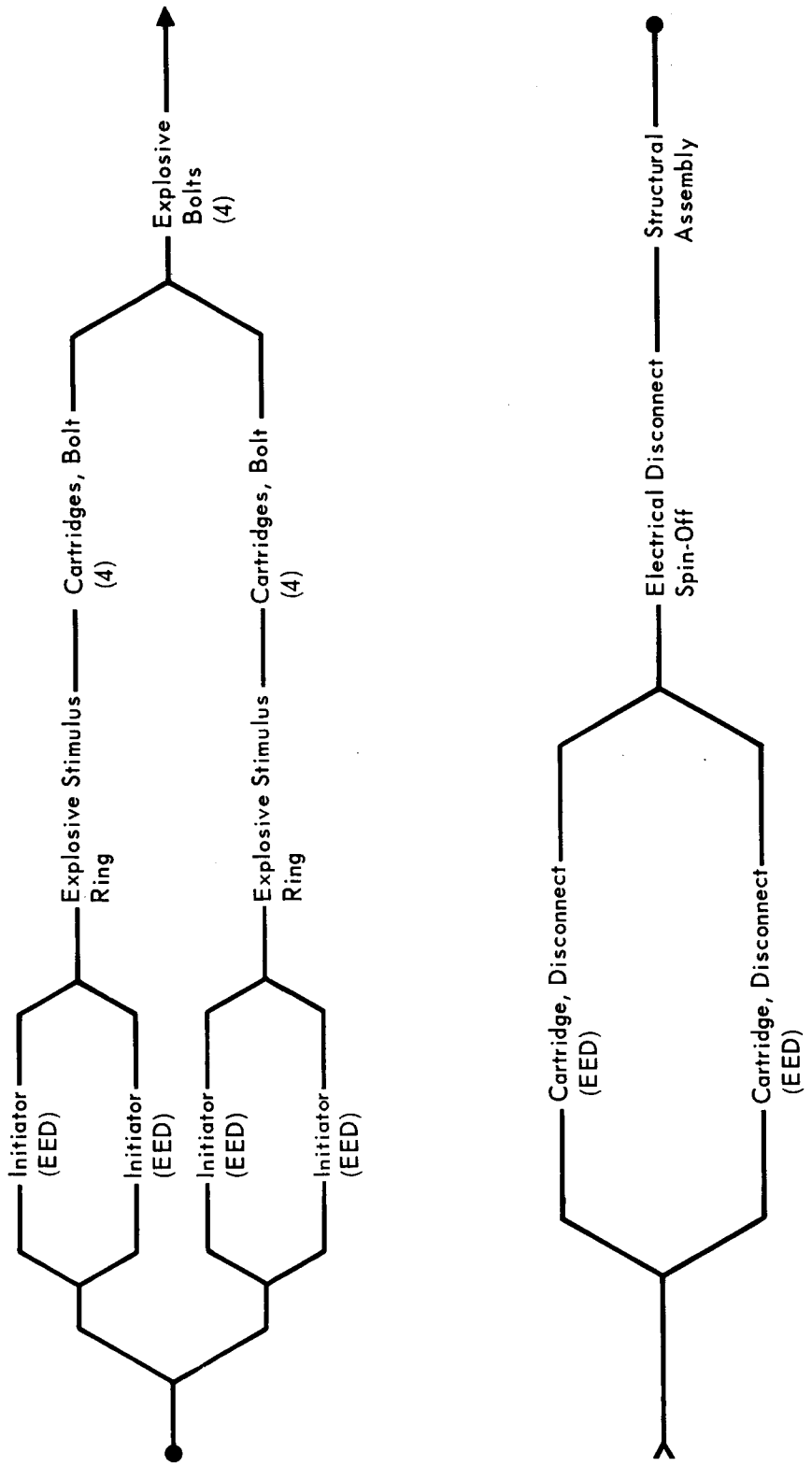

Figure 1.3.1–5

FAILURE MODE, EFFECT AND CRITICALITY ANALYSIS

LANDER/AEROSHELL RELEASE ASSEMBLY

Legend
Failure Categories
1 No effect on mission objective
2 Degrading effect on mission objective
3 Possible catastrophic effect on mission objective

COMPONENT OR FUNCTION	FAILURE MODE	FAILURE EFFECT	FAILURE CATEGORY: LANDING	ENTRY SCIENCE	LANDED SCIENCE	ENG. DATA	REMARKS
1. Explosive bolt	Fails to break when fired (any one of four)	Aeroshell will not separate from lander, unless bolt is broken by increased load or by firing terminal propulsion system against the aeroshell.	2/3	2	2/3	2	Dual cartridges are incorporated in each bolt with either cartridge providing adequate energy for breaking the bolt. Redundant sets of explosive stimulus lines insure cartridge initiation.
	Fails structurally when fired.	Shrapnel not expected to cause damage to surrounding equipment.	1/2	1/2	1/2	1/2	Adequate design and good inspection procedures make this failure mode remote.
2. Electrical disconnect dual cartridge spin-off	Fails to separate wire bundle.	Incomplete separation of aeroshell from lander	1/3	2	1/3	2	Dual cartridges are incorporated in each disconnect with either cartridge providing adequate energy to separate connector. A lanyard actuated back-up device can be incorporated to further reduce probability of failure to separate wire bundle.
	Fails structurally when fired.	Resulting shrapnel may cause damage to surrounding equipment.	1/2	1/2	1/2	1/2	Adequate design and good inspection procedures make this failure mode remote.

Figure 1.3.1-6

function to each explosive bolt. This change could be incorporated in lieu of the redundant cartridge in each explosive bolt.

Incorporation of these redundancies would eliminate single point failure modes in the performance of this function.

1.3.1.8 Test Requirements - No pre-flight, in-flight monitoring, or validation required after sterilization cycles are performed for the Aeroshell structure.

1.3.1.9 Development Requirements - No major development requirements for the Aeroshell structure exist. Some development of assembly techniques for the large thin-walled structure selected for the conical section may be required. The compatibility of beryllium with the ETO decontamination cycle requires confirmation. This material is included in a current test being performed at McDonnell to determine the effect of chemical decontamination and heat sterilization on VOYAGER materials.

1.3.2 Heat Shield

1.3.2.1 Equipment Identification and Usage - The heat shield will provide Mars atmospheric entry deceleration and heat protection for the Capsule, the Surface Laboratory and the Entry Science Package. Major components are:

- o A non-ablating spherical nose cap, Figure 1.3.2-1.
- o An ablative heat shield on the conical skirt, Figure 1.3.2-2.
- o A thermal curtain over the base, Figure 1.3.2-3, is considered part of the heat shield equipment.

1.3.2.2 Design Requirements and Constraints - The heat shield and curtain, after being subjected to sterilization/decontamination, ground handling, shipping, ascent, trajectory adjustment, de-orbit loads, and long-term low temperature and vacuum exposure, will provide heat protection for Mars entry.

Non-Ablative Nose Cap - The design thickness of the nose cap limits the backface temperature to 640°F. The maximum backface temperature acceptable for structural design and bond compatibility is 735°F. Thus, the nose cap provides a thermal design margin of 95°F. The nose cap must have less than 1.5 db one-way RF transmission loss at 1100 MHz and must not emit any gaseous products, during entry heating, that will redeposit on the TV experiment optical window or compromise the mass spectrometer data on atmospheric samples.

Ablative Heat Protection - the heat shield thickness for ablative heat protection has been sized to be compatible with the Aeroshell structural temperature limits. The design heat shield thickness limits the backface temperature to 640°F. The maximum backface temperature for structural design and bond compatibility is 800°F, thus allowing a thermal design margin of 160°F.

Thermal Curtain - The thermal curtain will enclose the nose of the capsule to protect the Surface Laboratory, Entry Science Package, and Aeroshell structure from wake heating, during entry and heating during retro-rocket firing. It will have a low emissivity coating on its interior surface to minimize heat loss during descent. The curtain must have short-term, high temperature capability (1000°), and be designed so that it will not interfere with separation of the entry portion of the Flight Spacecraft.

Design Trajectories - The design entry trajectories will include the following conditions:

- o Mars atmosphere: VM spectrum per SE003BB001-1B28 (ten atmospheric models).

NOSE-CAP ASSEMBLY

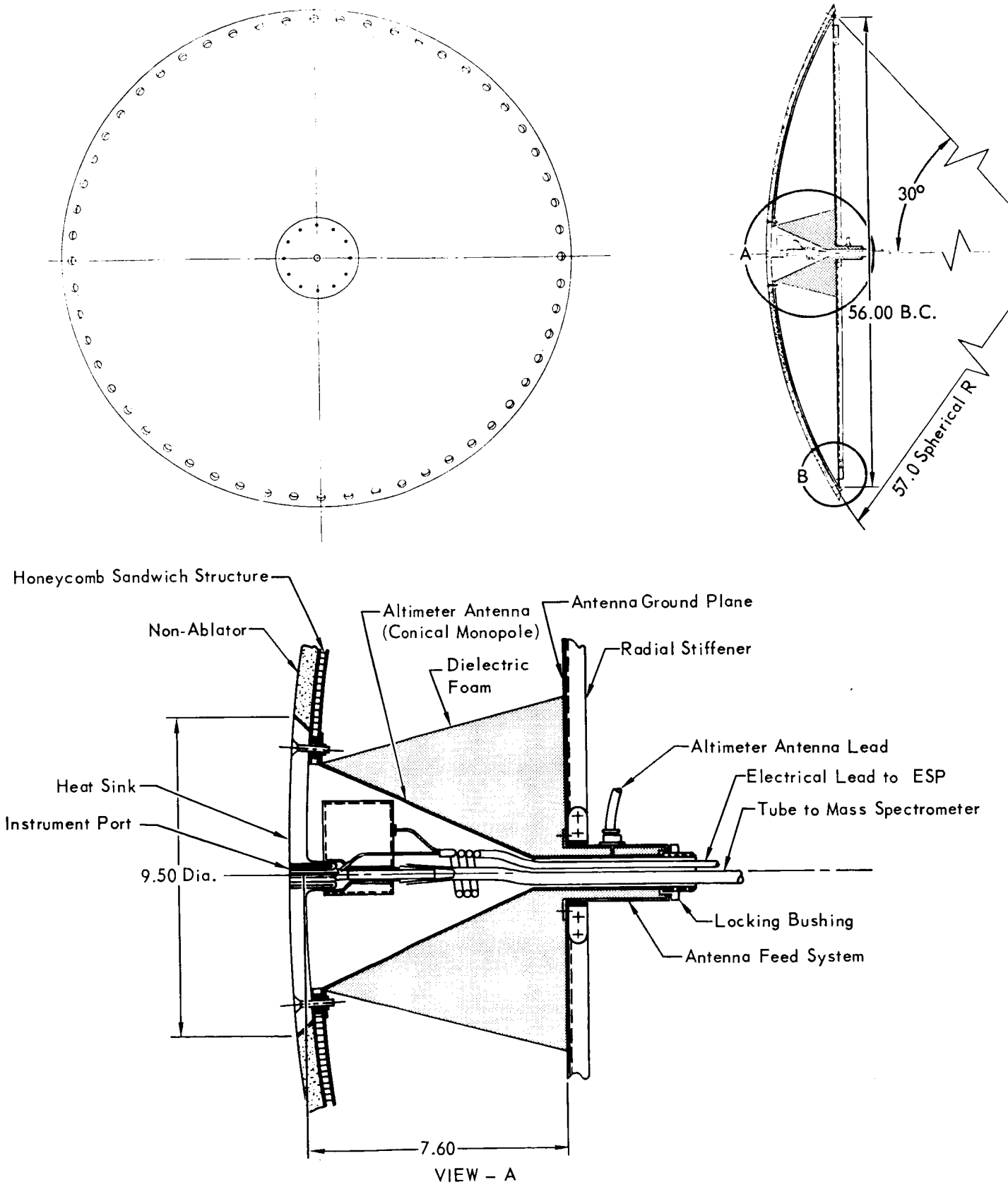

Figure 1.3.2–1

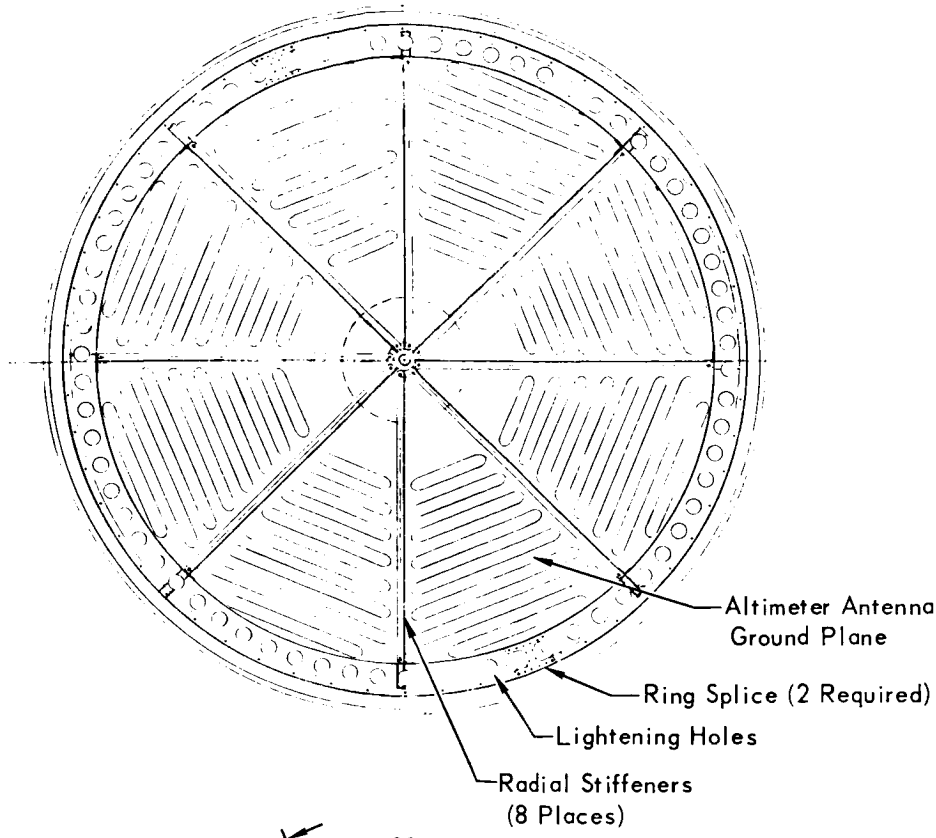
Altimeter Antenna
Ground Plane
Ring Splice (2 Required)
Lightening Holes
Radial Stiffeners
(8 Places)

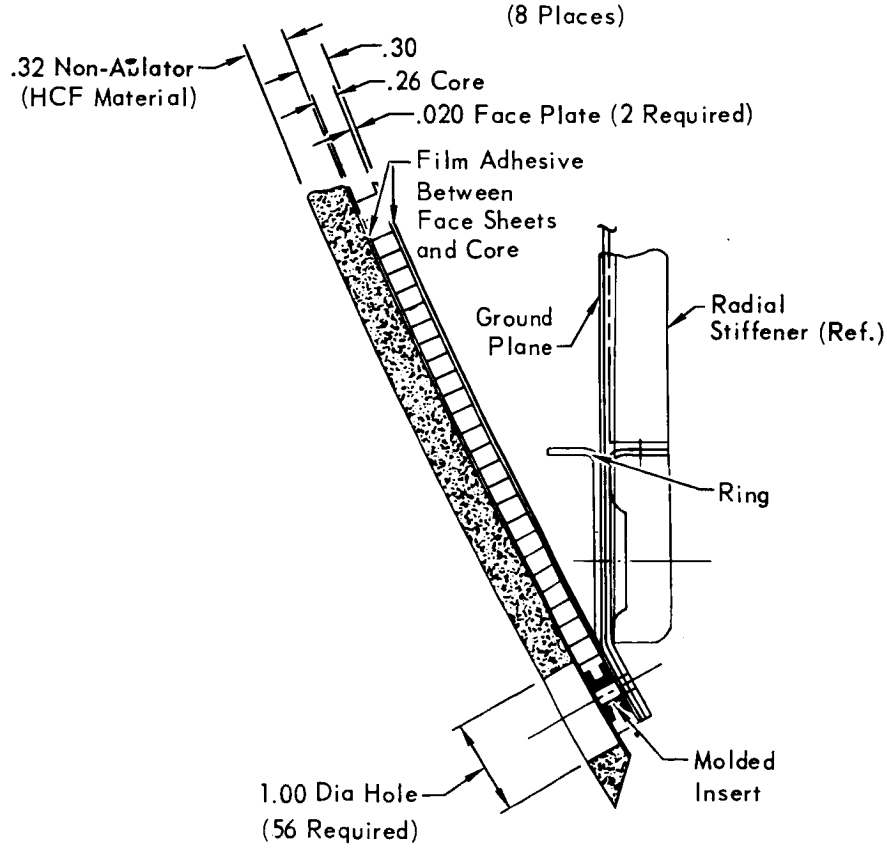
.32 Non-Ablator
(HCF Material)
.30
.26 Core
.020 Face Plate (2 Required)
Film Adhesive
Between
Face Sheets
and Core
Ground
Plane
Radial
Stiffener (Ref.)
Ring
Molded
Insert
1.00 Dia Hole
(56 Required)

VIEW – B

1-67-2

AEROSHELL HEAT SHIELD – ESM 1004X

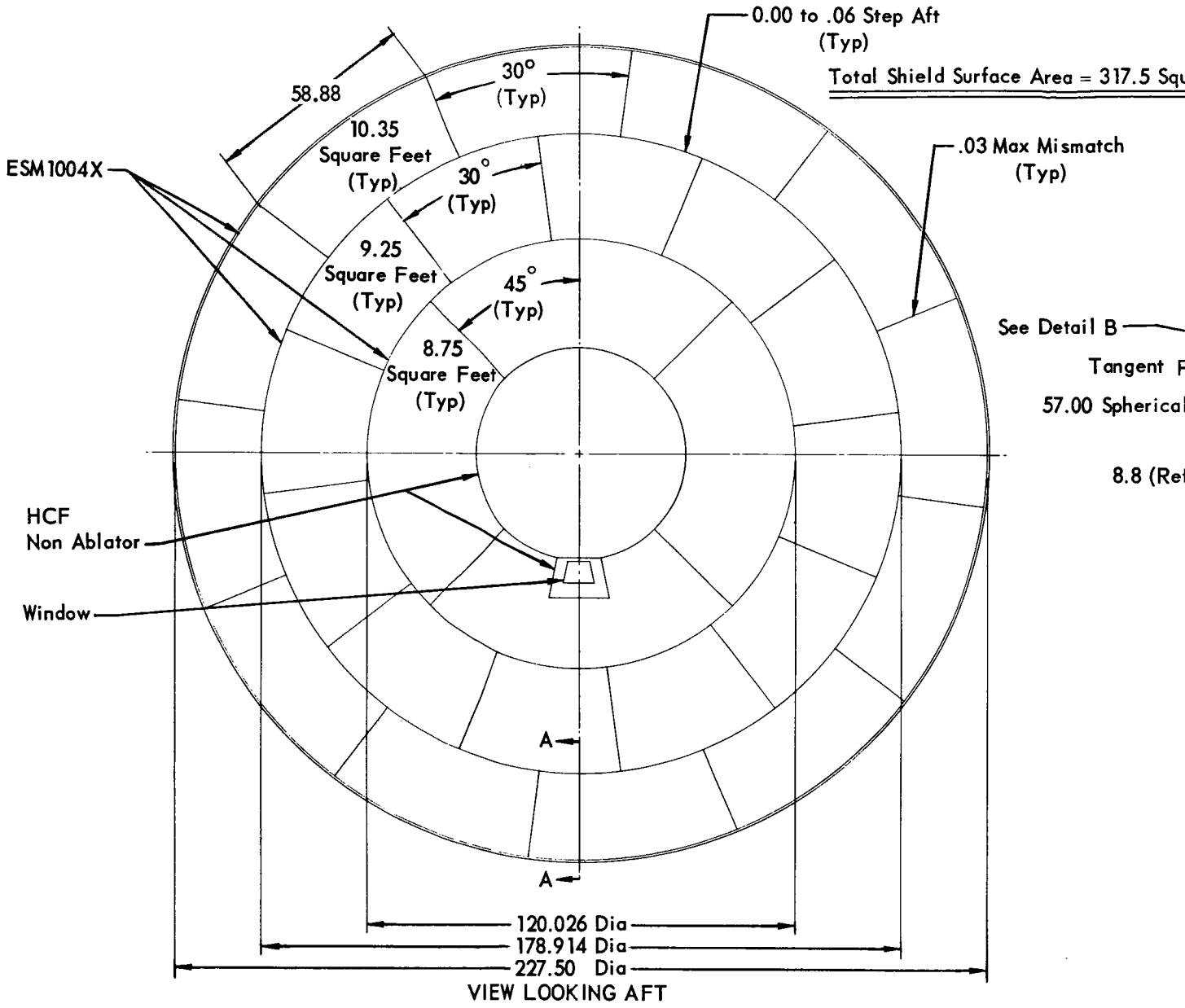

Figure 1.3.2-2

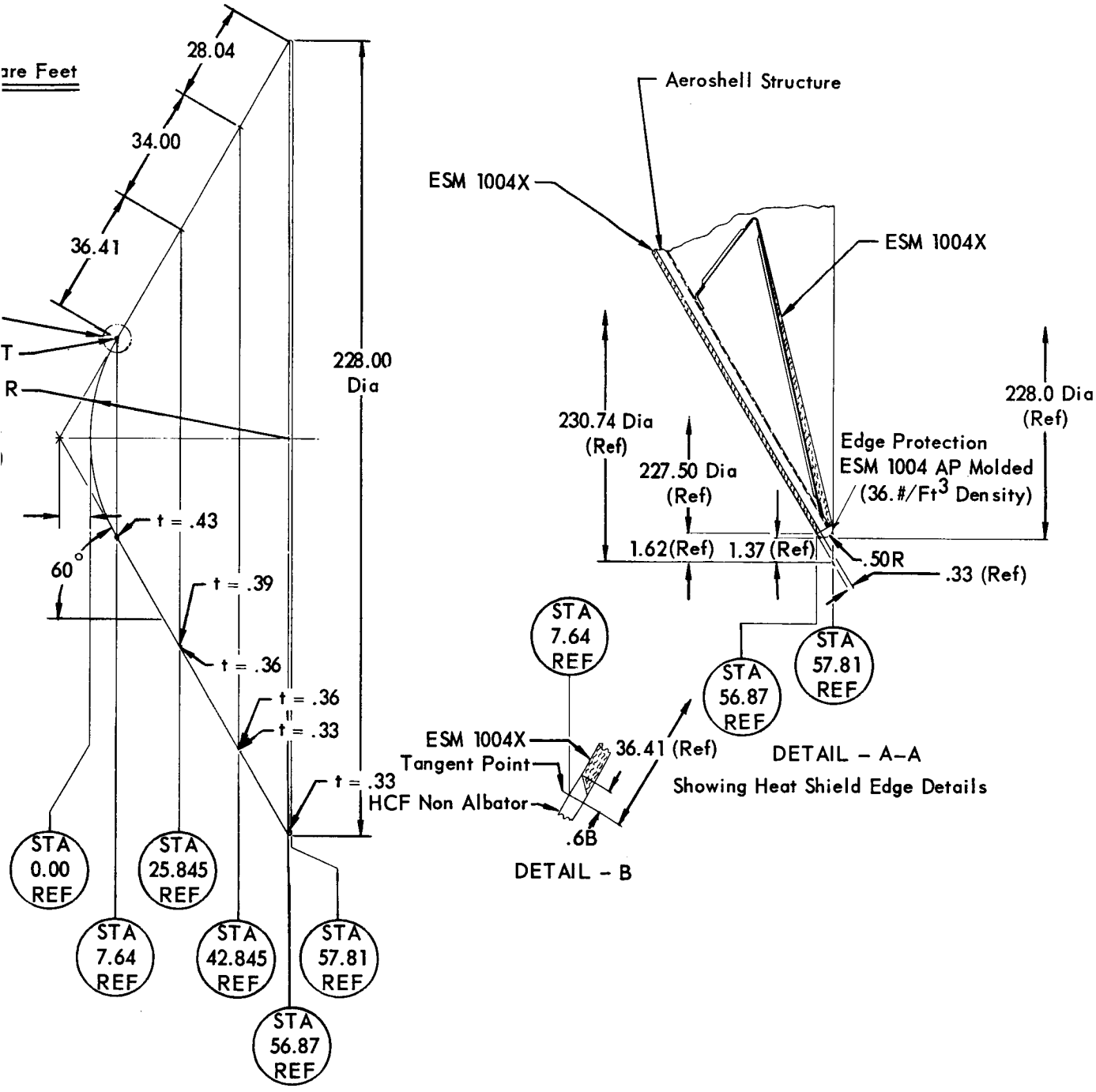
are Feet
28.04
34.00
36.41
T
R
228.00
Dia
t = .43
60°
t = .39
t = .36
t = .36
t = .33
t = .33
HCF Non Albator
STA
0.00
REF
STA
7.64
REF
STA
25.845
REF
STA
42.845
REF
STA
57.81
REF
STA
56.87
REF
Aeroshell Structure
ESM 1004X
ESM 1004X
230.74 Dia
(Ref)
227.50 Dia
(Ref)
228.0 Dia
(Ref)
Edge Protection
ESM 1004 AP Molded
(36.#/Ft3 Density)
1.62(Ref)
1.37 (Ref)
.50R
.33 (Ref)
STA
7.64
REF
STA
56.87
REF
STA
57.81
REF
ESM 1004X
Tangent Point
36.41 (Ref)
.6B
DETAIL - B
DETAIL - A-A
Showing Heat Shield Edge Details

1-65-2

CAPSULE BUS THERMAL CURTAIN ARRANGEMENT

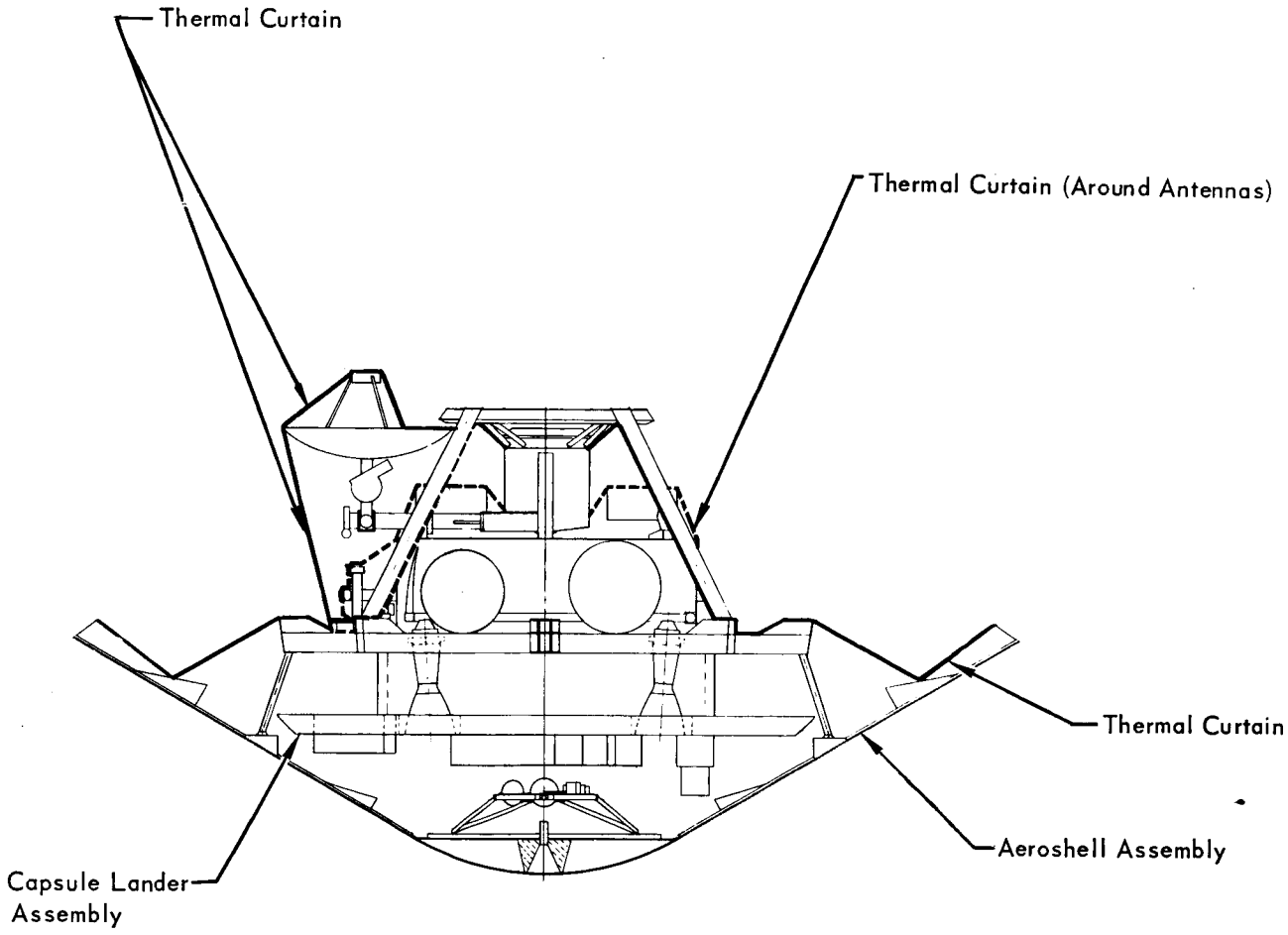

Figure 1.3.2–3

- Pressure Distribution: See Figure 1.3.2-4.
- Ballistic Coefficient: $M/C_DA = 0.266$ slugs/ft^2
- Entry Altitude: $h_e = 800{,}000$ feet (nominal)
- Entry Velocity: $13{,}000 \leqq V_e \geqq 15{,}000$ fps
- Entry Path Angles: Vacuum Graze $\leqq \gamma_e \geqq -20^\circ$ (from local horizontal)
- Initial Angle of Attack: $\alpha_e = 0^\circ \pm 20^\circ$.
- Initial Entry Temperature: $-150^\circ F \leqq T$ initial $\leqq +80^\circ F$.

Nominal Entry Conditions for 1973 Flight - The nominal entry conditions will be as follows:

Condition	V_e	γ_e	Atmosphere
Maximum Heating	13,000 FPS	-10.4° dfh	VM-3
Maximum Loads	15,000 FPS	-20.0° dfh	VM-8

Entry Loads - The maximum entry loads are 22.5 g longitudinal and 2.5 g lateral at an altitude of 65,690 feet, with a dynamic pressure of 142 psf.

Exposure - The space exposure will be as long as 240 days, with pressures less than 10^{-14} torr and a minimum heat shield temperature of $-150^\circ F$.

1.3.2.3 Physical Characteristics

Non Ablative Nose Cap - The nose cap is a spherical segment with a radius of 4.75 feet (57.0 inches) and a chord diameter of 4.75 feet (57.0 inches), Figure 1.3.2-1. The non-ablative material is a hardened compact fiber composite consisting of aluminosilicate fibers with a collodial silica binder. An instrument head imposes the use of a heat sink on the nominal stagnation point. The heat sink is a 9 1/4 inch diameter disc machined from beryllium. It is cemented into the fiber composite and potted to the sandwich structure with Stycast 1090 with Catalyst 11.

Ablative Heat Shield - the preferred ablative heat protection subsystem is the fiber reinforced, mechanically unsupported GE ESM 1004X, bonded to the Aeroshell structure with GE RTV 560 silicone adhesive, Figure 1.3.2-2. The density of the ESM is 16.6 pounds per cubic foot.

Thermal Curtain - The thermal curtain will be fiberglass cloth with a gold coating on the inside surface, Figure 1.3.2-3.

Weight - The total heat protection weight will be 234.4 pounds, including 20.0 pounds for the non-ablative nose; 184.4 pounds for the ESM 1004X, including bond and edge protection; and 30.0 pounds for the thermal curtain.

PRESSURE RATIO DISTRIBUTION AT HYPERSONIC VELOCITIES ON A 60° SPHERE CONE

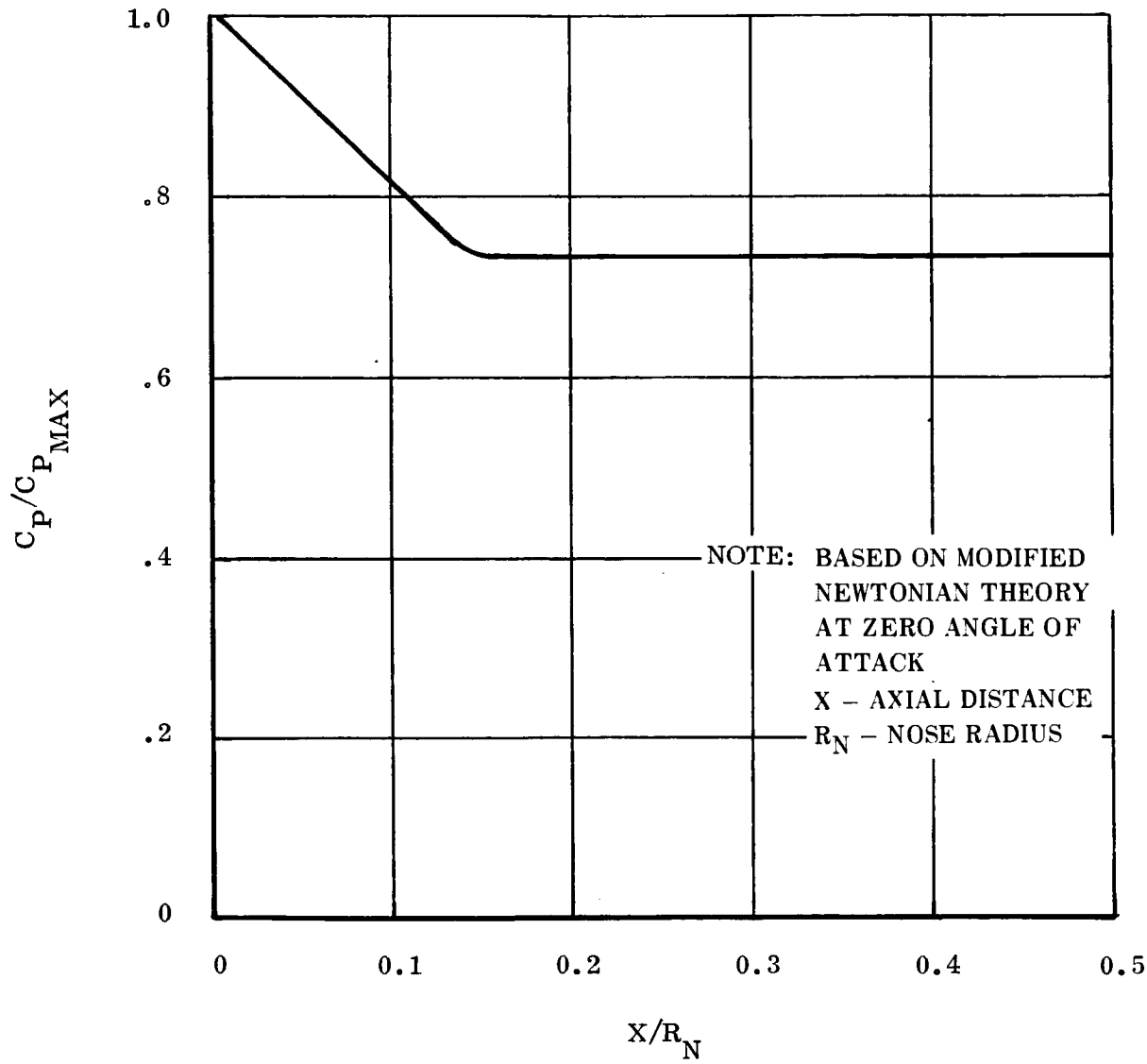

Figure 1.3.2–4

1.3.2.4 Operational Description - The heat shield and thermal curtain are passive devices, and as such, the Operational Description will be limited to a relation of function to mission sequence.

Following separation of the entry portion of the Flight Spacecraft and the de-orbit impulse, the heat shield functions as an aerodynamic decelerator and to provide thermal protection from the resulting net heat pulse. The thermal curtain protects the Capsule from base heating during de-orbit motor firing and wake heating during entry.

The Aeroshell, including heat shield, is jettisoned after parachute deployment, while a part of the thermal curtain remains over the Lander.

The thermal curtain is stripped away from the lander along with the parachute as the Lander continues descent by means of the terminal propulsion engines.

1.3.2.5 Performance Objectives - The heat shield will limit the backface temperature to 640°F. It shall also minimize interaction with the other Flight Capsule subsystem, due to out-gassing prior to entry and products of decomposition during entry. The thermal curtain will isolate the Aeroshell structure, Surface Laboratory, and Entry Science Package from the effects of base heating.

1.3.2.6 Interface Definition -

Non-Ablative Nose Cap - The non-ablative nose cap will be bonded to a phenolic fiberglas structure with HT435 supported film adhesive. The interface with the Aeroshell structure will be through the phenolic fiberglass nose structure. The nose cap must not outgas or have gaseous products of degradation during entry to compromise entry science measurements. It will have less than a 1.5 db one way RF transmission loss at 1100 MHz.

Ablative Heat Shield - The heat shield segments are bonded to single-faced corrugated 0.008-inch 6Al-4V titanium sheet structure (See Section 1.3.1). OSE will be so designed as not to impose shipping and handling loads in excess of those to be encountered in mission performance. The temperature limit will be 800°F maximum at the bond line to the structure. The allowable degree of surface waviness must be defined by analysis and test. The surface preparation must not degrade the titanium. No thermal control coating is required on the heat shield. Compatibility with windows and inclusions will be defined by the final design. The shield will minimize out-gassing interaction with experiments.

1.3.2.7 Reliability and Safety Considerations - The reliability and safety considerations in the design of the heat protection subsystem will be given major

attention. The design philosophy used on previous McDonnell Re-entry Vehicles is based on the maximum expected flight conditions plus a factor of safety. Positive verification by test to the factor or safety design limits, provide assurance that the reliability and safety risk is virtually eliminated.

Heat shield design criteria are identified in terms of the entry environmental conditions, a structural configuration, and structural design and maximum temperatures. The range of the entry environment was analyzed to determine the design environment. The effects of purturbations to the environment induced by parameters such as angle of attack, discontinuities in the shield surface, etc., were evaluated individually and included in the design environment when the statistical analysis of their influence dictated their inclusion.

Using the design environment and the structural configuration, the heat shield thickness was sized to limit the backface temperature to the design temperature. The ability of the system to operate at the maximum temperature, determined by applying a factor of safety to the design temperature, represents the thermal design margin. The bond system was selected to be compatible with the maximum temperature and bond strength requirements. Heat shield integrity for all environments, other than entry, will be verified by test; and the entry performance verified by extensive material ground testing to provide assurance that the design is consistent with the reliability and safety requirements.

1.3.2.8 Test Requirements - Pre-flight or in-flight monitoring and validation tests are not planned for the heat shield during operation. The heat shield material bond will be thoroughly inspected after Acceptance Flight heat sterilization at CBS contractor plant and prior to encapsulation for terminal heat sterilization to ensure that it has not cracked or separated, and is in compliance with quality control test standards. Quality control test samples are to be taken and performance of the ablative material lot verified.

1.3.2.9 Development Requirements - Investigation and testing of the materials relative to fabrication quality assurance and environmental capability are required for design of the overall heat shield. Measurements will be made both on preferred and on back-up materials. Also, selected measurements will be performed on additional materials which from our trade studies appear attractive as alternates for the VOYAGER application.

Fabrication Capabilities - Fabrication investigations and tests will resolve the problems associated with surface preparation, bond application, shield applications, repair techniques, and quality assurance provisions.

Environmental Capabilities - Tests will show heat shield material and bond capabilities for the extremes of the VOYAGER mission environments. Thermodynamic, mechanical, and ablation characteristics shall be measured to form the data base for designing the heat shield. The ETO, heat sterilization, and vacuum exposure effects will be identified and capabilities measured.

1.4 LANDER

1.4.1 Equipment Identification and Usage - The Lander constitutes the portion of the overall VOYAGER that is deposited upon the surface of Mars by means of controlled descent. It consists of a structural base platform to which are mounted the Surface Laboratory, a terminal descent propulsion system, landing radar antenna and supporting electronics, certain Entry Science Package equipment components, and an impact attenuation system.

1.4.1.1 Structural Base Platform - This is the basic platform structure to which are mounted the Surface Laboratory, the landed portion of the Entry Science Package, the terminal descent propulsion subsystem, and other Capsule Bus support subsystems required to control descent and landing. In addition, the impact attenuation subsystem is attached to the under side of the base platform. The Lander configuration is shown in Figure 1.4-1.

1.4.1.2 Impact Attenuation System - The impact attenuation system is designed to absorb the landing impact energy while not allowing the Surface Laboratory to tumble or to feel inertial loads in excess of 14g. This is done by providing a low c.g. and a wide footprint; the energy is absorbed by an aluminum Trussgrid crushable cylinder sandwiched between the large flat circular footpad and the base platform structure. This is a completely passive system stowed in the landing condition. There are eight tension cable pulley assemblies connecting the base platform and the impact footpad. Their function is to insure that the aluminum Trussgrid attenuator feels only compression and shear forces, no tension.

1.4.2 Design Requirements and Constraints - The Uni-Disc Lander was configured to meet the following constraints.

a. Fit inside the 19-foot diameter Aeroshell.
b. Fit sufficiently forward in the Aeroshell to maintain a stable aerodynamic c.g. of the Entry Vehicle.
c. Provide good structural ties and load distributions between the Aeroshell, the Lander and the adapter structure.
d. Allow clean Lander separation from Aeroshell.
e. Provide a configuration that has great versatility and growth capabilities through 1979 if possible, including full roving capabilities.

LANDER GENERAL ARRANGEMENT

VIEW A

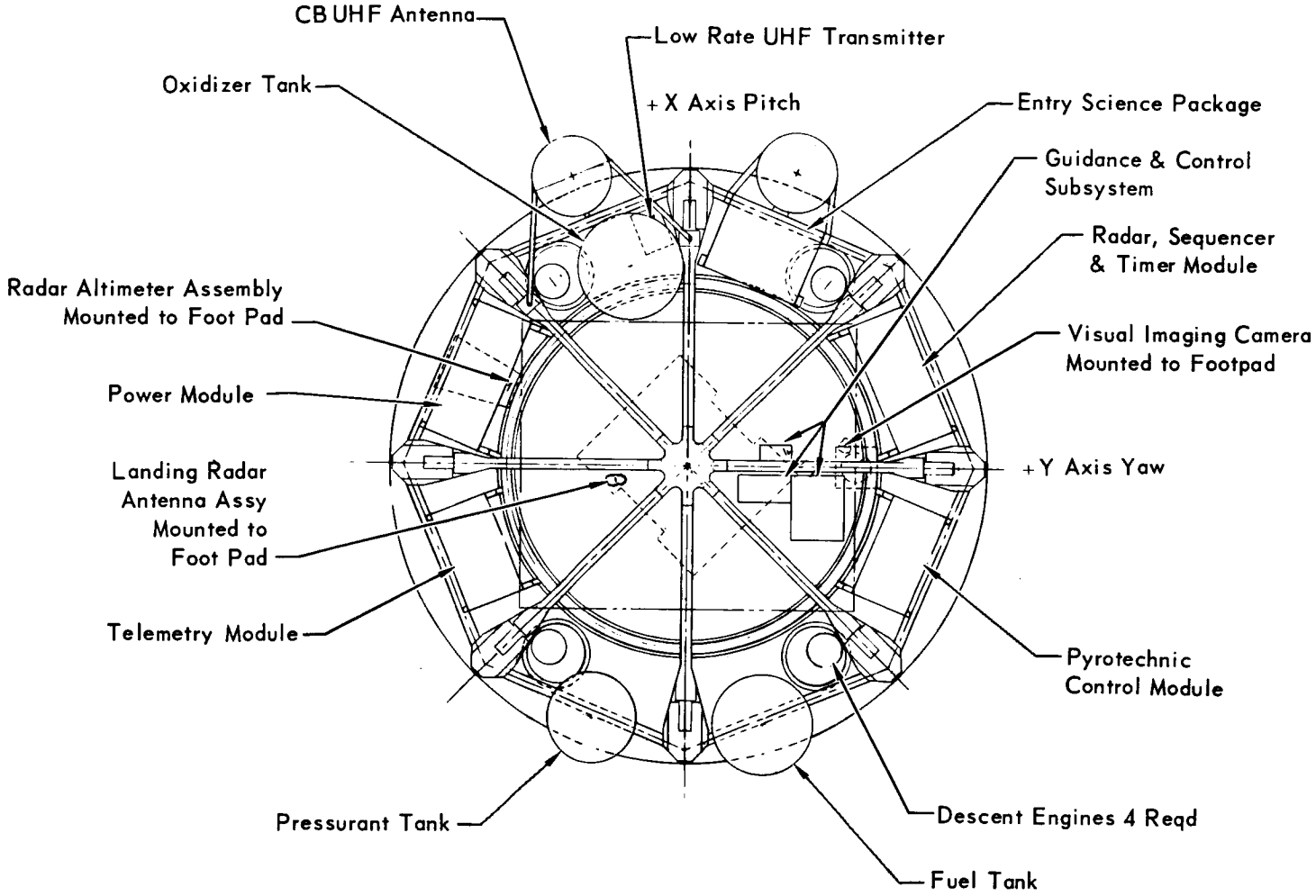

Figure 1.4-1

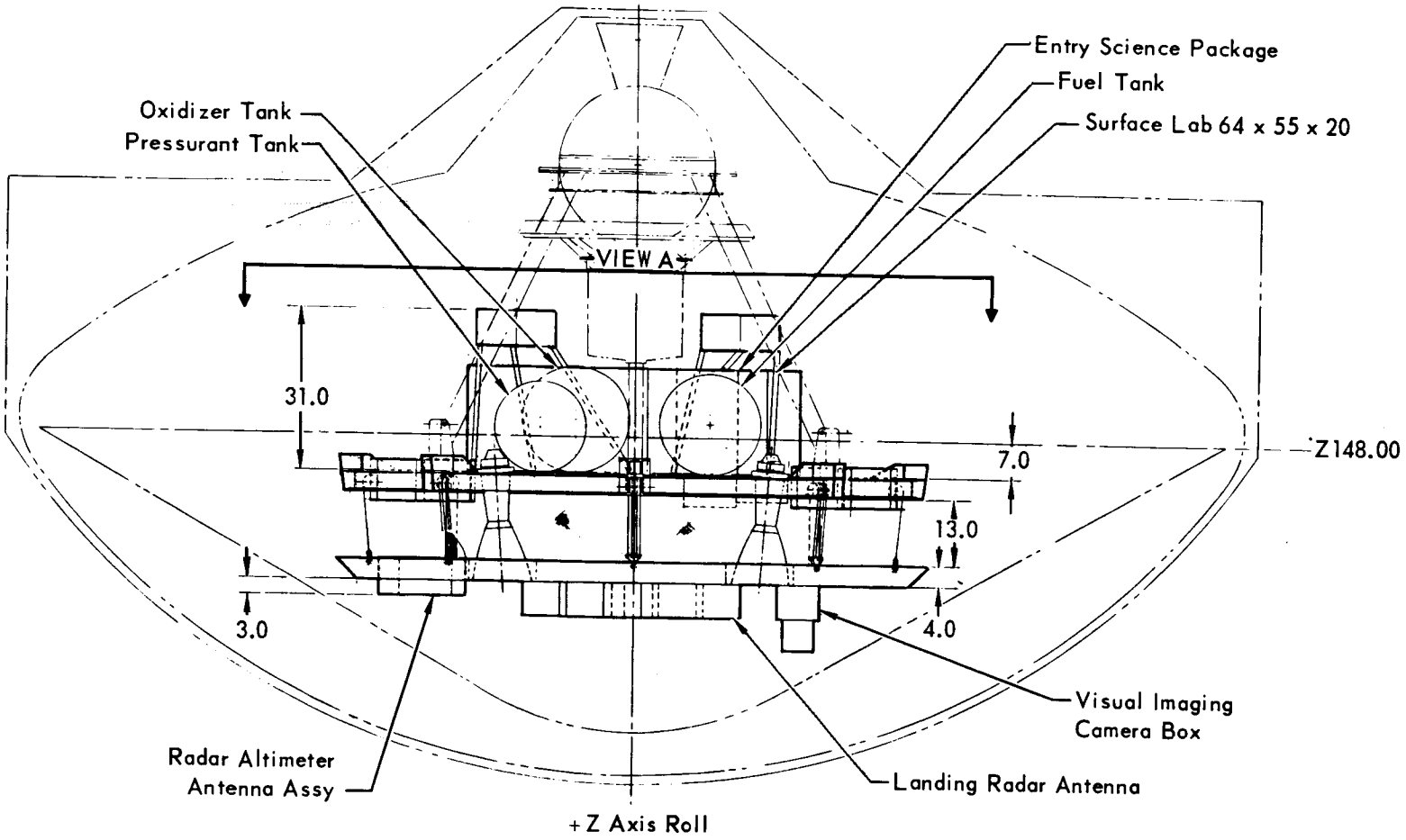

CAPSULE LANDER

LANDER GENERAL ARRANGEMENT (Continued)

VIEW B
GENERAL ARRANGEMENT
OF BASE PLATFORM

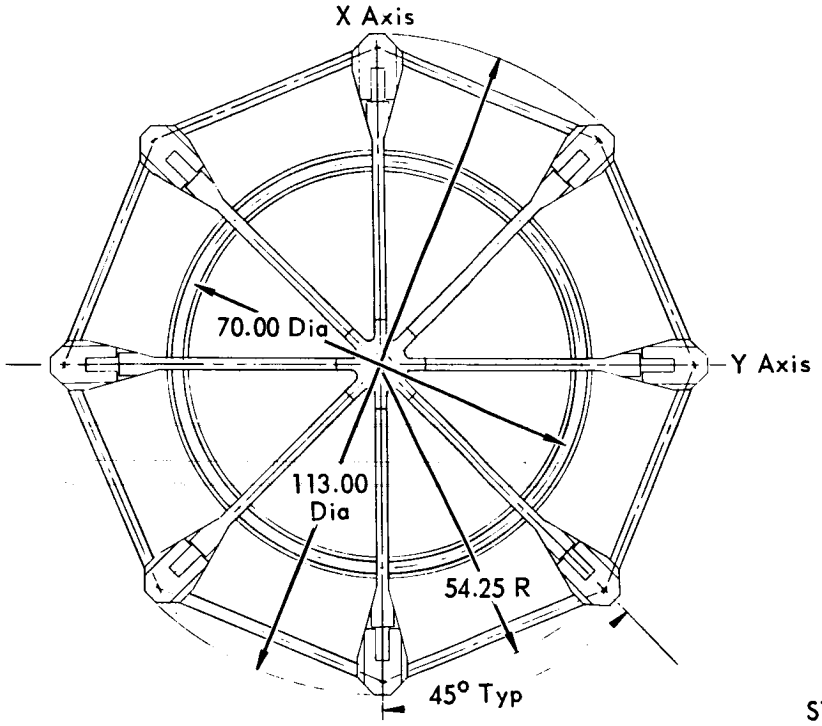

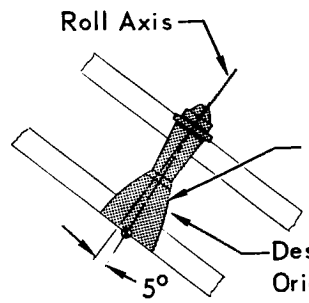

STABILIZING LEG GEOMETRY

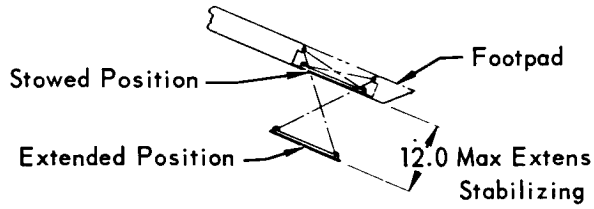

VIEW C
FOOT PAD GENERAL ARRANGEMENT

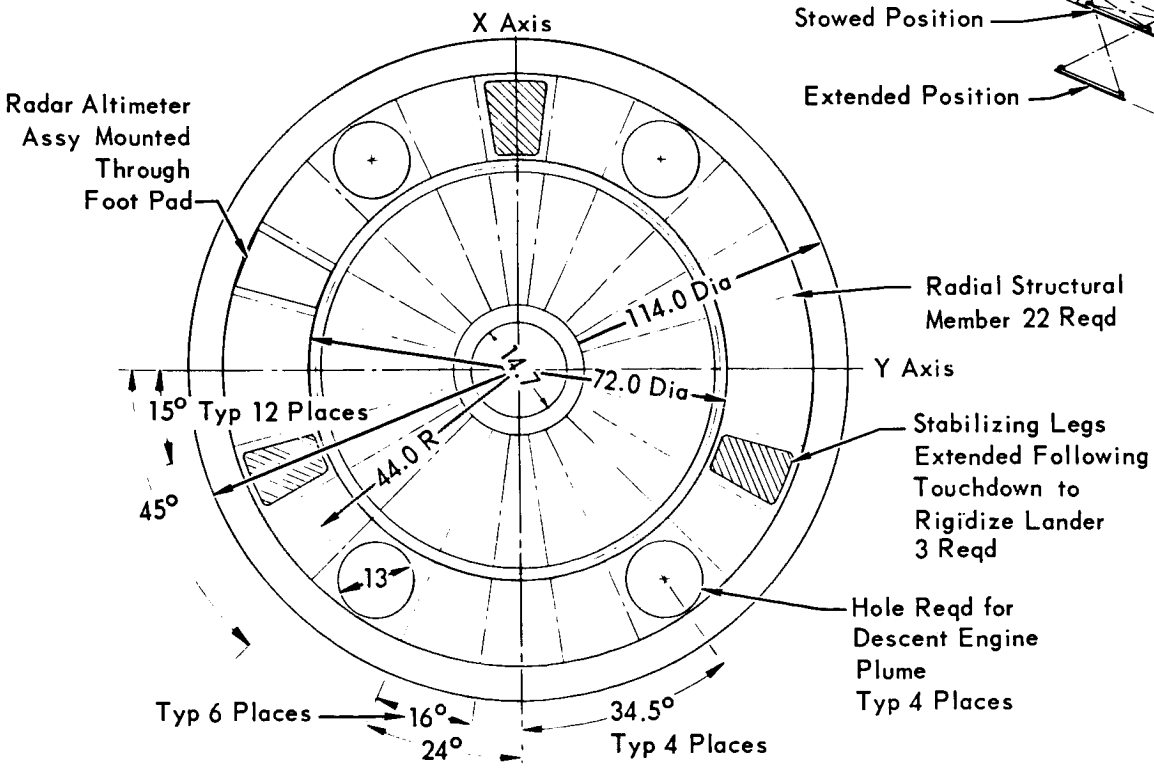

Solid Height
of Trussgrid

Max Stroke 10.4

Figure 1.4–1 (Continued)

VIEW D

PROPULSION SUBSYSTEM GENERAL ARRANGEMENT

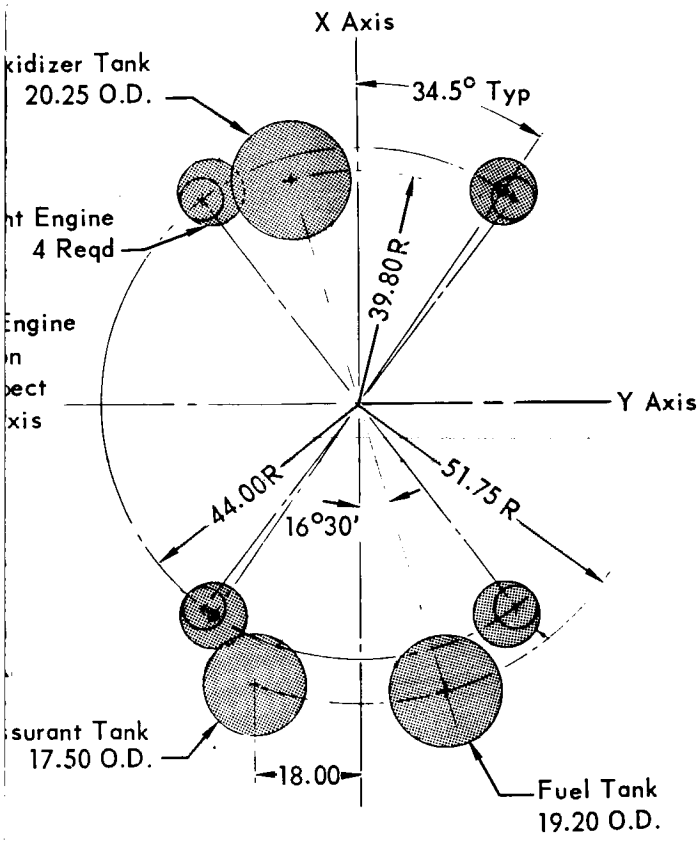

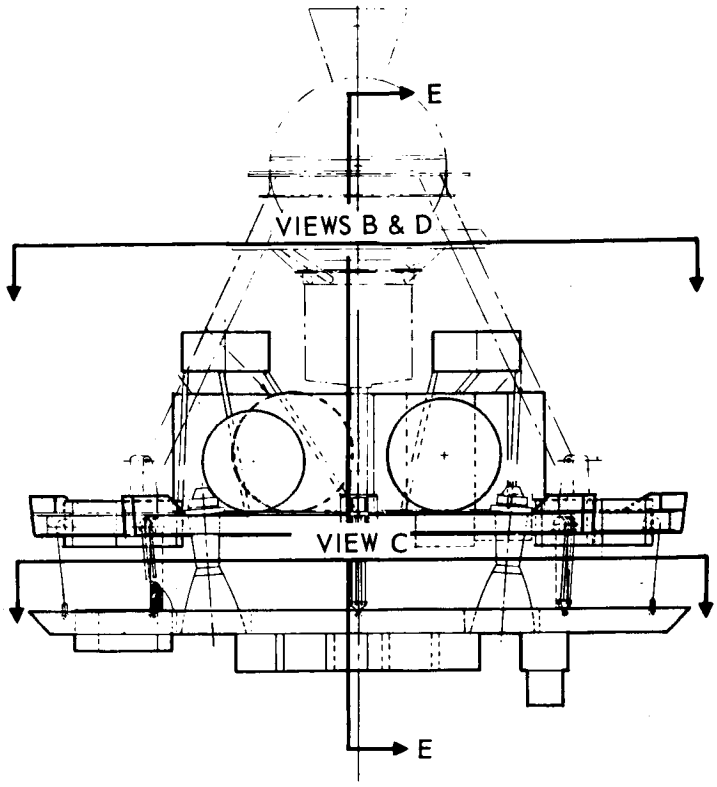

LANDER CAPSULE

VIEW E

LANDER IMPACT MECHANISM

GENERAL ARRANGEMENT

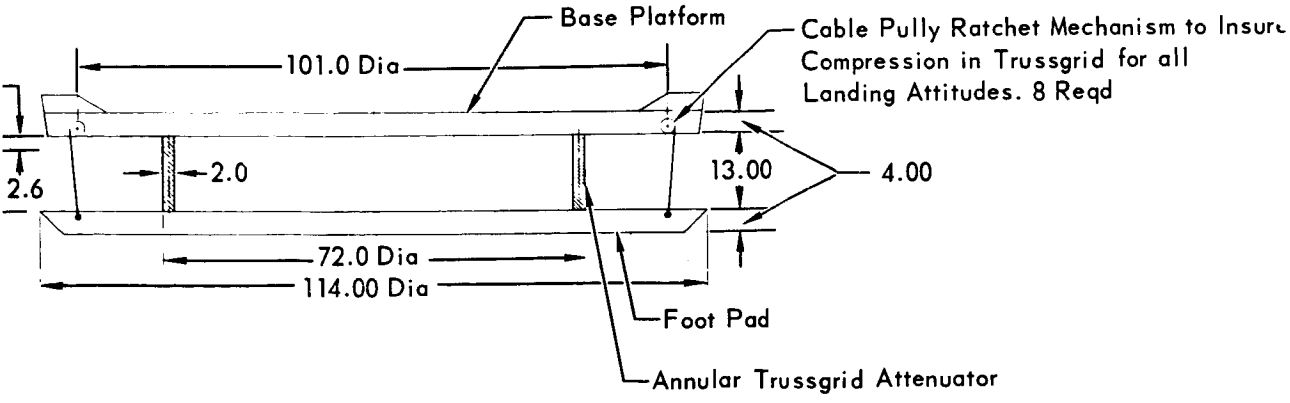

LANDER GENERAL ARRANGEMENT (Continued)

RAD

VIEW F

TELEMETRY SUBSYSTEM GENERAL ARRANGEMENT

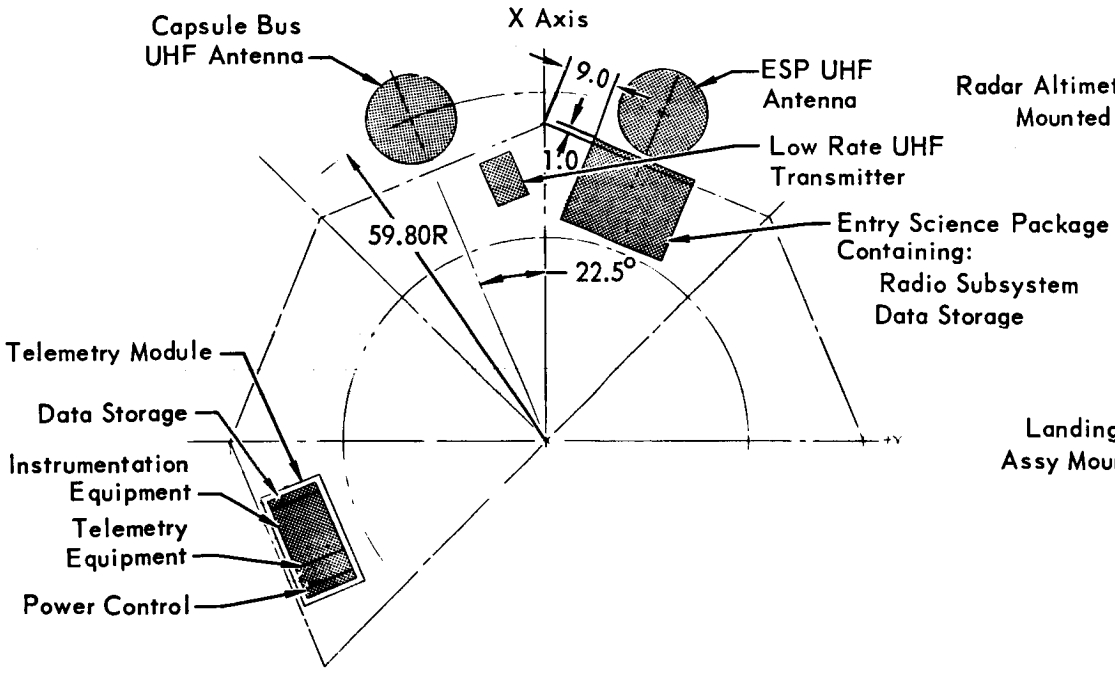

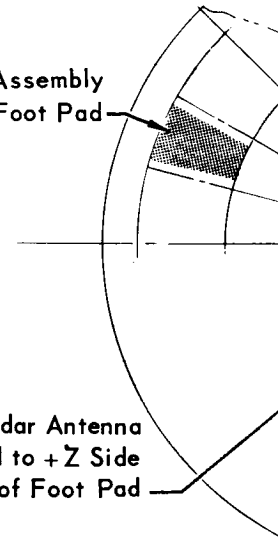

VIEW G

POWER & PYROTECHNIC CONTROL
GENERAL ARRANGEMENT

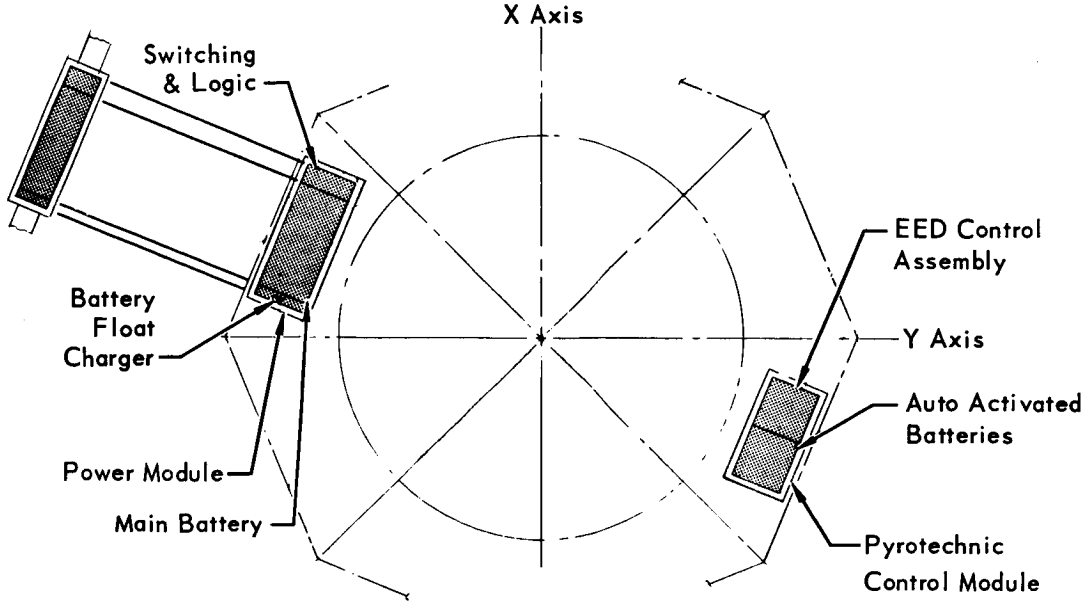

GUIDAN

G

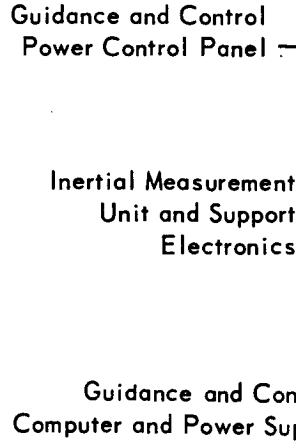

Figure 3.2.1.4–1 (Continued)

VIEW H
R GENERAL ARRANGEMENT

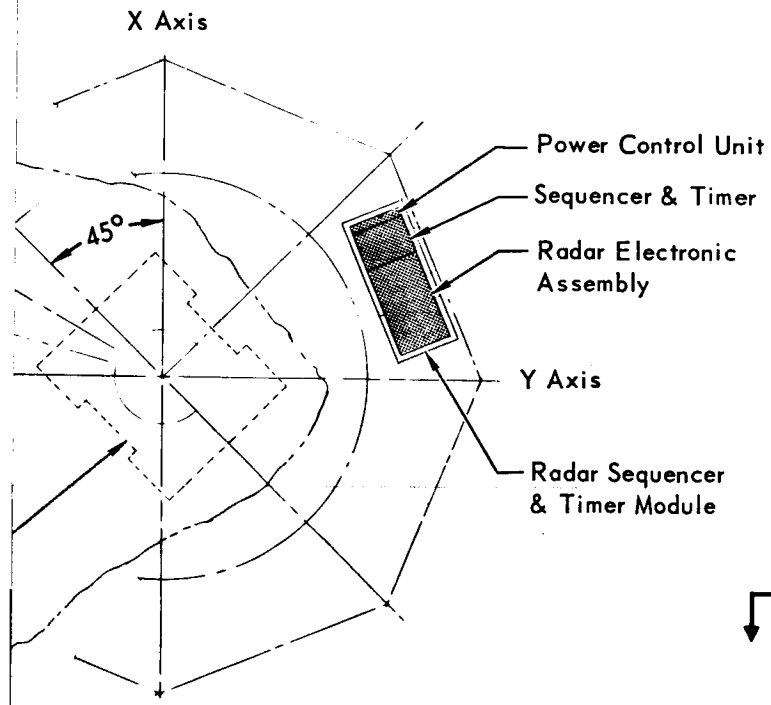

VIEW I
CE AND CONTROL SUBSYSTEM
ENERAL ARRANGEMENT

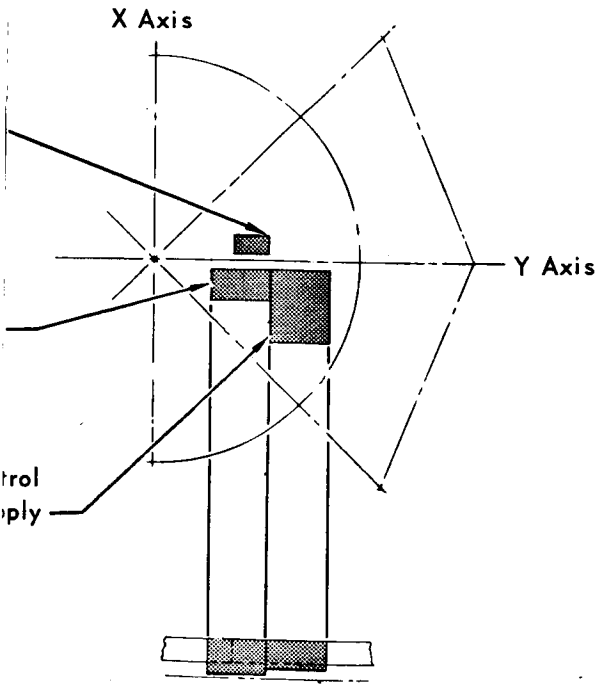

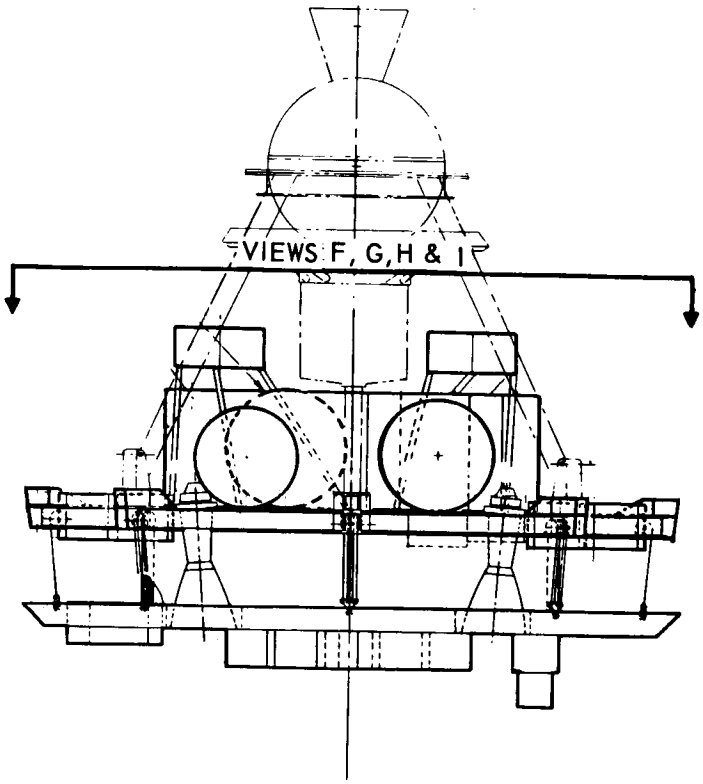

CAPSULE LANDER

f. Standardize as many systems as is practical.

g. Provide platform stability after landing.

h. Ample radiating surfaces for thermal control of Surface Laboratory equipment.

i. An unobstructed landing radar antenna preferably at bottom center.

j. A descent propulsion engines installation with ample moment arms, located so as not to impinge on other parts of the Lander.

k. Locate all equipments so as to obtain the lowest overall c.g. of the Lander, to improve stability on landing.

l. Simple passive design which is easily sterilized and can function after long time exposure to a hard vacuum.

m. Use only present state-of-the-art materials and techniques to minimize development risk and cost.

n. Provide stability, strength and ample footprint to make successful landings on the following surfaces:

Slopes to 34° to horizontal

Ridges and valleys with slopes to 34° to horizontal

Cones with slopes to 34° to horizontal

Surface bearing capabilities of 6 psi to ∞

Rocks of 5 inches diameter or smaller

Vertical and horizontal velocities of 20 ft/sec and 5 ft/sec or 16 ft/sec and 10 ft/sec respectively.

1.4.3 Physical Characteristics - The Uni-Disc Lander is a large flat circular disc shape having a very low silouette which results in a low c.g. and consequent stability (see Figure 1.4-1). The landing footpad is 114.0 inches in diameter. This pad is 4.0 inches thick with a turned-up outer lip to facilitate sliding over small obstacles. The footpad is made up of titanium radial beams and rings with a titanium lower skin. Sufficient structural rigidity is required in this pad to distribute impact loads uniformly to the crushable attenuator when landing on one edge or on peaks or ridges. The terminal descent engine nozzles thrust downward through four 13.0 inch diameter holes in the footpad. These holes are between the radial beams of the pad at a radius of 44.0 inches.

The base platform is made up of eight titanium I-beams, 4 inches deep, with 2.5 inch caps, equally spaced in a radial spoke arrangement as shown in Figure 1.4-2. Maximum platform diameter is 113 inches.

STRUCTURE ASSEMBLY CAPSULE BUS LANDER

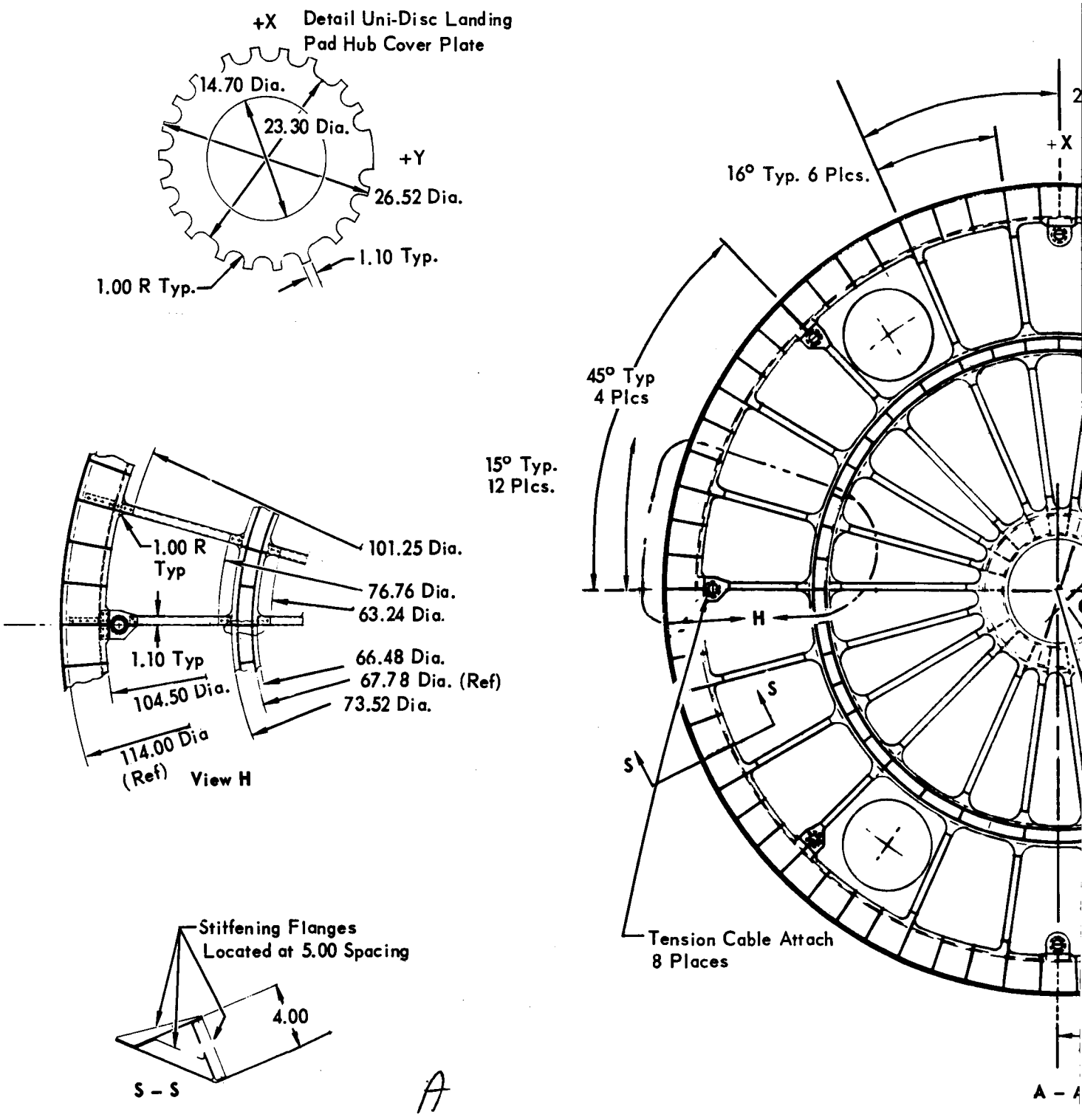

Figure 1.4–2

1–80 –1

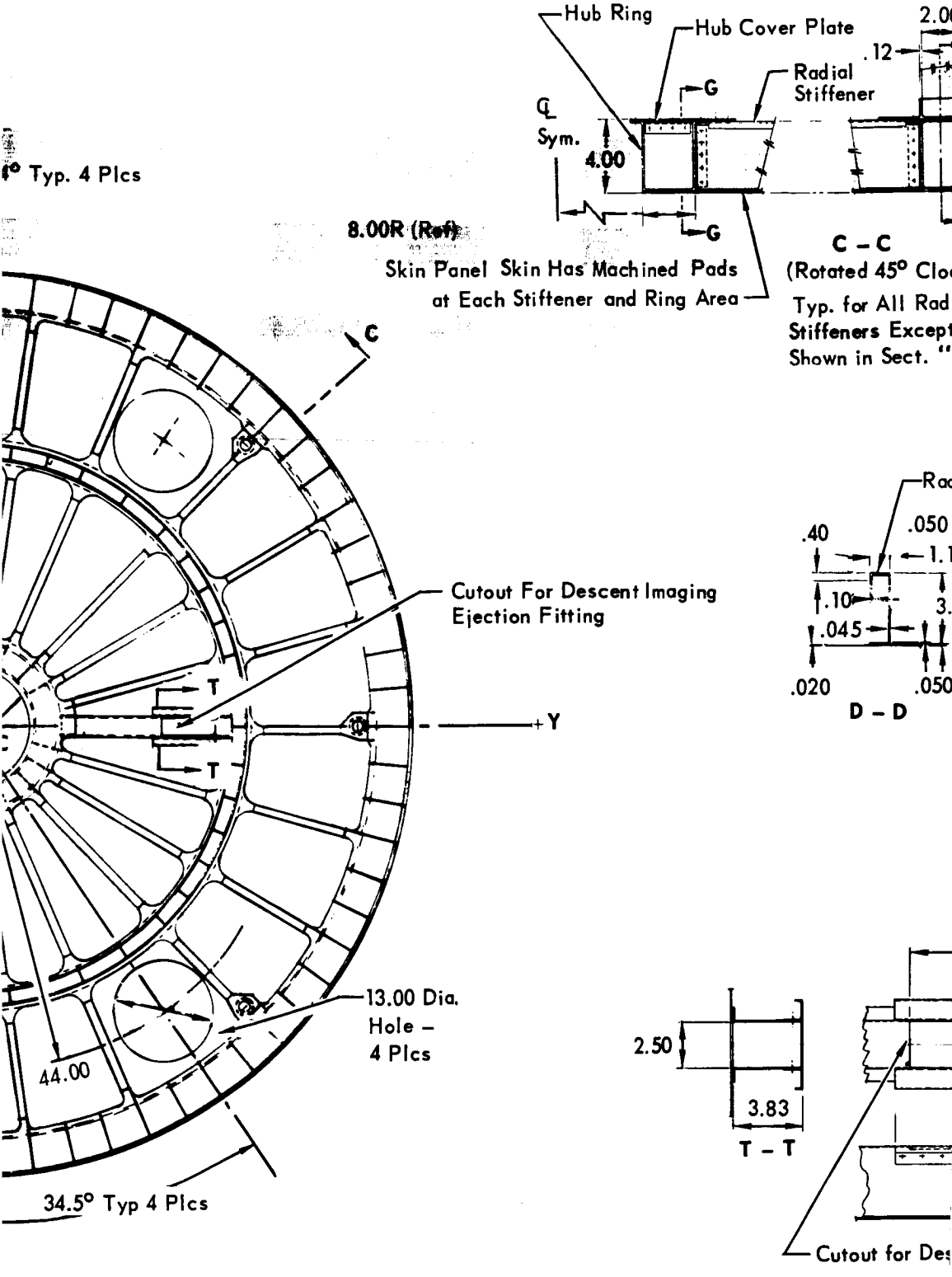

Hub Ring
Hub Cover Plate
Radial Stiffener
G
℄ Sym.
4.00
G
2.0
.12
C – C
(Rotated 45° Clo
Typ. for All Rad
Stiffeners Except
Shown in Sect. "
4° Typ. 4 Plcs
8.00R (Ref)
Skin Panel Skin Has Machined Pads at Each Stiffener and Ring Area
C
Cutout For Descent Imaging Ejection Fitting
T
T
Y
13.00 Dia. Hole – 4 Plcs
44.00
34.5° Typ 4 Plcs
Rad
.40
.050
1.1
.10
3.
.045
.020
.050
D – D
2.50
3.83
T – T
Cutout for Des

1-80-2

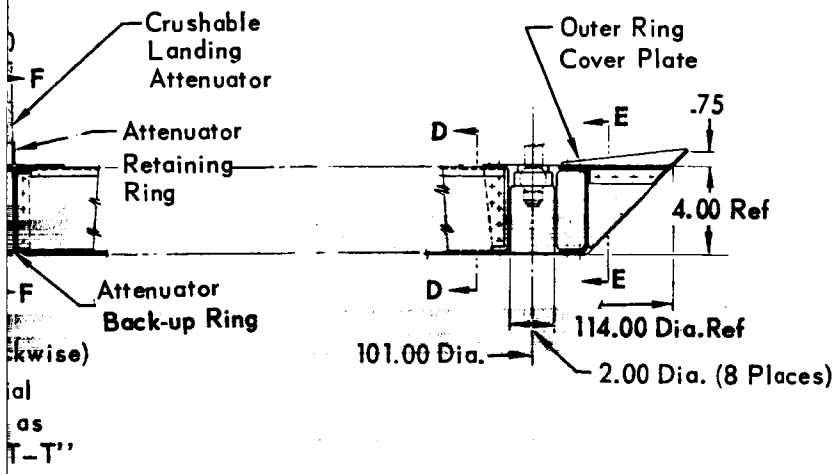

ial Stiffener

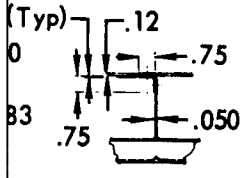

E - E

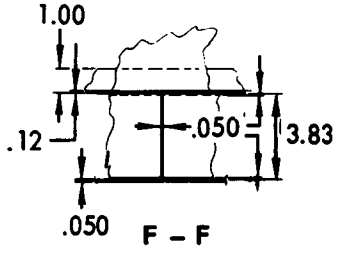

F - F

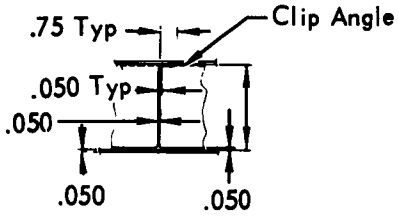

G - G

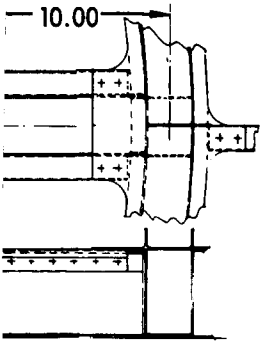

cent Imager Ejector

B

1-80-3

STRUCTURE ASSEMBLY CAPSULE BUS LANDER (Continued)

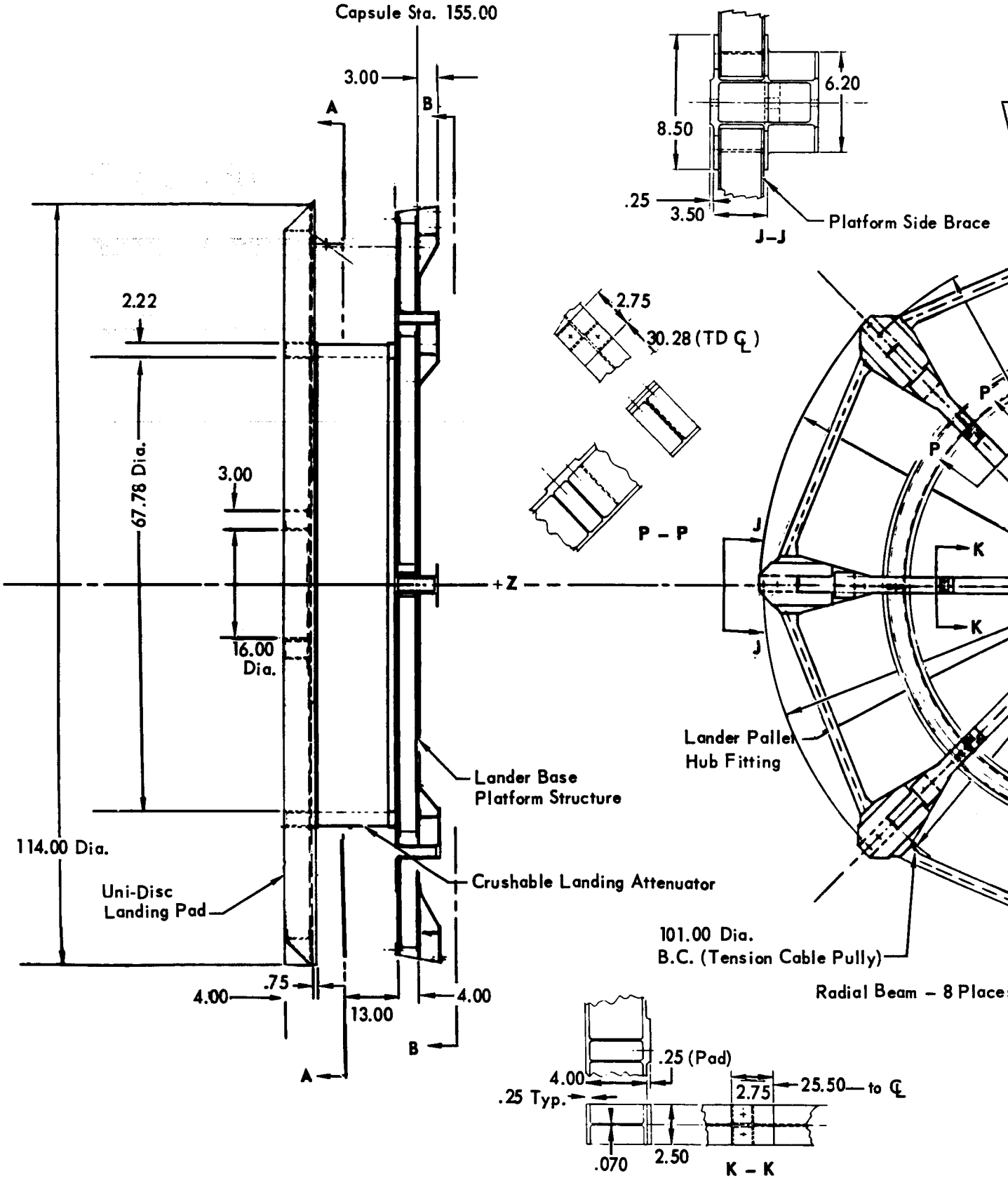

A

Figure 1.4–2 (Contin

1–81 -1

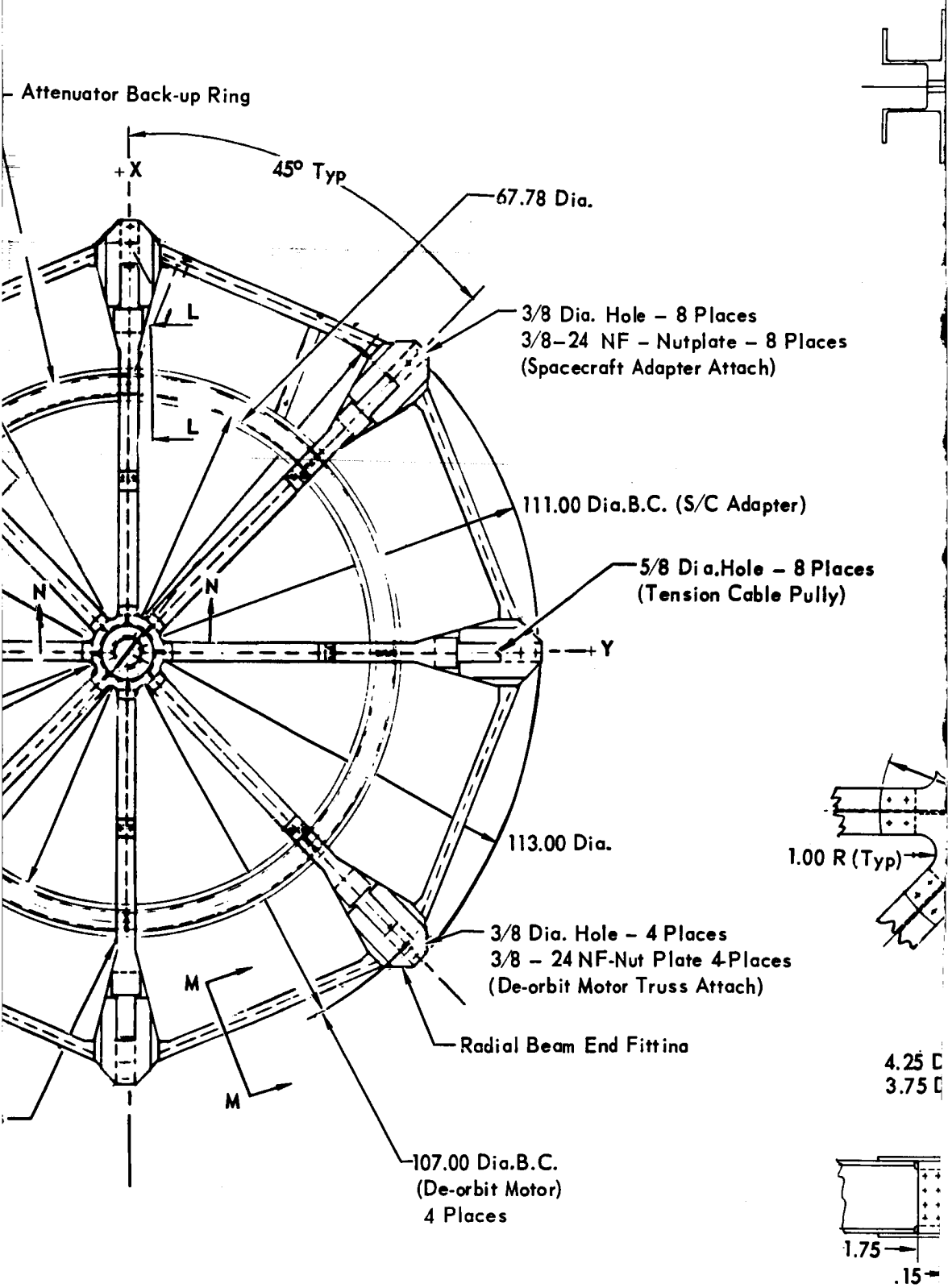
Attenuator Back-up Ring
+X
45° Typ
67.78 Dia.
3/8 Dia. Hole – 8 Places
3/8–24 NF – Nutplate – 8 Places
(Spacecraft Adapter Attach)
L
L
111.00 Dia.B.C. (S/C Adapter)
5/8 Dia.Hole – 8 Places
(Tension Cable Pully)
N
N
+Y
113.00 Dia.
1.00 R (Typ)
3/8 Dia. Hole – 4 Places
3/8 – 24 NF-Nut Plate 4-Places
(De-orbit Motor Truss Attach)
M
M
Radial Beam End Fitting
4.25 D
3.75 D
107.00 Dia.B.C.
(De-orbit Motor)
4 Places
1.75
.15

ed)

1-81-2

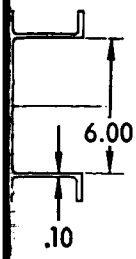

R – R

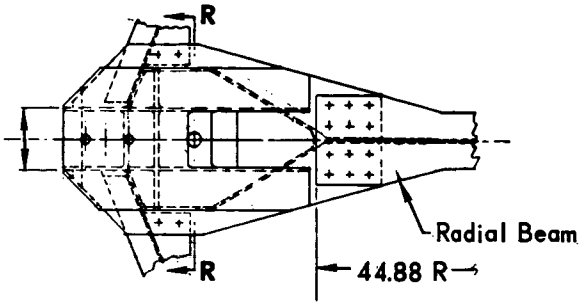

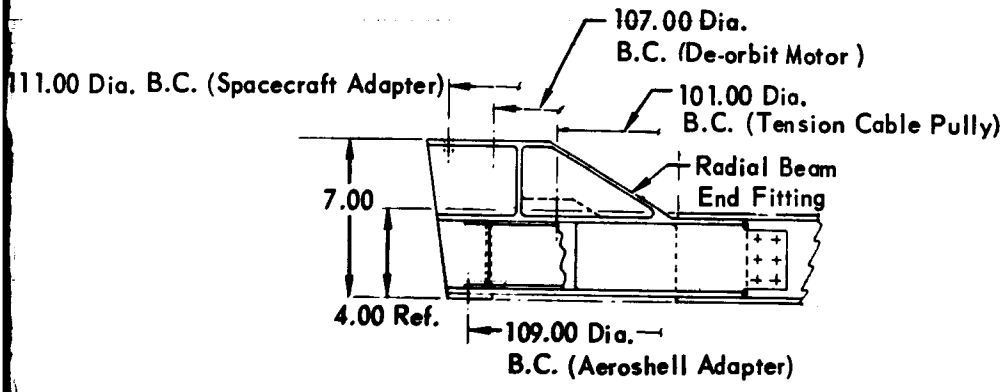

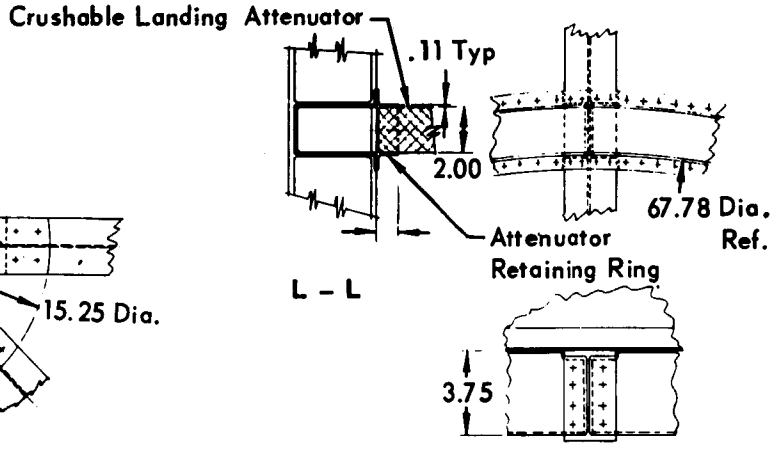

L – L

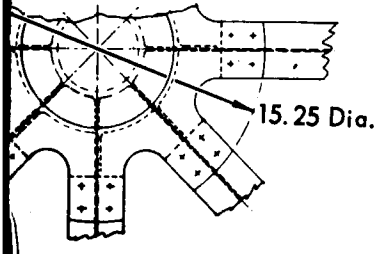

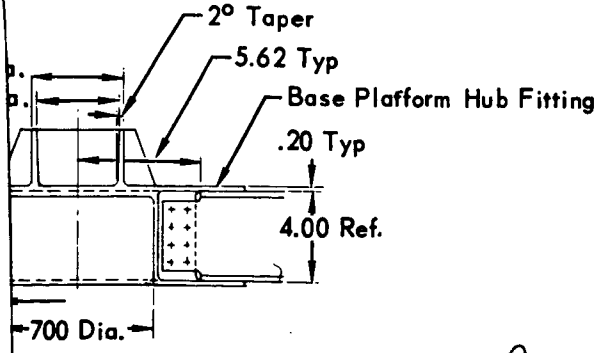

N – N

B

1-81-3

The impact attenuator is installed between the landing footpad and the base platform. It is a crushable aluminum (Trussgrid by American Cyanamid Co. or Cross-Core by Hexcel Products) cylinder 13 inches high, 72 inches outside diameter and 2.1 inches wall thickness. This Trussgrid is bonded and mechanically keyed to both the footpad and the base platform through structural channel rings to insure the transfer of landing loads. The Trussgrid used is:

.003 Thick Foil
5052 – H339 Aluminum
3/16 Inch Cell Size
3.3 lb/ft^3 Density
75 psi Crush Strength

Eight tension cable pulley assemblies are mounted one each to the ends of the eight radial I-beams of the base platform outboard of the Trussgrid attenuator. These cables tie the footpad to the base platform and serve as pivot points for the rigid footpad when it lands on the opposite edge. By forcing the footpad to rotate about this point the entire crushable attenuator is put into compression, eliminating tension loads across the bond between attenuator and adjoining structure. As the Trussgrid crushes, the spring loaded cable pulleys take up the cable slack; one-way ratchets prevent cable lengthening. This insures a repeat attenuation capability should the Lander bounce and land on the opposite edge.

In addition, this continuous snugged-up condition of the structure and the Trussgrid insures attenuation of the horizontal velocity loads through the Trussgrid. (These horizontal loads may also be dissipated in part through friction between the footpad and the Mars surface when sliding occurs.)

The combined de-orbit motor and parachute support structure is attached to the top of the base platform straddling the Surface Laboratory as shown in Figure 1.4-3.

The support structure consists of four 3.5 inch diameter aluminum tubes 67 inches long that attach at the upper end to a 39 inch diameter machined ring. This ring supports the de-orbit motor, which is attached by three bolts to facilitate thrust alignment. The base attach points of the four primary support tubes have a spread of 76 inches. Each attach point consists of one explosive bolt and one shear pin.

Ten inches below the de-orbit motor attach ring is another structural ring. The parachute canister mounts on the Lander centerline and attaches to the lower ring by eight one inch diameter tubes. These tubes react the side and up loads

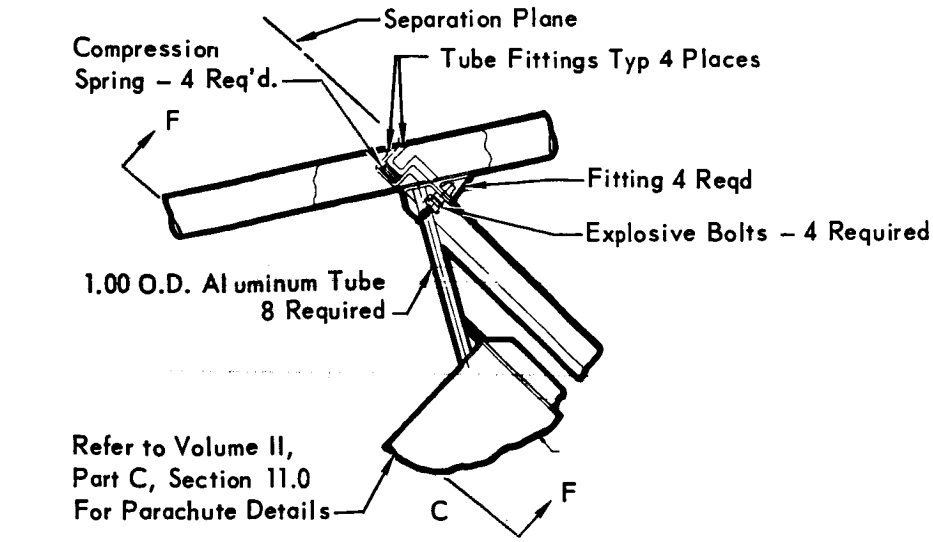

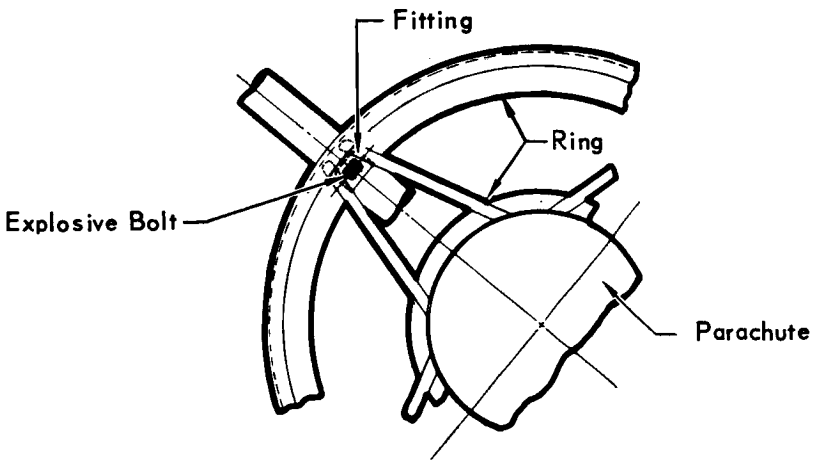

F – F

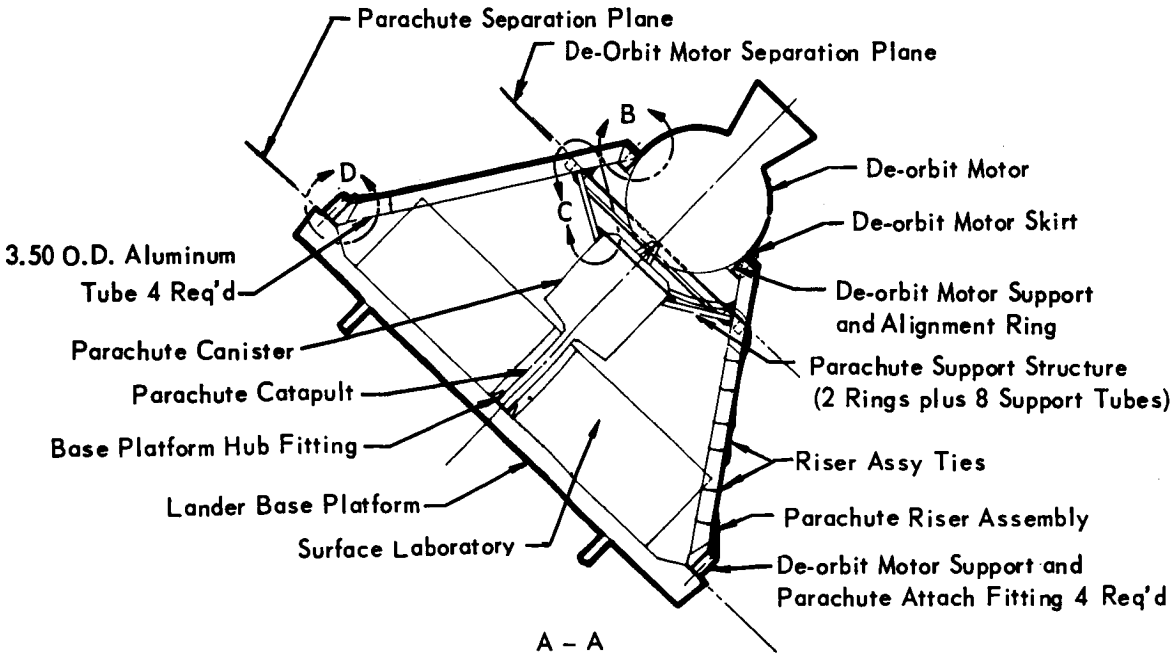

A – A

PARACHUTE AND DE-ORBIT

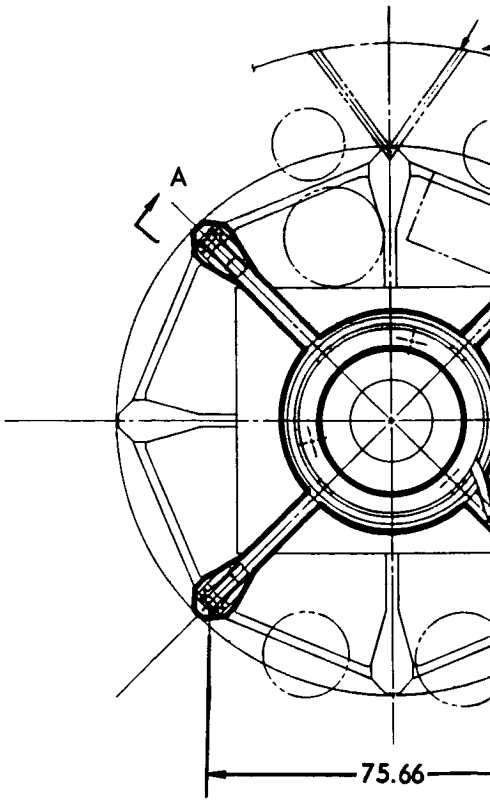

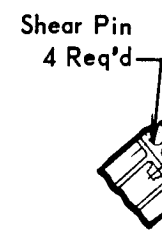

E–

Figure 1.4–3

1–83–1

MOTOR INSTALLATION

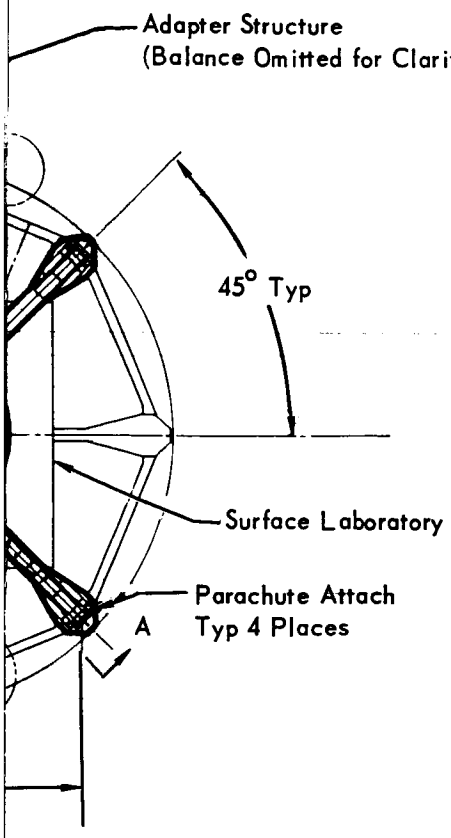

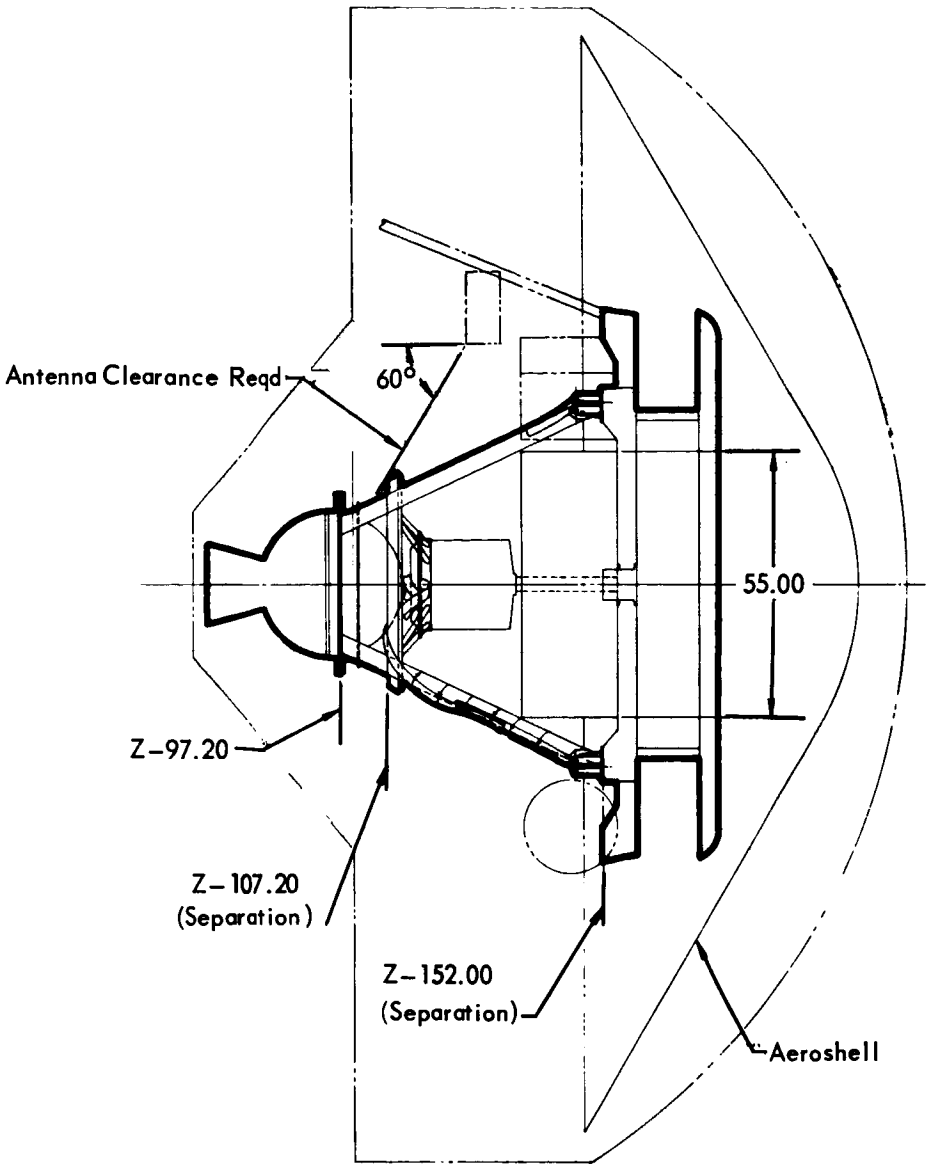

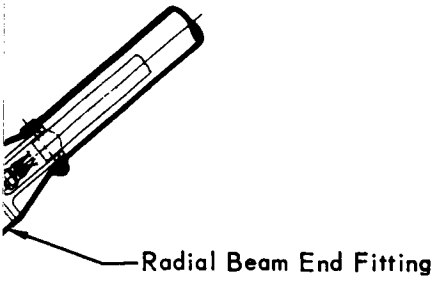

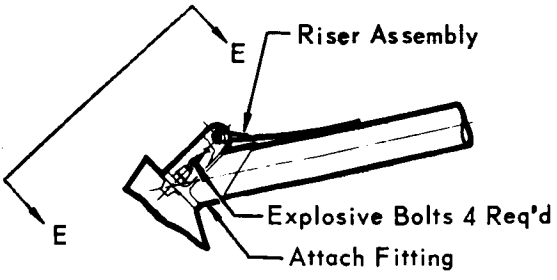

D

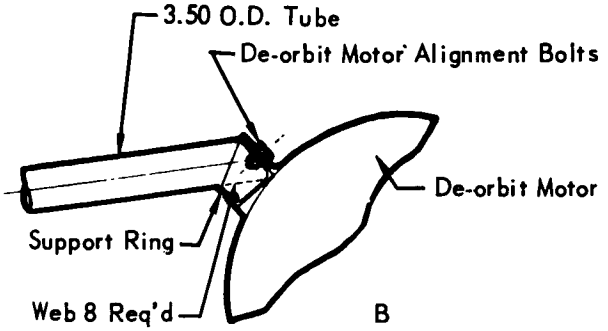

B

of the parachute canister. The catapult loads are reacted by the base platform through bearing of the parachute catapult barrel.

There is an explosive bolt separation joint just above the lower ring at each of the four tubes. Separation force is supplied by energy stored in compression springs at each bolt. These bolts are activated to separate the de-orbit motor and the upper portion of the support structure. The remaining portion of the structure, which supports the parachute assembly, is separated by activating explosive bolts at the base of each tube.

The parachute Harness Risers Lines are attached to the base of the four tubes above the mounting plane. The structure, parachute canister, and the thermal curtain are removed by differential drag of the parachute.

There are, in addition, secondary structures required to support various electronic equipment as well as the terminal descent propulsion tankage.

Eight aluminum I-beams 3.0 inches deep with 2.0 inch caps 39.0 inches long connect the ends of the four primary radial I-beams of the base platform, forming the peripheral octagon shape.

There are four insulated equipment containers attached to the base platform between the radial I-beams and outboard of the attenuator ring backup structure. These containers have constant width and height with the length varied as required to accept various modularized equipment combinations. Figure 1.4-4 is a detail drawing of a typical container. Figure 1.4-1 shows the installation locations.

The propulsion tankage is supported by tubular aluminum struts at two locations 180° apart. The locations were dictated by usage rates and c.g. shift control. The oxidizer tank, which is the heaviest, is supported at two horizontally opposing poles. One pole is attached to a tripod capable of loads in all directions. The other pole is supported by a bipod capable of shear in one direction only plus up and down loads. This bipod provides the flexibility required for tank growth due to temperature pressure changes. The fuel and pressurant tanks are individually mounted in an identical manner on the opposite side of the Surface Laboratory. All the tank support struts are attached to the upper surface of the base platform.

The terminal descent motors are mounted to the radial I-beams of the base platform. The terminal descent propulsion system is shown in Figure 1.4-5.

INSULATED CONTAINER CAPSULE BUS EQUIPMENT

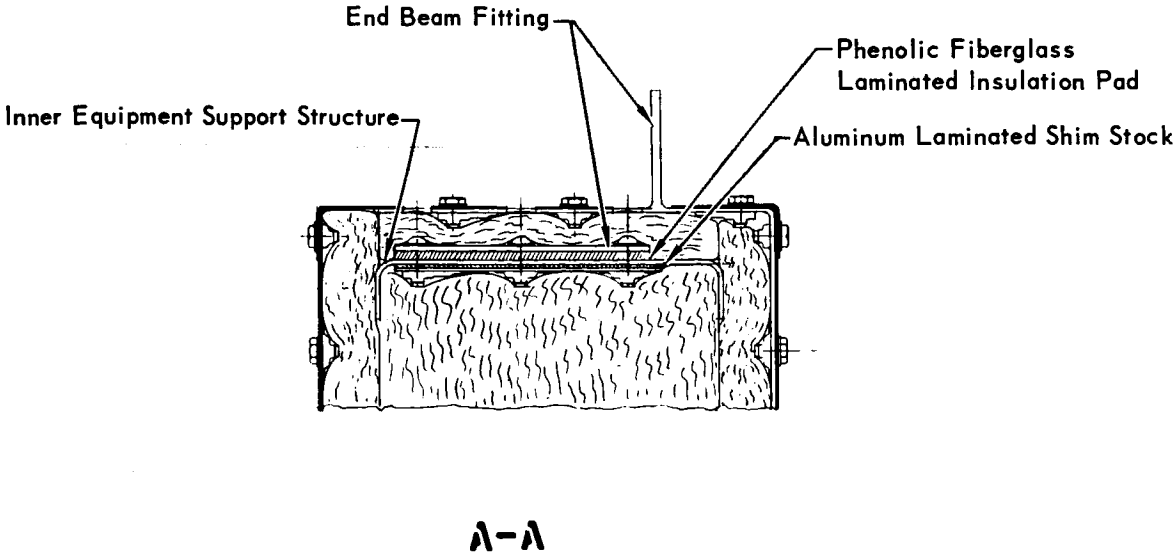

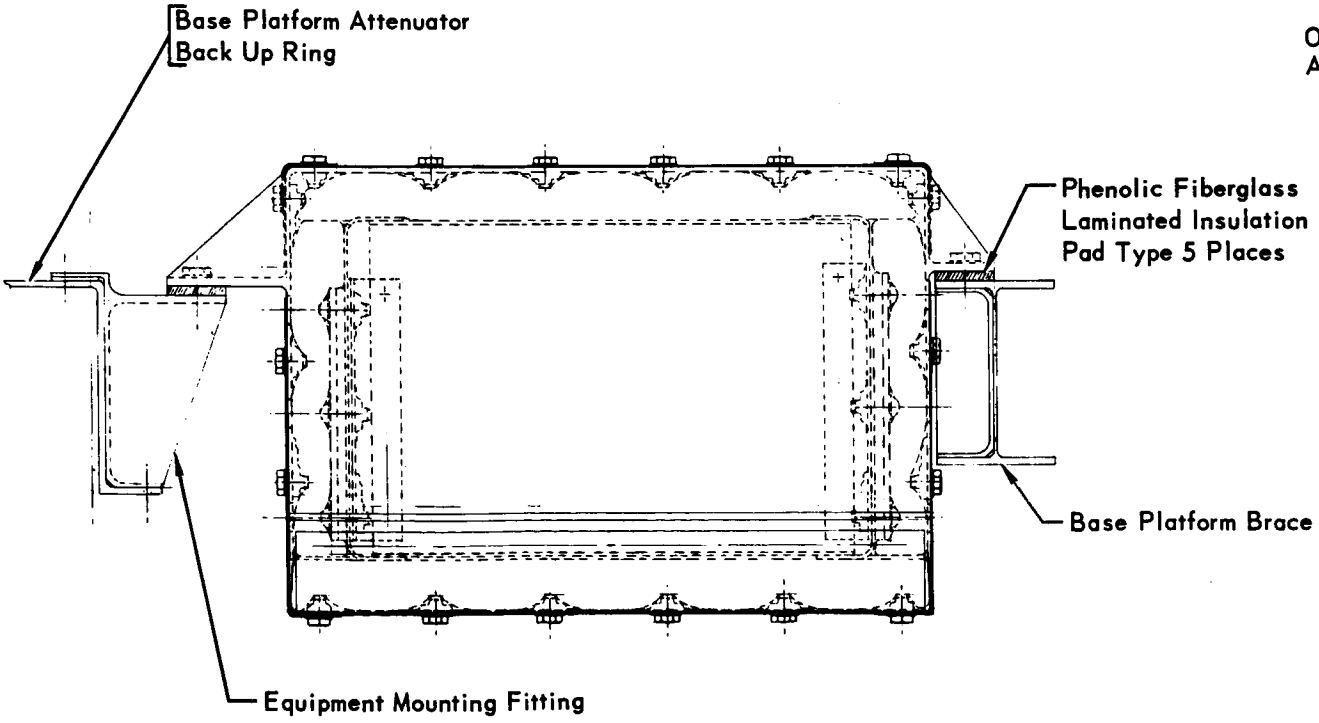

Figure 1.4-4

1-85-1

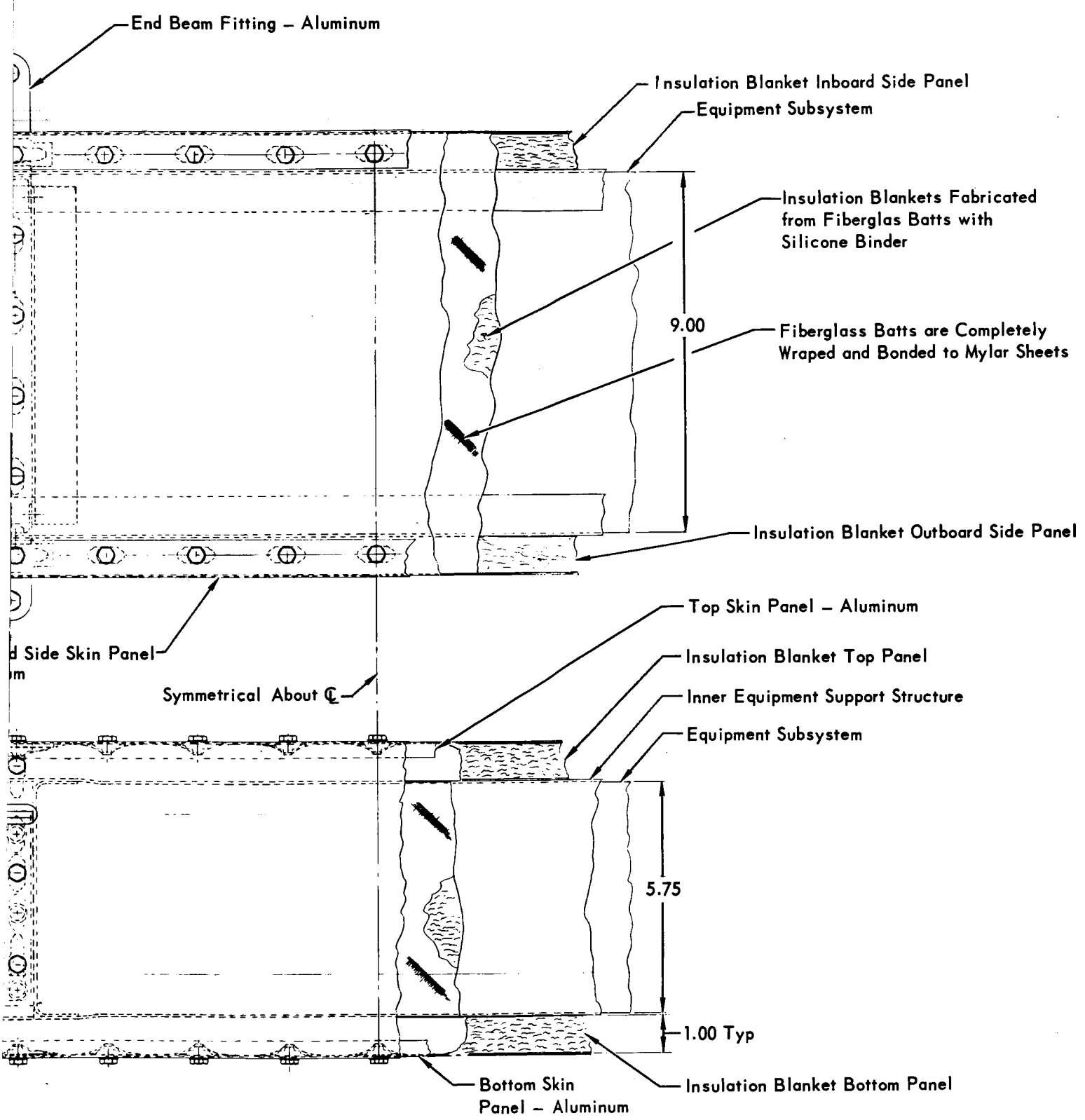
End Beam Fitting – Aluminum
Insulation Blanket Inboard Side Panel
Equipment Subsystem
Insulation Blankets Fabricated from Fiberglas Batts with Silicone Binder
9.00
Fiberglass Batts are Completely Wraped and Bonded to Mylar Sheets
Insulation Blanket Outboard Side Panel
d Side Skin Panel
m
Symmetrical About ℄
Top Skin Panel – Aluminum
Insulation Blanket Top Panel
Inner Equipment Support Structure
Equipment Subsystem
5.75
1.00 Typ
Bottom Skin Panel – Aluminum
Insulation Blanket Bottom Panel

1-85-2

TERMINAL PROPULSION SUBSYSTEM INSTALLATION

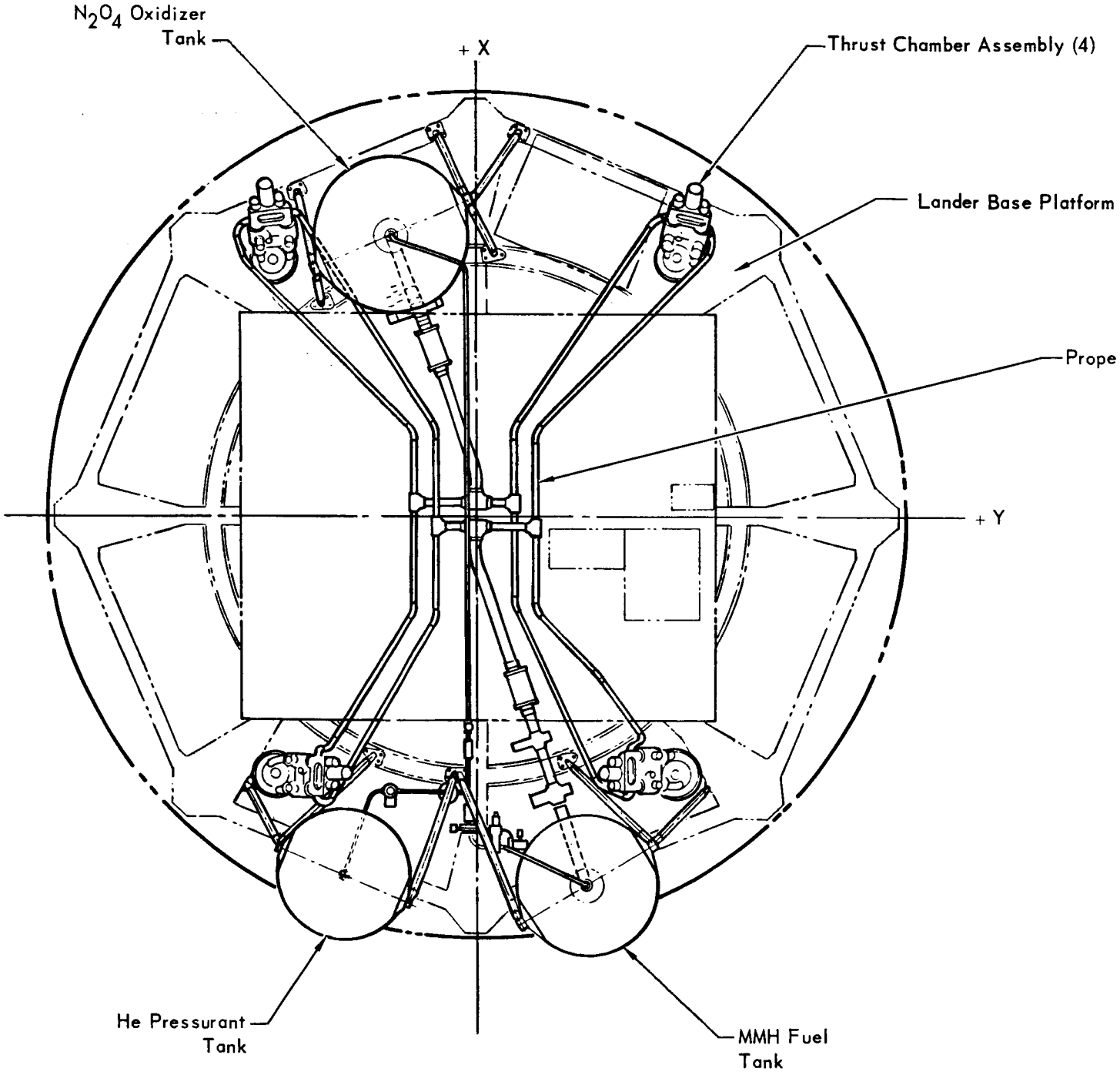

Figure 1.4–5

1–86 – 1

lant Distribution Lines

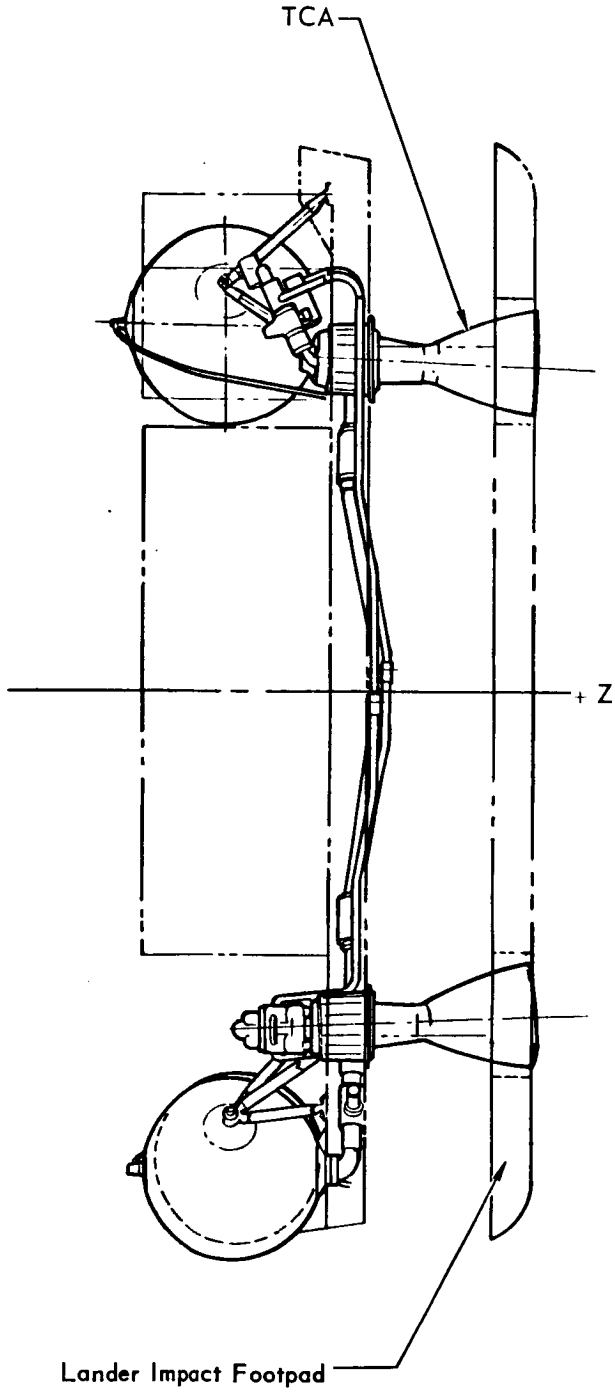

1-86-2

1.4.4 Operation Description - At a point 10 feet above the Mars surface the terminal descent engines are cut off allowing the Lander to free fall from that height. Because of a $\pm 5°$ variation in trajectory angle and a $\pm 5°$ attitude error, due to uneven engine tail off the Lander may be rotated as much as 10° from horizontal on impact. This $\pm 10°$ of Lander tilt when coupled with landing on a 34° slope imposes an equipment installation clearance line of 44° as shown on Figure 1.4-6.

In the case of a straight flat impact, at zero V_H on a level surface, the footpad distributes the loads uniformly to the crushable Trussgrid. The Trussgrid attenuator absorbs sufficient energy while stroking to reduce the loads felt by the Surface Laboratory and associated equipment during landing impact to a maximum of 14 g's.

The landing radar, which is mounted to the bottom center of the footpad, is crushed as well as the frangible terminal descent engine nozzles.

The eight tension cable assemblies serve no function in this kind of landing and merely roll up the slack cable created by crushing the Trussgrid.

For the case of landing on a slope or off-center on a ridge or peak coupled with horizontal velocity the operation is as follows:

The off-center vertical load outboard of the attenuator ring is introduced through the footpad to the Trussgrid. Because the footpad is a stiff structure - if not restrained by the tension cable assemblies - it would begin to rotate about the Trussgrid nearest the impact point. This rotation of the footpad would put tension loads on the bond between the Trussgrid and the footpad on the side opposite the impact point. This would cause footpad/Trussgrid separation and only local crushing of the attenuator ring. Use of the tension cables prevent this separation and force the crushable ring to compress over its entire area.

The one-way ratcheted cable pulleys keep the footpad tight against the Trussgrid and keep the system operational during subsequent bounding or sliding.

The base platform provides a rigid structural backbone and reacts the large loads introduced by the Trussgrid and the tension cables through bending in the eight radial I-beams. After impact, when the Lander has come to rest, stabilizing legs are extended. These legs are mounted flush with the underside of the impact footpad so as not to be damaged on impact or during skid out. The shoe of the stabilizer is attached to a spring loaded scissors mechanism which is held in the stowed position by a bolt extending through a pyrotechnic bolt cutter. The three

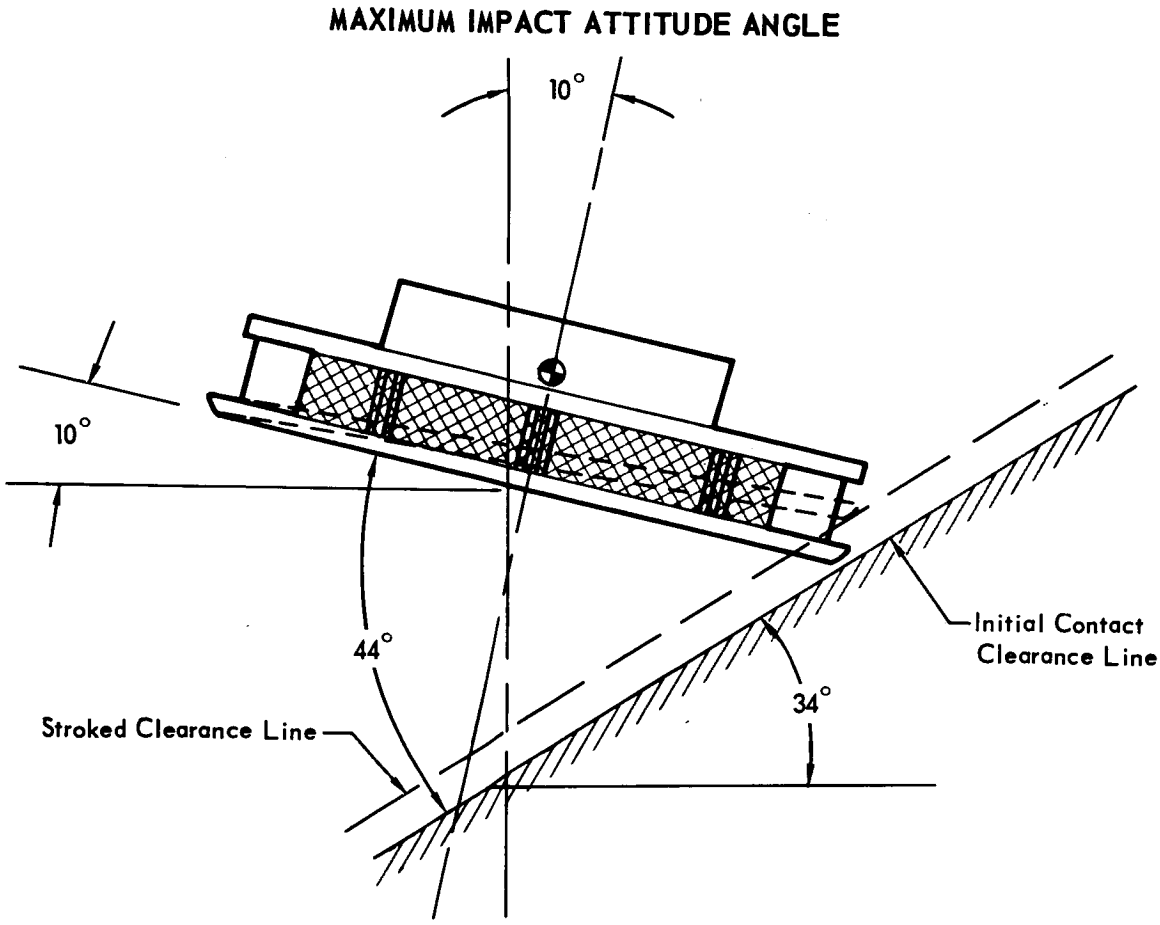
MAXIMUM IMPACT ATTITUDE ANGLE
10°
10°
44°
34°
Initial Contact
Clearance Line
Stroked Clearance Line

Figure 1.4-6

stabilizers, when simultaneously released, extend downward until meeting a 50 pound resistance or until they are fully extended to 12 inches. A one way ratchet mechanism locks the stabilizer at any point through its stroke, allowing it to support its full portion of the Lander weight. Figure 1.4-7 shows the mechanical details of the landing system.

1.4.5 Performance Objectives - The Lander shall be capable of landing successfully in an upright position on the surface of Mars under the following environmental conditions:

a. Slopes to 34° from horizontal up to 100 meters long, longer slopes <34°, 25 kilometer long slope mean angle 10°.
b. Ridges or valley with abrupt changes in slope of 68°.
c. Conical peaks with 34° slopes.
d. Surface bearing capacities ranging from 6 psi per foot of width to ∞.
e. Rocks of 12.5 cm in diameter (5 inches).
f. Combinations of vertical and horizontal velocities of 20 ft/sec and 5 ft/sec respectively or 16 ft/sec and 10 ft/sec.

At no time during this landing will the Surface Laboratory experience loads in excess of 14 g's. Structural performance shall be limited to that maximum which will not in any way reduce the overall possibility of mission success.

1.4.6 Interfaces - There are two separation interfaces on the Lander. These are Aeroshell to Lander, and Lander to Adapter and are detailed as follows:

1.4.6.1 Aeroshell to Lander Interface - This system consists of eight separate bipod trusses which are attached and hinged to the Aeroshell at sixteen places just above the second ring and inboard of the moldline. These bipods are spring loaded to swing outboard to provide maximum clearance during Lander separation. The apexes of the eight bipods attach to the ends of the radial I-beams of the Lander structural base. Four of the bipods, spaced 90° apart, are tied to the Lander I-beams (by explosive bolts) to carry both tension and compression loads. The remaining four bipods have "ball" ends which are seated in sockets at the ends of the base platform I-beams and allow transmittal of only compression loads. All eight bipods are adjustable to make up for manufacturing tolerances and to meet pre-load requirements. All eight bipods are capable of carrying side or shear loads. These bipods are shown in Figure 1.4-8.

MECHANICAL DETAILS LANDER
PULLEY-CABLE ASSEMBLY – UNI DISC LANDER, IMPACT ATTENUATION SYSTEM

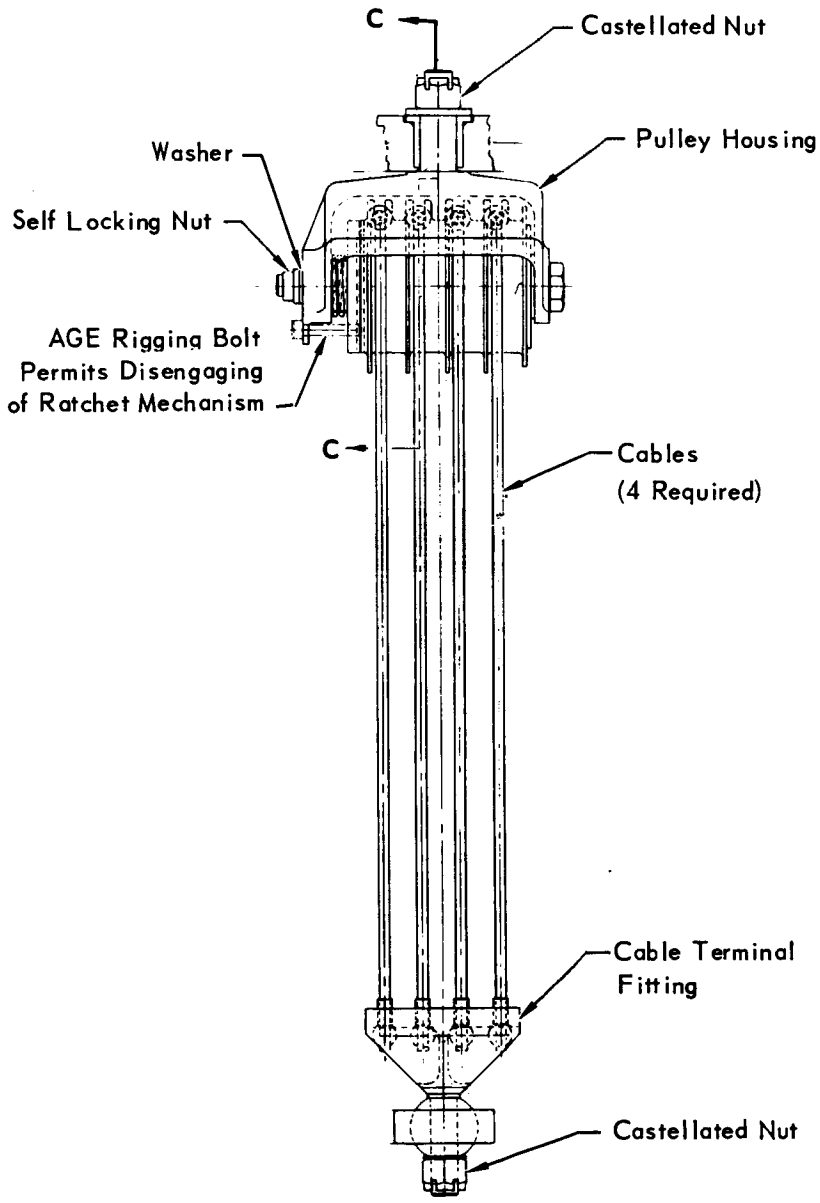

A – A

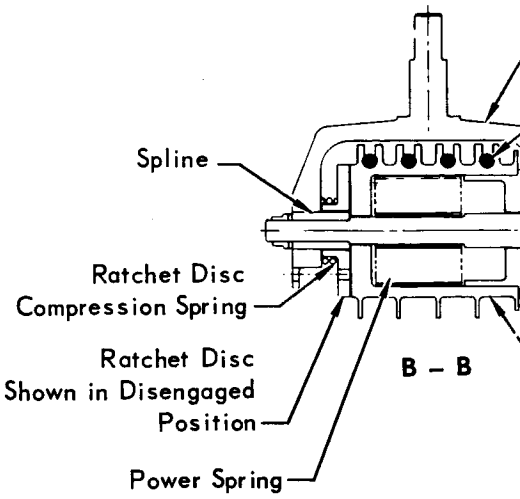

B – B

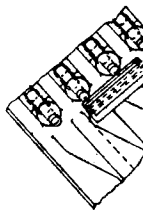

D – D

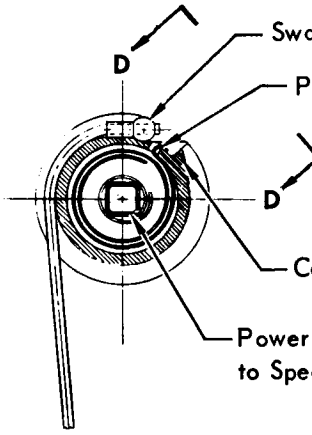

C – C

Figure 1.4–7

1–90

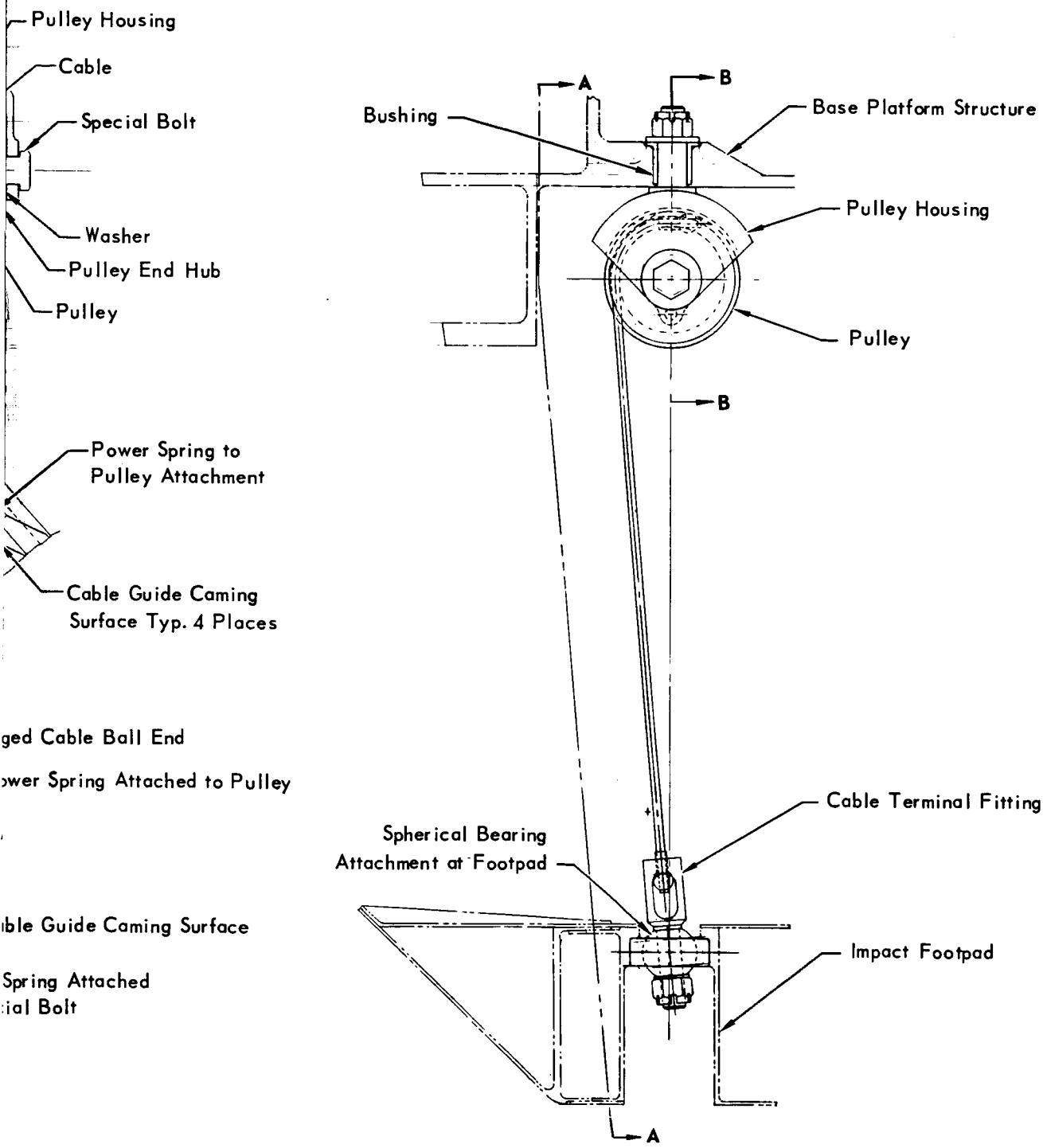
Pulley Housing
Cable
Special Bolt
Washer
Pulley End Hub
Pulley
Power Spring to
Pulley Attachment
Cable Guide Caming
Surface Typ. 4 Places
ged Cable Ball End
ower Spring Attached to Pulley
ble Guide Caming Surface
Spring Attached
ial Bolt
A
B
Bushing
Base Platform Structure
Pulley Housing
Pulley
B
Cable Terminal Fitting
Spherical Bearing
Attachment at Footpad
Impact Footpad
A

1-90-2

MECHANICAL DETAILS LANDER
STABILIZING LEG – UNI DISC CAPSULE LANDER

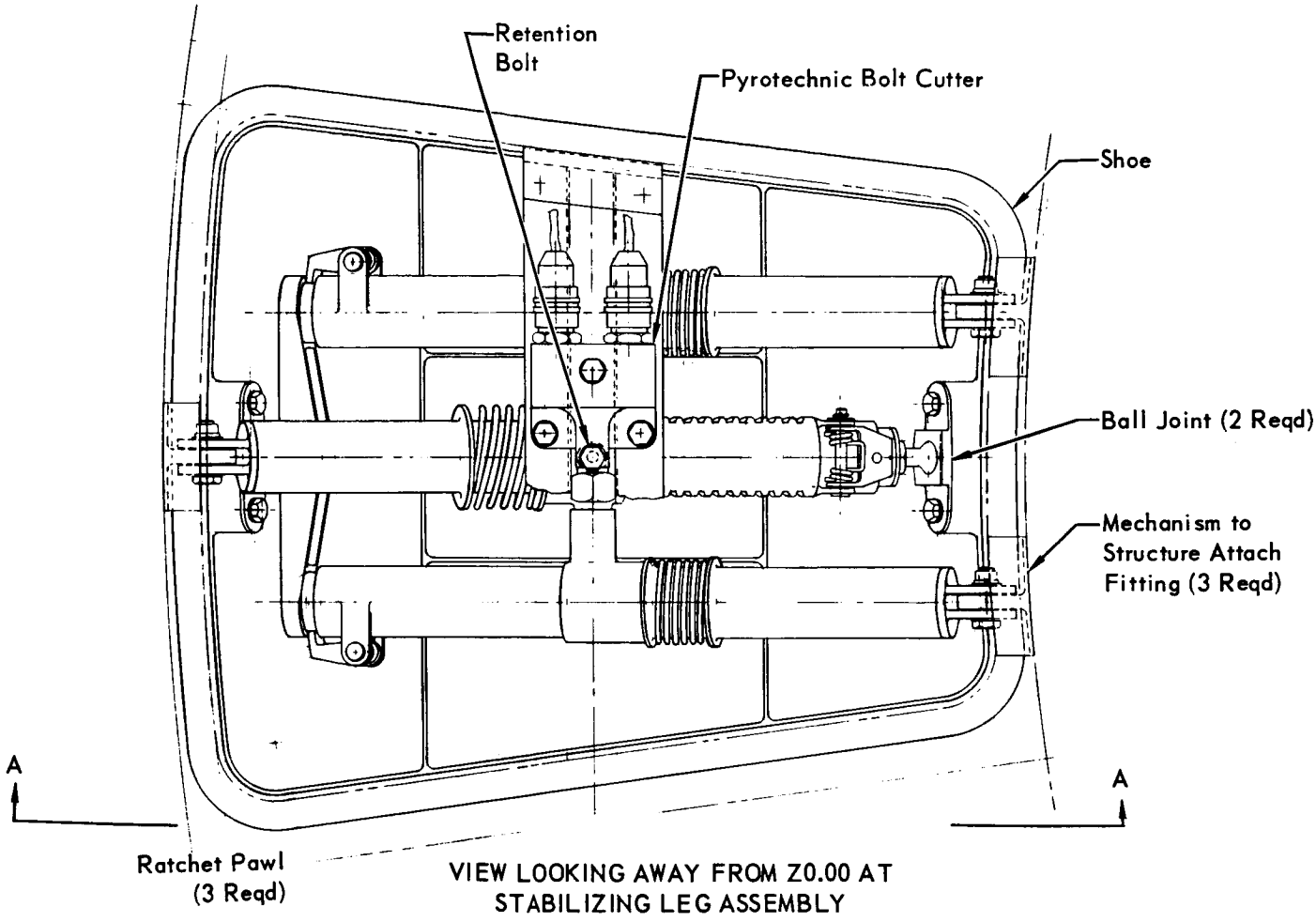

VIEW LOOKING AWAY FROM Z0.00 AT STABILIZING LEG ASSEMBLY

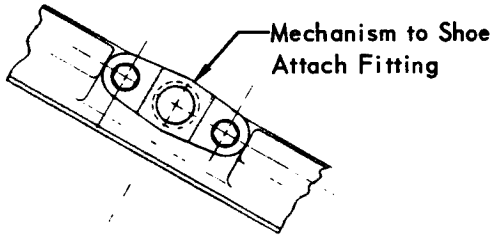

D–D

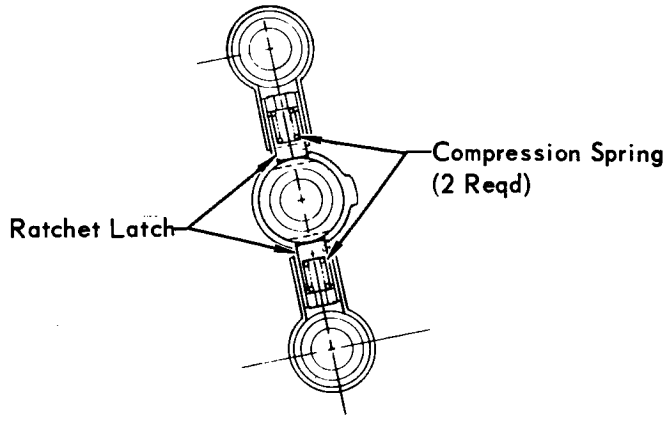

C–C
COLLAR RATCHET MECHANISM

Figure 1.4–7 (Continued)

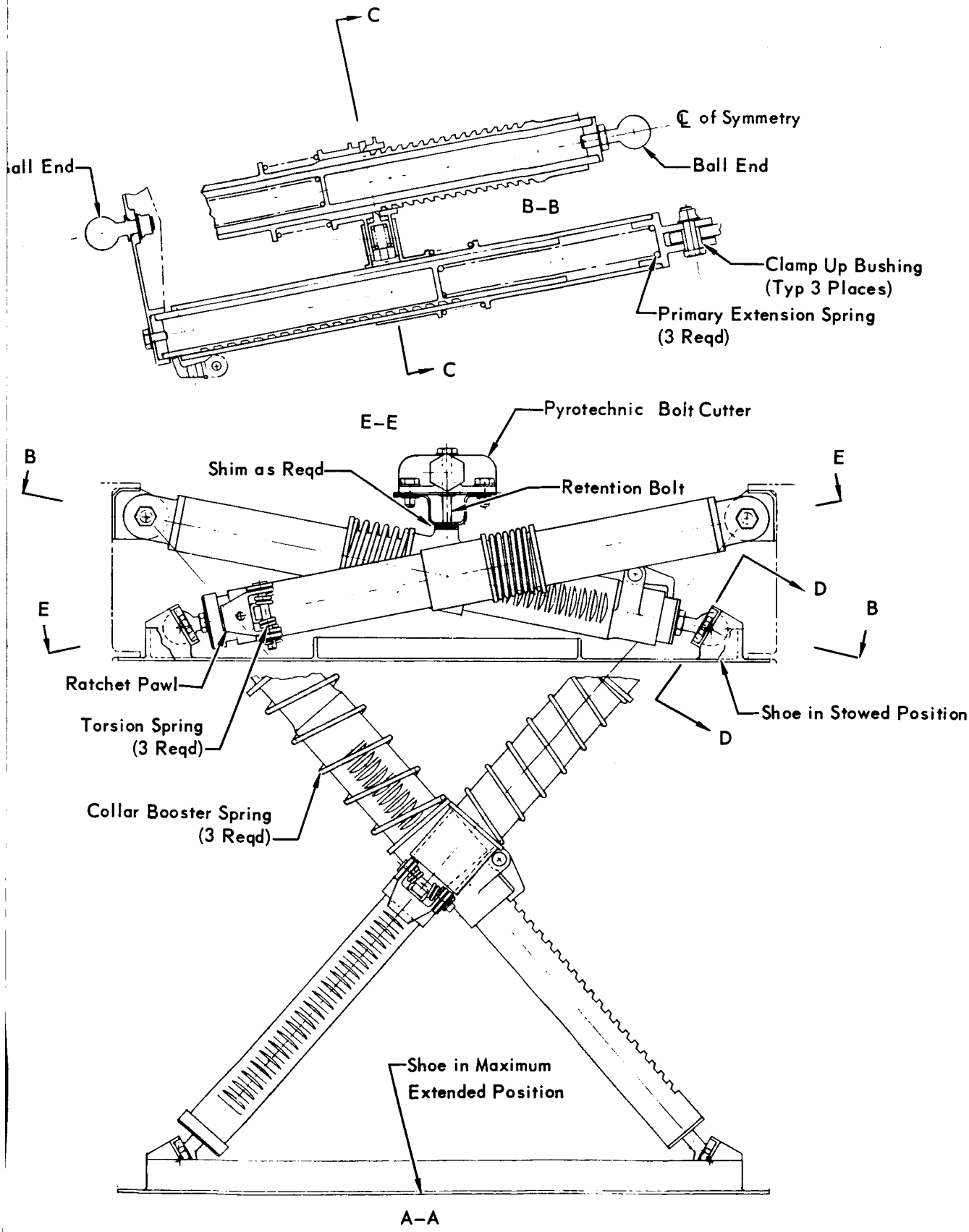
C
℄ of Symmetry
all End
Ball End
B–B
Clamp Up Bushing
(Typ 3 Places)
Primary Extension Spring
(3 Reqd)
C
E–E
Pyrotechnic Bolt Cutter
B
Shim as Reqd
Retention Bolt
E
D
E
B
Ratchet Pawl
Torsion Spring
(3 Reqd)
Shoe in Stowed Position
D
Collar Booster Spring
(3 Reqd)
Shoe in Maximum
Extended Position
A–A

1-91-2

AEROSHELL TO LANDER STRUCTURAL INTERFACE

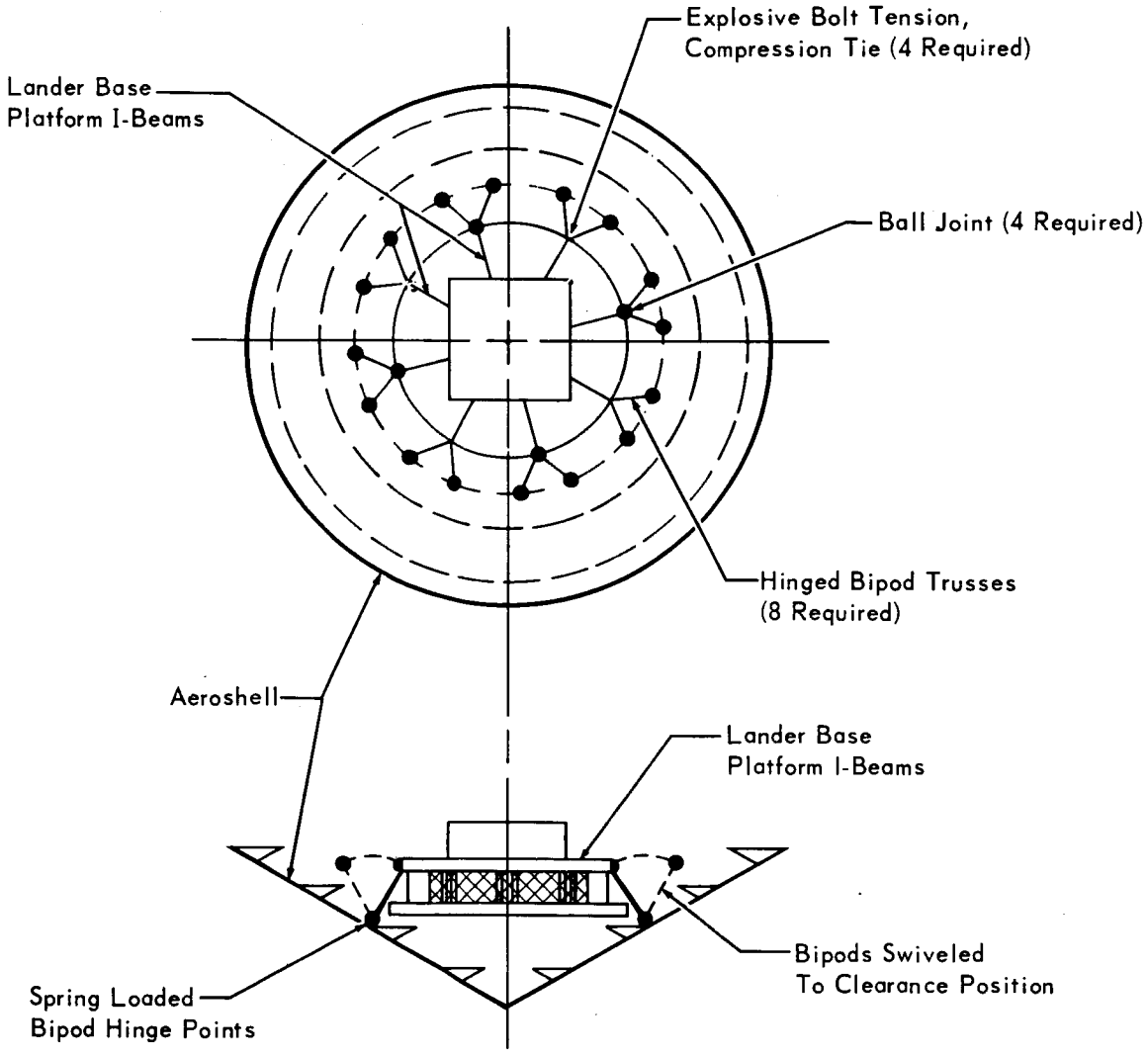

Figure 1.4–8

1.4.6.2 Lander to Adapter Interface - On the upper surfaces of the ends of the eight primary radial I-beams of the Lander base platform structure are eight explosive bolt attach points. These bolts attach the Lander to the adapter truss section as shown in Figure 1.4-9.

1.4.7 Reliability Consideration - Reliability considerations in the design of structural assemblies are given major attention. A design philosophy adopted and proven on previous McDonnell Spacecraft designs virtually negates the reliability risk for structural members. Structural criteria are identifed in terms of limit and ultimate design loads. Limit loads are those which result from the maximum expected flight or ground handling conditions. Ultimate loads are those determined by adjusting the limit loads upward by a factor of safety, normally 1.25 for flight conditions and 1.5 maximum for ground handling conditions which are potentially hazardous to personnel. Structural design, and positive vertification by test, to this ultimate design load virtually assures structural reliability and this subject therefore is not approached from a statistical standpoint. However, the Lander/Adapter Separation Assembly, De-orbit Motor Separation Assembly, Parachute and Support Structure Release Assembly, and the Impact Attenuation and Stabilization Assembly are considered a part of this assembly and have been the subject of a reliability analysis.

1.4.7.1 Reliability Estimate - A reliability logic diagram for the Lander Structural Module is presented as Figure 1.4-10. The estimated reliability of each element in the diagram is as follows:

COMPONENT	RELIABILITY
INITIATOR (EED)	.9998
EXPLOSIVE STIMULUS RING	.9999/STRAND
CARTRIDGE, BOLT OR DISCONNECT	.9998
BOLT, EXPLOSIVE (LESS CARTRIDGES)	.99995
BOLT CUTTER (LESS CARTRIDGES)	.9999
ELECTRICAL DISCONNECT, SPIN-OFF (LESS CARTRIDGES)	.9999
ELECTRICAL DISCONNECT, "HOT WIRE" AND LANYARD ACTUATED (INCLUDES DUAL "HOT WIRES" AND LANYARD)	.9999
SPRING, COMPRESSION	.99998
TENSION CABLES AND PULLEY ASSEMBLY	.9999
STABILIZER LEG ASSEMBLY	.9999

INTERFACE – CAPSULE BUS SYSTEM/SPACECRAFT SYSTEM

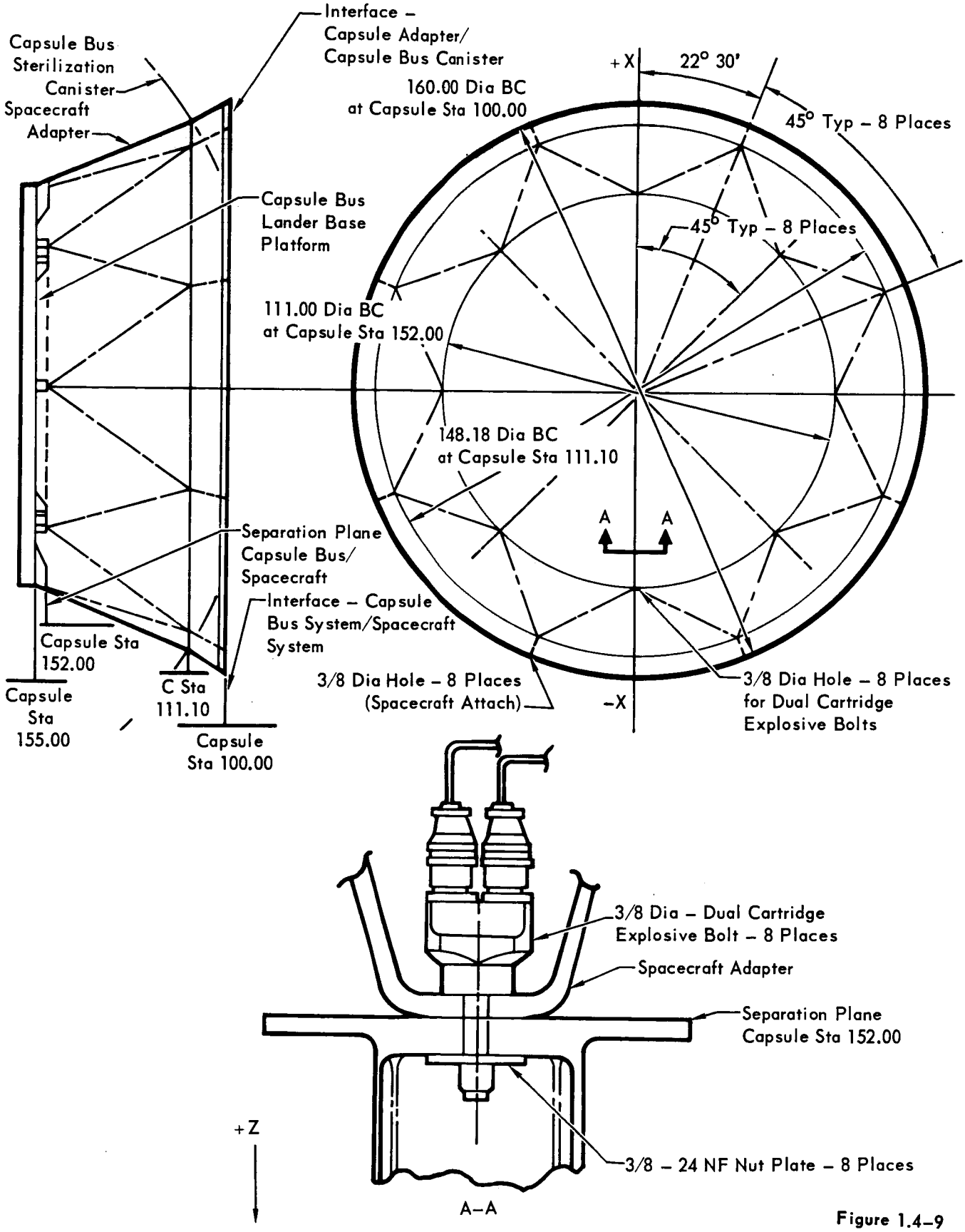

Figure 1.4–9

RELIABILITY LOGIC DIAGRAM LANDER MODULE – STRUCTURAL AND MECHANICAL

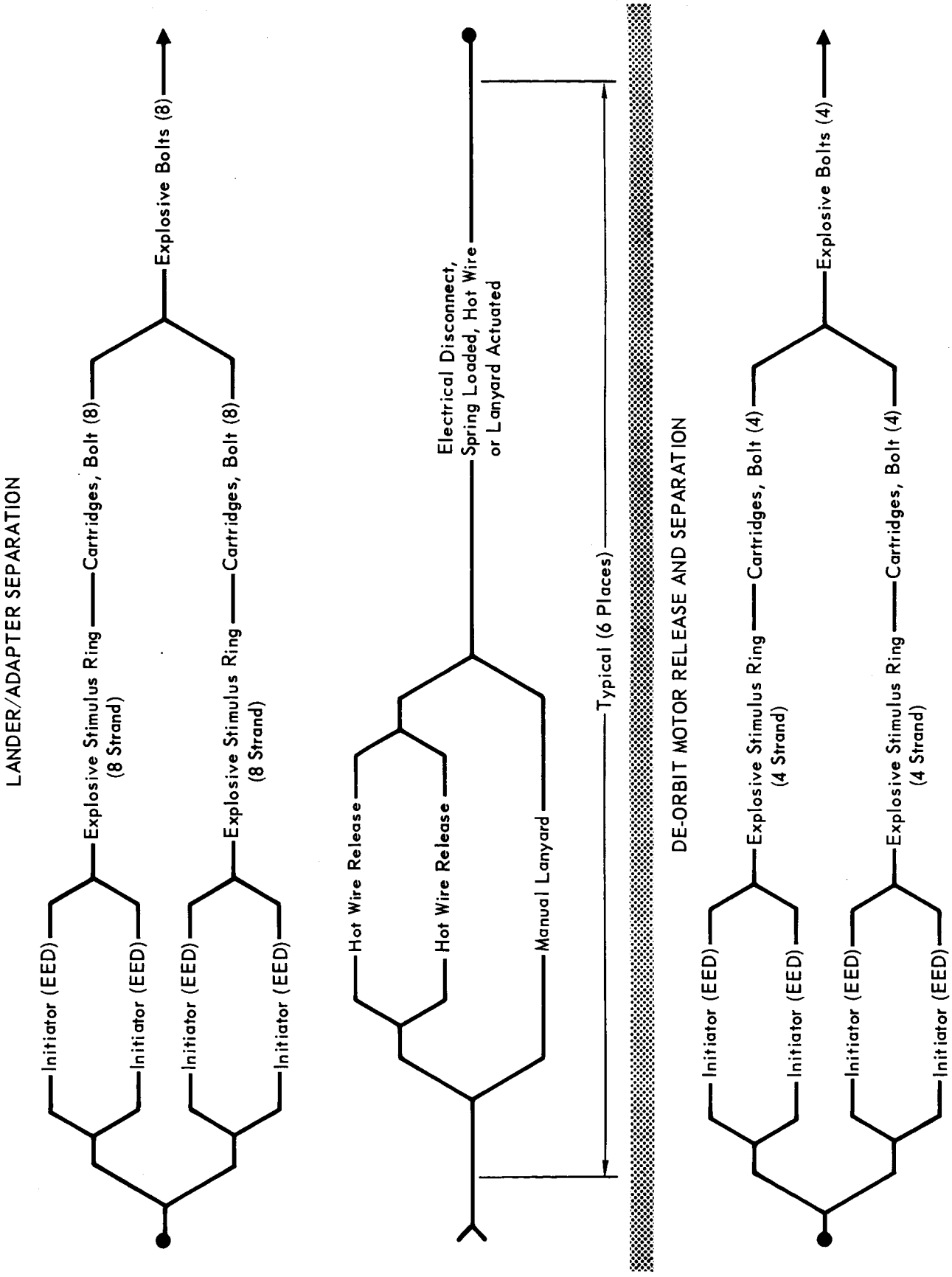

Figure 1.4–10

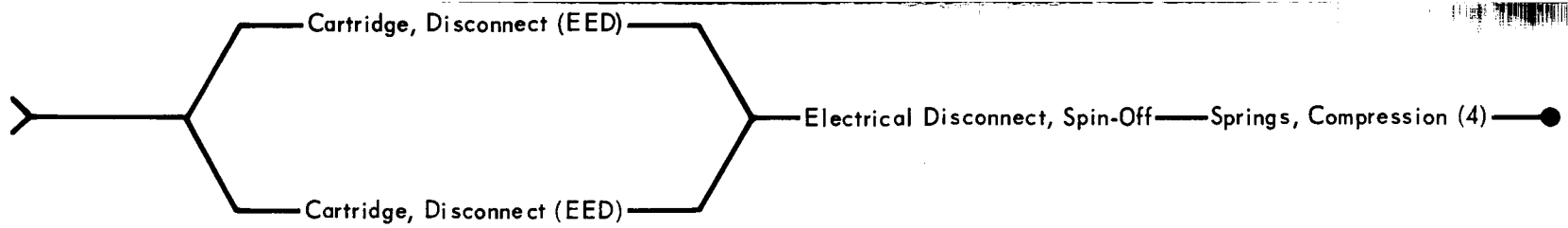

PARACHUTE AND SUPPORT STRUCTURE RELEASE

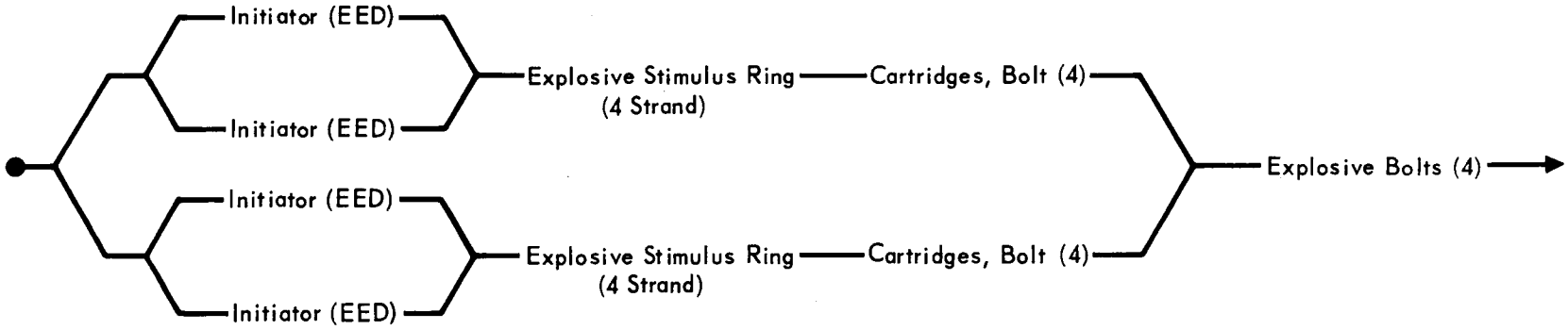

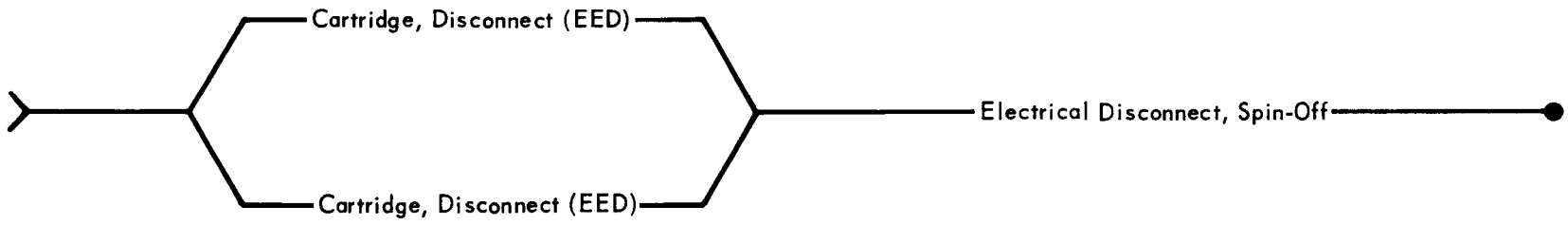

IMPACT ATTENUATION AND LANDED STABILIZATION

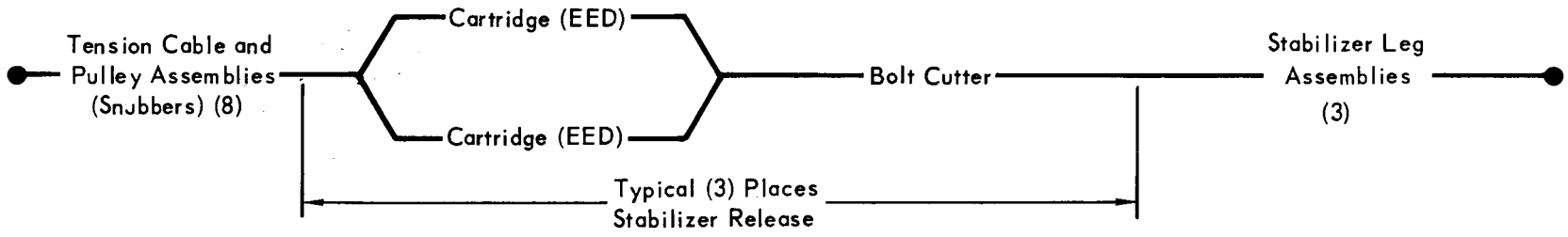

Applying these component and assembly estimates, the reliability of the Lander Structural and Mechanical Module was calculated to be:

$$R = .9969$$

1.4.7.2 Failure Mode, Effect, and Criticality Analysis - A failure mode, effect, and criticality analysis was conducted for the Lander Structural and Mechanical Module and the results are presented in Figure 1.4-11. Each failure mode is categorized according to the effect on the following mission objectives:

a. Achievement of Flight Capsule landing.

b. Performance of Entry Science Experiments.

c. Performance of Landed Science Experiments.

d. Retrieval of engineering data.

The failure categories are defined as follows:

Category	Effect
1	No effect on mission objective.
2	Degrading effect on mission objective
3	Possible catastrophic effect on mission objective.

Categories shown as 1/2, 1/3, 2/3, etc., indicate that the effect of the failure may vary between the two categories.

1.4.7.3 Reliability Improvement Considerations - The reliability of the separation and release functions could be improved if deemed necessary by the incorporation of two redundancy considerations.

The first and most desirable change is to provide a lanyard actuated backup for the pyroactuated spin-off electrical disconnect.

The second change would be to incorporate an explosive nut as a backup function to each explosive bolt. This change could be incorporated in lieu of the redundant cartridge in each explosive bolt.

FAILURE MODE, EFFECT AND CRITICALITY ANALYSIS

Failure Category Definition
1. No Effect on Mission Objective
2. Degrading Effect on Mission Objective
3. Possible Catastrophic Effect on Mission Objective

LANDER MODULE, STRUCTURAL AND MECHANICAL

COMPONENT OR FUNCTION	FAILURE MODE	FAILURE EFFECT	FAILURE CATEGORY: LANDING	FAILURE CATEGORY: ENTRY SCIENCE	FAILURE CATEGORY: LANDED SCIENCE	FAILURE CATEGORY: ENGINEERING DATA	REMARKS
(1) Explosive Bolt Adapter/Lander Separation	Fails to break when fired (any one of eight).	Capsule will not separate from adapter.	3	3	3	3	Dual cartridges are provided in each bolt assembly to minimize probability of failure. Either cartridge provides adequate output to break bolt. Redundant sets of explosive stimulus lines insure cartridge initiation.
	Fails structurally when fired.	Resulting shrapnel may cause damage to surrounding equipment.	1/2	1/2	1/2	1/2	Adequate design and good inspection procedures make this failure mode remote.
(2) Electrical Disconnect, Dual "Hot Wire" Initiated, Adapter/Lander Separation	Fails to disconnect wire bundle (any one of six).	No effect. Lanyard back-up for hot wire will separate the connection.	1	1	1	1	Redundant hot wire device minimizes probability of failure.
(3) Explosive Bolt, De-Orbit Motor Release	Fails to break when fired (any one of four).	De-Orbit motor will not separate. This prevents parachute deployment and subsequent Aeroshell separation. Lander will impact at destructive velocity.	3	2	3	2	Dual cartridges are incorporated in each bolt with either cartridge providing adequate energy for breaking the bolt. Redundant sets of explosive stimulus lines insure cartridge initiation.
	Fails structurally when fired.	Resulting shrapnel may cause damage to surrounding equipment.	1/2	1/2	1/2	1/2	Adequate design and good inspection procedures make this failure mode remote.
(4) Compression Spring, De-Orbit Motor Separation	Breaks (any one of four).	No effect. The three remaining springs plus force delivered by broken spring will eject de-orbit motor.	1	1	1	1	
(5) Electrical Disconnect, Dual Cartridge Spin-Off, De-Orbit Motor Release	Fails to separate wire bundle.	Incomplete separation of de-orbit motor prevents parachute deployment and subsequent Aeroshell separation. Lander will impact at destructive velocity.	3	2	3	2	Dual cartridges are incorporated in each disconnect with either cartridge providing adequate energy to separate connector. A lanyard actuated back-up device can be incorporated to further reduce probability of failure to separate wire bundle.
	Fails structurally when fired.	Resulting shrapnel may cause damage to surrounding equipment.	1/2	1/2	1/2	1/2	Adequate design and good inspection procedures make this failure mode remote.

Figure 1.4–11

FAILURE MODE, EFFECT AND CRITICALITY ANALYSIS (Continued)

LANDER MODULE, STRUCTURAL AND MECHANICAL

COMPONENT OR FUNCTION	FAILURE MODE	FAILURE EFFECT	FAILURE CATEGORY: LANDING	FAILURE CATEGORY: ENTRY SCIENCE	FAILURE CATEGORY: LANDED SOURCE	FAILURE CATEGORY: ENGINEERING DATA	REMARKS
(6) Explosive Bolt, Parachute Release	Fails to break when fired (any one of four).	Parachute, catapult and support structure will not separate from Lander. Will complicate landing.	2	1	2	1	Dual cartridges are incorporated in each bolt with either cartridge providing adequate energy for breaking the bolt. Redundant sets of explosive stimulus lines insure cartridge initiation.
	Fails structurally when fired.	Resulting shrapnel may damage surrounding equipment.	1/2	1/2	1/2	1/2	Adequate design and good inspection procedures make this failure mode remote.
(7) Electrical Disconnect, Dual Cartridge Spin-Off, Parachute Release	Fails to separate wire bundle.	Parachute, catapult and support structure will be attached to Lander by wire bundle unless parachute drag force is sufficient to effect wire bundle separation.	2	1	2	1	Dual cartridges are incorporated in each disconnect with either cartridge providing adequate energy to separate the connector. A lanyard actuated back-up device can be incorporated to further reduce probability of failure to separate wire bundle.
	Fails structurally when fired.	Resulting shrapnel may cause damage to surrounding equipment.	1/2	1/2	1/2	1/2	Adequate design and good inspection procedures make this failure mode remote.
(8) Tension Cable and Pulley Assemblies (8)	Fails to restrain motion (one of eight).	Possible degradation.	2	1	2	1	Failure to restrain the torque moment on the grid truss increases shear, promotes higher levels of forces on second and third bounce, and increases force levels on adjoining two tension cable pulley assemblies.
	Fails to maintain snubbing action (one of eight).	Possible degradation.	2	1	2	1	Promotes and increases shear forces and potential tumbling. Increase force levels on adjoining two tension cable pulley assemblies.
	Fails to latch (one of eight).	Possible degradation.	2	1	2	1	Same as snubbing action.
(9) Bolt Cutter Stabilizer Release	Fails to cut bolt when fired (any one of three).	Degraded stabilization because one stabilizing leg is not deployed.	1	1	2	1	Dual cartridges are incorporated in each bolt cutter with either cartridge providing adequate energy for breaking the bolt.
(10) Stabilizing Leg Assemblies (3)	Fails to deploy after release (one of three).	Degraded stabilization.	1	1	2	1	Stability of platform is degraded. Some experiments may be affected.
	Fails to latch when extended (one of three).	Degraded stabilization.	1	1	2	1	Same effect.

Figure 1.4–11 (Continued)

SECTION 2

TELEMETRY SUBSYSTEM

2.1 CAPSULE BUS TELEMETRY EQUIPMENT - The telemetry (TM) equipment on the Capsule Bus (CB) has two functions. The first function is to format the CB interplanetary cruise data, together with the Surface Laboratory (SL) and Experimental Science Package (ESP) cruise data, into a coherent bitstream and transfer this data to the spacecraft mounted data distribution unit (for subsequent transmission by the Flight Spacecraft (FSC)). The second function is to format the CB entry data, together with the cruise data of above, and after proper interleaving with the Capsule Bus Data Storage Subsystem, transfer this bitstream to the CB Radio Subsystem for transmission to the FSC.

2.1.1 Equipment Identification and Usage - The main commutator portion of the CB TM has the following major components:

a. Analog gates (both single end high level and double ended low level)
b. Differential amplifier
c. Analog to digital converter (including a sample and hold)
d. Digital multiplexer (including Schmidt triggers for non-logic level bilevel inputs, and "holding" circuitry for pulsed bilevel inputs
e. Frame and subframe word synchronization generators
f. Clock
g. Sequence Programmer
h. DC to DC converter
i. Bit interleavers
j. Sub-bit encoder
k. Biphase (Manchester II + 180) encoder

The cruise commutator portion of the CB TM has the following major components:

a. Analog gates (both single ended high level and double ended low level).
b. Differential amplifier
c. Analog to digital converter (including sample and hold)
d. Digital multiplexer (including schmidt triggers for non-logic level bilevel inputs, and "holding" circuitry for pulsed bilevel inputs).
e. Frame and subframe synchronization generators
f. Clock
g. Sequence programmer

h. DC to DC converter

Figure 2.1-1 is a functional block diagram of the CB TM. Figure 2.1-2 illustrates the usage of the CB TM in terms of mission phases.

The data requirements of the CB TM are defined in Figure 5.5-2 of Part B. Volume II, "The Capsule Bus Instrumentation List". This equipment works principally in conjunction with (a) the Instrumentation Equipment which provides the engineering sensors (their associated instrumentation power supplies) and processes much of the non-standard signals into standard signals, (b) the CB Radio Subsystem, (c) the spacecraft mounted Data Distribution Unit (DDU), (d) the CB Sequencer and Timer (ST) which initiates mode changes, (e) the CB Data Storage Subsystem (DSS), and (f) the CB power distribution subsystem.

The CB TM has a total of 431 signal inputs, 123 of which are single ended high level, 132 are double ended low level, 144 are bilevel and 32 are digital. These signals are arranged into 5 modes of operation, i.e., only those signals which are active during a given mission phase are telemetered.

CAPSULE BUS TELEMETRY EQUIPMENT FUNCTIONAL BLOCK DIAGRAM

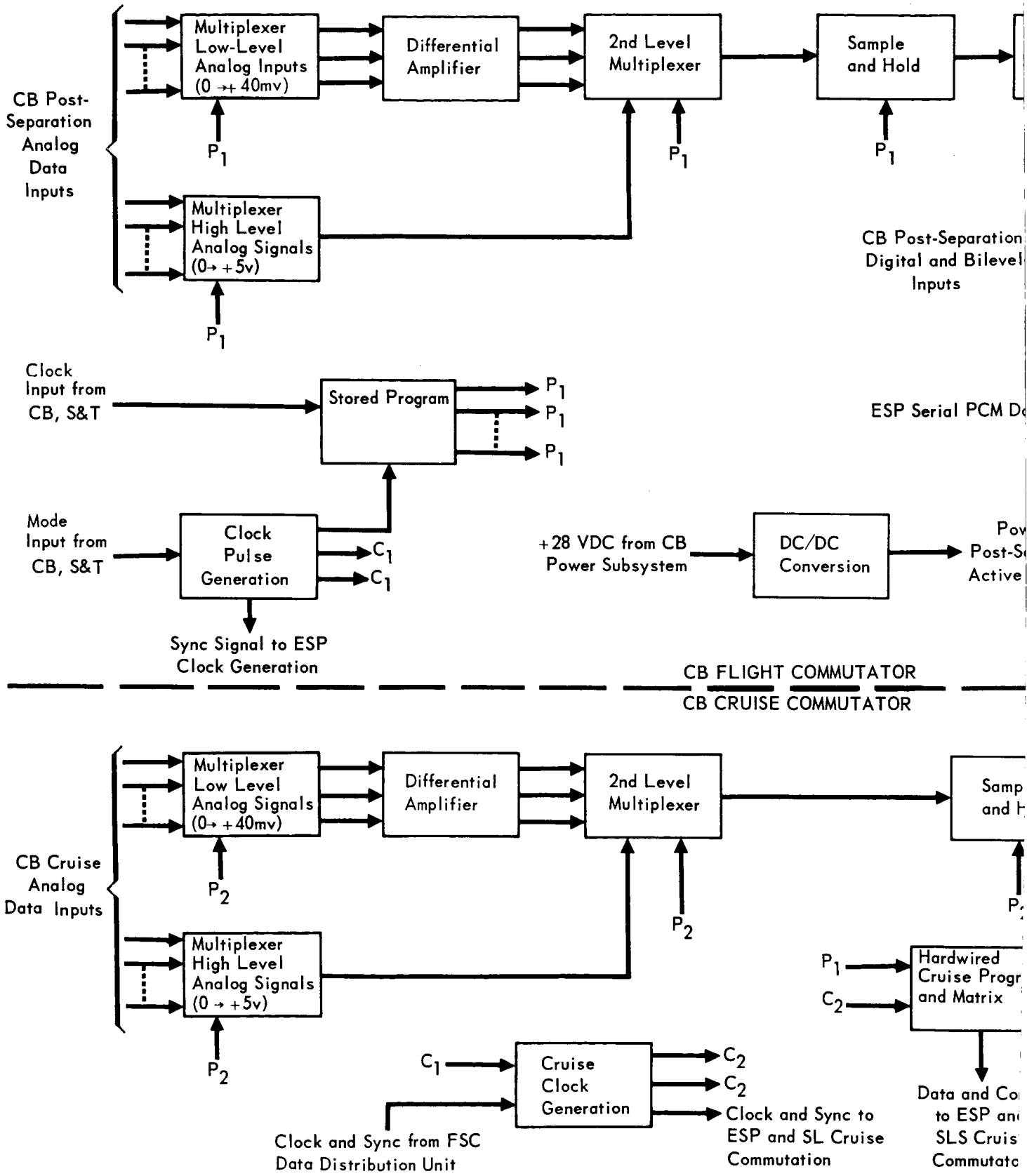

Figure 2.1-1

2-3 - 1

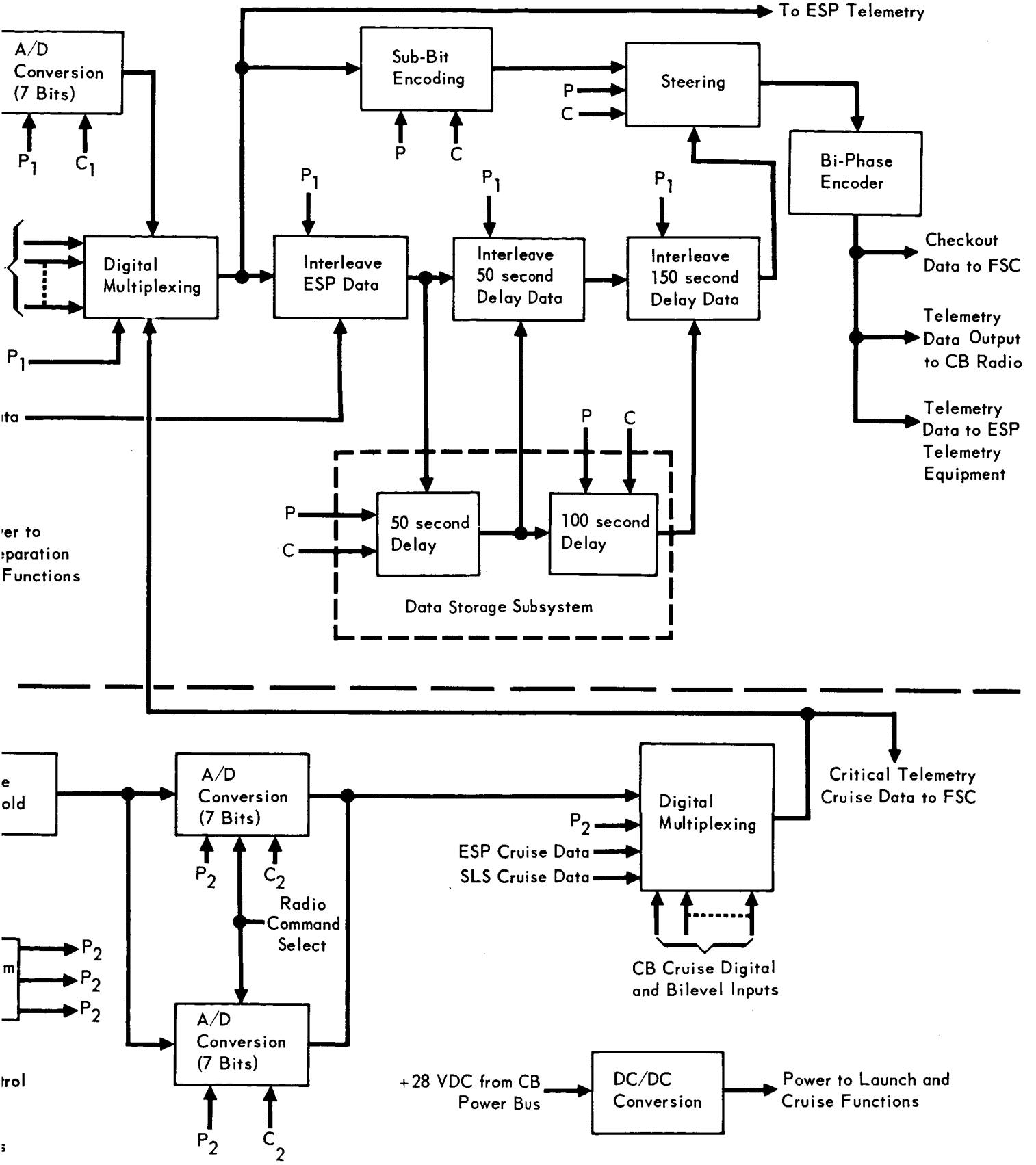
To ESP Telemetry
A/D Conversion (7 Bits)
P_1
C_1
Sub-Bit Encoding
P
C
Steering
P
C
Bi-Phase Encoder
Digital Multiplexing
P_1
Interleave ESP Data
P_1
Interleave 50 second Delay Data
P_1
Interleave 150 second Delay Data
Checkout Data to FSC
Telemetry Data Output to CB Radio
Telemetry Data to ESP Telemetry Equipment
P_1
P
C
P
C
50 second Delay
100 second Delay
Data Storage Subsystem
Critical Telemetry Cruise Data to FSC
A/D Conversion (7 Bits)
P_2
C_2
Radio Command Select
P_2
P_2
P_2
A/D Conversion (7 Bits)
P_2
C_2
Digital Multiplexing
P_2
ESP Cruise Data
SLS Cruise Data
CB Cruise Digital and Bilevel Inputs
+28 VDC from CB Power Bus
DC/DC Conversion
Power to Launch and Cruise Functions

CAPSULE BUS TELEMETRY EQUIPMENT ACTIVITIES AS RELATED TO MISSION PHASE

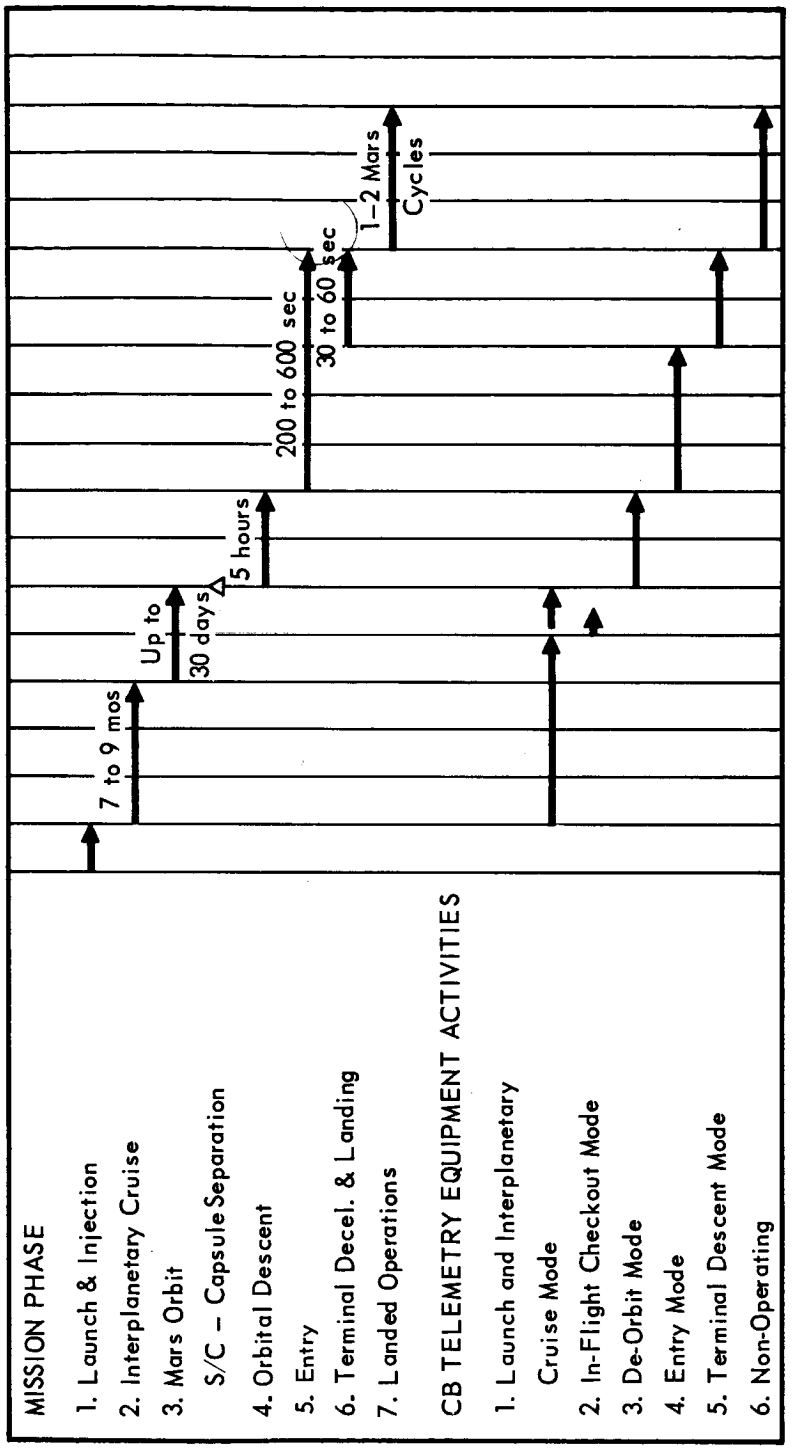

Figure 2.1–2

2.1.2 Design Requirements and Constraints - Aside from the usual VOYAGER requirements and contraints of:

a. Sterilizations
b. Low power consumption
c. Hard vacuum space environment
d. Life
e. Reliability, and
f. Satisfactory operation after a long dormancy.

The CB TM has specific data oriented requirements and constraints. These are:

a. Reprogrammable formating for mission flexibility,
b. Significant redundancy in the cruise commutator - due to the long operating life,
c. DC isolation of all digital interfaces - reducing ground loop vehicle noise,
d. Usage of alternate functional paths - as opposed to block redundancy, and
e. Graceful degradation.

2.1.3 Physical Characteristics - The CB TM occupies 240 cubic inches, weighs 9 pounds and requires 5 watts.

2.1.4 Operational Description - The operational description is divided into two parts. The first part describes the modes of operation of the equipment in terms of the mission phase. The second part describes the functions of the principal components.

2.1.4.1 Operational Modes - The CB TM will operate in five modes: launch and interplanetary cruise, in-flight checkout, de-orbit, atmospheric entry and terminal descent.

- Launch and Interplanetary Cruise Mode - During this mode the bulk of the CB equipments are dormant, thus only a small amount of status information is required. Only the cruise commutator will be active during this mode. The CB cruise commutator will multiplex the data from the ESP and SL cruise commutators and transfer a single data stream to the Data Distribution Unit in the spacecraft. In this mode the cruise commutator will be subject to the control (both bit and frame slave) of the spacecraft Data Distribution Unit. The data format for this mode is given in Figure 2.1-3. This data is transferred at a 7 bps rate.
- In-flight Checkout Mode - During this mode all of the CB equipments are tested prior to separation. The CB TM will have two "real" modes here:

CAPSULE BUS TELEMETRY EQUIPMENT LAUNCH AND CRUISE MODE FORMAT

16 x 7 = 112 Bit Prime Frame

Frame Sync	1	2	3	4	5	6	7	8	10	11	12–1	13–1	14–1
14 Bits											12–2	13–2	14–2
											12–3	13–3	14–3
											12–4	13–4	14–4
											12–5	13–5	14–5
											12–6	13–6	14–6
											↓	↓	↓
											12–48	13–48	14–48
											12–49	13–49	14–49
											12–50	13–50	14–50

Note: For the double channel number designation, the first number designates the prime channel (word) number, and the second number the sub-channel number.

CHANNEL(WORD)DESIGNATIONS	SAMPLE RATE*	CHANNEL(WORDS) AVAILABLE	CHANNELS USED
1 → 10	.0625/sec	10	6
11 (Subframe sync)	.0625/sec	1	1
12–1 → 14–50	.00125/sec	150	117

*Based on a bit rate of 7 bits per second.

Figure 2.1–3

a memory dump for all of the CB memories, and a mode to support the check-out of the other CB subsystems. A third "quasi-mode" will consist of cycling the CB TM through all of its modes. During the normal checkout mode the cruise commutators (CB, ESP and SL) are read through the main CB TM. The format for this mode is given in Figure 2.1-4. This data is transferred at a 2730 bps rate.

- o De-orbit Mode - The de-orbit mode covers the mission phases from the separation of the CB from the FSC to entry (at approximately 800,000 feet). The format for this mode is given in Figure 2.1-5. The "data" rate is 273 bps, but is artifically boosted by a factor of ten in the sub-bit encoder so that only one bit rate need be accomodated in the FSC CB bit synchronizer. Figure 2.1-6 illustrates the interleaver/sub-bit encoder switch positions for this mode. The cruise commutators now (CB, ESP and SL) feed the main CB commutator.
- o Entry Mode - From 800,000 feet to aeroshell separation the TM is in the atmospheric entry mode. During this mission phase there is a high probability of shock induced ionization blackout, thus the data is sent both in real time and delayed time. During this phase the main ESP TM also becomes active and is interleaved with the main CB TM. The CB format is given in Figure 2.1-7, which results in a 630 bps rate. Interleaving the 280 bps of the ESP results in a 910 bps rate. After interleaving with this real time rate, a 50 and a 150 second delayed bitstream, the transmitted bit rate becomes 2730 bps.
- o Terminal Descent Mode - From aeroshell separation until approximately five minutes after touchdown the TM is in the terminal descent mode. The storage and interleaving in this mode is identical to that in the entry mode, however, the format of data is changed. The terminal descent format is shown in Figure 2.1-8. The transmitted bit rate is 2730 bps.

2.1.4.2 Component Description - The "commutation" portions of the main and cruise commutators are functionally identical and similar to conventional telemeters, i.e., the analog gating, differential amplifier, sample and hold, analog to digital conversion, digital multiplexing and synchronizing operations. The "programming" portions of the two commutators is distinctly different. The cruise commutator is a hardwired device, employing conventional matrix programming. The main commutator is a stored program device, employing interlaced tube programming. The data storage interlacing operation is unique to the main TM. The following component description

CAPSULE BUS IN-FLIGHT CHECKOUT MODE TELEMETRY DATA FORMAT

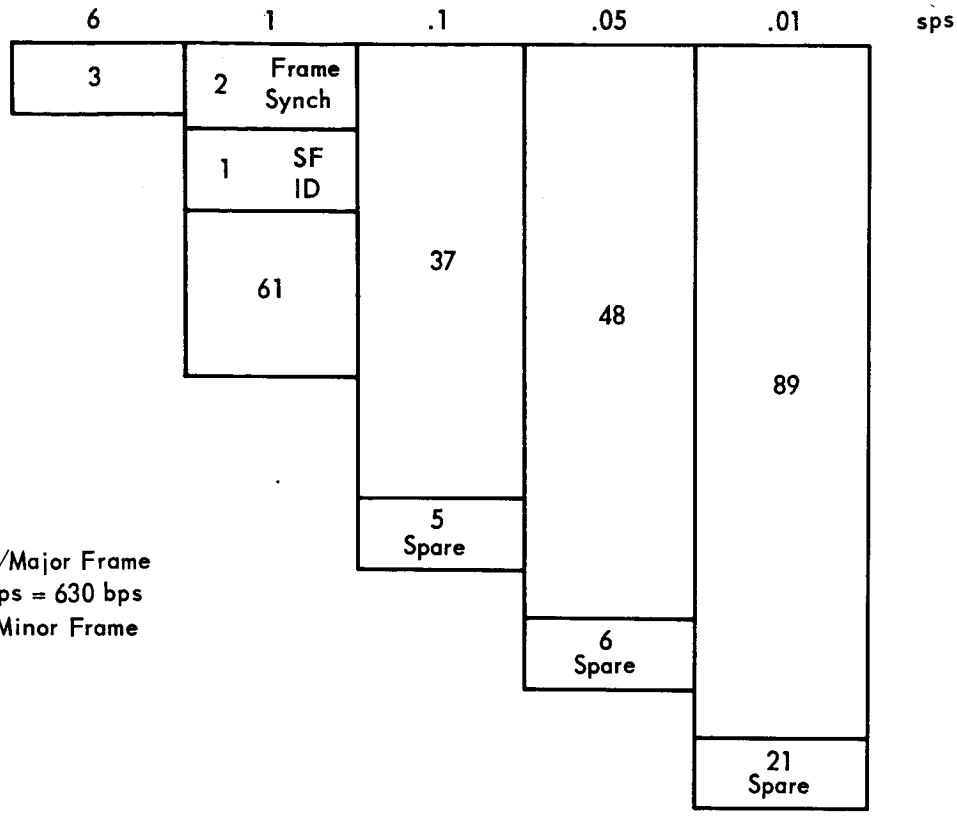

9000 S/Major Frame
90 sps = 630 bps
15 S/Minor Frame

NO. OF CHANNELS	DATA TYPE	SAMPLE RATE (sps)
1 at 20 Bits (3 Equivalent)	D	6
17	HL	1
14	LL	1
2	BL	1
16 at 4 Bits, 4 at 15 Bits (28 Equivalent)	D	1
19	HL	.1
12	LL	.1
3	BL	.1
3 Equivalent	D	.1
27	HL	.05
13	LL	.05
5	BL	.05
3	D	.05
17	HL	.01
67	LL	.01
1	BL	.01
4 Equivalent	D	.01

Figure 2.1-4

CAPSULE BUS TELEMETRY EQUIPMENT DE-ORBIT MODE FORMAT

NUMBER OF CHANNELS	DATA TYPE	SAMPLE RATE(SPS)
3	D	6.5
1	D	2 Cruise Comm.
1	LL	1
1	D	1
1	D(Time of events-7 bits)	1
11	HL	.1
6	LL	.1
3	BL	.1
6	LL	.05
21	HL	.01
66	LL	.01
1	BL	.01
5	D	.01

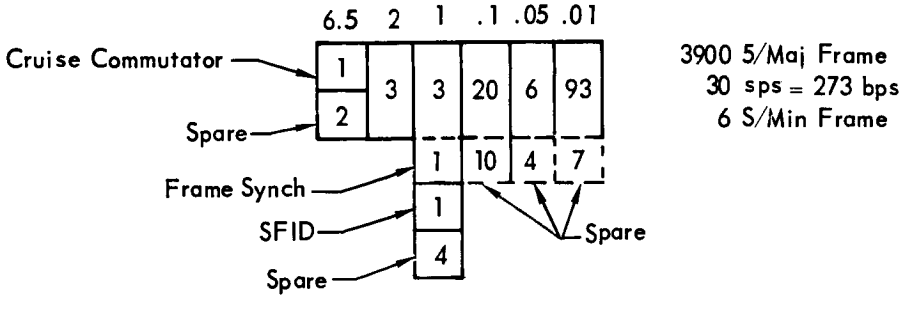

Figure 2.1–5

CAPSULE BUS TELEMETRY EQUIPMENT DE-ORBIT MODE FORMAT
(CRUISE COMMUTATOR)

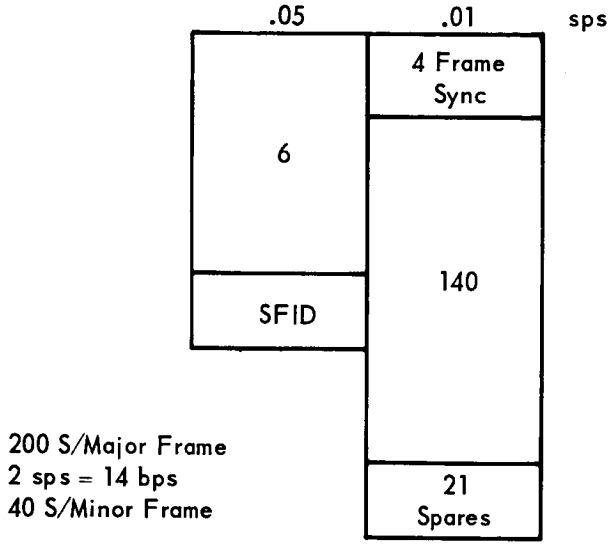

200 S/Major Frame
2 sps = 14 bps
40 S/Minor Frame

	NO. OF CHANNELS	DATA TYPE	SAMPLE RATE (sps)
SL	9	HL	.01
	15	LL	↓
	2	BL	↓
	1	D	↓
ESP			
	5	HL	.01
	15	LL	↓
	1	BL	↓
	1	D	↓
CBS			
	60	HL	.01
	29	LL	↓
	1	BL	↓
	1	D	↓
	6	LL	.05

Figure 2.1-5 (Continued)

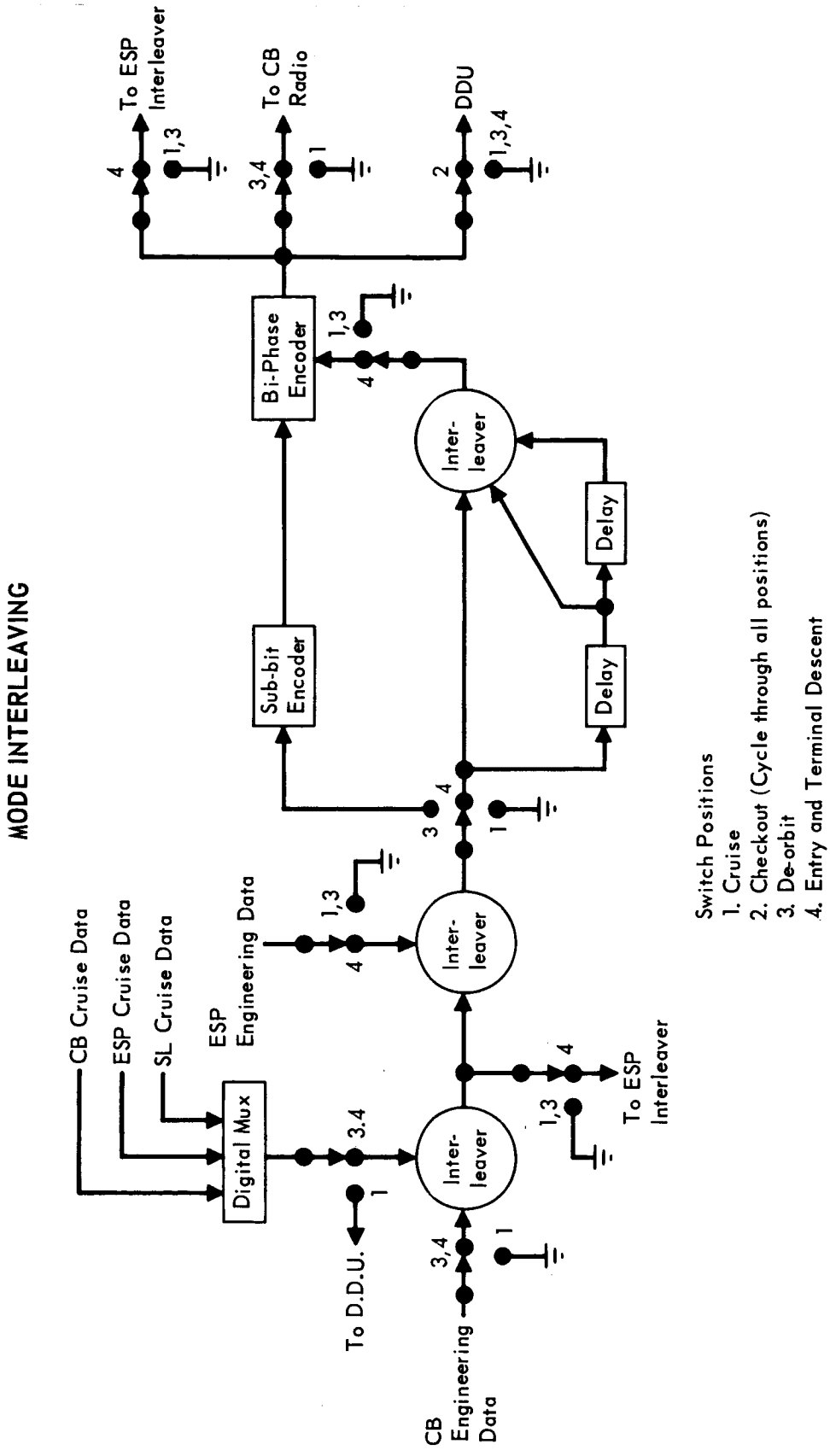
MODE INTERLEAVING
CB Cruise Data
ESP Cruise Data
SL Cruise Data
ESP Engineering Data
Digital Mux
To D.D.U.
CB Engineering Data
Inter-leaver
Inter-leaver
Inter-leaver
To ESP Interleaver
Sub-bit Encoder
Delay
Delay
Inter-leaver
Bi-Phase Encoder
To ESP Interleaver
To CB Radio
DDU
Switch Positions
1. Cruise
2. Checkout (Cycle through all positions)
3. De-orbit
4. Entry and Terminal Descent

Figure 2.1-6

CAPSULE BUS TELEMETRY EQUIPMENT ENTRY MODE TELEMETRY DATA FORMAT

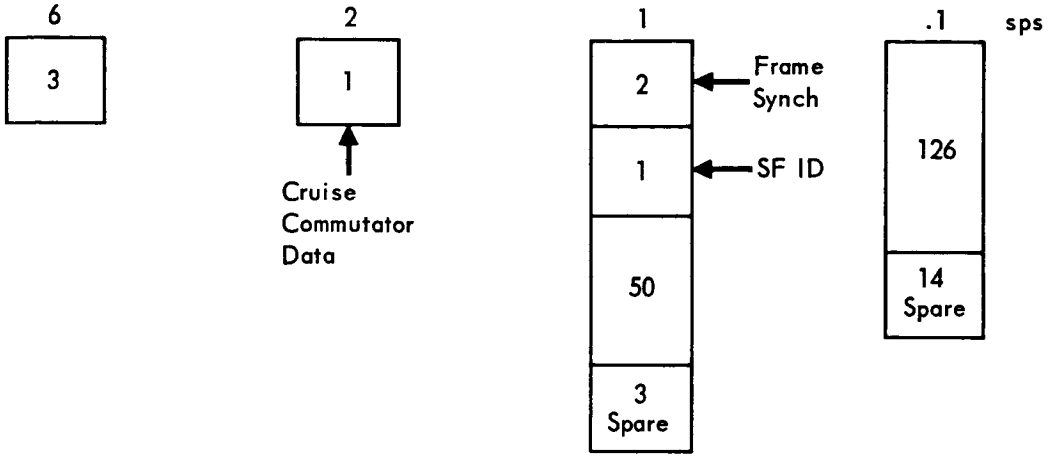

900 S/Maj. Frame
90 sps = 630 bps
15 S/Minor Frame

No of Channels	Data Type	Sample Rate (sps)	
3	D	6	
1	D	2	
2	HL	1	Cruise Commutator
4	LL	1	
3	D	1	
4	HL	.5	
6	LL	.5	
1	BL	.5	
34	HL	.1	
22	LL	.1	
7	BL	.1	
3	D	.1	
5	HL	.05	
15	LL	.05	
19	HL	.01	
46	LL	.01	
1	BL	.01	
4	D	.01	

Figure 2.1–7

CAPSULE BUS TELEMETRY EQUIPMENT TERMINAL DESCENT MODE FORMAT

NO. OF CHANNELS	DATA TYPE	SAMPLE RATE (sps)
3	D	6
1	D	2 Cruise Comm.
26	HL	1
10	LL	1
2	BL	1
14	D	1
21	HL	.25
1	BL	.25
32	HL	.1
18	LL	.1
6	BL	.1
3	D	.1
18	HL	.01
26	LL	.01
1	BL	.01
4	D	.01

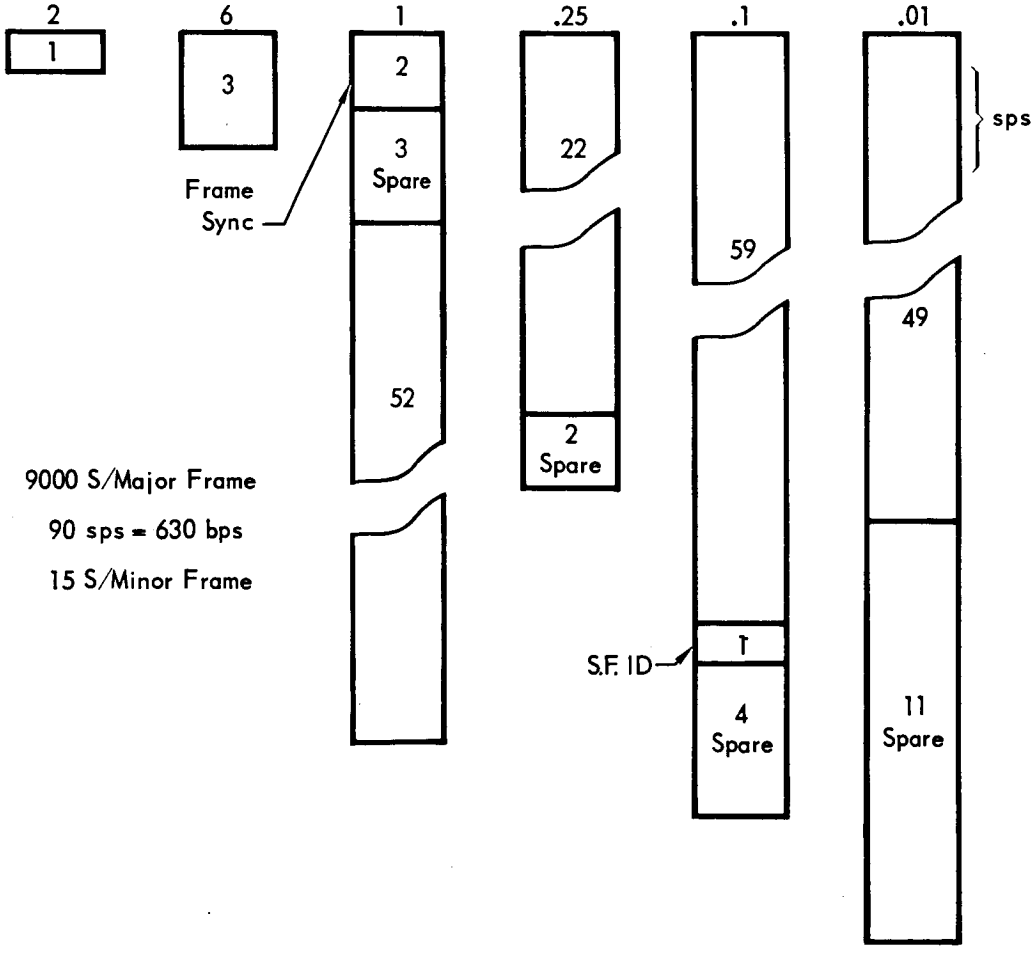

Figure 2.1–8

is divided into three parts: commutation, programming and interleaving.

- Commutation - The input signals are gated through MOSFET switches appropriately "treed", that is the gates are arranged into subgroups such that the failure of a single input switch will not propagate the failure any further than the subgroup. The specific treeing design is a function of the maximum allowable backcurrent into the data sources, programming efficiency and, most importantly, reliability. The single ended high level signals are gated directly to the sample and hold portion of the analog to digital converter. The double ended low level signals first pass through a differential amplifier which converts them to single ended high level signals, and then to the sample and hold. The sample and hold charge time is chosen to minimize aperture error. The analog to digital converter output is gated through the digital multiplexer together with the frame and subframe synchronization words and the bilevel data. All of the bilevel data is buffered - the "logic level" digital data being directly buffered, while the "non-logic" level bilevels are passed through schmidt triggers for voltage conversion. Some of the bilevels are pulsed, thus require "holding" circuitry. Dependent upon the specific accuracy requirement the bilevel may or may not be time tagged. The output of the digital multiplexer is the coherent PCM bitstream.
- Programmer - The cruise commutator hardwired matrix programmed multiplexer is identitical to conventional telemeter programmers. The clock drives a countdown logic network which in turn initiates gate closures. The main CB TM programmer is a stored program, interlaced tube programmed device. The clock herein drives a "hardwired" tube structure - any given position in the tube being a switch identified in core. A block diagram of the programmer is given in Figure 2.1-9. The magnetic core memory utilizes 20 mil ferrite cores in a 3D organization with a total capacity of 8192 bits. The interlaced tube memory has a unique address for each data channel. The "hardwired" tube structure is used to sequence the memory. The addresses of all the data channels are stored sequentially in memory. When a frame is to be sampled, the control unit accesses the memory, decodes the word, samples the channel, and adds one to the memory position for the next memory word. This process repeats until a rate group is completed. When a rate group is completed, and it is not time to repeat the group, the next lowest rate group is initiated until it is time to

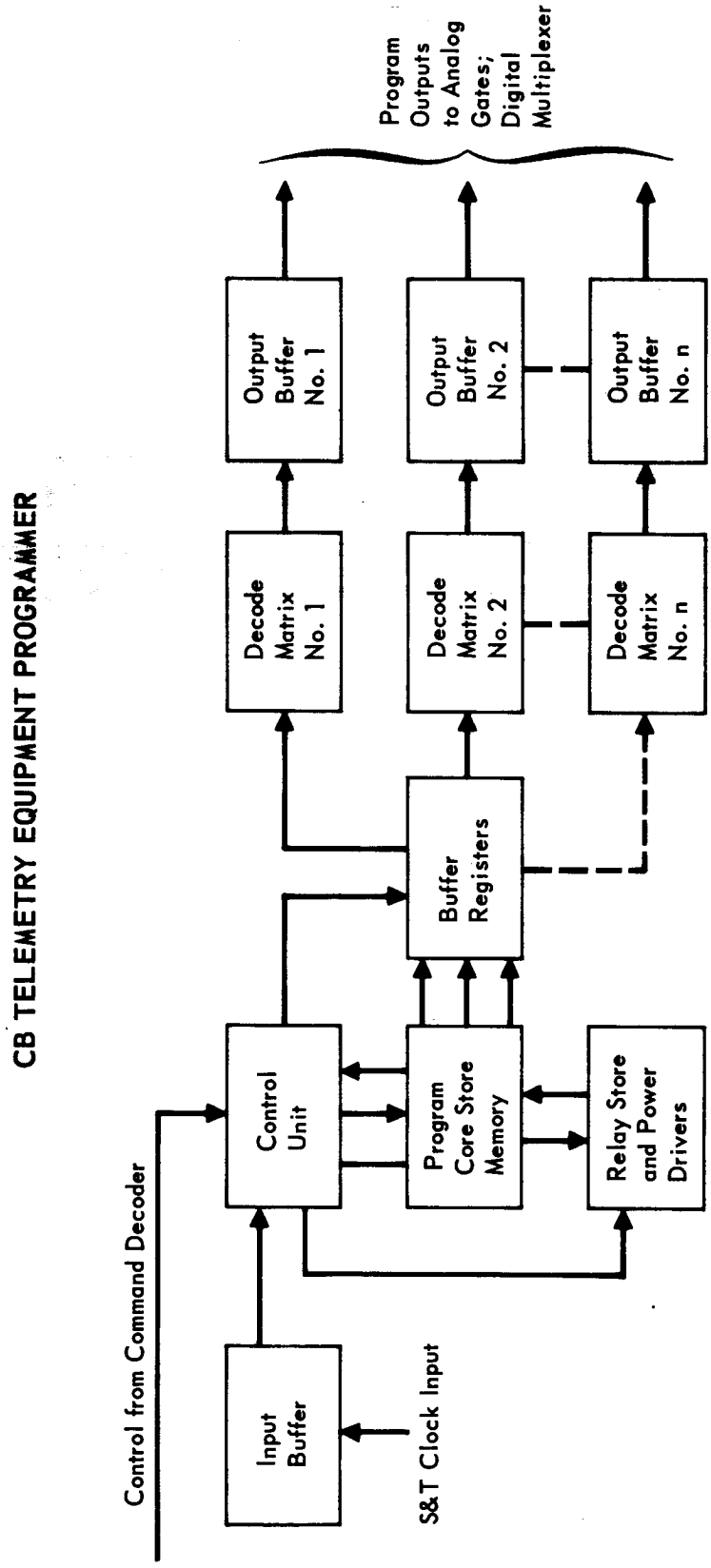
CB TELEMETRY EQUIPMENT PROGRAMMER
Control from Command Decoder
Input Buffer
S&T Clock Input
Control Unit
Program Core Store Memory
Relay Store and Power Drivers
Buffer Registers
Decode Matrix No. 1
Decode Matrix No. 2
Decode Matrix No. n
Output Buffer No. 1
Output Buffer No. 2
Output Buffer No. n
Program Outputs to Analog Gates; Digital Multiplexer

Figure 2.1–9

reinitiate the sampling of the next highest group.

The combination of a hardwired logic tube structure and stored program switch position assures (a) that a single core failure will not disrupt the entire format, and (b) a new switch position may be easily reprogrammed into core by a simple core address technique.

- Interleaver - The CB interleaving is shown in Figure 2.1-6. In the entry and terminal descent modes the ESP main TM is interleaved with the CB main TM on a word basis. Next this bitstream is interleaved on a bit basis with the 50 and 150 second delayed streams from the CB DSS to form the composite. This composite stream at 2730 bps is biphase encoded (Manchester II + 180) and routed to the Radio Subsystem.

During the de-orbit mode, the data is artifically boosted to 2730 bps by a sub-bit encoder. Each mark is encoded into a 10 bit PN word, and each space is encoded into an orthogonal 10 bit PN word.

2.1.5 Performance Characteristics

Input Signals

- Single Ended High Level, 0-5V, 0-5 kilo-ohm
- Double Ended Low Level, 0-40 mV, 0-500 ohm, maximum of 10V common mode
- Logic Level Digital inputs - 0 or 5V, 0-5 kilo-ohm
- Non-logic Level Bilevel - 0 or 28V, 0-10 kilo-ohm

Conversion Accuracy

- Single Ended High Level, ± 1 count in 126 counts
- Double Ended Low Level, ± 2 counts in 126 counts
- Logic Level Digital, 1 error in 10^5
- Non-logic Level Bilevel, 1 error in 10^3 with less than 1V as a "space" and greater than 4V as a "mark".

Output Signals

- All Digital, 0 or 5V, 5 kilo-ohm
- Straight binary encoded, NRZ zero and full scale suppression out of ADC
- Biphase Level coded serial PCM from main TM
- NRZ coded serial PCM from cruise commutator
- Sub-bit encoded de-orbit mode from main TM

Programming

- Interlaced or burst tube programming for all stored programs

- Matrix or interlaced tube programming for all hardwired programs
- Reprogram switch positions by radio command in stored programs
- Random access gate addressing

General

- Analog switching action is independent of source impedance
- DC isolation in all digital interfaces
- Signal, power and chassis ground isolation
- Vehicle time in each frame

2.1.6 Interfaces - The interfaces are given in Figure 2.1-10.

2.1.7 Reliability and Safety Considerations - The CBS Telemetry Equipment Reliability Model, and Fault Tree are shown in Figures 2.1-11, and 2.1-12. The estimated reliability for the CBS Telemetry Equipment is .985. The Cruise Commutator and Encoder has an estimated reliability of .995 excluding programming functions. Due to the continuous operation of the Cruise Commutator and Encoder throughout Interplanetary Cruise, active redundant analog data switches and standby redundant analog to Digital Converter has been incorporated into the design. The standby redundant ADC is switchable by command. Programming function redundancy considerations require further analysis. Alternatives include operation on a duty cycle basis, additional circuit redundancies or decentralization of programmer timing functions to permit limited operation and data retrieval in spite of individual failures. No special provisions are required because there are no high voltage applications in the Telemetry Equipment.

2.1.8 Test - The bulk of the telemetry using subsystems are tested through the telemetry subsystems during the test buildup from factory tests through lift-off. During the Mars orbit in-flight checkout mode, all of the using subsystems are tested through the telemetry subsystem. Prior to any of the using subsystems tests the telemetry is tested. The telemetry tests are conducted in three steps, a "cycle" through all modes, a memory readout mode, and a checkout mode, see Figure 2.1-13.

The telemetry tests are principally directed toward the major functional blocks by following a specific data "chain". Each "chain" is identified by a block of signal types, e.g., a low level calibration signal(s) is injected to a low level gate and the output of the TM (at the Radio Subsystem input) is monitored. This tests the chain of low level signals, namely, the gates and gate driver programming, the differential amplifier, the digital multiplexer, and the interleaver. Note that each individual gate is not tested (in-flight) but all of the major

CAPSULE BUS TELEMETRY INTERFACES

	Instrumentation Equip	S and T	CB Power Bus	CB Radio	CB DSS	FSC Command	DDU	Main CB Digital Mux	Main CB Programmer
Main CB Telemetry									
Analog Gates	X								
Digital Multiplexer	X	X							
Data Interleaver				X	X		X		
Clock		X							
Programmer		X				X			
DC to DC Converter			X						
Cruise Commutator									
Analog Gates	X								
Digital Multiplexer	X	X					X	X	
Clock							X		
Programmer		X					X		X
DC to DC Converter			X						

Figure 2.1–10

CAPSULE BUS TELEMETRY EQUIPMENT RELIABILITY MODEL

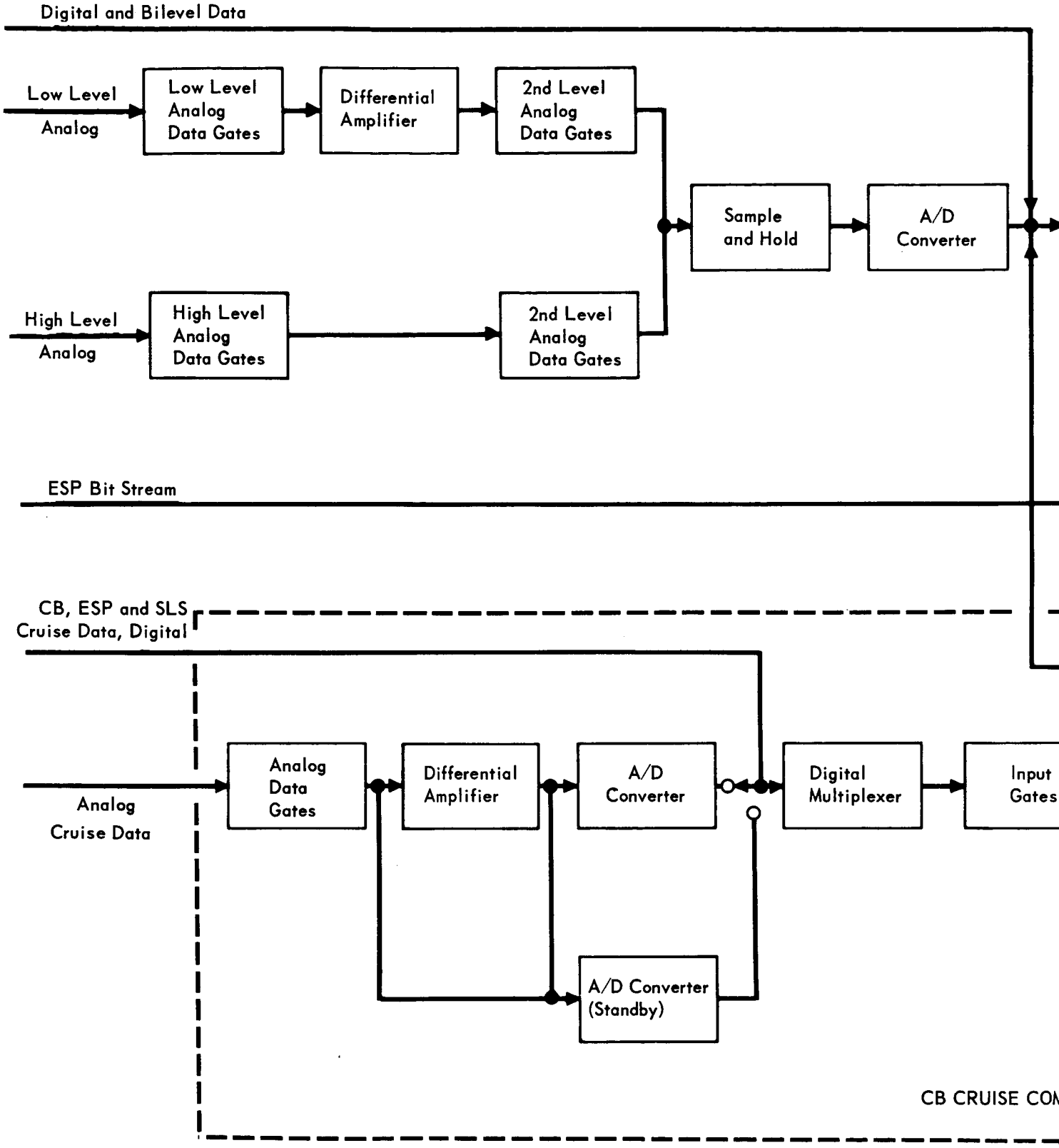

Figure 2.1-11

2-19 -1

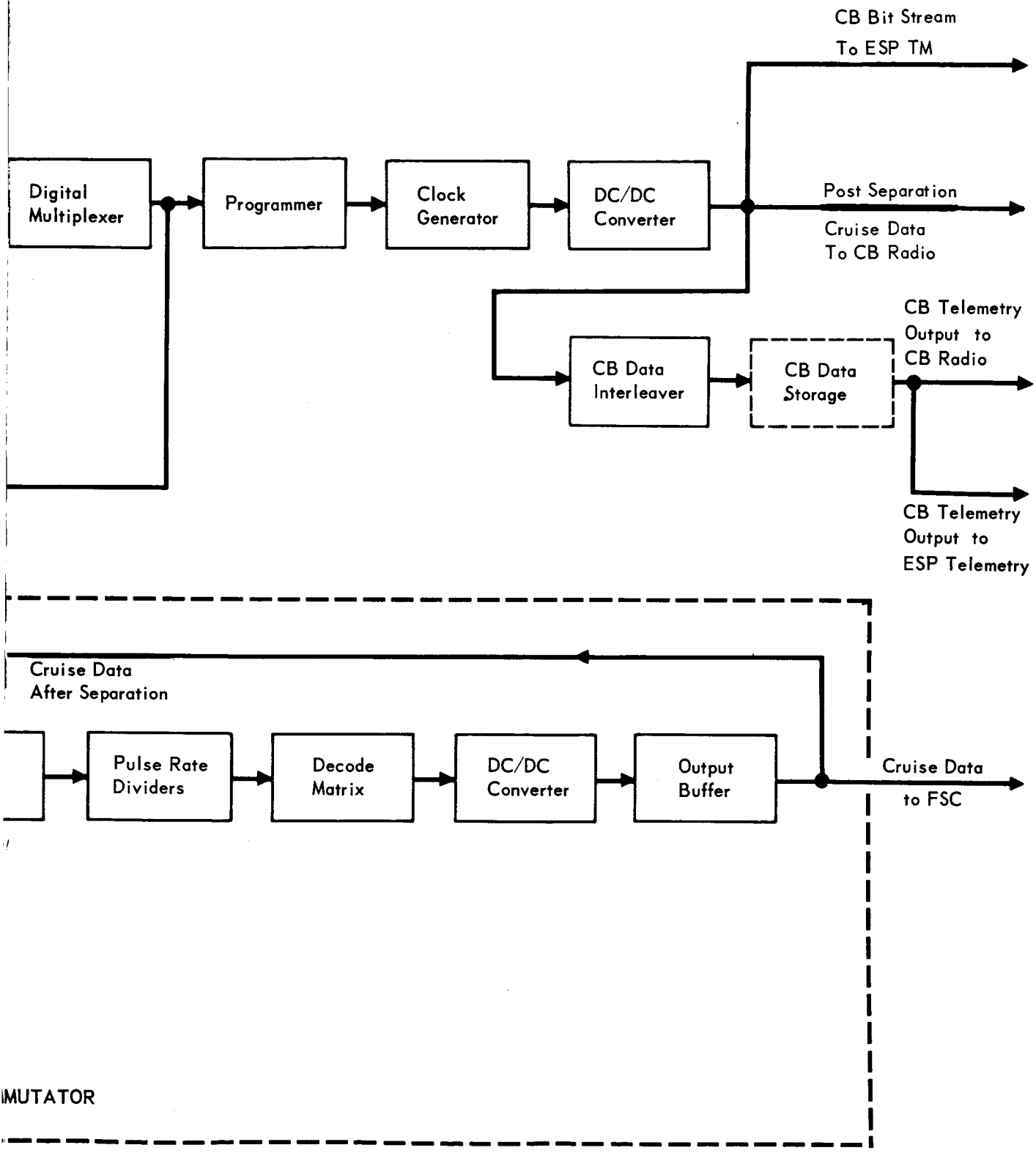
CB Bit Stream
To ESP TM
Digital Multiplexer
Programmer
Clock Generator
DC/DC Converter
Post Separation
Cruise Data
To CB Radio
CB Telemetry
Output to
CB Radio
CB Data Interleaver
CB Data Storage
CB Telemetry
Output to
ESP Telemetry
Cruise Data
After Separation
Pulse Rate Dividers
Decode Matrix
DC/DC Converter
Output Buffer
Cruise Data
to FSC
MUTATOR

CAPSULE BUS TELEMETRY EQUIPMENT RELIABILITY FAULT TREE

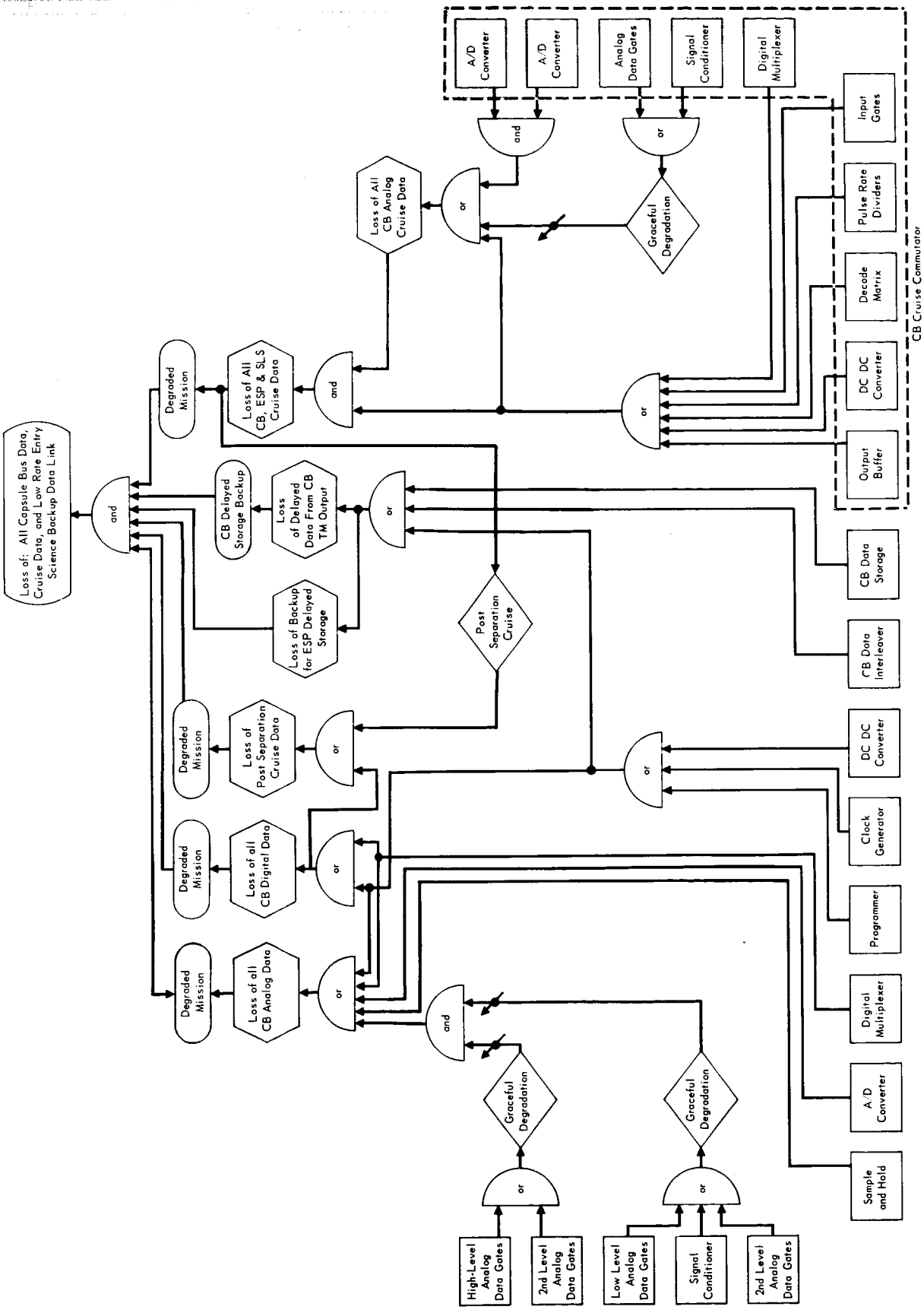

Figure 2.2–12

CAPSULE BUS TELEMETRY EQUIPMENT TEST MATRIX

TEST	Non Operative Test	CB Cruise Commutator	Commutating Gate Signal	Sequencing	Input Calibration Signals	A to D Calibration Signals	Digital Multiplexer	Digital Test Pattern	Operating Sequence	DC–DC Converter	Output Voltages	ADC/Multiplexer	Input Calibration Signals	A to D Calibration Signals	Clock Generator	Gating Signal Sequence and	Timer Input	Output Clock Signals	Programmer	Input Commands	Output Signal Sequence	Engr. Data Interleaver	Input Data	Output Data	Control and Timer Input Operations	Cruise Data Interleaver	Input Data	Control and Timer Input Operations	Output Data
ACCY REQ			Digital		1%	1%		Digital	Digital		2%		1%	1%		Digital		Digital		Digital	Digital		Digital	Digital	Digital		Digital	Digital	Digital
Telemetry Monitor Power					X	X		X	X		X		X	X						X	X				X			X	
System Test (Pre-Canister)			X		X	X		X	X		X		X	X		X		X		X	X		X	X	X		X	X	X
System Test (With Canister)					X	X		X	X		X		X	X						X	X				X			X	
Pre-Launch					X	X		X	X		X		X	X						X	X				X			X	
In-Flight Checkout					X	X		X	X		X		X	X						X	X				X			X	

Figure 2.1–13

functional blocks are tested. Factory testing checks each gate, while the individual gates are tested in-flight when monitoring the using subsystems.

2.1.9 Development Status - Aside from the normal VOYAGER development requirements, specifically reliability and sterilization, the CB TM will generally not require any state-of-the-art advances. The exception is the core stack drivers at low temperature. This problem in past space programs has been alleviated by close temperature control, however the battery weight necessary for the VOYAGER mission makes this solution prohibitively heavy.

2.2 SPACECRAFT MOUNTED FLIGHT CAPSULE TELEMETRY EQUIPMENT - The Spacecraft Mounted (S/C-MTD) Telemetry Support Equipment (TSE) provides the telemetry interface between the Entry Science Package (ESP), Surface Laboratory (SL), Capsule Bus (CB), Adapter and the Flight Spacecraft (FSC). The TSE has two major assemblies; the Data Distribution Unit (DDU) and the S/C-MTD Instrumentation and Commutation Unit (ICU). A functional block diagram is shown in Figure 2.2-1.

2.2.1 Equipment Identification and Usage - The ICU functions as a remote multiplexer to the FSC telemetry (TM). This unit gathers, and formats the data from the spacecraft mounted data sources. The ICU portion of the S/C-MTD TSE has the following major components.

a. analog gates (both single ended high level and double ended low level) including gate drivers
b. differential amplifier
c. analog to digital converter (including a sample and hold)
d. digital multiplexer (including schmidt triggers for non-logic level bilevels)
e. dc to dc converter

A block diagram of the ICU is shown in Figure 2.2-2. The ICU has a total of 64 signal inputs; 25 single ended high level, 10 double ended low level and 29 bilevel signals.

The DDU functions is the data interface unit between the FSC-TM and the cruise data sources, the inflight checkout data sources, and the de-orbit/landing data sources. The DDU has the following major components:

a. Mode controller,
b. Output data gating,
c. Radio - Storage data gating,
d. Cruise Commutator data gating,
e. In-flight checkout data gating, and
f. DC to DC converter.

The DDU works principally in conjunction with the FSC TM,FSC CC and S, FSC CMD, CB S/C-MTD Radio and Storage, ESP S/C-MTD Radio and Storage, Adapter and CB cruise commutators, CB, SL and ESP main commutators, and the CB and SL test programmers.

2.2.2 Design Requirements and Constraints - Aside from the usual VOYAGER requirements and constraints of:

a. low power consumption,
b. hard vacuum space environment,
c. long life,

SPACECRAFT MOUNTED FLIGHT CAPSULE TELEMETRY SUPPORT EQUIPMENT

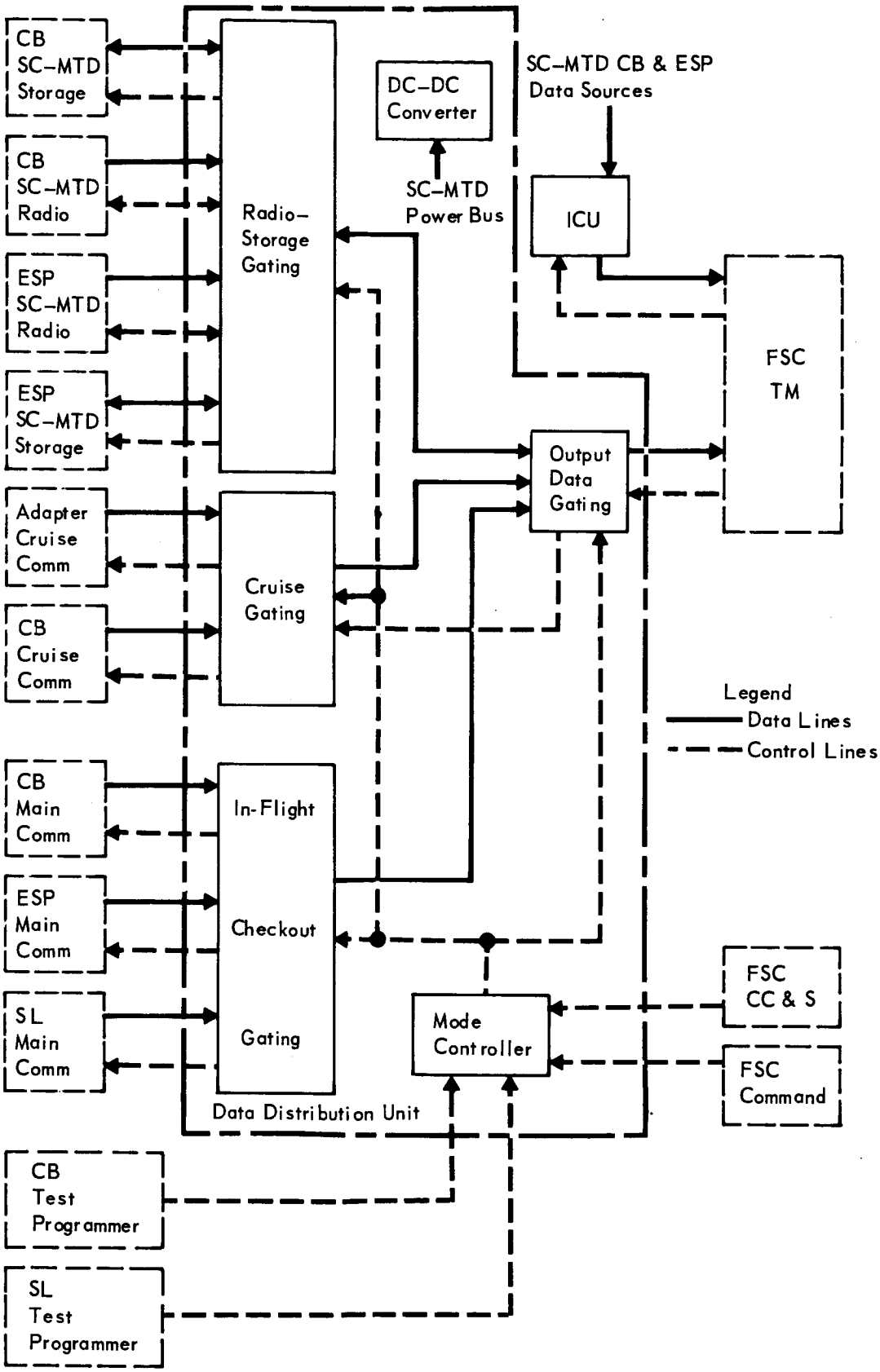

Figure 2.2-1

THE INSTRUMENTATION AND COMMUTATION UNIT

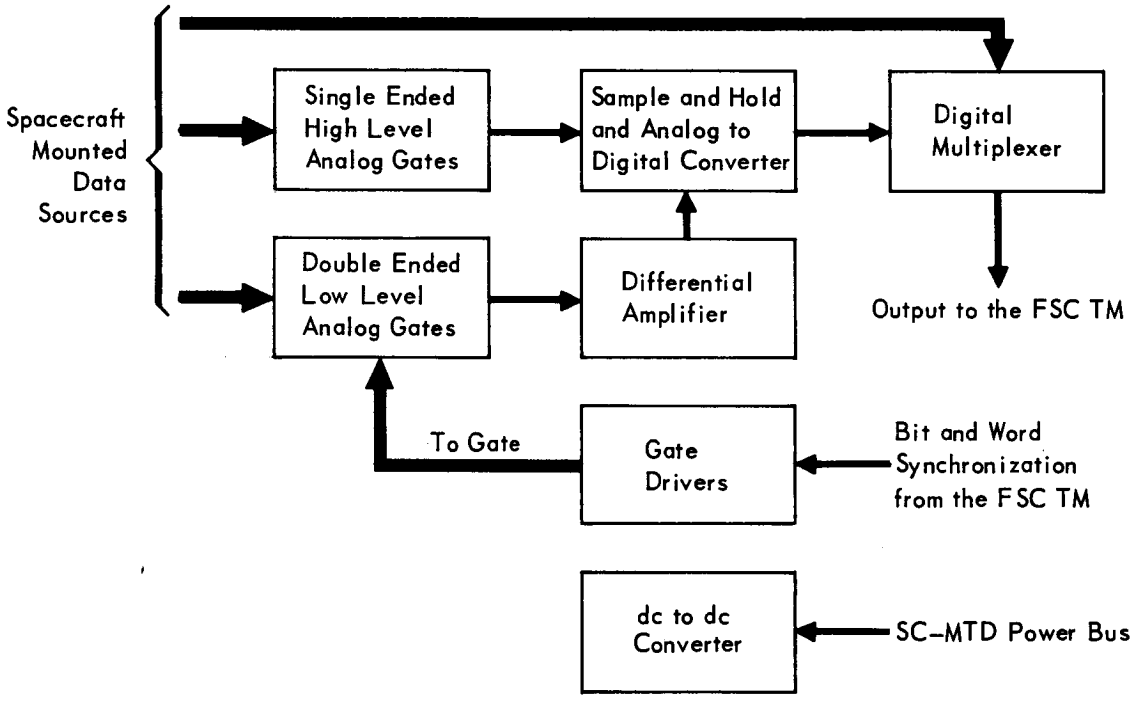

Figure 2.2–2

d. reliability, and

e. satisfactory operation after a long dormancy,

the TSE has specific data oriented requirements and constraints. These are:

a. significant redundancy in the ICU -- due to the long operating lifetime,

b. DC isolation of all digital interfaces -- reducing ground loop vehicle noise,

c. graceful degradation.

2.2.3 Physical Characteristics - The DDU occupies 128 cubic inches, weighs 3.2 lbs and requires 2 watts. The ICU occupies 112 cubic inches, weighs 2.8 lbs and requires 1.7 watts.

2.2.4 Operational Description - The operational description is divided into two parts. The first part describes the modes of operation of the equipments in terms of the mission phases. The second part describes the functions of the principal components.

2.2.4.1 Operational Modes - The TSE operates in four modes; launch and interplanetary cruise, in-flight checkout, separation and real time data mode, and data playback mode.

- Launch and Interplanetary Cruise Mode - During this mode the bulk of the equipments are off; only the ICU and cruise commutators in the CB and adapter are on. The ICU, as a remote multiplexer, is under the control of the FSC-TM in all modes. The cruise gates route the Adapter (4 bps) and CB (7 bps) cruise commutator data to the FSC-TM at 11 bps.
- In-flight Checkout Mode - During this mode the DDU receives its principal mode control inputs from the CB and SL test programmers. These signals configure the DDU gating as a function of in-flight checkout test flow. In DDU terms the checkout may be considered as three submodes. The principle submode will consist of directly routing the appropriate main commutator output (CB, ESP or SL) to the FSC-TM. A radio submode will consist of "matching" each link up, e.g., CB transmitter to CB receiver to CB storage and then to FSC-TM. An ESP television submode will route the ESP commutator output to the ESP store, at 55,860 bps, then to the FSC-TM at 2730 bps. All of the DDU inputs to the FSC-TM during the in-flight checkout mode are at 2730 bps, except for the radio submode time when the CB is transmitting at 273 bps (the CB de-orbit mode).
- Separation and Real Time Data Mode - Immediately upon CB separation from the FSC the S/C-MTD CB Radio will be receiving data at 273 bps from the CB

Radio. The DDU will route this data to both the S/C-MTD CB storage and to the FSC-TM. When 800,000 feet is sensed in the CB, the CB radio will shift to 2730 bps and the ESP radio comes on at 55,860 bps. The DDU will continue to route the S/C-MTD radio to both the S/C-MTD storage and to the FSC-TM. S/C-MTD ESP radio data will be routed to the S/C-MTD ESP storage for later playback. The S/C-MTD CB radio outputs a control signal for the S/C-MTD storage to identify which rate is being received.

- Data Playback Mode - Upon command from the FSC, the DDU will initiate playback from either the S/C-MTD CB or ESP data storage subsystems to the FSC-TM. All playback rates will be at either 2730 or 273 bps.

2.2.4.2 Component Description - The ICU is a conventional remote multiplexer to the FSC-TM, and the DDU is a digital interface unit.

- ICU Components - The input signals are gated through MOSFET switches appropriately "treed," that is the gates are arranged into subgroups such that the failure of a single input switch will not propagate further than the subgroup. The specific treeing design is a function of the maximum allowable back current onto the data sources, programming efficiency and, most importantly, reliability. The single ended high level signals are gated directly to the sample and hold portion of the analog to digital converter. The double ended low level signals first pass through a differential simplifier which converts them to single ended high level signals, and then to the sample and hold. The sample and hold change time is chosen to minimize aperture error. The analog to digital converter output is gated through the digital multiplexer together with the bilevel data. All of the bilevel data is buffered -- the "logic level" digital data being directly buffered, while the "non-logic level" bilevels are passed through schmidt triggers for voltage conversion. The gate drivers are individually addressable from the FSC-TM.

- DDU Components - With the exception of the dc to dc converter, all of the DDU components are "logic level" digital gates. The mode controller is the central component in the DDU. This unit accepts the "configuring" commands from external sources to propertly set the gates within the DDU. These commands originate the FSC CC and S and CMD, and also from the CB and SL test programmers.

When the FSC CC and S configures the DDU to the cruise mode, the cruise gating accepts bit and word synchronization control from the FSC-TM via

the output gater and transfers these pulses to the CB cruise and adapter commutators. The cruise gating then word interleaves the adapter/canister output at 4 bps with the CB cruise commutator output at 7 bps into a composite 11 bps for transfer to the FSC via the output gate.

During the in-flight checkout mode, after an in-flight go ahead from the FSC CC and S, the mode controller accepts commands from either the CB or SL test programmer (as a function of the test cycle). The in-flight gating receives "cycling" commands from the mode controller and routes the normal main commutator (CB, ESP and SL) outputs to the output gate.

In the separation/real time mode, initiated by an FSC-CC amd S command, the radio - storage gates (under mode controller control) route between the two S/C-MTD radios, the two S/C-MTD storages and the output data gate.

The output data gate serves to sort between the three input groups of gates and route to the FSC-TM. In the ESP television checkout mode, it routes the ESP main commutator output (from the in-flight checkout gates) totthe ESP S/C-MTD sorte(through the radio - storage gates).

2.2.5 Performance Characteristics - The performance characteristics of the ICU are:

Input Signals	° Single Ended High Level, 0-5V, 0-5 kilohm
	° Double Ended Low Level, 0-40 mV, 0-500 ohm, maximum of 10v common mode
	° Logic Level Bilevels, 0 or 5V, 0-5 kilohm
	° Non-Logic Level Bilevels, 0 or 28V, 0-10 kilohm
Conversion Accuracy	° Single Ended High Level, $\pm$ 1 count in 126
	° Double Ended Low Level, $\pm$ 1 count in 126
	° Logic Level Bilevels, 1 error in 10^5
	° Non-Logic Level Bilevels, 1 error in 10^3 with less than 1v as a "space" and greater than 4v as a "mark"
Output Signals	° Straight binary encoded NRZ with zero and full scale suppression
	° Voltage, 0 or 5 kilohm
	° Impedance, 5 kilohm
Programming	° Random access gates, remotely addressable
General	° Analog switching action is independent of source impedance
	° DC isolation of all digital interfaces
	° Signal, power and chassis ground insolation

The performance characteristis of the DDU are:

Input Signals	°	All digital, 0 or 5V, 5K ohm
	°	DC isolation
Output Signals	°	All digital, 0 or 5V, 5K ohm
	°	DC isolation
Accuracy	°	1 error in 10^5 transmitted pules
General	°	Signal, power and chassis ground isolated

2.2.6 Interfaces - The interfaces are given in Figure 2.2-3.

2.2.7 Reliability and Safety Considerations - The Telemetry Support Equipment Reliability Model, and Fault Tree are shown in Figures 2.2-4, and 2.2-5. The estimated reliability for the TSE is .992. The ICU Equipment Reliability is estimated to be .997 and the DDU Equipment is estimated at .995. Due to continuous operation of the Data Distribution Unit throughout interplanetary cruise and the relative importance of this function during subsequent mission phases, redundancy has been incorporated into the design. All data distribution switches are active redundant. DC-DC Converter redundancy considerations require further analysis. Alternatives include active redundant (load sharing) circuit components or additonal decentralization of converter functions to permit operation in spite of individual failures. No special safety provisions are required because there are no high voltage applications in this equipment.

2.2.8 Test - Testing will be conducted as listed in the test matrix, Figure 2.2-6. The ICU tests are directed toward the major functional blocks by following a specific data "chain." Each chain is identified by a block of signal types, e.g., a low level calibration signal is injected to a low level gate and the output of the digital multiplexer is monitored. This tests the chain of low level signals, namely the gates and gate drivers, the differential amplifier, the analog to digital converter and the digital multiplexer. Each individual gate is not tested in-flight, but all of the major function blocks are tested. Factory testing tests each gate, while the individual gates are "tested" in-flight when monitoring the using subsystems.

The DDU does not lend itself to in-flight testing per se as the components are individually addressable gates. The DDU is tested in-flight when employed by the using subsystems. Factory testing will, of course, check each gate.

2.2.9 Development Status - Aside from the normal VOYAGER development requirements, specifically reliability and low power drain, the TSE will not require any state-of-the-art advances.

INTERFACES

	ICU				DDU						
	● Analog Gates	● Digital Multiplexer	● Gate Drivers	● DC to DC Converter	● Cruise Gating	● Checkout Gating	● Radio-Storage Gating	● Output Data Gating	● Mode Controller	● DC to DC Converter
Instrumentation Sensors	X	X								
FSC TM Programming			X					X		
FSC TM Clock								X		
SC–MTD Power Bus				X						X
FSC TM Digital Max		X						X		
FSC CC and S									X	
FSC CMD									X	
CB Test Programmer									X	
SL Test Programmer									X	
Adapter Cruise Comm Digital Max					X					
CB Cruise Comm Digital Max					X					
Adapter Cruise Comm Programmer					X					
CB Cruise Comm Programmer					X					
CB Main Comm Digital Max						X				
CB Main Comm Programmer						X				
ESP Main Comm Digital Max						X				
ESP Main Comm Programmer						X				
SL Main Comm Digital Max						X				
SL Main Comm Programmer						X				
CB SC–MTD Radio Synch. Output Data							X			
CB SC–MTD Radio Synch Out CMD							X			
ESP SC–MTD Radio Synch Data Out							X			
ESP SC–MTD Radio Synch CMD Out							X			
CB SC–MTD Storage Mode CMD							X			
CB SC–MTD Storage Data In							X			
CB SC–MTD Storage Data Out							X			
ESP SC–MTD Storage Mode CMD							X			
ESP SC-MTD Storage Data In							X			
ESP SC–MTD Storage Data Out							X			

Figure 2.2–3

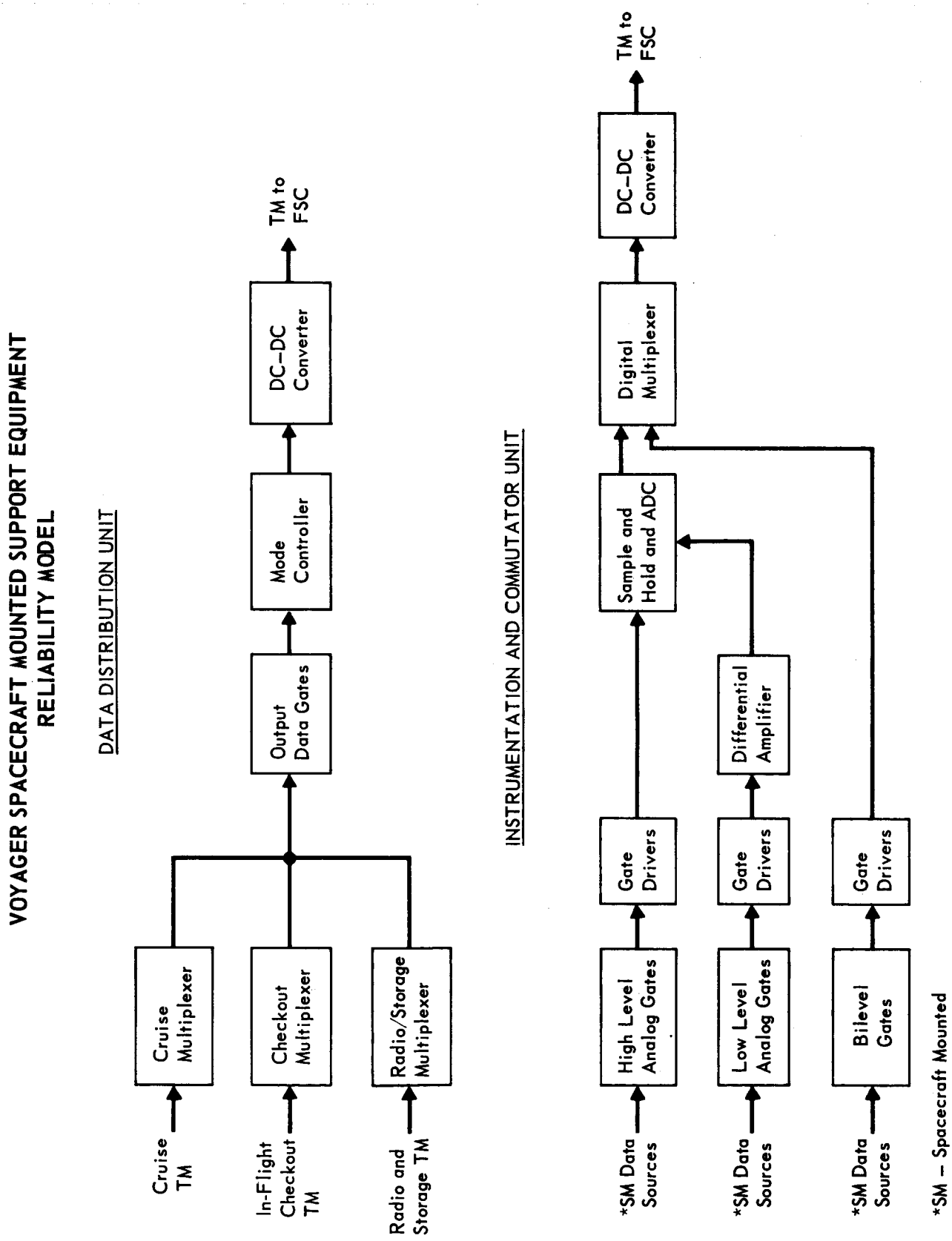
VOYAGER SPACECRAFT MOUNTED SUPPORT EQUIPMENT
RELIABILITY MODEL
DATA DISTRIBUTION UNIT
Cruise TM
In-Flight Checkout TM
Radio and Storage TM
Cruise Multiplexer
Checkout Multiplexer
Radio/Storage Multiplexer
Output Data Gates
Mode Controller
DC–DC Converter
TM to FSC
INSTRUMENTATION AND COMMUTATOR UNIT
*SM Data Sources
*SM Data Sources
*SM Data Sources
High Level Analog Gates
Low Level Analog Gates
Bilevel Gates
Gate Drivers
Gate Drivers
Gate Drivers
Differential Amplifier
Sample and Hold and ADC
Digital Multiplexer
DC–DC Converter
TM to FSC
*SM – Spacecraft Mounted

Figure 2.2–4

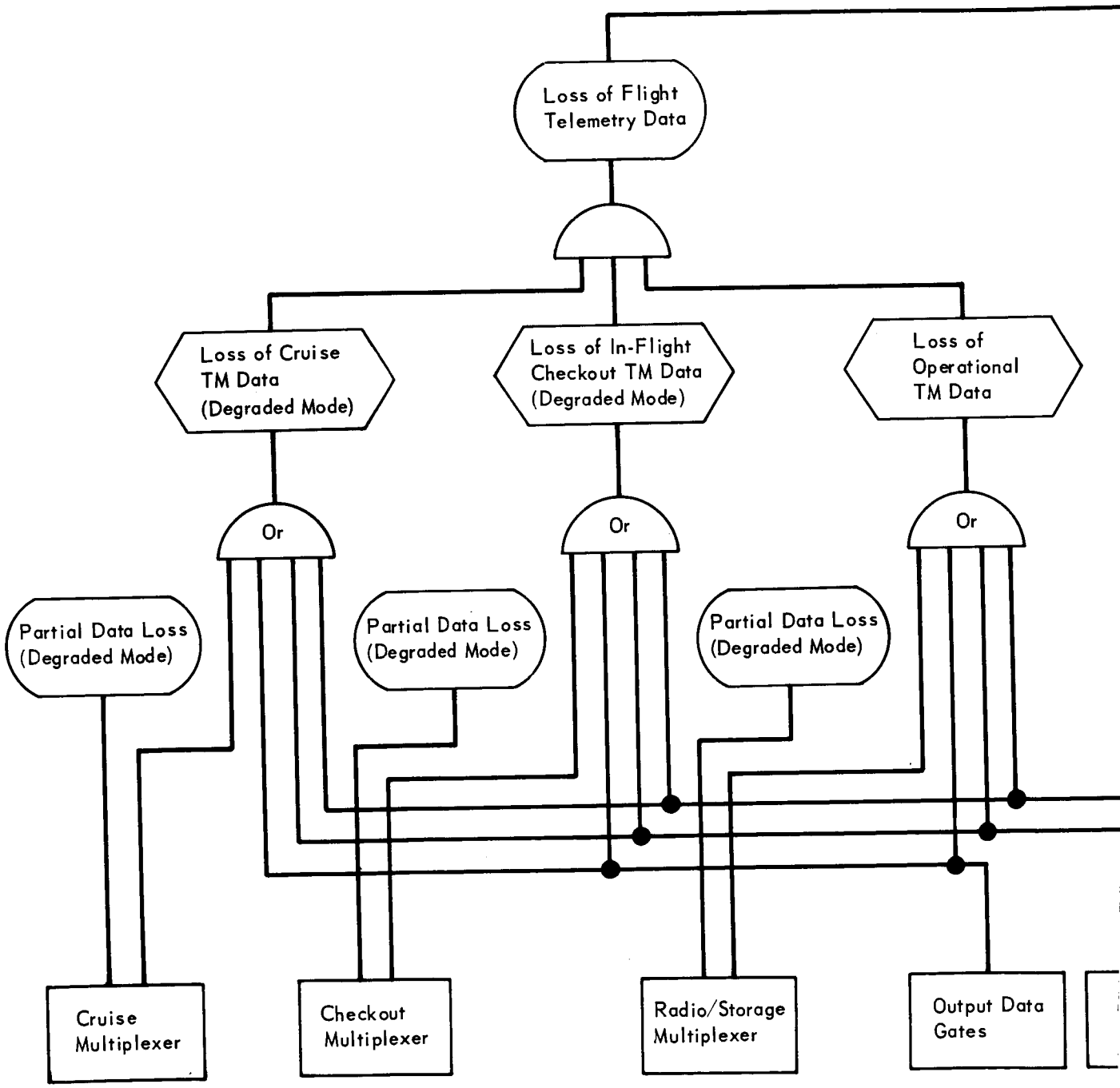

DATA DISTRIBUTION UNIT

A

Figure 2.2–5

NTED SUPPORT EQUIPMENT RELIABILITY FAULT TREE

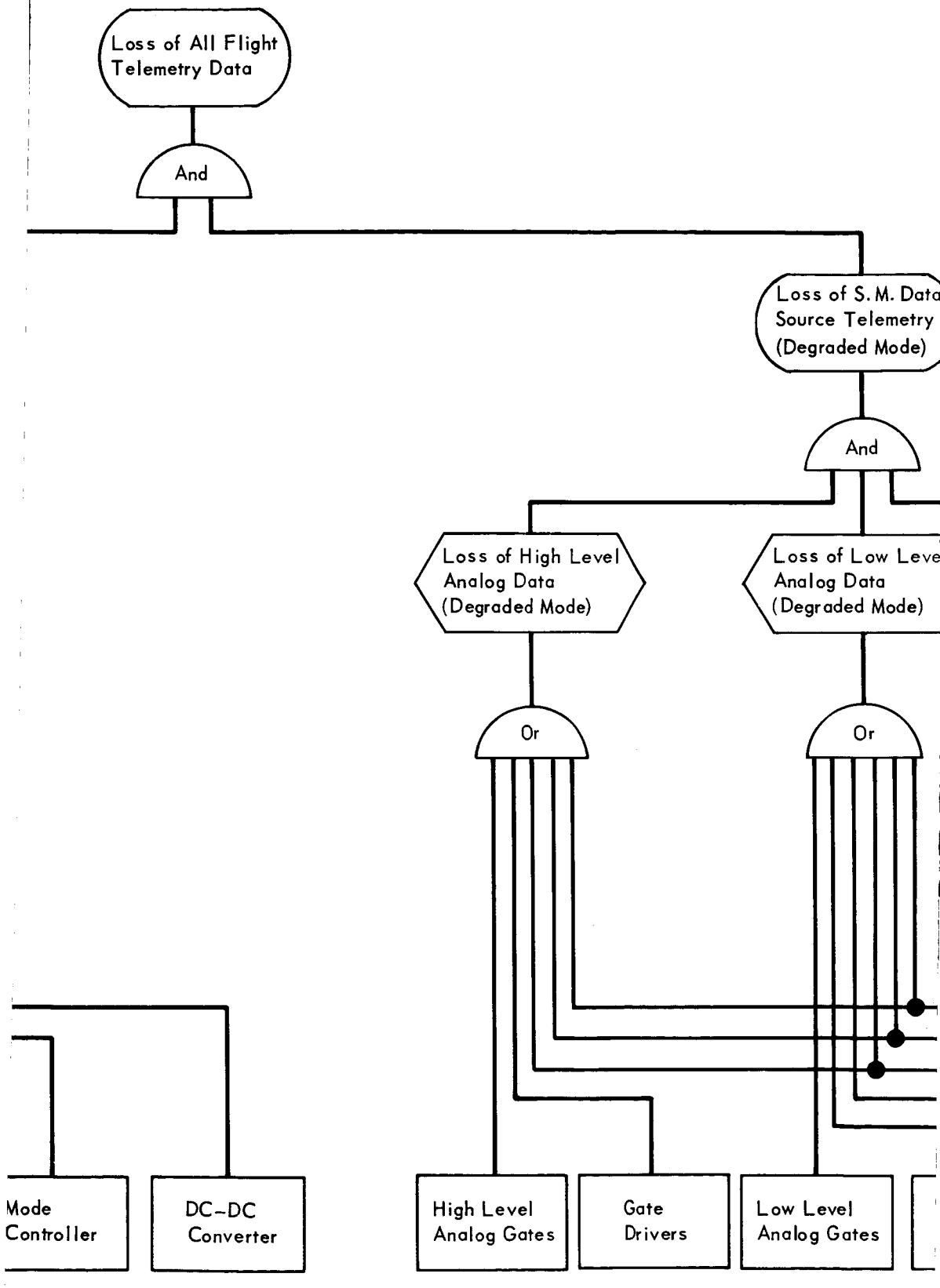

INS

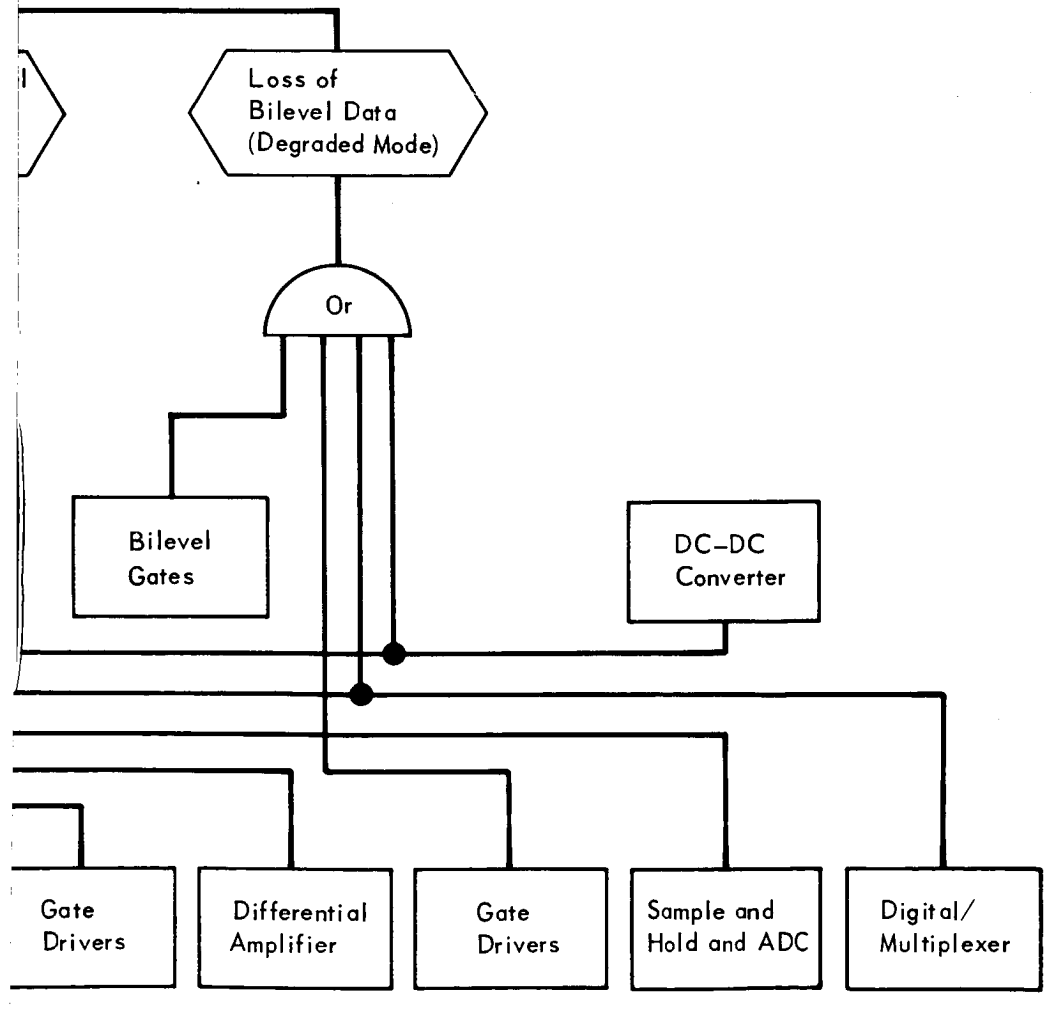

TRUMENTATION AND COMMUTATOR UNIT

B

2-32-3

CAPSULE BUS SPACECRAFT-MOUNTED FLIGHT CAPSULE SUPPORT TELEMETRY EQUIPMENT

TEST	ACCY REQ	In-Flight Checkout	Pre-Launch	System Test	Telemetry
Non Operative Test					
Data Distribution Unit					
Power Supply Voltage	3%			X	
Power Supply Current	3%			X	
Input Clocks	Digital			X	
Output Clocks	Digital			X	
Input Data	Digital			X	
Output Data	Digital	X	X	X	X
Input Commands	Digital			X	
Operating Sequence	Digital	X	X	X	X
Output Commands	Digital	X	X	X	X
Support Equipment Commutator					
Power Supply Voltage	3%			X	
Power Supply Current	3%			X	
Input Clock	Digital			X	
Commutation Sequence	Digital			X	
Input Analog Signals	1%			X	
Data Output	Digital	X	X	X	X
Conversion Accuracy	1%			X	

Figure 2.2–6

2.3 TELEMETRY INSTRUMENTATION - This section presents the functional description of the instrumentation equipment required for acquisition of the CB engineering performance and diagnostic data. The instrumentation equipment is identified as that portion of the telemetry subsystem where the data signals are sensed and conditioned to outputs compatible with the PCM encoders. The equipment configuration described herein is typical and evolved from a study of the CB engineering measurement requirements as summarized in the Instrumentation List of Part B. All components selected are potentially within the state-of-the-art and are based on designs which have been successfully used by McDonnell.

2.3.1 Equipment Identification and Usage - The instrumentation equipment is divided into three categories - transducers, signal conditioners, and associated instrumentation power supplies.

2.3.1.1 Transducers - Transducers are located throughout the CB to provide performance and diagnostic data from the CB and its subsystems. The specific transducer types required are temperature, pressure, position, acceleration, and liquid level sensors. A preliminary list of CB transducers with functional and performance information appears in Figure 2.3-1. The list includes transducer part numbers used or other aerospace applications which are representative of those that would be used on the CB. The quantity of each type of transducer required is given in Figure 2.3-2.

2.3.1.2 Signal Conditioners - The signal conditioners accept and process analog, bilevel and digital data signals from the various subsystems and supply inputs compatible with the PCM encoders. All nonstandard analog signals are scaled to the 0 to 5 volt PCM system range. Signal conditioning of data signals is accomplished either in the subsystem equipment, the telemetry equipment or in a self-contained Signal Process Unit (SPU). Figure 2.3-3 contains an overall list of signal conditioning requirements including type and location. Signal conditioning through the use of the SPU is described in this section. The majority of the binary signal conditioning takes place in the telemetry equipment and, therefore, is discussed along with that equipment. Where signal conditioning can be more easily accomplished at the source, it will be contained in the subsystem design. However, the same design philosophy of circuit isolation, impedance transformation, and scaling applies to this category.

CBS INSTRUMENTATION – TRANSDUCER LIST

DATA IDENT NO.	MEASUREMENT	SUBSYSTEM	RANGE	REPRESENTATIVE TRANSDUCERS: SIMILAR TO MANUF./PART NO.	USED ON	TYPE	INPUT POWER	OUTPUT SIGNAL	SIZE	WEIGHT LB
Temperature										
GC 1–6	G & C System Temperature (6)	Guidance & Control	Control Temp ± 10°F	–	–	Thermistor	5 Vdc, .4 mA	0–40 mVdc	.25 in.^{3}	.20
GC 7–9	Gyro Temperature (3)	Guidance & Control	175° ± 5°F	–	–	Thermistor	5 Vdc, .4 mA	0–40 mVdc	.25 in.^{3}	.20
GC 10–12	Accelerometer Temperatures (3)	Guidance & Control	175° ± 5°F	–	–	Thermistor	5 Vdc, .4 mA	0–40 mVdc	.25 in.^{3}	.20
DC 1	DAE Oscillator Temperature	Telemetry	25° to 150°F	RDF/55P886010–7	122Y	Thermoresistive	5 Vdc, .4 mA	0–40 mVdc	1 x .8 x .4 [1]	.18
RJ 3–6	Reaction Control System Temp (4)	RCS	–50° to 300°F	RDF/55P886010–5	122Y	Thremoresistive	5 Vdc, .4 mA	0–40 mVdc	1.1 x .5 x .4	.123
DP 1	De-Orbit Propulsion Case Temp	De-Orbit Propulsion	–50° to 300°F	RDF/55P886010–5	122Y	Thermoresistive	5 Vdc, .4 mA	0–40 mVdc	1.1 x .5 x .4	.123
LC 6–14	Terminal Propulsion Temp (9)	Terminal Propulsion	–50° to 300°F	RDF/55P886010–5	122Y	Thermoresistive	5 Vdc, .4 mA	0–40 mVdc	1.1 x .5 x .4	.123
EC 2–5	Battery Temperature (4)	Power	0 to 120°F	RDF/55P886010–5	122Y	Thermoresistive	5 Vdc, .4 mA	0–40 mVdc	1.1 x .5 x .4	.123
EC 12–13	DC/DC Converter Temperature (2)	Power	0 to 120°F	RDF/55P886010–5	122Y	Thermoresistive	5 Vdc, .4 mA	0–40 mVdc	1.1 x .5 x .4	.123
TC 17–26	Insulation Blanket Temp (10)	Thermal Control	–350° to 200°F	RDF/55P886010–7	122Y	Thermoresistive	5 Vdc, .4 mA	0–40 mVdc	1 x .8 x .4 [1]	.18
TC 27–36	Aeroshell Bond Line Temp (10)	Thermal Control	–200° to 1000°F	Rosemount/52–88721–21	Gemini	Thermoresistive	5 Vdc, .4 mA	0–40 mVdc	1.5 x 1.5 x .4 [1]	.20
TC 45–54	Aeroshell Equipment Temp (10)	Thermal Control	–200° to 200°F	RDF/55P886010–5	122Y	Thermoresistive	5 Vdc, .4 mA	0–40 mVdc	1.1 x .5 x .4	.123
TC 65–70	Aeroshell Surface Temperature (6)	Thermal Control	–200° to 1000°F	Rosemount/52–88721–21	Gemini	Thermoresistive	5 Vdc, .4 mA	0–40 mVdc	1.5 x 1.5 x .4 [1]	.20
TC 71–76	Aeroshell Surface Temperature (6)	Thermal Control	0 to 3000°F	GE/55P886006–5	122Y	Thermocouple	–	0–32 mVdc	1/16" dia	.10
RA 10	Radar-Altimeter Temperature	Radar Altimeter	–200 to 300°F	RDF/55P886010–7	122Y	Thremoresistive	5 Vdc, .4 mA	0–40 mVdc	1 x .8 x .4 [1]	.18
RA 33	Radar-Altimeter Temperature	Radar Altimeter	–50° to 250°F	RDF/55P886010–7	122Y	Thermoresistive	5 Vdc, .4 mA	0–40 mVdc	1 x .8 x .4 [1]	.18
LR 43–44	Landing Radar Temperature (2)	Landing Radar	–60° to 185°F	RDF/55P886010–7	122Y	Thermoresistive	5 Vdc, .4 mA	0–40 mVdc	1 x .8 x .4 [1]	.18
RC 3–4	UHF Xtal Temperature	Radio	25° to 150°F	RDF/55P886010–7	122Y	Thermoresistive	5 Vdc, .4 mA	0–40 mVdc	1 x .8 x .4 [1]	.18
SQ 1	S & T Master Oscillator Temperature	Sequencer	50° to 100°F	RDF/55P886010–7	122Y	Thermoresistive	5 Vdc, .4 mA	0–40 mVdc	1 x .8 x .4 [1]	.18
Pressure										
RJ 1	RCS Source Pressure	RCS	0 to 4500 psia	Servonic/55P886008–39	122Y	Potentiometric	5 Vdc, .25 mA	0–5 Vdc	1.0 Dia x 2.75	.313
RJ 2	RCS Regulator Pressure	RCS	0 to 500 psia	Servonic/55P886008–43	122Y	Potentiometric	5 Vdc, .25 mA	0–5 Vdc	1.0 Dia x 2.75	.313
LC 1	Terminal Propulsion Source Pressure	Terminal Propulsion	0 to 4500 psia	Servonic/55P886008–39	122Y	Potentiometric	5 Vdc, .25 mA	0–5 Vdc	1.0 Dia x 2.75	.313
LC 2–5	Terminal Propulsion Regulator Pressure (4)	Terminal Propulsion	0 to 1500 psia	Servonic/55P886008–35	122Y	Potentiometric	5 Vdc, .25 mA	0–5 Vdc	1.0 Dia x 2.75	.313
LC 24–27	Terminal Propulsion Engine Chamber Pressure (4)	Terminal Propulsion	0 to 500 psia	Servonic/55P886008–43	122Y	Potentiometric	5 Vdc, .25 mA	0–5 Vdc	1.0 Dia x 2.75	.313
TC 37–44	Heat Pipe Fluid Pressure (8)	Thermal Control	0 to 15 psia	Servonic/55P886008–21	122Y	Potentiometric	5 Vdc, .25 mA	0–5 Vdc	1.0 Dia x 2.4	.313
AR 8–24	Aeroshell Pressure (17)	Aerodynamic	0 to 5 psia	Servonic/55P886008–7	122Y	Potentiometric	5 Vdc, .25 mA	0–5 Vdc	1.0 Dia x 2.8	.313
AR 25	Lander Pitot Pressure	Aerodynamic	0 to .5 psia	CCC/52–88722–5	Gemini	Variable Reluctance	28 Vdc, .35 mA	0–5 Vdc	1.53 x 2.53 x 3.44	1.0
Motion										
LC 20–23	Terminal Propulsion – Throttle Position (4)	Terminal Propulsion	0 to .5 in.	Cresent		LVDT	28 Vdc, 30 mA	0–5 Vdc	1.2 Dia x 2.2	.63
AR 1	Accelerometer – No. 1 Axial	Aerodynamic	–5 to 5 g	Systron Donner/55P886012–3	122Y	Servo-Force Balance	28 Vdc, 50 mA	0–5 Vdc	1.50 x 1.50 x 3.50	.5
AR 2	Accelerometer – No. 2 Axial	Aerodynamic	0 to 70 g	Systron Donner/55P886012–3	122Y	Servo-Force Balance	28 Vdc, 50 mA	0–5 Vdc	1.50 x 1.50 x 3.50	.5
AR 4	Accelerometer – Lateral	Aerodynamic	–5 to 5 g	Systron Donner/55P886012–3	122Y	Servo-Force Balance	28 Vdc, 50 mA	0–5 Vdc	1.50 x 1.50 x 3.50	.5
AR 5	Accelerometer – Vertical	Aerodynamic	–5 to 5 g	Systron Donner/55P886012–3	122Y	Servo-Force Balance	28 Vdc, 50 mA	0–5 Vdc	1.50 x 1.50 x 3.50	.5
Level										
LC 28–34	TP – Propellant Level (2)	Terminal Propulsion				Thermistor Probe	2	6 Bilevels	1/2 Dia x 18	.5

NOTES:
1 Bridge and Sensing Element Are Separate.
2 Power Included in Signal Conditioner.

Figure 2.3–1

CBS Transducer Types and Quantities

Transducer	No. Required/Subsystem
Temperature Sensor	12 - G/C
	1 - Sequencer
	2 - Radar Altimeter
	2 - Landing Radar
	9 - Terminal Propulsion
	4 - RCS
	1 - Deorbit Propulsion
	6 - Power
	42 - Thermal Control
	2 - Radio
	1 - T/M
	82 TOTAL
Thermocouple	6 - Thermal Control
Pressure Transducer	9 - Terminal Propulsion
	2 - RCS
	18 - Aerodynamic
	29 TOTAL
Position Transducer	4 - Terminal Propulsion
Accelerometer	4 - Aerodynamic
Liquid Level Probe	2 - Terminal Propulsion

Figure 2.3-2

2.3.1.3 Instrumentation Power Supplies - This equipment is comprised of two dc/dc converters which convert raw dc power from the battery to regulated 5 Vdc power. This power provides excitation to the temperature sensors and the potentiometric transducers and provides calibration linearity voltages to the commutators.

2.3.2 Design Requirements and Constraints - The CB instrumentation equipment for the most part will be modifications or evolutions of existing designs influenced by VOYAGER peculiar constraints. The principal constraints influencing the modifications are sterilization, low power consumption, satisfactory operation in a hard vacuum environment for approximately 6,000 hours and satisfactory operation after a dormancy period of approximately 6,000 hours.

2.3.2.1 Transducers - The specific measurement requirements are:

Temperature - Extensive structural, equipment, and component temperature measure-

CBS INSTRUMENTATION – SIGNAL CONDITIONING LIST

DATA IDENT. NO.	MEASUREMENT	SUBSYSTEM	RANGE	SIGNAL CONDITIONING		
				LOCATION	TYPE	OUTPUT
GC 16	ac Power Supply Input Voltage	G&C	15 to 35Vdc	SPU	dc Signal Conv.	0 to 5Vdc
GC 17	dc Power Supply Input Voltage	G&C	15 to 35Vdc	SPU	dc Signal Conv.	0 to 5Vdc
GC 18	G&C Battery Voltage	G&C	15 to 35Vdc	SPU	dc Signal Conv.	0 to 5Vdc
GC 19	ADC 4Vdc Power Supply Voltage	G&C	2 to 6Vdc	SPU	dc Signal Conv.	0 to 5Vdc
GC 20	ADC 10Vdc Power Supply Voltage	G&C	8 to 12Vdc	SPU	dc Signal Conv.	0 to 5Vdc
GC 21	ADC –10Vdc Power Supply Voltage	G&C	–12 to –8Vdc	SPU	dc Signal Conv.	0 to 5Vdc
GC 22	ADC 7Vdc Power Supply Voltage	G&C	5 to 9Vdc	SPU	dc Signal Conv.	0 to 5Vdc
GC 23	ADC –7Vdc Power Supply Voltage	G&C	–9 to –5Vdc	SPU	dc Signal Conv.	0 to 5Vdc
GC 24	ADC 6.3Vdc Power Supply Voltage	G&C	6 to 7Vdc	SPU	dc Signal Conv.	0 to 5Vdc
GC 25	ADC –6.4Vdc Power Supply Voltage	G&C	–7 to –6Vdc	SPU	dc Signal Conv.	0 to 5Vdc
GC 26	ADC 20Vdc Power Supply Voltage	G&C	16 to 24Vdc	SPU	dc Signal Conv.	0 to 5Vdc
GC 13–15	Gyro Speed (3)	G&C	Bilevel	PCM	Binary	Bilevel
GC 27	Computer Digital Data	G&C	20 Bits	PCM	Binary	Digital
DC 4	DAE Input Voltage	Telemetry	15 to 35Vdc	SPU	dc Signal Conv.	0 to 5Vdc
DC 6–8	A/D Linearity Voltage (3)	Telemetry	0 to 5Vdc	–	–	0 to 5Vdc
DC 13	Cruise Comm. Input Voltage	Telemetry	15 to 35Vdc	SPU	dc Signal Conv.	0 to 5Vdc
DC 14–16	Cruise Comm. ADC Linearity Voltage (3)	Telemetry	0 to 5Vdc	–	–	0 to 5Vdc
DC 9–11	Low Level Amp. Linearity Volt. (3)	Telemetry	0 to 40mVdc	–	–	0 to 40mVdc
DC 12	Transducer Voltage Source	Telemetry	0 to 40mVdc	–	–	0 to 40mVdc
DC 17–19	Cruise Comm. Low Level Amp. Linearity Volt. (3)	Telemetry	0 to 40mVdc	–	–	0 to 40mVdc
DC 5	Slaved to Ref. Frequency	Telemetry	Bilevel	PCM	Binary	Bilevel
DC 2	Telemetry Mode	Telemetry	4 bits	PCM	Binary	Digital
DC 3	Vehicle Time	Telemetry	10 bits	PCM	Binary	Digital
DC 20	Cruise Comm. Telemetry Mode	Telemetry	4 bits	PCM	Binary	Digital
DC 27	Telemetry Memory Readout	Telemetry	–	PCM	Binary	Digital
DC 21–23	A/D Linearity Voltages (3)	Telemetry	0 to 5Vdc	–	–	0 to 5Vdc
DC 24–26	Low Level Amplifier Linearity Voltages (3)	Telemetry	0 to 40mVdc	–	–	0 to 40mVdc
PY (1)	Pyrotechnic Current Pulse (57)	Pyrotechnic	Pulse	SPU	Level Detector	Bilevel
PY (2)	Pyrotechnic Relay Closure (28)	Pyrotechnic	Bilevel	PCM	Binary	0 to 5Vdc
RJ 7–9	Cartridge Valve Actuations (3)	RCS	Bilevel	PCM	Binary	Bilevel
RJ 10–17	RCS Thrust Chamber Valve Opng. (8)	RCS	4 bits	SPU	Pulse Detector (3)	Bilevel
LC 15–17	Cartridge Valve Actuations (3)	Terminal Propulsion	Bilevel	PCM	Binary	Bilevel
LC 18	.05g Relay-Activation Sensor	Terminal Propulsion	Bilevel	PCM	Binary	Bilevel
LC19	Engine Start Valve	Terminal Propulsion	Bilevel	PCM	Binary	Bilevel
DP 2	Motor Ignition	De-Orbit Propulsion	Bilevel	PCM	Binary	Bilevel
DP 4	Nozzle Release	De-Orbit Propulsion	Bilevel	PCM	Binary	Bilevel
DP 5	Ignitor Arm Verification	De-Orbit Propulsion	Bilevel	PCM	Binary	Bilevel

Figure 2.3-3

TC 55–64	Aeroshell Heater Current (10)	Thermal Control	0 to 2A	–	–	0 to 40mVdc
LR 1–2	LR Transmitter Power (2)	Landing Radar		LR Subsystem		0 to 5Vdc
LR 3	LR Modulator Sweep Amp.	Landing Radar		LR Subsystem		0 to 5Vdc
LR 4	LR Modulator Sweep Frequency	Landing Radar		LR Subsystem		0 to 5Vdc
LR 46–50	LR Received Beam Signal Strength	Landing Radar		LR Subsystem		0 to 5Vdc
LR 39	LR –4Vdc Power Supply Voltage	Landing Radar	–4 to –2Vdc	SPU	dc Signal Conv.	0 to 5Vdc
LR 40	LR 6Vdc Power Supply Voltage	Landing Radar	4 to 8Vdc	SPU	dc Signal Conv.	0 to 5Vdc
LR 41	LR 30Vdc Power Supply Voltage	Landing Radar	25 to 35Vdc	SPU	dc Signal Conv.	0 to 5Vdc
LR 42	LR –30Vdc Power Supply Voltage	Landing Radar	–35 to –25Vdc	SPU	dc Signal Conv.	0 to 5Vdc
LR 10	LR Range	Landing Radar		LR Subsystem		0 to 5Vdc
LR 11–14	LR Velocity (4)	Landing Radar		LR Subsystem		0 to 5Vdc
LR 15	LR 150 kc Pulse Train	Landing Radar		LR Subsystem		0 to 5Vdc
LR 20–29	LR Pre-Amp Output (10)	Landing Radar		LR Subsystem		0 to 40mVdc
LR 35–38	LR Doppler & Range Simulator Sig. (4)	Landing Radar		LR Subsystem		0 to 40mVdc
LR 5–9	LR Tracker Lock-On Signals (5)	Landing Radar	Bilevel	PCM	Binary	Bilevel
LR 45	LR Range Low Scale Factor	Landing Radar	Bilevel	PCM	Binary	Bilevel
LR 30–34	LR AGC Gain State of Pre-Amp (5)	Landing Radar	Bilevel	PCM	Binary	Bilevel
LR 16–18	LR Velocity Output (3)	Landing Radar		PCM	Binary	Digital
LR 19	LR Range Output	Landing Radar	15 bits	PCM	Binary	Digital
AR 3	Axial Accelerometer Range	Aerodynamic	Bilevel	SPU	Binary	Bilevel
AR 6	Lateral Accelerometer Range	Aerodynamic	Bilevel	SPU	Binary	Bilevel
AR 7	Vertical Accelerometer Range	Aerodynamic	Bilevel	SPU	Binary	Bilevel
RC 1–2	UHF Transmitter Power (2)	Radio		Radio Subsystem		0 to 5Vdc
RC 5–6	UHF Oscillator Drive	Radio		Radio Subsystem		0 to 5Vdc
RC 7	UHF Antenna VSWR	Radio		Radio Subsystem		0 to 5Vdc
RC 8–9	UHF Transmitter Frequency (2)	Radio		Radio Subsystem		0 to 5Vdc
RC 10–11	Modulator Verification (2)	Radio		Radio Subsystem		0 to 5Vdc
SQ 6–8	SQ Power Supply Voltage (3)	Sequencer	0 to 20Vdc	SPU	dc Signal Conv.	0 to 5Vdc
SQ 2	SQ Frequency Monitor Reference	Sequencer	Bilevel	PCM	Binary	Bilevel
SQ 3	SQ Command Receipt Parity Check	Sequencer	Bilevel	PCM	Binary	Bilevel
SQ 4	SQ Address Decoder Entry	Sequencer	7 bits	PCM	Binary	Digital
SQ 5	SQ Driver Output Counter	Sequencer	7 bits	PCM	Binary	Digital
SQ 9	SQ Memory Readout	Sequencer	7 bits	PCM	Binary	Digital
EC 1	Battery Voltage	Power	15 to 35Vdc	SPU	dc Signal Conv.	0 to 5Vdc
EC 6	Battery Charge Current	Power	0 to 2A	SPU	Magnetic Amp.	0 to 5Vdc
EC 7–8	DC-DC Reg Output Voltage (2)	Power	25 to 30Vdc	SPU	dc Signal Conv.	0 to 5Vdc
EC 15–17	Squib Battery Voltage (2)	Power	25 to 30Vdc	SPU	dc Signal Conv.	0 to 5Vdc

EC 10–11	DC-DC Converter Current (2)	Power	0 to 8A	–	–	0 to 40mVdc
EC 20–23	Battery Current (4)	Power	0 to 25A	–	–	0 to 40mVdc
EC 18	Power Transfer Switch Operation	Power	Bilevel	PCM	Binary	Digital
EC 19	Redundant Battery Switch Operation	Power	Bilevel	PCM	Binary	Bilevel
RA 2	Regulator Voltage	Radar Altimeter	23 to 33Vdc	SPU	dc Signal Conv.	0 to 5Vdc
RA 3	6.3Vdc Power Supply Voltage	Radar Altimeter	6 to 7Vdc	SPU	dc Signal Conv.	0 to 5Vdc
RA 4	–7.3Vdc Power Supply Voltage	Radar Altimeter	–8 to –7Vdc	SPU	dc Signal Conv.	0 to 5Vdc
RA 5	12Vdc Power Supply Voltage	Radar Altimeter	10 to 14Vdc	SPU	dc Signal Conv.	0 to 5Vdc
RA 6	–12Vdc Power Supply Voltage	Radar Altimeter	–14 to –10Vdc	SPU	dc Signal Conv.	0 to 5Vdc
RA 7	15Vdc Power Supply Voltage	Radar Altimeter	13 to 17Vdc	SPU	dc Signal Conv.	0 to 5Vdc
RA 8	450Vdc Power Supply Voltage	Radar Altimeter	375 to 525Vdc	SPU	dc Signal Conv.	0 to 5Vdc
RA 9	1000Vdc Power Supply Voltage	Radar Altimeter	850 to 1150Vdc	SPU	dc Signal Conv.	0 to 5Vdc
RA 11–12	AFC (2)	Radar Altimeter		RA Subsystem		0 to 5Vdc
RA 13–14	AGC (2)	Radar Altimeter		RA Subsystem		0 to 5Vdc
RA 15	Transmitter Incident Volts	Radar Altimeter		RA Subsystem		0 to 5Vdc
RA 16	Transmitter Reflected Volts	Radar Altimeter		RA Subsystem		0 to 5Vdc
RA 17	Transmitter Pulse Width	Radar Altimeter		RA Subsystem		0 to 5Vdc
RA 20–21	Transmitter Current	Radar Altimeter		RA Subsystem		0 to 5Vdc
RA 1	Power Input	Radar Altimeter	Bilevel	PCM	Binary	Bilevel
RA 18–19	Tracker Lock-On (2)	Radar Altimeter	Bilevel	PCM	Binary	Bilevel
RA 22	Modulator Hold-Off	Radar Altimeter	Bilevel	PCM	Binary	Bilevel
RA 23	Mode Switch	Radar Altimeter	Bilevel	PCM	Binary	Bilevel
RA 24–26	Discrete Altitude Marks (3)	Radar Altimeter	Bilevel	PCM	Binary	Bilevel
RA 31–32	Range Accumulator (2)	Radar Altimeter	Bilevel	PCM	Binary	Bilevel
RA 27–28	Mixer (2)	Radar Altimeter	7 bits	PCM	Binary	Digital
RA 29	False Alarm Count	Radar Altimeter	4 bits	PCM	Binary	Digital
RA 30	Altitude	Radar Altimeter	14 bits	PCM	Binary	Digital

Notes: SPU – Signal Process Unit

(1) Data Ident. Nos. 1, 2, 5–11, 16–21, 24, 25, 28–29, 32–35, 38–41, 44–49, 52–57, 60–65, 70, 71, 74–77, 80–85.

(2) Data Ident. Nos. 3, 4, 12–15, 22, 23? 26, 27, 30, 31, 36, 37, 42, 43, 50, 51, 58, 59, 66, 67, 72, 73, 78, 79.

(3) Requires counter in PCM

B

2-373

ments are required to provide important temperature-time histories during all mission phases for:

- o Verification of proper thermal control performance
- o Verification that temperature critical electronic components and batteries are maintained within the controlled temperature spans
- o Indication of critical electronic component operating temperatures
- o Indication of aerodynamic heating of aeroshell during the entry phase
- o Calculation of mass quantities in closed gas and liquid systems
- o Diagnosis of failures and failure mode determination.

Pressure - Pressure measurements are required for:

- o Verification of adequate propulsion system pressures
- o Calculation of propulsion system leakage
- o Indication of terminal propulsion chamber pressures during terminal descent
- o Aerodynamic performance during entry and terminal descent

Position - Measurement of terminal propulsion throttle valve positions is required during pre-separation checkout and terminal descent operations.

Acceleration - Acceleration measurements are required to obtain aerodynamic performance during entry and terminal descent phases and to verify deorbit engine ignition.

Level - Discrete indication of the liquid level is required in the fuel and oxidizer terminal propulsion tanks during pre-separation checkout to verify that adequate propellant is present for landing.

2.3.2.2 Signal Process Unit - The following signal conditioning is required in the Signal Process Unit.

- o Monitoring of power system bus voltages, and G&C, telemetry, landing radar, sequencer, and radar altimeter power supply voltages
- o Current monitoring of the power system battery charge current intermittently during space flight
- o Detection of the pyrotechnic firing current pulse to each squib circuit
- o Detection of liquid level at discrete intervals in the terminal propulsion propellant tanks
- o Monitoring of RCS poppet valve movement

2.3.2.3 Instrumentation Power Supplies - The main requirements of the instrumentation power supply are to convert 28 Vdc battery power to a precision 5 Vdc with high efficiency and long term stability for excitation of the temperature sensors and potentiometric transducers during the entire mission.

2.3.3 Physical Characteristics - The size and weight of typical transducers is given in Figure 2.3-1. Outline drawings of those transducers with reference part numbers are illustrated in Figure 2.3-4.

2.3.3.1 Transducers - Temperature sensors will be used to measure temperature up to 1,000 degrees F. These sensors connected in a conventional wheatstone bridge arrangement will be of two types, i.e., integral bridge and element or separate element and bridge. The integral bridge sensors have a platinum resistance element and bridge completion network molded into one integral unit. The sensing elements are fully annealed pure platinum wire amounted in a strain free manner. Where it is not possible to mount an integral bridge sensor a separate element and remote bridge will be used. Depending on the location, surface temperature sensors are attached by cementing or spot welding of flanges. Silver doped epoxy cement will be used for good heat transfer.

Thermocouples will be used on the Aeroshell to measure temperatures up to 3,000 degrees F. These thermocouples will consist of W5Re/W26Re thermoelements, with ceramic insulation, and a coated columbium 1/16-inch diameter sheath.

All pressure transducers will be of the potentiometric type with the exception of the pitot pressure sensor. The mechanical portion of the potentiometric pressure transducers is a bellows or bourdon tube, depending on the pressure range, which varies the wiper position of the potentiometer with input pressure variation. The pitot pressure transducer will be of the variable reluctance type with integral oscillator and amplifier for a 0 to 5 Vdc output.

The accelerometers will be a pendulous force-balance type with self-contained electronics.

The liquid level sensors will be contained in 1/2-inch diameter by 18-inch probes with thermistor sensors located at three discrete levels. The electronics required for the liquid level sensing system will be located in the SPU.

2.3.3.2 Signal Process Unit - The CB SPU will be a self-contained unit consisting of plug-in, solid state, signal converter modules and associated power converter modules; interconnecting wiring; interface connectors; necessary hardware; and a suitable enclosure. The SPU will be designed for flexibility to accommodate changes in quantity, type and range of measurements. The initial configuration will have the following types of modules with one or more signal converters per module:

- Voltage monitor

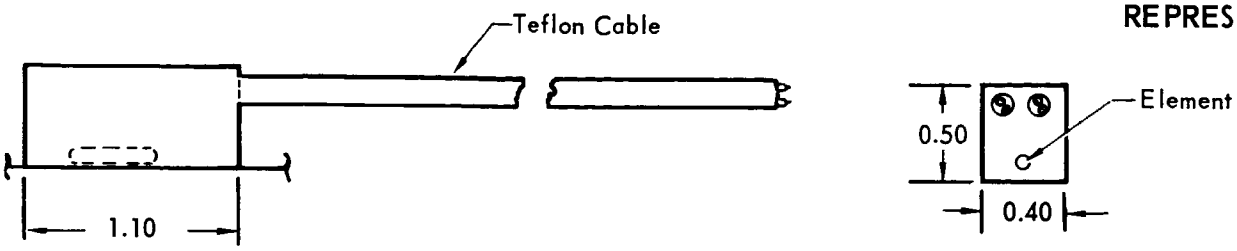

55P886010–5 TEMPERATURE SENSOR/INTEGRAL BRIDGE & ELEMENT

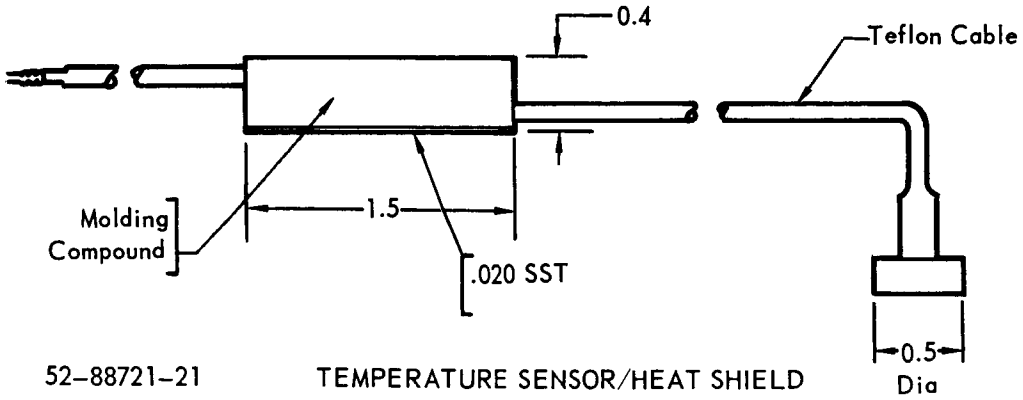

52–88721–21 TEMPERATURE SENSOR/HEAT SHIELD

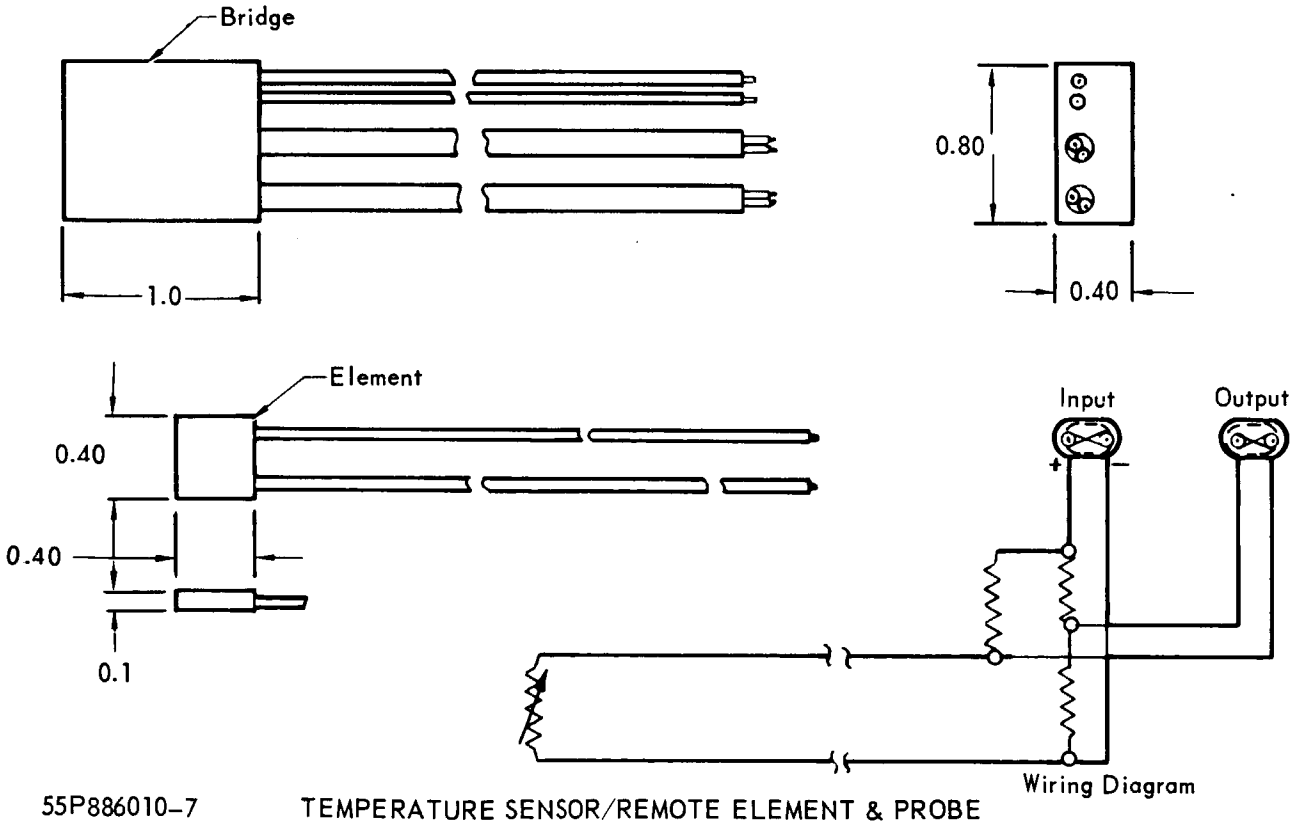

55P886010–7 TEMPERATURE SENSOR/REMOTE ELEMENT & PROBE

Figure 2.3–4

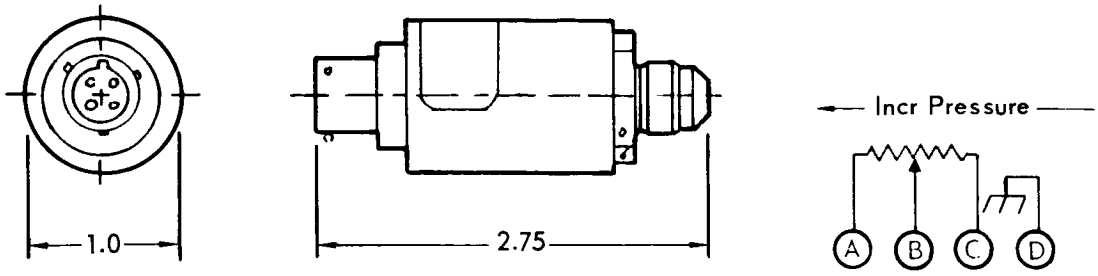

55P886008–39 PRESSURE TRANSDUCER

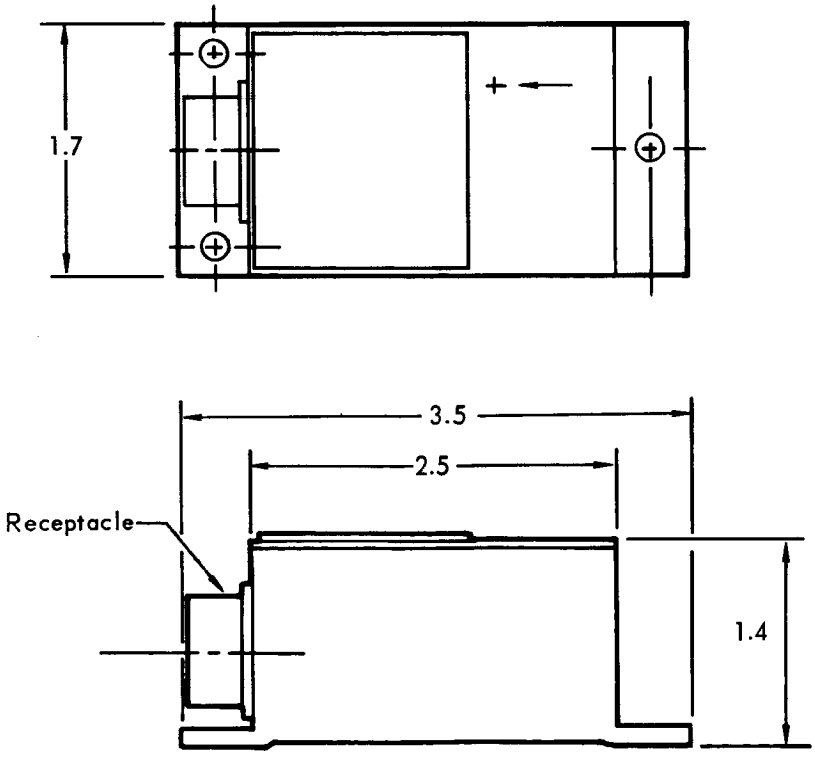

55P886012–3 LINEAR ACCELEROMETER

- o Current monitor
- o Liquid level monitor
- o RCS poppet valve monitor
- o Pyrotechnic current pulse detector
- o Power supply

Each module of the same type will have standardized dimensions and connector pin assignments for interchangeability. The SPU will have the flexibility to be procured either as a unit from a single source or to be procured by module types from several sources. Future optimization studies or requirements may reveal it would be feasible to locate certain type modules in decentralized locations. The design flexibility of the SPU allows this to be readily accomplished. The configuration of the SPU is governed by the quantity of modules needed for CB measurements. A preliminary estimate of the SPU size is 30 modules in a 12 inch by 9 inch by 4 inch configuration and weighing approximately 15 pounds. This initial configuration provides for 10 per cent excess signal conditioning capability. Total SPU power consumption is estimated to be 20 watts.

2.3.3.3 Instrumentation Power Supplies - The two instrumentation power supplies are identical self-contained units consisting of a solid state DC/DC converter, regulator and filter circuitry, interface connector, necessary hardware, and a suitable enclosure. Each unit will be approximately 3.5 inches by 2.5 inches by 1.0 inch with a maximum weight of .5 pounds and a maximum power consumption of .5 watts.

2.3.4 Operation Description - The functional operation of the instrumentation equipment is illustrated in the block diagram, Figure 2.3-5. The instrumentation equipment provides the following functions throughout the mission:

- o Subsystem status cruise monitoring data
- o Subsystem in-flight checkout data.
- o Failure diagnostic data.

Information concerning the mission phases and sequences for the individual transducers and signal conditioners while in operation appears in the CB instrumentation list of Part B. Functional operations are discussed further in the subsequent paragraphs.

2.3.4.1 Transducers - The temperature sensors and potentiometric pressure transducers are in operation throughout launch and interplanetary cruise to Mars surface impact and are powered by the two instrumentation power supplies.

CBS INSTRUMENTATION EQUIPMENT BLOCK DIAGRAM

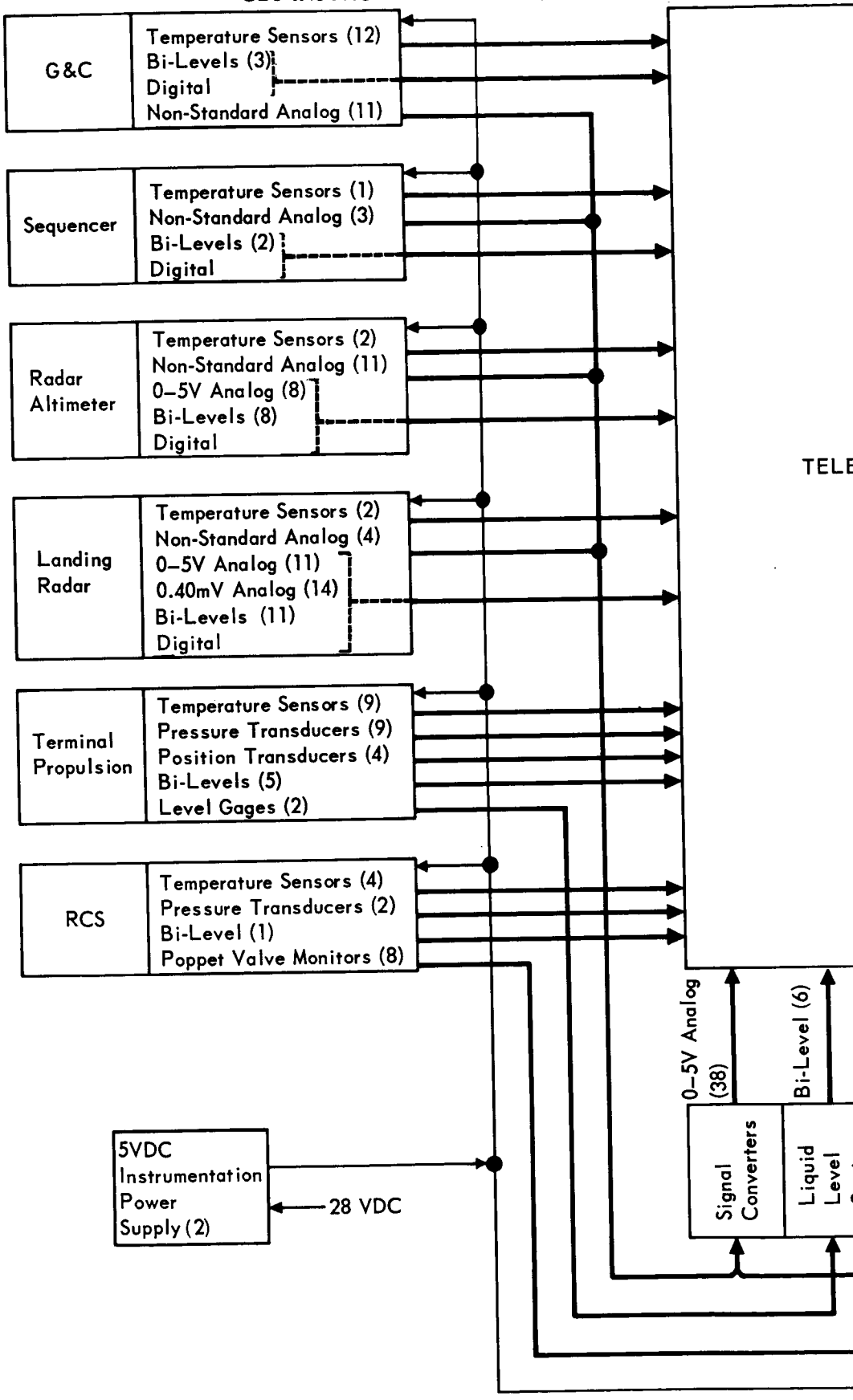

2-42-1

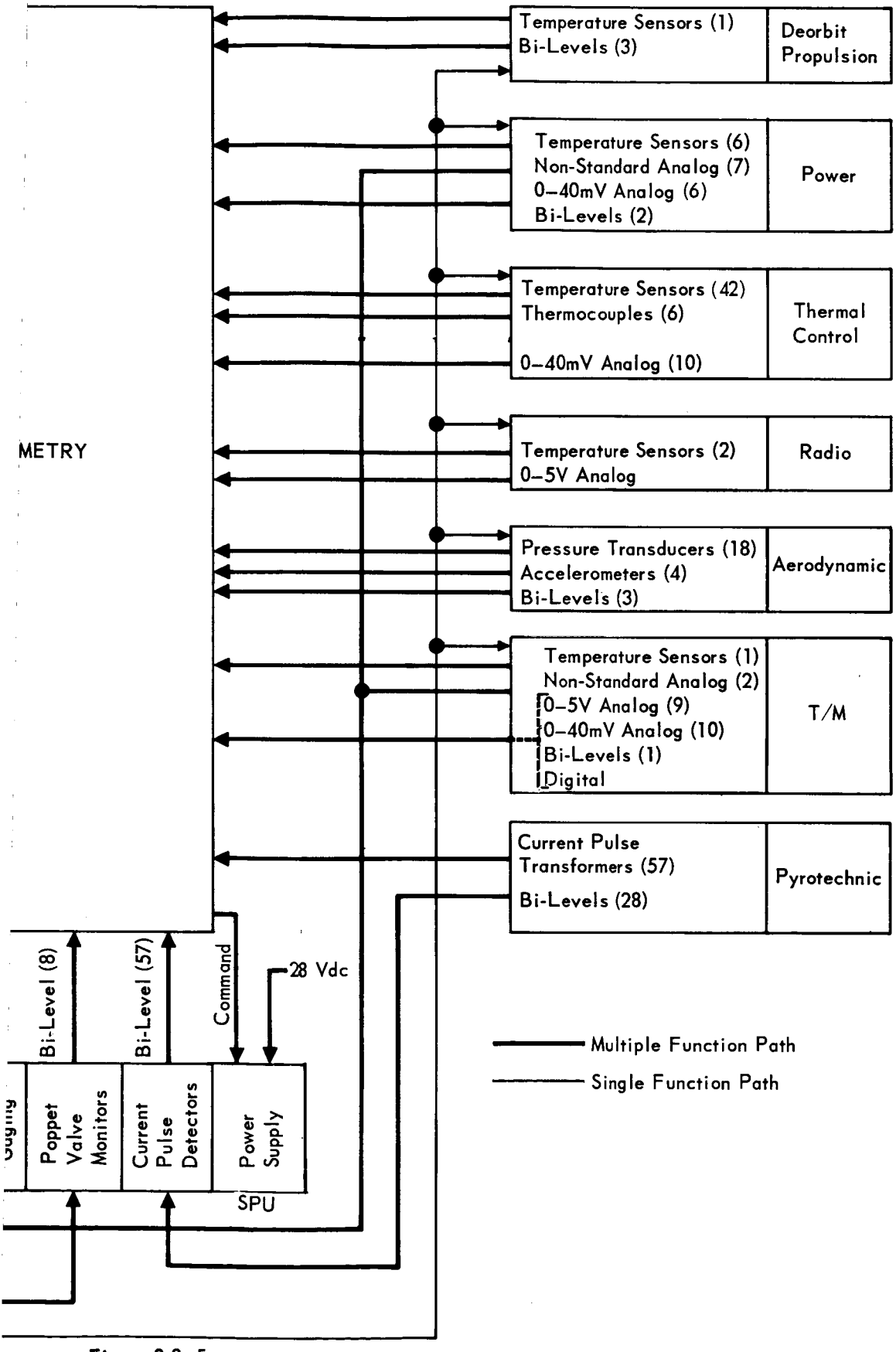

Figure 2.3–5

[redacted]

The variable reluctance pressure transducer, the LVDT position transducers and accelerometers are operative during pre-separation checkout and are then turned off until required during the deorbit, entry, and terminal descent mission phases.

2.3.4.2 Signal Process Unit - The signal process unit has four sections which operate independently from power supply module regulated voltages controlled by the Telemetry equipment during the mission. These sections are:

- o Voltage/current monitors.
- o Liquid level monitors.
- o RCS poppet valve monitors.
- o Pyrotechnic current detectors.

2.3.5 Performance Characteristics

2.3.5.1 Transducers - Transducer input/output characteristics appear in Figure 2.3-1. Additional typical performance characteristics are tabulated in Figure 2.3-6.

Figure 2.3-6 Typical Transducer Performance Characteristics

Transducer	Excitation	Theoretical Transfer Function	Output Impedance	Response Time	Static Error Band
Temperature Sensor	5.0 ± .005 Vdc	Linear	500 ohm max	500 ms	±1% FS
Thermocouple W 5 Re/W26Re	-	Calibration curve		100 ms	±2% FS
Pressure Transducer Potentiometric	5.0 ± .005 Vdc	Linear	5K ohms max	10 ms	±2% FS
Pressure Transducer Variable Reluctance	28 Vdc	Linear	5K ohms max	15 ms	±2.5% FS
Position Transducer LVDT	28 Vdc	Linear	5K ohms max		±2% FS
Accelerometer	28 Vdc	Linear	5K ohms max		±1% FS

2.3.5.2 Signal Process Unit - The SPU performance summary is tabulated below:

Input Power-	30 ± 6.5 Vdc
Total Power Consumption-	20 watts
dc Signal Converters-	
o Input Signal Impedance-	500 K ohms min.
o Output Signal-	0 to 5 Vdc
o Output Impedance-	2K max.
o Error-	± 1% FS
o Ripple and Noise-	20 mv max.
o Frequency Response-	± 1% DC to 100 Hz

Liquid Level Monitor

o Discrete Outputs (6)	0 or 5 Vdc
o Input Impedance	100 k ohms min
o Output Impedance	2 k ohms max

RCS Poppet Valve Monitor

o Discrete Outputs	On 5^{+2}_{-0} Vdc; Off 0 $\pm$.5 Vdc
o Input Impedance	15 k ohms min
o Output Impedance	2 k ohms max
o Response Time	100 micro sec.

Pyrotechnic Current Pulse Monitor

o Discrete Output	0 or 5 Vdc
o Output Impedance	2k ohms max
o Response Time	5 micro sec.

2.3.5.3 Instrumentation Power Supplies - The dc/dc converter performance summary is tabulated below.

Input Power	28 $\pm$ 5 Vdc
Power Consumption	.5 watts
Output Voltage	5.0 Vdc
Output Current	0 to 50 mA
Regulation	0.2%
Ripple	10 mV peak to peak

2.3.6 Interface Definition - Refer to Figure 2.3-5 for interface identification.

2.3.7 Reliability Considerations - The estimated reliability factor for the CB Instrumentation Equipment is .972 for mission success. A primary objective in the selection of the instrumentation equipment design concept was that instrumentation failures shall not cause a significantly degrading or possible catastrophic direct effect on any functional CB subsystem. This objective has been achieved. To adequately perform all functions, the instrumentation equipment must survive launch environment and operate reliably throughout interplanetary cruise and continuing through all mission phases to Mars surface impact. The design features sturdy mounting of all sensors and minimum operating electrical stress to assure reliable long duration operation. In addition, heat sink provisions are required to assure low operating thermal stress. A high conditioner to source impedance will be provided at all times. That is, isolation will still be provided in the event of a signal conditioner failure or shut down.

The major reliability factors considered in selecting the transducer types were: proven reliability, inherent simplicity, and where possible high level output without amplification. Five volt excitation of the transducers was split between two independent DC/DC converters such that one converter can fail and only cause a minimum of degradation in data received. e.g., two temperature sensors in a given area will be powered separately. Also the SPU has a self-contained independent regulated power supply so that it is independent of the Instrumentation Power Supplies.

While instrumentation failures must be minimized, the system should be capable of tolerating some individual instrument failures. For failure tolerance, two techniques have been considered; backup redundant sensors and direct data correlation between existing data sensors. An example of the latter technique is temperature and voltage monitoring of CB battery power. CB testing will establish correlation between these individual measurements. Failure to obtain measurements during a mission will allow earth MOS data correlation and thereby definition of the monitored function characteristics in spite of a sensor failure. Thermal testing is effective in correlation of temperature distribution throughout the CB and therefore will provide indirect data retrieval from a failed temperature sensor during a mission. Failure diagnostic data is of prime importance to arrive at earth MOS decision making and remedial action for each of two flight Capsules operating during a mission and for subsequent Flight Capsule missions. The proverbial question is as follows: is the CB subsystem malfunctioning or is the instrument data sensor malfunctioning? Flight Capsule testing and analysis establishes the sensor and subsystem predominate failure modes. These results are used to assess the nature of a Flight Capsule mission failure. In addition, by establishing continuous Flight Capsule cruise monitoring, performance and possible degradation trends of a gradual or sudden nature can be assessed by comparison to previous long term in-flight monitoring data points; thereby, enhancing MOS decision capability. Reliability considerations concerning instrumentation signal process units and dc/dc converters are two fold: first, individual circuits and converter elements can be made redundant to provide load sharing. Secondly, decentralization (Multichannel Cooperative Redundancy) was considered. This technique allows independent Signal Process Unit operation by use of multiple units and provides for data retrieval and processing in spite of any processor failure.

In the T/M Instrumentation Subsystem, the reliability goal is to maximize total and partial mission success with maximum degraded operating paths. Analysis indicates that as partial mission success is improved, some decrease in total mission success results based on a parts count reliability analysis. To minimize the resulting decrease in total mission success, limited circuit block redundancy can be added in the more critical elements such as the dc/dc converters.

2.3.8 Test - All modules in the SPU utilizing active elements will provide circuitry for removing input signals and applying at least two known precision input voltages for pre-flight and in-flight calibration and operational confidence checks.

Likewise, for pre-flight and in-flight checking the accelerometers will contain self-test circuitry located within the units that will provide 25 per cent and 75 per cent of full range output when external voltages are applied. This self-test feature exercises the complete accelerometer, including the seismic system, pick-off system and servo amplifier and provides a precision indication of system operation.

The transducers which utilize only passive circuit elements (e.g., temperature sensors, potentiometric type pressure transducers, etc.) will not be automatically calibrated during pre-flight and in-flight checks. These units are made up with resistors of the highest quality available. The basic transducers will be more reliable than the automatic checking equipment required for remote calibration.

2.3.9 Development Requirements - Instrumentation items are presently available which are potentially capable of meeting the VOYAGER sterilization and mission requirements. However, the state-of-the-art will be strained in several areas to meet sterilization and long term stability requirements. Such materials as potting, varnish, insulation, etc., and soldering and assembly techniques used in manufacturing present day transducers and signal conditioners will require changing to meet the stringent VOYAGER requirements. These items will require investigation and development tests.

SECTION 3

RADIO SUBSYSTEM

The Capsule Bus Radio Subsystem consists of the Capsule Bus Radio (transmitter) (below) and the Spacecraft-Mounted Capsule Bus Support Radio (receiver - See Paragraph 3.2). The Radios are mutually compatible, and they interface with one another through the Capsule Bus Antenna Subsystem.

3.1 CAPSULE BUS RADIO

3.1.1 Equipment Identification and Usage - The Capsule Bus (CB) Radio is the transmitter portion of the Capsule Bus to Spacecraft relay link. It provides a capability, after Spacecraft separation for transmitting engineering telemetry data back to Earth via the Flight Spacecraft. Upon initial separation from the orbiting spacecraft engineering data is relayed at 273 bps. During entry, and in the terminal descent phases the rate will be increased to 2730 bps.

Subsystem Configuration - The preferred CB Radio employs two 5 watt transmitters operating at 400.2 MHz and 340.2 MHz utilizing frequency diversity techniques to combat multipath degradation. The CB Radio consists of the following subassemblies:

- 400.2 MHz 5 watt transmitter
- 400.2 MHz transmitter power converter
- 340.2 MHz 5 watt transmitter
- 340.2 MHz transmitter power converter
- Antenna Deplexer

A block diagram of the CB Radio is shown in Figure 3.1-1. Both transmitters are operated simultaneously to provide frequency diversity.

3.1.2 Design Requirements and Constraints - One of the most significant requirements that has imposed design constraints on the CB Radio has been the requirement for verification testing of the transmitter while enclosed within the canister. This requirement imposes the likelihood of a high VSWR in the R.F. transmission line of the CB Radio. In order to protect the transmitter from the effects of this load mismatch a three port circulator is required with a suitable load connected to one of the circulator ports.

The two Entry Science Package transmitters, which have outputs of 40 watts each, will be radiating at the same time the CB transmitter is operating. It is necessary, because of the close proximity the two radiating antennas, to protect the CB from the leakage of the ESP transmitter. The three port circulator and load previously

CB RADIO SUBSYSTEM

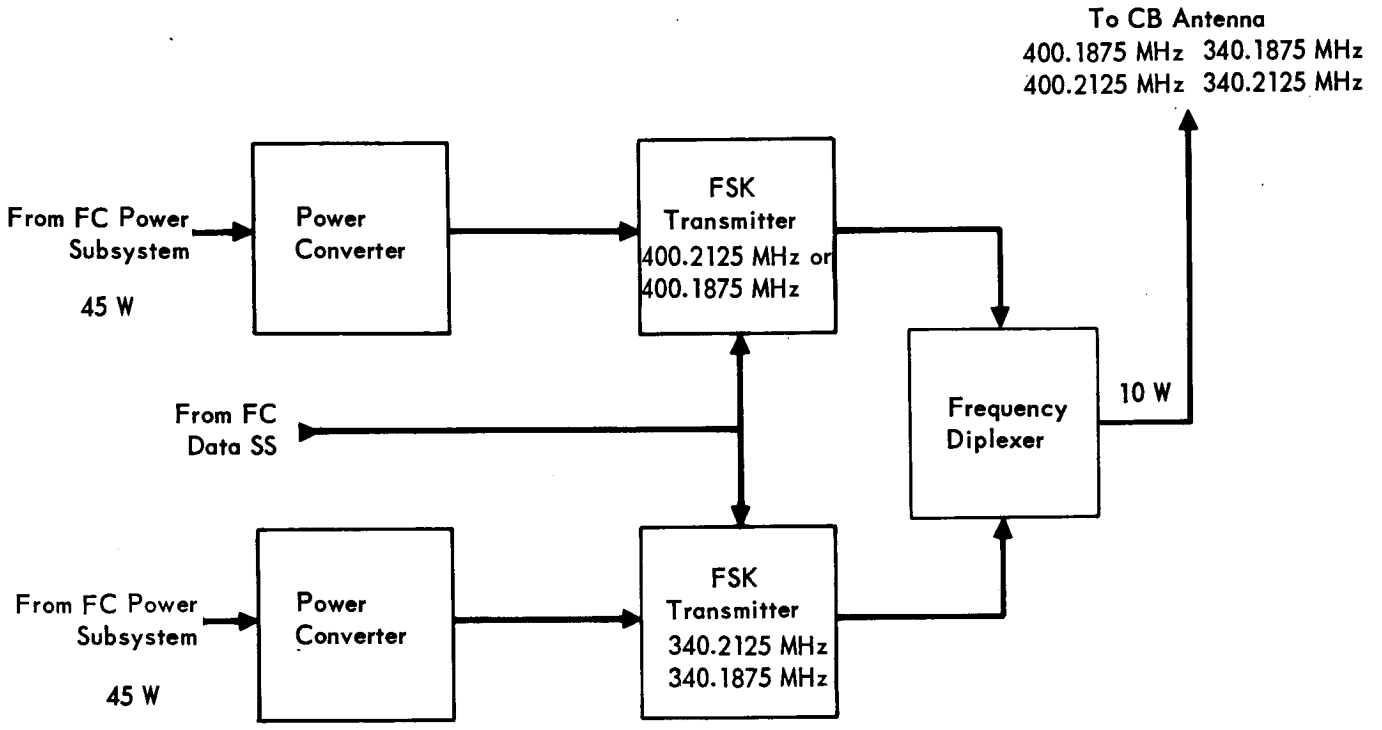

Figure 3.1–1

described to protect the CB Radio during testing will also serve as the needed protective measure.

Other requirements and constraints on the design of CB Radio have been called out in the "1973 VOYAGER Capsule Systems Constraints and Requirements Document," dated 1 January 1967 and 18 May 1967, Jet Propulsion Laboratory of the California Institute of Technology (Section 4.2).

3.1.3 Physical Characteristics - The pertinent physical characteristics for the total CB Radio Subsystem are summarized in Figure 3.1-2.

3.1.4 Operation Description - The CB Radio becomes operative upon separation of the Capsule Bus from the spacecraft and continues to operate until turn-off after landing on the Martian surface. During this period the CB Radio will transmit engineering data to the Flight Spacecraft.

3.1.4.1 Transmitter Assembly - Both the 400.2 MHz and 340.2 MHz transmitters accept binary engineering data from the transmitter exciters to accomplish FSK modulation. The carrier frequencies of the transmitters are:

Transmitter 1: 400.1875 MHz and 400.2125 MHz

Transmitter 2: 340.1875 MHz and 340.2125 MHz

The RF power output to the antenna from each transmitter is 5 watts. A block diagram of the 400.2 MHz transmitter is shown in Figure 3.1-3. The transmitter consists of the following modules:

a. Crystal Oscillator A
b. Crystal Oscillator B
c. FSK Modulator
d. Frequency Multiplier and AGC
e. RF Power Amplifier
f. Terminated 3-port circulator
g. Directional coupler and power detector

The block diagram of the 340.2 MHz transmitter is similar to that of the 400.2 MHz transmitter. The modules comprising the transmitters are described in the following paragraphs:

Crystal Oscillator - The most important design parameter of the crystal oscillator is frequency stability. The degree of frequency stability required depends upon the total frequency uncertainty tolerable in the CB radio system. The frequency uncertainty includes maximum Doppler shift, transmitter oscillator drift, and spacecraft local oscillator drift. The maximum Doppler shift has been calculated to be approximately 6 KHz. The total frequency uncertainty from both transmitter and re-

CAPSULE BUS RADIO PHYSICAL CHARACTERISTICS

Space Required	180 Cubic Inches
Weight	11 Pounds
DC Power Required	60 Watts
Thermal Power Dissipation	50 Watts
Size (inches):	
Transmitter Assembly (each)	6.5 x 8 x 1.5
Power Converter Assembly (each)	6.5 x 2.0 x 1.5
Frequency Diplexer	4 x 2 x 1

Figure 3.1–2

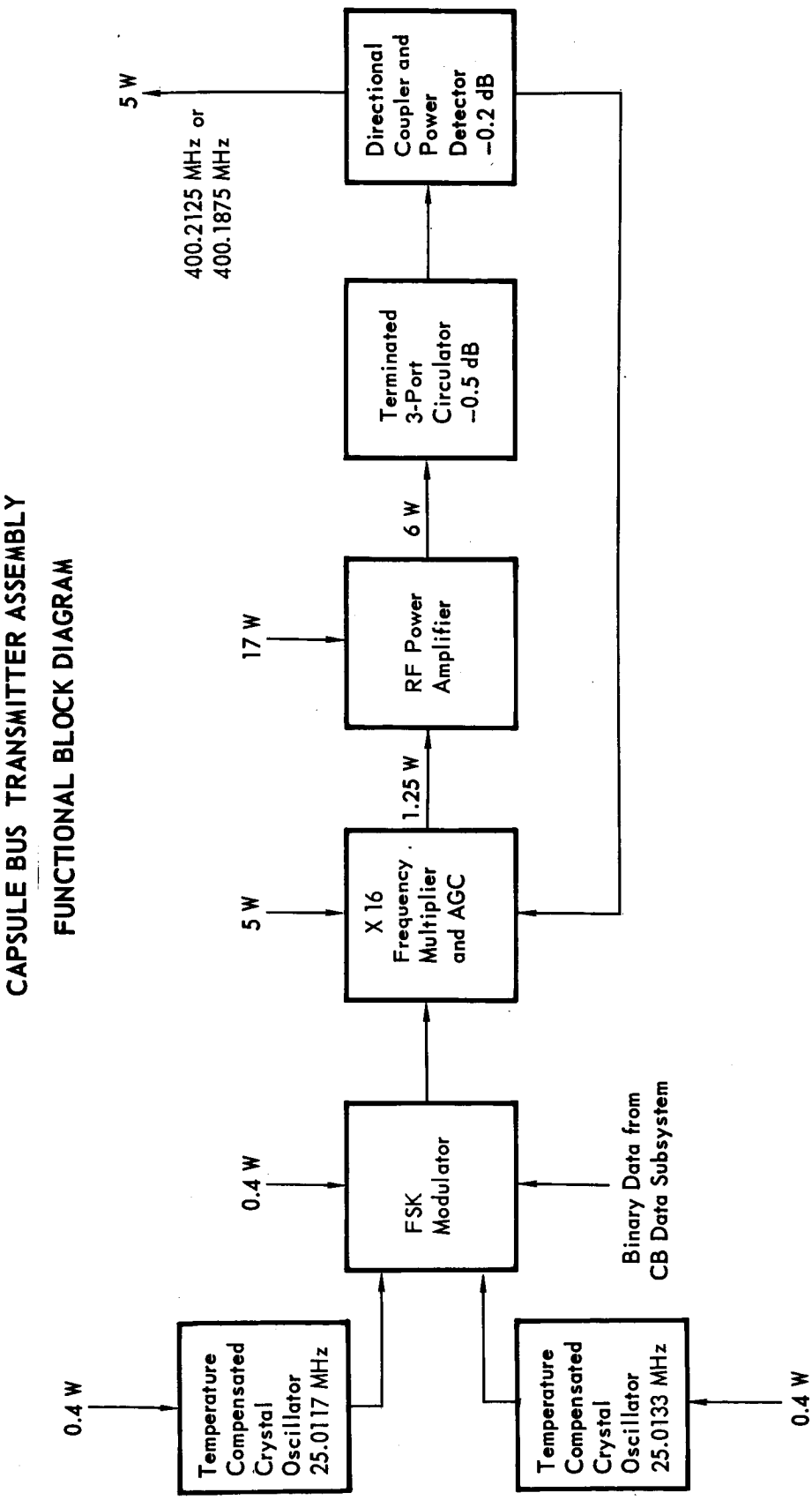
CAPSULE BUS TRANSMITTER ASSEMBLY
FUNCTIONAL BLOCK DIAGRAM
0.4 W
Temperature Compensated Crystal Oscillator 25.0117 MHz
0.4 W
FSK Modulator
Binary Data from CB Data Subsystem
Temperature Compensated Crystal Oscillator 25.0133 MHz
0.4 W
5 W
X 16 Frequency Multiplier and AGC
1.25 W
17 W
RF Power Amplifier
6 W
Terminated 3-Port Circulator -0.5 dB
Directional Coupler and Power Detector -0.2 dB
5 W
400.2125 MHz or 400.1875 MHz

Figure 3.1-3

ceiver oscillators should be not greater than 5 percent of the maximum Doppler shift. This requirement can easily be met with temperature compensated crystal oscillators (TCXO) having a long term stability of 1×10^{-6} per year, and a short term stability of 5×10^{-9} per second.

In terms of frequency stability requirements and frequency multiplier circuit complexity, the optimum choice of oscillator frequency lies in the 25 MHz region. A multiplication factor of 16 would result in the desired output frequency of approximately 400 MHz. To obtain the FSK output frequencies of 400.1875 and 400.2125 MHz, the required frequencies of the crystal oscillators are 25.0117 MHz and 25.0133 MHz respectively. The advantage of TCXO's are light weight (4 ounces), low power (120 mw), and zero warmup time. The oscillator output level is approximately 1 milliwatt.

FSK Modulator - The FSK modulator consists of a set of RF diode switches and associated switching control circuitry. A block diagram of the modulator is shown in Figure 3.1-4. The binary data is assumed to have a plus (mark) and minus (space) format. The RF divider switch is essentially a ring modulator.

Frequency Multiplier - A multiplication factor of 16 is obtained by cascading 4 transistor doubler stages. A block diagram of the frequency multiplier chain is shown in Figure 3.1-5. A power gain of approximately 6 dB per stage is obtained for an overall gain of 30 dB. A variable-gain 25 MHz amplifier stage preceeding the first doubler is driven by an AGC amplifier to maintain the transmitter output power at a constant level.

RF Power Amplifier - The RF power amplifier consists of a single common emitter transistor amplifier stage. It produces 6 watts of output power at 340 or 400 MHz with approximately 8 dB gain.

Port Circulator - The 3-port circulator serves two purposes: 1) it prevents the nearby Entry Science Package transmitter power from entering the CB RF power amplifier which can cause interference and dissipation, 2) it protects the RF power amplifier from reflected power due to momentary shorts at the antenna.

Directional Coupler and Power Detector - The directional coupler samples and detects the transmitter output power and provides a DC output voltage for the AGC amplifier and telemetry purposes. It is implemented using strip transmission line techniques.

3.1.4.2 Antenna Diplexer - Since a common antenna is used for the two frequency diversity transmitters, a diplexer is used for power combining. The diplexer pass-band and impedance characteristics are summarized in Figure 3.1-6.

BLOCK DIAGRAM FSK MODULATOR

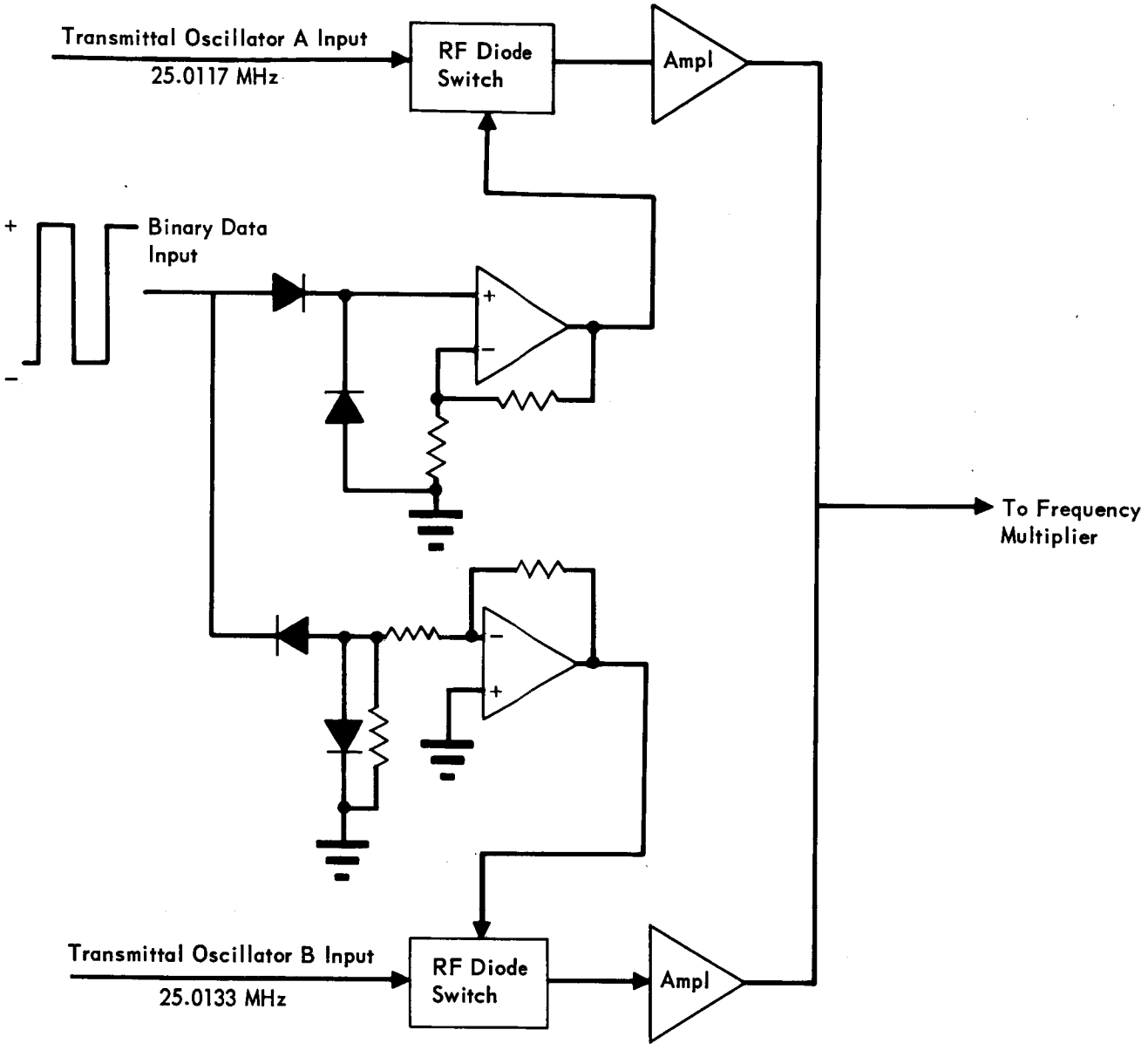

Figure 3.1–4

FREQUENCY MULTIPLIER/AGC BLOCK DIAGRAM

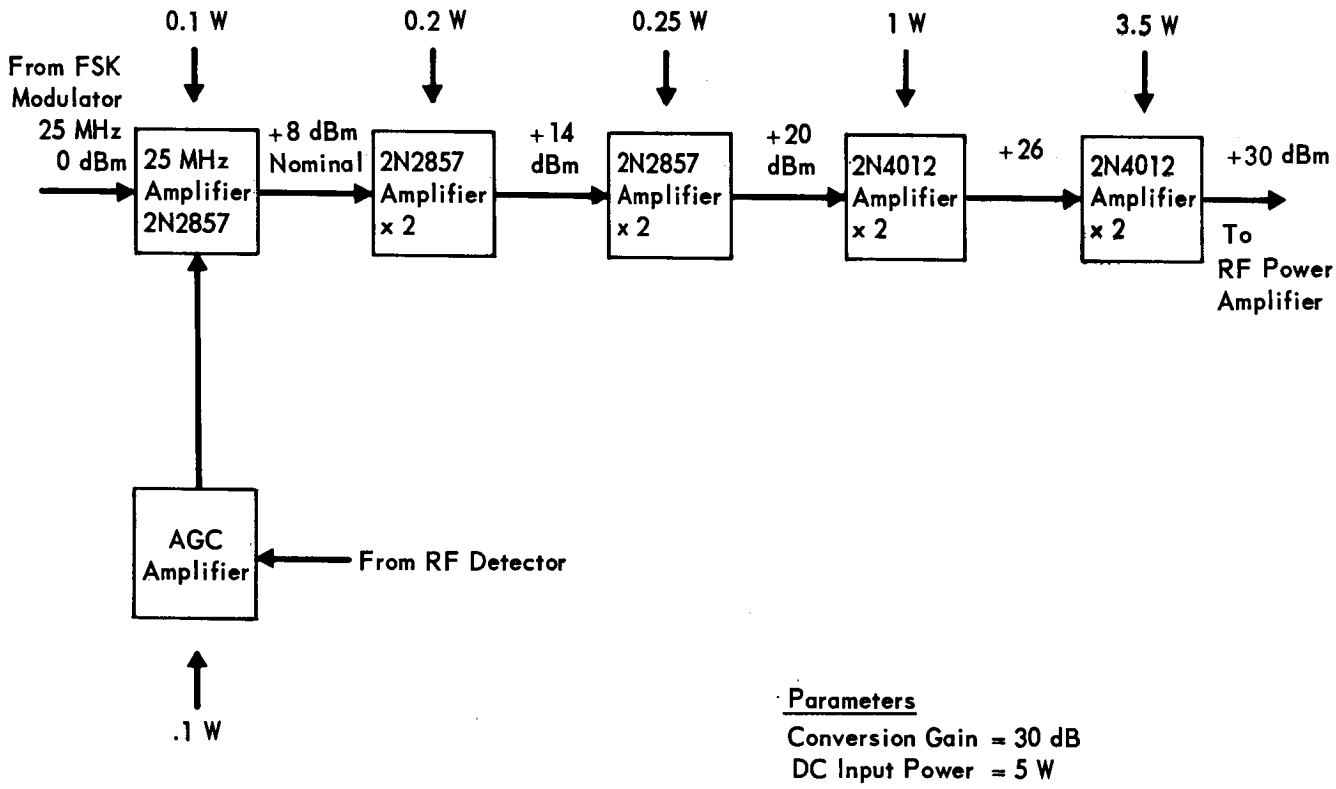

Figure 3.1–5

DIPLEXER PERFORMANCE CHARACTERISTICS

f_1	400.2 MHz
Bandwidth	4 MHz min. at −1.0 db points
	10 MHz max. at −6 db points
	30 MHz max. at −60 db points
Passband Ripple 0.5 db max.	
Input VSWR (output terminated)	1.2:1 maximum at 400.2 MHz
Output VSWR (f_1 input terminated)	1.2:1 max. at 400.2 MHz
Insertion loss:	0.5 db
f_2	340.2 MHz
Bandwidth	4 MHz min. at −1.0 db points
	10 MHz max. at −6 db points
	30 MHz max. at −60 db points
Passband ripple 0.5 db max.	
Input VSWR (output terminated)	1.2:1 max. at 340.2 MHz
Output VSWR (f_2 input terminated)	1.2:1 max. at 340.2 MHz
Insertion Loss	0.5 db

Figure 3.1–6

3.1.4.3 CB Transmitter Power Converter Assembly - The CB Transmitter DC Power Converter is a DC-to-DC converter providing a regulated and isolated 28 Vdc source to operate the CB transmitter. The converter performance characteristics are summarized in Figure 3.1-7.

In addition, the converter provides telemetry outputs for output voltage and load current measurements. The Off-On switch is electrically controlled by command.

3.1.5 Performance Characteristics - A summary of the expected performance characteristics of the Capsule Bus Radio is given in Figure 3.1-8.

3.1.6 Interface Definition - The interfaces of the CB Radio with other subsystems are listed in Figure 3.1-9.

3.1.7 Reliability and Safety Considerations - The following paragraphs describe the reliability and safety considerations which affect the design of the Capsule Bus Radio Subsystem.

3.1.7.1 Mission Success Definition - The CB Radio SS provides a transmission link from the Capsule Bus to the spacecraft during the time between capsule separation and post-landing turn-off.

3.1.7.2 Reliability Model - The CB Radio SS has an assessed reliability of a 0.9975 probability of successfully performing its required mission. The functional flow model is denoted in Figure 3.1-10a, the functional reliability assessment matrix in Figure 3.1-10b, and the mission success flow model in Figure 3.1-10c.

3.1.7.3 Mission Failure Modes and Effects - Figure 3.1-11 shows the mission fault tree for the CB Radio SS. Both transmitters are required for full mission success to assure a reliable signal to multipath interference noise ratio. Three major failure modes are recognized:

- Degraded Transmission - Both transmitters operating but degraded in one or more parameters that increase bit error rate.
- Degraded Link - One of the two transmitters having effectively no output resulting a degraded signal to multipath interference noise ratio.
- No Transmission Output - Effective loss of the CB to SC data transmission. No block redundancy is utilized in this design. Isolation is incorporated to protect the output circuits against VSWR induced failure mechanisms. The AGC circuits provide optimum drive under aging, manufacturing and temperature variance of circuit parameters.

3.1.7.4 Complexity Estimate - The CB Radio Subsystem is estimated to have a complexity in the order of 325 piece parts plus hardware and connection system. In Figure 3.1-12, a table that represents a breakdown of the subsystem to generic part

POWER CONVERTER PERFORMANCE CHARACTERISTICS

Input Voltage	24 to 40 VDC nominal
Output Power	35 watts minimum
Output Voltage	28 VDC ± 0.5%
Regulation	0.1%
AC Ripple	0.05%
Short and overload protection	Yes
Surge current	150% of full load current
Efficiency	90%
Volume	20 cu. in. nominal
Weight	0.75 pounds nominal

Figure 3.1–7

CAPSULE BUS RADIO SUBSYSTEM PERFORMANCE CHARACTERISTICS

Transmitter 1 Frequencies	400.1875 MHz and 400.2125 MHz
Transmitter 2 Frequencies	340.1875 MHz and 340.2125 MHz
Frequency Stability	$<1 \times 10^{-6}$/year
	$<5 \times 10^{-9}$/sec
Spurious or Harmonic Outputs	<-40 db from carrier
Power Output	
Transmitter 1	5 watts nominal ±0.5 dB
Transmitter 2	5 watts nominal ±0.5 dB
Modulation	FSK, data stream common to both transmitters
Input data format	Split phase pcm
Data Rate	2.730 Kbps and 273 bps
Output Power Stability	±0.5 dB
DC Input Voltage	24 to 40 volts
DC Input Power Required	60 watts
Base Plate Heat Sink Temperature	70°C max.
Operating Temperature	−20°C to +70°C

Figure 3.1–8

CAPSULE BUS RADIO SUBSYSTEM INTERFACE TABLE

SUBSYSTEMS TO BE INTERFACED	FUNCTION DEFINITION
CB Power S/S	Supplies primary power to CB radio
CB Antenna	RF radiation
CB Telemetry Equipment	Provides modulation data

Figure 3.1–9

A. FUNCTIONAL FLOW MODEL

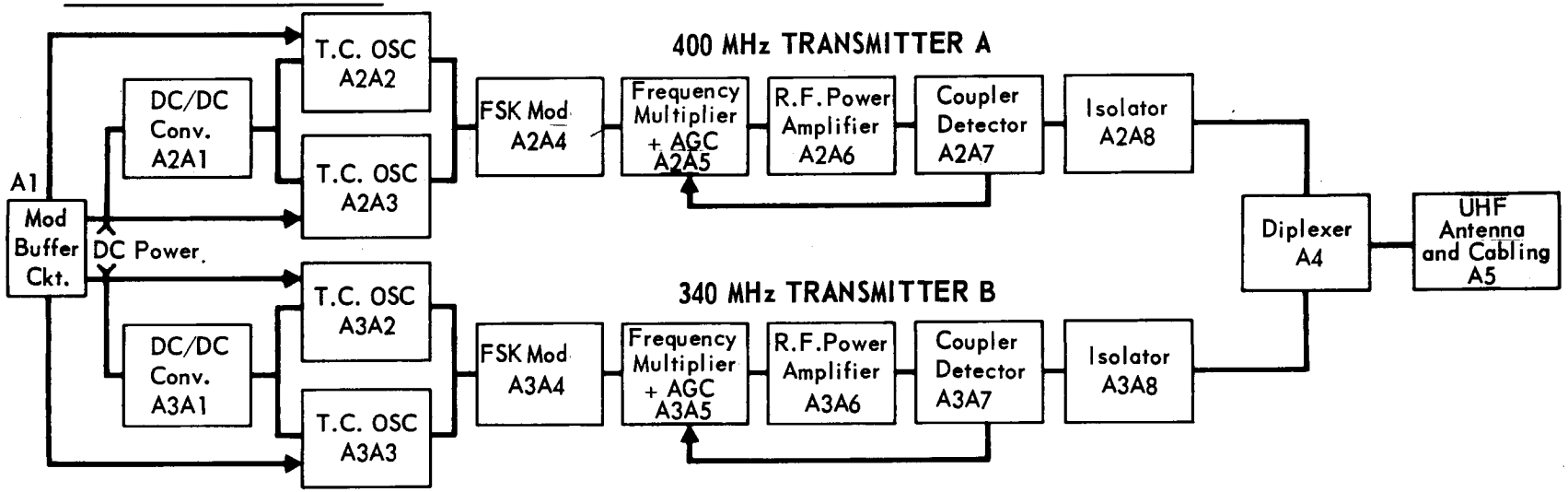

B. FUNCTIONAL RELIABILITY ASSESSMENT MATRIX

	A1 Mod Buffer Ckt.	(A2/A3)A1 DC/DC Conv.	(A2/A3)(A2/A3) T.C. OSC 2 Required	(A2/A3)A4 FSK Mod	(A2/A3)A5 Frequency Multiplier + AGC	(A2/A3)A6 R.F. Power Amplifier	(A2/A3)A7 Coupler Detector	(A2/A3)A8 Isolator	A4 Diplexer	A5 UHF Antenna and Cabling
Failure Rate λ	44.3	261	133.6	100.0	246.6	89.3	10	20	10	48.0
$\epsilon\lambda$	88.6	261	267.2	100.0	246.6	89.3	10	20	10	48.0
ϵKt	115	115	115	115	115	115	115	115	115	115
$\epsilon\lambda \cdot \epsilon Kt$	.0001	0.00030	.000307	0.000115	.0002	.000103	.0000115	.000023	.0000115	0.000055
Ps	.9999	0.9997	.999692	0.999885	.9998	.999897	.9999885	.999977	.9999885	0.99994
Total Ps		0.99884								
		.00116								

C. MISSION SUCCESS FLOW MODEL

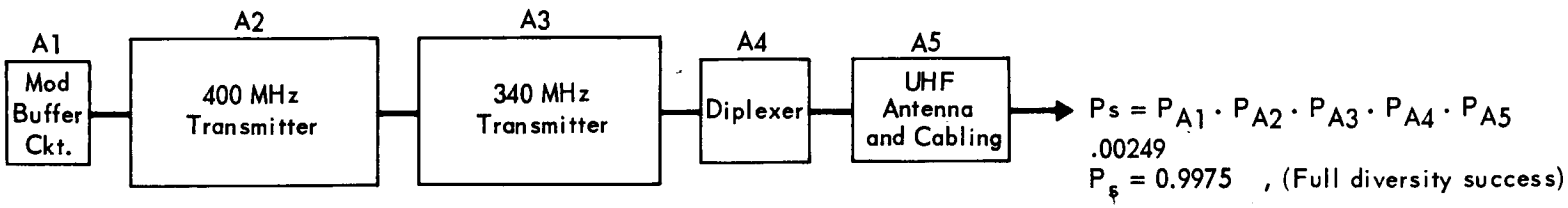

Figure 3.1-10

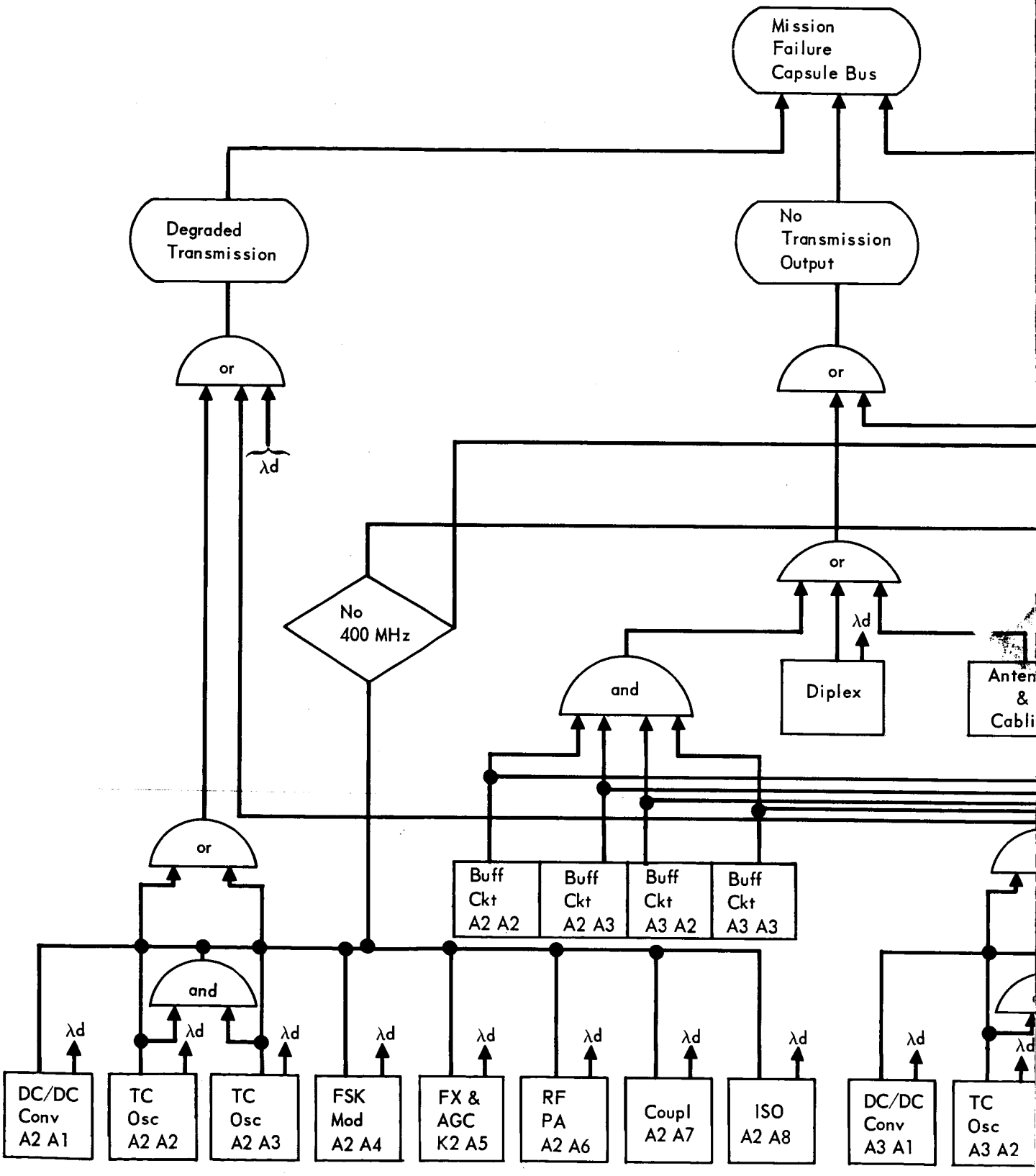
Mission Failure Capsule Bus
Degraded Transmission
No Transmission Output
or
or
λd
or
No 400 MHz
λd
and
Diplex
Anten & Cabli
or
Buff Ckt A2 A2
Buff Ckt A2 A3
Buff Ckt A3 A2
Buff Ckt A3 A3
and
λd
DC/DC Conv A2 A1
TC Osc A2 A2
TC Osc A2 A3
FSK Mod A2 A4
FX & AGC K2 A5
RF PA A2 A6
Coupl A2 A7
ISO A2 A8
DC/DC Conv A3 A1
TC Osc A3 A2

Figure 3.1–11

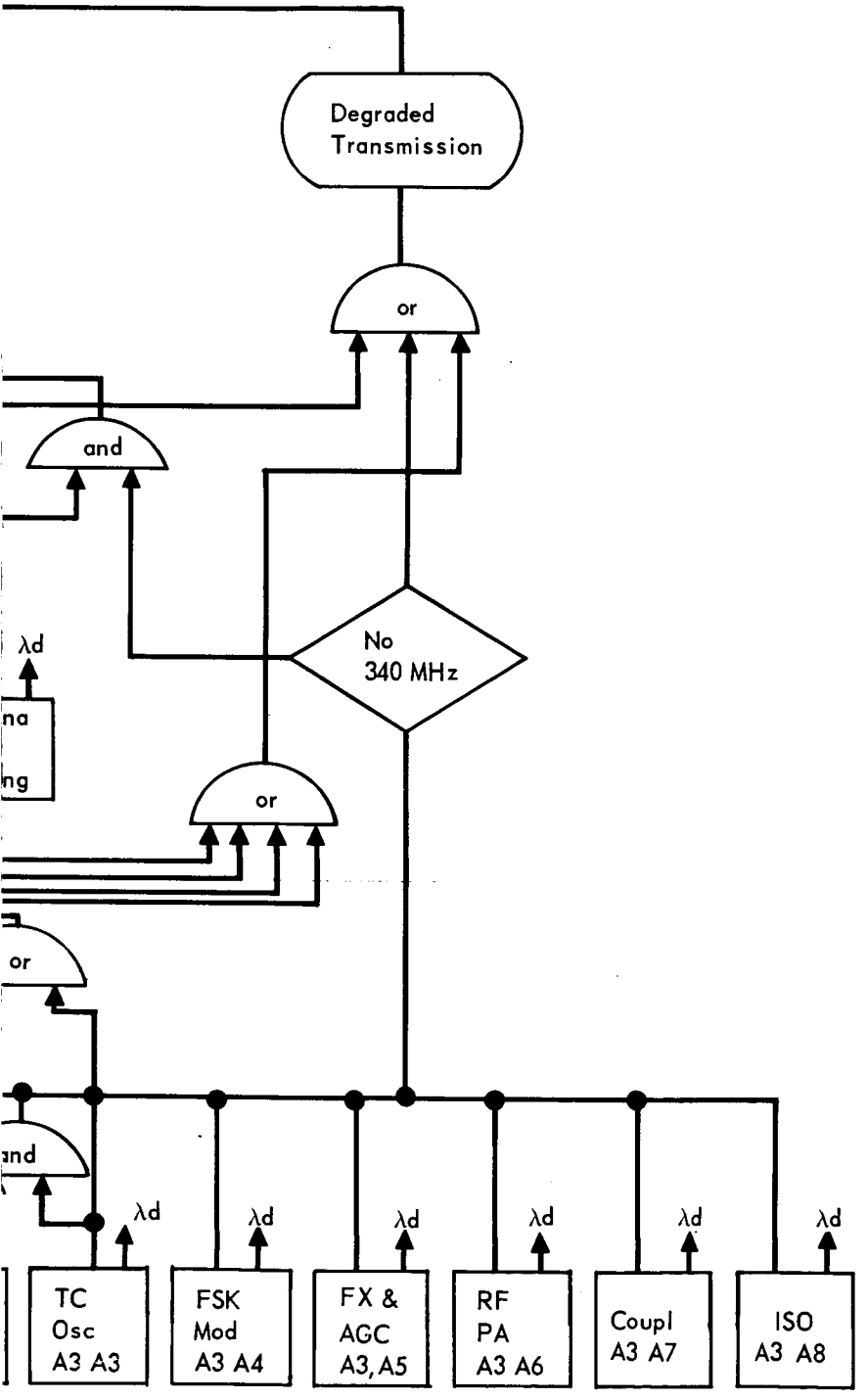
Degraded
Transmission
or
and
λd
na
ng
No
340 MHz
or
or
and
λd
λd
λd
λd
λd
λd
TC
Osc
A3 A3
FSK
Mod
A3 A4
FX &
AGC
A3, A5
RF
PA
A3 A6
Coupl
A3 A7
ISO
A3 A8

3-14-2

CB RADIO SS COMPLEXITY TABLE

(Vc 241)

GENERIC PART TYPE	λ	n	nλ	GENERIC PART TYPE	λ	n	nλ
1.0 Capacitors							
Ceramic/Glass	1.0	30	30	Crystal	65	2	130
Tantalum/Solid	2.0	3	6	Filters, L–C	5.0	6	30
Variable Piston	10.0	2	20	Op. Amp IC	30	1	30
Feed thru	5	7	35				
2.0 Diodes							
General Purpose	1.1	21	23.1	Probe, R.F.	0.4	1	0.4
Zener/Reference	10.0	3	10				
3.0 Resistors				Parts Subtotal			
Metal Film	0.3	15	4.5	A. One Transmitter:		159	749.4
Carbon Composition	0.1	29	2.9	B. Both Transmitters:		318	1499
4.0 Transistors				R.F. Components			
General Purpose	5	11	55	Coupler	10	2	20
Power	50	3	150	Isolator	20	2	40
R.F. Power	50	1	50	Diplexer	10	1	10
				Ant. and Cabling	48	1	48
5.0 Chokes and Coils							
R.F. Chokes	7.5	15	112.5				
L.V. Chokes/Coils	10.0	3	30	C. Subtotal:		6	118
6.0 Transformers				Transmitter Group			
RF/IF/Signal	5.0	1	5	D. Total:		325	1617
L.V./Power	5.0	5	25				

Figure 3.1–12

types.

The piece parts that are critical in assuming reliable applications design are the R.F. power transistor and crystals.

3.1.7.5 Safety Considerations - No special safety considerations are noted since all voltages in the unit are in the 28 Vdc region.

3.1.8 Test Requirements - Test shall be made prior to launch and Flight Spacecraft-Flight Capsule separation. Prelaunch test shall be made after heat sterilization of the Flight Capsule. The prelaunch test shall be a thorough test utilizing the Operational Support Equipment. The pre-FS-FC separation check-out is initiated by the Flight Capsule Sequencer and Timer, and monitored through the Spacecraft Telemetry Subsystem. Parameters to be tested are delineated in Figure 3.1-13.

3.1.9 Development Status - The circuit design is conservative and utilizes proven design techniques. No long lead time development will be required. Qualification of parts and suppliers will require tests which include sterilization and decontamination environments in addition to application requirements for parameter stability, long life, and failure rate. Particularly important are tests on components required for the 3-port circulator and the temperature compensated crystal oscillator.

CB RADIO
TEST MATRIX

TEST	ACCY REQD	Telemetry Monitoring Points	System Test Pre-canister	System Test W Canister	Pre-launch	In-flight Checkout
Non-operative Test						
RF Power Output	0.2 dB		X	X	X	
Power Amplifier Coll Current	2%	X	X	X	X	X
Power Supply Voltage	1%	X	X	X	X	X
DC Current Drain	2%	X	X	X	X	X
Case Temperature A	2%	X	X	X	X	X
Case Temperature B	2%	X	X	X	X	X
Modulation Input	5%		X			
Spurious Output	1 dB		X	X	X	
Transmitter No. 1 Frequency	1×10^{-8}		X			
Transmitter No. 2 Frequency	1×10^{-8}		X			
AGC Voltage	2%	X	X	X	X	X
Detected RF Output	0.5 dB	X	X	X	X	X
RF Power Stability	0.2 dB		X			
Frequency Stability Transmitter No. 1	1×10^{-8}		X	X		
Frequency Stability Transmitter No. 2	1×10^{-8}		X	X		
VSWR Monitor	2%	X	X	X	X	X

Figure 3.1–13

3.2 SPACECRAFT MOUNTED CAPSULE BUS SUPPORT RADIO

3.2.1 Equipment Identification and Usage - The Spacecraft Mounted (FSC-MTD) Capsule Bus support radio is a part of the UHF telecommunications relay link. It is used in the Flight Spacecraft (FSC) for receiving the Capsule Bus Engineering data for retransmission to Earth via the Spacecraft Radio Subsystem. The FSC-MTD CB support radio consists of the following subassemblies:

- Frequency Diplexer
- 400.2 MHz Receiver
- 340.2 MHz Receiver
- Diversity Combiner
- Bit Synchronizer
- Power Converter

A block diagram of the FSC-MTD CB support radio is shown in Figure 3.2-1. The receivers accept the 400.2 MHz and 340.2 MHz frequency diversity CB radio signals from Spacecraft CB antenna. The received signals are translated down to intermediate frequencies for amplification and demodulation. The demodulated FSK signals are fed to the diversity combiner. The video output from the diversity combiner is fed to the bit synchronizer. The bit synchronizer processes the video signal and presents a serial non-return to zero NRZ bit stream along with synchronization pulses to the Capsule Bus Data Distribution Unit. The power converters accept the 23 to 40 Vdc input from the Spacecraft Power Subsystem and convert the power into separate isolated -15 Vdc outputs to each receiver, diversity combiner and bit synchronizer.

3.2.2 Design Requirements and Constraints - The FSC-MTD CB Radio is constrained to share the frequency bands in the 400 MHz and 340 MHz regions with the Entry Science Package Radio Subsystem. This necessitates the use of a crystal band pass filter (60 KHz bandwidth) to attenuate the ESP Radio signals.

Because of the multipath environment, AGC design considerations must include fading. The gains of the two frequency diversity receivers must be nearly the same through out the dynamic range. This requirement is met by using identical IF amplifiers and AGC circuits for both receivers.

Since it is required that the CB transmitter be turned on at time of FSC-MTD separation, the FSC-MTD radio is subjected to very high level input signals. Therefore, it must be capable of handling a large dynamic range.

3.2.3 Physical Characteristics - The physical characteristics are shown in Figure 3.2-2.

SPACECRAFT – MOUNTED CAPSULE BUS SUPPORT RADIO

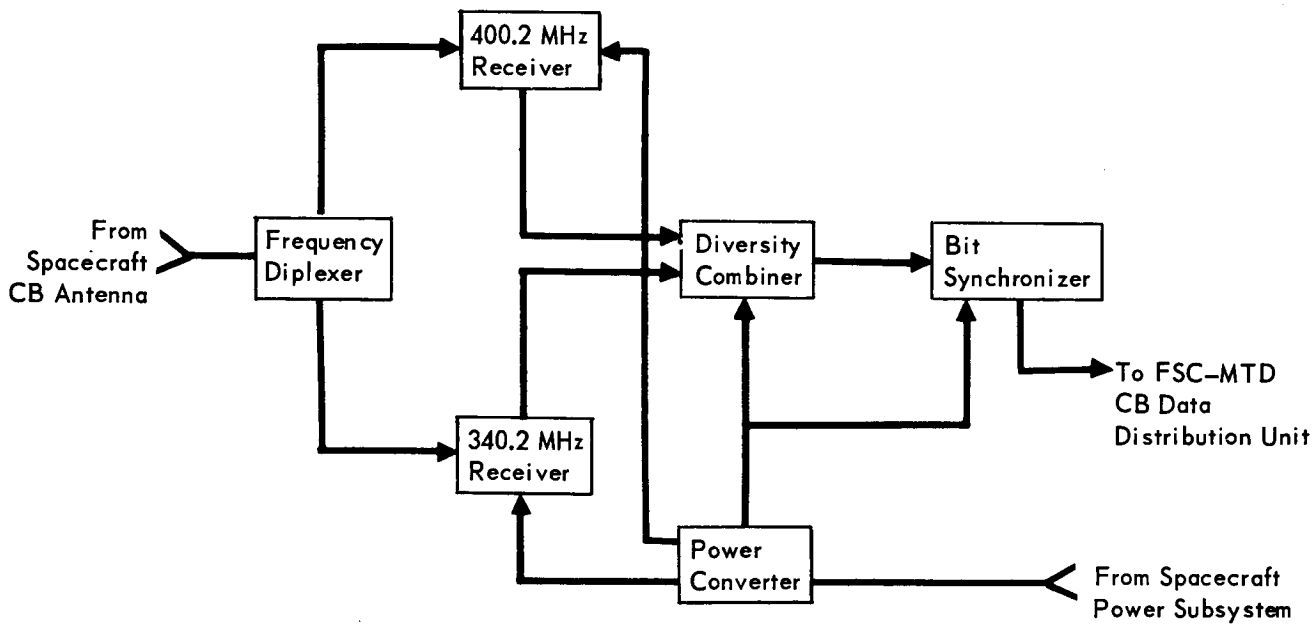

Figure 3.2–1

SPACECRAFT-MOUNTED CB SUPPORT RADIO PHYSICAL CHARACTERISTICS

ASSEMBLY	401.5 MHz RECEIVER	341.5 MHz RECEIVER	DIVERSITY COMBINER	BIT SYNCHRONIZER	POWER CONVERTER	FREQUENCY DIPLEXER	HOUSING	TOTAL
Size (inches)	5 x 8 x 1.5 (60 in.^{3})	5 x 8 x 1.5 (60 in.^{3})	2 x 2.5 x 1.5 (7.5 in.^{3})	2 x 4 x 1.5 (12 in.^{3})	24 x 1.5 (12 in.^{3})	2 x 4 x 1 (8 in.^{3})	10 x 8 x 2.5 (200 in.^{3})	10 x 8 x 2.5 (200 in.^{3})
Weight (Pounds)	3.6	3.6	0.45	0.72	1.00	0.8	1.8	10.97
Input Power (Watts)	2	2	0.30	0.30	5.75	–	–	5.75
Power Dissipation (Watts)	2	2	0.30	0.30	1.15	–	–	5.75

Figure 3.2-2

3.2.4 Operation Description - The FSC-MTD CB support radio will be turned on prior to FSC-FC separation for in-flight checkout and will remain in operation for the entire mission.

3.2.4.1 Frequency diplexer - The frequency diplexer separates the 340.2 MHz and 400.2 MHz frequency diversity signals from the FS CB antenna and feeds them into separate receivers. The diplexer characteristics are shown in Figure 3.2-3.

3.2.4.2 Receivers - Except for the RF front end, the 340.2 MHz and 400.2 MHz receiver components are identical. Each receiver consists of the following modules:

a. RF Front End
b. 1st IF
c. 2nd IF
d. Demodulator
e. Local Oscillator

A block diagram of the 400.2 MHz receiver is shown in Figure 3.2-4. The threshold signal for the receiver is -123.5 dBm nominal. The nominal signal level at the square law detector is -10 dBm. The receiver gain distribution is shown in Figure 3.2-5. The approximate receiver transfer characteristics are shown in Figure 3.2-6. The detector output is held constant within ±2 dB by the AGC.

- RF Front End - The RF front end consists of an RF amplifier, mixer, and a 30-MHz narrow band crystal filter. The RF amplifier gain is 25 dB and the noise figure is less than 3 dB at frequencies below 400.2 MHz. The overall receiver noise figure is less than 3.5 dB. The mixer loss is less than 7 dB when operated with an LO drive of 0.5 milliwatt at 370.2 MHz. The 30-MHz narrow band (60 KHz) crystal filter is designed to pass the converted 400.2 MHz or 340.2 MHz CB transmitter signal and to reject the adjacent 401.5 MHz or 341.5 MHz Entry Science Package transmitter signal.
- 1st IF - The first IF module includes a 30 MHz IF amplifier and the 2nd mixer. The 30-MHz IF gain is 53 dB maximum and -48 dB minimum, which is controlled by the AGC. The basic design is similar to the Mariner 69 Flight Spacecraft Radio receiver 1st IF. An additional 30-MHz output is provided for noise figure measurement. This output is terminated with a shielded load when noise figure measurements are not being made.
- 2nd IF - The 2nd IF module consists of three 8.67 MHz IF amplifier stages and two signal distribution stages. The total 2nd IF gain including the distribution amplifier is 54 dB. Circuit design is straight-forward. The most important requirements are frequency, gain stability, and reliability.

FSC-MTD CB RADIO DIPLEXER CHARACTERISTICS

Input frequencies – 340.2 MHz and 400.2 MHz nominal
Imput impedance – 50 ohm nominal
Input VSWR –
  at 340.2 MHz – 1.2 max (340.2 MHz output terminated)
  at 400.2 MHz – 1.2 max (400.2 MHz output terminated)
Output VSWR –
  at 340.2 MHz – 1.2 max (Input terminated)
  at 400.2 MHz – 1.2 max (Input terminated)
Bandpass at 340.2 MHz output:
  Bandwidth – 4 MHz min at –1.0 dB points
  60 MHz max at – 60 dB points
  400.2 MHz rejection – 60 dB min
Bandpass at 400.2 MHz Output:
  Bandwidth – 4 MHz min at – 1.0 dB points
  60 MHz max at –60 dB points
  340.2 MHz rejection – 60 dB min

Figure 3.2–3

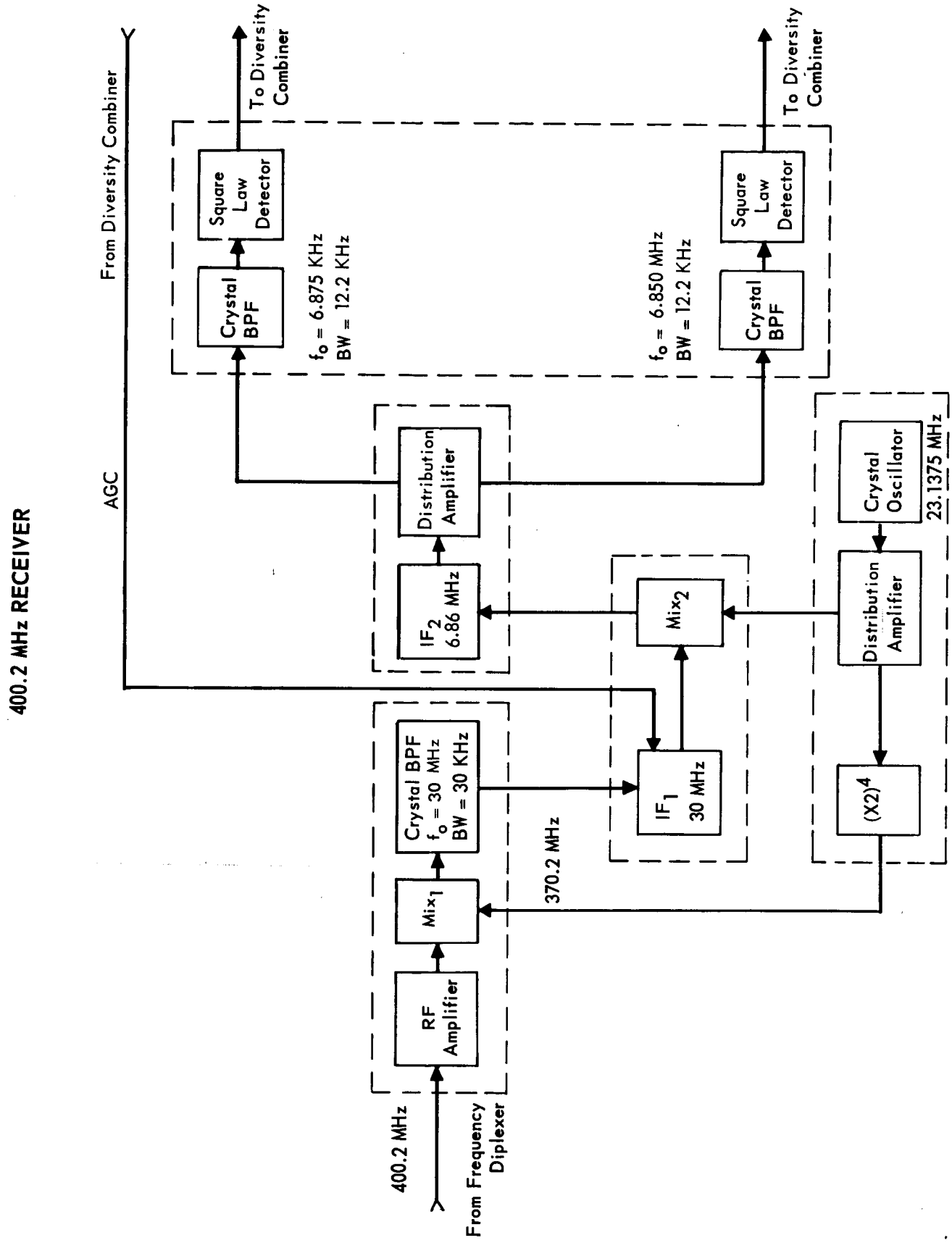
400.2 MHz RECEIVER
From Diversity Combiner
AGC
To Diversity Combiner
Square Law Detector
Crystal BPF
f_o = 6.875 KHz
BW = 12.2 KHz
f_o = 6.850 MHz
BW = 12.2 KHz
Distribution Amplifier
IF_2 6.86 MHz
Mix_2
Crystal Oscillator
23.1375 MHz
Crystal BPF f_o = 30 MHz BW = 30 KHz
IF_1 30 MHz
$(X2)^4$
Mix_1
370.2 MHz
RF Amplifier
400.2 MHz
From Frequency Diplexer

Figure 3.2–4

RECEIVER GAIN DISTRIBUTION

PARAMETERS	POWER GAIN (dB)
RF Ampl	25
1st Mix	−7
BPF (Crystal)	−6
1st IF & 2nd Mix	−48 to + 53
2nd IF	54
Predetection Filter	−6
Total Gain	113 dB (Minimum Input Signal)
	12 dB (Maximum Input Signal)

Figure 3.2–5

RECEIVER TRANSFER CHARACTERISTICS

INPUT LEVEL (dBm)	CHARACTER-ISTICS	OUTPUT LEVEL (dBm)			
		RF 400 MHz BW = 30 KHz N_o = −170 (Inc NF)	1st IF 30 MHz BW = 1 MHz NF 3 dB	2nd IF 6.87 MHz BW = 0.1 MHz	Det. Inputs 6.8625 MHz 6.8775 MHz BW = 10 KHz
−123	Signal	−111	−58	−4	−10
	Noise	−123	−58	−14	−24
−113	Signal	−101	−58	−4	−10
	Noise	−123	−68	−24	−34
−103	Signal	−91	−50	−4	−10
	Noise	−123	−78	−34	−44
−83	Signal	−71	−58	+6	−10
	Noise	−123	−98	−54	−64
−63	Signal	−51	−58	+6	−10
	Noise	−123	−118	−60	−70
−43	Signal	−31	−58	+6	−10
	Noise	−123	−	−60	−70
−23	Signal	−11	−58	+6	−10
	Noise	−123	−	−60	−70

Figure 3.2–6

- Demodulator - The FSK demodulator is implemented by a set of pre-detection filters and square law detectors. The pre-detection filter bandwidth is 12.2 KHz. The center frequency separation of the two filters is 24 KHz. The square law detectors are diode detectors operating in the square law region. The nominal signal level at the detector input is -10 dBm.
- Local Oscillator - The local oscillator generates a 23.1375 MHz and 370.2 MHz signal for the 2nd and 1st mixer respectively. The 370.2 MHz signal is derived from the 23.1375 MHz crystal oscillator by multiplication. The crystal oscillator is temperature compensated to operate between -20 degrees C to +70 degrees C with stabilities of 1×10^{-6} per year and 5×10^{-9} per second. The frequency multiplier consists of four transistor doublers.

3.2.4.3 Diversity Combiner - The demodulated data stream from the receiver square law detectors are added by the Diversity Combiner (Figure 3.2-7). One operational amplifier provides the necessary amplification and a differential output of the detected FSK, split-phase-coded binary data. The other operational amplifiers are used for amplification, integration and isolation of the AGC signal for the receivers. With a time constant of 0.2 milliseconds, the AGC would keep a constant IF output at the square law detector even when fast fading occurs.

3.2.4.4 Bit Synchronizer - The bit synchronizer demodulates the video output from the diversity combiner and presents a serial NRZ bit stream along with synchronization pulses to the Capsule Bus Data Distribution Unit. A block diagram of the bit synchronizer is shown in Figure 3.2-8. The input circuitry accepts the diversity combiner output and filters the waveform with a low pass filter which cuts off at a frequency equal to twice the data rate (5.4 KHz). Automatic gain control and dc cancellation are also incorporated before the signal is fed to the data channel. This signal is limited, differentiated and rectified (producing pulses at the zero crossings of the input) and fed to the time gated. The time gate selects the pulses which correspond to the transistion in the middle of each split-phase bit by responding to those pulses which appear at the same position in each bit period, at the same position in each bit period, then gates these pulses into the phase locked loop.

The phase locked loop integrates the jitter out of the gated input pulses and creates a square wave which is coherent with the bit period. This square wave is fed to the data channel.

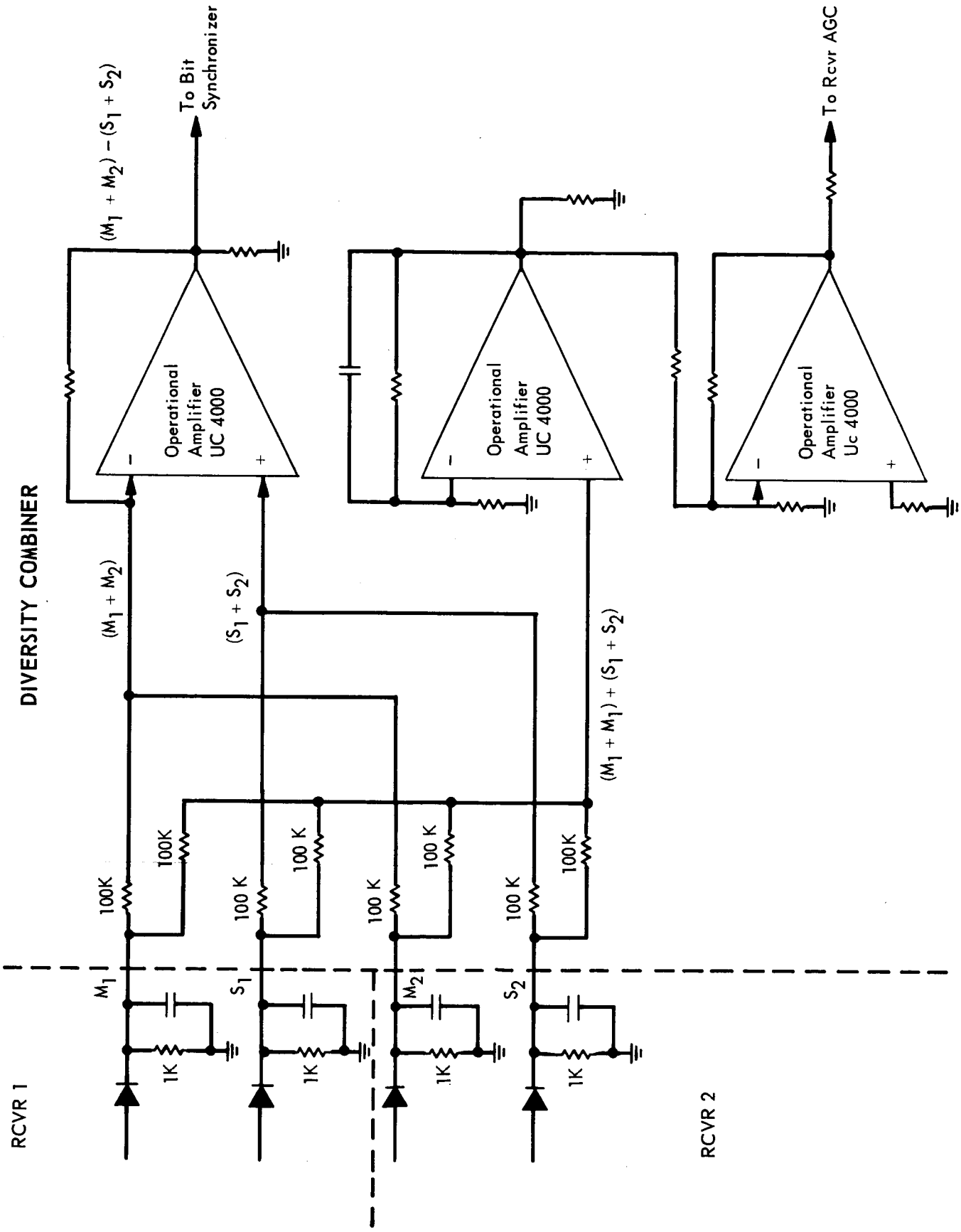
DIVERSITY COMBINER
RCVR 1
RCVR 2
M_1
S_1
M_2
S_2
1K
100K
$(M_1 + M_2)$
$(S_1 + S_2)$
$(M_1 + M_1) + (S_1 + S_2)$
$(M_1 + M_2) - (S_1 + S_2)$
Operational Amplifier UC 4000
Operational Amplifier UC 4000
Operational Amplifier Uc 4000
To Bit Synchronizer
To Rcvr AGC

Figure 3.2–7

BIT SYNCHRONIZER

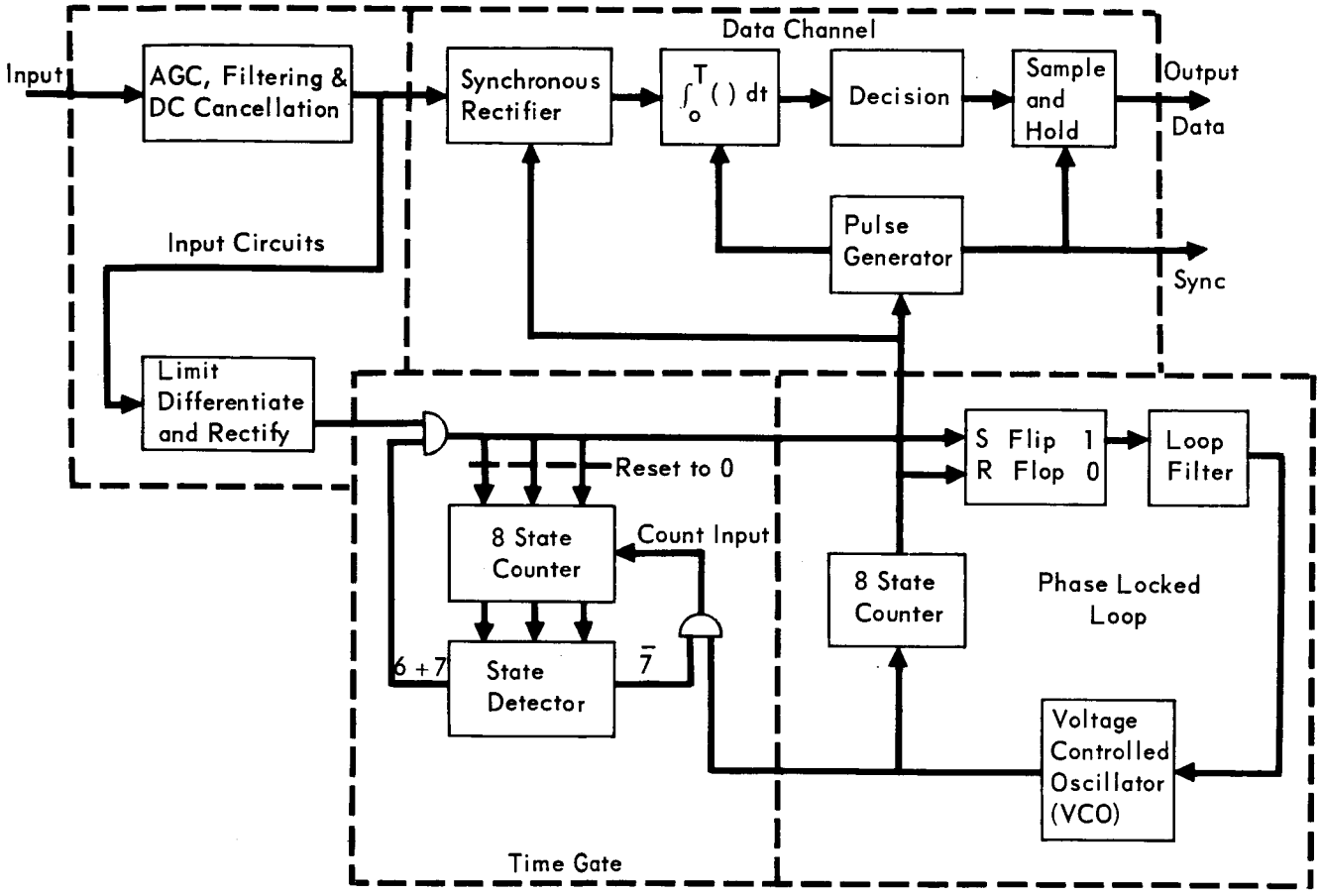

Figure 3.2–8

The data channel converts the input signal into NRZ data and integrates this NRZ data stream over each bit period using the square wave reference from the phase locked loop for these operations. The reconstructed bit stream and timing pulses are fed to the Capsule Bus Data Distribution Unit.

The parameters which affect the performance of the bit synchronizer are the ratio of nominal time gate opening to bit duration, the ratio of loop noise bandwidth to bit rate and the damping constant of the loop. The nominal time gate opening equals the rise time of the filtered data waveform to ensure passage of the desired pulses which have been shifted in time by noise, but to exclude the extraneous pulses produced by noise which is much greater than the signal. The loop noise bandwidth has been set at the sum of the frequency uncertainties of the received data rate and the VCO in order to provide fast acquisition and yet minimize the sensitivity to jitter of the time gate as it is perturbed by noise.

In accordance with standard tracking loop design, the loop damping factor has been set at 0.707.

3.2.4.5 Power Converter - The power converter converts the dc input from the Spacecraft Power Subsystem to regulated and isolated -15 VDC, 3-watt output to the CB receiver. The converter utilizes saturable core transistor switching techniques designed to operate with wide primary line excursions, 24 to 40 VDC.

3.2.5 Performance Characteristics - The performance characteristics of the SC-MTD CB Support Radio are shown in Figure 3.2-9.

3.2.6 Interface Definition - The interface diagram is shown in Figure 3.2-10.

3.2.7 Reliability and Safety Considerations - As design parameters, the following paragraphs describe the reliability and safety considerations of the SC CB Support Radio.

3.2.7.1 Mission Success Definition - The SC CB Radio mission is to survive pre-separation environments and provide reception, detection and bit synchronization SS to the Spacecraft for receiving the Capsule Bus engineering and science data with interleaved Entry Package data.

3.2.7.2 SC CB Radio Reliability Model - The SC CB Radio has an assessed reliability of a 0.9978 probability of successfully performing its required mission of frequency diversity reception. The functional flow is denoted in Figure 3.2-11a, the functional reliability assessment matrix in Figure 3.2-11b and the mission success flow model in Figure 3.2-11c.

PERFORMANCE CHARACTERISTICS
FSC–MTD CB SUPPORT RADIO

RF Frequency	400.2 MHz; 340.2 MHz Nominal
Threshold Signal	–123 dBm
Noise Figure	≤ 4.0 dB
Dynamic Range	100 dB (–123 dBm to –23 dBm)
Maximum Input Level	+20 dBm
AGC Time Constant	0.5 msec
Image Rejection	40 dB min
DC Input Voltage	–15 volts regulated
DC Power Consumption	6 watts maximum
Predetection Bandwidth	12.2 kHz
Post-detection Bandwidth	5.5 kHz
Video Output Level	± 2 volt nominal
1st IF Frequency	30 MHz
1st IF Bandwidth	1 MHz
2nd IF Frequency	6.87 MHz
2nd IF Bandwidth	100 kHz
Output Data Format	Serial NRZ bit stream and synchronization pulses

Figure 3.2–9

FSC–MTD CB RADIO INTERFACE DIAGRAM

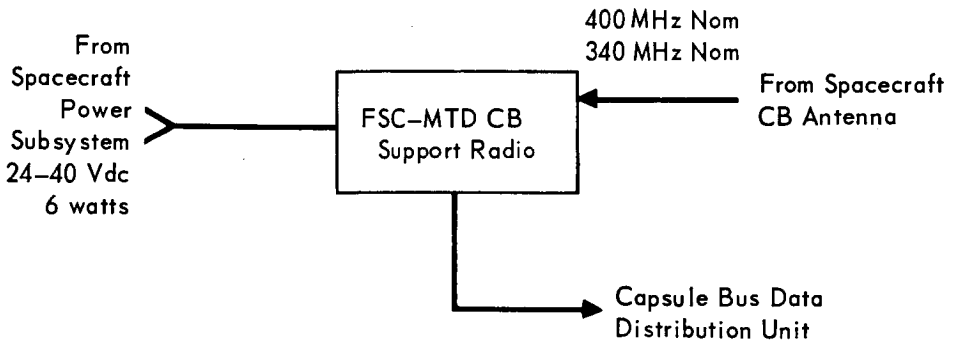

Figure 3.2–10

RADIO SUBSYSTEM

A. FUNCTIONAL FLOW, SC

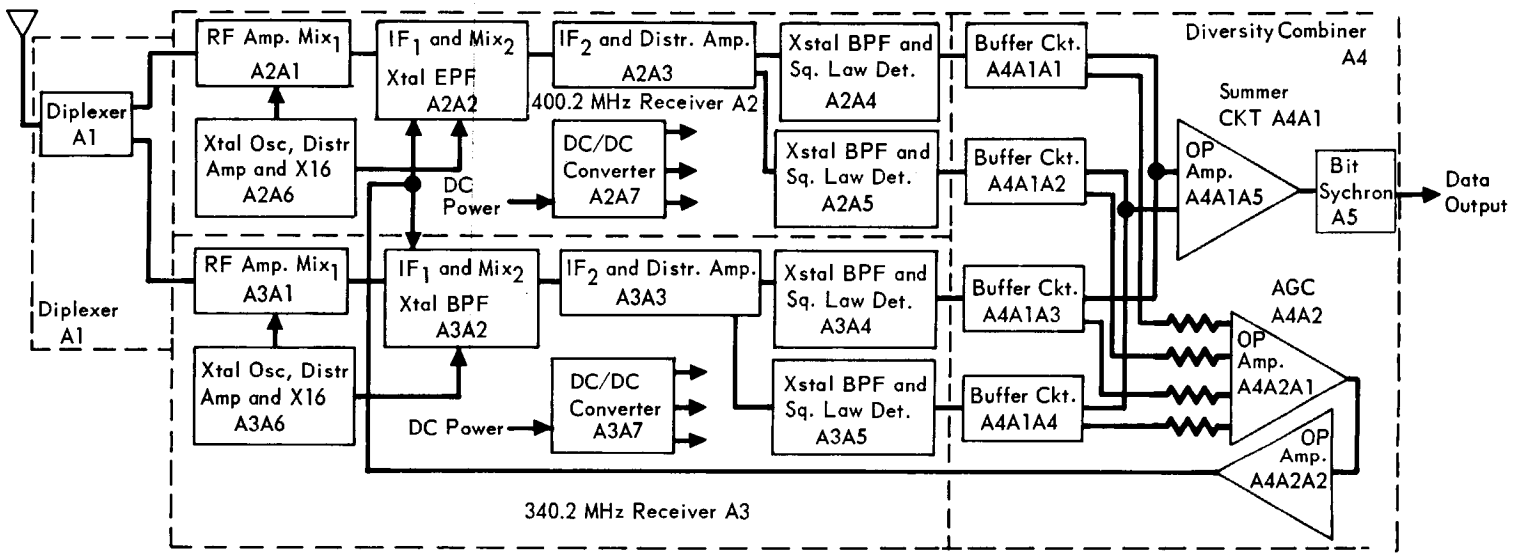

B. FUNCTIONAL RELIABILITY ASSESSMENT MATRIX

	Diplexer A1	RF Amp + A2A1 A3A1	IF_1 + A2A2 A3A2	IF_2 + A2A3 A3A3	Xstal BPF and Sq. Law Det. A2A4 A2A5 A3A4 A3A5	Xstal Osc Chain A2A6 A3A6	DC/DC Converter A2A7 A2A7	Buffer Ckt. A4A1A1 A4A1A2 A4A1A3 A4A1A4	Summer Amp. A4A1A5	AGC A3A2	Bit Sychron
λ	10	201	369	307	352	286	166	3	31	77	443
ϵKt	115	115	115	115	115	115	115	115	115	115	115
$\lambda\epsilon Kt$	.0000115	.000221	.000405	.000337	.000774	.000314	.000182	.00000345	.0000341	.0000846	.000520
P_s	$.9_49885$	$.9_39779$	$.9_39595$	$.9_39663$	$.9_39226$	$.9_39686$	$.9_39818$	$.9_59655$	$.9_49659$	$.9_49154$	.999480

C. FUNCTIONAL RELIABILITY MODEL

Diplexer A1	400 MHz Receiver A2	Buffer Ckt. A4A1A2 A4A1A2	340 MHz Receiver	Buffer Ckt. A4A1A3 A4A1A4	Summer Amp. A4A1A5	AGC A4A2	Bit Sychron A5
.0000115	.00223	$.0_50690$	.00223	$.0_50690$	.0000341	.0000846	.000520
$.9_49885$	.99777	$.9_59310$	.99777	$.9_59310$	$.9_49659$	$.9_49154$	.999480
				(X2)			

$\Sigma(\lambda)(\Sigma Kt) = .00275$

$$P_s = P_{A1} \cdot P_{A2} \cdot P_{A4A1A1\,A4A1A2} \cdot P_{A3} \cdot P_{A4A1A3\,A4A1A4} \cdot P_{A4A1A5}\, P_{A4A2}$$

$P_s = 0.99777$

Figure 3.2-11

3.2.7.3 Mission Failure Modes and Effects - In Figure 3.2-12 is shown the mission fault tree for the SC CB Radio. Both receivers are required for full mission success to assure a reliable signal to multipath interference noise ratio. Three major failure modes are identified:

- Degraded Reception - Both receivers operating but degraded in one or more parameters that effectivity increase the bit error rate.
- Degraded Link - One of the two receivers failing to a "no output" resulting in a degraded signal to multipath interference noise ratio.
- No Data Output - Effective catastrophic loss of the EP to SC data link due to failure(s) that result in no SC CB Radio SS output. Alternate functional path is via the CB to SC link by data interleaving.

3.2.7.4 Complexity Estimate - The radio is estimated to have a complexity in the order of 910 piece parts plus hardware and connection system (Figure 3.2-13). The critical application parts are crystal and their mounting. The RF mxier diodes are not considered a critical application at these UHF frequencies.

3.2.8 Test - Testing will be conducted as listed in the text matrix Figure 3.2-14 in accordance with the Integrated Test Plan.

Tests will be performed prior to Canister enclosure, after enclosure prior to final sterilization, after sterilization, and during pre-launch operations. All ground testing shall be performed with the use of Operational Support Equipment (OSE). In-flight checkout (pre-separation) is initiated by the test programmer upon command from the DSIF and monitored through the Spacecraft Telementry Subsystem.

3.2.9 Development Status - Most of the RF components and IF amplifier circuitry are similar to those used in the Mariner 69 Flight Spacecraft receiver. The video data circuit components are mostly integrated circuits. The frequency diplexer and crystal filters are virtually "off-the-shelf" items. No long lead time developments will be required.

SPACECRAFT MOUNTED CB SUPPORT RADIO FAULT TREE

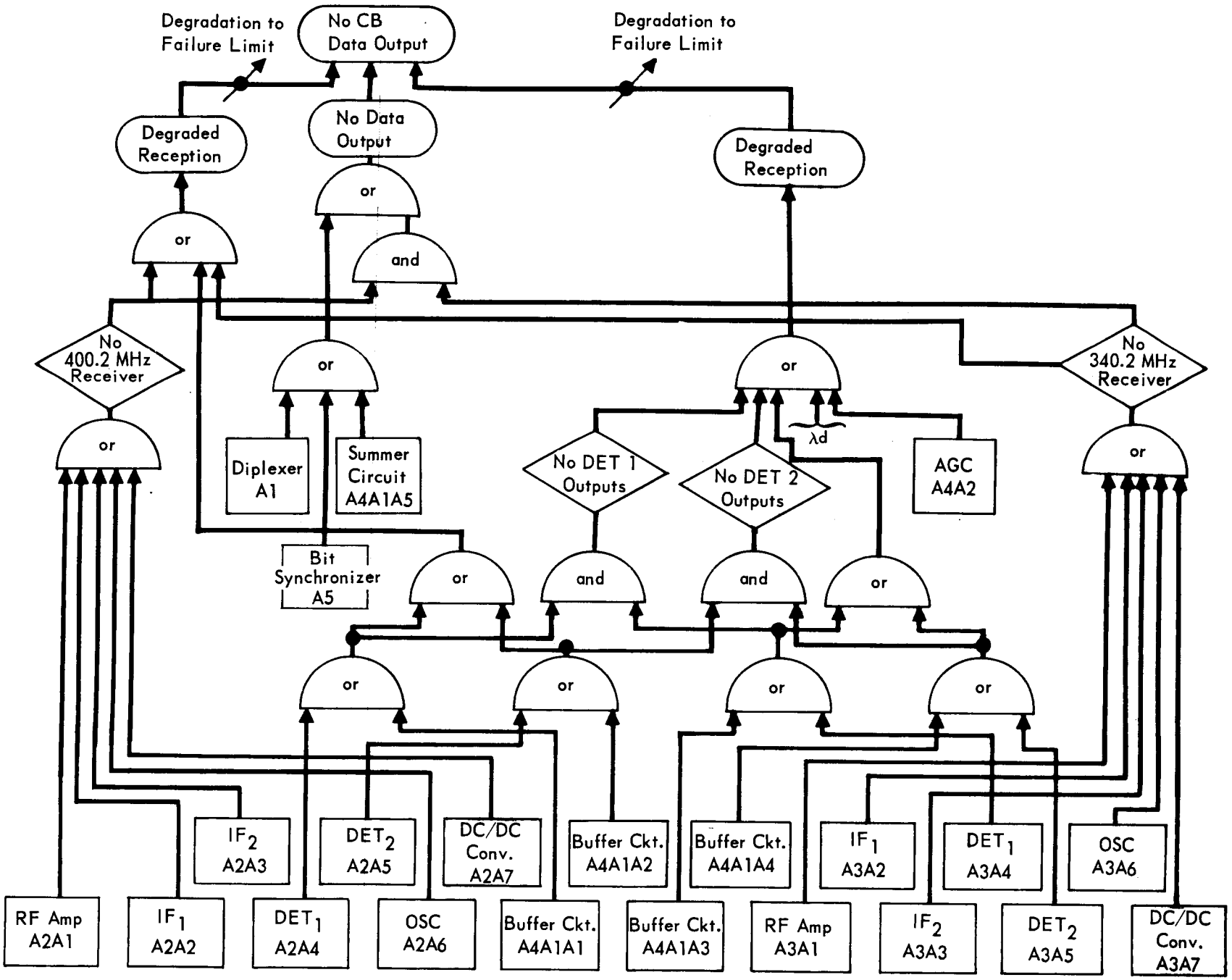

Figure 3.2–12

SPACECRAFT RADIO SS PARTS COUNT ESTIMATE

PART TYPE	FR λ	SINGLE RECEIVER n_1	DUAL RECEIVER $2n_1$	DATA n_2	MISC n_3	QUANTITY TOTAL ϵn	PRODUCT TOTAL $\epsilon n \lambda$
Capacitor							
Ceramic/Glass	1	76	152	4		156	156
Solid Tantalum	2	4	8			8	16
Variable Piston	10	21	42			42	420
Feedthrough	5	35	70			70	350
Diodes							
General Purpose	1.1	15	30	4		34	37
Zener	10	5	10			10	100
Mixer, RF	50	4	8			8	400
Resistors							
Metal Film	0.3	27	54	14		68	20
Carbon Comp.	0.1	93	186			186	19
Transistors							
General Purpose	5	24	48			48	240
Power	50	1	2			2	100
Integrated Checkout							
Linear Op. Amp.	30	1	2			2	60
Inductors							
RF Chokes	7.5	33	66			66	495
LV Coils/Induct.	10	3	6			6	60
Transformers							
RF/IF Signal	5	16	32			32	160
LV/Power	5	5	10			10	50
Crystals	65	1	2			2	130
Decoupling Filters	5	12	24			24	120
Crystal BPF	150	2	4			4	600
Diplexer	10				1	1	10
Antenna and Cabling	48				1	1	48
Total		378	756	22	2	780	3591

Figure 3.2–13

CAPSULE BUS RADIO SUBSYSTEM SPACECRAFT MOUNTED CB SUPPORT RADIO

	TEST	ACCY REQ	Non Operative Test	Threshold Signal	AGC Voltage	Local Oscillator Frequency	Mixer Current	Power Supply Voltage	DC Current Drain	Dynamic Range	Bandwidth	Image Rejection	Video Output Monitor
				1 db	2%	1x10-8	5%	1%	5%	1 db	5%	1 db	2%
Telemetry					X		X	X	X				X
System Test				X	X	X	X	X	X	X	X	X	X
Pre-Launch				X	X		X	X	X	X			X
In-Flight Checkout					X		X	X	X				X

Figure 3.2-14

SECTION 4

CAPSULE BUS ANTENNA SUBSYSTEM

The CB antenna subsystem supports RF transmission from the CB radio subsystem to the FSC mounted radio subsystem low rate equipment. The antenna subsystem includes provisions for radio subsystem testing in the pre-flight and pre-separation sequences, except for the CB receiving antenna, as shown in Figure 4.0-1. A summary of component characteristics is presented in Figure 4.0-2. All subsystem components are passive, 50 ohm devices.

4.1 EQUIPMENT IDENTIFICATION AND USAGE

4.1.1 CB Transmitting Antenna - The only subsystem component which will be mounted on the Capsule Lander, the CB transmitting antenna radiates 11 watts of RF power from the CB radio subsystem to the FSC mounted equipment of the CB antenna subsystem. The antenna radiates whenever the CB radio subsystem is transmitting, during pre-flight and in-flight testing, and from CB separation until at least five minutes after landing.

4.1.2 CB Test Antenna - Provided as part of the CB data path during test, the test antenna receives a portion of the RF power radiated from the transmitting antenna.

4.1.3 CB Test Attenuator - Included to provide further attenuation during test, the attenuator provides 60 dB attenuation, with a dissipation rating of 10 watts.

4.1.4 CB Directional Coupler - The directional coupler is common to the test and operational circuitry, and provides 50 dB isolation between the two paths.

4.1.5 CB Receiving Antenna - The CB receiving antenna, a RHC polarized biconical array, will be mounted on a mast which extends from the FSC. The antenna pattern encompasses the relative look angles to the CB during the period from separation until at least five minutes after landing and receives CB radiation at 340.2 MHz and 400.2 MHz.

4.2 DESIGN REQUIREMENTS AND CONSTRAINTS

4.2.1 CB Transmitting Antenna

4.2.1.1 Pattern Coverage - Adequate pattern coverage is required to insure sufficient power radiated toward the FSC from separation until at least five minutes after landing. The coverage will take account of the effects of varied CL attitude and CB/FSC geometry during the above period.

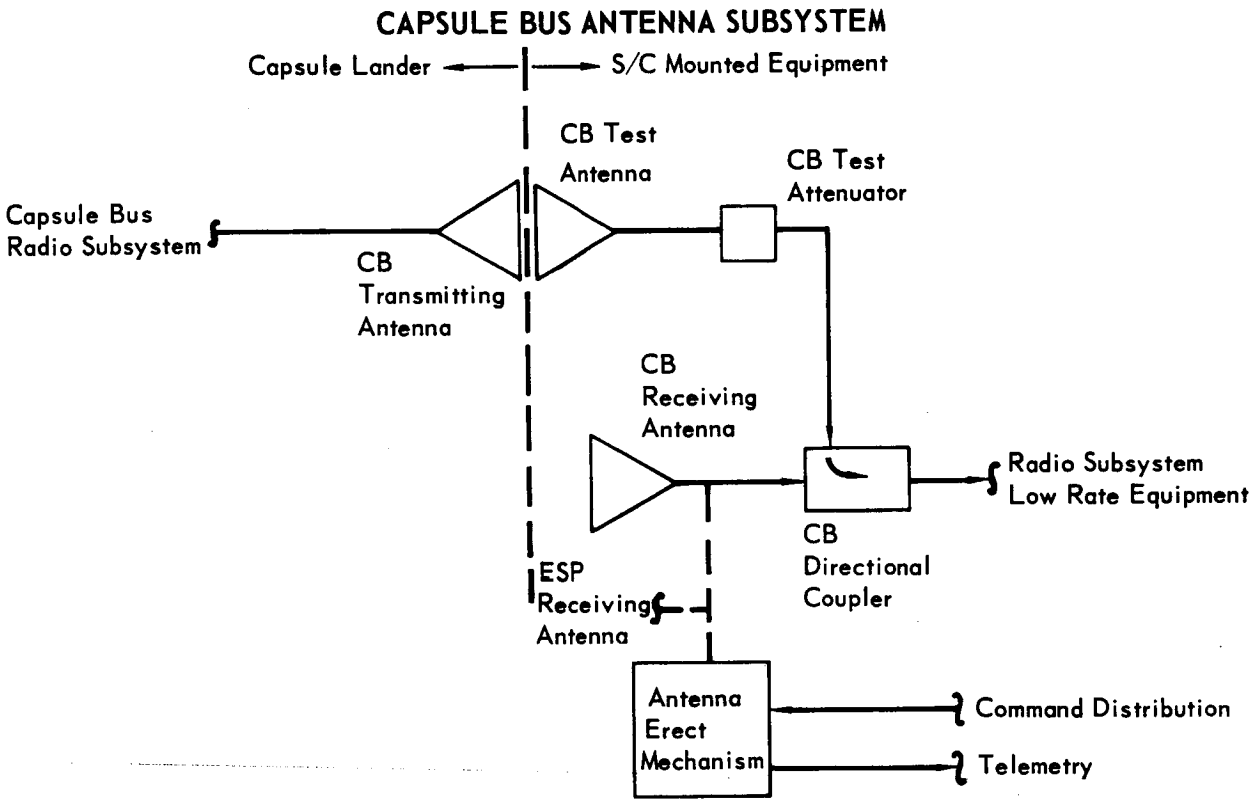
CAPSULE BUS ANTENNA SUBSYSTEM
Capsule Lander
S/C Mounted Equipment
CB Test Antenna
CB Test Attenuator
Capsule Bus Radio Subsystem
CB Transmitting Antenna
CB Receiving Antenna
Radio Subsystem Low Rate Equipment
CB Directional Coupler
ESP Receiving Antenna
Antenna Erect Mechanism
Command Distribution
Telemetry

Figure 4.0–1

CAPSULE BUS ANTENNA SUBSYSTEM SUMMARY

COMPONENT	LOCATION	VOLUME	WEIGHT	POWER	GAIN	POLARIZATION
CB Transmitting Antenna	Capsule Lander	1240 cu in	3 lb	10 W	5.1 dB	RHC
CB Test Antenna	Capsule Adapter	603 cu in	7 lb	10 W*	–	RHC
CB Test Attenuator	Flight Spacecraft	30 cu in	0.5 lb	10 W*	–	–
CB Directional Coupler	Flight Spacecraft	30 cu in	0.75 lb	–	–	–
CB Receiving Antenna	Flight Spacecraft **	4335 cu in	6 lb	–	5.5 dB	RHC

* Dissipation Capability

** Mast Mounted

Figure 4.0–2

4.2.1.2 Multipath - The antenna pattern is shaped to minimize multipath interference, with sharp pattern rolloff and low backlobes.

4.2.1.3 Polarization - The antenna is circularly polarized to account for variations in the relative attitudes of the CB and FSC. The polarization is right hand circular (RHC) to minimize coupling with the ESP antenna subsystem, which operates with LHC polarization in the same frequency band.

4.2.1.4 Bandwidth - The antenna operates at 340.2 MHz and 400.2 MHz.

4.2.1.5 Temperature - The antenna must perform before, during and after the high temperature period of entry. An antenna surface temperature of 650°F is expected, with a conservative upper bound of 1100°F.

4.2.2 CB Receiving Antenna - The receiving antenna will maintain pattern coverage to the CB, within the 3 dB beamwidth, during the period from separation until the FSC passes beyond the radio horizon after landing. The antenna is RHC polarized to optimize reception of radiation from the RHC polarized CB transmitting antenna, and reject radiation from the LHC polarized ESP transmitting antenna.

4.3 PHYSICAL CHARACTERISTICS

4.3.1 Transmitting Antenna - The transmitting antenna is a cavity backed Archimedes spiral, seven inches deep, with a 15 inch diameter. Volume and weight are shown in Figure 4.0-2. Location on the Capsule Lander is shown in Figure 4.0-3. The antenna is raised above the surrounding structure to protrude through the thermal curtain with a clear field of view ±60 degrees off the -Z axis.

4.3.2 CB Test Antenna - The test antenna is a cylinder, three inches high and 16 inches in diameter, lined with RF absorber (Emerson and Cuming NZ-2 satisfies the temperature and free space environment requirements) and dielectric.

4.3.3 CB Test Attenuator - The coaxial attenuator will be mounted in the FSC, with volume and weight requirements as shown in Figure 4.0-2.

4.3.4 CB Directional Coupler - The directional coupler with approximate dimensions of six inches by five inches by one inch will be mounted in the FSC.

4.3.5 CB Receiving Antenna - The receiving antenna is a two dimensional array of RHC polarized bicones. The array dimensions are approximately 30 inches by 17 inches by 8.5 inches, with weight and volume as shown in Figure 4.0-2. Each bicone is approximately 150 electrical degrees long at center frequency, with a conical flare angle of 60 degrees. The circularly polarized feed consists of a

CAPSULE BUS TRANSMITTING ANTENNA LOCATION

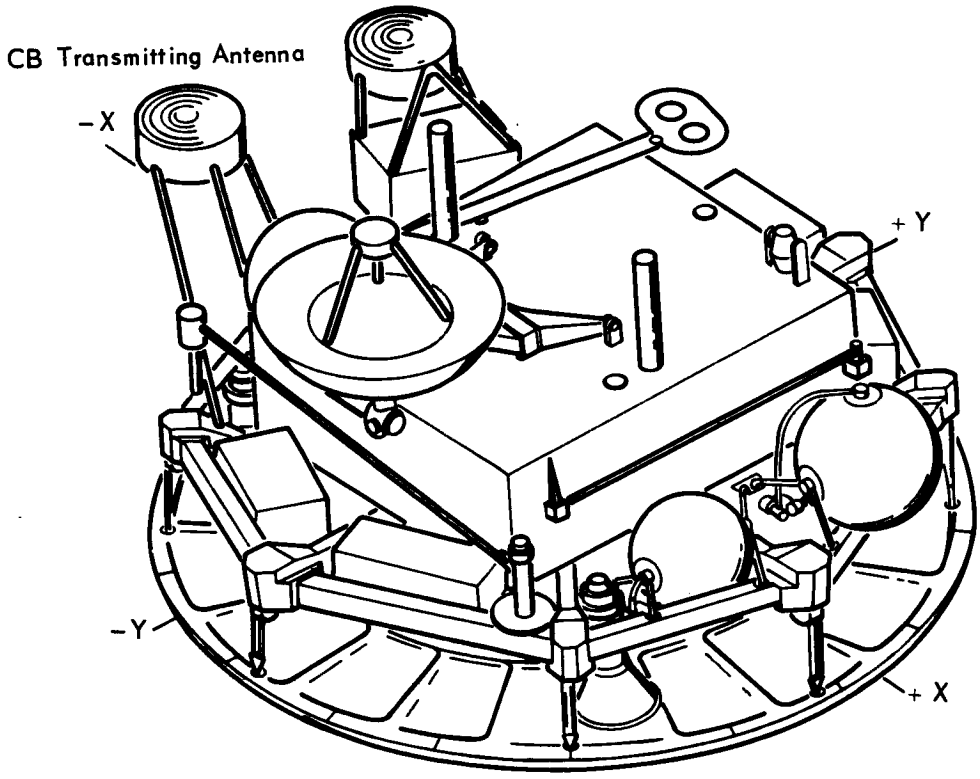

Figure 4.0-3

loop concentric with the bicone axis in the apex region for sensing polarization perpendicular to the axis, and a coaxial feed to sense polarization parallel to the axis. The antenna will be mounted on a common mast with the ESP receiving antenna, located as shown in Figure 4.0-4, and pointed to accommodate line of sight variations during the predicted de-orbit through post-landed sequence.

4.4 PERFORMANCE CHARACTERISTICS

4.4.1 Transmitting Antenna - Model antenna tests have been conducted to determine the antenna configuration which best satisfies the pattern coverage and multipath requirements. The most favorable antenna, an Archimedes spiral above a cavity, presents a pattern as shown in Figure 4.0-5. Maximum gain is approximately 5.1 dB (70% efficient) and the beamwidth is approximately 95 degrees. Average gain slope for angles beyond 70 degrees of axis is 0.73 dB per degree. Backlobe radiation is approximately 26 dB below maximum gain. The on-axis axial ratio is less than 1 dB, with RHC polarization. As shown, a conic section 55 degrees off axis exhibits less than 1.5 dB variation, with a symmetrical ground plane. Model tests were performed at 1200 MHz.

4.4.2 CB Test Antenna - Refer to Figures 4.0-2 and 4.0-6.

4.4.3 CB Test Attenuator - Refer to Figures 4.0-2 and 4.0-6.

4.4.4 CB Directional Coupler - Refer to Figures 4.0-2 and 4.0-6.

4.4.5 CB Receiving Antenna - The predicted pattern coverage is shown in Figure 4.0-7, with a gain of approximately 5.5 dB for 70% efficiency.

4.5 RELIABILITY AND SAFETY CONSIDERATIONS

4.5.1 Reliability - The antennas present single point failure modes in the link between the CB radio subsystem and the FSC mounted radio subsystem low rate equipment, from separation until entry, and after landing. However, a functional backup exists in the ESP antenna subsystem, for all CB data from entry until landing, due to interleaving between the CB and ESP data links. The most probable failure mechanism for the antennas is the result of physical damage to the connectors, feed points or elements, which would probably occur during handling or installation, and would be evident upon visual inspection or subsystem testing prior to sterilization.

The antenna positioning mechanism will be the most simple, reliable design possible, and will be compatible with the FSC configuration.

CAPSULE BUS RECEIVING ANTENNA LOCATION

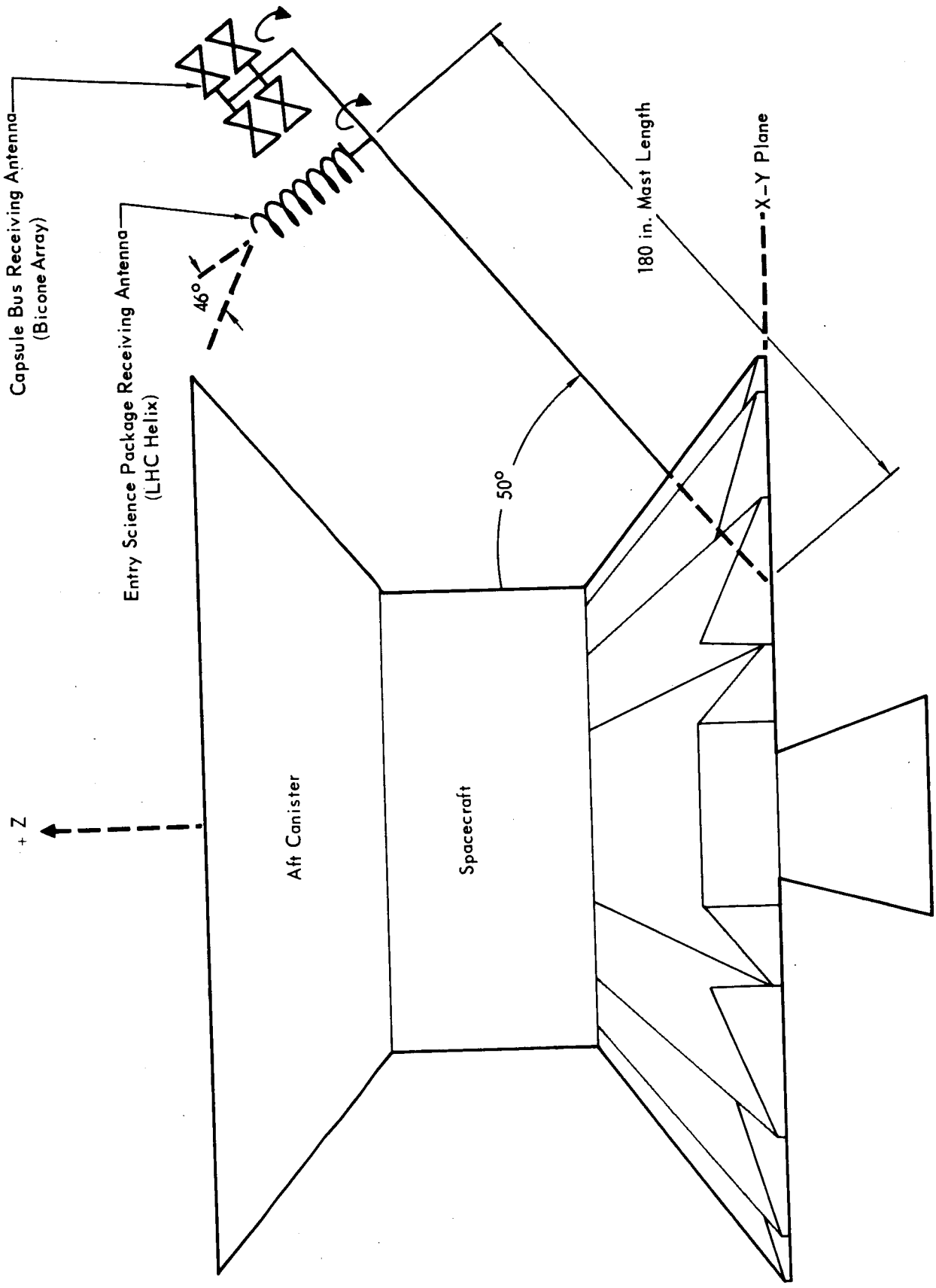

Figure 4.0–4

CAPSULE BUS TRANSMITTING ANTENNA
CONIC SECTION 55° OFF AXIS
(1/3 SCALE MODEL)

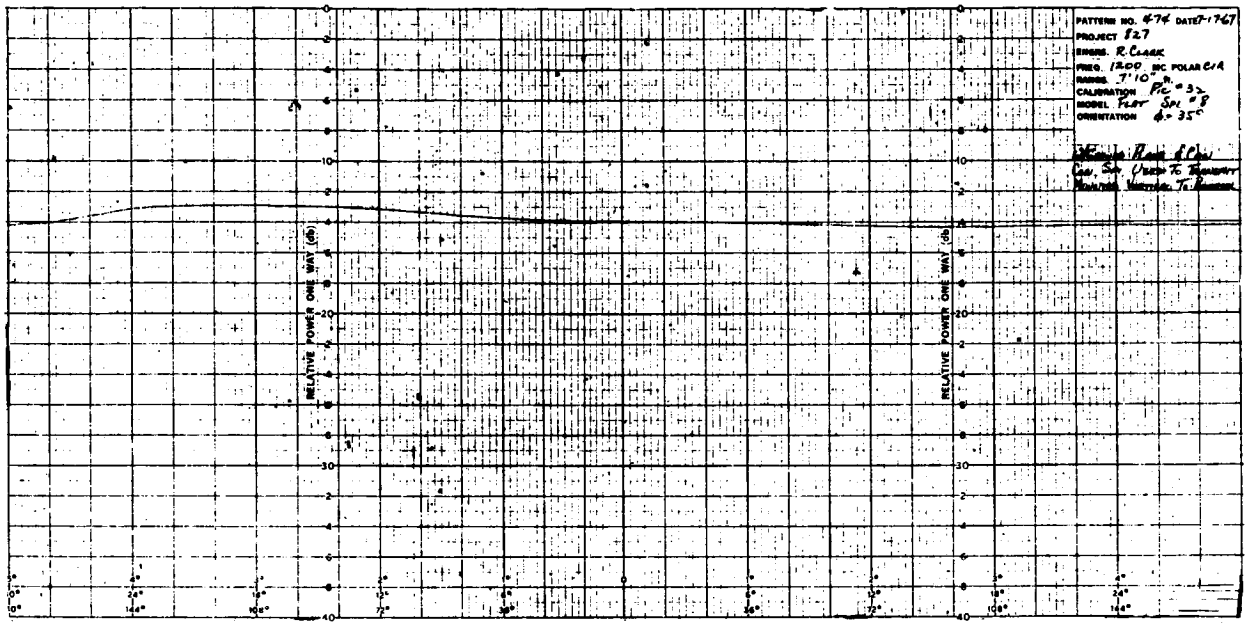

RADIATION PATTERN
(1/3 SCALE MODEL)

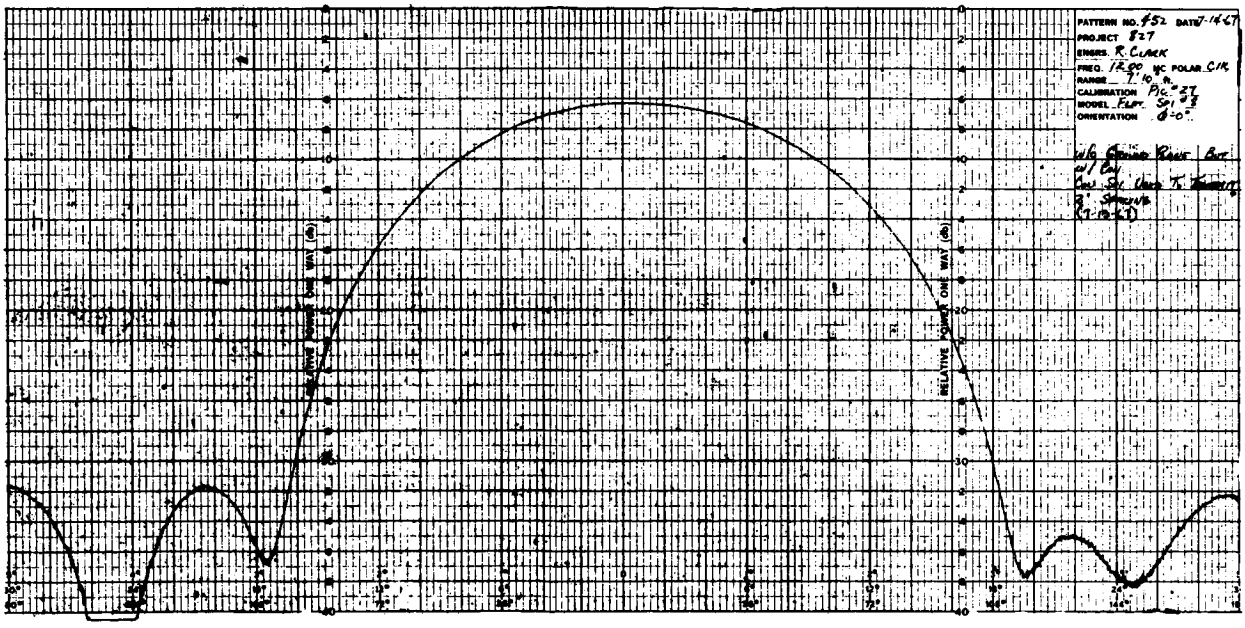

Figure 4.0–5

POWER FLOW THROUGH CAPSULE BUS ANTENNA SUBSYSTEM DURING TEST

COMPONENT	POWER IN	POWER OUT	LOSS MECHANISM
CB Transmitting Antenna	+40.4 dBm	+40.4 dBm	Radiation
CB Test Antenna	+40.4 dBm	-7dBm	Absorption & Decoupling
CB Attenuator	-7dBm	-67dBm	Dissipation
CB Directional Coupler	-67dBm	-117dBm	Reflection

S/C Mounted Radio Subsystem Low Rate Equipment Dynamic Range; -123dBm to +20dBm

Figure 4.0-6

CALCULATED CAPSULE BUS RECEIVING ANTENNA ARRAY PATTERNS

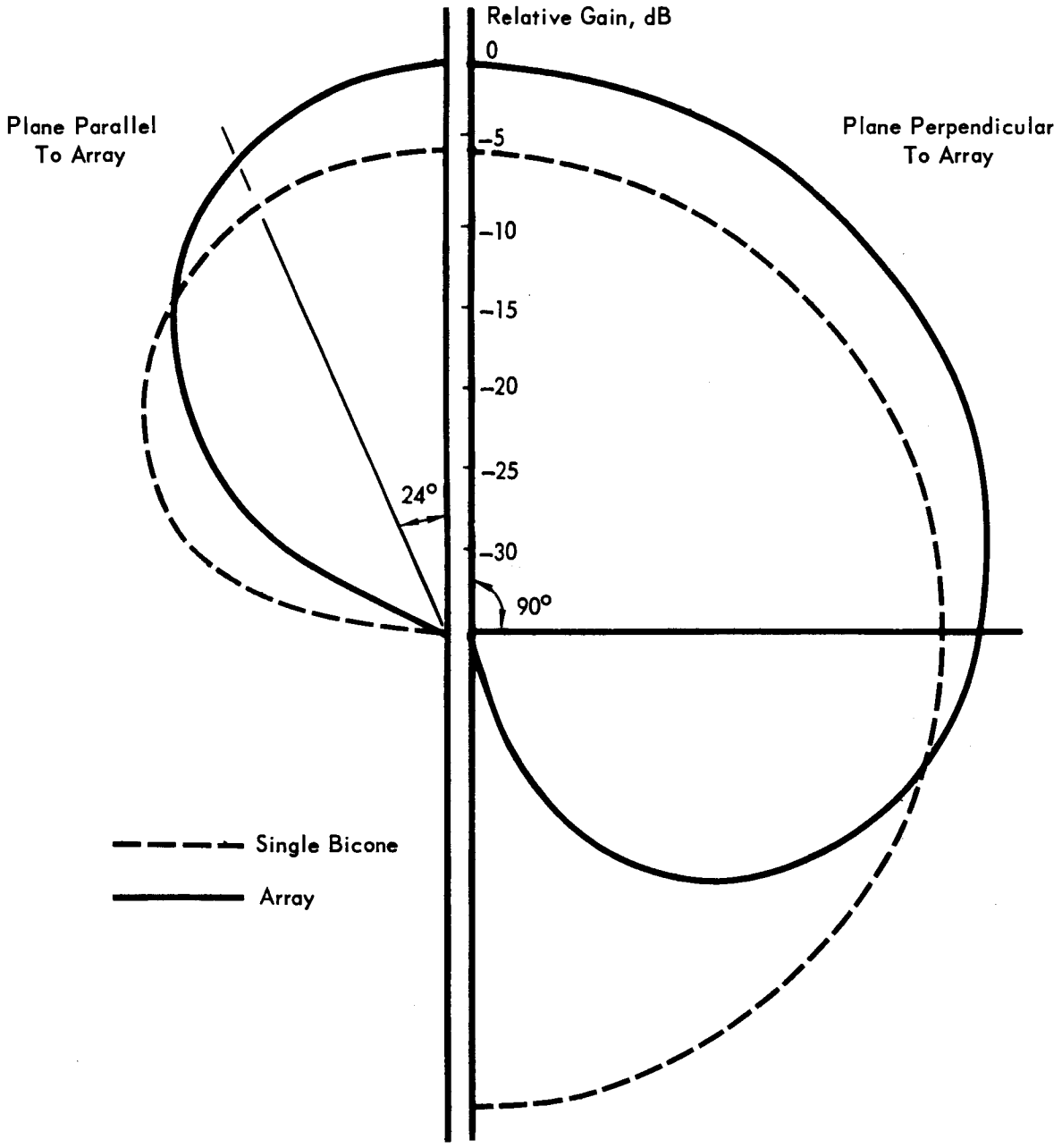

Figure 4.0–7

4.5.2 Safety - The CB transmitting antenna will radiate approximately 11 watts of RF power during tests after installation. The antenna is included as an operating element of the test path in order to eliminate the need for RF switches. To eliminate stray radiation, the CB test antenna will cover the CB transmitting antenna until CB separation.

4.6 TEST

4.6.1 CB Transmitting Antenna - The transmitting antenna will be tested for pattern coverage and impedance characteristics after delivery. Impedance characteristics will be measured during and after life cycling to insure proper performance subsequent to sterilization and during entry heating. Breakdown characteristics will be determined in the spectrum of Mars atmospheres. Explicit measurement of antenna performance will not take place during subsystem testing. However, transmitting antenna performance will be implied in forward and reflected power measurements made between the transmitters and diplexer of the CB radio subsystem.

4.6.2 CB Test Antenna - Testing before installation will include satisfactory separation from the CB transmitting antenna and survival of the sterilization environment. The antenna must retain a RF seal around the transmitting antenna after sterilization, and must release at CB separation.

4.7 DEVELOPMENT REQUIREMENTS

4.7.1 Transmitting Antenna - High temperature spiral antennas have been built for S-band operation. Development will be required to obtain high temperature performance at UHF, due to increased antenna size.

4.7.2 CB Test Antenna - The test antenna must be designed to satisfy the requirements peculiar to the application. However, no material developments are required. Development will be required to arrive at the optimum configuration.

4.7.3 CB Receiving Antenna - Circularly polarized biconical antennas have been developed at higher frequencies. The UHF circularly polarized feed mechanism requires development.

SECTION 5

DATA STORAGE SUBSYSTEM

The Data Storage Subsystem consists of the CB Data Storage Assembly and the Spacecraft-Mounted CB Support Data Storage Assembly. The CB DSA provides a time-delay function, and the SC-MTD CB Support DSA provides tape storage of relayed CB data.

5.1 CAPSULE BUS DATA STORAGE

5.1.1 Equipment Identification and Usage - The CB Data Storage Assembly accepts real time data from the real time data interleaver of the CB TM Equipment and provides two lines of delayed data to the delayed data interleavers of the CB TM Equipment. The two delayed outputs are interleaved with real time data giving triple redundance for all data in the high rate data modes. Figure 5.1-1 is a functional block diagram of the CB Data Storage Assembly.

The preferred CB Data Storage is two coincident-current core memories. The first provides a nominal 50 seconds of delay, the output feeding both the data interleaver and a second memory which provides an additional nominal 100 seconds of delay for a total of 150 seconds of delay. The assembly consists of the following subassemblies.

a. 2048 word by 23 bit core memory

b. 4096 word by 23 bit core memory

Each core memory will consist of a 3D organized core stack and the electronics necessary to drive the stack. The data storage assembly is driven at a 910 bps rate, and the actual delays are 51.8 sec and 103.5 sec for a total delay of 155.3 sec.

5.1.2 Design Requirements and Constraints - The design requires that data received at 910 bps be delayed 50 seconds and 150 seconds. This calls for at least 45,500 bits of storage for 50 seconds of delay and 91,000 bits for 100 seconds of delay. The Data Storage Assembly must be compatible with the bit stream moving through the data interleaver. Therefore, the assembly must operate in a serial by bit mode. Following is a summary of design requirements:

Total Storage Capacity	136,500 bits
read rate	910 bps
write rate	910 bps

Other requirements and constraints on the design of the CB Data Storage Assembly have been called out in Reference 5.1-1.

5.1.3 Physical Characteristics - The 50-second delay memory occupies 120 cu. in., weighs 5.3 lbs. and consumes 3 watts of power. The 100-second delay memory occupies 132 cu. in., weighs 4 lbs., and consumes 4 watts. This gives assembly totals of 252 cu. in., 7.5 lbs., and 7 watts. The power consumed is an average based upon the use of a 20 microsecond cycle time at a bit rate of 910 bps.

CB DATA STORAGE FUNCTIONAL BLOCK

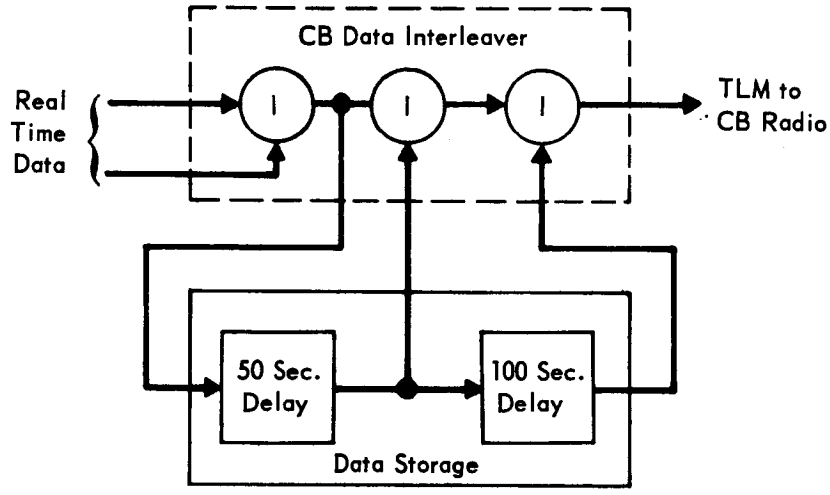

Figure 5.1-1

5.1.4 Operation Description - The Data Storage Assembly is used during entry and terminal descent. The operation of both delay memories is identical. They are coincident current units utilized in a serial by bit configuration. The memory cycle is the split cycle or read-modify-write cycle. Old data is read out of an address and new data is written into that address before the address register is advanced. The delay of each memory is proportional to the Storage capacity. Figure 5.1-2 is a detail block diagram of the CB Data Storage Assembly. Following is a description of the elements in the 50-second delay memory.

5.1.4.1 Internal Timing Logic - This logic provides all timing pulses necessary for the transfer of data in and out of the Storage array. The CB clock generator is used as the memory master clock. From this clock is generated the timing pulses for the read, write, and inhibit current pulses. The sense amplifier strobe and address counter advance are also derived from the clock. The internal timing logic is enabled only when the MOD 23 counter overflows. Figure 5.1-3 is a diagram of the memory internal timing.

5.1.4.2 MOD 23 Counter - MOD 23 counter counts the number of bits shifted into the input register. The overflow of this counter enables the memory cycle.

5.1.4.3 Address Register - This register is a binary counter that advances at the end of each memory cycle. For the 50-second delay it is a 13-bit counter. A 14-bit counter is required for the 100-second delay.

5.1.4.4 X - Y and Inhibit Decode and Drivers - Each dimension of the core stack requires a decode matrix and current drivers that provide the half select currents to drive the core stack. The X - Y currents are present during both read and write. The inhibit current is present only when it is desired to write a zero in an address.

5.1.4.5 Storage Array - The Storage array for the 50-second delay will be a 3D organized stack using 20 mil. O.D cores with 2048 cores per plane and 23 planes for a total of 47104 bits of storage capacity. The inhibit and sense lines are unique to each plane and the X-Y lines are common to all planes in the stack. The 100-second delay will require 4096 cores per plane, and 23 planes giving a total of 94208 bits of storage.

5.1.4.6 Sense Amplifiers - The output of a 20-mil core is on the order of 30 mv. Therefore, high gain differential amplifiers are required to bring the data contained in the cores up to standard integrated curcuit logic levels. One sense amplifier is required for each bit in a word. This gives a total of 23 sense amplifiers in each memory.

CB DATA STORAGE BLOCK DIAGRAM

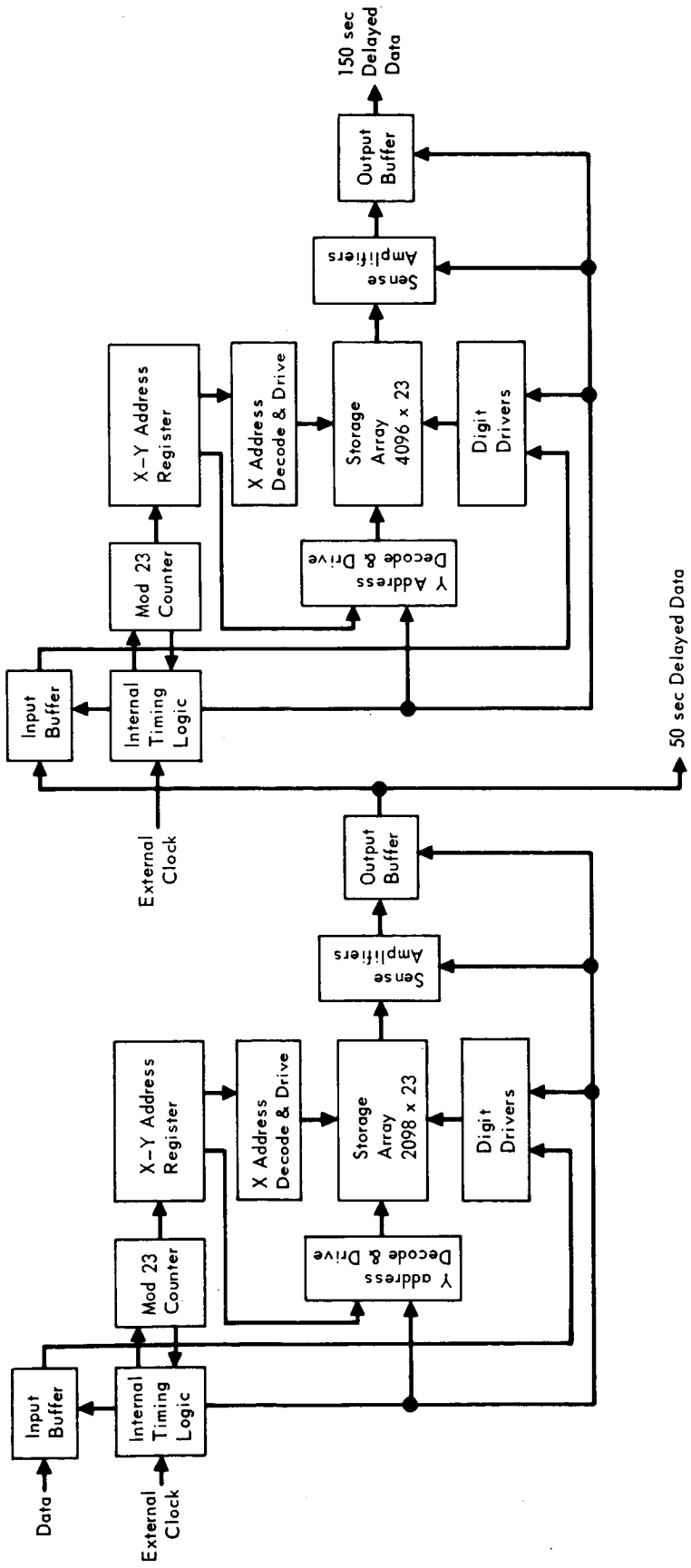

Figure 5.1–2

MEMORY INFORMAL TIMING DIAGRAM

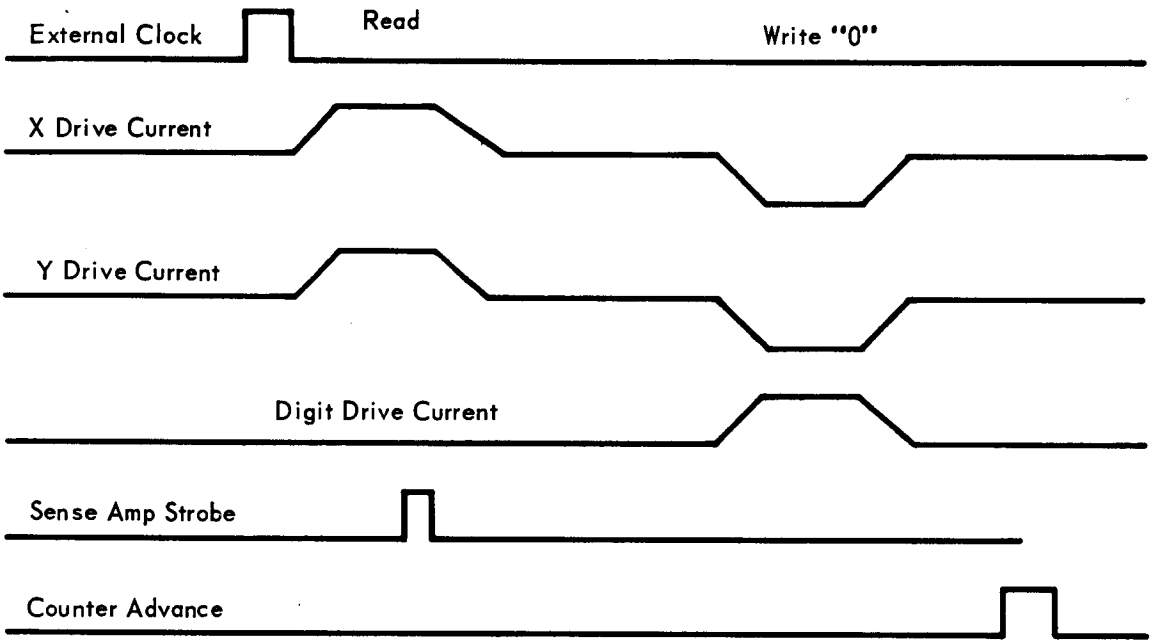

Figure 5.1–3

5.1.4.7 Output Buffer - A 19 bit parallel-in-serial-out shift register accepts data as it comes out of core in parallel and shifts the data out serially.

5.1.5 Performance Characteristics - CB Data Storage Performance Characteristics are listed in Figure 5.1-4.

5.1.6 Interface Definition - The Capsule Bus Data Storage Assembly has signal interfaces with the CP Power Subsystem, and CB Telemetry equipment as given on the Interface Diagram, Figure 5.1-5. The digital data streams move at 910 bits per second.

5.1.7 Reliability and Safety Considerations - As a design parameter, the following paragraphs describe the reliability and safety consideration of the Capsule Bus Data Storage Assembly.

5.1.7.1 Mission Success Definition - The CB Data Storage contribution to mission success is to provide delayed storage for the interleaved CB and low-rate ESP data. There are two nominal delay periods required: 50 seconds and 150 seconds.

5.1.7.2 Reliability Model - Capsule Bus Data Storage has an assessed reliability of 0.988 probability of successful performance. Figure 5.1-6 shows the reliability block diagram for the Data Storage Assembly.

5.1.7.3 Mission Failure Modes and Effects - Figure 5.1-7 shows the failure fault tree for the Capsule Bus Data Storage Assembly.

Redundancy is not employed within the assembly.

The degraded modes of operation of the assembly can be categorized as follows:

- o Correct 50-second delayed data and erroneous 150-second delayed data.
- o Erroneous 50-second and 150-second delayed data.

This first mode would result from a failure in the 100-second delay storage unit. The second mode would result from either a failure of the 50-second delay unit or a failure in both the 50-second and 100-second delay units. The erroneous data can be either no data, incorrect data, or a data delay of a time period other than specified. Operation in either of the degraded modes will not cause mission failure, because the Entry Science Package provides functionally redundant data transmission.

5.1.7.4 Complexity Estimate - The Capsule Bus Data Storage Assembly is estimated to have a total piece parts count of 149,775, of which 147,456 are magnetic cores. The estimated parts count is detailed in Figure 5.1-8.

5.1.7.5 Safety Considerations - No high voltages or pyrotechnics are employed so no safety considerations are denoted.

PERFORMANCE CHARACTERISTICS, CB DATA STORAGE

CHARACTERISTIC	50 SECOND DELAY	100 SECOND DELAY
Storage Capacity	47,104 bits	94,208 bits
Read Access Time	0.7 μ sec	0.7μ sec
Write Access Time	0.85 μ sec	0.85μ sec
Split Cycle Time	2.0μ sec	2.0μ sec
Bit Error Probability	$<10^{-4}$	$<10^{-4}$
Power	3.0 watts	4 watts

Figure 5.1–4

CB DATA STORAGE INTERFACE DIAGRAM

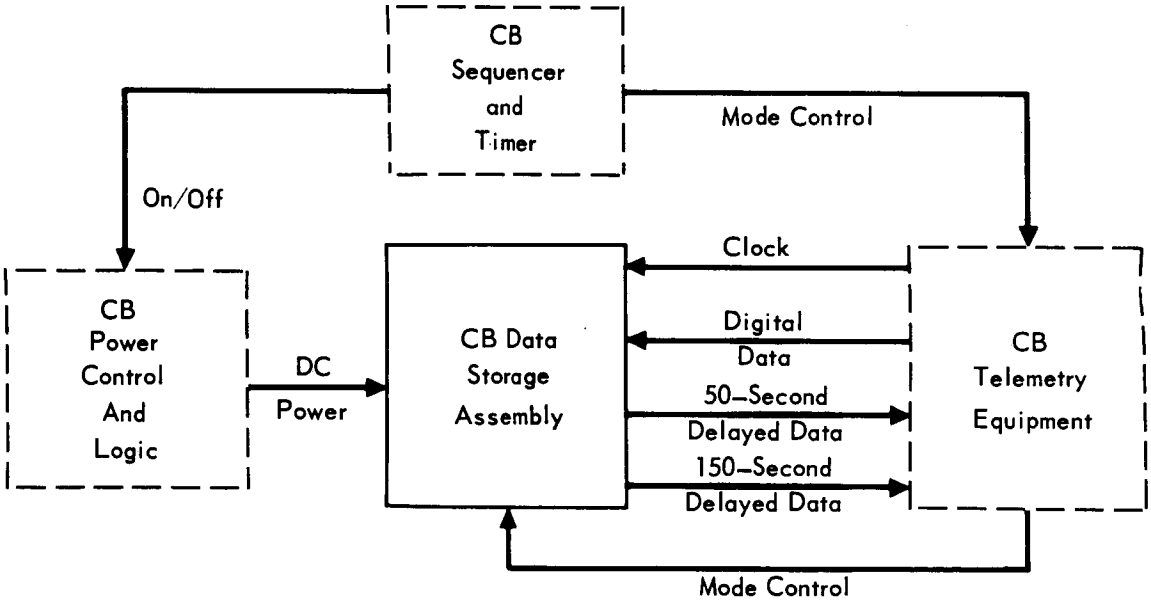

Figure 5.1–5

CAPSULE BUS DATA STORAGE RELIABILITY MODEL

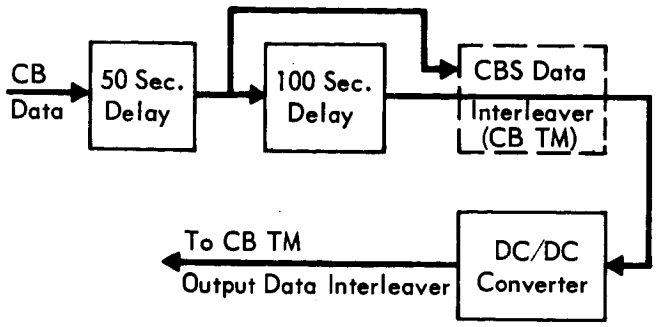

P_s (CB Delayed Data, 115 hrs) = $e^{-0.008060}$ = .991972

Figure 5.1–6

CAPSULE BUS DATA STORAGE RELIABILITY FAULT TREE

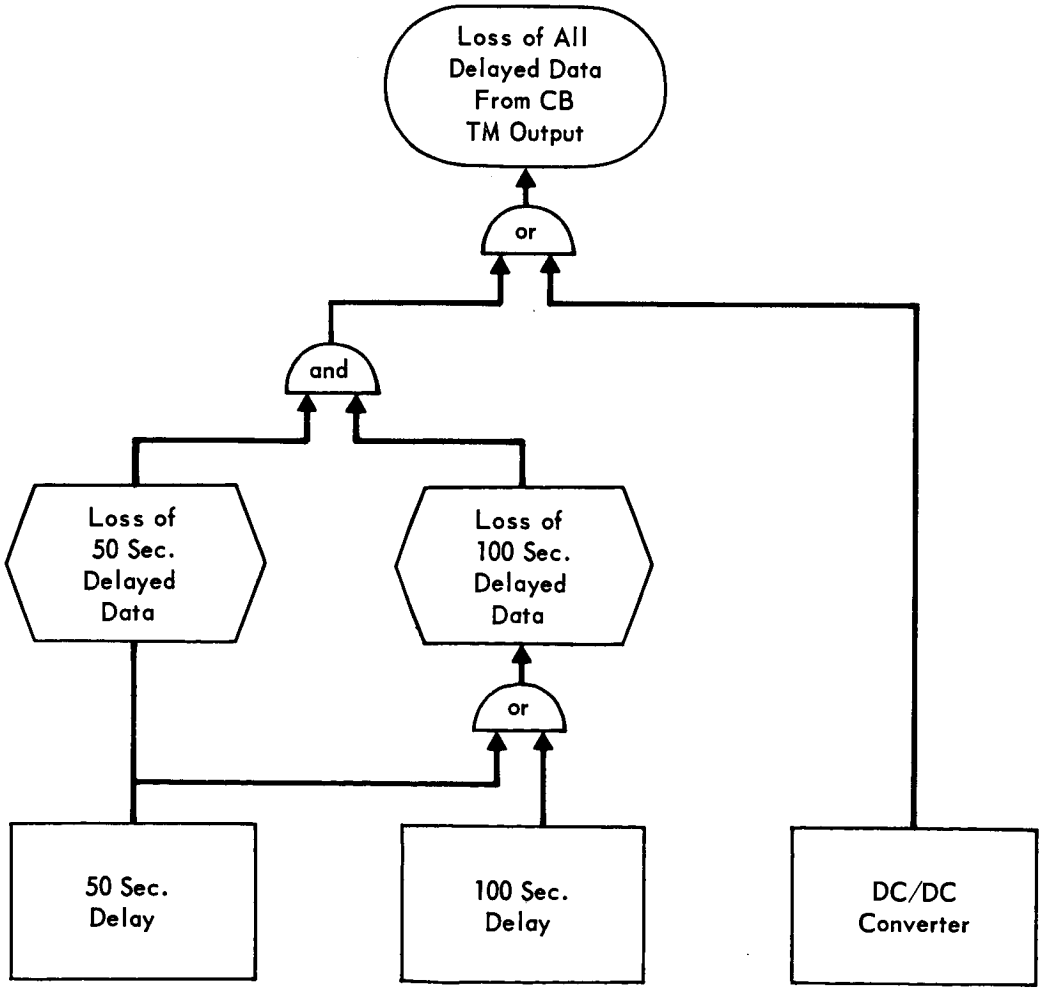

Figure 5.1–7

DATA STORAGE CAPSULE BUS

RELIABILITY PARTS COUNT ESTIMATE

PART TYPE	FAILURE RATE (BITS)[2]	COMPONENT PARTS COUNT			TOTAL PARTS	TOTAL FAILURE RATE (BITS)
		DC/DC CONV.	50 SEC DELAY	100 SEC DELAY		
Integrated Checkouts:						
Digital	10.000		42	60	102	1020
Linear	30.000		24	24	48	1440
Transistors:						
G.P.	5.000	2	120	176	298	1490
Power	50.000	4			4	200
Diodes:						
G.P.	1.100	8	294	420	722	794.2
Zener	10.000	2			2	20
Resistors:						
Metal Film	0.300	10	202	288	500	150
Carbon Comp.	0.100		155	221	376	37.6
Capacitors:						
Ceramic	1.000	4	36	52	92	92
Solid Tant.	2.000	4	28	28	60	120
Cores	0.002		38,912 (3,150)[1]	77,824 (4,500)[1]	116,736 (7,650)	233.5
Connections	0.1					765
Transformer, L.V.	5.000	1			1	5
Transformer, Sw	5.000		46	66	112	560
Inductors, L.V.	10.000	2			2	20
Totals:		37	39,859	79,159	119,018	6947.3

Notes: 1 – The number of core connections contributes to the failure rate only and is not included in the number of parts.
2 – Failure rate in failures per 10^8 hours.

Figure 5.1-8

5.1.8 Test - Testing of CB Data Storage will be conducted as tabulated in the Test Matrix, Figure 5.1-9, in accoradance with the Integrated Test Plan.

Tests will be performed prior to Canister enclosure, after enclosure prior to final sterilization, after sterilization and during prelaunch operations. All ground testing shall be performed with the use of Operational Support Equipment (OSE). In-flight checkout will be performed through the DSIF. In-flight checkout (pre-separation) is initiated by the appropriate flight capsule test programmer upon command from the DSIF and monitored through the spacecraft telemetry system.

Ground test of the Data Storage Assembly is accomplished by inserting a data pattern which has been determined by final design analysis to be the worst case pattern for the storage array, and verifying the pattern as it comes out of memory.

In-flight testing is accomplished as part of an end-to-end check of the telemetry subsystem.

5.1.9 Development Status - Core stacks and the ancillary peripheral electronics that have been used for spacecraft applications are available as off-the-shelf items. Consultation with the designers and manufacturers of these devices has indicated that these assemblies should be capable of withstanding the sterilization and decontamination environments without degradation. Qualification of parts and suppliers will require tests which stress these environments in addition to requirements for parametric stability, long life, and failure rate.

CAPSULE BUS DATA STORAGE SUBSYSTEM SPACECRAFT MOUNTED
CAPSULE BUS SUPPORT DATA STORAGE

	TEST	ACCY REQ.	Non Operative Test	Input Bit Stream	Output Bit Stream	Memory "Overflow" Signal	Memory "Empty" Signal	Power Supply Voltage	Power Supply Current	Sequencing Clock Frequency	Tape Speed	Tape Direction	Tape Bias Voltage	Tape Motor Drive Voltage	Command Verification
				Digital	Digital	Digital	Digital	2%	2%	Digital	0.1%	Digital	2%	2%	Digital
Telemetry Points						X	X	X	X			X	X	X	X
System Test				X	X	X	X	X	X	X	X	X	X	X	X
Pre-Launch						X	X	X	X			X	X	X	X
In-Flight Chackout								X	X			X	X	X	X

Figure 5.1-9

SECTION 5.1

REFERENCES

5.1-1 "1973 VOYAGER Capsule Systems contraints and Requirements Document" dated 1 January 1967 and 18 May 1967, authored by the Jet Propulsion Laboratory of the California Institute Technology.

5.2 SPACECRAFT - MOUNTED CAPSULE BUS SUPPORT DATA STORAGE

5.2.1 Equipment Identification and Usage - The Spacecraft-Mounted CB Support Data Storage Assembly (S/C CB DSA) is a magnetic tape recorder - reproducer and interface equipment with a total storage capacity of 8×10^6 bits. The S/C CB DSA records engineering data which are transmitted over the CB to FSC relay link during Flight Capsule entry and descent. These data are recorded on magnetic tape and are available for delayed playback and transmission at rates compatible with the FSC Telemetry Subsystem and the FSC Radio Subsystem.

5.2.2 Design Requirements and Constraints - The S/C CB DSA is constrained by the mission profile to remain in a power-down condition for extended periods of time. This condition suggests the use of a tape transport and an Iso-Elastic drive or an equivalent transport design which inhibits tape spillage during the power-down period.

The storage capacity (8×10^6 bits) and low data rates (2730 bits per second and 273 bits per second) can be satisfied by a multiple speed single data track tape transport with a tape capacity of 670 feet @ 1000 bits/inch packing density.

Data playback will probably be sampled at low bit rates and must be synchronized with FSC telemetry through the use of a phase-locked loop drive system as illustrated in the DSA system block diagram in Figure 5.2-1. The data register eliminates the effects of time displacement errors.

These requirements are based on the equipment usage defined in Paragraph 5.2.1. This recorder should be made available to the Flight Spacecraft System following the landing phase of the Flight Capsule, provided that additional requirements derived from application to the FSC do not compromise the primary mission of the recorder. Requirements can be modified at a systems integration level in Phase C.

5.2.3 Physical Characteristics - The DSA occupies 260 cubic inches, weighs 7 lbs, and requires 6 watts when operating. It records data on a single track and contains 670 feet of 1/4 inch 1-mil heavy duty Mylar-backed instrumentation tape. The tape transport is continuous motion reel-to-reel, using a peripheral reel-to-reel belt-driven configuration with flangeless reels.

5.2.4 Operation Description - The tape transport configuration includes a single seamless Mylar belt of approximately the same width as the tape which encircles the periphery of the tape packs and is driven by a differential capstan system to ensure tape-head contact and minimize data drop out. The tape pack remains under positive control of the pressure belt, permitting a power-down without danger of tape spillage.

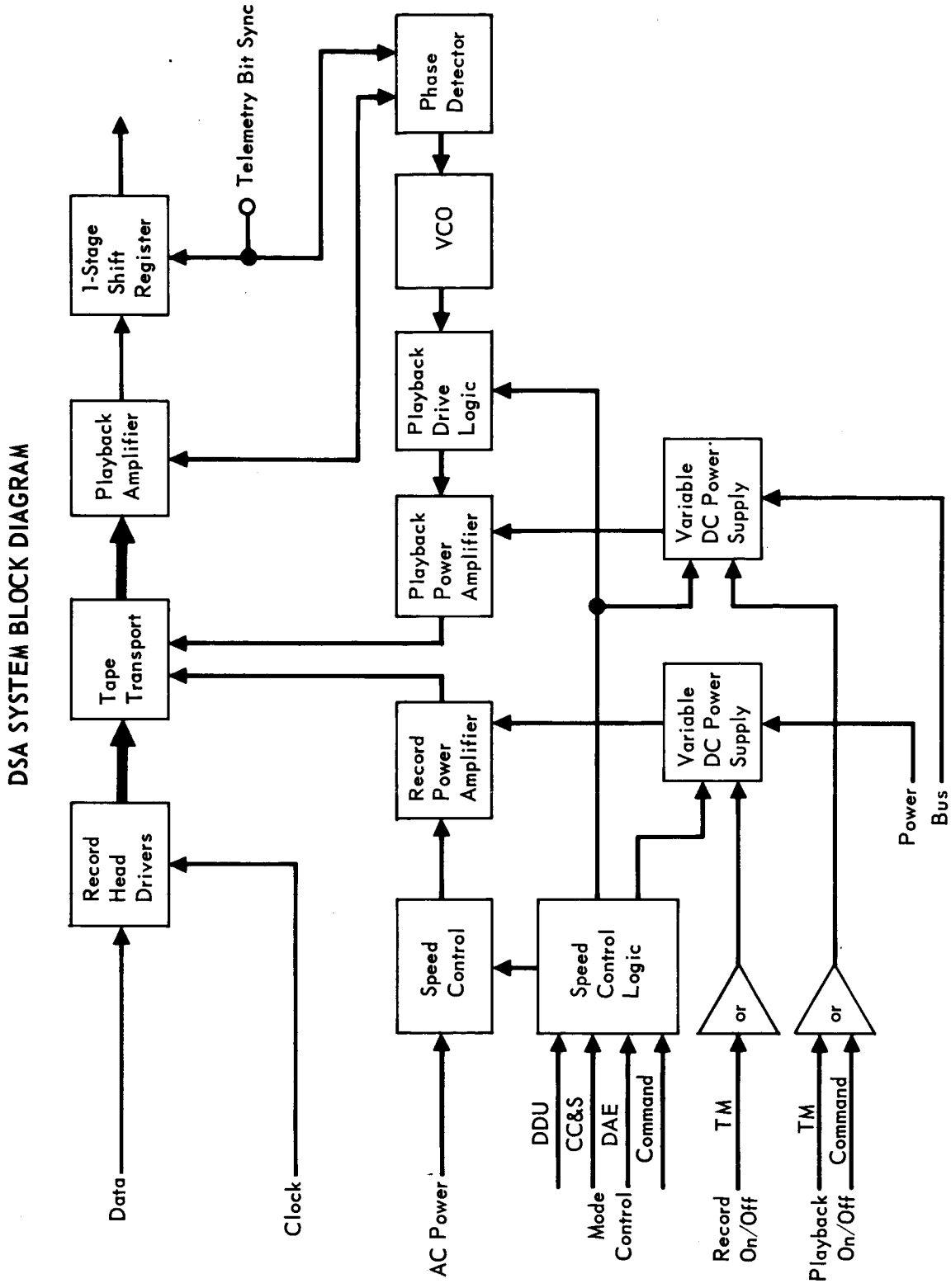
DSA SYSTEM BLOCK DIAGRAM
Data
Clock
Record Head Drivers
Tape Transport
Playback Amplifier
1-Stage Shift Register
Telemetry Bit Sync
Phase Detector
VCO
Playback Drive Logic
Playback Power Amplifier
Record Power Amplifier
Speed Control
Speed Control Logic
AC Power
DDU
CC&S
DAE
Command
Mode Control
Record On/Off
TM
or
Playback On/Off
TM
Command
or
Variable DC Power Supply
Variable DC Power Supply
Power
Bus

Figure 5.2–1

Tape bit packing density in the record mode is held constant at 1000 bits per track inch by a 1-to-10 speed change of the drive motor. The speed change is obtained by power supply frequency division and voltage attenuation for the hysteresis synchronous drive motor.

The DSA is controlled in the record mode by signals which originate in the FSC S/C MTD CB Support Radio bit synchronizer. It thus records only when data is being received from the CB. Recording is under automatic control of the link rather than the FSC CC&S.

Upon separation, the received rate of 273 bps will place the recorder in the low-rate data mode, where it remains (as long as receiver sync is maintained) throughout Orbital Descent. At Entry, the link shifts to 2730 bps, and the presence of sync lockup at this rate, coupled with loss of 273 bps sync, switches the recorder to the high rate mode, where it remains until the end of the Capsule Bus mission.

Playback is under control of the FSC CC&S. Since data identical to that recorded on tape is simultaneously relayed in real time by the FSC, the tape playback will be backup and will probably be transmitted at 110 bits per second (interleaved with other FSC telemetry). Hence the record/reproduce ratios are expected to be 2.5:1 and 25:1 for low rate data mode and high rate data mode respectively, and is within the capability of existing technology with phase-locked loop speed control.

Data is recorded in one complete unidirectional passage of tape, and reproduced with the tape driven in the opposite direction.

Backup control of recorder playback is provided by the FSC Command Subsystem.

The S/C CB DSA will include as a part of its operational capability these additional features:

- Provide for external control of tape speed, data mode, and record and playback functions.
- Provide status signals for "recording data", "reproducing data", and "recorder malfunction".
- Provide signals to telemetry for case temperature, internal pressure, and operating status.
- Provide the necessary inverters and power supplies for operation of the tape transport and DSA electronics on the 28 volt power from the S/C support equipment power bus.

5.2.5 Performance Characteristics - The performance characteristics of the DSA are:

Capacity	8×10^6 bits
Data Input	
Low Rate Mode	273 bps serial NRZ
High Rate Mode	2730 bps serial NRZ
Record Tape Speed	
Low Rate Mode	0.273 inches per second
High Rate Mode	2.73 inches per second
Bit Packing Density	1000 bits per track inch
Record/Reproduce Ratio	
Low Rate Mode	2.5:1
High Rate Mode	25:1
Reproduce Tape Speed	0.11 inches per second
Data Output	110 bps serial NRZ
Wow and Flutter	Not applicable
Bit error rate	less than 1 bit in 10^5

5.2.6 Interface Definition - All DSA electrical interfaces except power and telemetry points are with the FSC-MTD Flight Capsule Data Distribution Unit (DDU) for interface control purposes, although the sources and destinations of the electrical signals rest in other subsystems as listed in Figure 5.2-2. The power interface is with the FSC Power Subsystem. The telemetry points interface with the FSC-MTD Support Equipment Instrumentation and Commutation Assembly, from which they are routed to FSC telemetry.

5.2.7.1 Mission Success Definition - The Spacecraft Mounted Capsule Bus Data Storage (Tape Recorder) is required to successfully record the Capsule Bus data during the Deorbit and Descent phases of the mission and to playback that data upon command from the Spacecraft. The record mode performance and the playback mode performance must be compatible with the CB data rates and FSC data rates respectively. The tape recorder is a backup for the real time data transmission.

5.2.7.2 Reliability Model - The Tape Recorder (Data Storage) has an assessed reliability of a 0.986 probability of successfully performing its required function. Figure 5.2-3 illustrates the reliability model for the tape recorder.

5.2.7.3 Mission Failure Modes and Effects - Figure 5.2-4 shows the failure fault tree for the tape recorder. Failure of the units in either the record or playback mode will result in a loss of the data. The Capsule Bus data is transmitted real

DSA/DDU INTERFACE DEFINITION

INTERFACE FUNCTION	SOURCE	DESTINATION
Record ON/OFF Input Data Input Clock	CB Support Radio Bit Synchronizer	
Playback ON/OFF	FSC CC & S FSC Command	
Output Data Output Data Sync	FSC Telemetry Subsystem	FSC Telemetry Subsystem
Mode Control	FSC CC & S FSC Data Automation FSC Command	
Recorder Identification		FSC Telemetry
Status Signals ("Recording") ("Reproducing") ("Malfunction") ("Start of Tape") ("End of Tape")		FSC Data Automation FSC Telemetry

Figure 5.2–2

VOYAGER SPACECRAFT MOUNTED CAPSULE BUS DATA STORAGE RELIABILITY MODEL

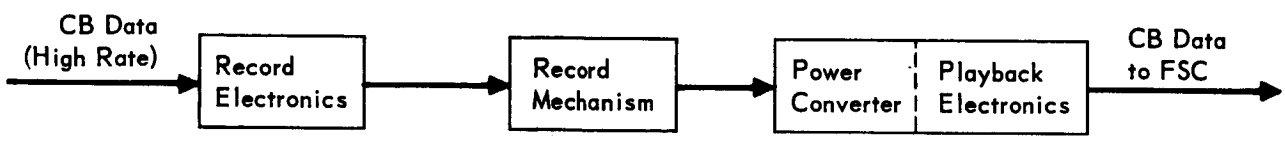

P_s (Stored Data, 115 hr.)= $e^{-0.014545}$ = 0.985560

Figure 5.2–3

VOYAGER SPACECRAFT MOUNTED

DATA STORAGE RELIABILITY FAULT TREE

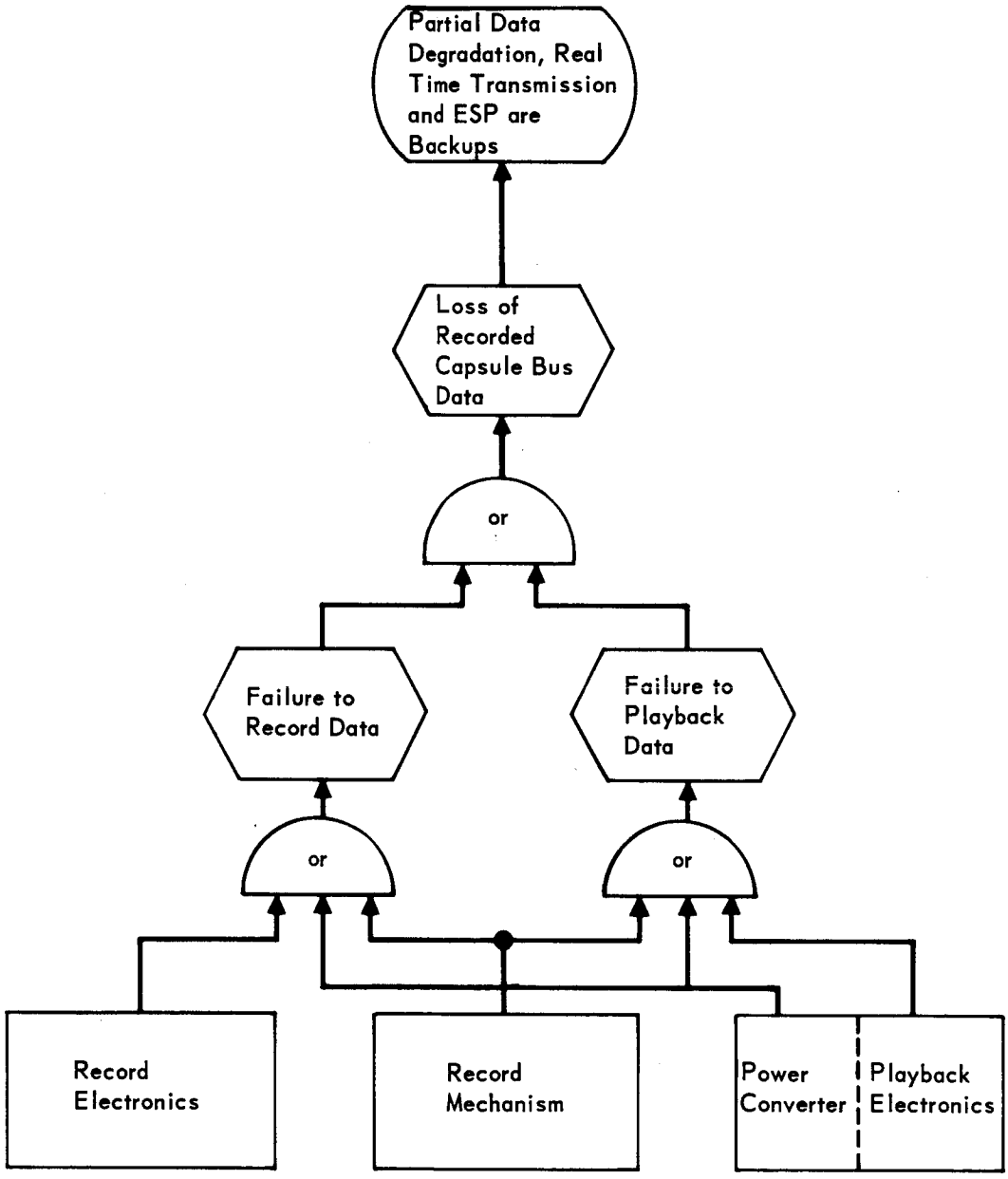

Figure 5.2–4

time and is also sent over the Entry Science link.

5.2.7.4 Complexity Estimate - The Spacecraft Mounted Capsule Bus Data Storage is estimated to have a total parts count of 1,248 items including electronic, mechanical, and electromechanical parts. Critical applications are bearings under shock and vibrational stresses. The parts count estimate is detailed in Figure 5.2-5.

5.2.7.5 Safety Consideration - No problems are anticipated since neither high voltages nor pyrotechnics are employed.

5.2.8 Test - Testing will be conducted as listed in the test matrix Figure 5.2-6 in accordance with the Integrated Test Plan.

Tests shall be performed prior to canister enclosure, after enclosure prior to final sterilization, after sterilization and during pre-launch operations. All ground testing shall be performed with the use of Operational Support Equipment (OSE). In-flight checkout will be performed through the DSIF. In-flight checkout (pre-separation) is initiated by the appropriate Flight Capsule test programmer upon command from the DSIF and monitored through the spacecraft telemetry system. All functional tests of the Data Storage can be accomplished as part of end to end tests of the FSC/DDU.

5.2.9 Development Status - Tape blocking, tape-to-head adhesion, and migration of bearing lubricant as a result of long duration non-operation during the interplanetary cruise phase will require additional study.

VOYAGER SPACECRAFT MOUNTED
FLIGHT CAPSULE DATA STORAGE
RELIABILITY PARTS COUNT ESTIMATE

TAPE RECORDER

PART TYPE	λ′	RECORD n	PLAY-BACK n	TOTAL 2n	2nλ	RECORD MECHANISM PART TYPE	λ	n	nλ
Capacitor						Drive Belt	1000	4	4000
Ceramic/Glass	11	14	121	125	125	Bearing Assembly	200	2	400
Solid Tantalum	2		50	50	100	Pulley Shaft Assembly	1	2	2
Diode						Shaft Bearing (Ball)	200	4	800
General Purpose	0.7	28	166	194	213	Input Bearing (Ball)	200	4	800
Zener/Reference	10		11	11	110	Clutch, Spring	250	2	700
Resistor						Pulleys, Input	1	2	2
Carbon Comp	0.1		2	2	0.2	Tape Drive Belt	1000	1	1000
Film, Carbon/Metal	0.3	56	561	617	186	Springs	1	2	2
Variable	11.9		1	1	12	Pivoted Sleeves	10	2	20
WW Power	0.5		2	2	1	Bearings	200	2	400
Potentiometer	108		1	1	108	Ball Bearings (Pair)	200	1	200
Transistor						Housing & Ctr Shaft	1	1	1
General Purpose	5	18	168	186	930	Hub Assembly Rotating	1	1	1
Transformer	5	1	5	6	30	Tape Roller Assembly	200	6	1200
Relay	10	1	1	2	20	Mylar Mag Tape	1	1	1
Inductor	7.5		3	3	24				
SCR	20		2	2	40				
Rectifier	120		2	2	210				
Record Head	20	2		2	40				
Playback Head	20		2	2	40				
Motor, Drive	300	1	2	3	900				
Totals	–	121	1100	1211	3119		–	37	9529
		(497)	(2611)		(3119)				(9529)

Figure 5.2–5

CAPSULE BUS DATA STORAGE TEST MATRIX

TEST	ACCY REQ	Non-operative Test	CB Data Storage	Power Supply Voltage	Power Supply Current	Input Data	Memory Operation	Memory Control Signals	Output Data (50 sec Delay)	Output Data (150 sec Delay)	
				3%	3%	Digital	Digital	Digital	Digital	Digital	
Telemetry				X	X						
System Test (Pre-canister)				X	X	X	X	X	X	X	
System Test (With Canister)				X	X	X	X	X	X	X	
Prelaunch				X	X	X	X	X	X	X	
In-flight Checkout				X	X	X	X	X	X	X	

Figure 5.2–6

SECTION 6

CAPSULE BUS COMMAND SUBSYSTEM

The command subsystem for the VOYAGER Capsule Bus (CB) provides for the execution of commands which are transferred to it from the Spacecraft (FSC) command decoder. The subsystem consists of a Capsule Bus Command Decoder mounted in the Capsule Adapter.

6.1 EQUIPMENT IDENTIFICATION AND USAGE - A functional diagram of the command subsystem operations is given in Figure 6-1. This diagram shows the operational sequences which occur in the processing of a command.

The equipment block diagram, Figure 6-2, shows the relationship of the subsystem with the FSC, CB, and Entry Science Package (ESP).

6.2 DESIGN REQUIREMENTS AND CONSTRAINTS - During interplanetary cruise and Mars orbit, the command subsystem will be employed to update test sequences and perform related switching functions for the purpose of telemetering performance data on various equipments within the CB and ESP. During Mars orbit it will be used for any final updating of the de-orbit, rentry, and landing programs of the CB and ESP equipment.

Prior to separation, the command subsystem will be employed as a backup function to the FSC CC & S subsystem and the CB S&T in readying the CB and ESP equipment for separation operations.

6.3 PHYSICAL CHARACTERISTICS - The command subsystem will weigh 0.7 pounds. It will consume 0.016 watts in standby and 1.36 watts when decoding a command. Internal construction features include interconnections to individual modules of the package via a multiple-layer printed circuit motherboard. Digital networks are packaged on stacked printed circuit substrates. The remainder of the circuitry is packaged in welded cordwood modules.

6.4 OPERATION DESCRIPTION - The CB command subsystem schematic is shown in Figure 6-3.

Data and synchronization signals from the FSC Command Decoder are inputted via pulse transformer. Each line from the FSC decoder is terminated in a signal transformer in order to isolate the FSC decoder from the CB and SL command decoders interconnection circuits.

CB COMMAND DECODER FUNCTIONAL DIAGRAM

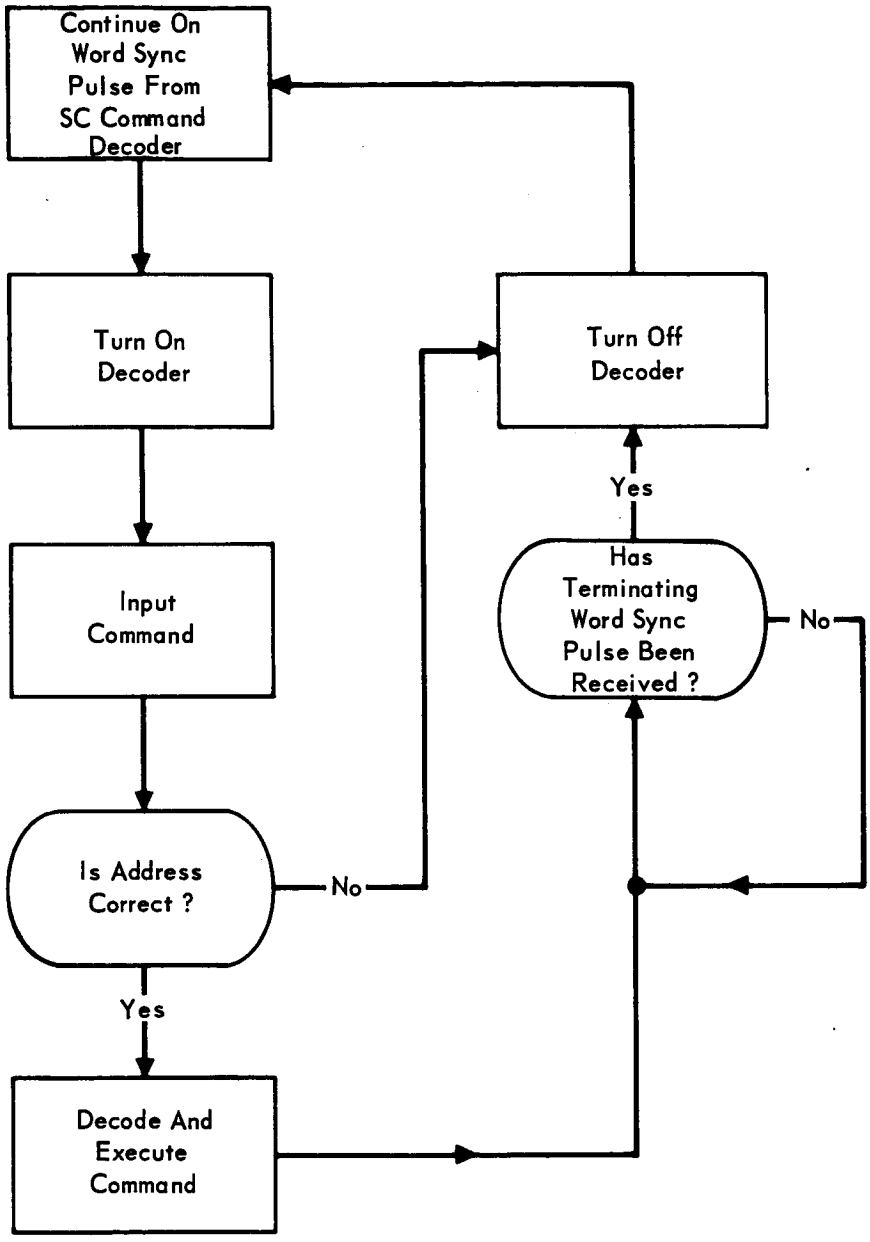

Figure 6–1

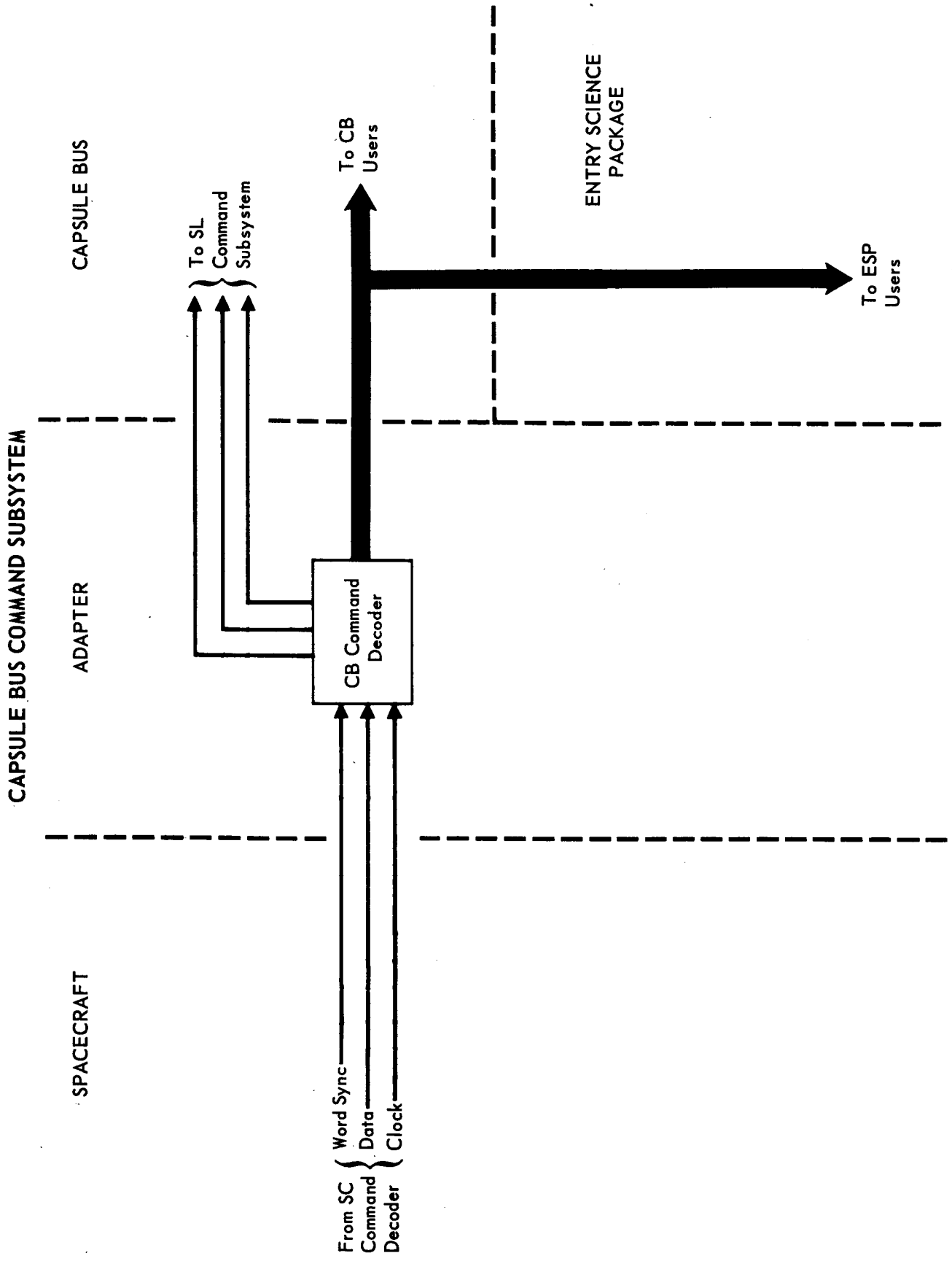
CAPSULE BUS COMMAND SUBSYSTEM
CAPSULE BUS
ADAPTER
SPACECRAFT
To SL Command Subsystem
CB Command Decoder
To CB Users
ENTRY SCIENCE PACKAGE
To ESP Users
From SC Command Decoder
Word Sync
Data
Clock

Figure 6-2

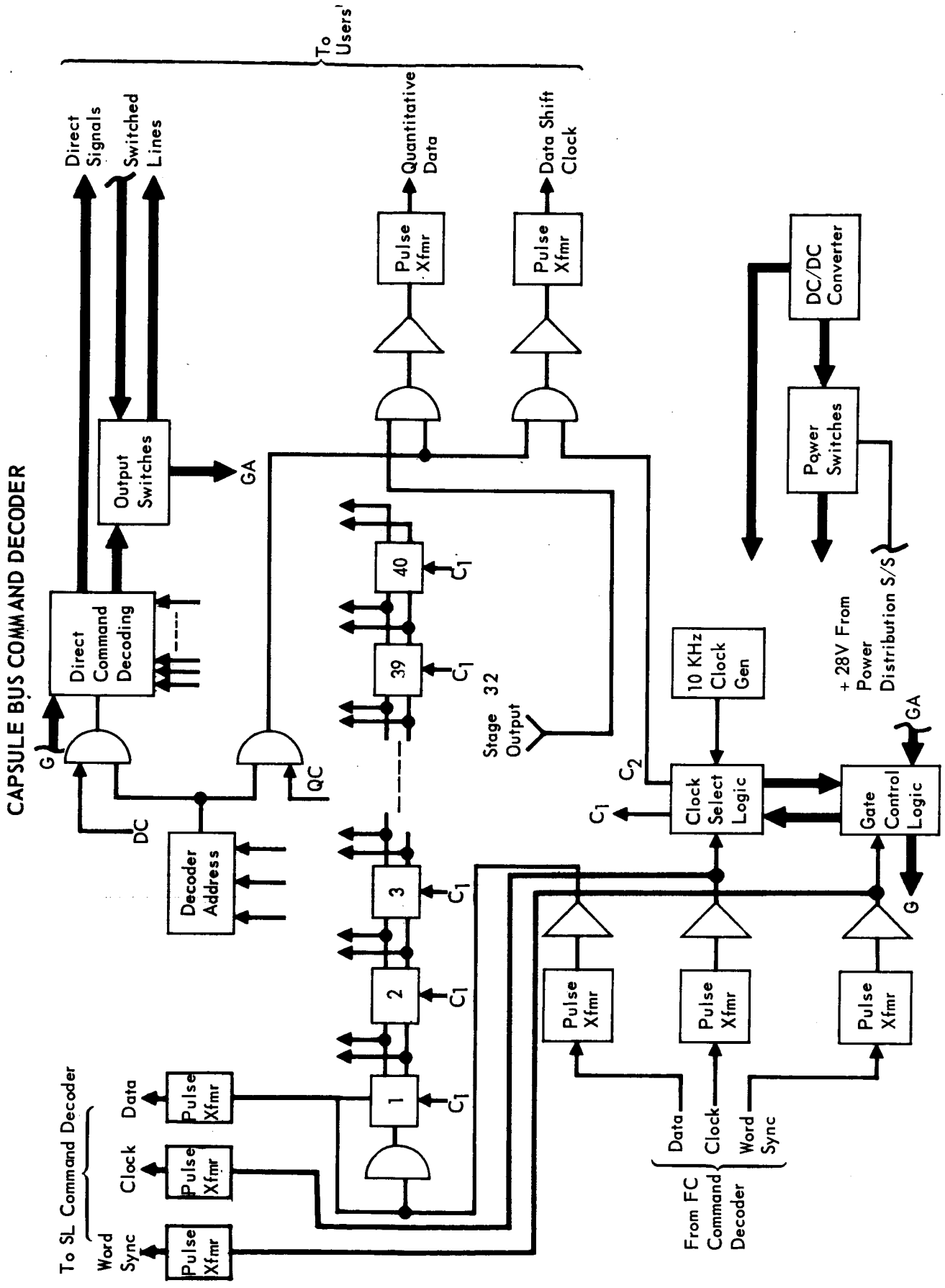
CAPSULE BUS COMMAND DECODER
To Users
Direct Signals
Switched Lines
Quantitative Data
Data Shift Clock
Pulse Xfmr
Output Switches
GA
Direct Command Decoding
G
DC
Decoder Address
QC
40
39
3
2
1
C1
Stage 32 Output
C2
10 KHz Clock Gen
Clock Select Logic
Gate Control Logic
DC/DC Converter
Power Switches
+ 28V From Power Distribution S/S
To SL Command Decoder
Data
Clock
Word Sync
From FC Command Decoder

Figure 6-3

The 43 data bits of the command word (Figure 6-4) are transferred serially into the shift register. Address bits are not required in the CB command subsystem. They are, however, required by the SL command subsystem. Hence, for simplicity, 43 shift pulses accompany each command word transfer. Since the command decoder register is 40 bits in length, the spacecraft address bits disappear in the transfer.

Direct Commands (DC) are decoded and outputted via magnetic latching relays.

Quantitative commands (QC) are outputted serially accompanied by a shift clock. Addressing of the QC is performed via a DC output.

6.5 PERFORMANCE CHARACTERISTICS - Decoding time is 43 seconds per command.

6.6 INTERFACE DEFINITION - The direct and quantitative commands that are to be handled by the CB command subsystem are listed in Figure 6-5. Other output signals are:

a. Word sync to the SL decoder - buffer transferred from the FSC command decoder.

b. Data to the SL decoder - buffer transferred from the FSC command decoder.

c. Clock to the SL decoder - buffer transferred from the FSC command decoder.

Inputs are:

a. Word sync pulse from the FSC command decoder.

b. Data, polarized pulse, from the FSC command decoder.

c. Clock pulse from the FSC command decoder.

d. +28 Vdc from CB electrical power.

6.7 RELIABILITY AND SAFETY CONSIDERATION - The Capsule Bus Command Subsystem has an assessed reliability of a 0.997 probability of successfully performing the decoding function for the CB and ESP users. The assessed reliability for the buffering of the commands for the SLS is a 0.999 probability of success. Figure 6-6 shows the Reliability Model.

Figure 6-7 shows the failure fault tree for the Capsule Bus Command Subsystem. Failure of the CB Command Decoder DC/DC Converter, power switches, input isolation and command isolation circuits will result in a loss of all commands from the spacecraft command decoder. A failure elsewhere in the CB Command Decoder will only affect commands to the CB and ESP. The Command Subsystem provides only isolation between the SLS and the SC.

The Capsule Bus Command Subsystem is estimated to have a total piece parts count of 517. The parts count estimate is shown in Figure 6-8.

No high voltages or pyrotechnics are employed, so no safety considerations are denoted.

COMMAND WORD FORMAT

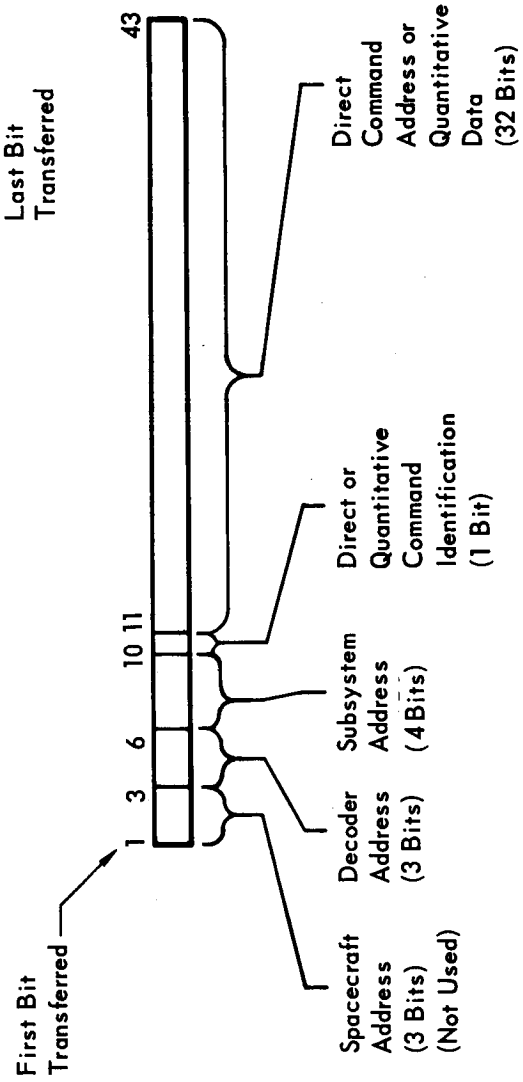

Figure 6–4

RADIO COMMAND LIST

RADIO COMMAND	TYPE DIRECT OR QUANTITATIVE	MAXIMUM VALUE OF QUANTITATIVE WORD AND TOLERANCE	TIME OCCURRENCE (MISSION PHASE, ETC.)
CAPSULE BUS GCS			
1. Activate GCS (IMU)	D	–	T_{12}–62 min.
2. Turn-On G&C Computer	D	–	T_{12}–62 min., T_{12}–8 min.
3. Update G&C (10 words)	Q	32 Bits	T_{12}–61 min.
4. Turn-Off G&C Computer	D	–	T_{12}–59 min.
CAPSULE BUS TELEMETRY SUBSYSTEM			
1. Turn-On Cruise Commutator	D	–	T_5–1 hr., T_8–120 min., T_{12}–55 min.
2. Switch Cruise Commutator to Cruise Mode	D	–	T_3–144 sec., T_5–55 min., T_8–115 min., T_{12}–50 min.
3. Turn-Off Cruise Commutator	D	–	T_3+3 hr., T_5+120 min., T_8+120 min.
4. Turn-On Capsule Telemetry	D	–	Back-Up Only
5. Turn-Off Capsule Telemetry	D	–	Back-Up Only
6. Switch CB TM to Checkout Mode	D	–	Back-Up Only
7. Switch CB TM to De-Orbit Cruise Mode	D	–	Back-Up Only
8. Switch CB TM to De-Orbit Thrust Mode	D	–	Back-Up Only
9. Switch CB TM to Entry Mode	D	–	Back-Up Only
10. Switch CB TM to Terminal Descent Mode	D	–	Back-Up Only
11. Update Memory	Q	32 Bits	As Required
CAPSULE BUS RADAR SUBSYSTEM			
1. Turn-On Radar Altimeter	D	–	Back-Up Only
2. Turn-Off Radar Altimeter	D	–	Back-Up Only
3. Turn-On Landing Radar	D	–	Back-Up Only
4. Turn-Off Landing Radar	D	–	Back-Up Only
CAPSULE BUS PROPULSION SUBSYSTEM			
1. RCS Arm	D	–	T_{12}–56 min.
SEPARATION TIMER			
1. Start Separation Sequence	D	–	T_{12}–6 min.
CAPSULE BUS SEQUENCER AND TIMER			
1. Update CB S&T (128 words)	Q	32 Bits	T_{12}–225 min.
2. Remove Separation Inhibit	D	–	T_{12}–70 min.
3. Start Separation Sequence	D	–	T_{12}–6 min.
CAPSULE BUS TEST PROGRAMMER			

Figure 6–5

1. Program Update (128 words)	Q	32 Bits	Back-Up Only
CAPSULE BUS RADIO SUBSYSTEM			
1. Turn-On Low-Rate UHF Transmitter	D	–	T_{12}–9 min.
CAPSULE BUS POWER SUBSYSTEM			
1. Switch-In Back-Up DC-DC Converter	D	–	Cruise and Mars Orbit, Back-Up Only
2. Switch to Battery Power	D	–	T_5+62 min., T_8+62 min., T_9+ 62 min., T_{12}–64 min.
3. Switch to Solar Power	D	–	T_3+23 min., T_5+204 min., T_8+204 min., T_9+204 min.
4. Turn-On CB Test Programmer	D	–	T_8–4 hr., T_{10}
5. Turn-Off CB Test Programmer	D	–	T_8–120 min., T_{10}+245 min.
6. Turn-On CB S&T	D	–	T_{12}–228 min.
7. Accivate Battery No. 1	D	–	T_{12}–59 min.
8. Activate Battery No. 2	D	–	T_{12}–58 min.
9. Activate Battery No. 3	D	–	T_{12}–57 min.
10. Begin Battery Recharge	D	–	T_3+90 min., T_{10}+245 min.
11. End Battery Recharge	D	–	T_{12}–230 min.
12. Turn-On Heaters			
13. Turn-Off Heaters			
ENTRY SCIENCE TELEMETRY SUBSYSTEM			
1. Turn-On Cruise Commutator	D	–	T_5–1 hr., T_8–120 min., T_{12}–55 min.
2. Switch Cruise Commutator to Cruise Mode	D	–	T_3+144 sec., T_5–55 min., T_8–115 min., T_{12}–50 min.
3. Turn-Off Cruise Commutator	D	–	T_3+3 hr., T_5+120 min., T_8+120 min.
4. Turn-On Entry Science TM	D	–	Back-Up Only
5. Turn-Off Entry Science TM	D	–	Back-Up Only
6. Switch ES TM to Hi-Rate Checkout Mode	D	–	Back-Up Only
7. Switch ES TM to Low-Rate Checkout Mode	D	–	Back-Up Only
8. Switch Cruise Commutator to De-Orbit Mode	D	–	Back-Up Only
9. Switch ES TM to Entry Mode	D	–	Back-Up Only
10. Switch ES TM to Terminal Descent Mode	D	–	Back-Up Only
11. Update Memory	Q	32 Bits	As Required
ENTRY PACKAGE POWER SUBSYSTEM			
1. Transfer to Internal Power	D	–	Cruise and Mars Orbit, Back-Up Only
2. Transfer to External Power	D	–	Cruise and Mars Orbit,
3. Turn-On Heaters	D	–	Back-Up Only
4. Turn-Off Heaters	D	–	Back-Up Only
ENTRY PACKAGE SCIENCE SUBSYSTEM			
MACH 5 TIMER			
1. Mode No. 1	D	–	Prior to Separation
2. Mode No. 2	D	–	
3. Mode No. 3	D	–	

2-1-2

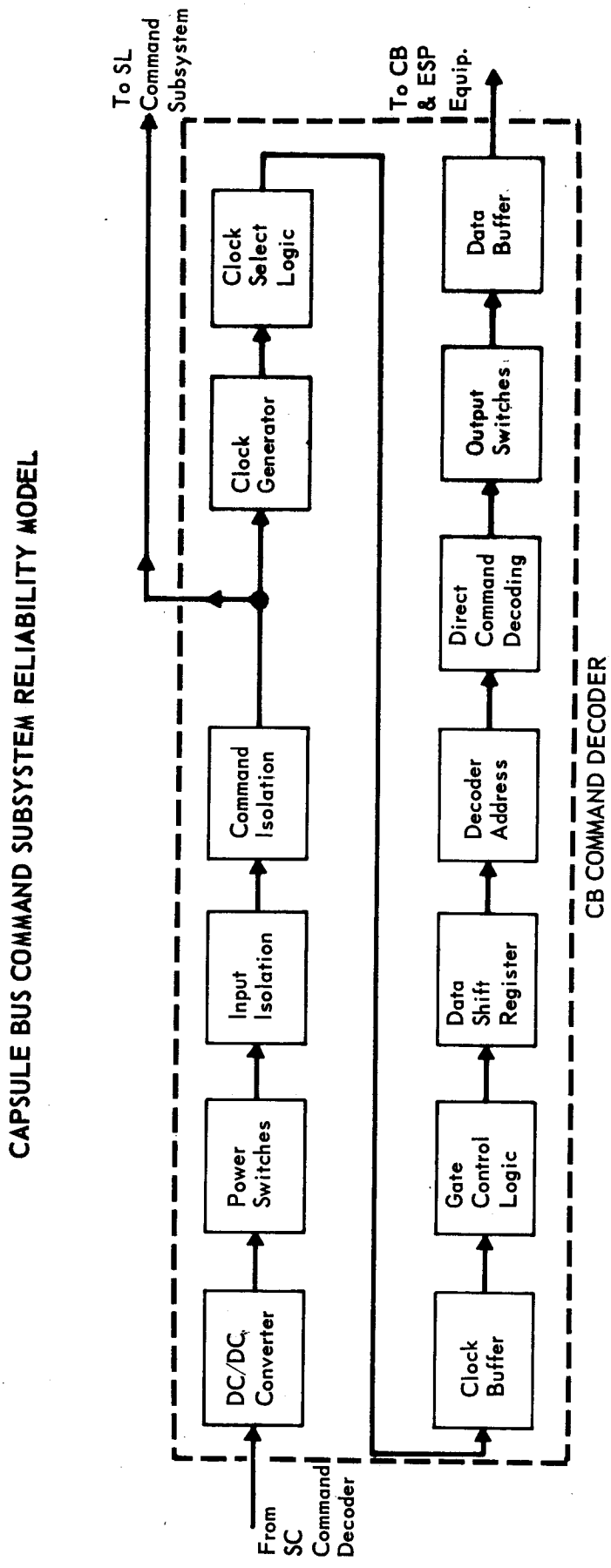
CAPSULE BUS COMMAND SUBSYSTEM RELIABILITY MODEL
To SL Command Subsystem
To CB & ESP Equip.
DC/DC Converter
Power Switches
Input Isolation
Command Isolation
Clock Generator
Clock Select Logic
Clock Buffer
Gate Control Logic
Data Shift Register
Decoder Address
Direct Command Decoding
Output Switches
Data Buffer
CB COMMAND DECODER
From SC Command Decoder

Figure 6–6

VOYAGER CAPSULE BUS COMMAND SUBSYSTEM RELIABILITY FAULT TREE

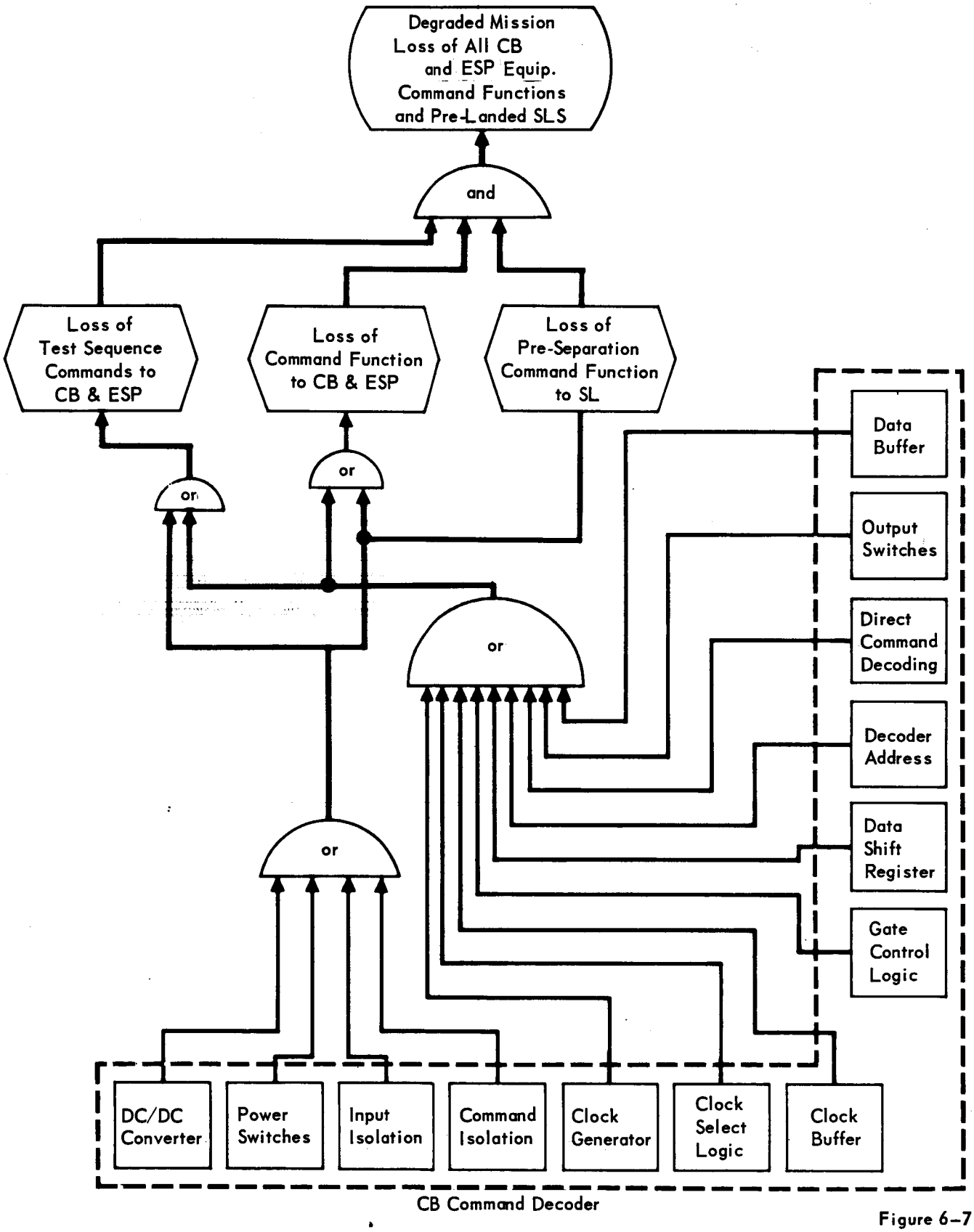

Figure 6–7

COMMAND SUBSYSTEM RELIABILITY
PARTS COUNT ESTIMATE

PART TYPE	FAILURE RATE, BITS*	PARTS COUNT CB DECODER	TOTAL FAILURE RATE, BITS
Integrated Ckts.			
Digital	10	90	900
Transistors	5.0	45	225
Diodes	1.1	15	16.5
Resistors	0.3	270	81
Capacitors:			
Ceramic	1.0	40	40
Solid Tant.	2.0	20	40
Transformers, L.V.	5.0	9	45
Inductors, L.V.	10	2	20
Relays, 2A	10	26	260
Total Parts		517	
Total Failure Rate, Bits		1627.5	1627.5

* Failure rate in failures per 10^8 hr

Figure 6-8

6.8 TEST - Testing will be conducted as listed in the test matrix of Figure 6-9 in accordance with the Integrated Test Plan.

Tests shall be performed prior to canister enclosure, after enclosure prior to final sterilization, after sterilization and during pre-launch operations. All ground testing shall be performed with the use of Operational Support Equipment (OSE).

6.9 DEVELOPMENT REQUIREMENTS - The development of all equipment in the CB command subsystem is relizable with component and assembly technology presently in existance.

CAPSULE BUS COMMAND DECODER TEST MATRIX

TEST	ACCY REQ	Non Operative Test	Power Supply Voltage	Power Supply Current	Input Command Data Word	Parity	Decoded Commands	Command Event	Bit Sync.		
			3%	3%	Digital	Digital	Digital	Digital	Digital		
Telemetry Points			●	●		●	●	●			
System Test			●	●	●	●	●	●	●		
Pre-Launch			●	●	●	●	●	●			

Figure 6–9