SE818-18

REPORT NO. F694

PART C2 FUNCTIONAL DESCRIPTIONS

VOLUME II CAPSULE BUS SYSTEM

N67-40049

(ACCESSION NUMBER)	(THRU)
235	1
(PAGES)	(CODE)
CR-89688	31
(NASA CR OR TMX OR AD NUMBER)	(CATEGORY)

FACILITY FORM 602

GPO PRICE $ _____

CFSTI PRICE(S) $ _____

Hard copy (HC) 3.00

Microfiche (MF) .65

MCDONNELL ASTRONAUTICS

REPORT NO. F694
31 AUGUST 1967

PART C2 FUNCTIONAL DESCRIPTIONS

VOYAGER CAPSULE PHASE B FINAL REPORT

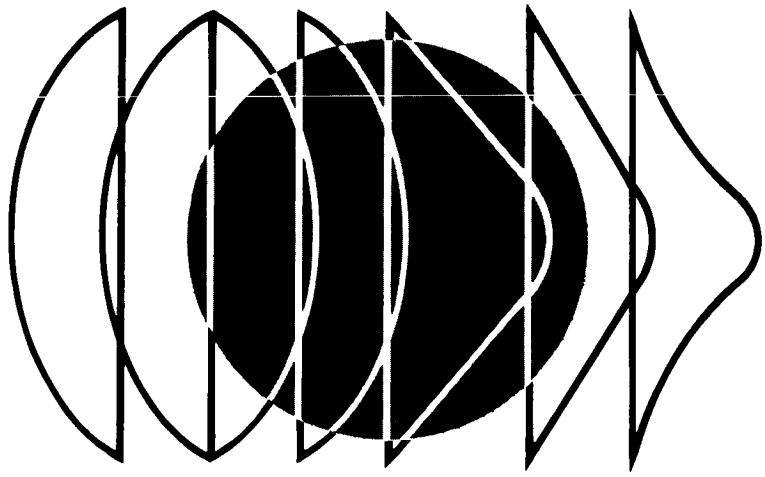

VOLUME II CAPSULE BUS SYSTEM

PREPARED FOR:
CALIFORNIA INSTITUTE OF TECHNOLOGY
JET PROPULSION LABORATORY
PASADENA, CALIFORNIA
CONTRACT NUMBER 952000

COPY NO. 36

MCDONNELL ASTRONAUTICS

REPORT ORGANIZATION

VOYAGER PHASE B FINAL REPORT

The results of the Phase B Voyager Flight Capsule study are organized into several volumes. These are:

Volume I	Summary
Volume II	Capsule Bus System
Volume III	Surface Laboratory System
Volume IV	Entry Science Package
Volume V	System Interfaces
Volume VI	Implementation

This volume, Volume II, describes the McDonnell Douglas preferred design for the Capsule Bus System. It is arranged in 5 parts, A through E, and bound in 11 separate documents, as noted below.

Part A	Preferred Design Concept	2 documents, Parts A_1 and A_2
Part B	Alternatives, Analyses, Selection	5 documents, Parts B_1, B_2, B_3, B_4 and B_5
Part C	Subsystem Functional Descriptions	2 documents, Parts C_1 and C_2
Part D	Operational Support Equipment	1 document
Part E	Reliability	1 document

In order to assist the reader in finding specific material relating to the Capsule Bus System, Figure 1 cross indexes broadly selected subject matter, at the system and subsystem level, through all volumes.

SYSTEM/SUBSYSTEM \ VOLUME II PARTS		PART A DESCRIPTION OF PREFERRED SYSTEM OBJECTIVES, MISSION, DESIGN, SUBSYSTEMS, OPERATIONS, SUPPORTING FUNCTIONS	PART B ALTERNATIVES, ANALYSIS AND SELECTION – METHODS TRADE STUDIES, OPTIMIZATION STUDIES RESULTS	PART C DETAILED DESCRIPTION OF SUBSYSTEM FUNCTIONS	PART D OPERATIONAL SUPPORT EQUIPMENT – SYSTEM, SUBSYSTEM, LAUNCH COMPLEX, MISSION, HANDLING, SOFTWARE	PART E RELIABILITY CONSTRAINTS, ANALYSIS, RESULTS, PROGRAM TESTING, CONTROL
CAPSULE BUS SYSTEM						
Mission	Objectives	1.1–Summary	2–Analysis	N/A	1–General	1–Constraints
	Profile	1.2–Summary	2–Analysis 2.4–Selection	N/A	N/A	3.1.1–Analysis
	Operations	4–Description by Phase	2.3–Analysis 2.3.7–Landing Site Select	N/A	4.4–LCE Description 4.5–MDE Description	3–Estimates
Design	General	2–Criteria Summary 3.1–Configuration	1–Study Approach 3–Functional Requirements	N/A	3.2–Concept 3.3–Summary 6.1–AHSE	4–Program Requirements 5–Component Reliability
	Standardization/Growth	2.5–Summary 11–Future	(See Specific Subsystem Below)	N/A	4.3.8-STC 4.4.8-LCE 4.5.8-MDE } Growth	N/A
	Weight	3.1.2.4–Summary 5–Breakdown	(See Specific Subsystem Below)	N/A	N/A	2.3.2–Reliability vs Weight
Interfaces (See Also Vol. V)		3.1–Summary 9.0–Operational	(See Volume V)	N/A	4.2.1,4.3.5,4.4.5, 4.5.5	N/A
Implementation (See Also Vol. VI)		10–Schedule 8.11–OSE	(See Volume VI)	N/A	(See Specific Subsystem Below)	N/A
Planetary Quarantine		7–General	(See Volume VI, C,7 Sterilization Plan)	N/A	None Required	N/A
O.S.E. (See Also Part D)		8–General (See Also–D1,D2, D3,D4)	(See D2.5-Selection Criteria, D9-Analysis, DIO - Alternatives)	(See D5-Subsystem Level Test Equipment, See Also D4, D6, D7)	Complete OSE Description	(See D4.3.6–STC D4.4.6–LCE D4.5.6–MDE)
SUBSYSTEMS						
Sterilization Canister		3.2.1.1–Description 3.1.2–Summary	5.1–Analysis	1.1	6.1.5.2,6.1.5.3, 6.1.5.6 6.1.5.8–AHSE 6.2.15–Servicing	(See Part C Sections 1.1.1.7 1.1.2.7 1.1.3.7)
Adapter		3.2.1.2–Description 3.1.2–Summary	5.2–Analysis	1.2	None Required	(See Part C, 1.2.7)

Figure 1-A

Aeroshell	3.2.1.3–Description 3.1.2–Summary	4.1–Configuration Selection 4.6–Separation 5.3.1–Structure 5.3.2–Heat Shield	1.3	None Required	(See Part C, 1.3.7)
Lander	3.2.1.4–Description 3.1.2–Summary	4.2–Configuration Selection 5.4–Analysis	1.4	6.1.5.9–Fixture	(See Part C, 1.4.7)
Telecommunications	3.2.2.1–Description	4.9–In-Flight Monitoring 5.5–Analysis	2–Telemetry 3–Radio 4–Antenna 5–Data Storage 6–Command	4.3.9.1–STC Console 5.7–Test Set	(See Part C, Sections 2.1.7, 2.2.7, 2.3.7, 3.1.7, 3.2.7, 4.5, 5.1.7, 5.2.7, 6.1.7, 6.2.7)
Power	3.2.2.2–Description	5.6–Analysis	7	4.3.9.1–STC Console 5.3–Test Set	(See Part C, Sect. 7.7)
Sequencing and Timing	3.2.2.3–Description	5.7–Analysis	8	4.3.9.1–STC Console 5.4–Test Set	(See Part C Sections 8.1.7, 8.2.7)
Guidance and Control	3.2.2.4–Description	4.7–De-orbit Attitude Reqm't. 5.8–Analysis	9	4.3.9.1–STC Console 5.5–Test Set	(See Part C, 9.7)
Radar	3.2.2.5–Description	5.9–Analysis	10	4.3.9.1–STC Console 5.6–Test Set	(See Part C, Sections 10.1.7, 10.2.7)
Aerodynamic Decelerator	3.2.3–Description	4.4–Selection 5.10–Analysis	11	None Required	(See Part C, 11.7)
Pyrotechnics	3.2.4–Description	5.11–Analysis	12	4.3.9.1–STC Console 5.9–Test Set	(See Part C, 12.7.1)
Thermal Control	3.2.5–Description	5.12–Analysis	13	4.3.9.1–STC Console 5.8–Test Set	(See Part C, 13.6)
De-orbit Propulsion	3.2.6.1–Description	5.13.1–Analysis	14	5.10–Test Set 6.1.5.10–AHSE	(See Part B, 5.13.4.5) (See Part C, 14.7)
Reaction Control	3.2.6.2–Description	5.13.2–Analysis	15	5.10–Test Set 6.2–Servicing	(See Part B, 5.13.4.5) (See Part C, 15.7)
Terminal Propulsion	3.2.6.3–Description	4.3–Configuration Selection 4.5–Terminal Deceleration 5.13.3–Analysis	16	4.3.9.1–STC Console 5.10–Test Set 6.2–Servicing	(See Part B, 5.13.4.5) (See Part C, 16.7)
Packaging and Cabling	3.2.7–Description	5.14–Analysis	17	4.3.9.8–Special Purpose Complex Equipment	Not Required

Note: Parentheses Refer Reader to Volumes/Parts Outside of the Respective Notation

TABLE OF CONTENTS

	Page
SECTION 7 ELECTRICAL POWER SUBSYSTEM	7-1
7.1 Equipment Identification and Usage	7-1
7.2 Design Requirements and Constraints	7-5
7.3 Physical Characteristics	7-5
7.4 Operation Description	7-9
7.5 Performance Characteristics	7-11
7.6 Interface Definition	7-11
7.7 Reliability Considerations	7-14
7.8 Testing	7-17
7.9 Development Requirements	7-21
SECTION 8 SEQUENCER SUBSYSTEM	8-1
8.1 Equipment Identification & Usage	8-1
8.2 Test Programmer	8-29
SECTION 9 GUIDANCE AND CONTROL SUBSYSTEM	9-1
9.1 Equipment Identification and Usage	9-1
9.2 Design Requirements and Constraints	9-3
9.3 Physical Characteristics	9-3
9.4 Operation Description	9-13
9.5 Performance Characteristics	9-27
9.6 Interface Definitions	9-29
9.7 Reliability and Safety Considerations	9-29
9.8 Test	9-35
9.9 Development Requirements	9-36
SECTION 10 GUIDANCE SENSOR SUBSYSTEM (RADAR)	10-1
10.1 Radar Altimeter	10.1-1
10.2 Landing Radar	10.2-1
SECTION 11 AERODYNAMIC DECELERATOR SUBSYSTEM	11-1
11.1 Equipment Identification and Usage	11-1
11.2 Design Requirements and Constraints	11-6
11.3 Physical Characteristics	11-6
11.4 Operational Description	11-13
11.5 Performance Objectives	11-16
11.6 Interface Definition	11-16
11.7 Reliability Considerations	11-17

	Page
11.8 Test Requirements	11-20
11.9 Development Requirements	11-20
SECTION 12 PYROTECHNIC SUBSYSTEM	12-1
12.1 Equipment Identification and Usage	12-1
12.2 Design Requirements and Constraints	12-7
12.3 Physical Characteristics	12-8
12.4 Operational Descriptions	12-8
12.5 Performance Objectives	12-8
12.6 Interface Definition	12-8
12.7 Safety and Reliability Considerations	12-10
12.8 Test Requirements	12-10
12.9 Development Requirements	12-10
SECTION 13 THERMAL CONTROL SUBSYSTEM	13-1
13.1 Equipment Identification and Usage	13-1
13.2 Design Requirements and Constraints	13-2
13.3 Physical Characteristics	13-2
13.4 Performance Objectives	13-3
13.5 Interface Definition	13-3
13.6 Reliability Considerations	13-3
13.7 Test Requirements	13-5
13.8 Development Requirements	13-5
SECTION 14 DE-ORBIT PROPULSION SUBSYSTEM	14-1
14.1 Equipment Identification and Usage	14-1
14.2 Design Requirements and Constraints	14-1
14.3 Physical Characteristics	14-1
14.4 Operation Description	14-5
14.5 Performance Objectives	14-7
14.6 Interface Definition	14-7
14.7 Reliability and Safety	14-7
14.8 Test Requirements	14-11
14.9 Development Requirements	14-11
SECTION 15 REACTION CONTROL SUBSYSTEM	15-1
15.1 Equipment Definition and Usage	15-1
15.2 Design Requirements and Constraints	15-4

	Page
15.3 Physical Characteristics	15-5
15.4 Operation Description	15-5
15.5 Performance Objectives	15-8
15.6 Interface Definitions	15-8
15.7 Reliability and Safety	15-8
15.8 Test Requirements	15-11
15.9 Development Requirements	15-13
SECTION 16 TERMINAL PROPULSION SUBSYSTEM	16-1
16.1 Equipment Identification and Usage	16-1
16.2 Design Requirements and Constraints	16-6
16.3 Physical Characteristics	16-7
16.4 Operation Description	16-7
16.5 Performance Objectives	16-10
16.6 Interface Definitions	16-10
16.7 Reliability and Safety	16-10
16.8 Test Requirements	16-13
16.9 Development Requirements	16-15
SECTION 17 PACKAGING AND CABLING	17-1
17.1 Equipment Identification	17-1
17.2 Design Requirements and Constraints	17-1
17.3 Physical Characteristics	17-1
17.4 Operational Description	17-4
17.5 Reliability and Safety Considerations	17-4
17.6 Development Requirements	17-4

This Document Consists of the Following Pages:

Title Page
i through v
7-1 through 7-21
8-1 through 8-34
9-1 through 9-37
10-1, 10.1-1 through 10.1-31
10.2-1 through 10.2-22
11-1 through 11-20
12-1 through 12-11
13-1 through 13-6
14-1 through 14-11
15-1 through 15-13
16-1 through 16-15
17-1 through 17-6

SECTION 7

ELECTRICAL POWER SUBSYSTEM

7.1 EQUIPMENT IDENTIFICATION AND USAGE - An equipment diagram of the Capsule Bus electrical power subsystem is shown in Figure 7-1. The subsystem provides the following:

a. Regulation of Flight Spacecraft (FSC) power available to the Flight Capsule (FC) during cruise and isolation of the Flight Capsule power grounding from the Flight Spacecraft power grounding during this period.

b. CB internal power for operation of the cruise commutator, and the command decoder during periods when Flight Spacecraft power is not available to the Flight Capsule during launch, cruise, and Mars orbit operation.

c. CB internal power during a portion of the Flight Capsule pre-separation checkout operations and during a period from approximately one hour prior to FSC/FC separation until Capsule Bus shutdown after landing on the surface of Mars.

The electrical power subsystem consists of one sealed, manually activated (activated prior to delivery) silver zinc battery, three automatically activated silver zinc batteries, one battery float charger, two DC to DC converter regulators, and one Power Switching and Logic Unit (PS&L). A schematic block diagram of the subsystem is shown in Figure 7-2.

7.1.1 DC to DC Converter - The DC to DC converters accept unregulated DC power from the Flight Spacecraft and provide regulated power to the Power Switching and Logic Unit. The converter also provides isolation between the Flight Spacecraft and Capsule Bus power ground systems. Both converters operate during cruise and each is capable of supplying the power required by the FC. The output voltages of the converters are adjusted such that one, regulating at a higher voltage, carries all of the load. If this converter fails during the flight the second converter will carry the load at a slightly lower voltage.

7.1.2 Power Switching and Logic Unit - The Power Switching and Logic Unit (PS&L) consists of four separate physical units. A primary unit contains the sensing and power transfer equipment associated with transfer to internal power when Flight Spacecraft power is not available, and main Capsule Bus battery failure sensing and redundant mode switching. Three secondary units contain secondary power distribution buses and power switching devices for controlling the Capsule Bus subsystem

CAPSULE BUS ELECTRICAL POWER SUBSYSTEM EQUIPMENT DIAGRAM

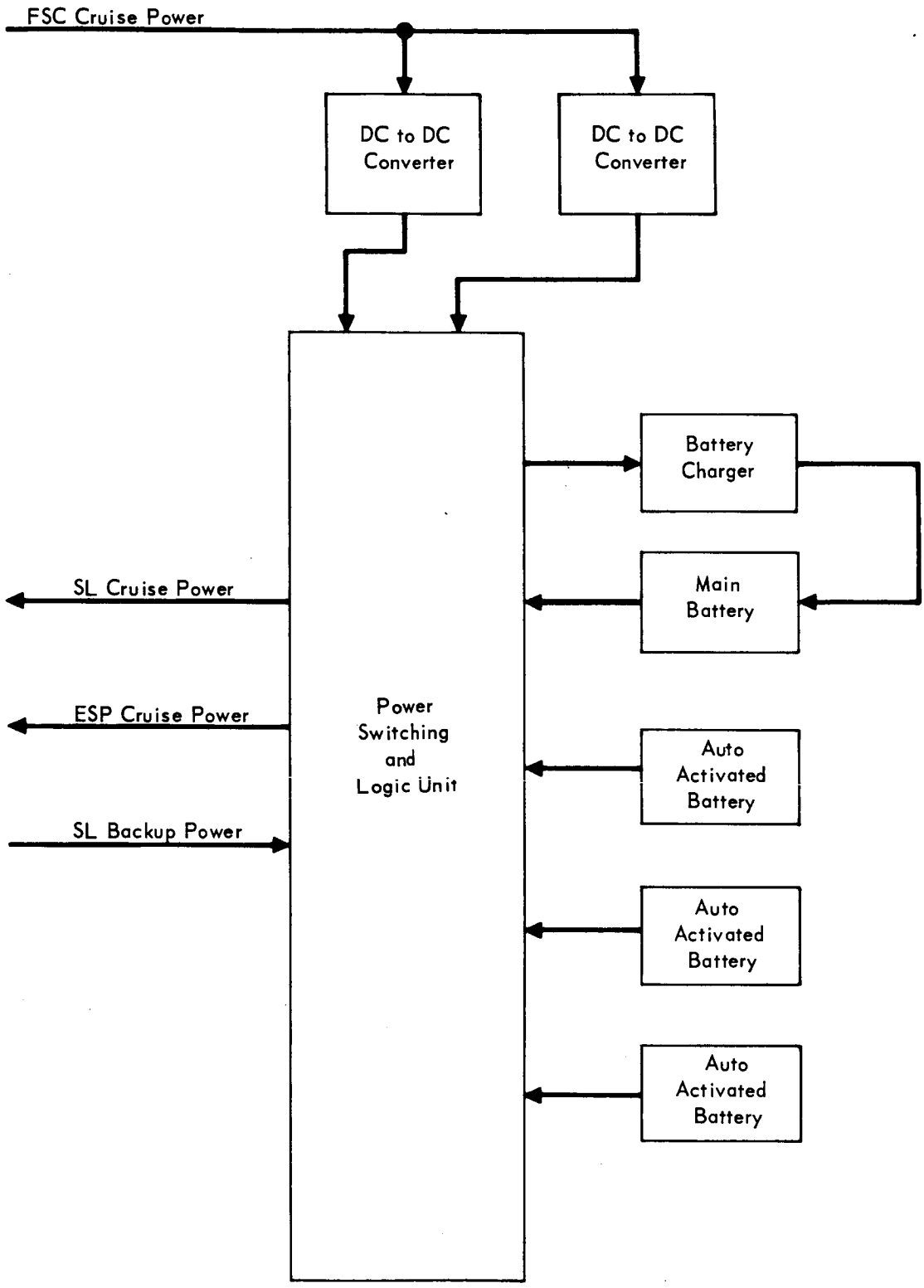

Figure 7–1

SCHEMATIC BLOCK DIAGRAM – CAPSULE BUS ELECTRICAL POWER SUBSYSTEM

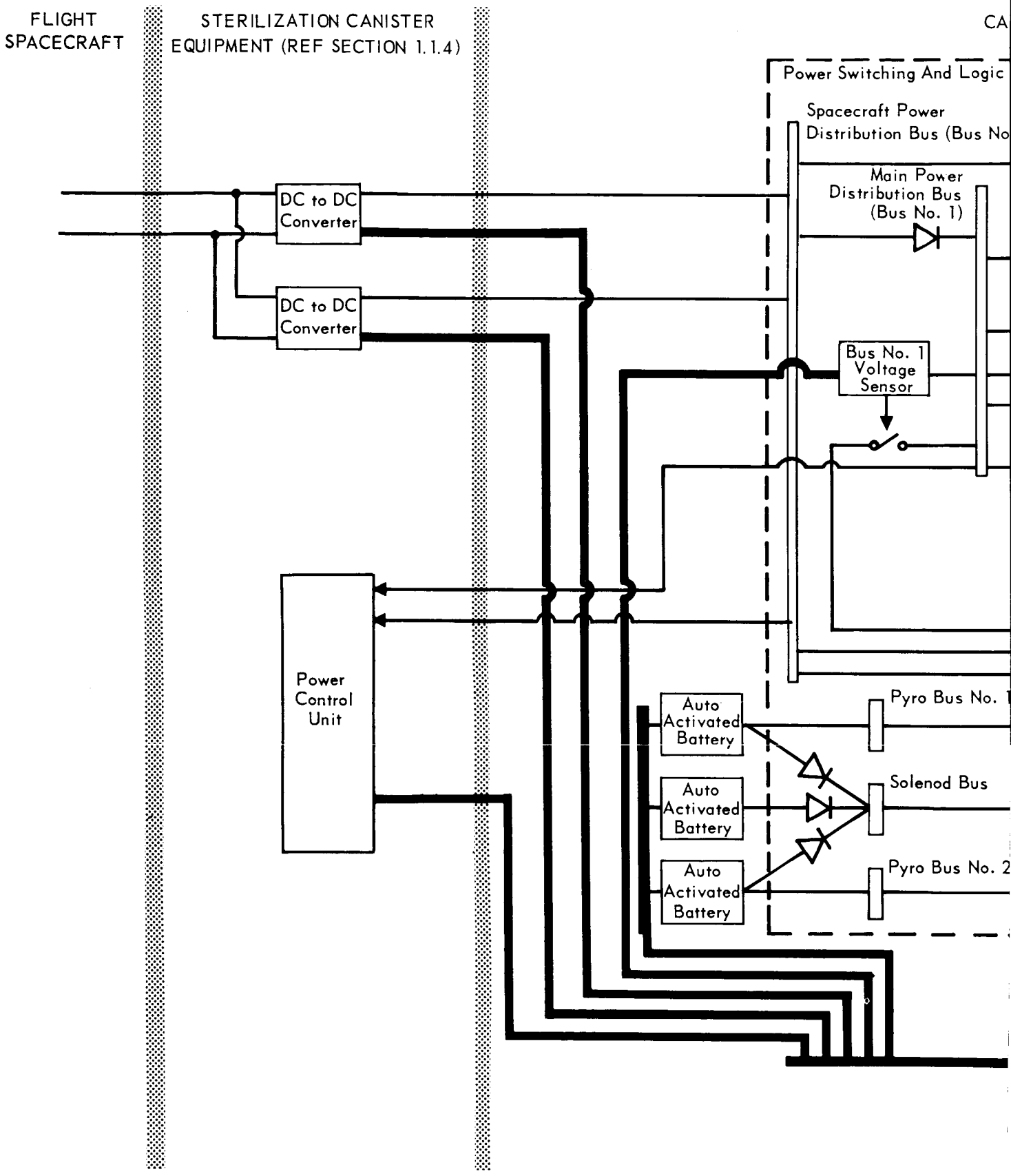

Figure 7–2

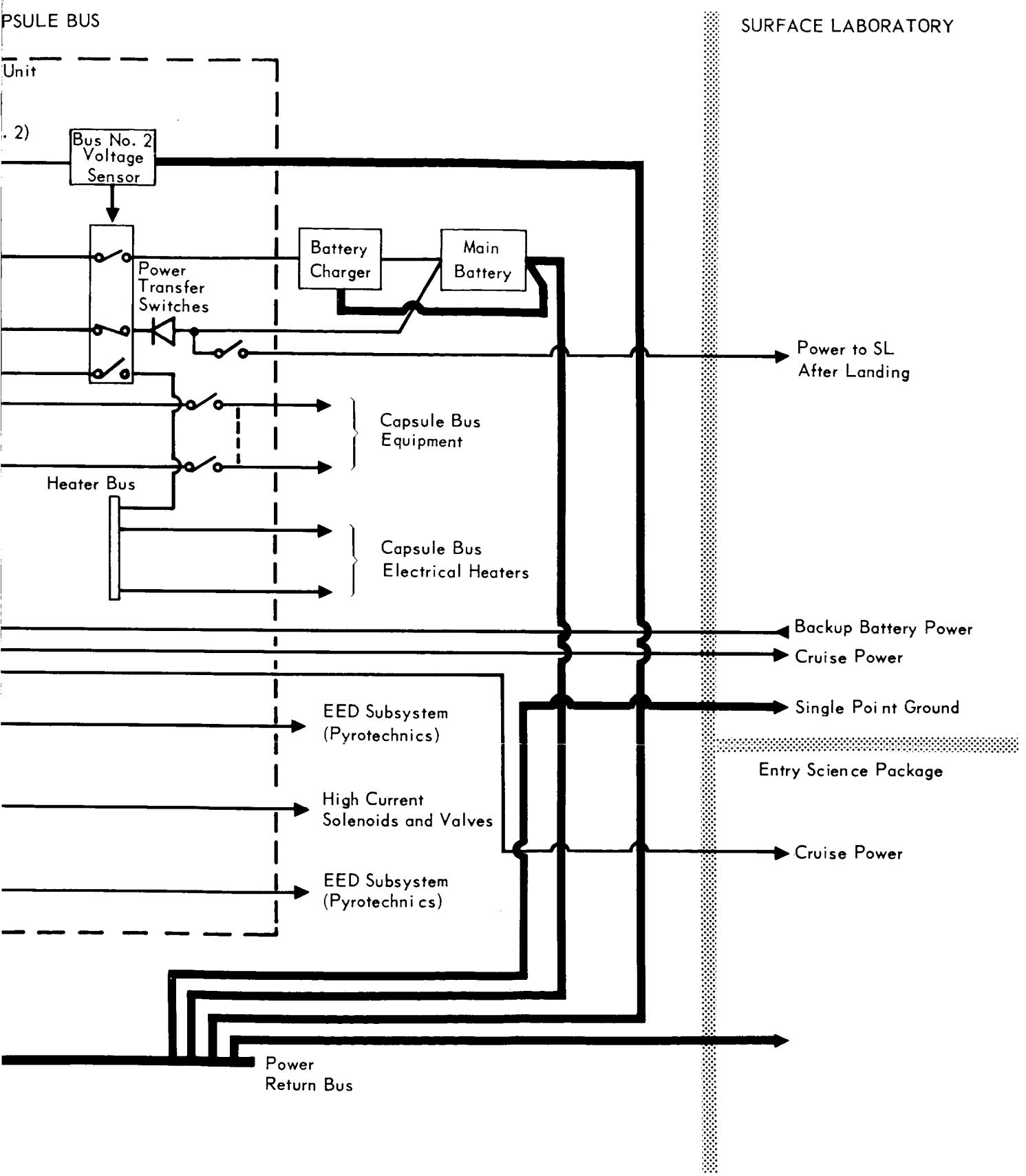
PSULE BUS
SURFACE LABORATORY
Unit
. 2)
Bus No. 2 Voltage Sensor
Power Transfer Switches
Battery Charger
Main Battery
Power to SL After Landing
Capsule Bus Equipment
Heater Bus
Capsule Bus Electrical Heaters
Backup Battery Power
Cruise Power
Single Point Ground
EED Subsystem (Pyrotechnics)
Entry Science Package
High Current Solenoids and Valves
Cruise Power
EED Subsystem (Pyrotechnics)
Power Return Bus

equipment. The secondary units are located as shown in Section 3.1.2.2 to minimize cabling weight.

The primary unit contains the spacecraft power distribution bus (bus #2) from which spacecraft power is supplied to the Main Capsule Bus power distribution bus (bus #1) and to the Surface Laboratory and Entry Science Package during cruise. All Capsule Bus subsystem equipment operates from bus #1, with heaters operating from a sub-bus. During cruise a voltage sensor (#1) senses loss of spacecraft power and activates the power transfer switches, removing power from the battery charger. Internal battery power is then provided to bus #1 and power is removed from the Capsule Bus electrical heaters. Return of spacecraft power is sensed by voltage sensor #1 which activates the power transfer switches removing the battery and allowing spacecraft power to be delivered to the battery charger and heater bus. Power diodes isolate bus #2 from bus #1. The heater bus can also be connected to bus #1 to allow heater operation on internal battery power. The PS&L contains switching to allow interconnection of SL batteries to bus #1. The latter switch is controlled either by a voltage sensor (#2) which senses low voltage at bus #1 or by command.

The switching devices in the Capsule Bus PS&L used for controlling the subsystem equipment are latching type relays requiring separate inputs to latch and unlatch. Fault protection of the power distribution buses is provided by current sensors which will activate the relays turning off the using equipment.

7.1.3 Battery Charger - The battery charger is a two step float charger. The charger maintains the main battery in a charged condition during cruise and recharges this battery after spacecraft maneuvers and after Flight Capsule pre-separation checkout. The charger has two modes of operation. In the first mode it charges the battery at a constant potential of 1.98 volts/cell (37.6 volts) ± .01 volts with current limiting at 1.4 amps (C/50 rate). Charging current is sensed and when this current reduces to 0.7 amps (C/100 rate) the battery is put on float charge at 1.87 volts ± .01 volts per cell (35.5 volts). Each time power is removed from the battery charger and then reapplied, the charger reverts to the first operating mode.

Batteries - Four batteries are contained in the CB electrical power subsystem. The main CB battery is a sealed, manually activated silver zinc battery consisting of 19 sixty-two ampere-hour cells connected in series, and is designed to provide a minimum of four complete charge-discharge cycles. It will be heat sterilized prior to the formation charge. This battery provides the power for the cruise commutators

and command decoder in the Capsule Bus when spacecraft power is not available, and for the electronic subsystem equipment during descent and landing operations.

Three automatically activated silver zinc batteries are also contained within the Electrical Power Subsystem. Each battery is designed to be activated using a separable gas generator containing dual pyrotechnic initiators. The batteries are designed to be sterilized in a dry charged condition. Activated stand life is at least 8 hours and the batteries are a high rate design. They are used during the descent and landing and supply the high current requirements for the attitude control and propulsion subsystems and pyrotechnic initiators.

7.1.4 Spacecraft Mounted Capsule Support Equipment - It is assumed that power for operation of the Capsule Bus Support Equipment mounted in the spacecraft will be provided directly from the spacecraft. This equipment requires a maximum of 50 watts.

7.2 DESIGN REQUIREMENTS AND CONSTRAINTS - The primary requirements and constraints influencing the design of the CB electrical power subsystem are:

a. The power subsystem must provide the power requirements of the CB subsystems during descent and landing operations, and during cruise periods when power is not available from the spacecraft.

b. The power subsystem must provide regulation and distribution of power from the spacecraft to Capsule Bus equipment as well as to the Surface Laboratory and Entry Science Package.

c. The power subsystem must provide power switching controls for Capsule Bus subsystems.

The electrical power requirements of the Capsule Bus equipment are shown in Figure 7-3. The requirements which are provided from the main CB battery are shown in part A and the requirements which are provided from the automatically activated batteries during descent and landing are shown in part B. A power profile for the descent and landing phase is shown in Figure 7-4. It has been assumed for the purposes of the CB power subsystem design that spacecraft power will require regulation prior to use by the Flight Capsule systems.

7.3 PHYSICAL CHARACTERISTICS - The CB electrical power subsystem equipment weighs 110 pounds and occupies a volume of 2120 cubic inches. This includes the dc to dc converters which are located in the Sterilization Canister. The physical characteristics of the equipment are shown in Figure 7-5.

CAPSULE BUS BASELINE MISSION ELECTRICAL POWER REQUIREMENTS

EQUIPMENT	LAUNCH AND MIDCOURSE CORRECTION (3 HR)		CRUISE		PRE-SEPARATION (1.0 HR)		ORBITAL DESCENT (6 HR)		ENTRY (10 MIN)		TERMINAL DE-CELERATION (1.5 MIN)		POST LANDER PERIOD (10 MIN)	
	Watts	WH	Watts	WH	Watts	WH	Watts	WH	Watts	WH	Watts	WH	Watts	WH
PART A														
Telecommunications							30	2.5	30	5	30	0.8	30	5
Radio Subsystem					30	4.5	30	180	30	5	30	0.8	30	5
Telemetry Subsystem														
Telemetry Equipment	1.5	4.5	1.5	*	5	0.8	5	30	5	0.9	5	0.1	5	0.9
Instrumentation Equipment	3	9	3	*	21	3.5	21	126	21	3.5	21	0.6	21	3.5
Data Storage Subsystem							7	1.6	7	1.2	7	0.1	7	1.2
Command Decoder	1.4	0.5	1.4											
Radar Subsystem														
Landing Radar														
Antenna Assembly									59	9.6	59	1.5		
Electronics Assembly									86	13.9	86	2.2		
Radar Altimeter														
Electronics									40	1.83	40	1		
Guidance and Control Subsystem														
Inertial Measurement Unit			–		45	45	45	270	45	7.5	45	1.2		
Guidance and Control Computer			–		61	61	61	22.0	61	10.2	61	1.5		
Power Supply			–		24	24	24	144	24	4	24	0.6		
Sequencer and Timer			–		14	14	14	84	14	2.4	14	0.4	14	2.4
Thermal Control Heaters			85				65	390						
Power Subsystem														
Battery Charger			8											
Converter Regulator			25											
Power Switching and Logic Unit	2	6	2	*	2	2.0	2	12.0	2	0.4	2	0.1	2	0.4
Line and Diode Losses (6%)	0.5	1.2	7.6		12.1	9.3	18.2	76	25.5	3.9	25.5	0.7	6.6	1.1
Totals	8.4	21.2	133.5		214.1	164.1	322.2	1338.1	449.5	69.3	449.5	11.6	115.6	19.5
Sterilization Canister Equipment														
Cruise Commutator	0.8	2.4	0.8	*										
Instrumentation Equipment	2.1	6.3	2.1	*										
Dual Battery Charger			5	*										
Dual Separation Programmer														
Thermal Control Heaters	3	18	3	*										
Line and Diode Losses (6%)	0.6	1.6	0.6											
TOTALS	6.5	28.3	11.5											
PART B														
Pyrotechnics and Solenoids														
Pyrotechnic Initiators							360							
Attitude Control Thruster Drivers							128	3.5	128	0.3				
Descent Engine Throttle Valves											642	16.1		
Descent Engine Valve Solenoids											360	9.0		
Line and Diode Losses (8%)							39.1	0.28	10.2	0.02	80	2.0		
Totals							527.1	3.78	138.2	0.32		27.1		

* Continuous Operation

Figure 7-3

CAPSULE BUS BASELINE MISSION ELECTRICAL POWER PROFILE

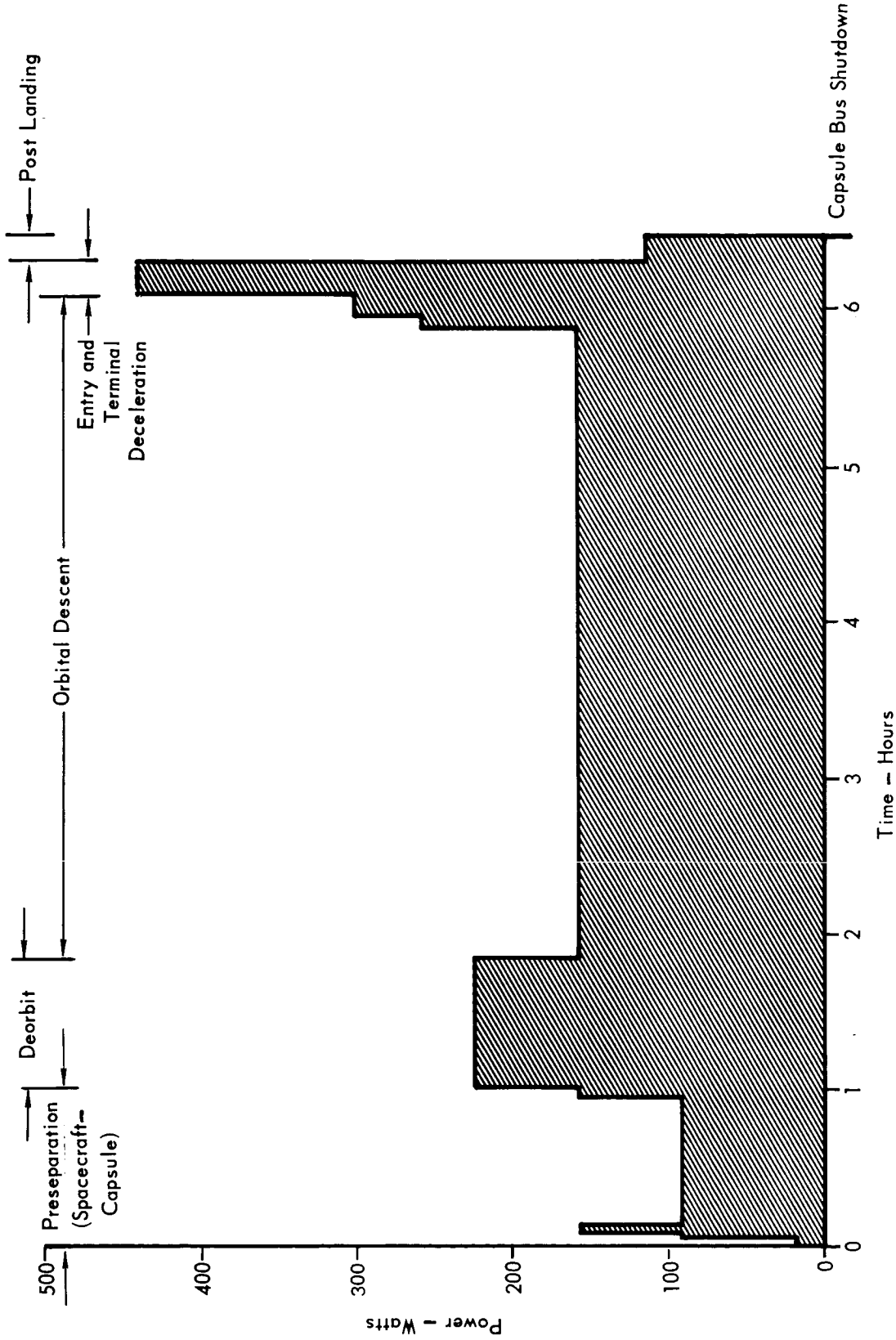

Figure 7–4

POWER SUBSYSTEM PHYSICAL CHARACTERISTICS

1. Main CB Battery

Weight	64 lb
Size	5.75" x 9" x 19.5"
Quantity	1
Cells/Battery	19

2. Auto Activated Battery

Weight	8 lb
Size	9" x 3" x 5.75"
Quantity	3
Cells/Battery	22

3. DC to DC Converter Regulator

Weight	4 lb
Size	4" x 4" x 5"
Quantity	2

4. Battery Charger

Weight	3.0 lb
Size	1.5" x 5.75" x 9"
Quantity	1

5. Power Switching & Logic Unit

Weight	11 lb Total
Size	3.5" x 5.75" x 9" – 1
	9" x 1.5" x 5.75" – 2
	3" x 4" x 6" –1
Quantity	4

Figure 7–5

7.4 OPERATION DESCRIPTION - The Capsule Bus electrical power subsystem mission sequence is shown in Figure 7-6.

7.4.1 Prelaunch and Launch - The CB main battery is charged prior to launch using the on-board battery charger. During launch, power is supplied from the CB main battery for operation of the cruise commutators and command decoder. Transfer to spacecraft-supplied power occurs after solar cell panel deployment. Less than 50 watt-hours will have been removed from the CB main battery during launch. Subsequently, the battery charger begins charging the main battery and the heaters are enabled. Transfer to spacecraft power is controlled by power transfer switches in the CB Power Switching and Logic Unit (PS&L). The command for activating these switches comes from the spacecraft. A voltage sensor is provided in the CB-PS&L for a functionally redundant path for this command.

7.4.2 Cruise - During cruise, spacecraft power is regulated by the DC to DC converter. A redundant operating converter, regulating at a lower output voltage, will pick up the load should the first converter fail. Power is distributed from a bus in the PS&L to the CB, ESP, SL, and Canister equipment. The maximum power which will be demanded from this bus at any one time is 230 watts, if all heaters cycle on at one time. Under normal conditions the power required will be 200 watts.

7.4.3 Periods of High Flight Spacecraft Power Usage - The spacecraft issues a command to activate the power transfer switches in the CB-PS&L causing the CB to be put on internal battery power during periods of high power usage or maneuvers by the spacecraft. A voltage sensor in the CB-PS&L provides a redundant path for activating the switches. Power to the SL and ESP is also turned off. During this period internal power is available to the CB and Adapter cruise commutators, and the command decoder, but the heaters are disabled. The maximum amount of energy removed from the main CB battery during any of these periods (3.5 hours assumed) is not expected to exceed 75 watt-hours. When FSC power again becomes available, the spacecraft issues a command to activate the power transfer switches in the CB-PS&L, thus placing the FC systems back on spacecraft power and putting the main CB battery back on float charge. The voltage sensor in the CB-PS&L is a redundant path for activating the power transfer switches. The battery chargers will normally revert to the float mode since only 2% to 4% of the battery capacity has been removed. If extended periods are required when spacecraft power is not available, the battery charger should be commanded "OFF" prior to S/C power resumption. This is done to prevent overload due to the potential combination of all heaters cycled on and by the battery

CAPSULE BUS ELECTRICAL POWER MISSION SEQUENCE

MISSION PHASE	DURATION	ENERGY SOURCE	EQUIPMENT OPERATING
Prelaunch	3 Days	OSE	Battery Chargers All Other Equipment Tested
Launch	3 Hours	Battery	Cruise Commutator Command Decoder *
Transit	7 Months	FSC	Battery Chargers Cruise Commutator DC to DC Converters Command Decoder *
Trajectory Corrections	10 Hours (Total)	Battery	Cruise Commutator Command Decoder *
Preseparation Checkout	4 Hours	FSC	Cruise Commutator Equipment Being Tested Command Decoder *
Separation and Descent	7 Hours	Battery	All
Post Landing	10 Minutes	Battery	Radio Subsystem Telemetry Subsystem Sequencer & Timer

* As Required

Figure 7–6

charger on the high rate (to which it would naturally revert after power interruption).

7.4.4 Pre-separation Checkout - Most of the pre-separation checkout will be performed using spacecraft power. End to end tests, however, will require more than 200 watts in some cases. For these tests, the test programmer will command a transfer to internal power. The depth of discharge of the main CB battery will be less than 10%. After completion of the pre-separation checkout, the battery will be recharged for 9 hours.

7.4.5 Pre-separation to CB Shutdown - Approximately one hour prior to separation the CB is transferred to internal power by command, and the electrical heaters are enabled. A voltage sensor is also enabled which senses the main power distribution bus voltage. Loss of CB battery power would cause the voltage sensor to close a switch allowing power from the SL to be made available to the CB. After transfer to internal power, the three automatically activated batteries are activated. Two of these batteries provide power to independent busses for pyrotechnic initiation. All three batteries are connected to a third bus, which provides power for operation of high current solenoids. Commands for activating these batteries originate in the CB-S&T. After landing, the CB-S&T energizes a latching relay making power from the main CB battery available to the SL, and activates the power transfer switches to disconnect the battery from the CB main power distribution bus.

7.5 PERFORMANCE CHARACTERISTICS - The performance characteristics of the power subsystem equipment can be well defined except for the CB main battery. Sealed sterilizable Ag-Zn batteries have given satisfactory post-sterilization performance. Limited demonstration testing has been accomplished, however, and therefore performance objectives presented here are necessarily conservative. The expected performance characteristics of the electrical power subsystem equipment are shown in Figure 7-7.

The battery terminal voltage will be between the limits of 24.7 and 35.2 Vdc. The using equipment will be required to operate between 23.0 and 33.5 volts except for low power equipment in the CB including the S&T, cruise commutator, command decoder, and test programmer which may be on under battery full charge conditions.

7.6 INTERFACE DEFINITION - The CB electrical power subsystem interfaces are shown in Figure 7-8. Within the CB, the interfaces with the subsystems consist of latching relays within the PS&L, which turn the using equipment on and off. These relays

POWER SUBSYSTEM PERFORMANCE CHARACTERISTICS

MAIN CB BATTERY

Type-Sealed, Manually Activated, Ag - Zn
Nominal Cell Capacity (to 1.3 V/Cell) = 62 Amp Hours
# of Cells 1 Battery = 19
Battery Energy = 1700 Watt Hours
Battery Watt Hours Per Pound = 26
Wet Stand Life = 12 Months
Battery Voltage Regulation = 24.7 V To 34V Nominal Under Load, 35.2 Open Circuit
Operating Temperature Environments
  On Float Charge = 0°F to 60°F
  Nominal Use Environment = 50°F to 120°F
Cycle Life – 4 Discharge – Charge Cycles to 100% of Rated Capacity

AUTOMATICALLY ACTIVATED BATTERY

Type - Ag - Zn
Nominal Cell Capacity – 1.25 Amp Hour
Wet Stand Life = 8 Hours Minimum
Dry Storage Life = 24 Months
Battery Voltage Regulation = 31.0 to 35.2 VDC
Maximum Load Current = 25 Amps
Operating Temperature Environment
  Unactivated = 65°F to 125°F
  Activated = 20°F to 120°F

BATTERY CHARGER

Type - Float Charger
  Mode #1 - Constant Potential - 37.6V ± 0.2 VDC
            Current Limiting at 1.4 Amps ± 5%
  Mode #2 - Constant Potential - 35.5V ± 0.2 VDC
  Mode Change (1 to 2) Trip Point = 0.7 Amps ± 5%
  Nominal Input Power (Mode #2) = 8 Watts

DC TO DC CONVERTER

Input Voltage = 32 to 62 Volts Assumed
Output Voltage = Adjustable in the Range of 30 to 35 VDC
                ± 1VDC No Load to Full Load
Output Power = 250 Watts
Ripple = 0.25% RMS

Figure 7–7

CAPSULE BUS ELECTRICAL POWER SUBSYSTEM INTERFACE BLOCK DIAGRAM

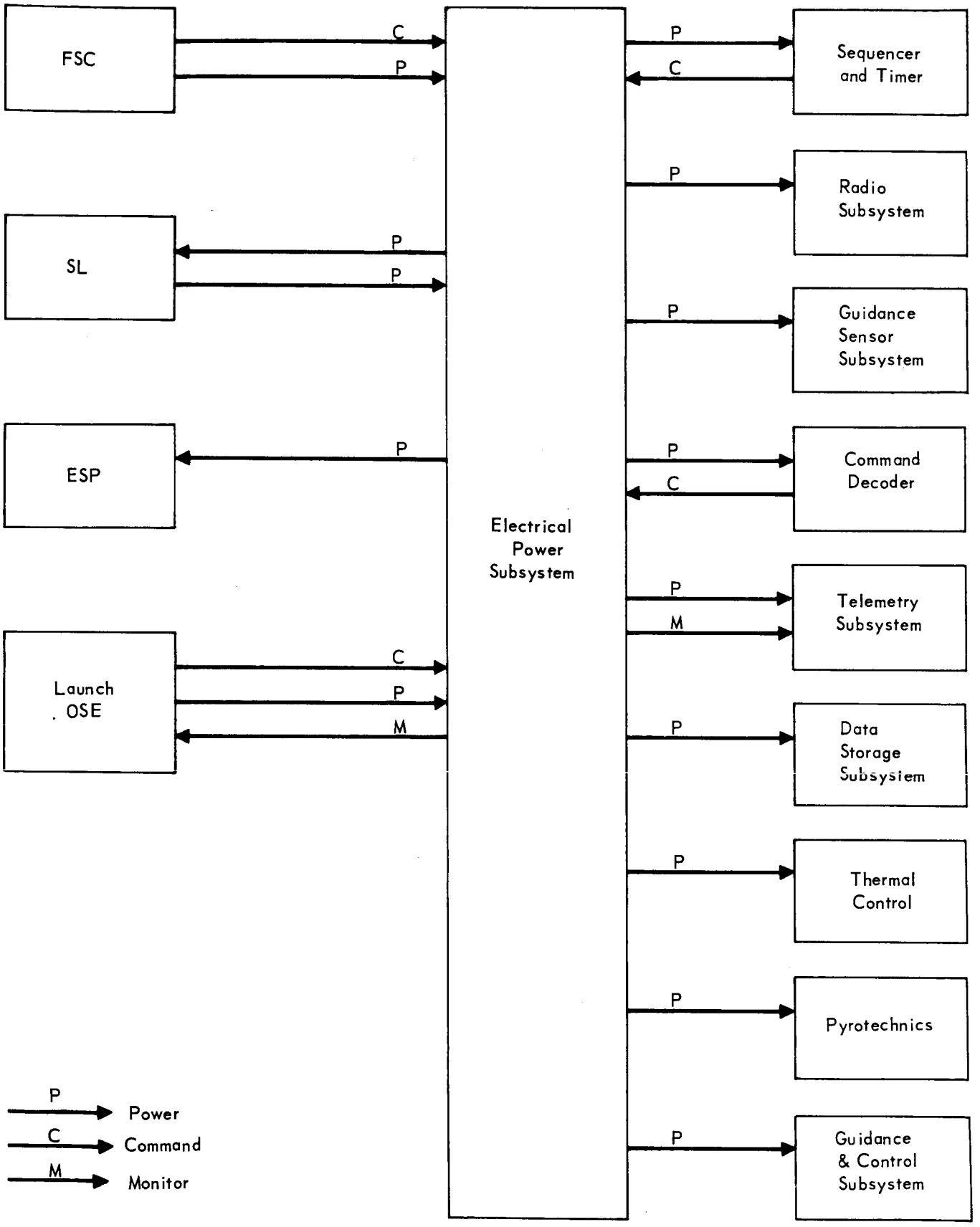

Figure 7–8

are activated from the sequencer and timer, test programmer, or the command decoder. The command and sequencing interfaces with the power subsystem are shown in Figure 7-9. Planned in-flight monitoring of the power subsystem equipment is shown in Figure 7-10.

A single point ground system is used in the FC with the structural ground point located in the Surface Laboratory. The single point ground is isolated from the spacecraft ground by the DC to DC converters. The FC ground is used by the Sterilization Canister electrical system during cruise. When the Canister power subsystem is transferred to internal battery power prior to separation it is switched to a structural ground point in the Canister. The Canister electrical subsystem is described in Section 1.1.4.

7.7 RELIABILITY CONSIDERATIONS - The electrical power subsystem reliability considerations center about assurance that power for Capsule Bus equipment operation is available during the mission. This assurance comes through conservative design, simplicity and redundancy. With the exception of the necessity of developing the sterilizable batteries, the remainder of the electrical power subsystem elements involve present day hardware and design techniques.

7.7.1 Operational Reliability - The system is configured simply with operational reliability provisions as follows:

a. The DC-DC converter regulator function is accomplished by redundant converter regulators. Both regulators are operative, while being set at different voltage levels, with either one capable of satisfying the function. The regulator set at the lower voltage approaches standby condition since it carries no load until the other regulator fails.

b. Main battery power is assured by several means, all of which enhance mission success. The CB battery operational life will be considerably strengthened by the charge control method to be utilized. The float charging concept, or charge control method, has shown most promising results under the limited Goddard Space Flight Center testing. This limited testing has thus far indicated: (1) essential elimination of cell unbalance problems during cycling, (2) contributions to preventing premature catastophic failure during cyclic life, and (3) retardation of silver migration and zinc dendritic growth. Although test data is limited, this means was chosen for the VOYAGER program in consideration of the extended cruise period (7 months), and intermittent cycle duty. In addition to above battery charge control method,

CB POWER SUBSYSTEM COMMAND INTERFACE LIST

POWER SUBSYSTEM FUNCTION \ COMMAND SOURCE	CB-S&T	FSC-CC&S	CB COMMAND DECODER
1. Operate CB-PS&L Power Transfer Switch	X	X	
2. Activate Voltage Sensor #2 Allowing Backup Power From SL	X		
3. Turn Battery Charger On or Off			X
4. Activate or Deactivate Heater Bus	X		X
5. Make CB Battery Power Available to SL	X		
6. Initiate Automatically Activated Batteries	X		
7. Subsystem Power On-Off			
CB Radio	X		
IMU & Power Supply	X		
G&C Computer	X		
Cruise Commutator			X
Telemetry	X		
Radar Altimeter	X		
Landing Radar	X		
Sequencer & Timer		X	
Test Programmer			

Figure 7–9

ELECTRICAL POWER SUBSYSTEM – IN FLIGHT DATA REQUIREMENTS

EQUIPMENT	NUMBER	MISSION PHASE	SAMPLING FREQUENCY	PURPOSE OF TEST	CORRECTIVE ACTION
Battery	1	Cruise	0.01	Verify Charging	Command Charger On or Off
Voltage	4	Preseparation	0.01	Monitor Performance	Command Redundant S L Power
	4	Descent	0.01	Monitor Performance	None
Battery Current	1	Cruise	0.01	Monitor Performance	None
	4	Preseparation + Descent	0.01	Monitor Performance	None
Battery Temperature	4	Cruise	0.01	Diagnostic Data	Reduce or Increase Heat Input
	4	Preseparation + Descent	0.01	Monitor Performance	Command Redundant S L Power
Battery Charger Current	1	Cruise	0.01	Verify Charging	Command Charger On or Off
DC to DC Converter Voltage	2	Cruise	0.01	Monitor Performance	None
DC to DC Converter Current	2	Cruise	0.01	Monitor Performance	None
DC to DC Converter Temperature	2	Cruise	0.01	Monitor Performance	None
Power Transfer Switch Positions	1	Cruise Preseparation + Descent	0.01	Verify Operation	Command Again
Redundant Surface Lab Power Switch	1	Preseparation + Descent	0.01	Verify Transfer To S L Power	None

Figure 7–10

the CB battery power is backed up by SL batteries.

c. The squib-solenoid battery function is a redundant two out of three configuration for success. The squib-solenoid bus circuitry is designed such that any two of the three automatically activated batteries will provide both the squib bus power and the high current solenoid bus power.

7.7.2 Failure Mode, Effect and Critically Analysis (FMECA) - A failure mode, effect, and criticality analysis was conducted for the electrical power system and results are presented in Figure 7-11. Each failure mode is categorized according to the effect on the following mission objectives:

a. Achievement of Flight Capsule Landing

b. Performance of Entry Science Experiments

c. Performance of Landed Science Experiments

d. Retrieval of Engineering Data

7.7.3 Reliability Estimate - The functional relationship of components in the Electrical Power System is depicted in the Reliability Diagram, Figure 7-12. The Reliability Estimate Summary, Figure 7-13, evidences the Electrical Power System calculated reliability of 0.9849.

The reliability estimate for the main battery is based on Surveyor silver zinc battery cell test data utilizing 662 cells over a period of 383,000 hours. Testing was performed by running programmed mission profile in an environmental chamber. The resultant cell Mean-Time Between Failures was 239,392 hours for a failure rate of 4.1 per million hours. It was projected that within the development span allowable for the VOYAGER mission, this failure rate could be improved an order of magnitude. Thus the failure rate utilized in the Reliability estimate calculations was 0.4/cell/10^6 hrs with a resultant 19 cell battery failure rate of 7.6 per million hours. With similar development time, the Sterilizable Silver Zinc Battery may obtain the same reliability obtained by the Mariner Battery which demonstrated Mission Probability of Success of 0.998 @ 80% confidence level.

The estimate for the automatically activated batteries is primarily based on the more advanced development state. At least one battery manufacturer will quote delivery on a fixed price basis. A reliability value was used in agreement with the Polaris and Torpedo automatically activated batteries of 0.9999.

7.8 TESTING - Pre-launch testing of CB equipment will be accomplished using OSE power. The anticipated charge-discharge cycling of the main CB battery is as follows:

FAILURE MODE, EFFECT AND CRITICALITY ANALYSIS

SUBSYSTEM: CBS ELECTRICAL POWER

COMPONENT OR FUNCTION	FAILURE MODE	FAILURE EFFECT	FAILURE CATEGORY: Landing	Entry Science	Landed Science	Eng. Data	REMARKS
Battery (Main)	Loss	None	1	1	1	1	CBS battery backed up by SLS. If SLS battery charger units fully operative, backup does not effect SLS.
Squib Battery No. 1	Loss	None (2 of 3)	1	1	1	1	No effect if squib batteries No. 2 and No. 3 are operative.
Squib Battery No. 2	Loss	None (2 of 3)	1	1	1	1	No effect if squib batteries No. 1 and No. 3 are operative.
Squib Battery No. 3	Loss	None (2 of 3)	1	1	1	1	No effect if squib batteries No. 1 and No. 2 are operative.
DC–DC Converter Regulator No. 1	Short, open or loss of regulation	None	1	1	1	1	Active redundant DC–DC converter regulator No. 2 will pick up the load.
DC–DC Converter Regulator No. 2	Short, open or loss of regulation	None	1	1	1	1	No effect if DC–DC converter Regulator No. 1 is operative. Loss of back up function, only.
PS&L							
Input Power Diode	Open	None	1	1	1	1	Loss of spacecraft power input which is CBS battery backed up for CBS functions and the CBS battery itself is backed up by SLS.
Voltage Sensor No. 1 (S/C Power Loss)	Inoperative	None	1	1	1	1	Backed up by spacecraft command for power transfer switching CBS battery on the line.
Voltage Sensor No. 2 (CBS Battery Loss)	Inoperative	None	1	1	1	1	No effect if CBS battery is operative. Loss of back up function.
Battery Float Charger	Inoperative	None	1	1	1	1	CBS battery energy decay's normally at 4%/month rate. CBS battery backed up by SLS.

Failure Category Definition
1 – No effect on mission objectives
2 – Degraded effect on mission objectives
3 – Possible catastrophic effect on mission objectives

Figure 7–11

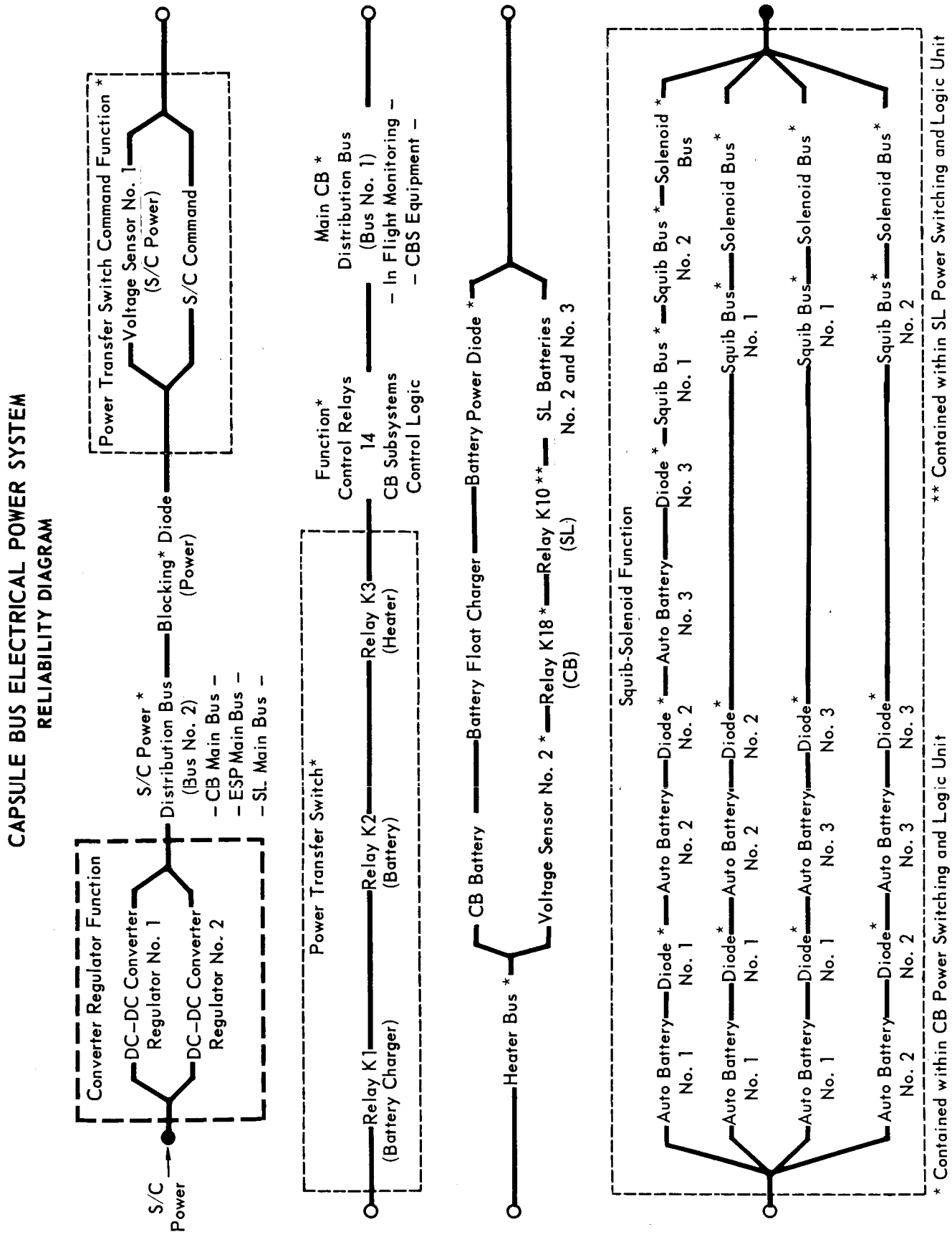
CAPSULE BUS ELECTRICAL POWER SYSTEM
RELIABILITY DIAGRAM
S/C Power
Converter Regulator Function
DC–DC Converter Regulator No. 1
DC–DC Converter Regulator No. 2
S/C Power * Distribution Bus (Bus No. 2)
– CB Main Bus –
– ESP Main Bus –
– SL Main Bus –
Blocking* Diode (Power)
Power Transfer Switch Command Function *
Voltage Sensor No. 1 (S/C Power)
S/C Command
Power Transfer Switch*
Relay K1 (Battery Charger)
Relay K2 (Battery)
Relay K3 (Heater)
Function* Control Relays 14 CB Subsystems Control Logic
Main CB * Distribution Bus (Bus No. 1)
– In Flight Monitoring –
– CBS Equipment –
Heater Bus *
CB Battery
Battery Float Charger
Battery Power Diode *
Voltage Sensor No. 2 *
Relay K18 * (CB)
Relay K10 ** (SL)
SL Batteries No. 2 and No. 3
Squib-Solenoid Function
Auto Battery No. 1
Diode * No. 1
Auto Battery No. 2
Diode * No. 2
Auto Battery No. 3
Diode * No. 3
Squib Bus * No. 1
Squib Bus * No. 2
Solenoid * Bus
Solenoid Bus *
* Contained within CB Power Switching and Logic Unit
** Contained within SL Power Switching and Logic Unit

Figure 7–12

CB ELECTRICAL POWER SUBSYSTEM
RELIABILITY ESTIMATE SUMMARY

COMPONENT	tm (1)	λ (2)	$-\ln R \times 10^6$ (3)
DC–DC Converter Regulator Function–Redundant	5559	—	618
PS & L			
Input Power Diode	5549	0.10	555
Power Transfer Switch			
Relay KI (Battery Charger)	5549	0.40	2220
Relay K2 (Battery)	136	0.40	54
Relay K3 (Heater)	98	0.40	39
Battery Power Diode	136	0.10	14
Function Control Relays			
K4 (Master Test Programmer)	90	0.40	36
K5 (Command Decoder)	5559	0.40	2224
K6 (Cruise Commutator)	5559	0.40	2224
K7 Through K15 (Subsystems)	124/relay	0.40/relay	450
K16 Heater	124	0.40	50
Power Transfer Switch Command Function-Redundant	5559	—	≈ 0
Main Battery Power–Redundant	5597	—	6652
Squib Battery Function–Redundant	31	—	0
			15136 R .9849

Notes: (1) tm = Modified time factor x time (hours)

(2) λ = Failures per million hours

(3) $-\ln R \times 10^6 = tm\ \lambda$

Figure 7–13

a. Post Sterilization - one complete charge-discharge cycle.

b. Launch to Pre-separation - up to 6 discharge - charge cycles of less than 5% depth of discharge.

c. Mars Descent - complete discharge.

Battery performance testing prior to Flight Capsule terminal sterilization is not presently planned because some batteries under development must be sterilized prior to the formation charge.

7.9 DEVELOPMENT REQUIREMENTS - The electrical power subsystem components are not long lead time development items except for the Ag-Zn batteries. Two 6 cell manually activated batteries have demonstrated the capability to survive heat sterilization followed by the flight time on wet stand. In these tests, the total heat sterilization time was less than the VOYAGER type approval test requirements.

Further development appears necessary in the areas of:

a. Demonstration of the capability of sealed cells to repeatedly survive the sterilization environment without cell case rupture.

b. Demonstration of the capability of sealed cells to survive heat sterilization followed by 12 month wet stand and then give rated performance.

The capability of an automatically activated battery cell pack to survive one heat sterilization cycle (120 hours) at the VOYAGER type approval temperature has been demonstrated. The gas generator has successfully survived 168 hours at 300°F. Further development of this system is necessary in the areas of:

a. Demonstration of the capability of the cell pack and gas generator to survive six 120 hour cycles of heat sterilization at the type approval temperature.

b. Development of a battery activator which will survive heat sterilization.

SECTION 8

SEQUENCER SUBSYSTEM

The Sequencer Subsystem affords the control by which the Capsule Bus (CB) fulfills the functional requirements to be a fully automatic device throughout its mission from activation and inflight checkout prior to separation from the Flight Spacecraft (FSC) in Mars orbit to landing on the surface of Mars. Without requiring primary Earth commands (except for "START" commands) this subsystem performs the necessary on-board sequencing and timing functions within the CB. The two major portions of the Sequencing Subsystem are denoted (1) and the Sequencer and Timer (S & T) and (2) the Test Programmer (TP).

8.1 SEQUENCER AND TIMER

8.1.1 Equipment Identification and Usage - The prupose of the sequencer and timer (S & T) is to provide the CB with the means for accomplishing, independent of primary Earth control, the sequential time-based events from activation prior to de-orbit until CB shurdown after landing on the surface of Mars. During the portion of the mission between separation from the FSC and trouchdown, no Earth commands may be utilized for on-board control of CB sequential actions. Furthermore, in this period prior to Entry, when the first physical sensing may be detected, all CB control sequences must be internally generated based upon S & T outputs.

8.1.2 Design Requirements and Constraints - The S & T is required to perform the following functions during the CB mission:

a. Provide on-board time reference for time-based control of Capsule subsystems.

b. Provide reference clock frequencies for interfacing Capsule subsystems.

c. Provide decoding and non-volatile storage capabilities for non-real-time (delayed) commands for use as time-based control of Capsule subsystems. The information contained in this storage (representing time delays to command initiation) must be capable of being updated or modified both prior to launch and in-flight.

d. Provide output driver/circuit closure signals as required for use as time-based control of Capsule subsystem.

e. Insert or update adjacent subsystem time-based digital data words.

8.1.2.1 Operational Requirements - The S & T will fulfill the following known CB subsystem requirements for a typical 1973 mission:

a. The CB subsystem currently require 56 discrete command subsequent to one of 8 possible mission "marks"; these discretes are desired at a time of up to 8 hours after a given "mark" with an accuracy of ± 1 second. A more accurate time sequence is also required for delays of up to 30 minutes after the "mark" with an accuracy of ± 0.05 second.

b. Two reference clock frequencies are presently required for synchronization of subsystem time-based functions; 1 kHz ± .01% for telemetry reference frequency and 38.4 kHz ± .01% for gyro power inverter synchronization.

c. Ten digital data words (up to 16 bits long) are required by the Guidance Computer; one digital data word (up to 16 bits long, ± 1 second accuracy) is required by telemetry as a data stream time tag.

8.1.2.2 Sequence of Events - The preceding S & T outputs are based upon the sequence of operational events for a typical 1973 mission shown in Figure 8-1. The input stimuli and the required S & T reactions for this mission may be summarized as follows:

a. Power ON (S & T activation)

b. "Prepare for Separation" command (an "ARM" command, resulting in 14 discrete outputs.)

c. "Start Separation Sequence" (a "FIRE" command resulting in 1 S & T output.)

d. "Enable Separation Command" (a verification from the Canister Programmer that the Canister has separated, resulting in 2 S & T outputs.)

e. Sensed FSC/CB Separation (S & T outputs 18 successive discretes.)

f. Sense .05g CB Deceleration (4 S & T sequential outputs.)

g. 23,000 Foot Mark (12 outputs are sequenced.)

h. 5,000 Foot Mark (5 outputs are required from S & T.)

i. Sense Touchdown (6 S & T discretes result.)

j. Radar Altimeter (RA) Reliable Tracking Signal (an inhibit signal to prevent 0-7-1 S & T backup output from occurring.

8.1.3 Physical Characteristics

a. Size - The estimated size of the S & T is 9" x 7" x 5-3/4" as shown in the outline drawing of Figure 8-2.

b. Weight - The weight of the S & T is estimated to be 13 pounds.

c. Power - The power dissipated in the S & T is estimated to be approximately 14 watts. This includes 4 watts in the memory, 5 watts in the nonmemory circuitry, and 5 watts in the power supply. It does not include any power transmitted by the S & T and dissipated in its loads. Input voltage will vary between 23 and 35 VDC.

CB SEQUENCER AND TIMER (S & T) SEQUENCE OF EVENTS FOR A TYPICAL 1973 MISSION

INTERFACE DESIGNATION	S & T INPUT (I)/OUTPUT (O)	SOURCE	S & T DESTINATION	BACKUP	MISSION TIME	S & T TIME
I–1	Apply Power to CB S & T	FS CC & S	CB Pwr	MOS	T_{12} – 228 Min.	(Warmup)
I–2	Update CB S & T Parameters (via. Cmd Rcvr.) (Up to 128 words)	MOS	CB S & T	–	T_{12} – 225 Min.	(Update)
O–1	Verify CB Parameters (via. T/M) (128 words)	CB S & T	MOS	–	T_{12} – 195 Min.	(Verify)
I–3	Receive "Prepare FC for Separation" Cmd (Cmd. Rcvr.)	MOS	CB S & T	–	T_{12} – 70 Min.	T_a
O–3–1	Switch CB & ESP to Internal Power	CB S & T	CB & ESP Pwr	MOS	T_{12} – 65 Min.	+ 5 Min.
O–3–2	Activate CB TM (Checkout Mode)	CB S & T	CB TM (Pwr)	MOS	T_{12} – 64 Min	+ 6 Min
O–3–3	Activate CB GCS (IMU)	CB S & T	CB GCS (Pwr)	MOS	T_{12} – 63 Min	+ 7 Min
O–3–4	Activate CB GCC	CB S & T	CB GCC (Pwr)	MOS	T_{12} – 62 Min	+ 8 Min
O–3–5	Transfer GCS Data Words (10)	CB S & T	CB GCC	MOS	T_{12} – 61 Min	+ 9 Min
O–3–6	Turn GFF GCC	CB S & T	CB GCC (Pwr)	MOS	T_{12} – 60 Min	+ 10 Min
O–3–7	Activate Squib Battery No. 1	CB S & T	CB Pwr	MOS	T_{12} – 59 Min	+ 11 Min
O–3–8	Activate Squib Battery No. 2	CB S & T	CB Pwr	MOS	T_{12} – 58 Min	+ 12 Min
O–3–9	Activate Squib Battery No. 3	CB S & T	CB Pwr	MOS	T_{12} – 57 Min	+ 13 Min
O–3–10	Switch ESP/SL/CB Cruise Commutators to CB TM Control Mode	CB S & T	ESP/SL/CB CC	MOS	T_{12} – 56 Min	+ 14 Min
O–3–11	Switch Canister to Internal Power	CB S & T	CN Pwr	MOS	T_{12} – 10 Min	+ 60 Min
O–3–12	Turn On Low Rate UHF Transmitter	CB S & T	CB TM (Pwr)	MOS	T_{12} – 9 Min	+ 61 Min
O–3–13 (Repeat O–3–4)	Activate CB GCC	CB S & T	CB GCS (Pwr)	MOS	T_{12} – 8 Min	+ 62 Min
O–3–14	Switch CB TM to De-Orbit Mode	CB S & T	CB TM	–	T_{12} – 6 Min	+ 64 Min
I–4	Start Separation Sequence (Cmd Rcvr to CC & S)	FS CC & S	CB S & T	MOS	T_{12} – 5 Min	T_b
O–4–1	Initiate GCC Separation Routine	CB S & T	CB GCS	MOS	T_{12} – 30 Sec	+ 5.5 Min
I–5	Enable CB S & T Separation Command	CN DP	CB S & T	–	T_{12} – 15 Min	T_c
O–5–1	Enable CB RCS	CB S & T	CB RCS	–	T_{12} – 5 Sec	+ 10 Min
O–5–2	Separate FC from FS	CB S & T	CB GCS	–		+ 15 Sec
I–6	Verify FS–FC Separation	FC Sep Sw	CB S & T	–	T_{12} +	T_d
O–6–1	Terminate RCS Separation Firing	CB S & T	CB GCS	–	T_{12} + 1 Sec	+ 1 Sec
O–6–2	Initiate De-Orbit Attitude Maneuver Sequence	CB S & T	CB GCC	–	T_{12} + 25 Sec	+ 25 Sec
O–6–3	Initiate De-Orbit Velocity Routine	CB S & T	CB GCC	–	T_{12} + 15 Min	+ 15 Min
O–6–4	Arm CB De-Orbit Motor	CB S & T	CB Prop (Pyro)	–	T_{13} – 5 Sec	+ 19 Min, 5.5 Sec
O–6–5	Ignite CB De-Orbit Motor	CB S & T	CB Prop (Pyro)	–	T_{13} +	+ 20 Min
O–6–6	Arm De-Orbit Motor Thrust Termination	CB S & T	CB Prop (Pyro)	–	T_{13} + 0–31 Sec	+ 20 Min, 31 Sec
O–6–7	Terminate CB De-Orbit Thrust Motor (Backup)	CB GCC	CB Prop	CB S & T	T_{13} + 0–32 Sec	+ 20 Min, 32 Sec
O–6–8	Arm Motor Case Release Mechanism	CB S & T	CB Prop (Pyro)	–	T_{13} + 35 Sec	+ 20 Min, 35 Sec
O–6–9	Release De-Orbit Motor	CB S & T	CB Prop (Pyro)	–	T_{13} + 40 Sec	+ 20 Min, 40 Sec
O–6–10	Separate De-Orbit Motor (Backup)	CB Pyro	CB Prop (Pyro)	CB S & T	T_{13} + 40.1 Sec	+ 20 Min, 40.1 Sec
O–6–11	Initiate Entry Attitude Maneuver Sequence	CB S & T	CB GCC	–	T_{13} + 2 Min	+ 22 Min
O–6–12	Start Coast Roll	CB S & T	CB GCC	–	T_{13} + 15 Min	+ 35 Min
O–6–13 (Repeat	Turn Off GCC	CB S & T	CB GCC (Pyro)	–	T_{13} + 16 Min	+ 36 Min

Figure 8–1

0-3-6)						
0-6-14 (Repeat 0-3-4)	Activate GCC	CB S & T	CB GCC (Pyro)	–	T_{14} – 8 Min	+ 5 Hr 52 Min
0-6-15	Initiate GCC Acceleration Routine	CB S & T	CB GCC	–	T_{14} – 7 Min	+ 5 Hr, 53 Min
0-6-16	Turn on CB Radar Altimeter	CB S & T	CB RA (Pwr)	–	T_{14} – 6 Min	+ 5 Hr, 54 Min
0-6-17	Turn on ESP	CB S & T	ESP Pwr	–	T_{14} – 5 Min	+ 5 Hr, 55 Min
0-6-18	Switch CB TM to Entry Mode	CB S & T	CB TM	–	T_{14}	+ 6 Hr
1-7	Sense .05 g CB Deceleration	CB GCC	CB S & T	–	T_{15}	T_e
0-7-1	Turn on Landing Radar (Backup)*	CB RA	CB LR (Pwr)	CB S & T*	T_{15} + 30 Sec	+ 30 Sec
0-7-2	Arm TPS Valves Pressurant	CB S & T	CB Prop (Pyro)	–	T_{15} + 49 Sec	+ 49 Sec
0-7-3	Fire TPS Pressurant Isolation Valves	CB S & T	CB Prop (Pyro)	–	T_{15} + 50 Sec	+ 50 Sec
0-7-4	Fire TPS Propellant Isolation Valves	CB S & T	CB Prop (Pyro)	–	T_{15} + 55 Sec	+ 55 Sec
1-8	23,000 Foot Mark	CB RA	CB S & T	CB GCS	T_{19} – .5 Sec	T_f
0-8-1	Shutdown CB RCS	CB S & T	CB Pyro (RCS)	–	T_{19} – .2 Sec	+ .3 Sec
0-8-2	Enable CB Aerodecelerator Deployment	CB S & T	CB Pyro	–	T_{19} – .1 Sec	+ .4 Sec
0-8-3	Deploy CB Aerodecelerator	CB S & T	CB Pyro	–	T_{19}	+ .5 Sec
0-8-4	Arm CB Aeroshell Separation Mech	CB S & T	CB Pyro	–	T_{20} – 1 Sec	+ 11 Sec
0-8-5	Initiate GCC Descent Control Mode	CB S & T	CB GCC	–	T_{20} – 1 Sec	+ 11 Sec
0-8-6	Start RA Hold-off Signa	CB S & T	CB RA	–	T_{20} – 1 Sec	+ 11 Sec
0-8-7	Switch CB & ESP TM to Terminal Deceleration Mode	CB S & T	CB/ESP TM	–	T_{20} – .5 Sec	+ 11.5 Sec
0-8-8	Release CB Aeroshell (Electrical)	CB S & T	CB Pyro	–	T_{20} – .2 Sec	+ 11.8 Sec
0-8-9	Release CB Aeroshell (Mechanical)	CB S & T	CB Pyro	–	T_{20} – .1 Sec	+ 11.9 Sec
0-8-10	Separate CB Aeroshell	CB S & T	CB Pyro	–	T_{20}	+ 12 Sec
0-8-11	End RA Hold-off Signal	CB S & T	CB RA	–	T_{20} + 4 Sec	+ 16 Sec
0-8-12	Arm Aerodecelerator Release	CB S & T	CB Pyro	–	T_{20} + 35 Sec	+ 47 Sec
1-9	5,000 Foot Mark	CB RA	CB S & T	–	T_{21} – .5 Sec	T_g
0-9-1	Ignite Terminal Propulsion Motors (Backup)	CB GCC	CB Prop	CB S & T	T_{21}	+ .5 Sec
0-9-2	Release Aerodecelerator from CB (Backup)	CB Prop Sensors	CB Pyro	CB S & T	T_{21} + .5 Sec	+ 1 Sec
0-9-3	Throttle Down Terminal Thrust to .8 g	CB GCC	CB Prop	CB S & T	T_{21} + .5 Sec	+ 1 Sec
0-9-4	Separate Aerodecelerator from CB	CB S & T	CB Pyro	–	T_{21} + .6 Sec	+ 1.1 Sec
0-9-5	LR Search/Track Enable Command	CB S & T	CB LR	–	T_{21} + 2 Sec	+ 2.5 Sec
1-10	Sense Touchdown	CB IS	CB S & T	SL IS	T_{26}	T_h
0-10-1	Touchdown Time Backup (Shutdown LR, RA, GCS, Propulsion)	CB IS	CB Pwr	CB S & T	T_{26}	T_h
0-10-2	Arm CB Stabilizer Legs	CB S & T	CB Pyro	–	T_{26} + 5 Sec	+ 5 Sec
0-10-3	Release CB Stabilizer Legs	CB S & T	CB Pyro	–	T_{26} + 6 Sec	+ 6 Sec
0-10-4	Extend CB Stabilizer Legs	CB S & T	CB Pyro	–	T_{26} + 8 Sec	+ 8 Sec
0-10-5	Shutdown CB (Transfer Residual Power)	CB S & T	CB Pwr	–	T_{26} + 10 Min	+ 10 Min
0-10-6	Shutdown ESP	CB S & T	ESP Pwr	–	T_{26} + 10 Min	+ 10 Min
1-11	RA Reliable Tracking Signal	CB RA	CB S & T	–	(During RA Tracking)	

*Conditional backup – inhibited if RA "Reliable Tracking Signal" is present.

†Conditional reaction – if release has been accomplished.

Notes:

CB	Capsule Bus
CC	Cruise Commutator
CC & S	Central Computer & Sequencer
CMD	Command
CN	Canister (Sterilization)
DP	Dual Programmer
ESP	Entry Science Package
FSC	Flight Spacecraft
GCS	Guidance Control Computer
GCS	Guidance Control Subsystem
IMU	Inertial Measurement Unit
IS	Impact Sensor (Landing)
LR	Landing Radar
MOS	Mission Operations Systems
PROP	Propulsion
PWR	Power (Electrical)
PYRO	Pyrotechnic
RA	Radar Altimeter
RCS	Reaction Control Subsystems
RCVR	Receiver
S & T	Sequencer & Timer
SL	Surface Laboratory
TM	Telemetry
TPS	Terminal Prop. Subsystem

Times:

T_{12}	Separation (CB/FSC): T_b
T_{13}	De-Orbit: T_d + 20 min
T_{14}	Predicted (S & T) Entry: T_d + (1 to 6) hr
T_{15}	Sensed .05g Entry: T_e
T_{19}	Aerodecelerator Deployed: T_f + .5 sec
T_{20}	Aeroshell Separation: T_f + 12 sec
T_{21}	TPS Ignition: T_g + .5 sec
T_{26}	Touchdown: T_h

CB SEQUENCER AND TIMER (S&T)
OUTLINE DRAWING

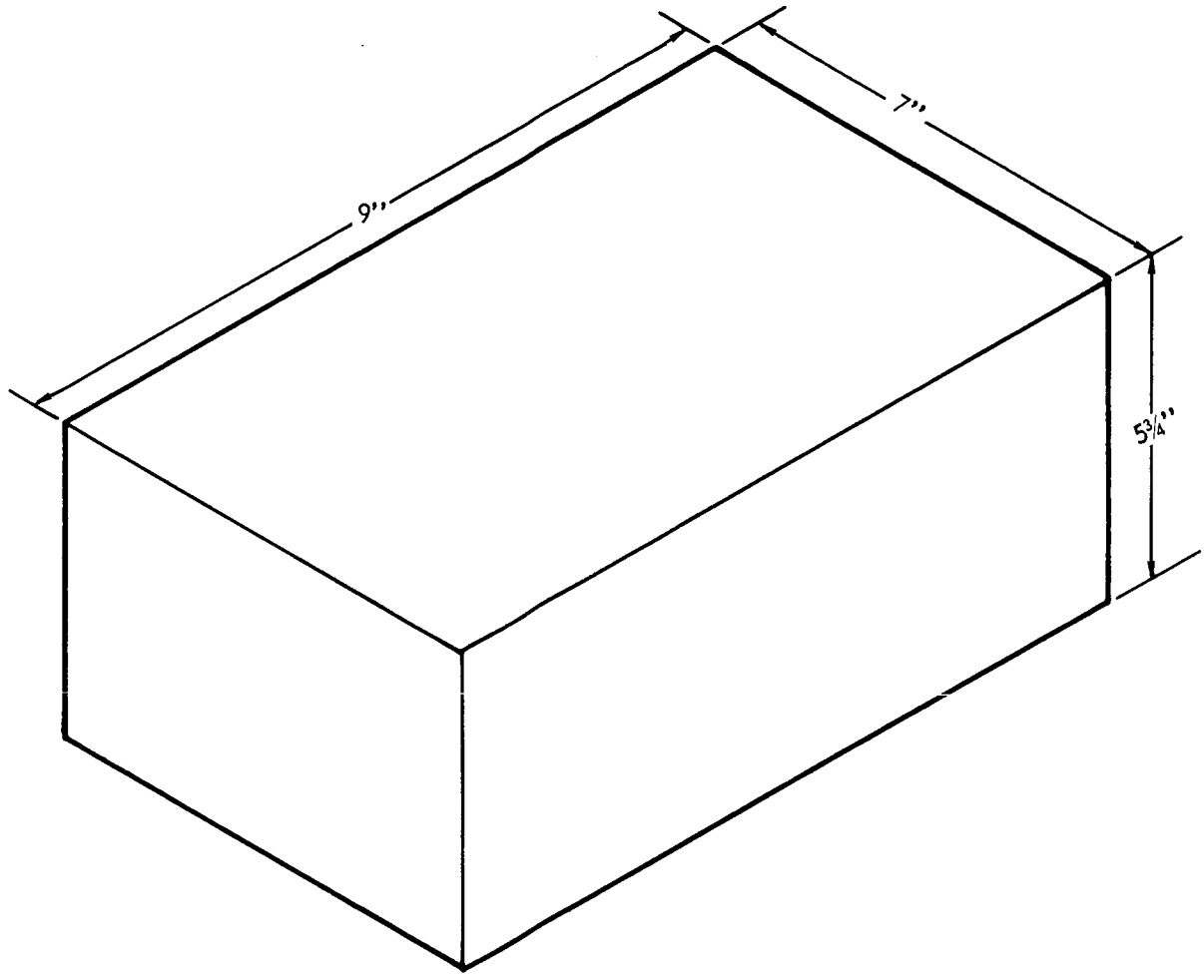

Figure 8-2

d. Alignment - The S & T may be mounted in any orientation.

8.1.4 Operation Description - The functions required of the CB S & T in the preceding sections may be summarized as follows:

a. Accept, decode and store non-real-time (delayed) commands from the Commander Decoder.

b. Based on these commands and an internally generated timing clock, time the delayed period from the corresponding "START" signal.

c. Activate the appropriate discrete output when this delay period has elapsed.

d. Upon request from a using subsystem, transfer the desired stored data word (command) to this subsystem.

e. Generate reference clock frequencies for use by interfacing subsystems.

Figure 8-3 shows the Functional block Diagram of the CB S & T to accomplish these functions and the interconnections and inter-relationships of the functions themselves.

The S & T functions as an extremely simple special purpose digital programmer (that acts on variable data with a hardwired program), and an associated master clock with subdividing counters to yield the required reference clock frequencies. The digital words stored in the memory may be inserted, verified and/or updated (modified) both during prelaunch checkout and prior to separation from the FSC.

In general, a digital word stored in the S & T memory represents the time delay from a specified sensor input to the corresponding line driver output. After this sensor input has occurred, this word is counted down at a rate equal to the required time resolution. The instantaneous value of the data word is the time-to-go to the desired discrete output. When the word has been decremented to zero, the associated output occurs.

Digital data words, which are not decremented, are stored at a constant value until transferred to the requesting subsystems. The exception to this fixed storage of data is the telemetry time tag which represents the elapsed time from the FSC pre-separation "START" command to the S & T. This word is stored in the memory as the maximum digital time; when time counting starts, this word is decremented at the internal 1 Hz rate. Following a time-tag request from telemetry, the decremented word is buffered and its complement is transferred to telemetry (representing "time-from-START" instead of the usual "time-to-go" in a decrementing memory).

Figure 8-4 is the CB S & T schematic Block Diagram. The S & T memory word length is assumed to be 24 bits with the following content: (a) 16 bits of data,

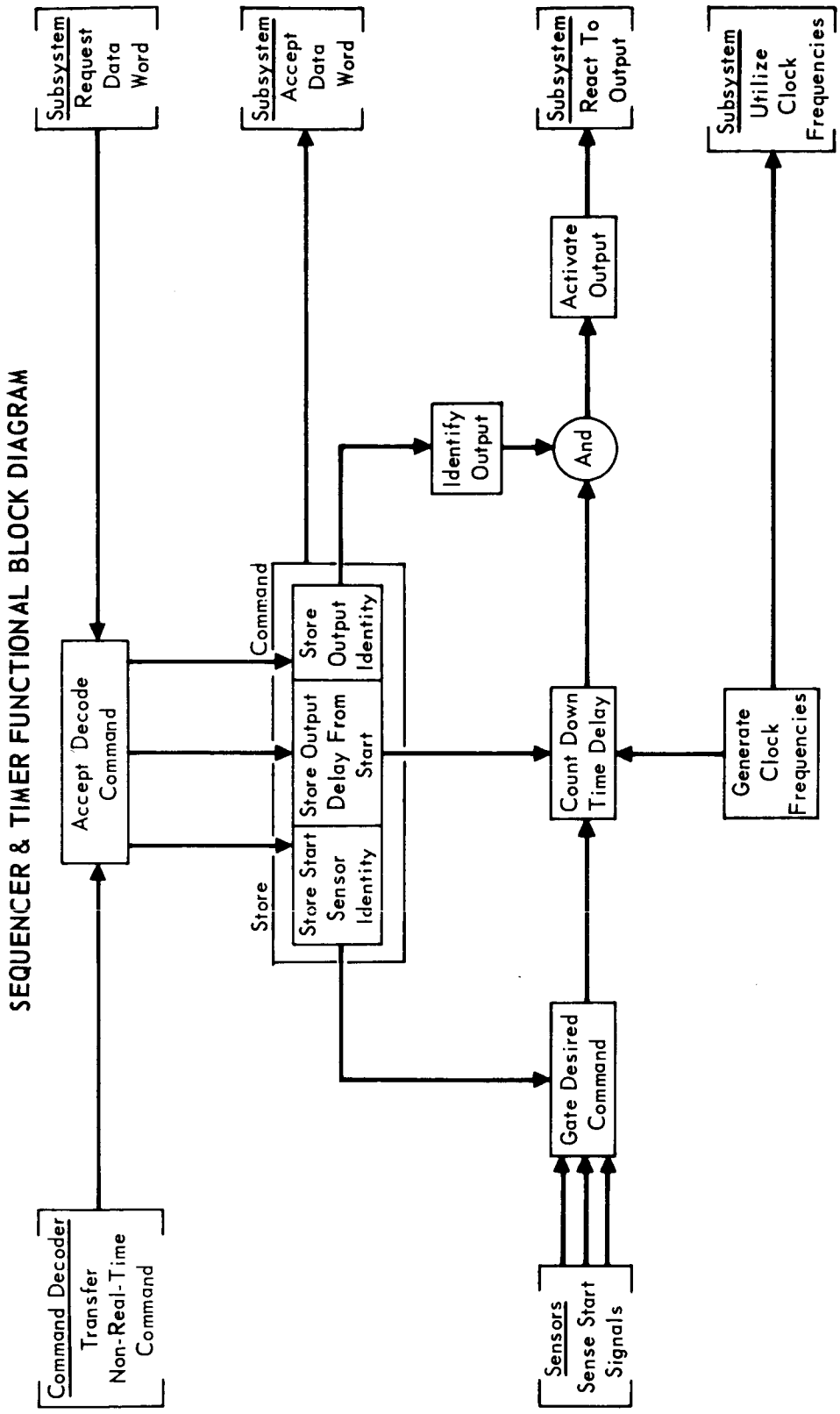
SEQUENCER & TIMER FUNCTIONAL BLOCK DIAGRAM
Command Decoder
Transfer
Non-Real-Time
Command
Accept Decode
Command
Subsystem
Request
Data
Word
Store
Store Start
Sensor
Identity
Store Output
Delay From
Start
Command
Store
Output
Identity
Subsystem
Accept
Data
Word
Sensors
Sense Start
Signals
Gate Desired
Command
Count Down
Time Delay
Identify
Output
And
Activate
Output
Subsystem
React To
Output
Generate
Clock
Frequencies
Subsystem
Utilize
Clock
Frequencies

Figure 8-3

CB SEQUENCER AND TIMER SCHEMATIC BLOCK DIAGRAM

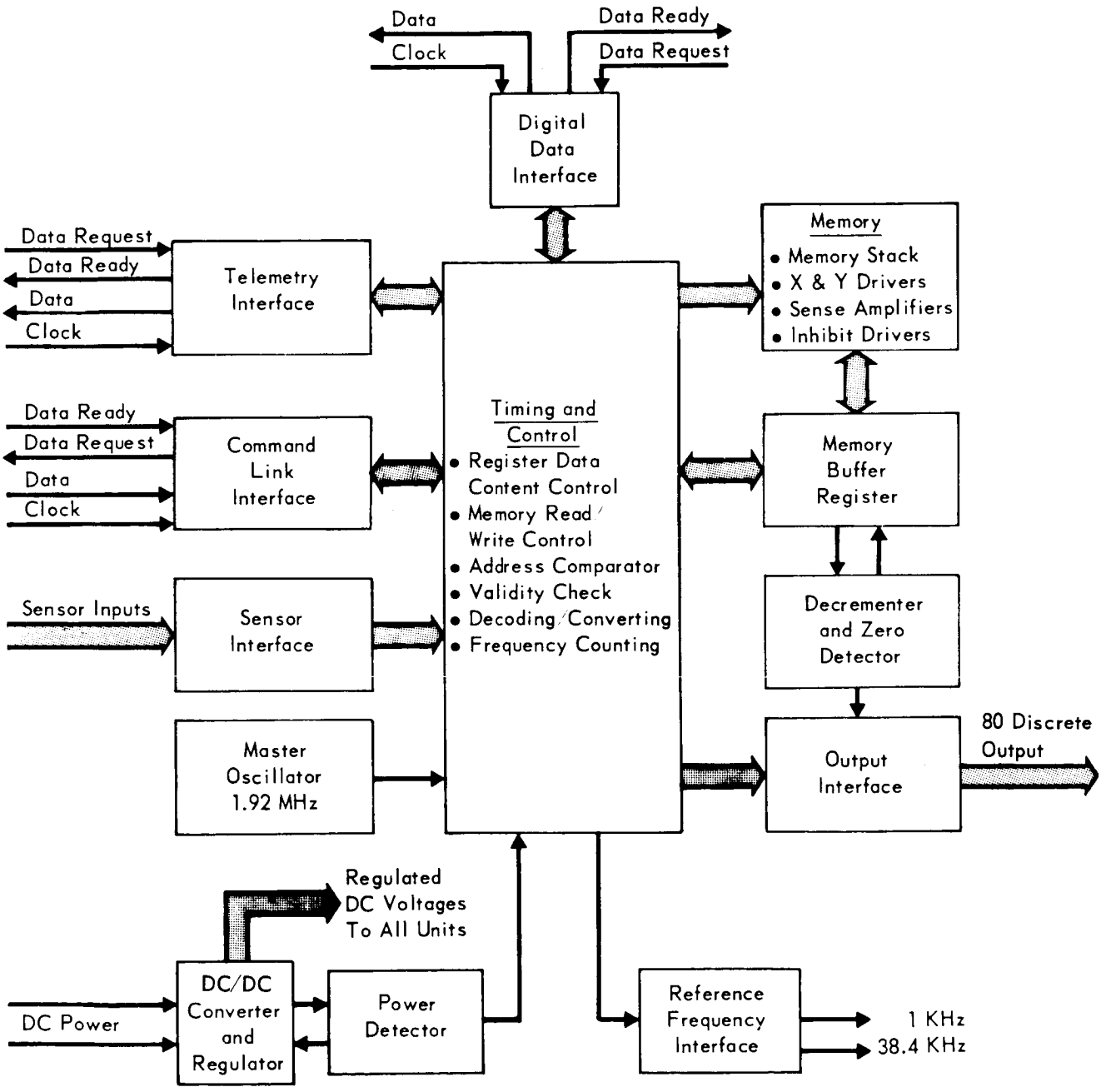

Figure 8–4

(b) 3 bits to define the applicable sensor, (c) 1 bit to define the word as "Fine" or "Coarse", (d) 1 bit to indicate the occurrence of the applicable sensor, (3) 1 bit to indicate that the word has been decremented to zero time-to-go, (f) 1 word-mark bit, (g) 1 parity bit. The reasons for the additional bits are: (1) to insure that in the event of a power failure, that the S & T will return to the correct state when power returns, (2) for correct data interpretation during transmission with the interfaces, and (3) for simplification of hardware. The S & T command input word length is 32 bits: the additional 8 bits are for memory location address which signifies the action to be accomplished.

As an example of a typical operational sequence, one discrete delayed output command (output #1 will occur 10 seconds after sensor input "A") may be traced through Figure 8-4.

a. Upon application of primary power, the DC to DC converter and regulators, and power detector are energized. Standard transformer-coupled chopper-driven converter/series regulator circuits are used, providing outputs of ±15 and +5 VDC. The Power Detector senses when the input voltage drops below a specific level and then turns off the power to the logic circuitry (+5 VDC) before allowing the ±15 VDC to decay. In this manner, the memory content is not destroyed despite input power interruptions.

b. Prior to launch, the expected time of occurrence of this example output is entered into the memory: word A-1 will occur 10 seconds after sensor input "A". This word enters the S & T through the Command Link Interface module (merely a buffer and data word time correlation stage), through the Timing and Control module for address decoding, and routed to the proper memory word location.

c. The memory is detailed in Figure 8-5. It is a coincident current, lithium-ferrite core, destructive readout type. The lithium-ferrite cores are formed at a temperature in excess of twice the sterilization temperature of 135°C and no problem of variation of memory characteristics due to sterilization heat is anticipated. However, the memory should be loaded and verified after having been sterilized.

d. The solid-state crystal stabilized Master Oscillator provides the 1.92 MHz internal timing reference, with an initial specified accuracy of 1 PPM.

e. This primary reference frequency is divided as necessary within the Time and Control Module for adjacent subsystem and for internal timing references.

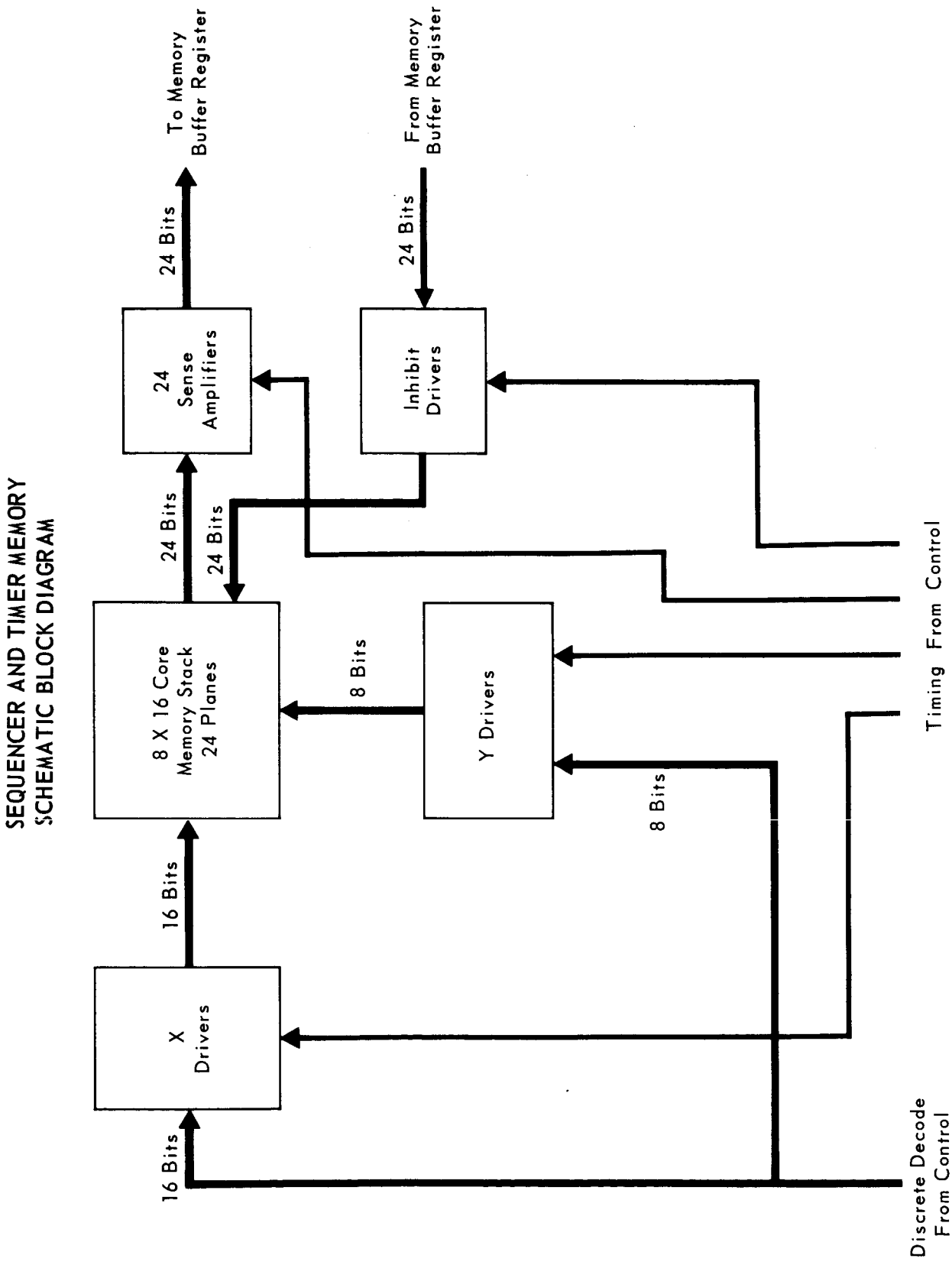
SEQUENCER AND TIMER MEMORY
SCHEMATIC BLOCK DIAGRAM
To Memory
Buffer Register
From Memory
Buffer Register
24 Bits
24 Bits
24
Sense
Amplifiers
Inhibit
Drivers
24 Bits
24 Bits
8 X 16 Core
Memory Stack
24 Planes
8 Bits
Y Drivers
8 Bits
16 Bits
X
Drivers
16 Bits
Timing From Control
Discrete Decode
From Control

Figure 8–5

f. The function of the timing and control module is detailed as follows: The Memory Buffer control circuits perform the task of controlling the data content of the memory buffer register which is a 24 bit flip-flop register. The memory buffer register serves as the exclusive input and output for the core memory. Data transfer to and from the core memory is in parallel. All other operations relative to changing data in the buffer register are performed serially while the contents of the register are shifted in a 24 bit shift cycle in the direction of the least significant bit. As each bit is shifted out of the least significant bit position it is operated upon and then re-entered into the most significant bit position of the register. After one complete shift cycle, all bits are in their respective positions, and the contents of the register are written into the core memory. Typical operating sequence of the memory is shown in Figure 8-6. The only deviation from this sequence is for a "memory readout" cycle or a digital word request. For these operations the word is written back into the memory prior to the shifting operation (Step #5). The reason for this is that the shifting operation is controlled by an external strobe which could locate the data bit in an incorrect slot in the register if a strobe pulse is missed.

g. The logic diagram of the Decrementer and Zero Detector is shown in detail in Figure 8-7. This circuit decrements the content of the Memory Buffer Register by changing the least significant bit (LSB) and serially checking the new word to see if any bit is not zero. If not, the zero detector sets a flip-flop and enables the Output Interface.

h. The logic diagram of the output interface is detailed in Figure 8-8. Upon zero-detection the appropriate line driver is energized and held in that state by a latching gate arrangement until a reset command is received. The reset command could be either a word reaching zero having been decremented, a timing module flip-flop to produce a pulse output, or a signal from the Control and Timing to protect against false triggering during power interruptions. The line drivers are transistorized because they are smaller, lighter, faster, less noisy and require less power than relays.

i. Other interface modules are merely impedance matching and date time correlation buffer units. Details of the interfaces are given in Section 8.1.6.

8.1.5 Performance Characteristics - The S & T utilizes the 128 word storage and the 1.92 MH internal frequency reference to produce the following output capability:

SEQUENCER AND TIMER (S & T) MEMORY TYPICAL OPERATING SEQUENCE

STEP	DESCRIPTION
1	Increment memory address register
2	Reset memory buffer register
3	Read word from memory specified by the address register and strobe the 24 bit word into memory buffer register in parallel
4	Prior to shifting check for the following and set mode switches accordingly: • Is this a time–to–go word as opposed to a digital data word? • Is this word to be updated from the command link system as indicated by comparison of the memory address and the address in the digital command system register? • Is the sensor for this word active? • Has this word previously reached zero? • Is this a fine or course time word? • Is this a "memory readout" cycle or a digital data word request?
5	Shift the register through 24 shift cycles and update/distribute the data as dictated by mode switches
6	Check if the time word has been decremented to zero and command discrete for this memory word address
7	Write contents of buffer register into the same core memory position from which the word was read in step 3
8	Return to step 1 and repeat sequence for next memory word

Figure 8–6

SEQUENCER AND TIMER DECREMENTER AND ZERO DETECTOR LOGIC DIAGRAM

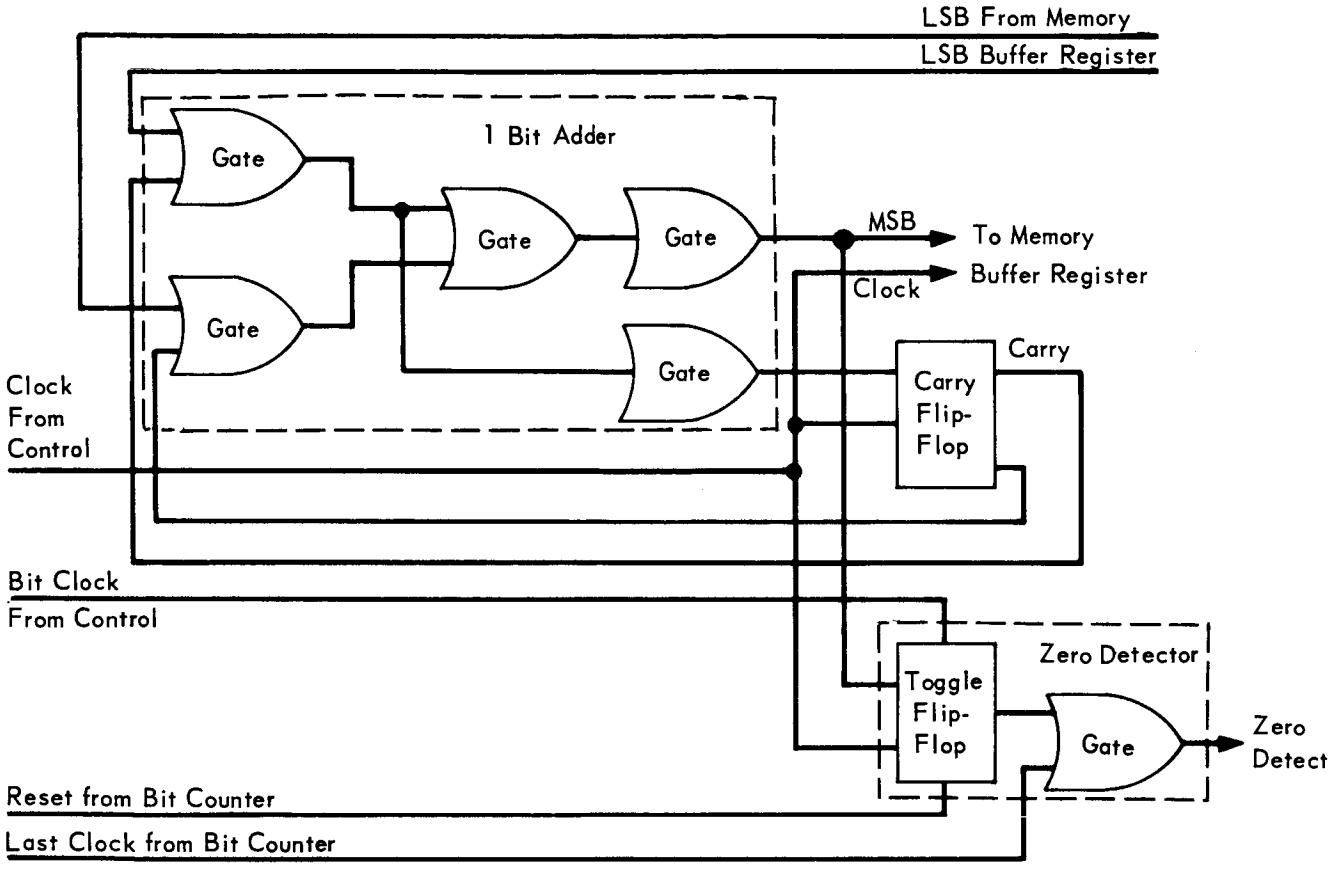

Figure 8–7

CB SEQUENCER & TIMER OUTPUT INTERFACE LOGIC DIAGRAM

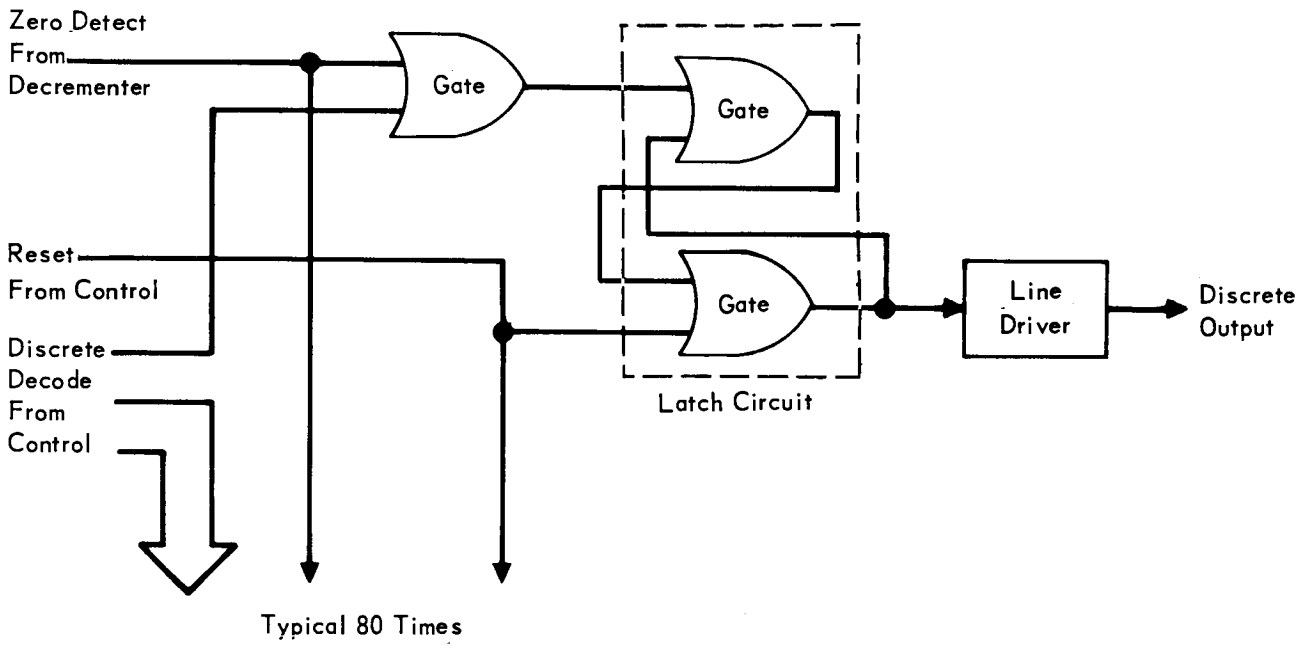

Figure 8–8

a. 80 discrete (bilevel) outputs with relay line driver capacity (switching line voltage, 23 to 35 VDC, up to 5 watts each, preferably pulsed for 1 second to latch in a remote relay in the using subsystem). These discretes may occur following any of eight sensor inputs with either of the following maximum time delay/accuracy preselected ranges: 0 to 8 hours/± 1 second, or 0 to 30 minutes/± 0.05 seconds. Because the number of stored words is over 50% greater than the number of discrete outputs, the extra memory capacity may be utilized in early flights as redundant command capability for repeated commands; nearly one-half of the discrete functions may be repeated twice.

b. Digital data word storage and transfer capability is limited only by the number of unused time word locations in the memory. These words thus have the same 16 bit capacity as the time-base data. Present requirements are (10) 16-bit data words.

c. Any integer sub-multiple frequency divided from the internal 1.92 MHz reference may be provided for subsystem synchronization and/or basic frequency reference signals. The selected baseline design currently requires two output references: 1 KHz ±.01% and 38.4 KHz ±.01%.

8.1.6 Interface Definition - The S & T interfaces are shown on Figure 8-9.

8.1.6.1 In-Flight Test - The Test Programmer (TP) inputs, are test control discretes and test power as required, discussed in the Test Section 8.1.8.

8.1.6.2 Command Link - The S & T interfaces with the CB Command Decoder with the standard digital data transfer sequence for the quantitative (delay-time) digital data words.

a. Data Ready - logic switching level input from Command Decoder.

b. Data Request - same type output from S & T to Command Decoder.

c. Clock - data transfer rate reference frequency from sending Command Decoder to S & T; (the same number of pulses as bits in the data word).

d. Data Word(s) - the logic switching level digital data (up to 128 words, 32 bits each including S & T word address) from Command Decoder to S & T. Discrete (bilevel) commands are received from the Command Decoder in the same manner as the Data Ready pulse.

8.1.6.3 Sensor Inputs - The sensor inputs shown on Figure 8-9 may be either power level or logic signal level interfaces. In addition the CB physical sensing devices outputs (separation and impact sensors), these outputs also emanate from CB subsystems (0.05g sensing from GCC, altitude marks and Reliable Tracking inhibit from RA, and CB propulsion signal from the TPS).

CB S & T INTERFACE DIAGRAM

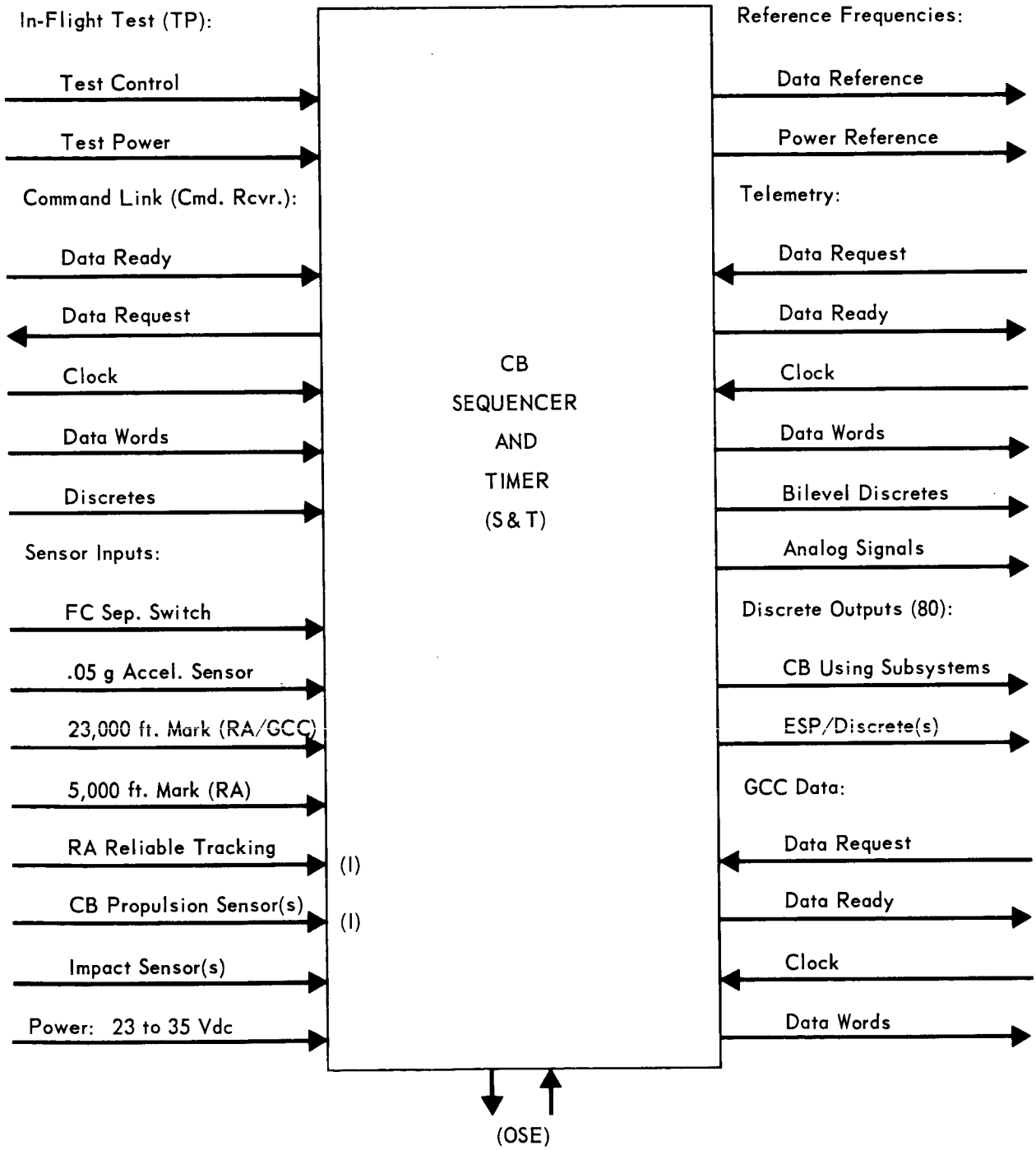

Figure 8–9

8.1.6.4 Power - The primary electrical power input originates from the unregulated CB batteries (23 to 35 VDC). However, both ground power for pre-launch functions, and FSC power for preseparation operations must be accepted.

8.1.6.5 Reference Frequencies - These S & T references are transferred as two-wire balanced outputs, isolated from power and signal inputs.

a. 1 KHz ±.01% for telemetry synchronization reference.

b. 38.4 KHz ±.01% for guidance gyro inverter synchronization.

8.1.6.6 Telemetry - The outputs to telemetry (TM) include the digital words, bilevel discretes and analog signals indicative of S & T internal operation. The digital data words may be transferred in the same manner as those from the Command Receiver except that the signal directions are reversed: following the Request from TM and the Ready from S & T, the data flow is from S & T to TM. The clock reference is provided at the required TM, data rate. The data words which are monitored include the following:

a. Address Decoder Entry - monitored to verify the proper acceptance of each command word from Command Receiver to S & T.

b. Driver Output Counter - sampled periodically to indicate the number of discrete outputs occurring prior to the sampling instant.

c. Time-Tag Word(s) - required by TM for data correlation, this counter starts at the preseparation "Ready" command.

d. Memory Readout - a complete readout of the S & T memory to verify the total updating procedure.

The S & T bilevel discretes monitored by TM are:

a. Frequency Reference Monitor - internal rough check of S & T Master Oscillator frequency (±10%) to assure non-harmonic operation.

b. Command Receipt Parity Check - a bilevel denoting that properly coded (correct number of bits) command was received by the S & T from the Command Decoder.

The analog signals measured by TM include:

a. S & T Master Oscillator Temperature - self evident.

b. Power Supply Voltages - monitored to indicate S & T operational trends allowing modification of stored times to counteract degraded counting performance.

8.1.6.7 Discrete Outputs - The S & T line driver outputs are capable of activating a (latch) relay in the using subsystem. The 80 allotted S & T outputs are summarized by CB subsystems in Figure 8-10. These include certain backup signals to provide

CB S&T OUTPUT SUMMARY

S&T OUTPUTS (TYPE) / TO INTERFACING SUBSYSTEMS	LINE DRIVERS (BILEVEL) 1		DATA TRANSFER (DIGITAL) 2	DATA TRANSFER (ANALOG) 3
Guidance and Control	7	(11)	10	1
Power	16	(20)		
Propulsion	14	(18)		
Pyrotechnic	12	(16)		
Radar Altimeter (& Landing Radar)	3	(7)		
Telecommunications	4	(8)	130	3
Totals	56	(80)	130	4

1 Currently allocated outputs compared to those tentatively allotted (includes growth allowance or excess S&T output capacity).

2 Memory telemetry requirement to read out entire stored sequence for Earth verification includes G & C digital data.

3 Includes clock or reference frequencies, and telemetry monitoring signals.

Figure 8–10

functional redundancy for critical ESP and SL signal sources.

8.1.6.8 Digital Data Word - The transfer of digital data words to the Guidance Control Computer (GCC) is identical to that interface with the TM digital data transfer. The ten words required in the present baseline concept (up to 16 bits each) include:

a. De-orbit Roll #1 (Magnitude and polarity).
b. De-orbit Pitch (Magnitude and polarity).
c. De-orbit Roll #2 (Magnitude and polarity).
d. De-orbit Thrust Magnitude.
e. Entry Roll #1 (Magnitude and polarity).
f. Entry Pitch (Magnitude and polarity).
g. Entry Roll #2 (Magnitude and polarity).
h. Velocity Profile Data Word #1.
i. Velocity Profile Data Word #2.
j. Velocity Profile Data Word #3.

8.1.6.9 Operational Support Equipment - The interface with OSE is discussed in detail in the Test Section 8.1.8.

8.1.7 Reliability Considerations - During the evolution of the Capsule Bus Sequencer and Timer (S & T) Design Concept, reliable performance of each required function has been a primary consideration. Each of the major design decisions was made with its object being to select the approach considered likely to yield the most reliable system operation. These decisions included:

a. Selection of decrementing of time words, as opposed to incrementing.
b. Selection of Ferrite Core Memory, as the non-volatile storage medium.
c. Selection of coincident core memory organization.
d. Selection of 128 word memory size.

Once the major decisions had been made, the selected approach was carried to a depth sufficient to insure no incompatibilities existed in the design.

In order to provide a firm basis on which to establish unit weight, power consumption, volume and reliability, the design was carried another step further, detailing the type of components and physical hardware required to implement the selected design. Selection of those components was based on their ability to withstand the sterilization and mission environments. JPL "Preferred Parts" and JPL "Electronic Parts Sterilization Candidates for S/C Application" listings were used as a guide in those selections.

8.1.7.1 Reliability Model - The Reliability Model for the Capsule Bus Sequencer and

Timer is presented in Figure 8-11. This model is representative of the "single thread" (I.E., non-redundant) design approach and as such formed the starting point for a reliability evaluation of the Sequencer and Timer. (A model modified to show redundancies considered for incorporation in the Capsule Bus Sequencer and Timer is presented in Section 8.1.7.4).

8.1.7.2 Reliability Estimate - The steps followed in obtaining the Reliability estimate for the Sequencer and Timer were:

a. Determine the components required to realistically implement each block of the reliability model.

b. Estimate the failure rate for each block of the model using the "project standardized" failure rates.

c. Determine the mission operational requirements in order to determine total operational time and applicable "project standardized" environmental failure rate modifiers.

d. Sum the failure rates of each reliability model block and apply the appropriate environmental failure rate modifiers.

As a result of the above evaluation, the reliability estimate for the Capsule Bus Sequencer and Timer, for a nominal 1973 Mars mission, as shown in Figure 8-11 is: P_s (probability of success) = .9932.

Reliability Estimate by Mission Phase - The estimate of Capsule Bus Sequencer and Timer Probability of Success (P_s) for each of the four mission phases is:

Phase 1 (Launch to De-orbit Maneuver) P_s = .9952

Phase 2 (De-orbit Maneuver to Entry) P_s = .9997

Phase 3 (Entry to Landing) P_s = .9999

Phase 4 (Landing to Mission End) P_s = .9984

Major Assembly Reliability Estimates - The component type, quantity of components and probability of assembly mission success were estimated for each block of the reliability model in order to obtain overall Sequencer and Timer mission success probability. These estimates are as follows:

CAPSULE BUS SEQUENCER & TIMER RELIABILITY MODEL

DC–DC Converter and Regulator

	RFI Filter	Chopper	Transformer	Bias Voltage(+) Regulator	Bias Voltage (–) Regulator	Logic Voltage Regulator	Power Detector
λ (F/10^6 hr)	.070	.670	.050	.779	.779	.779	.043
tm	126	126	126	126	126	126	126
λtm x 10^6	8.82	84.42	6.30	98.15	98.15	98.15	5.42
P_s	.999991	.999916	.999994	.999902	.999902	.999902	.999995

	Command Link Interface	Digital Data Interface	Memory Buffer Register and Content Control and Memory Read Write Control	Digital to Binary Converter	One Bit Memory	Telemetry Gating	Bina Disc Conv
λ (F/10^6 hr)	.104	.104	2.700	.800	.100	.100	2.
tm	126	126	126	126	126	126	
λtm x 10^6	13.10	13.10	340.20	100.80	12.6	12.6	252
P_s	.999987	.999987	.999660	.999900	.999987	.999987	.999

Timing and Control

	Speed-Up Control Counter	Speed Control Gates	Frequency Divider (÷ 4)	Divider (÷ 10)	Reference Frequency Dividers	Command Link and Digital Data Gating and Control	Par Add
λ (F/10^6 hr)	.200	.100	.200	.500	1.600	.200	
tm	126	126	126	126	126	126	
λtm x 10^6	25.20	12.60	25.20	63.00	201.60	25.20	
P_s	.999975	.999987	.999975	.999937	.999798	.999975	

Memory

Discrete Output Interface

	"X" Drivers	"Y" Drivers	Sense Amplifiers	Inhibit Drivers	Core Stack	Discrete Output Gates
λ (F/10^6 hr)	2.064	1.032	2.400	2.496	9.216	6.000
tm	126	126	126	126	126	126
λtm x 10^6	260.06	130.03	302.40	314.50	1161.22	756.00
P_s	.999740	.999870	.999698	.999685	.998839	.999244

Figure 8–11

Master Oscillator	Reference Frequency Interface	Memory Buffer Register	Decrementer & Zero Detector	Telemetry Interface	Sensor Interface
.833	.104	3.00	.500	.104	.416
126	126	126	126	126	126
104.96	13.10	378.00	63.00	13.10	52.42
.999895	.999987	.999622	.999937	.999987	.999948

y to ete erter	Address Decoder	Memory Buffer Register Bit Decoding	One Hz Decode	Memory Cycle Counter (÷ 20)	Bit Counter (÷ 24)
000	2.200	1.000	.100	.400	1.200
126	126	126	126	126	126
.00	277.20	126.00	12.6	50.40	151.20
748	.999723	.999874	.999987	.999950	.999849

llel 7 Bit ess Comparator	Command Link/ Digital Word Address	Validity Check	Address Counter	Command Link Interface Word Data Register
.700	.700	.300	.700	2.400
126	126	126	126	126
88.20	88.20	37.80	88.20	302.40
.999912	.999912	.999962	.999912	.999698

Discrete Output Line Drivers
4.160
126
524.16
.999476

Total S&T
53.90
126
6792
.9932

Major Assembly	Phase P_s (1)	(2)	(3)	(4)	Mission P_s
DC-DC Converter and Power Regulator	.999714	.999984	.999997	.999904	.999611
Memory	.998461	.999913	.999987	.999481	.997832
Timing and Control	.998361	.999908	.999986	.999450	.997706
Output Interface	.999090	.999949	.999992	.999694	.998721
Remaining Assemblies	.999536	.999974	.999996	.999844	.999350

8.1.7.3 Failure Mode, Effect and Criticality Analysis (FMECA) -A failure mode, effect and criticality analysis was performed on the selected design to highlight its possible deficiencies and point up those areas requiring additional effort. The analysis performed is reflected in Figure 8-12 and serves to identify those failure modes which could have catastrophic or degraded effect on the mission. This analysis was used to determine single point failures and, additionally, as a guide in applying the redundancies discussed in Section 8.1.7.4. A need for continuing effort is indicated to assure that as many as possible of the identified catastrophic and degraded failure modes are eliminated.

8.1.7.4 Redundancy Considerations - As a part of the overall reliability evaluation of the Capsule Bus each major subsystem design was reviewed for potential application of redundancies which would improve the mission success probability and eliminate single failure modes which have catastrophic mission effect. Since Capsule Bus weight is constrained, one major consideration used in determining the efficiency of redundancy alternates has been the reliability improvement (ΔW) required to implement the redundancy being considered. This analysis was performed for the Capsule Bus Sequencer and Timer. Figure 8-13 depicts the redundancies selected, of the various forms considered, for comparison with other subsystem potential redundancies on the basis of their ΔR to ΔW ratios.

Using the $\Delta R/\Delta W$ criteria, the priority of redundancy incorporation for the Capsule Bus Sequencer and Timer is:

a. Provide active redundant crystal controlled oscillators.

b. Provide duplex memories and memory buffer registers with error detection switching logic.

c. Incorporate triple redundant frequency dividers with majority voters at each use point.

d. Incorporate triple redundant decrementers and zero detectors with majority voters.

FAILURE MODE, EFFECT AND CRITICALITY ANALYSIS
CAPSULE BUS SEQUENCER AND TIMER

FAILURE CATEGORY DEFINITION
1. No Effect on Mission Objective
2. Degrading Effect on Mission Objective
3. Possible Catastrophic Effect on Mission Objective

COMPONENT OR FUNCTION	FAILURE MODE	FAILURE EFFECT	FAILURE CATEGORY: Landing	Entry Science	Landed Science	Eng. Data	REMARKS
DC–DC Converter	No output	S&T fails to function	3	3	3	3	Prevents entire de-orbit sequence, etc. from occuring. Redundant regulators lower the probability of occurence best from effectiveness vs. weight standpoint.
Master Oscillator	No output	S&T fails to function	3	3	3	3	Prevents entire de-orbit sequence, etc. from occuring. Active redundant oscillators would prevent a single oscillator failure from causing S&T failure.
	Frequency instability	Inaccuracy in timing of functions	2	2	1	2	Adequate design should minimize this as a problem. (Mariner 4 had only slight drift.)
Reference Frequency Interface	No output	Fails to provide synch for using units	2	1	1	1	Design of using units will provide for free-running operation (unsynched) at frequencies slightly below the synch frequencies so that loss of synch only results in degraded operation.
Power Detector	Fails to detect power loss	Possible alteration of data in memory	3-2	3-2	3-1	3-1	When bias voltage is removed before logic voltage, a possibility exists that the memory will be altered by the shutfown transients. If significant digits are altered can cause events to occur too early or too late. Small probability of occurence.
	False Shutdown	Loss of down time in time count	1	1	1	1	No problem created if this occurs prior to final update. After that time only effect is a Δ delay in event times equal to the time during which power was lost.
Memory Buffer	Failure to allow data transfer	Loss of all functions other than as frequency	3	3	3	3	All data enters and leaves the memory buffer register. Loss of

Figure 8–12

Register	from or to memory.	generator for synch. use.					all or part of the memory buffer register can prevent all timed events from occuring. Duplexed memory registers used with the duplexing of memories would preclude this as a single point failure.
Decrementer and Zero Detector	Failure to decrement memory time word	All time functions fail to occur	3	3	3	3	All timed events are initiated by the DZD decrementing of the time word and detection of zero. Triple redundant decremeters and zero detectors with voters would reduce probability but already low probability of occurence.
	Failure to detect zero	No output discretes will occur	3	3	3	3	(Same as above)
Telemetry Interface	Failure to allow telemetry readout of the S&T memory	Uncertainty as to correctness of memory content	2-1	2-1	1	1	Failure to obtain telemetry readout of the memory would necessitate either accepting the data already in the memory in an unverified state or attempting to write new words in the memory without being able to verify these words were correctly written into the memory. Redundant telemetry interface would reduce the probability of this occurence, however probability is already small.
Sensor Interface	Fails to recognize sensor activation	Events timed from sensor occurence will fail to occur	3-2	3-2	3-2	3-2	All events which are timed from a sensor activation will fail to occur unless backup by some other means exists. Redundant sensor interface would reduce the probability of this occurence however probability is already small.
	False indication that sensor has activated	Events timed from sensor occurence will occur at improper time	3-2	3-2	3-2	3-2	False indication might occur by virtue of a transient of by chatter in a relay acting as a sensor element. This failure mode requires triple redundant interface with majority voters to reduce likelihood of occurence.
Command Link Interface	Fails to allow memory up-date	Events will occur at nominal times programmed prior to command link interface failure.	2	2	1	1	Readout of memory during the test sequence will establish memory contents. If mission can be performed utilizing nominal times, separate command will be sent by MOS. Can be made redundant, however probability of failure is low.

FAILURE MODE, EFFECT AND CRITICALITY ANALYSIS
CAPSULE BUS SEQUENCER AND TIMER (Continued)

FAILURE CATEGORY DEFINITION
1. No Effect on Mission Objective
2. Degrading Effect on Mission Objective
3. Possible Catastrophic Effect on Mission Objective

COMPONENT OR FUNCTION	FAILURE MODE	FAILURE EFFECT	FAILURE CATEGORY: Landing	Entry Science	Landed Science	Eng. Data	REMARKS
Digital Data Interface	Fails to allow transfer of digital data words stored in S&T memory to using units.	Units will retain nominal words stored prior to failure and operate as for a nominal mission	3-2	3-2	3-1	3-1	Digital data interface can be made redundant, however, probability of failure is already low. Using units have pre-programmed nominal words and would operate on those words instead of allowing update.
Memory Drivers	Fail to drive.	Loss of row driven by failed driver	3-1	3-1	3-1	3-1	Criticality is based on which "bit" of time word failed by memory driver loss. Duplex of memories or programming of redundant time words in different "X" – "Y" locations would reduce the probability of this occurrence.
Memory Sense Amplifiers	Fail to perform sensing function.	Loss of memory plane associated with failed sense amplifier	3-1	3-1	3.1	3-1	Criticality is based on which "bit" of all time words is failed by memory sense amplifier loss. Triple redundant sense amplifiers with majority voter or duplex memory would reduce the probability of this occurrence.
Inhibit Drivers	Fails to drive	Loss of plane driven by failed inhibit driver	3-1	3-1	3-1	3-1	Criticality is based on which "bit" of time words may be incorrect. Duplexing of memories would reduce the probability of this failure mode.
Core Stack	Broken core	Loss of bit for storage purposes	3-2	3-2	3-1	3-1	Criticality dependent on word or "bit" associated with failure. Duplex memories would reduce the probability of this failure mode, however probability of occurrence is extremely small.
	Broken drive, sense or inhibit	Loss of drive, sense or inhibit functions	3-2	3-2	3-1	3-1	Criticality dependent on word or "bit" associated with failure.

Figure 8–12 (Continued)

	functions associated with failed wire	associated with failed wire					Duplex memories would reduce the probability of this failure mode, however probability of occurrence is extremely small.
Discrete output drivers	Fails to actuate output	Loss of function controlled by output.	3-1	3-1	3-1	3-1	Criticality dependent on function controlled by output. Use of two outputs to actuate one function will prevent this from occurring.
	Fails to reset	Failure to turn off function controlled by output	3-1	3-1	3-1	3-1	Criticality dependent on function controlled by output. Triple redundant gates with majority voter would reduce the probability of this failure mode.
	False actuation	Enables function at improper time – possible mission abort	3-2	3-2	3-1	3-1	Criticality dependent on function controlled by output. Triple redundant gates with majority voter would reduce the probability of this failure mode.
Timing and Control Sensor Recognition	Fails to recognize sensor activation	Fails to command associated event at Δ time after sensor occurence.	3-2	3-2	3-1	3-1	All events which are timed from a sensor activation will fail to occur unless backup by some other means exists. Triple redundacizing of this function with majority voters will reduce probability of occurrence.
	False recognition of sensor	Commands associated event at Δ time after false sensor indication.	3-2	3-2	3-1	3-1	All events which are timed from the falsely recognized sensor activation will occur at the preprogrammed Δ time. Triple redundacizing of this function with majority voters will reduce probability of this failure mode.
Telemetry readout	Fails to transfer data from memory buffer register to telemetry interface	Failure to readout S&T memory content to MOS.	2-1	2-1	2-1	2-1	Failure to obtain telemetry readout of the memory would necessitate either accepting the data already in the memory in an unverified state or attempting to write new words in the memory without being able to verify these words were correctly written into the memory. Triple redundacizing of this function with majority voters would reduce probability of this failure mode.
Discrete Decoding	Failure to properly decode output address	Actuation of incorrect output and failure to actuate proper output when time word reaches zero.	3-2	3-2	3-1	3-1	Criticality is dependent upon function mistakenly activated and function not activated. Triple redundacizing of this function with majority voters would reduce the probability of this failure mode occurring.

FAILURE MODE, EFFECT AND CRITICALITY ANALYSIS
CAPSULE BUS SEQUENCER AND TIMER (Continued)

FAILURE CATEGORY DEFINITION
1. No Effect on Mission Objective
2. Degrading Effect on Mission Objective
3. Possible Catastrophic Effect on Mission Objective

COMPONENT OR FUNCTION	FAILURE MODE	FAILURE EFFECT	FAILURE CATEGORY: Landing	Entry Science	Landed Science	Eng. Data	REMARKS
Memory Driver Decoding	Failure to actuate proper "X" and "Y" memory drivers.	"Write" or "read" of data in incorrect memory location causing incorrect output and failure to actuate proper output when time word reaches zero.	3-2	3-2	3-1	3-1	Criticality is dependent upon function controlled by word mistakenly written. Triple redundacizing of this function with majority voters would re-reduce the probability of this failure mode occurring.
Frequency Dividers	Fails to divide	Probable failure of entire timing and control function	3-2	3-2	3-1	3-1	Prevents entire de-orbit sequence, etc., from occurring. Triple redundant frequency dividers with majority voters would reduce probability of this failure mode occurring.
Speed-Up Control	Fails to speed-up "clock" rate to compensate for time taken to read out telemetry.	Time error of time taken to read out memory	2-1	2-1	1	1	No problem created if this occurs prior to final update. After that time only effect is a Δ delay in event times equal to the time required to read out the memory. Triple redundant speed-up control with majority voters would reduce probability of this failure mode occurring.
External Clocking Gates	Fails to clock memory at externally supplied rate.	Either does not supply digital data to TM or using unit or supplies it at an unusable rate.	2-1	2-1	1	1	Memory cannot be read out and/or digital data cannot be transferred. Nominal times in S&T can be used or attempt made to read in new words without verification. Using units of digital words will use nominal data words. Triple redundant clocking gates

Figure 8–12 (Continued)

							would reduce probability, however probability is already small and does not warrant redundancy.
Bit Decoding	Incorrectly reads bit	Initiates Incorrect operation on word in memory buffer register	3-1	3-1	3-1	3-1	Criticality is dependent upon nature of operation initiated by the erroneous bit. Triple redundant bit decoding with majority voters would reduce probability of failure mode, however, probability of occurrence is low and redundancy is not warrented.
Address Decoding	Reads address location incorrectly	Initiates incorrect output when word decrements to zero	3-2	3-2	3-1	3-1	Criticality is dependent upon output incorrectly initiated. Triple redundant address decoders with majority voters would reduce probability of occurrence, however, probability of failure mode is small.
Address Comparator	Fails to correctly address words being inserted via command link or selects incorrect word for digital data read out.	Data words are read from or inserted into incorrect memory locations.	3-2	3-2	3-1	3-1	Criticality is dependent upon function controlled by memory location. Triple redundant address comparators would reduce probability of occurrence.
Command Link – Digital Data Register	Fails to allow the transfer of data from or to memory buffer register.	Fails to allow digital data readout causing those using units to use nominal pre-launch inserted data and fails to allow up-date of S&T memory causing discrete commands to occur at nominal pre-launch inserted times	2-1	2-1	1	1	Amount of degradation will depend on variation from nominal values. Triple redundant command link/digital data registers with majority voters would reduce probability of failure mode occurrence.

CAPSULE BUS SEQUENCER & TIMER REDUNDANCY CONSIDERATION MODEL

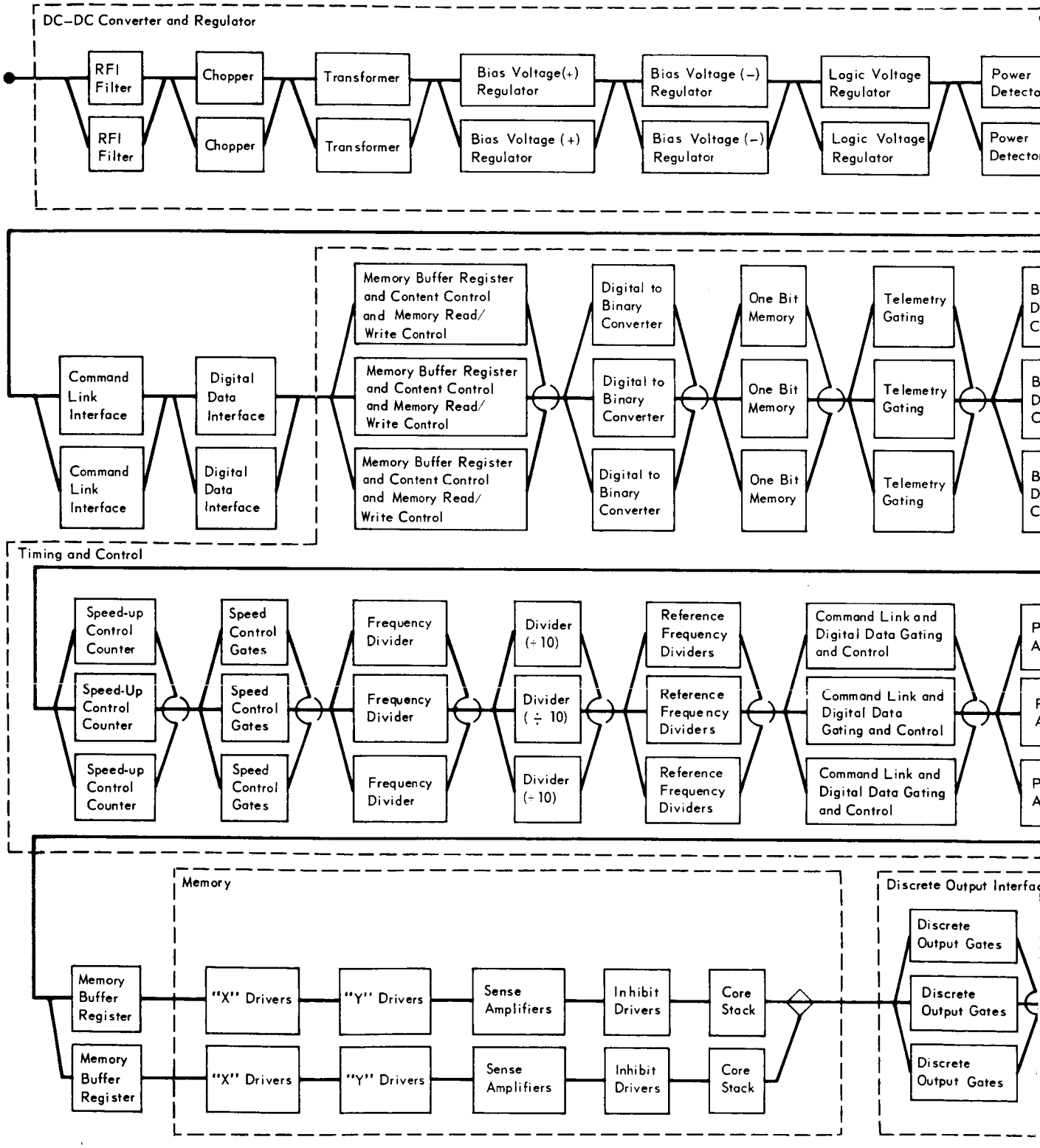

Figure 8–13

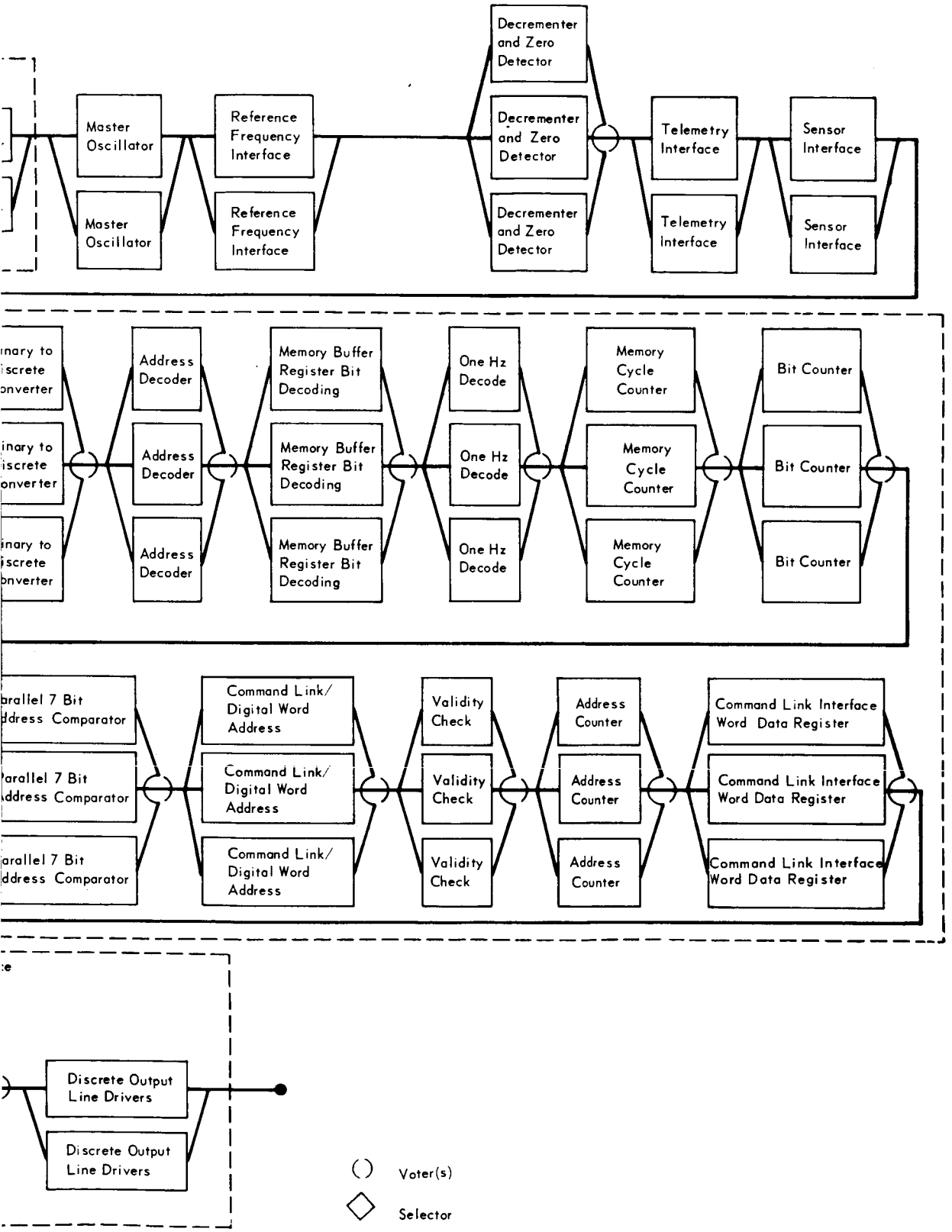
Master Oscillator
Master Oscillator
Reference Frequency Interface
Reference Frequency Interface
Decrementer and Zero Detector
Decrementer and Zero Detector
Decrementer and Zero Detector
Telemetry Interface
Telemetry Interface
Sensor Interface
Sensor Interface
Address Decoder
Address Decoder
Address Decoder
Memory Buffer Register Bit Decoding
Memory Buffer Register Bit Decoding
Memory Buffer Register Bit Decoding
One Hz Decode
One Hz Decode
One Hz Decode
Memory Cycle Counter
Memory Cycle Counter
Memory Cycle Counter
Bit Counter
Bit Counter
Bit Counter
Command Link/ Digital Word Address
Command Link/ Digital Word Address
Command Link/ Digital Word Address
Validity Check
Validity Check
Validity Check
Address Counter
Address Counter
Address Counter
Command Link Interface Word Data Register
Command Link Interface Word Data Register
Command Link Interface Word Data Register
Discrete Output Line Drivers
Discrete Output Line Drivers
Voter(s)
Selector

8-25-2

e. Provide active redundant discrete output line drivers.

f. Incorporate triple redundant control logic with majority voters.

g. Provide active redundant telemetry, command link, reference frequency and digital data interfaces.

h. Provide active redundant sensor interfaces.

i. Incorporate triple redundant discrete output gates with majority voters.

j. Provide active redundant bias voltage and logic voltage regulators.

The projected effect of incorporation of these redundancies, in the above order, on the Capsule Bus Sequencer and Timer Reliability and weight is illustrated in Figure 8-14.

The Reliability objective for the Capsule Bus is to provide protection against as many as possible of the single point failure modes which have catastrophic effect on the mission while optimizing the system probability of success. Incorporation of redundancies is therefore not determined on a subsystem basis but rather on an overall system basis and incorporation of Capsule Bus Sequencer and Timer redundancies will depend on their relative ΔR - ΔW ratios and effectiveness in protection against single point failure when viewed from a system standpoint.

8.1.8 Test - The area of S & T testing may be divided into Pre-flight (subsystem and installed and In-flight Monitoring and Checkout. Consideration has been given to both areas of test to provide the required S & T module test point access enhancing accomplishment of all S & T verification of flight readiness.

8.1.8.1 Pre-Flight Checkout - The S & T selected design concept includes sufficient access via the OSE connector to allow S & T subsystem testing and anomaly isolation to the modular level even after being installed in the vehicle. Provisions for a "fast-clock" simulated mission test is also included to reduce test time. Following terminal sterilization, pre-flight checkout will consist of monitoring the CB TM parameters when the Command Receiver and OSE are exercised. Once fully connected in the CB, test of the S & T must be carefully accomplished to prevent inadvertent activation of irreversible devices (i.e., pyrotechnic). To prevent such an occurence following S & T installation, the OSE must latch the Safe/Arm pyrotechnic power relay(s) in the Safe condition. The S & T may then be checked throu throughout the entire simulated mission sequence without unsafe activations of pyrotechnic devices.

8.1.8.2 In-Flight Checkout - Following the long interplanetary cruise and Mars orbit period, the CB subsystems are activated and tested to determine their

CAPSULE BUS
SEQUENCER AND TIMER
RELIABILITY VS. WEIGHT

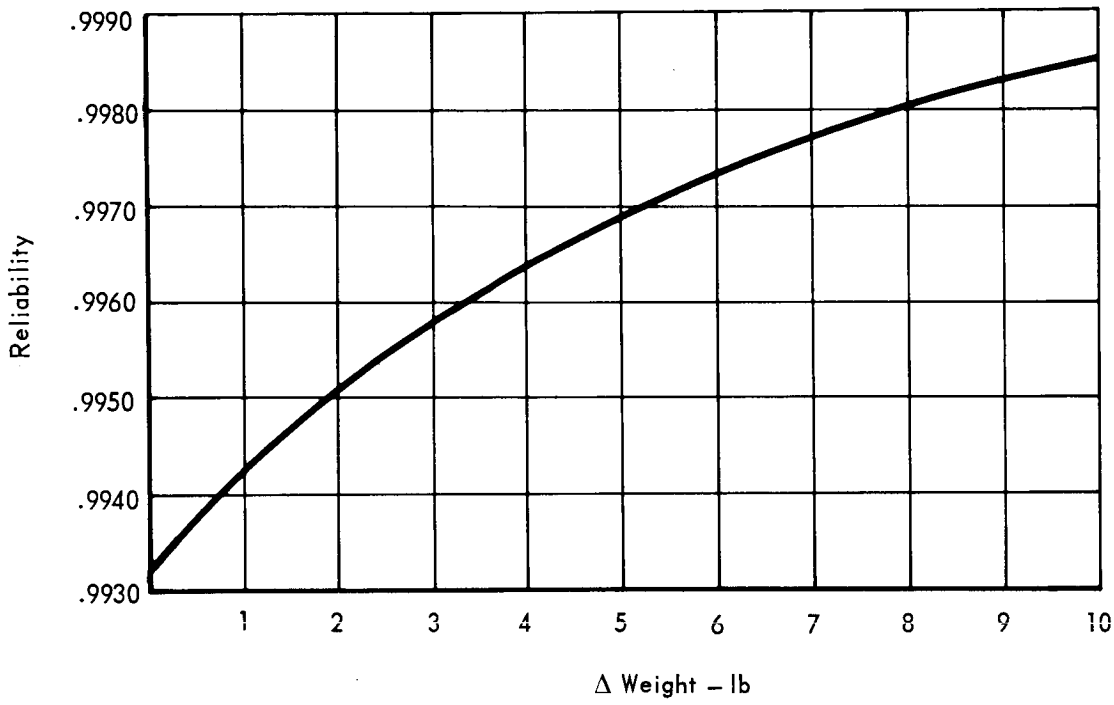

Figure 8–14

operational readiness. The Test Programmer (TP) provides an on-board test control to decrease the number of Earth commands for such testing, and supplies the in-flight checkout inputs to the S & T as the OSE provided prior to launch.

The TP outputs to the S & T include test power (if from other than normal operational power source) and test control discretes to govern the test sequence, by simulating the various sensor inputs. The S & T test outputs are monitored by TM indicating its internal operation and flight readiness. To minimize the CB weight, all possible S & T outputs are also utilized by the TP in support of other subsystems in-flight checkout.

8.1.9 Development Requirements - At present, no advanced state-of-the-art devices appear to be required in the S & T design. Verification through testing is desired to assure that the components (memory cores, crystals, capacitors, etc.) will withstand terminal sterilization without permanent damage or effective change in operating characteristics. Circuit concepts of Lunar Orbiter and advanced Mariner sequencer designs are envisioned to fulfill the functional requirements of the S & T.

8.2 TEST PROGRAMMER

8.2.1 Equipment Identification and Usage - The purpose of the Capsule Bus Test Programmer is to establish the operational readiness of both the Capsule Bus and Entry Science Package equipments prior to their utilization in the VOYAGER mission. The prolonged interplanetary cruise period when the Capsule Bus and Entry Science Package equipment is inactive in the environment of deep space necessitates an in-flight check on operational readiness. Subsystems designed for deep space missions of long duration often include functional redundancy. In-flight checkout by the test programmer is designed to determine what functionally redundant capability is available so that the mission can be run using the functional path most likely to succeed.

The test programmer consists of an adapter mounted memory unit and a bus mounted selection-driver unit. The memory unit will accept Earth commands, store the test program, and generate the checkout sequence. The selection-driver unit will instruct the subsystems in the checkout sequence.

8.2.2 Design Requirements and Constraints - In-flight checkout will be performed during Mars orbit. At this point in the mission the de-orbit, entry and landing programs will be finalized. It is the last time prior to separation that a closed loop checkout via Earth command and telemetry can be performed. The test programmer will be designed to accept quantitative data from the command subsystem to provide for changes in the checkout sequence that may result from analysis of telemetry data on Earth. The programmer's outputs will be discretes for instructing the built-in testing section of each subsystem. The test programmer will be designed so that a minimum of its weight, the selection-driver unit, is located in the Capsule Bus and the remainder is located in the Capsule Bus adapter.

8.2.3 Physical Characteristics - The adapter mounted memory unit of the test programmer will require ten watts of power and 250 cubic inches of space. It will weigh 8 pounds. The Capsule Bus mounted selection-driver unit will require 50 cubic inches of space and weight 3 pounds.

8.2.4 Operation Description - In-flight checkout requires perturbation of a subsystem to stimulate its operation in a manner which simulates the mission as closely as is practical. As shown in the Functional Block Diagram of Figure 8-16, the test programmer will generate a checkout sequence from the test program stored in its memory. This sequence will be transmitted to the subsystems under test in the form of discrete instructions to their built-in-testing section. The test program stored

TEST PROGRAMMER FUNCTIONAL BLOCK DIAGRAM

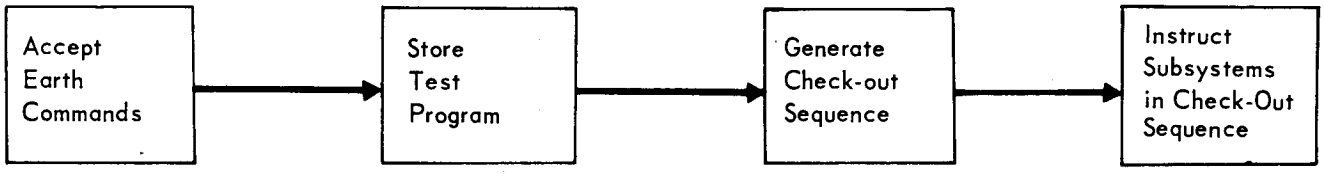

Figure 8–16

in the test programmer is alterable via radio commands from Earth to provide for changes in the checkout sequence such as the rerunning of a given test. The subsystem's reaction to the perturbations of the checkout sequence will be monitored by telemetry and transmitted to Earth to provide a closed loop checkout.

The Test Programmer Functional Schematic Block Diagram, Figure 8-17, shows the method of controlling in-flight checkout. The test programmer will be activated by the Spacecraft Central Computer and Sequencer. Its self-contained clock will begin a systematic read-out of the memory to first run through a self-test and second run through the Capsule Bus and Entry Science Package test sequence. Any updating of the programmer's memory will be accomplished between discrete events in the test sequence in synchronization with the programmer's clock. The status of the test sequence will be telemetered to Earth for use in evaluating test data. Control of the subsystem under test is through the relay drivers of the sequencer and timer or the selection-driver unit.

8.2.5 Performance Characteristics - The test programmer will output 37 test discretes to Capsule Bus subsystems, 17 to Entry Science Package subsystems and 4 to Spacecraft Mounted Support Equipment. It will have a capacity for 128 discretes. Using a 16 bit time tag for each discrete word and adding sufficient memory for all internal programming, the programmer memory will be 3000 bits.

8.2.6 Interface Definition - The test programmer will interface with the command subsystem, the telemetry subsystem, and the various subsystems under test. The command subsystem test programmer interface will consist of quantitative commands to the test programmer to reprogram it. The telemetry subsystem-test programmer interface will consist of the transfer of program status data to the telemetry subsystem for transmission to Earth. Test programmer outputs to Capsule Bus subsystems under test are:

a. Guidance and Control - 7 discretes
b. Altimeter - 2 discretes
c. Landing Radar - 11 discretes
d. Sequencer and Timer - 9 discretes
e. Propulsion - 2 discretes
f. Telemetry - 1 discrete
g. Detailed interface definition see Figure 8-18.

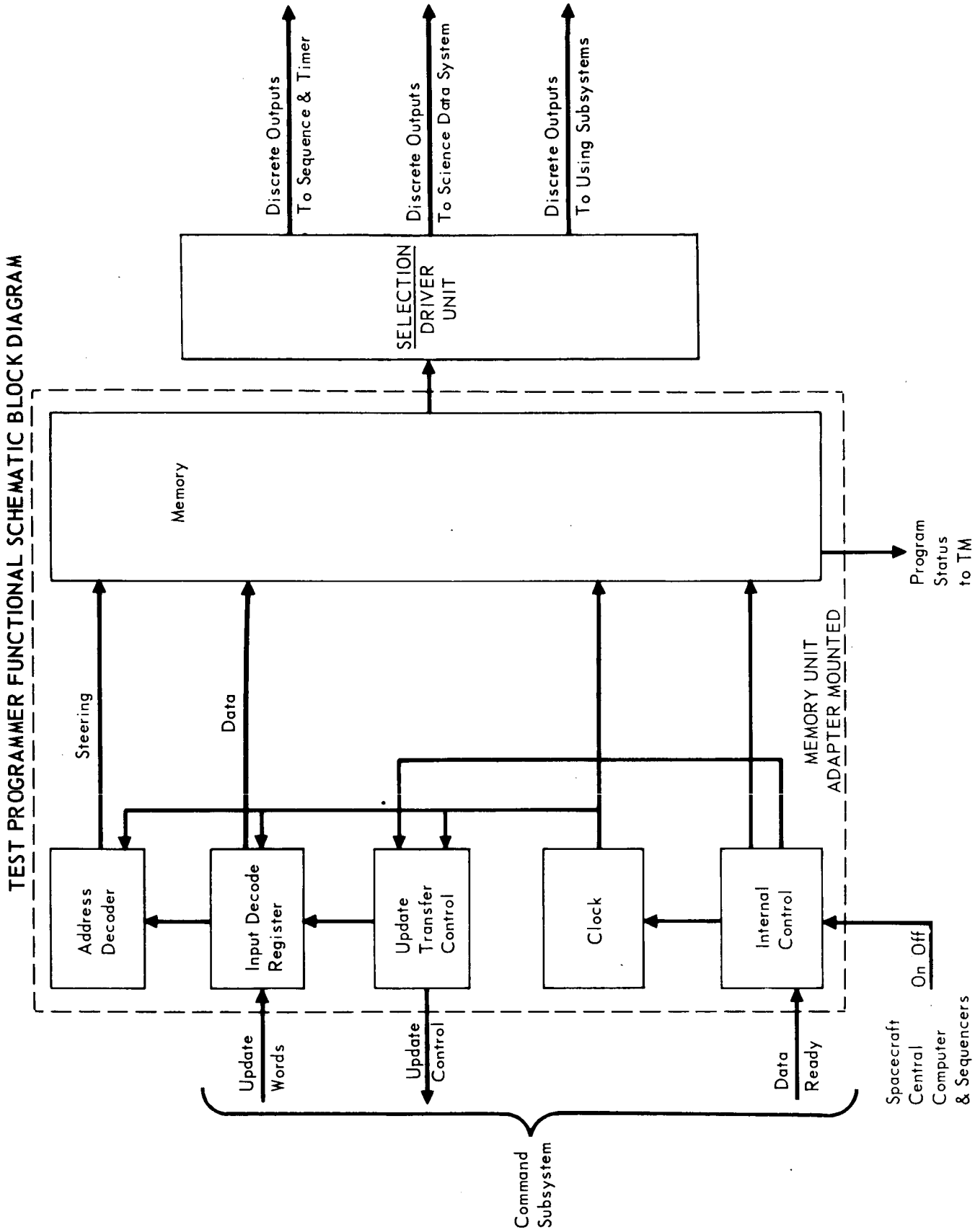
TEST PROGRAMMER FUNCTIONAL SCHEMATIC BLOCK DIAGRAM
Discrete Outputs
To Sequence & Timer
Discrete Outputs
To Science Data System
Discrete Outputs
To Using Subsystems
SELECTION DRIVER UNIT
Memory
Program Status to TM
Steering
Data
MEMORY UNIT ADAPTER MOUNTED
Address Decoder
Input Decode Register
Update Transfer Control
Clock
Internal Control
On Off
Update Words
Update Control
Data Ready
Spacecraft Central Computer & Sequencers
Command Subsystem

Figure 8-17

TEST PROGRAMMER INTERFACE DIAGRAM

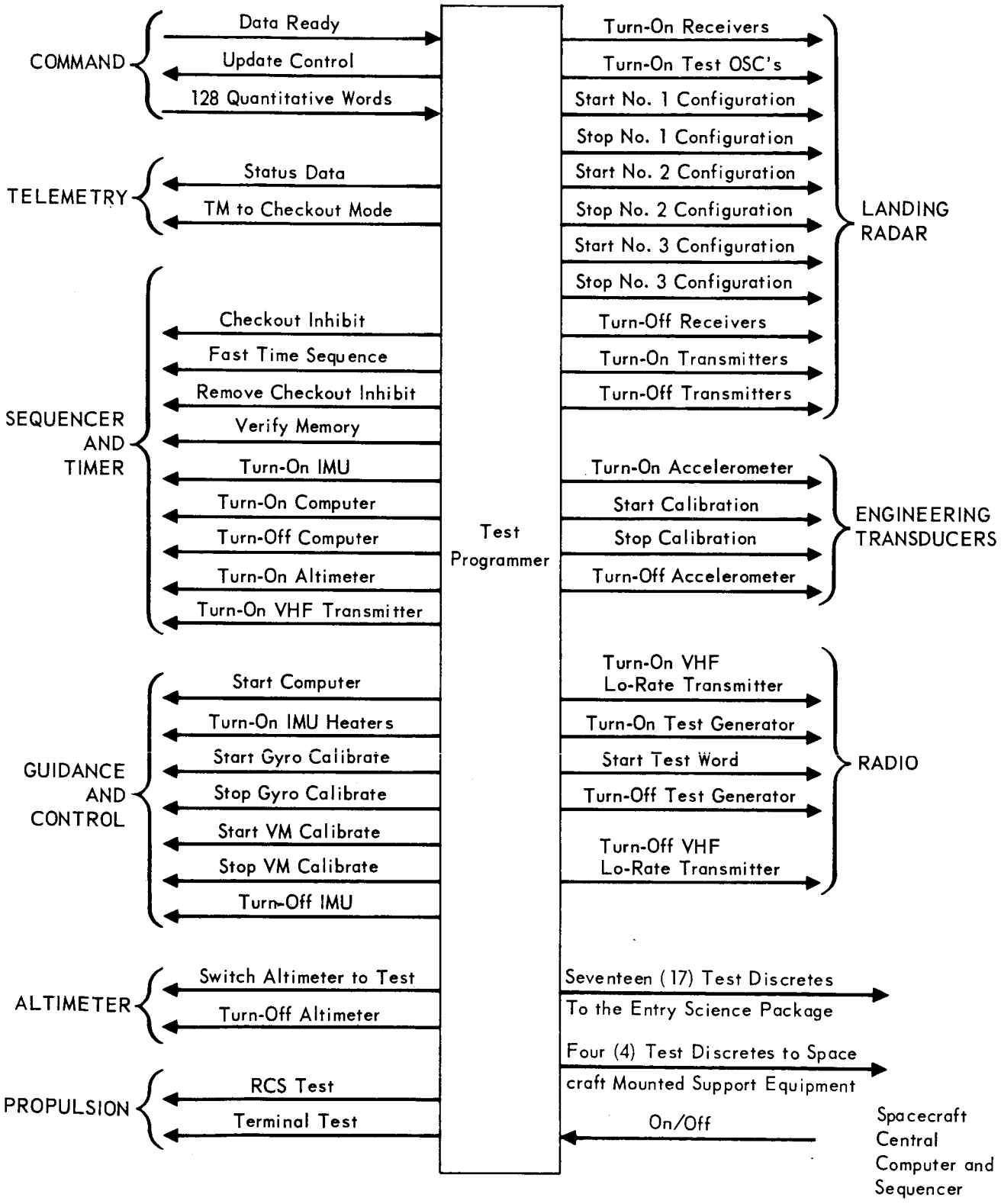

Figure 8–18

8.2.7 Reliability Considerations - The primary reliability consideration in the design of the Capsule Bus test programmer has been to assure that the test programmer does not induce failure of any of the subsystems under test. Continued strict attention must be given to the design of all interfaces with systems to be tested to assure a "Fail-Safe" condition should a failure of the test programmer occur.

As a result of a preliminary evaluation, the reliability estimate for the Capsule Bus test programmer, for a nominal 1973 Mars mission, is estimated to be .9961.

8.2.8 Test Requirements - Pre-flight testing will consist of a checkout of the test programmer counting circuitry, memory and driver circuitry. One or more positions in the memory will be set aside for test words that will exercise all circuitry. The same approach will be taken for checkout of the counting circuitry during in-flight testing.

8.2.9 Development Requirements - No advanced state-of-the-art devices are required for the test programmer. However, verification that components such as memory cores will withstand terminal sterilization without permanent damage or effective change in operating characteristics is necessary.

SECTION 9

GUIDANCE AND CONTROL SUBSYSTEM

9.1 EQUIPMENT IDENTIFICATION AND USAGE - The Guidance and Control Subsystem (GCS) consists of an Inertial Measurement Unit (IMU), a Guidance and Control Computer (GCC), and a common power supply. The IMU senses axial acceleration and inertial body rates about three orthogonal capsule axes. The GCC accepts the IMU signals, sequencer commands, and radar range and velocity measurements. It generates commands for the operation of the propulsion subsystems to guide and control the Capsule Lander from Flight Spacecraft separation to a soft landing on the Martian surface. The GCC is a general purpose digital computer consisting of a central processor, a core memory, input-output, and control circuitry.

The preferred design provides the following desirable features:

a. Flexibility for mission profile changes any time before launch

b. High reliability

c. Inherent built-in-test capability

d. Self-calibration of sensors

e. Hardware standardization

This design was selected on the basis of a configuration trade study; Volume II, Part B, Section 5.8. The following paragraphs discuss only the functional characteristics of the hardware comprising the GCS; namely, the IMU and the GCC. For applicable supporting analysis including control loop transfer functions, see Part B, Section 2.3 of Volume II.

Figure 9-1 depicts the portion of the VOYAGER Capsule mission pertinent to the GCS. Operation begins just prior to separation of the Capsule Bus from the Flight Spacecraft, when the attitude reference is initialized in the GCC. After separation, the Capsule Bus is stabilized and turned to de-orbit attitude, which is held throughout the thrusting period. After this phase, the GCS commands a maneuver to entry attitude followed by a slow roll to equalize solar heating.

At entry into the sensible atmosphere, attitude control is changed from attitude hold to rate damping about all three body axes. At an altitude of 23,000 feet, the RCS is disabled and a parachute is deployed. The capsule is further decelerated until at 18,000 feet the Aeroshell is separated. At 5,000 feet the parachute is released. With the activation of the terminal descent thrusters, the final phase begins.

MAJOR GUIDANCE AND CONTROL EVENTS

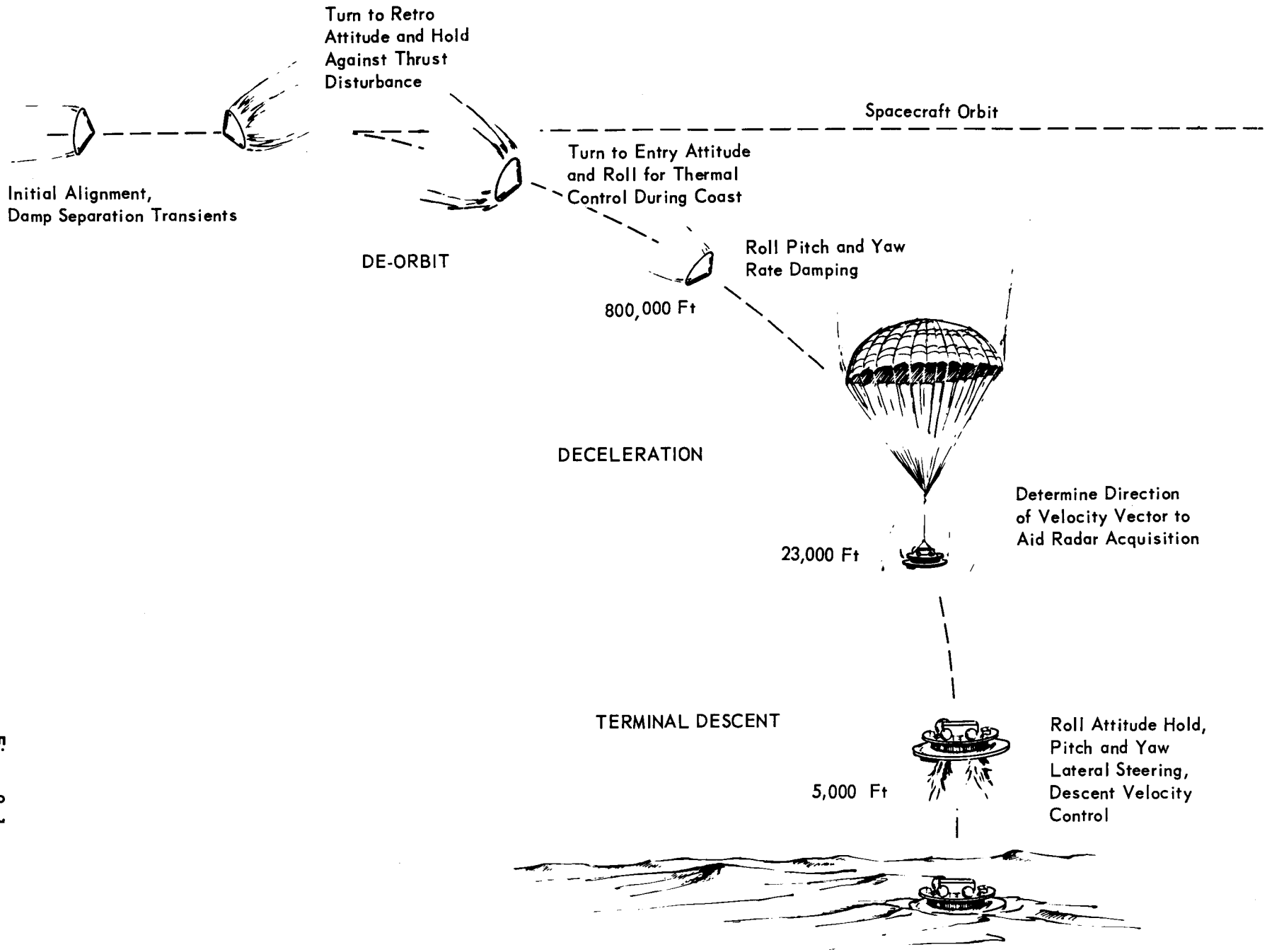

Figure 9-1

Terminal thrusting is first controlled to provide a constant axial deceleration. Then axial descent velocity is controlled as a function of radar range. The roll axis of the vehicle is aligned to the Mars referenced velocity vector by steering commands from the landing radar. At ten feet from the surface, the thrusters are shut off.

9.2 DESIGN REQUIREMENTS AND CONSTRAINTS - To facilitate description of the subsystem, the mission is broken down into specific phases. These phases are defined in Figure 9-2 along with the functional requirements of the GCS during each phase.

The design constraints, listed in Figure 9-3, are imposed by JPL specification, or have been derived from mission or other subsystem constraints.

9.3 PHYSICAL CHARACTERISTICS - The elements that make up the GCS are centrally mounted in the Lander as two units. One package is the IMU which contains the inertial sensors and their support electronics. The second package contains the combined Guidance and Control Computer (GCC) and the Guidance Power Supply (GPS). The physical characteristics of each package are listed in Figure 9-4.

9.3.1 Inertial Measurement Unit - The IMU holds three gyros and one accelerometer mounted in a machined inertial block. Each sensor is pulse rebalanced by circuitry located within the IMU. The physical characteristics of the inertial sensors are tabulated in Figure 9-5.

9.3.1.1 Gyros and Gyro Rebalance Electronics - The three gyros selected for the IMU are identical single-degree-of-freedom, floated, rate integrating instruments. Particular features which have been incorporated to meet overall requirements are:

- Gas bearing spinmotor
- High viscosity flotation fluid
- High torquer scale factor
- Dithered jewel output axis bearing

Figure 9-6 shows the operation of the gyro and the pulse rebalance electronics. An inertial angular rate about the gyro input axis produces a gyroscopic torque which causes movement of the gyro float about the output, or gimbal, axis. A signal generator on the output axis senses the movement and develops an AC signal whose amplitude is proportional to the integral of the input rate and whose phase indicates its polarity. The output axis of the gyro also includes a torque generator. A current into the generator produces a torque on the float.

MISSION GUIDANCE AND CONTROL SUBSYSTEM FUNCTIONAL REQUIREMENTS

MISSION PHASE	DEFINING BOUNDARIES	SUBSYSTEM FUNCTIONAL REQUIREMENTS
Separation	Ends at RCS Control	Maintains Inertial Reference
Coast-to-De-orbit	Ends at De-Orbit Thrust Initiation	Generates Commands to the RCS to: • Acquire capsule orientation existing prior to separation • Maintain three axis attitude hold • Orient capsule for de-orbit
De-Orbit	Ends at De-Orbit Thruster Cutoff	Generates commands to the RCS to maintain attitude hold during de-orbit thrusting Measures longitudinal velocity and initiates thrust termination
Coast-to-Entry	Ends at Entry Into Sensible Atmosphere	Commands capsule orientation for entry Commands slow roll rate Generates commands to maintain 3-axis attitude hold
Entry	Ends when Mach number is low enough to allow parachute deployment	Signals entry to Sequencer and Timer (0.05g) Generates rate stabilization commands for three body axes
Transition	Begins with parachute deployment and ends with terminal propulsion activation	Maintains standby status Determines direction of velocity vector to aid radar acquisition Provides backup to radar altimeter for parachute deployment
Terminal Descent	Begins with activation of terminal propulsion subsystem. Ends at touch down.	Interfaces with the Terminal Propulsion Subsystem: • Commands alignment of roll axis with direction of relative wind • Commands inertial hold in roll axis to arbitrary reference • Commands constant acceleration to descent thrusters • Commands longitudinal velocity relative to Mars' surface • Accepts steering commands and generates pitch/yaw attitude control commands to maintain roll axis along velocity vector • Serves as inertial backup for velocity and pitch/yaw attitude control in event of radar failure. • Shuts off Terminal Propulsion Subsystem

Figure 9–2

GUIDANCE AND CONTROL SUBSYSTEM CONSTRAINTS

MISSION PHASE	CONSTRAINTS
Pre-Separation	Sensor Alignment Gyros, case to Flight Spacecraft axes – ± 0.3 degree (3 σ) Alignment of Flight Spacecraft primary axis to preselected inertial direction ± 10 milliradians (3 σ), design goal.
Coast-to-De-Orbit	Attitude deadband ± 2 degrees, Attitude maneuver rate 1 to 3 degrees/second 300 meters minimum distance before initiation of de-orbit thrust.
De-Orbit	Velocity increment: Component parallel to specified velocity increment – 0.75% (3 σ), design goal Component normal to specified velocity increment along any two orthogonal axes – 1.5% (3 σ), design goal Attitude deadband ± 0.25 degree
Coast-to-Entry	Attitude maneuver rate 1 to 3 degrees/second Attitude deadband ± 2 degrees Constant roll rate 3 to 4 revolutions/hour
Entry	Attitude rate limit (3 axes) 3 degrees/second Attitude reference, pitch and yaw, at 0.05g ± 15 degrees
Transition	Body rates up to 2 radians/second
Terminal Descent	Roll axis alignment to wind referenced velocity vector ± 20 degrees Touchdown conditions: Vertical velocity – less than 25 feet/second Horizontal velocity – less than 10 feet/second.

Figure 9–3

GUIDANCE AND CONTROL SUBSYSTEM PHYSICAL CHARACTERISTICS

Inertial Measurement Unit

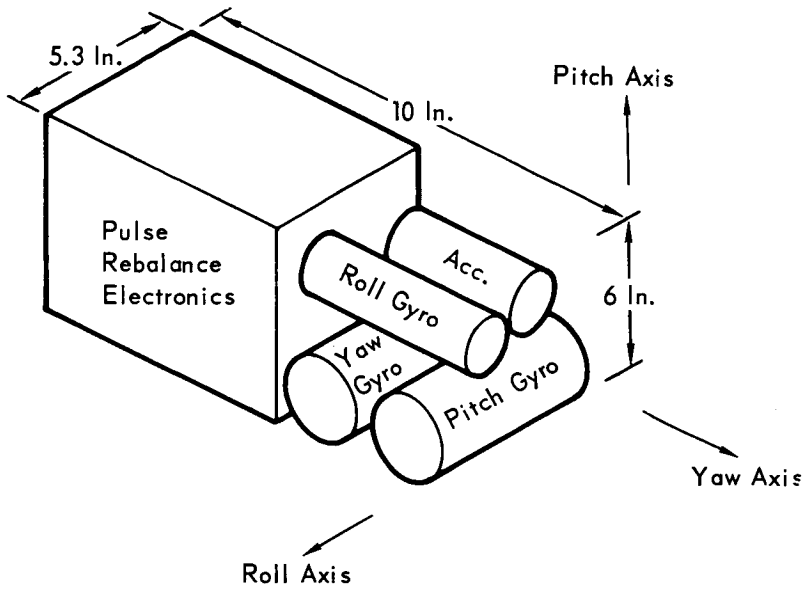

Physical Characteristics

Unit	Volume (In.^{3})	Weight (Lb)	Max. Power (Watts)
Inertial Measurement Unit	315	14	45
Guidance and Control Computer	400	16	61
Power Supply	175	7	24
Total	890	37	130

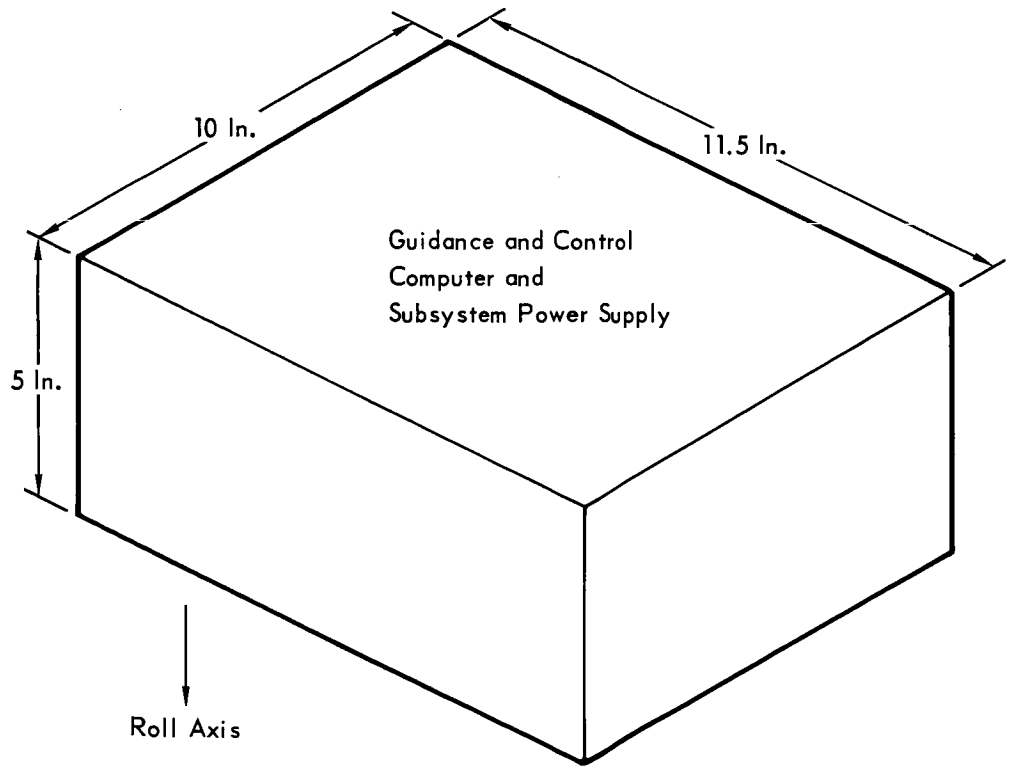

Figure 9–4

CHARACTERISTICS OF INERTIAL MEASUREMENT UNIT COMPONENTS

PARAMETER	CHARACTERISTICS
GYROS (HONEYWELL GG 334S)	
Input Angular Freedom	±10 degrees
Gimbal Freedom	±4 degrees
Operating Temperature	180°F
Size: Diameter	2.32 inches
Length	4.70 inches
Weight	1.4 pounds
Spinmotor power	3.5 watts
Heaters	
Warmup	140 watts
Control	10 watts
Torqueing rate (max.)	2 rad/sec
G-Sensitive Drift (max.)	
MUSRA	±0.50°/hr/g
MUIA	±0.46°/hr/g
Non-G-Sensitive Drift	±0.40°/hr
70°F Cooldown Stability	
G-Sensitive	0.05°/hr rms
Non-G-Sensitive	0.03°/hr rms
Variation from Reference due to Thermal Sterilization 135°C 96 Hours Per Cycle	
Change in MUSRA	0.10°/hr/g rms per cycle
Change in MUIA	0.10°/hr/g rms per cycle
Change in Non-G-Sensitive Drift	0.05°/hr rms per cycle
ACCELEROMETER (GG 177)	
Range	0 to 30 g's
Operating Temperature	180°F
Size: Diameter	1.8 inches
Length	1.8 inches
Weight	8 oz
Heater	30 watts
Linearity	±0.005% to ±1g max.
Threshold	$\pm 1 \times 10^{-6}$ g max.
Null torque (calibrated)	$\pm 5 \times 10^{-5}$ g max.
Cross axis sensitivity	1×10^{-5} g/g max.
Scale factor temperature sensitivity	0.0002%/of rms (over any 20°F range)
Input axis misalignment	±0.05% max.
Long term stability (1 yr operating)	
Null torque	14×10^{-5} g rms
Scale factor	0.005% rms

Figure 9–5

GUIDANCE AND CONTROL SUBSYSTEM GYRO AND PULSE REBALANCE ELECTRONICS FUNCTIONAL SCHEMATIC

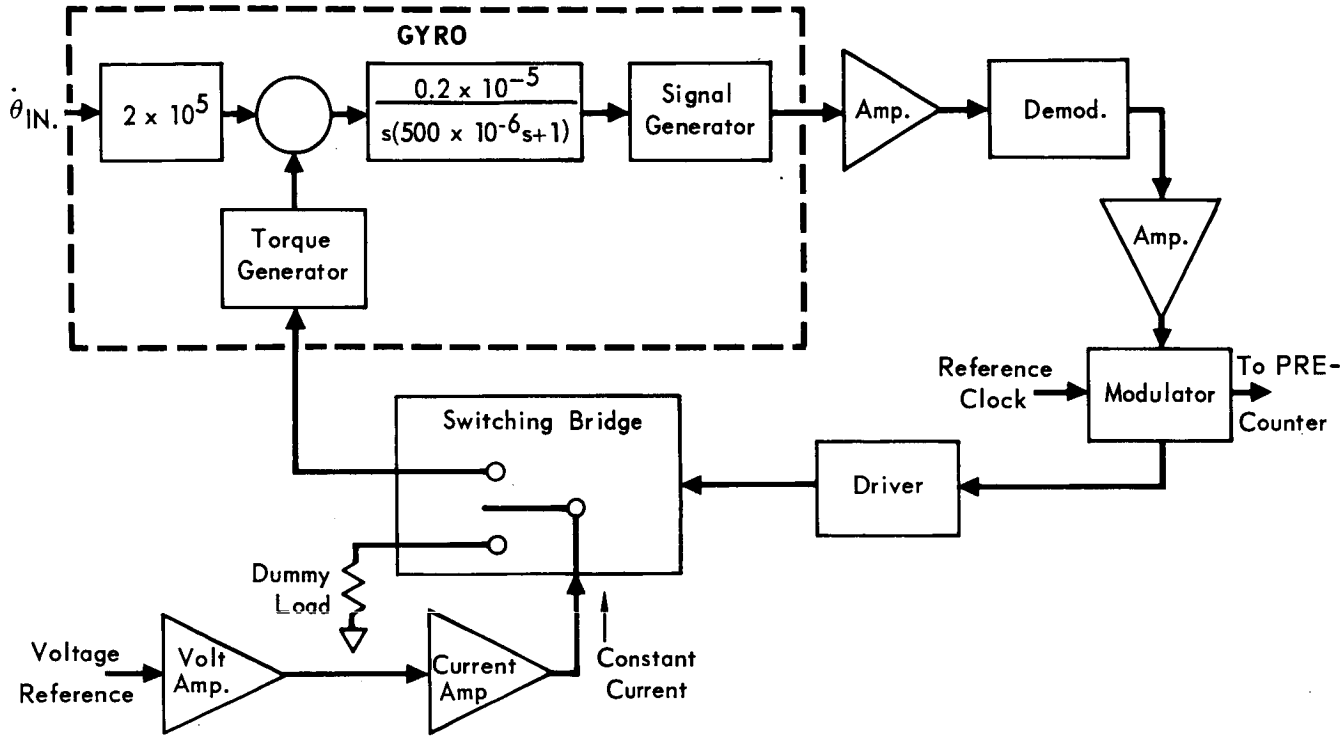

Figure 9-6

The output of the signal generator is amplified and demodulated to produce a DC signal which is converted to a pulse frequency. These pulses divert the output of a precision current generator from a dummy load to the torque generator of the gyro. For each pulse into the torquer, an equivalent pulse is provided as an output to the GCS. Each pulse represents an increment of attitude; $\Delta\phi$, $\Delta\Theta$, or $\Delta\Psi$ and provides the gyro with the proper amount of current to null the gimbal.

The types of pulse modulation used in gyro rebalance electronics are time modulated or discrete. Time (pulse width) modulation has the disadvantage of requiring greater equipment complexity to achieve the same accuracy as discrete and increased complexity in the utilization of the output data. Discrete modulation can be ternary (pulse on demand) or binary. Of the discrete, ternary has advantages of lower drift, higher peak rates and simplicity of readout while sacrificing scale factor stability. Considering the possibilities, the ternary system was selected for the Guidance and Control Subsystem.

9.3.1.2 Accelerometer and Accelerometer Rebalance Electronics - The selected accelerometer is a pendulous force rebalance type. The operation of the accelerometer loop is the same as the gyro loop except that torque is applied about the pivot axis of a pendulous mass instead of the output axis of a gyroscope.

Each output pulse in this case represents a precise increment of velocity. A block diagram of the accelerometer with transfer function is given by Figure 9-7.

9.3.1.3 Inertial Block Assembly - The inertial block assembly design provides the necessary mechanical properties for accurate mounting and structural stability of the inertial sensors. It is a machined aluminum block which also serves as a heat sink and a heat transfer mechanism.

9.3.2 Guidance and Control Computer - The GCC is a general purpose digital computer with a central processor, core memory, control circuitry, and gating and interface circuitry. It also has an analog portion which provides deadband switching for the RCS and derived rate stabilization during the Coast Phase. The principal features of the computer are listed in Figure 9-8.

A special feature of the GCC is its ability to deactivate all internal circuits (memory, central processor, input selection), except those required for attitude control during the long coast period. This results in a power savings in the computer of approximately 90%.

GUIDANCE AND CONTROL SUBSYSTEM ACCELEROMETER FUNCTIONAL SCHEMATIC

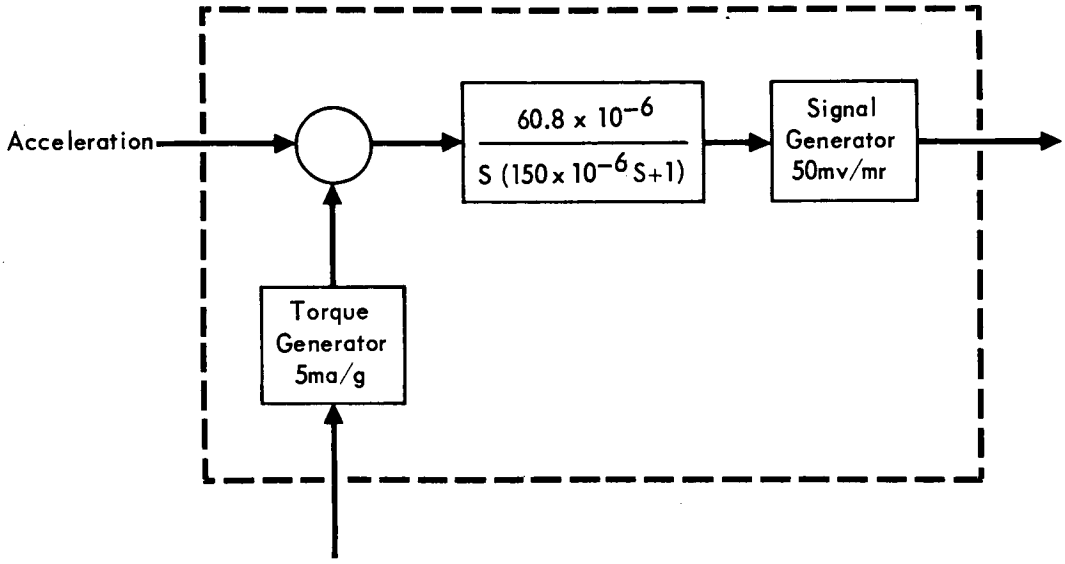

Figure 9–7

GUIDANCE AND CONTROL COMPUTER CHARACTERISTICS

Type – Digital, parallel operation

Number System – Binary, two's complement

Memory – 4096, NDRO (512 electrically alterable)

Word Length – 20 bits, including sign

Addressing – Single address

Instructions – 20 minimum

Add Time – 8 μ s

Interrupt Capability – Two types required:
(1) Direct access to memory for I/O operations
(2) Forced branching, automatic return provided

Input Power – 61 watts

D/A Converters – 8 required

Analog Requirements – 16 solenoid drivers
6 deadband switches

Figure 9–8

Figure 9-9 is a functional schematic of the GCS emphasizing the guidance computer. As shown, two counters are provided for each gyro. The least significant bit (LSB) counters have a limited capacity and are used for all phases of the mission. For all phases, except during de-orbit coast, they are continually monitored and reset by the central processor to prevent loss of information. During de-orbit coast with the central portion of the computer deactivated, the most significant bit (MSB) counters are activated and provide the overflow capacity for the LSB counters. At this time, the most significant bit counts become the attitude error commands for each of the three control channels. Only the roll channel is shown on the diagram. A digital to analog converter transforms the attitude error commands, either from the MSB Counters or those generated in the central computer and drives the analog attitude deadband switches. The derived rate loop is switched in to provide control damping with the central portion of the computer deactivated.

9.3.2.1 Memory Capacity - Analysis of the math flow described in Paragraph 9.4.3 indicates that 1650 instructions and 286 variable locations are required. To maintain sufficient growth potential, 4096 words of permanent storage with a minimum of 512 variable locations (included in the 4096) are provided. McDonnell experience on the Boost-Glide-Reentry Vehicle (BGRV) and Gemini programs indicate that excess storage is quickly consumed. For the Gemini computer, original estimates for memory size called for 6000 words of core storage. The final configuration was 12,000 words of core storage plus an additional 1000 words required on an auxiliary tape unit. Thirty thousand words of tape storage were actually used, the bulk of which contained redundant programs and additional subroutines. Original BGRV estimates called for 3000 words of core; final design capacity was 12,000. Some examples of VOYAGER refinements which would require more storage are:

- All attitude reference capability
- Redundant attitude system using additional gyros

9.3.2.2 Speed Requirements - To establish speed requirements for a computer, the prototype program (see Paragraph 9.4.3) must be analyzed to determine which loop requires the most time of operation. Consider the inertial error subroutine. Assume that multiply time is ten times longer than add time. This subroutine requires 6 multiply and 70 add instructions, so that there are 6 x 10 + 70 = 130 equivalent add operations. If the inertial error subroutine was the only function

GUIDANCE AND CONTROL SUBSYSTEM FUNCTIONAL SCHEMATIC

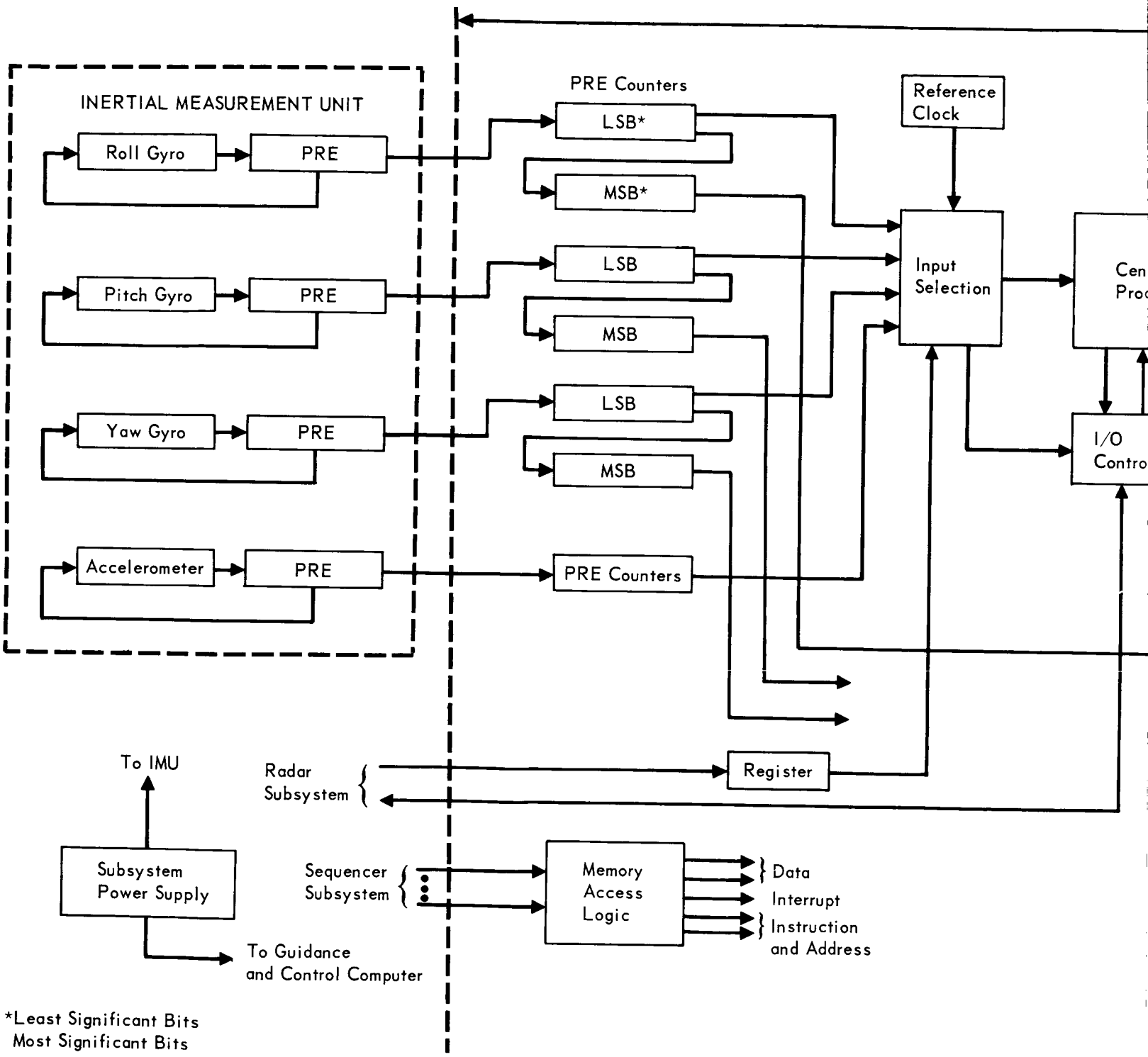

Figure 9–9

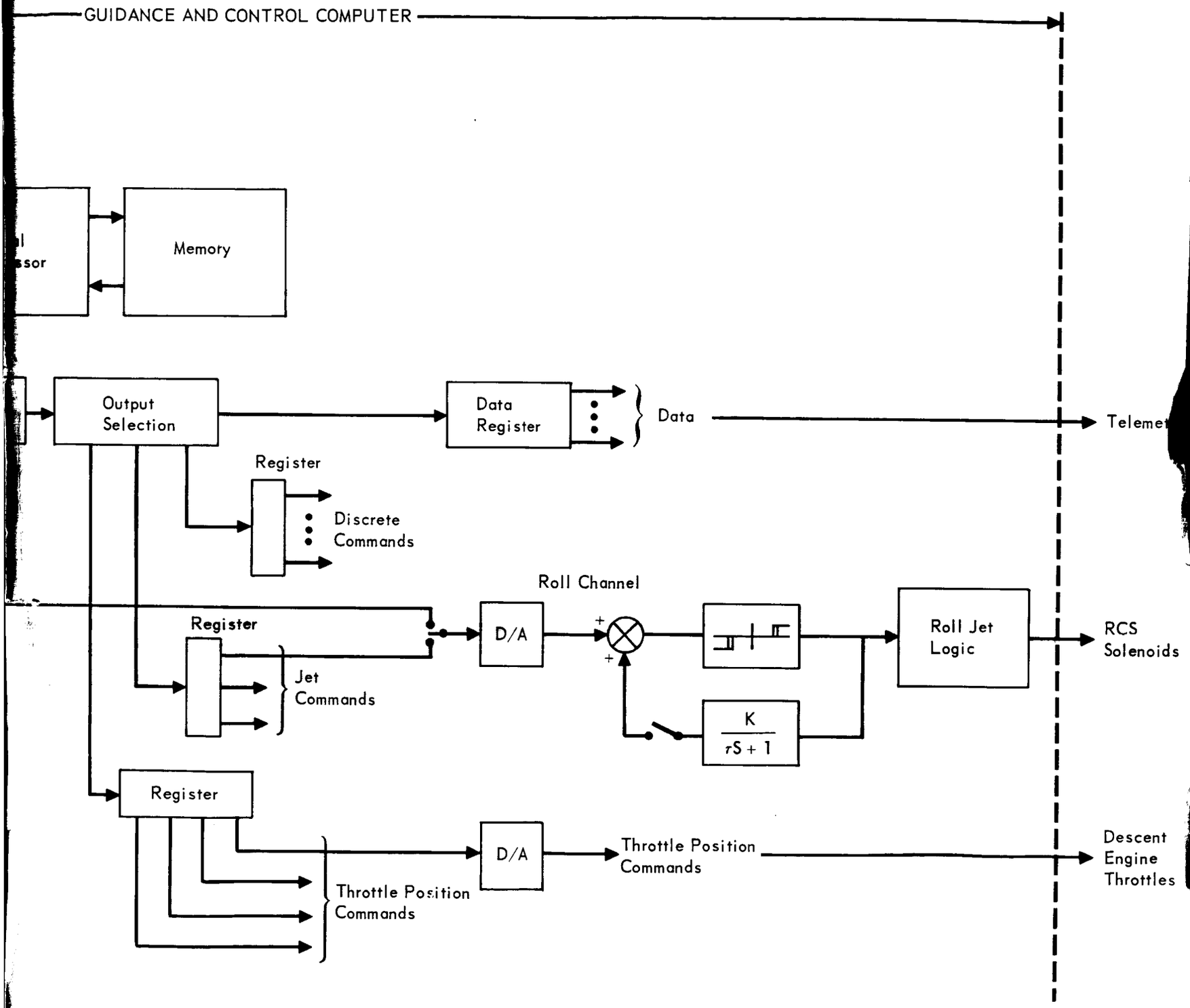
GUIDANCE AND CONTROL COMPUTER
Memory
Output Selection
Data Register
Data
Telemet
Register
Discrete Commands
Roll Channel
Register
D/A
Jet Commands
Roll Jet Logic
RCS Solenoids
K
τS + 1
Register
D/A
Throttle Position Commands
Throttle Position Commands
Descent Engine Throttles

to be performed, the number of equivalent adds for one second would be the iteration rate, 200 times/second, times the adds for one iteration. For this case 200 x 130 = 26,000. The required add time would be 1 second divided by 26,000. Obviously, the inertial error subroutine alone does not determine the required add time. Analysis of the math flow indicates that the longest path (time wise) is the executive-inertial error - stabilization loop . The assumption which can be made here is that although the executive routine contains 100 instructions, only 20 instructions (by program design) are required to service the most critical loop (speed wise). The number of equivalent adds are computed as:

executive 20 x 500 = 10,000

inertial routines 176 x 200 = 35,200

stabilization 109 x 200 = 21,800

Total 67,000 operations

The required add time is then $\frac{1 \text{ sec}}{67,000} = 15 \ \frac{\text{microseconds}}{\text{operation}}$

To provide a substantial speed margin, an add time of 8 microseconds was selected.

9.3.2.3 Word Length - Based on simulation studies performed by United Aircraft, a 19 bit word length is satisfactory to minimize round off errors. Other performance characteristics are somewhat dependent on the ones previously listed. For example, an 8 microsecond add time generally dictates parallel operation, single address logic. The majority of machines in the parallel microcircuit class with 10 microseconds or less add times are designed with index registers, interrupt circuitry, and special instructions. The percentage increase in weight to provide these capabilities is small compared with savings in program instructions when utilized.

9.4 OPERATIONAL DESCRIPTION - In order of presentation, this Section describes functionally the control modes of the GCS, gives a discussion of the equipment operation, and, finally, the functional operation of the equipment is tied in with the mission with a description of the GCC program which controls the operation of the subsystem.

9.4.1 Functional Operation - Figure 9-10 shows the functional position of the GCS within the overall Lander Subsystem. The major function of the GCS is to generate commands to the Reaction Control Subsystem (RCS) and the Terminal Propulsion Subsystem (TPS). Four modes of control are defined for each of the two propulsion subsystems. These modes are described below.

GUIDANCE AND CONTROL SUBSYSTEM FUNCTIONAL BLOCK DIAGRAM

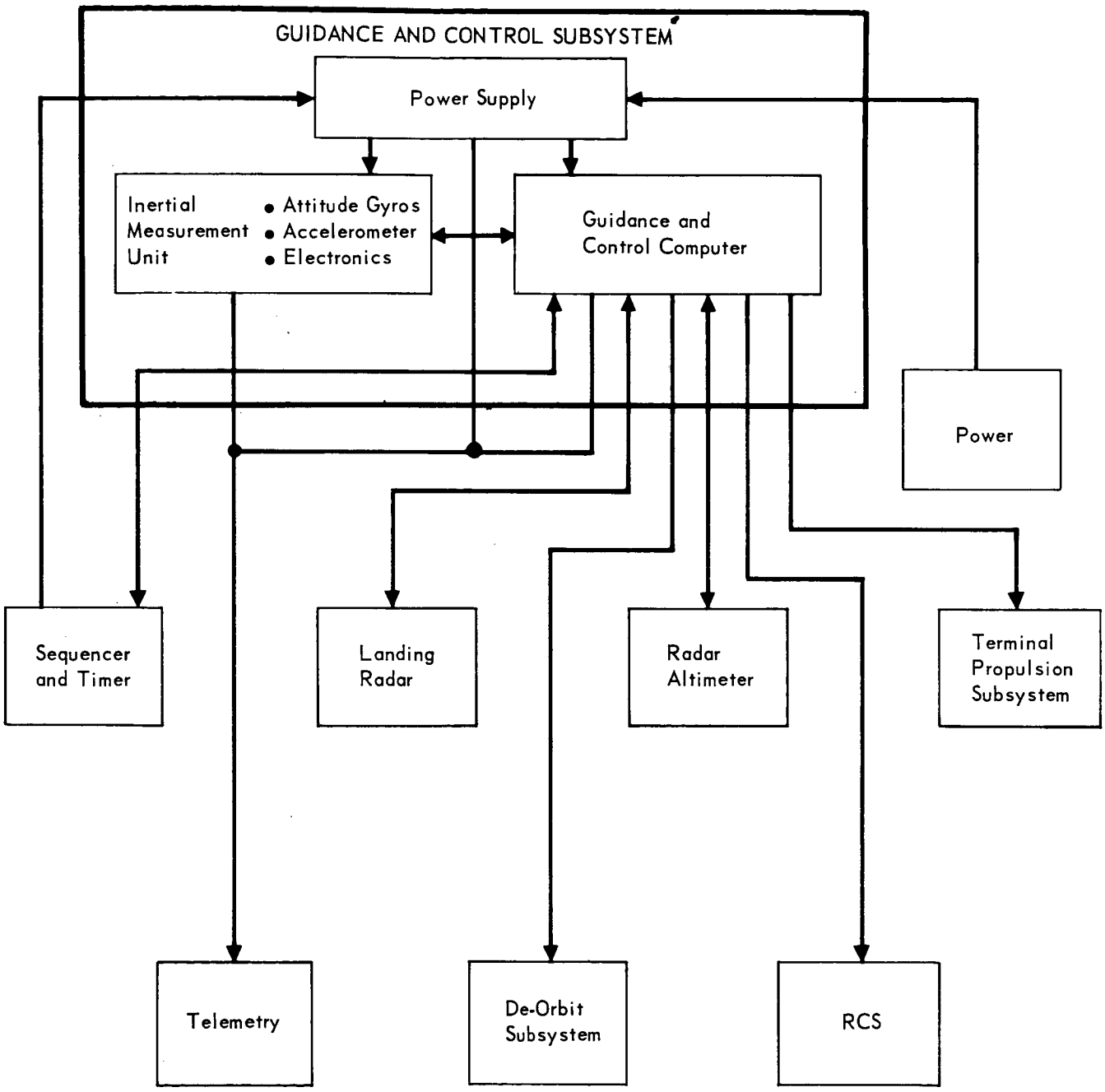

Figure 9–10

9.4.1.1 RCS Command Function -

Mode I Attitude Hold/Rate Stabilization - Body attitude error is summed with measured body rate in commanding the operation of the RCS. The measured rate stabilizes the control of attitude by providing active damping. For the presently configured system the response to an initial rate and to an initial disturbance torque is shown in Figures 9-11a and 9-11b.

Mode II, Attitude Maneuver - This mode is the same as the preceding with the exception that the reference frame is rotated, one axis at a time, at a constant rate. The vehicle axes follow the rotated frame. The vehicle response to a rate command is shown in Figure 9-11c.

Mode III, Attitude Hold/Derived Rate Stabilization - Body attitude error is summed with a constant times the on-time of the reaction control thruster command. In a low disturbance environment with known thruster levels, adequate damping is provided (see Figure 9-11a). (This type of damping is termed pseudo or derived rate.)

Mode IV, Rate Stabilization - Measured body rates, when they exceed fixed limits, actuate the control thrusters. Body rates are thereby held within required limits.

9.4.1.2 TPS Command Function - (for applicable analyses see Part B, Section 2.3)

Mode V, Attitude Hold - Attitude error and measured body rate are summed to form proportional throttle commands. This mode is similar to I.

Mode VI, Radar Steering - The two radar measured lateral velocities are used to rotate the attitude reference frame while maintaining control. The vehicle is thereby rotated until the measured velocities are zero.

Mode VII, Acceleration Command - In this mode the axial component of the terminal propulsion thrusters is controlled to a constant acceleration level.

Mode VIII, Axial Velocity Command - The command of the axial component of the terminal propulsion thrusters to provide a given Capsule Lander velocity relative to the Martian surface constitutes this last mode.

In control Modes I, II, V, and VI, a basic set of equations is solved to determine attitude error with respect to a reference frame. The equations are small angle approximations to the rigid body kinematic rotation equations. They are:

$$\dot{\phi} = p + r\Theta$$
$$\dot{\Theta} = q - r\Psi$$
$$\dot{\Psi} = r + q\phi$$

where ϕ, Θ, Ψ are Euler angles of body roll, pitch, and yaw and p, q, r are inertial body rates about the respective axes.

(a) PHASE PLANE RESPONSE TO INITIAL RATE

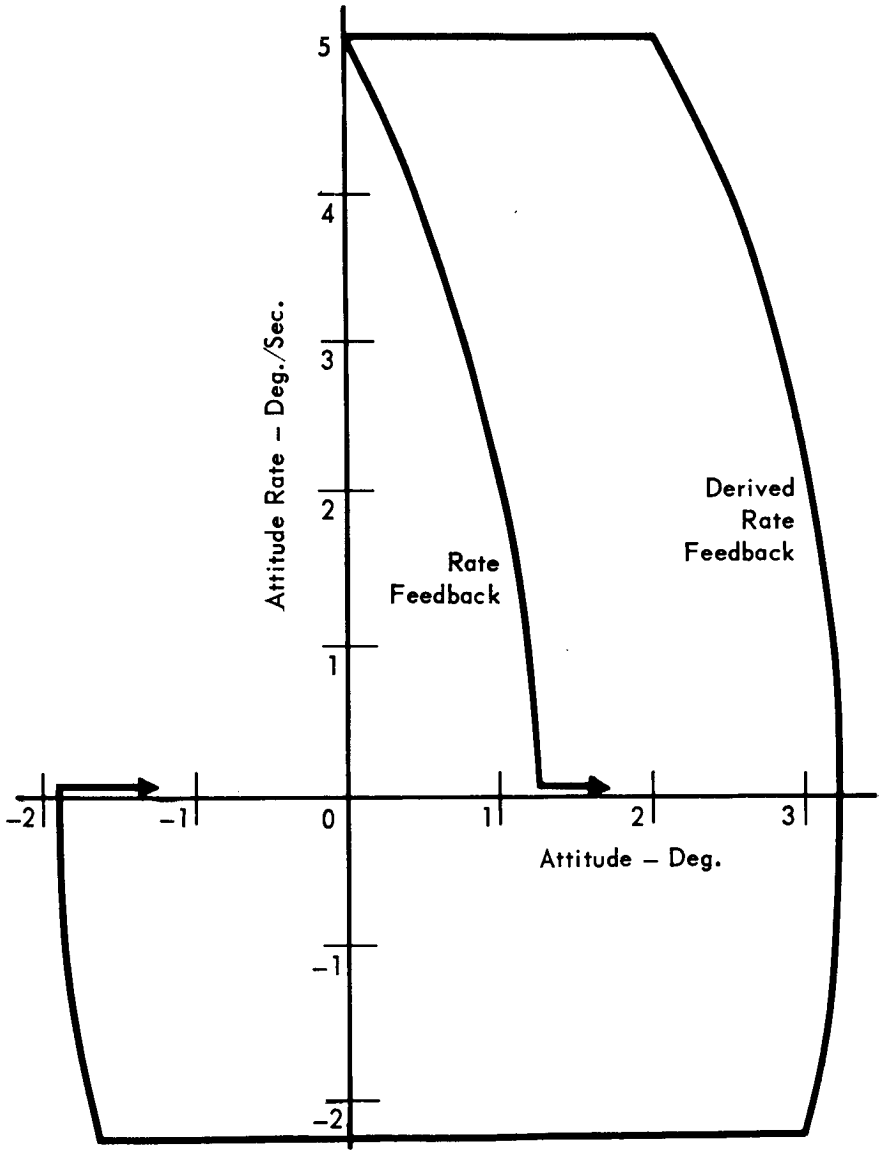

(b) ATTITUDE RESPONSE TO

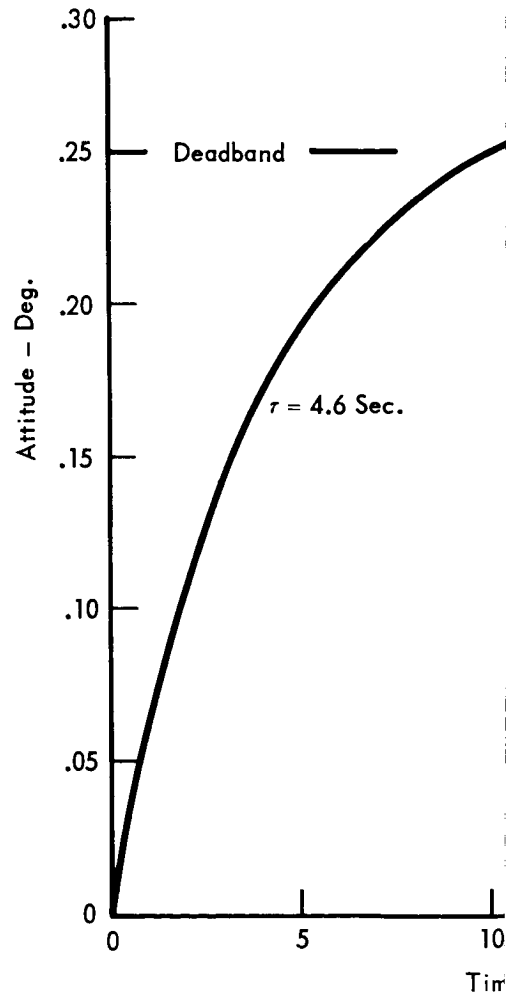

Figure 9–11

A DISTURBANCE TORQUE

(c) ATTITUDE RESPONSE TO A RATE COMMAND

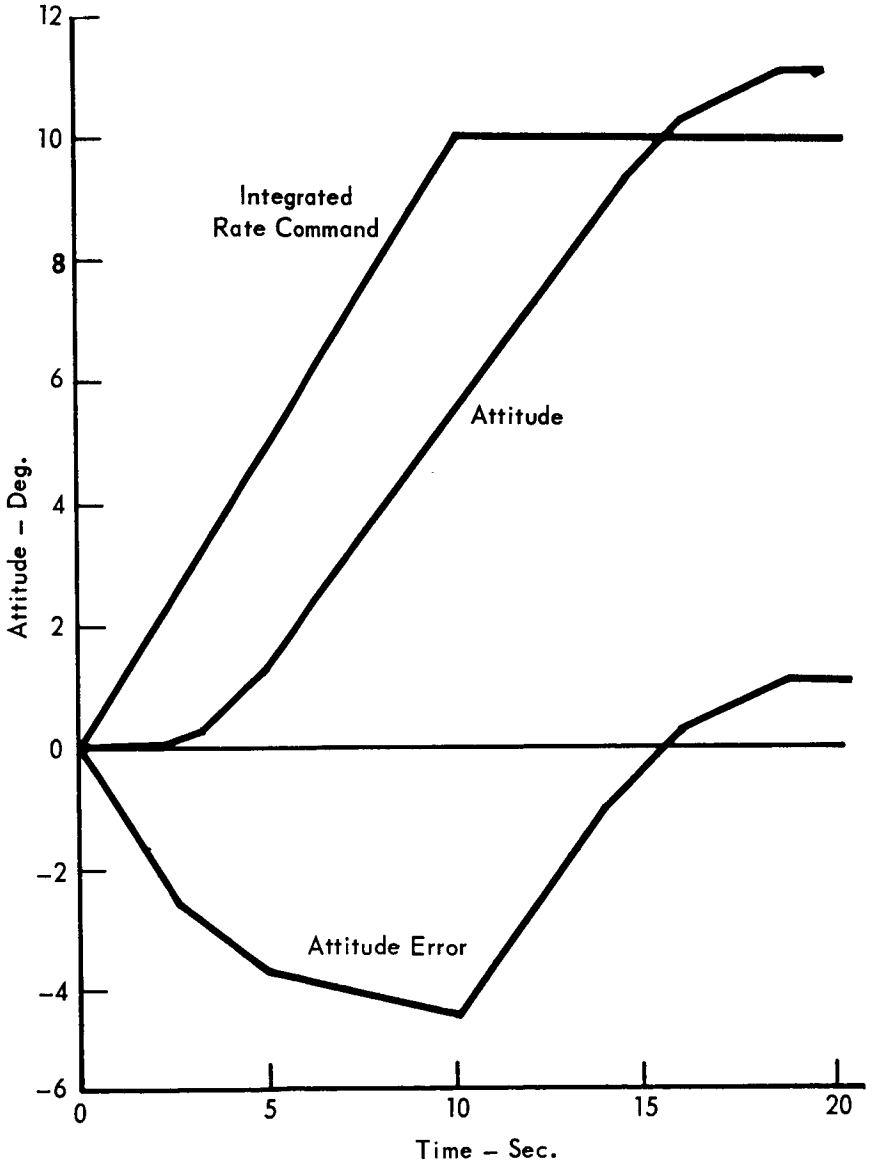

9-16-2

9.4.1.3 Modes I and II - Figure 9-12 presents the functional operation. The roll channel of control is shown; the others are identical in operation. The IMU supplies incremental changes in attitude about each axis to the GCC. The Euler angle rate is computed and integrated to form the Euler error, $e\phi$. The body rate, p, is summed with $e\phi$ to yield the input to the roll jet switching logic (deadband switch) which operates the roll jets in the RCS. For Mode I, the rate command is zero; in performing an attitude maneuver, Mode II, a constant rate command is applied to one channel at a time until the desired attitude is attained.

9.4.1.4 Mode III - In Mode III control, the integral of the body rate about each of the vehicle axes forms the attitude error for actuation of the thrusters in the RCS.

Figure 9-13a shows the operation for the roll jet command channel. A counter in the GCC sums the increments of attitude change from the IMU to form attitude error commands to the jet switching logic. The feedback loop closed around the jet logic switch integrates the switch output. The resulting signal is proportional to vehicle induced rate and is fed back to provide rate stabilization. Minimum pulse circuitry, not shown on the figure, is included to insure proper operation.

9.4.1.5 Mode IV - This is the rate stabilization mode. Measured body rates become the inputs to the jet switching logic. Figure 9-13b shows the operation.

In operating the terminal propulsion thrusters, the computer generates proportional commands to the descent thruster throttles for the control of attitude, Modes V and VI, and axial thrust, Modes VII and VIII. Attitude and axial thrust control can be considered two independent functions, although, the same thrusters, independently throttled, provide for both.

9.4.1.6 Modes V and VII - Figure 9-14 shows the control configuration at the beginning of the terminal descent phase of the mission where these modes are in effect. Only the pitch channel is shown. The attitude error is formed as described for Mode I with the exception that an initial attitude error is imposed at the beginning of the phase. The body rate is combined, for stabilization, to form a proportional pitch axis moment command.

The constant axial acceleration command with an acceleration feedback loop closed through the IMU constitutes Mode VII. The thruster logic block transforms the axial thrust command and the three axis moment commands into individual thruster throttle commands.

CONTROL MODE I, ATTITUDE HOLD/RATE STABILIZATION (ROLL CHANNEL), AND MODE II, ATTITUDE MANEUVER (ROLL CHANNEL)

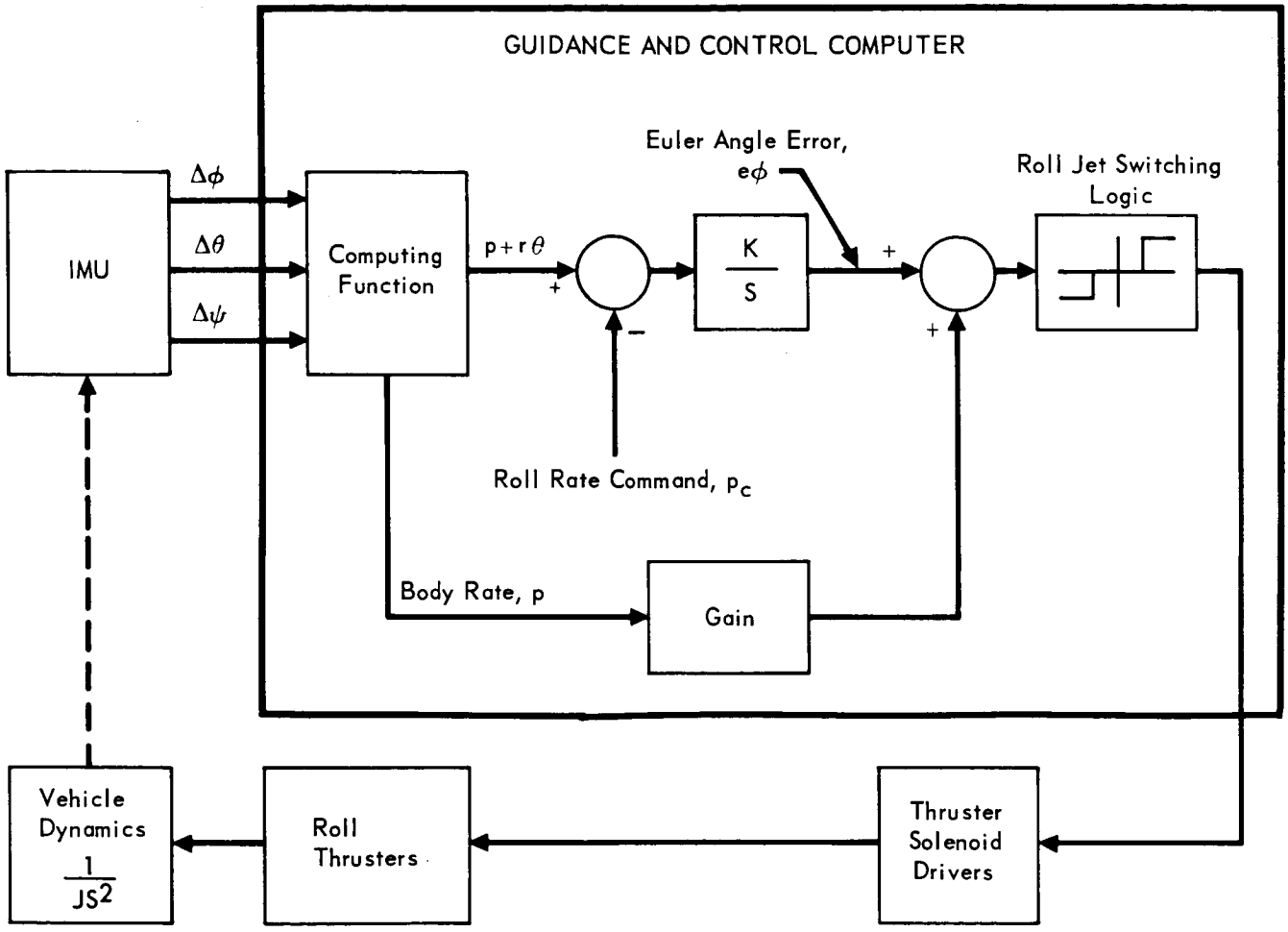

Figure 9–12

CONTROL MODES III AND IV

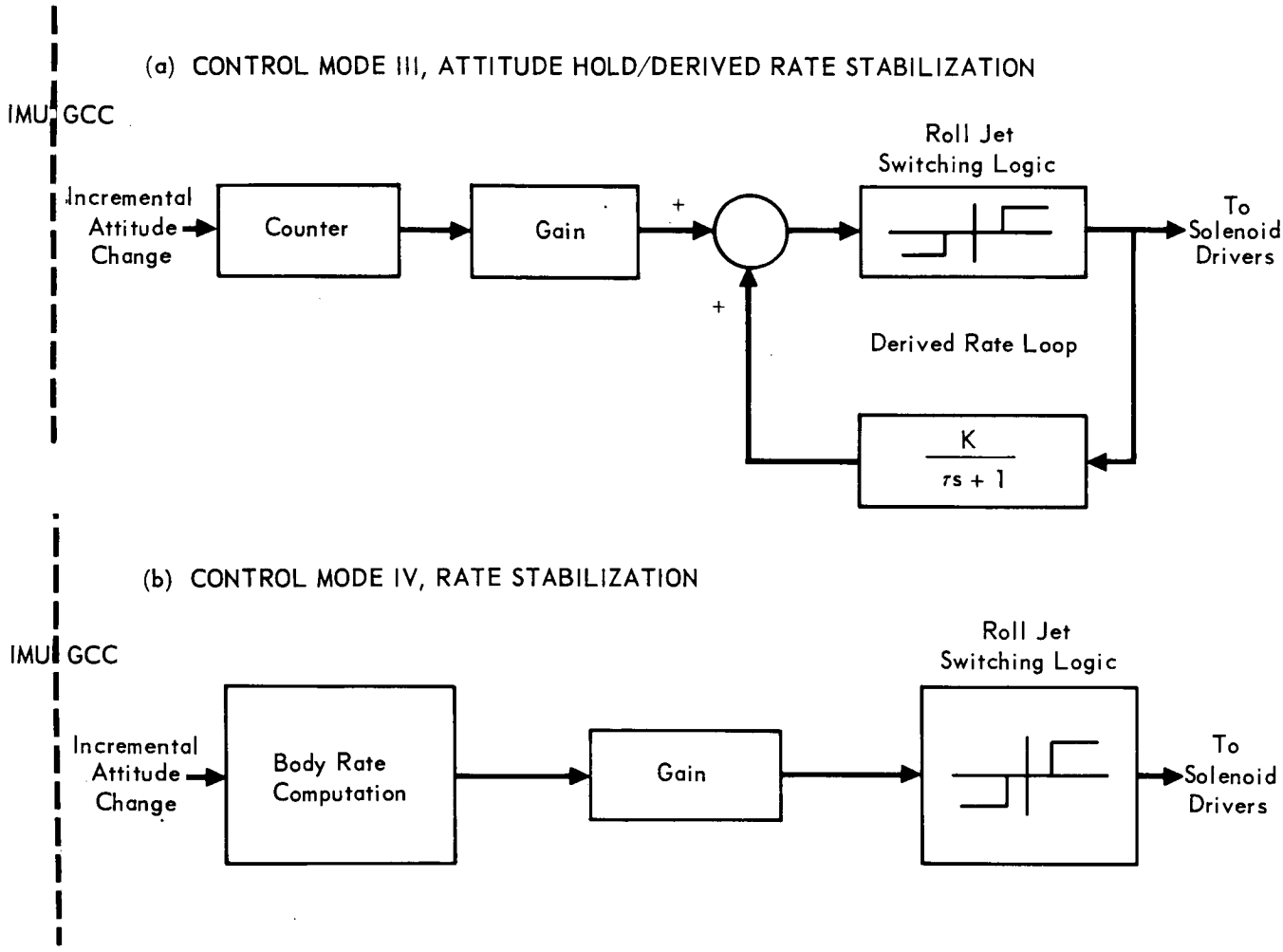

Figure 9–13

CONTROL MODE V, ATTITUDE HOLD (PITCH CHANNEL), AND MODE VII, ACCELERATION COMMAND

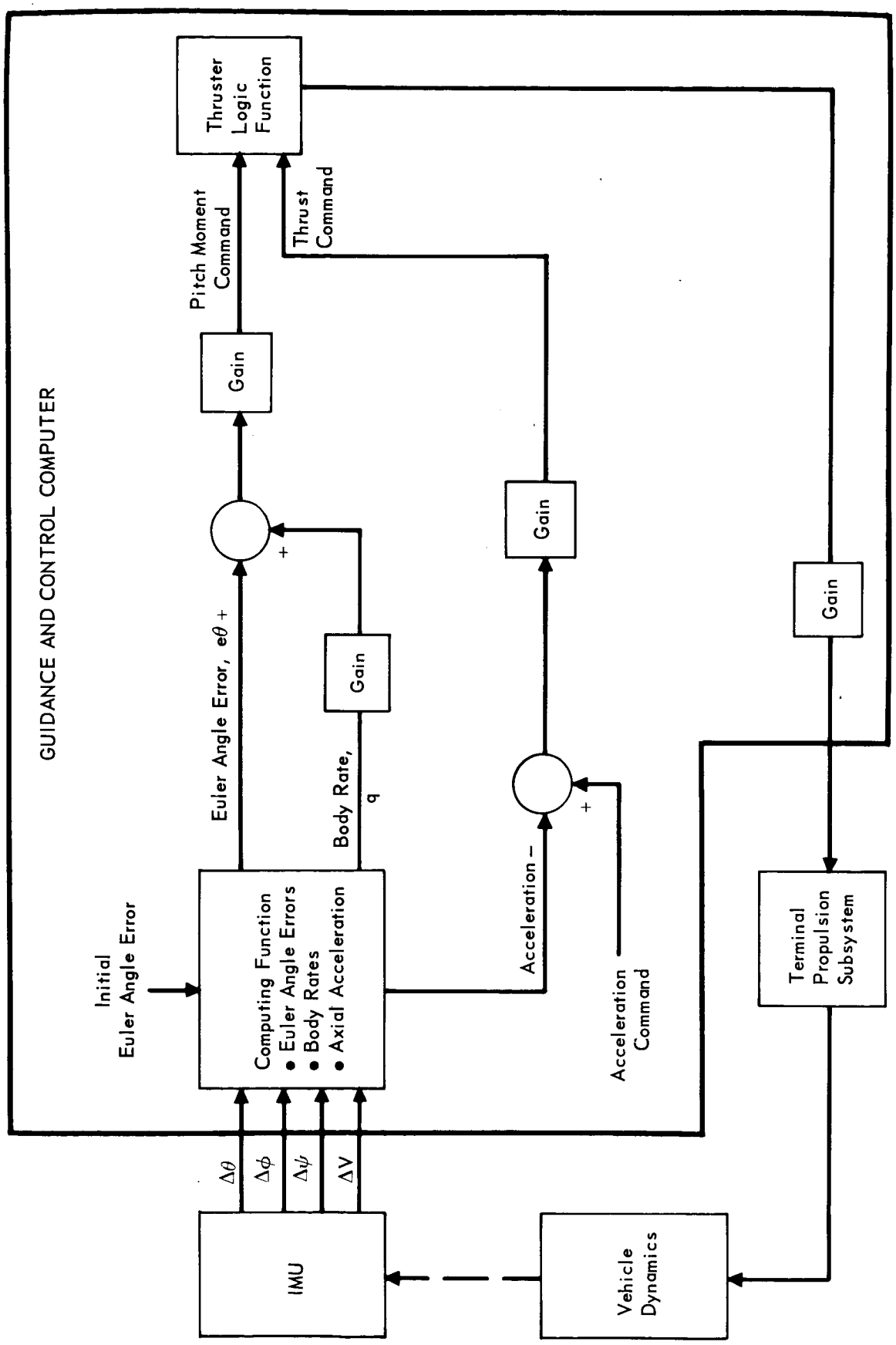

Figure 9–14

9.4.1.7 Modes VI and VIII - After the Landing Radar establishes track, reliable operation is indicated to the GCC, which changes attitude control from inertial hold (Mode V) to radar steering in the pitch and yaw body axes (Mode VI). Figure 9-15 describes how radar steering is accomplished. If the capsule has a component of y-axis velocity, the pitch axis reference frame is rotated by a normalized rate command, $\frac{Vy}{Vz}$. The vehicle follows the rotated frame thus driving the lateral velocity component to zero. With similar control about the vehicle yaw axis, the vehicle is aligned to the Mars referenced velocity vector.

Control of the magnitude of this vector constitutes the last control mode, VIII. Two velocity command regimes are defined, a programmed deceleration profile and a constant velocity regime. For the former, a velocity command is generated as a linear function of slant range; for the latter, a constant velocity of 5 ft/sec is commanded. Figure 9-15 presents the operation.

In the event of either a failure in the Landing Radar or a loss of velocity or range track, indicated to the GCS by the Radar, contingency modes are activated. Loss of reliable velocity data switches radar steering control to inertial attitude hold; loss of range track substitutes altitude measurements from the Radar Altimeter for the Landing Radar range data. The Radar Altimeter supplies data to within 50 feet of the surface for this purpose. Since it is possible that both range and velocity track can be lost simultaneously, altitude rate (also provided by the altimeter) closes the velocity feedback loop, see Mode VIII, when both reliable operation signals from the Landing Radar are lost.

In addition to vehicle control in the eight modes the GCS measures the velocity change of de-orbit and initiates thrust termination of the de-orbit motor. Another important function, required by a Landing Radar constraint, is the establishment of a reference frame, at the beginning of the Terminal Descent Phase, with its roll axis near the atmospheric referenced velocity vector. The reason for this and the manner in which it is implemented by the GCS is explained below.

The Landing Radar requires the roll axis of the capsule to be near the local vertical, in order to establish track. A vertical reference is not available but alignment to the atmospheric referenced velocity will insure that the radar constraint is fulfilled (see Figure 9-3). If the vehicle roll axis would always remain aligned along the velocity vector, the initial Euler angle errors indicated

CONTROL MODE VI, RADAR STEERING (PITCH CHANNEL), AND MODE VIII, VELOCITY COMMAND

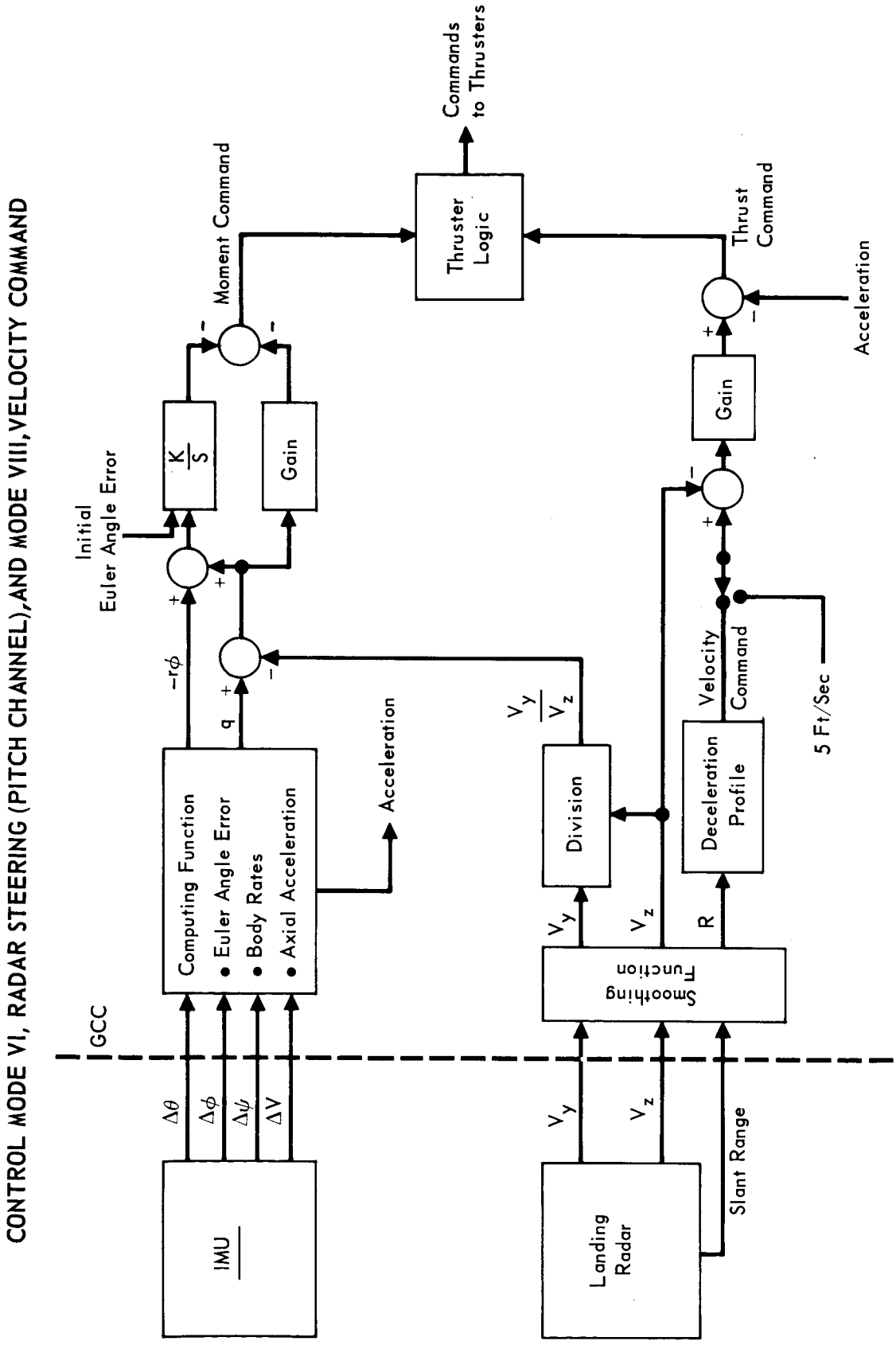

Figure 9-15

in Figure 9-14 would be zero at the start of Terminal Descent. Since this is not the case, the following approach is taken. During entry at peak dynamic pressure, the roll axis of the capsule is closely aligned to the velocity vector. At this time, a routine is initialized and the GCC starts computing the direction cosines of the body axes. The routine also effectively filters the computed pitch and yaw Euler angles and uses them to rotate the reference frame. In this manner the computed roll axis reference follows the gravity turn without following the higher frequency body oscillations cuased by winds and other disturbances. At the start of the Terminal Descent Phase, angles derived from the computed direction cosines become the initial pitch and yaw Euler angles used in control Modes V and VI.

Measuring de-orbit velocity and establishing a wind referenced frame are associated with the primary subsystem guidance and control function. An auxiliary usage of the GCS is to provide a functional backup for the Radar Altimeter parachute deployment command. This is accomplished in the following manner. The 0.05g mark generated by the GCS to indicate entry also starts an acceleration integrating subroutine. When the integrated axial velocity reaches a preprogrammed level, indicating that the capsule has slowed to the velocity expected at parachute deployment altitude (23,000 feet), a command is issued to back up the primary mark from the Altimeter.

9.4.2 Sequence of Events - The operational sequence of events pertinent to the GCS is presented in Figure 9-16. The initiating source and approximate time of occurrence are also given.

9.4.3 Software Implementation - Figure 9-17 shows the GCC Top Level Math Flow. This diagram provides a perspective view of the computer program during the mission without showing the details contained in the subroutines. The executive routine, shown by dotted lines, serves as the basic internal program direction finder as required for various mission sequences. Not included on the diagram are such details as the required initialization and telemetry routines.

Sizing estimates for all routines and subroutines are shown in Figure 9-18. Included on this figure are estimated iteration rates used to determine required computer speed. The estimates for the major control functions which are critical, such as the inertial error and stabilization subroutines, are based on consultation with Honeywell, Inc. and guidance and control requirements; estimates for executive, telemetry, and service library routines are based on in-house experience on the BGRV and Gemini programs.

GUIDANCE AND CONTROL SUBSYSTEM OPERATIONAL SEQUENCE OF EVENTS

EVENT	SEQUENCE COMMAND		TIME
	SOURCE	DESTINATION	
Activate IMU	CBS&T	GCS	T_{12} – 63 min
Activate GCC	CBS&T	GCS	T_{12} – 62 min.
Transfer Data to GCC	CBS&T	GCS	T_{12} – 61 min
Turn Off GCC	CBS&T	GCS	T_{12} – 60 min
Activate GCC	CBS&T	GCS	T_{12} – 8 min
Start Separation Sequence	FSCC&S	CBS&T	T_{12} – 5 min
Initiate Separation Routine	CBS&T	GCS	T_{12} – 30 sec
Release FC from FS (Electrical)	CNDP	FC Pyro	T_{12} – 15 sec
Arm CB/RCS	CBS&T	RCS	T_{12} – 5 sec
Release FC from FS (Mechanical)	CNDP	FC Pyro	T_{12} – 0.5 sec
Reverse RCS Logic	CBS&T	GCS	T_{12} + 3 sec
Initiate De-Orbit Maneuver	CBS&T	GCS	T_{12} + 25 sec
Initiate De-Orbit Velocity Routine	CBS&T	GCS	T_{12} + 15 min
Terminate CB De-Orbit Motor Thrust	GCS	CB Pyro	T_{13} + 32 sec
Initiate Entry Maneuver	CBS&T	GCS	T_{13} + 2 min
Start Coast Roll	CBS&T	GCS	T_{13} + 15 min
Turn off Central GCC	CBS&T	GCS	T_{13} + 16 min
Activate GCC	CBS&T	GCS	T_{14} – 8 min
End Coast Roll	CBS&T	GCS	T_{14} – 7 min
Initiate Acceleration Routine	CBS&T	GCS	T_{14} – 7 min
Sense 0.05g Deceleration	GCS	CBS&T	T_{15}
Switch to Three Axis Rate Damping	GCS	GCS	T_{15}
Initiate Inertial Reference Routine	GCS	GCS	T_{15} + 1 min
Initiate Descent Control Modes	CBS&T	GCS	T_{20} – 1 sec
Establish Inertial Attitude Control over CB	GCS	GCS	T_{21} + 2 sec
Establish Landing Radar Attitude Steering	CBLR	GCS	T_{21} + 5 sec
Intercept Programmed CB Descent Profile	GCS	GCS	T_{22}
Switch to Variable Thrust Descent	GCS	GCS	T_{22}
Switch to Inertial Attitude Control	GCS	GCS	T_{24}
Switch to Constant Velocity Descent	GCS	GCS	T_{25}
Turn off TPS	GCS	TPS	T_{26}

T_{12} – Separation
T_{13} – De-Orbit Start
T_{14} – Entry
T_{15} – Sense 0.05g
T_{20} – Aeroshell Separation
T_{21} – TPS Ignition
T_{22} – Intercept Descent Profile
T_{24} – $V_z = 10$ ft/sec
T_{25} – Begin Constant Velocity Descent
T_{26} – R = 10 ft

Figure 9–16

GUIDANCE AND CONTROL COMPUTER TOP LEVEL MATH FLOW

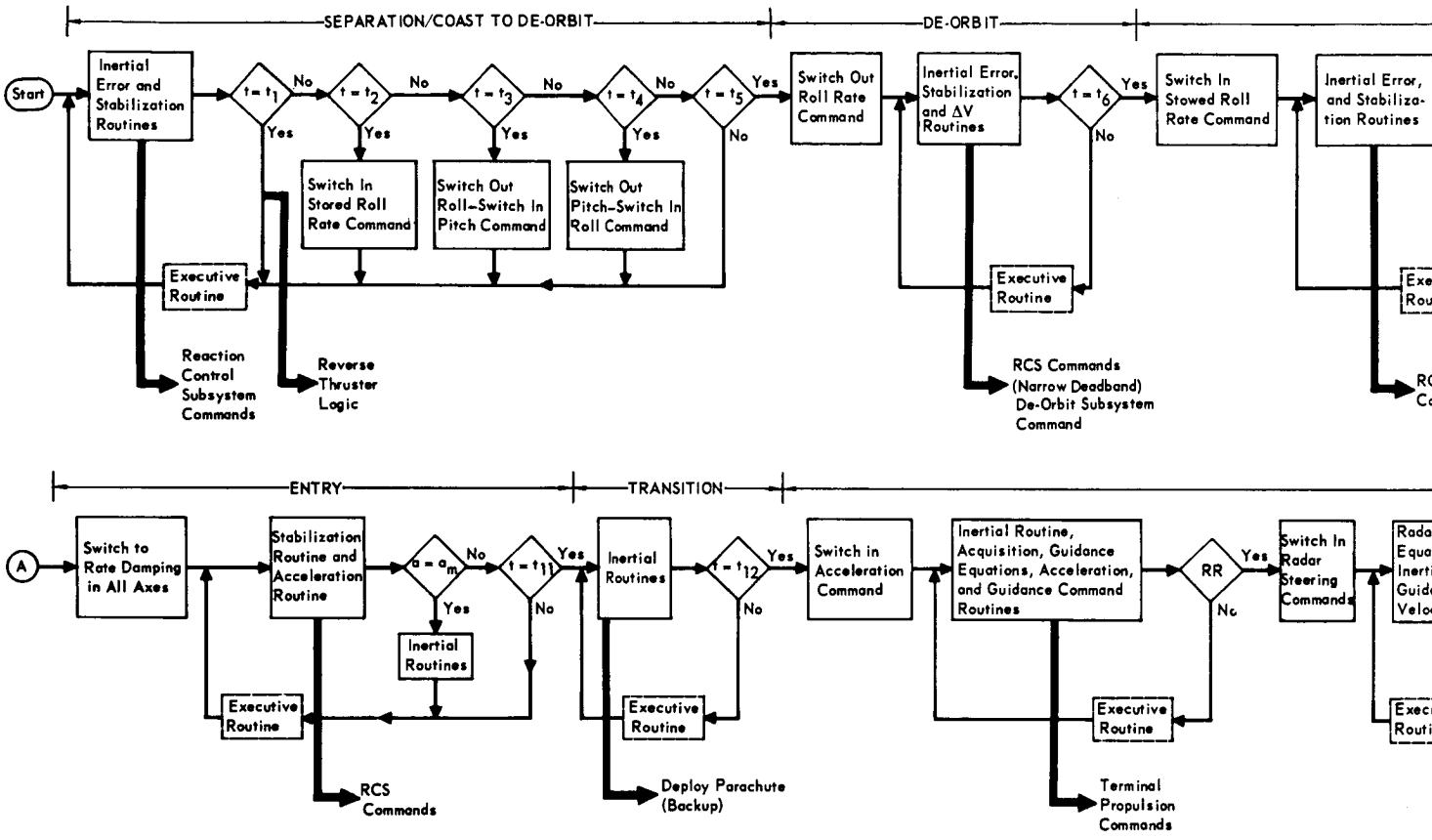

Figure 9–17

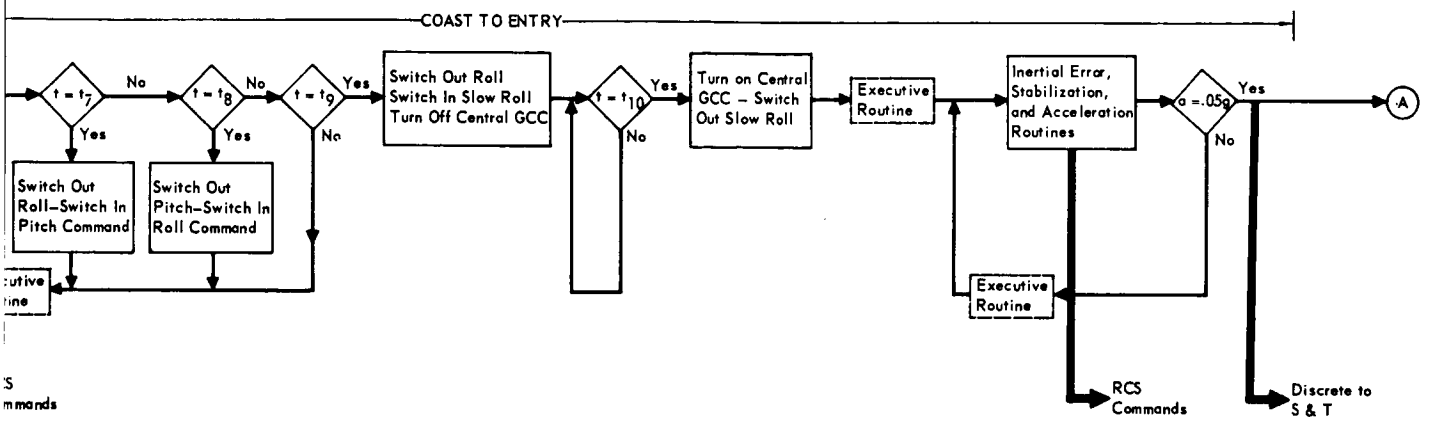

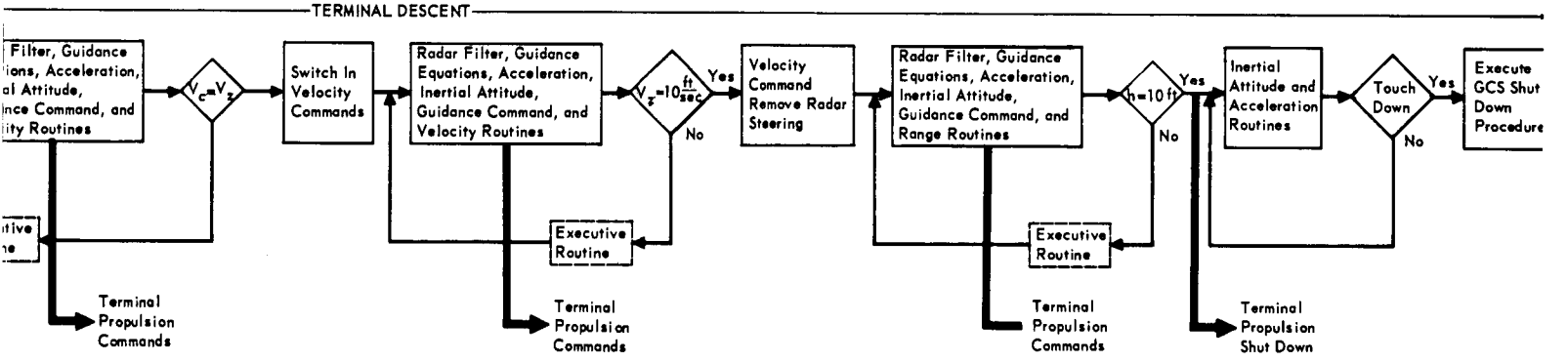

GLOSSARY:

t_1 – Reverse Thruster Logic
t_2 – Begin De-Orbit Maneuver
t_5 – End Maneuver
t_6 – Begin Entry Maneuver
t_9 – End Maneuver, Turn Off Computer
t_{10} – Turn On Computer
t_{11} – Turn Off Commands to RCS
t_{12} – Initiate Descent Control Modes
a_m – Peak Dynamic Pressure (q)
RR – Reliable Radar Operation

9-25-2

GUIDANCE AND CONTROL COMPUTER SIZING ESTIMATES

SUBROUTINES	MULTIPLY INSTRUCTION	EQUIVALENT ADD INSTRUCTION	ITERATION RATE
Radar Filter	6	24	8 cps
Guidance Equation	32	174	8 cps
Inertial Attitude	6	31	200 cps
Guidance Command	24	80	25 cps
Inertial Error	6	70	200 cps
Inertial Pitch/Yaw	6	70	200 cps
Precision Inertial Roll	15	50	200 cps
Stabilization	7	39	200 cps
Pitch/Yaw Error		7	50 cps
Roll Error		3	50 cps
Acceleration	4	7	25 cps
Velocity		2	25 cps
Handling Instruction		100	
Operational Subroutine Access	18	147	
Executive		100	500 cps
Service Library		300	
Calibration		100	
Telemetry		170	
Self Check		50	
Time Reference		20	
Initialization		10	
Subtotal	124	1554	
Total 124 + 1554 = 1678 Instructions			

Figure 9–18

The total of approximately 1700 instructions (Figure 9-18) represents an estimated minimum baseline storage requirement. In addition to instruction storage, certain routines require variable data locations. Estimates for these routines are:

General Program	126
Calibration	40
Telemetry	70
Service Library	50
Total	286

The above total defines a minimum variable data storage requirement.

A typical subroutine math flow is shown on Figure 9-19. This is a digital technique used to generate Euler angles as desribed under Functional Operation (Paragraph 9.4.1). To illustrate the operation, the flow for the roll angle (ϕ) is explained. The angle ϕ is obtained, at each iteration through the routine, by summing the content, $\Delta\phi$, of the PRE counter with the calculated old value. Thus $\phi_{new} = \phi_{old} + \Delta\phi$. This new value is then compared to the established computing quantization level ϵ. If the body movement is such that the value of ϕ is $\epsilon > \phi > -\epsilon$, the calculation of the Euler angle error e_ϕ remains relatively unchanged since e_ϕ is set to zero. If $|\phi|$ is greater than ϵ, ϵ is used as a correction factor in the error angle (e_ϕ) equation and the ϕ equation ($\phi_{new} = \phi_{old} + \Delta\phi - \epsilon\phi$).

9.5 PERFORMANCE CHARACTERISTICS - The primary characteristics of the Guidance and Control Subsystem are:

a.	Inertial sensor drift, 3σ, each axis	$\pm 1.0 \frac{\text{degree}}{\text{hour}}$
b.	Reference alignment to Flight Spacecraft, 3σ, each axis	± 0.3 degree
c.	Maximum input rates (before saturation)	$115 \frac{\text{degrees}}{\text{second}}$
d.	Maximum acceleration (before saturation)	30 g's
e.	Maximum time to de-orbit	29 minutes
f.	Inertial reference drift rate during coast (maximum upper bound)	$+5 \frac{\text{degrees}}{\text{hour}}$
g.	Pitch and yaw uncertainty at entry (maximum)	± 15 degrees
h.	Roll axis alignment to relative wind at start of terminal descent (maximum)	± 17 degrees

INERTIAL ERROR SUBROUTINE

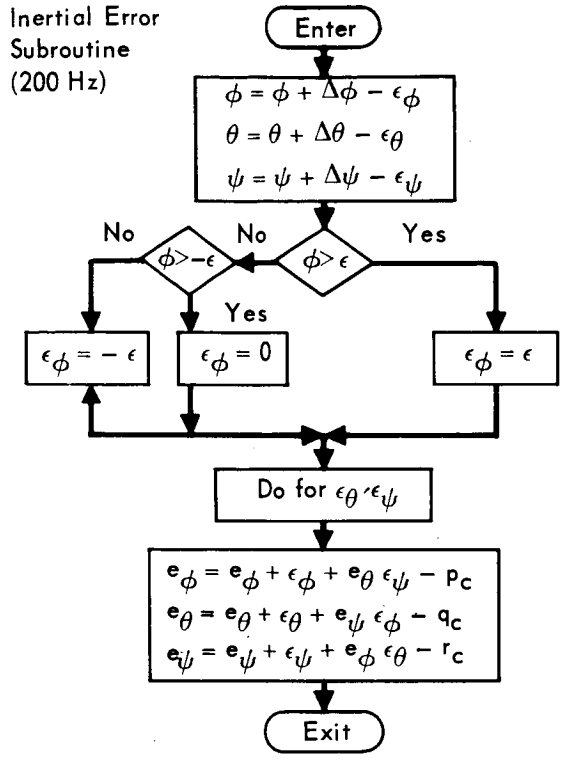

Figure 9–19

i. Touchdown velocity (3σ)

Vertical component	21.6 feet/sec
Horizontal component	
0° Ground Slope	4.3 feet/sec
34° Ground Slope	8.95 feet/sec

The principal accuracy constraint imposed on the GCS, see Figure 9-3, is the de-orbit velocity increment requirement of less than 1.5% normal to the desired vector. Figure 9-20 shows the design implication. Removing thrust offset (dead-band, 0.25 degree, and thrust malalignment, 0.25 degree) from the velocity constraint yields the GCS de-orbit reference constraint. Prior to separation, an initial reference frame error exists due to Spacecraft inertial reference inaccuracy (0.57 degree) and alignment transfer (0.3 degree). Begininning at separation the sensor drift ($1\frac{\text{degree}}{\text{hour}}$) is combined with the initial error to give the attitude reference drift curve. Referring to the Figure, de-orbit must take place prior to the time the drift curve intersects the GCS constraint line, i.e., within approximately 29 minutes. The selected Spacecraft-Capsule separation velocity of 1.25 feet/second will yield the minimum separation distance of 300 meters in 13.1 minutes, therefore all constraints will be fulfilled.

9.6 INTERFACE DEFINITIONS - Interface connections between the three sub-units of the GCS and between other subsystems are defined in Figures 9-21 and 9-22.

9.7 RELIABILITY AND SAFETY CONSIDERATIONS - The reliability estimate for this subsystem is 0.9469. The reliability model for the GCS is presented in Figure 23. The model presents the success paths, the estimated success probability of major elements, and the total estimated GCS probability of success.

9.7.1 Failure Mode, Effect and Criticality Analysis - This analysis was performed for the purpose of identifying sources of single point failure. The analysis, presented in Figure 9-24, provides a logical approach for locating, defining and ranking guidance and control failure modes which result in degraded or catastrophic mission performance.

Failure categories are assigned according to the effect on major mission objectives as follows:

1 - No effect on mission objective

2 - Degrading effect on mission objective

3 - Possible catastrophic effect on mission objective

ATTITUDE REFERENCE DRIFT PERFORMANCE FROM SEPARATION TO DE-ORBIT

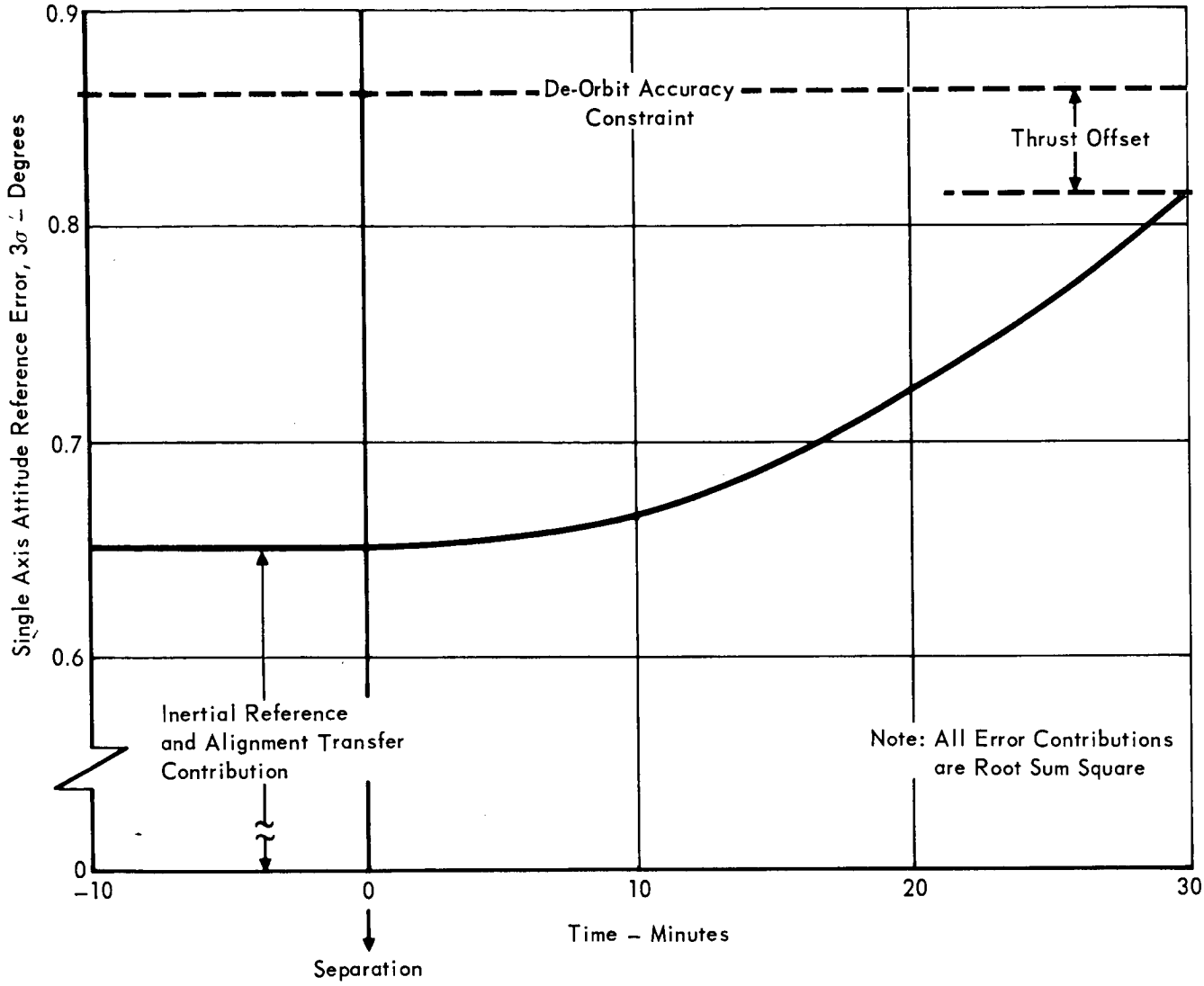

Figure 9–20

GUIDANCE AND CONTROL SUBSYSTEM INTERFACES

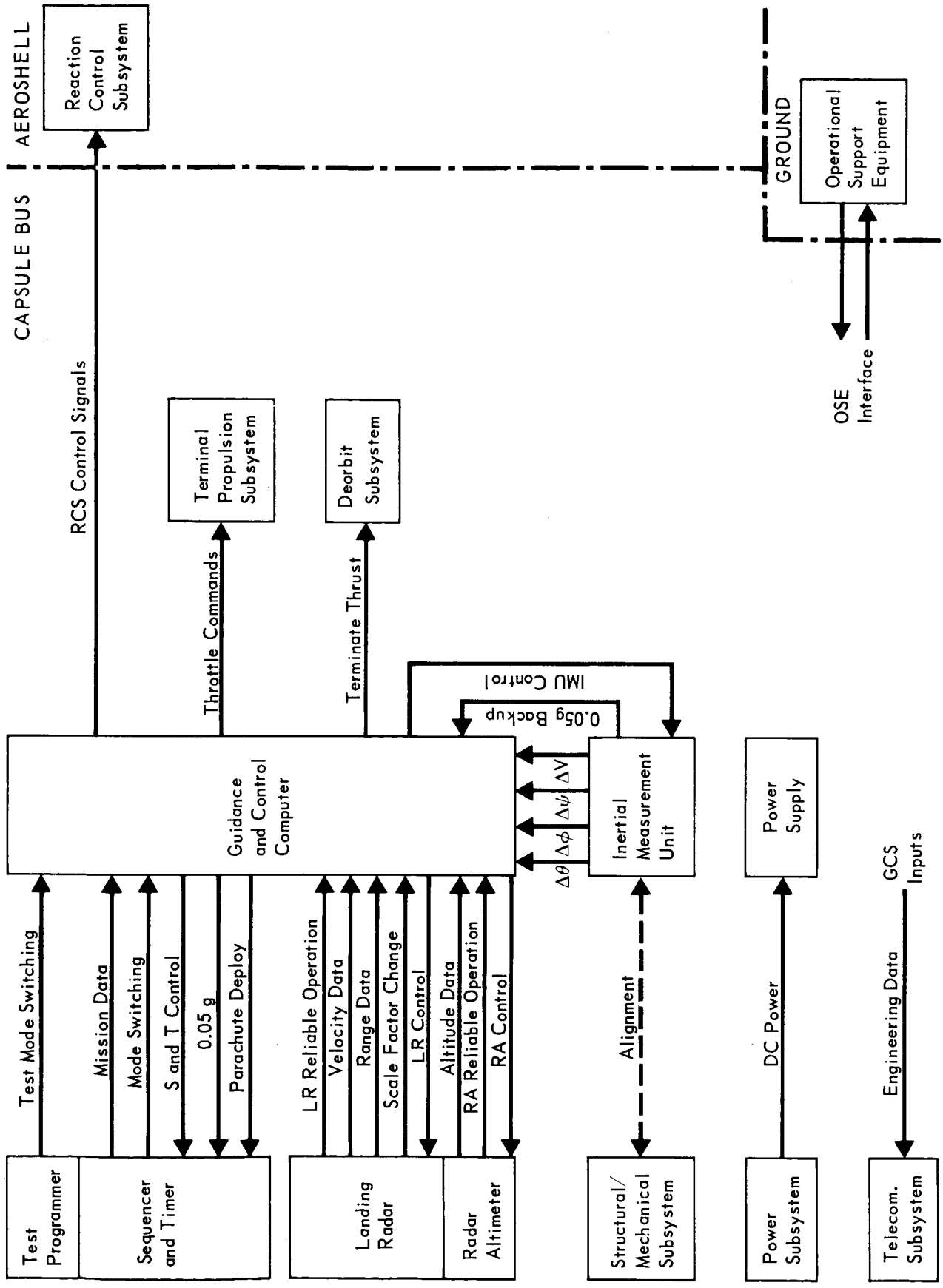

Figure 9–21

GUIDANCE AND CONTROL SUBSYSTEM INTERFACE DESCRIPTION

SIGNAL	DESCRIPTION
SEQUENCER	
Test Mode Switching	Bilevel voltages
Mission Data	Digital data words: maneuvers, de-orbit velocity, descent profile update
Mode Switching	Bilevel voltages
S and T Control	Clock pulses
0.05g	Bilevel voltage indicating 0.05g axial acceleration
Parachute Deploy	Bilevel voltage (backup command)
RADAR	
LR Reliable Operation	Bilevel voltage; indicating acceptable landing radar data
Velocity Data	Digital data words: three body velocity components (Vx, Vy, Vz)
Range Data	Digital data words: slant range (R)
Scale Factor Change	Bilevel voltage indicating radar range scale factor change
LR Control	Clock pulses
Altitude Data	Digital data words: altitude and altitude rate (backup data)
RA Reliable Operation	Bilevel voltage, indicates acceptable radar altimeter operation
RA Control	Clock pulses
IMU	
$\Delta\theta$, $\Delta\phi$, $\Delta\psi$	Pulse trains, each pulse indicates incremental attitude change
ΔV	Pulse train, each pulse indicates incremental axial velocity change
0.05 g Backup	Bilevel voltage, indicates 0.05g acceleration (backup command)
IMU Control	Bilevel control voltages
RCS	
RCS Control	RCS solenoid actuation currents
TERMINAL PROPULSION SUBSYSTEM	
Throttle Commands	Analog throttle command signals
DE-ORBIT SUBSYSTEM	
Terminate Thrust	Bilevel voltage, signals thrust termination

Figure 9–22

GUIDANCE AND CONTROL SUBSYSTEM RELIABILITY MODEL

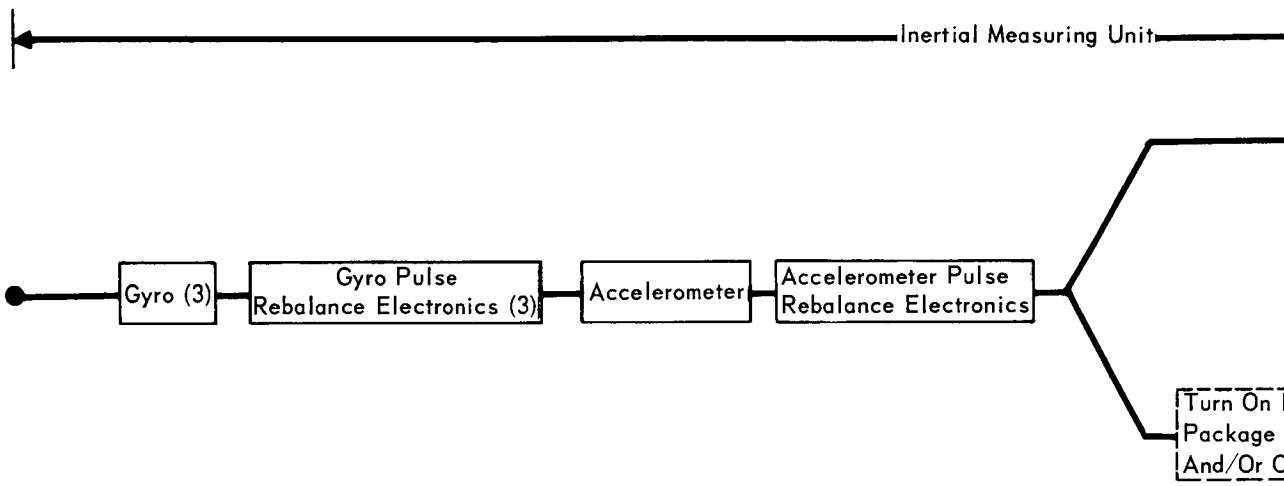

λ (F/10^6 HRS)	120	17	20	5.7	
t_m	94	94	94	94	
$\lambda t_m \times 10^6$	11,280	1,598	1,880	536	
P_s	.988783	.998401	.998122	.999464	

Total IMU P_s = .9848

Figure 9–23

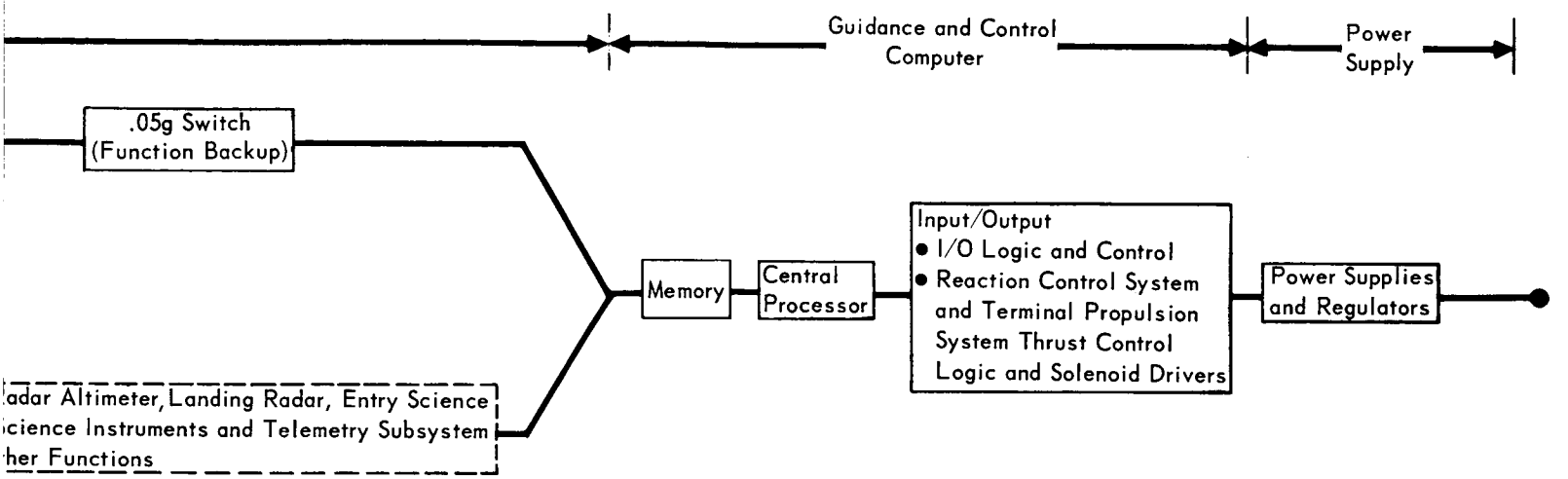

–	290	80	65	15
94	87	87	87	94
–	25,230	6960	5655	1410
P_s = .9999	.975085	.993064	.994355	.998591
Redundant P_s = .999990	Total G & C Computer P_s = .9628			

Total Guidance and Control Subsystem P_s = .9469

FAILURE MODE, EFFECT AND CRITICALITY ANALYSIS GUIDANCE AND CONTROL SUBSYSTEM

FAILURE CATEGORY DEFINITION
1. No Effect on Mission Objective
2. Degrading Effects on Mission Objective
3. Possible Catastrophic Effect on Mission Objective

COMPONENT OR FUNCTION	FAILURE MODE	FAILURE EFFECT	FAILURE CATEGORY: Landing	Entry Science	Landed Science	Eng. Data	REMARKS
Inertial Measuring Unit							
1. Pitch, Yaw and Roll Δ Angle Signals	• Δ Angle Error	• Degraded Reference	1–3	1–3	1–3	1–2	1.1 Inertial attitude sensing success probability can be increased by providing some form of sensor redundancy.
	• No Output	• Complete loss of Pitch, Yaw or Roll Reference.	3	3	3	2	1.2 (Same as 1.1)
	• Hardover Output	• Continuous Rotation in one axis.	3	3	3	2	1.3 (Same as 1.1)
2. Δ Velocity Signal	• Δ Velocity Error	• Degraded deorbit motor burn and CBS Landing.	1–2	1–2	1–2	1–2	2.1 Acceleration sensing success probability can be increased by providing accelerometer redundancy.
	• No Velocity Signal	• Deorbit motor cutoff backup by S & T 0.05g sensed by 0.05g switch. CB would not follow proper terminal descent profile	3	2	3	2	2.2 (Same as 2.1)
3. 0.05g Switch Signal Discrete	• No Signal	• None	1	1	1	1	3.1 0.05g signal backup available from accelerometer.
Guidance and Control Computer							
4. Data words from S & T (Attitude & Deorbit Command Words)	• Computer will not accept new words.	• Possibly degraded entry attitude and angle conditions.	1–3	1–2	1–3	1–2	4.1 Data words stored for nominal mission. Commands stored are attitude maneuvers and deorbit ΔV

Figure 9–24

							4.2 Success probability of guidance storage, logic and computation functions can be enhanced by incorporating redundancy.
5. Data Readout Signals to S & T from Computer	● No Signals.	● Possibly degraded entry attitude and angle conditions.	1–3	1–2	1–3	1–2	5.1 (Same as 4.1 and 4.2)
6. Altitude Readout Signals to Radar Altimeter from Computer	● No Signals	● Radar altimeter backup of landing radar slant range would be lost.	1, 3	1, 2	1, 3	1, 2	6.1 Failure category depends on obtaining slant range from landing radar. 6.2 (See 4.2)
7. Slant Range Readout Signals to Landing Radar from Computer.	● No Signals with range data good signal present.	● Improper terminal descent control.	3	2	3	2	7.1 G & C Computer would not receive range data for terminal descent and would not switch to radar altimeter for backup. 7.2 (See 4.2)
8. RCS Thrustor Commands (8)	● Loss of one or more commands	● No vehicle attitude command capability	3	3	3	2	8. Thruster command success probability can be enhanced by incorporating redundancy.
9. Deorbit ΔV Thrust Termination Command	● No Command	● Possibly degraded angle of entry.	1–2	1–2	1–2	1–2	9. S & T terminates deorbit motor based on burn time.
10. Terminal Propulsion Thrust Commands (4)	● Loss of one or more commands	● CB will not follow desired descent profile.	3	2	3	2	10. (Same as 8.)
11. Sense 0.05g from IMU Accelerometer	● 0.05g No Sensed	● None	1	1	1	1	11. 0.05g is sensed by 0.05g switch in IMU.
12. Sense 0.5g with no Radar Altimeter reliable operate logic signal present.	● 0.5g signal not sent to S & T	● None	1	1	1	1	12. Landing radar will be turned on by radar altimeter.
13. Sense Terminal Propulsion Motor Failure	● Failure Not Sensed	● Aerodecelarator will be released	3	2	3	2	13. This function provided to retain parachute to allow more time for data transmission.
14. Sense h = 10 ft.	● Not Sensed	● Terminal propulsion motors will not be turned off until landing.	2	1–2	2	1–2	14. Motors will be turned off by impact sensors.
15. Mode Control	● G & CC does not operate on proper mode when commanded.	● CBS control will be incorrect.	3	2	3	2	15.1 If G & C is placed in wrong mode at wrong time, CBS will be improperly controlled. 15.2 (See 4.2)
Power Supply							
16. Any Power Supply Voltage	● Out of Tolerance	● Possibly Catastrophic	1–3	1–3	1–3	1–2	16.1 Degree of out-of-tolerance determines failure category.
	● Loss of any Voltage	● No G & C IMU or Computer Operation.	3	3	3	2	16.2 Success probability of CBS attitude control could be increased by providing redundant power supplies.

9.7.2 Safety Considerations - No safety problems are anticipated with this subsystem. The GCS consists of two self-contained units. Neither contains explosive gas mixtures or pyrotechnics. No high voltages are used in any of the circuitry.

9.8 TEST - The GCS design incorporating the digital IMU and the Guidance and Control Computer makes the job of testing, in particular In-Flight Monitoring and Checkout, comparatively easy. The computer interfaces with the OSE for pre-flight functional tests and with the Test Programmer to perform in-flight checkout and sensor calibration. Computer memory has been sized to accommodate self-test routines.

9.8.1 In-Flight Monitoring and Checkout - The built-in test hardware of the GCS consists of a precision current source in the IMU and necessary switching circuitry for torquing the inertial sensors to simulate rate inputs to the gyros and acceleration input to the accelerometer. Also, each gyro incorporates a Spin Motor Rotation Detector (SMRD) as a diagnostic feature. The GCC contains diagnostic routines which are performed for computer self-test, and for test of the IMU. A particularly attractive feature of the design is that the computer can perform drift calibration checks on the gyros.

A complete end-to-end functional check of the GCS is performed in orbit around Mars prior to Capsule Separation. The Test Programmer initiates the self-test which is conducted solely by the computer. Prior to these tests the GCS is turned on for gyro drift checks. The drift rate for each gyro is monitored by the computer and its memory is updated to account for these biases in all applicable routines.

9.8.2 Pre-Flight Tests - Pre-flight tests on the GCS system can be performed so as to take full advantage of ground based OSE functions. For a system with a high degree of self-checking capability, the advantages of ground based OSE are primarily in flexiblity of test and superior monitoring devices. For an example, special test programs could be loaded into the computer. A total comprehensive computer self-check program would be superior to the limited self-check performed in-flight. With separate test routines, tests can be more comprehensive where required.

The basic test outline (which is good for both pre-flight and in-flight tests is presented below:

- o Self-check - computer
- o Interface check -
  - a. Computer - telemetry
  - b. Computer - IMU
  - c. Computer - radar
  - d. Computer - radar
  - e. Computer - descent engine
  - f. Computer - timer
- o System checks -

  End-to-end checks with simulated inputs where possible; example - IMU - computer - RCS test

The level of detail for pre-flight tests will be greater than for in-flight checks.

9.8.3 Unique Test Features - Two types of tests can be performed by the computer, internal self-check and GCS interface and system checks. Internal programs test computer logic for arithmetic operations. Also algorithms can be performed on a regular basis by the program. Status discretes can be outputted via telemetry. Systems checks require more effort. To check internal interfaces, simulated torquing signals must be supplied to the gyros and accelerometer. The computer simulates a problem, processes the outputs, and checks for the proper command to the propulsion subsystems. To perform a complete end-to-end test, the output signals can be monitored by telemetry.

Many variations in this theme can be applied if all input and output interfaces can be exercised during the test mode. A somewhat larger computer may be required but the end result is high confidence in the on-board systems after a satisfactory checkout.

9.9 DEVELOPMENT REQUIREMENTS - All equipment comprising the CGS is within the realm of state-of-the-art technology. Anticipated areas of difficulty will be in qualifying the subsystem for sterilization and for the long term storage requirements of the mission.

9.9.1 IMU - The digital IMU of the GCS will incorporate sterilizable sensors. One version of the selected gyro is used on a classified Air Force space program. The concept of body mounted pulse rebalanced sensors has successfully been used for space missions, for example, in the PRIME system with environmental extremes ecceeding those expected for the VOYAGER Capsule. The LM Abort Sensor Assembly, an IMU

containing pulse rebalanced gyros and accelerometers, has successfully completed qualification testing.

Programs in gyro and accelerometer sterilization currently being conducted by JPL are expected to culminate in the verification that VOYAGER type inertial sensors can be sterilized and still perform to meet the VOYAGER requirements.

9.9.2 Computer - The computer can be mechanized from existing state of the art components and technology. This does not preclude the use of components such as large scale integrated circuits which are presently being developed. Future development of this type may reduce size, power and weight.

9.9.2.1 Memory - One area which deserves special attention is the memory. A choice of hard wire read only, electrically alterable read only, and destructive readout is available. These memories are well developed and time proven. The electrically alterable read-only memory offers advantages of power savings when compared to DRO and flexibility of programming when compared to hard wired types. Although both thin film and ferrite read only electrically alterable exist, great care should be taken to insure that the selected memory in the production model computer is not sensitive to electrical transients generated either external or internal to the computer. At least 1 month of extensive noise testing is required with emphasis on computer interface lines. Also, the long term storage requirements of the memory must be verified. Tests on this item will necessarily follow the sterilization qualification of memory components. Tests will verify that the memory maintains information for as long as necessary under conditions similar to those required by the mission.

9.8.2.2 Sterilization - No severe problems are expected as a result of sterilization cycles. Contracts are underway to develop the most critical item, the memory, to pass the requirement. Progress reported on JPL contract No. 950986, Nondestructive Readout Data Memory Unit, is that a breadboard unit was delivered in December 1966; a qualification unit is to be delivered in February 1968. On a NASA/Goddard contract, NASS-10077, Random Access Memory System, an engineering unit is scheduled for delivery in November 1967, followed by the qualification unit four months later.

SECTION 10

GUIDANCE SENSOR SUBSYSTEM (RADAR)

This subsystem consists of two major equipment items; a Radar Altimeter and a Landing Radar. Separate functional descriptions for each follow. Appropriate interface information is contained therein.

10.1 RADAR ALTIMETER

10.1.1 Equipment Identification and Usage - The Radar Altimeter equipment, which is part of the Guidance Sensor (Radar) Subsystem, includes the following items: (1) Electronics package mounted on the Capsule Bus (includes secondary antenna) (2) Conical monopole primary antenna on the nose cap (3) RF cable connecting the electronics package and primary antenna. Figure 10.1-1 shows the installation of the Radar Altimeter equipment.

The altimeter, operating at 1 GHz, is an altitude measuring radar using broad-beam antenna coverage, pulsed RF and servo controlled range tracking. Threshold detection of the returned signal leading edge and early/late gate tracking allow direct altitude measurements to be made from 200,000 ft to 50 ft. The primary antenna (conical monopole) is used until the Aeroshell is released and the secondary antenna (dipole) on the electronics package is used. The transmitter pulse width and IF bandwith is switched at 5,000 feet to allow operation down to a minimum of 50 ft.

The primary function of the Radar Altimeter is to provide output signal marks at various altitudes to the Sequencer subsystem to initiate immediate operations or subsequent actions. The altimeter also provides backup marks to the Sequencer, Pyro and Propulsion subsystems. Continuous altitude and altitude rate data is supplied to the Guidance and Control Computer as a functional backup to the Landing Radar range beam. Continuous altitude data will also be sent to the Telecommunication subsystem at a 1 sample per second rate to provide Entry Science data correlation and aid in post-mission analysis.

Secondary uses will be to: (1) provide data on the Martian surface back-scattering coefficient (σ_0) at 1 GHz, by automatic gain control (AGC) measurements sent to the Telecommunication subsystem, (2) obtain limited entry plasma data by measuring the transmitter power incident on, and reflected from the plasma sheath.

Major elements of the Radar Altimeter subsystem with multi-channel receiver redundancy are shown in the functional block diagram, Figure 10.1-2.

10.1.1.1 Primary Antenna - A conical monopole antenna with a 255 degree electrical length and a 50 degree flare angle provides optimum coverage. The radiation pattern for this antenna is shown in Figure 10.1-3 physical characteristics of this antenna are described in Section 10.1.3.2.

10.1.1.2 Secondary Antenna - A half-wave dipole antenna, encased in a dielectric material and mounted on the altimeter ground plane provides coverage after Aeroshell separation. The radiation pattern for this dipole is also shown in Figure 10.1-3.

RADAR ALTIMETER EQUIPMENT LOCATION

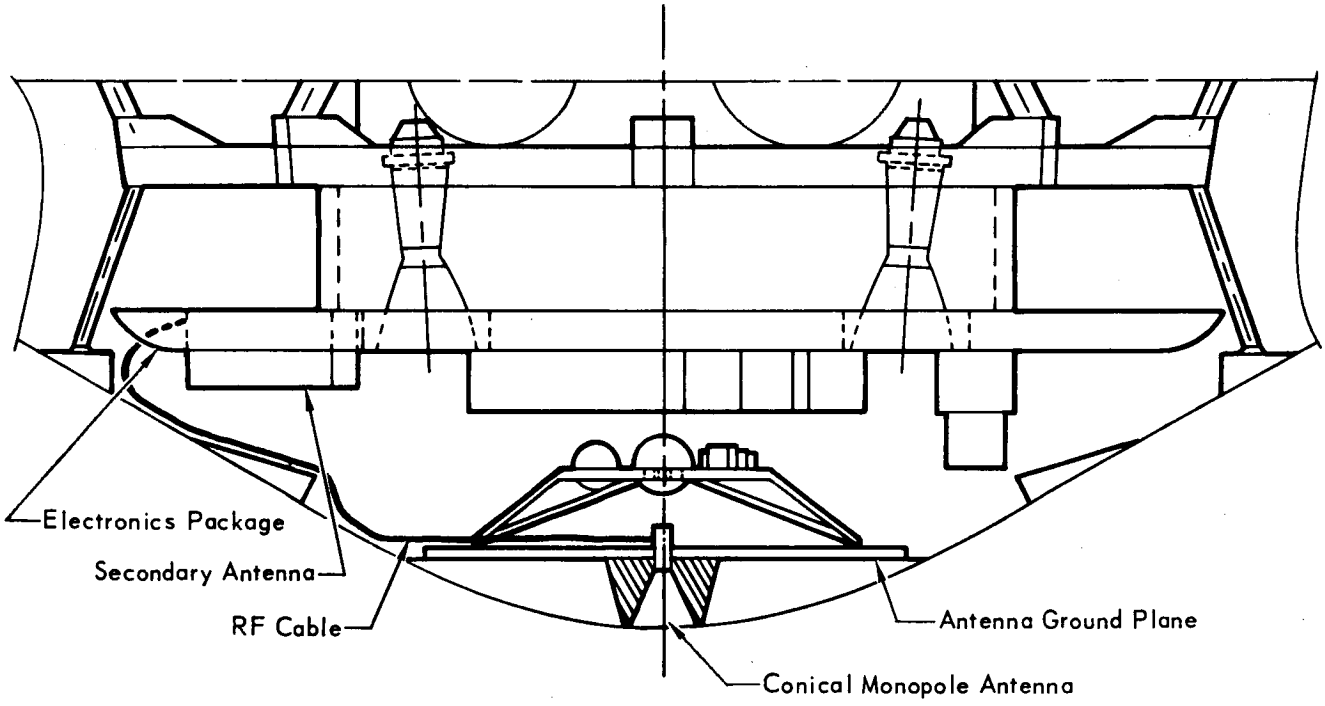

Figure 10.1–1

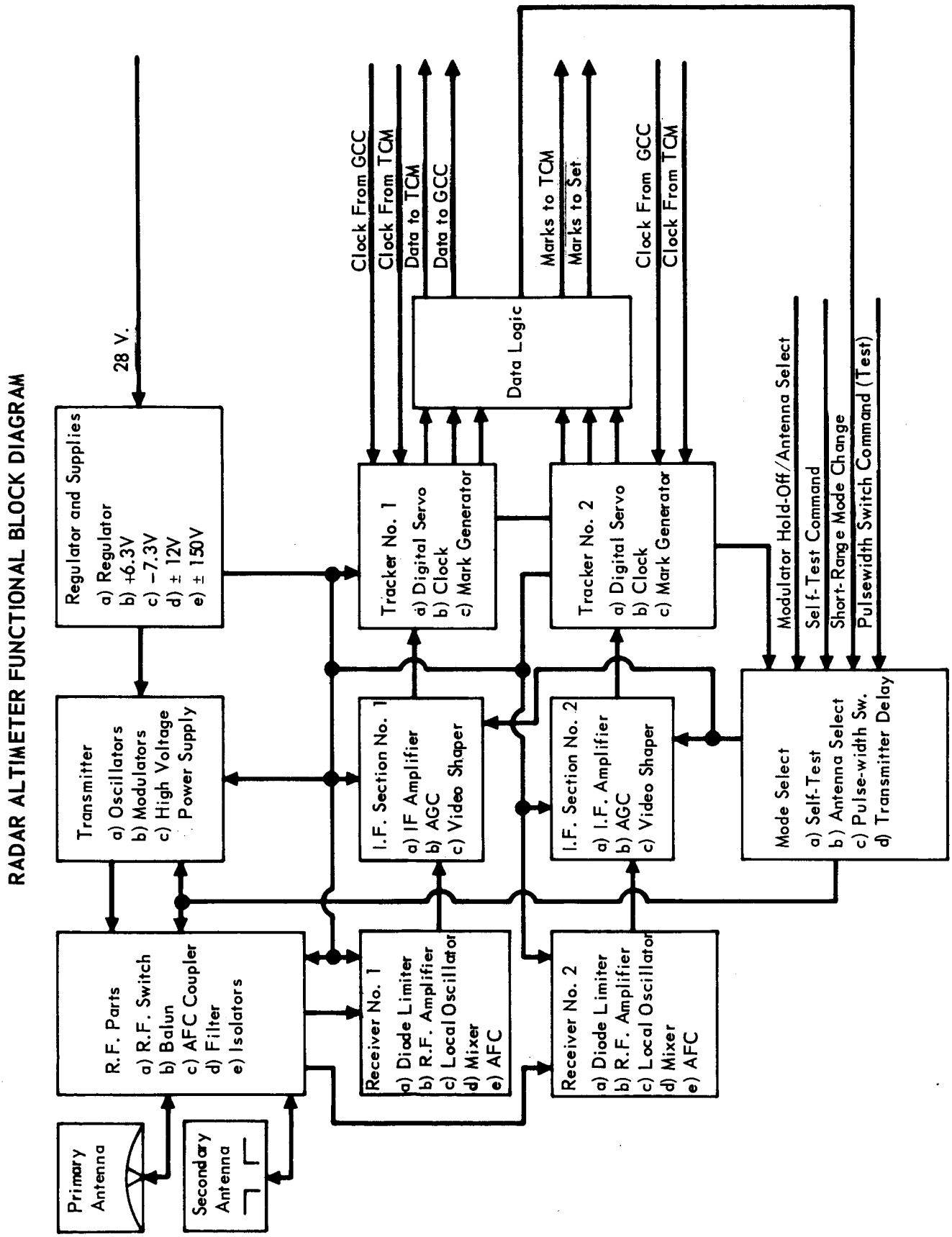
RADAR ALTIMETER FUNCTIONAL BLOCK DIAGRAM
28 V.
Regulator and Supplies
a) Regulator
b) +6.3V
c) −7.3V
d) ± 12V
e) ± 150V
Transmitter
a) Oscillators
b) Modulators
c) High Voltage Power Supply
R.F. Parts
a) R.F. Switch
b) Balun
c) AFC Coupler
d) Filter
e) Isolators
Primary Antenna
Secondary Antenna
Clock From GCC
Clock From TCM
Data to TCM
Data to GCC
Data Logic
Marks to TCM
Marks to Set
Clock From GCC
Clock From TCM
Tracker No. 1
a) Digital Servo
b) Clock
c) Mark Generator
Tracker No. 2
a) Digital Servo
b) Clock
c) Mark Generator
I.F. Section No. 1
a) IF Amplifier
b) AGC
c) Video Shaper
I.F. Section No. 2
a) I.F. Amplifier
b) AGC
c) Video Shaper
Receiver No. 1
a) Diode Limiter
b) R.F. Amplifier
c) Local Oscillator
d) Mixer
e) AFC
Receiver No. 2
a) Diode Limiter
b) R.F. Amplifier
c) Local Oscillator
d) Mixer
e) AFC
Modulator Hold-Off/Antenna Select
Self-Test Command
Short-Range Mode Change
Pulsewidth Switch Command (Test)
Mode Select
a) Self-Test
b) Antenna Select
c) Pulse-width Sw.
d) Transmitter Delay

Figure 10.1-2

RADAR ALTIMETER ANTENNA RADIATION PATTERNS

A PRIMARY ANTENNA (CONICAL MONOPOLE)
B SECONDARY ANTENNA (DIPOLE)

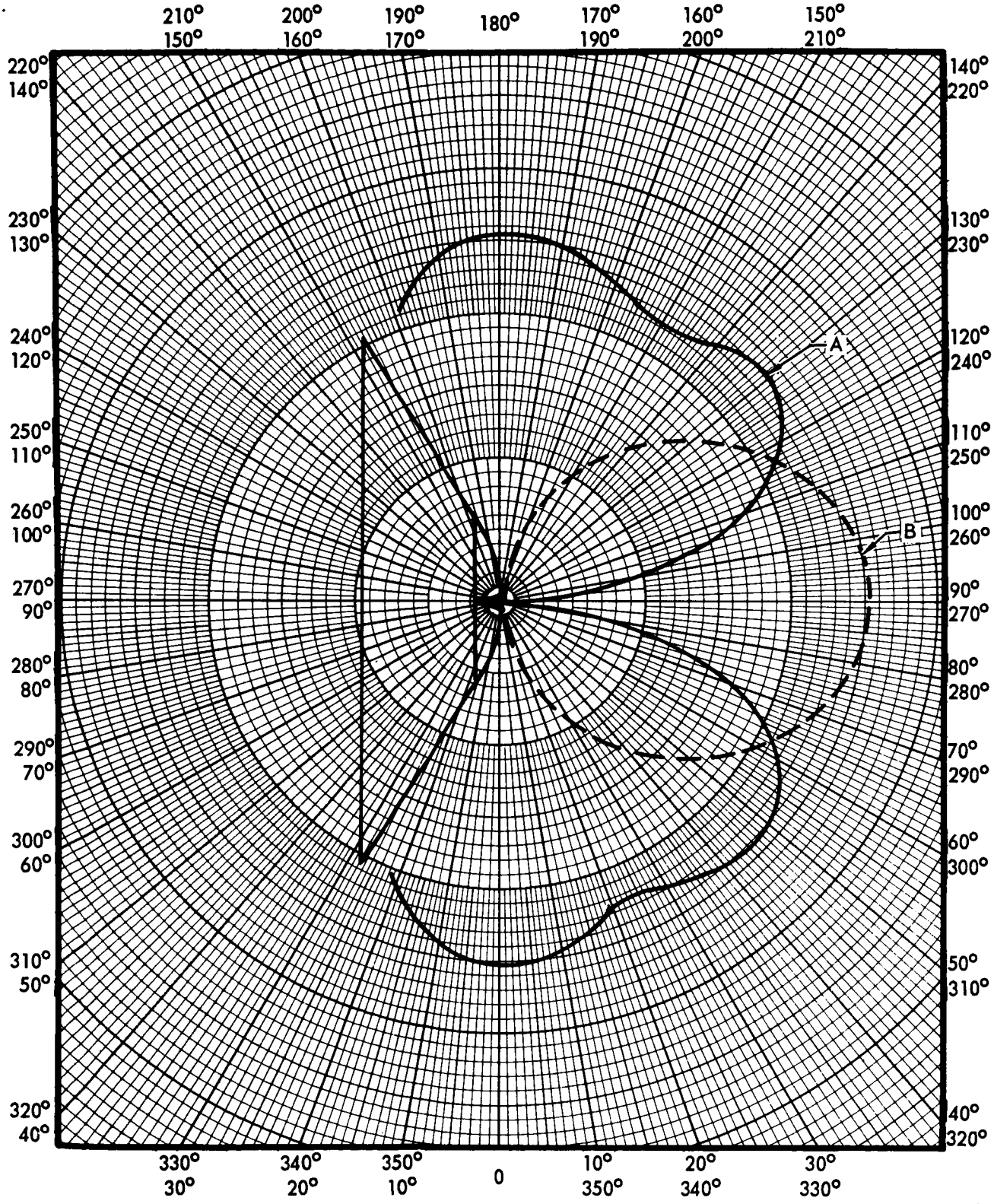

Figure 10.1–3

10.1.1.3 RF Parts Section - This section consists of elements such as the antenna balun, RF switches, isolators and circulators which direct the transmitted and received RF energy.

10.1.1.4 Receiver/RF Amplifier - Contains the diode switches, RF amplifier, local oscillators and mixer to process the incoming signal to an intermediate frequency (IF).

10.1.1.5 IF Section - Amplifies and controls the level of the IF signal, envelope detects the signal and provides a shaped video pulse to the tracker section.

10.1.1.6 Altitude Tracking Section - By using either present threshold detection or leading edge centroid tracking techniques the tracker servos a range gate around the returned video pulse. Elapsed time count from the leading edge of the transmitted pulse to the leading edge of the range gate provides an accurate measurement of altitude.

10.1.1.7 High Voltage Power Supply (HVPS), Modulator and Transmitters - This section provides high voltage, and modulation pulses to the triode/stripline oscillators, to generate RF pulses at a 1000 pulses per second repetition frequency.

10.1.1.8 Voltage Regulator and Main Power Supplies - Filters and regulates the primary input voltage, and supplies regulated voltages to the altimeter major elements from a multi-tap dc-to-dc inverter.

10.1.1.9 Mode Select and Self-Test Section - Contains the logic and electronics required to perform the self-test, modulator hold-off, antenna selection, pulse width and IF bandwidth switching functions.

10.1.2 Design Requirements and Constraints - A list of constraints and operational requirements which influenced the altimeter design are given in Figure 10.1-4.

10.1.3 Physical Characteristics

10.1.3.1 Electronics Package/Secondary Antenna - Figure 10.1-5 shows the altimeter outline and a general layout of the major elements in the electronics package. Parallel redundant receiver/RF amplifiers, IF sections, tracker electronics and transmitter oscillators are used to provide operation in the event a failure should occur in the transmitter or receiver. The high voltage power supply, modulator and low voltage supplies were considered for, but were not made redundant due to a large weight increase for a small reliability improvement. (See Section 10.1.7).

Major elements of the altimeter, such as the RF section, IF amplifier, tracker electronics, etc., can be fabricated as complete modules, tested individually and assembled into the final package. Extensive use of integrated circuits and thin film hybrid circuits provides a lightweight, high density design.

TABULATION OF RADAR ALTIMETER DESIGN REQUIREMENTS AND CONSTRAINTS

REQUIREMENT OR CONSTRAINT	REASON
1. Hemispherical antenna Pattern coverage	To allow altimeter operation with variations in flight path angle and no preferred roll orientation
2. 200,000 ft. maximum altitude	To enable accurate determination of atmospheric profile and provide altitude mark capability
3. 50 foot minimum altitude	To allow functional backup to Landing Radar
4. Built in Self-test	To verify proper operation after cruise-storage, and allow alternate mission mode if failure has occurred
5. Size limitation on Antenna and Electronics	Aeroshell nose cap constrained to specific area, Lander shape requires shaped electronics package
6. Weight limitation	Capability of launch vehicle for interplanetary mission requires lightest possible equipment
7. Input power constraints	Must consume minimum power to conserve battery weight, must operate with fluctuating voltage levels
8. Electrical breakdown of High Voltage and R.F. sections must not occur	Variations and uncertainty in the Martian atmosphere, and high peak transmitter power allow the possibility of electrical breakdown at critical pressures
9. Compatible operation behind the Aeroshell	Operation during entry precludes the use of external antenna
10. Operate compatibly with part of mission in blackout region	Atmospheric profiles and entry vehicle geometry combinations allow varying blackout periods
11. Operate after Aeroshell release	Altimeter must provide backup to the Landing Radar
12. Operate with a -10dB backscatter coefficient	Uncertainty in the Martian backscatter coefficient calculations (-2 dB) require a safety factor
13. Withstand Temp., vibration etc. environments	VOYAGER Mission subjects equipment to severe environment
14. Parallel redundancy	Use of altimeter for critical marking functions requires high reliability
15. Operate at high altitude rates and accelerations	Entry trajectories generate high altitude rates

Figure 10.1–4

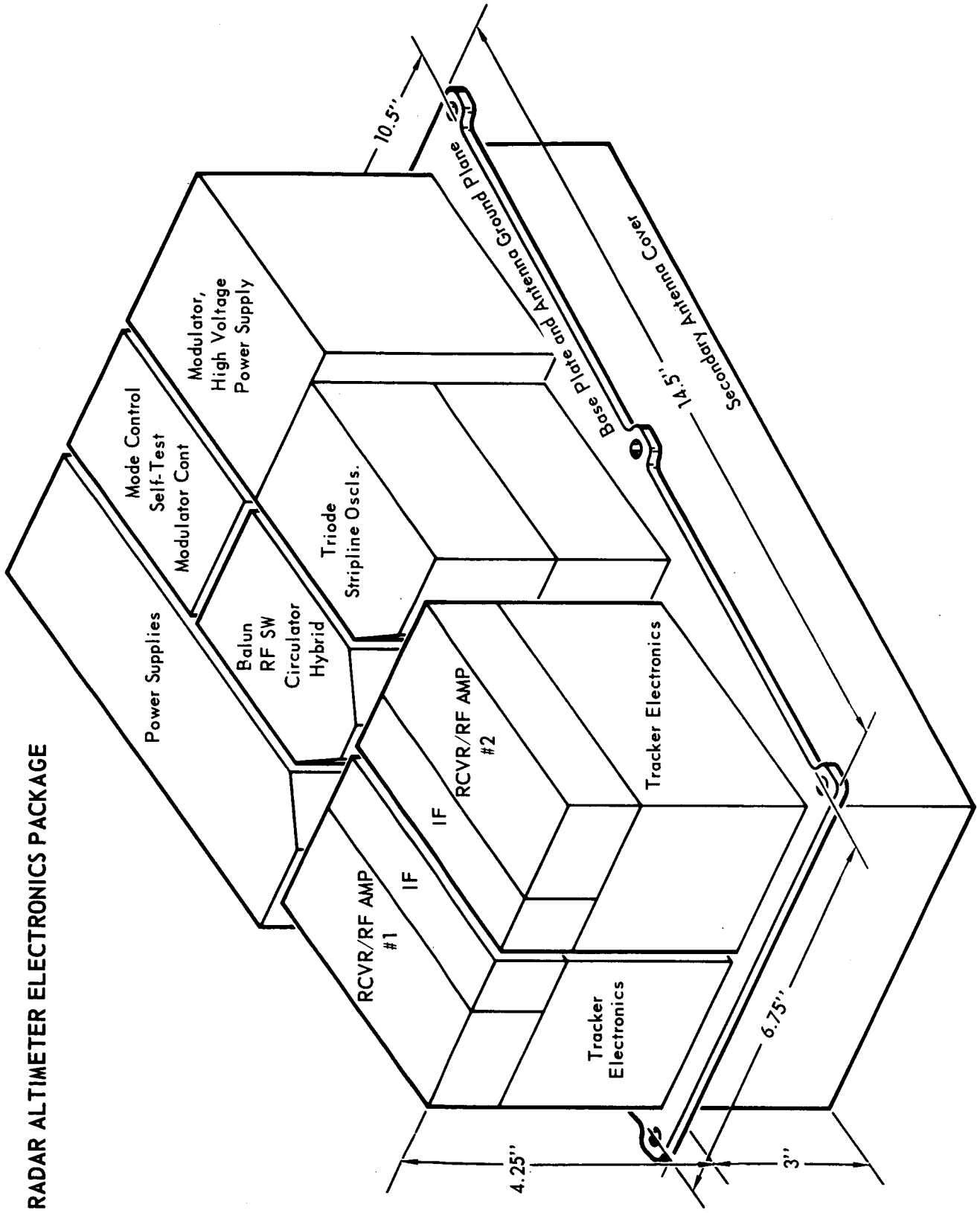
RADAR ALTIMETER ELECTRONICS PACKAGE
Power Supplies
Mode Control
Self-Test
Modulator Cont
Modulator,
High Voltage
Power Supply
Balun
RF SW
Circulator
Hybrid
Triode
Stripline Oscls.
RCVR/RF AMP
#1
IF
IF
RCVR/RF AMP
#2
Tracker Electronics
Tracker
Electronics
Base Plate and Antenna Ground Plane
Secondary Antenna Cover
10.5"
14.5"
6.75"
4.25"
3"

Figure 10.1-5

The major elements will be mounted on an aluminum baseplate, which serves as a heat sink and conductive heat transfer path. It also provides a ground plane for the secondary antenna. (See Figure 10.1-5). The integral modules will be attached to the baseplate to form a unified package of minimum volume having good heat transfer characteristics and structural integrity.

Sections of the altimeter which use or conduct high voltages will be designed to protect against any possibility of electrical arc or corona breakdown. The most reliable method of preventing electrical breakdown is to completely cover all leads and components subjected to high voltage gradients with insulative material to exclude the surrounding atmosphere. The high voltage power supply, modulator and triode-stripline oscillators will be completely potted in a silicone based insulating material. Most of the microwave RF parts such as the stripline, co-ax lines, circulator/isolator, etc., will be integrated into one package, the stripline assembly serving as the mounting surface for the other items. This design allows the RF components to be insulated from the atmosphere. Primary and secondary antenna radiating elements will be completely surrounded by a high temperature dielectric insulator which prevents electrical breakdown.

The altimeter will require about 40 watts of primary input power. Weight of the complete system is 33 lbs., 23 lbs. for the electronics package and 10 lbs. for the primary antenna. Volume of the altimeter is 900 cubic inches. An estimated weight breakdown for the redundant and non-redundant altimeter electronics package is tabulated in Figure 10.1-6.

10.1.3.2 Primary Antenna - Figure 10.1-7 shows the integrated spherical nose cap and conical monopole antenna with ground plane. Entry Science temperature and pressure transducers have been located inside the conical monopole to obtain atmospheric data without interferring with altimeter operation. Feed point for the antenna will be located one-quarter wave length away from the ground plane/monopole attachment point to allow the entry science transducer leads to pass through. Figure 10.1-8 shows a detailed view of the radiating element, feed point and Entry Science transducers. A lightweight dielectric material will be used to fill areas where high voltage gradients exist to exclude air and eliminate partial-pressure breakdown. Complete weight of the integral nose-cap/antenna assembly is 40 lbs., of which 10 is antenna weight.

10.1.4 Operational Description

10.1.4.1 Block Diagram - A detailed block diagram of the altimeter is given in Figure 10.1-9. Dotted lines around the blocks indicate those functions which make

ALTIMETER WEIGHT TABLE

SUBSECTION	WEIGHT IN BASIC ALTIMETER (oz.)	WEIGHT IN REDUNDANT ALTIMETER (oz.)
1. Secondary Antenna	32	32
2. Ground Plane and Hardware	53	62
3. RF Amplifier/Receiver	15	30
4. I.F. Section	18	36
5. Electronics Package/Tracker	24	48
6. Self-Test	16	16
7. Regulator/Power Supplies	30	36
8. High Voltage p.s./Mod./ Transmitter	65	80
9. RF Parts/Integrated RF	24	27
	277 oz = 17.3 lb.	367 oz = 23 lb.

Figure 10.1-6

RADAR ALTIMETER ANTENNA/NOSE CAP ASSEMBLY

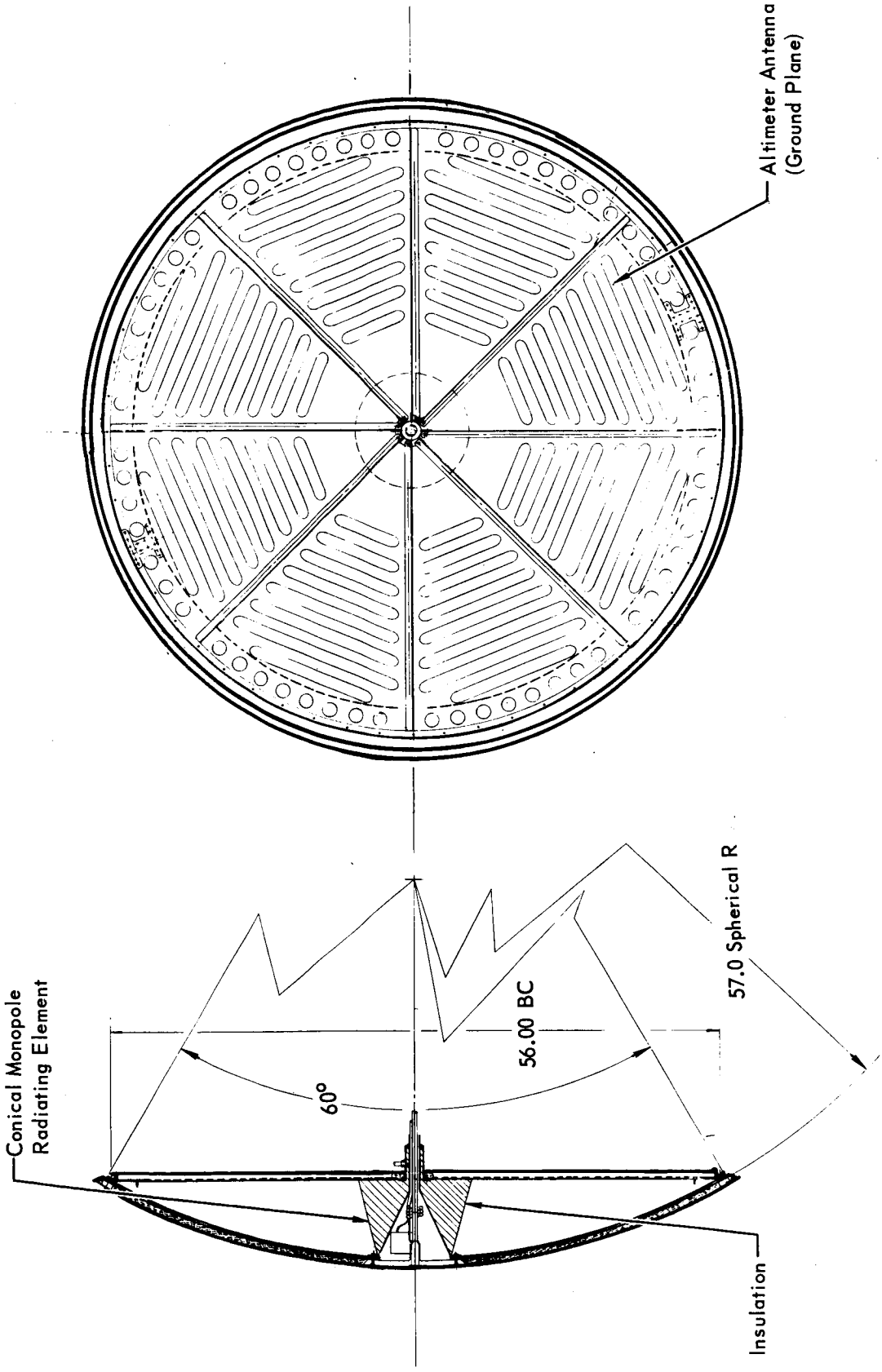

Figure 10.1-7

RADAR ALTIMETER CONICAL MONOPOLE ANTENNA AND ENTRY SCIENCE STAGNATION POINT INSTRUMENT HEAD

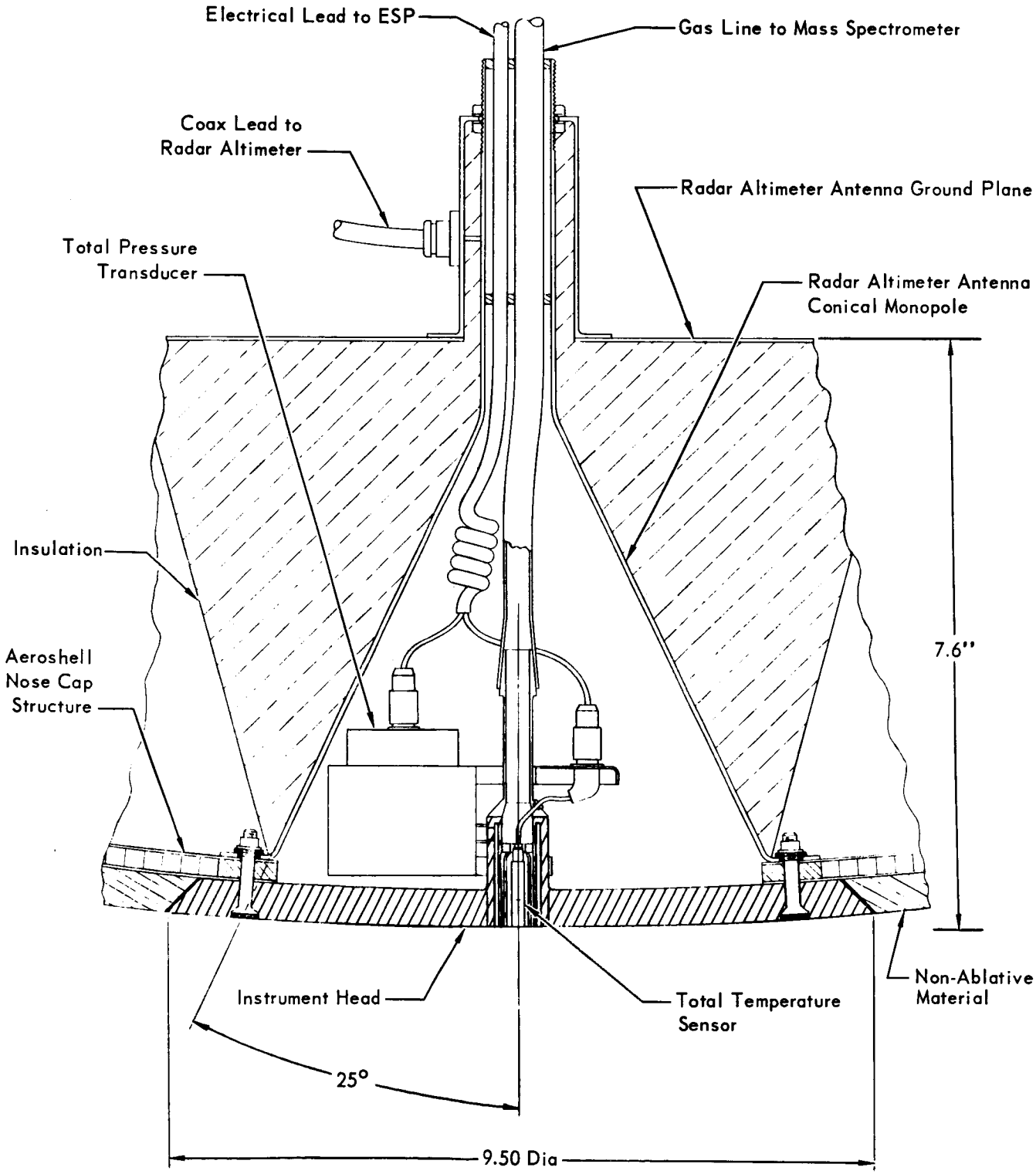

Figure 10.1-8

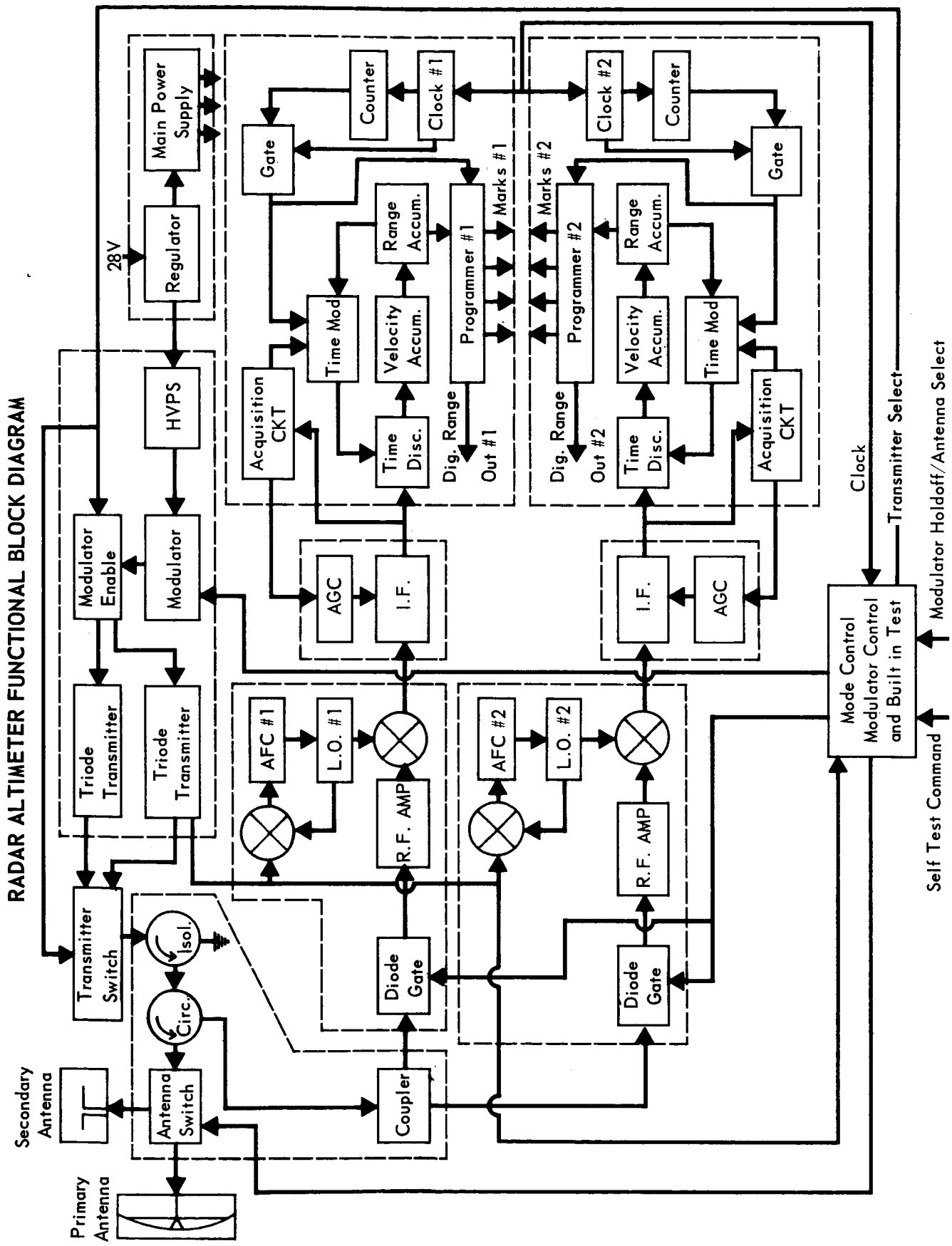
RADAR ALTIMETER FUNCTIONAL BLOCK DIAGRAM
Main Power Supply
Regulator
28V
HVPS
Modulator Enable
Modulator
Triode Transmitter
Triode Transmitter
Transmitter Switch
Isol.
Circ.
Antenna Switch
Secondary Antenna
Primary Antenna
Coupler
Diode Gate
Diode Gate
R.F. AMP
R.F. AMP
AFC #1
L.O. #1
AFC #2
L.O. #2
AGC
I.F.
I.F.
AGC
Acquisition CKT
Acquisition CKT
Time Disc.
Time Disc.
Time Mod
Time Mod
Velocity Accum.
Velocity Accum.
Range Accum.
Range Accum.
Programmer #1
Programmer #2
Gate
Gate
Counter
Counter
Clock #1
Clock #2
Marks #1
Marks #2
Dig. Range
Out #1
Dig. Range
Out #2
Clock
Transmitter Select
Modulator Holdoff/Antenna Select
Mode Control Modulator Control and Built in Test
Self Test Command

Figure 10.1-9

up a major element. The block diagram shows two independent receiving sections, and transmitter oscillators are used. This allows the altimeter to function normally in the event a failure occurs in one of the transmitters or receivers.

10.1.4.2 Functional Operation - Five microsecond RF pulses (long range) or 0.1 microseconds (short range) are generated by the high voltage power supply and modulator pulsing one of the two triode/stripline oscillators. (See Figure 10.1-9). The second triode is held in reserve with internal logic switching used to allow its operation in the event of a failure in the first triode. Switching will be used to prevent damage to the modulator in the event of a triode failure. A 1 KHz pulse train derived from synchronized clock oscillators is sent through the modulator control to the modulator. These pulses trigger a one-shot multivibrator to form a modulation waveform, which is amplified and applied to the grid of the triode oscillator to generate the RF pulses. The RF energy is transmitted through the AFC coupler, circulator/isolator and antenna switch to the primary (or secondary) antenna. Diode switches isolate the receivers during the transmitting period, and couple the returned RF energy. The returned signal is amplified, and mixed with the local oscillator signal to produce an Intermediate Frequency (IF). The IF pulses are amplified and regulated by the IF amplifier-AGC combination, envelope detected, shaped to accentuate the leading edge and then applied to the tracking section.

Conventional early-late gate tracking techniques are used in the tracking section. The early/late gates are centered over the desired section of the video leading edge by the altitude tracking servo system. An all-digital tracking loop has been developed and appears to be a desirable method of range tracking because the digital nature of the design eliminates temperature and time drift errors. (See Reference 10.1.4-1 and 10.1-4-2. Acquisition is performed by programming the position of the early-late gates from maximum to minimum time delay. As the gates sweep across the shaped video pulse, lock-on will occur and the system will begin tracking in altitude.

To prevent tracking loop unlock in case return signal fade momentarily reduces the video level, a 0.3 sec hold circuit will time out before the re-acquisition sweep begins. Re-acquisition sweep will begin at the altitude where loss of lock occurred, to enable rapid re-acquisition.

Digital range information from the altitude tracker/programmers will be sent to the Telecommunication subsystem. Digital altitude and altitude rate data will be sent to the flight control electronics computer to provide backup capability to the Landing Radar. Figure 10.1-10 shows the logic flow diagram to enable this data,

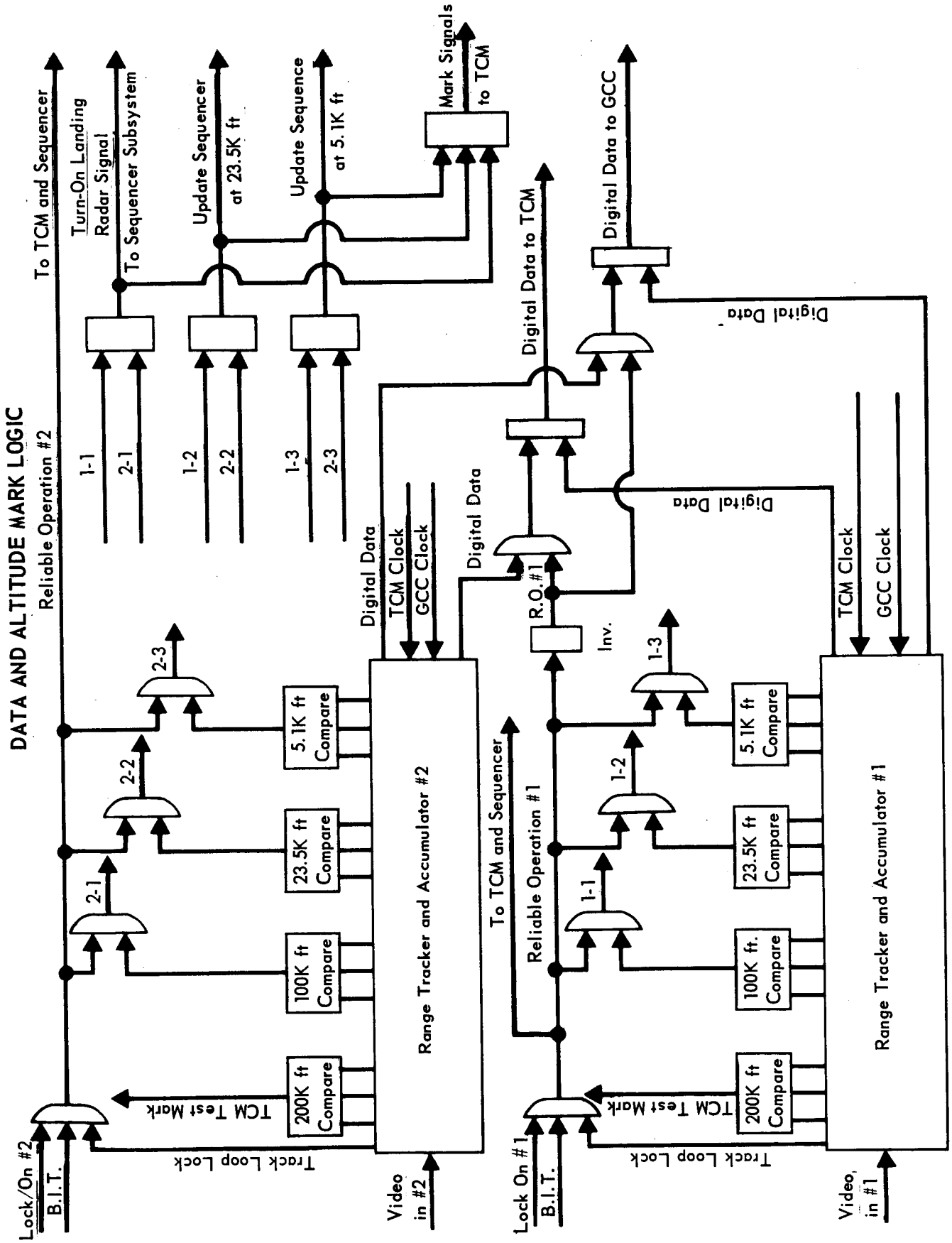

Figure 10.1–10

and altitude marks to be generated and sent to the Telecommunication, Guidance and Control, and Sequencer subsystems from the redundant tracker/programmers. Bit comparison of the range accumulator allows a trigger to be generated at any selected altitude or altitude interval. Marks will occur only if the unit is operating reliably. Reliable operation is determined by sensing lock-on, tracking loop operation and the absence of self-test to form a "reliable operation" signal. This signal allows the altitude trigger to pass to an "or" gate. The mark from either tracker No. 1 or tracker No. 2 will trigger a one-shot multivibrator to provide a signal to the system requiring the mark. Digital data from range accumulator No. 1 will be sent to the telecommunications and Guidance and Control Computer (GCC) if a "reliable operation" from channel No. 1 is sensed. In the absence of "reliable operation" from channel No. 1, the data from tracker and accumulator No. 2 will be used.

A self-test section provides the necessary logic and control to completely check-out the altimeter. Upon command from the test programmer the built-in test section initiates the test sequence. The modulator/transmitter begins transmitting at the system PRF. At a time delay corresponding to 200K ft from the transmitted pulse leading edge (T_o) the modulator is again triggered and the receiver is allowed to acquire this delayed "target" through calibrated leakage. An altitude mark corresponding to 200K ft, and digital altitude at 200K ft are sent to the Telecommunications subsystem, along with the performance evaluation data shown in Figure 10.1-15, Telecommunication/Altimeter Interface. This data will verify all major elements are functioning properly. After the 200,000 ft test using the primary antenna, the test programmer will send a test "modulator holdoff/antenna select" command through the sequencer to the altimeter and the above test will be repeated using the secondary antenna. The test programmer will finally send a test "pulsewidth switch" signal and the above test will be repeated in the short range mode. When the self-test command signal is removed, the altimeter will recycle to normal operation, transmitting through the primary antenna.

10.1.4.3 Mission Sequence - Prior to de-orbit, after the sterilization canister has been released, the altimeter will be energized by the application of primary power from the power subsystem. After a 3 to 5 minute warm-up, commands from the test programmer will enable the self-test circuit to perform the previously-described self-test. After de-orbit, 6 minutes before entry the altimeter will again be energized. Before an altitude of 600,000 ft has been reached the altimeter will begin transmitting. Between 225,000 and 200,000 ft altitude, the altimeter will lock-on to the surface and begin altitude tracking. At 100,000 ft a marking signal

will be generated, and sent to the sequencer subsystem to allow the power subsystem to apply primary power to the Landing Radar. The sequencer will provide a backup to this mark based on a timed interval from sensing .05g, in the event an altimeter "reliable operation" signal is not detected by the sequencer. At 23,500 ft a second mark is generated and sent to the sequencer for subsequent timed aerodecelerator deployment and Aeroshell release.

A back-up to this critical altitude mark will be provided to the sequencer by the guidance and control computer. The computer will calculate, as closely as possible, the velocity expected at 23,000 ft. When this velocity is sensed the computer will generate a mark to the sequencer which will enable the timed aerodecelerator deployment and Aeroshell release, if the "reliable operation" signal from the altimeter is absent.

One second prior to Aeroshell release, the sequencer will send a "modulator holdoff/antenna select" signal which disables the transmitter during Aeroshell release and antenna switching. Four to six seconds after Aeroshell release the altimeter will begin transmitting, re-acquire the surface and track in altitude. The 5 microsecond built-in receiver blanking will allow discrimination against near-returns from the Aeroshell and assure ground-return tracking. At 5,100 feet, a mark is generated and sent to the sequencer to perform a timed aerodecelerator release and terminal propulsion engine start. The 5,100 ft mark will internally perform pulse-width and IF bandwidth switching to allow operation down to 50 ft. The Landing Radar will provide backup to the 5,100 ft mark. Upon sensing 5,100 feet or lower, the Landing Radar mark will be sent to the sequencer to perform the functions if an altimeter "reliable operation" signal is not present.

During the interval from 5,000 feet to 50 feet, continuous altitude and altitude rate data will be supplied to the Guidance and Control Computer to provide a functional backup to the Landing Radar. Figure 10.1-11 shows the altimeter input/output and marking functions, starting at entry and including the terminal deceleration sequence.

10.1.5 Performance Objectives - The primary objectives of the Radar Altimeter are to: (1) Provide altitude marks for initiating sequencing functions and (2) Provide altitude data for Entry Science data correlation. An accuracy (3σ) of 1% $\pm$ 400 ft in the long range mode and 1% $\pm$ 25 ft in the short range mode is required. Operation will be from 200,000 ft maximum to 50 ft, minimum.

10.1.5.1 Performance Characteristics - The performance characteristics selected for the altimeter to meet these objectives are given in Figure 10.1-12.

VOYAGER RADAR ALTIMETER MISSION SEQUENCE

EVENT	SIGNAL SOURCE	SIGNAL DESTINATION	BACKUP SIGNAL	TIME	REMARKS
1. Turn On CB Radar Altimeter	CB S&T	CB RA		T_{14} - 6 min	
2. Begin Radar Altimeter Altitude - Tracking Search	CB RA	-	-	T_{14} - 5 min	Automatic 30-60 sec after (2)
3. Begin CB Radar Altimeter Tracking	CB RA	-	-	T_{16}	h = 200,000 ft
4. Turn On CB Landing Radar	CB RA	CB LR	S&T	T_{17}	h = 100,000 ft
5. Update CB S&T	CB RA	CB S&T	GCC	T_{19} - .5 sec	h = 23,500 ft
6. Start Altimeter Hold Off Signal	CB S&T	CB RA	-	T_{20} - 1 sec	
7. End Radar Altimeter Hold Off Signal	CB S&T	CB RA	-	T_{20} + 4 sec	
8. Update CB S&T	CB RA	CB S&T	CB LR	T_{21} - .5 sec	Update CB S&T at h = 5100 ft
9. Enable CB & SL Impact Sensors	CB RA	CB&SL IS	CB LR	T_{24}	h = 90 ft
10. Terminate CB Radar Altimeter Operations	CB LR	CB RA	CB IS	T_{25}	h = 50 ft

Figure 10.1-11

RADAR ALTIMETER FUNCTIONAL CHARACTERISTICS

CHARACTERISTIC	SYMBOL	VALUE
Frequency	f	1 GHz
Wavelength	λ	1 foot
Transmitter Repetition Frequency	f_R	10^3 Hz
Pulse Width	τ	5×10^{-6} seconds (Long Range) 1×10^{-7} seconds (Short Range)
Peak Transmitter Power	P_{pk}	500 watts (27 dBw)
Pulses Integrated (for acquisition)	N_i	25 – Long Range Mode 5 – Short Range Mode
Acquisition Sweep Time	T_{aq}	2 seconds
I.F. Bandwidth	B	2×10^5 Hz – Long Range 1×10^7 Hz – Short Range
Single Pulse Signal to Noise Ratio	S/N	3 db – Long Range Mode 27 db – Short Range Mode
Probability of Detection (Single-Sweep)	P_d	.95 – Long Range .99 – Short Range
False Alarm Time	T_{fa}	1 hour
System Noise Figure	N_f	6 db
System Losses (including Aeroshell)	L	6 db
System Noise Power	KT	4.14×10^{-21} watt-seconds (–204 dBw) (assumes 300°K system temperature)
Antenna Gain	G	1 (0 db) Long Range 1.59 (2 db) Short Range

Figure 10.1-12

10.1.5.2 System Accuracy - Altimeter accuracy analysis for a digital range tracking mechanism similar to that of References 10.1-9 and 10.1-10, and an analog range tracking loop similar to the Saturn altimeter is presented in Part B, Section 5.9.7 of this volume. Basic error sources were due to noise, quantization, deceleration lead error, ground return signal fluctuations and primary antenna pattern degradation. Noise, fluctuation error and quantization in the digital loop gave a (3σ) error of 435 feet at maximum range. Deceleration lag error occurred during the 150,000 to 30,000 interval and reached a maximum of about 146 feet.

Noise and fluctuation error for the analog tracking loop was found to be 1210 feet (3σ) at maximum range. Deceleration lag error was calculated to be about 28 feet in the deceleration interval from 150,000 to 30,000 feet. Differences in accuracy are due primarily to the loop constants selected for the two tracking loops. A digital computer program which simulates the different loop mechanizations will be implemented during Phase C. This will allow selection of loop parameters which best fulfill total mission requirements.

Insufficient ground illumination due to the null in the antenna pattern was found to contribute approximately 500 feet error. This was determined by calculating the return signal rise-time for two cases; (1) where the main-lobe, and (2) where the null in the pattern (See Figure 10.1-3) illuminated the surface directly below the altimeter. Figure 10.1-13 shows this error, due to the leading edge centroid being displaced approximately 1 microsecond from the "normal" rise time. This error occurs only for the V-10 atmosphere, in the interval from 30,000 to 20,000 feet. Total system accuracy, in percent of altitude measured, is shown in Figure 10.1-14. This is a composite of all errors and their effect as altitude decreases. Significant accuracy improvements occur at Aeroshell release (where the pattern null error is eliminated due to the radiation from the secondary antenna having no null about the roll axis) and at 5,000 feet where the pulse-width is switched to 0.1 microsecond.

10.1.5.3 Transmitter Power - Peak transmitted power required to achieve the performance objectives of Paragraph 10.1.5 were calculated in Part B, Section 5.9.7 of this volume from the standard radar equation:

$$P_{pk} = \frac{4(4\pi)^2 h^3 (KT) B N_f (S/N)\ L}{G^2 \lambda^2 \sigma_o C \tau} \qquad (1)$$

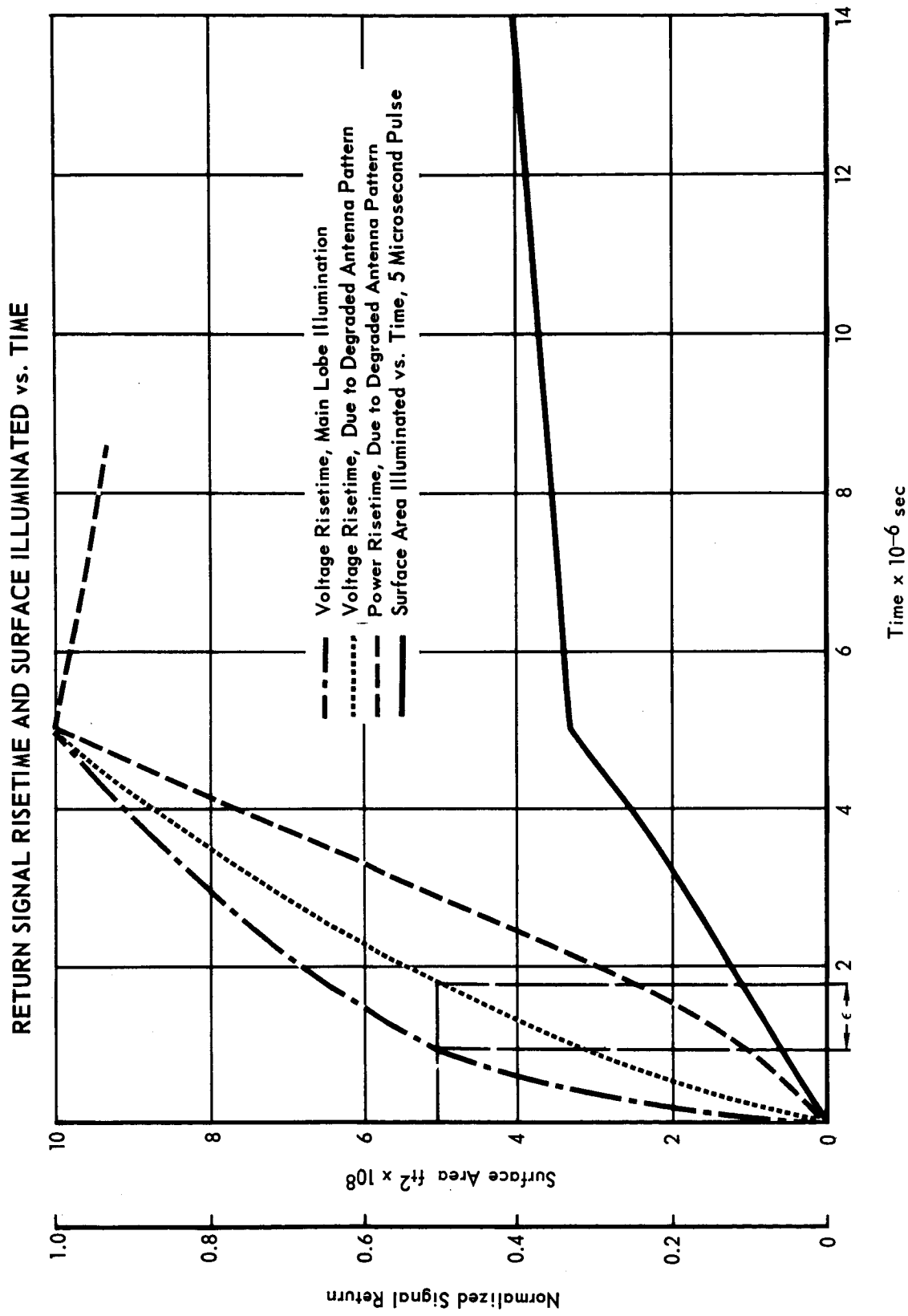

Figure 10.1–13

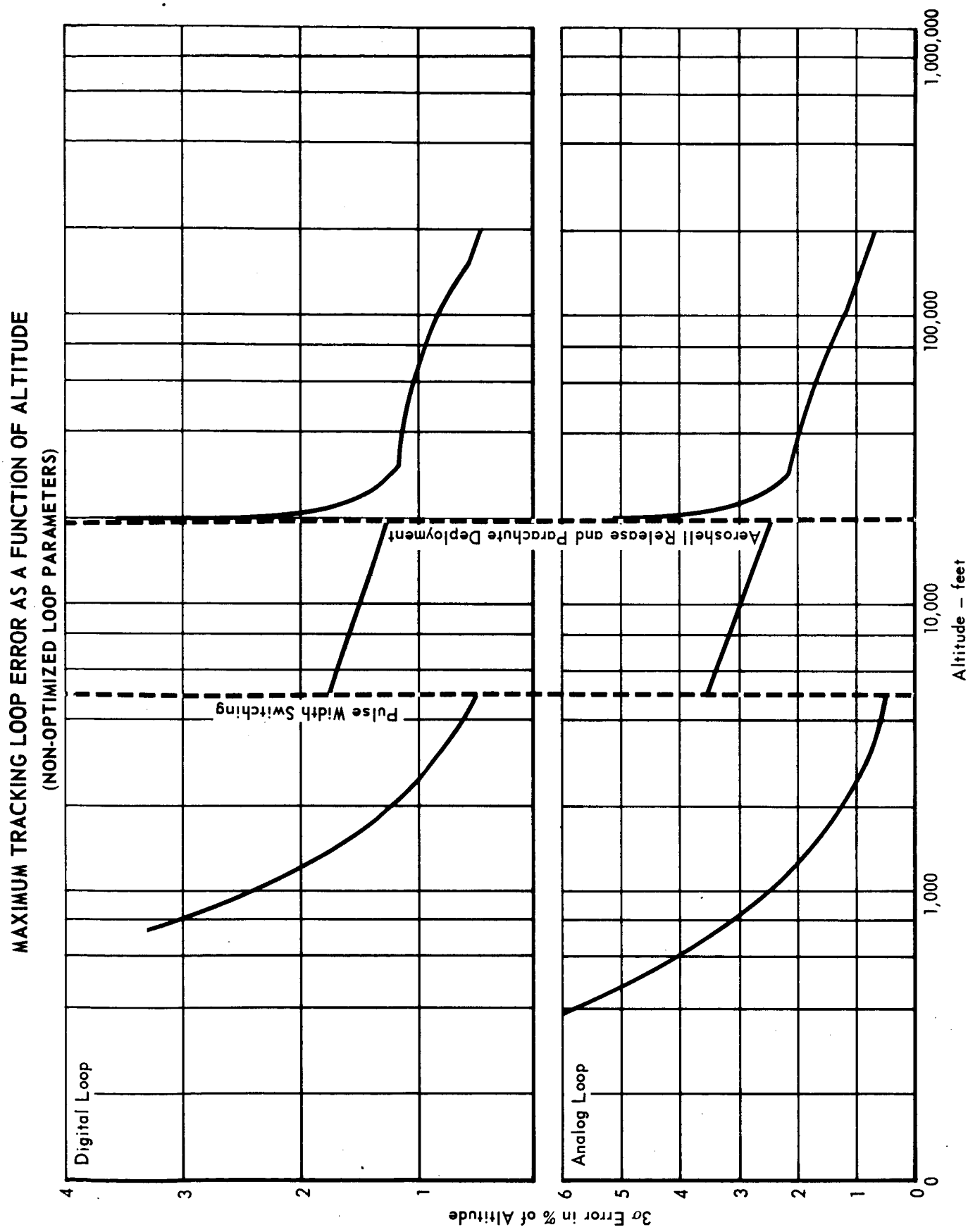

Figure 10.1–14

where the parameters are as specified in Figure 10.1-12. Substituting in the values for the parameters gives P_{pk} equal to 27 dbw, or 500 watts. Keeping the peak transmitter power at 500 watts after pulse width switching at 5,000 feet enables the signal to noise ratio (S/N) to increase to +41 db, which increases re-acquisition detection probability considerably.

10.1.6 Interface Definition - The altimeter will have an electrical inteface with the following subsystems:

- o Telecommunications
- o Flight Control Electronics
- o Test Programmer
- o Sequencer
- o Power
- o Operational Support Equipment

The altimeter will also have an RF connection via interconnecting cable from the electronics package to the primary antenna. Figure 10.1-15 interconnection block diagram shows these interfaces. Figure 10.1-16 lists the signals anticipated to be sent or received by the interfaces.

10.1.7 Reliability Considerations - An optimum landing can be achieved only if the altimeter successfully performs its functions. Based on this mission dependence, redundancies were incorporated in the altimeter to improve the probability of success.

10.1.7.1 Reliability Improvement Considerations - Several combinations and alternatives were available to increase the altimeter reliability. As a result of Capsule Bus weight and reliability trade studies, redundant transmitter tubes and receiver/tracker channels were incorporated in the altimeter design.

From the studies it was determined that the redundancies incorporated offered a significant increase in the probability of a successful landing per pound of redundant weight. The redundancies actually incorporated (Item 4) and others which were considered are presented in Figure 10.1-17. Redundancy types are defined as follows:

- o Multi-channel - Function is performed by equipment divided into two or more independent portions. If one portion fails the function will still be performed with some degradation possible. No failure sensing and switching is required.
- o Functional - Function is performed by two or more physically different and independent elements. One element usually serves as a primary source, the other serves as an alternate or backup.

INTERFACE BLOCK DIAGRAM

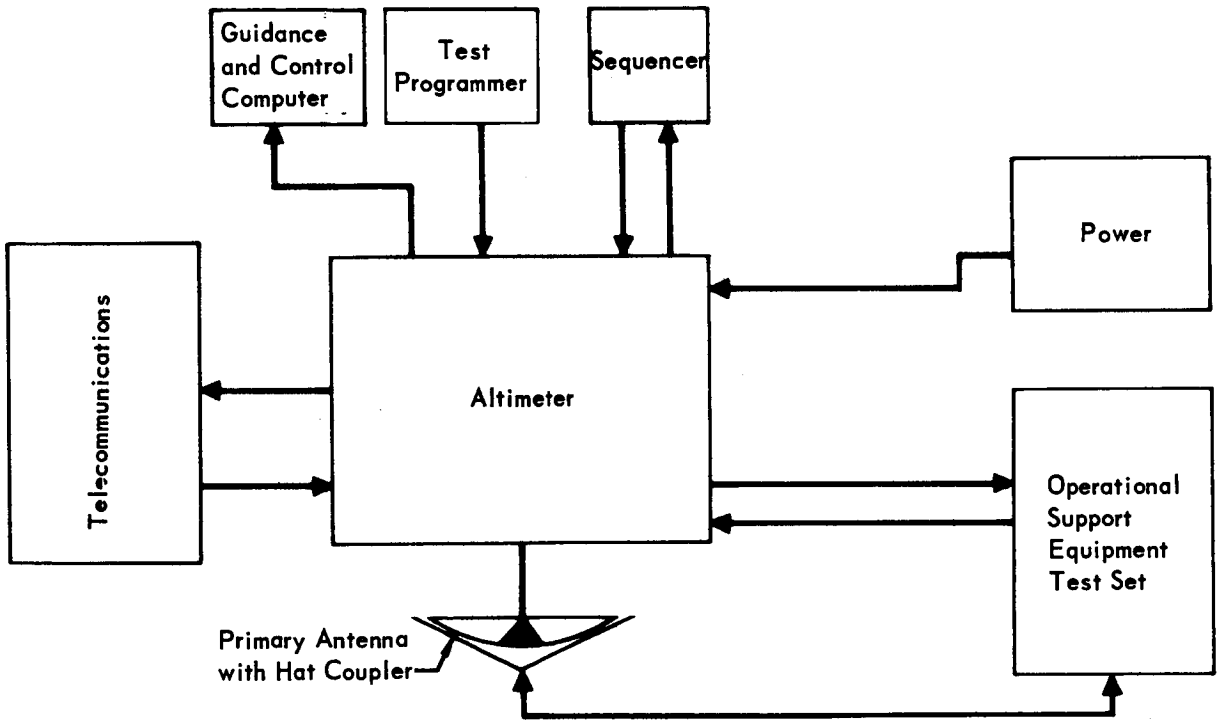

Figure 10.1–15

ALTIMETER INTERFACE

ALTIMETER INTERFACE WITH	INPUT TO ALTIMETER	OUTPUT FROM ALTIMETER
1. Telecommunications	1. Data request 2. Clock	1. Digital data (altitude, crystal current, false-alarm count) 2. Primary power applied signal 3. Regulator output signal 4. Power supply voltages 5. Temperature data 6. AFC signal 7. AGC signal 8. Transmitter incident voltage 10. Transmitter reflected voltage 11. Transmitter plate current 12. Tracker operating signal 13. Modulator hold-off 14. Long/short range mode 15. Altitude marks 16. Antenna switch position 17. Range bit compare for built-in-test 18. Reliable operation signal
2. Flight control electronics		1. Digital altitude data 2. Digital altitude rate data
3. Test programmer	1. Build-in test command 2. Modulator hold-off/ antenna select	
4. Sequencer & timer	1. Modulator hold-off/ mode change	1. Turn-on landing radar 2. Update S & T at 23,250 ft 3. Update S & T at 5,100 ft

Figure 10.1–16

ALTIMETER INTERFACE (Continued)

ALTIMETER INTERFACE WITH	INPUT TO ALTIMETER	OUTPUT FROM ALTIMETER
5. Power	1. Primary input power	
6. Operational Support Equipment	1. Simulated R.F. returns 2. Primary power (test) 3. TCM data request (test) 4. TCM clock (test) 5. Built-in test signal (test) 6. Modulator hold-off (test) 7. Mode change (test)	1. Digital (test) data 2. Primary power applied (test) 3. Regulator output (test) 4. Power supply voltages (test) 5. Temperature data 6. AFC (test) 7. AGC (test) 8. Transmitter incident volts (test) 9. Transmitter reflected volts (test) 10. Transmitter pulse width (test) 11. Transmitter plate current (test) 12. Tracker operation (test) 13. Modulator hold-off (test) 14. System mode (test) 15. Altitude marks (test) 16. Antenna sw. position (test) 17. Built-in-test range comparison (test) 18. Reliable operation signal (test)

Figure 10.1–16 (Continued)

REDUNDANCIES CONSIDERED

REDUNDANCIES CONSIDERED	TYPE	IMPROVEMENT FACTOR	ΔP PER POUND ADDED WEIGHT	ΔP
1. None (Single Thread)	–	1.0	—	—
2. Redundant Transmitter Tubes	Block	1.1	.00005	.0009
3. Redundant RF Amplifier, I.F., and Tracker Channels	Multi-Channel	2.9	.00120	.0062
4. Number 2 and 3 Combined (Preferred Design)	Multi-Channel and Block	3.5	.00096	.0071
5. Two Complete Altimeters	Multi-Channel	15.2	.00079	.0088
6. Redundant Regulators and Power Supplies	Multi-Channel	1.2	.00042	.0013

Figure 10.1–17

- o Block - Function is performed by one of two or more identical units. When a failure in the operating unit is sensed, the backup unit is activated through switching.

The improvement factor is a ratio, defined as:

$$\frac{1 - \text{Reliability (non-redundant configuration)}}{1 - \text{Reliability (redundant configuration)}}$$

This illustrates the degree of improvement resulting from incorporating the redundant configuration. The total probability of success improvement is indicated in the column labeled "ΔP", and is the difference between the redundant, and non-redundant probability of success. Another basis for comparison is the increase in the probability of success, per pound of added weight for redundant elements, which is presented in the column labeled "ΔP per pound added weight." The final selection of redundancy was a compromise which eliminated a potential single-point failure (the transmitter tube) and also provided substantial reliability improvement per pound weight increase.

A reliability model of the selected Radar Altimeter design is presented in Figure 10.1-18. The model presents the success paths, the estimated success probability of major elements and the total estimated probability of success.

10.1.7.2 Failure Mode, Effect and Criticality Analysis - This analysis has been performed on the radar altimeter for the purpose of identifying sources of single-point failures. This analysis, presented in Figure 10.1-19 provides a logical approach for locating, defining and ranking altimeter failure modes which result in degraded mission performance or catastrophic mission failure. The major mission objectives are:

- o Achievement of Flight Capsule Landing
- o Performance of Entry Science Experiments
- o Performance of Landed Science Experiments
- o Measurement and Transmission of Engineering Performance Data

Failure categories are defined, according to the effect on major mission objectives, as follows:

1. No effect on mission objective
2. Degrading effect on mission objective
3. Catastrophic effect on mission objective

10.1.8 Test Requirements

10.1.8.1 Development Tests - These are covered in Section 10.1.9.

10.1.8.2 Qualification Tests - The Radar Altimeter will be qualified for all environments including sterilization prior to first flight article delivery.

RADAR ALTIMETER RELIABILITY MODEL

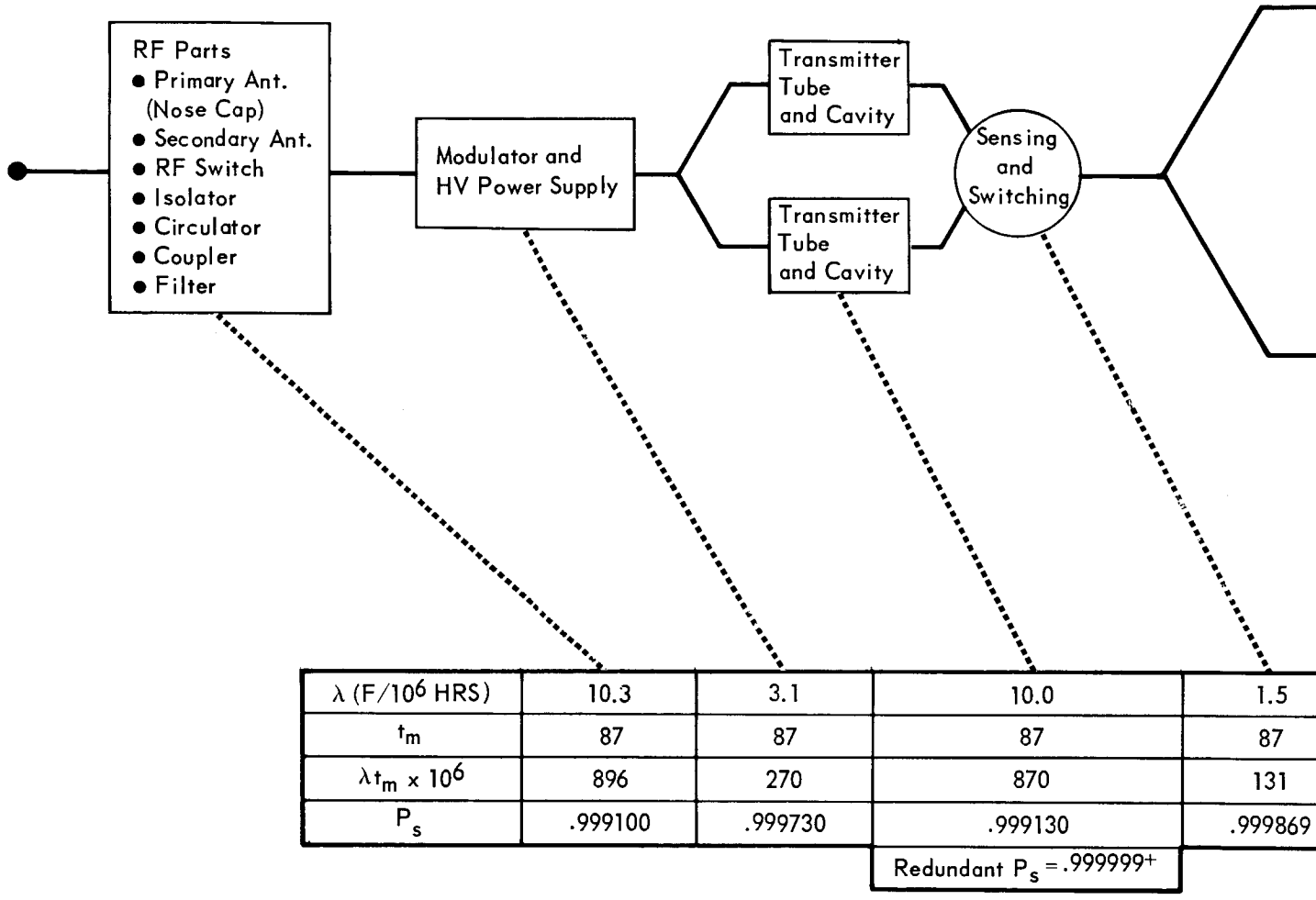

λ (F/10^6 HRS)	10.3	3.1	10.0	1.5
t_m	87	87	87	87
$\lambda t_m \times 10^6$	896	270	870	131
P_s	.999100	.999730	.999130	.999869
			Redundant P_s = .999999+	

Total Radar Altimete

Figure 10.1–18

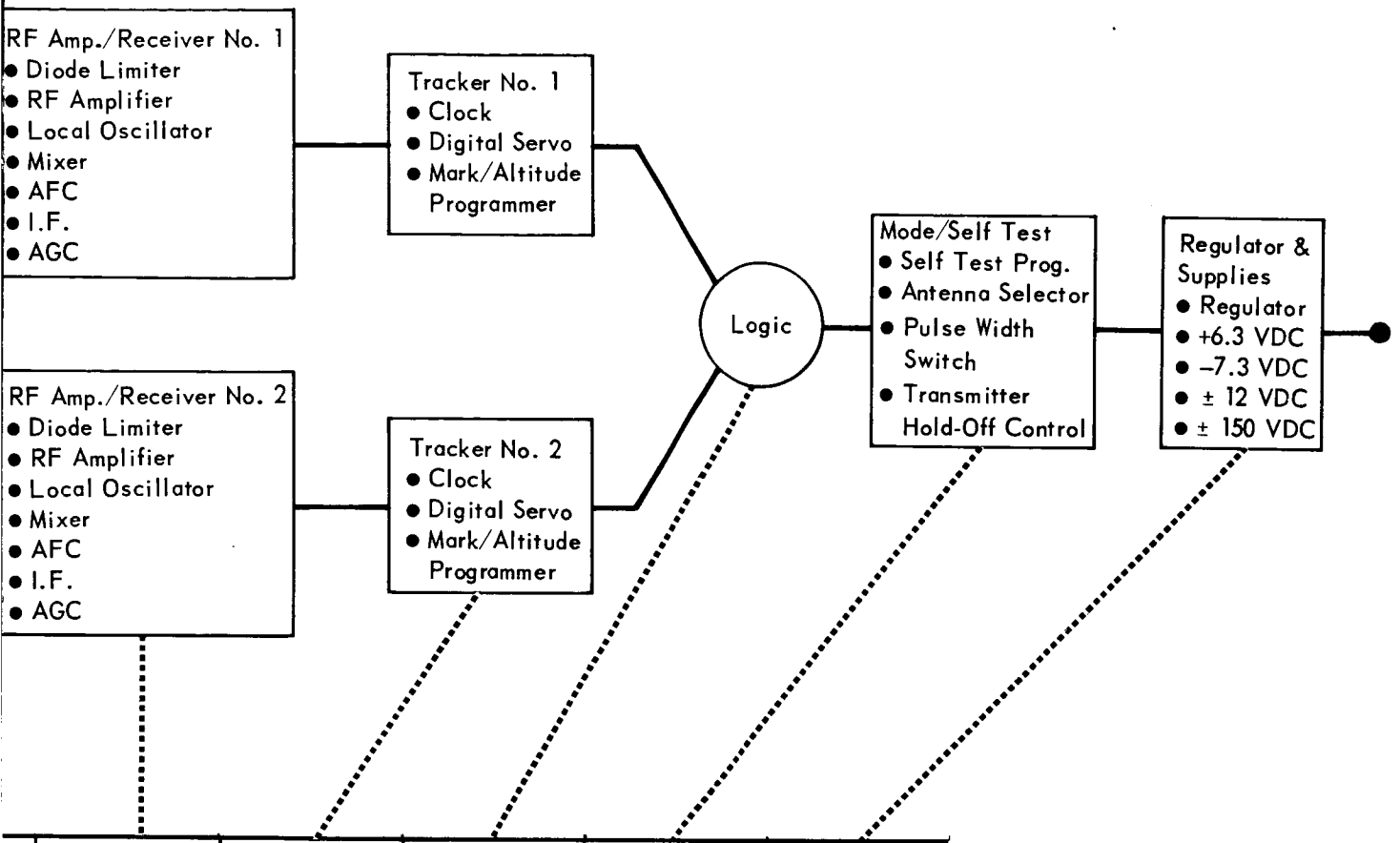

32.5	35.0	2.5	3.5	10.1
87	87	87	87	87
2828	3045	218	304	879
.997183	.996954	.999782	.999696	.999121

Redundant P_s = .999965

P_s = .9973

FAILURE MODE EFFECT AND CRITICALITY ANALYSIS
RADAR ALTIMETER

FAILURE CATEGORY DEFINITION
1. No Effect on Mission Objective
2. Degrading Effect on Mission Objective
3. Possible Catastrophic Effect on Mission Objective

COMPONENT OR FUNCTION	FAILURE MODE	FAILURE EFFECT	FAILURE CATEGORY: LANDING	ENTRY SCIENCE	LANDED SCIENCE	ENG DATA	REMARKS
1. Altimeter Function 1.1 Reliable Operate Logic Signal 1	• No logic signal when altitude data is good. • Logic signal present when altitude data is incorrect.	• None	1	1	1	1	1.1.1 Altitude data is available from altimeter channel 2.
		• Incorrect altitude data is available for entry science correlation and for landing radar backup.	1	2	1	1	1.1.2 A Range is provided to guidance and control computer (G&CC) from landing radar. 1.1.2 B Possible alternate to overcome loss of entry science altitude correlation. Send altitude data to TCM from both channels 1 and 2 regardless of status of reliable operate logic signals.
1.2 Reliable Operate Logic Signal 2	• No logic signal present when altitude data is good. • Logic signal present when altitude data is incorrect.	• None	1	1	1	1	1.2.1 Altitude data from Channel 1 is available.
		• None	1	1	1	1	1.2.2 Altitude data from Channel 1 is available for backup of range from landing radar and for entry science altitude correlation.
1.3 h = 100,000 ft Discrete, Channel 1	• No signal with reliable operate Logic Signal 1 present.	• None	1	1	1	1	1.3.1 100,000 ft mark for landing radar turn-on is provided by altimeter Channel 2 or from 0.5g signal from G&C computer.
	• Signal present and no reliable operate Logic Signal 1 present.	• None	1	1	1	1	1.3.2 (Same as 1.3.1)
1.4 h = 100,000 ft Discrete, Channel 2	• No signal with reliable operate Logic Signal 2 present.	• None	1	1	1	1	1.4.1 100,000 ft mark for landing radar turn-on is provided by altimeter Channel 1 or from 0.5g signal from G&C computer.
	• Signal present and no reli-	• None	1	1	1	1	1.4.2 (Same as 1.4.1)

Figure 10.1-19

	able operate Logic Signal 2 present.						
1.5 h > 23,000 ft Discrete, Channel 1	• No signal with reliable operate Logic Signal 1 present.	• None	1	1	1	1	1.5.1 h = 23,000 ft mark for initiation of aerodecelerator deployment sequence provided by altimeter Channel 2.
	• Signal present with no reliable operate Logic Signal 1 present.	• None	1	1	1	1	1.5.2 (Same as 1.5.1)
1.6 h > 5000 ft Discrete, Channel 2	• No signal with reliable operate Logic Signal 2 present.	• None	1	1	1	1	1.6.1 h > 23,000 ft mark for initiation of aerodecelerator release sequence provided by altimeter Channel 1.
	• Signal present with no reliable operate Logic Signal 2 present.	• None	1	1	1	1	1.6.2 (Same as 1.6.1)
1.7 h > 5000 ft Discrete, Channel 1	• No signal with reliable operate Signal 1 present.	• None	1	1	1	1	1.7.1 h > 5000 ft mark for terminal propulsion ignition is provided by Channel 2.
	• Signal present with no reliable operate Signal 1 present.	• None	1	1	1	1	1.7.2 (Same as 1.7.1)
1.8 h > 5000 ft Discrete, Channel 2	• No signal with reliable operate Signal 2 present.	• None	1	1	1	1	1.8.1 h > 5000 ft mark for terminal propulsion ignition is provided by Channel 1.
	• Signal present with no reliable operate Signal 2 present.	• None	1	1	1	1	1.8.2 (Same as 1.8.1)
1.9 Altitude Data, Channel 1	• No altitude data with reliable operate Logic Signal 1 present.	• No altitude data available for entry science correlation and for landing radar backup.	1	2	1	1	1.9.1 G&C receives range data from landing radar. (See also 1.1.2 B)
	• Correct altitude data available with no reliable operate Logic Signal 1 present.	• None	1	1	1	1	1.9.2 G&C receives range data from landing radar. Altimeter Channel 2 is available for backup of landing radar range and to supply altitude for entry science correlation.
	• Altitude data incorrect with reliable operate Logic Signal 1 present.	• Altitude data incorrect for entry science correlation and for landing radar backup.	1	2	1	1	1.9.3 (Same as 1.9.1 and 1.1.2 B)
1.10 Altitude Data, Channel 2	• No altitude data with reliable operate Logic Signal 2	• None	1	1	1	1	1.10.1 G&CC receives range data from landing radar. Altimeter Channel 1 is available for backup of landing radar range and

10.1-28-2

	present.						for backup of landing ~~radar range and~~ to supply altitude for entry science correlation.
	• Correct data available with no reliable operate Logic Signal 2 present.	• None	1	1	1	1	1.10.2 Altimeter Channel 1 is available for backup of landing radar range to G&CC and to supply altitude for entry science correlation.
	• Altitude data incorrect with	• None	1	1	1	1	1.10.3 (Same as 1.10.2)
2. Altimeter Elements							
2.1 Transmitter Tube 1	• Open filament.	• None	1	1	1	1	2.1 Transmitter 2 backup will take over function.
2.2 Transmitter Tube 2	• Open filament.	• None	1	1	1	1	2.2 Transmitter 2 is backup for No. 1.
2.3 Receiver and Tracker Channel 1	• Fails	• None	1	1	1	1	2.3 Receiver and tracker Channel 2 is available for landing radar range backup and for entry science altitude correlation.
2.4 Receiver and Tracker Channel 2	• Fails	• None	1	1	1	1	2.4 Receiver and tracker Channel 1 is available for landing radar range backup and for entry science altitude correlation.
2.5 Antennas, Circulator, Coupler, Power Supplies and regulators	• Fails	• No altitude output.	1	2	1	1	2.5 G&C accelerometer will deploy aerodecelerator in case of altimeter failure. No entry science altitude correlation available.
2.6 RF Switch	• Fails to make contact in nose cap antenna position.	• No altitude output.	1	2	1	1	2.6.1 (Same as 2.5)
	• Fails to switch to secondary antenna.	• Altimeter will not furnish 5000 ft mark to initiate terminal propulsion ignition and aerodecelerator release sequence.	1	1	1	1	2.6.2 Landing radar will provide backup initiation.

Qualification tests will include long-term vacuum storage of the assembled altimeter system, with a simulated mission at the end of storage which simulates entry temperatures and pressures. Shock, vibration, temperature cycles and operation in simulated Martian atmospheres at full power will be performed on the electronics package and antenna to verify design. Overstress tests and extended periods of operation will be performed to determine design margins.

10.1.8.3 Pre-Delivery Acceptance Testing (PDA) - By assembling the major elements in modular form, testing to verify functional performance can be performed prior to final assembly. After final assembly a functional test, which might include vibration and/or temperature-vacuum tests will be performed to verify acceptable operation.

10.1.8.4 Pre-Installation - (Phase IA, IB, II) This test will be performed after delivery, prior to installing the electronics/secondary antenna package on the lander, and the primary antenna on the Aeroshell. These tests are the same as the PDA tests but do not subject the equipment to additional environmental tests. The self-test described in Section 10.1.4.2 is performed to provide data correlation.

10.1.8.5 Pre-Sterilization Functional, Self-Test and Simulated Mission - (Phases III and IV) After installation an abbreviated version of the pre-installation test verifies system operation. A self-test and a simulated mission test verifies the system is ready for sterilization. The test may be performed with the Sterilization Canister in place by transmitting through the RF window provided in the canister.

10.1.8.6 Post Sterilization - After sterilization, prior to installation in the the Launch Vehicle, a self-test and simulated mission test providing correlating data verifies the system is flightworthy.

10.1.8.7 Pre-Mission In-flight Checkout - Prior to de-orbit a self-test will be performed to verify the altimeter has survived storage and is acceptable to perform its functions.

10.1.8.8 Special Test Requirements - An R.F. transparent section in the Sterilization Canister is provided to enable a complete altimeter checkout when the Capsule Bus System is installed in the Sterilization Canister.

10.1.9 Development Requirements - The altimeter electronics design is based on previously used space proven techniques and equipment, standard parts and pulse altimeter technology. The Saturn altimeter has demonstrated the ability of an L-band short pulse altimeter using relatively wide beam antennas to perform high altitude measurements. Miniaturization and improvement study contracts on the

Saturn altimeter have demonstrated digital tracking techniques, self-test features and pulse width switching to achieve low altitude performance. The primary and secondary antennas are derived from elementary radiating elements which have been used in previous space applications such as Gemini. No long-lead time electronics items, or state-of-the-art improvements are required to design and fabricate this altimeter.

Vendor, or in-house development tests will be required during Phase C to establish an optimum primary antenna design. Various types of anti-breakdown insulation materials, and the amount required should be investigated to achieve reliable protection at minimum weight for all temperature and pressure extremes expected. Insulating materials to be used in the altimeter should be investigated, and thoroughly tested to verify capabilities, considering total mission environment and sterilization requirements.

SECTION 10.1

REFERENCES

10.1.4-1 Space Probe Radar Altimeter Study, Volume I, Technical Report, Westinghouse Electric Corporation, November 1966, Contract No. NAS 1-5953 for NASA, Langley Research Center

10.1.4-2 Phase IV Final Report: Research and Development of Microminiaturization Techniques and Circuitry and Its Adaptability to Radar Altimeters, Westinghouse Electric Corporation, 31 January 1966, Contract No. NAS 8-11682, for NASA, Marshall Space Flight Center

10.2 LANDING RADAR

10.2.1 Equipment Identification and Usage - The Landing Radar is a part of the Guidance Sensor (Radar) Subsystem which also includes the Radar Altimeter. Section 3.2.2.5, Part A, Volume II describes the combined operation of the Radar Altimeter and Landing Radar.

The Landing Radar measures slant range and velocity vector for the Capsule Guidance and Control Subsystem. These measurements are required after separation from the parachute at an altitude of 5000 feet.

The attitude of the Capsule Lander is maintained inertially after separation from the parachute until Landing Radar acquisition. After acquisition, the attitude of the capsule is controlled to align the roll axis with the velocity vector as measured by the Landing Radar. A constant thrust is programmed during the early phase of the descent. By aligning the thrust vector (along the roll axis) with the velocity vector, horizontal velocity components are reduced to zero and the capsule flight path angle approaches 90 deg. Slant range is measured concurrently. When slant range and velocity vector correspond to some point on a preprogrammed range versus velocity landing profile, a mode change is initiated.

From this point on, thrust is controlled according to measured range and velocity vector to stay on this trajectory until a velocity of 10 feet per second is reached. This should correspond to a range of approximately 50 feet on the preprogrammed profile. Below 50 feet, the attitude of the Capsule Lander is maintained inertially. Velocity along the roll axis controls the Capsule Lander descent to a constant rate of 10 feet per second. Range is monitored continuously during this constant rate of descent mode until a range of 10 feet is reached. Here, the engines are shut down and the lander falls to the surface.

A block diagram of the Landing Radar is shown in Figure 10.2-1. The Landing Radar consists of the antenna assembly and electronics assembly. The separation of the functional components between these two assemblies is indicated.

10.2.1.1 Velocity Sensor Transmitter and Antenna - The velocity sensor transmitter generates an unmodulated X-band carrier which is divided between two transmitter arrays. Each array generates two narrow beams. Each of the resulting four transmitted beams is directed at an angle of twenty degrees from the capsule roll axis, and the beams are located symmetrically around the roll axis. Each of the four velocity receivers has a separate receiver array. Each receiver beam coincides in angular position with one of the transmitted beams.

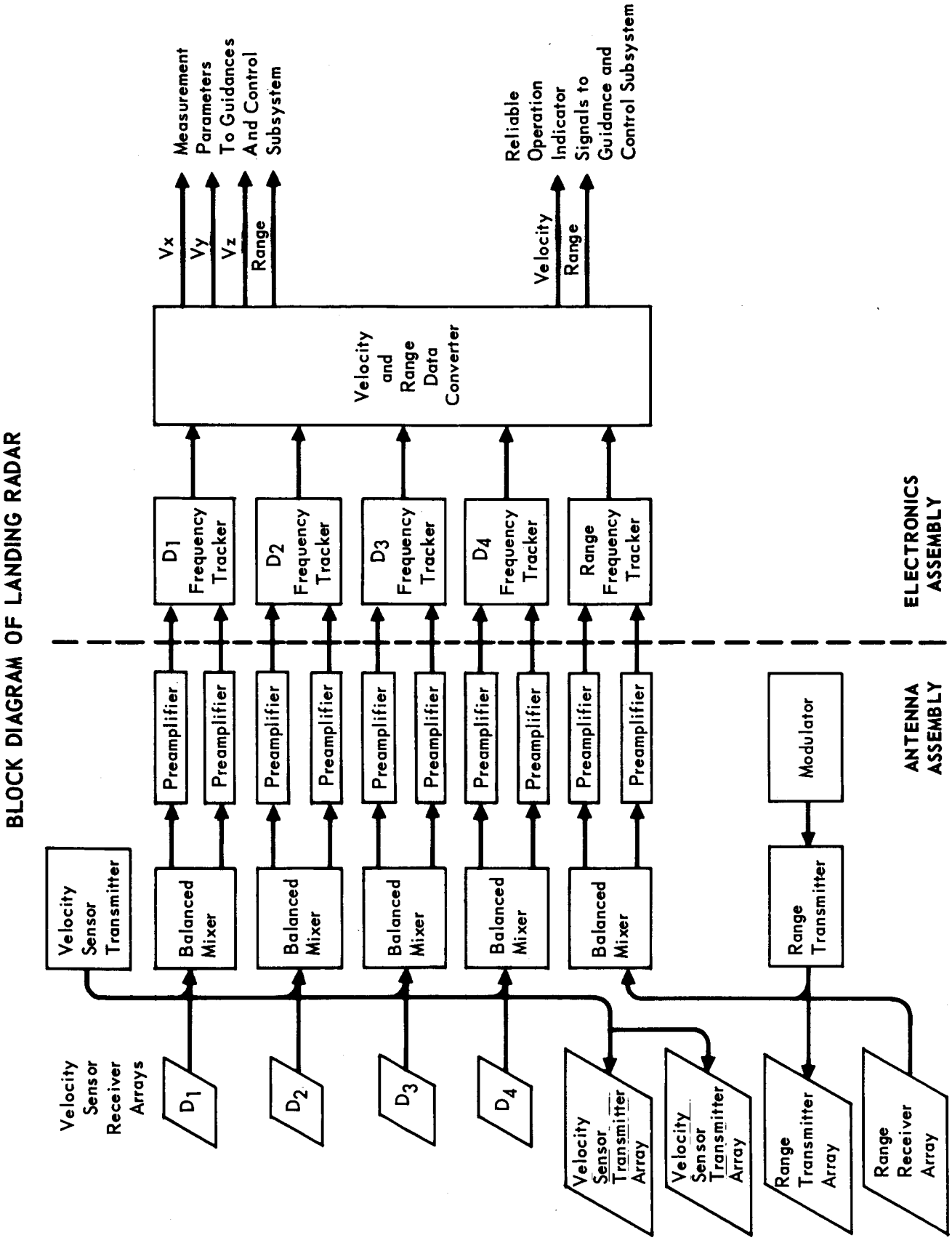
BLOCK DIAGRAM OF LANDING RADAR
Velocity Sensor Transmitter
Velocity Sensor Receiver Arrays
D1
D2
D3
D4
Balanced Mixer
Balanced Mixer
Balanced Mixer
Balanced Mixer
Balanced Mixer
Preamplifier
Preamplifier
Preamplifier
Preamplifier
Preamplifier
Preamplifier
Preamplifier
Preamplifier
Preamplifier
Preamplifier
Velocity Sensor Transmitter Array
Velocity Sensor Transmitter Array
Range Transmitter Array
Range Receiver Array
Modulator
Range Transmitter
ANTENNA ASSEMBLY
D1 Frequency Tracker
D2 Frequency Tracker
D3 Frequency Tracker
D4 Frequency Tracker
Range Frequency Tracker
ELECTRONICS ASSEMBLY
Velocity and Range Data Converter
Vx
Vy
Vz
Range
Measurement Parameters To Guidances And Control Subsystem
Velocity
Range
Reliable Operation Indicator Signals to Guidance and Control Subsystem

Figure 10.2-1

10.2.1.2 Velocity Sensor Receivers and Trackers - The four velocity receivers are identical and contain a pair of balanced mixers which mix a sample of the transmitted carrier, in-phase and quadrature, with the received signal. The in-phase and quadrature mixer output signals are amplified in separate pre-amplifiers. The frequency tracker operates on the in-phase and quadrature channels to produce a signal output whose frequency is proportional (plus a reference offset) to the doppler frequency shift of the transmitted carrier for that particular beam. The in-phase and quadrature channels allow the sense of the doppler frequency (positive or negative) to be retained after the homodyne mixing process. The frequency trackers perform the search function for acquisition, as well as the necessary filtering after acquisition has been accomplished.

10.2.1.3 Velocity Data Converter - The output signals from the four velocity sensor frequency trackers are supplied to the velocity and range data converter. Only three of the four outputs are required to generate three orthogonal velocity components in the capsule coordinate system. Each tracker supplies a "reliable lock" signal to the data converter. Logic is incorporated in the data converter which allows the first three "reliable lock" signals to establish the processing necessary to transform these particular frequency tracker outputs into the desired V_x, V_y, and V_z components. The resultant orthogonal velocity components are sent to the Guidance and Control Subsystem in digital form for use by the guidance computer.

10.2.1.4 Range Transmitter and Antennas - The range transmitter generates a linearly swept frequency modulated carrier (sawtooth modulation) to be transmitted by the range transmitter array antenna. The range transmitter and receiver arrays form a narrow beam along the capsule roll axis.

10.2.1.5 Range Receiver and Tracker - The range receiver is very similar to the velocity receivers. A sample of the frequency modulated transmitted carrier is mixed (in-phase and quadrature) in a pair of balanced mixers with the received signal. The two quadrature outputs are amplified in separate pre-amplifiers and supplied to the range frequency tracker.

Mixing the linearly frequency modulated transmitted signal with the received signal (which is a time delayed and doppler frequency shifted replica of the transmitted signal) results in an output signal whose frequency is proportional to range plus velocity. The in-phase and quadrature channels are processed by the range frequency tracker to provide an output signal whose frequency is proportional to range plus velocity (plus a reference offset). Again, search and acquisition is

accomplished by the range frequency tracker which also provides the required filtering after acquisition.

10.2.1.6 Range Data Converter - The range tracker output signal is processed in the velocity and range data converter to remove the velocity component. The range signal is then converted to digital form and sent to the Guidance and Control Subsystem. A "reliable lock" signal is generated by the range frequency tracker which is used in conjunction with velocity tracker "reliable lock" signals to generate a "reliable operation" signal for the range measurement. This signal, along with a "reliable operation" signal for the velocity channels, is used by the Guidance and Control Subsystem for performance certification of the range and velocity measuring functions of the Landing Radar.

10.2.2 Design Requirements and Constraints - The requirements and constraints for the Landing Radar are described in the following paragraphs.

10.2.2.1 Operational Constraints and Requirements - The operational sequence for the preferred landing concept includes parachute deployment at an altitude of 23,000 feet with Aeroshell release accomplished 12 seconds later. Separation is accomplished by utilizing difference in drag between the Aeroshell and parachute supported lander. The lander is released from the parachute at an altitude of 5,000 feet, at which time the lander is controlled in attitude by the terminal descent engines with attitude commands from the inertial measuring unit (IMU). Immediately after lander release from the parachute, the Landing Radar is placed in the acquisition mode. The Landing Radar is constrained to operate in the absence of a preferred roll position. However, roll rate is controlled to zero. The angle between the roll axis and local vertical for radar acquisition after inertial stabilization will be between 0 and 30 degrees. The 30 deg comes from a minimum angle of 10 degrees for a worse case (VM-7) atmosphere, plus 20 degrees for angular uncertainties in pitch angle reference from the IMU. This uncertainty results from the inability of the guidance computer to filter out undesired angular variations while on the parachute. After acquisition, and control to the velocity vector, this angle may approach 50 degrees in winds. Pitch rates are limited to less than 15 degrees per second. In addition, an allowance of 10 degrees must be made for ground slopes up to 2 kilometers long. Local ground slopes up to 34 degrees that extend for 100 meters must also be considered.

From an altitude of 5,000 feet, 2 seconds is allowed for inertial stabilization, after which 4 seconds is allowed for radar acquisition. The velocities at 5,000 feet will be between 128 and 453 feet per second, depending on atmosphere

and wind conditions. The Landing Radar must continue to measure range and velocity vector after acquisition through terminal descent to a minimum range of 10 feet and a minimum velocity of 10 feet per second. The desired accuracies are presented in Section 10.2.5.

Techniques within the state-of-the-art should be used for the Landing Radar to minimize development risks and costs. Redundancy should be considered to eliminate potentially dangerous single point failures. Signals should be available for the Guidance and Control Subsystem which verify that the range and velocity measurement functions are performing properly. Range along the capsule roll axis must be provided in digital form for the Guidance and Control Subsystem. Velocity vector data must be supplied in orthogonal components (Vx, Vy, and Vz) with respect to capsule reference frame. These orthogonal velocity components must be in digital form for use by the Guidance and Control Subsystem. Signals (properly conditioned for telemetry) which indicate the received power on each velocity and range beam should also be supplied for use during post flight analysis to help define the Martian backscatter model.

Provisions must be included for performance testing of the Landing Radar while within the Aeroshell and Sterilization Canister prior to launch. In addition, provisions must be incorporated for in-flight check out prior to capsule separation from the Space Vehicle.

The radar backscatter that can be expected from the Martian surface has been predicted on the basis of radar astronomy measurements of the planet, backscatter measurements both of the Moon (made by Surveyor II), and of the Earth. The backscatter model is discussed in Section II, B, 5.9.5.4.

The Landing Radar must operate near the exhausts from the landing engines. The effects of these exhausts are expected to be negligible for the higher frequencies of interest for the Landing Radar (X-band or above). This is discussed in Section II, B, 5.9.5.8.

10.2.2.2 Physical Requirements and Constraints - The Landing Radar antenna must be located on the base of the lander. The associated electronics will be located as close to the antenna as practical to minimize the length of interconnecting cables. The antenna depth should be minimum (approximately seven inches or less). The antenna should be crushable (since it will be between the lander foot pad and the surface on impact) with a minimum of shattering and flying fragments. An area up to 4 feet by 4 feet is available for the antenna. It is desirable however, to keep the antenna area as small as possible to be consistent with minimum weight.

An aperture approximately 2.5 feet by 2.5 feet is considered nominal.

The Landing Radar should be as light as possible. The design goal is 35 pounds or less.

The power source will be a DC voltage whose value can vary between 22 and 32 volts. A power consumption of 150 watts or less is desired.

The capsule Thermal Control Subsystem cannot remove heat from the Landing Radar. The storage temperature can vary from -150 to +160 degrees Fahrenheit. The minimum temperature can be experienced during orbital descent. The maximum temperature can be experienced prior to and during launch. A soak temperature of -50 to -150 degrees Fahrenheit is experienced for approximately six months during cruise and Mars orbit. The operating temperature of the Landing Radar depends on the soak temperature before turn on and the nature of the heat inputs prior to and during radar operation, as well as the heat generated by the radar itself during this period. This is discussed in Section II, B, 5.9.5-13.

The equipment must be able to undergo sterilization without affecting subsequent performance. Sterilization requirements plus other environmental requirements such as acceleration, shock, vibration, magnetic fields, electromagnetic radiation, etc., are defined in Section II, A, 2.3.

10.2.3 Physical Characteristics - The VOYAGER Landing Radar is divided into the antenna assembly and the electronics assembly. The antenna assembly consists of three transmitting and five receiving planar arrays together with the microwave electronics integrated into a single unit. The electronics assembly consists of the frequency trackers, data converters, power supply, and cabling subassembly.

The physical characteristics of these two assemblies, as given in Figure 10.2-2, are based on a conservative extrapolation of the Lunar Module (LM) radar characteristics.

10.2.3.1 Antenna Assembly - The layout of the Landing Radar antenna assembly is shown in Figure 10.2-3. All range and velocity beams are generated from planar arrays contained in this assembly.

One transmitting array and one receiving array are used for the ranging beam. Both planar arrays are mounted normal to the Capsule Lander roll axis.

Two transmitting arrays and four receiving arrays are used to generate the four symmetrical velocity beams. Each velocity beam transmitting array forms two beams separated by about 28 degrees in a plane normal to the particular array. The two transmitting arrays are physically tilted (axis of rotation parallel to the 32 inch dimension) in opposite directions such that the resulting four velocity beams

LANDING RADAR PHYSICAL CHARACTERISTICS

ELEMENT	SIZE (INCHES)	VOLUME (CUBIC INCHES)	WEIGHT (LB)	PRIMARY POWER (WATTS)
Antenna Assembly	32 x 28 x 6.5	5824	25	59
Electronic Assembly	16.5 x 7.4 x 6.75	824	15	86
Total		6648	40	145

Figure 10.2-2

VOYAGER LANDING RADAR ANTENNA LAYOUT
(DIMENSIONS IN INCHES)

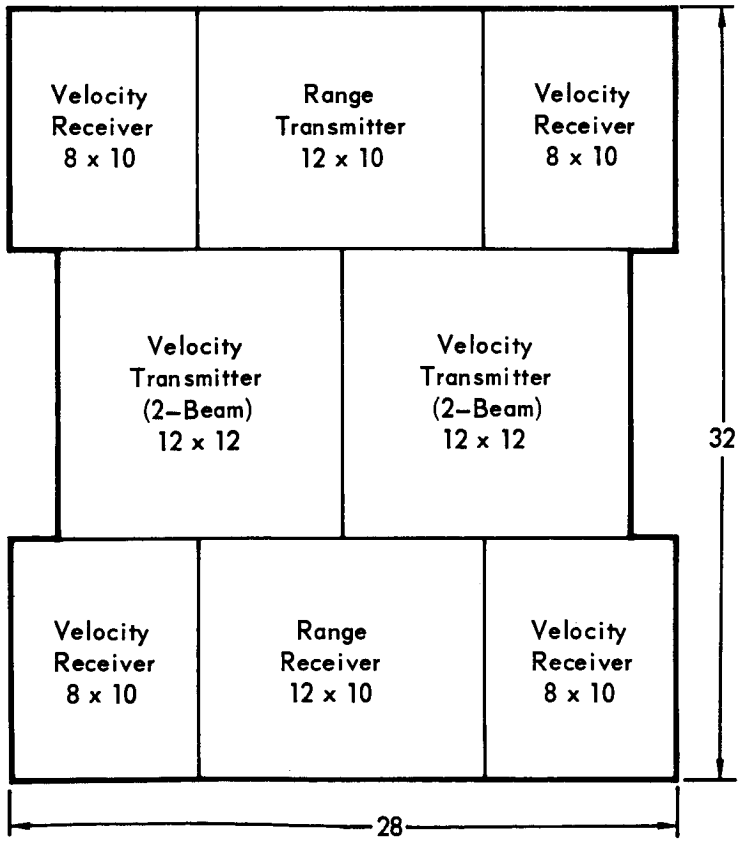

Figure 10.2-3

form a symmetrical configuration about the roll axis. A separate receiving array is provided for each velocity beam, and is physically tilted in two planes.

The antenna assembly is mounted on the underside near the center of the Capsule Lander footpad. This Capsule Lander configuration allows a relatively large antenna aperture area with a clear field-of-view.

In addition to the planar arrays, the antenna assembly contains the microwave electronics including the range transmitter, velocity transmitter, range beam FM modulator, microwave mixers, and pre-amplifiers. The transmitters are of the frequency multiplier type. The primary power requirements of Figure 10.2-2 assume varactor multipliers.

10.2.3.2 Electronics Assembly - The electronics assembly contains five frequency trackers (one for each velocity beam and one for the range beam), three-out-of-four velocity beam logic, data converters, power supply electronics, and the cabling subassembly. The physical characteristics given in Figure 10.2-2 are a conservative estimate based on the extrapolation of the hybrid (conventional parts with some integrated circuits), cordwood packaging technique used in the LM landing radar.

10.2.4 Operation Description - Figure 10.2-4 presents a flow diagram showing the Landing Radar operating sequence and operational alternatives.

As shown in the figure two externally generated commands are required by the Landing Radar. These are the Landing Radar Turn On Command at an altitude of 100,000 feet, and the Landing Radar Search/Track Enable Command at an altitude of 5,000 feet. The source of both commands is the Radar Altimeter. The turn on command is provided at an altitude of 100,000 feet in order to assure adequate radar warm-up time (30 seconds minimum for varactor frequency multipliers). The search/track function is inhibited prior to an altitude of 5,000 feet to prevent false target acquisition. Landing Radar derived information is required only after separation from the parachute at 5,000 feet.

Upon receipt of the Search/Track Enable Command at an altitude of 5,000 feet, each of the five radar frequency trackers will initiate a search mode, causing the tracking filters to sweep a predetermined frequency interval. At about the same time as the Search/Track Enable Command the descent engines will be ignited and an inertial attitude hold mode will be initiated. Two seconds after engine ignition Capsule Lander attitude rates will be less than 15 deg/sec. With attitude rates less than 15 deg/ sec, acquisition on all radar beams should occur within three seconds. Thus, under these conditions, all beams have acquired within five seconds

LANDING RADAR SEQUENTIAL DIAGRAM

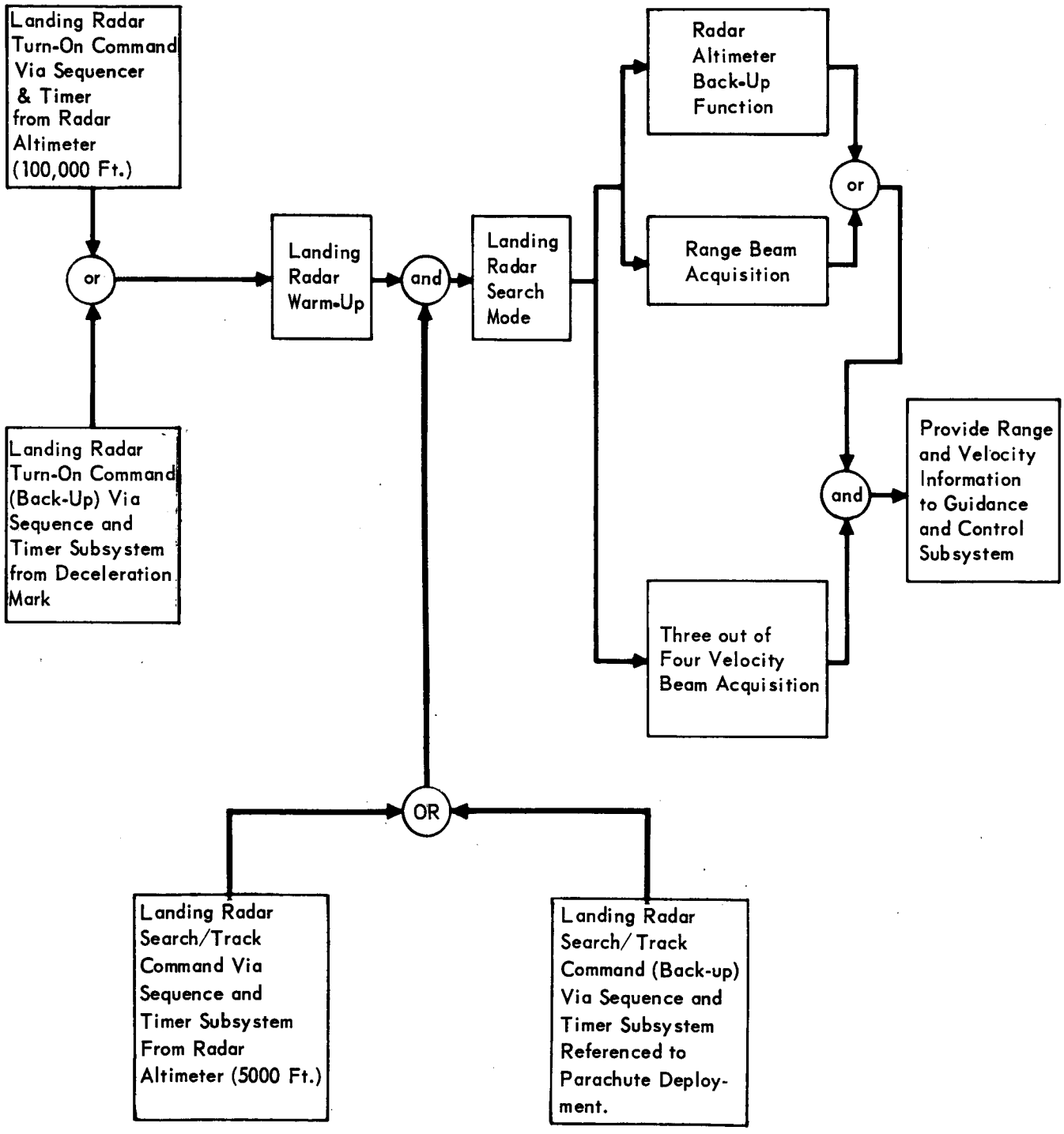

Figure 10.2-4

after engine ignition.

Doppler information from the first three velocity beams to acquire is supplied to Landing Radar data converters wherein three orthogonal velocity components are generated and supplied to the Guidance and Control Subsystem. The Capsule Lander is then caused to align with the measured velocity vector. During this maneuver attitude rate limiting will be employed to avoid exceeding the frequency rate tracking capability of the Landing Radar.

At this point slant range and velocity information is being provided by the Landing Radar. Information from the Radar Altimeter will be used if a Landing Radar ranging function failure occurs. This range and velocity information is used continuously during the remaining portion of the terminal descent until the 10 foot altitude, engine shut-down point.

During this latter portion of the terminal descent phase Landing Radar mode switching will be employed. At a prescribed slant range the frequency deviation on the FM/CW range beam will be increased and the range beam tracking filter bandwidth will be decreased to provide increased accuracy. At a prescribed doppler frequency (or combination of doppler frequency and slant range measurements) the velocity beam tracking filter bandwidths will be reduced resulting in improved signal-to-noise ratio.

The Landing Radar Turn On Command nominally will be provided at an altitude of 100,000 feet via the Radar Altimeter. This command source will be backed up by a time delayed command from the Sequence and Timer Subsystem referenced to a deceleration level mark.

In the event of a Radar Altimeter failure, the Landing Radar Search/Track Enable Command will be provided prior to the 5,000 foot altitude point by the Sequencer and Timer Subsystem. In this manner the Landing Radar provides a functional backup for the Radar Altimeter functions at 5,000 feet.

10.2.5 Performance Objectives - The performance characteristics of the Landing Radar are essentially determined by the radar beam configuration, the per beam transmitting and receiving parameters, and data processing techniques. The Landing Radar beam configuration is shown in Figure 10.2-5. The remaining performance characteristics are summarized in Figure 10.2-6. The accuracies given in Figure 10.2-6 represent nominal values and will vary with signal-to-noise ratio, beam incident angle, frequency rates, etc.

10.2.6 Interface Requirements - Figure 10.2-7 illustrates the Landing Radar interfaces with the Power Subsystem (via power connector); Operational Support Equipment

LANDING RADAR BEAM CONFIGURATION

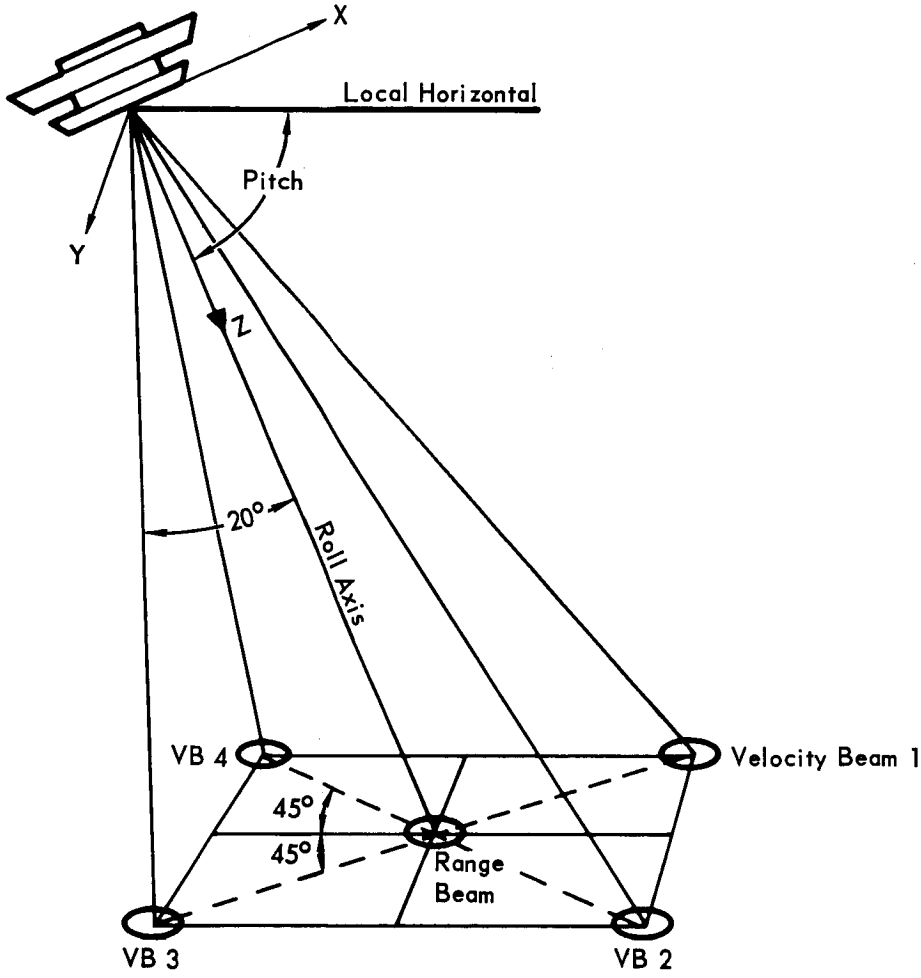

Figure 10.2-5

LANDING RADAR PERFORMANCE PARAMETERS

Accuracy	
Velocity (Terminal Phase)	± (1.5% ± 1.5 fps)
Slant Range	
2,500 - 10,000 ft	± (1.4% ± 15 ft)
10 - 2,500 ft	± (1.4% ± 5 ft)
Smoothing Time (Typical)	
Frequency Tracker	0.1 sec
Post Tracker	0.2 sec
Tracking Filter Bandwidth	
Velocity	1000 Hz, R>2500 ft 400 Hz, R<2500 ft
Range	5000 Hz, R>2500 ft 1000 Hz, R<2500 ft
Noise Figure	14.0 dB at 10 KHz Increasing with decreasing frequency
Acquisition Time	3 sec. (max.)
SNR For Acquisition	+4 dB
Antenna Gain	
Velocity Beams	27.9 dB
Range Beam	26.3 dB
Effective Radiated Power Per Beam	
Velocity Beams	35 mw
Range Beam	106 mw
Transmitted Frequency	
Velocity Beams	10.51 GHz
Range Beam	9.58 GHz
Beamwidth (2-Way)	
Velocity Beam	5.0 deg (Circular)
Range Beam	5.0 deg (Circular)
Modulation	
Velocity Beam	None
Range Beam	Linear Sawtooth FM Deviation: 8 MHz, R>2500 ft 40 MHz, R<2500 ft

Figure 10.2-6

SUBSYSTEM INTERFACE BLOCK DIAGRAM

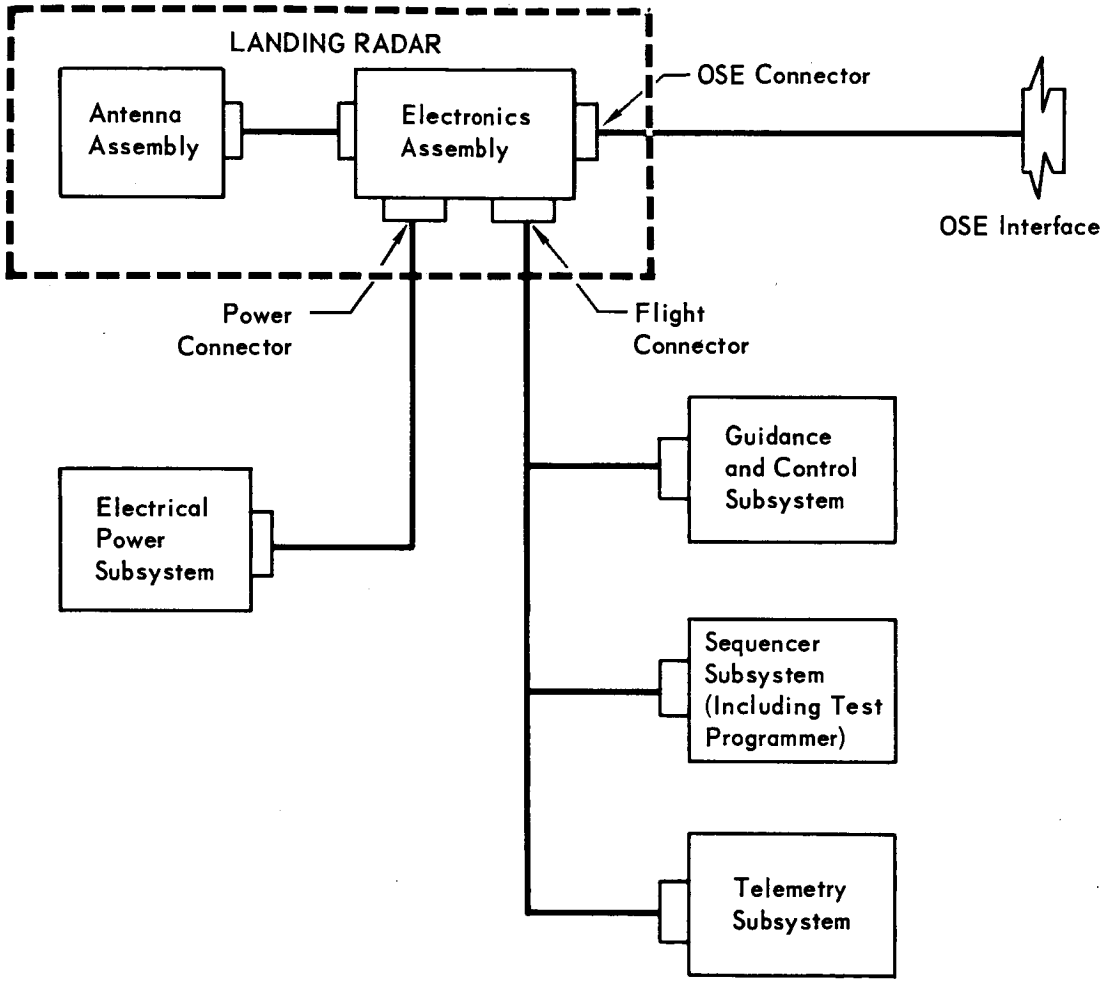

Figure 10.2-7

(via OSE connector); and Guidance and Control Subsystem, Telemetry Subsystem, and Sequence Subsystem (via flight connector). The voltage level at the Power Subsystem interface will be 22 to 32 VDC.

The flight connector and OSE connector preliminary interface listings are given in the following two Figures (10.2-8 and 10.2-9). D_i indicates the ith doppler channel. The 0° and 90° labels associated with these doppler channel parameters indicate the in-phase and quadrature components.

10.2.7 Reliability Considerations - Studies and analyses have been performed to determine how Landing Radar failures affect mission performance, and to identify methods of incorporating redundancies into the Landing Radar to enhance the probability of mission success.

A summary of the failure mode, effect and critically analysis is presented in Figure 10.2-10. This analysis was performed to identify sources of single point failure. It provides a logical approach for locating, defining, and ranking Landing Radar failure modes which result in degraded or catastrophic mission performance.

In the analysis summarized in Figure 10.2-10 the major mission objectives are defined as:

- Achievement of capsule landing
- Performance of entry science experiments
- Performance of landed science experiments
- Measurement and transmission of engineering performance data

In Figure 10.2-10 failure categories are assigned according to the effect on major mission objectives as follows:

1. No effect on mission objectives
2. Degraded effect on mission objectives
3. Possible catastrophic effect on mission objectives

The failure mode effect and criticality analysis, combined with consideration of the Landing Radar's effect on total Capsule Bus reliability, led to consideration of specific Landing Radar reliability improvement approaches. These considered redundancies are summarized in Figure 10.2-11. Range measurement is less critical than velocity measurement because the Radar Altimeter is available for range back-up. Consequently, most Landing Radar redundancy efforts were directed at the velocity sensing function.

In Figure 10.2-11, the reliability improvement factor is defined as:

$$\frac{1 - \text{Reliability (non-redundant configuration)}}{1 - \text{Reliability (redundant configuration)}}$$

FLIGHT CONNECTOR

ITEM	SIGNAL NAME	SIGNAL NOMINAL VALUE OR RANGE	INPUT (1) OUTPUT (0)	INTERFACE
1	Self Test	Contact Closure	1	SS
2	Strobe 1 Pulse Train	Amplitude 3.75 ± 1.5V Width 3.0 ± .5 μ sec	1	G&C
3	Strobe 2 Pulse Train		1	G&C
4	Readout Command		1	G&C
5	V_{xa}, V_{ya}, V_{za} and Range	Serial, Binary "0" and "1" read on command; amplitude +7.0 ± 3.0V Width 4± 0.2 μ sec	0	G&C TCM
6	Temperature #1		0	SS TCM
7	Temperature #2		0	SS TCM
8	Range "Data Good"	High 24.6 ± 10.0V	0	TCM G&C
9	Velocity "Data Good"	Low 0 ± 2V	0	TCM G&C
10	Range Low Scale Factor		0	TCM
11	Velocity Transmitter Power		0	TCM
12	Range Transmitter Power		0	TCM
13	V.S. Frequency Tracker D_1 Lock-On		0	TCM
14	V.S. Frequency Tracker D_2 Lock-On		0	TCM
15	V.S. Frequency Tracker D_3 Lock-On		0	TCM
16	V.S. Frequency Tracker D_4 Lock-On		0	TCM
17	Range Frequency Tracker Lock-On		0	TCM
18	150 KHZ Ref.	3± $1V_{pp}$	0	TCM
19	150 KHz + D_1	Approximately 700 KHZ max.	0	TCM
20	150 KHz + D_2		0	TCM

Figure 10.2-8

21	[illegible]			
22	150 KHz + D_4		0	TCM
23	$F_c + (F_R + D_a)$		0	TCM
24	D_1 0°		0	TCM
25	D_1 90°	2.5 mv to 3VRMS	0	TCM
26	D_2 0°	0 to 150 KHZ	0	TCM
27	D_2 90°		0	TCM
28	D_3 0°		0	TCM
29	D_3 90°		0	TCM
30	D_4 0°		0	TCM
31	D_4 90°		0	TCM
32	Range 0°		0	TCM
33	Range 90°		0	TCM
34	Beam #1 Received Signal Strength		0	TCM
35	Beam #2 Received Signal Strength		0	TCM
36	Beam #3 Received Signal Strength		0	TCM
37	Beam #4 Received Signal Strength		0	TCM
38	Range Beam Received Signal Strength		0	TCM
39	+25 VDC Power Supply		0	TCM
40	-25 VDC Power Suqply		0	TCM
41	+4 VDC Power Supply		0	TCM
42	-2 VDC Power Supply		0	TCM
43	D_1 AGC Gain State		0	TCM
44	D_2 AGC Gain State		0	TCM
45	D_3 AGC Gain State		0	TCM
46	D_4 AGC Gain State		0	TCM
47	Range AGC Gain State		0	TCM
48	Self Test Osc #1		0	TCM
49	Self Test Osc #2		0	TCM
50	Self Test Osc #3		0	TCM
51	Modulator Sweep Amp.		0	TCM
52	Modulator Sweep Freq.		0	TCM
53	Search/Track Enable Command		1	SS
54	Landing Radar Turn On Command		1	SS

10.2-15-2

OSE CONNECTOR LISTING

ITEM	SIGNAL NAME	SIGNAL NOMINAL VALUE OR RANGE
1	Counter Read-Out Command	Same as strobe No. 2 but delayed 1 M sec and only 15 pulses
2	Reset Strobe No. 2	+ 7.0 ± 3.0V
3	VZ Gate Strobe No. 2	3.2 kc pulses
4	VY Gate Strobe No. 2	Width = 3.0 ± 0.5 μ sec
		Rise time 0.2 μ sec
5	VX Gate Strobe No. 2	Strobe 2 delayed
6	Range Gate Strobe No. 2	2 sec. after strobe 1
7	-25 VDC	-25 ± 0.25 vdc
8	+25 VDC	+25 ± 0.25 vdc
9	+25 VDC (To Alt. and V.S. SSX)	+25 ± 0.25 vdc
10	-4 VDC	+4 ± 0.2 vdc
11	-2 VDC	-2 ± 0.1 vdc
12	"0" Data	+7 v ± 3.0 vdc
		3.2 kc pulses
13	"1" Data	Width 4 ± 2 μ sec
14	Range Marker Reset	Contact Closure
15	Test Signal #1 Frequency Control	
16	Test Signal #1 Amplitude Control	
17	Test Signal #2 Frequency Control	
18	Test Signal #2 Amplitude Control	
19	Test Signal #3 Frequency Control	
20	Test Signal #3 Amplitude Control	
21	Blanking Signal	-10 vdc 700 μs ± 10%
22	Mode Control	25 vdc ± 0.25 vdc

Figure 10.2-9

23	D_1 0° at Tracker Input	2.5 mv to 3 v rms
24	D_1 90° at Tracker Input	2.5 mv to 3 v rms
25	D_2 0° at Tracker Input	2.5 mv to 3 v rms
26	D_2 90° at Tracker Input	2.5 mv to 3 v rms
27	D_3 0° at Tracker Input	2.5 mv to 3 v rms
28	D_3 90° at Tracker Input	2.5 mv to 3 v rms
29	D_4 0° at Tracker Input	2.5 mv to 3 v rms
30	D_4 90° at Tracker Input	2.5 mv to 3 v rms
31	Range 0° at Tracker Input	2.5 mv to 1.26 v rms
32	Range 90° at Tracker Input	2.5 mv to 1.26 v rms
33	Deviation Inhibit	Contact closure
34	Power Monitor - Altm. - DC Sig.	+2.1 vdc to + 5.0 vdc
35	Power Monitor - Vel. - DC Sig.	+ 2.1 vdc to + 5.0 vdc
36	D_1 Gain State	High 0 + 0.5 vdc - 0.0 vdc Low 6.2 ± 0.4 vdc
37	D_2 Gain State	
38	D_3 Gain State	
39	D_4 Gain State	
40	Range Gain State	
41	D_1 Tracker Lock	5 v ± 1 vdc
42	D_2 Tracker Lock	5 v ± 1 vdc
43	D_3 Tracker Lock	5 v ± 1 vdc
44	D_4 Tracker Lock	5 v ± 1 vdc
45	Range Tracker Lock	5 v ± 1 vdc
46	Range (PRF)	5 V pp, 3 μ sec ± 0.5 μ sec, 0.2 μ sec rise,

10.2-16-2

		droop 15% max.
47	150 kc Ref.	
48	150 kc + V_{xa}	
49	150 kc + V_{ya}	3 ± 1.0 Vpp, 1.6 μ sec ± 0.6 width, 0.2 μ sec rise time
50	150 kc + V_z	
51	Temperature #1	
52	Temperature #2	
53	Range Low Scale Factor	
54	$F_c + D_1$	
55	$F_c + D_2$	
56	$F_c + D_3$	
57	$F_c + (F_R + D_a)$	
58	Beam #1 Received Signal Strength	
59	Beam #2 Received Signal Strength	
60	Beam #3 Received Signal Strength	
61	Beam #4 Received Signal Strength	
62	Range Beam Received Signal Strength	
63	Self Test Osc, #1	
64	Self Test Osc #2	
65	Self Test Osc #3	
66	Modulator Sweep Amp.	

10.2-16-3

FAILURE MODE, EFFECT AND CRITICALITY ANALYSIS

COMPONENT OR FUNCTION	FAILURE MODE	FAILURE EFFECT	FAILURE CATEGORY: Landing	Entry Science	Landed Science	Eng. Data	REMARKS
1. Landing Radar Functions							
1.1 V_x, V_y Data Output	• Loss of V_x or V_y Data	• CBS will not be referenced to velocity vector	3	2	3	2	1.1.1 Landing radar three of four velocity channel redundancy increases probability of successful landing
	• V_x or V_y Data incorrect with velocity data good logic signal present.	• Degraded attitude reference	2–3	1–2	2–3	1–2	1.1.2 Failure category depends on degree of data error.
1.2 V_z Data Output	• Loss of V_z Data	• CBS will not be referenced to velocity vector and will not follow desired descent profile.	3	2	3	2	1.2 (Same as 1.1.1)
	• V_z Data incorrect with velocity data good logic signal present.	• (Same as Above)	2–3	1–2	2–3	1–2	1.2 (Same as 1.1.2)
1.3 Velocity Data Good Logic Signal	• No signal when velocity data is good.	• CBS will not switch from radar reference.	3	2	3	2	1.3.1 CBS roll axis will not be aligned to velocity vector.
	• Signal present when velocity data is incorrect	• Degraded attitude reference	2–3	1–2	2–3	1–2	1.3.2 (Same as 1.1.2)
1.4 Slant Range Data Output	• Loss of data with range data good logic signal present.	• CBS will not follow desired descent profile.	3	2	3	2	1.4.1 G & C Computer will not switch to radar altimeter altitude for backup.
	• Data incorrect with range data good logic signal present.	• CBS will not follow desired descent profile.	2–3	2	2–3	2	1.4.2 (Same as 1.1.2)
1.5 Slant Range Data Good Logic Signal	• No signal when range data is good.	• No effect	1	1	1	1	1.5.1 Radar altimeter altitude will back up landing radar slant range.
	• Signal present when range data is incorrect.	• Degraded terminal descent.	2–3	2	2–3	2	1.5.2 G & C Computer will not switch to radar altimeter for backup. Category depends on degree of data error.

Figure 10.2-10

1.6 Range Low Scale Factor Signal	• Signal present and range data to G & C computer does not change scale.	• G & C Computer will think it is one fifth actual altitude at 2500 feet and below for computing descent equations.	3	2	3	2	1.6.1	Terminal propulsion fuel will be expended at high altitude.
	• No signal and range data to G & C Computer changes scale.	• G & C Computer will think it is five times actual altitude at 2500 feet and below for computing descent equations.	3	2	3	2	1.6.2	CBS will not decelerate properly.
	• No signal and range data to G & C Computer does not change scale.	• Radar will stop functioning at higher than design altitude.	1-2	1-2	1-2	1-2		
2. Landing Radar Elements								
2.1 Velocity Sensor RF Elements • Two Transmitting Antennas • Solid State Transmitter	• Fails to transmit RF.	• No V_x, V_y or V_z data and no velocity data good logic signal output.	3	2	3	2	2.1	Landing success probability could be increased by providing redundant transmitters.
2.2 Velocity Sensor Channel (4) • Antenna • Mixer • Amplifiers • Frequency Tracker	• Any one of the four channels provided fails to function.	• None	1	1	1	1	2.2	Landing Radar redundancy overcomes this failure mode. Three of four channels required for success.
2.3 Velocity Data Converter	• Fails to properly convert velocity output data.	• No V_x, V_y, or V_z data and no velocity data good logic signal output.	3	2	3	2	2.3	Reliability could be increased by incorporating circuit redundancy in data converter
2.4 Range Sensor RF Elements. • Antenna • Solid State Transmitter • Modulator	• Fails to function	• None	1	1	1	1	2.4	Radar altimeter will back up landing radar slant range.
2.5 Range Sensor Receiving and Tracking Channel.	• Fails to function	• None	1	1	1	1	2.5	(Same as 2.4)
• Antenna • Mixer • Amplifiers • Tracker								
2.6 Range Data Converter	• Velocity data correct and range data incorrect. Also no range data good logic signal output.	• None	1	1	1	1	2.6	(Same as 2.4)
2.7 Regulator and Power Supplies	• Any supply voltage fails.	• No range or velocity data output.	3	2	3	2	2.7	Redundant regulator and supplies would increase success probability of CBS landing.

REDUNDANCIES CONSIDERED

REDUNDANCIES CONSIDERED	TYPE	IMPROVEMENT FACTOR		
		Velocity Sensor Function	Range Sensor Function	Velocity and Range Function
Provide four velocity channels, three required for velocity sensing.	Multi-Channel	3.12	–	1.76
Velocity Sensor Transmitters	Multi-Channel or Block	1.07	–	1.04
Range Sensor Transmitters and Modulators	Multi-Channel or Block	–	1.21	1.07
Range Sensor Audio Frequency Amplifiers and Trackers	Multi-Channel	–	1.20	1.07
DC-DC Converters, Regulators and Power Supplies	Multi-Channel	–	–	1.05

Figure 10.2-11

The above analysis combined with consideration of the contribution of the Landing Radar to successful Capsule Bus landing has led to the preferred Landing Radar configuration described in previous sections. In addition to the functional redundancy for the ranging function provided by the Radar Altimeter, the Landing Radar incorporates multi-channel velocity sensing redundancy by employing four velocity channels, where only three are required. From Figure 10.2-11 the reliability improvement factor for the velocity sensing function is 3.12.

A reliability model of the Landing Radar is presented in Figure 10.2-12. The model presents the success paths, the estimated success probability of major elements, and the total estimated Landing Radar probability of success.

10.2.8 Test - Equipment performance verification is broken down into four test phases plus vendor and in-flight test.

a. Vendor Test and Equipment Function Test (EFT)

b. Phase IA - Module Build Up

   Phase IB - Systems Integration

c. Phase II - System Test

d. Phase III - Kennedy Space Center

e. Phase IV - Prelaunch

f. In-Flight

10.2.8.1 Vendor, EFT and Phase IA - These are bench type test and will completely exercise the Landing Radar using the OSE connector (Section 10.2.6) and simulated targets at the RF level (antenna hat). Parameters measured are those of the OSE connector covered in Section 10.2.6, plus transmitter power out of the antenna. Access to all test points will be available for adjustment and troubleshooting.

10.2.8.2 Phase IB and Phase II - These will be systems integration and system test. Access to the Landing Radar will be limited to the OSE connector except for the simulated RF targets. It is anticipated that access to the Landing Radar antenna will be available for injection, via an antenna hat coupler, of simulated targets. Complete exercise of the Landing Radar will be possible; the parameters to be measured are those of the OSE connector plus transmitter power out of the antenna.

10.2.8.3 Phase III and IV - Prior to final enclosure in the canister, antenna boresight alignment will be made. This may be considered part of Phase II or Phase III, but boresight integrity must be maintained thereafter. With final enclosure in the canister all transmitter power measurement and signal simulation will be by the Landing Radar built-in-test. The built-in test will provide RF signals

LANDING RADAR RELIABILITY MODEL

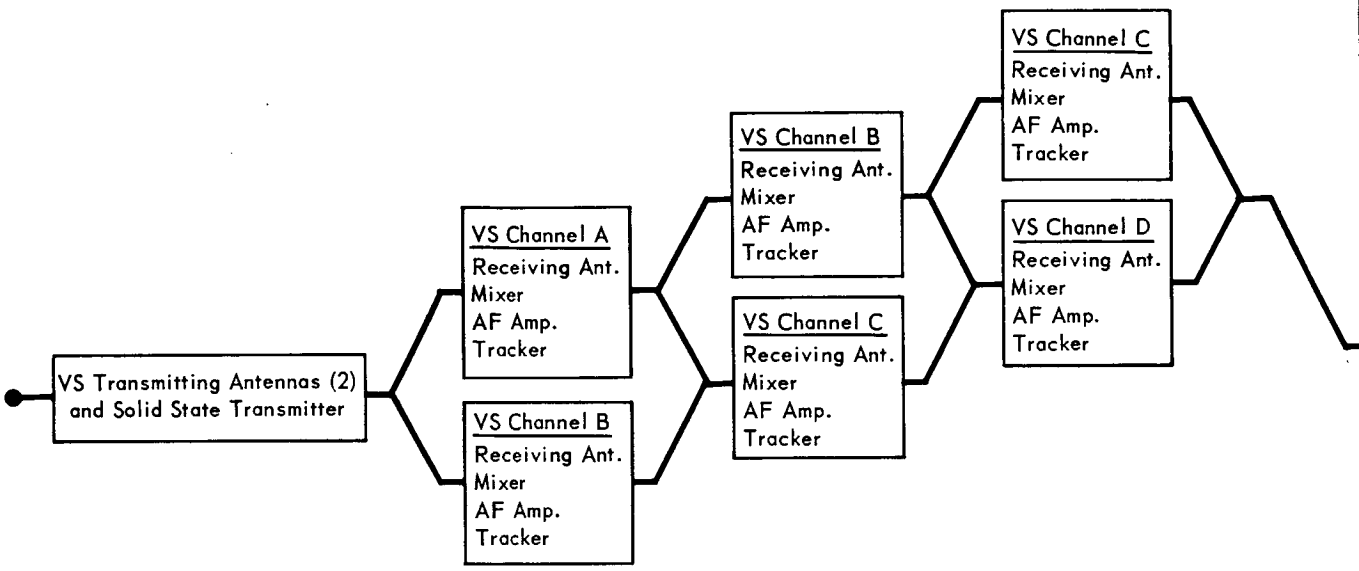

γ (F/10^6 Hrs)	14	38 (EA VS Channel)
t_m	87	87
$\gamma t_m \times 10^6$	1218	3306 (EA VS Channel)
P_s	0.998780	0.996695 (EA VS Channel)
		P_s (3 of 4 VS Channels) = 0.999934

Figure 10.2-12

10.2-20 – 1

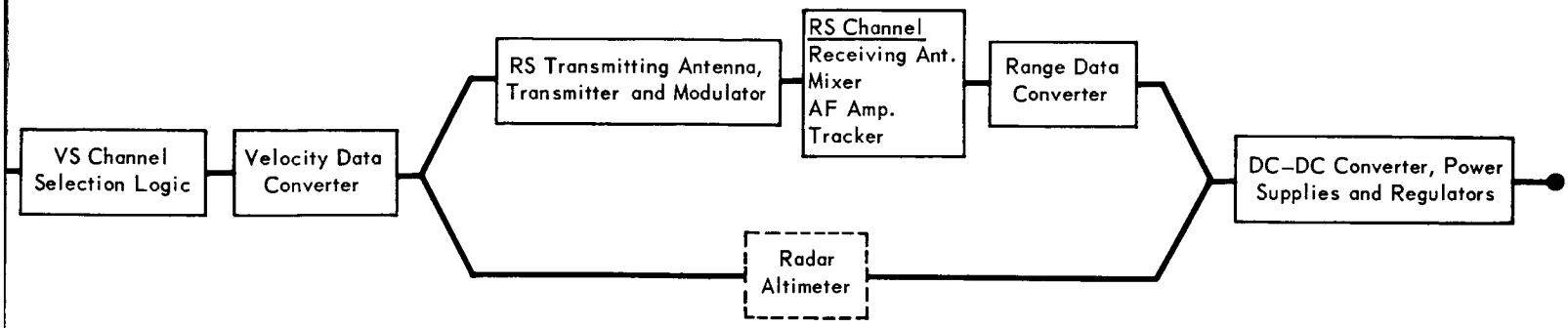

15	32	25	36	20	14
87	87	87	87	87	87
1305	2784	2175	3132	1740	1218
0.998690	0.997223	0.997822	0.996874	0.998261	0.998780
		Combined P_s = 0.999981 (Radar Altimeter P_s = 0.9973)			

Total P_s = 0.9934

10.2-20-2

injected after the antenna and prior to the mixers, and RF signals applied at the preamplifier. These signals will be supplied by voltage controlled oscillators (VCO) directly for the IF signals and VCO signals mixed with the Landing Radar transmitter signals for the RF inputs. Control of the VCO is over a wide range of simulated conditions will be possible through the umbilical connector. Monitoring will be via TCM and the umbilical connection. This allows complete Landing Radar checkout including mixer crystals after sterilization except for the antenna. RF absorbent material in front of the antenna will provide sufficient isolation to allow transmitter operation through the antenna. Internal transmitter power monitors will be used. The antenna RF absorbent material, approximately 0.3 lbs/sq. ft. with a total weight of 1.9 lbs, will separate with the Aeroshell.

10.2.8.4 In-Flight Checkout - This mode will use the built in target simulators. The Adapter Test Programmer will initiate the test and select one of several programmed discrete input conditions. Landing Radar interrogation will be by the Guidance and Control Subsystem and monitoring via telemetry. This will allow an end-to-end check of the Landing Radar and Guidance and Control. Complete in-flight checkout after warm-up is expected to last approximately two minutes. To prevent thermal damage, the radar will be shut down immediately on completion of the test.

10.2.9 Development Requirements - The VOYAGER Landing Radar is based directly on the radar developed for the Apollo lunar landings. The LM radar is currently in production, and has operated successfully during extensive flight testing. Both radars are of common design and similar implementation as the radar used on Surveyor. This will minimize development risk and allow rapid development.

Development areas that must be considered are:

a. Antenna

b. Built-in-test

c. Sterilization

Antenna modification will add a fourth velocity beam and will change the beam configuration to give a square footprint 20 degrees off the capsule roll axis. The modification results in increased mission reliability and improved performance without a preferred roll orientation. Preliminary antenna design with the addition of the one beam and the alteration of the beam configuration has been completed. The design is feasible and is compatible with mounting restrictions.

Built-in-test modifications are partially a result of no access, post sterilization restrictions, and partially a result of the desired in-flight

pre-entry checkout. Circuitry is known and within the state-of-the art.

Piece part sterilization survivability was investigated. All applicable parts in the present LM Landing Radar have been reviewed with the following results:

a. 62.20% are on the JPL ZPP-2010 listing.

b. 32.33% have indicated sterilization capability.

c. 5.28% have questionable sterilization capability.

Minor modifications are indicated to tailor the LM radar to the VOYAGER mission (e.g., increase range tracker bandwidth).

It is recommended that antenna breadboard and vendor detail analysis be started in Phase C.

Modifications to handle VOYAGER primary power will result in minor changes to the power supply with no change to other circuitry and little or no increase in weight.

SECTION 11

AERODYNAMIC DECELERATOR SUBSYSTEM

11.1 EQUIPMENT IDENTIFICATION AND USAGE - A parachute is employed by the Aerodynamic Decelerator Subsystem to decelerate the Aeroshell/Lander between the altitudes of 23,000 ft. and 5,000 ft. above the Martian suraace. Deceleration above 23,000 ft. is provided by Aeroshell aerodynamic drag and deceleration below 5,000 ft. is provided by terminal propulsion rocket motors.

The decelerator subsystem consists of the following major elements:

- o Parachute
- o Riser Assy
- o Reefing line cutters
- o Deployment Bag
- o Catapult Assembly

The relationship of the subsystem components is shown by Figure 11-1.

Figure 11-2 shows the Decelerator Subsystem components as installed in the Flight Capsule. Refer to Paragraph 3.2.7, Volume II, Part B for a discussion of the background and analysis of the Aerodynamic Decelerator Subsystem.

11.1.1 Parachute - The parachute is a 70 ft. D_o Ringsail, modified to incorporate a peripheral slot to improve high altitude stability characteristics. Material of 330 nylon is used for the construction of the canopy which consists of 12 rings arranged in 60 gores and suspension lines. Provisions for the installation of a single 1,000 lb. dacron reefing line and three reefing line cutters are included in the parachute canopy. Reefing is necessary to control opening shock forces on the canopy. Details of the parachute configuration, dimensions, materials, and assembly methods are shown by Figure 11-3.

11.1.2 Riser Assembly - The Riser assembly attaches the parachute assembly to the Capsule Bus. It is connected to the canopy at the four suspension line connector links and to the CB at the four structural attach points. The Riser is constructed from 1-inch wide, 10,000 lb. dacron webbing and has an overall length of 20 ft. Detail dimensions and assembly methods of the Riser assembly are shown by Figure 11-4.

11.1.3 Reefing Line Cutters - Three reefing line cutters with prescribed time delay are used to redundantly sever the parachute reefing line. The cutters are installed in pockets sewn to the canopy skirt. Line stretch at parachute deployment pulls the firing pin to initiate the pyrotechnically actuated cutters.

AERODYNAMIC DECELERATOR SUBSYSTEM

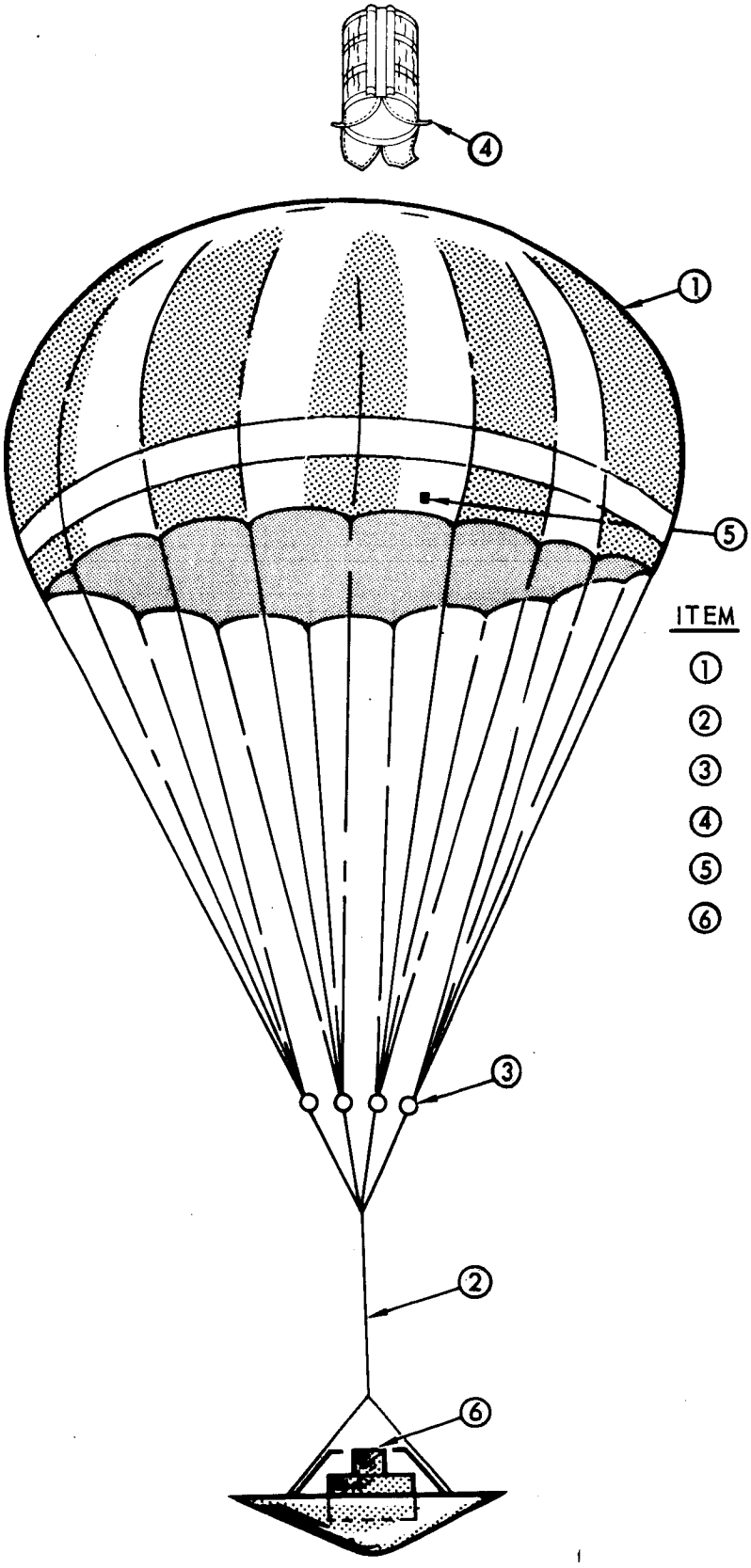

ITEM	DESCRIPTION	QUANTITY
1	70 Ft. D_o Parachute	1
2	Riser	1
3	Link	4
4	Deployment Bag	1
5	Reefing Line Cutter	3
6	Catapult Assy.	1

Figure 11-1

AERODYNAMIC DECELERATOR INSTALLATION IN FLIGHT CAPSULE

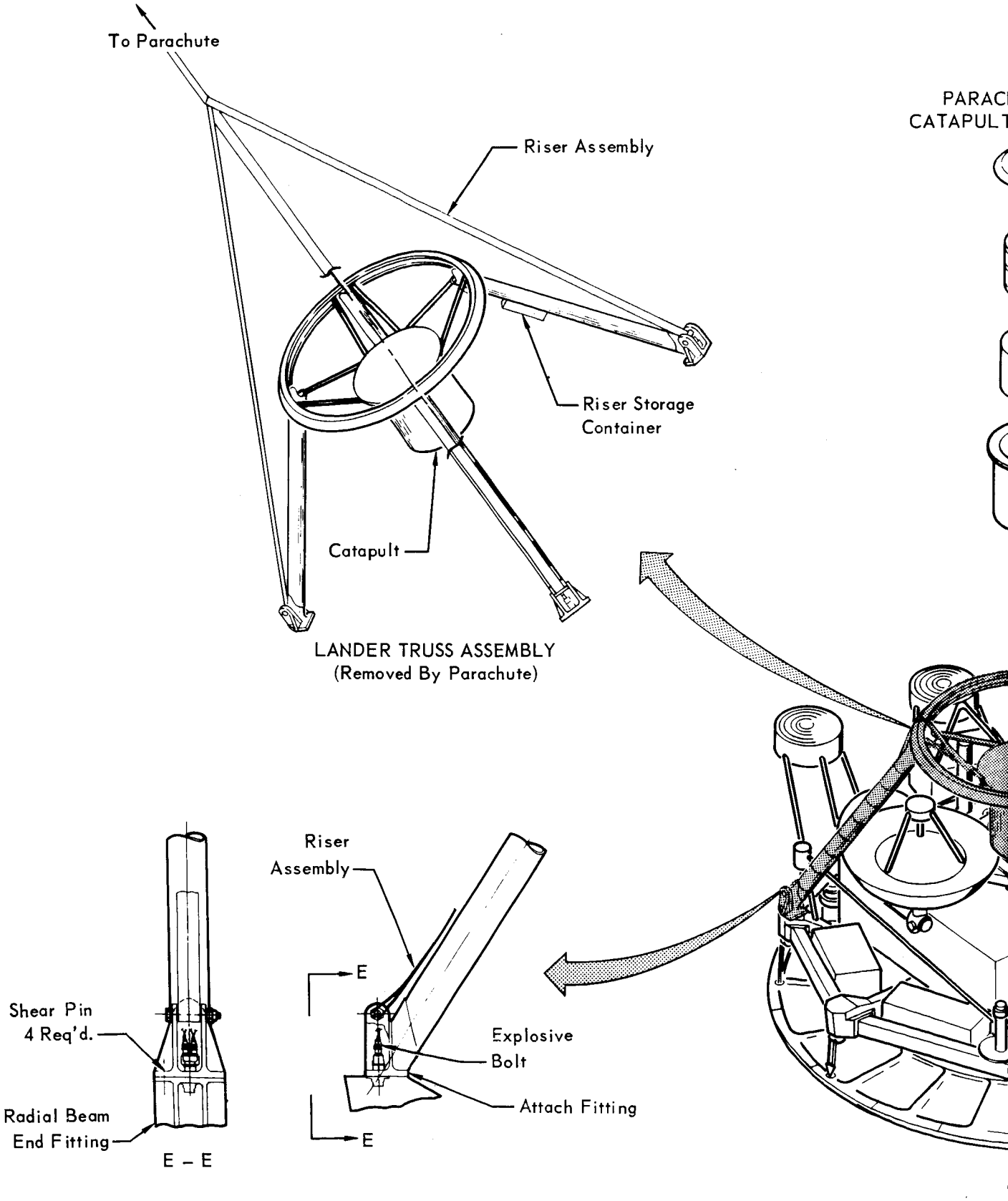

Figure 11–2

HUTE AND
INSTALLATION

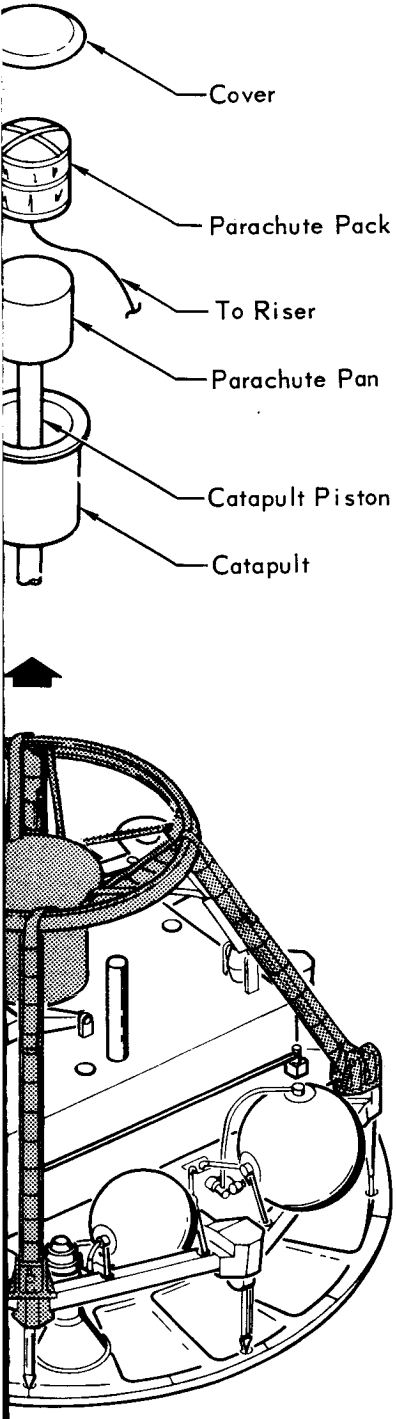

70 FT.D_o RINGSAIL WITH 10% S_o PERIPHERAL SLOT

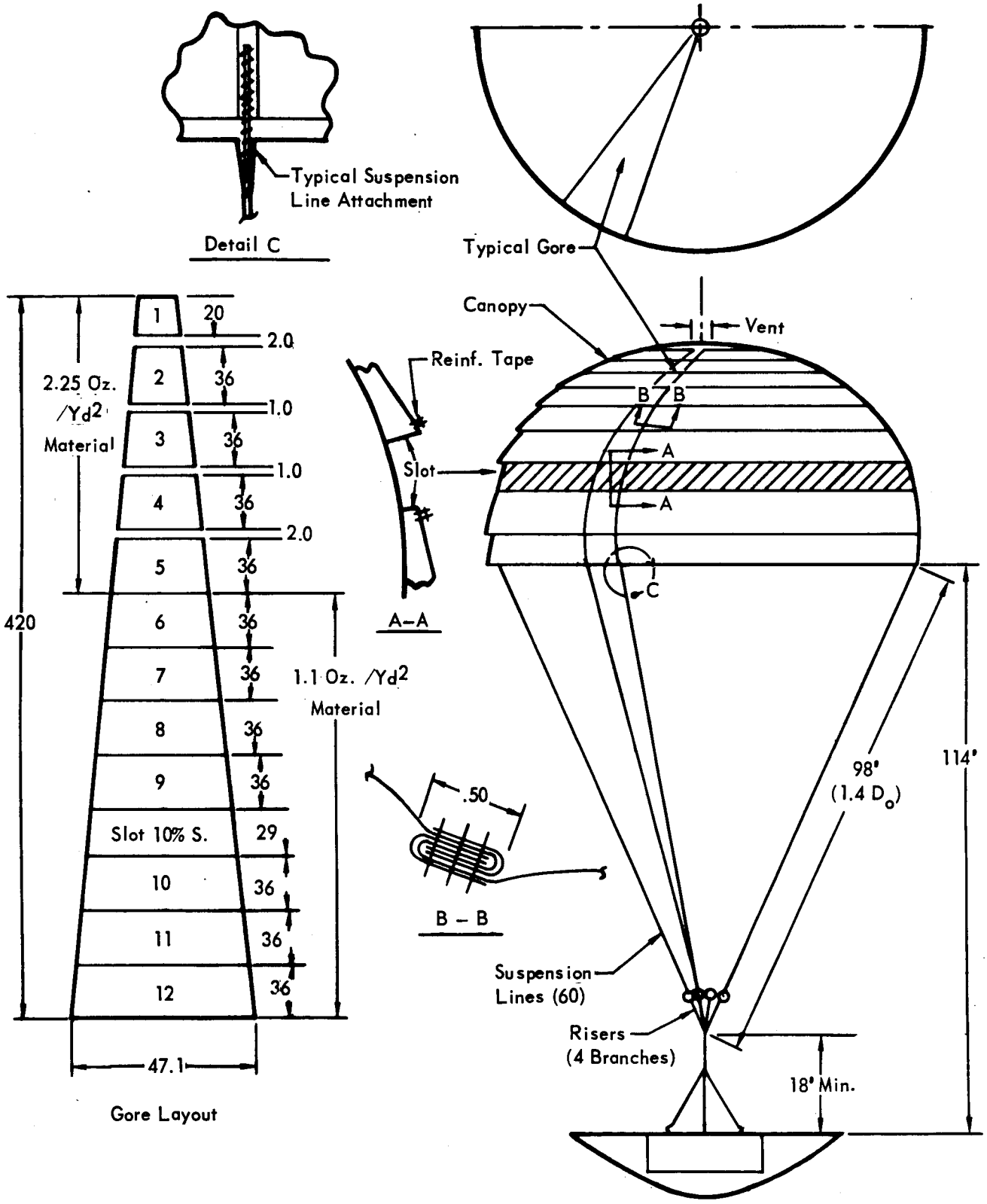

Figure 11–3

RISER ASSEMBLY DIAGRAM

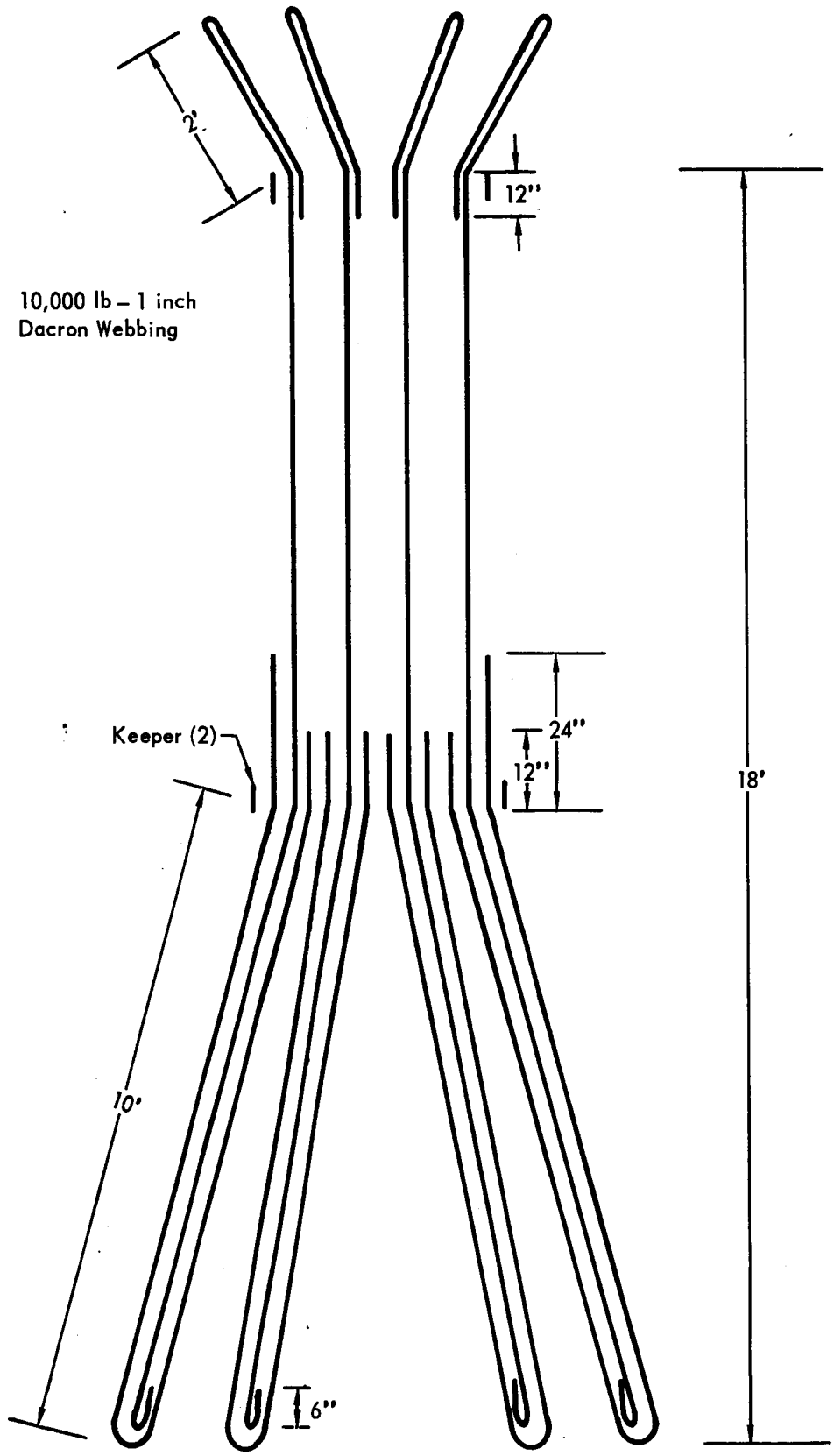

Figure 11–4

Reefing cutter configuration is shown in Figure 11-5.

11.1.4 Parachute Deployment Bag - The parachute canopy, suspension lines, and a portion of the Riser assembly are stowed in the parachute deployment bag within the catapult canister. Figure 11-6 shows the important features of the parachute deployment bag design. The remainder of the riser assembly is stowed in the Riser stowage compartment adjacent to the parachute catapult.

The deployment bag is constructed of cotton sateen cloth and necessary reinforcement webbings. The deployment bag is utilized to stow the parachute and insure an orderly deployment of the canopy and suspension lines by the use of restraint ties in the deployment bag. This method of positive restraint prevents the canopy from being dumped out of the bag prematurely because of the high inertia loads acting during the catapult firing.

11.1.5 Parachute Catapult Assembly - The Catapult Assembly is utilized to stow the parachute assembly and to provide the exit velocity required to properly deploy the parachute.

The Catapult Electro Explosive Device (EED) is initiated by the electrical signal directed by the EED Control Module when it receives the proper signal from the CB sequencer and timer. The catapult firing imparts a 100 ft/sec. velocity to the parachute pack as it leaves the catapult compartment and begins the deployment process. See Figure 11-7 for Catapult Assembly Configuration.

11.2 DESIGN REQUIREMENTS AND CONSTRAINTS - The Aerodynamic Decelerator Subsystem is designed to reduce the vehicle velocity to a subsonic range within the operational capability of the terminal propulsion subsystem. To meet this design requirement, the parachute must be reliably deployed and inflated. In addition, the system has been designed to meet the following requirements and constraints:

- Operate reliably following exposure to sterilization temperature.
- Noninterference with the communications subsystem.
- The parachute must serve as a backup for the terminal propulsion subsystems.
- The Aerodynamic Decelerator Subsystem shall not contaminate other subsystems or experiment instruments.
- The Aerodynamic Decelerator must be capable of extracting the Lander from the Aeroshell following parachute inflation.

11.3 PHYSICAL CHARACTERISTICS - The Aerodynamic Decelerator Subsystem major elements and their physical characteristics are described below.

11.3.1 Parachute - The canopy has nominal diameter (D_o) at 70 ft. with a total

REEFING LINE CUTTER

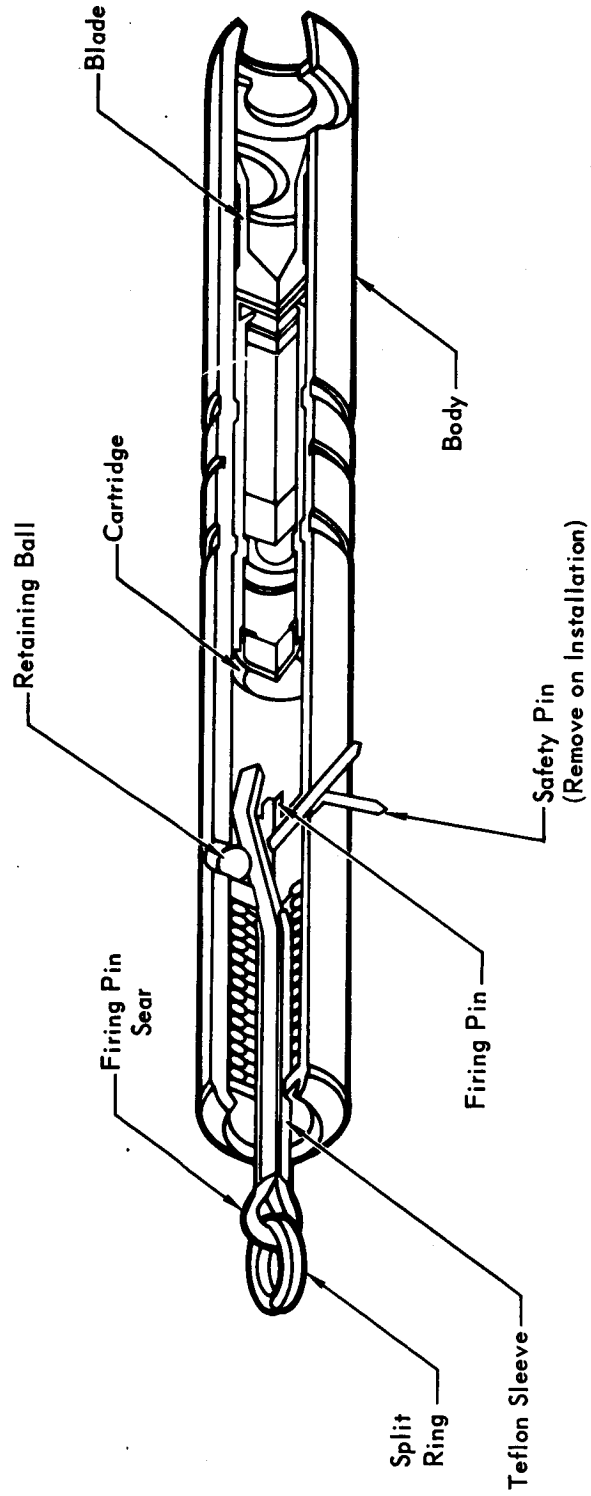

Figure 11-5

PARACHUTE DEPLOYMENT BAG

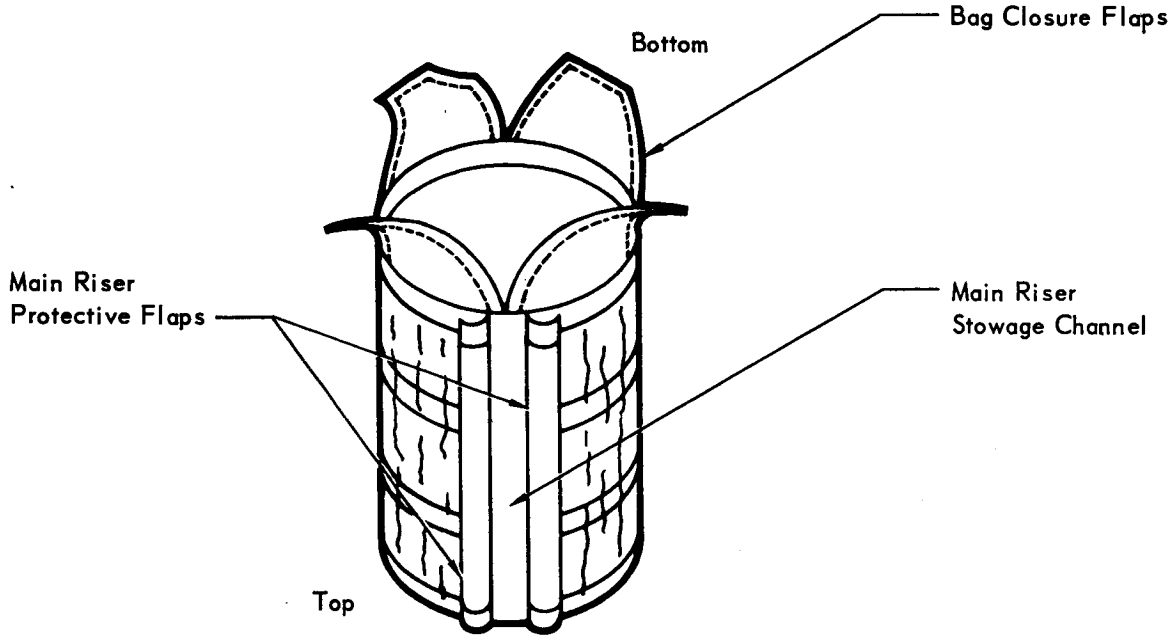

A - Exterior View

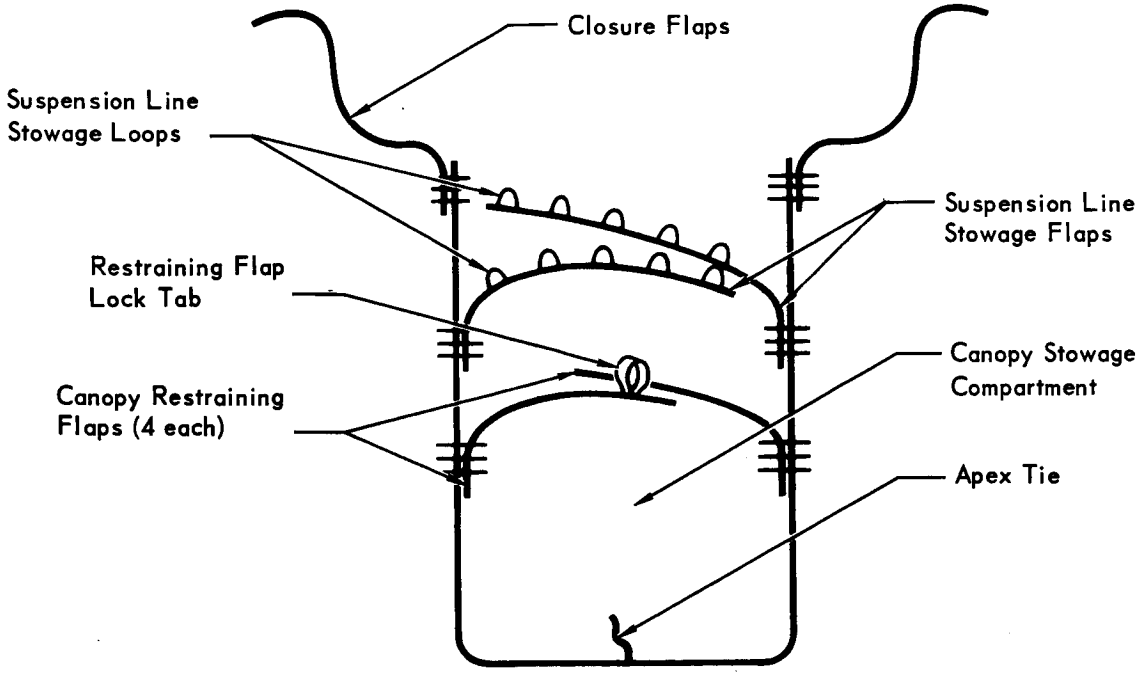

B - Interior Cut-Away

Figure 11-6

CATAPULT ASSEMBLY

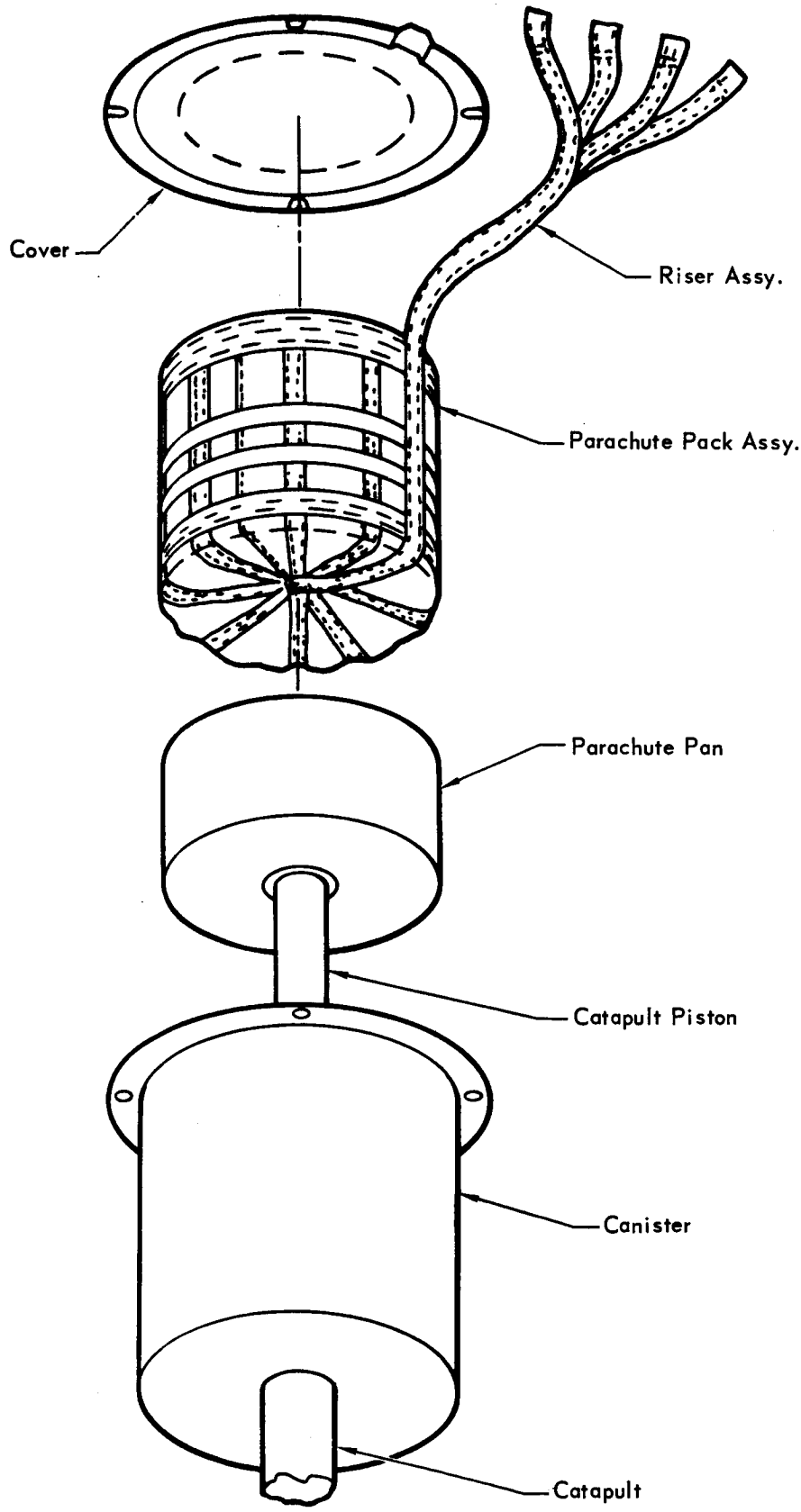

Figure 11–7

essential cloth area (S_o) of 3846 ft^2. The material used is 330 nylon. Construction consists of 12 rings of sails arranged in 60 gores and suspension lines. The suspension lines confluence with the riser assembly links; 15 lines attach to each of four links.

The lower parachute rings are made from 1.1 oz/yd^2 330 nylon cloth and the upper rings are made from 2.25 oz/yd^2 330 nylon cloth. The Aerodynamic Decelerator Subsystem shall be designed to withstand opening shock forces of 20,000 pounds.

Provisions for the installation of a single 1,000 lb. dacron reefing line and three reefing line cutters are included in the parachute canopy. The reefing line is installed by passing through small reefing rings sewn to the skirt band at the intersection of each radial tape. The suspension lines are 750 lb. 330 nylon cord.

Investigations conducted on the ability of 330 nylon parachute material to withstand the sterilization cycle have indicated that no degradation in material properties resulted from exposure to sterilization temperature (135°C) for periods of time up to 200 hours. See Figure 11-3 for details of parachute configuration.

11.3.2 Riser Assy - The riser is constructed from 1.0 inch wide dacron webbing with 10,000 lb. rated tensile strength. The riser has four legs at each end to adapt to the parachute suspension line links and to the vehicle attach points. See Figure 11.4 for riser configuration.

11.3.3 Reefing Line Cutter - The reefing line cutter has an aluminum tubular body containing a spring-loaded firing pin, a time delay cartridge and a cutter blade. A hole is provided near one end of the cutter body to insert the reefing line. The reefing line pyrotechnic cartridge is hermetically sealed to protect the pyrotechnic charge during prelaunch storage and vacuum soak conditions. See Figure 11-5 for reefing cutter assembly details.

11.3.4 Parachute Deployment Bag - The deployment bag is constructed of cotton sateen cloth and reinforcement webbings. To insure an orderly and controlled deployment of the parachute and riser assembly, they are stowed in the deployment bag in the following manner. The apex of the parachute canopy is tied with a break cord to the top inner end of the deployment bag. The canopy is folded and stowed in an accordian fashion with each folded layer being tied to restraining tabs on the interior of the bag. Four large canopy closure flaps are sewn to the inner wall of the bag and are folded down on the canopy. These flaps restrain the parachute canopy by means of a lock tab, through which the suspension line bundle is passed,

to form a loop lock for these flaps. This method of storage prevents the canopy from being dumped prior to the orderly and complete deployment of the suspension lines. McDonnell's experience with the F111A/B crew module, in which a 70 ft. diameter parachute was deployed at 100 ft/sec catapult velocity, showed this method of canopy stowage and restraint is necessary for large canopies deployed at high catapult exit velocities.

The remainder of the suspension lines are bundled and folded in a series of loops which are then stowed in a series of suspension line stowage loops sewn to the suspension line stowage flaps within the bag. The last section of the riser assembly is placed over the upper suspension line stowage flap and the bag closure flaps are sewn closed through the riser with break cord. The bag has a main riser stowage channel with two flaps which enclose and protect the riser from friction burns while the bag is leaving the catapult compartment.

Deployment Bag Configuration is shown in Figure 11-6.

11.3.5 Catapult Assembly - The parachute deployment bag and the upper section of the riser assembly is stowed within the catapult compartment. The catapult compartment is located on the aft portion of the lander structure as shown in Figure 11-2. The parachute deployment bag is constrained in the catapult compartment by the catapult cover. The catapult cover is made of aluminum alloy with .5 inches of insulation to protect the parachute from heating during descent from orbit. The cover is retained by four screws located in open-ended slots. When the catapult fires the pressure of the parachute bag against the cover causes it ot "oil can" off the retaining screws, thus freeing the parachute to deploy.

Ejection loads are transmitted to the parachute from the catapult piston by a parachute pan which is attached to the upper end of the piston. Sides on the parachute pan prevent the parachute from expanding due to compression loads during firing and creating excessive drag forces on the catapult canister wall. A catapult design illustrated by Figure 11-8 has been developed and fully qualified by McDonnell Douglas for the F-111 Pod parachute ejection system. This catapult design is capable of ejecting weights of 114 pounds from velocities of 45 ft/sec to 100 ft/sec. The design includes a crushable honeycomb feature for precise control of chamber pressure which results in uniform acceleration and exact velocity control over a temperature range from $-65^{\circ}F$ to $+200^{\circ}F$. A catapult capable of accelerating the 108 lb. VOYAGER parachute to a velocity of 100 ft/sec is therefore well within the McDonnell Douglas design experience capability.

F-111 PARACHUTE CATAPULT CROSS SECTION

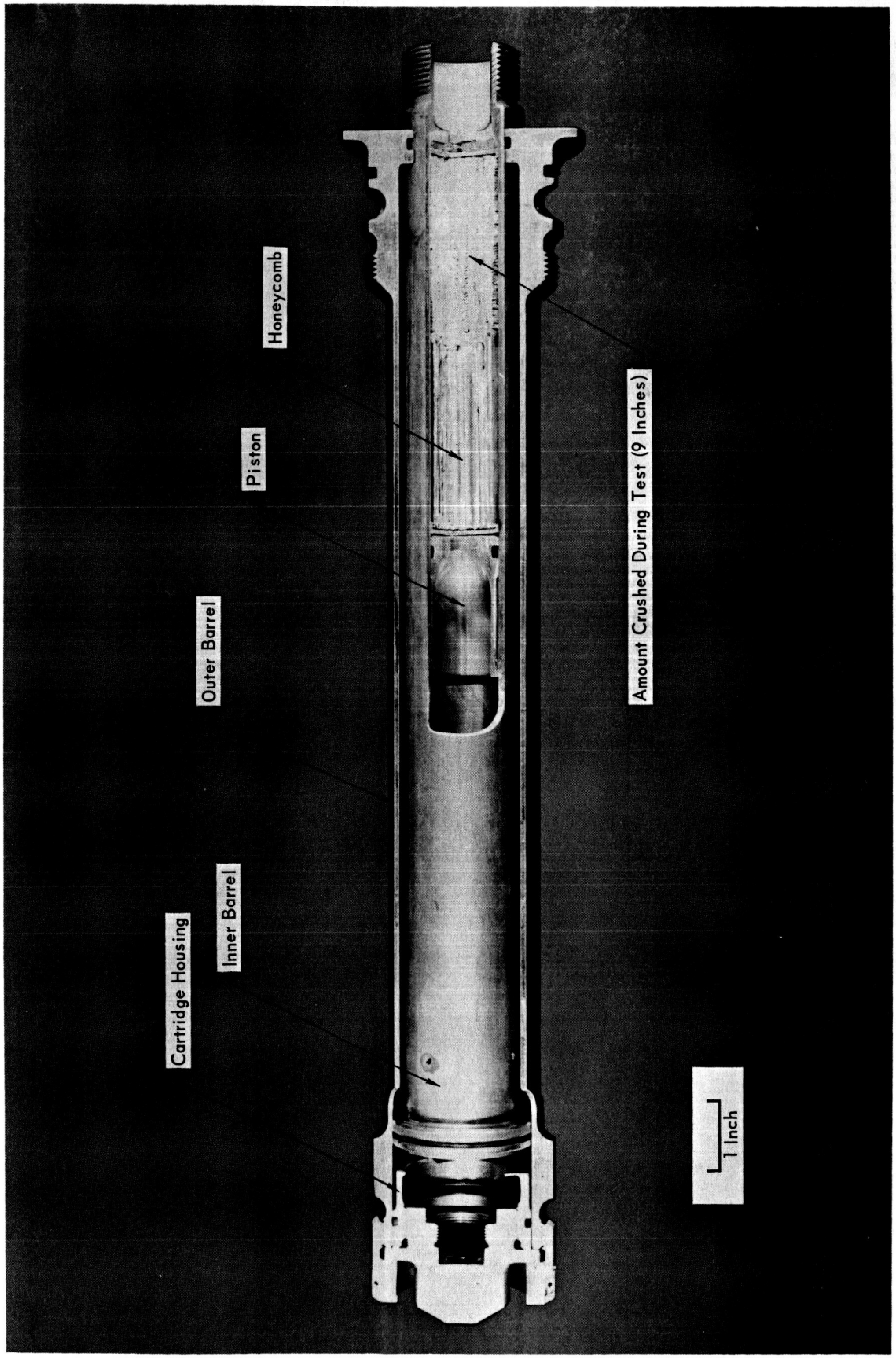

Note: Catapult shown after firing, except inner barrel retracted for photo.

Figure 11-8

11.4 OPERATIONAL DESCRIPTION - Sequencing of the Aerodynamic Decelerator Subsystem is initiated by signals originating from other subsystems. Figure 11-9 pictorially illustrates the operation and sequencing of the Aerodynamic Decelerator Subsystem from parachute catapult fire initiation through terminal propulsion subsystem initiation and subsequent parachute release.

A block diagram of the Aerodynamic Decelerator Subsystem sequencing is shown in Figure 11-10. This figure is broken into two phases: (a) that phase associated with parachute deployment and separation of the Lander from the Aeroshell, and (b) the phase of releasing the parachute from the Lander.

The Altitude Marking Radar measures the altitude of the Flight Capsule above the Mars surface, and when it detects an altitude of 23,000 ft., it initiates the parachute deployment sequence by sending a signal to initiate the parachute catapult. A 12-second time delay signal for separation of the Aeroshell is also initiated at the 23,000 ft. mark. The parachute catapult forcefully deploys the parachute to its line stretch position. At line stretch three pyrotechnic 8-second delay reefing cutters are initiated. The parachute opens to its reefed position where it is restrained from opening further by the reefing line attached around the interior of the parachute skirt. After the 8-second delay expires in the reefing cutters, the cutters fire and mechanically sever the reefing line allowing the parachute to open to the fully inflated condition. Shortly after the parachute attains full open, the pyrotechnic bolts connecting the Lander to the Aeroshell are fired at expiration of the 12-second time delay initiated at 23,000 ft. The drag of the parachute separates the Lander from the Aeroshell. With the mass of the Aeroshell now removed from the parachute, the Lander and parachute continue to decelerate to terminal or near terminal descent conditions depending on the atmosphere encountered. The Aeroshell falls away from the Lander and impacts on the Mars surface.

At 5,000 ft. above the Mars surface the Altitude Marking Radar sends a signal to initiate the terminal propulsion rocket motors. This sequence is shown in Figure 11-10. After a 0.5 second delay, if the rocket motors have all ignited and are functioning properly, the terminal propulsion status detector indicates proper operation and sends an electrical signal to initiate the parachute release. The parachute is released from the Lander and the Lander continues its descent to the Mars surface under the control of the Terminal Descent Subsystems.

In case one or more of the terminal propulsion rocket motors malfunctions,

AERODYNAMIC DECELERATOR SUBSYSTEM OPERATIONAL SEQUENCE

Catapult Fire
t = 0
h = 23,000 ft

Reef Open
t = 1 sec
h = 22,300 ft (VM–7)
h = 22,600 ft (VM–10)

Full Open
t = 9 sec
h = 17,200 ft (VM–7)
h = 19,750 ft (VM–10)

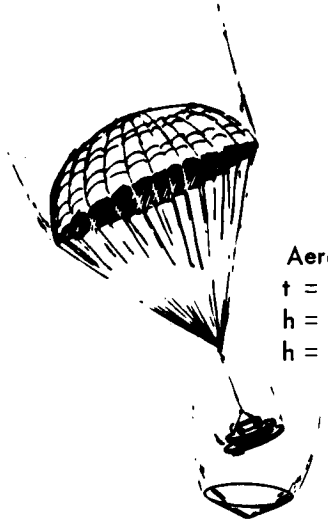

Aeroshell Release
t = 12 sec
h = 16,000 ft (VM–7)
h = 18,900 ft (VM–10)

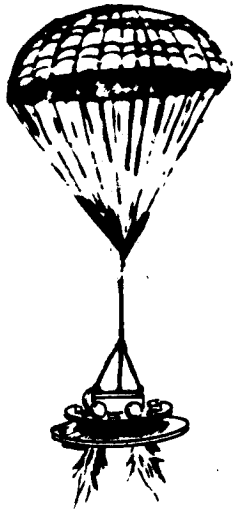

Terminal Propulsion
Initiation
t = 45.2 sec (VM–7)
t = 121.5 sec (VM–10)
h = 5,000 ft

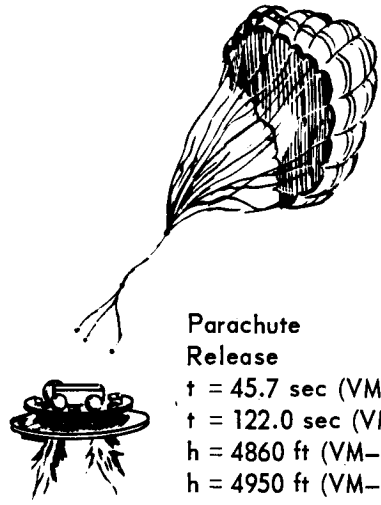

Parachute
Release
t = 45.7 sec (VM–7)
t = 122.0 sec (VM–10)
h = 4860 ft (VM–7)
h = 4950 ft (VM–10)

Figure 11–9

AERODYNAMIC DECELERATOR SUBSYSTEM SEQUENCING

A – PARACHUTE DEPLOYMENT SEQUENCE

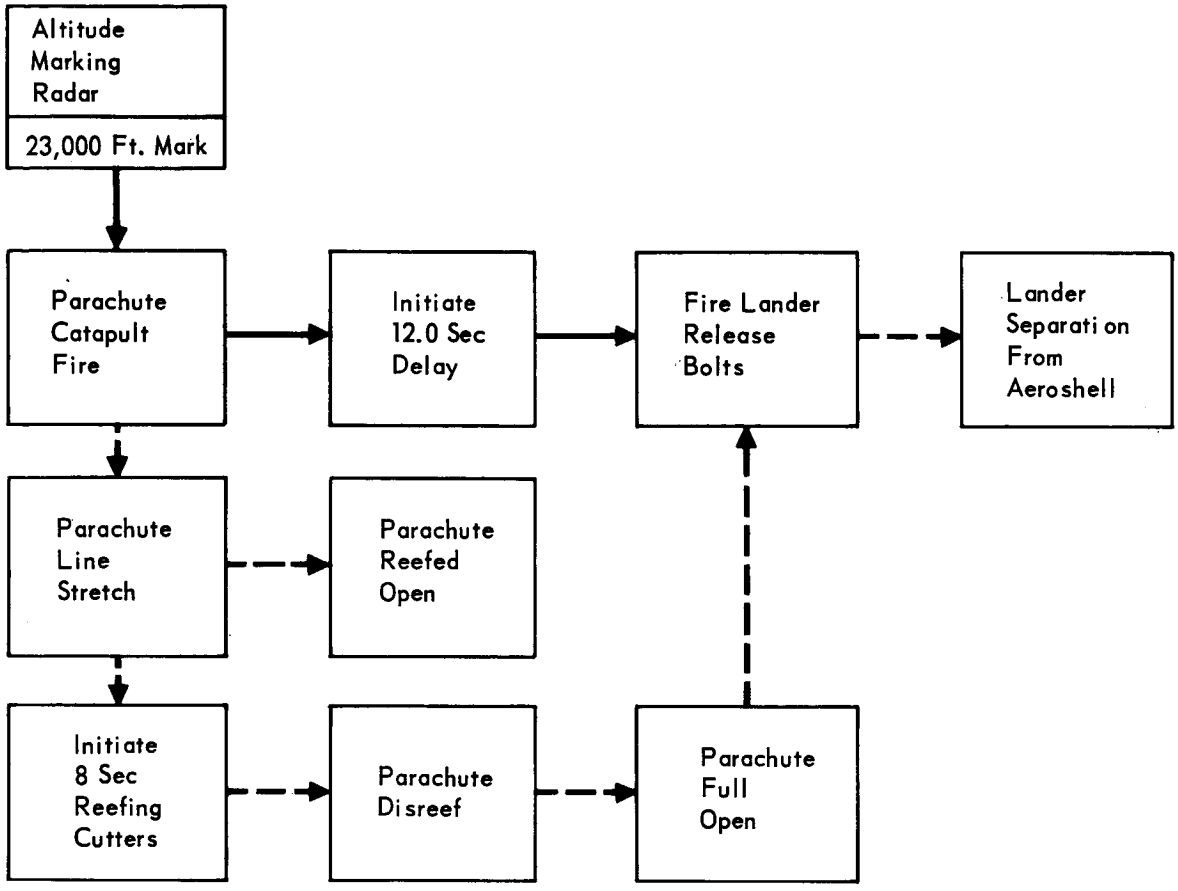

B – PARACHUTE DISCONNECT SEQUENCE

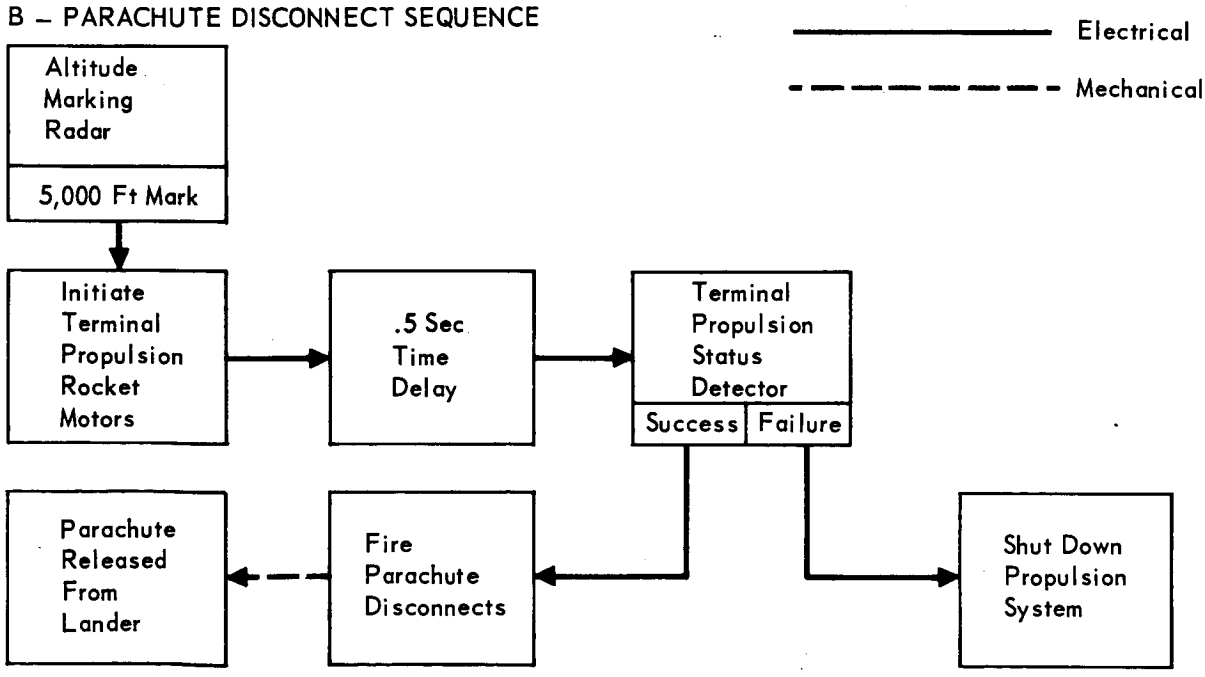

Figure 11–10

the terminal propulsion status detector will send a signal to shut down the rocket motors. The parachute is not released in this mode and the Lander continues to descend to the Mars surface with the parachute attached. Depending on the density of the Mars atmosphere encountered, the Lander could impact at a velocity as low as 120 ft/sec.

11.5 PERFORMANCE OBJECTIVES - The performance requirements which must be imposed on the Aerodynamic Decelerator Subsystem are affected by mission analysis, capabilities of interrelated subsystems and the present state-of-the-art aerodynamic decelerator technology. Our subsystem is designed to operate successfully under the most critical combination of entry conditions in the VM atmospheres. Subsystem design analysis appears in Volume II, Part B, Section 5, par. 5.10. Parachute design and performance is summarized below:

Parachute Type	-	Ringsail
Diameter (D_o)	-	70 ft.
Area (S_o)	-	3846 ft^2
Drag Coefficient (C_o)	-	.6
No. Rings	-	12
No. Gores	-	60
No. Suspension Lines	-	60
Basic Material	-	330 nylon
Reefing	-	Single - 8 sec delay
Parachute Weight	-	108.7 lbs.
Deployment Method	-	Catapult
Deployment Altitude	-	23,000 ft.
Deployment Velocity	-	100 ft/sec
Deployment Mach. No.	-	2.0
Deployment Dynamic Pressure	-	13.2 PSF
Deployment Weight	-	3650 lbs (with Aeroshell)
	-	2800 lbs (without Aeroshell)
Opening Shock Load	-	20,000 lbs
Release Altitude	-	5000 ft.
Aeroshell Release	-	12 sec after parachute deployment

11.6 INTERFACE DEFINITION - The catapult assembly, which includes the parachute, deployment bag, and catapult cover, is attached through a flange to a truss assembly. The truss assembly is in turn attached to the Lander by explosive

bolts at four points. The parachute riser assembly is also attached to the truss assembly at a point near the explosive bolt attachment. For installation details see Figure 11-2. Detonation of the explosive bolts allows the parachute to remove the truss assembly, and catapult assembly from the Lander.

The electrical interface between the truss and the Lander is pyrotechnically separated at the same time the truss assembly explosive bolts are fired which allows unrestrained separation of the Decelerator Subsystem. Details of the separation circuit are contained in Section 12, Paragraph 2.7 of Volume II, Part C.

The retro-rocket motor is also attached to the truss assembly as shown by Figure 11-2. Four explosive bolts are used to separate the de-orbit rocket motor prior to atmospheric entry. Eight compression springs eject the rocket motor from the truss assembly when the explosive bolts are fired.

11.7 RELIABILITY CONSIDERATIONS - Reliability has been a major consideration in the design of the Aerodynamic Decelerator Subsystem. The structural elements of the subsystem are designed to a philosophy adopted and proven on previous McDonnell spacecraft designs which virtually negates the reliability risk. For this reason the reliability of the structural elements are not approached from a statistical probabilistic standpoint. The reliability analysis is therefore limited the functioning elements of the subsystems.

Reliability Estimate - A reliability logic diagram of the Aerodynamic Decelerator Subsystem was prepared and is presented as Figure 11-11. An estimate of the reliability of each element in the logic diagram was made and is as follows:

Component	Reliability
Initiator, Catapult	.9998
Catapult Assembly	.9998
Reefing Cutter	.9994
Parachute Assembly	.997

Applying these component reliability estimates to the reliability logic diagram gives the following estimate of the subsystem reliability:

$R = .9968$

Failure Mode, Effect and Criticality Analysis - A failure mode, effect and criticality analysis was conducted for the Aerodynamic Decelerator Subsystem and the results are presented in Figure 11-12. Each failure mode is categorized according to the effect on the following mission objectives.

- o Achievement of flight capsule landing.
- o Performance of entry science experiments.

RELIABILITY LOGIC DIAGRAM – AERODYNAMIC DECELERATION

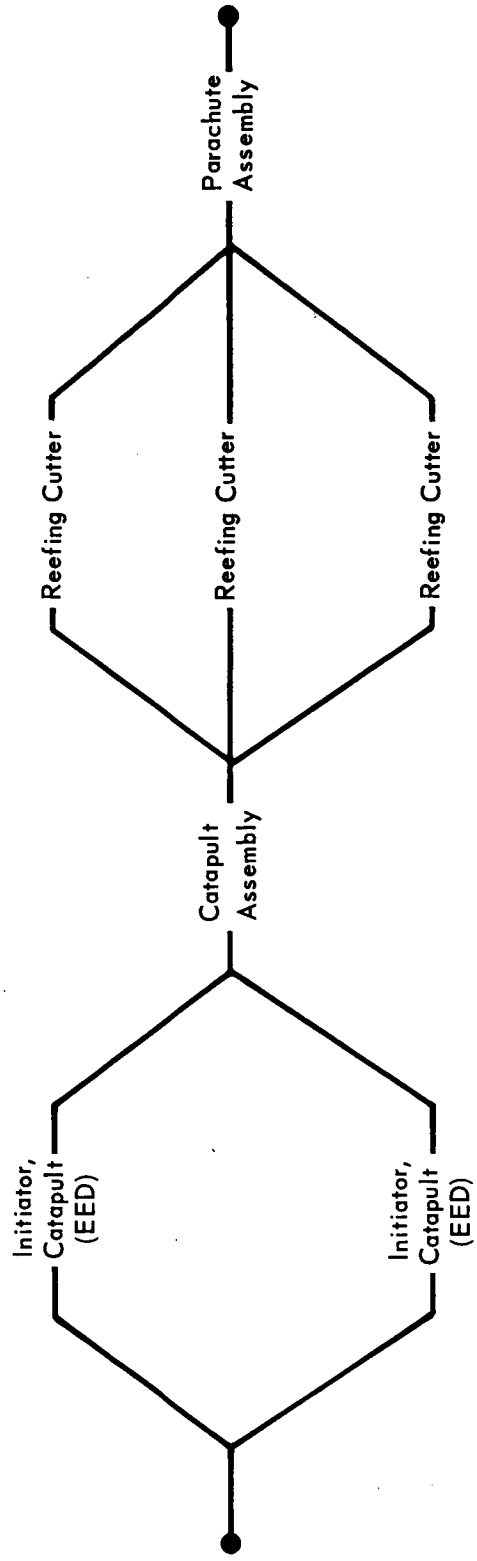

Figure 11-11

FAILURE MODE, EFFECT AND CRITICALITY ANALYSIS
AERODYNAMIC DECELERATOR

Failure Category Definition

1. No effect on mission objective
2. Degrading effect on mission objective
3. Possible catastrophic effect on mission objective

COMPONENT OR FUNCTION	FAILURE MODE	FAILURE EFFECT	FAILURE CATEGORY: Landing	Entry Science	Landed Science	Eng. Data	REMARKS
1. Parachute Catapult Assembly	Initiator fails to fire	No effect – redundant initiators.	1	1	1	1	
	Output charge fails to ignite	Parachute will not be deployed and the lander will not be separated from aeroshell. Lander will impact at destructive velocity.	3	2	3	2	Probability of occurance is minimized by the incorporation of redundant initiators
	Output charge gives low order output	Parachute will probably deploy but delay in sequence will reduce parachute's effectiveness and lander will impact at excessive velocity if terminal propulsion system is unable to compensate for reduced deceleration from parachute.	1/3	1/2	1/3	1/2	The effect is dependent upon the amount of deceleration loss in conjunction with density of the Martian atmosphere encountered.
	Structural failure of catapult	Possible damage to surrounding equipment or to the parachute.	1/3	1/2	1/3	1/2	Parachute will probably be deployed but may suffer damage which will degrade performance. Probability of failure is minimized by adequate design margins.
2. Parachute Assembly	Fails to disreef	Lander will impact at destructive velocity	3	2	3	2	Redundant reefing cutters (one of three) insure that reefing line will be severed.
	Canopy fails structurally	Varying drag loss dependent upon extent of failure.	1/3	1/2	1/3	1/2	Adequate design margins minimize probability of failure.
	Bridle leg or attachment fitting failure. (any one of four)	Remaining three bridles will pick up the load. Some oscillation will probably occur.	1	2	1	1	Adequate design margins minimize probability of failure. Three of four bridle legs will carry the load; however, the resulting oscillation may degrade entry TV experiments.

Note: Failure categories listed as 1, 2, 1/3, 2/3, etc., indicate that effect of failure may vary between the two categories.

Figure 11–12

- Performance of landed science experiments.
- Retrieval of engineering data.

The failure categories are defined as follows:

Category	Effect
1	No effect on mission objective.
2	Degrading effect on mission objective.
3	Possible catastrophic effect on mission objective.

Reliability Improvement Considerations - Reliability improvement effort for this subassembly will be directed toward increasing the reliability of the basic components rather than adding further redundancy. This will entail a critical review of the design details of each component to insure that any potential deficiency is removed. Reliability will be demonstrated during the Development and Qualification Test Program outlined in Volume VI, Part B, Section 1.3.3.

11.8 TEST REQUIREMENTS - Testing of the parachute assembly is limited to monitoring the step-by-step packing procedure performed by a qualified and experienced parachute rigger. X-rays of the packed parachute from three directions will be made to ensure that the reefing line cutters were not fired or damaged during the packing operation. Preflight tests of the Aerodynamic Decelerator Subsystem are limited to electrical checks of the catapult pyrotechnic bridgewire, safe-arm circuits and initiation signal.

11.9 DEVELOPMENT REQUIREMENTS - An extensive development program will be required to obtain an operational Aerodynamic Decelerator Subsystem. Due to the limited experience and data available on parachute deployment and inflation at high Mach number and low "q" conditions expected during Mars atmospheric entry, high altitude parachute development tests will be required. During this test program, the following will be investigated:

- Inflation characteristics under low "q" conditions.
- Dynamic stability during high Mach number in the reefed condition.
- Determination of proper reefing parameters for loads optimization.
- Demonstration of proper operation of complete subsystem following sterilization and vacuum soak conditions.
- Aeroshell separation.
- Catapult deployment of parachute.
- Structural integrity under design and ultimate conditions.

A complete discussion of the development program to be conducted on the Aerodynamic Decelerator Subsystem is contained in Volume VI, Part B, Section 1.3.3.

SECTION 12

PYROTECHNIC SUBSYSTEM

12.1 EQUIPMENT IDENTIFICATION AND USAGE - The CBS pyrotechnic subsystem contains the pyrotechnic devices shown in Figure 12-1 that support non-repetitive mission events. Figure 12-2 shows that this subsystem also contains the electro-explosive device (EED) control modules which are activated by the CB S & T control of electrical power to the EED's. These in turn initiate the pyrotechnic energy release required to function the devices.

12.1.1 EED Control Module - The EED control module contains the firing relays, arming relays, firing capacitors and safe/arm relay required to activate the automatically activated batteries which in turn energize the EED buses as shown in Figure 12-3. The EED control module also contains the current limiting resistors, arm and fire relays required to initiate pyrotechnic functions supporting other mission events. Figure 12-4 shows a CBS pyrotechnic firing circuit (#1) capable of initiating three EED's. A completely redundant firing circuit (#2) is used to initiate the second EED installed in each pyrotechnic device. The CSE test connections are shown on Figure 12-4 that provide individual remote checkout of the arm relay, fire relay and EED. After the firing circuitry has been checked out the test connector is replaced with a shorting plug to maintain the circuit in a shorted condition in the event the arm relay is inadvertently actuated due to ground handling or other system testing. The shorting plug is replaced with a flight plug just prior to launch that will guarantee separation of the contacts from the connector case and one another and provide environmental protection during launch and transit to Mars.

12.1.2 Electro-explosive Devices - The EED's are hermetically sealed units threaded at one end to mate with a pyrotechnic device and terminated on the other end in an integral bayonet lock electrical connector shell surrounding two pin contacts.

Each EED contains a single standardized bridgewire and the amount of ignition material and the varied output charge necessary to individually perform the functions shown in Figure 12-5.

Pyrotechnic time delay elements are incorporated in certain EED's as indicated in Figure 12-5 between the ignition material and output charge to provide a preprogrammed delay of output charge initiation after the EED has received the electrical pulse. Sequential functioning of several devices incorporating different time delays occurs when all are initiated by the EED control module simultaneously.

PYROTECHNIC DEVICES SUPPORTING MAJOR MISSION EVENTS

MAJOR MISSION EVENTS	SUPPORTING PYROTECHNIC DEVICES
Activate Auto-Activated Batteries	• Gas Generators
Release and Separate Forward Sterilization Canister	• CESD Separation Assembly
Release and Separate CB from FS	• Explosively Interconnected Contained Explosive Bolts
Activate Reaction Control System (RCS)	• Contained Normally Closed Isolation Valves
Control De-orbit Propulsion Motor	• Pyrogen Igniters • Contained Explosive Bolts • Rotary Wire Bundle Disconnects • Explosively Interconnected Contained Explosive Bolts
Activate Terminal Propulsion System (TPS)	• Contained, Normally Closed Isolation Valves
Release Aeroshell	• Rotary Wire Bundle Disconnect • Explosively Interconnected Contained Explosive Bolts
Deploy and Release Aerodynamic Decelerator	• Contained Thruster • Rotary Wire Bundle Disconnect • Explosively Interconnected Contained Explosive Bolts
Jettison Descent Imaging Camera	• Rotary Wire Bundle Disconnects
Terminate TPS	• Contained Thruster • Contained Normally Open Isolation Valves
Release Capsule Lander Stabilizer Legs	• Contained Bolt Cutters

Figure 12-1

FUNCTIONAL INTERRELATIONSHIP OF PYROTECHNIC SUBSYSTEM ELEMENTS

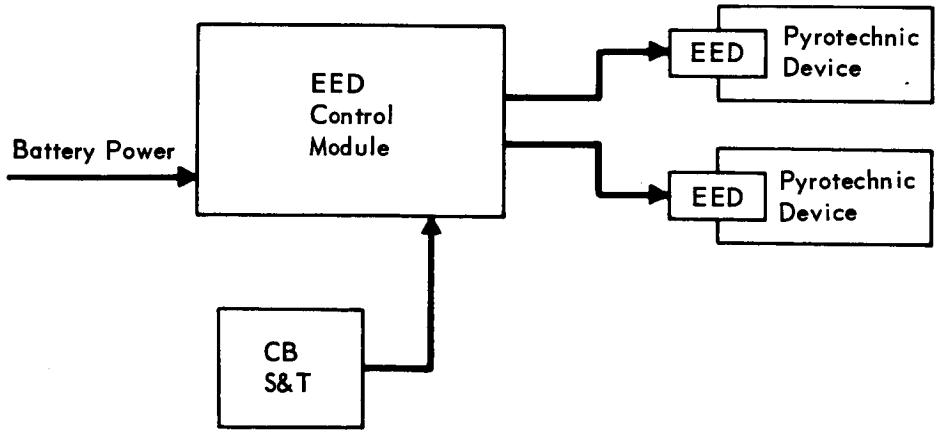

Figure 12-2

CBS PYROTECHNIC MAJOR ELEMENTS FUNCTIONAL SCHEMATIC

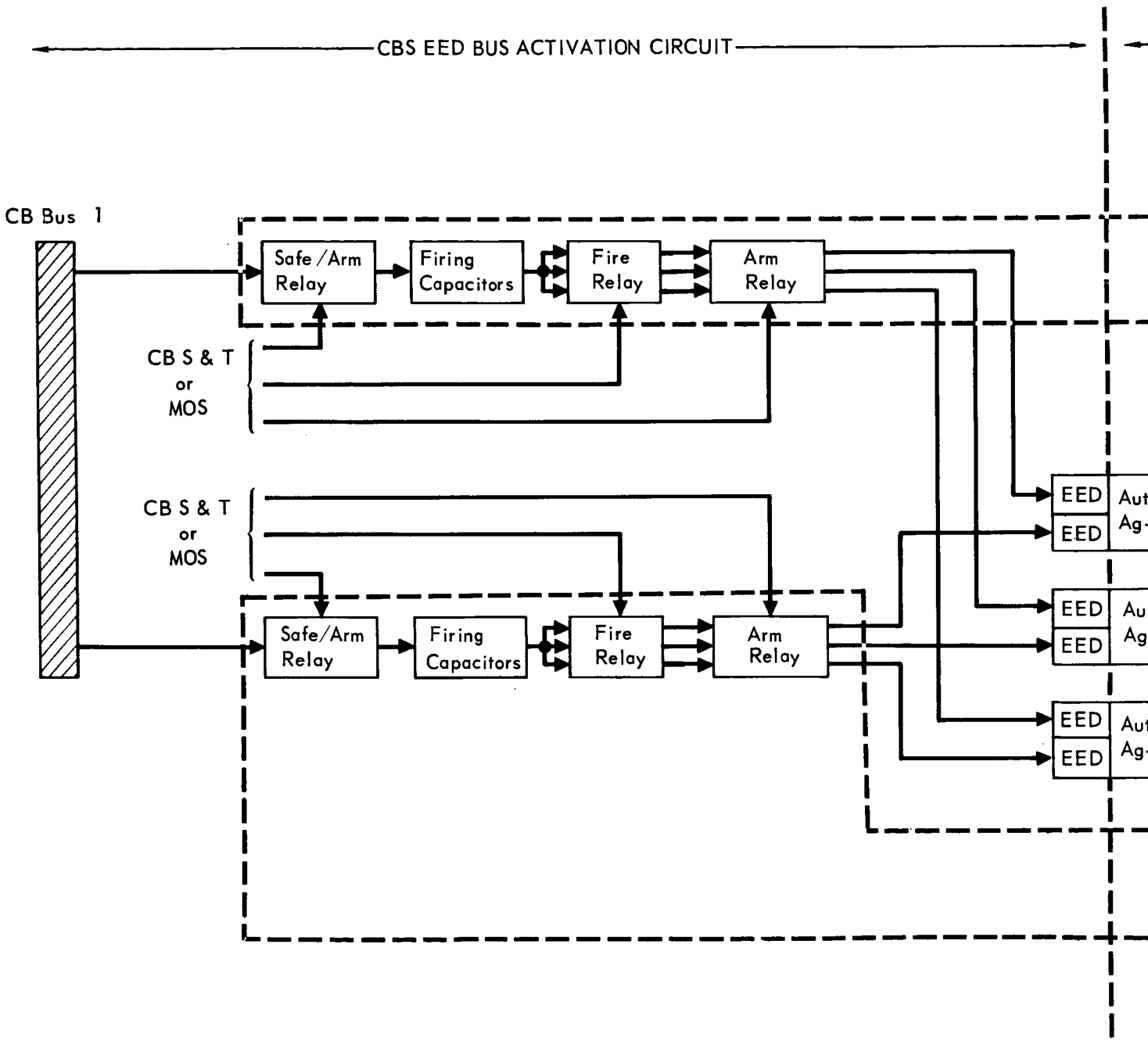

Figure 12-3

CBS TYPICAL EED FIRING CIRCUIT

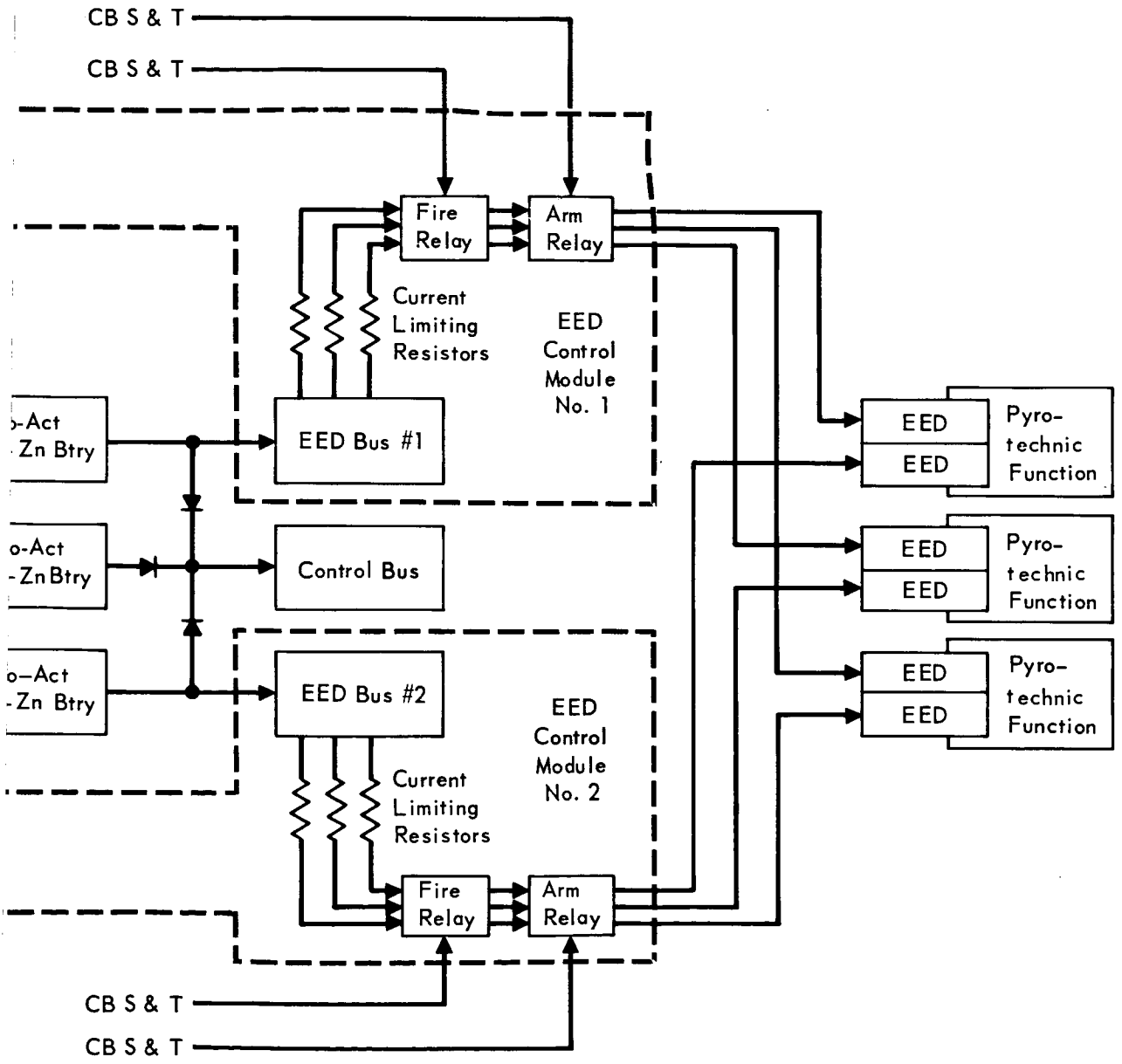

SELECTED CBS EED FIRING CIRCUIT

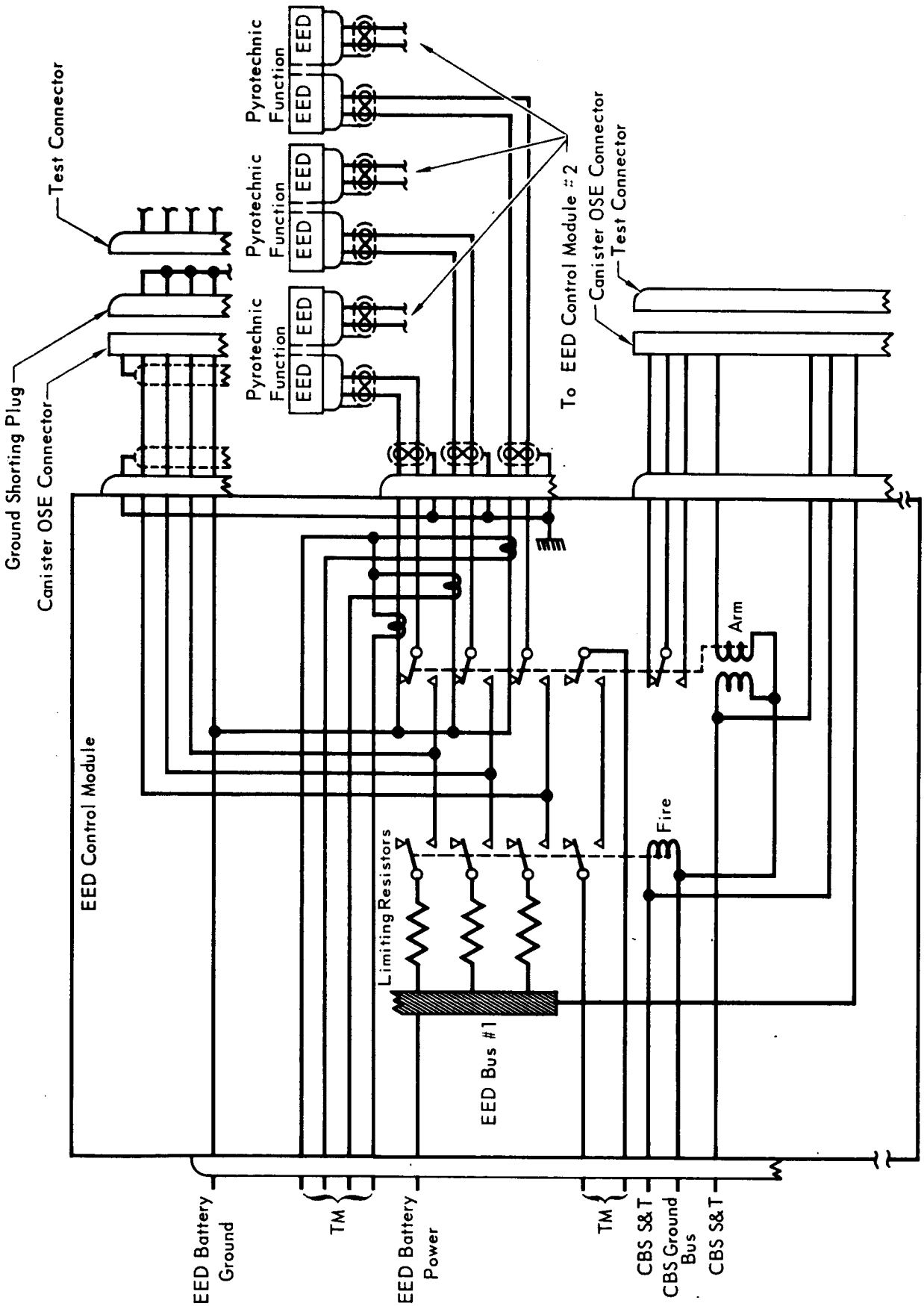

Figure 12-4

12.1.3 Pyrotechnic Devices - The pyrotechnic devices providing integrated support of CBS functions shown in Figure 12-5 are described below:

- Gas Generator is a pyrotechnic gas operated device that is vented into a electrolyte reservoir. Upon initiation of either or both EED's the generated gases will be directed to electrolyte reservoir moving the electrolyte in front of it through a burst diaphragm into the battery cells.
- Contained Explosive Separation Device is described in detail in Volume II, Part C, Section 1.1.2.
- Normally closed pyrotechnic isolation valve is a non-venting pyrotechnic gas operated device that is contained in a housing which has fluid inflow and outflow ports. These fluid flow ports are terminated in shear diaphragms in the path of a ram having a hole, the size of the inflow/outflow ports, through its diameter. Upon initiation of either or both of the installed EED's, the generated gases are directed to the ram forcing it to move and shear the diaphragms. Movement of the ram is stopped by a shoulder, which allows the hole through its diameter to align with the inflow and outflow ports. Fluid then flows through the valve.
- Normally open pyrotechnic isolation valve is a non-venting pyrotechnic gas operated device that is contained in a housing which has fluid inflow and outflow ports. A ram, having a hole through its diameter the size of the inflow/outflow ports, is positioned to connect these ports so that fluid may flow through the valve prior to actuation. The generated gases are directed to the ram, upon initiation of either or both of the installed EED's, forcing it to move the diametetial hole completely out of line with the two ports stopping fluid flow through this valve.
- Pyrogen Igniter is a device housing ignition granules, such as Boron Potassium Nitrate, in a basket connected to the deorbit motor propellant by a flow path through the motor case to permit the ignition granule flame to come in contact with the deorbit motor propellant. The ignition granules are ignited by either or both of the installed EED's.
- Rotary Pyrotechnic Wire Bundle Disconnect is a non-venting device which imparts a rotational force to the coupling ring of a bayonet locking electrical connector by piston motion, on activation of either or both of the installed EED's. causing the mating connector halves to separate.
- Contained Explosive Stimulus Interconnected Explosive Bolts comprise a multiple point structural attachment subassembly. A non-venting explosive bolt

MISSION PHASE	MISSION EVENT	PYROTECHNIC DEVICES PERFORMING FUNCTION	FUNCTION	NUMBER OF EED'S INITIATED/CONTROL MODULE	SUBSYSTEM SUPPORTED	TIME OF FUNCTION	PYROTECHNIC TIME DELAY
Spacecraft–Capsule Bus Separation	Initiate Auto–Activated High Discharge Rate and EED Batteries	Gas Generators	Force Electrolyte into Auto-Activated Batteries	3	Electrical Power	T_{12} – 57 min	None
	Release and Separate Forward Sterilization Canister	CESD Separation Assembly	Remove Forward Sterilization Canister from Capsule Bus	Part of Canister	Canister	T_{12} – 5 min	None
	Activate Reaction Control System	Normally Closed Pyrotechnic Isolation Valve	Activate Reaction Control System Pressurant	2	Reaction Control System	T_{12} – 5 sec	None
		Normally Closed Pyrotechnic Isolation Valves	Activate Reaction Control System Propellant	1	RCS	T_{12} – 5 sec	None
	Release and Separate CB from FS	Contained Explosive Stimulus Inter-Connected Explosive Bolts	Release CB–FS Structural Interface	Part of Canister	CBS	T_{12}	None
Capsule Bus Deorbit	Control Deorbit Propulsion Motor	Pyrogen Igniter	Ignite CB Deorbit Motor	1	Deorbit Propulsion Subsystem	T_{12} + 20 min	None
		Contained Explosive Bolts	Release Motor Nozzle (Terminate Thrust)	1	Deorbit Propulsion Subsystem	T_{13} + 32 sec	None
		Rotary Pyrotechnic Wirebundle Disconnects	Separate Deorbit Motor/ CB Electrical Interface	1	CBS	T_{13}+ 40 sec	.5 Second
		Contained Explosive Stimulus Inter-Connected Explosive Bolts	Release and Separate Deorbit Motor Case and Support	2	Deorbit Propulsion Subsystem	T_{13} + 41 sec	1.5 Seconds
Capsule Entry	Activate Terminal Propulsion System (TPS)	Normally Closed Pyrotechnic Isolation Valves	Activate TPS Pressurant	3	TPS	T_{15} + 50 sec	None
		Normally Closed Pyrotechnic Isolation Valves	Activate TPS Propellant	2	TPS	T_{15} + 55 sec	5 Seconds
Capsule Terminal Deceleration	Initiate CB Terminal Descent	Contained Pressure Controlled Catapult	Deploy Aero-decelerator	1	Aerodecelerator Subsystem	T_{19}	None
	Release CB from Aeroshell	Rotary Pyrotechnic Wirebundle Disconnects	Separate CB/ Aeroshell Electrical Interface	1	CBS	T_{20} – .5 sec	.5 Second
		Contained Explosive Stimulus Interconnected Explosive Bolts	Release CB/Aeroshell Structural Interface	2	CBS	T_{20}	1 Second
	Release CB from Aerodecelerator	Rotary Pyrotechnic Wire-Bundle Disconnect	Separate CB/ Aero-decelerator Electrical Interface	1	CBS	T_{21} + 1 sec	.5 Second
		Contained Explosive Stimulus Interconnected Explosive Bolts	Release CB/ Aero-decelerator Structural Interface	2	Capsule Lander	T_{21} + 1.6 sec	1.1 Seconds
	Release and Separate Descent Imaging Camera from CB	Rotary Pyrotechnic Wire Bundle Disconnect	Separate CB/Descent Camera Electrical Interface	1	ESP	T_{24} - 1 sec	.5 Second
		Contained Thruster	Jettison Descent Imaging Camera	1	ESP	T_{24}	1 Second
	Terminate TPS	Contained Explosive Stimulus Interconnected Normally Open Isolation Valves	Deactivate TPS Engines	4	Capsule Lander	T_{26}	None
Landed Capsule	Deploy Capsule Lander Stabilizer Legs	Contained Bolt Cutter	Release Stabilizer Legs from Stowed Position	3	Capsule Lander	T_{27} + 6 sec	None

Figure 12–5

contains a shouldered piston in the grip length part of the bolt. This piston is driven by pyrotechnic gas pressure into a stop creating shock waves, which concentrate in a predetermined plane of the bolt, causing the bolt to break. The explosive bolts are interconnected with contained explosive stimulus transfer lines to provide almost simultaneous initiation of the percussion actuated cartridges in each bolt. All explosive bolts contained in each subassembly are interconnected with two explosive stimulus transfer lines. Each transfer line is initiated by two detonating type EED's.

- Thruster is a non-venting pyrotechnic gas operated device that contains a piston which protrudes through the thruster housing and is locked in place. Initiating either or both of the installed EED's creates gas pressure behind the piston unlocking it. The piston is then forced to travel outward at a rapid rate to a sealed stop. At this point the attached equipment module separates from the top of the piston due to its energy and continues on a ballistic trajectory.

12.2 DESIGN REQUIREMENTS AND CONSTRAINTS

12.2.1 Pyrotechnic Device Design - All pyrotechnic devices shown in Figure 12-5 contain all primary explosive and pyrotechnic combustion products and those secondary products, such as separation debris, during and after their function. This further guarantees interference free operation of the science and engineering instruments in the CBS, SLS and ESP. The materials for the pyrotechnic device hardware will be carefully selected for their ability to survive dry heat sterilization without detrimental degradation and be compatible with ETO decontamination.

12.2.2 EED Design Constraints - The standardized EED, used in all CB pyrotechnic subsystem functions, conforms to the requirements and satisfies the constraints stated in Section 4.2.12 of JPL Document No. PD-606-4, dated 12 June 1967. The pyrotechnic and explosive compositions used in the EED's must be selected for their ability to survive dry heat sterilization without detrimental degradation.

12.2.3 EED Control Module Design Constraints - The EED's are shorted and grounded after installation until time for firing. No single failure or procedural error will cause the control module to inadvertently fire any EED's. The EED energy source is isolated from other subsystem uses. A safe/arm device removes power from the EED control module. All components in the control module must be compatible with ETO decontamination and withstand the dry heat sterilization cycles. The control module must contain the necessary provisions to telemeter the actuation of the arm and fire relays for each pyrotechnic function and the firing of each EED.

The control module must contain the necessary provisions for remote checkout of the complete firing circuitry and EED hardware continuity after installation of the EED's.

12.3 PHYSICAL CHARACTERISTICS

12.3.1 EED Control Module - Each control module is housed in a case measuring 9" wide x 4.65" long x 5.75" high and contains the components listed in Figure 12-6. The module will weight approximately eight pounds.

12.4 OPERATIONAL DESCRIPTION - Figure 12-3 is a functional schematic of the EED firing circuitry. During pre-launch-launch-cruise and Mars orbit and until one-hour prior to FS/FC separation the safe/arm relay prevents the battery activation capacitors from being charged. One-hour prior to FS/FC separation the CB (Sequence and Timer) provides a signal which actuates the safe/arm relay allowing these capacitors to charge from the CB bus #1. One minute later upon receipt of separate arm and fire command pulses from the CB S&T the arm and fire relays will energize, discharging the capacitors through the automatically activated battery gas generator EED's causing the stored electrolyte to be forced into the battery cells, energizing them, and applying power to the CBS EED Bus No. 1 and 2 and control bus. The remaining CB EED's we fired from these buses when the appropriate arm and fire commands are received by the EED control modules from the CB S&T.

Figure 12-5 shows the operational sequence of the pyrotechnic devices supporting mission events.

12.5 PERFORMANCE OBJECTIVES - The standardized EED's used in the CBS pyrotechnic subsystem provide the performance characteristics listed in Figure 12-7.

12.6 INTERFACE DEFINITION - The EED control modules interface with CB bus #1 through electrical wire bundles to charge the EED firing capacitors required to initiate the automatically activated battery gas generators EED's, and with the CB S&T through electrical wire bundles, to provide the preprogrammed signals to command charging of the firing capacitors, latch the arm relays and actuate the fire relays for activation of the auto-activated batteries. The EED control modules also interface with the auto-activated batteries, through electrical wire bundles, to supply electrical power to initiate the balance of the CBS EED's. Electrical wire bundles interface with the CB S&T to provide the signal to latch the arm relays and actuate the fire relays for the balance of the CBS EED's. The EED control modules interface with all the CBS EED's, through wire bundles, to provide the electrical power to sequentially initiate all CBS EED's functioning the pyrotechnic devices.

COMPONENTS CONTAINED IN EACH EED CONTROL MODULE

QUANTITY	COMPONENT
4	5 Amp, 6 Pole, Latch, Relay
6	5 Amp, 4 Pole, Latch, Relay
8	5 Amp, 4 Pole, Nonlatch Relay
4	5 Amp, 2 Pole, Nonlatch Relay
1	2 Amp, 2 Pole, Nonlatch Relay
28	Resistors
28	Current Transformers
3	Tantalum Capacitors

Figure 12-6

EED PERFORMANCE CHARACTERISTICS

- Pressure Seal Good to 20,000 psi After Firing
- Hermetic End Seal – Leakage Rate Not to Exceed 10^{-6} cc/sec (Helium) at One Atmosphere Differential Pressure
- Recommended Firing Current: 5 amps Over a Temperature Range of -20° F to +130° F
- Minimum All-Fire Current as Determined by Bruceton Test to be not Less Than 3.0 amps or .05 Joules
- Insulation Resistance Greater than 20 Megohms When 500 VDC is Applied Between Shorted Pins and Case
- Withstand Electrostatic Discharge of 25,000 volts Discharged Directly From 500 Picofarad Capacitor Between Pins and Case
- EED Body Material Essentially Nonmagnetic

Figure 12-7

12.7 SAFETY AND RELIABILITY CONSIDERATIONS

12.7.1 Reliability Considerations - The reliability considerations for pyrotechnic devices are generally included with the subsystem in which the pyrotechnic function is required. The basic types of pyrotechnic devices and the estimated reliability of each are as follows:

DEVICE	RELIABILITY
EED, Gas Generating	.9998
EED, Detonating	.9998
Shielded Mild Detonating Cord, Explosive Stimulus Line	.9998/strand
Contained Explosive Separation Device	.999/strand

These reliability estimates are based on McDonnell experience with similar items on past programs.

Completely redundant electrical firing circuitry virtually eliminates the probability of failure due to absence of the proper electrical impulse, if sufficient electrical power is available at the source. For this reason, firing circuit effect on device reliability is considered negligible.

12.7.2 Safety Considerations - All EED's are considered Category A items as defined by AFETRM 127-1, dated 1 November 1966, due to inaccessibility of the EED control modules and EED's after installation of the sterilization canister. The EED's and explosive stimulus lines are installed as separate items independent of their respective pyrotechnic device interfaces with other subsystems. The electro-explosive devices are installed and mated with their firing circuit telectrical connectors, which are shorted by the arm relay, immediately before attaching the sterilization canister to minimize hazards to personnel during Capsule Bus final assembly.

12.8 TEST REQUIREMENTS - Development test, qualification tests, X-ray and neutron radiographic inspection previously performed on the assemblies, subassemblies and firing circuitry increase confidence of the subsystem preparedness for flight. Firing circuitry design permits pre-flight monitoring of the circuit components while maintaining the EED's in a shorted condition. The EED's can also be individually checked out after installation of the sterilization canister through the OSE provisions of the firing circuit while holding the remainder of the circuit in a safe condition.

12.9 DEVELOPMENT REQUIREMENTS - The pyrotechnic subsystem selected devices are either to be specifically designed to perform the intended functions, or existing

hardware is modified to provide the desired function. This design approach provides optimum mating subsystem interfaces rather than sacrifice the mating subsystem performance to accommodate an existing "off the shelf" pyrotechnic device without modification. The use of high temperature resistant propellants requires Phase C Development testing to determine the quantitative output energy as it applies to Capsule Bus Pyrotechnic Subsystem use.

McDonnell has determined by test that the Apollo Standard Initiator (ASI) survives the immediate effects of dry heat sterilization. A test is presently in progress on the ASI to determine the effects of long term storage after dry heat sterilization that would apply to the long cruise phase of the mission.

Extensive design analysis and development testing must be initiated during Phase C if the use of dual bridge wire EED's capable of withstanding the 25,000 volt electrostatic discharge between the bridge wires is imposed as a requirement.

SECTION 13

THERMAL CONTROL SUBSYSTEM

13.1 EQUIPMENT IDENTIFICATION AND USAGE - The thermal control subsystem will maintain an acceptable environment for the Capsule Bus structure and temperature-sensitive components during all mission phases. Major elements will include a multilayer insulation blanket, electrical resistance heaters with thermostat control mechanisms, insulation packages for individual components, and a thermal curtain. Optical coatings or tapes will be used on surfaces which require specific optical properties.

13.1.1 Multilayer Insulation Blanket - The multilayer insulation blanket is the primary thermal resistance between the Capsule Bus and the deep space environment. It consists of layers of plastic film with an application of highly reflective coating on each layer. As such it acts as a series of radiation heat transfer barriers. This is the most efficient type of insulation for covering large surface areas in a vacuum environment.

13.1.2 Electrical Resistance Heaters and Thermostat Control Devices - Heat must be generated within the Capsule Bus to replace that which is lost to space if an acceptable equilibrium temperature level is to be maintained. The heat will be generated with electrical resistance heaters powered by the Spacecraft solar panels. These heaters will be located on components placed throughout the Capsule Bus which require control to a higher temperature than the average Capsule Bus environment. Thermostat control devices will be used with high capacity (greater than 3 watts) heaters to conserve power and avoid overheating.

13.1.3 Insulation Packages for Individual Components - Components which are provided with heaters will also be insulated to minimize the heat loss and conserve heater power. This insulation is a fiber glass type which can be efficiently fabricated to fit the individual components. The insulation of individual components is also necessary to preclude excessive cool down during periods when Spacecraft-provided power is not available for heaters, e.g., trajectory corrections during cruise.

13.1.4 Thermal Curtain - The thermal curtain is required to protect components and structure within the conical Aeroshell from aerodynamic heating during Mars atmospheric entry. It also precludes damage to the SLS surface coatings during de-orbit motor firing and reduces heat loss from the rear of the Aeroshell during Mars orbital descent.

13.2 DESIGN REQUIREMENTS AND CONSTRAINTS - Equipment located within the SLS is limited to a temperature range of 40°F to 125°F. Many components located outside the SLS require active temperature control to temperatures higher than the average Capsule Bus environment. The power available from the Spacecraft for thermal control is less than 200 watts. The multilayer insulation blanket must therefore provide sufficient thermal resistance to make adequate temperature control possible with the available power. Analytical results, as described in Part B, Section 5.12, indicate that this can be accomplished with an insulation blanket that has an equivalent conductivity, k, of 1×10^{-4} BTU-ft/hr-ft^2-°F based on a 0.5 inch blanket.

13.3 PHYSICAL CHARACTERISTICS

13.3.1 Multilayer Insulation Blanket - The multilayer insulation blanket will consist of 16 to 35 sheets of Mylar, each with an aluminum coating. Alternate sheets will be dimpled or wrinkled to minimize surface contact and therefore conduction between adjacent sheets. The sheets will have a packing density such that the blanket is about 0.5 inches thick. The blanket is loosely stitched on 12 inch centers to prevent shifting of the layers relative to each other. The blanket is located on the external surface of the Sterilization Canister and will be provided with an outer cover sheet to protect it from possible ground handling damage. A portion of the insulation blanket provides the required thermal barrier between the Capsule Bus and the Spacecraft. The blanket is located on the Spacecraft side of the canister so that it will continue to act as a thermal barrier for the Spacecraft after Capsule Bus separation in Mars orbit.

13.3.2 Electrical Resistance Heaters and Thermostat Control Devices - The heaters are of the standard electrical resistance type and will be located within the insulated region of the component packages. Uniform package temperatures are obtained by providing good heat transfer characteristics from the heaters to all portions of the component. The thermostat control devices will control the power to the heaters such that the component is held at the specified temperature plus or minus 5°F.

13.3.3 Insulation Packages for Individual Components - The insulating material will be fiber glass with a silicone binder. The insulation will be fabricated into packages, with 1 inch thick walls, to fit individual components. This material has a density of 4 lbs/ft^3.

13.3.4 Thermal Curtain - The thermal curtain will be fabricated of fiber glass cloth 0.030 inches thick. Cutouts will be required to allow items such as adapter struts, antennas, etc., to penetrate it. The surface facing the interior of the Aeroshell will have a gold coating directly sprayed and baked onto the cloth curtain to minimize radiation heat transfer between the curtain and the Aeroshell. The curtain has an area of 280 ft^2 and will weigh approximately 30 lbs.

13.4 PERFORMANCE OBJECTIVES - The thermal control subsystem is expected to maintain the SLS internal equipment and the de-orbit motor at a temperature above 40°F throughout all mission phases. Miscellaneous temperature sensitive equipment, located outside the SLS, will be controlled separately. This can be accomplished with the 200 watts of power available.

13.5 INTERFACE DEFINITION - Interfaces between the CBS thermal control subsystem and other subsystems are as follows:

Interfacing Subsystem	Definition
Capsule Bus Power	Provides heater power.
Capsule Bus Telemetry Subsystem	Monitors temperatures, heater power levels.
Capsule Bus Structural/Mechanical Subsystem	Mechanical mounting of insulation blanket to canister.
Capsule Bus ESP Subsystem	Establishes thermal environment for ESP.
SLS Thermal Control Subsystem	Establishes thermal environment for SLS.

13.6 RELIABILITY CONSIDERATIONS - The reliability considerations concerning the thermal control subsystem were simplified by the passive nature of the subsystem, i.e., insulation, coatings, heaters, and thermostats. No dynamic components are involved. All elements of the system involve present day hardware and techniques. As a result, no problem with respect to thermal control subsystem reliability is expected.

13.6.1 Operational Reliability - Operational reliability is provided for since Spacecraft command capability exists as to availability of heater bus power. This is in addition to thermostat control.

13.6.2 Failure Mode, Effect, and Criticality Analysis - A failure mode, effect, and criticality analysis was conducted for the thermal control subsystem and the results are presented in Figure 13.0-1. Each failure mode is categorized according to the effect on the following mission objectives:

Achievement of Flight Capsule Landing

Performance of Entry Science Experiments

FAILURE MODE, EFFECT & CRITICALITY ANALYSIS

CAPSULE BUS THERMAL CONTROL (CRUISE)

COMPONENT OR FUNCTION	FAILURE MODE	FAILURE EFFECT	FAILURE CATEGORY: LANDING	ENTRY SCIENCE	LANDER SCIENCE	ENG. DATA	REMARKS
Resistance Heaters & Thermostats							
De-orbit Motor (1)	Open	None	1	1	1	1	De-orbit Motor Heater helps keep the surrounding capsule at correct temperatures. Redundant heater provided.
Thrusters (1)	Open	Degradation	2	2	2	1	Without thruster heaters, the thruster may reach degrading temperatures.
Tankage (4)	Open	Degradation	2	2	2	1	Without tank heaters, the tanks may reach degrading temperatures.
Experiments & Subsystem (10)	Open	Degradation	2	2	2	1	Without heaters, the equipment may reach degrading temperatures.

Note: Closed failure mode not applicable due to backup command shut off capability.

Category Definition

1– No effect on mission objectives
2–Degrading effect on mission objectives
3–Possible catastrophic effect on mission objectives

Figure 13.0–1

Performance of Landed Science Experiments

Retrieval of Engineering Data

The failure categories are defined as follows:

Category	Effect
1	No effect on mission objectives.
2	Degrading effect on mission objectives.
3	Possible catastrophic effect on mission objectives.

In keeping with the statements made above as to enhancement of mission success capability, the electrical power system FMECA analysis evidences no Category 3 failures and only possible Category 2 failures. The probability of these degrading effects is considered so remote that no further weight was allocated for the removal of same.

13.6.3 Reliability Estimate - The functional logic relationship of components in the thermal control subsystem are depicted in the Reliability Diagram, Figure 13.0-2. The Reliability Estimate Summary in Figure 13.0-2, evidences the Thermal Control System calculated reliability of 0.9973.

13.7 TEST REQUIREMENTS - Tests to verify vacuum thermal performance will be required for the fiber glass insulation and a representative portion of the multilayer insulation blanket prior to installation in the Capsule Bus. After installation, performance is verified during integrated Flight Capsule Thermal Qualification tests. Electrical checks to verify heater continuity and resistance are performed before and after these tests. Regular in-flight monitoring of temperatures is necessary to assist in failure analysis and explanation of anomalies.

13.8 DEVELOPMENT REQUIREMENTS - The only known development requirement for the CBS thermal control subsystem is verification of sterilization compatibility for the selected fibrous insulation materials used on components requiring local heating. However, this same sterilization requirement exists for similar insulation to be developed and tested for the SLS and ESP.

CB THERMAL CONTROL RELIABILITY DIAGRAM

Resistance Heaters (16) — Control Thermostats (16)

CB Thermal Control
Reliability Estimate Summary

COMPONENT	tm (1)	λ (2)	$-\ln R \times 10^6$ (3)	
Proximity Resistance Heaters (16)	5549	0.16	832	
Control Thermostat s (16)	5549	0.32	1776	
			2608	R = .9973

Notes: (1) tm = modified time factor x time (hours)

(2) λ = failures per million hours

(3) $-\ln R \times 10^6 = tm\ \lambda$

Figure 13.0–2

SECTION 14

DE-ORBIT PROPULSION SUBSYSTEM

14.1 EQUIPMENT IDENTIFICATION AND USAGE - The de-orbit motor is a solid propellant rocket motor, with provision for thrust termination prior to burn out. The subsystem provides the impulse required to decelerate the Capsule Bus to effect a Mars entry trajectory.

The Capsule Bus contains one de-orbit motor which is 41.0 inches long and has a spherical case diameter of 30.0 inches. The de-orbit motor consists of a motor case, an igniter system (consisting of an igniter and a safe-and-arm device), a single, fixed, partially submerged, high expansion ratio nozzle, a thrust termination ring which holds the nozzle to the motor case, and an internally-perforated, case bonded propellant grain. The configuration of the de-orbit motor is shown on Figure 14-1; a functional block diagram is shown on Figure 14-2.

14.2 DESIGN REQUIREMENTS AND CONSTRAINTS - The major design considerations for the de-orbit motor subsystem were:

a. Sterilization - Must withstand dry heat sterilization at 275°F in a nitrogen atmosphere.

b. Vacuum Storage - Capable of 43 weeks storage during prelaunch and transit in an ambient pressure environment of 10^{-14} Torr.

c. Vacuum and Zero "G" Operation - Capable of operating in a vacuum and a Zero "g" atmosphere.

d. Temperature Control - Temperature must be maintained between 40°F to 100°F.

e. Separation - Capable of being separated from Capsule Bus after subsystem operation.

f. Thrust Alignment - The angular error between the thrust vector and the mechanical centerline of the nozzle must not exceed 10 minutes of arc. The thrust vector must pass within .010 inch of the area centroid in the plane of the nozzle throat.

g. Installation Location - Allow for compatable installation of other subsystems.

h. Thrust Termination - The motor shall be capable of being thrust terminated any time after ignition and prior to burn out.

14.3 PHYSICAL CHARACTERISTICS - The physical characteristics of the de-orbit motor propulsion subsystems are shown in Figure 14-3.

14.3.1 Propellant Formulation - The propellant formulation will be a modification

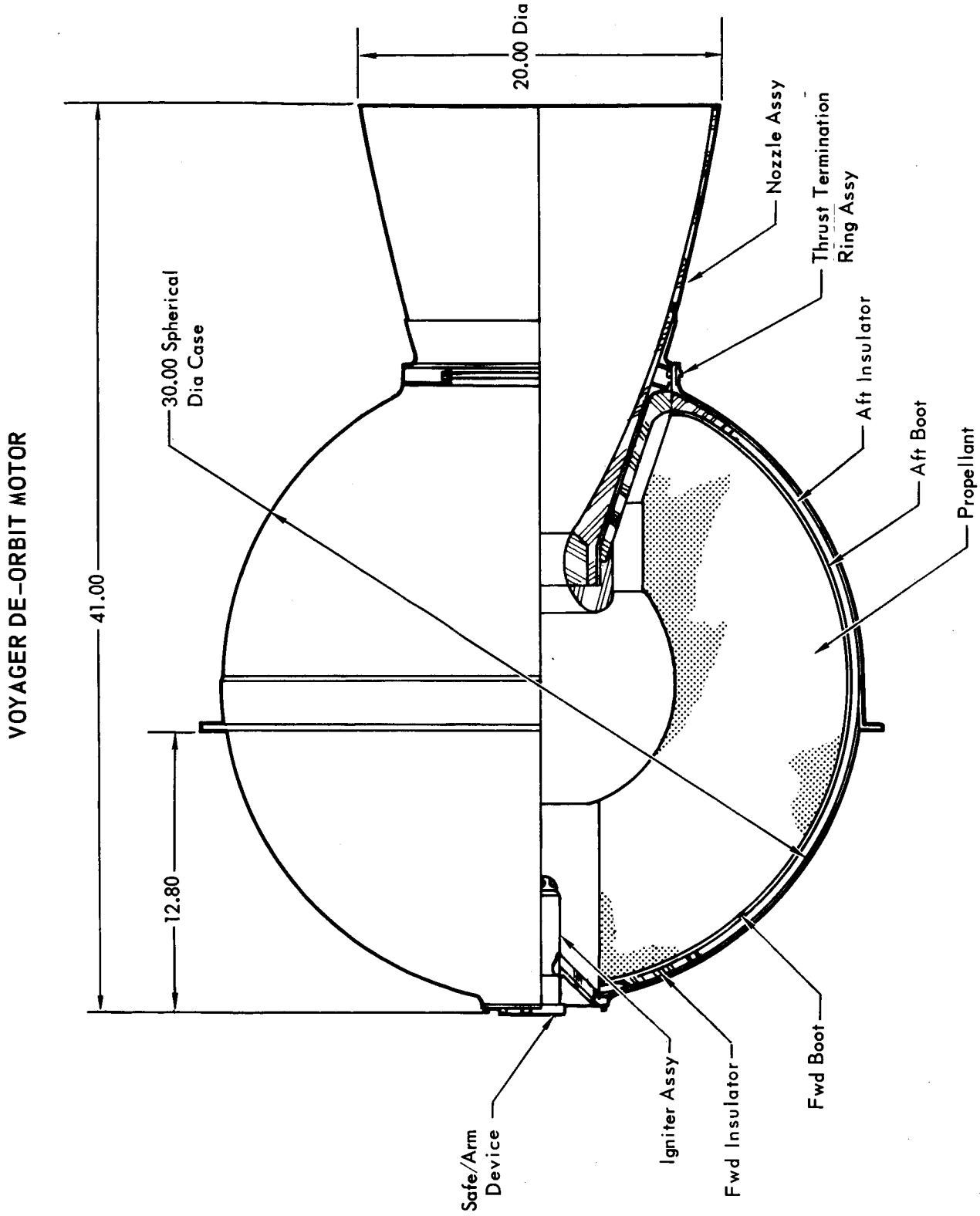
VOYAGER DE-ORBIT MOTOR
41.00
12.80
30.00 Spherical Dia Case
20.00 Dia
Nozzle Assy
Thrust Termination Ring Assy
Aft Insulator
Aft Boot
Propellant
Fwd Boot
Fwd Insulator
Igniter Assy
Safe/Arm Device

Figure 14-1

DE-ORBIT PROPULSION SUBSYSTEM
FUNCTIONAL BLOCK DIAGRAM

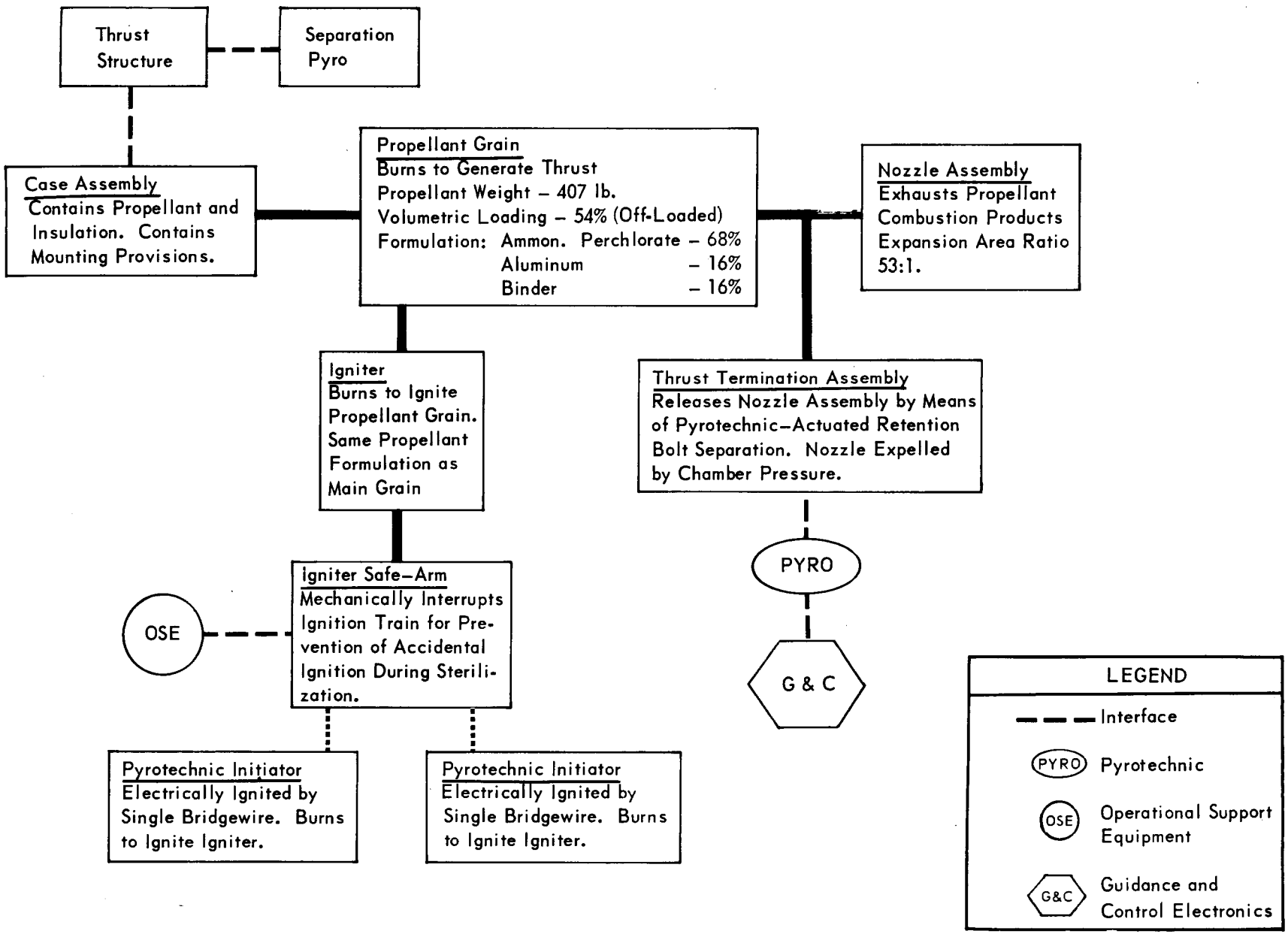

Figure 14–2

CHARACTERISTICS OF THE DE-ORBIT MOTOR

Motor	
Length (Over-All)	41.00 in.
Diameter (Spherical)	30.00 in.
Weight:	
Inert	70 lb.
Loaded 1973	477 lb.
Loaded 1979	678 lb
Case	
Material	6Al–4V Titanium
Weight	29 lb.
Insulation	
Type	
Weight	12 lb.
Nozzle	
Type	Ablative
Configuration	Contoured
Weight	24 lb
Expansion Ratio	53:1
Throat Diameter	2.65 in.
Exit Diameter	19.24 in.
Igniter	
Type	Pyrogen
Weight	4 lb.
No. of Squibs	2
Propellant	
Type	PB (16% AL – 68% AP)
Predicted I_{sp} at 1000 psi (Vacuum)	287
Density	0.063 lbm/in.^{3}
Motor Performance	
Average Acceleration	
1973	1 g
1979	1.4 g's
Burning Time	
1973	19.5 sec.
1979	28.7 sec.
Average Thrust	6000 lb.
Average Chamber Pressure	600 psia
Vacuum Total Impulse	
1973	117,000 lb-sec
1979	172,000 lb-sec
Volumetric Loading	
1973	54%
1979	80%

Figure 14–3

of an existing propellant or a propellant containing a new binder and curative designed to improve the propellant's capabilities to withstand sterilization.

14.3.2 Propellant Grain Design - The design is based on considerations related to sterilization requirements and required performance characteristics. The temperature range to which the motor will be subjected during sterilization requires that the grain be designed so that the propellant grain strains and the propellant-to-insulation bond stresses are within its physical limitations.

14.3.3 Insulation - The insulation for the motor case will be a material developed and tailored specifically to meet sterilization requirements. The interior of the motor case will be covered with sufficient insulation to limit case temperature to 250°F at propellant web burnout. Two boots will be used, one in the forward end and one in the aft end, to reduce bond stresses during and after sterilization heat cycles.

14.4 OPERATION DESCRIPTION - The deorbit motor is installed in the Capsule Bus before terminal sterilization. Arming of the safe-and-arm device requires an electrical signal which physically aligns the squibs with the igniter. The arming of the safe-and-arm device will take place prior to launch to permit verification of motor arming. The only pre-fire checks that are considered desirable from time of launch to insertion into Mars orbit are continuity checks of the electrical circuits of the igniter and thrust termination mechanism, and determination of the propellant grain temperature.

Electrical arming of the ignition system occurs approximately 20 minutes after Capsule Bus and Spacecraft Separation. The system is armed by a command from the Capsule Bus timer and sequencer. At the command to ignite the de-orbit motor subsystem, the squibs in the safe-and-arm device are actuated. The squibs ignite the pellets in the initiator and in turn ignites the sustainer charge which provides sufficient pressure and heat to ignite the main propellant in the motor. At the same time the command to ignite is given, the timer and sequencer arms the thrust termination squibs.

The method of thrust termination for the de-orbit motor is to release the nozzle by activating the contained explosive bolt which releases the thrust termination ring that attaches the nozzle to the motor case. See Figure 14-4. This technique has been used successfully in the Jupiter and Titan II Vernier rocket motor applications. The sudden pressure decrease associated with releasing the nozzle will terminate propellant burning. Thrust termination can be initiated at any time after ignition. A thrust spike will occur at thrust termination;

PROPULSION DE-ORBIT SUBSYSTEM
THRUST TERMINATION TECHNIQUE

NOZZLE EJECTION

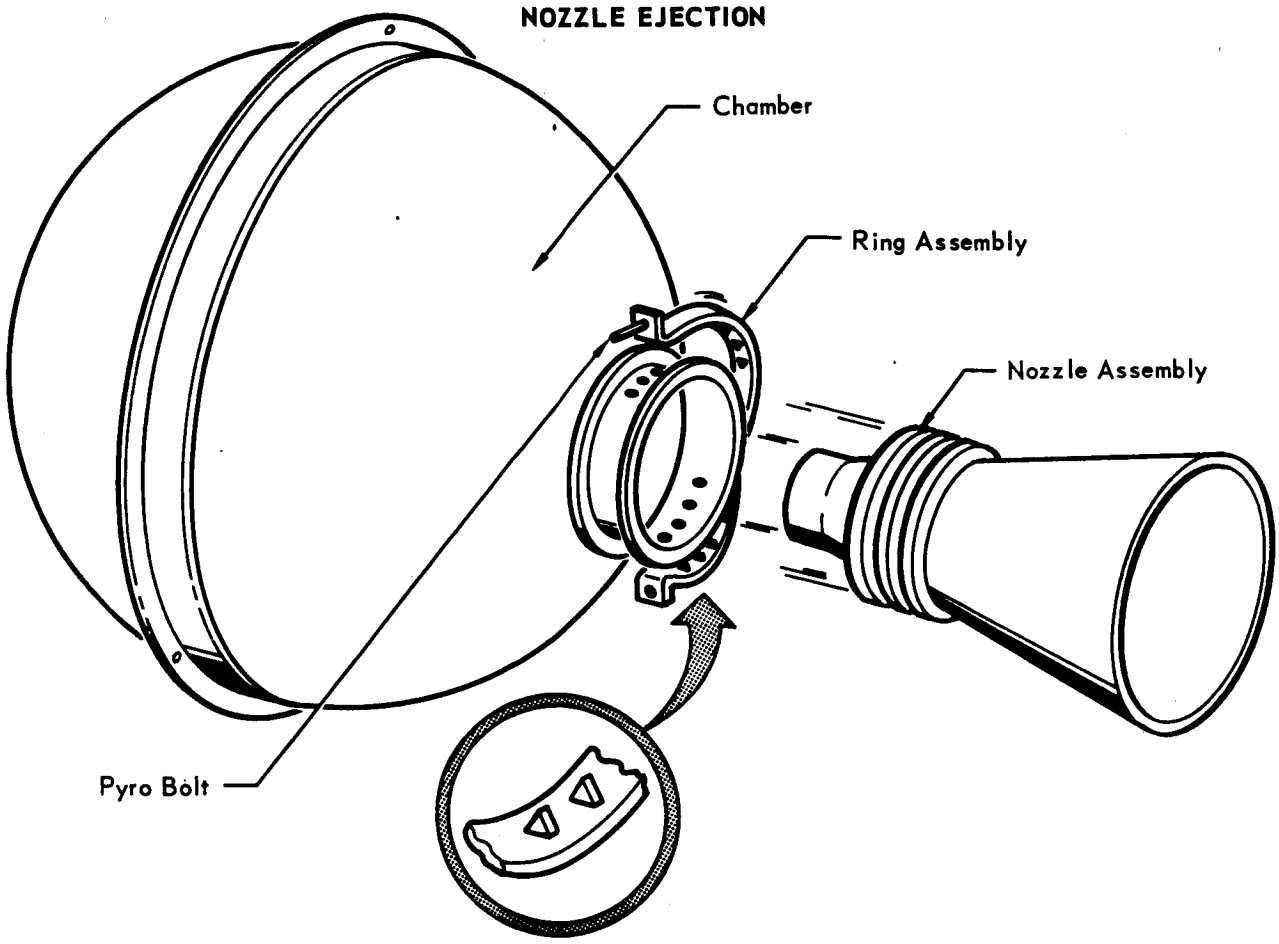

Figure 14-4

however, the duration of this thrust spike is extremely short. See Figure 14-5.

14.5 PERFORMANCE OBJECTIVES - The performance objective of the de-orbit motor for the 1973 and 1979 missions are: A delivered effective specific impulse in a vacuum of 287 lb-sec/lb, an average thrust of 6000 pounds, an average chamber pressure of 600 psia, a vacuum total impulse of 172,000 lb-sec for the 1979 mission, off-loaded for 1973 to give 117,000 lb-sec, and a motor firing duration of 19.5 sec for 1973 and 28.7 sec for 1979. Performance curves of thrust and pressure versus time are shown in Figure 14-6. The volumetric loading for 1973 is 54% and 1979 is 80%.

14.6 INTERFACE DEFINITION

14.6.1 Mechanical Interfaces

- o Attachment of De-orbit Motor to Capsule Bus Substructure
- o Electrical harness connectors to Capsule Bus Subsystem
- o Mountings to provide thermal control of De-orbit Motor

14.6.2 Electrical Interfaces

Signals from Motor to Telemetry Subsystem

- o Safe-and-arm device position indicator
- o Motor case temperature

Control and Sequence Subsystem

- o Arm igniter squibs
- o Arm thrust termination squibs
- o Activate igniter squibs
- o Activate thrust termination squibs

14.7 RELIABILITY AND SAFETY

14.7.1 Reliability Estimate - The reliability estimate for the selected solid rocket de-orbit motor subsystem is

P_s (Probability of Success) = .995

14.7.1.1 Redundancy Considerations - Due to the simplicity of the selected de-orbit subsystem, the primary area for consideration of redundancy was that of the ignition system.

14.7.1.2 Failure Mode, Effect and Criticality Analysis - A failure mode, effect and criticality analysis was performed on the selected subsystem design to delineate the effects of various component failures on mission success. This analysis is presented in Figure 14-7.

14.7.2 Safety - The safety procedures to be considered are:

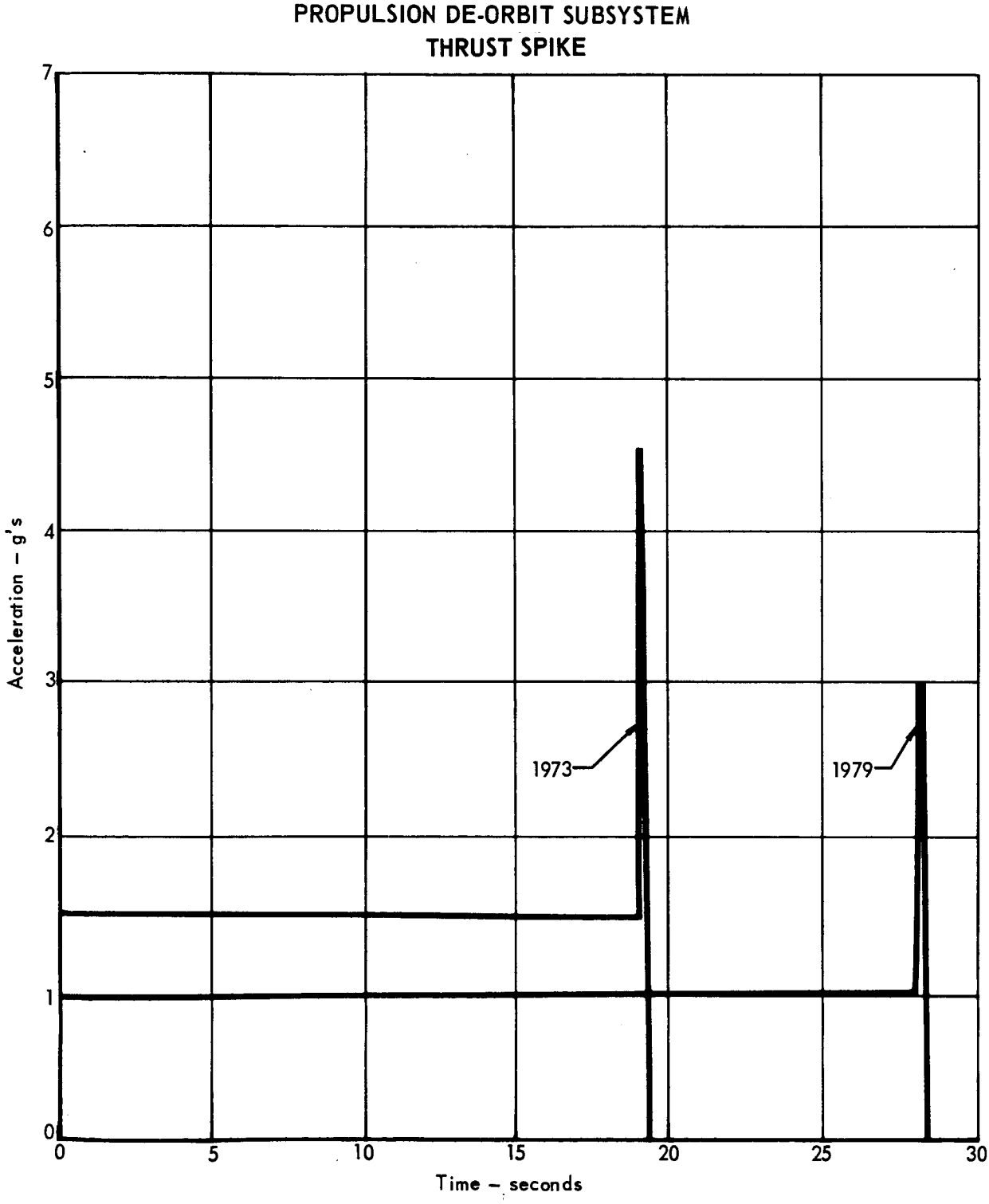
PROPULSION DE-ORBIT SUBSYSTEM
THRUST SPIKE
Acceleration – g's
Time – seconds
0
1
2
3
4
5
6
7
0
5
10
15
20
25
30
1973
1979

Figure 14-5

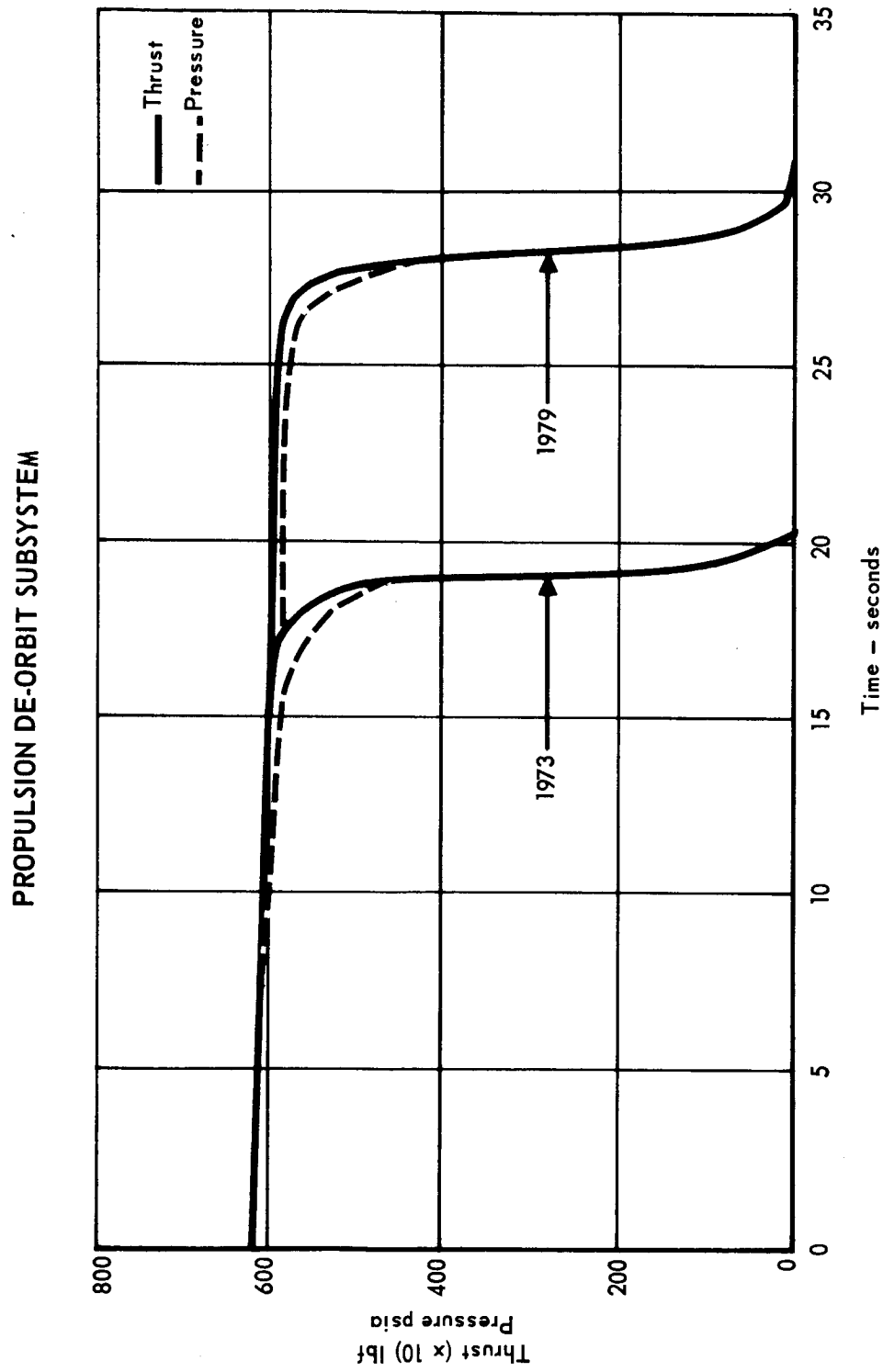
PROPULSION DE-ORBIT SUBSYSTEM
Thrust
Pressure
1973
1979
Thrust (x 10) lbf
Pressure psia
800
600
400
200
0
0
5
10
15
20
25
30
35
Time – seconds

Figure 14-6

FAILURE MODE, EFFECT AND CRITICALITY ANALYSIS

SUBSYSTEM: DE-ORBIT

Failure Category Definition

1 – No effect on mission objective
2 – Degrading effect on mission objective
3 – Possible catastrophic effect on mission objective

COMPONENT OR FUNCTION	FAILURE MODE	FAILURE EFFECT	FAILURE CATEGORY: Landing	Entry Science	Landed Science	Eng. Data	REMARKS
1. Igniter Assembly	Failure to ignite or to provide adequate thermal output.	Propellant ignition failure with resultant failure to develop thrust.	3	3	3	2	Dual initiators provide minimum redundancy.
2. Rocket Motor	Failure of propellant to ignite (due to degradation during sterilization and/or interplanetary cruise phase.)	Motor fails to provide thrust for de-orbit maneuver.	3	3	3	2	Remote failure mode. Reliability assurance provided by qualification and environmental testing.
	Case structural failure.	Loss of thrust resulting in failure to complete de-orbit maneuver. Damage to capsule equipment.	3	3	3	2	Reliability assurance provided by qualification and environmental testing.
	Burn through	Thrust degradation possibility resulting in failure to complete de-orbit maneuver. Possible loss of attitude control due to resultant side loading. Damage to capsule equipment.	2/3	2/3	2/3	2	Criticality depends upon time of occurrance and severity of failure mode.
	Excessive nozzle erosion	Degradation of motor performance.	1/3	1/3	1/3	1/2	Criticality depends upon degree of erosion. Catastrophic failure very remote.
	Failure to develop required total impulse.	Fail to complete de-orbit maneuver.	3	3	3	2	Reliability assurance provided by qualification and environmental testing.
3. Thrust termination ring assembly	Failure to initiate explosive charge or failure to sever case.	Fail to terminate thrust resulting in deviation from predetermined flight path and failure of flight capsule to land in predetermined landing area.	1/2	1/2	1/2	1/2	Dual cartridges provide minimum redundancy.
	Inadvertant thrust termination.	Fail to complete de-orbit maneuver	3	3	3	2	Very remote failure mode.

Figure 14–7

- o Conformity to AFETRM 127-1 Requirements
- o Proper checkout of propellant grain
- o Propellant stability

14.8 TEST REQUIREMENTS - The pre-fire tests in orbit that are considered desirable are checks of the electrical circuits of the ignition and thrust termination systems, and determination of the propellant grain temperature.

14.9 DEVELOPMENT REQUIREMENTS - In addition to the normal motor development effort, special emphasis will be placed on the critical areas listed.

14.9.1 Sterilization - All materials used in the rocket motor will be tested to assure their tolerance of dry heat sterilization. The propellant grain and the motor assembly will be tested to determine effects of differential thermal expansion, propellant slump, decomposition exotherms and internal stress on motor structure and performance.

14.9.2 Decontamination - The effects of ethylene oxide decontamination will be offset by hermetically sealing the motor during the decontamination process.

14.9.3 Storage - The effects of 43 week vacuum storage on motor performance will be determined.

SECTION 15

REACTION CONTROL SUBSYSTEM

15.1 EQUIPMENT DEFINITION AND USAGE - The reaction control subsystem is a monopropellant rocket engine subystem, which uses cold gas pressurization from a positive expulsion propellant tank to supply hydrazine to eight thrust chamber assemblies installed about the periphery of the vehicle. This subsystem provides (1) separation of the Capsule Bus from the Spacecraft and (2) attitude control and rate damping to the Capsule Bus during de-orbit and Mars entry. The RCS consists of components arrayed as shown schematically in Figure 15-1. The subsystem divides into three major groupings, pressurant components, propellant storage components and thrust chamber assemblies (TCA). Ports are provided throughout the subsystem for testing. A functional block diagram is presented in Figure 15-2.

15.1.1 Pressurant Components - Nitrogen gas is stored at high pressure prior to subsystem activation in a spherical pressurant tank, the outlet of which is sealed by a normally closed, pyrotechnic operated valve. At subsystem activation, this valve is opened and the nitrogen pressure is regulated from the high storage valve to the design propellant tank operating pressure. The regulator inlet is protected from contamination by an in-line fliter. Storage tank pressure and temperature are monitored continuously prior to RCS activation and will be used for analysis of propellant consumption during RCS operation.

15.1.2 Propellant Storage Components - This group of components stores the monopropellant hydrazine prior to use, provides for positive expulsion during use, and provides overpressure relief. Normally closed pyrotechnic valves upstream and downstream of the propellant tank seal the tank and its propellant. The tank itself uses a titanium bellows for propellant expulsion. Tank overpressure is prevented by a relief valve the inlet of which is sealed before use by a burst disc for positive leakage control. Propellant tank temperature and pressure are continuously monitored by sensors located in this group.

15.1.3 Thrust Chamber Assemblies and Feed Lines - A propellant distribution manifold feeds propellant to the eight TCA's. Each TCA consists of a propellant solenoid valve, an injector, a monopeopellant catalyst bed using Shell 405 hydrazine catalyst, a combustion chamber, throat and exhaust nozzle. Each catalyst

REACTION CONTROL SUBSYSTEM SCHEMATIC

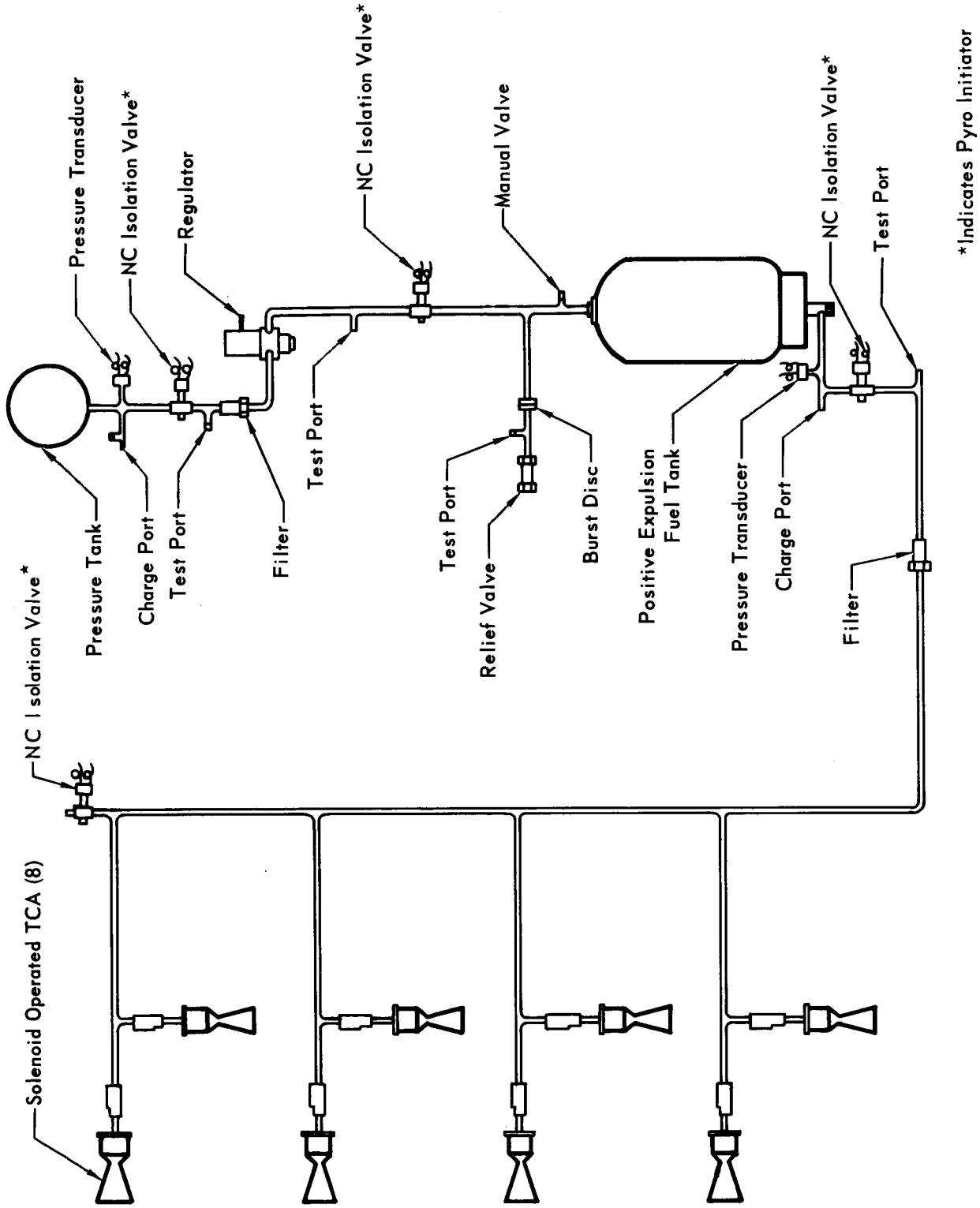

Figure 15-1

REACTION CONTROL SUBSYSTEM
FUNCTIONAL BLOCK DIAGRAM

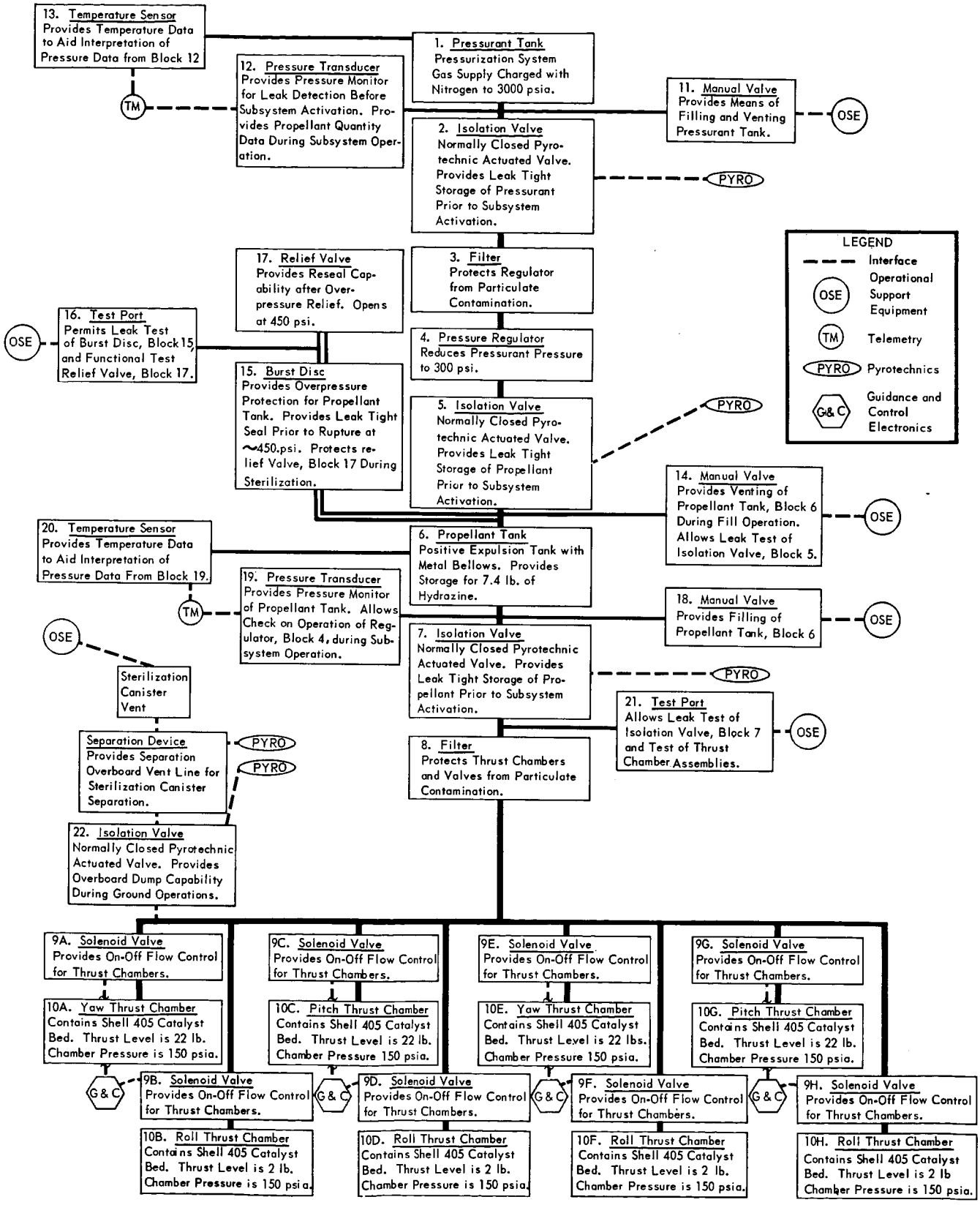

Figure 15–2

bed is sealed from the ambient environment during ETO decontamination. An in-line filter protects the TCA's from propellant-borne particulate contamination. In the event relief of the propellant side of the bellows is required during ground operations, a pyrotechnic overboard dump valve in the feed manifold and the propellant tank outlet isolation valve are opened. A plumbing line leads from the valve to the sterilization canister vent, where OSE is available to dispose of the propellant.

15.1.4 Test Ports - Access to all parts of the subsystem is afforded by manual valves and test ports, through which each component may be individually tested. These ports are also used for loading and unloading pressurant and propellant.

15.2 DESIGN REQUIREMENTS AND CONSTRAINTS - The RCS is evolved to meet the following requirements.

15.2.1 ETO Decontamination - The subsystem, prior to loading of propellant and pressurant, must withstand ethylene oxide decontamination at 122°F as specified in JPL Report SE 003BB002-2A21, Paragraph 5.1.4.

15.2.2 Sterilization - The subsystem, subsequent to loading of propellant and pressure, must withstand dry heat sterilization, at 275°F and in a nitrogen atmosphere, as specified in JPL Report SE 003BB002-2A21, Paragraph 5.1.4.

15.2.3 Vacuum Storage - The subsystem must withstand 43 weeks of storage during prelaunch operations and transit to Mars, during the majority of which ambient pressure will be approximately 10^{-14} Torr.

15.2.4 Sterilization Canister - The propellant dump lines between the RCS and the sterilization canister vent must be separable to allow unimpeded separation of the canister from the Capsule Bus.

15.2.5 Vacuum and Zero "G" Operation - The RCS must be capable of operation in zero "G" and in vacuum.

15.2.6 Pulse Operation - The RCS must be capable of pulse mode operation, with variable length thrust pulses.

15.2.7 Propellant Freezing - The propellant must be maintained at a temperature greater than 40°F throughout transit and operation to prevent propellant freezing.

15.2.8 Thrust Levels - The RCS must provide control torques of 205 pounds-foot in pitch and yaw and 37 pounds-foot in roll.

15.2.9 Total Impulse - The RCS must deliver 1930 pounds-second of total impulse for attitude control functions. TCA's shall have sufficient life capability for any reasonable duty cycle based on this total impulse value.

15.2.10 Translation Thrust- The RCS must provide translation thrust along the Capsule Bus +Z axis to provide positive separation from the Spacecraft.

15.2.11 Entry Loads - The RCS must provide the required performance before, during and after application of the Mars atmospheric entry dynamic loads.

15.2.12 Growth - The RCS must be capable of growth to an application involving increased total impulse without significant subsystem or critical component redesign.

15.3 PHYSICAL CHARACTERISTICS - The RCS tankage and control components are located on the Capsule Bus centerline above the radar altimeter antenna ground plane. The TCA's are arrayed on the web of the apt ring of the aeroshell near it's outer periphery. The equipment location is shown in Figure 15-3. Tabulated in Figure 15-4 are the envelope dimensions of the major components, and the subsystem, pressurant and propellant weights.

Pressurant tankage is constructed of titanium for weight conservation. The portion of the propellant storage group wetted by propellant is also titanium, for hydrazine compatibility during sterilization and storage. The remainder of the subsystem equipment is primarily stainless steel.

15.4 OPERATION DESCRIPTION - The RCS is loaded with propellant and pressurant and sealed before terminal sterilization. At the completion of the transit to five seconds before separation of the Capsule Bus from the Flight Spacecraft by opening the normally closed pyrotechnic isolation valves at the pressurant and propellant tanks. Electrical signals to the TCA solenois valves permit propellant flow and thrust. The pitch and yaw TCA's are rated at 22 pounds of steady state thrust; the roll TCA's deliver two pounds of thrust.

The separation of the Capsule Bus from the Flight Spacecraft is aided by firing the four pitch and yaw TCA's simultaneously to give a separation velocity increment of 1.25 foot/second. Orbit attitude control, attitude stabilization during de-orbit motor firing, and descent attitude control are obtained by pulsing

RCS GENERAL ARRANGEMENT

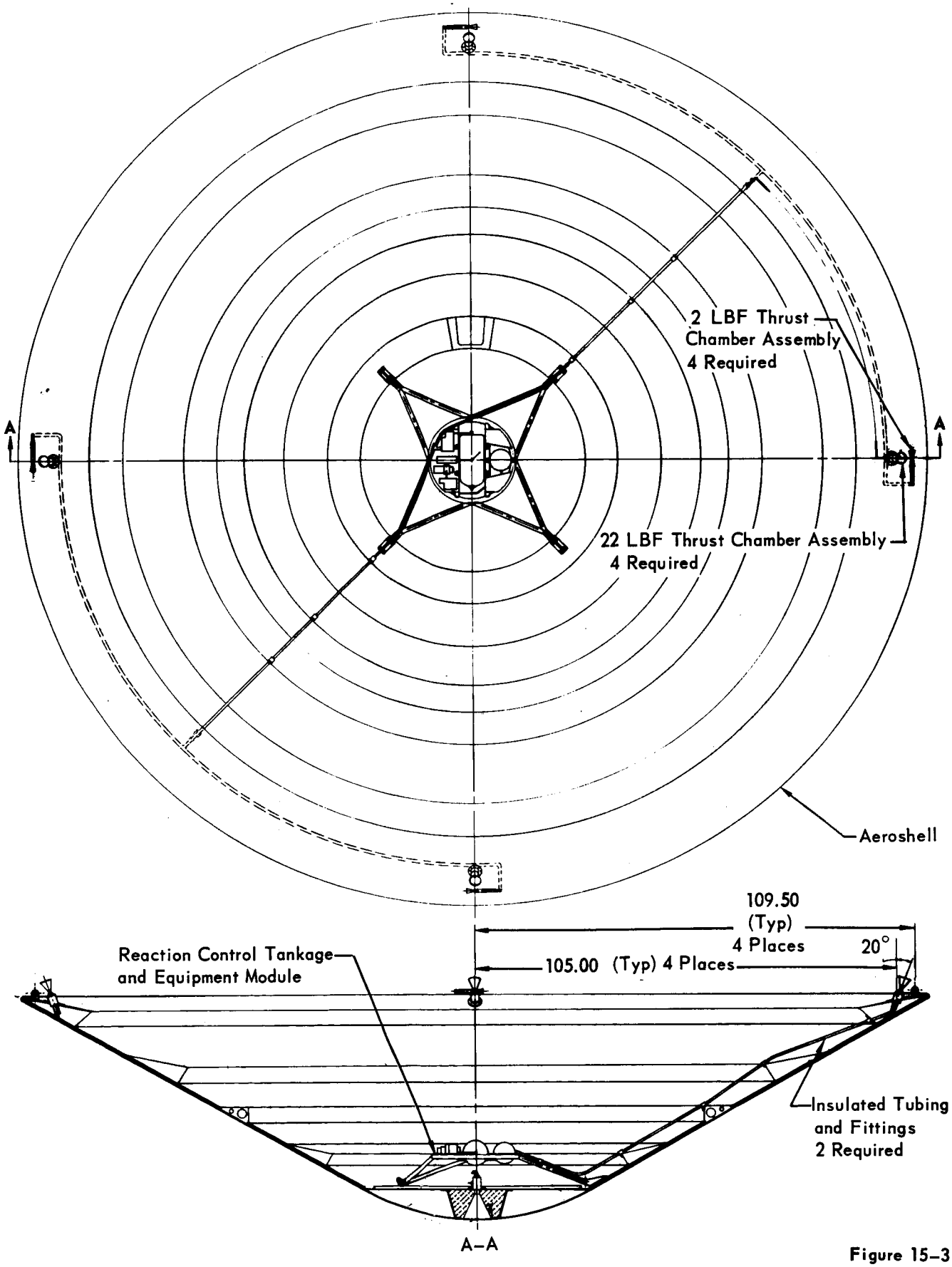

Figure 15–3

REACTION CONTROL SUBSYSTEM
PHYSICAL AND PERFORMANCE CHARACTERISTICS

Subsystem

Type – Monopropellant
  Propellant – Anhydrous Hydrazine
  Ignition – Catalyst, Shell 405
Pressurization – Stored Cold Gas, Regulated
  Pressurant – Nitrogen
Total Impulse, lb-sec – 1028

Thrust Chamber Assemblies

  Total Number – 8
  Type – Radiation Cooled, Fixed Thrust, Fixed Mount

Control Axis	PITCH	YAW	ROLL
No. of TCA's per Axis	2	2	4
No. of TCA's per Control Maneuver	1	1	2
Thrust per TCA, lb	22		2
Specific Impulse, Steady State, sec	220 min		
Minimum Impulse Pulse, lb-sec	0.22 max.		
Response, Start, Signal to 90% Thrust, sec	.020 max.		
Response, Shutdown, Signal to 10% Thrust, sec	.020 max.		
Area Ratio, ϵ	50:1		

Pressures –	CHARGE	STERILIZATION	OPERATION
Pressurant Tank	3000 psia @ 70°F	4400 psia @ 275°F	400–3000 psia
Regulator Inlet	14.7 psia	21 psia	400–3000 psia
Regulator Outlet	14.7 psia	21 psia	300 psia
Propellant Tank	14.7 psia	27 psia	300 psia
Combustion Chamber	14.7 psia	21 psia	150 psia

  Burst Disc/Relief Valve Relief Pressure – 450 psia

Weights

  Subsystem Total Weight, Loaded, lb – 46.6
  Propellant Weight, Loaded, lb – 7.4
  Propellant Weight, Usable, lb – 6.6
  Pressurant Weight, lb – 0.4

Tankage

Propellant Tank – Positive Expulsion, Metal Bellows,
  Cylindrical, Titanium
  6.1 inch dia x 12.2 inch long
Pressurant Tank – Spherical, Titanium, 4.9 inch dia

TCA Envelopes	22 lb	2 lb
Length Overall (Including Valve)	9.3 in.	7.3 in.
Chamber Diameter	2.0 in.	1.0 in.
Nozzle Exit Diameter	2.7 in.	1.2 in.

Figure 15–4

the TCA's in response to guidance and control commands. Vehicle attitude rate damping during Mars atmospheric entry is similarly obtained. Upon deployment of the parachute at approximately 18,000 feet, the Aeroshell, and with it the RCS, is jettisoned.

15.5 PERFORMANCE OBJECTIVES - The RCS performance objectives are tabulated in Figure 15-4.

15.6 INTERFACE DEFINITIONS - The RCS shares interfaces with other subsystems as indicated in Figure 15-2.

15.7 RELIABILITY AND SAFETY - Reliability and safety considerations are reflected in the preferred subsystem design, as indicated below.

15.7.1 Reliability Considerations - Reliability has been of primary importance in the design concept of the reaction control subsystem. Subsystem reliability is enhanced by storing the pressurant and propellant behind positively leak-proof valves prior to use. These valves are pyrotechnic-actuated devices of inherent high reliability. All components with moving parts, except the positive expulsion bellows and pressure transducers, are stored out of contact with propellant and under very low (one atmosphere) pressure stress until immediately prior to subsystem use.

15.7.1.1 Reliability Estimate - A nonredundant subsystem was used as a starting point for reliability estimation. The reliability logic diagram of this subsystem is presented in Figure 15-5. The reliability estimate for the subsystem is shown in Figure 15-6 which presents the probability of success.

$$P_s = .9934$$

The reliability of the subsystem was determined using the component failure rates presented in Part B, Section 5, Figure 5.13.4.5-1 and the failure rate modifying factors presented in Part E, Section 3, Figure 3.1.1-1.

15.7.1.2 Redundancy Considerations - A reliability versus weight study was conducted to evaluate the effect of redundant components by comparing the reliability improvement with the added weight. The greatest increase in reliability for the least increase in weight was the determining factor for establishing the optimum order of component redundancy.

RELIABILITY LOGIC DIAGRAM
REACTION CONTROL SUBSYSTEM

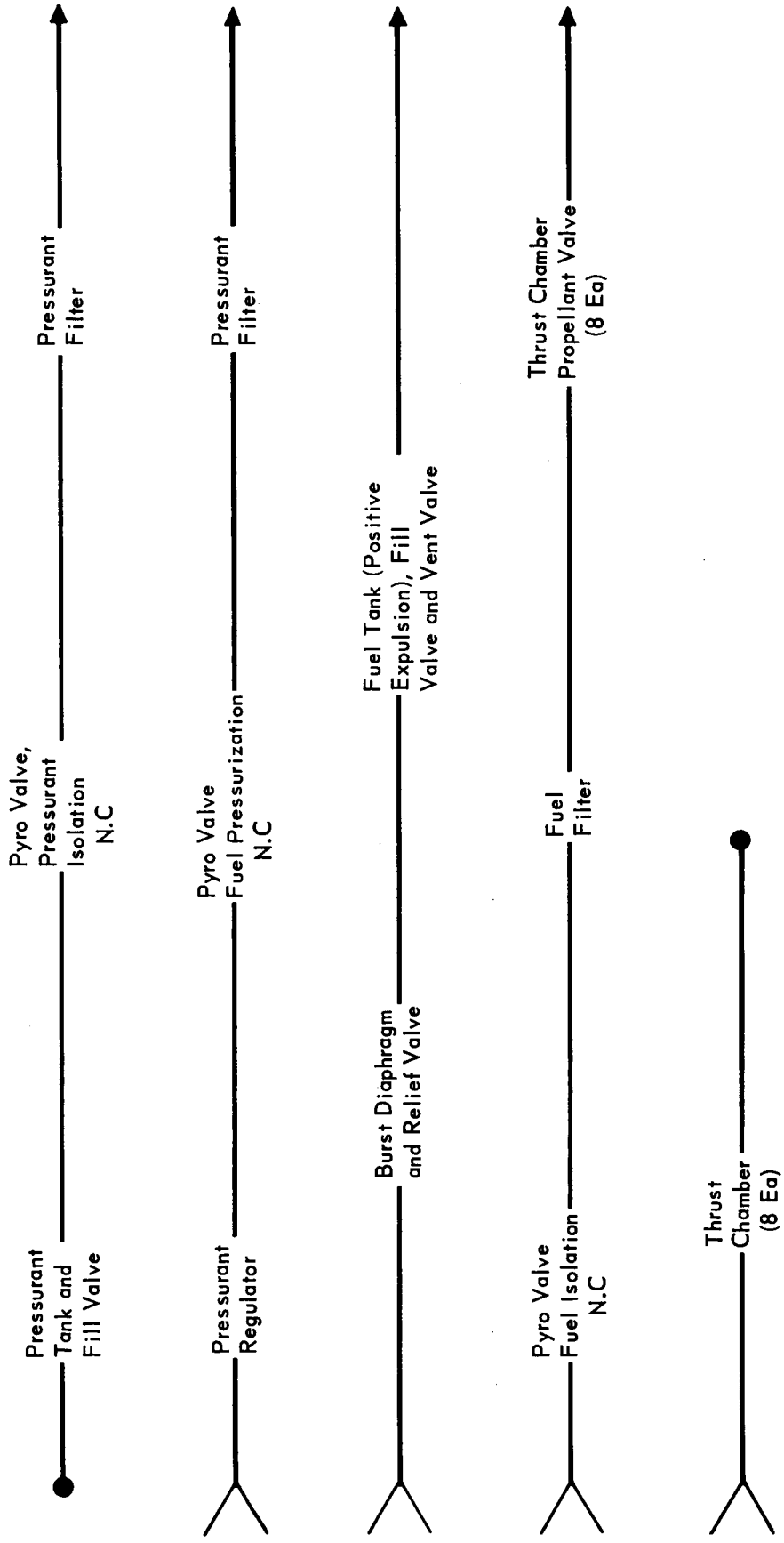

Figure 15–5

RELIABILITY ESTIMATE
REACTION CONTROL SUBSYSTEM

COMPONENT	DUTY CYCLE t_m (OR CY)	FAILURE RATE $\lambda \times 10^6$	$\lambda t_m \times 10^6$ $(-LnR \times 10^6)$
Tank, Pressurant	5566 hrs	0.08/hr	445
Valve, Pyro (N.C.)	1 cy	250/cy	750
Filter, Pressurant (2)	1 cy	25.3/cy ea.	51
Regulator, Pressurant	92 hrs	16/hr	1472
Burst Diaphragm + Relief Valve	Redundant for Leakage		< 1
Tank, Fuel, Positive Expulsion	2 cy	357/cy	714
Filter, Fuel	1 cy	52/cy	52
Valves, Propellant, TCA (8)	2800 cy (total)	0.84/cy	2352
Thrust Chamber (8)	166 sec (total)	5.16/sec	857
Subsystem Reliability = $e^{-\Sigma \lambda t_m} = 0.99333$			$\Sigma = 6694$

Figure 15–6

Redundancies considered in the order of priority are:

- o Incorporate a redundant cartridge in each of the pyro valves.
- o Incorporate a series redundant pressure regulator.
- o Incorporate redundant pyro valves.
- o Incorporate a redundant pressurant supply.
- o Incorporate a complete redundant reaction control subsystem. The secondary ring would be active but would control to a greater deadband than the primary ring.
- o Incorporate quad-redundant TCA propellant valves.

15.7.1.3 Failure Mode, Effect and Criticality Analysis - A failure mode, effect and criticality analysis was performed on the selected subsystem design to delineate the effects of various component failures on mission success. The analysis is presented in Figure 15-7.

15.7.2 Safety - Safety is provided by imposing appropriate proof and burst pressure safety factors on all equipment and by verification by test that all components possess structural margins for dynamic loads over actual flight load levels. Provision is made in the liquid side of the propellant tankage for relief of spontaneously generated, unexpected, overpressure, as, for example, from hydrazine decomposition. In the event that the propellant tank must relieve, the propellant is vented through the sterilization canister vent into an OSE disposal system. Pressure transducers in the pressurant and propellant storage sections of the subsystem provide continuous monitoring capability to permit assessment of subsystem condition at any time.

15.8 TEST REQUIREMENTS - Subsystem tests are required in which each component is functionally checked and/or calibrated. Exceptions to this rule will be the pyrotechnic actuated valves and pressure relief burst discs, for which a reliability value will be established during subsystem development. Internal leakage rates for all applicable components and total system external leakage will be measured. The subsystem will not be fired prior to use during the mission.

In-flight tests will be limited to checks of TCA valve function and the results of periodic analysis of pressurant and propellant tank pressure and temperature transducer readings. Activation of the RCS will be verified by tank pressure data. Proper operation of the subsystem will be verified by analysis of guidance and control commands and resulting vehicle responses.

FAILURE MODE, EFFECT AND CRITICALITY ANALYSIS
REACTION CONTROL SUBSYSTEM

FAILURE CATEGORY DEFINITION

1. No Effect on Mission Objective
2. Degrading Effect on Mission Objective
3. Possible Catastropic Effect on Mission Objective

COMPONENT OR FUNCTION	FAILURE MODE	FAILURE EFFECT	FAILURE CATEGORY: LANDING	ENTRY SCIENCE	LANDED SCIENCE	ENG. DATA	REMARKS
1. Pressurant Tank and Fill Valve (Valve Capped)	Leakage	Loss of all or part of pressurant.	1/3	1/3	1/3	1/2	Criticality depends upon leakage rate.
2. Pyro Valve, Pressurant Isolation (N.C.)	Cartridge fails to fire or gives low order output, or device jams in closed position.	Loss (unavailability) of source pressurant. Propellant tank would not be pressurized.	3	3	3	2	Pyro valves have shown high reliability. Dual cartridges could provide min. redundancy
3. Filter, Pressurant	Clogged	Restricted flow (or no flow) of pressurant.	1/3	1/3	1/3	1/2	This is a secondary failure to pressurant contamination and is considered remote. Criticality depends upon degree of clogging.
4. Regulator, Pressurant	Fails Closed	Loss (unavailability) of source pressurant. Propellant tank would not be pressurized.	3	3	3	2	Remote failure mode. Regulator design is "Normally Open."
	Fails Open	Fuel Tank would be overpressurized resulting in burst diaphragm rupture and loss of pressurant through the relief valve.	1/3	1/3	1/3	1/2	Criticality depends upon time in mission that failure occurs.
5. Pyro Valve, Fuel Pressurization (N.C.)	Cartridge fails to fire or gives low order output, or device jams closed.	Loss (unavailability) of source pressurant. Propellant tank would not be pressurized.	3	3	3	2	Pyro valves have shown high reliability. Dual cartridges could provide min. redundancy
6. Filter, Pressurant	Clogged	Restricted flow (or no flow) of pressurant.	1/3	1/3	1/3	1/2	This is a secondary failure and is considered remote.
7. Burst Diaphragm	Fails to rupture at design relief pressure.	Failure of propellant tank due to overpressurization.	3	3	3	2	This is a secondary failure following pressure regulator

Figure 15-7

							sidered unlikely.
	Ruptures before design relief pressure is attained.	None	1	1	1	1	Series relief valve maintains desired pressure.
8. Relief Valve	Fails Open (Leakage)	None	1	1	1	1	Secondary failure following pressure regulator failure and rupture of burst diaphragm.
	Fails Closed	Failure of propellant tank due to over-pressurization.	3	3	3	2	This is a secondary failure following pressure regulator failure and is considered unlikely.
9. Fuel Tank and Fill Valve (Valve Capped)	Leakage	Loss of all or part of fuel plus possibility of fuel attacking other materials and components inside the sterilization Canister during the long interplanetary cruise.	2/3	2/3	2/3	1/2	Design and fabrication techniques must minimize the probability of this failure mode to the point of elimination.
10. Pyro Valve, Fuel Isolation (N.C.)	Cartridge fails to fire or gives low order output, or device jams in closed position.	Loss (unavailability) of propellant source. Engines would not fire.	3	3	3	2	Dual cartridges could provide min. redundancy
12. Filter, Fuel	Clogged	Restricted flow (or no flow) of propellant.	1/3	1/3	1/3	1/2	This is a secondary failure to propellant contamination and is considered unlikely. Criticality depends upon the degree of clogging.
12. Thrust Chamber Propellant Valve (8)	Fails closed at system activation or during operation.	Loss of propellant flow to engines. Capsule would lose attitude control and possibly fail to de-orbit, or capsule would enter Mars atmosphere in a random attitude.	2/3	2/3	2/3	1/2	Criticality depends upon time in mission that failure occurs.
	Fails continuously open during operation or leakage after shutdown.	Failed open condition during operation would result in loss of attitude control and premature depletion of fuel. Effect of leakage after shutdown would be nullified by parachute deployment.	2/3	2/3	2/3	1/2	
13. Thrust Chamber (8)	Burn thru or rupture.	Capsule could lose attitude control and possibly fail to de-orbit, or capsule would enter Mars atmosphere in random attitude.	2/3	2/3	2/3	1/2	Criticality depends upon time in mission that failure occurs.

15-12-2

15.9 DEVELOPMENT REQUIREMENTS - In addition to conventional investigations of performance throughout the entire operating range, the development program for the RCS will emphasize the areas listed below.

15.9.1 Sterilization - All components will be developed to withstand and function following dry heat sterilization. Decomposition characteristics of hydrazine in flight tankage systems plus the effect of the gaseous products of decomposition on TCA performance will be thoroughly investigated. Durability of the monopropellant catalyst, Shell 405, during sterilization will also be investigated.

Decontamination - Resistance of all components to ethylene oxide decontamination will be verified. The selected method of sealing the Shell 405 catalyst, which is poisoned by ethylene oxide, will be evaluated.

Storage - The effects of 43 week storage following sterilization of the propellant and catalyst must be determined.

TCA Performance - The development of a TCA capable of delivering the required high response and low minimum impulse pulse characteristics is within the existing state-of-the-art for monopropellant hydrazine engines. However, the requirements are stringent and development will be lengthy.

SECTION 16

TERMINAL PROPULSION SUBSYSTEM

16.1 EQUIPMENT IDENTIFICATION AND USAGE - The Terminal Propulsion Subsystem (TPS) is a liquid bipropellant rocket engine subsystem with four downward-directed engines mounted on the VOYAGER Lander base platform. The subsystem equipment is located on both sides of the Surface Laboratory, as shown in Figure 16-1. The TPS employs throttling of rocket thrust to provide deceleration to the Lander during terminal descent to the surface of Mars. Vehicle attitude control during this descent is effected by differential throttling of selected combinations of the TPS engines as shown in Figure 16-2. The engines are alternately canted to provide roll control. The TPS, shown schematically in Figure 16-3 consists of three main groups of components: pressurization group components, propellant components and manifolds, and the rocket engines. Test ports are provided throughout the subsystem. A functional block diagram which summarizes the function of each component in the subsystem is presented in Figure 16-4.

16.1.1 Pressurization Components - Helium is stored at high pressure behind a pyrotechnically actuated isolation valve prior to subsystem activation and is provided at regulated pressure to the propellant tanks during TPS operation. The regulator inlet is protected from contamination by an in-line filter. Storage tank pressure and temperature are monitored continuously for leak check prior to TPS activation and subsystem performance analysis during operation. A burst disc and relief valve provide pressure relief in the event of oxidizer tank overpressure during subsystem operation. The relief valve reseat action, after venting excess pressurant, permits continued operation of the TPS. A normally open pyrotechnically-actuated valve is provided to reseal the pressurant storage tank.

16.1.2 Propellant Storage Components and Manifold - This unit stores the fuel, MMH, and oxidizer, N_2O_4, behind leak-tight isolation valves until system activation and provides distribution of these propellants under regulated pressure to the TCA's during TPS operation. A special burst disc is provided to protect the oxidizer tank from overpressurization during heat sterilization; a burst disc-relief valve combination protects the fuel tank at all times. Provision for monitoring of the temperature and pressure of both tanks is provided for subsystem performance analysis. (A normally open pyrotechnically-actuated valve is provided to reclose the pressurant line between the fuel and oxidizer tanks

TERMINAL PROPULSION SUBSYSTEM MAJOR COMPONENTS

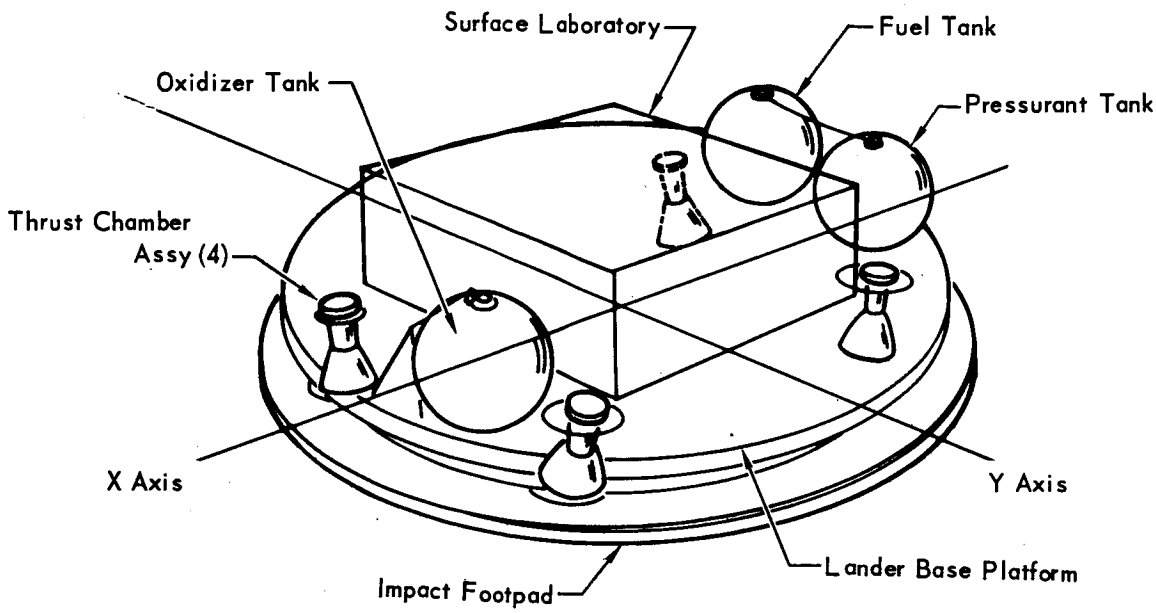

Figure 16–1

DIFFERENTIAL THROTTLING ATTITUDE CONTROL

With Four Fixed Canted Engines

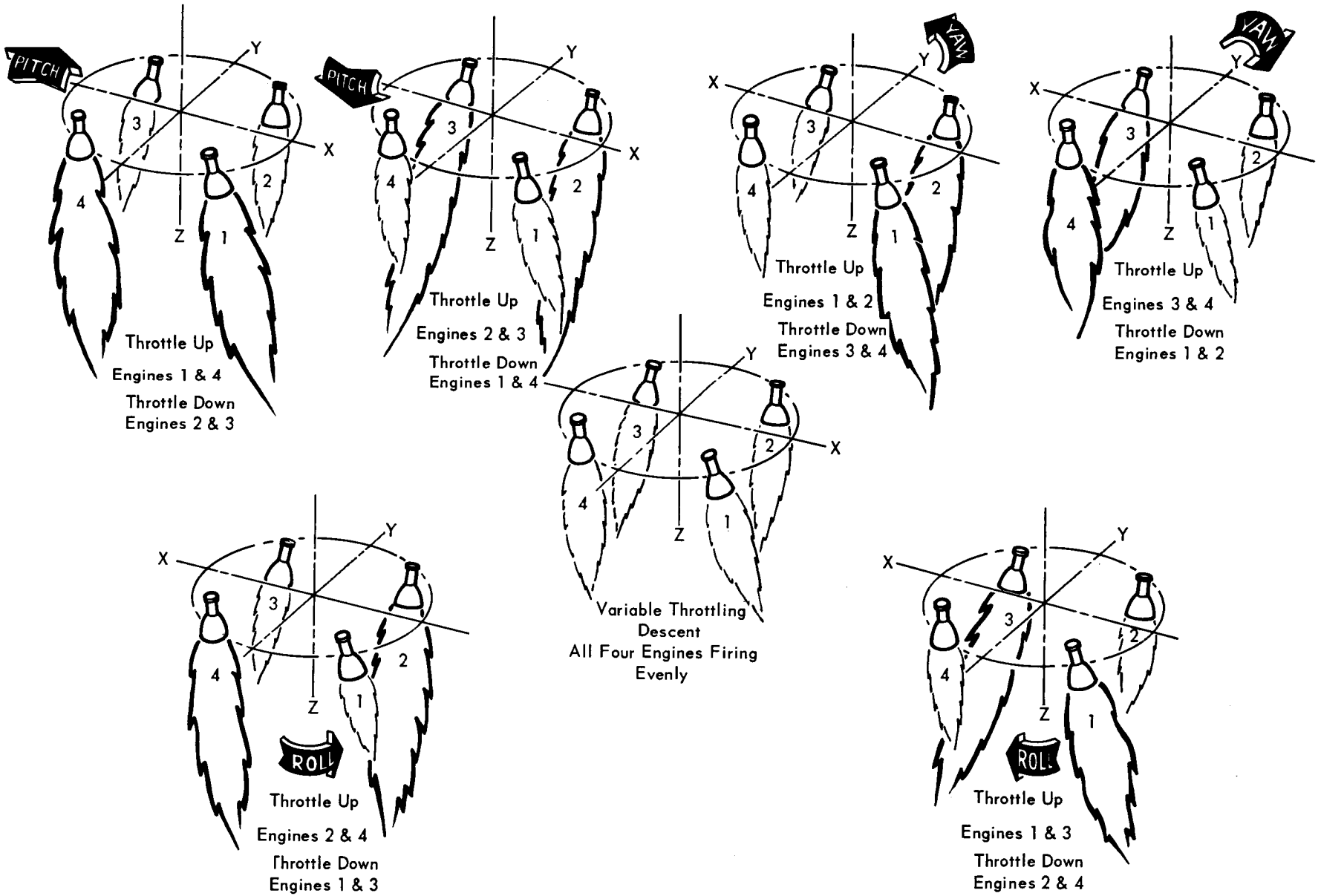

Figure 16-2

SCHEMATIC DIAGRAM TERMINAL DESCENT PROPULSION SUBSYSTEM – VOYAGER

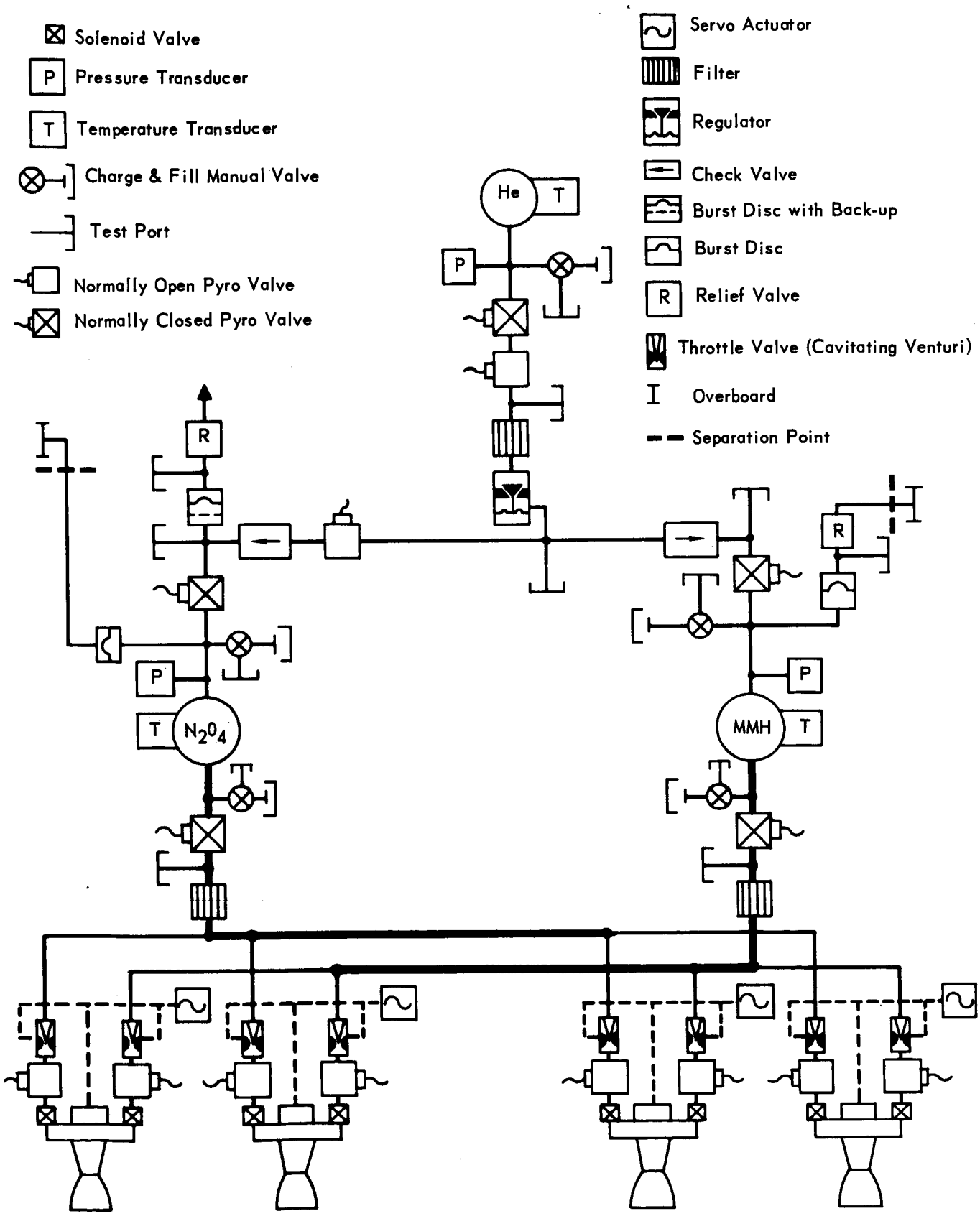

Figure 16–3

TERMINAL PROPULSION SUBSYSTEM
FUNCTIONAL BLOCK DIAGRAM

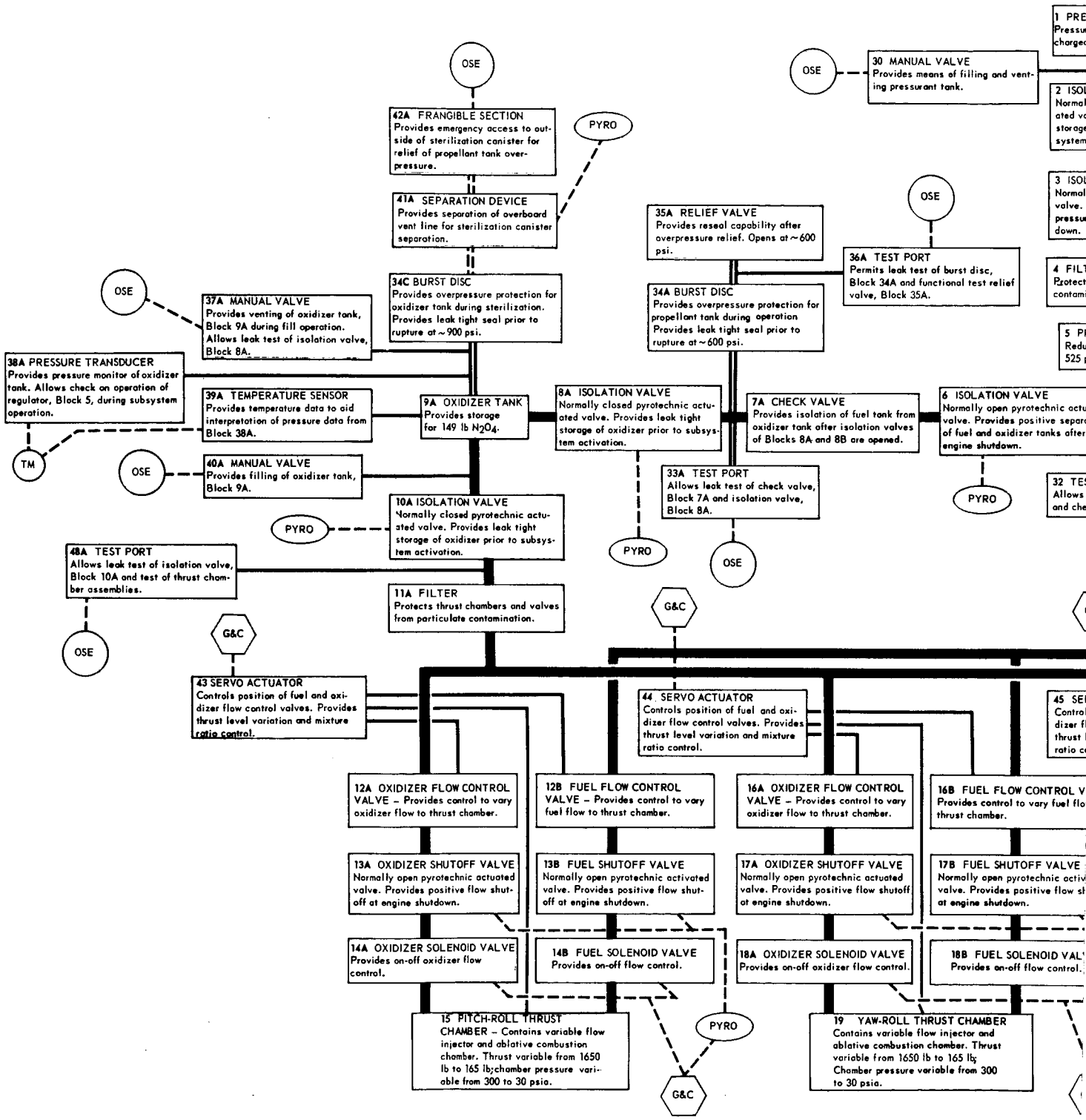

Figure 16–4

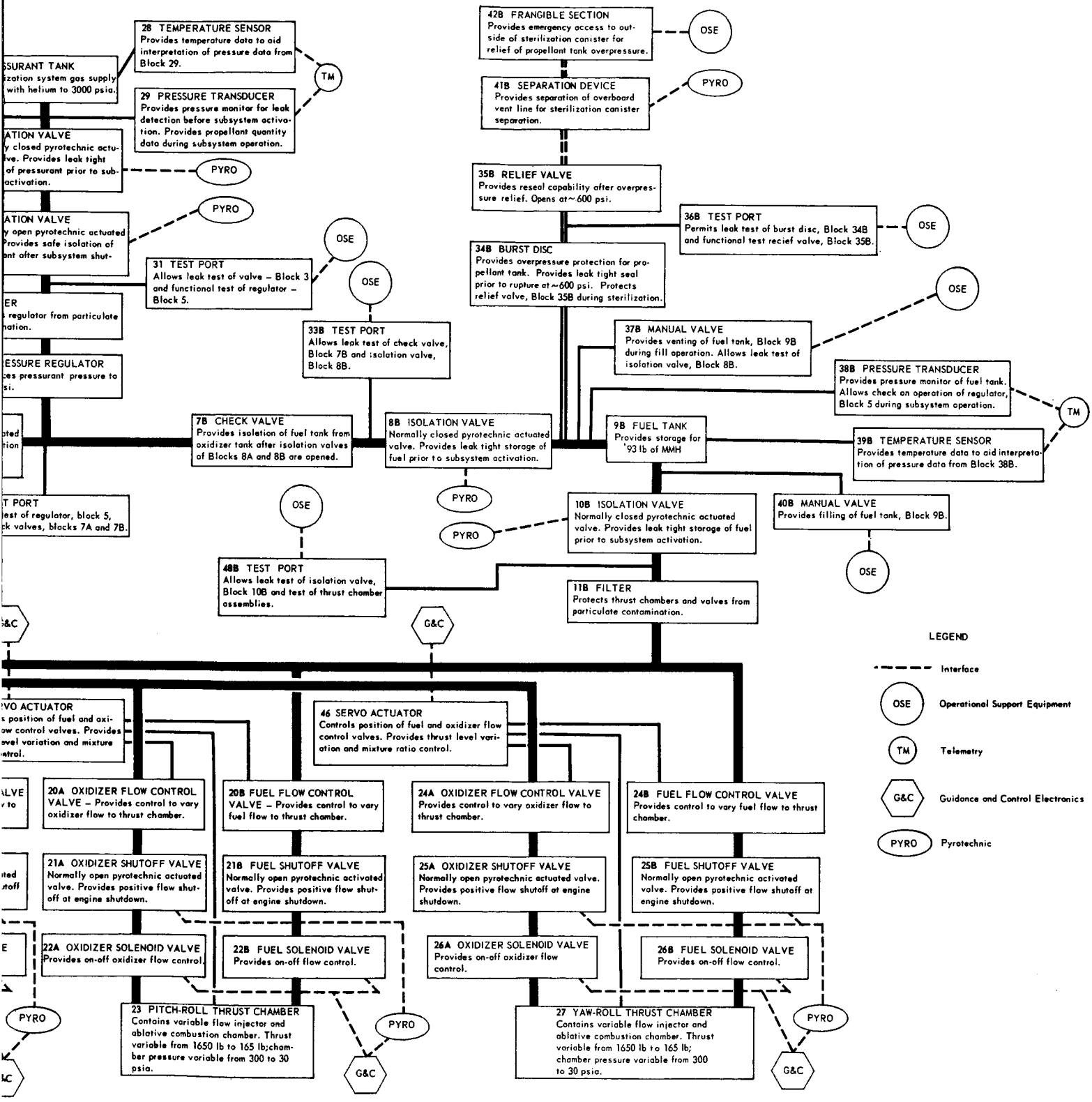
SURANT TANK
ization system gas supply with helium to 3000 psia.
28 TEMPERATURE SENSOR
Provides temperature data to aid interpretation of pressure data from Block 29.
TM
29 PRESSURE TRANSDUCER
Provides pressure monitor for leak detection before subsystem activation. Provides propellant quantity data during subsystem operation.
ATION VALVE
y closed pyrotechnic actuve. Provides leak tight of pressurant prior to subactivation.
PYRO
ATION VALVE
y open pyrotechnic actuated Provides safe isolation of ant after subsystem shut-
PYRO
OSE
31 TEST PORT
Allows leak test of valve – Block 3 and functional test of regulator – Block 5.
OSE
ER
regulator from particulate ation.
ESSURE REGULATOR
es pressurant pressure to si.
33B TEST PORT
Allows leak test of check valve, Block 7B and isolation valve, Block 8B.
7B CHECK VALVE
Provides isolation of fuel tank from oxidizer tank after isolation valves of Blocks 8A and 8B are opened.
8B ISOLATION VALVE
Normally closed pyrotechnic actuated valve. Provides leak tight storage of fuel prior to subsystem activation.
PYRO
T PORT
est of regulator, block 5, k valves, blocks 7A and 7B.
OSE
48B TEST PORT
Allows leak test of isolation valve, Block 10B and test of thrust chamber assemblies.
42B FRANGIBLE SECTION
Provides emergency access to outside of sterilization canister for relief of propellant tank overpressure.
OSE
41B SEPARATION DEVICE
Provides separation of overboard vent line for sterilization canister separation.
PYRO
35B RELIEF VALVE
Provides reseal capability after overpressure relief. Opens at ~600 psi.
36B TEST PORT
Permits leak test of burst disc, Block 34B and functional test recief valve, Block 35B.
OSE
34B BURST DISC
Provides overpressure protection for propellant tank. Provides leak tight seal prior to rupture at ~600 psi. Protects relief valve, Block 35B during sterilization.
OSE
37B MANUAL VALVE
Provides venting of fuel tank, Block 9B during fill operation. Allows leak test of isolation valve, Block 8B.
38B PRESSURE TRANSDUCER
Provides pressure monitor of fuel tank. Allows check on operation of regulator, Block 5 during subsystem operation.
TM
9B FUEL TANK
Provides storage for '93 lb of MMH
39B TEMPERATURE SENSOR
Provides temperature data to aid interpretation of pressure data from Block 38B.
10B ISOLATION VALVE
Normally closed pyrotechnic actuated valve. Provides leak tight storage of fuel prior to subsystem activation.
PYRO
PYRO
40B MANUAL VALVE
Provides filling of fuel tank, Block 9B.
OSE
11B FILTER
Protects thrust chambers and valves from particulate contamination.
G&C
G&C
LEGEND
Interface
OSE Operational Support Equipment
TM Telemetry
G&C Guidance and Control Electronics
PYRO Pyrotechnic
VO ACTUATOR
s position of fuel and oxiow control valves. Provides evel variation and mixture ntrol.
46 SERVO ACTUATOR
Controls position of fuel and oxidizer flow control valves. Provides thrust level variation and mixture ratio control.
LVE
r to
20A OXIDIZER FLOW CONTROL VALVE – Provides control to vary oxidizer flow to thrust chamber.
20B FUEL FLOW CONTROL VALVE – Provides control to vary fuel flow to thrust chamber.
24A OXIDIZER FLOW CONTROL VALVE
Provides control to vary oxidizer flow to thrust chamber.
24B FUEL FLOW CONTROL VALVE
Provides control to vary fuel flow to thrust chamber.
ted
toff
21A OXIDIZER SHUTOFF VALVE
Normally open pyrotechnic actuated valve. Provides positive flow shutoff at engine shutdown.
21B FUEL SHUTOFF VALVE
Normally open pyrotechnic activated valve. Provides positive flow shutoff at engine shutdown.
25A OXIDIZER SHUTOFF VALVE
Normally open pyrotechnic actuated valve. Provides positive flow shutoff at engine shutdown.
25B FUEL SHUTOFF VALVE
Normally open pyrotechnic activated valve. Provides positive flow shutoff at engine shutdown.
E
22A OXIDIZER SOLENOID VALVE
Provides on-off oxidizer flow control.
22B FUEL SOLENOID VALVE
Provides on-off flow control.
26A OXIDIZER SOLENOID VALVE
Provides on-off oxidizer flow control.
26B FUEL SOLENOID VALVE
Provides on-off flow control.
PYRO
23 PITCH-ROLL THRUST CHAMBER
Contains variable flow injector and ablative combustion chamber. Thrust variable from 1650 lb to 165 lb; chamber pressure variable from 300 to 30 psia.
PYRO
G&C
27 YAW-ROLL THRUST CHAMBER
Contains variable flow injector and ablative combustion chamber. Thrust variable from 1650 lb to 165 lb; chamber pressure variable from 300 to 30 psia.
PYRO
G&C

16-5-2

upon engine system shutdown).

16.1.3 Rocket Engines - Four engines provide differentially variable rocket thrust during TPS operation. These engines are ablative-cooled; pyrotechnic valves provide leak-tight closure at shutdown.

Engine throttling is accomplished by servo-actuated cavitating venturi throttling valves which are coupled with a specially configured injector to provide stable combustion over a wide range of propellant flow rates.

16.2 Design Requirements and Constraints - The TPS is evolved to meet the following requirements:

16.2.1 ETO Decontamination - The subsystem, prior to loading of propellant and pressurant, must withstand ethylene oxide decontamination at 122°F, as specified in JPL Report SE 003BB002-2A21, Paragraph 5.1.4.

16.2.2 Sterilization - The subsystem, subsequent to loading of propellant and pressurant, must withstand dry heat sterilization, at 275°F and in a nitrogen atmosphere, as specified in JPL Report SE 003BB002-2A21, Paragraph 5.1.4.

16.2.3 Vacuum Storage - The subsystem must withstand 43 weeks of storage during prelaunch operations and transit to Mars, during the majority of which ambient pressure will be approximately 10^{-14} torr.

16.2.4 Sterilization Canister - Relief valve vent lines between the TPS and the sterilization canister wall must be separable to allow unimpeded separation of the canister from the Capsule Bus.

16.2.5 Storage - The TPS must provide leak-proof storage of pressurant and propellant prior to subsystem activation.

16.2.6 Thrust Levels - The TPS engines must each provide thrust variable from 1650 lb. to 165 lb. The thrust level variation of each engine must be independent of the operating level of other engines in the subsystem.

16.2.7 Total Impulse - The TPS must deliver 65,000 pound-seconds of total impulse for descent control functions. TCA's shall have sufficient life capability for any reasonable duty cycle based on this total impulse value.

16.2.8 Control Torques - The TPS must provide control torques of 965 lb-ft in pitch, 740 lb-ft in yaw and 106 lb-ft in roll.

16.2.9 Isolation at Shutdown - The TPS must provide sealed, safe isolation of remaining pressurant and propellants following TPS shutdown.

16.2.10 Crushable Nozzle - The TPS engine nozzles must be crushable so as not to interfere with Lander shock attenuation.

16.2.11 Entry Loads - The TPS must provide the required performance after application of the Mars atmospheric entry dynamic loads.

16.2.12 Growth - The TPS must be capable of growth to an application involving increased total impulse without significant subsystem or critical component redesign.

16.2.13 Radar Interaction - Interaction between TPS exhaust plumes and radar signals must be minimized.

16.3 Physical Characteristics - The TPS equipment is mounted on the Lander base platform. The significant characteristics of the major TPS components are summarized in Figure 16-5. Equipment installation is depicted in Figure 16-6.

16.3.1 Engines - The engines are located on a 44 inch radius circle, at the corners of a 54 x 70 inch rectangle which is symmetrical about the Lander X and Y axes. The engines are attached to the Lander base platform in truncated conical fixed mounts, the nozzles extending downward through the Lander impact footpad. The alignment of the engines to the Z axis is alternately canted 5° as shown in Figure 16-6.

16.3.2 Tankage - The propellant tanks are supported from the Lander base platform by equatorial trunnion mounts.

The propellant tanks are located along a Lander major diameter, and are located at distances from the vehicle c.g. inversly proportional to the propellant mixture ratio. Propellant consumption exerts a minimal c.g. shift.

Pressurant tankage is constructed of titanium for weight conservation. The portion of the propellant storage groups in contact with fuel and oxidizer is also titanium for compatibility during sterilization and storage (Ref. Paragraph 5.13.4.3). The remainder of the subsystem equipment is primarily stainless steel.

16.4 Operation Description - The TPS is loaded with propellant and pressurant and sealed before terminal sterilization. TPS operation begins during the final moments of the Lander descent.

Propellant settling results from the drag-induced deceleration of the Lander vehicle prior to subsystem pressurization. The pressurization sequence begins with the radar altitude signal which is given for parachute deployment at 23,000 ft. At this point the isolation valve pyrotechnic circuits are armed. Following a twelve second delay the propellant tank outlet isolation valves are opened allowing propellant flow to the engine inlets. Five seconds after that, the simultaneous opening of the isolation valves at the pressurant tank

TERMINAL PROPULSION SUBSYSTEM
PHYSICAL AND PERFORMANCE CHARACTERISTICS

SUBSYSTEM
- Type – Bipropellant
  - Ignition – Hypergolic
  - Fuel – Monomethyl Hydrazine
  - Oxidizer-Nitrogen Tetroxide
- Pressurization – Stored Cold Gas, Regulated
  - Pressurant – Helium
- Total Impulse, lb-sec. – 65,000

THRUST CHAMBER ASSEMBLIES
- Number – 4
- Type – Throttleable, Fixed Mount, Ablative-cooled Combustion Chamber, Radiation-Cooled Nozzle Extension.
- Thrust – Throttleable, 1650 to 165 lb
- Specific Impulse, Steady State, Maximum Thrust – 291 Sec.
- Mixture Ratio, Oxidizer/Fuel – 1.6
- Response – 0% to 90% thrust – 0.200 Sec. Max.
  - 100% to 10% thrust – 0.200 Sec. Max.
  - 10% to 100% thrust – 0.150 Sec..Max.
- Life – 70 Sec. Minimum
- Nozzle – Area Ratio (ϵ) –30:1, Crushable Extension

PRESSURES

	CHARGE	STERILIZATION	OPERATION
Pressurant Tank	3000 psia at 70°F	4400 psia at 275°F	650 – 3000 psia
Regulator Inlet	14.7 psia	21 psia	650 – 3000 psia
Regulator Outlet	14.7 psia	21 psia	525 psia
Fuel Tank	14.7 psia	63 psia	525 psia
Oxidizer Tank	14.7 psia at 70°	F760 psia at 275°F	525 psia
Combustion Chamber	14.7 psia	21 psia	30 – 300 psia

Burst Disc Rupture Pressure – Oxidizer Tank (Sterilization) – 900 psia
Burst Disc/Relief Valve Relief Pressure – Oxidizer Tank (Operation) – 650 psia
– Fuel Tank (Sterilization and Operation) – 650 psia

WEIGHTS
- Subsystem Total Weight, Loaded, 585 Lb
- Propellant Weight, Loaded
  - Fuel, Lb – 93
  - Oxidizer, Lb – 149
- Propellant Weight, Usable
  - Fuel, Lb. – 87
  - Oxidizer, Lb. – 140
- Pressurant Weight, Lb. – 2.7

TANKAGE
- Propellant –
  - Fuel – Spherical, Titanium, 19.2 In. dia.
  - Oxidizer – Spherical, Titanium, 20.5 In. dia.
- Pressurant – Spherical, 17.5 In. dia.

TCA ENVELOPE
- Length, Injector & Nozzle – 25 In. (Crushable to 17 In.)
- Nozzle Exit Diameter – 11.5 In.

Figure 16–5

TERMINAL PROPULSION SUBSYSTEM INSTALLATION

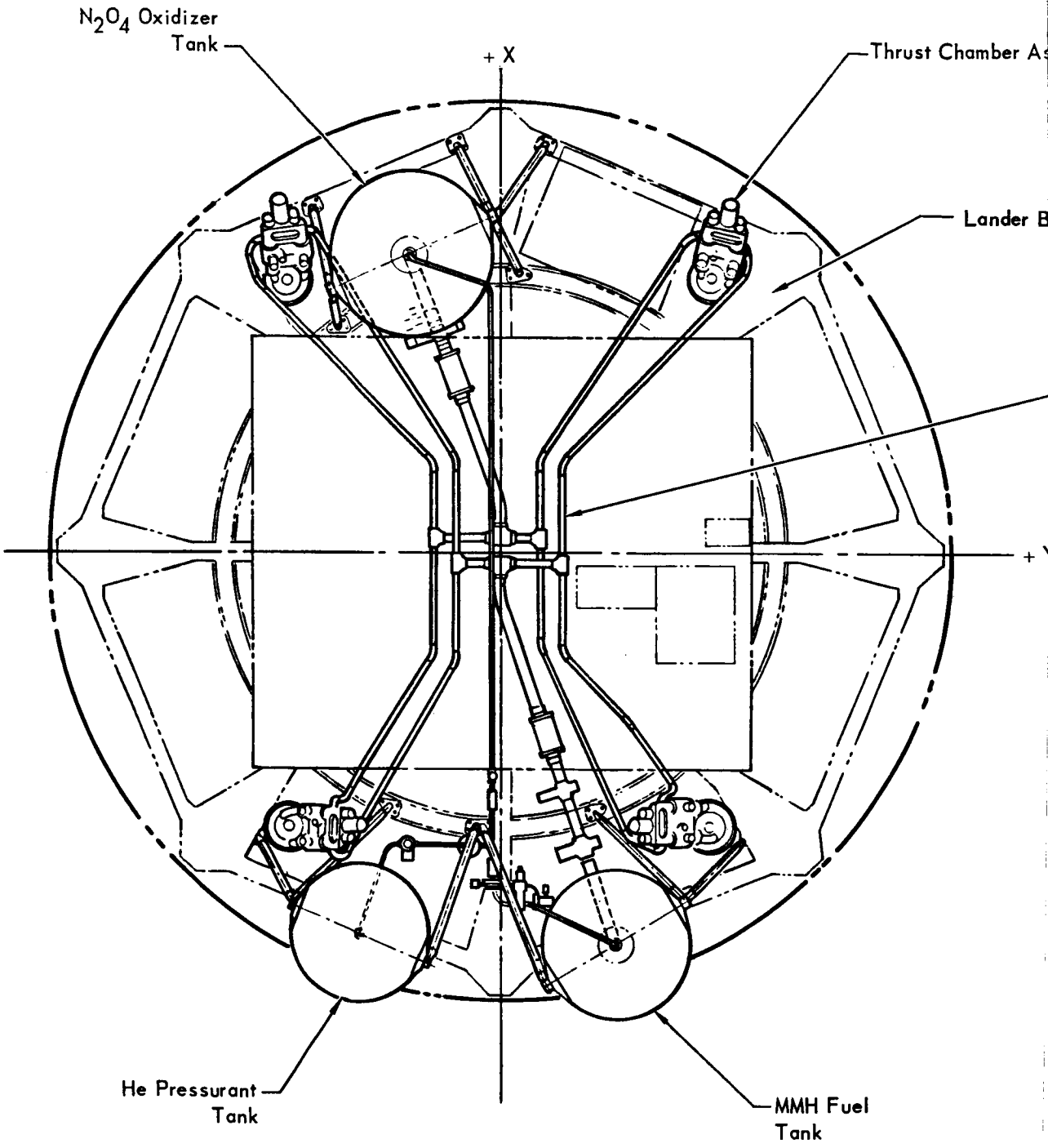

Figure 16-6

sembly (4)

ase Platform

Propellant Distribution Lines

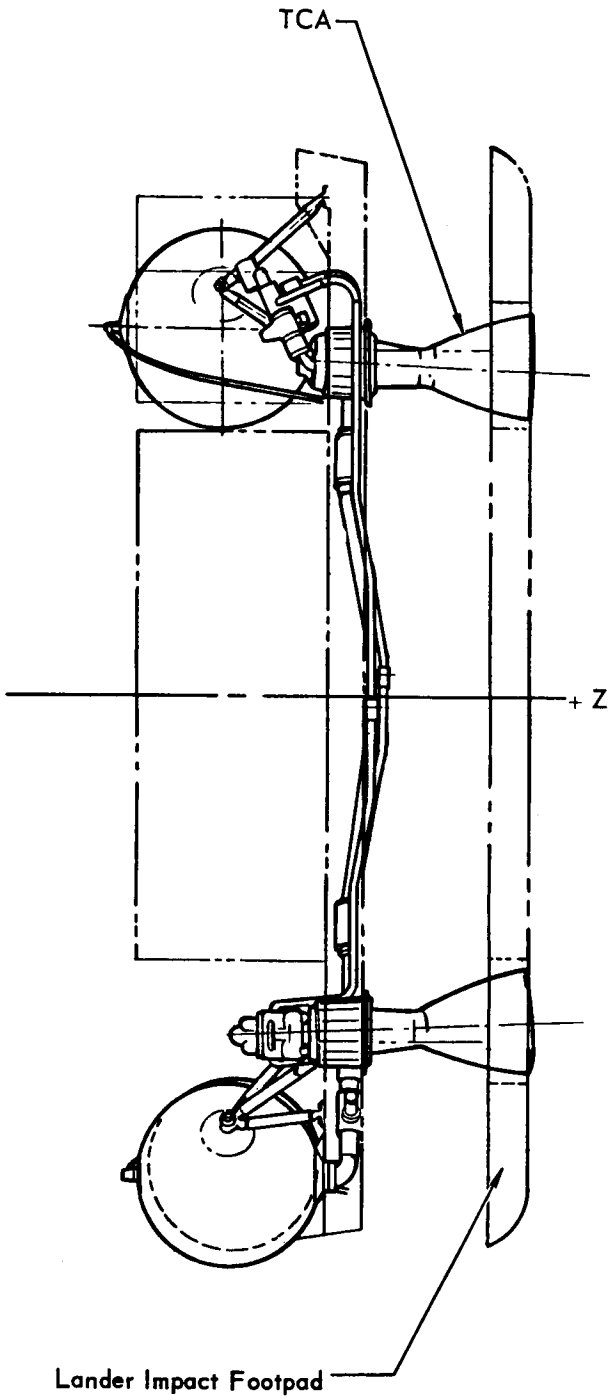

16-9-2

and propellant tank inlet pressurizes the propellant manifolds. During parachute descent, a signal from the radar altimeter, at 5000 ft. altitude, initiates hypergolic engine ignition. Parachute release is conditional upon satisfactory TPS operation. Engine operation is signalled by the opening, within one-half second, of fusible wire links in the combustion chamber.

The engine servoactuators, controlling the propellant throttling valves, respond to radar and gyro signals to provide variable thrust for deceleration from a descent rate of 283 ft/sec maximum at ignition to 5 $\pm$ 1 ft/sec at 10 ft. above the surface of Mars.

Upon TPS shutdown, isolation valves are closed, sealing the remaining pressurant and propellant in their storage systems, thereby limiting engine thrust tail-off and propellant dribble. The Lander will settle the remaining 10 feet to the surface.

16.5 PERFORMANCE OBJECTIVES - The TPS performance objectives are:

- o A delivered total impulse of 65,000 lb. sec.
- o A maximum total thrust of 6600 lb. from four engines
- o A throttling range of 1650 to 165 lb for each engine
- o A specific impulse at maximum thrust of 291 sec.
- o Engine operating life capability of 70 seconds
- o Response to start and shutdown of 200 msec maximum
- o Full range throttling response of 150 msec maximum

Performance characteristics of the preferred subsystem are presented in Figure 16-5.

16.6 INTERFACE DEFINITIONS - The TPS shares interfaces with other subsystems as indicated on Figure 16-4.

16.7 RELIABILITY AND SAFETY

16.7.1 Reliability Considerations

16.7.1.2 Reliability Estimate - A non-redundant subsystem was used as a starting point for reliability estimation. The reliability logic diagram used in the analysis is presented in Figure 16-7. The reliability estimate is presented in Figure 16-8, which shows a probability of success:

$$P_s = .97379$$

This was established using the component failure rates presented in Part B, Section 5, Figure 5.13.4.5-1, and the failure rate modifying factors presented in Part G, Section 3, Figure 3.1.1-1.

TERMINAL PROPULSION SUBSYSTEM
RELIABILITY LOGIC DIAGRAM

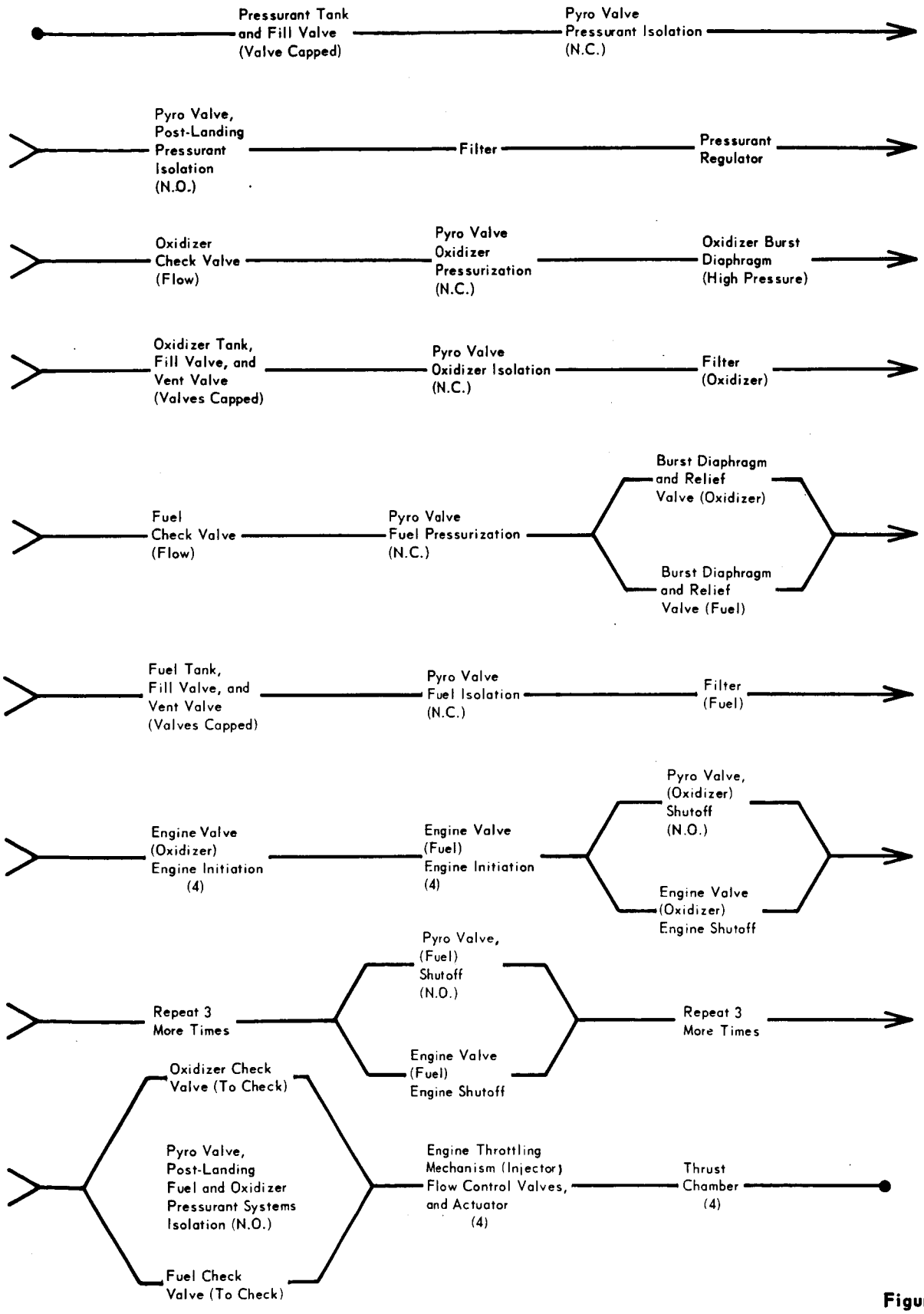

Figure 16–7

RELIABILITY ESTIMATE
TERMINAL PROPULSION SUBSYSTEM

COMPONENT	DUTY CYCLE t_m (OR CY)	FAILURE RATE $\lambda \times 10^6$	$\lambda t_m \times 10^6$ $(-LnR \times 10^6)$
Tank, Pressurant	5566 hr	.08/hr	445
Pyro Valve, Pressurant NC (3)	1 cy	250/cy ea	750
Pyro Valve, Pressurant NO (2)	Negligible – backed up by check valves		
Regulator, Pressurant	87 hr	16/hr	1,392
Filter, Pressurant	1 cy	25.3/cy	26
Check Valve, (Fail Closed) (2)	50 cy	1/cy ea	100
Burst Diaphragm & Relief Valve	Redundant for Leakage		<1
Burst Diaphragm	1 cy	10/cy	10
Tank, Propellant (2)	2 cy	53.5/cy ea	214
Pyro Valve, Propellant Isolation NC (2)	1 cy	250/cy ea	500
Filter, Propellant (2)	1 cy	52/cy ea	104
Pyro Valve, Propellant Shutoff NO (8)	Negligible – redundant with engine valves for shutoff		
Engine Valve (8)	1 cy	127/cy ea	1,016
Throttling Mechanism (4)	50 sec	100/sec ea	20,000
Thrust Chamber (4)	50 sec	10/sec ea	2,000
Subsystem Reliability = $e^{-\Sigma\lambda t_m} = 9{,}738$			$\Sigma = 26{,}558$

Figure 16–8

16.7.1.3 Redundancy Considerations - A reliability versus weight study was conducted to evaluate the effect of redundant components by comparing the reliability improvement with the added weight. The greatest increase in reliability for the least increase in weight was the determining factor for establishing the optimum order of component redundancy. Redundancies considered in the order of priority are:

- Incorporate a redundant cartridge in each of the two normally closed tank pressurization pyro valves and in the normally closed pressurant isolation pyro valve.
- Incorporate a series redundant pressure regulator.
- Incorporate a redundant cartridge in each of the two normally closed propellant isolation pyro valves.
- Incorporate redundant check valves in the fuel and oxidizer tank pressurization systems.
- Incorporate redundant normally closed pyro valves (changes No. 1 and 3 provide a much greater increase in reliability per unit weight).
- Incorporate redundant engine valves.

16.7.1.4 Failure Mode, Effect and Criticality Analysis - A failure mode, effect and criticality analysis was performed on the selected system design to delineate the effects on mission success. The analysis is presented in Figure 16-9.

16.7.2 Safety - Safety is provided by imposing appropriate proof and burst pressure safety factors on all equipment and by verification by test that all components possess structural margins for dynamic loads over actual flight load levels. Provision is made in the propellant tankage for relief of spontaneously generated, unexpected, overpressure. In the event that the propellant tranks must relieve, the propellants are vented through the sterilization canister wall into an OSE disposal system. Pressure transducers in the pressurant and propellant storage sections of the subsystem provide continuous monitoring capability to permit assessment of subsystem condition at any time.

16.8 TEST REQUIREMENTS - Pre-flight Subsystem tests are required in which each component is functionally checked and/or calibrated. Exceptions to this rule will be the pyrotechnic actuated valves and pressure relief burst discs, for which a reliability value will be established during subsystem development. Internal leakage rates for all applicable components and total system external leakage will be measured. The OSE access ports indicated in Figure 16-4 are used for these tests. The subsystem will not be fired prior to use during the mission.

FAILURE MODE, EFFECT AND CRITICALITY ANALYSIS
TERMINAL PROPULSION SUBSYSTEM

COMPONENT OR FUNCTION	FAILURE MODE	FAILURE EFFECT	FAILURE CATEGORY: LANDING	FAILURE CATEGORY: ENTRY SCIENCE	FAILURE CATEGORY: LANDED SCIENCE	FAILURE CATEGORY: ENG. DATA	REMARKS
1. Pressurant Tank and Fill Valve (Valve Capped)	Leakage	Loss of all or part of pressurant	1/3	1/2	1/3	1/2	Criticality depends upon leakage rate. Design and fabrication techniques must minimize probability of this failure mode.
2. Pyro Valve Pressurant Isolation (N.C.)	Cartridge fails to fire or gives low order output, or device jams in closed position.	Loss (unavailability) of source pressurant. Fuel and oxidizer tanks are not pressurized.	3	2	3	2	Pyro valves have shown high reliability incorporation of dual cartridges would provide minimum redundancy.
3. Pyro Valve, Post-Landing Pressurant Isolation (N.O.)	Cartridge fails to fire or gives low order output, or device jams in open position.	No effect if pressurant regulator does not leak through the seat. If regulator leaks, increase in fuel tank pressure would increase possibility of fuel leakage and/or release of fuel vapors through the pres-pressure relief system.	1	1	1/2	1/2	Criticality depends upon leakage rate. This is a secondary failure to pressure regulator failure.
4. Filter, Pressurant	Filter clogged.	Restricted flow (or no flow) of pressurant.	1/3	1/2	1/3	1/2	This is a secondary failure to pressurant contamination and is considered remote. Criticality depends upon degree of closure.
5. Regulator, Pressurant	Fails open	Partial loss of pressurant through pressure relief system. Possible premature depletion of pressurant.	1/3	1/2	1/3	1/2	Criticality depends upon time that failure occurs and amount of pressurant lost.
	Fails closed	Loss (unavailability) of source pressurant. Fuel and oxidizer tanks are not pressurized to required level.	2/3	1/2	2/3	1/2	Remote failure mode. Regulator design is normally open. Criticality depends upon time that failure occurs.
6. Pyro Valve, Post-Landing, Fuel & Oxidize Pressurant Systems Isolation (N.O.)	Cartridge fails to fire or gives low order output, or device jams in open position.	None	1	1	1	1	Fuel and oxidizer pressurant system check valves isolate propellants.
7. Check Valve, Fuel or Oxidizer	Fails closed	Fuel and oxidizer tanks are not pressurized.	3	2	3	2	Remote failure mode incorporation of dual check valves would provide minimum redundancy.
	Fails open	Possible mixing of fuel and oxidizer vapors in pressurant lines.	1/3	1/2	1/3	1/2	Remote failure mode since pressurant flow will prevent mixing of propellant vapors during operation. The fuel and oxidizer pressurant system isolation pyro valve will isolate propellants after landing
8. Pyro Valve, Fuel	Cartridge fails to fire	Fuel and oxidizer tanks are	3	2	3	2	Pyro valves have shown high

Figure 16-9

or Oxidizer Pressurization (N.C.)	or gives low order output, or device jams in closed position.	not pressurized.					reliability. Incorporation of dual cartridges would provide minimum redundancy.
9. Burst Diaphragm, Fuel or Oxidizer (Low Pressure)	Fails to rupture at design relief pressure.	No effect in flight. Either fuel or oxidizer burst diaphragm will relieve overpressure due to regulator failure.	1	1	1	1	Very remote failure mode. This is a secondary failure following a pressure regulator failure.
	Ruptures before design relief pressure is attained.	None	1	1	1	1	Relief valve in series main tanks desired pressure.
10. Burst Diaphragm, Oxidizer (High Pressure) (Used for Protection of Oxidizer Tank During Sterilization)	Leakage during flight.	Loss of all or part of pressurant and/or oxidizer.	1/3	1/2	1/3	1/2	Remote failure mode. Criticality depends upon leakage rate.
	Ruptures before design relief pressure is attained.	Loss of pressurant and/or oxidizer.	3	2	3	2	Remote failure mode. Burst diaphragm will be exposed to pressures during sterilation that are substatially higher than flight operating pressures.
11. Relief Valve, Fuel or Oxidizer	Fails open (Leakage)	None	1	1	1	1	Secondary failure following pressure regulator failure and rupture of burst diaphram.
	Fails closed	No effect in flight	1	1	1	1	Either relief valve – burst diaphragm unit will prevent catastrophic overpressure by failed open pressure regulator.
12. Fuel Tank, Fill Valve and Vent Valve (Valves Capped)	Leakage	Loss of all or part of fuel plus possibility of fuel attacking other materials and components inside the sterilization canister during the long interplanetary cruise phase.	2/3	1/2	2/3	1/2	Design & fabrication techniques must minimize the probability of this failure mode to the point of elimination.
13. Oxidizer Tank, Fill Valve, and Vent Valve (Valves Capped)	Leakage	Loss of all or part of oxidizer plus possibility of oxidizer attacking other materials and components inside the sterilization canister during long interplanetary cruise.	2/3	1/2	2/3	1/2	Design & fabrication techniques must minimize the probability of this failure mode occurring to the point of elimination.
14. Pyro Valve, Fuel Isolation (N.C.)	Cartridge fails to fire or gives low order output or device jams in closed position.	Loss (unavailability) of engine fuel supply.	3	2	3	2	Pyro valves have shown high reliability incorporation of dual cartridges would provide minimum redundancy.
15. Pyro Valve, Oxidizer Isolation (N.C.)	Cartridge fails to fire or gives low order output, or device jams	Loss (unavailability) of engine oxidizer supply.	3	2	3	2	Pyro valves have shown high reliability. Incorporation of dual cartridges would provide mini-

	in closed position.						mum redundancy.
16. Filter, Fuel or Oxidizer	Closed	Restricted flow (or no flow) of fuel or oxidizer.	1/3	1/2	1/3	1/2	This is a secondary failure to propellant contamination and is considered unlikely. Criticality depends upon the degree of clogging.
17. Pyro Valves, Fuel or Oxidizer Shutoff (4 N.O.)	Cartridge fails to fire or gives low order output, or device jams in open position.	None	1	1	1	1	Series redundant engine valves.
18. Engine Valves, Fuel or Oxidizer (4 ea.)	Fails closed at system activation or during operation.	Loss of fuel or oxidizer flow to engines.	3	2	3	2	Minimum redundancy can be provided by incorporating parallel redundant engine valves.
	Fails open or leaks at system shutoff.	None	1	1	1	1	Series redundant fuel or oxidizer shutoff pryo valves.
19. Throttling Mechanism (Injector, Flow Control Valves, and Actuator)	Fails in deep throttle position.	Capsule will impact at high velocity and random attitude.	3	2	3	2	Minimum redundancy can be provided by incorporating redundant drive motors in actuator.
	Fails in full thrust position.	Capsule will lose attitude control and will impact at excessive velocity and random attitude. Propellant will be used at an excessive rate.	3	2	3	2	
20. Thrust Chamber	Burn through or rupture.	Capsule will lose attitude control and will impact at random attitude and excessive velocity.	3	2	3	2	Failure mode unlikely for short voyager burn times.

FAILURE CATEGORY DEFINITION

1. No Effect on Mission
2. Degrading Effect on Mission Objective
3. Possible Catastrophic Effect on Mission Objective

In-flight tests will be limited to functional checks of TCA valves and periodic analysis of pressurant and propellant tank pressure and temperature transducer readings. Proper operation of the subsystem will be verified before parachute release by analysis of telemetry of guidance and control commands and resulting vehicle responses.

16.9 DEVELOPMENT REQUIREMENTS - In addition to the normal subsystem development effort, special emphasis will be placed on the critical areas listed.

16.9.1 Sterilization - All components will be developed to survive and function following dry heat sterilization. The effects of heat sterilization on N_2O_4 and the decomposition characteristics of monomethylhydrazine in flight-tankage systems will be thoroughly investigated.

16.9.2 Decontamination - The effects of ethylene oxide decontamination on all components of the TPS will be analyzed and evaluated.

16.9.3 Storage - The effects of environment controlled storage, simulating actual predicted conditions will provide increased confidence in the component materials of the TPS preferred design.

16.9.4 Engine Development - An engine performing to the required thrust level and throttling range for the duration of the 70 second duty cycle is within current state-of-the-art capability, however, Phase C effort is needed to develop the design and fabrication techniques for the VOYAGER engine requirements.

SECTION 17

PACKAGING AND CABLING

17.1 EQUIPMENT IDENTIFICATION - This section defines the preferred techniques of assembling components and subassemblies into assemblies, and interconnecting the assemblies to provide subsystem functions compatible with mission requirements and constraints.

17.2 DESIGN REQUIREMENTS AND CONSTRAINTS - In addition to the requirements noted in VOYAGER Capsule Systems Constraints and Requirements Document SE003BB002-2A21 dated 12 June 1967, McDonnell has selected circular connectors for harness connections and established minimum wire gauge as 24 AWG. Additional details are defined in design guide manuals and the electromagnetic control plan. McDonnell Process Specifications in effect for fabrication of electrical wire bundles are shown in Figure 17-1.

17.3 PHYSICAL CHARACTERISTICS - The physical characteristics of the electronic equipment installation and cabling arrangement are indicated in Figure 17-2. Some equipment is located in areas dictated by functional requirements. Thus, the Radar Altimeter and the Landing Radar Antenna are mounted on the impact foot pad because of viewing requirements, the UHF Radio is mounted near its antenna, and the Guidance and Control Subsystem is located near the center of gravity to minimize angular rate effects on the Inertial Measurement Unit. The remaining equipment is grouped into one of four modularized assemblies, each of which are located in an outer sector of the Capsule Bus structure. The assemblies contain interfacing subassemblies within an enclosure which provides thermal insulation for the entire assembly. These assemblies have all flight and OSE connectors located on the upper surface for accessibility and inspection.

Trunk wire harnesses are installed in a circular path along the lower surfaces of the primary structure radial beams. Three independent wire bundles, one each for digital signals, analog signals, and power and control, are routed with four inch spacing to minimize electromagnetic interference between wires carrying different classes or levels of signals. Wire bundles are routed over the impact attenuator support ring for direct connection to the equipment mounted in the modularized assemblies. The use of direct connections from the trunk reduces the interconnecting hardware weight, volume and interfaces. Pyrotechnic firing circuit wires are routed from the control assemblies to the ignitors via a trunk

WIRE BUNDLE PROCESS SPECIFICATIONS

SPECIFICATION NO.	TITLE – DESCRIPTION
	GENERAL WIRE BUNDLE PROCESSES
PS 17400	Wiring, Electrical; Installation of
PS 17410	Wiring, Electrical, Spacecraft and Missile; Fabrication of
PS 17110	Wiring, Electrical; Identification of
PS 17111	Stripping of Electrical Wires
PS 17113	Lacing and Tying of Wiring
PS 17120	Bonding and Grounding; Electrical
PS 17153	Termination and Grounding of Shielding on Wire and Cable
PS 17172	Waterproofing of Electrical Connectors for Continuous Operation Temperatures up to 500°F
PS 17410.1	Assembly of Electrical Cable Terminals and Splices
PS 17410.2	Connectors, Electrical, Assembly of
PS 17410.3	Assembly of Radio Frequency Cable Assemblies
PS 17410.4	Connectors, Electrical, Crimp Type; Assembly of
PS 17420	Wiring, Electrical; Shielding of
PS 14070	Storage, Size Selection and Application of Heat Shrinkage Material
PS 20003	Inspection, Storage and Identification of Rubber Based Adhesives, Potting, and Sealing Materials
PS 22800	Soft Soldering of Electrical and Electronic Connectors
	COMPACT WIRE BUNDLE PROCESSES
PS 17115	Wiring, Electrical, Compact; Fabrication of
PS 17115.1	Wiring, Electrical, Compact; Twisting of Wires for
PS 17115.2	Application of Protective Jacket to Compact Electrical Wire Bundles
PS 17115.3	Wiring, Electrical, Compact; Application of Impregnating Compound
PS 17116.1	Coating of High Temperature Compact Electrical Wire Bundles
PS 17118	Wiring, Electrical, Shielded Compact; Fabrication of
PS 17118.1	Wiring, Electrical, Shielded Compact; Braiding of Shielding

Figure 17–1

CAPSULE BUS EQUIPMENT AND CABLING INSTALLATION

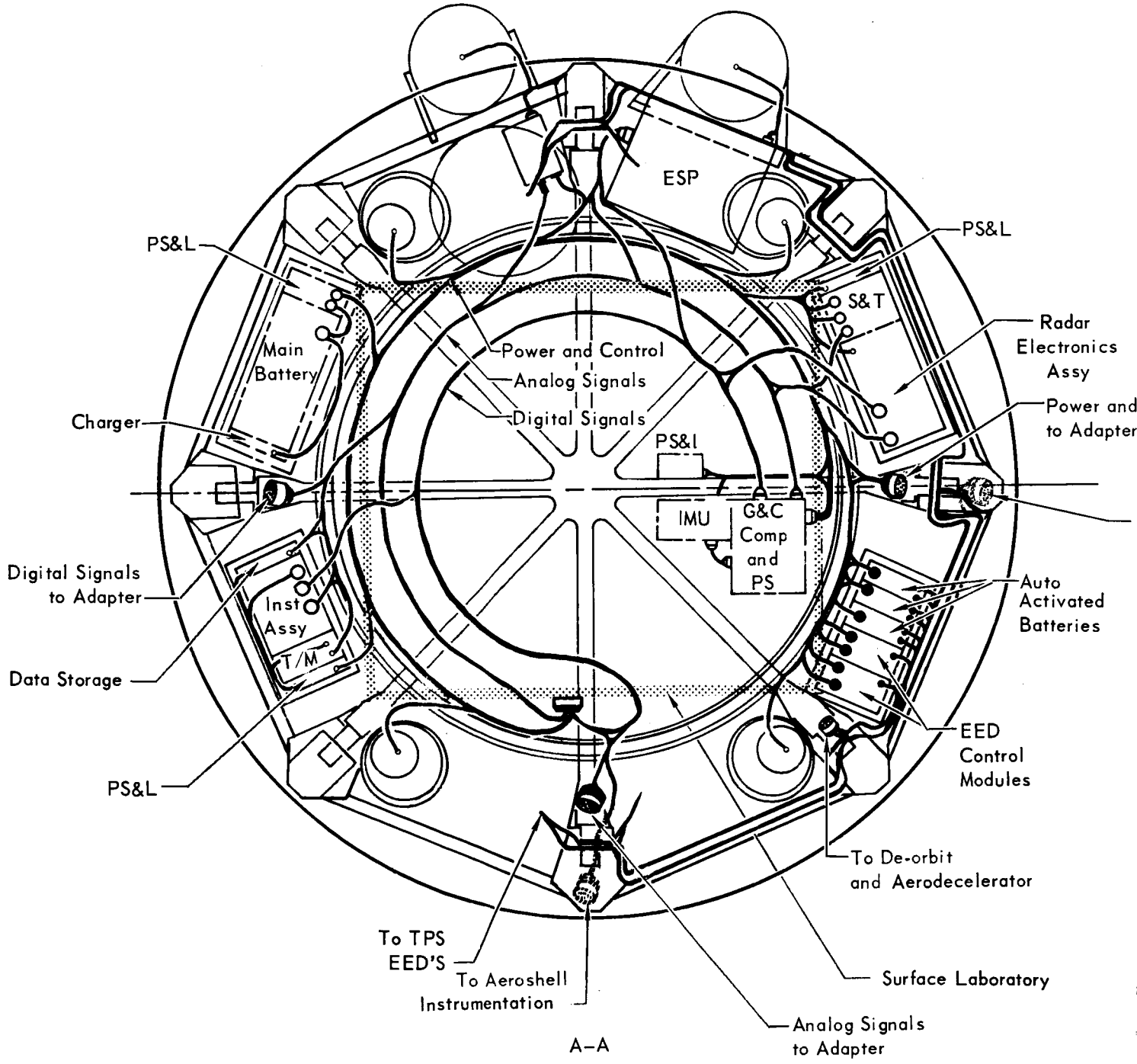

Figure 17–2

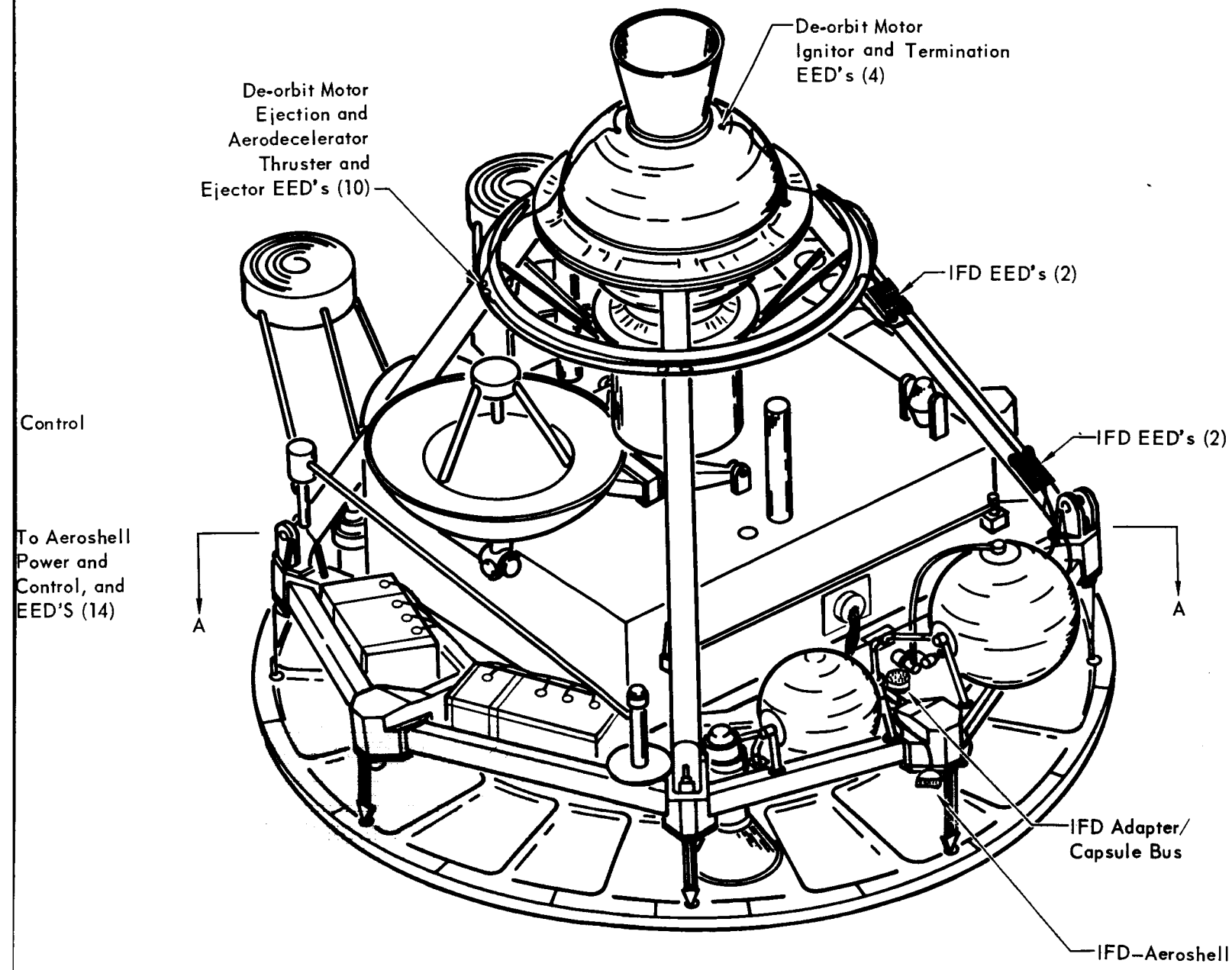
De-orbit Motor
Ignitor and Termination
EED's (4)
De-orbit Motor
Ejection and
Aerodecelerator
Thruster and
Ejector EED's (10)
IFD EED's (2)
Control
IFD EED's (2)
To Aeroshell
Power and
Control, and
EED'S (14)
A
A
IFD Adapter/
Capsule Bus
IFD–Aeroshell

harness installed on the top surface of the intercostals between the end fittings of the primary structure radial beams.

Firing circuits for de-orbit motor ignition and termination are routed from the end fittings along the de-orbit motor support structure to the ignitors. Routing to pyrotechnically actuated propulsion valves is also provided from this trunk. This location for pyrotechnic firing circuits trunk wire bundles provides the necessary isolation and separation from wire bundles of other signal classifications.

17.4 OPERATIONAL DESCRIPTION - All equipment interconnections within the Capsule Bus are made using MIL-C-38999 connectors. These miniature circular plugs are aligned and keyed on three dimensional harness boards during fabrication so that coupling to the mating equipment in the Capsule Bus requires minimum rotation of plug prior to index keyway mating. Final coupling and locking is completed by one quarter turn of the plug coupling ring. OSE cables will also use MIL-C-38999 connectors.

17.5 RELIABILITY AND SAFETY CONSIDERATIONS - Pyrotechnic initiator firing circuits are designed to provide complete checkout and safety of pyrotechnic devices after installation into the sterilization canister. All initiators and circuits are considered Category A devices as defined by Air Force Eastern Test Range Manual AFETRM-127-1, dated 1 November 1966. Potential safety hazards due to high voltages associated with radio frequency equipment are minimized by standard RF handling precautions.

17.6 DEVELOPMENT REQUIREMENTS - Components and materials required to implement high reliability equipment packaging and cabling will be selected from MAC Report E936, "VOYAGER Candidate Materials". Where components and/or materials not listed in MAC Report E936 are required, special testing is required to determine compatibility with ethylene oxide (ETO) and heat sterilization.

Testing of a connector type, wire types, and potting compounds has been initiated during phase B to determine the effect of ETO and heat sterilization and 200 days vacuum storage. Two identical assemblies have been fabricated, one to be subjected to the test environments and one for control. The latter will be stored at room temperature. In addition to the potting compatibility test results to be derived from the connector assembly testing, a potting slug containing only wires is also being tested to evaluate a third compound. The test articles are configured as shown in Figure 17-3.

WIRE ASSEMBLY TEST CONFIGURATION – ETO, HEAT STERILIZATION AND VACUUM STORAGE

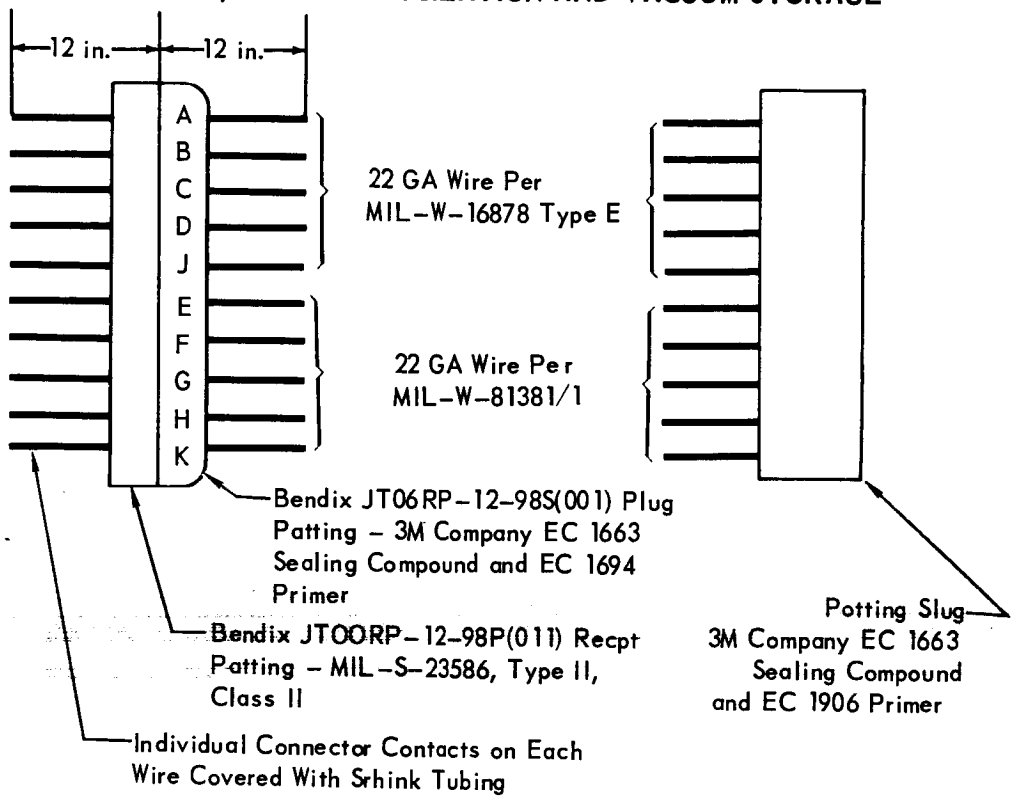

Figure 17-3

One particular aspect of electronic packaging is expected to warrant considerable development effort with both basic materials and equipment design. Since the Mars atmosphere is predicted to fall within the critical breakdown region, and the VOYAGER equipment will have to undergo long term space vacuum exposure, voltage breakdown may be induced. Techniques to restrain breakdown, such as fluid (liquid and gas) filled devices, do not appear to be suitable. Insulating, encapsulating and embedding materials which have been thoroughly cured and outgassed appear to be likely candidates. The standard urethane foams do not appear to be satisfactory. Epoxy or silicone materials, in both the unfilled and syntatic forms, offer the most promise.