X-554-66-283

PROJECT
GEMINI

# GODDARD REAL TIME PROGRAMMING SYSTEM

## VOLUME II
## MONITOR AND I/O PROGRAMS

LIBRARY COPY
CASE FILE
JAN 24 1967
COPY
MANNED SPACECRAFT CENTER
HOUSTON, TEXAS

MARCH 1965

NASA

GODDARD SPACE FLIGHT CENTER
GREENBELT, MD.

PRICE $ _____

TI PRICE(S) $ _____

Hard copy (HC) 3.00

Microfiche (MF) _____

FACILITY FORM 602

N67-40276 (ACCESSION NUMBER)

(THRU)

104 (PAGES)

0 (CODE)

TMX-60548 (NASA CR OR TMX OR AD NUMBER)

08 (CATEGORY)

3 July 65

NATIONAL AERONAUTICS AND SPACE ADMINISTRATION
GODDARD SPACE FLIGHT CENTER
GREENBELT, MARYLAND

FOR OFFICIAL USE ONLY

THIS SERIES OF VOLUMES DESCRIBES IN DETAIL THE GODDARD REALTIME PROGRAMMING SYSTEM USED TO SUPPORT THE GEMINI, GT-3 AND GT-4 MANNED MISSIONS.

THE VOLUMES REPRESENT OUR FIRST ATTEMPT AT LARGE SCALE COMPUTERIZED DOCUMENTATION. IT HAS BEEN A LEARNING PROCESS AND WE FEEL THE TECHNIQUE HAS GREAT POSSIBILITIES. ALTHOUGH THE ANTICIPATED ECONOMIES WERE NOT REALIZED ON THIS FIRST ATTEMPT, WE FEEL WITH THE EXPERIENCE GAINED, FUTURE AUTOMATED DOCUMENTATION TASKS CAN BE ACCOMPLISHED MORE ECONOMICALLY THAN BY USING CONVENTIONAL TECHNIQUES.

FURTHER WE FEEL THAT COMPUTERIZED DOCUMENTATION PERMITS REALTIME DOCUMENTATION OF THE COMPUTER PROGRAMMING EFFORT INCLUDING FLOW CHARTING. THIS WAS DEMONSTRATED IN OUR LATEST AIMP EFFORT, AND IS A SOLUTION TO THE PROBLEM OF KEEPING DOCUMENTATION CURRENT WITH COMPUTER PROGRAM DEVELOPMENT.

PREPARED BY IBM FOR

DATA OPERATIONS BRANCH
MANNED FLIGHT OPERATIONS DIVISION
TRACKING AND DATA SYSTEMS DIRECTORATE
NASA-GODDARD

RELEASED BY J. J. Donegan
---
J. J. DONEGAN, HEAD
DATA OPERATIONS BRANCH

X-554-66-283

Project
GEMINI

# GODDARD
# REAL TIME PROGRAMMING
# SYSTEM

## Volume II
## Monitor and I/O Programs

prepared for
National Aeronautics and Space Administration
Contract No. NAS 5-9762

March 1965

by
Federal Systems Division
International Business Machines Corporation

GODDARD REAL TIME PROGRAMMING SYSTEM

INDEX OF VOLUMES


I INTRODUCTION

II MONITOR AND I/O PROGRAMS

III REAL TIME PROCESSORS

IV NON-REAL TIME PROGRAMS

# FOREWORD

PROJECT GEMINI WAS ESTABLISHED BY THE NATIONAL AERONAUTICS AND SPACE ADMINISTRATION (NASA) AS ITS SECOND MAN-IN-SPACE PROGRAM TO CARRY FORWARD THE MANNED SPACE MISSION STARTED BY PROJECT MERCURY AND TO PROVIDE THE KNOW-HOW NEEDED TO ENSURE A SUCCESSFUL MANNED LUNAR LANDING IN PROJECT APOLLO. IN PROJECT GEMINI, NASA WILL CONDUCT A SERIES OF SPACE FLIGHTS THAT WILL MEASURE THE PHYSIOLOGICAL ASPECTS OF EXPOSING MEN TO SPACE ENVIRONMENT FOR PROLONGED PERIODS, PROVIDE EXPERIENCE IN SPACE-CRAFT CONTROL, AND PERFECT RENDEZVOUS AND DOCKING TECHNIQUES WITH OTHER SPACE VEHICLES IN FLIGHT.

THE GODDARD SPACE FLIGHT CENTER (GSFC), LOCATED AT GREENBELT, MARYLAND, IS RESPONSIBLE FOR PROVIDING PRIME (REAL TIME) COMPUTING SUPPORT FOR THE GEMINI SPACE FLIGHTS THROUGH THE GT-3 (GEMINI TITAN-3) MISSION, AND TO PROVIDE BACKUP SUPPORT FOR THE MANNED SPACECRAFT CENTER AT HOUSTON, TEXAS FOR LATER MISSIONS.

THIS VOLUME IS ONE OF A SERIES OF FOUR MANUALS THAT DESCRIBE THE GSFC REAL TIME COMPUTING SYSTEMS AS DEVELOPED FOR MISSION SUPPORT THROUGH THE GT-3 MISSION. THE FOUR VOLUMES IN THIS SERIES ARE -

VOLUME I, INTRODUCTION
VOLUME II, MONITOR AND I/O PROGRAMS
VOLUME III, REAL TIME PROCESSORS
VOLUME IV, NON-REAL TIME PROGRAMS

THE PAGE IMPRESSIONS USED FOR PHOTO-OFFSET PRINTING OF THE TEXT AND FLOWCHARTS OF THIS SERIES OF MANUALS WERE PRODUCED BY AN IBM 1401 COMPUTER, WHICH WAS ALSO USED TO CONTROL THE PAGE AND LINE FORMAT. DUE TO CERTAIN LIMITATIONS IN THIS METHOD OF PRODUCTION, SOME FLOWCHARTS, TABLES AND ILLUSTRATIONS WERE PREPARED IN WHOLE OR IN PART, USING CONVENTIONAL TYPEWRITER/LINE ART METHODS.

CONTENTS


| SEC | TITLE | PAGE |
|---|---|---|
| 1. | BASIC MONITOR CONTROL PROGRAMS | 1 |
| 2. | MOPRIO - MAIN CONTROLLER PRIORITY PROGRAM | 3 |
| 3. | MORTCC - REAL-TIME CHANNEL CONTROLLER PROGRAM | 9 |
| 4. | SAVE - SAVE MACRO | 15 |
| 5. | MOSAVE - MAIN CONTROLLER SAVE PROGRAM | 19 |
| 6. | MORTRN - MAIN CONTROLLER RETURN PROGRAM | 24 |
| 7. | MODIAG - MAIN CONTROLLER DIAGNOSTIC PROGRAM (MODIAG) | 27 |
| 8. | QUEUE - QUEUE MACRO | 30 |
| 9. | MOQUEUE - MAIN CONTROLLER QUEUE PROGRAM (MOQUEUE) | 33 |
| 10. | UNQUE - UNQUEUE MACRO | 38 |
| 11. | MOUNQU - MAIN CONTROLLER UNQUEUE PROGRAM (MOUNQU) | 41 |
| 12. | TRNON - TURN ON MACRO | 46 |
| 13. | TRNOF - TURN OFF MACRO | 49 |
| 14. | QENBA/MYENBA - ENABLE MACRO/ENABLE PROGRAM | 52 |
| 15. | QENBZ/MYENBO - DISABLE MACRO/DISABLE PROGRAM | 55 |
| 16. | QPSLF/MYPSLF - PRESENT SENSE LINE MACRO/ PRESENT SENSE LINE PROGRAM | 57 |
| 17. | QPSLE/MYPSLE - PRESENT SENSE LINE MACRO/ PRESENT SENSE LINE PROGRAM | 60 |
| 18. | REFR - REFERENCE MACRO | 63 |
| 19. | QTSX - REAL TIME SIMULATED TRAP MACRO | 66 |
| 20. | MTQTSX - SIMULATED TRAP PROCESSOR | 69 |
| 21. | MOPANL - NON-REAL TIME SAVE PROGRAM | 73 |
| 22. | MOENDS - MAIN ENDING PROGRAM | 76 |

CONTENTS


| SEC | TITLE | PAGE |
|---|---|---|
| 23. | DATA COMMUNICATIONS CHANNEL AND PROGRAM CONTROL CONSOLE INPUT CONTROL | 82 |
| 24. | HIGH-SPEED INPUT | 83 |
| 25. | MTHSGB - MONITOR B-GE HIGH-SPEED INPUT TRAP PROCESSOR | 93 |
| 26. | MPHSGB - MONITOR PREFIX TO IOHSGB | 96 |
| 27. | IOHSGB - B-GE HIGH SPEED INPUT PROGRAM | 99 |
| 28. | MFFSGB - TELEMETRY PROCESSING SUFFIX TO IOHSGB | 113 |
| 29. | MFHSGB - VECTOR PROCESSING SUFFIX TO IOHSGB | 116 |
| 30. | MTHS09 - MONITOR IP 3600 HIGH-SPEED TRAP PROCESSOR | 122 |
| 31. | MPHS09 - MONITOR PREFIX TO IOHS09 | 125 |
| 32. | IOHS09 - IP-3600 HIGH-SPEED INPUT PROGRAM | 128 |
| 33. | MFFS09 - TELEMETRY PROCESSING SUFFIX TO IOHS09 | 142 |
| 34. | MFHS09 - VECTOR PROCESSING SUFFIX TO IOHS09 | 145 |
| 35. | MTHSB5 - MONITOR BERMUDA HIGH-SPEED INPUT TRAP PROCESSOR FOR SUBCHANNEL 5 | 148 |
| 36. | MTHSB6 - MONITOR BERMUDA HIGH-SPEED INPUT TRAP PROCESSOR FOR SUBCHANNEL 6 | 151 |
| 37. | MPHSBD - MONITOR PREFIX TO IOHSBD | 156 |
| 38. | IOHSBD - BERMUDA HIGH-SPEED INPUT | 159 |
| 39. | R7MOV - TABLE MOVING SUBROUTINE OF IOHSBD | 170 |
| 40. | RFRAC - REFRACTION CORRECTION SUBROUTINE FOR BERMUDA HIGH-SPEED INPUT PROGRAM, IOHSBD | 176 |
| 41. | MFHSBD - MONITOR SUFFIX TO IOHSBD | 180 |
| 42. | LOW-SPEED INPUT | 183 |

CONTENTS


| SEC | TITLE | PAGE |
|---|---|---|
| 43. | MTTTIN - MONITOR TTY INPUT TRAP PROCESSOR | 189 |
| 44. | MPTTIN - MONITOR PREFIX TO IOTTIN | 195 |
| 45. | IOTTIN - LOW SPEED TTY INPUT PROGRAM | 198 |
| 46. | MFTTIN - MONITOR SUFFIX TO IOTTIN | 217 |
| 47. | MSDEOV - MONITOR OVERLAY SORT SUBROUTINE | 226 |
| 48. | IOMANI - MANUAL INSERTION PROGRAM | 230 |
| 49. | MFMANI - MONITOR SUFFIX TO IOMANI | 268 |
| 50. | MFMN01 - MONITOR LONGITUDE AND LANDING REVOLUTION NUMBER SUFFIX TO IOMANI | 271 |
| 51. | MFMN02 - MONITOR ABORT/ORBIT SWITCH SUFFIX TO IOMANI | 274 |
| 52. | MFMN03 - IOMANI SUFFIX FOR S/C WEIGHTS | 277 |
| 53. | MFMN04 - MONITOR TIME OF LIFTOFF SUFFIX TO IOMANI | 281 |
| 54. | MFMN05 - MONITOR R AND V SUFFIX TO IOMANI | 284 |
| 55. | MFMN06 - MONITOR CAPSULE CLOCK SETTING TO IOMANI | 288 |
| 56. | MFMN07 - MONITOR UPDATE PRIMARY AREA SUFFIX TO IOMANI | 292 |
| 57. | MFMN08 - MONITOR RETROFIRE SUFFIX TO IOMANI (NOMINAL RETROFIRE AND NON-NOMINAL RETROFIRE) | 296 |
| 58. | MFMN10 - IOMANI SUFFIX FOR ORBIT LIFETIME PARAMETERS | 301 |
| 59. | MFMN11 - IOMANI SUFFIX FOR D.C. PARAMETERS | 305 |
| 60. | MFMN12 - IOMANI SUFFIX FOR ORBIT, REENTRY DENSITY FACTOR | 308 |
| 61. | MFMN13 - MONITOR MANUAL TTF SUFFIX TO IOMANI | 311 |

CONTENTS


| SEC | TITLE | PAGE |
|---|---|---|
| 62. | MFMN14 - IOMANI SUFFIX FROM MANEUVER TABLE UPDATES | 314 |
| 63. | MFMN15 - IOMANI SUFFIX FOR CONFIRMATION OF A MANEUVER | 320 |
| 64. | MFMN16 - IOMANI SUFFIX FOR PROPULSION PANEL COMPUTATIONS | 323 |
| 65. | MFMN17 - MONITOR ORBIT NAVIGATION VECTOR SUFFIX TO IOMANI | 326 |
| 66. | MFMN18 - MONITOR RANGE ADAPTER BEACON SUFFIX TO IOMANI | 329 |
| 67. | MFMN19 - MONITOR CHANGE TARGET IN REENTRY SUFFIX TO IOMANI | 332 |
| 68. | MFMN20 - MONITOR SELECT BACKUP GUIDANCE PARAMETERS IN REENTRY | 335 |
| 69. | MFMN21 - MONITOR RENDEZVOUS INPUTS SUFFIX TO IOMANI | 338 |
| 70. | MFMN22 - MONITOR SEQUENCE COUNT SUFFIX TO IOMANI | 341 |
| 71. | MFMN23 - MONITOR ADDRESS DCS MESSAGE SUFFIX TO IOMANI | 344 |
| 72. | MFMN24 - MONITOR DCS TRANSMIT SUFFIX TO IOMANI | 347 |
| 73. | MFMN25 - IOMANI SUFFIX FOR DCS MANEUVER UPDATE | 350 |
| 74. | MFMN26 - IOMANI SUFFIX FOR CONFIRMATION OF A MANEUVER | 356 |
| 75. | MFMN27 - MONITOR BACKUP D.C. SUFFIX TO IOMANI | 359 |

CONTENTS


| SEC | TITLE | PAGE |
|---|---|---|
| 76. | MFMN28 - MONITOR BANK ANGLE UPDATE DURING ORBIT SUFFIX TO IOMANI | 361 |
| 77. | MFMN29 - MONITOR DELTA V TABLE UPDATE SUFFIX TO IOMANI | 364 |
| 78. | MFMANR - MONITOR GENERAL IOMANI SUFFIX EXIT | 367 |
| 79. | TIMING CONTROL | 370 |
| 80. | MTWWVI - MONITOR INITIAL WWV TRAP PROCESSOR | 374 |
| 81. | MTWWWV - MONITOR WWV TRAP PROCESSOR | 378 |
| 82. | MTHFSC - MONITOR HALF-SECOND TRAP PROCESSOR | 381 |
| 83. | MYMINS - MONITOR MINUTE PROCESSOR | 387 |
| 84. | MSTICK - TTY INPUT CHECK SUBROUTINE | 394 |
| 85. | MTERTC - MONITOR REAL-TIME CHANNEL ERROR TRAP PROCESSOR | 397 |
| 86. | TMCPCC - MONITOR PROGRAM CONTROL CONSOLE CHANNEL TRAP PROCESSOR | 400 |
| 87. | MYOPCC - MONITOR PROGRAM CONTROL CONSOLE PROCESSOR | 403 |
| 88. | MYKEYS - MONITOR PROCESSOR TO USE PCC ENTRY KEYS | 406 |
| 89. | KEYTL - TELEMETRY SUBROUTINE TO MYKEYS | 411 |
| 90. | KEYDC - MONITOR SUBROUTINE TO CONTROL INSERTION AND DELETION OF ENTRIES IN THE TMSTMS TABLE | 415 |
| 91. | KEYCF - MONITOR SUBROUTINE TO INDICATE CADFISS USE OF RADAR STATIONS | 420 |
| 92. | KEYDE - MONITOR SUBROUTINE TO BYPASS DIFFERENTIAL CORRECTION FOR A STATION | 424 |

CONTENTS


| SEC | TITLE | PAGE |
|---|---|---|
| 93. | KEYRT - MONITOR SUBROUTINE TO ACCEPT GMT OF RETROFIRE | 427 |
| 94. | OOORRE - PLOTBOARD AND WALL MAP DISPLAYS DURING ORBIT AND REENTRY | 430 |
| 95. | OOAGL/OOTIM - TIME MEASURE TO BCD DEGREES CONVERSION | 443 |
| 96. | OOBCF/OOBCX - BINARY CODED DECIMAL CONVERSION | 446 |
| 97. | OOPAC - PACKING ROUTINE | 450 |
| 98. | OOOSC - SCALING SUBROUTINE | 453 |
| 99. | OOOTI - TIME CONVERSION PROGRAM | 456 |
| 100. | OOMDQ - BCD TO MODIFIED BCD CHARACTERS | 459 |
| 101. | PCUPD - SUBROUTINE TO ADDRESS A DCS MESSAGE | 462 |
| 102. | PCTRN - SUBROUTINE TO TRANSMIT A DCS MESSAGE | 468 |
| 103. | CONTROL DURING PHASE CHANGE AND RESTART | 472 |
| 104. | MYDUMP - MONITOR ROUTINE TO DUMP 'A' CORE ON TAPE AT LAUNCH/ORBIT INTERFACE | 474 |
| 105. | MTDUMP - TRAP PROCESSOR FOR MYDUMP | 477 |
| 106. | MSWECC - MONITOR SUBROUTINE TO WRITE ERROR CORRECTION CODES | 479 |
| 107. | MSRECC - MONITOR SUBROUTINE TO READ ERROR CORRECTION CODES | 485 |
| 108. | MOINIT - MAIN CONTROLLER INITIALIZATION PROGRAM | 491 |
| 109. | MYINIT - MONITOR INITIALIZATION PROCESSOR | 498 |
| 110. | MYSCRD - MONITOR STATION CHARACTERISTICS TAPE PROCESSOR | 505 |

CONTENTS


| SEC | TITLE | PAGE |
|---|---|---|
| 111. | MTENST - MONITOR STATION CHARACTERISTICS TAPE TRAP PROCESSOR | 517 |
| 112. | MYWRRS - MONITOR RESTART TAPE WRITER | 520 |
| 113. | MTWRRS/MTWRS1 - MONITOR RESTART TAPE WRITER TRAP PROCESSOR | 534 |
| 114. | CONTROL DURING ORBIT-TO-REENTRY | 540 |
| 115. | MYREST - MONITOR ORBIT TO REENTRY INTERPHASE PROCESSOR | 545 |
| 116. | MYDCIT - MONITOR EDITING PROCESSOR FOR ORBIT TO REENTRY INTERPHASE | 559 |
| 117. | MYRRRS - MONITOR REENTRY RESTART TAPE PROCESSOR | 565 |
| 118. | MTRRRS - MONITOR REENTRY RESTART TAPE TRAP PROCESSOR | 577 |
| 119. | MYSRST - MONITOR ORBIT RESTART TAPE PROCESSOR | 583 |
| 120. | MTRSTB/MTRSTC - MONITOR ORBIT RESTART TRAP TAPE PROCESSOR | 602 |
| 121. | MTINTV - MONITOR INTERVAL TIMER TRAP PROCESSOR | 607 |
| 122. | DATA COMMUNICATIONS CHANNEL OUTPUT CONTROL | 610 |
| 123. | HIGH-SPEED OUTPUT | 611 |
| 124. | MPLANA - MONITOR PREFIX TO OOLANA | 616 |
| 125. | OOLANA - HIGH SPEED OUTPUT PROGRAM | 619 |
| 126. | MFLANA - MONITOR SUFFIX TO OOLANA | 638 |
| 127. | MPORRE - MONITOR PREFIX TO OOORRE | 641 |
| 128. | MFORRE - MONITOR SUFFIX TO OOORRE | 644 |

CONTENTS


| SEC | TITLE | PAGE |
|---|---|---|
| 129. | MYHSOD - MONITOR HIGH-SPEED OUTPUT TO CAPE KENNEDY PROCESSOR | 647 |
| 130. | MTHSOD - MONITOR TRAP PROCESSOR FOR HIGH-SPEED OUTPUT TO CAPE KENNEDY | 655 |
| 131. | MPGDFP - MONITOR PREFIX TO OOGDFP | 659 |
| 132. | OOGDFP - GODDARD DISPLAYS FORMATTING PROCESSOR | 663 |
| 133. | MFGDFP - MONITOR SUFFIX TO OOGDFP | 673 |
| 134. | MYEMDS - OUTPUT PROCESSOR FOR SUBCHANNEL 1 OF THE MOD II DCC | 675 |
| 135. | MTEMDS - TRAP PROCESSOR FOR SUBCHANNEL 1 OF THE MOD II DCC | 678 |
| 136. | TTY OUTPUT/ACQUISITION DATA | 680 |
| 137. | MYACQD - ACQUISITION DATA MONITOR PROCESSOR | 683 |
| 138. | MYTTOX - SC 10 ACQUISITION DATA OUTPUT PROCESSOR | 691 |
| 139. | MYTTOY - SC11 ACQUISITION OUTPUT PROCESSOR | 697 |
| 140. | MTTTOX - SC10 ACQUISITION DATA TRAP PROCESSOR | 703 |
| 141. | MTTTOY - SC11 ACQUISITION DATA TRAP PROCESSOR | 707 |
| 142. | MYTTXO - SC10 ACQUISITION DATA LOGGING PROCESSOR | 711 |
| 143. | MYTTYO - SC11 ACQUISITION DATA LOGGING PROCESSOR | 714 |
| 144. | MYSENS - MONITOR SENSE OUTPUT PROCESSOR | 717 |
| 145. | MTSENS - MONITOR SENSE OUTPUT TRAP PROCESSOR | 721 |
| 146. | MPLPBD - MONITOR PREFIX TO OOLPBD | 724 |

CONTENTS


| | TITLE | PAGE |
|---|---|---|
| 147. | OOLPBD - SANBORN PLOTTER CONVERSION PROGRAM | 727 |
| 148. | MFLPBD - MONITOR SUFFIX TO OOLPBD | 734 |
| 149. | MYDDCP - MONITOR OUTPUT PROCESSOR FOR OOLPBD | 737 |
| 150. | MTDDCP - MONITOR TRAP PROCESSOR FOR OOLPBD | 741 |
| 151. | THE ON-LINE MESSAGE SYSTEM | 744 |
| 152. | MYMESS - MONITOR ON-LINE MESSAGE PROCESSOR | 748 |
| 153. | MTMSCK - MONITOR MESSAGE CHECK TRAP PROCESSOR | 757 |
| 154. | MYMSCK - MONITOR MESSAGE CHECK PROCESSOR | 763 |
| 155. | MTENPR - MONITOR END-OF-PRINTING TRAP PROCESSOR | 789 |
| 156. | THE LOGGING PROCESS | 794 |
| 157. | MSLOGG - MONITOR LOGGING SUBROUTINE | 801 |
| 158. | MYSTLT - MONITOR LOGGING PROCESSOR | 811 |
| 159. | MTENLG - MONITOR END-OF-LOGGING TRAP PROCESSOR | 815 |
| 160. | MSMOVE - MONITOR SUBROUTINE FOR MOVING DATA BETWEEN CORES | 818 |
| 161. | DISK BUFFERING | 821 |
| 162. | MYDISK - MONITOR DISK BUFFERING PROCESSOR | 822 |
| 163. | MTDISK - TRAP PROCESSOR FOR MYDISK | 833 |
| 164. | MSDISK - MONITOR DISK READ/WRITE SUBROUTINE | 837 |
| 165. | TELEMETRY SUMMARY MESSAGE FLOW | 844 |
| 166. | MYRCAL - CALIBRATION TAPE READER | 851 |
| 167. | MTRCAL - MYRCAL TRAP PROCESSOR | 856 |
| 168. | MYCLUP - PCM CALIBRATION TABLE UPDATE PROGRAM | 858 |
| 169. | MTCLUP - TRAP PROCESSOR FROM MYCLUP | 862 |

CONTENTS


| | TITLE | PAGE |
|---|---|---|
| 170. | MYCALB - PCM CALIBRATION PROGRAM | 864 |
| 171. | MYPCMX - PROCESSOR FOR PCM OUTPUT (SUBCHANNEL 10) | 878 |
| 172. | MTPCMX - TRAP PROCESSOR FOR PCM OUTPUT (DCC SUBCHANNEL 10) | 881 |
| 173. | MSCOMP - PCM OUTPUT SUBROUTINE FOR ON-BOARD COMPUTER DATA | 884 |
| 174. | MYPCMY - PROCESSOR FOR PCM OUTPUT (DCC SUBCHANNEL 11) | 896 |
| 175. | MTPCMY - TRAP PROCESSOR FOR PCM OUTPUT (DCC SUBCHANNEL 11) | 899 |
| 176. | MSOHED - SUBROUTINE FOR PCM OUTPUT PROCESSORS | 902 |
| 177. | MSOPCM - SUBROUTINE FOR PCM OUTPUT PROCESSORS | 909 |
| 178. | MSOEND - SUBROUTINE FOR PCM OUTPUT PROCESSORS | 914 |
| 179. | DIGITAL COMMAND SYSTEM | 917 |
| 180. | MPPDCS - PREFIX TO OOPDCS | 920 |
| 181. | MFPDCS - SUFFIX TO OOPDCS | 924 |
| 182. | OOPDCS - DCS LOAD AND TRANSLATION FORMAT PROGRAM | 927 |
| 183. | MPTDCS - MONITOR PREFIX TO OOTDCS | 950 |
| 184. | MFTDCS - MONITOR SUFFIX TO OOTDCS | 953 |
| 185. | OOTDCS - DCS LOAD AND TRANSLATION TTY CONVERT PROGRAM | 956 |
| 186. | COMP1 - SUBROUTINE OF OOPDCS | 960 |
| 187. | GUCON - SUBROUTINE OF OOPDCS | 962 |

CONTENTS


| TITLE | PAGE |
|---|---|
| 188. LCBCB - SUBROUTINE OF OOPDCS | 964 |
| 189. TCBCB - SUBROUTINE OF OOPDCS | 972 |
| 190. TIPP2 - SUBROUTINE OF OOPDCS | 975 |
| 191. MDIU - MANUAL DATA INSERTION UNIT SUBROUTINE | 977 |
| 192. TIMP1 - SUBROUTINE OF OOPDCS | 981 |
| 193. TIMP2 - SUBROUTINE OF OOPDCS | 984 |
| 194. TIMP3 - SUBROUTINE OF OOPDCS AND OOTDCS | 987 |
| 195. PVTX - SUBROUTINE OF OOPDCS | 990 |
| 196. PCHYA - SUBROUTINE OF OOPDCS | 992 |
| 197. BANKA - SUBROUTINE OF OOPDCS | 995 |
| 198. BCDX/BCDF - SUBROUTINES OF OOPDCS AND OOTDCS | 998 |
| 199. TBX - SUBROUTINE OF OOPDCS | 1000 |
| 200. RADEG - RADIANS TO DEGREES MACRO | 1003 |
| 201. DEGRA - DEGREES TO RADIANS MACRO | 1004 |
| 202. TTFOR - SUBROUTINE OF OOTDCS | 1005 |
| 203. MYDCSX - DCS OUTPUT PROCESSOR FOR SUBCHANNEL 10-DCC MOD | 1010 |
| 204. MYDCSY - DCS OUTPUT PROCESSOR FOR SUBCHANNEL 11-DCC MOD 2 | 1013 |
| 205. MTDCSX - DCS TRAP PROCESSOR FOR SUBCHANNEL 10-DCC MOD I | 1016 |
| 206. MTDCSY - DCS TRAP PROCESSOR FOR SUBCHANNEL 11-DCC MOD I | 1019 |

VOL II MONITOR AND I/O PROGRAMS

## 1. BASIC MONITOR CONTROL PROGRAMS

THE BASIC MONITOR CONTROL FUNCTIONS FOR THE GEMINI PROGRAMMING SYSTEM ARE PERFORMED BY THE MAIN CONTROLLER PROGRAMS, BY THE QUEUEING AND UNQUEUEING PROGRAMS, AND BY ASSOCIATED GEMINI SYSTEM MACROS. THE MAIN CONTROLLER PRIORITY PROGRAM, MOPRIO, GIVES CONTROL TO OTHER PROGRAMS IN THE GEMINI PROGRAMMING SYSTEM ON THE BASIS OF A DYNAMIC PRIORITY TABLE IN WHICH THE PRIORITY INDICATORS ARE CONTROLLED BY THE MONITOR MACROS, TRNOF AND TRNON. THESE MACROS ARE USED THROUGHOUT THE GEMINI PROGRAMMING SYSTEM BY VARIOUS MONITOR PROGRAMS.

WHEN A NONTRAP PROCESSOR IS INTERRUPTED, THE SAVE MACRO, SAVE, GIVES CONTROL TO THE MAIN CONTROLLER SAVE PROGRAM, MOSAVE, WHICH PRESERVES THE CONDITION OF THE INTERRUPTED PROCESSOR. THE REAL TIME CHANNEL MAIN CONTROLLER PROGRAM, MORTCC, INTERPRETS ALL INTERRUPTS OCCURRING ON THE DATA COMMUNICATIONS CHANNEL (DCC). WHEN THE TRAP PROCESSOR WHICH SERVICES THE INTERRUPT HAS BEEN COMPLETED (PRIORITY CONDITIONS PERMITTING), MOPRIO GIVES CONTROL TO THE MAIN CONTROLLER RETURN PROGRAM, MORTRN, WHICH RESTORES THE CONDITIONS AND RETURNS CONTROL TO THE PROGRAM AT THE INTERRUPTED POINT. IF A PROGRAM MAY NOT BE INTERRUPTED, THE DISABLE MACRO, QENBZ, AND ITS ASSOCIATED DISABLE PROGRAM, MYENBO, ARE EXECUTED. WHEN CONDITIONS PERMIT INTERRUPTION, THE ENABLE MACRO, QENBA, AND ITS ASSOCIATED ENABLE PROGRAM, MYENBA, ARE EXECUTED.

WHEN INPUT DATA IS HELD FOR A PROGRAM, THE EXECUTION OF THE QUEUE MACRO, QUEUE, AND ITS ASSOCIATED QUEUE PROGRAM, MOQUEU, PLACES AN ENTRY IN THE INPUT QUEUE TABLE FOR THAT PROGRAM. WHEN THE PROGRAM IS FREE TO ACCEPT NEW

DATA, THE EXECUTION OF THE UNQUEUE MACRO, UNQUE, AND ITS ASSOCIATED UNQUEUE PROGRAM, MOUNQU, EXTRACTS THE OLDEST WAITING INPUT FROM THE FIRST LOCATION IN THE QUEUE TABLE.

THE REFERENCE MACRO, REFR, IS EXECUTED ONLY DURING A COMPILATION OF THE GEMINI PROGRAMMING SYSTEM. IT GENERATES THE QUEUE TABLES AND THE BASIC MONITOR TABLES USED BY THE MAIN CONTROLLER PROGRAMS AND THE SYSTEM MACROS.

## 2. MOPRIO - MAIN CONTROLLER PRIORITY PROGRAM

MOPRIO, THE MAIN PRIORITY PROGRAM, IS THE CENTER OF THE MONITOR CONTROL SYSTEM AND GIVES PROCEDENCE TO ROUTINES OF THE GEMINI REAL TIME SYSTEM ACCORDING TO A PRIORITY TABLE WHICH IS CONTINUOUSLY MODIFIED BY MISSION CONDITIONS. IN ADDITION, WHEN PRIORITY REQUIRES THE EXECUTION OF A ROUTINE WHICH IS NOT IN CORE STORAGE, MOPRIO INITIATES A REQUEST TO LOAD THE REQUIRED ROUTINE FROM DISK STORAGE (SEE FLOWCHART).

INPUT

A) TABLES -

TMDEFN A VARIABLE LENGTH TABLE USED TO ESTABLISH LINKAGE BETWEEN MOPRIO AND PROGRAMS IN JOBS OF THE MULTI SYSTEM OTHER THAN JOB 1. THIS TABLE IS SET UP BY A SPECIAL PORTION OF THE B-4 WRITER AND CONSISTS OF ONE TRANSFER VECTOR FOR EVERY ROUTINE APPEARING WITHIN A QDEFN (SEE QDEFN MACRO).

TMPRIO THE MONITOR PRIORITY TABLE CONSISTING OF ONE ENTRY EACH OF THE NN ROUTINES IN THE PRIORITY LIST IN ORDER OF PRIORITY. EACH LOCATION IN THE TABLE CONTAINS IN ITS ADDRESS THE LOCATION OF THE ENTRY POINT FOR THAT ROUTINE. THE REMAINING BITS OF THE TMPRIO ENTRY INDICATE THE CURRENT STATUS OF THE ROUTINE -

| BIT | INDICATOR | |
|---|---|---|
| S | A | ROUTINE IN PROCESS |
| 1 | B | DATA WAITING FOR ROUTINE |
| 2-15 | C-P | ROUTINE SUPPRESSED |
| 16 | Q | ROUTINE NOT IN CORE, BUT HAS BEEN REQUESTED |
| 17 | R | ROUTINE NOT IN CORE |
| 18-20 | S-V | ROUTINE SUPPRESSED |

TMFRPR THE MONITOR PRIORITY REFERENCE TABLE CONSISTING OF ONE ENTRY FOR EACH OF THE NN ROUTINES IN THE PRIORITY LIST IN ORDER OF PRIORITY. THE ADDRESS OF EACH ENTRY CONTAINS THE ROUTINE NUMBER CORRESPONDING TO THE ROUTINE OF THE PARTICULAR PRIORITY. THE DECREMENT OF EACH ENTRY CONTAINS A ONE IF A ROUTINE IS TO BE EXECUTED IN B-CORE, ZERO IF THE ROUTINE IS TO BE EXECUTED IN A-CORE.

TMNMSK A TWENTY-THREE LOCATION TABLE CONTAINING IN THE FIRST TWENTY-ONE LOCATIONS, OCTAL MASKS USED TO DETERMINE WHETHER EACH OF THE INDICATORS A THROUGH U IS ON. THE LAST TWO LOCATIONS CONTAIN COMPOSITE OCTAL MASKS USED TO DETERMINE (1) WHETHER ANY OF THE INDICATORS C THROUGH Q AND S THROUGH U ARE ON, AND (2) WHETHER THE A AND B INDICATORS ARE ON, RESPECTIVELY.

TMSAVE THE MONITOR SAVE TABLE CONSISTING OF ONE ENTRY FOR EACH OF THE NN ROUTINES IN THE PRIORITY LIST IN ORDER BY PRIORITY. THE ADDRESS OF EACH ENTRY CONTAINS THE LOCATION OF THE 14-CELL BLOCK IN TMPANL USED TO STORE MACHINE CONDITIONS WHEN A TRAP OCCURS DURING EXECUTION OF THAT ROUTINE.

ADDUM THE 14-LOCATION BLOCK USED TO SAVE THE MACHINE CONDITIONS WHEN A TRAP TAKES PROGRAM CONTROL FROM MODIAG.

B) PARAMETERS -

NN THE NUMBER OF ROUTINES IN THE PRIORITY LIST

THE FOLLOWING PARAMETERS ARE USED TO DEFINE ENTRIES IN THE TMNMSK TABLE FOR DETERMINING WHETHER THE SPECIFIED INDICATORS ARE ON -

A EQU 1 (INDICATOR A)

Q EQU 17(INDICATOR Q)

R EQU 18(INDICATOR R)

Y EQU 22(INDICATOR C THROUGH Q AND S THROUGH U)

Z EQU 23(INDICATORS A AND B)

OUTPUT

A) TABLE -

TMPRIO THE 'Q' BIT IS TURNED ON IN THE APPROPRIATE TMPRIO ENTRY WHEN PRIORITY CONDITIONS REQUIRE A ROUTINE TO BE LOADED FROM DISK STORAGE.

B) COMMUNICATION CELLS -

MCSAVE CONTAINS THE LOCATION OF THE SAVE BLOCK IN TMPANL FOR THE DESIRED ROUTINE IN THE ADDRESS. THE DECREMENT CONTAINS THE ROUTINE NUMBER EXCEPT WHEN THE SAVE BLOCK IS ADDUM (IN THIS CASE, THE DECREMENT IS ZERO)

MCSUBR CONTAINS ZERO IF THE DESIRED ROUTINE IS TO BE EXECUTED IN A-CORE. CONTAINS NONZERO IF THE DESIRED ROUTINE IS TO BE EXECUTED IN B-CORE.

MCTRUK CONTAINS THE ROUTINE NUMBER OF THE PROGRAM TO BE LOADED FROM DISK STORAGE IN THE ADDRESS.

METHOD

MOPRIO RECEIVES CONTROL WHEN EITHER A TRAP OR AN ORDINARY (I.E., NONTRAP) PROCESSOR HAS BEEN COMPLETED. SINCE MOPRIO HAS NO WAY OF KNOWING THE SOURCE OF PROGRAM CONTROL, ITS FIRST OPERATIONS ARE TO SET THE EXECUTION CYCLE CONTROL (ECC) TO A-CORE, LEAVE THE MULTIPLE TAG MODE, AND ENABLE THE COMPUTER FOR TRAPPING.

MOPRIO EXAMINES THE ENTRIES IN THE TMPRIO TABLE, SEEKING THE HIGHEST PRIORITY ROUTINE FOR WHICH NONE OF THE SUPPRESSION INDICATORS (C THROUGH Q, S THROUGH U) IS TURNED ON. IF SUCH A SITUATION EXISTS, MOPRIO EXAMINES THE IN PROCESS AND READY INDICATORS, A AND B, RESPECTIVELY. IF NEITHER IS ON, MOPRIO CONTINUES TO EXAMINE THE SUPPRESSION INDICATORS FOR THE REMAINING ENTRIES IN TMPRIO. IF IT FINDS THAT EVERY UNSUPPRESSED ROUTINE HAS NEITHER ITS A OR ITS B INDICATOR ON, THERE IS NOTHING FOR

THE GEMINI REAL TIME SYSTEM TO DO. MOPRIO THEN GIVES CONTROL TO THE DIAGNOSTIC PROGRAM, MODIAG, AFTER PLACING THE LOCATION OF ADDUM IN MCSAVE.

IF MOPRIO FINDS AN UNSUPPRESSED ROUTINE WITH ITS A AND/OR B INDICATORS ON, THE A INDICATOR TAKES PRECEDENCE OVER THE B. THIS ENSURES THAT, NO MATTER HOW MANY TIMES A ROUTINE IS INTERRUPTED, PROCESSING OF OLD INPUT DATA IS COMPLETED BEFORE NEW INPUT DATA IS ACCEPTED. MOPRIO THEN EXAMINES THE R-BIT. IF THIS BIT IS ON, THE REQUESTED ROUTINE MUST BE LOADED INTO CORE STORAGE FROM THE DISK. AFTER TURNING ON THE 'Q' BIT IN THE TMPRIO ENTRY FOR THIS ROUTINE TO INDICATE, THAT LOADING FROM DISK STORAGE HAS BEEN INITIATED, MOPRIO QUEUES THE DISK ROUTINE. IT THEN TRANSFERS TO ITS OWN ENTRY POINT AND BEGINS TO SCAN THE PRIORITY TABLE AGAIN.

IF THE R-BIT IS OFF, THE ADDRESS OF THE SAVE BLOCK IN TMPANL IS PLACED IN MCSAVE AND CONTROL TRANSFERS TO THE ROUTINE DIRECTLY (B INDICATOR ON, A INDICATOR OFF) OR INDIRECTLY VIA MORTRN (A INDICATOR ON, B INDICATOR MAY BE OFF).

USAGE

MOPRIO IS ENTERED AT THE COMPLETION OF ANY ROUTINE OR TRAP PROCESSOR AND EXITS TO A PREVIOUSLY INTERRUPTED ROUTINE, A NEW ROUTINE, OR TO MODIAG.

A) STORAGE REQUIRED - 66 LOCATIONS

B) TIMING (7099) -

1) EXIT TO MODIAG .036 + .016S MILLISECONDS

2) EXIT TO NEW ROUTINE .104 + .016S MILLISECONDS

3) EXIT TO MORTRN .094 + .016S MILLISECONDS

WHERE S=NO. ROUTINES EXAMINED HAVING ONE OR MORE SUPPRESSION INDICATORS ON.

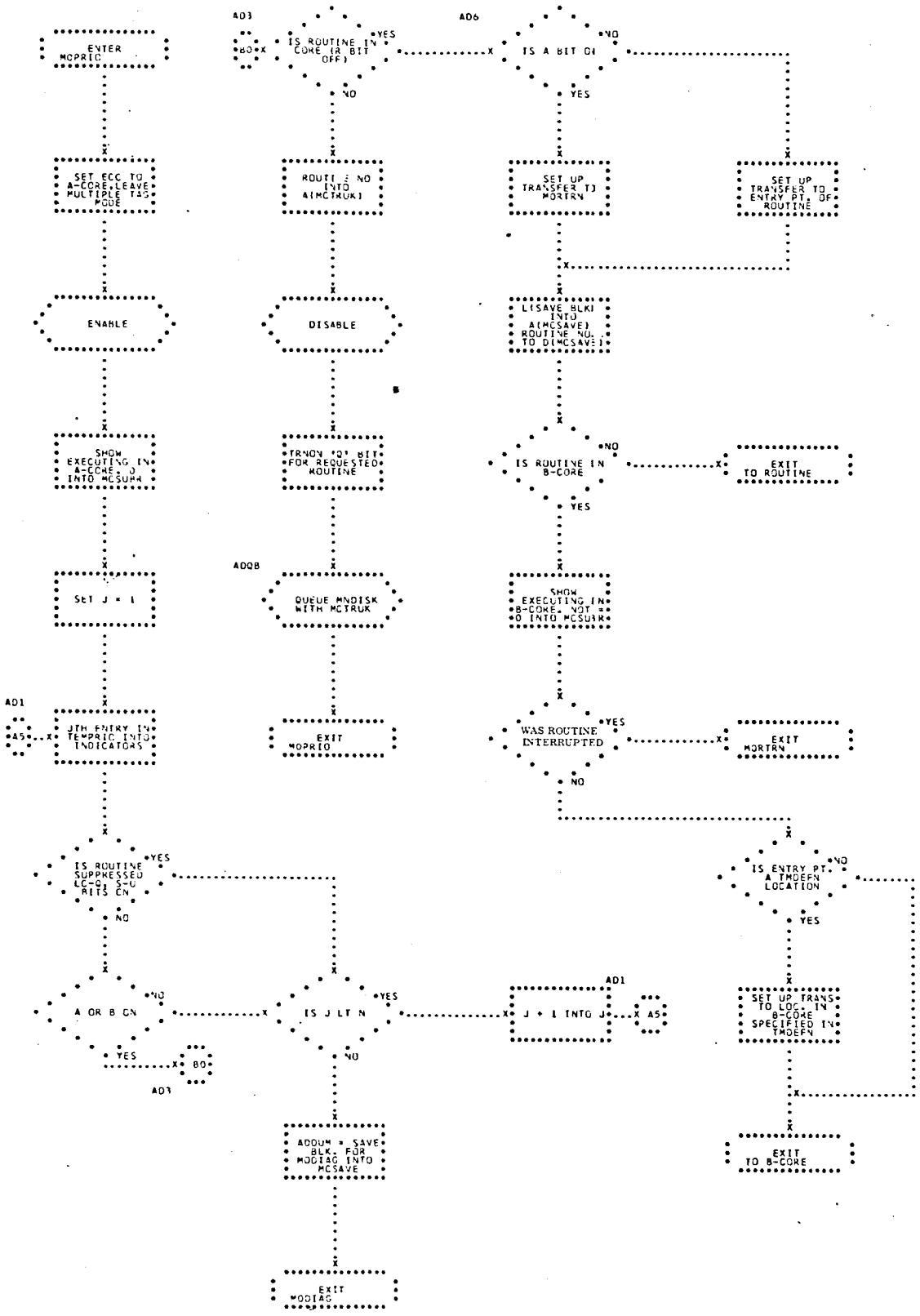
ENTER MOPRIO
SET ECC TO A-CORE, LEAVE MULTIPLE TAS MODE
ENABLE
SHOW EXECUTING IN A-CORE, J INTO MCSUPR
SET J = 1
AD1
J TH ENTRY IN TEMPRIO INTO INDICATORS
IS ROUTINE SUPPRESSED (C-0, S-0 BITS ON)
YES
NO
A OR B ON
NO
YES
B0
AD3
IS J LT N
YES
NO
ADDUM = SAVE BLK. FOR MODIAG INTO MCSAVE
EXIT MODIAG
AD3
IS ROUTINE IN CORE (R BIT OFF)
YES
NO
ROUTINE NO INTO A(MCTRUK)
DISABLE
TRNON 'D' BIT FOR REQUESTED ROUTINE
AD08
QUEUE MNDISK WITH MCTRUK
EXIT MOPRIO
AD6
IS A BIT ON
NO
YES
SET UP TRANSFER TO MORTRN
SET UP TRANSFER TO ENTRY PT. OF ROUTINE
L(SAVE BLK) INTO A(MCSAVE) ROUTINE NO. TO D(MCSAVE)
IS ROUTINE IN B-CORE
NO
YES
EXIT TO ROUTINE
SHOW EXECUTING IN B-CORE, NOT = 0 INTO MCSUBR
WAS ROUTINE INTERRUPTED
YES
NO
EXIT MORTRN
AD1
J + 1 INTO J
A5
IS ENTRY PT. A TMDEFN LOCATION
NO
YES
SET UP TRANS TO LOC. IN B-CORE SPECIFIED IN TMDEFN
EXIT TO B-CORE

## 3. MORTCC - REAL-TIME CHANNEL CONTROLLER PROGRAM

ALL PROGRAM INTERRUPTS RESULTING FROM DATA TRANSMISSION THROUGH THE DCC AND PCC ARE INTERPRETED BY MORTCC. DURING THE EXECUTION OF MORTCC, THE COMPUTER IS INHIBITED. (SEE FLOWCHART).

INPUT

A) TABLES -

TMDEFN A VARIABLE LENGTH TABLE USED TO PROVIDE LINKAGE BETWEEN MORTCC AND JOBS OF THE MULTI SYSTEM OTHER THAN JOB 1. THE TABLE CONTAINS ONE ENTRY FOR EVERY ROUTINE APPEARING WITHIN A QDEFN (SEE QDEFN MACRO) AND IS SET UP BY A SPECIAL PORTION OF THE B-4 WRITER.

TMNMSK A TWENTY-THREE LOCATION TABLE CONTAINING, IN THE FIRST TWENTY-ONE LOCATIONS, OCTAL MASK USED TO SET EACH OF THE INDICATORS A THROUGH U AND IN THE LAST TWO LOCATIONS, COMPOSITE MASKS USED TO TEST (1) INDICATORS C THROUGH Q AND S THROUGH U AND (2) INDICATORS A AND B, RESPECTIVELY.

TMRTCC A TWENTY-TWO LOCATION TABLE CONTAINING, IN INVERSE SUBCHANNEL ORDER, AN ENTRY FOR EACH SUBCHANNEL OF THE DCC USED BY THE GEMINI REAL TIME SYSTEM.

SIGN - NEGATIVE IF TRAP PROCESSOR IN B-CORE

DECR - LOCATION OF DCC STORAGE BUFFER

SERVICED BY THIS SUBCHANNEL

ADDR - LOCATION OF TRAP PROCESSOR WHICH SERVICES BUFFER

TM8.3M A ONE-CELL TABLE CONTAINING IN FIXED POINT, B35, THE COUNT OF 8 1/3 MILLI-SECONDS SINCE THE LAST HALF-SECOND.

B) COMMUNICATION CELL -

MCHFSC CONTAINS CURRENT GMT IN FIXED POINT HALF-SECONDS, B35

C) CONSTANT -

KMSK59 OCTAL MASK USED TO SAVE BITS 5-9

D) PARAMETERS -

B EQU 2 (INDICATOR BIT B)

MNOPCC PRIORITY/ROUTINE NUMBER OF PCC DATA PROCESSOR

E) CORE LOCATIONS -

LOC. 3 CONTROL WORD SET BY HARDWARE WHEN DCC OR PCC TRAP OCCURS -

| BIT | MEANING |
|---|---|
| 3 | ICC INDICATOR |
| 4 | ECC INDICATOR |
| 5-9 | DCC SUBCHANNEL CAUSING TRAP |
| 12 | DCC TRAP INDICATOR |
| 15 | PCC TRAP INDICATOR |
| 21-35 | LOCATION COUNTER AT TIME OF TRAP |

LOC. 4 CONTAINS INSTRUCTION FOLLOWING DCC TRAP - TTR MORTCC

OUTPUT

A) TABLE -

TMPRIO THE MONITOR PRIORITY TABLE HAVING THE B INDICATOR IN THE ENTRY FOR THE PCC DATA

PROCESSOR TURNED ON IF A TRAP OCCURRED FROM THE PCC.

B) COMMUNICATION CELLS -

MCSUBR SET NON-ZERO IF TRAP PROCESSOR TO BE USED IS IN B-CORE.

MCTIMM CONTAINS TO NEAREST 8 1/3 MILLISECOND, THE TIME OF PCC TRAP.

MCPCCJ SET NON-ZERO ON OCCURRENCE OF PCC TRAP.

METHOD

AFTER SAVING MACHINE CONDITIONS, MORTCC EXAMINES LOCATION 3 TO DETERMINE WHETHER THE DCC OR THE PCC IS RESPONSIBLE FOR THE TRAP. SHOULD THE PCC BE INDICATED, MORTCC TURNS ON THE B INDICATOR FOR MYOPCC AFTER COMPUTING THE TIME OF THE PCC TRAP AND INDICATING THAT A TRAP OCCURRED ON THE PCC. IT THEN CHECKS TO DETERMINE WHETHER A DCC TRAP OCCURRED SIMULTANEOUSLY WITH THE PCC INTERRUPT. IF NOT, CONTROL IS RETURNED TO MOPRIO. OTHERWISE, LOCATION 3 IS REEXAMINED TO DETERMINE WHICH SUBCHANNEL OF THE DCC CAUSED THE TRAP. WITH THIS INFORMATION MORTCC PLACES THE SUBCHANNEL NUMBER IN THE DECREMENT OF THE ACCUMULATOR, THE SUBCHANNEL'S BUFFER BLOCK LOCATION IN THE ADDRESS OF THE ACCUMULATOR AND INDICATES IN WHICH CORE THE TRAP RPOCESSOR RESIDES. CONTROL IS THEN TRANSFERRED DIRECTLY TO THE SPECIFIED TRAP PROCESSOR.

USAGE

MORTCC IS ENTERED FROM LOCATION 4 FOLLOWING A DCC OR PCC TRAP AND EXITS TO THE SELECTED TRAP PROCESSOR.

A) STORAGE REQUIRED - 43 LOCATIONS

B) TIMING (7094) -

1) DCC TRAP ONLY, 0.086 MILLISECONDS

| | | |
|---|---|---|
| | 2) PCC TRAP ONLY, | 0.050 MILLISECONDS |
| | 3) DCC AND PCC TRAPS, | 0.136 MILLISECONDS |
| C) | MACROS - | TRNON, SAVE |

## DCC REFERENCE TABLE

| Symbolic Location | DCC Buffer | Trap Processor | Sub-Channel | Function |
|---|---|---|---|---|
| | 3 17 | 21 35 | | |
| TMRTCC | TMSENS | MTSENS | 31 | To Sense Output Console |
| + 1 | TMT117 | MTTTIN | 30 | Paper Tape Input (17) |
| + 2 | TMT116 | MTTTIN | 29 | TTY Input 16 |
| + 3 | TMT115 | MTTTIN | 28 | TTY Input 15 |
| + 4 | TMT114 | MTTTIN | 27 | TTY Input 14 |
| + 5 | TMT113 | MTTTIN | 26 | TTY Input 13 |
| + 6 | TMT112 | MTTTIN | 25 | TTY Input 12 |
| + 7 | TMT111 | MTTTIN | 24 | TTY Input 11 |
| + 8 | TMT110 | MTTTIN | 23 | TTY Input 10 |
| + 9 | TMT109 | MTTTIN | 22 | TTY Input 9 |
| + 10 | TMT108 | MTTTIN | 21 | TTY Input 8 |
| + 11 | TMT107 | MTTTIN | 20 | TTY Input 7 |
| + 12 | TMT106 | MTTTIN | 19 | TTY Input 6 |
| + 13 | TMT105 | MTTTIN | 18 | TTY Input 5 |
| + 14 | TMT104 | MTTTIN | 17 | TTY Input 4 |
| + 15 | TMT103 | MTTTIN | 16 | TTY Input 3 |
| + 16 | TMT102 | MTTTIN | 15 | TTY Input 2 |
| + 17 | TMT101 | MTTTIN | 14 | TTY Input 1 |
| + 18 | - - - | MTERTC | 13 | None, DCC Error |
| + 19 | - - - | MTERTC | 12 | None, DCC Error |
| + 20 | TMYBOX | MTTTOY | 11 | TTY Output 2 |
| + 21 | TMXBOX | MTTTOX | 10 | TTY Output 1 |
| + 22 | TMINTV | MTINTV | 09 | Interval Timer |
| + 23 | - - - | MTWWVI | 08 | WWV Minute Pulse |
| + 24 | TM8.3M | MTHFSC | 07 | Half-Second Trap |
| + 25 | TMHSB6 | MTHSB6 | 06 | Bermuda Input #2 |
| + 26 | TMHSB5 | MTHSB5 | 05 | Bermuda Input #1 |
| + 27 | TMHSOP | MTHSOP | 04 | Local Plotter |
| + 28 | TMHSOD | MTHSOD | 03 | MCC Output to Displays |
| + 29 | TMHSO9 | MTHSO9 | 02 | High-Speed Input 2 |
| + 30 | TMHSGB | MTHSGB | 01 | High-Speed Input 1 |
| + 31 | - - - | MTERTC | 32 | None, DCC Error |

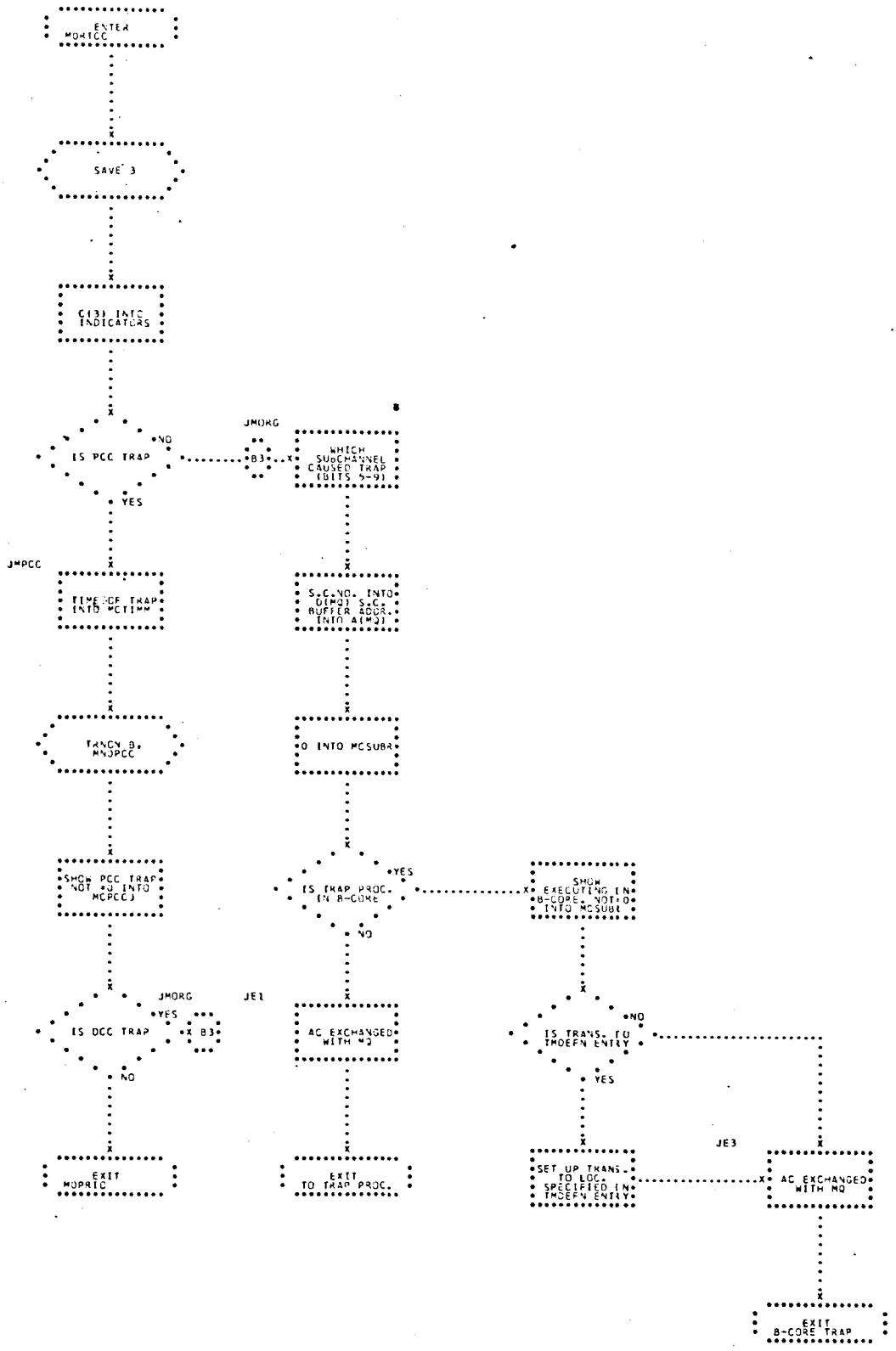
ENTER MORTCC
SAVE 3
C(3) INTO INDICATORS
IS PCC TRAP
NO
YES
JMORG
B3
WHICH SUBCHANNEL CAUSED TRAP (BITS 5-9)
JMPCC
TIME OF TRAP INTO MCTIMM
S.C.NO. INTO D(MQ) S.C. BUFFER ADDR. INTO A(MQ)
TRNCN B, MNOPCC
0 INTO MCSUBR
SHOW PCC TRAP NOT *0 INTO MCPCC)
IS TRAP PROC. IN B-CORE
YES
NO
SHOW EXECUTING IN B-CORE, NOT=0 INTO MCSUBR
JMORG
IS DCC TRAP
YES
B3
NO
JE1
AC EXCHANGED WITH MQ
IS TRANS. TO TMDEFN ENTRY
NO
YES
EXIT MORTCC
EXIT TO TRAP PROC.
SET UP TRANS. TO LOC. SPECIFIED IN TMDEFN ENTRY
JE3
AC EXCHANGED WITH MQ
EXIT B-CORE TRAP

## 4. SAVE - SAVE MACRO

EVERY TIME A PROGRAM INTERRUPT OCCURS, THE MACHINE CONDITION MUST BE PRESERVED IF CONTROL IS TO RETURN TO THE INTERRUPTED PROGRAM AT THE EXACT POINT OF THE INTERRUPT. THE SAVE MACRO PREPARES INFORMATION FOR, AND TRANSFERS CONTROL TO THE SAVING ROUTINE, MOSAVE. ALL NON-DCC TRAP PROCESSORS EXECUTE THE SAVE MACRO BEFORE PROCESSING DATA. FOR DCC AND PCC TRAP PROCESSORS SAVE IS EXECUTED BY MORTCC. (SEE FLOWCHART)

INPUT

A) MACRO DEFINITION -

```
SAVE MACRO  CW
     SXD    MCX4RA,4
     LXA    CW,4
     SXA    MCX4RA,4
     TSX    MOSAVE,4
     END
```

B) THE SINGLE PARAMETER CW IS THE DECIMAL EQUIVALENT OF THE ABSOLUTE LOCATION OF THE CELL SET BY THE IBM 7094 COMPUTER WHEN A TRAP OCCURS. CW IS 0 FOR FLOATING-POINT TRAPS, 3 FOR DCC AND PCC TRAPS, 10 FOR CHANNEL A TRAPS, 12 FOR CHANNEL B TRAPS, 14 FOR CHANNEL C TRAPS AND 16 FOR CHANNEL D (DISK) TRAPS. THE LOCATION SPECIFIED BY CW CONTAINS IN ITS ADDRESS THE VALUE OF THE LOCATION COUNTER WHEN THE TRAP OCCURRED. FOR DCC TRAPS BITS 5 THROUGH 9 OF LOCATION 00003 ALSO CONTAIN THE NUMBER OF THE SUBCHANNEL RESPONSIBLE FOR THE TRAP.

THE COMPUTER IS INHIBITED DURING THE EXECUTION OF THE SAVE MACRO.

OUTPUT

THE OUTPUT OF SAVE CONSISTS OF A SINGLE COMMUNICATION CELL, MCX4RA, WHICH CONTAINS IN ITS ADDRESS THE CONTENTS OF THE LOCATION COUNTER WHEN THE TRAP OCCURRED AND IN ITS DECREMENT THE CONTENTS OF INDEX REGISTER 4. INDEX REGISTER 4 CONTAINS THE 2'S COMPLEMENT OF THE LOCATION COUNTER FOR THE INSTRUCTION WHICH TRANSFERS CONTROL TO MOSAVE.

METHOD

THE SAVE MACRO STORES THE CONTENTS OF INDEX REGISTER 4 INTO THE DECREMENT OF MCX4RA. WITH INDEX REGISTER 4 AVAILABLE FOR DATA RELOCATION, SAVE USES IT TO MOVE THE LOCATION COUNTER VALUE AT THE INTERRUPT FROM CW INTO THE ADDRESS OF MCX4RA. SAVE THEN TRANSFERS PROGRAM CONTROL TO MOSAVE AND SETS INDEX REGISTER 4 TO THE 2'S COMPLEMENT OF THE CURRENT VALUE OF THE LOCATION COUNTER.

USAGE

ENTRY TO SAVE IS MADE BY TRANSFER INSTRUCTION IN LOWER CORE, FOLLOWING A TRAP, AND SAVE EXITS TO MOSAVE.

A) STORAGE REQUIRED - FOUR LOCATIONS

B) TIMING (7094) - 0.013 MILLISECOND

LOCATION COUNTER DIAGRAM

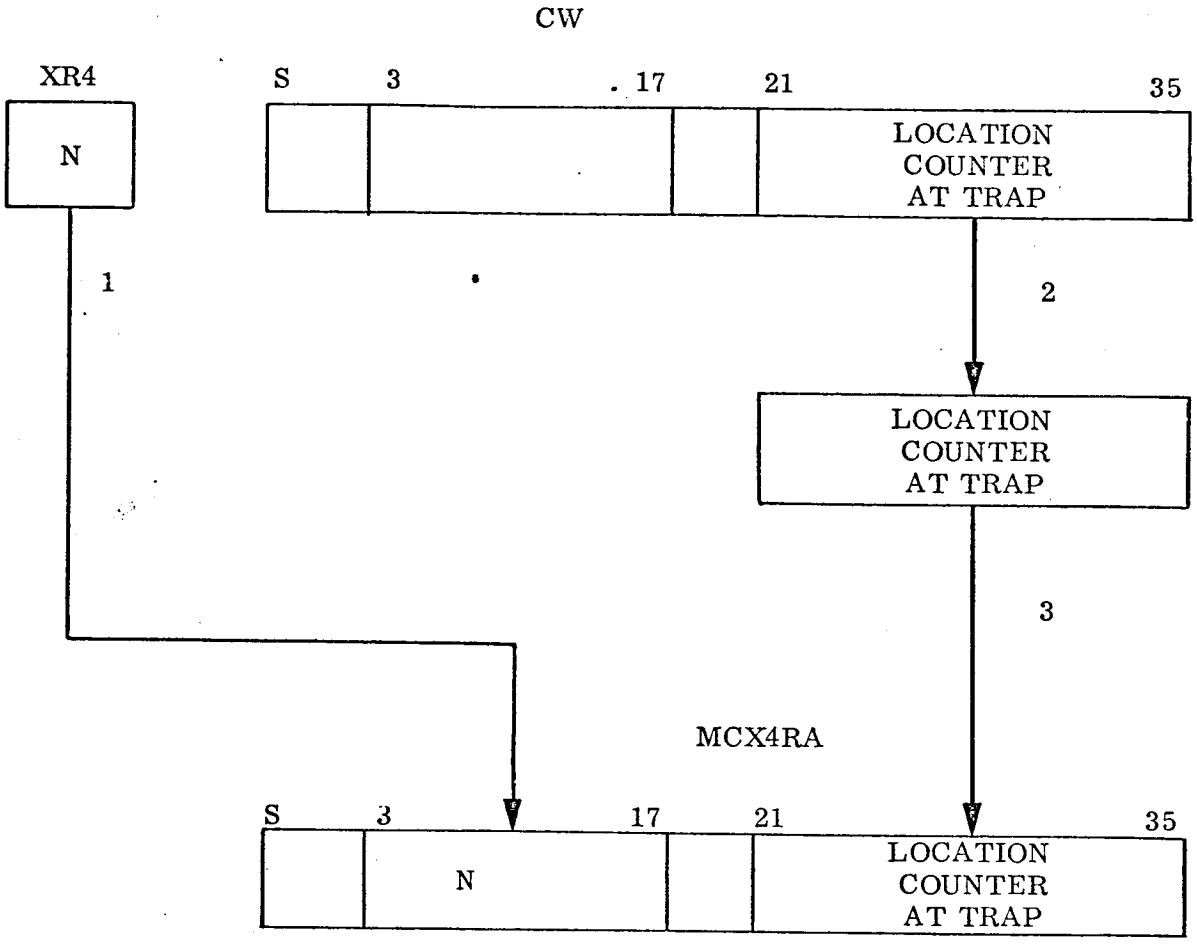


SAVE MACRO MUST BE FIRST EXECUTED PROGRAM AFTER EVERY TRAP.

LOCATION COUNTER READING SET IN CONTROL WORD (CW) BY THE COMPUTER WHEN TRAP OCCURS.

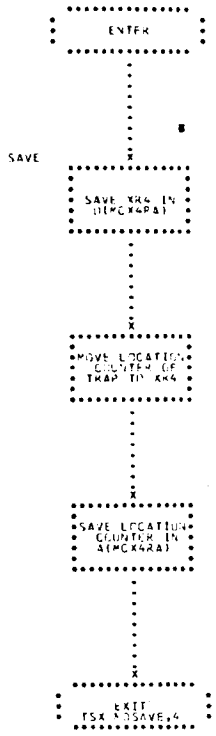
ENTER
SAVE
SAVE XR4 IN
(MCX4RA)
MOVE LOCATION
COUNTER OF
TRAP TO XR4
SAVE LOCATION
COUNTER IN
4(MCX4RA)
EXIT
TSX XOSAVE,4

## 5. MOSAVE - MAIN CONTROLLER SAVE PROGRAM

EVERY TIME A PROGRAM INTERRUPT OCCURS, THE MACHINE CONDITION MUST BE PRESERVED IF CONTROL IS TO RETURN TO THE INTERRUPTED PROGRAM AT THE EXACT POINT OF THE INTERRUPT. MOSAVE PERFORMS THIS FUNCTION. (SEE FLOWCHART)

INPUT

A) TABLE -

COMMON SIX COMMON CELLS FOR STORING AND SAVING THE TEMPORARY RESULTS OF LIBRARY ROUTINES.

B) COMMUNICATION CELLS -

MCX4RA CONTAINS, IN ITS DECREMENT, THE CONTENTS OF INDEX REGISTER 4 AND IN ITS ADDRESS THE CONTENTS OF THE LOCATION COUNTER AT THE TIME OF THE TRAP.

MCSAVE CONTAINS IN ITS ADDRESS, THE INITIAL LOCATION OF EITHER THE BLOCK IN TMPANL IN WHICH THE MACHINE CONDITIONS ALL STORED WHEN A TRAP OCCURS DURING EXECUTION OF A ROUTINE OR ADDUM WHEN THE TRAP OCCURS DURING EXECUTION OF MODIAG. CORRESPONDINGLY, ITS DECREMENT CONTAINS EITHER THE PRIORITY/ROUTINE NUMBER OR ZERO.

MCSUBR NON-ZERO IF THE INTERRUPTED ROUTINE IS IN B-CORE.

MCTRAP NON-ZERO IF THE INTERRUPTED ROUTINE WAS ATTEMPTING TO DISABLE FROM TRAPPING WHEN THE TRAP OCCURRED.

C) CONSTANTS -

```
KOC000  DEC 0
KT0001  PZE 0, 1, 0
KTC002  PZE 0, 2, 0
KTC004  PZE 0, 4, 0
```

D) SYMBOLIC LOCATIONS -

MOPRIO AND AD5 FIRST AND LAST LOCATIONS IN MOPRIO

MORTRN AND AD6 FIRST AND LAST LOCATIONS IN MORTRN

OUTPUT

A) TMPANL OR ADDUM THE SAVE BLOCK CORRESPONDING TO THE INTERRUPTED ROUTINE IS FILLED.

METHOD

THE SAVE MACRC SETS UP THE CALLING SEQUENCE, WHICH INCLUDES THE CONTENTS OF BOTH INDEX REGISTER 4, AND THE LOCATION COUNTER WHEN THE INTERRUPT OCCURRED, AND TRANSFERS CONTROL TO MOSAVE. BY EXAMINING THE SAVED LOCATION COUNTER VALUE, MOSAVE DETERMINES WHETHER THE TRAP TOOK CONTROL FROM MOPRIC OR MORTRN. IF EITHER OF THESE TWO PROGRAMS WAS INTERRUPTED, THERE IS NO NEED TO SAVE THE MACHINE CONDITION-BOTH PRUGRAMS ARE ENTERED ONLY AT THE INITIAL INSTRUCTION - CONTROL IS GIVEN DIRECTLY TO THE APPROPRIATE TRAP PROCESSOR. OTHERWISE, MOSAVE STORES THE MACHINE CONDITION IN THE RESERVED BLOCK IN THE TMPANL TABLE TAKING THE ADDRESS OF THIS BLOCK FROM MCSAVE.

FOUR TESTS ARE PERFORMED IN THE PROCESS OF SAVING THE MACHINE CONDITION -

A) IF MCTRAP IS NON-ZERO, AN INDICATION THAT THE INTERRUPTED PROGRAM WAS ATTEMPTING TO DISABLE WHEN THE TRAP OCCURED IS MADE IN THE TAG OF THE THIRD WORD.

B) IF THE DIVIDE CHECK INDICATOR IS ON, IT IS TURNED OFF AND A NOTATION IS MADE IN THE TAG OF THE FOURTH WORD.

C) IF THE OVERFLOW INDICATOR IS ON, IT IS TURNED OFF AND A NOTATION IS MADE IN THE TAG OF THE FOURTH WORD.

D) IF MCSUBR IS NON-ZERO, AN INDICATION THAT THE INTERRUPTED ROUTINE IS IN B-CORE IS MADE IN THE FOURTH WORD.

THE ICC AND ECC INDICATORS ARE STORED IN THE PREFIX OF THE FOURTH WORD.

THE BLOCK IN TMPANL CONTAINS 14 LOCATIONS. THE LAST SIX CONTAIN THE COMMON LOCATIONS FROM LIBRARY SUBROUTINES SHARED BY TWO OR MORE ROUTINES IN THE GEMINI SYSTEM. TO CONSERVE CORE STORAGE, STANDARD LIBRARY SUBROUTINES WERE REWRITTEN TO PROVIDE SIX COMMON CELLS FOR THE STORAGE OF TEMPORARY RESULTS. BEFORE THIS CHANGE, EACH ROUTINE INCORPORATED WITHIN ITSELF EVERY LIBRARY SUBROUTINE IT USED TO PREVENT THE DESTRUCTION BY A TRAP OF TEMPORARY RESULTS WHICH WERE OUTSIDE THE PANEL LOCATIONS. WITH THE COMMON STORAGE FEATURE, TEMPORARY RESULTS ARE ACCESSIBLE TO THE MOSAVE PROGRAM AND COULD BE SAVED FOR ANY ROUTINE. CONSEQUENTLY, LIBRARY SUBROUTINES MAY BE USED BY ANY ROUTINE IN ANY ORDER WITHOUT INTERFERING WITH THE USE OF THE SUBROUTINE BY ANY OTHER ROUTINE.

USAGE

MOSAVE IS ENTERED FROM THE SAVE MACRO.

A) STORAGE REQUIRED - 69 LOCATIONS

B) TIMING (7094)

1) IF MOPRIO IS INTERRUPTED, 0.034 MILLISECOND

2) IF MORTRN IS INTERRUPTED, 0.042 MILLISECOND

3) MAXIMUM, 0.202 MILLISECOND

DIAGRAM OF SAVE BLOCK

S 1 2 3 17 18 19 20 21 35

SAVE BLOCK

| | | | | | | | |
|---|---|---|---|---|---|---|---|
| C(MQ) | | | | | | | |
| $C(AC)_{Q, P, 1-34}$ | | | | | | | |
| $A_C$ S | $A_C$ 35 | | C(XR2) | | | TRAP | C(XR1) |
| | ICC | ECC | C(XR4) | DC | CORE | OV | RETURN ADDRESS |
| C(0) | | | | | | | |
| C(SENSE INDICATORS) | | | | | | | |
| C(COMMON) | | | | | | | |
| C(COMMON + 1) | | | | | | | |
| C(COMMON + 2) | | | | | | | |
| C(COMMON + 3) | | | | | | | |
| C(COMMON + 4) | | | | | | | |
| C(COMMON + 5) | | | | | | | |
| | C(XR5) | | | | | | C(XR3) |
| | C(XR7) | | | | | | C(XR6) |

MCSAVE

| | | | |
|---|---|---|---|
| | ROUTINE NUMBER OF INTERRUPTED ROUTINE | | LOCATION OF SAVE BLOCK FOR INTERRUPTED ROUTINE |

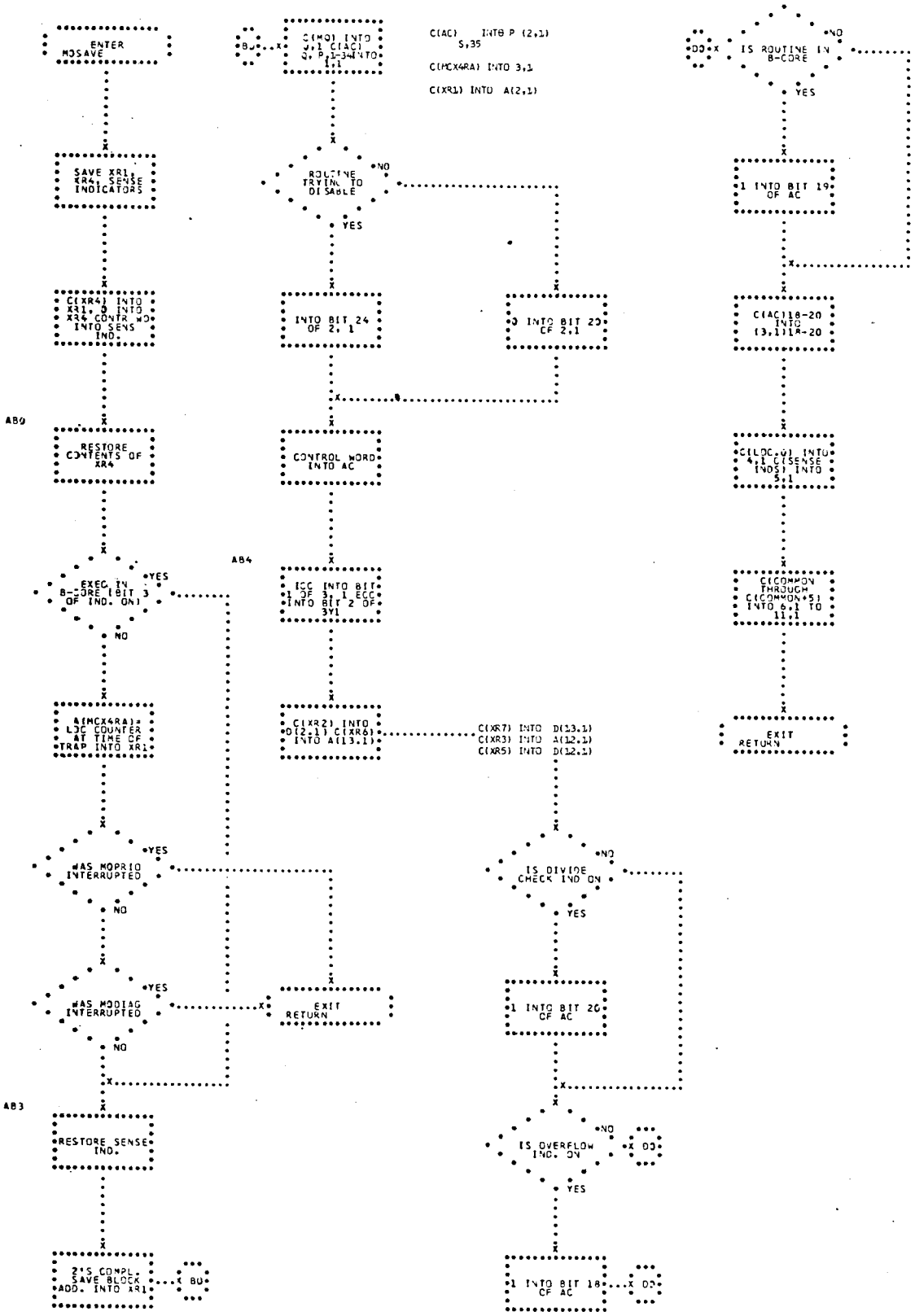
ENTER MOSAVE
SAVE XR1, XR4, SENSE INDICATORS
C(XR4) INTO XR1, 0 INTO XR4 CONTR WD INTO SENS IND.
AB0
RESTORE CONTENTS OF XR4
EXEC IN B-CORE (BIT 3 OF IND. ON)
YES
NO
A(MCX4RA)= LOC COUNTER AT TIME OF TRAP INTO XR1
WAS MOPRIO INTERRUPTED
YES
NO
WAS MODIAG INTERRUPTED
YES
NO
AB3
RESTORE SENSE IND.
2'S COMPL. SAVE BLOCK ADD. INTO XR1
BU
C(MQ) INTO 0,1 C(AC) 0, P,1-34 INTO 1,1
BU
ROUTINE TRYING TO DISABLE
NO
YES
INTO BIT 24 OF 2, 1
CONTROL WORD INTO AC
AB4
ISC INTO BIT 1 OF 3, 1 ECC INTO BIT 2 OF 3Y1
C(XR2) INTO D(2,1) C(XR6) INTO A(13,1)
C(AC) INTO P (2,1) S,35
C(MCX4RA) INTO 3,1
C(XR1) INTO A(2,1)
C(XR7) INTO D(13,1)
C(XR3) INTO A(12,1)
C(XR5) INTO D(12,1)
EXIT RETURN
IS DIVIDE CHECK IND ON
NO
YES
1 INTO BIT 20 OF AC
IS OVERFLOW IND. ON
NO
YES
1 INTO BIT 18 OF AC
DD
IS ROUTINE IN B-CORE
NO
YES
DD
1 INTO BIT 19 OF AC
C(AC)18-20 INTO (3,1)18-20
C(LOC.0) INTO 4,1 C(SENSE INDS) INTO 5,1
C(COMMON THROUGH C(COMMON+5) INTO 6,1 TO 11,1
EXIT RETURN

## 6. MORTRN - MAIN CONTROLLER RETURN PROGRAM

WHEN MOPRIO DETERMINES THAT THE HIGHEST PRIORITY ASSIGNMENT IS THE COMPLETION OF A PREVIOUSLY INTERRUPTED ROUTINE, CONTROL IS FIRST GIVEN TO MORTRN, WHICH RESTORES THE MACHINE CONDITIONS OF THE INTERRUPTED ROUTINE EXACTLY AS THEY WERE AT THE TIME OF THE TRAP. (SEE FLOWCHART.)

INPUT

A) COMMUNICATION CELLS -

MCSAVE CONTAINS, IN ITS ADDRESS, THE INITIAL LOCATION OF EITHER THE BLOCK IN TMPANL IN WHICH THE MACHINE CONDITIONS HAVE BEEN STORED - WHEN THE TRAP OCCURRED DURING EXECUTION OF THE ROUTINE - OR ADDUM WHEN THE TRAP OCCURRED DURING EXECUTION OF MODIAG. CORRESPONDING, THE DECREMENT CONTAINS EITHER THE PRIORITY/ ROUTINE NUMBER OR ZERO.

B) CONSTANTS -

```
K00000  DEC  0
KTC001  PZE  0, 1, 0
KTC002  PZE  0, 2, 0
KT0004  PZE  0, 4, 0
```

OUTPUT

MORTRN IS ESSENTIALLY THE REVERSE OF MOSAVE. THUS, MACHINE CONDITIONS ARE RESTORED AND THE INTERRUPTED ROUTINE BEGINS FROM THE POINT OF INTERRUPT AS IF THE TRAP HAD NOT OCCURRED. IF THE ROUTINE WAS ATTEMPTING TO DISABLE WHEN INTERRUPTED, MORTRN WILL DISABLE THE COMPUTER

BEFORE RETURNING CONTROL TO THE INTERRUPTED ROUTINE.

METHOD

MORTRN RECEIVES CONTROL FROM MOPRIO, WITH THE LOCATION OF THE SAVE BLOCK FOR THE INTERRUPTED ROUTINE IN MCSAVE. THE CONTENTS OF THE COMMON LOCATIONS FROM THE STORED LIBRARY ROUTINES ARE RESTORED FROM THE LAST SIX WORDS OF THE SAVE BLOCK. INDEX REGISTER 3, 5, 6, 7 ARE THEN RESTORED. BASED ON THE SETTING OF THE ICC AND ECC INDICATOR BITS, MORTRN SETS UP THE INSTRUCTIONS WHICH WILL RETURN TO THE INTERRUPTED ROUTINE IN THE CORRECT BANK OF CORE (TIA FOR A-CORE, TIB FOR B-CORE) WITH THE ECC SET PROPERLY (SEA FOR A-CORE, SEB FOR B-CORE). MORTRN THEN RESTORES INDEX REGISTER 4 AND THE RETURN ADDRESS. IF THE INTERRUPTED ROUTINE IS IN B-CORE, MCSUBR IS SET TO INDICATE THIS. IF THE INTERRUPTED ROUTINE HAD TURNED ON THE DIVIDE CHECK OR ACCUMULATOR OVERFLOW INDICATORS, THE SETTING OF THESE INDICATORS IS RESTORED. FINALLY, INDEX REGISTER 2, THE MULTIPLIER QUOTIENT, LOCATION 0, THE SENSE INDICATORS AND INDEX REGISTER 1 ARE RESTORED. IF THE INTERRUPTED ROUTINE WAS ATTEMPTING TO DISABLE AT THE TIME OF THE TRAP, MORTRN DISABLES THE COMPUTER BEFORE RETURNING CONTROL TO THE TRAPPED ROUTINE.

USAGE

MORTRN RECEIVES CONTROL FROM MOPRIO AND TRANSFERS TO THE SELECTED ROUTINE.

| | | |
|---|---|---|
| A) | STORAGE REQUIRED - | 63 LOCATIONS |
| B) | TIMING (7094) - | 0.180 MILLISECOND, MINIMUM |
| | | 0.216 MILLISECOND, MAXIMUM |
| C) | MACRO - | QENBZ |

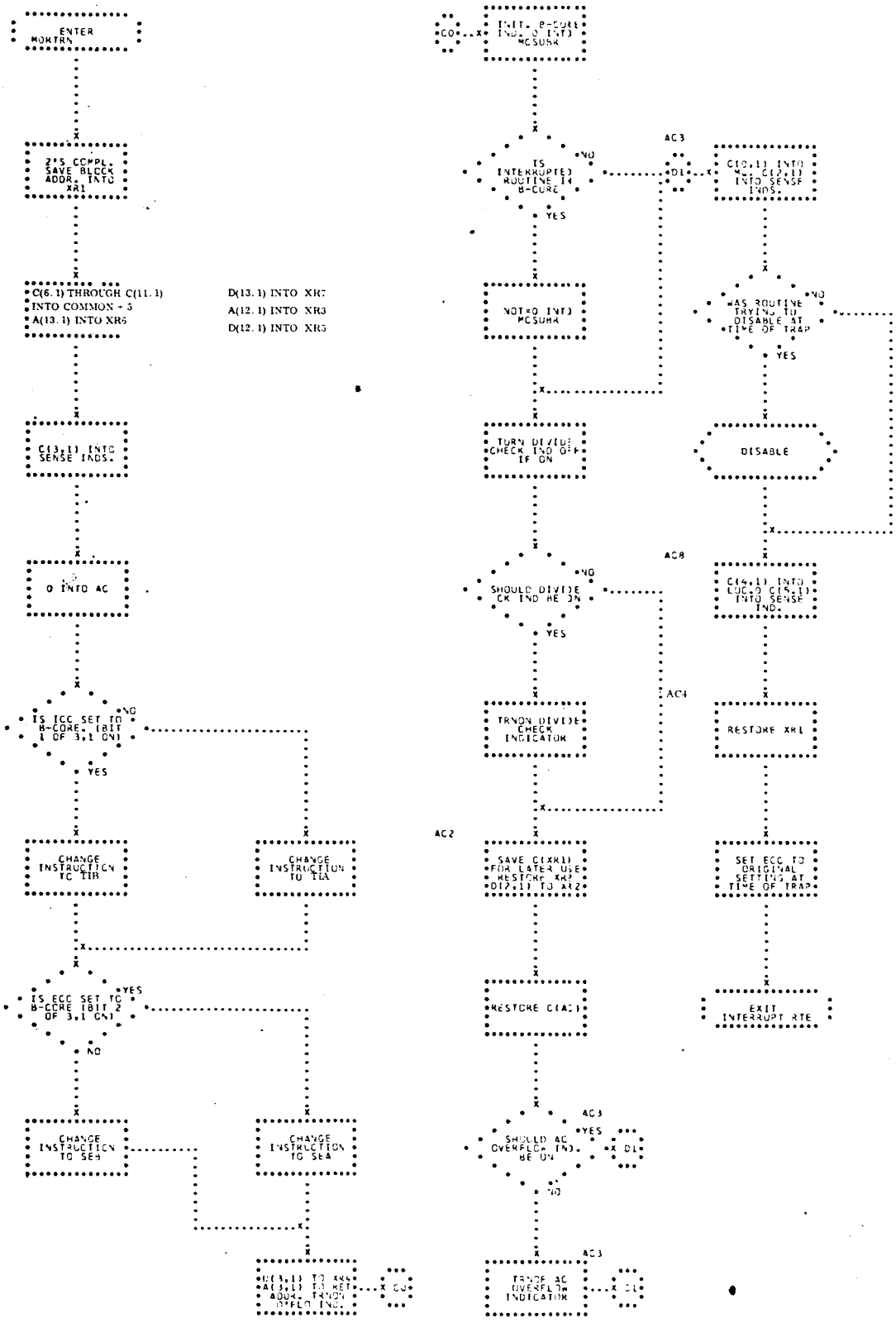
ENTER MORTRN
2'S COMPL. SAVE BLOCK ADDR. INTO XR1
C(6.1) THROUGH C(11.1) INTO COMMON + 5
A(13.1) INTO XR6
D(13.1) INTO XR7
A(12.1) INTO XR3
D(12.1) INTO XR5
C(3,1) INTO SENSE INDS.
0 INTO AC
IS ICC SET TO B-CORE. (BIT 1 OF 3,1 ON)
NO
YES
CHANGE INSTRUCTION TO TIB
CHANGE INSTRUCTION TO TIA
IS ECC SET TO B-CORE (BIT 2 OF 3,1 ON)
YES
NO
CHANGE INSTRUCTION TO SEB
CHANGE INSTRUCTION TO SEA
D(3,1) TO XR4
A(3,1) TO RET ADDR. TRNON OFFLO IND.
C0
INIT. B-CORE IND. 0 INTO MCSUBR
IS INTERRUPTED ROUTINE IN B-CORE
NO
YES
AC3
D1
C(0,1) INTO MC. C(2,1) INTO SENSE INDS.
NOT=0 INTO MCSUBR
WAS ROUTINE TRYING TO DISABLE AT TIME OF TRAP
NO
YES
TURN DIVIDE CHECK IND OFF IF ON
DISABLE
AC8
SHOULD DIVIDE CK IND BE ON
NO
YES
C(4,1) INTO LOC.0 C(5,1) INTO SENSE IND.
AC4
TRNON DIVIDE CHECK INDICATOR
RESTORE XR1
AC2
SAVE C(XR1) FOR LATER USE RESTORE XR2 D(2,1) TO XR2
SET ECC TO ORIGINAL SETTING AT TIME OF TRAP
RESTORE C(AC)
EXIT INTERRUPT RTE
AC3
SHOULD AC OVERFLOW IND. BE ON
YES
D1
NO
AC3
TRNOF AC OVERFLOW INDICATOR
D1

## 7. MODIAG - MAIN CONTROLLER DIAGNOSTIC PROGRAM (MODIAG)

WHEN MOPRIO IS UNABLE TO GIVE CONTROL TO ANY OTHER PROGRAM IN THE GEMINI PROGRAMMING SYSTEM, CONTROL IS GIVEN TO MODIAG AND REMAINS THERE UNTIL A PROGRAM INTERRUPT OCCURS. (SEE FLOWCHART.)

INPUT

A) SENSE SWITCH -

| | |
|---|---|
| SSW 1 | WITH THIS SENSE SWITCH DOWN, LOGGING OF HIGH-SPEED INPUT AND OUTPUT DATA IS SUPPRESSED, OTHERWISE, LOGGING OCCURS. |

OUTPUT

A) COMMUNICATION CELL -

| | |
|---|---|
| MCSWT1 | CONTAINS TRA 0,4 IF LOGGING IS TO BE BYPASSED. OTHERWISE, CONTAINS AXC 0,0 (SIMULATED NO OPERATION) |

B) CORE LOCATION -

| | |
|---|---|
| 3 | THE DCC OR PCC TRAP LOCATION IS SET TO ZERO |
| 10 | THE CHANNEL A TRAP LOCATION IS SET TO ZERO |
| 12 | THE CHANNEL B TRAP LOCATION IS SET TO ZERO |
| 14 | THE CHANNEL C TRAP LOCATION IS SET TO ZERO |

METHOD

THE PRIMARY FUNCTION OF MODIAG IS TO REDUCE THE AMOUNT OF NONCRITICAL DATA WRITTEN ON THE LOG TAPE. THE GEMINI PROGRAMMING SYSTEM, LOADED MINUTES BEFORE LIFTOFF, RECEIVES TEST PATTERNS AND OTHER DATA OVER THE HIGH-SPEED LINES FROM CAPE KENNEDY. THIS DATA IS PROCESSED AND THE RESULTS ARE TRANSMITTED TO THE MISSION CONTROL CENTER FOR DISPLAY.

AFTER DISABLING THE COMPUTER, MODIAG EXAMINES THE SETTING OF SENSE SWITCH 1. IF THIS SWITCH IS DOWN, THE INSTRUCTION TRA 0,4 IS SORTED INTO MCSWT1. IF THE SENSE SWITCH IS UP, THE INSTRUCTION AXC 0,0 (SIMULATED NO OPERATION) REPLACES THE CONTENTS OF MCSWT1. (THE HIGH-SPEED INPUT AND OUTPUT PROCESSOR THEN EXECUTE THE INSTRUCTION IN MCSWT1 TO INHIBIT OR ALLOW EXECUTION OF THE LOGGING SUBROUTINE MSLOGG).

BEFORE HALTING TO AWAIT A PROGRAM INTERRUPT, MORTRN ZEROS OUT THE TRAP LOCATIONS FOR THE DCC OR PCC AND CHANNELS A, B, C, AND SETS INDEX REGISTERS 3,5,6,7 TO PREDETERMINED QUANTITIES.

USAGE

MODIAG RECEIVES CONTROL FROM MOPRIO AND EXITS TO THE LOWER CORE LOCATION SPECIFIED BY THE PROGRAM TRAP.

A) STORAGE REQUIRED - 25 LOCATIONS

B) TIMING (7094) - SSW1 UP, 0.052 MILLISECOND
SSW1 DOWN, 0.054 MILLISECOND

C) MACROS - QENBA, QENBZ

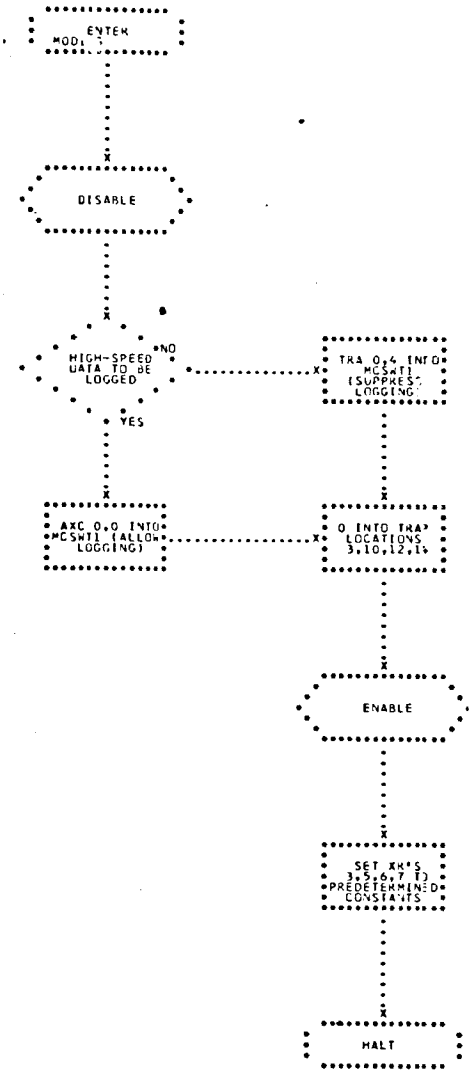
ENTER
MODE
DISABLE
HIGH-SPEED DATA TO BE LOGGED
NO
YES
TRA 0,4 INTO MCSWTI (SUPPRESS LOGGING)
AXC 0,0 INTO MCSWTI (ALLOW LOGGING)
0 INTO TRAP LOCATIONS 3,10,12,14
ENABLE
SET XR'S 3,5,6,7 TO PREDETERMINED CONSTANTS
HALT

## 8. QUEUE - QUEUE MACRO

THE QUEUE MACRO ESTABLISHES THE CALLING SEQUENCE FOR, AND TRANSFERS CONTROL TO, MOQUEU WHICH SERVICES THE QUEUE TABLES. (SEE FLOWCHART.)

INPUT

A) MACRO DEFINITION -

```
QUEUE   MACRO   N,DL
        TSX     BOQUEU 4
        PZE     DL, 0, N
        END
```

B) PARAMETERS -

N — THE PRIORITY/ROUTINE NUMBER WHICH IDENTIFIES THE ROUTINE TO BE QUEUED.

DL — THE LOCATION OF THE WORD TO BE STORED AS AN ENTRY IN THE QUEUE TABLE.

BOQUEU — APPEARS IN BOTH A AND B CORE AND CONTAINS THE INSTRUCTION TIA MOQUEU

THE COMPUTER MUST BE DISABLED DURING THE EXECUTION OF THE QUEUE MACRO.

OUTPUT

CONTROL IS TRANSFERRED TO MOQUEU WITH THE DATA LOCATION (DL) IN THE ADDRESS AND THE PRIORITY/ROUTINE NUMBER (N) IN THE DECREMENT OF THE SECOND WORD OF THE CALLING SEQUENCE. INDEX REGISTER 4 CONTAINS THE 2'S COMPLEMENT OF THE LOCATION COUNTER FOR THE TRANSFER INSTRUCTION.

METHOD

SINCE THE SECOND WORD OF THE CALLING SEQUENCE IS ESTABLISHED DURING THE COMPILATION, QUEUE EXECUTES ONLY ONE INSTRUCTION, A TRANSFER (TSX) TO BOQUEU.

USAGE

ENTRY TO QUEUE HAS NO RESTRICTIONS OTHER THAN THE COMPUTER MUST BE DISABLED, QUEUE EXITS TO BOQUEU 4

A) STORAGE REQUIRED - 2 LOCATIONS

B) TIMING (7094) - 0.003 MILLISECOND

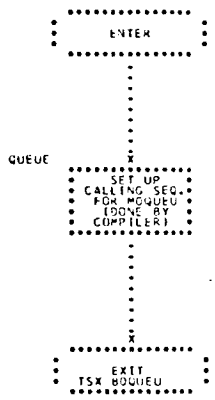
ENTER
QUEUE
SET UP
CALLING SEQ.
FOR MOQUEU
(DONE BY
COMPILER)
EXIT
TSX MOQUEU

## 9. MOQUEU - MAIN CONTROLLER QUEUE PROGRAM (MOQUEU)

FOR SOME ROUTINES IN THE GEMINI REAL TIME SYSTEM, SITUATION EXIST IN WHICH INPUT DATA IS SUPPLIED TO A ROUTINE AT A RATE EXCEEDING THE ROUTINE'S CAPABILITY TO ACCEPT THE DATA OR TO DISPOSE OF THE COMPUTED OUTPUT. FURTHERMORE, A RATE OF OUTPUT COMPUTATIONS IS NOT DESIRABLE SINCE OUTPUT DEVICES FREQUENTLY DO NOT OPERATE AT SPEEDS COMPARABLE TO THOSE OF THE IBM 7094 COMPUTER AND GENERALLY OPERATE ASYNCHRONOUSLY WITH DATA PROCESSING. (SEE FIGURE 1)

TO PRESERVE THIS INPUT, THE QUEUE BLOCKS (OR TABLES) ALLOW FOR THE STACKING OF DATA UNTIL SUCH TIME AS THE RESTRICTIONS OF THE SITUATION PERMIT PROCESSING OR TRANSMISSION. THE ENTRIES OF THE QUEUE BLOCKS ARE STORED BY MOQUEU. (SEE FLOWCHART.)

INPUT

A) TABLES -

DL THE LOCATION OF THE WORD TO BE PLACED IN THE QUEUE BLOCK. (FOR ROUTINES WHOSE INPUT REQUIREMENTS EXCEED ONE CORE LOCATION, DL IS THE ADDRESS OF A BLOCK OF INPUT DATA. FOR THOSE ROUTINES WHOSE INPUT CONSISTS OF DATA CONTAINED WITHIN A SINGLE LOCATION, DL MAY BE THE ACTUAL LOCATION OF THE DATA, THAT IS, THE DATA ITSELF IS CONTAINED IN THE QUEUE TABLE. THE DISTINCTION OF DL IS THE RESPONSIBILITY OF THE ROUTINES WHICH USE QUEUE TABLES.)

TMNMSK A TWENTY-THREE LOCATION TABLE CONTAINING, IN THE FIRST TWENTY-ONE LOCATIONS, OCTAL MASKS USED TO SET EACH OF THE INDICATORS A THROUGH U AND IN THE LAST TWO LOCATIONS, COMPOSITE MASKS USED TO TEST(1) INDICATORS C THROUGH Q AND S THROUGH U AND (2) INDICATORS A AND B.

TMQKEY THE MONITOR QUEUE TABLE CONSISTING OF ONE ENTRY FOR EACH OF THE ROUTINES IN THE PRIORITY LIST IN ORDER BY PRIORITY. THE ADDRESS OF EACH ENTRY CONTAINS THE LOCATION OF THE QUEUE BLOCK FOR THE ROUTINE, THE DECREMENT OF EACH ENTRY CONTAINS A COUNT OF THE CURRENT NUMBER OF ENTRIES IN THE QUEUE BLOCK.

TMQKY2 THE MONITOR QUEUE TABLE CONSISTING OF ONE ENTRY FOR EACH OF THE ROUTINES IN THE PRIORITY LIST IN ORDER OF PRIORITY. THE DECREMENT CONTAINS THE 2'S COMPLEMENT OF TWICE THE MAXIMUM NUMBER OF ENTRIES IN THE QUEUE TABLE FOR THIS ROUTINE.

B) COMMUNICATION CELLS -

MCSUBR NON-ZERO IF THE QUEUING ROUTINE IS IN B-CORE.

C) CONSTANTS -

KOC001 DEC 1

KDC002 PZE 0, 0, 2

D) PARAMETERS -

N ROUTINE NUMBER OF ROUTINE BEING QUEUED

B EQU 2 (INDICATOR B)

OUTPUT

IF THE QUEUE TABLE IS FULL UPON ENTRY TO MOQUEU, THERE IS NO OUTPUT - THE NEW ENTRY IS LOST.

IF THE QUEUE TABLE IS NOT FULL -

A) TABLES -

QUEUE TABLE — TWO ENTRIES ARE MADE IN THE FIRST AVAILABLE LOCATIONS OF THE QUEUE BLOCK. THE FIRST ENTRY CONTAINS THE WORD IN LOCATION DL. THE SECOND ENTRY CONTAINS THE ADDRESS OF THE ENTRY TO MOQUEU FROM THE QUEUING ROUTINE.

TMPRIO — THE B INDICATOR IN THE TMPRIO ENTRY FOR ROUTINE N IS TURNED ON.

TMQKEY — THE COUNT OF THE CURRENT NUMBER OF ENTRIES IN THE QUEUE TABLE, LOCATED IN THE DECREMENT OF THE TMQKEY ENTRY FOR ROUTINE N, IS INCREMENTED BY TWO.

COMMON +5 — DECREMENT CONTAINS LOCATION FROM WHICH ENTRY TO MOQUEU WAS MADE. ADDRESS CONTAINS PRIORITY/ROUTINE NUMBER OF PROGRAM REQUESTING QUEUE, IF ENTRY IS MADE FROM QTSX MACRO, OTHERWISE, ADDRESS IS ZERO.

B) COMMUNCIATION CELL -

MCQUUQ — IN CASE OF QUEUE ERROR (I.E., EITHER THE ROUTINE QUEUED DOES NOT HAVE A QUEUE TABLE OR THE QUEUE TABLE IS FULL) THIS CELL IS SET TO ZERO.

NOTE - NO PROVISION IS MADE BY MOQUEU TO SAVE THE MACHINE CONDITION. THE CONTENTS OF INDEX REGISTERS 1,2,4 AND THE ACCUMULATOR ARE DESTROYED.

METHOD

AFTER INITIALIZING, MOQUEU DETERMINES WHETHER THE QUEUED ROUTINE HAS A QUEUE BLOCK DEFINED FOR IT, IF NOT, AN ERROR INDICATION IS SET AND MOQUEU EXITS TO MSQUUQ.

IF THE QUEUED ROUTINE HAS A QUEUE BLOCK WHICH HAS BEEN FILLED, MSQUUQ IS ENTERED WITH A DIFFERENT ERROR INDICATION. IF NEITHER OF THE ABOVE HOLDS (I.E., THE QUEUE ROUTINE HAS A QUEUE BLOCK WHICH CAN ACCOMODATE ADDITIONAL ENTRIES), THE COUNT OF THE CURRENT NUMBER OF ENTRIES IS UPDATED AND THE ENTRIES ARE PLACED IN THE QUEUE TABLE. AFTER TURNING ON THE READY (B) INDICATOR FOR THE QUEUED ROUTINE, MOQUEU EXITS TO THE QUEUING ROUTINE.

USAGE

MOQUEU IS ENTERED FROM THE QUEUE MACRO AND EXITS EITHER TO THE QUEUING ROUTINE OR TO MSQUUQ.

A) STORAGE REQUIRED - 36 LOCATIONS

B) TIMING (7094) -

1) QUEUE OF ROUTINE WITH NO QUEUE BLOCK, 0.034 MILLISECOND

2) QUEUE OF ROUTINE WITH FULL QUEUE BLOCK, 0.046 MILLISECOND

3) NORMAL QUEUE, 0.080 MILLISECOND

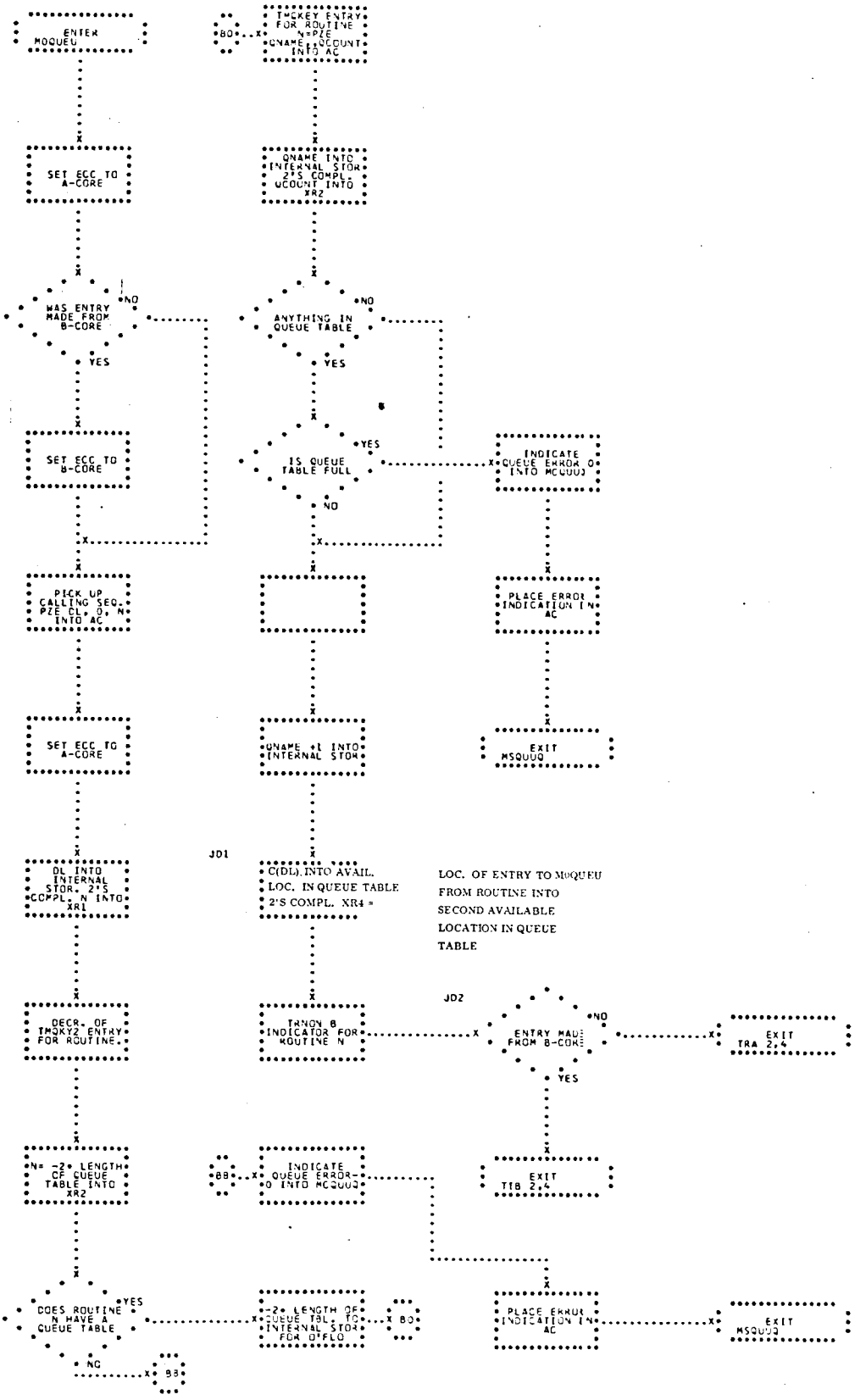
ENTER MOQUEU
B0
TMCKEY ENTRY FOR ROUTINE N=PZE QNAME, UCOUNT INTO AC
SET ECC TO A-CORE
QNAME INTO INTERNAL STOR 2'S COMPL. UCOUNT INTO XR2
WAS ENTRY MADE FROM B-CORE
NO
YES
ANYTHING IN QUEUE TABLE
NO
YES
SET ECC TO B-CORE
IS QUEUE TABLE FULL
YES
NO
INDICATE QUEUE ERROR 0 INTO MCQUUJ
PICK UP CALLING SEQ. PZE DL, 0, N INTO AC
PLACE ERROR INDICATION IN AC
SET ECC TO A-CORE
QNAME +1 INTO INTERNAL STOR
EXIT MSQUUQ
JD1
DL INTO INTERNAL STOR. 2'S COMPL. N INTO XR1
C(DL) INTO AVAIL. LOC. IN QUEUE TABLE 2'S COMPL. XR4 =
LOC. OF ENTRY TO MOQUEU FROM ROUTINE INTO SECOND AVAILABLE LOCATION IN QUEUE TABLE
JD2
DECR. OF TMCKY2 ENTRY FOR ROUTINE.
TRNON B INDICATOR FOR ROUTINE N
ENTRY MADE FROM B-CORE
NO
YES
EXIT TRA 2,4
N= -2+ LENGTH OF QUEUE TABLE INTO XR2
B8
INDICATE QUEUE ERROR-0 INTO MCQUUJ
EXIT TIB 2,4
DOES ROUTINE N HAVE A QUEUE TABLE
YES
NO
B8
-2+ LENGTH OF QUEUE TBL. TO INTERNAL STOR FOR O'FLO
B0
PLACE ERROR INDICATION IN AC
EXIT MSQUUQ

## 10. UNQUE - UNQUEUE MACRO

THE UNQUE MACRO ESTABLISHES THE CALLING SEQUENCE FOR, AND TRANSFERS CONTROL TO MOUNQU. (SEE FLOWCHART)

INPUT

A) MACRO DEFINITION -

```
UNQUE   MACRO   N,DL
        TSX     BOUNQU,4
        PZE     DL,0,N
```

B) PARAMETERS -

N — THE NUMBER WHICH IDENTIFIES THE ROUTINE TO BE UNQUEUED.

DL — THE LOCATION INTO WHICH THE FIRST ENTRY IN THE QUEUE TABLE FOR ROUTINE N IS PLACED.

BOUNQU — APPEARS IN BOTH A AND B CORE AND CONTAINS THE INSTRUCTION TIA MOUNQU

THE COMPUTER MUST BE DISABLED DURING THE EXECUTION OF THE UNQUE MACRO.

OUTPUT

CONTROL IS TRANSFERRED TO MOUNQU WITH THE DATA LOCATION (DL) IN THE ADDRESS AND THE PRIORITY/ROUTINE NUMBER (N) IN THE DECREMENT OF THE SECOND WORD OF THE CALLING SEQUENCE. INDEX REGISTER 4 CONTAINS THE 2'S COMPLEMENT OF THE LOCATION COUNTER FOR THE TRANSFER INSTRUCTION.

METHOD

SINCE THE SECOND WORD OF THE CALLING SEQUENCE IS ESTABLISHED DURING THE COMPILATION, UNQUE EXECUTES ONLY ONE INSTRUCTION, A TRANSFER (TSX) TO BOUNQU.

USAGE

ENTRY TO UNQUE HAS NO RESTRICTIONS OTHER THAN THE COMPUTER MUST BE DISABLED, UNQUE EXITS TO BOUNQU.

A) STORAGE REQUIRED - 2 LOCATIONS

B) TIMING (7094) - 0.003 MILLISECOND

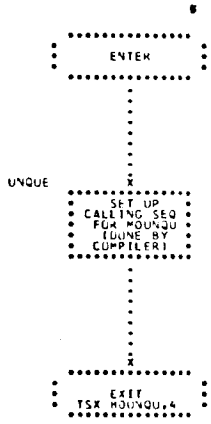
ENTER
UNQUE
SET UP
CALLING SEQ
FOR MOUNQU
(DONE BY
COMPILER)
EXIT
TSX MOUNQU,4

## 11. MOUNQU - MAIN CONTROLLER UNQUEUE PROGRAM (MOUNQU)

MOUNQU SUPPLIES INPUT DATA TO THOSE ROUTINES HAVING QUEUE TABLES. (SEE FLOWCHART)

INPUT

A) TABLES -

TMFMSK — A TWENTY-THREE LOCATION TABLE CONTAINING, IN THE FIRST TWENTY-ONE LOCATIONS, OCTAL MASKS TO RESET TO ZERO EACH OF THE INDICATORS A THROUGH U. THE LAST TWO LOCATIONS CONTAIN COMPOSITE OCTAL MASKS TO RESET TO ZERO (1) INDICATORS C THROUGH Q AND S THROUGH U AND (2) INDICATORS A AND B, RESPECTIVELY.

TMQKEY — THE MONITOR QUEUE TABLE CONSISTING OF ONE ENTRY FOR EACH OF THE ROUTINES IN THE PRIORITY LIST IN ORDER OF PRIORITY. THE ADDRESS OF EACH ENTRY CONTAINS THE LOCATION OF THE QUEUE BLOCK FOR THE ROUTINE, THE DECREMENT OF EACH ENTRY CONTAINS A COUNT OF THE CURRENT NUMBER OF ENTRIES IN THE QUEUE BLOCK.

B) COMMUNICATION CELL -

MCSUBR — NON-ZERO IF UNQUEUING ROUTINE IS IN B-CORE

C) CONSTANTS -

KOCOOO — DEC 0

KOCOO1 — DEC 1

```
        K77777      OCT   77777
        KD7776      PZE   0,0,-2
    D)  PARAMETERS -
        N           PRIORITY/ROUTINE NUMBER OF ROUTINE
                    TO BE UNQUEUED
        B EQU 2     (INDICATOR B)
OUTPUT
    A)  TABLES -
        DL          THE LOCATION INTO WHICH THE FIRST
                    ENTRY IN THE QUEUE TABLE IS PLACED.
                    (FOR ROUTINES WHOSE INPUT REQUIRE-
                    MENTS EXCEED ONE CORE LOCATION. DL
                    CONTAINS THE ADDRESS OF A BLOCK OF
                    DATA. FOR THOSE ROUTINES WHOSE INPUT
                    DATA MAY BE CONTAINED IN A SINGLE
                    LOCATION, DL MAY CONTAIN THE ACTUAL
                    DATA.)
        TMPRIO      THE MONITOR PRIORITY TABLE HAVING
                    THE B INDICATOR FOR ROUTINE N
                    TURNED OFF IF THE QUEUE TABLE IS
                    EMPTIED.
        TMQKEY      THE COUNT OF THE CURRENT NUMBER OF
                    ENTRIES IN THE QUEUE TABLE, LOCATED
                    IN THE DECREMENT OF THE TMQKEY ENTRY
                    FOR ROUTINE N, IS DECREMENTED BY
                    TWO.
        COMMON+5    THE LAST LOCATION OF THE COMMON
                    BLOCK CONTAINS IN THE DECREMENT THE
                    LOCATION FROM WHICH ENTRY TO MOQUEU
                    WAS MADE. THE ADDRESS CONTAINS THE
                    PRIORITY/ROUTINE NUMBER OF PROGRAM
                    REQUESTING QUEUE IF ENTRY MADE THRU
```

QTSX MACRO, OTHERWISE ADDRESS IS ZERO.

B) COMMUNICATION CELL -

MCQUUQ IN CASE OF UNQUEUE ERROR (I.E., THE ROUTINE REQUESTING INPUT DOES NOT HAVE A QUEUE BLOCK OR THE QUEUE BLOCK HAS NO ENTRIES) THIS CELL IS SET NON-ZERO. AC IS SET TO 0 IF THE ENTRY TO MOQUEU WAS MADE FROM THE QUEUE MACRO. IT IS SET TO 77777 IF THE ENTRY WAS MADE FROM THE QTSX MACRO.

METHOD

AFTER INITIALIZING, MOUNQU DETERMINES WHETHER THE ROUTINE REQUESTING INPUT HAS A QUEUE TABLE DEFINED FOR IT AND WHETHER THE QUEUE TABLE CONTAINS INPUT DATA. IF EITHER OF THESE CONDITIONS DOES NOT HOLD, AN ERROR INDICATION IS MADE AND MOUNQU TRANSFERS CONTROL TO MSQUUQ.

IF BOTH CONDITIONS ARE MET, MOUNQU UPDATES THE COUNT OF THE NUMBER OF ENTRIES IN THE QUEUE TABLE AND UN-QUEUES THE FIRST TWO ENTRIES OF THE TABLE INTO DL AND COMMON+5, RESPECTIVELY. IF THE QUEUE BLOCK IS NOW EMPTY, THE B INDICATOR IN THE PRIORITY TABLE IS TURNED OFF. IF THE QUEUE BLOCK IS NOT EMPTY, EACH ENTRY IS ADVANCED TWO LOCATIONS TOWARD THE FRONT OF THE TABLE AND B INDICATOR FOR THIS ROUTINE IS LEFT ON TO INDICATE THAT MORE INPUT DATA REMAINS. IF THE ENTRY TO MOQUEU WAS MADE FROM THE QTSX MACRO, THE ACCUMULATOR IS SET NON-ZERO BEFORE RE-TURN IS MADE TO THE ROUTINE REQUESTING INPUT.

USAGE

MOUNQU IS ENTERED FROM THE UNQUE MACRO. IT EXITS EITHER TO MSQUUQ OR TO THE ROUTINE WHICH REQUESTED THE INPUT DATA.

A) STORAGE REQUIRED - 48 LOCATIONS

B) TIMING (7094) -

1) UNQUEUE FOR ROUTINE WITH NO QUEUE TABLE, 0.034 MILLISECOND

2) UNQUEUE FOR ROUTINE WITH NO ENTRIES IN QUEUE TABLE, 0.038 MILLISECOND

3) ONLY ONE ENTRY IN QUEUE TABLE, 0.096 MILLISECOND

4) MORE THAN ONE ENTRY IN QUEUE TABLE 0.086 + .010 E MILLISECOND, WHERE E = NUMBER OF ENTRIES IN QUEUE BLOCK

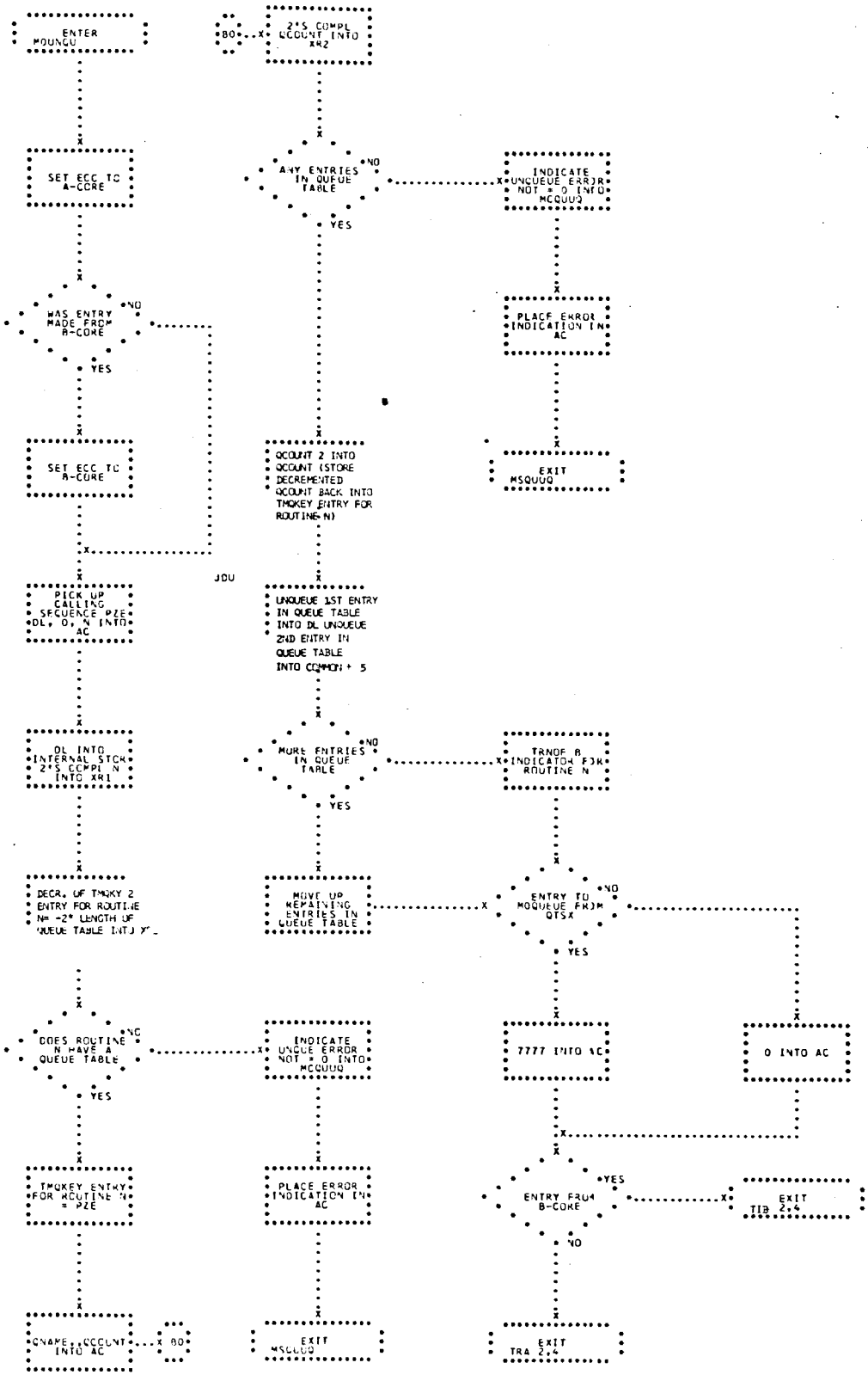
ENTER MOUNQU
B0
2'S COMPL QCOUNT INTO XR2
SET ECC TO A-CORE
ANY ENTRIES IN QUEUE TABLE
NO
YES
INDICATE UNQUEUE ERROR NOT = 0 INTO MCQUUQ
WAS ENTRY MADE FROM A-CORE
NO
YES
PLACE ERROR INDICATION IN AC
SET ECC TO A-CORE
QCOUNT 2 INTO QCOUNT (STORE DECREMENTED QCOUNT BACK INTO TMOKEY ENTRY FOR ROUTINE N)
EXIT MSQUUQ
JDU
PICK UP CALLING SEQUENCE PZE DL, 0, N INTO AC
UNQUEUE 1ST ENTRY IN QUEUE TABLE INTO DL UNQUEUE 2ND ENTRY IN QUEUE TABLE INTO COMMON + 5
DL INTO INTERNAL STOR 2'S COMPL N INTO XR1
MORE ENTRIES IN QUEUE TABLE
NO
YES
TRNOF B INDICATOR FOR ROUTINE N
DECR. OF TMOKY 2 ENTRY FOR ROUTINE N= -2* LENGTH OF QUEUE TABLE INTO X
MOVE UP REMAINING ENTRIES IN QUEUE TABLE
ENTRY TO MOQUEUE FROM QTSX
NO
YES
DOES ROUTINE N HAVE A QUEUE TABLE
NO
YES
INDICATE UNQUE ERROR NOT = 0 INTO MCQUUQ
7777 INTO AC
0 INTO AC
TMOKEY ENTRY FOR ROUTINE N = PZE
PLACE ERROR INDICATION IN AC
ENTRY FROM B-CORE
YES
NO
EXIT TRA 2,4
QNAME, QCOUNT INTO AC
B0
EXIT MSQUUQ
EXIT TRA 2,4

## 12. TRNON - TURN ON MACRO

THE TRNON MACRO TURNS ON (I.E., SETS TO ONE) AN INDICATOR IN THE MONITOR PRIORITY TABLE ENTRY FOR THE REQUESTED ROUTINE. (SEE FLOWCHART.)

INPUT

A) MACRO DEFINITION -

```
TRNON   MACRO   ALPHA,I
        CAL     TMNMSK + ALPHA -1
        ORS     TMPRIO + I - 1
        END
```

B) PARAMETER -

ALPHA THE INDICATOR TO BE TURNED ON. THE INDICATORS ARE LOCATED IN THE FIRST 21 BITS (S, 1 THROUGH 20) OF THE ENTRIES IN THE MONITOR PRIORITY TABLE, TMPRIO. THERE ARE 21 INDICATORS - A THROUGH U. A IS NUMERICALLY EQUAL TO 1 (THE FIRST BIT), B IS EQUAL TO 2 (THE SECOND BIT), THE ....U IS EQUAL TO 21 (THE TWENTY-FIRST BIT).

I THE PRIORITY/ROUTINE NUMBER OF THE PROGRAM FOR WHICH THE INDICATOR IS TO BE TURNED ON.

C) TABLES -

TMNMSK A TWENTY-THREE LOCATION TABLE CONTAINING, IN THE FIRST TWENTY-ONE LOCATIONS, OCTAL MASKS TO SET TO ONE EACH OF THE INDICATORS A THROUGH U. THE LAST LOCATIONS CONTAIN COMPOSITE OCTAL MASKS USED

TO SET - (1) THE INDICATORS C THROUGH Q AND S THROUGH U AND (2) INDICATORS A AND 9.

TMPRIO THE MONITOR PRIORITY TABLE CONTAINING ONE ENTRY FOR EACH ROUTINE IN THE PRIORITY LIST. EACH LOCATION IN THE TABLE CONTAINS IN ITS ADDRESS THE LOCATION OF THE ENTRY POINT FOR THAT ROUTINE. THE REMAINING BITS OF THE ENTRY INDICATE THE CURRENT STATUS OF THE ROUTINE.

OUTPUT

A) TABLE -

TMPRIO AN INDICATOR IS TURNED ON FOR ROUTINE I IN THE PRIORITY TABLE.

METHOD

THE MASK CONTAINING A ZERO IN EVERY BIT POSITION EXCEPT THAT OF THE INDICATOR TO BE TURNED ON IS SUPPLIED BY THE TMNMSK TABLE. THE MASK IS MATCHED BY ''ORING'' THE MASK TO THE ENTRY FOR THE ROUTINE IN THE TMPRIO TABLE AND THE DESIGNATED INDICATOR IS TURNED ON.

USAGE

ENTRY TO TRNON HAS NO RESTRICTIONS, EXIT IS MADE TO THE SECOND LOCATION FOLLOWING THE ENTRY.

A) STORAGE REQUIRED - 2 LOCATIONS

B) TIMING (7094) - 0.008 MILLISECOND

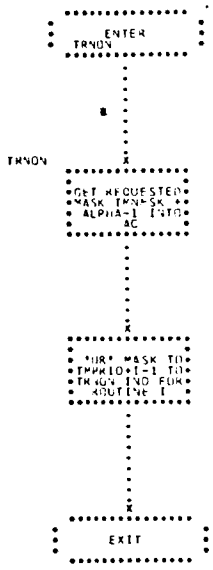
ENTER
TRNON
TRNON
GET REQUESTED
MASK TMNMSK +
ALPHA-1 INTO
AC
'UR' MASK TO
TMPRIO+I-1 TO
TRNON IND FOR
ROUTINE I
EXIT

## 13. TRNOF - TURN OFF MACRO

THE TRNOF MACRO TURNS OFF (I.E., SETS TO ZERO) AN INDICATOR IN THE MONITOR PRIORITY TABLE ENTRY FOR THE REQUESTED ROUTINE. (SEE FLOWCHART.)

INPUT

A) MACRO DEFINITION -

```
TRNOF   MACRO   ALPHA,I
        CAL     TMFMSK+ALPHA - 1
        ANS     TMPRIO + I - 1
        END
```

B) PARAMETERS -

ALPHA THE INDICATOR TO BE TURNED OFF. THE INDICATORS ARE LOCATED IN THE FIRST 21 BITS (S, 1 THROUGH 20) OF THE ENTRIES IN THE MONITOR PRIORITY TABLE, TMPRIO. THERE ARE 21 INDICATORS - A THROUGH U. A IS NUMERICALLY EQUAL TO 1 (THE FIRST BIT), B IS EQUAL TO 2 (THE SECOND BIT), ETC. . . . U IS EQUAL TO 21 (THE TWENTY-FIRST BIT).

I THE PRIORITY/ROUTINE NUMBER OF THE PROGRAM FOR WHICH THE INDICATOR IS TO BE TURNED OFF.

C) TABLES -

TMFMSK A TWENTY-THREE LOCATION TABLE CONTAINING, IN THE FIRST TWENTY-ONE LOCATIONS, OCTAL MASKS TO SET TO ZERO EACH OF THE INDICATORS A THROUGH U. THE LAST TWO LOCATIONS CONTAIN COMPOSITE OCTAL MASKS

USED TO SET (1) THE INDICATORS C THROUGH Q AND S THROUGH U AND (2) INDICATORS A AND B.

TMPRIO THE MONITOR PRIORITY TABLE CONTAINING ONE ENTRY FOR EACH ROUTINE IN THE PRIORITY LIST. EACH LOCATION IN THE TABLE CONTAINS IN ITS ADDRESS THE LOCATION OF THE ENTRY POINT FOR THAT ROUTINE. THE REMAINING BITS ON THE ENTRY INDICATE THE CURRENT STATUS OF THE ROUTINE.

OUTPUT

A) TABLE -

TMPRIO AN INDICATOR IS TURNED OFF FOR ROUTINE I IN THE PRIORITY TABLE.

METHOD

THE MASK CONTAINING A ONE IN EVERY BIT POSITION EXCEPT THAT OF THE INDICATOR TO BE TURNED OFF IS SUPPLIED BY THE TMFMSK TABLE. THE MASK IS MATCHED BY 'ANDING' THE MASK TO THE ENTRY FOR THE ROUTINE IN THE TMPRIO TABLE AND THE DESIGNATED INDICATOR IS TURNED OFF.

USAGE

ENTRY TO TRNOF HAS NO RESTRICTIONS. EXIT IS MADE TO THE SECOND LOCATION FOLLOWING THE ENTRY.

A) STORAGE REQUIRED - 2 LOCATIONS

B) TIMING (7094) - 0.012 MILLISECOND

```
                 ENTER
          TRNOF

TRNOF

          GET REQUESTED
          MASK TMPMSK+
          ALPHA -1 INTO
          AC

          SAVE MASK TO
          TMPRTO+I-1 TO
          TRNOF IND FOR
          ROUTINE I

                 EXIT
```

## 14. QENBA/MYENBA - ENABLE MACRO/ENABLE PROGRAM

THE QENBA MACRO ENABLES THE COMPUTER FOR DATA CHANNEL TRAPS THROUGH THE EXECUTION OF THE MYENBA PROGRAM. THE QENBA MACRO IS USED THROUGHOUT THE GEMINI REAL TIME SYSTEM, BUT GENERALLY FOLLOWS THE COMPLETION OF A ROUTINE FOR WHICH THE COMPUTER IS DISABLED. (SEE QENBA FLOWCHART).

INPUT

A) MACRO DEFINITION -

```
QENBA    MACRO    MYENBA
         XEC
         END
```

B) PROGRAM DEFINITION -

```
MYENBA  ENB     K40007
K40007 - CONSTANT, 000 000 044  017
```

OUTPUT

THE COMPUTER IS ENABLED FOR DATA CHANNEL TRAPS ON CHANNELS A, B, C, D (THE DISK), AND F (THE DCC) AND THE PCC.

METHOD

UPON ENTRY TO MACRO QENBA, PROGRAM MYENBA IS EXECUTED. MYENBA CONSISTS OF AN ENABLE (ENB) FROM A LOCATION IN WHICH BITS 21, 24, 32, 33, 34, AND 35 CONTAIN 1'S. THESE BITS ENABLE CHANNELS A, B, C, D (THE DISK), AND F (THE DCC) AND THE PCC.

USAGE

ENTRY TO QENBA HAS NO RESTRICTIONS, EXCEPT THAT THE MACRO MAY NOT BE USED FROM THE TIME A TRAP OCCURS UNTIL THE COMPLETION OF THE TRAP PROCESSOR. QENBA EXITS TO THE SECOND LOCATION FOLLOWING ENTRY.

A) STORAGE REQUIRED - 1 LOCATION

B) TIMING (7099) - 0.006 MILLISECOND

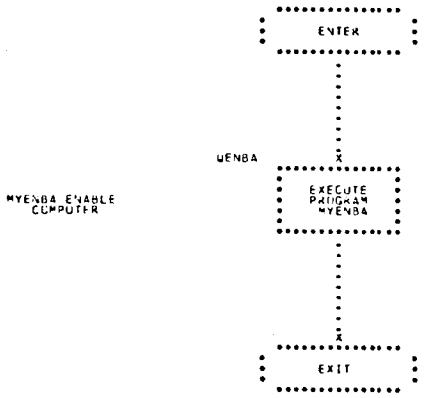
ENTER
UENBA
EXECUTE PROGRAM MYENBA
MYENBA ENABLE COMPUTER
EXIT

## 15. QENBZ/MYENBO - DISABLE MACRO/DISABLE PROGRAM

THE QENBZ MACRO DISABLES THE COMPUTER FROM TRAPPING THROUGH THE EXECUTION OF THE MYENBO PROGRAM. THE QENBZ MACRO IS USED THROUGHOUT THE GEMINI REAL TIME SYSTEM WHENEVER A SERIES OF INSTRUCTIONS MUST BE COMPLETED WITHOUT INTERRUPTION. THE MOST COMMON EXAMPLES OF ROUTINES WHICH RUN DISABLED ARE MSLOGG, MOQUEU, AND MOUNQU. (SEE FLOWCHART)

INPUT

A) MACRO DEFINITION -

```
QENBZ    MACRO
         XEC      MYENBO
         END
```

B) PROGRAM DEFINITION -

```
MYENBO   ENB      K00000
K0C000 - CONSTANT,0
```

OUTPUT

THE COMPUTER IS DISABLED FROM DATA CHANNEL TRAPS.

METHOD

THE PROGRAM MYENBO IS EXECUTED. MYENBO CONSISTS OF AN ENABLE (ENB) FROM A LOCATION CONTAINING ALL ZEROS.

USAGE

ENTRY TO QENBZ HAS NO RESTRICTION AND QENBZ EXITS TO THE FIRST LOCATION FOLLOWING ENTRY.

A) STORAGE REQUIRED - 1 LOCATION

B) TIMING (7094) - 0.006 MILLISECOND

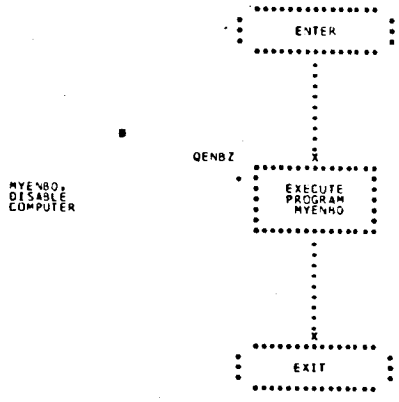
ENTER
QENBZ
MYENBO:
DISABLE
COMPUTER
EXECUTE
PROGRAM
MYENHO
EXIT

## 16. QPSLF/MYPSLF - PRESENT SENSE LINE MACRO/PRESENT SENSE LINE PROGRAM

THE QPSLF MACRO ACTIVATES OR DEACTIVATES THE INDIVIDUAL SUBCHANNELS OF THE DCC THROUGH THE EXECUTION OF MYPSLF PROGRAM. THE QPSLF MACRO IS USED THROUGHOUT THE GEMINI REAL TIME SYSTEM TO INITIATE OR TERMINATE TRANSMISSION THROUGH THE DCC. (SEE FLOWCHART)

INPUT

A) MACRO DEFINITION -

```
QPSLF   MACRO
        XEC     MYPSLF
        END
```

B) PROGRAM DEFINITION -

```
MYPSLF  PSLF    MCACTV
```

(NOTE - PSLF [PRESENT SENSE LINES ON CHANNEL F] IS RECOGNIZED BY THE GEMINI SOS, BUT IS NOT A STANDARD SCAT INSTRUCTION. THE OPERATION CODE FOR PSLF IS -0666.)

MCACTV USED TO ACTIVATE OR DEACTIVATE SUBCHANNELS OF THE DCC. BITS 1-32 CORRESPOND TO SUBCHANNELS 1-32, RESPECTIVELY. A 1 IN BIT POSITION 1 ACTIVATES (TURNS ON) SUBCHANNEL 1 OF THE DCC, A ZERO IN BIT POSITION 2 DEACTIVATES (TURNS OFF) SUBCHANNEL 2 OF THE DCC, ETC. THE 3-BIT OCTAL NUMBER (0-7) CONTAINED IN BITS 33-35 SPECIFIES THE UNIT TERMINAL ADDRESS IN THE

ACTIVATION OF THE TTY OUTPUT SUB-CHANNELS, 10 AND 11. A 1 IN THE S-BIT POSITION OF THE MASK TURNING ON THE 8.3 MILLISECOND CLOCK RESTARTS THE CLOCK FROM ZERO.

OUTPUT

ANY OR ALL OF THE DCC SUBCHANNELS ARE ACTIVATED OR DEACTIVATED ACCORDING TO THE BIT CONFIGURATION OF MCACTV.

METHOD

THE QPSLF MACRO EXECUTES THE SINGLE INSTRUCTION PROGRAM, MYPSLF, WHICH PRESENTS SENSE LINES ON CHANNEL F (THE DCC PHYSICALLY REPLACES DATA CHANNEL F) FROM THE LOCATION MCACTV.

USAGE

ENTRY TO QPSLF HAS NO RESTRICTIONS AND QPSLF EXITS TO THE FIRST LOCATION FOLLOWING ENTRY.

A) STORAGE REQUIRED - 1 LOCATION

B) TIMING (7094) - 0.005 MILLISECOND

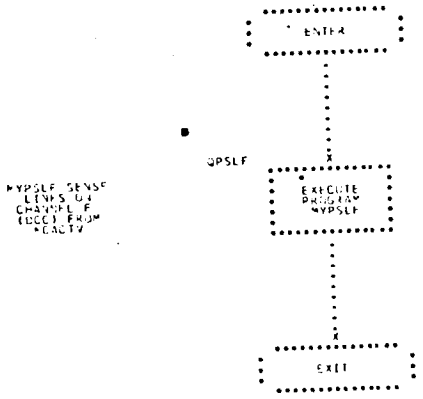
ENTER
QPSLF
MYPSLF SENSE
LINES ON
CHANNEL F
(DCC) FROM
KCACTV
EXECUTE
PROGRAM
MYPSLF
EXIT

## 17. QPSLE/MYPSLE - PRESENT SENSE LINE MACRO/PRESENT SENSE LINE PROGRAM

THE QPSLE MACRO ACTIVATES OR DEACTIVATES THE INDIVIDUAL SUBCHANNELS OF THE MOD II DCC THROUGH THE EXECUTION OF THE MYPSLE PROGRAM. THE QPSLE MACRO IS USED THROUGHOUT THE GEMINI REAL TIME SYSTEM TO INITIATE OR TERMINATE TRANSMISSION THROUGH THE MOD II DCC. (SEE FLOWCHART)

INPUT

A) MACRO -

```
QPSLE   MACRO
        XEC     MYPSLE
        END
```

B) PROGRAM DEFINITION -

MYPSLE PSLE MCACTE

NOTE - PSLE (PRESENT SENSE LINES ON CHANNEL E) IS RECOGNIZED BY THE GEMINI SOS, BUT IS NOT A STANDARD SCAT INSTRUCTION.

MCACTE USED TO ACTIVATE OR DEACTIVATE SUBCHANNELS OF THE MOD II DCC. BITS 1-32 CORRESPOND TO SUBCHANNELS 1-32, RESPECTIVELY. A 1 IN BIT POSITION 1 ACTIVATES (TURNS ON) SUBCHANNEL 1 OF THE MOD II DCC. A 0 BIT POSITION 2 DEACTIVATES (TURNS OFF) SUBCHANNEL 2 OF THE MOD II DCC, ETC.

OUTPUT

ANY OR ALL OF THE MOD II DCC SUBCHANNELS ARE ACTIVATED OR DEACTIVATED ACCORDING TO THE BIT CONFIGURATION OF MCACTE.

METHOD

THE QPSLE MACRO EXECUTES THE SINGLE INSTRUCTION PROGRAM, MYPSLE, WHICH PRESENTS SENSE LINES ON CHANNEL E (THE MOD II DCC PHYSICALLY REPLACES DATA CHANNEL E) FROM THE LOCATION MCACTE.

USAGE

ENTRY TO QPSLE HAS NO RESTRICTIONS AND QPSLE EXITS TO THE FIRST LOCATION FOLLOWING ENTRY.

A) STORAGE REQUIRED - 1 LOCATION

B) TIMING (7094) - 0.005 MILLISECOND

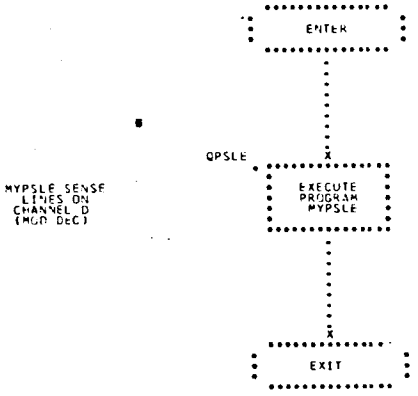
ENTER
QPSLE
MYPSLE SENSE
LINES ON
CHANNEL D
(MCD DEC)
EXECUTE
PROGRAM
MYPSLE
EXIT

## 18. REFR - REFERENCE MACRO

THE REFR MACRO CONSTRUCTS THE BASIC MONITOR TABLES FOR THE GEMINI REAL TIME SYSTEM - TMPRIO, TMFRPR, TMSAVE, TMQKEY, AND TMQKY2.

INPUT

A) MACRO DEFINITION -

```
REFR    MACRO   N, ENTRY, QNAME, PNAME, QLENG
QNAME   PZE     N
        ORG     TMPRIO + N-1
        PZE     ENTRY
        ORG     TMFRPR + N-1
        PZE     N
        ORG     TMSAVE + N-1
        PZE     PNAME,,N
        ORG     TMQKEY + N-1
        PZE     QNAME
        ORG     TMQKY2 + N-1
        PZE     0,,2*QLENG
        ORG     QNAME + 2*QLENG
PNAME   BSS     MNPANL
        END
```

B) PARAMETERS -

N — THE PRIORITY/ROUTINE NUMBER SET UP BY THE QPRIO MACRO DEFINING THE RELATIVE POSITION OF THE ENTRIES FOR THE ROUTINE IN EACH OF THE MONITOR TABLES.

ENTRY — THE LOCATION OF THE FIRST INSTRUCTION OF THE ROUTINE.

QNAME THE SYMBOLIC NAME OF THE QUEUE BLOCK FOR THE ROUTINE.

PNAME THE SYMBOLIC NAME OF THE SAVE BLOCK FOR THE ROUTINE.

QLENG THE LENGTH (IN DECIMAL) OF THE QUEUE BLOCK FOR THE ROUTINE.

OUTPUT

A) TABLES -

TMPRIO THE MONITOR PRIORITY TABLE OF NN CELLS ARRANGED IN ORDER OF PRIORITY. EACH CELL CONTAINS THE ENTRY POINT OF THE ROUTINE IN ITS ADDRESS. THE REMAINING BITS SERVE AS INDICATORS OF THE CURRENT STATUS OF THE ROUTINE.

TMFRPR THE MONITOR PRIORITY REFERENCE TABLE OF NN CELLS ARRANGED IN ORDER OF PRIORITY. EACH CELL CONTAINS IN ITS ADDRESS THE PRIORITY/ROUTINE NUMBER.

TMSAVE THE MONITOR SAVE TABLE OF NN CELLS ARRANGED IN ORDER OF PRIORITY. EACH CELL CONTAINS THE LOCATION OF THE ROUTINE'S SAVE BLOCK IN THE ADDRESS AND THE PRIORITY/ROUTINE NUMBER IN THE DECREMENT.

TMQKEY THE MONITOR QUEUE TABLE, NN CELLS, IN ORDER OF PRIORITY. EACH CELL CONTAINS THE LOCATION OF THE QUEUE BLOCK FOR THE ROUTINE. (THE DECREMENT OF EACH ENTRY IS USED TO KEEP A COUNT OF THE CURRENT NUMBER OF ENTRIES IN THE QUEUE TABLE.)

TMQKY2 THE MONITOR QUEUE LENGTH TABLE, NN CELLS, IN ORDER OF PRIORITY. EACH CELL CONTAINS IN ITS DECREMENT THE 2'S COMPLEMENT OF TWICE THE LENGTH OF THE QUEUE BLOCK FOR THE ROUTINE.

QUEUE BLOCKS ARE GENERATED AS SPECIFIED BY THE INPUT DATA FOLLOWED BY THE 14-WORD SAVE BLOCK FOR THE ROUTINE.

METHOD

THE REFR MACRO IS COMPOSED ENTIRELY OF PSEUDO INSTRUCTIONS AND IS EXECUTED FOR EACH ORDINARY PROCESSOR IN THE GEMINI REAL TIME SYSTEM.

THE PSEUDO INSTRUCTION QNAME PZE N ASSIGNS THE SYMBOLIC LOCATION QNAME TO THE CURRENT VALUE OF THE LOCATION COUNTER. THE LOCATION COUNTER IS INCREMENTED BY TWICE THE NUMBER OF CELLS SPECIFIED BY QLENG, AND THE 14-WORD SAVE BLOCK WITH THE SYMBOLIC NAME PNAME IS GENERATED AS THE LAST INSTRUCTION OF THE MACRO.

THE PSEUDO INSTRUCTION ORG SETS THE LOCATION COUNTER TO THE VALUE SPECIFIED IN THE ADDRESS OF THE INSTRUCTION, THE FOLLOWING PSEUDO INSTRUCTION PZE DEFINES THE CONTENTS OF THE LOCATION THUS SPECIFIED. THE RESULT IS AS FOLLOWS-

```
TMPRIO + N-1   PZE  ENTRY
TMFRPR + N-1   PZE  N
TMSAVE + N-1   PZE  PNAME,,N
TMQKEY + N-1   PZE  QNAME
TMQKY2 + N-1   PZE  0,,-2*QLENG
```

USAGE

REFR DOES NOT ACTUALLY APPEAR IN THE GEMINI REAL TIME SYSTEM AND HAS NO TIMING CONSIDERATIONS. AFTER COMPILATION, THE REFR MACRO EXISTS ONLY IN EFFECT.

## 19. QTSX - REAL TIME SIMULATED TRAP MACRO

QTSX ALLOWS PROGRAM INTERRUPTION AT ANY POINT IN AN ORDINARY PROCESSOR BY TRANSFERRING TO MTQTSX, A TRAP PROCESSOR WHICH SIMULATES ALL THE PROPERTIES OF A HARDWARE GENERATED TRAP. (SEE FLOWCHART.)

INPUT

A) MACRO DEFINITION

```
QTSX    MACRO   N,DL
        STR     DL,,N
        END
```

B) PARAMETERS -

N — THE PRIORITY/ROUTINE NUMBER DEFINING THE RELATIVE POSITION OF THE ENTRIES FOR THE ROUTINE IN EACH OF THE MONITOR TABLES.

C) TABLE -

DL — THE LOCATION OF THE WORD TO BE STORED AS AN ENTRY IN THE QUEUE TABLE.

OUTPUT

THE CURRENT VALUE OF THE LOCATION COUNTER IS STORED IN THE ADDRESS OF LOCATION 0.

METHOD

THE LOCATION OF THE QTSX MACRO PLUS ONE REPLACES THE ADDRESS OF LOCATION 0. THE COMPUTER THEN TAKES ITS NEXT INSTRUCTION FROM LOCATION 2 WHICH CONTAINS TTR MTQTSX, THUS GIVING CONTROL TO THE TRAP PROCESSOR, MTQTSX.

USAGE

QTSX MAY BE ENTERED FROM ANY ORDINARY PROCESSOR AND EXITS TO MTQTSX.

A) STORAGE REQUIRED - 1 LOCATION

B) TIMING (7094) - 0.004 MILLISECONDS

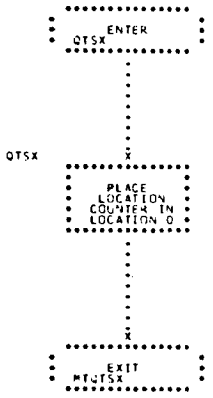
ENTER
QTSX
QTSX
PLACE
LOCATION
COUNTER IN
LOCATION 0
EXIT
MTQTSX

## 20. MTQTSX - SIMULATED TRAP PROCESSOR

MTQTSX PROCESSES ALL SIMULATED (NON-HARDWARE) TRAPS BY COMBINING THE LOGIC OF A PROGRAM TRANSFER WITH THE LOGIC OF A HARDWARE GENERATED TRAP. (SEE FLOWCHART.)

INPUT

A) TABLES -

DL — THE LOCATION OF THE WORD TO BE PLACED IN THE QUEUE TABLE OF THE ROUTINE REQUESTED BY THE EXECUTION OF THE QTSX MACRO.

TMNMSK — A TWENTY-THREE LOCATION TABLE CONTAINING IN THE FIRST TWENTY-ONE LOCATIONS, OCTAL MASKS TO SET TO ONE, EACH OF THE INDICATORS A THROUGH U AND, IN THE LAST TWO LOCATIONS, COMPOSITE OCTAL MASKS TO SET TO ONE - (1) INDICATORS C THROUGH Q AND S THROUGH U, AND (2) INDICATORS A AND B.

B) COMMUNICATION CELLS -

MCSAVE — CONTAINS IN THE ADDRESS, THE LOCATION OF THE SAVE BLOCK FOR THE ROUTINE WHOSE PRIORITY/ROUTINE NUMBER APPEARS IN THE DECREMENT.

MCX4RA — CONTAINS, IN THE ADDRESS THE LOCATION COUNTER AT THE TIME THE QTSX MACRO WAS EXECUTED AND IN THE DECREMENT, THE CONTENTS OF INDEX REGISTER 4.

C) PARAMETERS -

N — PRIORITY/ROUTINE NUMBER OF PROGRAM REQUESTED BY EXECUTION OF QTSX MACRO.

S EQU 19(INDICATOR S)

OUTPUT

A) TABLES -

| | |
|---|---|
| COMMON | ADDRESS CONTAINS PRIORITY/ROUTINE |
| +5 | NUMBER OF ROUTINE EXECUTING QTSX MACRO |
| TMPRIO | THE S INDICATOR IN THE ENTRY OF THE ROUTINE EXECUTING THE QTSX MACRO IS TURNED ON. |

B) COMMUNICATION CELLS -

| | |
|---|---|
| MCSUBR | THE CORE BANK INDICATOR CELL IS SET TO ZERO. |

METHOD

MTQTSX PERMITS AN ORDINARY PROCESSOR TO REQUEST OUTPUT FROM ANOTHER ORDINARY PROCESSOR AND TO SUSPEND ITS OWN OPERATIONS UNTIL THE REQUEST HAS BEEN SERVICED. SINCE THE INPUT DATA TO THE REQUESTED ROUTINE MUST BE PLACED IN A QUEUE TABLE, ONLY THOSE ORDINARY PROCESSORS HAVING QUEUE TABLES DEFINED MAY BE REQUESTED VIA THE QTSX MACRO.

AFTER DISABLING THE COMPUTER FROM ALL TRAPS, MTQTSX EXECUTES THE SAVE MACRO TO SAVE ALL THE MACHINE CONDITIONS. THE PRIORITY/ROUTINE NUMBER OF THE ROUTINE WHICH EXECUTED THE QTSX MACRO IS SAVED IN THE ADDRESS OF THE LAST LOCATION OF COMMON TO IDENTIFY ENTRY TO MOQUEU AS RESULT OF QTSX MACRO. THE SETTING OF THE ECC IS DETERMINED AND THE PRIORITY/ROUTINE NUMBER AND LOCATION OF THE QUEUE WORD FOR THE REQUESTED ROUTINE ARE PICKED UP AND PLACED IN THE CALLING SEQUENCE TO MOQUEU.

FINALLY, AFTER SETTING THE CORE BANK INDICATOR, MCSUBR, TO ZERO TO SHOW A-CORE, MTQTSX SUPPRESSES THE ROUTINE EXECUTING THE QTSX MACRO BY TURNING ON ITS S

INDICATOR. THE QUEUING ROUTINE, MOQUEU, IS ENTERED, AFTER WHICH CONTROL IS TRANSFERRED TO MOPRIO.

USAGE

MTQTSX RECEIVES CONTROL FROM THE QTSX MACRO, IT RELINQUISHES CONTROL TO MOPRIO.

A) STORAGE REQUIRED - 22 LOCATIONS

B) TIMING (7094) - 0.344 MILLISECONDS, MAXIMUM (INCLUDING TIME REQUIRED BY MOSAVE AND MOQUEU.)

C) MACROS - QENBZ, SAVE

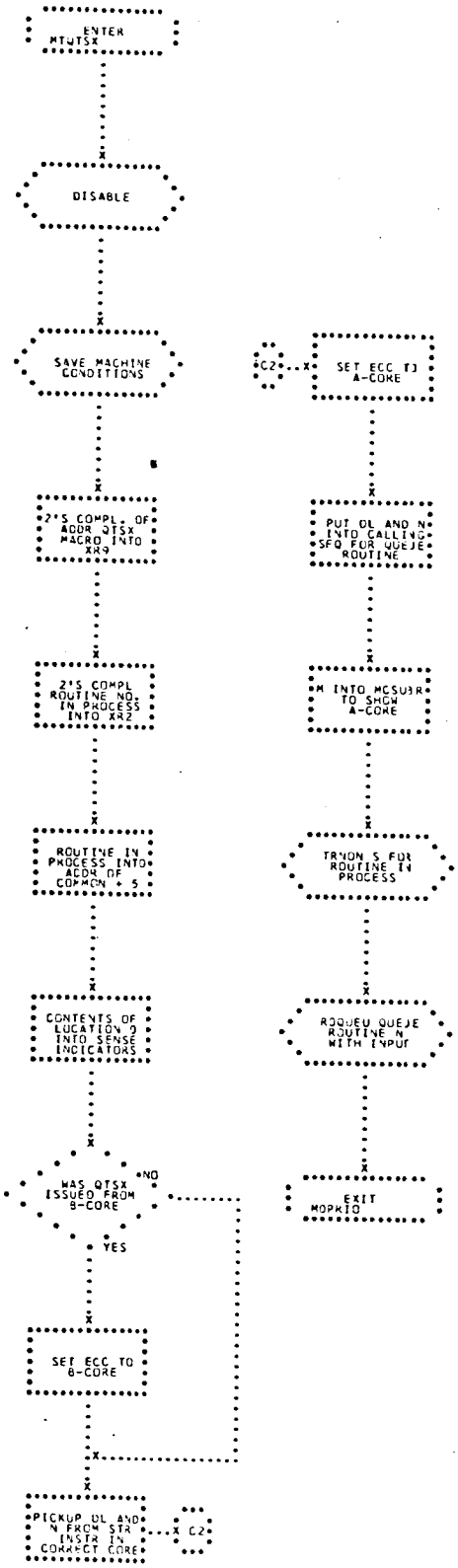
ENTER MTUTSX
DISABLE
SAVE MACHINE CONDITIONS
2'S COMPL. OF ADDR QTSX MACRO INTO XR9
2'S COMPL ROUTINE NO. IN PROCESS INTO XR2
ROUTINE IN PROCESS INTO ADDR OF COMMON + 5
CONTENTS OF LOCATION 0 INTO SENSE INDICATORS
WAS QTSX ISSUED FROM B-CORE
NO
YES
SET ECC TO B-CORE
PICKUP DL AND N FROM STR INSTR IN CORRECT CORE
C2
C2
SET ECC TO A-CORE
PUT DL AND N INTO CALLING SEQ FOR QUEUE ROUTINE
M INTO MCSUBR TO SHOW A-CORE
TRNON S FOR ROUTINE IN PROCESS
REQUEU QUEUE ROUTINE N WITH INPUT
EXIT MOPKIO

## 21. MOPANL - NON-REAL TIME SAVE PROGRAM

MOPANL PRESERVES THE CONTENTS OF COMPUTER REGISTERS AND CORE LOCATIONS 0 THROUGH 14, WHICH ARE DESTROYED BY CORING OPERATIONS. (SEE FLOWCHART.)

INPUT

A) CONSTANT -

KCH200 OCT 200000000000

OUTPUT

A) TABLES -

TMENDS A NINE-LOCATION TABLE USED TO STORE THE CONTENTS OF THE AC, MQ, SENSE INDICATORS, INDEX REGISTERS 1,2,3,5,6,7, DIVIDE CHECK AND OVERFLOW INDICATORS.

TRAP A FIFTEEN-LOCATION TABLE USED TO HOLD THE CONTENTS OF LOCATIONS 0 THROUGH 14.

METHOD

MOPANL FIRST SAVES THE CONTENTS OF INDEX REGISTERS 1,2,3,5,6,7, THE ACCUMULATOR AND MULTIPLIER-QUOTIENT REGISTER. AFTER CLEARING THE ACCUMULATOR, MOPANL CHECKS THE DIVIDE CHECK INDICATOR. A ZERO OR A FOUR IS STORED IN THE PREFIX OF TMENDS DEPENDING ON WHETHER THE INDICATOR IS ON OR OFF, RESPECTIVELY.

THE CONTENTS OF THE SENSE INDICATORS ARE THEN SAVED, AFTER WHICH THE ACCUMULATOR OVERFLOW INDICATOR IS TESTED. IF THIS INDICATOR IS ON, A TWO IS STORED IN THE PREFIX OF TMENDS+8, OTHERWISE, THE LOCATION IS ZEROED OUT.

FINALLY, THE CONTENTS OF THE LOWER CORE TRAP

LOCATION ARE STORED IN THE TABLE, TRAP, AND CONTROL RETURNED TO THE CALLING PROGRAM, MOENDS.

USAGE

MOPANL IS ENTERED FROM MOENDS VIA THE CALLING SEQUENCE -

```
TSX     MOPANL,4
RETURN
```

A) STORAGE REQUIRED - 42 LOCATIONS

B) TIMING (7094) - 0.074 MILLISECOND

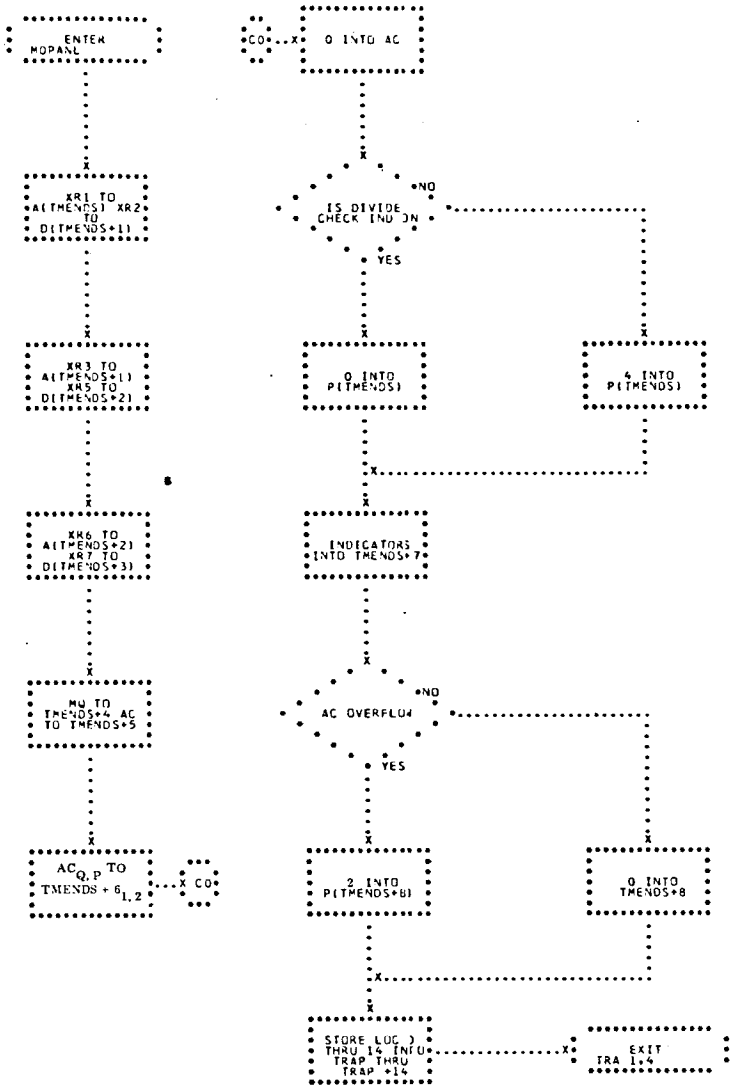
ENTER MOPANL
CO
0 INTO AC
XR1 TO A(TMENDS) XR2 TO D(TMENDS+1)
IS DIVIDE CHECK IND ON
NO
YES
XR3 TO A(TMENDS+1) XR5 TO D(TMENDS+2)
0 INTO P(TMENDS)
4 INTO P(TMENDS)
XR6 TO A(TMENDS+2) XR7 TO D(TMENDS+3)
INDICATORS INTO TMENDS+7
MQ TO TMENDS+4 AC TO TMENDS+5
AC OVERFLOW
NO
YES
AC Q, P TO TMENDS + 6 1, 2
CO
2 INTO P(TMENDS+8)
0 INTO TMENDS+8
STORE LOC ) THRU 14 INTO TRAP THRU TRAP +14
EXIT TRA 1,4

## 22. MOENDS - MAIN ENDING PROGRAM

MOENDS TERMINATES THE REAL-TIME OR SIMULATED PROCESSING OF THE GEMINI PROGRAMMING SYSTEM AND SETS UP CONDITIONS FOR A SYSTEM DUMP.

THE FLOW CHART FOR MOENDS IS SHOWN.

INPUT

A) COMMUNICATION CELLS -

MCOPTI CONTAINS A 1 IN ITS DECREMENT AND IS USED TO SELECT OPTION 1 ON THE SANBORN PLOTTERS. OPTION 1 IS SELECTED TO STOP THE PAPER IN PLOTTERS WHICH MAY STILL BE FEEDING.

MCLTPI CONTAINS A WRITE SELECT OF THE LOG TAPE.

MCWWWV CONTAINS THE CURRENT GMT IN 8-1/3 MILLISECONDS (UPDATED EVERY MINUTE) DURING AN ACTUAL MISSION. DURING A SIMULATED MISSION, MCWWWV IS NOT USED AS A TIME CELL AND, THEREFORE, MAY BE USED TO DETERMINE WHETHER THE PROGRAM IS RUNNING IN AN ACTUAL OR SIMULATED MISSION. IN A SIMULATED MISSION, THERE IS NO CHANNEL C RESTART TAPE AND MOENDS DOES NOT ATTEMPT TO WRITE AN EOF ON THE CHANNEL C RESTART TAPE.

B) CONSTANTS -

KOOOOO DEC 0

C) PARAMETERS -

MUREST PARAMETER DESIGNATING THE UNIT TAPE ADDRESS OF THE RESTART TAPE (9).

D) SUBROUTINES -

1) MOPANL SAVES MACHINE REGISTERS FOR DUMPING

2) PRINT PROVIDES ON-LINE PRINTING, THE CALLING SEQUENCE IS -

```
ALPHA      TSX    PRINT,4
ALPHA+1    PZE    LOC,,N
```

WHERE N IS THE NUMBER OF BCD CHARACTERS TO BE PRINTED (N CAN BE ANY SIZE). LOC IS THE LOCATION OF THE BCD INFORMATION TO BE PRINTED.

E) TAPE - B4 TAPE IS READ TO OBTAIN MXDUMP FROM FILE 4.

OUTPUT

A) TABLE -

TMENDS TABLE USED BY MOPANL TO SAVE THE CONTENTS OF COMPUTER REGISTERS. MOENDS SAVES IR4 IN THE DECREMENT OF TMENDS BEFORE TRANSFERRING TO MOPANL.

B) AC -

ADDRESS CONTAINS THE LOCATION OF TMCORE.
DECREMENT CONTAINS THE LOCATION OF TMENDS.
(MXDUMP CANNOT REFERENCE THESE SYMBOLICALLY SINCE IT IS NOT INCLUDED IN THE SYSTEM COMPILATION.)

C) MQ -

CONTAINS THE FIRST WORD OF THE DISK SEEK COMMAND GIVING THE TRACK ON WHICH UPPER A CORE HAS BEEN WRITTEN.

D) DISK TRACK 9000 OR 9400 MODULE 1 -

CONTAINS UPPER HALF OF A CORE 16384 TO 32767.
(MXDUMP RESIDES THERE.)

METHOD

A) ENTRY -

MOENDS RECEIVES CONTROL FROM A TRANSFER INSTRUCTICN IN LOCATION 32767 WHEN A SYSTEM RUN IS TO BE TERMINATED. THIS TRANSFER IS GIVEN CONTROL FROM MSUERR AS A RESULT OF MTHFSC RECOGNIZING A CONSOLE REQUEST FOR A DUMP. THERE MAY ALSO BE A MANUAL TRANSFER TO 52767.

ON ENTRY, MOENDS DISABLES THE COMPUTER AND DEACTIVATES THE SUBCHANNELS OF THE DCC. MOPANL THEN SAVES THE MACHINE REGISTERS WHICH WILL BE GIVEN IN THE DUMP. OPTION 1 IS SELECTED ON THE SANBORN PLOTTERS. EOF MARKS ARE WRITTEN ON THE LOG TAPE AND RESTART TAPES.

B) DISK WRITING -

UPPER A CORE, 16384 TO 32767, IS WRITTEN ONTO DISK TRACK 9000 MODULE 1. IF FIVE ATTEMPTS DO NOT PRODUCE A SUCCESSFUL WRITE, THE TRACK IS RECALIBRATED. IF FIVE MORE ATTEMPTS STILL PRODUCE ERROR, TRACK 9400 MODULE 1 IS TRIED AND RECALIBRATED IF NECESSARY. IF THERE IS STILL ERROR, A MESSAGE IS PRINTED ON-LINE AND PROCESSING CONTINUES.

C) B4 READING -

AFTER UPPER A CORE IS WRITTEN OUT, MXDUMP IS READ FROM THE 4TH FILE OF THE B4 TAPE. TWENTY ATTEMPTS ARE MADE TO READ A REDUNDANT TAPE. WHEN THE FIRST 10 REDUNDANCIES ARE ENCOUNTERED, THE TAPE IS BACKSPACED TWO RECORDS AND SKIPPED FORWARD ONE RECORD BEFORE READING IS ATTEMPTED AGAIN. IF THERE ARE 10 MORE REDUNDANCIES, THE

TAPE IS BACKSPACED THREE RECORDS AND SKIPPED FORWARD TWO BEFORE REREADING. IF ALL ATTEMPTS TO CLEAN THE TAPE FAIL, A MESSAGE ''PERMANENT REDUNDANCY ON B4. REPLACE TAPE'' IS PRINTED ON-LINE, AND THE PROGRAM HALTS FOR OPERATOR ACTION. THE NEW TAPE IS THEN READ IN THE SAME MANNER.

D) EXIT -

WHEN MXDUMP HAS BEEN SUCCESSFULLY READ INTO CORE THE AC AND MQ ARE LOADED. CONTROL IS THEN TRANSFERRED TO MXDUMP AT 20000.

USAGE

MOENDS IS ENTERED FROM A TRANSFER AT 32767. IT EXITS TO MXDUMP.

A) STORAGE REQUIRED - 160 LOCATIONS

B) TIME REQUIRED -

MINIMUM - APPROXIMATELY 317.99 MILLISECONDS

MAXIMUM - APPROXIMATELY 21.5 SECONDS PLUS OPERATOR ACTION.

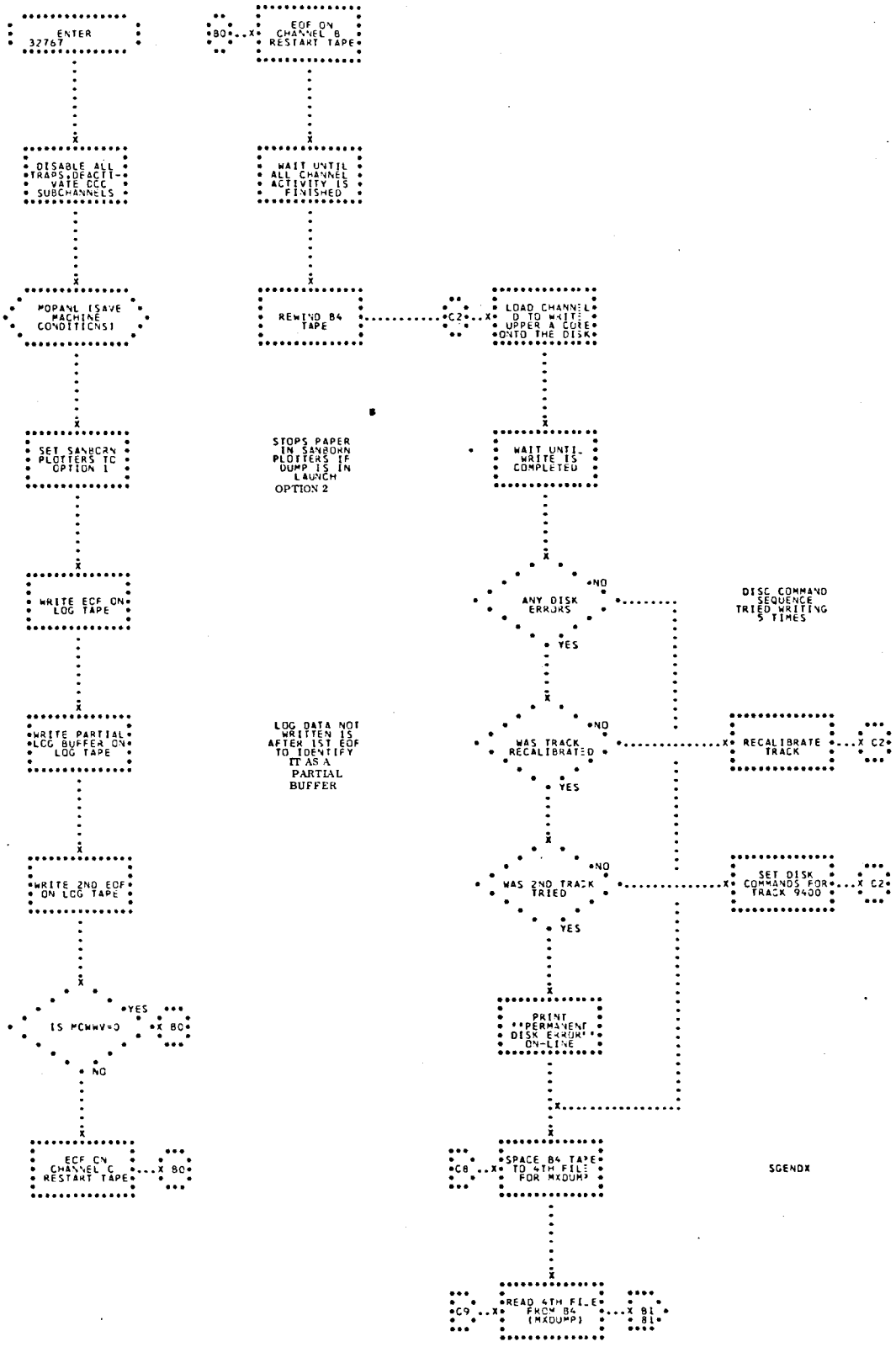
ENTER 32767
B0
EOF ON CHANNEL B RESTART TAPE
DISABLE ALL TRAPS,DEACTI-VATE CCC SUBCHANNELS
WAIT UNTIL ALL CHANNEL ACTIVITY IS FINISHED
MOPANL (SAVE MACHINE CONDITIONS)
REWIND B4 TAPE
C2
LOAD CHANNEL D TO WRITE UPPER A CORE ONTO THE DISK
SET SANBORN PLOTTERS TO OPTION 1
STOPS PAPER IN SANBORN PLOTTERS IF DUMP IS IN LAUNCH OPTION 2
WAIT UNTIL WRITE IS COMPLETED
WRITE EOF ON LOG TAPE
ANY DISK ERRORS
NO
YES
DISC COMMAND SEQUENCE TRIED WRITING 5 TIMES
WRITE PARTIAL LOG BUFFER ON LOG TAPE
LOG DATA NOT WRITTEN IS AFTER 1ST EOF TO IDENTIFY IT AS A PARTIAL BUFFER
WAS TRACK RECALIBRATED
RECALIBRATE TRACK
C2
WRITE 2ND EOF ON LOG TAPE
WAS 2ND TRACK TRIED
SET DISK COMMANDS FOR TRACK 9400
C2
IS MCWWV=0
YES
B0
NO
PRINT "PERMANENT DISK ERROR" ON-LINE
EOF ON CHANNEL C RESTART TAPE
B0
C8
SPACE B4 TAPE TO 4TH FILE FOR MXDUMP
SGENDX
C9
READ 4TH FILE FROM B4 (MXDUMP)
B1
B1

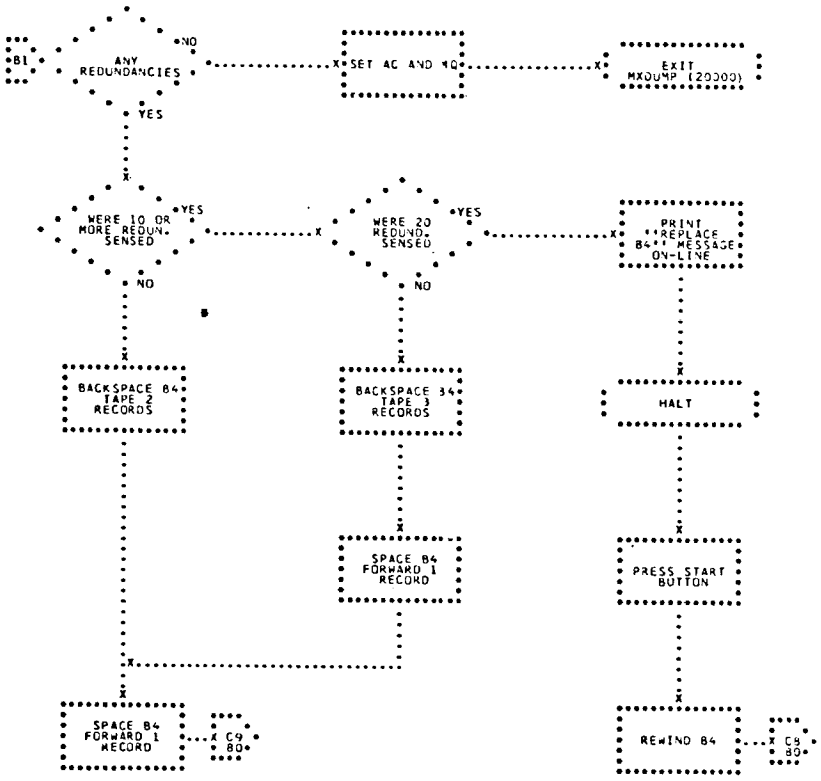
B1
ANY REDUNDANCIES
NO
YES
SET AC AND MQ
EXIT MXDUMP (20000)
WERE 10 OR MORE REDUN. SENSED
YES
NO
WERE 20 REDUND. SENSED
YES
NO
PRINT "REPLACE B4" MESSAGE ON-LINE
BACKSPACE B4 TAPE 2 RECORDS
BACKSPACE 34 TAPE 3 RECORDS
HALT
SPACE B4 FORWARD 1 RECORD
PRESS START BUTTON
SPACE B4 FORWARD 1 RECORD
C9 80
REWIND B4
C9 80

## 23. DATA COMMUNICATIONS CHANNEL AND PROGRAM CONTROL CONSOLE INPUT CONTROL

THE DATA COMMUNICATIONS CHANNEL (DCC) COUPLES BOTH REAL-TIME DATA AND ASSOCIATED TIMING SIGNALS TO THE GEMINI PROGRAMMING SYSTEM. ALL REAL-TIME INPUT USES AN INTERNAL TRAPPING FEATURE OF THE IBM 7094, I.E., THE COMPUTER PROGRAM MAY BE INTERRUPTED BY THE DCC. ALL INTERRUPTS PRODUCED BY THE DCC ARE INTERPRETED BY THE REAL-TIME CHANNEL MAIN CONTROLLER PROGRAM, MORTCC. THIS CONTROLLER EXECUTES THE SAVE MACRO, WHICH USES THE MAIN CONTROLLER SAVE PROGRAM, MOSAVE, TO PRESERVE THE CONDITION OF THE INTERRUPTED PROGRAM. MORTCC THEN TRANSFERS CONTROL TO A MONITOR PROCESSOR APPROPRIATE FOR PROCESSING THE INPUT INFORMATION.

THE MONITOR PROGRAMS WHICH CONTROL DCC INPUT ARE DESCRIBED IN DETAIL IN THE FOLLOWING SECTIONS AND MAY BE DIVIDED INTO FOUR GROUPS -

A) HIGH-SPEED INPUT PROGRAMS THAT CONTROL DATA DURING THE LAUNCH PHASE.

B) LOW-SPEED INPUT PROGRAMS THAT CONTROL DATA DURING THE ORBIT AND REENTRY PHASES.

C) TIMING CONTROL PROGRAMS THAT ARE USED THROUGHOUT THE GEMINI MISSION, WITH THOSE PROGRAMS INTIMATELY RELATED TO TIME PERIODS BUT NOT READILY CLASSIFIED IN OTHER PARTS OF THIS MANUAL.

D) PROGRAM WHICH ACCEPTS CONTROL FOLLOWING AN ERRONEOUS DCC TRAP.

## 24. HIGH-SPEED INPUT

FROM THE MOMENT OF LIFTOFF UNTIL THE GO/NO-GO DECISION IS MADE BY THE LAUNCH PROGRAMS AFTER THE TERMINATION OF POWERED FLIGHT, PRIMARY INPUT DATA TO THE GEMINI PROGRAMMING SYSTEM IS TRANSMITTED FROM CAPE KENNEDY TO THE GODDARD COMMUNICATIONS CENTER DIRECTLY OVER HIGH-SPEED LINES. DATA ENTERS THE COMPUTERS IN REAL TIME VIA SUBCHANNELS 1 AND 2 OF THE DCC. BOTH SUBCHANNELS RECEIVE DATA OVER DUPLEXED LINES AT A RATE OF 1000 BITS PER SECOND, AND TWO TRANSMISSION CYCLES ARE REQUIRED TO TRANSMIT ONE COMPLETE MESSAGE FRAME - A FIRST AND SECOND SUBFRAME. BOTH SUBFRAMES ARE SENT IN DUPLICATE, REFERRED TO AS THE SUBFRAME AND THE SUBFRAME IMAGE, OVER DUPLEXED LINES TO ENSURE RELIABILITY. THE FIRST SUBFRAME CONTAINS TELEMETRY INFORMATION AND OTHER DISCRETE SIGNALS. THE REMAINDER OF THE FIRST SUBFRAME AND THE ENTIRE SECOND SUBFRAME CONSIST OF IDENTIFICATION FLAGS, VALIDITY BITS, PARITY CHECKS, AND TRACKING DATA (COMPUTED POSITION AND VELOCITY COMPONENTS WITH THE ASSOCIATED TIME - ONE SET OF VECTORS PER COMPLETE FRAME).

AFTER SPACECRAFT SEPARATION (SPS) AND POWERED FLIGHT TERMINATION, HIGH-SPEED DATA FROM THE RADARS AT BERMUDA TRACKING STATIONS IS ACCEPTED BY THE GODDARD COMMUNICATIONS CENTER ON SUBCHANNELS 5 AND 6 OF THE DCC. BOTH SUBCHANNELS RECEIVE DATA AT A RATE OF 2000 BITS PER SECOND, AND EACH TRANSMISSION CONTAINS A COMPLETE MESSAGE - ONE READING OF RANGE, AZIMUTH, AND ELEVATION FOR THE AN/FPS-16 RADAR, AND ANOTHER FOR THE VERLORT RADAR. THE REMAINDER OF THE MESSAGE CONSISTS OF UNUSED TELEMETRY BITS AND TWO ERROR CHECK WORDS.

SUBCHANNEL 1 INPUT

SUBCHANNEL 1 HAS THE HIGHEST PRIORITY OF THE DCC CHANNELS AND RECEIVES INPUT FROM THE BURROUGHS-GENERAL ELECTRIC (B-GE) GUIDANCE COMPUTER SYSTEM AT CAPE KENNEDY. THE B-GE COMPUTER, OPERATING IN CONJUNCTION WITH RADAR AND TELEMETRY DATA RECEIVED FROM THE LAUNCH VEHICLE, TRACKS A BEACON IN THE VEHICLE, CHECKS THE FLIGHT TRAJECTORY, AND GENERATES THE COMMANDS NECESSARY TO ACHIEVE OPTIMUM LAUNCH AND INSERTION PERFORMANCE.

MONITOR CONTROL OF SUBCHANNEL 1 (SEE HIGH-SPEED INPUT FROM CAPE KENNEDY B-GE DATA FLOW DIAGRAM) BEGINS WITH THE DCC TRAP, WHICH SIGNALS THE ARRIVAL OF ONE SUBFRAME OF THE MESSAGE FRAME. THIS SUBFRAME, RECEIVED IN DUPLICATE, CONSISTS OF 96 BITS IN TWELVE 8-BIT BYTES. EACH BYTE IS STORED RIGHT-JUSTIFIED IN A COMPUTER WORD. THE TRAP GIVES CONTROL (VIA MORTCC) TO THE MONITOR B-GE HIGH-SPEED INPUT TRAP PROCESSOR, MTHSGB. THE PROCESSOR MOVES THE DATA FROM THE INPUT BLOCKS OF SUBCHANNEL 1, GENERATES A LOGGING TIME TAG, AND INFORMS MOPRIO THAT NEW DATA IS AVAILABLE FOR PROCESSING BY IOHSGB.

WHEN PRIORITY CONDITIONS PERMIT - THE HIGH-SPEED OUTPUT PROCESSORS, THE LAUNCH/ABORT OUTPUT COMPUTATIONS PROGRAM, AND IOHS09 (BECAUSE SUBCHANNEL 2 HAS A FASTER INPUT CYCLE THAN SUBCHANNEL 1) HAVE HIGHEST PRIORITY - MOPRIO ENTERS THE B-GE INPUT PROCESSING PROGRAM VIA THE MONITOR PREFIX MPHSGB. MPHSGB LOGS THE INPUT DATA AND TRANSFERS CONTROL TO IOHSGB.

IOHSGB PROCESSES DATA AND THEN TRANSFERS CONTROL TO EITHER OF TWO MONITOR SUFFIXES, MFHSGB OR MFFSGB. AFTER ONE COMPLETE FRAME (TWO SUBFRAMES) HAS BEEN PROCESSED, IOHSGB EXITS TO ITS RADAR DATA SUFFIX MFHSGB. THIS SUF-

FIX, PRIMARILY CONCERNED WITH DATA FLOW, DETERMINES WHETHER THE INPUT DATA WAS ACCEPTED BY IOHSGB. IF THE DATA WAS ACCEPTABLE, MFHSGB EXAMINES THE CELL MCLFTM FOR THE INDICATION OF LIFTOFF. FURTHERMORE, THE LAUNCH PROCESSING PROGRAMS (OTHER THAN INPUT PROGRAMS) ARE NOT GIVEN CONTROL UNTIL THE TIME OF LIFTOFF IS AVAILABLE TO THE SYSTEM. MFHSGB ALSO SETS PRIORITY INDICATORS FOR THE CONTROL OF LAUNCH PROCESSING.

WHEN INPUT DATA IS A FIRST SUBFRAME, IOHSGB EXITS TO ITS TELEMETRY SUFFIX MFFSGB. THIS SUFFIX EXAMINES THE TELEMETRY TO SEE IF THERE HAS BEEN ANY CHANGE SINCE THE LAST SEQUENCE WAS PROCESSED. IF SO, MFFSGB USES SUBROUTINE IITPRO TO SET APPROPRIATE TELEMETRY CELLS FOR THE SYSTEM.

SUBCHANNEL 2 INPUT

SUBCHANNEL 2, THE SECOND HIGH-SPEED SUBCHANNEL OF THE DCC, RECEIVES INPUT FROM THE IMPACT PREDICTOR (IP) 3600 COMPUTER. THIS INPUT DATA, AS WITH THE B-GE DATA, IS MULTIPLEXED WITH THE SPACECRAFT TELEMETRY AND DISCRETE EVENT INFORMATION, A COMPLETE MESSAGE OF THE FIRST AND THE SECOND SUBFRAMES, IN DUPLICATE, IS TRANSMITTED TO GSFC EVERY 400 MILLISECONDS. THE IP 3600 PROCESSED DATA, WHICH MAY ORIGINATE EITHER FROM THE AZUSA, MISTRAM VALK, FPQ-6 OR AN/FPS-16 TRACKING SYSTEMS, CONSISTS OF AN R AND V VECTOR WITH AN ASSOCIATED TIME.

THE MONITOR CONTROL OF SUBCHANNEL 2 INPUT (SEE HIGH-SPEED INPUT FROM CAPE KENNEDY IP3600 DATA FLOW DIAGRAM) IS SIMILAR TO THAT OF SUBCHANNEL 1 AND BEGINS WITH THE DCC TRAP WHICH SIGNALS THE ARRIVAL OF ONE SUBFRAME OF THE MESSAGE FRAME. THIS SUBFRAME, RECEIVED IN DUPLICATE, CONSISTS OF 96 BITS IN TWELVE 8-BIT BYTES. EACH BYTE IS

RIGHT-JUSTIFIED IN A COMPUTER WORD. THE TRAP GIVES CONTROL (VIA MORTCC) TO THE MONITOR IP 3600 HIGH-SPEED INPUT TRAP PROCESSOR, MTHS09. THE PROCESSOR MOVES THE DATA FROM THE INPUT BLOCKS OF SUBCHANNEL 2, GENERATES A LOGGING TIME TAG, AND INFORMS MOPRIO THAT NEW DATA IS AVAILABLE FOR PROCESSING BY THE IP 3600 INPUT PROCESSING PROGRAM, IOHS09.

WHEN PRIORITY CONDITIONS PERMIT, MOPRIO ENTERS IOHS09 VIA THE MONITOR PREFIX, MPHS09. MPHS09 LOGS THE INPUT DATA AND TRANSFERS CONTROL TO IOHS09. IOHS09 PROCESSES THE INPUT AND TRANSFERS CONTROL TO EITHER OF TWO MONITOR SUFFIXES, MFHS09 OR MFFS09. AFTER ONE COMPLETE FRAME (TWO SUBFRAMES) HAS BEEN PROCESSED, IOHS09 EXITS TO ITS RADAR DATA SUFFIX, MFHS09. THIS SUFFIX, PRIMARILY CONCERNED WITH DATA FLOW, SETS PRIORITY INDICATORS FOR THE CONTROL OF LAUNCH PROCESSING.

WHEN INPUT DATA IS A FIRST SUBFRAME, IOHS09 EXITS TO ITS TELEMETRY SUFFIX, MFFS09. THIS SUFFIX EXAMINES THE TELEMETRY TO SEE IF THERE HAS BEEN ANY CHANGE SINCE THE LAST SEQUENCE WAS PROCESSED. IF SO, MFFS09 USES SUBROUTINE IITPRO TO SET APPROPRIATE TELEMETRY CELLS.

SUBCHANNELS 5 AND 6 OF THE DCC RECEIVE INPUT FROM THE BERMUDA VERLORT AND AN/FPS-16 RADARS. THE COLLECTION OF BERMUDA DATA FOR PROCESSING IN THE HOLD PHASE BEGINS AT $t_{bar}$ WHICH MAY BE ONE OF THE FOLLOWING - SECO + 5 SECONDS, SSCO + 4.5 SECONDS, OR AAA + 4.5 SECONDS.

CONTROL OF INPUT OVER SUBCHANNELS 5 AND 6 (SEE HIGH-SPEED INPUT FROM BERMUDA VERLORT AND AN/FPS-16 RADAR DATA FLOW DIAGRAM) BEGINS WITH THE DCC TRAP WHICH SIGNALS THE ARRIVAL OF DATA. DATA CONSISTS OF 192 BITS IN TWELVE 16-BIT BYTES, WHICH ARE SEQUENTIALLY DIVIDED BY THE DCC INTO 24 WORDS OF 8-BIT BYTES. EACH BYTE IS

RIGHT-JUSTIFIED IN A COMPUTER WORD. THE INPUT MESSAGE CONTAINS ONE OBSERVATION FROM THE AN/FPS-16 RADAR (RANGE, AZIMUTH, AND ELEVATION) AND ONE OBSERVATION FROM THE VERLORT RADAR (RANGE, AZIMUTH, AND ELEVATION), WITH THE ASSOCIATED TIME TAG, ON-TRACK INDICATORS AND BERMUDA AND GSFC ERROR CODES. THE TRAP GIVES CONTROL (VIA MORTCC) TO THE MONITOR BERMUDA HIGH-SPEED TRAP PROCESSOR FOR SUB-CHANNEL 5 (MTHSB5) OR FOR SUBCHANNEL 6 (MTHSB6) WHICH REPACKS THE DATA INTO THE ORIGINAL 12-WORD FORMAT, GENERATES THE LOGGING TIME TAG, QUEUES IOHSBD WITH THE NEW DATA, AND INFORMS MOPRIO THAT NEW DATA IS AVAILABLE FOR PROCESSING BY IOHSBD. (BERMUDA HIGH-SPEED DATA FORMATS ARE LISTED FOLLOWING THE DATA FLOW DIAGRAMS.)

WHEN PRIORITY CONDITIONS PERMIT, MOPRIO ENTERS THE BERMUDA INPUT PROCESSING PROGRAM VIA THE MONITOR PREFIX, MPHSBD. MPHSBD EXTRACTS THE NEXT ENTRY IN THE QUEUE TABLE FOR IOHSBD, MOVES THE DATA INTO THE INPUT BLOCK FOR IOHSBD, LOGS THE DATA, AND INFORMS IOHSBD OF THE LOCATION OF THE NEW DATA TO BE PROCESSED.

IOHSBD PROCESSES THE DATA AND TRANSFERS CONTROL TO THE MONITOR SUFFIX MFHSBD WHICH, IN TURN, EXITS TO MOPRIO.

## HIGH-SPEED INPUT FROM CAPE KENNEDY B-GE DATA FLOW

Input from Cape Kennedy B-GE. One complete frame transmitted in duplicate (two subframes and subframe images) every 500 milliseconds.

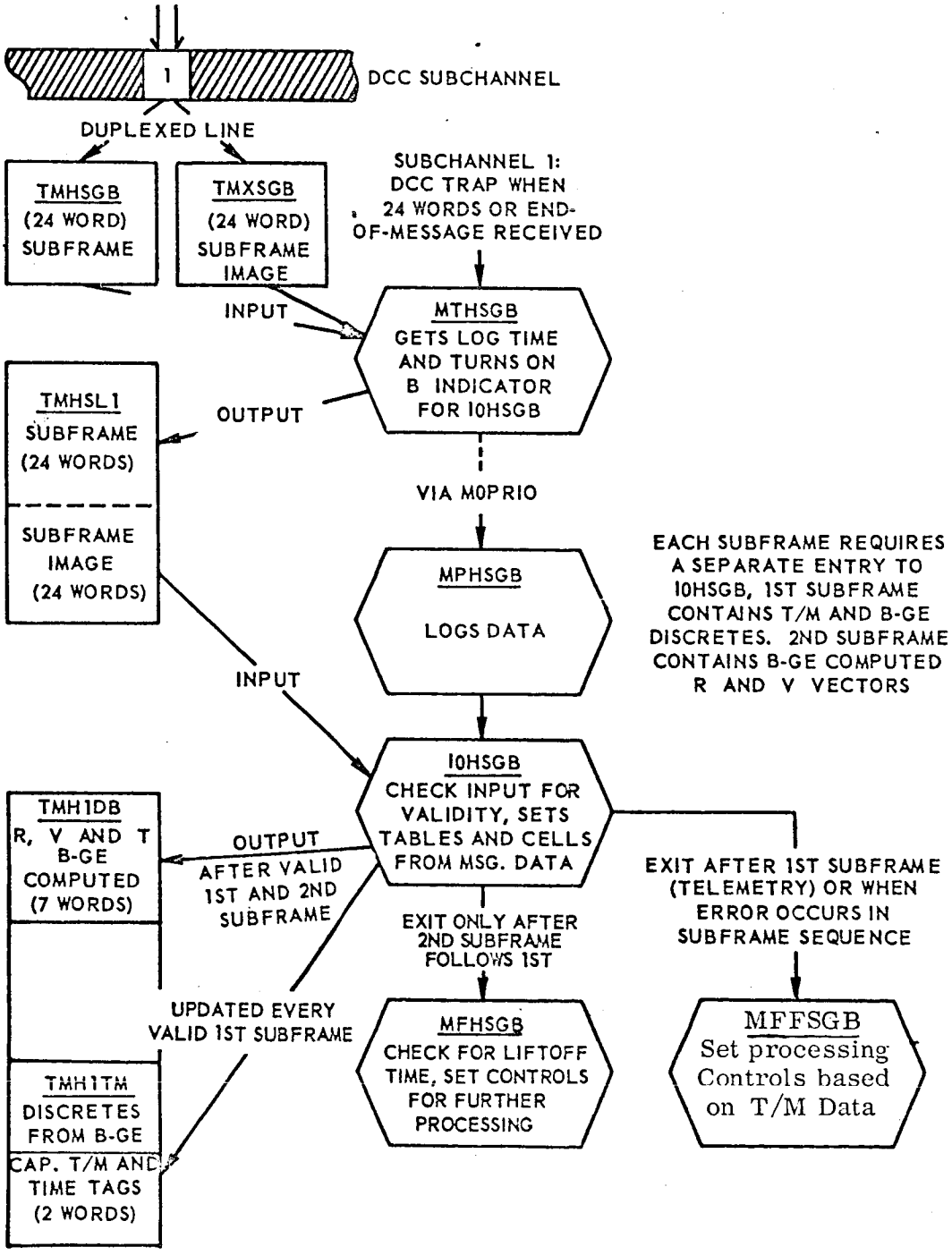

## HIGH-SPEED INPUT FROM CAPE KENNEDY IP 3600 DATA FLOW

Input from Cape Kennedy IP 3600. One complete frame transmitted in duplicate (two subfranes and subframe images) every 400 milliseconds.

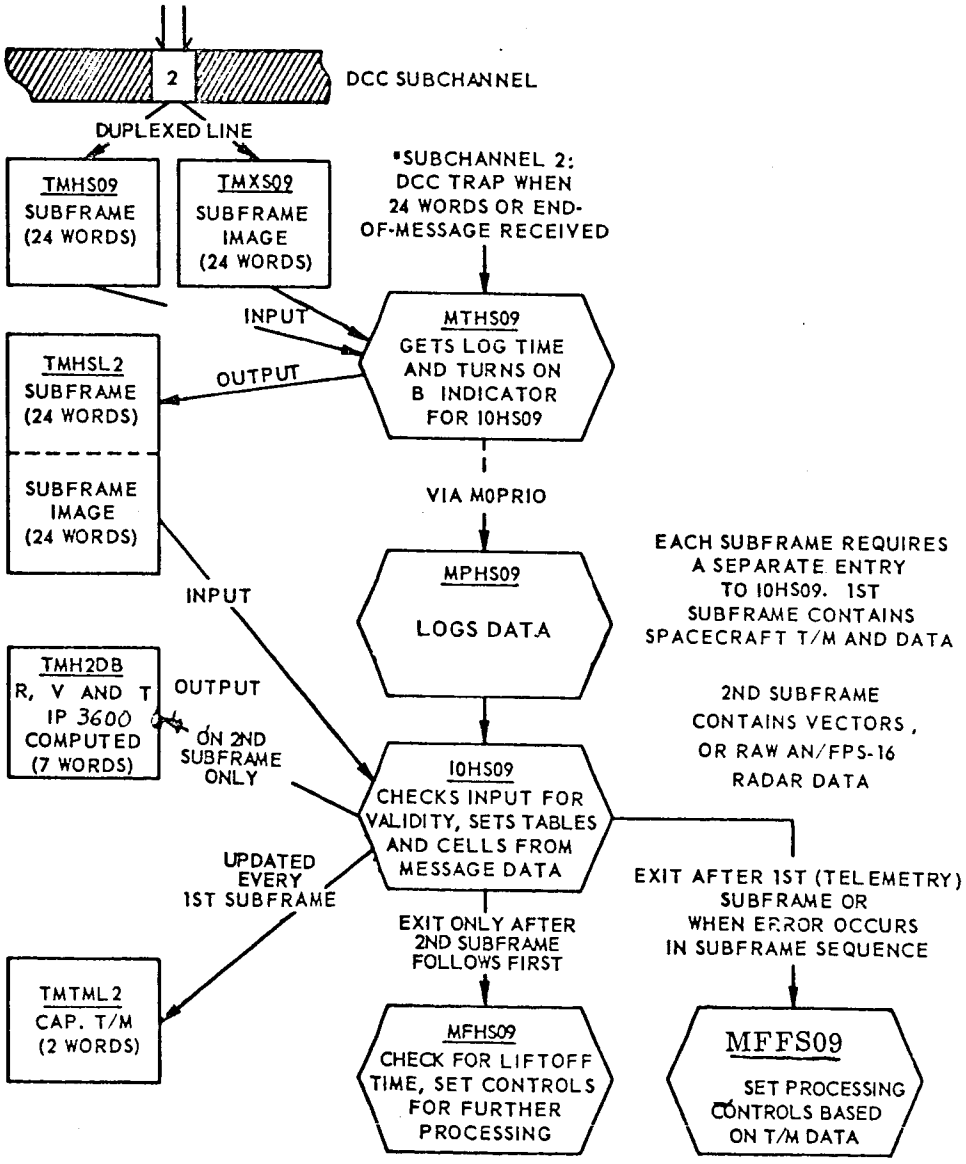

## HIGH-SPEED INPUT FROM BERMUDA VERLORT AND AN/FPS-16 RADARS DATA FLOW

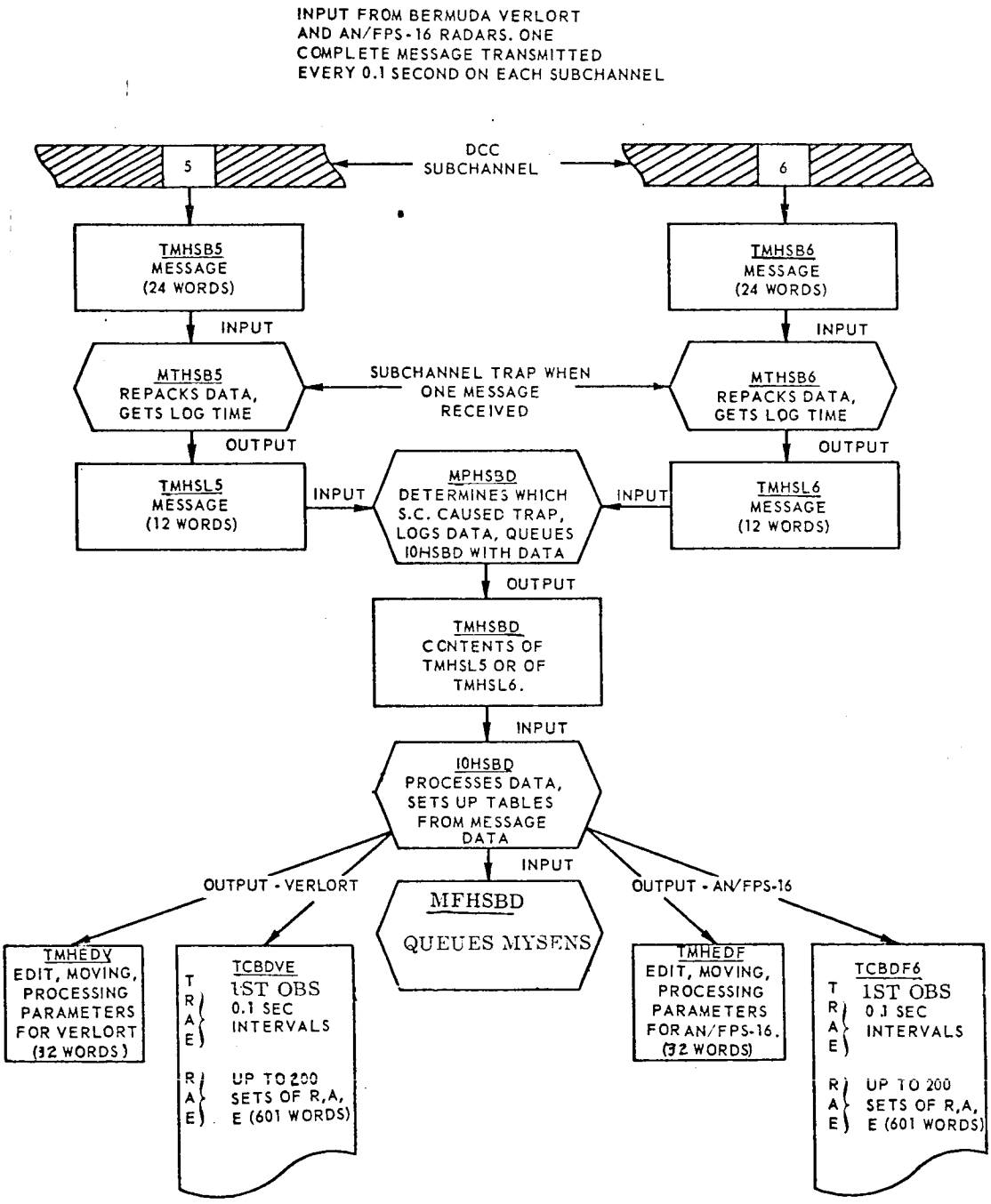

## HIGH-SPEED BERMUDA DATA FORMAT FROM DCC

| | BITS 28 TO 35 | | | | | | | |
|---|---|---|---|---|---|---|---|---|
| 1 | Time 17 | | | | | | | Time 24 |
| 2 | $T_m$ | $T_m$ | Time 11 | | | | | Time 16 |
| 3 | Time 3 | | | | | | | Time 10 |
| 4 | $T_m$ | $T_m$ | Range 17 | | Range 19 | $O_T$ | Time 1 | Time 2 |
| 5 | Range 9 | | | | | | | Range 16 |
| 6 | $T_m$ | $T_m$ | Range 3 | | | | | Range 8 |
| 7 | AZ 11 | | | | | AZ 16 | Range 1 | Range 2 |
| 8 | $T_m$ | $T_m$ | AZ 5 | | | | | AZ 10 |
| 9 | EI 13 | | | EI 16 | AZ 1 | | | AZ 4 |
| 19 | $T_m$ | $T_m$ | EI 7 | | | | | EI 12 |
| 11 | Range 20 | $O_T$ | EI 1 | | | | | EI 6 |
| 12 | $T_m$ | $T_m$ | Range 14 | | | | | Range 19 |
| 13 : | Range 6 | | | | | | | Range 13 |
| 14 | $T_m$ | $T_m$ | Range 0 | | | | | Range 5 |
| 15 | AZ 16 | AZ 17 | S | S | S | S | S | S |
| 16 | $T_m$ | $T_m$ | AZ 10 | | | | | AZ 15 |
| 17 | AZ 2 | | | | | | | AZ 9 |
| 18 | $T_m$ | $T_m$ | EI 15 | | EI 17 | S | S | AZ 1 |
| 19 | EI 7 | | | | | | | EI 14 |
| 20 | $T_m$ | $T_m$ | EI 1 | | | | | EI 6 |
| 21 | EC 9 | | | B D A | | | | EC 16 |
| 22 | EC 1 | | | | | | | EC 8 |
| 23 | EC 9 | | | G F S C | | | | EC 16 |
| 24 | EC 1 | | | | | | | EC 8 |

Legend:

$T_m$: Telemetry Bits

$O_T$: On-track Indicator

S: Spike Bit

EC: Error Code

## HIGH-SPEED BERMUDA INPUT FORMAT - PACKED BY TRAP PROCESSOR

| | BITS 20 TO 27 | | | | | | | | BITS 28 TO 35 | | | | | | | |
|---|---|---|---|---|---|---|---|---|---|---|---|---|---|---|---|---|
| 1 | $T_m$ | $T_m$ | Time 11 | ← | | | | | | | | | | | | Time 24 |
| 2 | $T_m$ | $T_m$ | Range 17 | ↔ | Range 19 | $O_T$ | Time 1 | ← | | | | | | | | Time 10 |
| 3 | $T_m$ | $T_m$ | Range 3 | ← | | | | | | | | | | | | Range 16 |
| 4 | $T_m$ | $T_m$ | AZ 5 | ← | | | | | | | | | | AZ 16 | Range 1 | Range 2 |
| 5 | $T_m$ | $T_m$ | El 7 | ← | | | | | | | | El 16 | AZ -1 | ↔ | | AZ 4 |
| 6 | $T_m$ | $T_m$ | Range 14 | ← | | | | | Rang 20 | $O_T$ | El 1 | ← | | | | El 6 |
| 7 | $T_m$ | $T_m$ | Range 0 | ← | | | | | | | | | | | | Range 13 |
| 8 | $T_m$ | $T_m$ | AZ 10 | ← | | | | | | AZ 17 | S | S | S | S | S | S |
| 9 | $T_m$ | $T_m$ | El 15 | ↔ | El 17 | S | S | AZ 1 | ← | | | | | | | AZ 9 |
| 10 | $T_m$ | $T_m$ | El 1 | ← | | | | | | | | | | | | El 14 |
| 11 | EC 1 | ← | | | | | BDA | | | | ← | | | | | EC 16 |
| 12 | EC 1 | ← | | | | | GSFC | | | | ← | | | | | EC 16 |

Codes:

$T_m$: Telemetry Bits (Currently Unused)

$O_T$: On Track Indicator (1 = On Track; $\phi$ = Not On Track)

S: Spike Bit

EC: Error Code

## 25. MTHSGB - MONITOR B-GE HIGH-SPEED INPUT TRAP PROCESSOR

MTHSGB MOVES B-GE HIGH-SPEED INPUT DATA RECEIVED ON DCC SUBCHANNEL 1 FROM THE DCC INPUT TABLE INTO A STORAGE BUFFER SO THAT A NEW B-GE MESSAGE MAY BE ACCEPTED. (SEE FLOWCHART.)

INPUT

| | | |
|---|---|---|
| A) | TMHSGB AND TMXSGB | TWO SUBCHANNEL 1 INPUT TABLES OF 24 CELLS, EACH CELL CONTAINS AN 8-BIT QUANTITY, RIGHT-JUSTIFIED. TMHSGB AND TMXSGB RECEIVE, IN DUPLEX, THE OUTPUT FROM THE B-GE COMPUTER MULTIPLEXED WITH SPACECRAFT TELEMETRY AND OTHER DISCRETE EVENT DATA. TMHSGB CONTAINS THE SUBFRAME (EITHER FIRST OR SECOND) AND TMXSGB CONTAINS THE SUBFRAME IMAGE. |
| B) | MCHFSC | CONTAINS CURRENT GMT IN FIXED-POINT HALF-SECONDS. |
| C) | TM8.3M | CONTAINS THE NUMBER OF 8-1/3 MILLISECOND INTERVALS SINCE THE LAST EXACT HALF-SECOND. |

OUTPUT

| | | |
|---|---|---|
| A) | TMHSL1 | A 48-CELL TABLE WITH THE CONTENTS OF TMHSGB IN THE FIRST 24 CELLS AND THE CONTENTS OF TMXSGB IN THE LAST 24 CELLS. |

B) MCHST1 CONTAINS THE LOGGING TIME TAG FOR THE INPUT MESSAGE.

METHOD

MTHSGB STORES THE TMHSGB AND TMXSGB INPUT TABLES IN TMHSL1 AND THEN COMPUTES THE LOGGING TIME TAG ASSOCIATED WITH THIS DATA. THE TIME TAG IS STORED IN MCHST1, AND THE B INDICATOR FOR IOHSGB IS TURNED ON SO THAT THE NEW INPUT CAN BE PROCESSED.

USAGE

MTHSGB IS ENTERED FROM MORTCC FOLLOWING A TRAP ON DCC SUBCHANNEL 1 AND EXITS TO MOPRIO.

A) MACRO -
TRNON

B) PARAMETERS -
B
MNHSGB

C) COMMUNICATION CELLS -
MCHFSC
MCHST1

D) TABLES -
TM8.3M
TMHSGB
TMHSL1
TMXSGB

E) TIME REQUIRED -
0.404 MILLISECOND

F) STORAGE REQUIRED -
13 LOCATIONS.

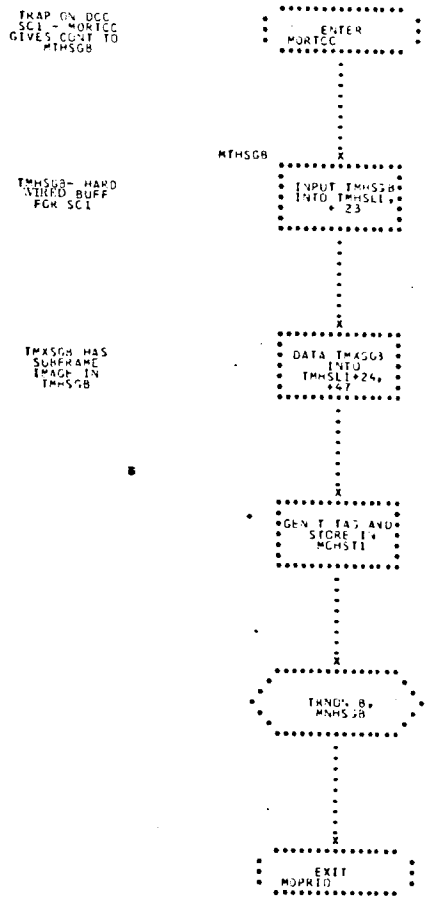
TRAP ON DCC
SC1 - MORTCC
GIVES CONT TO
MTHSGB
ENTER
MORTCC
MTHSGB
TMHSGB- HARD
WIRED BUFF
FOR SC1
INPUT TMHSGB
INTO TMHSL1,
+ 23
TMXSGB HAS
SUBFRAME
IMAGE IN
TMHSGB
DATA TMXSGB
INTO
TMHSL1+24,
+47
GEN T TAG AND
STORE IN
MCHST1
TRNON 8,
MNHSGB
EXIT
MDPRIO

## 26. MPHSGB - MONITOR PREFIX TO IOHSGB

MPHSGB SETS UP CONTROLS TO ENTER THE INPUT PROCESSOR, IOHSGB, AND LOGS THE CURRENT INPUT. (SEE FLOWCHART.)

INPUT

A) TABLE -

TMHSL1 A 48-LOCATION TABLE CONTAINING THE CURRENT INPUT DATA AND ITS IMAGE IN WORDS OF 8 BITS, RIGHT JUSTIFIED, AS RECEIVED FROM SUBCHANNEL 1 OF THE DCC.

B) COMMUNICATION CELLS -

MCHST1 CONTAINS TIME OF TRAP IN FIXED POINT TO THE CLOSEST 8.3 MILLISECOND.

MCSWT1 CONTAINS INSTRUCTION GOVERNING ENTRY TO LOGGING SUBROUTINE, MSLOGG.

C) CONSTANTS -

K00048 DEC 48

K00012 DEC 12

OUTPUT

TABLE -

TMPRIO THE B INDICATOR BIT IN THE MONITOR PRIORITY TABLE ENTRY FOR IOHSGB IS TURNED OFF. THE A INDICATOR BIT FOR THAT ENTRY IS TURNED ON.

METHOD

MTHSGB TURNS ON THE A INDICATOR BIT, AND TURNS OFF THE B INDICATOR BIT. IF THE CURRENT INPUT DATA IS LOGGED, THE SUBROUTINE MSLOGG IS ENTERED. OTHERWISE, ENTRY TO MSLOGG IS BYPASSED. CONTROL IS THEN TRANSFERRED TO IOHSGB, THE INPUT DATA PROCESSOR.

USAGE

MPHSGB IS ENTERED FROM MOPRIO WHEN PRIORITY CONDITIONS PERMIT AND EXITS TO IOHSGB.

A) PARAMETERS -

A

B

MNHSGB

B) MACROS -

TRNON

TRNOF

QENBZ

QENBA

C) TIMING (7094) -

MINIMUM - 1.81 MILLISECONDS

MAXIMUM - 2.28 MILLISECONDS

D) STORAGE REQUIRED - 29 LOCATIONS.

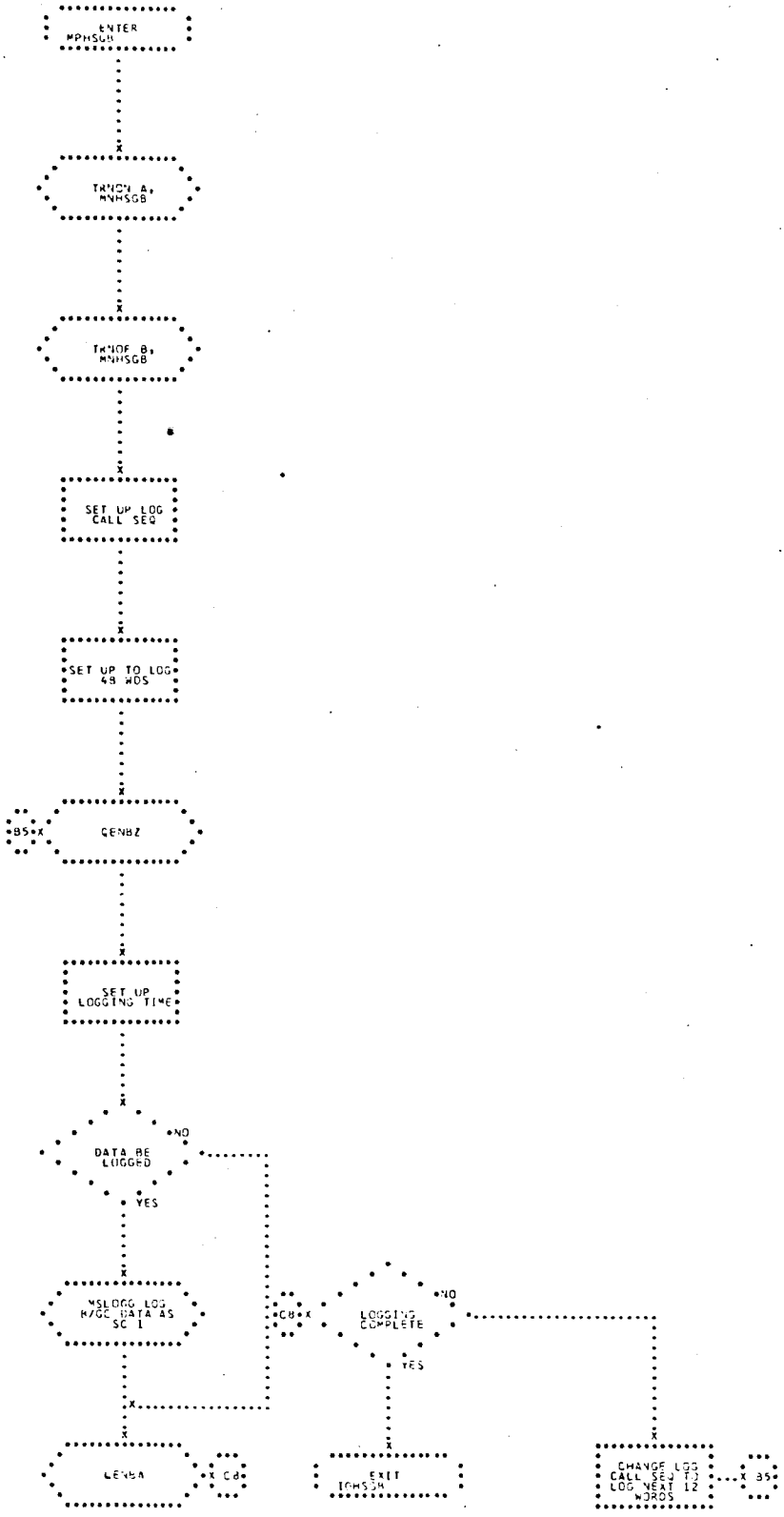
ENTER MPHSGB
TRNON A, MNHSGB
TRNOF B, MNHSGB
SET UP LOG CALL SEQ
SET UP TO LOG 48 WDS
B5
GENBZ
SET UP LOGGING TIME
DATA BE LOGGED
NO
YES
MSLOGG LOG R/GC DATA AS SC 1
C8
LOGGING COMPLETE
NO
YES
GENBA
C8
EXIT IGHSSM
CHANGE LOG CALL SEQ TO LOG NEXT 12 WORDS
B5

## 27. IOHSGB - B-GE HIGH SPEED INPUT PROGRAM

THIS PROGRAM PROCESSES B-GE COMPUTED DATA AND ASSOCIATED TELEMETRY SUMMARIES TRANSMITTED TO GODDARD VIA SUBCHANNEL 1 OF THE DATA COMMUNICATIONS CHANNEL (DCC) FROM CAPE KENNEDY DURING THE LAUNCH PHASE OF GEMINI MISSION. (SEE FLOWCHART.)

INPUT

A) TABLE -

TMHSL1 A FORTY-EIGHT WORD TABLE CONTAINING A TWENTY-FOUR WORD FIRST OR SECOND SUB-FRAME AND ITS DUPLICATE

B) COMMUNICATION CELL -

MCHST1 CONTAINS IN BITS 0 THROUGH 26, THE INTEGRAL NUMBER OF HALF-SECONDS WHICH HAVE ELAPSED SINCE MIDNIGHT (GMT) PRECEDING LAUNCH. BITS 27 THROUGH 35 CONTAIN THE INTEGRAL NUMBER OF 8.3 MILLISECONDS WHICH HAVE ELAPSED SINCE THE LAST HALF-SECOND.

C) CONSTANTS -

KOC000 FIXED POINT ZERO

KOC001 FIXED POINT ONE

KCH200 CHARACTERISTIC OF $200_8$

KCH201 CHARACTERISTIC OF $201_8$

KCH226 CHARACTERISTIC OF $226_8$

KCH232 CHARACTERISTIC OF $232_8$

OUTPUT

A) TABLES -

TMH1DB A SEVEN-LOCATION TABLE CONTAINING THE TIME OF THE VECTORS IN FLOATING POINT GMT SECONDS AND THE POSITION AND VELOCITY VECTOR IN FLOATING POINT B-GE UNITS.

TMH1TM A FOUR-LOCATION TABLE CONTAINING THE DISCRETE DATA IN THE FOLLOWING FORMAT -

A) TIME OF DISCRETE DATA IN GMT FLOATING POINT SECONDS

B) B-GE DISCRETE, SIGNAL WORD IN THE FOLLOWING FORMAT -

| | | |
|---|---|---|
| BITS 0-27 | | NOT USED, SET TO ZERO |
| BIT | 28 | $\Delta_1$ DATA FLAG |
| BIT | 29 | $\Delta_2$ DATA FLAG |
| BIT | 30 | $\Delta_3$ DATA FLAG |
| BIT | 31 | $\gamma_n$ DATA FLAG |
| BIT | 32 | TWO INCH LIFTOFF |
| BIT | 33 | $S_6$ DATA FLAG |
| BIT | 34 | SUSTAINER ENGINE CUTOFF (SECO) |
| BIT | 35 | GO NO-GO RECOMMENDATION |

C) TIME OF TELEMETRY DATA TRANSMISSION IN GMT FLOATING POINT SECONDS

D) TELEMETRY DISCRETE SIGNAL WORD IN THE FOLLOWING FORMAT -

| | |
|---|---|
| BITS 0-12 | NOT USED, SET TO ZERO |
| BITS 13-15 | SELECTED SOURCE (001 FOR B-GE, 010 FOR BERMUDA, 100 FOR IP-7094) |

| | |
|---|---|
| BITS 16-19 | RETRO ''i'' FIRED, WHERE i IS 1, 3, 2, OR 4 RESPECTIVELY. |
| BIT 20 | SECOND STAGE CUTOFF (SSCO) |
| BIT 21 | SPACECRAFT THRUSTING INITIATED |
| BITS 22-23 | LIFT SWITCH (00 FOR PROGRAMMED LIFT, 01 FOR MAXIMUM LIFT, 10 FOR NO LIFT) |
| BIT 24 | LIFTOFF |
| BIT 25 | ABORT MODE CHANGEOVER |
| BIT 26 | EMERGENCY RETRO SALVO |
| BIT 27 | ASTRONAUT ACTUATED ABORT |
| BIT 28 | SPACECRAFT SEPARATION |
| BIT 29 | ABORT PHASE ENTERED |
| BIT 30 | ORBIT PHASE ENTERED |
| BITS 31-35 | NOT USED, SET TO ZERO |

A 1 IN ANY OF THE DISCRETE SIGNAL POSITIONS OF ENTRIES B) AND D) ABOVE INDICATES THAT THE EVENT HAS OCCURRED. A 1 IN ANY OF THE DATA QUALITY FLAG POSITIONS INDICATES AN ACCEPTABLE DATA CONDITION.

A) COMMUNICATION CELLS -

MCCOM1 CONTAINS COMPUTED DATA VALIDITY INDICATOR. IF NON-ZERO, INDICATES REJECTION OF THE PROCESSED COMPUTED DATA AND RETENTION OF PREVIOUS CONTENTS OF TMH1DB

MCMST1 CONTAINS MACHINE TIME TAG OF FIRST SUBFRAME IN SAME FORMAT AS MCFST1

MCTEL1 CONTAINS TELEMETRY DATA VALIDITY INDICATOR. IF NON-ZERO, INDICATES REJECTION OF THE TELEMETRY DATA AND RETENTION OF THE PREVIOUS CONTENTS OF TMH1TM

METHOD

A DATA FRAME CONSISTING OF 384 (8X48) BITS IS TRANSMITTED AT A RATE OF 1000 BITS/SECOND OVER A DUPLEXED LINE FROM B-GE BUFFER. IT IS RECEIVED AS A SEQUENCE OF TWO 192 (8X24) BIT SUBFRAMES. EACH SUBFRAME AND ITS IMAGE ARE STORED BY MONITOR IN THE 48 WORD DATA TABLE, TMHSL1, AND CONTROL IS TRANSFERRED TO IOHSGB.

A COMPLETE HIGH-SPEED DATA MESSAGE (I.E., A FIRST AND SECOND SUBFRAME IN SEQUENCE) MUST BE RECEIVED TO GENERATE A COMPLETE SET OF OUTPUT DATA. THIS IMPLIES A MINIMUM OF TWO ENTRIES TO IOHSGB. MESSAGES ARE PROCESSED IN THREE PHASES - SUBFRAME IDENTIFICATION, TELEMETRY DATA PROCESSING, AND COMPUTED DATA PROCESSING AS DESCRIBED BELOW.

SUBFRAME IDENTIFICATION

UPON ENTRY TO IOHSGE, THE GIVEN SUBFRAME (I.E., WORDS 1 THROUGH 24 OF TMHSL1) IS EXAMINED TO ENSURE THAT IT IS NOT ''SOLID,'' I.E., THAT NOT ALL 24 ENTRIES OF THE SUBFRAME ARE IDENTICAL. IF THE SUBFRAME IS NOT SOLID, THE SUBFRAME ID (WORD 24 OF DATA BUFFER) IS EXAMINED TO DETERMINE ITS VALIDITY. IF THE SUBFRAME FAILS EITHER OF THESE CRITERIA, THE SAME TESTS ARE PERFORMED ON THE SUBFRAME IMAGE (WORDS 25 THROUGH 48 OF TMHSL1). IF THE IMAGE ALSO FAILS TO SATISFY EITHER OF THESE REQUIREMENTS CONTROL PASSES TO MFFSGB WITH DATA

REJECTION INDICATED. THE SUBFRAME PASSING BOTH STANDARDS IS THEN PROCESSED ACCORDING TO ITS ID WORD.

THE SUBFRAME IS ALSO EXAMINED TO DETERMINE WHETHER IT IS A FIRST OR A SECOND SUBFRAME. IF THE SUBFRAMES ARE FIRST SUBFRAMES, THE TELEMETRY DATA OF THE MESSAGE IS PROCESSED, THE COMPUTED DATA ENTRIES OF TMHSL1 ARE TRANSFERRED TO TEMPORARY STORAGE AND A SECOND SUBFRAME INDICATOR IS SET NON-ZERO. CONTROL THEN PASSES TO MFFSGB.

IF THE RECEIVED SUBFRAME IS A SECOND SUBFRAME, AND IF THE SECOND SUBFRAME INDICATOR IS SET NON-ZERO, ALL THE ENTRIES OF TMHSL1 ARE TRANSFERRED TO TEMPORARY STORAGE, THE SECOND SUBFRAME INDICATOR IS SET TO ZERO, AND THE COMPUTED DATA OF THE MESSAGE IS PROCESSED.

A SECOND SUBFRAME RECEIVED WITH THE SECOND SUBFRAME INDICATOR SET TO ZERO IS REJECTED WITHOUT PROCESSING. IN THIS CASE, THE TELEMETRY DATA VALIDITY INDICATOR IS SET NON-ZERO AND CONTROL IS GIVEN TO MFFSGB.

TELEMETRY DATA PROCESSING

WHEN A FIRST SUBFRAME IS RECOGNIZED TELEMETRY DATA IS PROCESSED AS FOLLOWS -

A) IF THE TELEMETRY DATA TO BE PROCESSED COMES FROM THE SUBFRAME IMAGE, THE COUNT OF TELEMETRY MESSAGES REJECTED FROM THE ORIGINAL SUBFRAME IS INCREASED BY ONE. THE TELEMETRY DATA IN BOTH ORIGINAL SUBFRAME AND IMAGE IS THE COMPARED. IF IDENTICAL, THE COUNT OF TELEMETRY MESSAGES REJECTED FROM THE IMAGE IT INCREASED BY ONE AND THE TELEMETRY DATA VALIDITY INDICATOR SET TO SHOW REJECTION OF TELEMETRY. CONTROL THEN PASSES TO MFFSGB.

B) IF EITHER THE TELEMETRY DATA COMES FROM THE ORIGINAL SUBFRAME OR COMES FROM THE IMAGE, BUT DIFFERS FROM THE TELEMETRY DATA IN THE ORIGINAL SUBFRAME, THE SUBROUTINE ISPAKT IS ENTERED TO PROCESS THE DATA.

ISPAKT EXAMINES THE THREE 23-BIT TELEMETRY MESSAGES TO ENSURE -

1) THAT THE THREE SELECTED SOURCE BITS DEFINE THE BINARY CONFIGURATION FOR ONE OF THE OCTAL DIGITS 1, 2, OR 4.
2) THAT THE THREE 23-BIT SEQUENCES ARE IDENTICAL.
3) THAT NOT BOTH THE ABORT AND ORBIT BITS ARE SET TO 1.

THE TELEMETRY DATA FROM A BUFFER SATISFYING THE ABOVE CONDITIONS IS THEN STORED IN THE FOURTH WORD OF THE TMH1TM TABLE AND THE TELEMETRY DATA VALIDITY INDICATOR IS SET TO SHOW ACCEPTANCE OF THE TELEMETRY. THE SUBROUTINE HGTIM IS THEN ENTERED TO GENERATE THE TELEMETRY GMT TIME TAG WHICH IS STORED IN THE THIRD WORD OF THE TMH1TM TABLE. TRANSFER IS THEN MADE TO MFFSGB.

IF HOWEVER, NEITHER THE SUBFRAME NOR ITS IMAGE SATISFY ALL THE CRITERIA, THE TELEMETRY DATA VALIDITY INDICATOR IS SET TO SHOW REJECTION OF THE DATA AND RETENTION OF THE PREVIOUS CONTENTS OF TMH1TM BEFORE CONTROL IS GIVEN TO MFFSGB.

COMPUTED DATA PROCESSING

UPON RECEIPT OF A FIRST AND SECOND SUBFRAME IN SEQUENCE, THE COMPUTED DATA ENTRIES OF THE MESSAGE ARE PROCESSED. THE CHECKSUM OF THE MESSAGE AND, IF NECES-

SARY, CF THE IMAGE ARE SUCCESSIVELY COMPUTED AND COMPARED WITH THE TRANSMITTED CHECKSUMS. THE DATA CONTAINED IN THE BLCCK FIRST PRCDUCING CHECKSUM AGREEMENT IS THEN PROCESSED BY THE SUBROUTINE HGPCD TO PRODUCE THE OUTPUT TABLE TMH1DB AND THE FIRST TWO LOCATIONS OF TMH1TM. THE CELL MCCOM1 IS THEN SET ZERO TO SLOW ACCEPTANCE OF THE DATA. FAILURE TO FIND A VALID CHECKSUM CAUSES THE CELL MCCOM1 TO BE SET TO NON-ZERO INDICATING REJECTION OF THE COMPUTED DATA. IN EITHER CASE, MONITOR RECEIVES CONTROL THRCUGH AN EXIT TO MFHSGB.

USAGE

IOHSGB MUST BE ENTERED FROM ITS PREFIX, MPHSGB, AT LEAST TWICE TO GENERATE THE COMPLETE SET OF OUTPUT DATA. COMPUTED DATA OUTPUT CAN BE GENERATED ONLY AFTER RECEIPT OF A FIRST AND A SECOND SUBFRAME IN SEQUENCE, WHEREAS TELEMETRY DATA OUTPUT CAN BE GENERATED EACH TIME A FIRST SUBFRAME IS RECEIVED. CONTROL IS RETURNED TO MONITOR VIA MFHSGB WHEN A FIRST AND A SECOND SUBFRAME HAVE BEEN RECEIVED IN SEQUENCE - OTHERWISE, RETURN IS MADE TO MFFSGB.

A) STORAGE REQUIRED - 322 LOCATIONS INCLUDING STORAGE REQUIRED BY HGPCD AND HGTIM AND TEMPORARY STORAGE

B) TIMING (7094) - APPROXIMATELY 10 MILLISECONDS

## DATA FORMAT TABLE

8-Bit Word Transfers From Data Receiver Mod. 72
at GSFC to DCC Subchannel 1

| First Subframe | | | | Second Subframe | | | |
|---|---|---|---|---|---|---|---|
| 1 | 1 | Telemetry | 8 | 1 | 1 | L | 8 |
| 2 | 9 | Telemetry | 16 | 2 | 9 | L | 16 |
| 3 | 17 | Telemetry | 24 | 3 | 17 | L | 24 |
| 4 | 25 | Telemetry | 32 | 4 | 1 | M | 8 |
| 5 | 33 | Telemetry | 40 | 5 | 9 | M | 16 |
| 6 | 41 | Telemetry | 48 | 6 | 17 | M | 24 |
| 7 | 49 | Telemetry | 56 | 7 | 1 | N | 8 |
| 8 | 57 | Telemetry | 64 | 8 | 9 | N | 16 |
| 9 | 65 | Telemetry | 72 | 9 | 17 | N | 24 |
| 10 | 1 | Discrete Word | 8 | 10 | 1 | Check Sum Σ | 8 |
| 11 | 1 | G | 8 | 11 | 9 | Check Sum Σ | 16 |
| 12 | 9 | G | 16 | 12 | 17 | Check Sum Σ | 24 |
| 13 | 17 | G | 24 | 13 | 1 | 1 1 1 1 1 1 1 | |
| 14 | 1 | H | 8 | 14 | 1 | 1 1 1 1 1 1 1 | |
| 15 | 9 | H | 16 | 15 | 1 | 1 1 1 1 1 1 1 | |
| 16 | 17 | H | 24 | 16 | 1 | 1 1 1 1 1 1 1 | |
| 17 | 1 | J | 8 | 17 | 1 | 1 1 1 1 1 1 1 | |
| 18 | 9 | J | 16 | 18 | 1 | 1 1 1 1 1 1 1 | |
| 19 | 17 | J | 24 | 19 | 1 | 1 1 1 1 1 1 1 | |
| 20 | 1 | K | 8 | 20 | 1 | 1 1 1 1 1 1 1 | |
| 21 | 9 | K | 16 | 21 | 1 | 1 1 1 1 1 1 1 | |
| 22 | 17 | K | 24 | 22 | 1 | 1 1 1 1 1 1 1 | |
| 23 | 1 | 1 1 1 1 1 1 1 | 1 | 23 | 1 | 1 1 1 1 1 1 1 | |
| 24 | 0 | 0 0 \ 1 ID* | 5 | 24 | 0 | 0 0 1 ID* | 5 |

DATA FORMAT TABLE

NOTES APPLICABLE TO TABLE

THE ABOVE CONSTITUTES A COMPLETE MESSAGE FRAME AND IS TRANSMITTED WITH AN INTERVAL OF 500 MILLISECONDS BETWEEN THE START OF ONE MESSAGE AND THE START OF THE NEXT MESSAGE. EACH SUBFRAME CONSISTS OF 192 SERIAL BITS PRECEDED BY A SYNC SIGNAL. THE QUANTITIES REPRESENTED BY G, H, J, M AND N ARE RESTRICTED INFORMATION.

MOST SIGNIFICANT BIT OF EACH QUANTITY IS TRANSMITTED FIRST.

SEE NOTE 1 FOR MAKEUP OF ID WORD.

SEE NOTE 2 FOR FORMAT OF BITS 1 TO 72 OF FIRST SUBFRAME IN ABSENCE TELEMETRY DATA AND NOTE 3 FOR FORMAT IN ABSENCE OF QUANTITIES G, H, J, K, L, M AND N.

NOTE 1 - THE FORMAT OF THE 5-BIT IDENTITY CODE (ID) IN EACH SUBFRAME IS IDENTICAL IN BOTH B-GE AND IP 7094 MESSAGES AND CONVEYS THE FOLLOWING INFORMATION -

BIT 1 - ALWAYS A ZERO

BIT 2 - ONE SIGNIFIES SECOND SUBFRAME

BIT 3 - ONE SIGNIFIES FIRST SUBFRAME

BIT 4 - ALWAYS A ZERO

BIT 5 - ALWAYS A ZERO

NOTE 2 - IN THE EVENT THAT NO DATA IS RECEIVED FROM THE TELEMETRY EVENT TRANSMITTING BUFFER, THE HIGH-SPEED BUFFER AND RETRANSMITTERS ARE ARRANGED TO TRANSMIT ZEROS IN THE BIT POSITIONS OCCUPIED BY TELEMETRY EVENT DATA BITS 1 THROUGH 40, AND 43 THROUGH 72. ONES WILL BE TRANSMITTED IN POSITIONS 41 AND 42. THIS WILL RESULT IN ERRONEOUS PARITY FOR THE TELEMETRY EVENT DATA MESSAGE.

NOTE 3 - IN THE ABSENCE OF DATA QUANTITIES G, H, J, K, L, M AND N, THE COMPLETE MESSAGE FRAME WILL BE TRANSMITTED EACH 650 MILLISECONDS. TELEMETRY DATA WILL CONTINUE TO BE TRANSMITTED. IN PLACE OF THE MISSING DATA QUANTITIES, ''ZEROS'' WITH ''ONES'' INTERSPERSED IN CERTAIN POSITIONS WILL BE TRANSMITTED. THE FOLLOWING IS A LIST OF BITS WHICH WILL APPEAR AS ''ONES'' IN THIS EVENT -

| SUBFRAME | 8-BIT WORD NO. | QUANTITY | BIT WITHIN QUANTITY |
|---|---|---|---|
| 1 | 13 | G | 24 |
| 1 | 16 | H | 24 |
| 1 | 19 | J | 24 |
| 1 | 22 | K | 24 |
| 2 | 3 | L | 24 |
| 2 | 6 | M | 24 |
| 2 | 9 | N | 24 |
| 2 | 10 | CHECK SUM | 1 |

NOTE 4 - IN THE ABSENCE OF DATA QUANTITIES, A, B, C, D, E, F, AND N, THE COMPLETE MESSAGE FRAME WILL BE TRANSMITTED EACH 400 MILLISECONDS. TELEMETRY DATA WILL CONTINUE TO BE TRANSMITTED. IN PLACE OF THE MISSING DATA QUANTITIES, ''ZEROS'' WITH ''ONES'' INTERSPERSED IN CERTAIN POSITIONS WILL BE TRANSMITTED. THE FOLLOWING IS A LIST OF BITS WHICH WILL APPEAR AS ''ONES'' IN THIS EVENT -

| SUBFRAME | 8-BIT WORD NO. | QUANTITY | BIT WITHIN QUANTITY |
|---|---|---|---|
| 1 | 12 | A | 24 |
| 1 | 15 | B | 12 |
| 1 | 18 | B | 36 |
| 1 | 21 | C | 24 |
| 2 | 3 | D | 24 |
| 2 | 6 | E | 12 |
| 2 | 9 | E | 36 |
| 2 | 12 | F | 24 |
| 2 | 15 | N | 12 |
| 2 | 19 | CHECK SUM | 1 |

NOTE 5 - THE TOTAL TIME LAG BETWEEN THE TIME THE ABOVE DATA IS GENERATED AND THE RECEIPT OF A COMPLETE MESSAGE FRAME BY THE IBM 3600 IS AS FOLLOWS -
VIA THE B-GE COMPLEX. 300 TO 800 MILLISECONDS.
VIA THE IP3600 COMPLEX. 300 TO 700 MILLISECONDS.

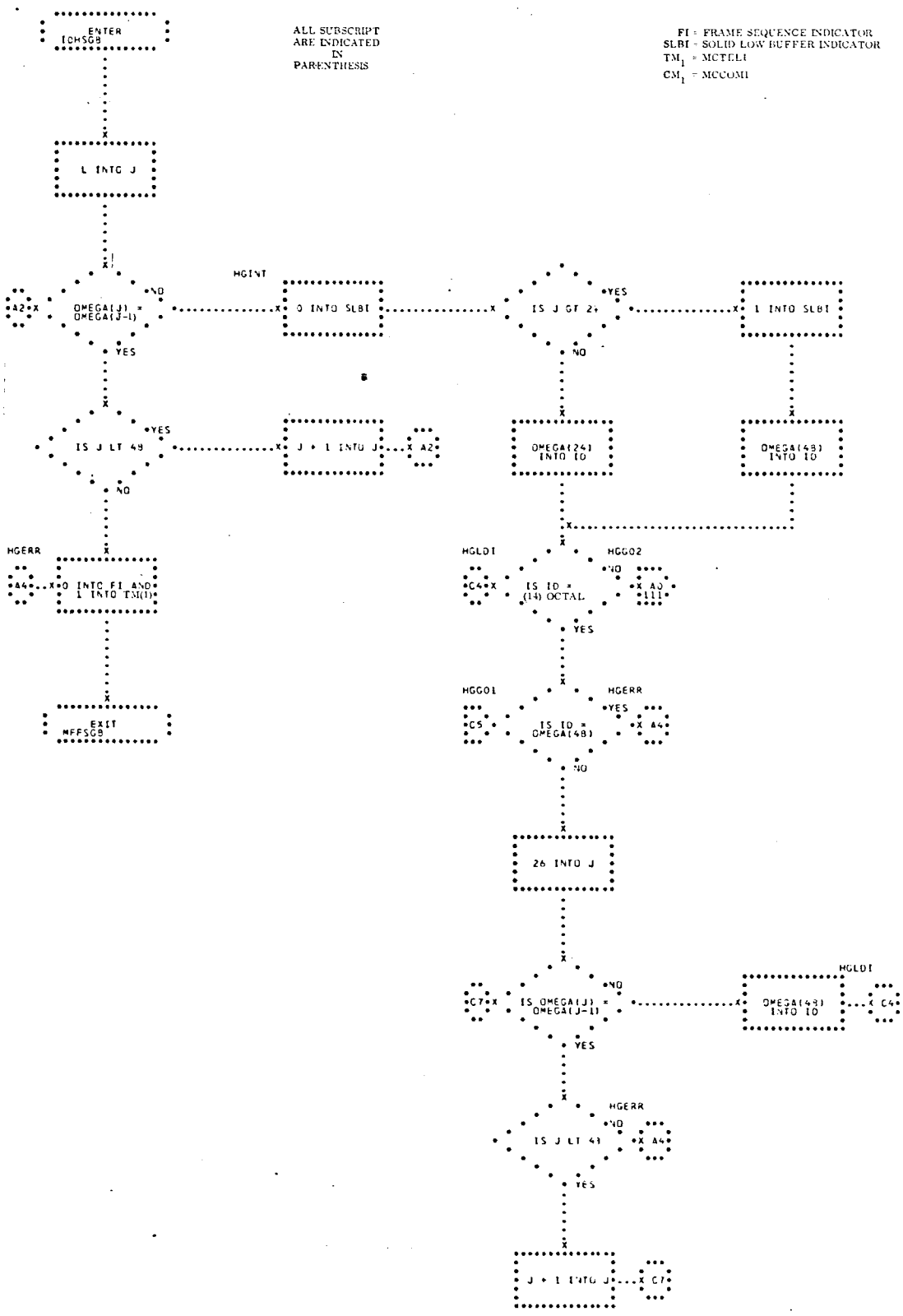
ALL SUBSCRIPT
ARE INDICATED
IN
PARENTHESIS
FI = FRAME SEQUENCE INDICATOR
SLBI = SOLID LOW BUFFER INDICATOR
TM1 = MCTELI
CM1 = MCCOMI
ENTER
IOHSGB
L INTO J
HGINT
A2
OMEGA(J) =
OMEGA(J-1)
NO
YES
0 INTO SLBI
IS J GT 2+
1 INTO SLBI
IS J LT 49
J + 1 INTO J
OMEGA(24)
INTO ID
OMEGA(48)
INTO ID
HGERR
A4
0 INTO FI AND
1 INTO TM(1)
HGLDI
C4
IS ID =
(14) OCTAL
HGGO2
A0
111
HGGO1
C5
IS ID =
OMEGA(48)
26 INTO J
C7
IS OMEGA(J) =
OMEGA(J-1)
IS J LT 43
EXIT
MFFSGB

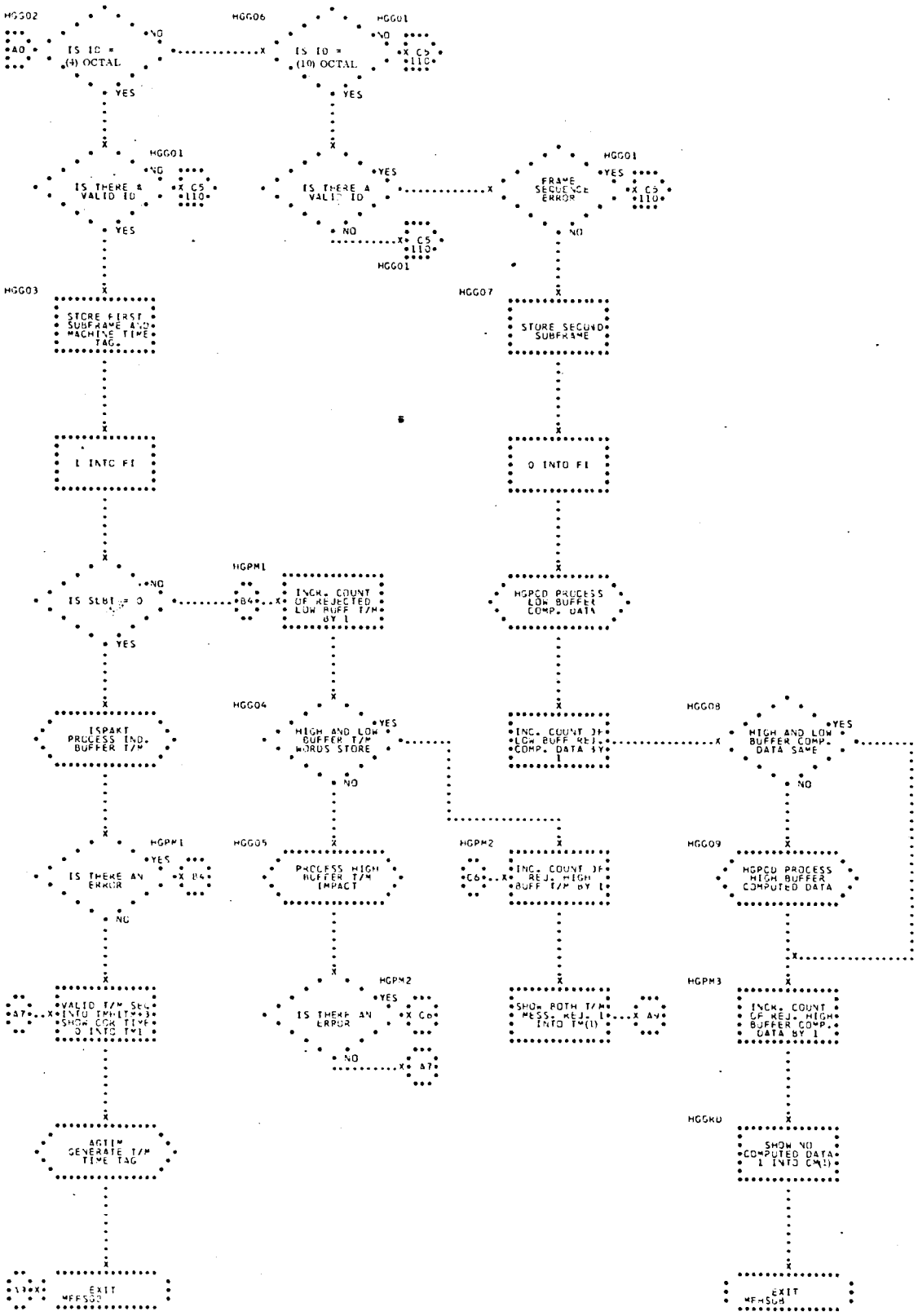
HGG02
A0
IS ID = (4) OCTAL
NO
YES
HGG06
IS ID = (10) OCTAL
HGG01
C5 110
IS THERE A VALID ID
FRAME SEQUENCE ERROR
HGG03
STORE FIRST SUBFRAME AND MACHINE TIME TAG.
HGG07
STORE SECOND SUBFRAME
1 INTO FI
0 INTO FI
IS SUBT = 0
HGPM1
B4
INCR. COUNT OF REJECTED LOW BUFF T/M BY 1
HGPCD PROCESS LOW BUFFER COMP. DATA
ISPAKT PROCESS IND. BUFFER T/M
HGG04
HIGH AND LOW BUFFER T/M WORDS STORE
INC. COUNT OF LOW BUFF REJ. COMP. DATA BY 1
HGG08
HIGH AND LOW BUFFER COMP. DATA SAME
IS THERE AN ERROR
HGG05
PROCESS HIGH BUFFER T/M IMPACT
HGPM2
C6
INC. COUNT OF REJ. HIGH BUFF T/M BY 1
HGG09
HGPCD PROCESS HIGH BUFFER COMPUTED DATA
A7
VALID T/M SEQ INTO TMHITM+3 SHOW COR TIME 0 INTO TM1
IS THERE AN ERROR
SHOW BOTH T/M MESS. REJ. 1 INTO TM(1)
A9
HGPM3
INCR. COUNT OF REJ. HIGH BUFFER COMP. DATA BY 1
AGTIM GENERATE T/M TIME TAG
HGGRD
SHOW NO COMPUTED DATA 1 INTO CM(1)
EXIT MFFSGO
EXIT MFHSUB

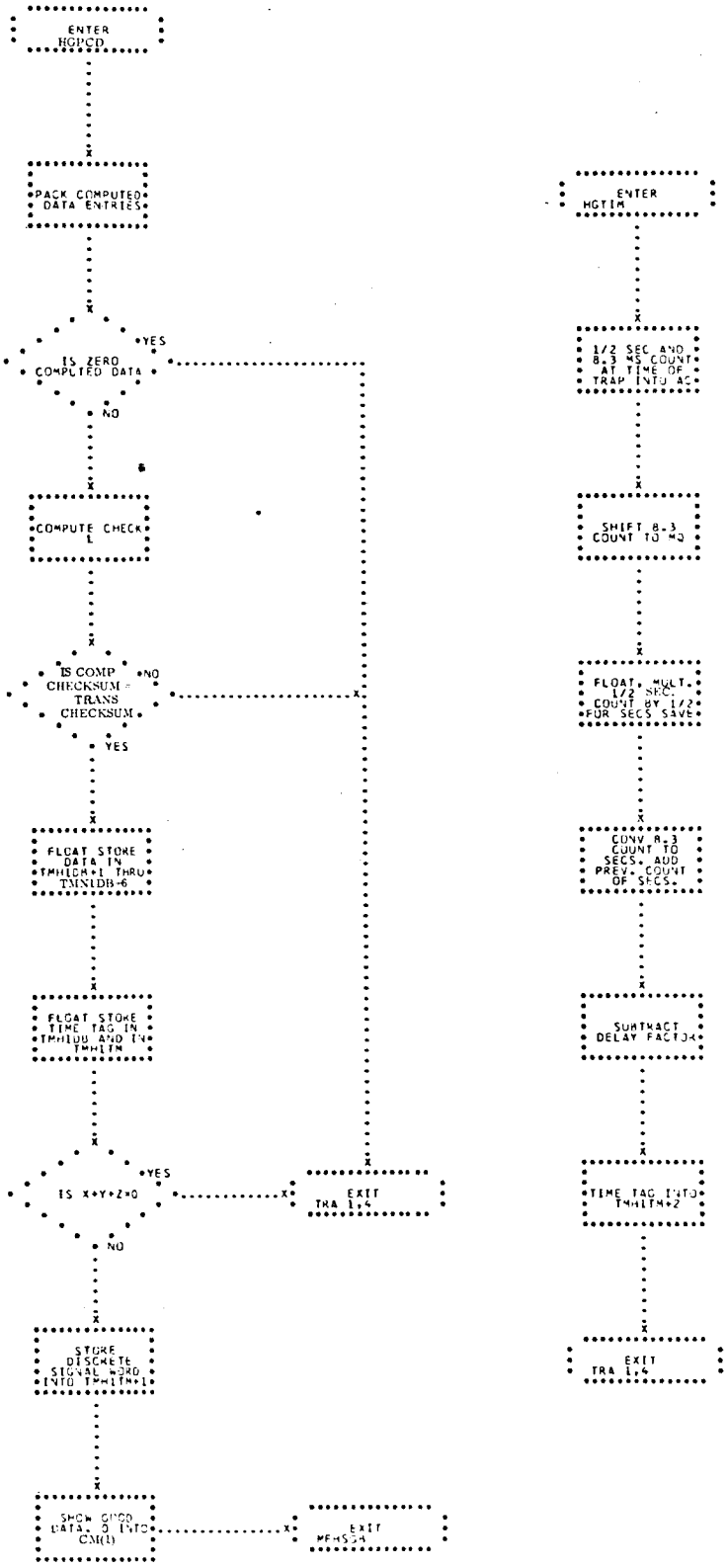
ENTER HGDCD
PACK COMPUTED DATA ENTRIES
IS ZERO COMPUTED DATA
YES
NO
COMPUTE CHECK L
IS COMP CHECKSUM = TRANS CHECKSUM
NO
YES
FLOAT STORE DATA IN TMHIGH+1 THRU TMHIDB-6
FLOAT STORE TIME TAG IN TMHIDB AND IN TMHIIN
IS X+Y+Z=0
YES
NO
EXIT TRA 1,4
STORE DISCRETE SIGNAL WORD INTO TMHITM+1
SHOW GOOD DATA, 0 INTO CM(1)
EXIT MFHSS4
ENTER HGTIM
1/2 SEC AND 8-3 MS COUNT AT TIME OF TRAP INTO AC
SHIFT 8-3 COUNT TO MQ
FLOAT, MULT. 1/2 SEC. COUNT BY 1/2 FOR SECS SAVE
CONV 8-3 COUNT TO SECS. ADD PREV. COUNT OF SECS.
SUBTRACT DELAY FACTOR
TIME TAG INTO TMHITM+2
EXIT TRA 1,4

## 28. MFFSGB - TELEMETRY PROCESSING SUFFIX TO IOHSGB

MFFSGB PROCESSES ALL TELEMETRY ASSOCIATED WITH THE B-GE HIGH-SPEED SUBCHANNELS OF THE DCC. (SEE FLOWCHART.)

INPUT

A) TABLE

TMH1TM A FOUR LOCATION TABLE CONTAINING THE TELEMETRY SEQUENCE AND ITS ASSOCIATED TIME TAG IN THE THIRD AND FOURTH WORDS.

B) COMMUNICATION CELLS

MCDTWD CONTAINS MASK OF DELETIONS FROM TELEMETRY SEQUENCE ENTERED THROUGH THE PCC.

MCITWD CONTAINS MASK OF INSERTIONS TO TELEMETRY SEQUENCE ENTERED THROUGH THE PCC.

MCLTTL CONTAINS THE MOST RECENTLY PROCESSED TELEMETRY SEQUENCE.

MCTEL1 NON-ZERO IF DATA HAS BEEN REJECTED.

MCTLTC CONTAINS THE TIME IN FLOATING POINT GMT SECONDS OF THE LAST CHANGE IN TELEMETRY.

OUTPUT

THE APPROPRIATE EVENT CELL IS RESET NON-ZERO IF THAT EVENT HAS OCCURRED, OTHERWISE, IT REMAINS ZERO.

METHOD

UPON RECEIPT OF A FIRST SUBFRAME (WHICH CONTAINS THE 72-BIT TELEMETRY SEQUENCE), MFFSGB IS ENTERED FROM IOHSGB. THE PROGRAM FIRST CHECKS THE NUMBER OF HIGH AND LOW BUFFER TELEMETRY MESSAGES WHICH HAVE BEEN REJECTED. IF THE NUMBER FOR EITHER BUFFER IS 120, A MESSAGE FOR ON-LINE PRINT IS QUEUED TO THAT EFFECT. MFFSGB THEN PROCESSES THE TELEMETRY SEQUENCE PROVIDED THAT THE FOLLOWING CONDITIONS ARE MET -

A) AFTER MODIFICATIONS BY THE PCC INSERT AND DELETE AND INSERT WORDS, THE SELECTED LINE IS A LEGAL ONE.

B) THE TIME OF THE TELEMETRY IS GREATER THAN THE TIME OF THE PREVIOUS TELEMETRY.

C) THE TELEMETRY SEQUENCE INDICATES A CHANGE FROM THE SEQUENCE PREVIOUSLY PROCESSED.

IF THESE CONDITIONS ARE NOT MET, THE PROGRAM EXITS TO MOPRIO.

MFFSGB PROCESSES THE TELEMETRY SEQUENCE USING IITPRO TO SET THE APPROPRIATE CELLS INDICATING WHETHER OR NOT AN EVENT HAS OCCURRED. AFTER PROCESSING, BOTH THE TELEMETRY SEQUENCE AND THE TRANSMISSION TIME TAG ARE SAVED FOR FUTURE PASSES, AND MFFSGB EXITS TO MOPRIO.

USAGE

MFFSGB IS ENTERED FROM IOHSGB UPON RECEIPT OF A FIRST SUBFRAME. IT TRANSFERS CONTROL TO MOPRIO.

A. MACROS -

QENBZ, QENBA, QUEUE, TRNON, TRNOF

B. PARAMETERS -

A, C, MNHSGB, MNHS09, MNMESS

C. STORAGE REQUIRED - 65 LOCATIONS

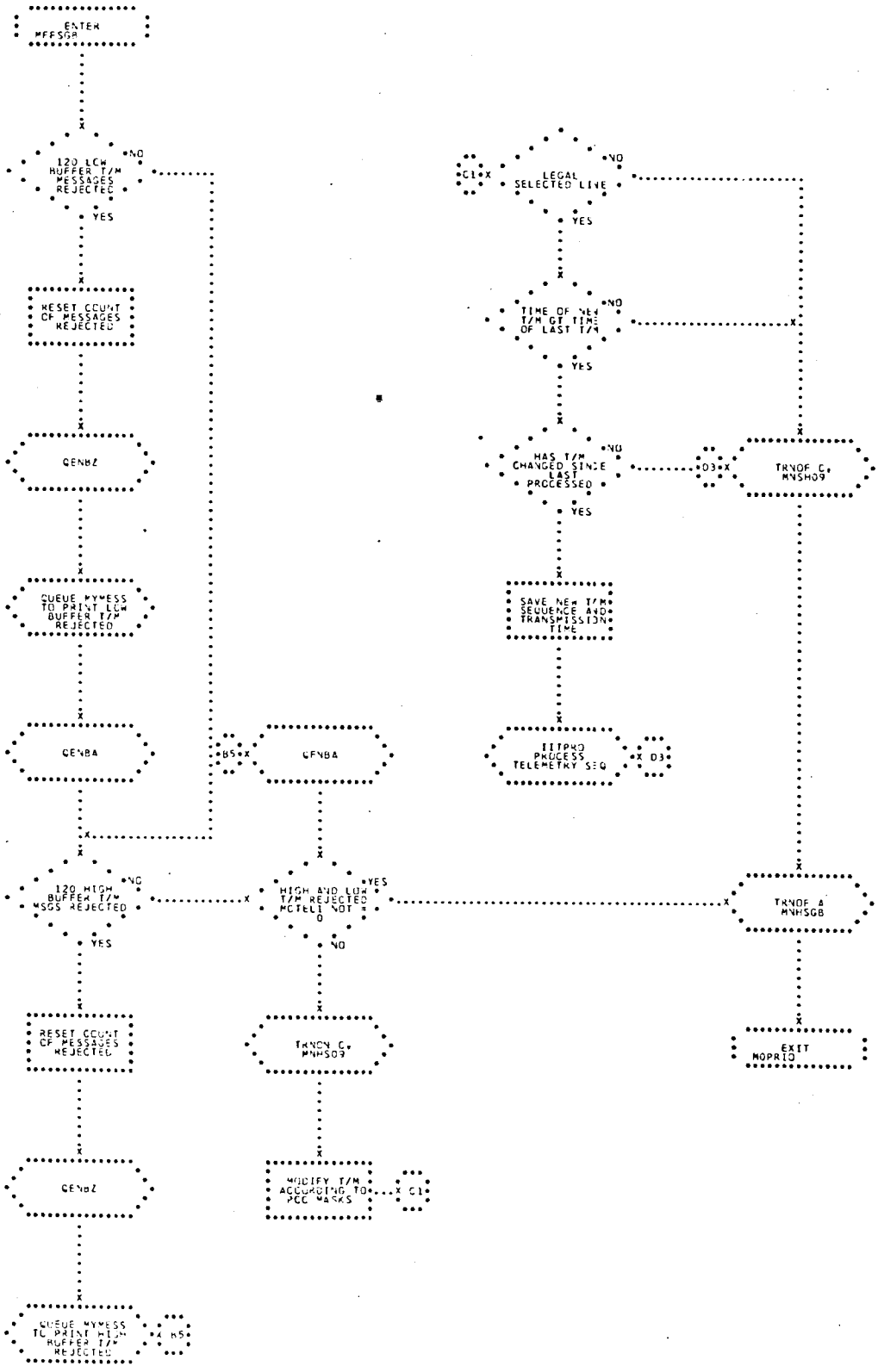
ENTER MFESGR
120 LCW BUFFER T/M MESSAGES REJECTED
NO
YES
RESET COUNT OF MESSAGES REJECTED
GENBZ
QUEUE MYMESS TO PRINT LCW BUFFER T/M REJECTED
GENBA
B5
GENBA
120 HIGH BUFFER T/M MSGS REJECTED
NO
YES
HIGH AND LOW T/M REJECTED MCTELI NOT = 0
YES
NO
RESET COUNT OF MESSAGES REJECTED
TRNON C, MNHS09
GENBZ
MODIFY T/M ACCORDING TO PCC MASKS
C1
QUEUE MYMESS TO PRINT HIGH BUFFER T/M REJECTED
A5
C1
LEGAL SELECTED LINE
NO
YES
TIME OF NEW T/M GT TIME OF LAST T/M
NO
YES
HAS T/M CHANGED SINCE LAST PROCESSED
NO
YES
D3
TRNOF C, MNSH09
SAVE NEW T/M SEQUENCE AND TRANSMISSION TIME
IITPRO PROCESS TELEMETRY SEQ
D3
TRNOF A MNHSGB
EXIT MOPRIO

## 29. MFHSGB - VECTOR PROCESSING SUFFIX TO IOHSGB

MFHSGB PROCESSES THE DISCRETE WORD AND THE VECTORS RECEIVED VIA THE B-GE HIGH-SPEED SUBCHANNELS OF THE DCC. (SEE FLOWCHART.)

INPUT

A) TABLES -

| | |
|---|---|
| TMDSGO | A 2-LOCATION TABLE CONTAINING MASKS TO TURN ON THE DISCRETE GO LIGHTS ON THE PCC AND THE OCC. |
| TMDSNG | A 2-LOCATION TABLE CONTAINING MASKS TO TURN OFF THE DISCRETE GO LIGHTS ON THE PCC AND OCC. |
| TMH1TM | A 4-LOCATION TABLE CONTAINING THE TIME TAG OF THE DATA, THE DISCRETE EVENT WORD, THE TELEMETRY SEQUENCE, AND THE TIME TAG OF TRANSMISSION. |
| TMSECO | A 2-LOCATION TABLE CONTAINING MASKS TO TURN ON THE SECO LIGHTS ON THE PCC AND THE OCC. |
| TMSNSE | A 2-LOCATION TABLE CONTAINING MASKS TO TURN OFF THE SECO LIGHTS ON THE PCC AND THE OCC. |

B) COMMUNICATION CELLS -

| | |
|---|---|
| MCCOM1 | NON-ZERO IF DATA WAS REJECTED, OTHERWISE ZERO. |
| MCLFTM | CONTAINS GMT OF LIFT-OFF IN FLOATING POINT SECONDS. |

OUTPUT

A) TABLE -

TMH1DB A 9-LOCATION TABLE ARRANGED AS FOLLOWS -

| | | |
|---|---|---|
| TMH1DB | t | VECTOR TIME TAG IN FLOATING POINT GMT SECONDS |
| +1 | x | |
| +2 | y | POSITION VECTOR IN FLOATING |
| +3 | z | POINT B-GE LENGTH UNITS |
| +4 | $\dot{x}$ | |
| +5 | $\dot{y}$ | VELOCITY VECTOR IN FLOATING |
| +6 | $\dot{z}$ | POINT B-GE VELOCITY UNITS |
| +7 | 1 | DATA SOURCE INDICATOR |
| +8 | =0 | DATA ACCEPTABLE |
| | ≠0 | DATA UNACCEPTABLE |

B) COMMUNICATION CELL -

MCSECO CONTAINS THE TIME OF THE DISCRETE EVENT SECO IN GMT FLOATING POINT SECONDS, IF THE EVENT HAS OCCURRED, OTHERWISE, ZERO.

METHOD

UPON ENTRY, MGHSGB DETERMINES IF THE NUMBER OF CHECKSUM ERRORS ON EITHER HIGH OR LOW BUFFER IS 120. IF EITHER OCCURS, A MESSAGE IS QUEUED TO THAT EFFECT. IF THE VECTOR IS DEEMED ACCEPTABLE BY IOHSGB AND IF LIFT-OFF HAS OCCURRED, PROCESSING WILL CONTINUE. OTHERWISE, EXIT IS MADE TO MOPRIC.

THE DISCRETE WORD IS THEN EXAMINED. IF SECO IS INDICATED, THE TIME OF THE EVENT IS SET AND MYSENS IS QUEUED TO TURN ON THE SECO LIGHTS ON THE PCC AND THE OCC.

IF SECO IS NOT INDICATED AND HAS BEEN PREVIOUSLY SET, ALL CELLS ARE RESET TO SHOW NO OCCURRENCE AND THE SECO LIGHTS ON THE PCC AND THE OCC ARE TURNED OFF.

A DATA SOURCE INDICATING MOD III IS THEN ASSIGNED TO THE DATA.

THE DISCRETE WORD IS THEN EXAMINED FOR THE B-GE GO/NO-GO RECOMMENDATION. IF A GO IS INDICATED, MYSENS IS QUEUED TO TURN ON THE GO LIGHTS ON THE PCC AND THE OCC. IF THE GO IS NOT INDICATED AND WAS PREVIOUSLY INDICATED, THE GO LIGHTS ON THE PCC AND THE OCC ARE TURNED OFF.

DATA FLAGS, $\delta_2$, $\delta_3$, AND $\gamma_n$ ARE EXAMINED. IF ALL ARE INDICATED, THE DATA IS FLAGGED AS GOOD. IF ANY ARE NOT INDICATED, THE DATA IS FLAGGED AS BAD.

THE COORDINATE CONVERSION PROGRAM FOR B-GE DATA IS THEN REQUESTED AND CONTROL IS RETURNED TO MOPRIO.

USAGE

MFHSGB IS ENTERED FROM IOHSGB UPON THE RECEIPT OF BOTH A FIRST AND A SECOND SUBFRAME OF DATA AND TRANSFERS CONTROL TO MOPRIO.

A) PARAMETERS -

A

B

MNHSGB

MNCCGB

MNMESS

MNSENS

B) MACROS -

TRNON

TRNOF

QENBZ

QENBA

QUEUE

C) TIMING (7094) -

MINIMUM - 0.026 MILLISECONDS

MAXIMUM - 0.35 MILLISECONDS

D) STORAGE REQUIRED - 91 LOCATIONS.

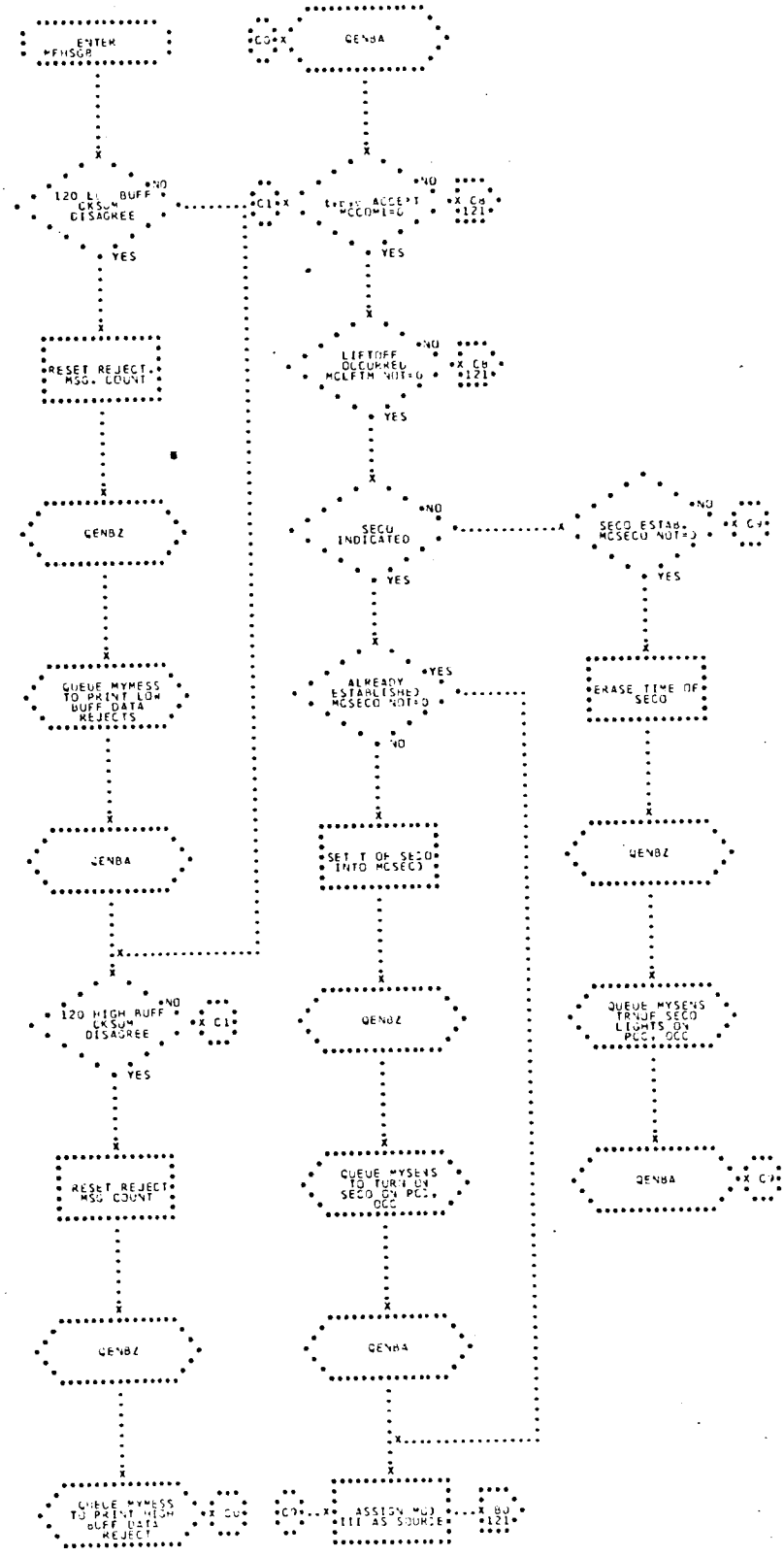
ENTER MFHSGR
GENBA
120 LL BUFF CKSUM DISAGREE
NO
YES
RESET REJECT MSG. COUNT
GENBZ
QUEUE MYMESS TO PRINT LOW BUFF DATA REJECTS
GENBA
120 HIGH BUFF CKSUM DISAGREE
RESET REJECT MSG COUNT
GENBZ
QUEUE MYMESS TO PRINT HIGH BUFF DATA REJECT
ACCEPT MCCOMM=0
LIFTOFF OCCURRED MCLFTM NOT=0
SECO INDICATED
ALREADY ESTAB(SHED) MCSECO NOT=0
SET T OF SECO INTO MCSECO
QUEUE MYSENS TO TURN ON SECO ON PCT. OCC
ASSIGN MOJ III AS SOURCE
SECO ESTAB. MCSECO NOT=0
ERASE TIME OF SECO
QUEUE MYSENS TRNOF SECO LIGHTS ON PCT. OCC

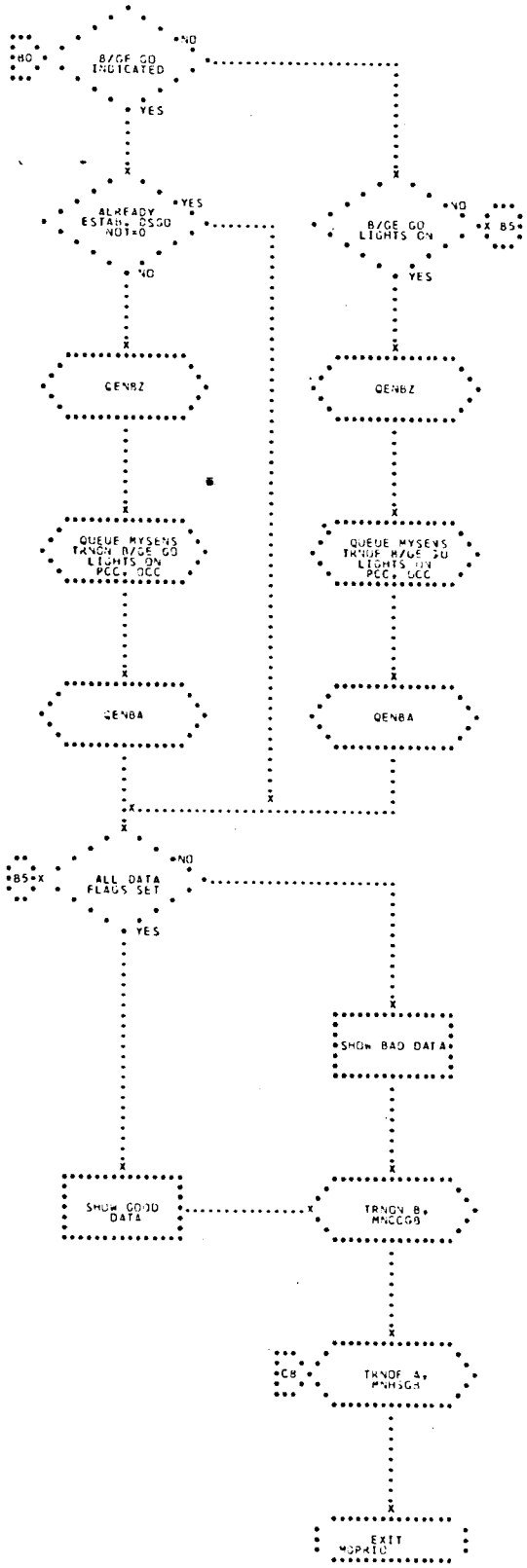
B0
B/GE GO INDICATED
NO
YES
ALREADY ESTAB. DSGO NOT=0
YES
NO
B/GE GO LIGHTS ON
NO
X B5
YES
QENBZ
QENBZ
QUEUE MYSENS TRNON B/GE GO LIGHTS ON PCC, OCC
QUEUE MYSENS TRNOF B/GE GO LIGHTS ON PCC, OCC
QENBA
QENBA
B5 X
ALL DATA FLAGS SET
NO
YES
SHOW BAD DATA
SHOW GOOD DATA
TRNON B, MNCCGB
CB
TRNOF A, MNHSGB
EXIT MOPRIO

## 30. MTHS09 - MONITOR IP 3600 HIGH-SPEED TRAP PROCESSOR

MTHS09 MOVES IP 3600 HIGH-SPEED INPUT DATA RECEIVED ON DCC SUBCHANNEL 2 FROM THE DCC INPUT TABLE INTO A STORAGE BUFFER SO THAT A NEW IP 3600 MESSAGE MAY BE ACCEPTED. (SEE FLOWCHART.)

INPUT

| | | |
|---|---|---|
| A) | TMHS09 AND TMXS09 | TWO SUBCHANNEL 2 INPUT TABLES OF 24 CELLS, EACH CELL CONTAINING AN 8-BIT QUANTITY, RIGHT-JUSTIFIED. TMHS09 AND TMXS09 RECEIVE, IN DUPLEX, THE OUTPUT FROM THE IP 3600 COMPUTER MULTIPLEXED WITH SPACECRAFT TELEMETRY DATA. TMHS09 CONTAINS THE SUBFRAME (EITHER FIRST OR SECOND) AND TMXS09 CONTAINS THE SUBFRAME IMAGE. |
| B) | MCHFSC | CONTAINS CURRENT GMT IN FIXED-POINT HALF-SECONDS. |
| C) | TM8.3M | CONTAINS THE NUMBER OF 8-1/3 MILLISECOND INTERVALS SINCE THE LAST EXACT HALF-SECOND. |

OUTPUT

| | | |
|---|---|---|
| A) | TMHSL2 | A 48-CELL TABLE CONTAINING THE CONTENTS OF TMHS09 IN THE FIRST 24 CELLS AND THE CONTENTS OF TMXS09 IN THE |

LAST 24 CELLS.

B) MCHST2 CONTAINS THE LOGGING TIME TAG FOR THE INPUT MESSAGE.

METHOD

MTHS09 STORES THE TMHS09 AND TMXS09 INPUT TABLES INTC TMHSL2 AND THEN COMPUTES THE LOGGING TIME TAG ASSOCIATED WITH THIS DATA. THE TIME TAG IS STORED IN MCHST2 AND THE B INDICATOR FOR IOHS09 IS TURNED ON SO THAT THE NEW INPUT MAY BE PROCESSED.

USAGE

MTHS09 IS ENTERED FROM MORTCC, FOLLOWING A TRAP ON DCC SUBCHANNEL 2 AND EXITS TO MOPRIO.

A) TABLES -
   TM8.3M
   TMHS09
   TMHSL2
   TMXS09

B) PARAMETERS -
   B
   MNHS09

C) COMMUNICATIONS CELLS -
   MCHFSC
   MCHST2

D) MACRO -
   TRNCN

E) STORAGE REQUIRED - 13 LOCATIONS.

F) TIME REQUIRED - 0.56 MILLISECOND

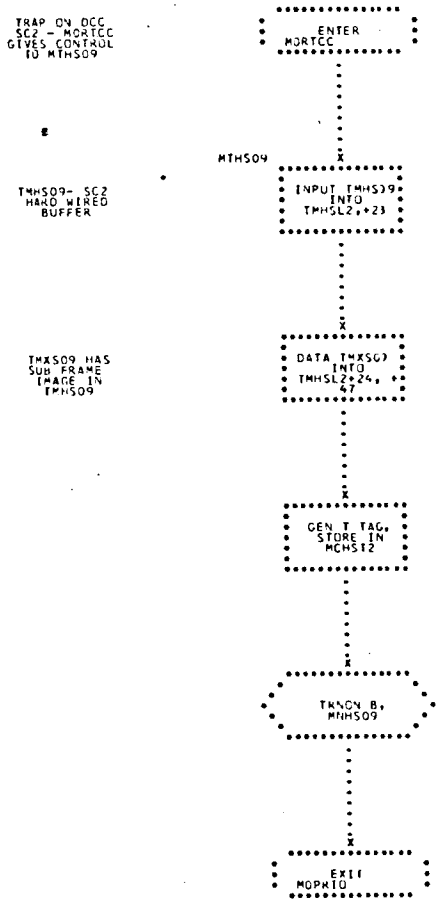
TRAP ON OCC SC2 - MORTCC GIVES CONTROL TO MTHS09
ENTER MORTCC
MTHS09
TMHS09- SC2 HARD WIRED BUFFER
INPUT TMHS09 INTO TMHSL2,+23
TMXS09 HAS SUB FRAME IMAGE IN TMHS09
DATA TMXS09 INTO TMHSL2+24, + 47
GEN T TAG, STORE IN MCHSI2
TRNON B, MNHS09
EXIT MOPRIO

## 31. MPHS09 - MONITOR PREFIX TO IOHS09

MPHS09 SETS UP CONTROLS TO ENTER THE INPUT PROCESSOR, IOHS09, AND LOGS THE CURRENT INPUT. (SEE FLOWCHART.)

INPUT

A) TABLE

TMHSL2 A 48-LOCATION TABLE CONTAINING THE CURRENT INPUT DATA AND ITS IMAGE IN WORDS OF 8 BITS, RIGHT JUSTIFIED, AS RECEIVED FROM SUBCHANNEL 2 OF THE DCC.

B) COMMUNICATION CELLS -

MCHST2 CONTAINS TIME OF TRAP IN FIXED POINT TO THE CLOSEST 8.3 MILLISECOND.

MCSWT1 CONTAINS INSTRUCTION GOVERNING ENTRY TO LOGGING SUBROUTINE, MSLOGG.

C) CONSTANTS

K00048 DEC 48

K00012 DEC 12

OUTPUT

TABLE -

TMPRIO THE B INDICATOR BIT IN THE MONITOR PRIORITY TABLE ENTRY FOR IOHS09 IS TURNED OFF. THE A INDICATOR BIT FOR THAT ENTRY IS TURNED ON.

METHOD

MPHS09 TURNS ON THE A INDICATOR BIT AND TURNS OFF THE B INDICATOR BIT. IF THE CURRENT INPUT DATA IS TO BE

LOGGED, THE SUBROUTINE MSLOGG IS ENTERED. OTHERWISE, ENTRY TO MSLOGG IS BYPASSED. CONTROL IS THEN TRANSFERRED TO IOHS09, THE INPUT DATA PROCESSOR.

USAGE

MPHS09 IS ENTERED FROM MOPRIO WHEN PRIORITY CONDITIONS PERMIT, IT EXITS TO IOHS09.

A) STORAGE REQUIRED - 29 LOCATIONS

B) TIMING (7094): - 1.81 MILLISECONDS, MINIMUM
2.28 MILLISECONDS, MAXIMUM

C) MPHS09 USES THE PARAMETERS A, B, AND MNHS09. MACROS TRNON, TRNOF, QENBZ, AND QENBA.

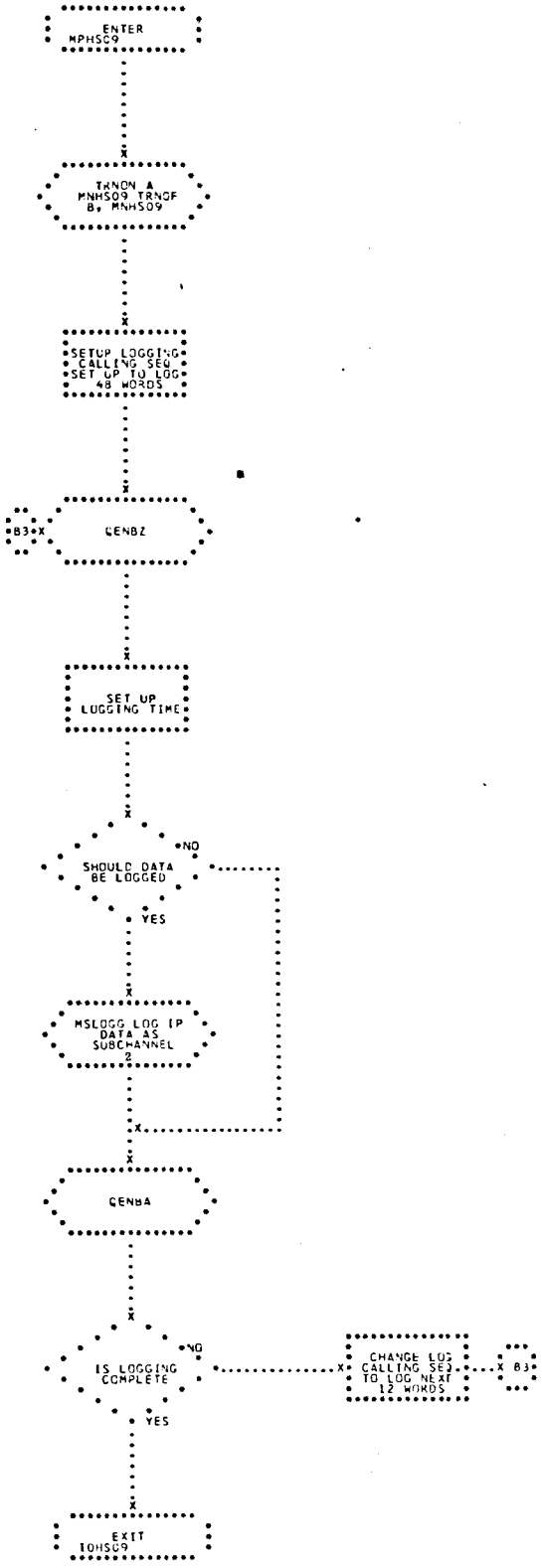
ENTER
MPHSC9
TRNON A
MNHS09 TRNOF
B, MNHS09
SETUP LOGGING
CALLING SEQ
SET UP TO LOG
48 WORDS
B3
GENBZ
SET UP
LOGGING TIME
NO
SHOULD DATA
BE LOGGED
YES
MSLOGG LOG IP
DATA AS
SUBCHANNEL
2
GENBA
NO
IS LOGGING
COMPLETE
YES
CHANGE LOG
CALLING SEQ
TO LOG NEXT
12 WORDS
B3
EXIT
IOHSC9

## 32. IOHS09 - IP-3600 HIGH-SPEED INPUT PROGRAM

THIS PROGRAM PROCESSES IP-3600 COMPUTED DATA AND ASSOCIATED TELEMETRY SUMMARIES TRANSMITTED TO GSFC VIA SUBCHANNEL 2 OF THE DATA COMMUNICATIONS CHANNEL (DCC) FROM CAPE KENNEDY DURING THE LAUNCH PHASE OF GEMINI MISSIONS. (SEE FLOWCHART.)

INPUT

A) TABLE -

TMHSL2 A FORTY-EIGHT WORD TABLE CONTAINING A TWENTY-FOUR WORD FIRST OR SECOND SUB-FRAME AND ITS DUPLICATE

B) COMMUNICATION CELL -

MCHST2 CONTAINS IN BITS 0 THROUGH 26, THE INTEGRAL NUMBER OF HALF-SECONDS WHICH HAVE ELAPSED SINCE MIDNIGHT (GMT) PRECEDING LAUNCH. BITS 27 THROUGH 35 CONTAIN THE INTEGRAL NUMBER OF 8.3 MILLISECONDS WHICH HAVE ELAPSED SINCE THE LAST HALF-SECOND.

C) CONSTANTS -

| | | | |
|---|---|---|---|
| K00000 | DEC | 0 | FIXED POINT ZERO |
| K0001 | DEC | 1 | FIXED POINT ONE |
| KT7700 | OCT | -377777777000 | |
| KT0077 | OCT | 777 | |
| KCH233 | OCT | 233000000000 | CHARACTERISTIC OF 233 OCTAL. |
| K0060. | DEC | 60.0 | FLOATING POINT SIXTY |
| K059.0 | DEC | 59. | FLOATING POINT FIFTY-NINE |

| | | | |
|---|---|---|---|
| K0.001 | DEC | .001 | FLOATING POINT ONE THOUSANDTH |
| K999.0 | DEC | 999.0 | FLOATING POINT NINE HUNDRED NINETY-NINE |

OUTPUT

A) TABLES -

TMH2DB A SEVEN-LOCATION TABLE CONTAINING THE TIME OF THE VECTORS IN FLOATING POINT GMT SECONDS AND THE POSITION AND VELOCITY VECTOR IN FLOATING POINT IP-UNITS.

TMH2TM A THREE-LOCATION TABLE CONTAINING THE DISCRETE DATA IN THE FOLLOWING FORMAT -

A) TIME OF TELEMETRY DATA IN GMT FLOATING POINT SECONDS

B) TELEMETRY DISCRETE, SIGNAL WORD AS FOLLOWS -

| | |
|---|---|
| BITS 0-12 | NOT USED, SET TO ZERO |
| BITS 13-15 | SELECTED SOURCE (001 FOR B-GE, 010 FOR BERMUDA, 100 FOR IP-3600 |
| BITS 16-19 | RETRO ''i'' FIRED, WHERE i IS 1, 3, 2, 4, RESPECTIVELY |
| BIT 20 | SECOND STAGE CUTOFF (SSCO) |
| BIT 21 | SPACECRAFT THRUSTING INITIATED |
| BITS 22-23 | LIFT SWITCH (00 PROGRAMMED LIFT, 10 NO LIFT, 01 MAXIMUM LIFT) |

| | |
|---|---|
| BIT 24 | LIFTOFF |
| BIT 25 | ABORT MODE CHANGEOVER |
| BIT 26 | EMERGENCY RETRO SALVO |
| BIT 27 | ASTRONAUT ACTUATED ABORT |
| BIT 28 | SPACECRAFT SEPARATION |
| BIT 29 | ABORT PHASE ENTERED |
| BIT 30 | ORBIT PHASE ENTERED |
| BITS 31-35 | NOT USED, SET TO ZERO |

C) SOURCE ID AND DATA QUALITY -

| | |
|---|---|
| BIT 1 | 0 |
| BIT 2 | 0 |
| BIT 3 | 0 |
| BIT 4 | FPS-16 RADAR |
| BIT 5 | FPQ-6 RADAR |
| BIT 6 | AZUSA MACH 2 |
| BIT 7 | MISTRAM |
| BIT 8 | 0 |
| BIT 9 | 0 GOOD DATA, 1 BAD DATA |

B) COMMUNICATION CELLS -

MCCOM2 CONTAINS COMPUTED DATA VALIDITY INDICATOR. IF NON-ZERO, INDICATES REJECTION OF PROCESSED COMPUTED DATA AND RETENTION OF PREVIOUS CONTENTS OF TMH2DB

MCMST2 CONTAINS MACHINE TIME TAG OF FIRST SUBFRAME IN SAME FORMAT AS MCHST2

MCTEL2 CONTAINS TELEMETRY DATA VALIDITY INDICATOR. IF NON-ZERO, INDICATES REJECTION OF TELEMETRY DATA AND RETENTION OF PREVIOUS CONTENTS OF TMH2TM

METHOD

A DATA FRAME CONSISTING OF 384 (8X48) BITS IS TRANSMITTED AT A RATE OF 1000 BITS/SECOND OVER A DUPLEXED LINE FROM THE IP-3600 BUFFER. IT IS RECEIVED AS A SEQUENCE OF TWO 192 (8X24) BIT SUBFRAMES. EACH SUBFRAME AND ITS IMAGE ARE STORED BY MONITOR IN THE 48 WORD DATA TABLE, TMHSL2, AND CONTROL IS TRANSFERRED TO IOHS09.

A COMPLETE HIGH-SPEED DATA MESSAGE (I.E., A FIRST AND SECOND SUBFRAME IN SEQUENCE) MUST BE RECEIVED TO GENERATE A COMPLETE SET OF OUTPUT DATA. THIS IMPLIES A MINIMUM OF TWO ENTRIES TO IOHS09. MESSAGES ARE PROCESSED IN THREE PHASES - SUBFRAME IDENTIFICATION, TELEMETRY DATA PROCESSING, AND COMPUTED DATA PROCESSING AS DESCRIBED BELOW.

SUBFRAME IDENTIFICATION

UPON EACH ENTRY TO IOHS09, THE GIVEN SUBFRAME (I.E., WORDS 1 THROUGH 24 OF TMHSL2) IS EXAMINED TO ENSURE THAT IT IS NOT ''SOLID'' I.E., THAT NOT ALL 24 ENTRIES OF THE SUBFRAME ARE IDENTICAL. IF THE SUBFRAME IS NOT SOLID, THE SUBFRAME ID (WORD 24 OF DATA BUFFER) IS EXAMINED TO DETERMINE ITS VALIDITY. IF THE SUBFRAME FAILS EITHER OF THESE CRITERIA, THE SAME TESTS ARE PERFORMED ON THE SUBFRAME IMAGE (WORDS 25 THROUGH 48 OF TMHSL2). IF THE IMAGE ALSO FAILS TO SATISFY EITHER OF THESE REQUIREMENTS, CONTROL PASSES TO MFFS09 WITH DATA REJECTION INDICATED. THE SUBFRAME PASSING BOTH STANDARDS IS THEN PROCESSED ACCORDING TO ITS ID WORD.

THE SUBFRAME IS ALSO EXAMINED TO DETERMINE WHETHER IT IS A FIRST OR A SECOND SUBFRAME. IF THE SUBFRAMES ARE FIRST SUBFRAMES, THE TELEMETRY DATA OF THE MESSAGE IS

PROCESSED, THE COMPUTED DATA ENTRIES OF TMHSL2 ARE TRANSFERRED TO TEMPORARY STORAGE AND A SECOND SUBFRAME INDICATOR IS SET NON-ZERO. CONTROL THEN PASSES TO MFFS09.

IF THE RECEIVED SUBFRAME IS A SECOND SUBFRAME, AND IF THE SECOND SUBFRAME INDICATOR IS SET NON-ZERO, ALL THE ENTRIES OF TMHSL2 ARE TRANSFERRED TO TEMPORARY STORAGE, THE SECOND SUBFRAME INDICATOR IS SET TO ZERO, AND THE COMPUTED DATA OF THE MESSAGE IS PROCESSED.

A SECOND SUBFRAME RECEIVED WITH THE SECOND SUBFRAME INDICATOR SET TO ZERO IS REJECTED WITHOUT PROCESSING. IN THIS CASE, THE TELEMETRY DATA VALIDITY INDICATOR IS SET NON-ZERO AND CONTROL IS GIVEN TO MFFS09.

TELEMETRY DATA PROCESSING

WHEN A FIRST SUBFRAME IS RECOGNIZED, TELEMETRY DATA IS PROCESSED AS FOLLOWS -

A) IF THE TELEMETRY DATA TO BE PROCESSED COMES FROM THE SUBFRAME IMAGE, THE COUNT OF TELEMETRY MESSAGES REJECTED FROM THE ORIGINAL SUBFRAME IS INCREASED BY ONE. THE TELEMETRY DATA IN BOTH ORIGINAL SUBFRAME AND IMAGE IS THEN COMPARED. IF IDENTICAL, THE COUNT OF TELEMETRY MESSAGES REJECTED FROM THE IMAGE IS INCREASED BY ONE AND THE TELEMETRY DATA VALIDITY INDICATOR SET TO SHOW REJECTION OF TELEMETRY. CONTROL THEN PASSES TO MFFS09.

B) IF EITHER THE TELEMETRY DATA COMES FROM THE ORIGINAL SUBFRAME OR COMES FROM THE IMAGE, BUT DIFFERS FROM THE TELEMETRY DATA IN THE ORIGINAL SUBFRAME, THE SUBROUTINE ISPAKT IS ENTERED TO PROCESS THE DATA. ISPAKT EXAMINES THE 23-BIT TELEMETRY MESSAGES TO ENSURE -

1) THAT THE THREE SELECTED SOURCE BITS DEFINE THE BINARY CONFIGURATION FOR ONE OF THE OCTAL DIGITS 1, 2, OR 4
2) THAT THE THREE 23-BIT SEQUENCES ARE IDENCAL
3) THAT NOT BOTH THE ABORT AND ORBIT BITS ARE SET TO 1

THE TELEMETRY DATA FROM A BUFFER SATISFYING THE ABOVE CONDITIONS IS THEN STORED IN THE SECOND WORD OF THE TMH2TM TABLE AND THE TELEMETRY DATA VALIDITY INDICATOR IS SET TO SHOW ACCEPTANCE OF THE TELEMETRY. THE SUBROUTINE IPTIM IS THEN ENTERED TO GENERATE THE TELEMETRY GMT TIME TAG WHICH IS STORED IN THE THIRD WORD OF THE TMH2TM TABLE. TRANSFER IS THEN MADE TO MFFS09.

IF HOWEVER, NEITHER THE SUBFRAME NOR ITS IMAGE SATISFY ALL THE CRITERIA, THE TELEMETRY DATA VALIDITY INDICATOR IS SET TO SHOW REJECTION OF THE DATA AND RETENTION OF THE PREVIOUS CONTENTS OF TMH2TM BEFORE CONTROL IS GIVEN TO MFFS09.

COMPUTED DATA PROCESSING

UPON RECEIPT OF A FIRST AND SECOND SUBFRAME IN SEQUENCE, THE COMPUTED DATA ENTRIES OF THE MESSAGE ARE PROCESSED. THE CHECKSUM OF THE MESSAGE AND, IF NECESSARY, OF THE IMAGE ARE SUCCESSIVELY COMPUTED AND COMPARED WITH THE TRANSMITTED CHECKSUMS. THE DATA CONTAINED IN THE BLOCK FIRST PRODUCING CHECKSUM AGREEMENT IS THEN PROCESSED BY THE SUBROUTINE H7PCD TO PRODUCE THE OUTPUT TABLE TMH2DB AND THE THIRD LOCATION OF TMH2TM. THE CELL MCCOM2 IS THEN SET ZERO TO SHOW ACCEPTANCE OF THE DATA.

FAILURE TO FIND A VALID CHECKSUM CAUSES THE CELL MCCOM2 TO BE SET NON-ZERO INDICATING REJECTION OF THE COMPUTED DATA. IN EITHER CASE, MONITOR RECEIVES CONTROL THROUGH AN EXIT TO MFHSGB.

USAGE

IOHS09 MUST BE ENTERED FROM ITS PREFIX, MPHS09, AT LEAST TWICE TO GENERATE THE COMPLETE SET OF OUTPUT DATA. COMPUTED DATA OUTPUT CAN BE GENERATED ONLY AFTER RECEIPT OF A FIRST AND A SECOND SUBFRAME IN SEQUENCE, WHEREAS TELEMETRY DATA OUTPUT CAN BE GENERATED EACH TIME A FIRST SUBFRAME IS RECEIVED. CONTROL IS RETURNED TO MONITOR VIA MFHS09 WHEN A FIRST AND A SECOND SUBFRAME HAVE BEEN RECEIVED IN SEQUENCE, OTHERWISE RETURN IS MADE TO MFFS09.

A) STORAGE REQUIRED - 396 LOCATIONS INCLUDING STORAGE REQUIRED BY H7PCD, IPTIM, CNVIP AND TEMPORARY STORAGE

B) TIMING (7094) - APPROXIMATELY 10 MILLISECONDS

## CAPE KENNEDY IP TO GSFC DATA FORMAT TABLE

8-Bit Word Transfers From Data Receiver Mod 72
at GSFC to DCC Subchannel 2

First Subframe

| | | | | | | | |
|---|---|---|---|---|---|---|---|
| 1 | 1 | | Telemetry | | | | 8 |
| 2 | 9 | | Telemetry | | | | 16 |
| 3 | 17 | | Telemetry | | | | 24 |
| 4 | 25 | | Telemetry | | | | 32 |
| 5 | 33 | | Telemetry | | | | 40 |
| 6 | 41 | | Telemetry | | | | 48 |
| 7 | 49 | | Telemetry | | | | 56 |
| 8 | 57 | | Telemetry | | | | 64 |
| 9 | 65 | | Telemetry | | | | 72 |
| 10 | 1 | | A | | | | 8 |
| 11 | 9 | | A | | | | 16 |
| 12 | 17 | | A | | | | 24 |
| 13 | 25 | | A | | | | 32 |
| 14 | 33 | A | 36 | 1 | B | | 4 |
| 15 | 5 | | B | | | | 12 |
| 16 | 13 | | B | | | | 20 |
| 17 | 21 | | B | | | | 28 |
| 18 | 29 | | B | | | | 36 |
| 19 | 1 | | C | | | | 8 |
| 20 | 9 | | C | | | | 16 |
| 21 | 17 | | C | | | | 24 |
| 22 | 25 | | C | | | | 32 |
| 23 | 33 | C | 36 | 0 | 0 | 0 | 0 |
| 24 | 0 | 0 | 0 | 1 | ID* | | 5 |

Second Subframe

| | | | | | | | |
|---|---|---|---|---|---|---|---|
| 1 | 1 | | D | | | | 8 |
| 2 | 9 | | D | | | | 16 |
| 3 | 17 | | D | | | | 24 |
| 4 | 25 | | D | | | | 32 |
| 5 | 33 | D | 36 | 1 | E | | 4 |
| 6 | 5 | | E | | | | 12 |
| 7 | 13 | | E | | | | 20 |
| 8 | 21 | | E | | | | 28 |
| 9 | 29 | | E | | | | 36 |
| 10 | 1 | | F | | | | 8 |
| 11 | 9 | | F | | | | 16 |
| 12 | 17 | | F | | | | 24 |
| 13 | 25 | | F | | | | 32 |
| 14 | 33 | F | 36 | 1 | N | | 4 |
| 15 | 5 | | N | | | | 12 |
| 16 | 13 | | N | | | | 20 |
| 17 | 21 | | N | | | | 28 |
| 18 | 29 | | N | | | | 36 |
| 19 | 1 | | Check Sum | | | Σ | 8 |
| 20 | 9 | | Check Sum | | | Σ | 16 |
| 21 | 17 | | Check Sum | | | Σ | 24 |
| 22 | 25 | | Check Sum | | | Σ | 32 |
| 23 | 33 | Σ | 36 | 0 | 0 | 0 | 0 |
| 24 | 0 | 0 | 0 | 1 | ID* | | 5 |

NOTES:

1. The above constitutes a complete message frame and is transmitted each 400 milliseconds.

*2. Each subframe consists of 192 serial bits preceded by a sync signal. The quantities represented by A to F, and N are restricted information.

3. Most significant bit of each quantity above is transmitted first.

NOTES APPLICABLE TO TABLE

NOTE 1 - THE FORMAT OF THE 5-BIT IDENTITY CODE (ID) IN EACH SUBFRAME IS IDENTICAL IN BOTH B-GE AND IP 3600 MESSAGES AND CONVEYS THE FOLLOWING INFORMATION -

BIT 1 - ALWAYS A ZERO

BIT 2 - ONE SIGNIFIES SECOND SUBFRAME

BIT 3 - ONE SIGNIFIES FIRST SUBFRAME

BIT 4 - ALWAYS A ZERO

BIT 5 - ALWAYS A ZERO

NOTE 2 - IN THE EVENT THAT NO DATA IS RECEIVED FROM THE TELEMETRY EVENT TRANSMITTING BUFFER, THE HIGH-SPEED BUFFER AND RETRANSMITTERS ARE ARRANGED TO TRANSMIT ZEROS IN THE BIT POSITIONS OCCUPIED BY TELEMETRY EVENT DATA BITS 1 THROUGH 40, AND 43 THROUGH 72. ONES WILL BE TRANSMITTED IN POSITIONS 41 AND 42. THIS WILL RESULT IN ERRONEOUS PARITY FOR THE TELEMETRY EVENT DATA MESSAGE.

NOTE 3 - IN THE ABSENCE OF DATA QUANTITIES G, H, J, K, L, M, AND N, THE COMPLETE MESSAGE FRAME WILL BE TRANSMITTED EACH 650 MILLISECONDS. TELEMETRY DATA WILL CONTINUE TO BE TRANSMITTED. IN PLACE OF THE MISSING DATA QUANTITIES, ''ZEROS'' WITH ''ONES'' INTERSPERSED IN CERTAIN POSITIONS WILL BE TRANSMITTED. THE FOLLOWING IS A LIST OF THE BITS WHICH WILL APPEAR AS ''ONES'' IN THIS EVENT -

| SUBFRAME | 8-BIT WORD NO. | QUANTITY | BIT WITHIN QUANTITY |
|---|---|---|---|
| 1 | 13 | G | 24 |
| 1 | 16 | H | 24 |
| 1 | 19 | J | 24 |
| 1 | 22 | K | 24 |
| 2 | 3 | L | 24 |
| 2 | 6 | M | 24 |
| 2 | 9 | N | 24 |
| 2 | 10 | CHECKSUM | 1 |

NOTE 4 - IN THE ABSENCE OF DATA QUANTITIES, A,B,C,D,E,F, AND N, THE COMPLETE MESSAGE FRAME WILL BE TRANSMITTED EACH 400 MILLISECONDS. TELEMETRY DATA WILL CONTINUE TO BE TRANSMITTED. IN PLACE OF THE MISSING DATA QUANTITIES, ''ZEROES'' WITH ''ONES'' INTERSPERSED IN CERTAIN POSITIONS WILL BE TRANSMITTED. THE FOLLOWING IS A LIST OF THE BITS WHICH WILL APPEAR AS ''ONES'' IN THIS EVENT -

| SUBFRAME | 8-BIT WORD NO. | QUANTITY | BIT WITHIN QUANTITY |
|---|---|---|---|
| 1 | 12 | A | 24 |
| 1 | 15 | B | 12 |
| 1 | 18 | B | 36 |
| 1 | 21 | C | 24 |
| 2 | 3 | D | 24 |
| 2 | 6 | E | 12 |
| 2 | 9 | E | 36 |
| 2 | 12 | F | 24 |
| 2 | 15 | N | 12 |
| 2 | 19 | CHECKSUM | 1 |

NOTE 5 - THE TOTAL TIME LAG BETWEEN THE TIME THE ABOVE DATA IS GENERATED AND THE RECEIPT OF A COMPLETE MESSAGE FRAME BY THE IBM 7094 IS AS FOLLOWS -

VIA THE B-GE COMPLEX -

300 TO 800 MILLISECONDS.

VIA THE IP 3600 COMPLEX -

300 TO 700 MILLISECONDS.

ALL SUBSCRIPT
ARE INDICATED IN
PARENTHESIS

FI = FRAME SEQUENCE INDICATOR
SLBI = SOLID LOW BUFFER INDICATOR
$TM_2$ = MCTEL2
$CM_2$ = MCCOM2

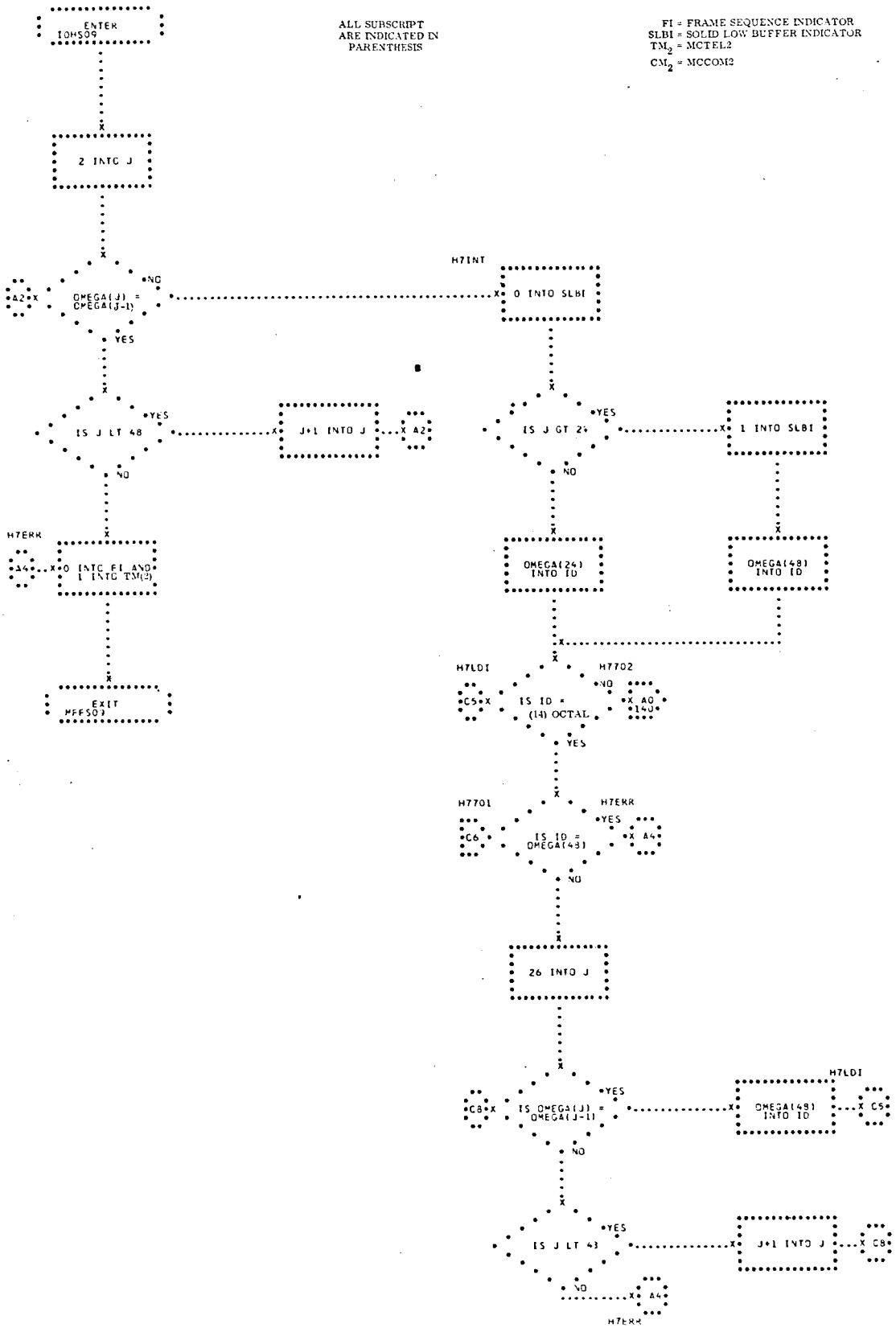

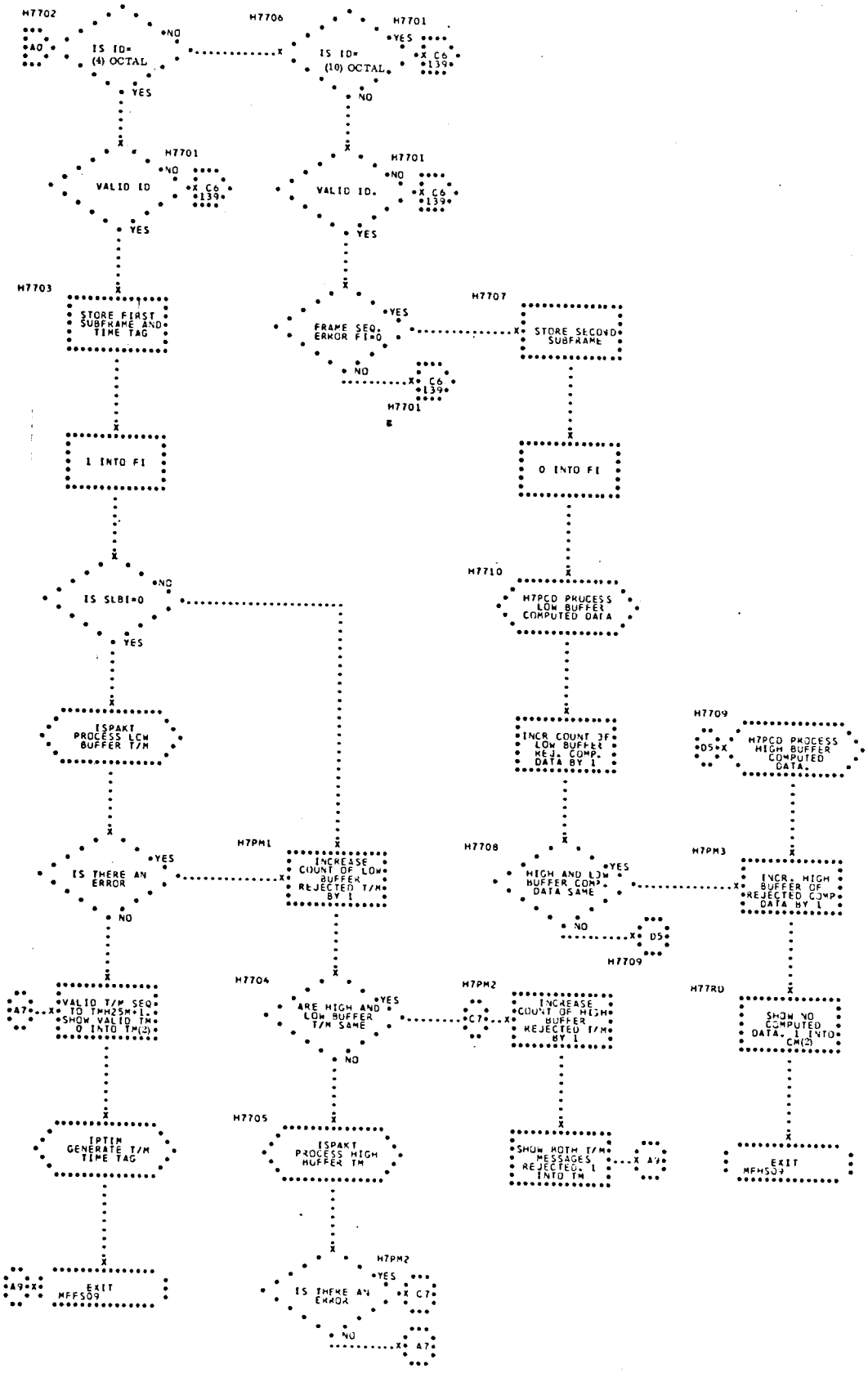
H7702
A0
IS ID= (4) OCTAL
NO
YES
H7706
IS ID= (10) OCTAL
H7701
YES
C6 139
NO
VALID ID
H7701
NO
C6 139
YES
VALID ID.
H7701
NO
C6 139
YES
H7703
STORE FIRST SUBFRAME AND TIME TAG
FRAME SEQ. ERROR FI=0
YES
NO
C6 139
H7701
H7707
STORE SECOND SUBFRAME
1 INTO FI
0 INTO FI
IS SLBI=0
NO
YES
H7710
H7PCD PROCESS LOW BUFFER COMPUTED DATA
ISPAKT PROCESS LOW BUFFER T/M
INCR COUNT OF LOW BUFFER REJ. COMP. DATA BY 1
H7709
D5
H7PCD PROCESS HIGH BUFFER COMPUTED DATA.
IS THERE AN ERROR
YES
NO
H7PM1
INCREASE COUNT OF LOW BUFFER REJECTED T/M BY 1
H7708
HIGH AND LOW BUFFER COMP. DATA SAME
YES
NO
D5
H7709
H7PM3
INCR. HIGH BUFFER OF REJECTED COMP. DATA BY 1
VALID T/M SEQ TO TMH25M+1. SHOW VALID TM. 0 INTO TM(2)
A7
H7704
ARE HIGH AND LOW BUFFER T/M SAME
YES
NO
H7PM2
C7
INCREASE COUNT OF HIGH BUFFER REJECTED T/M BY 1
H77RD
SHOW NO COMPUTED DATA. 1 INTO CM(2)
IPTIM GENERATE T/M TIME TAG
H7705
ISPAKT PROCESS HIGH BUFFER TM
SHOW BOTH T/M MESSAGES REJECTED. 1 INTO TM
A9
EXIT MFHS09
A9
EXIT MFFS09
H7PM2
IS THERE AN ERROR
YES
C7
NO
A7

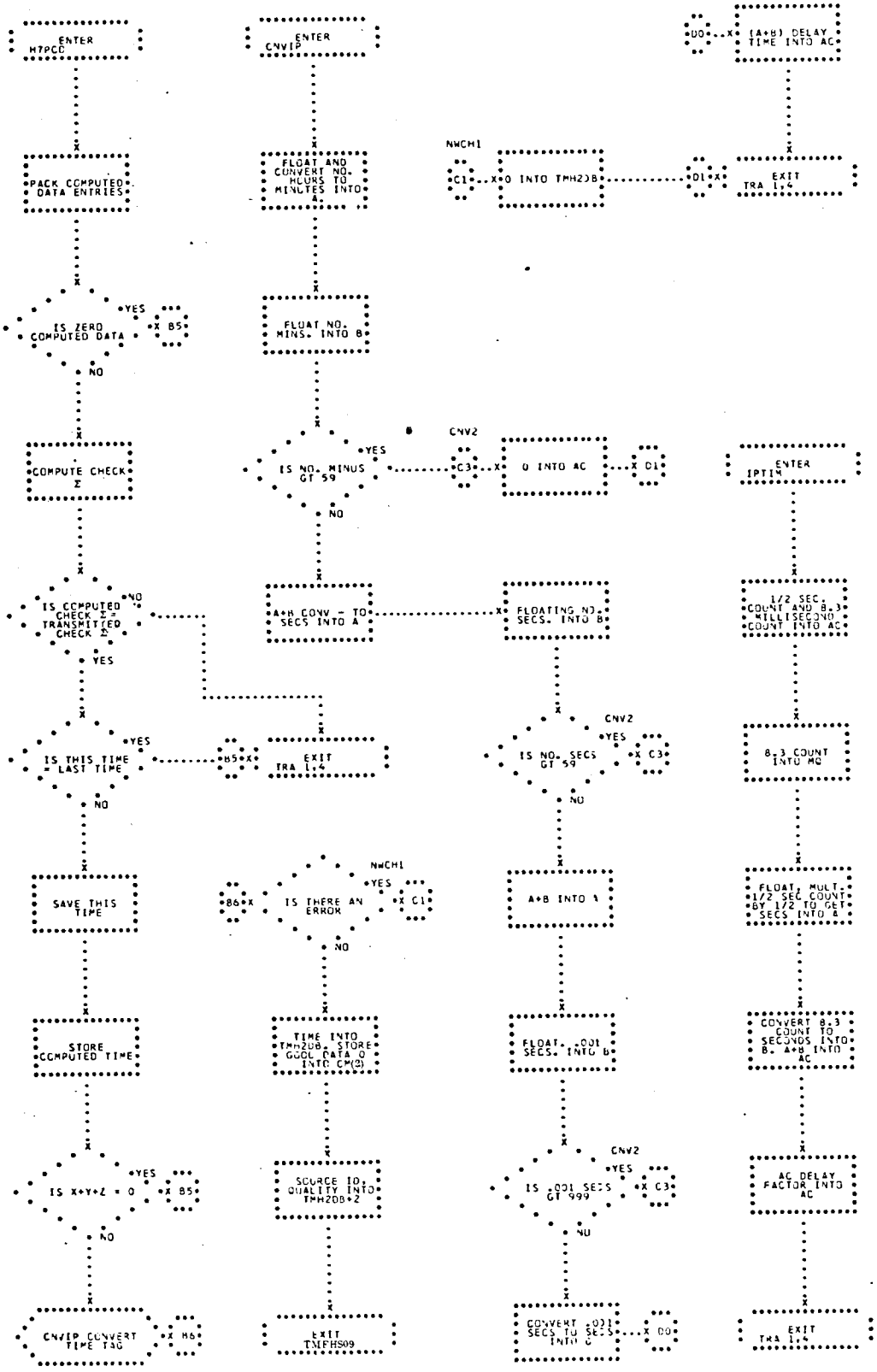
ENTER H7PCD
PACK COMPUTED DATA ENTRIES
IS ZERO COMPUTED DATA
YES
B5
NO
COMPUTE CHECK Σ
IS COMPUTED CHECK Σ = TRANSMITTED CHECK Σ
NO
YES
IS THIS TIME = LAST TIME
YES
B5
NO
SAVE THIS TIME
STORE COMPUTED TIME
IS X+Y+Z = 0
YES
B5
NO
CNVIP CONVERT TIME TAG
H6
ENTER CNVIP
FLOAT AND CONVERT NO. HOURS TO MINUTES INTO A.
FLOAT NO. MINS. INTO B
IS NO. MINUS GT 59
YES
NO
A+B CONV - TO SECS INTO A
EXIT TRA 1,4
IS THERE AN ERROR
NWCH1
YES
C1
B6
NO
TIME INTO TMH2DB. STORE GOOD DATA 0 INTO CM(2)
SOURCE ID. QUALITY INTO TMH2DB+2
EXIT TMFHS09
B
CNV2
C3
0 INTO AC
D1
FLOATING NO. SECS. INTO B
IS NO. SECS GT 59
CNV2
YES
C3
NO
A+B INTO A
FLOAT. .001 SECS. INTO B
IS .001 SECS GT 999
CNV2
YES
C3
NO
CONVERT .001 SECS TO SECS INTO C
D0
NWCH1
C1
0 INTO TMH2DB
D1
D0
(A+B) DELAY TIME INTO AC
EXIT TRA 1,4
ENTER IPTIM
1/2 SEC. COUNT AND 8.3 MILLISECOND COUNT INTO AC
8.3 COUNT INTO MQ
FLOAT. MULT. 1/2 SEC COUNT BY 1/2 TO GET SECS. INTO A
CONVERT 8.3 COUNT TO SECONDS INTO B. A+B INTO AC
AC DELAY FACTOR INTO AC
EXIT TRA 1,4

## 33. MFFS09 - TELEMETRY PROCESSING SUFFIX TO IOHS09

MFFS09 PROCESSES ALL TELEMETRY ASSOCIATED WITH THE I.P HIGH-SPEED SUBCHANNELS OF THE DCC. (SEE FLOWCHART.)

INPUT

A) TABLE -

TMH2TM A FOUR LOCATION TABLE CONTAINING THE TELEMETRY SEQUENCE AND ITS ASSOCIATED TIME TAG IN THE FIRST AND SECOND WORDS.

B) COMMUNICATION CELLS -

MCDTWD CONTAINS MASK OF DELETIONS FROM TELEMETRY SEQUENCE ENTERED THROUGH THE PCC.

MCITWD CONTAINS MASK OF INSERTIONS TO TELEMETRY SEQUENCE ENTERED THROUGH THE PCC.

MCLTTL CONTAINS THE MOST RECENTLY PROCESSED TELEMETRY SEQUENCE.

MCTEL2 NON-ZERO IF DATA HAS BEEN REJECTED.

MCTLTC CONTAINS THE TIME IN FLOATING POINT GMT SECONDS OF THE LAST CHANGE IN TELEMETRY.

OUTPUT

THE APPROPRIATE EVENT CELL IS SET NON-ZERO IF THAT EVENT HAS OCCURRED. OTHERWISE, IT IS RESET TO ZERO.

METHOD

UPON RECEIPT OF A FIRST SUBFRAME (WHICH CONTAINS THE 72-BIT TELEMETRY SEQUENCE), MFFS09 IS ENTERED FROM IOHS09. THE PROGRAM FIRST CHECKS THE NUMBER OF HIGH AND LOW BUFFER TELEMETRY MESSAGES WHICH HAVE BEEN REJECTED. IF THE NUMBER FOR EITHER BUFFER IS 120, A MESSAGE FOR ON-

LINE PRINT IS QUEUED TO THAT EFFECT. MFFS09 THEN PROCESSES THE TELEMETRY SEQUENCE PROVIDED THAT THE FOLLOWING CONDITIONS ARE MET -

A) AFTER MODIFICATIONS BY THE PCC INSERT AND DELETE WORDS, THE SELECTED LINE IS A LEGAL ONE.

B) THE TIME OF THE TELEMETRY IS GREATER THAN THE TIME OF THE PREVIOUS TELEMETRY.

C) THE TELEMETRY SEQUENCE INDICATES A CHANGE FROM THE SEQUENCE PREVIOUSLY PROCESSED.

IF THESE CONDITIONS ARE NOT MET, THE PROGRAM EXITS TO MOPRIO.

MFFS09 PROCESSES THE TELEMETRY SEQUENCE USING IITPRO TO SET APPROPRIATE CELLS INDICATING WHETHER OR NOT AN EVENT HAS OCCURRED. AFTER PROCESSING, BOTH THE TELEMETRY SEQUENCE AND THE TRANSMISSION TIME TAG ARE SAVED FOR FUTURE PASSES, AND MFFS09 EXITS TO MOPRIO.

USAGE

MFFS09 IS ENTERED FROM IOHS09 UPON RECEIPT OF A FIRST SUBFRAME. IT TRANSFERS CONTROL TO MOPRIO.

A. MACROS -

QENBZ, QENBA, QUEUE, TRNON, TRNOF

B. PARAMETERS -

A, MNHS09, MNMESS

C. STORAGE REQUIRED -

61 LOCATIONS

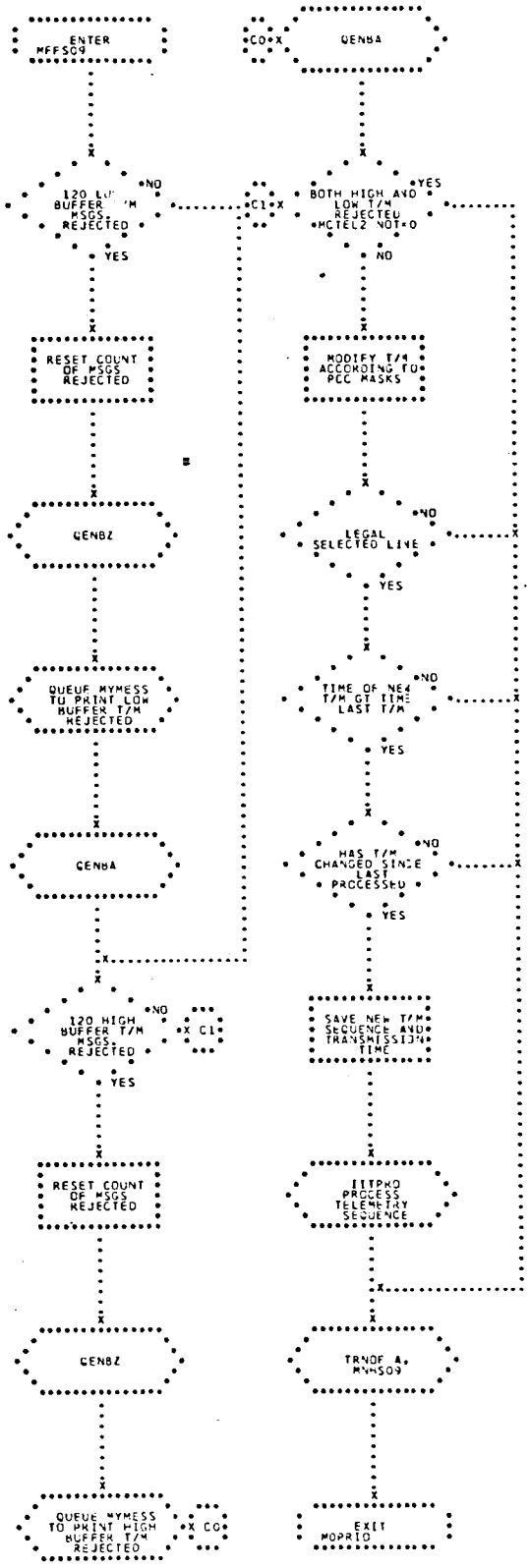
ENTER MFFS09
CO X
GENBA
120 LOW BUFFER T/M MSGS. REJECTED
NO
YES
C1 X
BOTH HIGH AND LOW T/M REJECTED MCTEL2 NOT 0
YES
NO
RESET COUNT OF MSGS REJECTED
MODIFY T/M ACCORDING TO PCC MASKS
GENBZ
LEGAL SELECTED LINE
NO
YES
QUEUE MYMESS TO PRINT LOW BUFFER T/M REJECTED
TIME OF NEW T/M GT TIME LAST T/M
NO
YES
GENBA
HAS T/M CHANGED SINCE LAST PROCESSED
NO
YES
120 HIGH BUFFER T/M MSGS. REJECTED
NO
X C1
YES
SAVE NEW T/M SEQUENCE AND TRANSMISSION TIME
RESET COUNT OF MSGS REJECTED
IITPKO PROCESS TELEMETRY SEQUENCE
GENBZ
TRNOF A. MYMS09
QUEUE MYMESS TO PRINT HIGH BUFFER T/M REJECTED
X CO
EXIT MOPRIO

## 34. MFHS09 - VECTOR PROCESSING SUFFIX TO IOHS09

MFHS09 PROCESSES THE VECTORS RECEIVED VIA THE IP HIGH-SPEED SUBCHANNELS OF THE DCC. (SEE FLOWCHART)

INPUT

COMMUNICATION CELLS

| | |
|---|---|
| MCCOM2 | NON-ZERO IF DATA WAS REJECTED. OTHERWISE ZERO. |
| MCLFTM | CONTAINS GMT OF LIFT-OFF IN FLOATING POINT SECONDS. |

OUTPUT

TABLE

| | | |
|---|---|---|
| TMH2DB | | A NINE-LOCATION TABLE ARRANGED AS FOLLOWS - |
| TMH2DB | t | VECTOR TIME TAG IN FLOATING POINT GMT SECONDS |
| +1 | X | POSITION VECTOR IN FLOATING |
| +2 | Y | POINT IP LENGTH UNITS |
| +3 | Z | |
| +4 | $\dot{X}$ | VELOCITY VECTOR IN FLOATING |
| +5 | $\dot{y}$ | POINT IP VELOCITY UNITS |
| +6 | $\dot{Z}$ | |
| +7 | 4,5,6,7 | DATA SOURCE INDICATOR |
| +8 | = 0 | DATA ACCEPTABLE |
| | $\neq$ 0 | DATA UNACCEPTABLE |

METHOD

UPON ENTRY, MPHS09 DETERMINES IF THE NUMBER OF CHECKSUM ERRORS ON EITHER HIGH OR LOW BUFFERS IS 120. IF EITHER OCCURS, A MESSAGE IS QUEUED TO THAT EFFECT. IF THE VECTOR IS DEEMED ACCEPTABLE BY IOHS09 AND IF LIFT-OFF HAS OCCURRED, PROCESSING WILL CONTINUE. OTHERWISE, EXIT IS MADE TO MOPRIO.

A DATA SOURCE IS THEN ASSIGNED TO THE DATA. THE COORDINATE CONVERSION PROGRAM FOR IP DATA IS THEN REQUESTED AND CONTROL IS RETURNED TO MOPRIO.

USAGE

MFHS09 IS ENTERED FROM IOHS09 UPON THE RECEIPT OF BOTH A FIRST AND A SECOND SUBFRAME OF DATA. IT TRANSFERS CONTROL TO MOPRIO.

A. MACROS -

TRNON, TRNOF, QENBZ, QENBA, QUEUE

B. PARAMETERS -

A, B, MNHS09, MNCCIP, MNMESS

C. STORAGE REQUIRED - 91 LOCATIONS

D. TIMING (7094) - 0.026 MILLISECONDS (MIN.).
0.35 MILLISECONDS (MAX.).

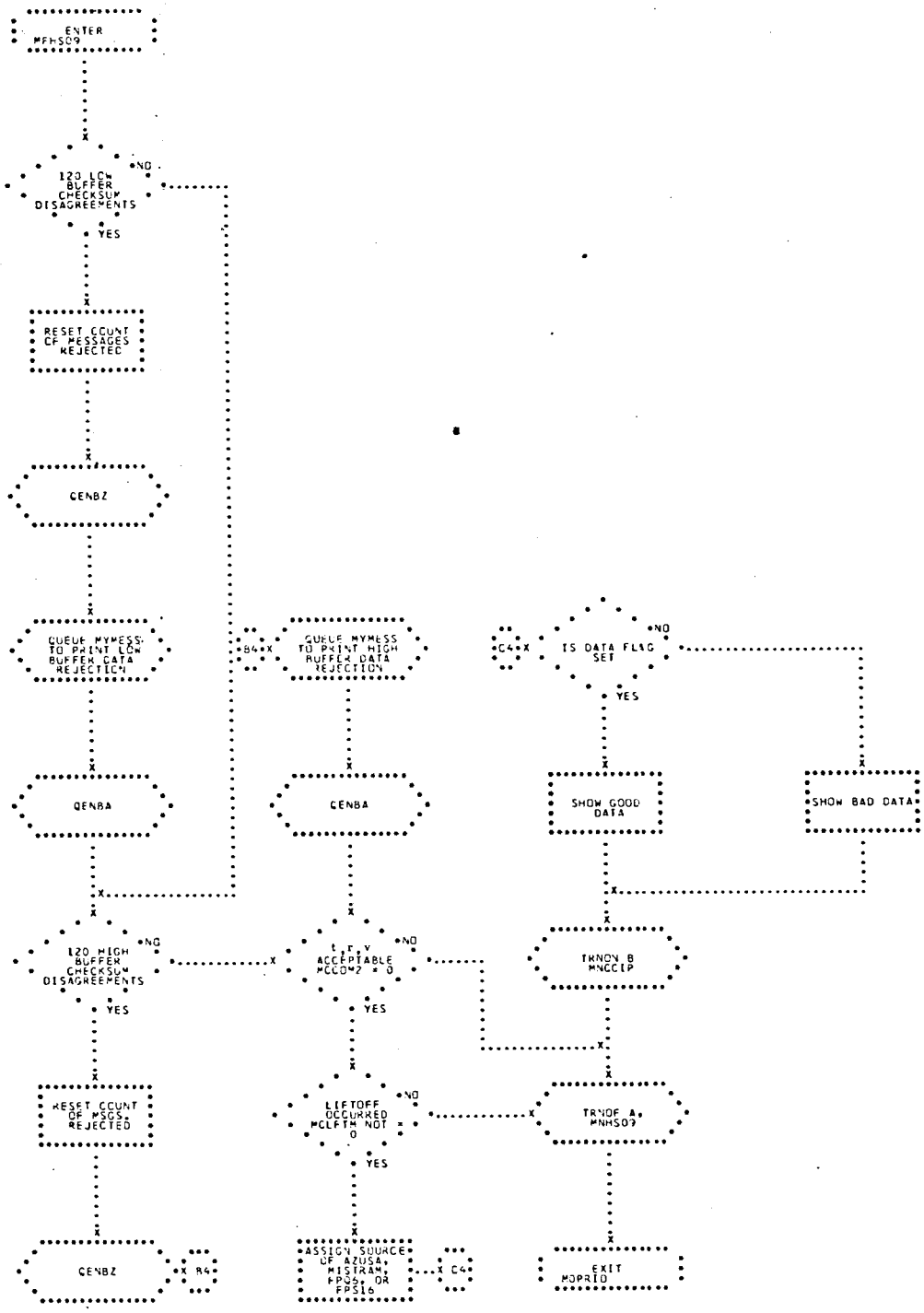
ENTER MFHS09
120 LOW BUFFER CHECKSUM DISAGREEMENTS
NO
YES
RESET COUNT OF MESSAGES REJECTED
GENBZ
QUEUE MYMESS TO PRINT LOW BUFFER DATA REJECTION
GENBA
B4
QUEUE MYMESS TO PRINT HIGH BUFFER DATA REJECTION
GENBA
C4
IS DATA FLAG SET
NO
YES
SHOW GOOD DATA
SHOW BAD DATA
120 HIGH BUFFER CHECKSUM DISAGREEMENTS
NO
YES
t,r,v ACCEPTABLE MCCOM2 = 0
NO
YES
TRNON B MNCCIP
RESET COUNT OF MSGS. REJECTED
LIFTOFF OCCURRED MCLFTM NOT = 0
NO
YES
TRNOF A, MNHS09
GENBZ
B4
ASSIGN SOURCE OF AZUSA, MISTRAM, FPS6, OR FPS16
C4
EXIT MOPRID

## 35. MTHSB5 - MONITOR BERMUDA HIGH-SPEED INPUT TRAP PROCESSOR FOR SUBCHANNEL 5

MTHSB5 MOVES BERMUDA HIGH-SPEED INPUT DATA RECEIVED ON SUBCHANNEL 5 OF THE DCC FROM THE DCC INPUT BUFFER TO A STORAGE BUFFER SO THAT A NEW BERMUDA HIGH-SPEED INPUT MESSAGE MAY BE ACCEPTED. (SEE FLOWCHART.)

INPUT

A) TABLES -

TMHSB5 SUBCHANNEL 5 INPUT TABLE OF 24 LOCATIONS, EACH LOCATION CONTAINING AN 8-BIT QUANTITY, RIGHT-JUSTIFIED.

TM8.3M THE NUMBER OF 8.3 MILLISECONDS WHICH HAVE ELAPSED SINCE THE LAST HALF-SECOND IN FIXED POINT, B35.

B) COMMUNICATION CELL -

MCHFSC CONTAINS CURRENT GMT IN FIXED POINT HALF-SECONDS, B35.

OUTPUT

A) TABLES -

TMHSL5 SUBCHANNEL 5 OUTPUT TABLE OF 12 LOCATIONS, EACH LOCATION CONTAINING A 16-BIT QUANTITY, RIGHT-JUSTIFIED.

QHSBD THE QUEUE TABLE FOR IOHSBD CONTAINS AN ENTRY WHICH IDENTIFIES THE LOCATION OF THE INPUT TABLE AND THE SUBCHANNEL OVER WHICH THE INPUT MESSAGE CAME.

MCTTB5 CONTAINS THE COMPUTED TIME TAG OF THE INPUT MESSAGE (CONTENTS OF MCHFSC PLUS THOSE OF TM8.3M).

METHOD

BERMUDA DATA IS RECEIVED AT THE DCC AS TWELVE 16-BIT WORDS THAT ARE DIVIDED INTO TWENTY-FOUR 8-BIT WORDS AND TRANSFERRED TO STORAGE. MTHSB5 REPACKS THE TWENTY-FOUR WORDS INTO THEIR ORIGINAL TWELVE WORD FORMAT AND STORES THEM IN TMHSL5. MTHSB5 THEN COMPUTES THE LOGGING TIME TAG OF THE INPUT MESSAGE, STORES THIS TIME IN MCTTB5, AND QUEUES IOHSBD WITH THE LOCATION OF THE DATA AND THE SUB-CHANNEL NUMBER OVER WHICH THIS DATA WAS RECEIVED.

USAGE

MTHSB5 IS ENTERED FROM MORTCC WHEN A TRAP ON SUB-CHANNEL 5 OCCURS AND EXITS TO MOPRIO.

A) STORAGE REQUIRED - 16 LOCATIONS

B) TIMING (7094) - 0.252 MILLISECONDS (EXCLUDING TIME REQUIRED FOR MOQUEU).

C) MACRO - QUEUE

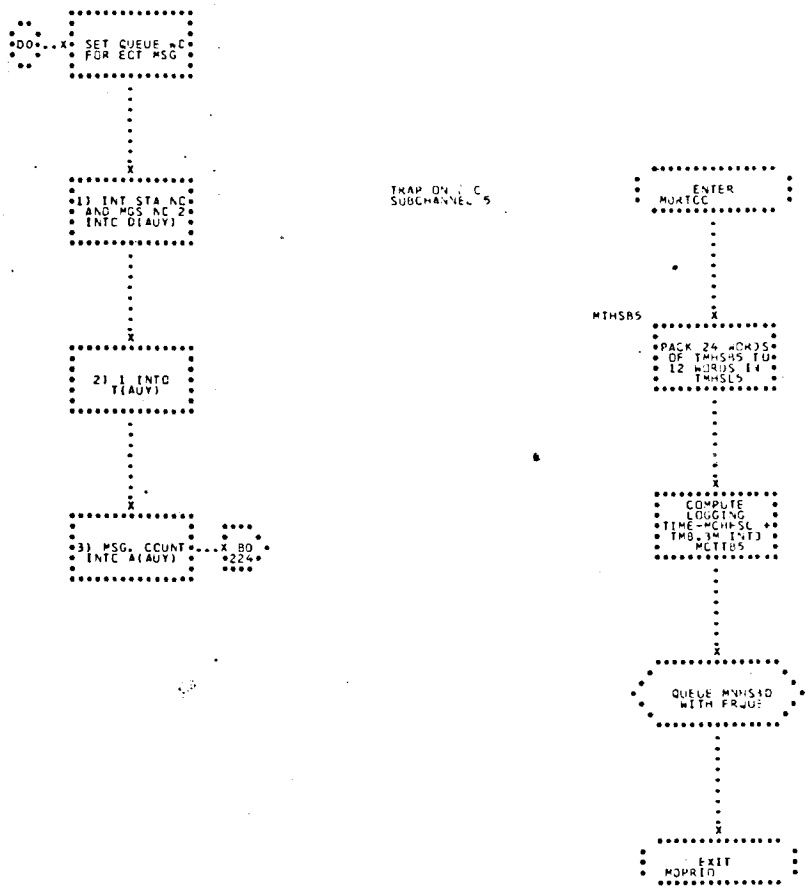
DO
SET QUEUE WC FOR ECT MSG
1) INT STA NC AND MGS NC 2 INTC D(AUY)
2) 1 INTC T(AUY)
3) MSG. COUNT INTC A(AUY)
BD 224
TRAP ON I C SUBCHANNEL 5
ENTER MORTCC
MTHSB5
PACK 24 WORDS OF TMHSB5 TO 12 WORDS IN TMHSL5
COMPUTE LOGGING TIME-MCHFSC + TMB.3M INTO MCTTB5
QUEUE MNHS3D WITH FRQUE
EXIT MOPRIO

## 36. MTHSB6 - MONITOR BERMUDA HIGH-SPEED INPUT TRAP PROCESSOR FOR SUBCHANNEL 6

MTHSB6 MOVES BERMUDA HIGH-SPEED INPUT TABLE DATA RECEIVED ON SUBCHANNEL 6 OF THE DCC FROM THE DCC INPUT BUFFER TO A STORAGE BUFFER SO THAT A NEW BERMUDA HIGH-SPEED INPUT MESSAGE MAY BE ACCEPTED. (SEE FLOWCHART.)

INPUT

A) TABLES -

TMHSB6 SUBCHANNEL 6 INPUT TABLE OF 24 LOCATIONS, EACH LOCATION CONTAINING AN 8-BIT QUANTITY, RIGHT-JUSTIFIED. (SEE TABLE 1)

TM8.3M CONTAINS NUMBER OF 8.3 MILLISECONDS WHICH HAVE ELAPSED SINCE THE LAST HALF-SECOND IN FIXED POINT, B35.

B) COMMUNICATION CELL -

MCHFSC CONTAINS CURRENT GMT IN FIXED POINT HALF-SECONDS, B35.

OUTPUT

A) TABLES -

TMHSL6 SUBCHANNEL 6 OUTPUT TABLE OF 12 LOCATIONS, EACH LOCATION CONTAINING, A 16-BIT QUANTITY, RIGHT-JUSTIFIED. (TABLE -2.)

QHSBD THE QUEUE TABLE FOR IOHSBD CONTAINS AN ENTRY WHICH IDENTIFIES THE LOCATION OF THE INPUT TABLE AND THE SUBCHANNEL OVER WHICH THE INPUT MESSAGE CAME.

B) COMMUNICATION CELL -

MCTTB6 CONTAINS THE COMPUTED TIME TAG OF THE INPUT MESSAGE (CONTENTS OF MCHFSC PLUS THOSE OF TM8.3M).

METHOD

BERMUDA DATA IS RECEIVED AT THE DCC AS TWELVE 16-BIT WORDS THAT ARE DIVIDED INTO TWENTY-FOUR 8-BIT WORDS AND TRANSFERRED TO STORAGE. MTHSB6 REPACKS THE TWENTY-FOUR WORDS INTO THEIR ORIGINAL TWELVE WORD FORMAT AND STORES THEM IN TMHSL6. MTHSB6 THEN COMPUTES THE LOGGING TIME TAG OF THE INPUT MESSAGE, STORES THIS TIME IN MCTTB6, AND QUEUES IOHSBD WITH THE LOCATION OF THE DATA AND THE SUB-CHANNEL NUMBER OVER WHICH THIS DATA WAS RECEIVED.

USAGE

MTHSB6 IS ENTERED FROM MORTCC WHEN A TRAP ON SUB-CHANNEL 6 OCCURS AND EXITS TO MOPRIO.

A) STORAGE REQUIRED - 16 LOCATIONS

B) TIMING (7094) - 0.252 MILLISECONDS (EXCLUDING TIME REQUIRED FOR MOQUEUE).

C) MACRO - QUEUE

## HIGH-SPEED BERMUDA DATA FORMAT TABLE

| | BITS 28 TO 35 | | | | | | | |
|---|---|---|---|---|---|---|---|---|
| 1 | Time 17 | | | | | | | Time 24 |
| 2 | AUX | AUX | Time 11 | | | | | Time 16 |
| 3 | Time 3 | | | | | | | Time 10 |
| 4 | AUX | AUX | Range 17 | | Range 19 | $O_T$ | Time 1 | Time 2 |
| 5 | Range 9 | | | | | | | Range 16 |
| 6 | AUX | AUX | Range 3 | | | | | Range 8 |
| 7 | AZ 11 | | | | | AZ 16 | Range 1 | Range 2 |
| 8 | AUX | AUX | AZ 5 | | | | | AZ 10 |
| 9 | EI 13 | | | EI 16 | AZ 1 | | | AZ 4 |
| 10 | AUX | AUX | EI 7 | | | | | EI 12 |
| 11 | Range 25 | $O_T$ | EI 1 | | | | | EI 6 |
| 12 | AUX | AUX | Range 19 | | | | | Range 24 |
| 13 | Range 11 | | | | | | | Range 18 |
| 14 | AUX | AUX | Range 5 | | | | | Range 10 |
| 15 | AZ 16 | AZ 17 | S | S | Range 1 | Range 2 | Range 3 | Range 4 |
| 16 | AUX | AUX | AZ 10 | | | | | AZ 15 |
| 17 | AZ 2 | | | | | | | AZ 9 |
| 18 | AUX | AUX | EI 15 | | EI 17 | S | S | AZ 1 |
| 19 | EI 7 | | | | | | | EI 14 |
| 20 | AUX | AUX | EI 1 | | | | | EI 6 |
| 21 | EC 9 | BDA | | | | | | EC 16 |
| 22 | EC 1 | | | | | | | EC 8 |
| 23 | EC 9 | GFSC | | | | | | EC 16 |
| 24 | EC 1 | | | | | | | EC 8 |

Legend:

$O_T$: On-track Indicator
S: Spike Bit
EC: Error Code

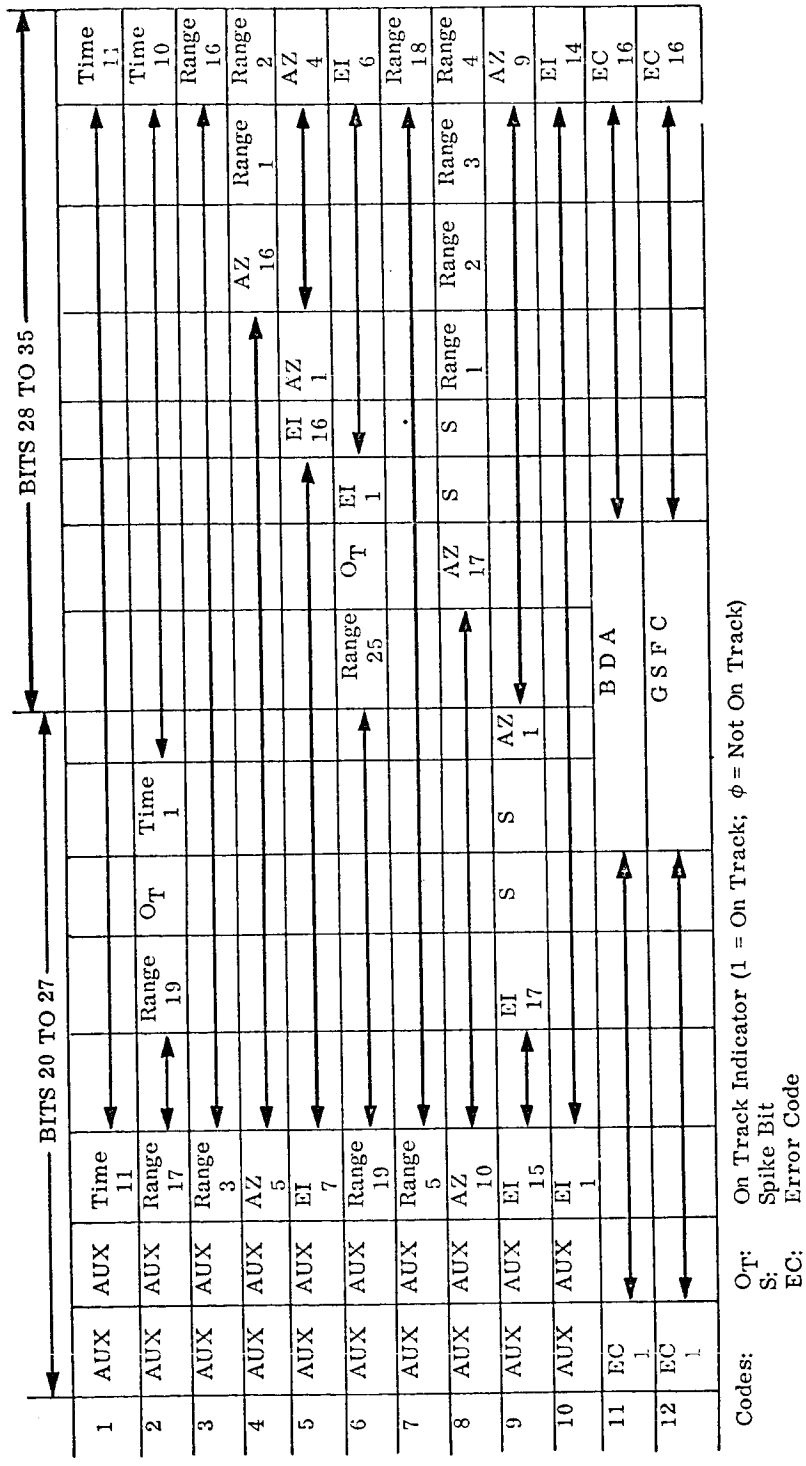


HIGH-SPEED BERMUDA INPUT FORMAT PACKED BY TRAP PROCESSOR

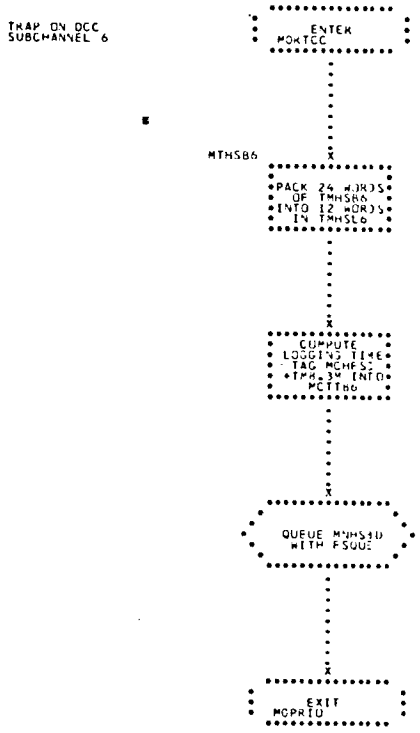
TRAP ON DCC
SUBCHANNEL 6
ENTER
MORTCC
MTHSB6
PACK 24 WORDS
OF TMHSB6
INTO 12 WORDS
IN TMHSL6
COMPUTE
LOGGING TIME
TAG MCHFSD
+TMB.3M INTO
MCTTB6
QUEUE MNHSBD
WITH FSQUE
EXIT
MCPRIO

## 37. MPHSBD - MONITOR PREFIX TO IOHSBD

MPHSBD LOGS INCOMING BERMUDA HIGH-SPEED DATA RECEIVED ON DCC SUBCHANNELS 5 AND 6 AND SETS INDICATORS FOR USE BY IOSHBD. (SEE FLOWCHART)

INPUT

A) TABLES -

TMHSL5 (TMHSL6) A 12-LOCATION TABLE CONTAINING BERMUDA INPUT DATA FROM SUBCHANNEL 5 (SUBCHANNEL 6) IN 16-BITS, RIGHT-JUSTIFIED, PER LOCATION.

B) COMMUNICATION CELLS -

MCHSBD CONTAINS THE UNQUEUED ENTRY FROM THE QUEUE TABLE FOR IOHSBD. THE ADDRESS CONTAINS THE LOCATION OF THE INPUT DATA, THE DECREMENT CONTAINS THE SUBCHANNEL OVER WHICH THE DATA CAME.

MCTTB5 (MCTTB6) CONTAINS COMPUTED LOGGING TIME TAG FOR INPUT DATA ON SUBCHANNEL 5 (SUBCHANNEL 6) TO NEAREST 8.3 MILLISECOND IN FIXED POINT.

OUTPUT

A) TABLE -

TMHSBD CONTAINS PACKED BERMUDA INPUT DATA FROM EITHER TMHSL5 OR TMHSL6.

B) THE AC CONTAINS THE LOCATION OF THE INPUT DATA AND THE LENGTH OF THE INPUT TABLE -

PZE TMHSBD,,12.

METHOD

MPHSBD TURNS ON ITS A INDICATOR AND UNQUEUES THE NEXT INPUT TO IOHSBD. IT THEN PLACES THE SUBCHANNEL NUMBER (IN THE DECREMENT OF THE UNQUE WORD, MCHSBD) IN THE CALLING SEQUENCE TO THE MONITOR LOGGING SUBROUTINE, MSLOGG, PLACES THE LOGGING TIME IN THE MQ AND LOGS THE DATA. FINALLY, MPHSBD SETS UP THE LOCATION AND LENGTH OF THE INPUT TABLE IN AC AND EXITS TO IOHSBD.

USAGE

MPHSBD IS ENTERED FROM MOPRIO WHEN PRIORITY CONDITIONS PERMIT. IT EXITS TO IOHSBD.

A) STORAGE REQUIRED - 31 LOCATIONS

B) TIMING (7094) - 0.164 MILLISECONDS (EXCLUDING TIME REQUIRED FOR MOUNQU AND MSLOGG).

C) MACROS - TRNON, QENBA, QENBZ, UNQUE

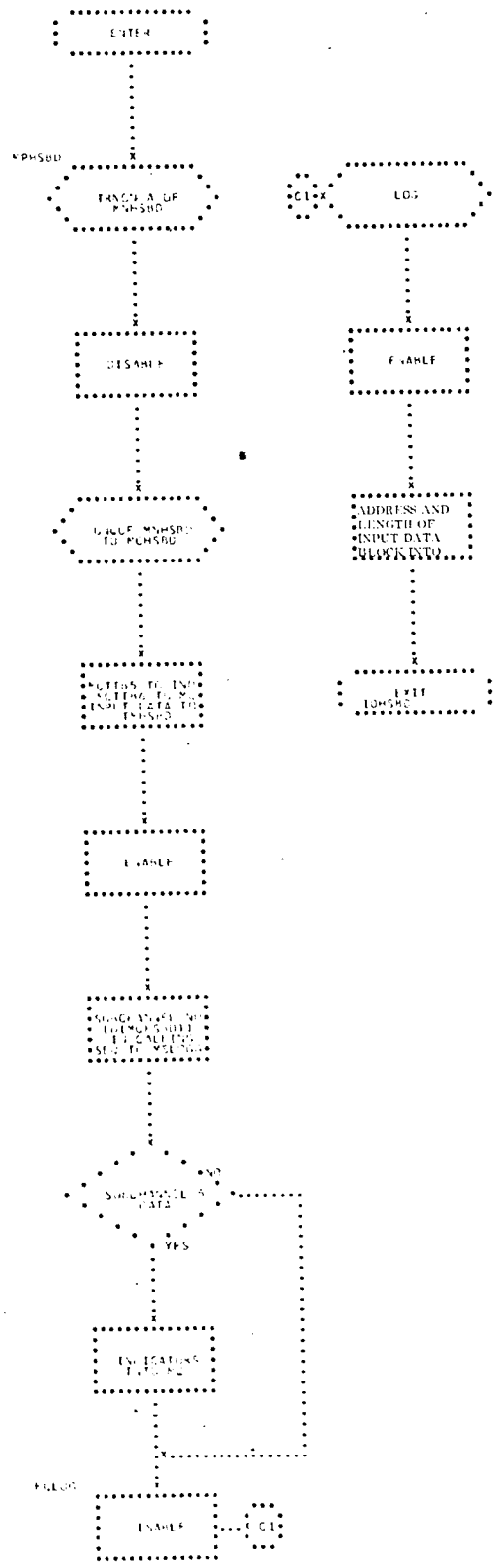


AC - C(FQLOG - 2)
INTO AC

## 38. IOHSBD - BERMUDA HIGH-SPEED INPUT

IOHSBD PROCESSES ALL FPS-16 AND VERLORT RADAR OBSERVATIONS TRANSMITTED FROM BERMUDA AND RECEIVED ON SUBCHANNELS 5 AND 6 OF THE DCC. (SEE FLOWCHART.)

INPUT

A) TABLES -

| | |
|---|---|
| TABEDT | A 14-LOCATION TABLE CONTAINING, IN THE FIRST SEVEN LOCATIONS, THE INITIAL EDIT PARAMETERS FOR THE FPS-16 RADAR DATA TABLE AND, IN THE LAST SEVEN LOCATIONS, THE INITIAL EDIT PARAMETERS FOR THE VERLORT RADAR DATA TABLE |
| TCBDF6 (TCBDVE) | A 601-LOCATION TABLE CONTAINING UP TO 200 RANGE, AZIMUTH, AND ELEVATION OBSERVATION (r, a, e) FROM THE FPS-16 (VERLORT) RADAR. RANGE IS EXPRESSED IN FIXED POINT FEET, B35, AZIMUTH AND ELEVATION IN FIXED POINT RADIANS, B14. THE FIRST CELL CONTAINS THE TIME ASSOCIATED WITH THE FIRST OBSERVATION IN THE DATA TABLE IN FIXED POINT TENTHS OF SECONDS, B35. |

| | | |
|---|---|---|
| TMHEDF (TMHEDV) | | A 32-LOCATION TABLE OF PARAMETERS USED TO OBTAIN SPECIFIC LOCATIONS IN THE FPS-16 (VERLORT) DATA TABLE, TCBDF6 (TCBDVE). THE FIRST SEVEN LOCATICNS CONTAIN LOCATIONS IN THE DATA TABLE CORRESPCNDING TO THE EDIT PARAMETERS. |
| TMHSBD | | A 12-LOCATION TABLE, EACH CELL CONTAINING 16 BITS OF DATA RIGHT-JUSTIFIED. |

B) CCNSTANTS -

| | | |
|---|---|---|
| K00001 | DEC 1 | FIXED POINT CNE |
| K00002 | DEC 2 | FIXED POINT TWO |
| K00003 | DEC 3 | FIXED POINT THREE |
| K00010 | DEC 10 | FIXED POINT TEN |
| K00015 | DEC 15 | FIXED POINT FIFTEEN |
| K00063 | DEC 63 | FIXED POINT SIXTY-THREE |
| K00777 | OCT 777 | MASK KEEPING LAST NINE BITS CF WORD |
| K01777 | OCT 1777 | MASK KEEPING LAST TEN BITS CF WORD |
| K37777 | OCT 37777 | MASK KEEPING LAST FOURTEEN BITS OF WORD |
| KCH233 | OCT 233000000000 | CHARACTERISTICS OF 233 OCTAL |
| K010.0 | DEC 10.0 | FLOATING POINT TEN |

| | |
|---|---|
| KBBDEL | BERMUDA HIGH-SPEED DELAY TIME IN FIXED POINT TENTHS OF SECONDS |
| KMAXEL | MAXIMUM ALLOWABLE ELEVATION ANGLE IN OCTAL |
| KMINEL | MINIMUM ALLOWABLE ELEVATION ANGLE IN OCTAL |

OUTPUT

TABLES -

| | |
|---|---|
| TCBDF6 (TCBDVE) | A 601-LOCATION TABLE CONTAINING THE LATEST FPS-16 (VERLORT) RADAR OBSERVATION |
| TMHEDF (TMHEDV) | A 32-LOCATION TABLE OF PARAMETERS UPDATED TO REFLECT THE ADDITION OF THE LATEST FPS-16 (VERLORT) OBSERVATION. |

METHOD

AFTER INITIALIZING FOR THIS PASS, IOHSBD CHECKS THE GODDARD ERROR CODE TO DETERMINE WHETHER IT HAS BEEN COMPUTED AND SENT. IF THE ERROR CODE IS ZERO, AN IMMEDIATE EXIT TO THE SUFFIX, MFHSBD, IS MADE. IF THE GODDARD ERROR CODE HAS BEEN SENT, IT IS COMPARED TO THE BERMUDA ERROR CODE FOR AGREEMENT. IF THEY DO NOT AGREE, IOHSBD CONTINUES AS IN G).

IF THE CODES DO AGREE, THE TIME OF THIS ENTRY IS PACKED INTO A SINGLE WORD AND COMPARED TO THE TIME OF THE LAST ENTRY. IF THE TIME OF THIS ENTRY IS NOT GREATER, IOHSBD GIVES CONTROL TO G). OTHERWISE, THE TIME OF THIS ENTRY IS SAVED IN TEMPORARY STORAGE AND CONVERTED TO TENTHS OF SECONDS.

THE TIME OF THIS ENTRY MUST BE NO GREATER THAN ONE SECOND AHEAD OF NOR TWO MINUTES BEHIND THE CURRENT GMT. IF EITHER OF THESE CONDITIONS IS VIOLATED, TRANSFER IS MADE TO G). IF BOTH ARE SATISFIED, THE UNCONVERTED, PACKED TIME OF THIS ENTRY IS SAVED FOR COMPARISION WITH THE TIME OF THE NEXT ENTRY. IOHSBD THEN SETS UP TO PROCESS THE VERLORT DATA FIRST AND UNPACKS AND SAVES BOTH THE FPS-16 AND THE VERLORT DATA IN INTERNAL STORAGE.

A) IF (1) THE OBSERVATION IS NOT ''ON TRACK'', (2) THE ELEVATION IS NOT BETWEEN THE LIMITS OF THREE AND NINETY DEGREES, OR (3) ONE OF THE COMPONENTS (RANGE, AZIMUTH, OR ELEVATION) IS NOT NON-ZERO, THE BAD POINT INDICATOR IS SET TO ONE AND CONTROL PASSES TO C.

B) IF ALL THE ABOVE CONDITIONS ARE MET, THE COMPONENTS OF THE OBSERVATION ARE CONVERTED TO THE PROPER TABLE FORMAT -

| | |
|---|---|
| RANGE | FIXED POINT FEET, B35 |
| AZIMUTH | FIXED POINT RADIANS, B14 |
| ELEVATION | FIXED POINT RADIANS, B14 |

THE BAD POINT INDICATOR IS SET TO ZERO AND A TRANSFER IS MADE TO C).

C) IOHSBD MUST PLACE AN OBSERVATION IN THE DATA TABLE FOR EVERY TENTH OF A SECOND IN TIME. MISSING OBSERVATIONS ARE FILLED IN WITH POINTS WHICH WILL LATER FAIL THE EDIT CRITERIA AND WILL BE DISCARDED TO COMPLY WITH THE ABOVE REQUIREMENT. TO DETERMINE THE NUMBER OF MISSING OBSERVATIONS, THE DIFFERENCE BETWEEN THE TIME OF THIS ENTRY AND THE TIME OF THE LAST ENTRY IS COMPUTED. IF THIS DIFFERENCE IS LESS THAN OR

EQUAL TO ZERO, AN ERROR HAS BEEN MADE AND NO FURTHER PROCESSING OF THIS OBSERVATION TAKES PLACE. CONTROL IS GIVEN TO F). IF THE DIFFERENCE IS GREATER THAN ZERO, IT IS SAVED IN TEMPORARY STORAGE.

1) IF NO OBSERVATIONS HAVE BEEN PLACED IN THE DATA TABLE, AND THE LATEST OBSERVATION RECEIVED HAS NOT BEEN ACCEPTED, CONTROL IS PASSED TO F).

2) IF NO OBSERVATIONS ARE YET IN THE DATA TABLE, AND THE LATEST OBSERVATION RECEIVED WAS ACCEPTED, ITS TIME FILLS THE TIME CELL OF THE DATA TABLE. AN INDICATION IS MADE THAT ONE OBSERVATION IS NOW IN THE DATA TABLE AND CONTROL IS GIVEN TO E).

D) IF AT LEAST ONE OBSERVATION IS IN THE DATA TABLE, IOHSBD CHECKS TO DETERMINE WHETHER EXTRAPOLATION FOR MISSING OBSERVATIONS IS NEEDED AND, IF NEEDED, WHETHER THE PROCESS CAN TAKE PLACE (TWO OBSERVATIONS, THUS ESTABLISHING A TIME SEQUENCE, MUST BE IN THE DATA TABLE BEFORE IOHSBD IS PERMITTED TO EXTRAPOLATE FOR MISSING POINTS). THE NUMBER OF POINTS TO BE EXTRAPOLATED IS RECOMPUTED TAKING INTO ACCOUNT WHETHER OR NOT THE LATEST OBSERVATION WAS ACCEPTED.

1) IF ONLY ONE OBSERVATION IS IN THE TABLE AND EXTRAPOLATION IS NECESSARY, THE TIME CELL OF THE DATA AND THE EDIT PARAMETERS ARE RESET TO THEIR ORIGINAL VALUES. TRANSFER IS THEN MADE BACK TO C).

2) IF ONLY ONE OBSERVATION IS IN THE DATA TABLE AND NO EXTRAPOLATION IS NEEDEC, THE LATEST OBSERVATICN HAS BEEN ACCEPTED. THUS, IOHSBD INDICATES THAT TWO OBSERVATIONS ARE NOW IN THE DATA TABLE AND TRANSFERS TC E).

3) IF TWO OBSERVATICNS HAVE BEEN PLACED IN THE DATA TABLE AND NC EXTRA POLATICN IS NEEDED, THE LATEST OBSERVATION IS ACCEPTED. THEN IOHSBD TRANSFERS TO E).

OTHERWISE, SINCE EXTRAPOLATION MAY TAKE PLACE, IOHSBD SETS UP FOR IT. IF AT ANY TIME, EITHER IMMEDIATELY PRECEDING OR DURING EXTRAPOLATION PROCESS, THE DATA TABLE BECOMES FULL, AN ATTEMPT IS MADE TO MOVE THE CLDEST DATA OUT OF THE TABLE. IF THE MOVE CANNOT TAKE PLACE, AN IMMEDIATE TRANSFER IS MADE TO F). OTHERWISE, THE EXTRAPOLATICN PROCESS CONTINUES UNTIL ALL MISSING OBSERVATICNS HAVE BEEN FILLED IN. THEN, IF THE BAD POINT INDICATOR SHOWS THAT THE LATEST OBSERVATION WAS NOT ACCEPTED, IOHSBC TRANSFERS TO F). IF THE LATEST OBSERVATION WAS ACCEPTED, CCNTROL IS GIVEN TO E).

E) REFRACTION CORRECTICN IS APPLIED TO THE LATEST OBSERVATION AND IOHSBD PREPARES TO STORE THE RESULTING OBSERVATICN IN THE DATA TABLE. AGAIN, THE DATA TABLE IS TESTED TO DETERMINE WHETHER A MOVE MUST BE ATTEMPTED. IF THE MOVE IS NECESSARY, BUT CANNCT BE MADE, CCNTROL IS GIVEN TO F). IF EITHER THE TABLE NEED NOT BE MOVED OR IS SUCCESSFULLY MOVED, THE LATEST OBSERVATION IS STORED IN THE DATA TABLE. CCNTROL IS PASSED TO F).

F) THE TIME OF THE LAST ENTRY IS UPDATED TO REFLECT THE RESULTS OF THIS PASS THROUGH THE PROGRAM. IF FPS-16 DATA HAS NOT YET BEEN PROCESSED, IOHSBD INITIALIZES TO DO SO AND TRANSFERS BACK TO A). IF BOTH TYPES OF RADAR DATA HAVE BEEN PROCESSED, CONTROL IS GIVEN TO H) AFTER THE BAD POINTS INDICATOR HAS BEEN RESET TO ZERO.

G) CONTROL IS GIVEN TO H) AFTER THE BAD POINTS INDICATOR HAS BEEN SET NON-ZERO.

H) IF EITHER DATA TABLE HAS BEEN FILLED, AN ATTEMPT IS MADE TO MOVE THE OLDEST DATA OUT OF THE TABLE. REGARDLESS OF THE RESULTS OF THAT ATTEMPT, IOHSBD EXITS TO ITS SUFFIX, MFHSBD.

USAGE

IOHSBD RECEIVES CONTROL FROM ITS PREFIX, MPHSBD AND TRANSFERS CONTROL TO ITS SUFFIX, MFHSBD.

A) STORAGE REQUIRED - 333 LOCATIONS

B) TIMING (7094) - APPROXIMATELY 8 MILLISECONDS

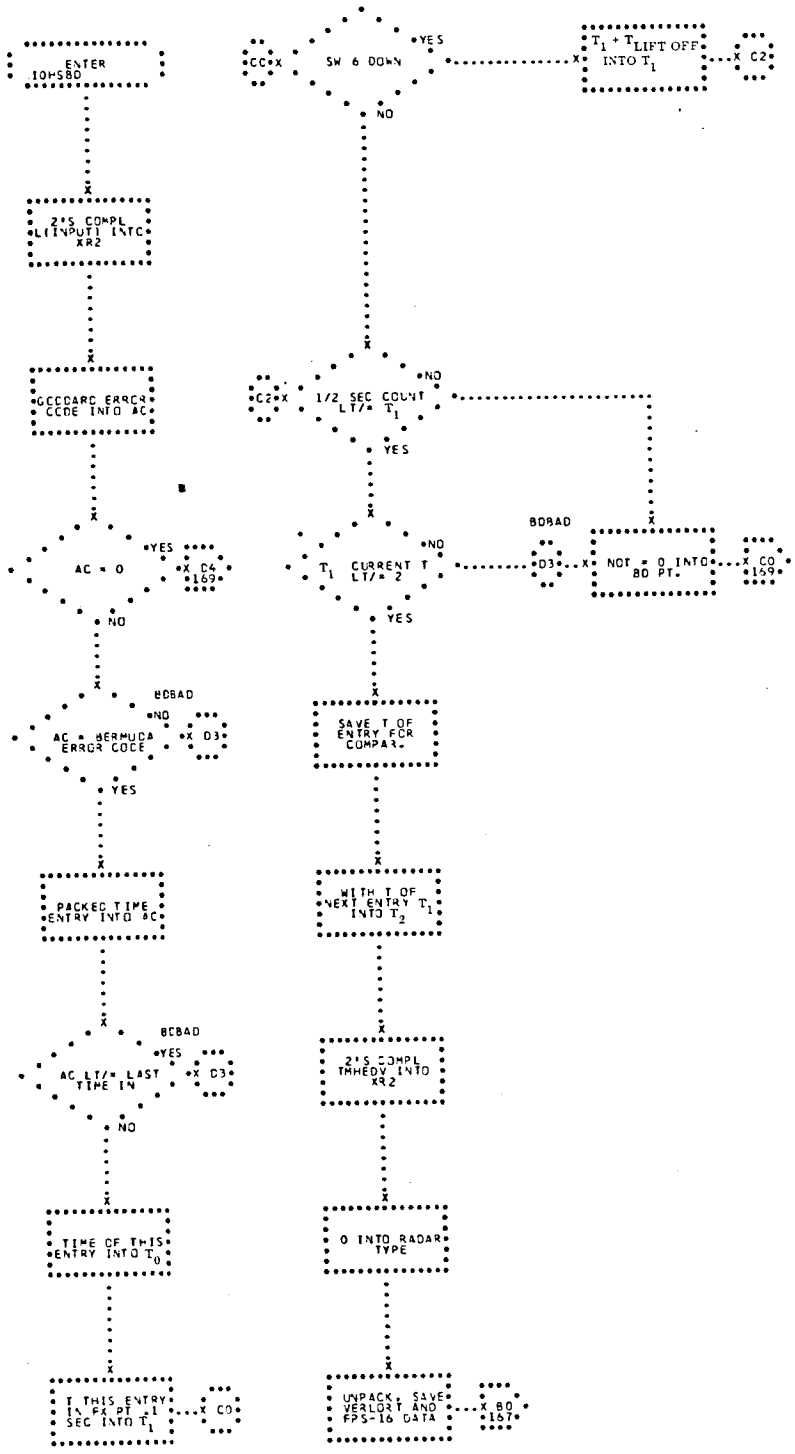
ENTER IOHSBO
2'S COMPL (INPUT) INTO XR2
GCCDARC ERROR CODE INTO AC
AC = 0
YES
X C4 169
NO
BCBAD
AC = BERMUDA ERROR CODE
NO
X D3
YES
PACKED TIME ENTRY INTO BC
BCBAD
AC LT/= LAST TIME IN
YES
X D3
NO
TIME OF THIS ENTRY INTO $T_0$
T THIS ENTRY IN FX PT .1 SEC INTO $T_1$
X CO
CC X
SW 6 DOWN
YES
$T_1 + T_{LIFT\ OFF}$ INTO $T_1$
X C2
NO
C2 X
1/2 SEC COUNT LT/= $T_1$
NO
YES
$T_1$ CURRENT T LT/= 2
NO
BCBAD
X D3
NOT = 0 INTO BD PT.
X CO 169
YES
SAVE T OF ENTRY FOR COMPAR.
WITH T OF NEXT ENTRY $T_1$ INTO $T_2$
2'S COMPL THHEDV INTO XR2
0 INTO RADAR TYPE
UNPACK, SAVE VERLOR T AND FPS-16 DATA
X BO 167

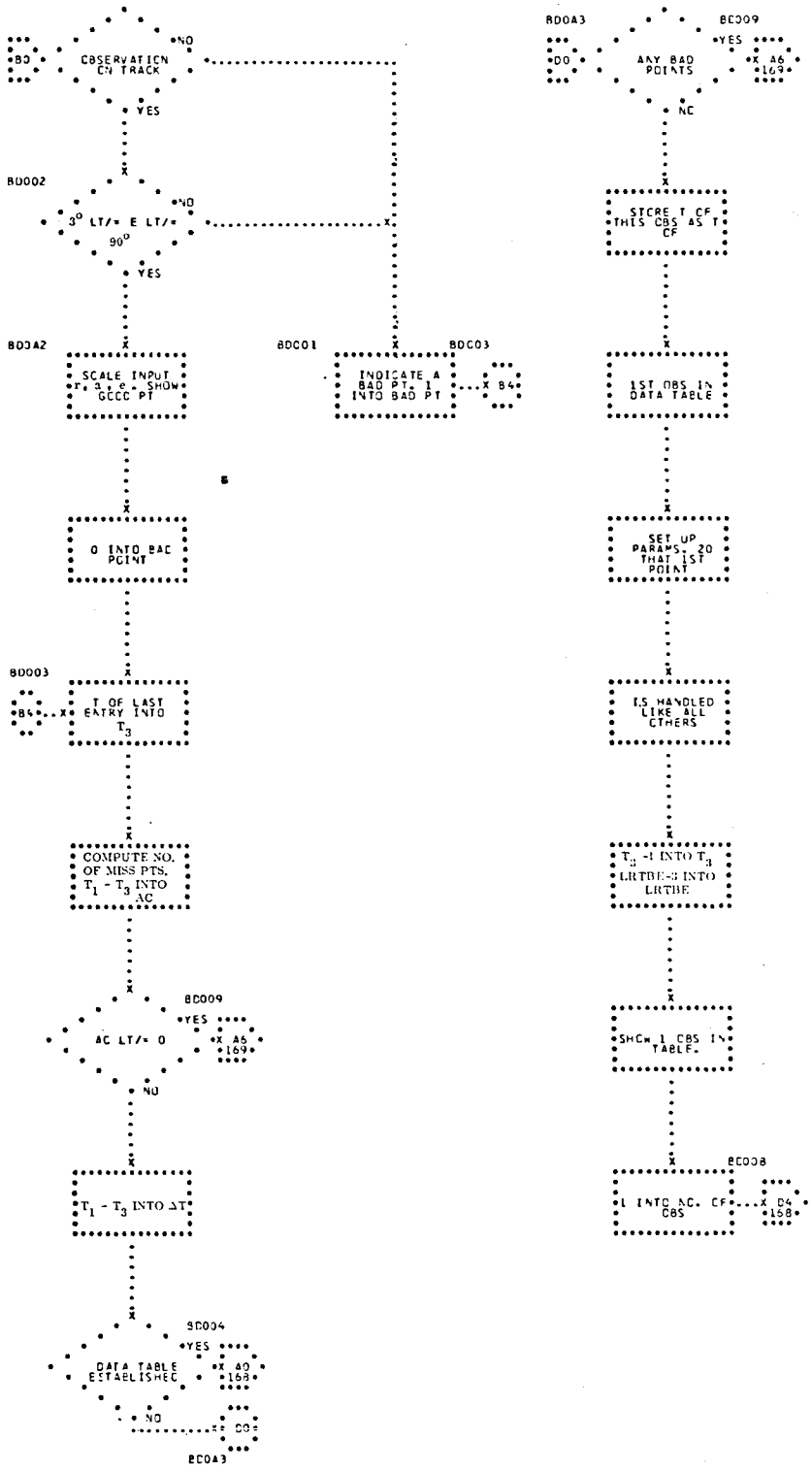
BD
OBSERVATION ON TRACK
NO
YES
BD002
3° LT/= E LT/= 90°
NO
YES
BD0A2
SCALE INPUT r, a, e, SHOW GCCC PT
0 INTO BAC POINT
BD003
B4
T OF LAST ENTRY INTO T3
COMPUTE NO. OF MISS PTS. T1 - T3 INTO AC
BC009
YES
AC LT/= 0
A6 169
NO
T1 - T3 INTO ΔT
BC004
YES
DATA TABLE ESTABLISHED
A0 168
NO
BC0A3
BD001
INDICATE A BAD PT. 1 INTO BAD PT
BD003
B4
BD0A3
DO
ANY BAD POINTS
BC009
YES
A6 169
NO
STORE T OF THIS OBS AS T OF
1ST OBS IN DATA TABLE
SET UP PARAMS. 20 THAT 1ST POINT
IS HANDLED LIKE ALL OTHERS
T3 -1 INTO T3
LRTBE-3 INTO LRTBE
SHOW 1 OBS IN TABLE.
BC0B
1 INTO NO. OF OBS
D4 168

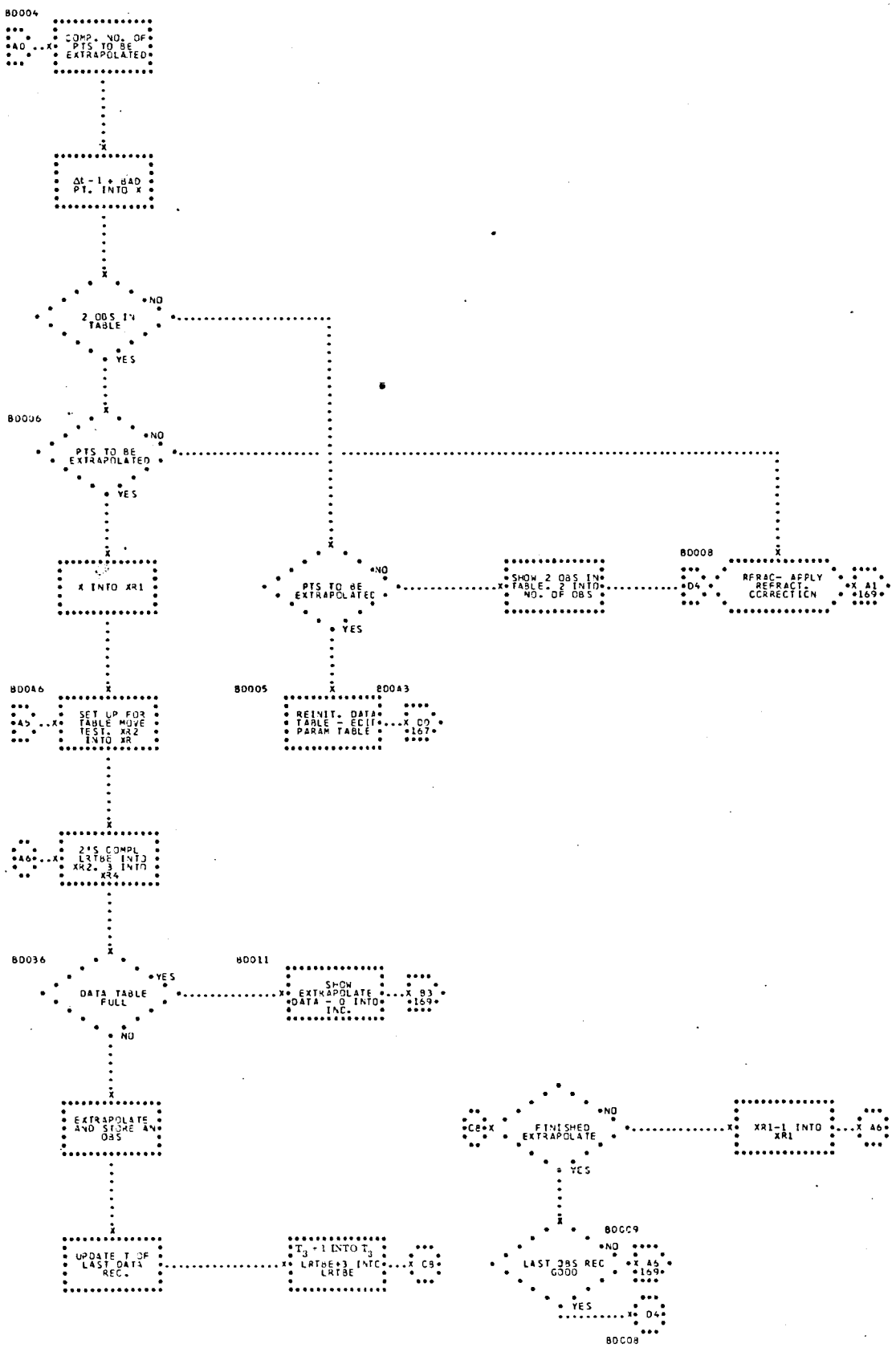
BD004
A0
COMP. NO. OF PTS TO BE EXTRAPOLATED
Δt - 1 + BAD PT. INTO X
2 OBS IN TABLE
NO
YES
BD006
PTS TO BE EXTRAPOLATED
NO
YES
X INTO XR1
PTS TO BE EXTRAPOLATED
NO
YES
SHOW 2 OBS IN TABLE. 2 INTO NO. OF OBS
BD008
D4
REFRAC- APPLY REFRACT. CORRECTION
A1
169
BD046
A5
SET UP FOR TABLE MOVE TEST. XR2 INTO XR
BD005
REINIT. DATA TABLE - EDIT PARAM TABLE
BD0A3
D0
167
A6
2'S COMPL LRTBE INTO XR2. 3 INTO XR4
BD036
DATA TABLE FULL
YES
NO
BD011
SHOW EXTRAPOLATE DATA - 0 INTO INC.
B3
169
EXTRAPOLATE AND STORE AN OBS
C8
FINISHED EXTRAPOLATE
NO
YES
XR1-1 INTO XR1
A6
UPDATE T OF LAST DATA REC.
$T_3$ - 1 INTO $T_3$
LRTBE+3 INTO LRTBE
C9
BDCC9
LAST OBS REC GOOD
NO
YES
A5
169
D4
BDC08

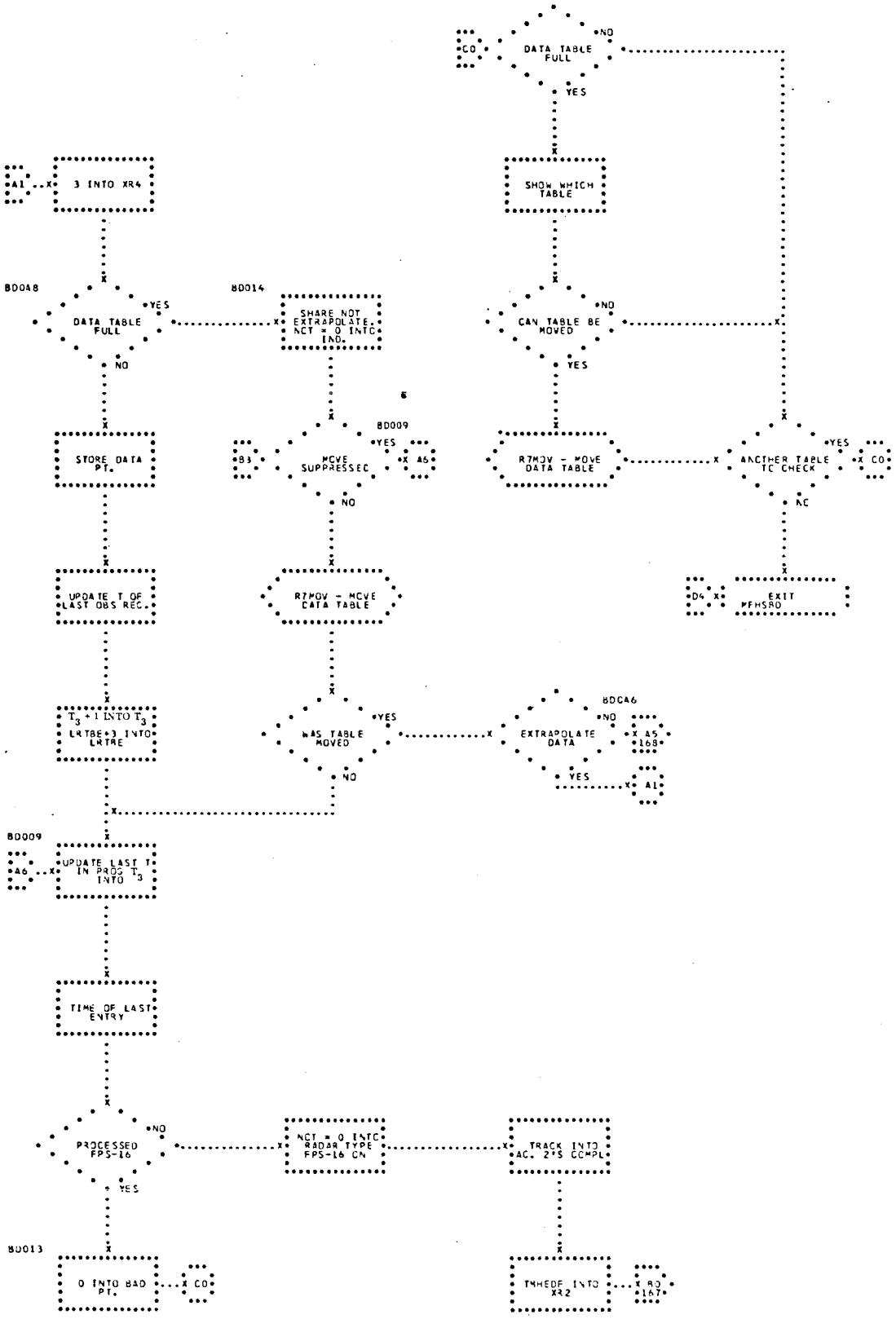
DATA TABLE FULL
NO
YES
C0
SHOW WHICH TABLE
A1
3 INTO XR4
BD048
DATA TABLE FULL
YES
NO
BD014
SHARE NOT EXTRAPOLATE. NCT = 0 INTO IND.
CAN TABLE BE MOVED
STORE DATA PT.
BD009
B3
MOVE SUPPRESSED
A6
RZMOV - MOVE DATA TABLE
ANOTHER TABLE TO CHECK
UPDATE T OF LAST OBS REC.
RZMOV - MOVE DATA TABLE
D4
EXIT MFHSRO
T3 + 1 INTO T3
LRTBE+3 INTO LRTRE
WAS TABLE MOVED
BDCA6
EXTRAPOLATE DATA
A5
168
BD009
A6
UPDATE LAST T IN PROG T3 INTO T3
TIME OF LAST ENTRY
PROCESSED FPS-16
NCT = 0 INTO RADAR TYPE FPS-16 CN
TRACK INTO AC. 2'S COMPL.
BD013
0 INTO BAD PT.
TNHEDF INTO XR2
B0
167

## 39. R7MOV - TABLE MOVING SUBROUTINE OF IOHSBD

R7MOV IS USED TO MOVE THE OLDEST DATA OUT OF THE BERMUDA HIGH-SPEED RADAR DATA TABLES AND TO UPDATE THE NECESSARY PARAMETERS TO REFLECT THE MOVE. (SEE FLOW-CHART.)

INPUT

A) TABLES -

| | |
|---|---|
| TMHEDF (TMHEDV) | A 32-LOCATION TABLE CONTAINING THE PARAMETERS USED BY EDIT, SMOOTHING AND SHORT ARC TO PROCESS THE FPS-16 (VERLORT) RADAR DATA. |
| TCBDF6 (TCBDVE) | A 601-LOCATION TABLE CONTAINING THE BERMUDA FPS-16 (VERLORT) HIGH-SPEED RADAR DATA. |

B) CONSTANTS -

| | | |
|---|---|---|
| K00001 | DEC 1 | FIXED POINT ONE |
| K00009 | DEC 9 | FIXED POINT NINE |
| K00588 | DEC 588 | FIXED POINT FIVE HUNDRED EIGHTY-EIGHT |

C) THE CONTENTS OF THE AC INDICATE WHICH OF THE TWO DATA TABLES IS TO BE MOVED - 0, IF TCBDF6 CONTAINING FPS-16 DATA, NON-ZERO, IF TCBDVE CONTAINING VERLORT DATA.

OUTPUT

TABLES -

| | |
|---|---|
| TMHEDF (TMHEDV) | A 32-LOCATION TABLE CONTAINING THE EDIT, SMOOTHING AND SHORT ARC PARAMETERS UPDATED TO REFLECT THE MOVE. |
| TCBDF6 (TCBDVE) | A 601-LOCATION TABLE CONTAINING BERMUDA HIGH-SPEED FPS-16 (VERLORT) RADAR DATA UPDATED TO REFLECT THE MOVE. |

METHOD

AFTER INITIALIZING AND DETERMINING WHICH DATA TABLE IS TO BE MOVED THIS PASS, R7MOV COMPUTES THE RANGE LOCATION OF THE LOWER LIMIT OF THE MOVE (I.E., THE LOCATION OF THE FIRST COMPONENT OF THE FIRST POINT WHICH IS NOT TO BE MOVED OUT OF THE TABLE). THE LOWER MOVE LIMIT MAY HAVE ONE OF THE FOLLOWING VALUES -

A) IF EITHER EDIT HAS NOT YET BEEN ENTERED OR ONLY EDIT HAS BEEN ENTERED, R7MOV SAVES ALL BUT THE OLDEST FIVE SECONDS OF DATA.

B) IF EDIT AND SHORT ARC HAVE BEEN ENTERED, R7MOV USES AS THE LOWER MOVE LIMIT THE SMALLER OF THE FOLLOWING - THE LOCATION OF THE FIRST COMPONENT OF THE LAST POINT USED BY SHORT ARC (LAR) OR THE LOCATION OF THE FIRST COMPONENT OF THE FIRST OF THE LAST FOUR POINTS IN THE DATA TABLE (LR-9).

C) IF EDIT AND SMOOTHING HAVE BEEN ENTERED, R7MOV USES THE LOCATION OF THE FIRST COMPONENT OF THE FIRST OBSERVATION OF THE LAST SMOOTHED SPAN OF DATA ($L(X_0)-3N$).

IF THE LOWER MOVE LIMIT FALLS OUTSIDE THE DATA TABLE OR EXCEEDS THE MAXIMUM MOVE ALLOWED, R7MOV RETURNS TO IOHSBD WITHOUT ATTEMPTING TO MOVE THE DATA TABLE. OTHERWISE, THE DIFFERENCE BETWEEN THE LOWER MOVE LIMIT AND THE LOCATION OF THE FIRST COMPONENT OF THE FIRST OBSERVATION IN THE DATA TABLE DEFINES THE MOVE SIZE.

THE TIME OF THE FIRST OBSERVATION IN THE DATA TABLE IS THEN UPDATED TO REFLECT THE MOVE -

$$t_{new} = t_{old} + \frac{\text{move size}}{3}$$

AND THE DATA TABLE IS UPDATED.

R7MOV THEN ADJUSTS THE EDIT PARAMETERS AND THE PARAMETERS USED BY THE PARTICULAR PROGRAM SELECTED TO PROCESS THE DATA (SHORT ARC OR SMOOTHING) BEFORE RETURNING THE IOHSBD.

USAGE

A) CALLING SEQUENCE -

```
C(AC)=   0 IF THE FPS-16 DATA TABLE IS TO BE
         MOVED
   r =   1 IF THE VERLORT DATA TABLE IS TO
         MOVED
TSX      R7MOV,4
RETURN
```

B) STORAGE REQUIRED - 82 LOCATIONS

C) TIMING (7094) - .312+Q(.014) MILLISECONDS, WHERE Q IS THE NUMBER OF OBSERVATIONS MOVED.

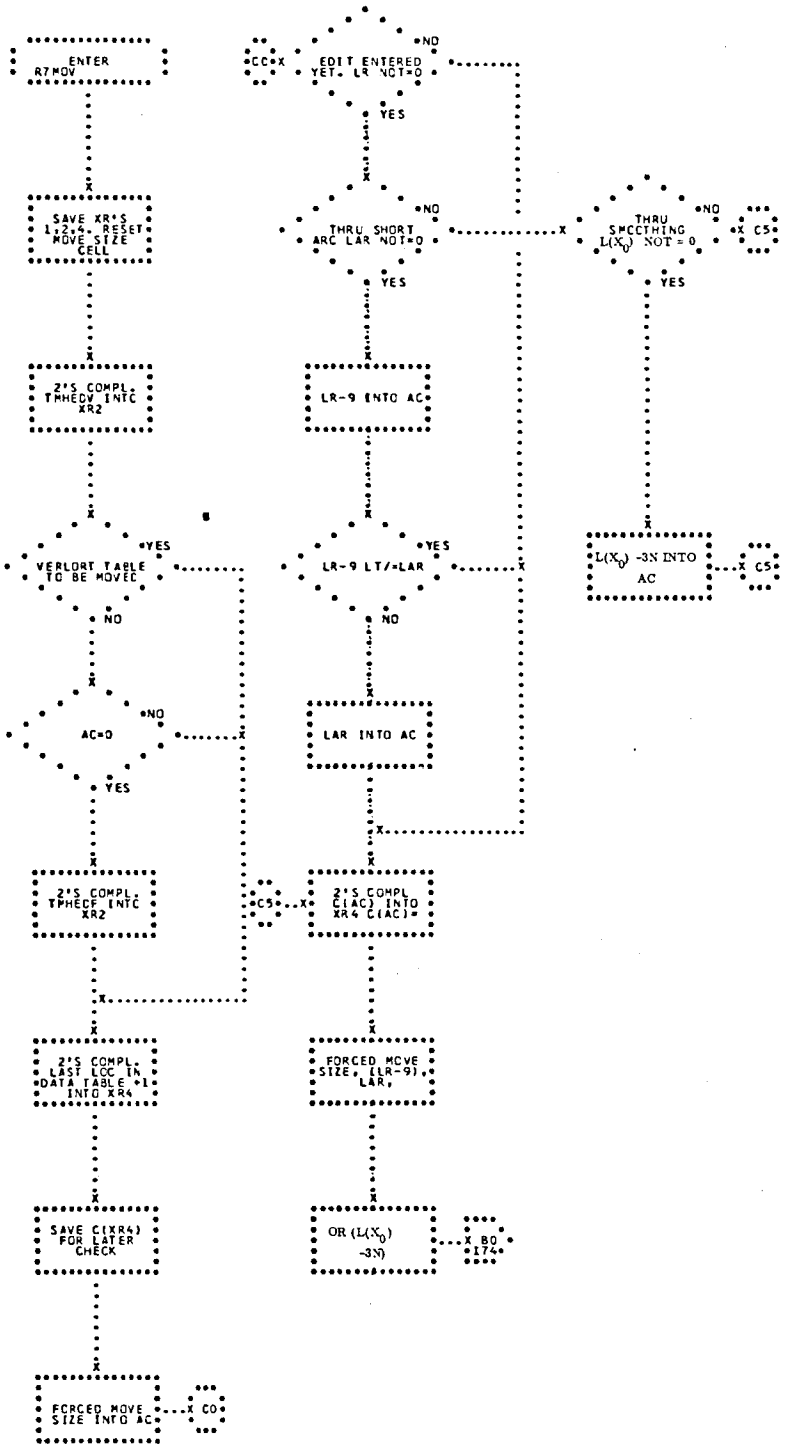
ENTER R7MOV
SAVE XR'S 1,2,4, RESET MOVE SIZE CELL
2'S COMPL. THHEDV INTO XR2
VERLORT TABLE TO BE MOVED
YES
NO
AC=0
NO
YES
2'S COMPL. THHEDF INTO XR2
2'S COMPL. LAST LOC IN DATA TABLE +1 INTO XR4
SAVE C(XR4) FOR LATER CHECK
FORCED MOVE SIZE INTO AC
CO
EDIT ENTERED YET, LR NOT=0
NO
YES
THRU SHORT ARC LAR NOT=0
NO
YES
LR-9 INTO AC
LR-9 LT/=LAR
YES
NO
LAR INTO AC
2'S COMPL C(AC) INTO XR4 C(AC)=
C5
FORCED MOVE SIZE, (LR-9), LAR,
OR (L(X0) -3N)
B0
174
THRU SMOOTHING L(X0) NOT = 0
NO
YES
C5
L(X0) -3N INTO AC
C5

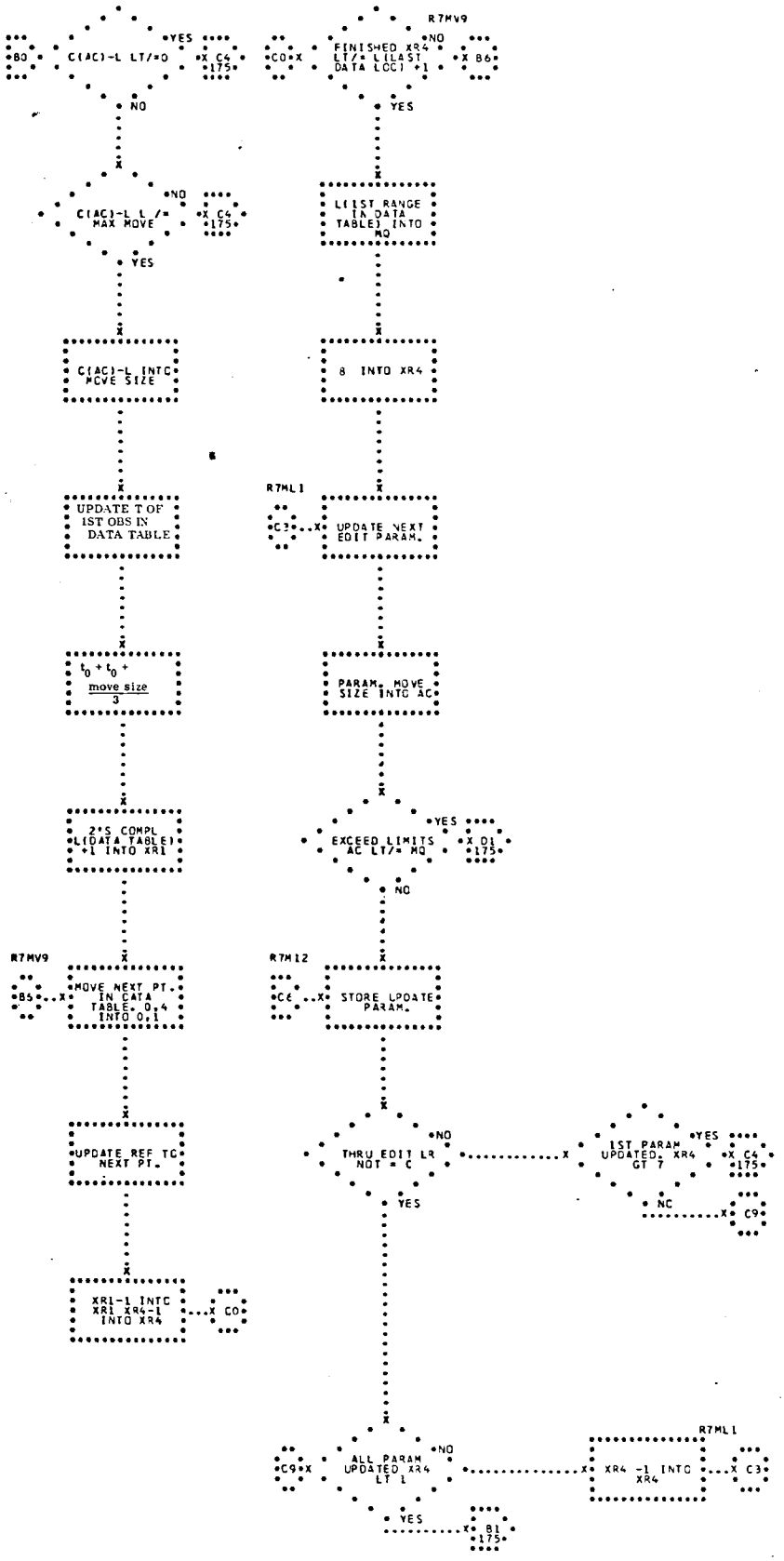
B0
C(AC)-L LT/=0
YES
C4 +175
NO
C(AC)-L L /= MAX MOVE
YES
C(AC)-L INTO MOVE SIZE
UPDATE T OF 1ST OBS IN DATA TABLE
$t_0 + t_0 + \frac{\text{move size}}{3}$
2'S COMPL L(DATA TABLE) +1 INTO XR1
R7MV9
B5
MOVE NEXT PT. IN DATA TABLE. 0,4 INTO 0,1
UPDATE REF TO NEXT PT.
XR1-1 INTO XR1 XR4-1 INTO XR4
C0
R7MV9
C0
FINISHED XR4 LT/= L(LAST DATA LOC) +1
NO
B6
YES
L(1ST RANGE IN DATA TABLE) INTO MQ
8 INTO XR4
R7ML1
C3
UPDATE NEXT EDIT PARAM.
PARAM. MOVE SIZE INTO AC
EXCEED LIMITS AC LT/= MQ
YES
D1 +175
NO
R7M12
C6
STORE UPDATE PARAM.
THRU EDIT LR NOT = C
NO
YES
1ST PARAM UPDATED, XR4 GT 7
YES
C4 +175
NO
C9
C9
ALL PARAM UPDATED XR4 LT 1
NO
YES
B1 +175
XR4 -1 INTO XR4
R7ML1
C3

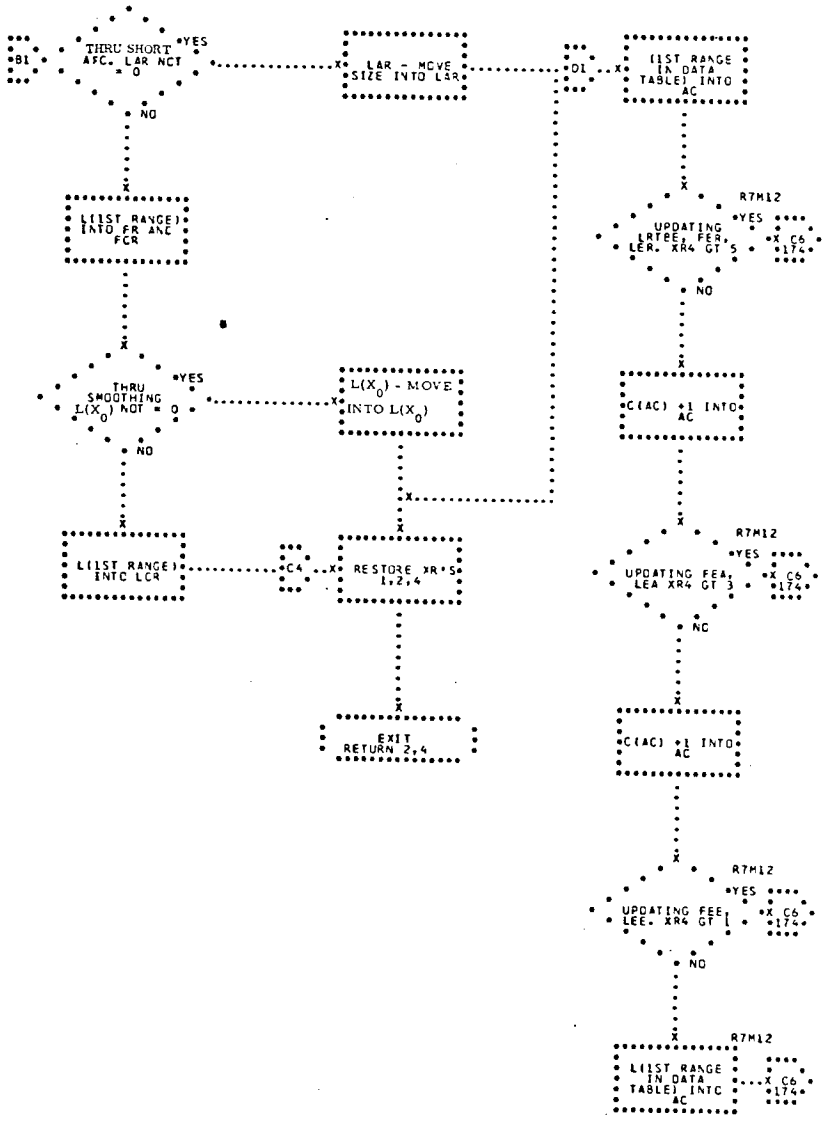
B1
THRU SHORT AFC. LAR NOT = 0
YES
NO
LAR - MOVE SIZE INTO LAR
D1
(1ST RANGE IN DATA TABLE) INTO AC
(1ST RANGE) INTO FR AND FCR
R7M12
UPDATING LRTBE, FER, LER. XR4 GT 5
C6 174
THRU SMOOTHING L(X0) NOT = 0
L(X0) - MOVE INTO L(X0)
C(AC) +1 INTO AC
(1ST RANGE) INTO LCR
C4
RESTORE XR'S 1,2,4
UPDATING FEA, LEA XR4 GT 3
EXIT RETURN 2,4
UPDATING FEE, LEE. XR4 GT 1
(1ST RANGE IN DATA TABLE) INTO AC

## 40. RFRAC - REFRACTION CORRECTION SUBROUTINE FOR BERMUDA HIGH-SPEED INPUT PROGRAM, IOHSBD

RFRAC APPLIES REFRACTION CORRECTION TO THE RADAR OBSERVATION RECEIVED VIA THE HIGH-SPEED LINES FROM THE BERMUDA VERLORT AND FPS-16 RADARS ON SUBCHANNELS 5 AND 6 OF THE DCC. (SEE FLOWCHART.)

INPUT

A) TABLES -

| | |
|---|---|
| HB01 | AN 8-LOCATION TABLE CONTAINING THE UNPACKED VERLORT AND FPS-16 RADAR DATA ARRANGED AS FOLLOWS - |
| HB01 | VERLORT RANGE OBSERVATION |
| +1 | VERLORT AZIMUTH OBSERVATION |
| +2 | VERLORT ELEVATION OBSERVATION |
| +3 | FPS-16 ON-TRACK INDICATION |
| +4 | FPS-16 RANGE OBSERVATION |
| +5 | FPS-16 AZIMUTH OBSERVATION |
| +6 | FPS-16 ELEVATION OBSERVATION |
| +7 | TIME TAG OF DATA IN FIXED POINT 0.1 SECONDS, B35 |
| INDN | A 1-LOCATION TABLE CONTAINING THE IDENTIFICATION OF RADAR DATA TO BE PROCESSED - 0 = VERLORT<br>1 = AN/FPS-16 |
| TMSTCH | THE FIFTH AND SIXTH LOCATIONS OF THIS 28-CELL TABLE CONTAIN THE ADDRESSES OF THE STATION CHARACTERISTICS BLOCK-1 FOR AN/FPS-16 AND VERLORT DATA, RESPECTIVELY |

B) CONSTANTS -

| | | |
|---|---|---|
| KCH233 | OCT 233000000000 | CHARACTERISTIC OF 233 OCTAL |
| KMNMSK | OCT 000777777777 | |
| RFR3 | DEC 24304. 461944 | |

C) LIBRARY SUBROUTINES -

| | |
|---|---|
| U1SICO | SINE/COSINE ROUTINE |
| U1TACO | TANGENT/COTANGENT ROUTINE |

OUTPUT

HB01, HB01+2 - TWO LOCATIONS OF THE HB01 TABLE CONTAINING THE CORRECTED RANGE AND ELEVATION OF THE OBSERVATION, RESPECTIVELY.

METHOD

UPON ENTRY, RFRAC SAVES INDEX REGISTERS 1 AND 4. IT THEN SETS UP FOR A VERLORT PASS BY PLACING -5 IN INDEX REGISTER 1 (THE CONTENTS OF INDEX REGISTER 1 ARE LATER USED TO OBTAIN THE BASE ADDRESS OF THE CORRECT STATION CHARACTERISTICS BLOCK FOR THE TYPE OF RADAR DATA BEING PROCESSED) AND CHECKS THE INDICATOR INDN FOR THE RADAR TYPE. IF INDN IS NONZERO, FPS-16 DATA IS BEING PROCESSED AND INDEX REGISTER 1 IS RESET FOR AN AN/FPS-16 (-4 REPLACES THE -5 IN INDEX REGISTER 1).

THE COMPLEMENT OF THE BASE ADDRESS OF THE STATION CHARACTERISTICS BLOCK FOR THAT RADAR IS PLACED IN INDEX REGISTER 1. REFRACTION CORRECTION IS THEN APPLIED TO THE RANGE AND ELEVATION USING THE FOLLOWING FORMULAS -

A) $DR = .1161466225 \times 10^{-2} \times \frac{(n-1)}{\sin E}$

R - DR ⟶ R

B) DE = (N-1) COT E

E - DE ⟶ E

WHERE N = INDEX OF REFRACTION

RANGE IS CONVERTED TO FIXED-POINT FEET, B35, AND STORED. IF THE CORRECTED ELEVATION IS LESS THAN ZERO, IT IS SET EQUAL TO ZERO. OTHERWISE, IT IS CONVERTED TO FIXED-POINT RADIANS, B14, AND STORED.

USAGE

RFRAC IS ENTERED FROM IOHSBD VIA THE CALLING SEQUENCE AND EXITS TO IOHSBD VIA A TRA 1,4.

A) CALLING SEQUENCE -

```
TSX     RFRAC,4
RETURN
```

B) STORAGE REQUIRED - 50 LOCATIONS

C) TIMING (7094) - 0.250 MILLISECONDS, MAXIMUM (NOT INCLUDING TIME REQUIRED BY U1SICO AND U1TACO)

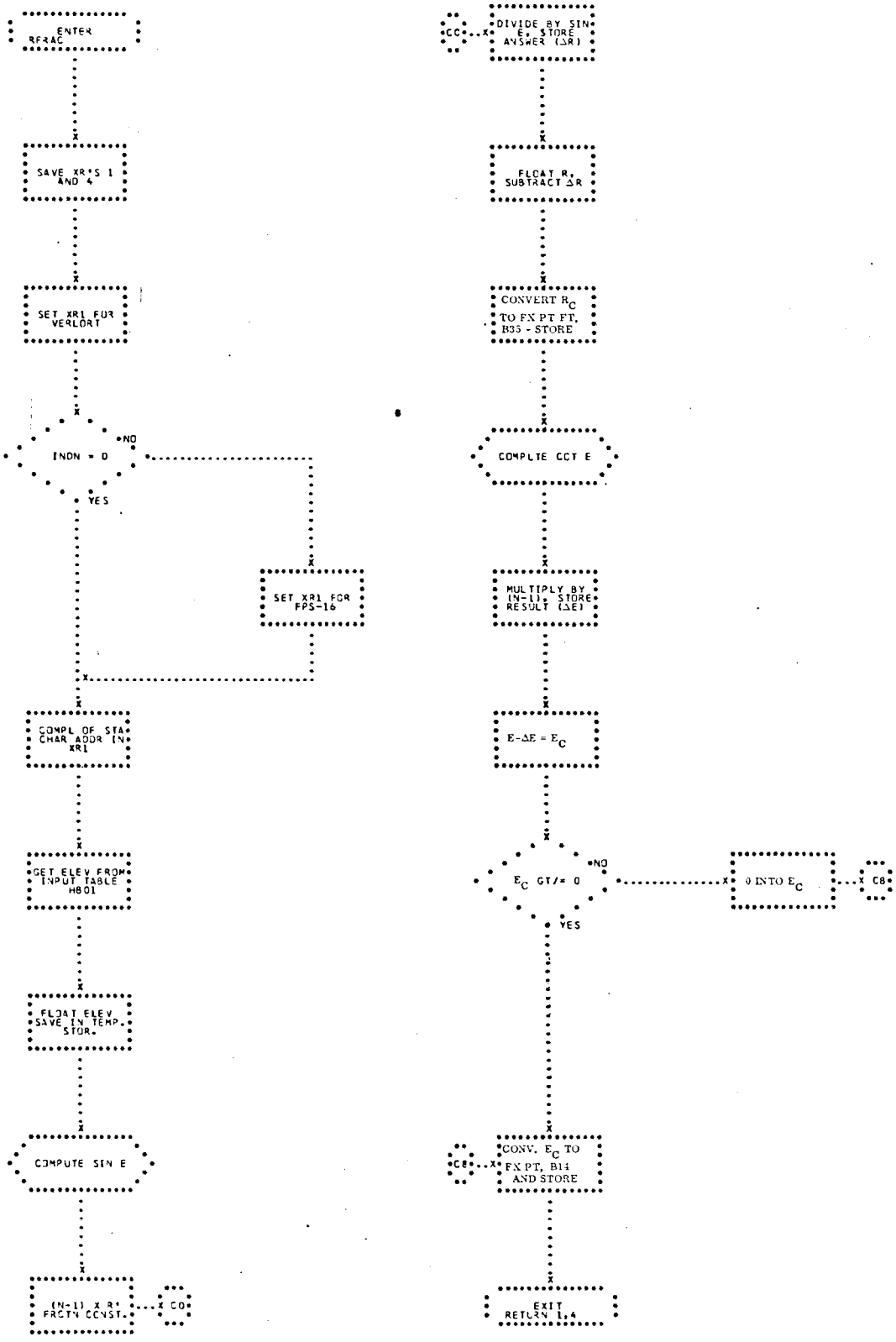
ENTER RFRAC
SAVE XR'S 1 AND 4
SET XR1 FOR VERLORT
INDN = 0
NO
YES
SET XR1 FOR FPS-16
COMPL OF STA CHAR ADDR IN XR1
GET ELEV FROM INPUT TABLE H801
FLOAT ELEV SAVE IN TEMP. STOR.
COMPUTE SIN E
(N-1) X R' FRCTN CONST.
CO
CC
DIVIDE BY SIN E, STORE ANSWER (ΔR)
FLOAT R, SUBTRACT ΔR
CONVERT $R_C$ TO FX PT FT, B35 - STORE
COMPLTE CCT E
MULTIPLY BY (N-1), STORE RESULT (ΔE)
$E-\Delta E = E_C$
$E_C$ GT/= 0
NO
YES
0 INTO $E_C$
C8
CONV. $E_C$ TO FX PT, B14 AND STORE
EXIT RETURN 1,4

## 41. MFHSBD - MONITOR SUFFIX TO IOHSBD

MFHSBD DETERMINES WHETHER THE SENSE LIGHT PROGRAM SHOULD BE QUEUED WITH THE CURRENT STATUS OF THE AN/FPS-16 AND VERLORT ON-TRACK BITS. (SEE FLOWCHART.)

INPUT

A) COMMUNICATION CELL -

MCFVOT CONTAINS CURRENT STATUS OF VERLORT AND AN/FPS-16 ON-TRACK BITS IN THE 34TH AND 35TH BIT POSITIONS, RESPECTIVELY.

B) PARAMETERS -

MNHSBD PRIORITY/ROUTINE NUMBER FOR MPHSBD.

MNSENS PRIORITY/ROUTINE NUMBER FOR MYSENS.

OUTPUT

A) TABLES -

TMBDSL A TWO-LOCATION TABLE CONTAINING AN INDICATION OF THE ON-TRACK LIGHT TO BE TURNED ON IN BIT POSITIONS 13 AND 14 OF THE FIRST LOCATION. THE CORRESPONDING BIT POSITIONS OF THE SECOND WORD INDICATE THE ON-TRACK LIGHT TO BE TURNED OFF.

B) COMMUNICATION CELL -

MCBOTL SET NON-ZERO TO INDICATE THAT INPUT TRAPS FROM BERMUDA ARE BEING RECEIVED.

METHOD

UPON RECEIVING CONTROL FROM IOHSBD, MFHSBD COMPARES THE CURRENT STATUS OF THE VERLORT AND AN/FPS-16 ON-TRACK

INDICATORS WITH THEIR STATUS ON THE PREVIOUS ENTRY. IF THEY HAVE NOT CHANGED SINCE THE PREVIOUS ENTRY, MFHSBD EXITS TO MOPRIO AFTER SETTING MCBCTL NON-ZERO TO SHOW THAT BERMUDA INPUT TRAPS ARE BEING RECEIVED.

IF A CHANGE IS INDICATED, MFHSBD SETS UP THE TMBDSL TABLE AND QUEUES THE SENSE LIGHT PROGRAM, MYSENS, WITH THE CURRENT INFORMATION. MCBCTL IS THEN SET NON-ZERO AND CONTROL IS GIVEN TO MOPRIO.

USAGE

MFHSBD IS ENTERED FROM IOHSBD. IT TRANSFERS CONTROL TO MOPRIO.

A) MACROS -

QENBA

QENBZ

TRNOF

B) STORAGE REQUIRED -

23 LOCATIONS

C) TIMING (7094) -

1) NO CHANGE IN STATUS OF ON-TRACK BITS, 0.024 MILLISECONDS

2) CHANGE IN STATUS OF ON-TRACK BITS, 0.148 MILLISECONDS (INCLUDING TIME REQUIRED FOR MOQUEU)

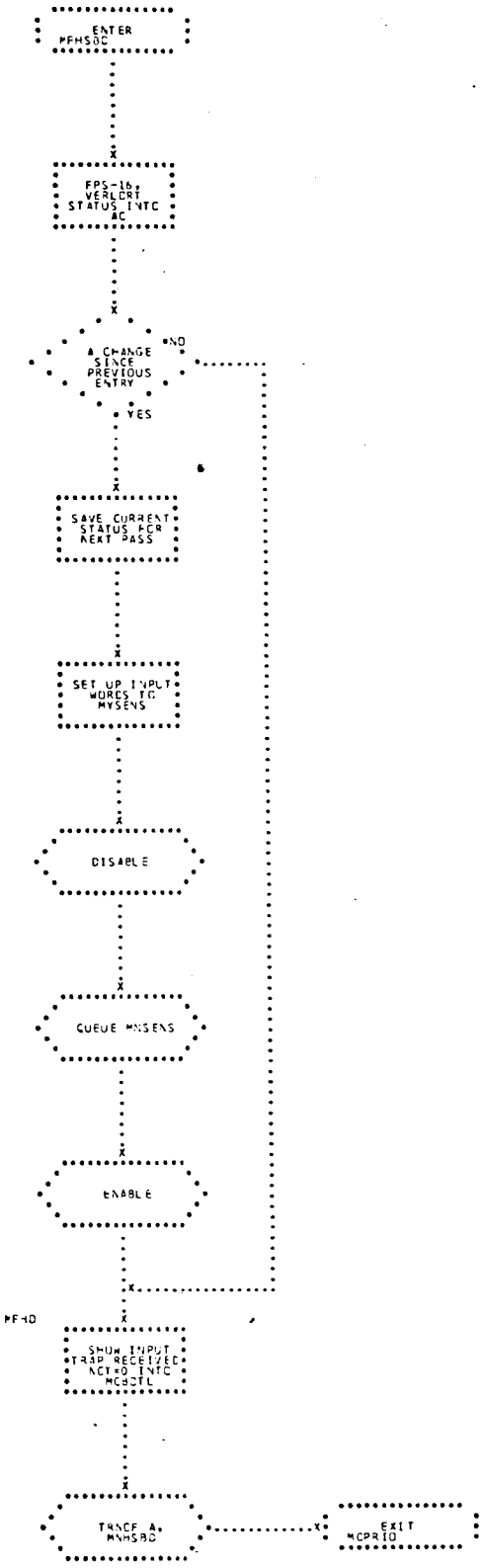
ENTER
MFHSBC
FPS-16, VERLORT STATUS INTO AC
A CHANGE SINCE PREVIOUS ENTRY
NO
YES
SAVE CURRENT STATUS FOR NEXT PASS
SET UP INPUT WORDS TO MYSENS
DISABLE
QUEUE MNSENS
ENABLE
MFHD
SHOW INPUT TRAP RECEIVED NOT=0 INTO MCBOTL
TRNCF A, MNHSBD
EXIT MCPRIO

## 42. LOW-SPEED INPUT

THE GEMINI PROGRAMMING SYSTEM ACCEPTS THREE TYPES OF LOW-SPEED TELETYPE-FORMAT VIA THE DCC - (1) SPACECRAFT POSITIONAL DATA FROM THE RADAR SITES, (2) PCM SPACECRAFT TELEMETRY DATA AND (3) SPECIAL MESSAGES COMPOSED AT GODDARD FOR MANUAL INSERTION. IN GENERAL, MONITOR CONTROL OF LOW-SPEED INPUT CONSISTS OF ACCEPTING, PACKING THE TELETYPE CHARACTERS, AND STORING THEM IN TEMPORARY BUFFERS. WHEN ANY OF THESE TEMPORARY BUFFERS IS FILLED, CONTROL IS GIVEN TO THE PROCESSING PROGRAMS WHICH CONVERT THE DATA FROM TELETYPE FORMAT INTO A FORM SUITABLE FOR COMPUTATIONS. THE INPUT PROCESSING PROGRAMS ALSO INTERPRET THE DATA AND PROVIDE INDICATIONS USED TO CONTROL FURTHER DATA FLOW AND PROCESSING.

### RADAR DATA

WHEN THE GEMINI SPACECRAFT COMES WITHIN RANGE OF THE RADAR TRACKING STATION, RAW RADAR VALUES OF RANGE, AZIMUTH, AND ELEVATION (WITH THE CORRESPONDING GREENWICH MEAN TIME) ARE SENT VIA TELETYPE TO GODDARD COMMUNICATIONS AND CONTROL CENTER. THESE MESSAGES ARE THE PRIMARY INPUT TO THE GEMINI PROGRAMMING SYSTEM WHEN THE SPACECRAFT PASSES OUT OF RANGE OF THE CAPE KENNEDY RADARS. THESE MESSAGES ENTER THE COMPUTER VIA SUBCHANNELS 14 THROUGH 29 OF THE DCC. EACH 5-BIT TELETYPE CHARACTER IS STORED, RIGHT-JUSTIFIED, IN A SEPARATE COMPUTER STORAGE LOCATION. WHEN SIX SUCH CHARACTERS HAVE BEEN ENTERED THE DCC REQUESTS A PROGRAM INTERRUPT ON THE SUBCHANNEL SUPPLYING THE SIX CHARACTERS. THIS TRAP GIVES CONTROL TO THE MONITOR TELETYPE INPUT TRAP PROCESSOR, MTTTIN, WHICH PRE-

FIXES A ZERO TO THE 5-BIT CHARACTER AND PACKS THE SIX CHARACTERS IN A SINGLE WORD. THE DCC INPUT BUFFER FOR THAT SUBCHANNEL IS NOW FREE TC ACCEPT SIX MORE INPUT CHARACTERS. WHEN MTTTIN HAS PACKED 60 CHARACTERS (10 COMPUTER WORDS) THE DATA IS LCGGED AND CONTROL IS GIVEN TO IOTTIN TO PROCESS THE DATA.

ON THE FIRST ENTRY TO MTTTIN FOR ANY 10-WORD-PACKED OUTPUT BLOCK, A LOGGING TIME TAG MUST BE CCNSTRUCTED. ON THE LAST ENTRY TO MTTTIN FOR A 10-WORD BLOCK, THE BLOCK IS LOGGED.

ENTRY TO IOTTIN IS MADE VIA THE MCNITCR PREFIX, MPTTIN, WHICH DETERMINES WHEN THE INPUT IS TELETYPE FROM REMOTE SITES. MPTTIN EXTRACTS THE IOTTIN QUEUE ENTRY, DETERMINES THE SOURCE AND, IF THE MESSAGE IS TELETYPE FROM THE SITES, PREPARES THE INPUT PARAMETERS FOR IOTTIN.

IOTTIN DETERMINES WHETHER THE MESSAGE IS ACCEPTABLE (BECAUSE NONRADAR TELETYPE MESSAGES, ALTHOUGH IGNORED IN COMPUTER PROCESSING, ARE ALSO RECEIVED INTO COMPUTER CORE STORAGE). RADAR MESSAGES ARE EXAMINED FOR VALIDITY, AND VALID DATA IS CONVERTED INTO THE FORMAT REQUIRED FOR LATER PROCESSING. THE INPUT RADAR DATA IS PROCESSED PAST THE INPUT LEVEL ONLY AFTER TRANSMISSION HAS BEEN COMPLETED. TRANSMISSICN MAY BE COMPLETED TWO WAYS - (1) AN END-OF-TRANSMISSION SIGNAL IS RECEIVED OR (2) EIGHT MINUTES HAVE PASSED SINCE THE BEGINNING OF TRANSMISSION AND END-OF-TRANSMISSION IS FORCED. THE FIRST IS THE RESPONSIBILITY OF IOTTIN. PROGRAM CONTROL INITIATES ACTION WHEN AN END-OF-TRANSMISSION MUST BE FORCED. IOTTIN EXITS TO THE MONITOR SUFFIX, MFTTIN, WHICH CONTROLS THE PROCESSING FLOW. PROGRAM CONTROL IS SET FOR THE EDITING PROCESSING PROGRAM, EOLED1, IF TRANSMISSICN IS COMPLETE.

SINCE SEVERAL STATIONS MAY PROVIDE SIMULTANEOUS RADAR DATA FOR THE LOW-SPEED INPUT PROGRAMS, BOTH BECAUSE OF SIMULTANEOUS TRACKING BY TWO OR MORE RADARS AT DIFFERENT LOCATIONS AND BECAUSE RADAR DATA IS PRESERVED AT THE SITE ON PAPER TAPE FOR LATER TRANSMISSION OR RETRANSMISSION, MTTTIN IS CAPABLE OF HANDLING SIMULTANEOUS INPUT FROM MANY STATIONS. REFER TO DATA FLOW DIAGRAM FOR THE MONITOR CONTROL OF LOWSPEED TELETYPE INPUT RADAR MESSAGES.

PCM MESSAGES

RAW DATA RECEIVED FROM THE SPACECRAFT AND PROCESSED BY THE ON-SITE COMPUTER ARE SENT TO GODDARD VIA TELETYPE FOR CONVERSION TO ENGINEERING UNITS.

IOTTIN GATHERS THE DATA RECEIVED IN 10 WORD SEGMENTS FROM MTTTIN AS DESCRIBED ABOVE. WHEN THE MESSAGE IS DETERMINED TO BE A PCM MESSAGE, THE MESSAGE HEADER IS EXAMINED. THE INFORMATION FROM THE HEADER IS FORMATTED FOR AN ON-LINE MESSAGE. IF THERE ARE NO DESTRUCTIVE ERRORS IN THE HEADER, DATA COLLECTION IS CONTINUED. IOTTIN WILL HALT COLLECTION WHEN EITHER A NEW MESSAGE IS RECOGNIZED OR THE AMOUNT OF DATA EXCEEDS THE EXPECTED AMOUNT FOR THE MESSAGE FORMAT.

IF A DESTRUCTIVE ERROR IS RECEIVED, A CELL IS SET FOR MFTTIN TO QUEUE AN ERROR MESSAGE ON-LINE.

AT THE COMPLETION OF A MESSAGE, THE INFORMATION IS STORED IN A STACK TABLE FOR HANDLING BY OTHER PCM PROCESSORS. A CELL IS SET FOR MFTTIN TO QUEUE THE HEADER INFORMATION MESSAGE ON-LINE.

MANUALLY INSERTED MESSAGES

SPECIAL MESSAGES MAY BE PREPARED, ACCORDING TO A PRESCRIBED AND RIGID FORMAT, FOR DIRECT ENTRY INTO THE COMPUTER VIA LOW-SPEED SUBCHANNEL 30 OF THE DCC. THESE MESSAGES PROVIDE A MEANS WHEREBY THE GEMINI PROGRAMMING SYSTEM MAY BE PROVIDED WITH (1) THE GREENWICH MEAN TIME OF LIFTOFF, (2) AN ABORT/ORBIT DECISION, (3) AN R AND A V VECTOR WITH THE CORRESPONDING TIME, (4) THE NUMBER AND TIME OF RETROROCKET FIRING, AND MANY OTHER MESSAGES TO EXTEND THE FLEXIBILITY OF THE SYSTEM AND/OR PROVIDE A MEANS OF PROTECTION AGAINST FAILURE IN THE PRIMARY INFORMATION SOURCE.

THE MANUALLY INSERTED MESSAGES ARE PUNCHED ON PAPER TAPE IN STANDARD TELETYPE CODE AND ARE FED INTO THE COMPUTER VIA SUBCHANNELS 29 OR 30. THE PAPER TAPE MESSAGES ARE PROCESSED BY MTTTIN IN THE SAME MANNER AS STANDARD RADAR TELETYPE INPUT, WITH ONLY ONE MINOR DIFFERENCE. WHERE 60 TELETYPE CHARACTERS (10 PACKED WORDS) MUST ACCUMULATE BEFORE PROCESSING RADAR DATA, THE NUMBER OF PACKED WORDS REQUIRED FOR PROCESSING MANUALLY INSERTED MESSAGES IS INITIALLY SIX, AND MAY HAVE ANY VALUE LESS THAN SIX. FOR MANUALLY INSERTED MESSAGES, MTTTIN QUEUES THE MANUAL INSERTION PROGRAM MPMANI. THE MONITOR PREFIX, MPMANI, GIVES CONTROL TO ITS PROCESSOR IOMANI.

MONITOR CONTROL OF MANUAL INSERTION IS CONCERNED WITH MAINTAINING THE VARIABLE LENGTH OF THE INPUT TABLE TO ALLOW PROCESSING WHEN THE MESSAGE IS AVAILABLE. AFTER IOMANI HAS SUCCESSFULLY PROCESSED AN INSERTED MESSAGE, THE SUFFIX RECEIVING CONTROL MUST PROVIDE CONTROL FUNCTIONS BASED ON THE INFORMATION RECEIVED. THESE VARY FROM

THE TURNING ON OF THE LAUNCH LIGHT ON THE OPERATIONS CONTROL CONSOLE AND THE STORING OF LIFTOFF TIME IN THE RESTART TABLE FOR THE GMT OF LIFTOFF MESSAGE TO THE INITIATING OF THE PHASE CHANGE SEQUENCE FOR THE RETROFIRE MESSAGE. FOR EVERY EXIT FROM IOMANI, EXCEPT TO MFMANI ON AN INCOMPLETE MESSAGE, AN ON-LINE MESSAGE IS PROVIDED WHICH DESCRIBES THE INFORMATION RECEIVED BY IOMANI.

DATA FLOW - TELETYPE INPUT RADAR MESSAGES

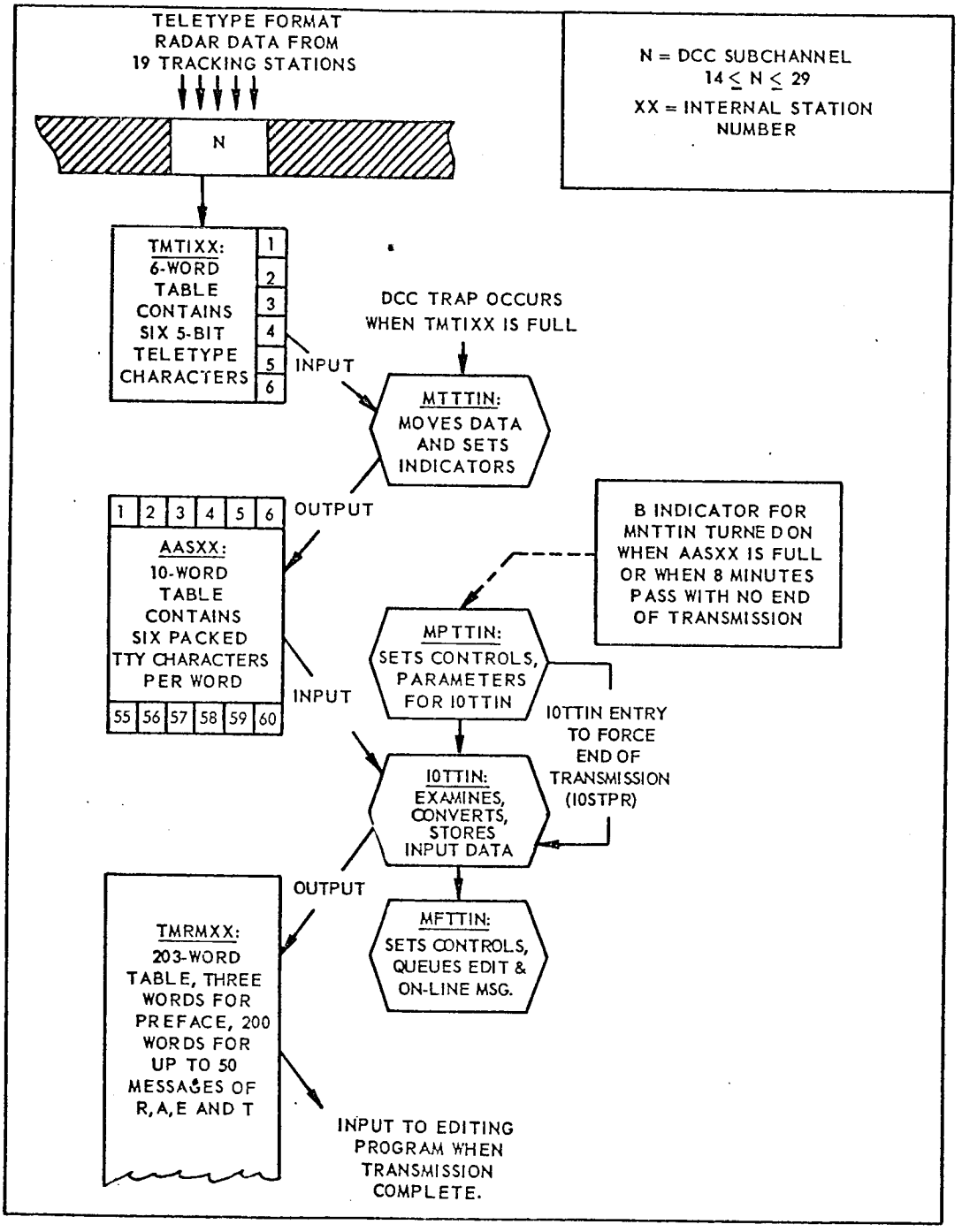

## 43. MTTTIN - MONITOR TTY INPUT TRAP PROCESSOR

MTTTIN SERVICES TRAPS RESULTING FROM DATA ON THE 17 TTY INPUT SUBCHANNELS, 14 THROUGH 30, OF THE DCC. MTTTIN PACKS AND STORES THE INPUT FROM EACH SUBCHANNEL IN THE ASSOCIATED STATION BLOCK AND, WHEN THE BLOCK IS FILLED, LOGS THE INPUT DATA. MTTTIN ALSO QUEUES THE MONITOR PREFIX TO IOMANI OR IOTTIN WITH THE TTY LINE NUMBER PRODUCING THE INPUT TRAP. (SEE FLOWCHART.)

INPUT

ON ENTRY TO MTTTIN, THE DECREMENT OF THE ACCUMULATOR MUST CONTAIN THE NUMBER OF THE DCC SUBCHANNEL PRODUCING THE TRAP, AND THE ADDRESS OF THE ACCUMULATOR MUST CONTAIN THE LOCATION OF THE INPUT TTY DATA (TMTI01, TMTI02, ... OR TMTI17).

A) TMTI01 THRU TMTI17 — 1 OF THESE 6-CELL INPUT BLOCKS MUST CONTAIN THE INPUT TTY CHARACTERS. INPUT ON SUBCHANNEL 14 IS STORED IN TMTI01, WHERE 01 IS THE LINE NUMBER FOR TTY INPUT ON SUBCHANNEL 14 . . . INPUT ON SUBCHANNEL 30 IS STORED IN TMTI17, WHERE 17 IS THE LINE NUMBER FOR TELETYPE INPUT ON SUBCHANNEL 30. SUBCHANNELS 14 THROUGH 29 ARE USED FOR RADAR INPUT AND SUBCHANNEL 30 IS USED FOR MANUALLY INSERTED DATA. HOWEVER, IF SUBCHANNEL 29 IS USED WITH SENSE SWITCH 3 DOWN, THEN SC 29 IS

| | | |
|---|---|---|
| | | BEING USEC FOR MANUAL INSERTION. |
| B) | TMTTIN | 18-WORD TABLE, ORDERED SEQUENTIALLY BY LINE NUMBER (SUBCHANNEL NUMBER MINUS 13), WITH ONE CELL ASSIGNED TC EACH OF THE 17 INPUT LINES. THE ADDRESS OF THE TMTTIN ENTRY CCNTAINS THE LOCATICN CF THE AASXX BLOCK FOR EACH LINE, THE DECREMENT CONTAINS THE NUMBER OF WORDS TO BE ADDED TO THE AASXX BLOCK BEFORE THE BLOCK IS FULL AND EITHER IOTTIN OR IOMANI IS ENTEREC. |
| C) | TM8.3M | CONTAINS THE NUMBER OF 8-1/3 MILLISECCND INTERVALS ELAPSED SINCE THE LAST EXACT HALF-SECOND. |
| D) | MCHFSC | CONTAINS CURRENT GMT IN FIXED-POINT HALF-SECONDS. |

OUTPUT

OLTPLT FROM MTTTIN CONSISTS OF AN ACCUMULATION OF TTY INPUT CHARACTERS, PACKED SIX CHARACTERS PER 7094 COMPUTER WORD, AND STORED IN THE OUTPUT BLOCK DEFINED IN THE ADDRESS OF TMTTIN. EACH TTY INPUT SUBCHANNEL HAS A SEPARATE BLOCK FCR THIS PURPOSE, FOR EXAMPLE IN AASXX, WHERE XX IS THE NUMBER OF THE ASSOCIATED LINE NUMBER. LINE NUMBER 1 IS THE EQUIVALENT TC SUBCHANNEL 14, ETC. THE ADDRESS OF TMTTIN GIVES THE LCCATION OF THE OUTPUT BLOCK FOR THE CORRESPCNDING LINE NUMBER. HOWEVER, IN ONE CASE THE LINE NUMBER WILL NOT CORRESPOND WITH THE OUTPUT BLOCK LOCATION. IF A TRAP OCCURS ON SUBCHANNEL 29 (LINE 16) AND SENSE SWITCH 3 IS DCWN, THE INPUT DATA IS MOVED

FROM THE TMTI16 INPUT BLOCK TO THE AAS17 INSTEAD OF AAS16 OUTPUT BLOCK.

LOGGING IS REQUIRED WHEN AN AASXX BLOCK IS FULL AND IS READY FOR PROCESSING BY IOTTIN OR IOMANI. WORDS IN THE BLOCK WHICH HAVE BEEN LOGGED ARE NOT LOGGED AGAIN.

METHOD

TELETYPE CHARACTERS ARE RECEIVED ON DCC SUBCHANNELS 14 THROUGH 30 AND ARE STORED, ONE CHARACTER PER 7094 COMPUTER WORD, IN A 6-CELL BLOCK CORRESPONDING TO THE SUBCHANNEL INVOLVED. EACH OF THE 17 SUBCHANNELS HAS ITS OWN 6-CELL BLOCK - TMTI01, TMTI02, ... TMTI17.

WHEN ONE OF THE TMTIXX INPUT BLOCKS BECOMES FULL, A TRAP OCCURS AND CONTROL IS TRANSFERRED TO MTTTIN VIA MORTCC. MTTTIN SETS THE NECESSARY CONDITIONS TO MOVE DATA FROM THE INPUT BLOCK TO THE OUTPUT BLOCK (AASXX). MTTTIN EXAMINES THE SIGN POSITION OF THE TMTTIN ENTRY TO DETERMINE IF CONTROL WORDS FOR SUBSEQUENT LOGGING ARE REQUIRED. WHEN THE SIGN IS NEGATIVE, CONTROL WORDS ARE REQUIRED, AND MTTTIN SAVES 1) THE DECREMENT OF THE TMTTIN ENTRY, INDICATING THE NUMBER OF NEW WORDS REQUIRED TO FILL THE AASXX BLOCK AND, THEREFORE, THE NUMBER OF WORDS TO BE LOGGED BY MSLOGG WHEN THE BLOCK IS FULL AND READY FOR PROCESSING BY IOTTIN OR IOMANI, AND 2) THE TIME OF THE TRAP OF THE FIRST NEW WORD PLACED IN THE AASXX BLOCK. MTTTIN SETS THE SIGN OF THE TMTTIN ENTRY TO POSITIVE INDICATING THE LOGGING CONTROL WORDS HAVE BEEN SET. THIS SIGN REMAINS POSITIVE UNTIL THE AASXX BLOCK HAS BEEN FILLED AND LOGGED.

AFTER ALL NECESSARY CONDITIONS HAVE BEEN ESTABLISHED, MTTTIN PACKS THE SIX INPUT CHARACTERS IN A SINGLE WORD AND STORES THE WORD IN THE APPROPRIATE ENTRY IN THE OUTPUT BLOCK (AASXX) DETERMINED BY THE TMTTIN ENTRY. MTTTIN THEN DETERMINES IF THE AASXX BLOCK IS FULL AND READY TO BE PROCESSED BY TESTING FOR A ONE IN THE DECREMENT OF THE APPROPRIATE ENTRY IN TMTTIN. IF THE DECREMENT DOES NOT EQUAL ONE, THE BLOCK IS NOT FULL. MTTTIN THEN REDUCES THE DECREMENT BY ONE, INDICATING THE NUMBER OF WORDS NOW REQUIRED TO FILL THE AASXX BLOCK, AND TRANSFERS CONTROL TO MOPRIO.

IF THE DECREMENT EQUALS ONE, THE BLOCK IS FULL AND READY TO BE PROCESSED BY EITHER IOTTIN OR IOMANI. MTTTIN QUEUES THE APPROPRIATE PROCESSOR WITH THE LINE NUMBER ASSOCIATED WITH THE BLOCK. (THE LINE NUMBER IS PLACED IN THE DECREMENT OF AATTY.) DATA IN THE AASXX BLOCK THAT WAS NOT LOGGED PREVIOUSLY IS NOW LOGGED, THE TMTTIN ENTRY IS SET TO NEGATIVE AND CONTROL IS GIVEN TO MOPRIO.

USAGE

MTTTIN IS ENTERED FROM MORTCC FOLLOWING A TRAP ON SUBCHANNEL 14 THROUGH 30 AND EXITS TO MOPRIO.

A) TABLES -

TMTTIN

TMTI01, ... TMTI17

AAS01, ... AAS17

B) COMMUNICATION CELL -

MCHFSC

C) PARAMETER -

MNTTIN

D) MACRO -

QUEUE

E) SUBROUTINE -
MSLOGG

F) TIME REQUIRED -
MINIMUM - 0.133 MILLISECOND
MAXIMUM - 0.631 MILLISECOND

G) STORAGE REQUIRED - 254 LOCATIONS.

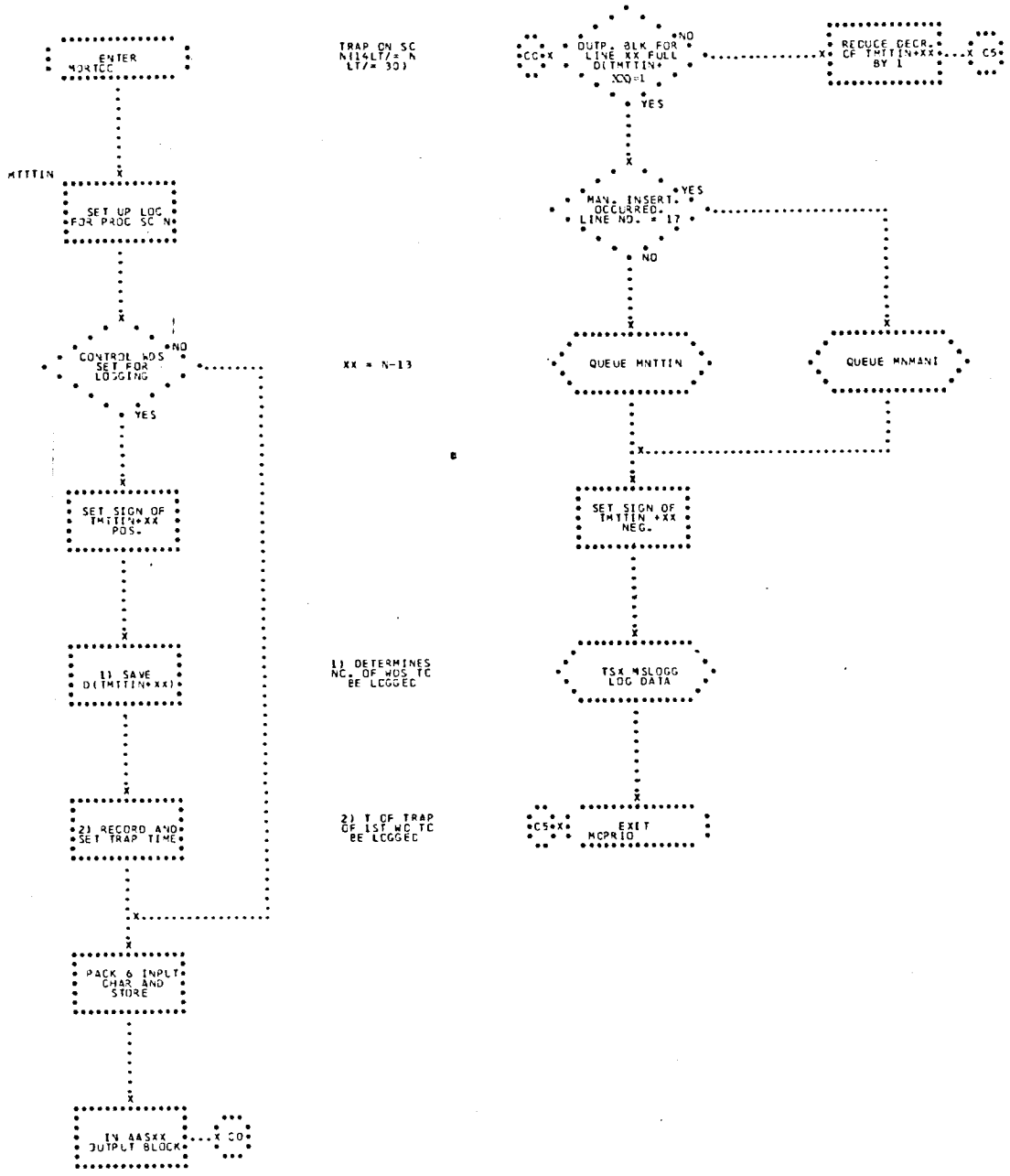
ENTER MORTCC
MTTTIN
SET UP LOC FOR PROC SC N
CONTROL WDS SET FOR LOGGING
NO
YES
SET SIGN OF TMTTIN+XX POS.
1) SAVE D(TMTTIN+XX)
2) RECORD AND SET TRAP TIME
PACK 6 INPUT CHAR AND STORE
IN AASXX OUTPUT BLOCK
X CO
TRAP ON SC N(14LT/= N LT/= 30)
XX = N-13
1) DETERMINES NO. OF WDS TO BE LOGGED
2) T OF TRAP OF 1ST WD TO BE LOGGED
CO X
OUTP. BLK FOR LINE XX FULL D(TMTTIN+ XX)=1
NO
YES
REDUCE DECR. OF TMTTIN+XX BY 1
X C5
MAN. INSERT. OCCURRED. LINE NO. = 17
YES
NO
QUEUE MNTTIN
QUEUE MNMANI
SET SIGN OF TMTTIN +XX NEG.
TSX MSLOGG LOG DATA
C5 X
EXIT MCPRIO

## 44. MPTTIN - MONITOR PREFIX TO IOTTIN

MPTTIN ESTABLISHES CONTROL INFORMATION FOR USE BY IOTTIN WHEN LOW-SPEED INPUT OVER DCC SUBCHANNELS 14 THROUGH 29 RESULTS IN EITHER OF THE FOLLOWING TWO CONDITIONS -

A) AN INPUT BLOCK (AAS01 THROUGH AAS16) BECOMES FULL AND PROCESSING IS REQUIRED.

B) A RADAR STATION EXCEEDS THE APPROXIMATE 8-MINUTE REPORTING INTERVAL WITH NO END-OF-TRANSMISSION SIGNAL.

(SEE FLOWCHART.)

### INPUT

INPUT TO MPTTIN INCLUDES A QUEUE WORD WHOSE DECREMENT CONTAINS THE LINE NUMBER (SUBCHANNEL NUMBER MINUS 13) FOR THE INPUT BLOCK OR WHOSE ADDRESS CONTAINS THE INTERNAL STATION NUMBER OF A RADAR STATION WHICH MUST BE FORCED TO END TRANSMISSION.

### OUTPUT

OUTPUT FROM MPTTIN IS EITHER OF THE FOLLOWING -

A) LINE NUMBER (SUBCHANNEL NUMBER MINUS 13) FOR THE INPUT BLOCK TO BE PROCESSED IS PLACED IN THE DECREMENT OF THE AC.

B) INTERNAL STATION NUMBER OF RADAR STATION EXCEEDING 8-MINUTE TRANSMISSION INTERVAL IS PLACED IN ADDRESS OF MCISTN.

METHOD

THE QUEUE WORD FOR MPTTIN IS TAKEN FROM THE QUEUE TABLE AND STORED IN ATNO. FROM ATNO, THE WORD IS PLACED IN THE AC AND TESTED AS FOLLOWS -

A) IF THE ADDRESS PORTION IS ZERO, CONTROL IS GIVEN TO IOTTIN TO PROCESS THE INPUT BLOCK IDENTIFIED BY THE LINE NUMBER CONTAINED IN THE DECREMENT.

B) IF THE ADDRESS IS NONZERO, END OF TRANSMISSION MUST BE FORCED AND CONTROL IS GIVEN TO IOSTPR. THE INTERNAL RADAR STATION NUMBER, A (ATNO), IS STORED IN THE ADDRESS OF MOISTN.

USAGE

MPTTIN IS ENTERED FROM MOPRIC AND EXITS TO EITHER IOTTIN OR IOSTPR.

A) STORAGE REQUIRED -

11 LOCATIONS

B) MACROS -

TRNON

QENBZ

UNQUE

QENBA

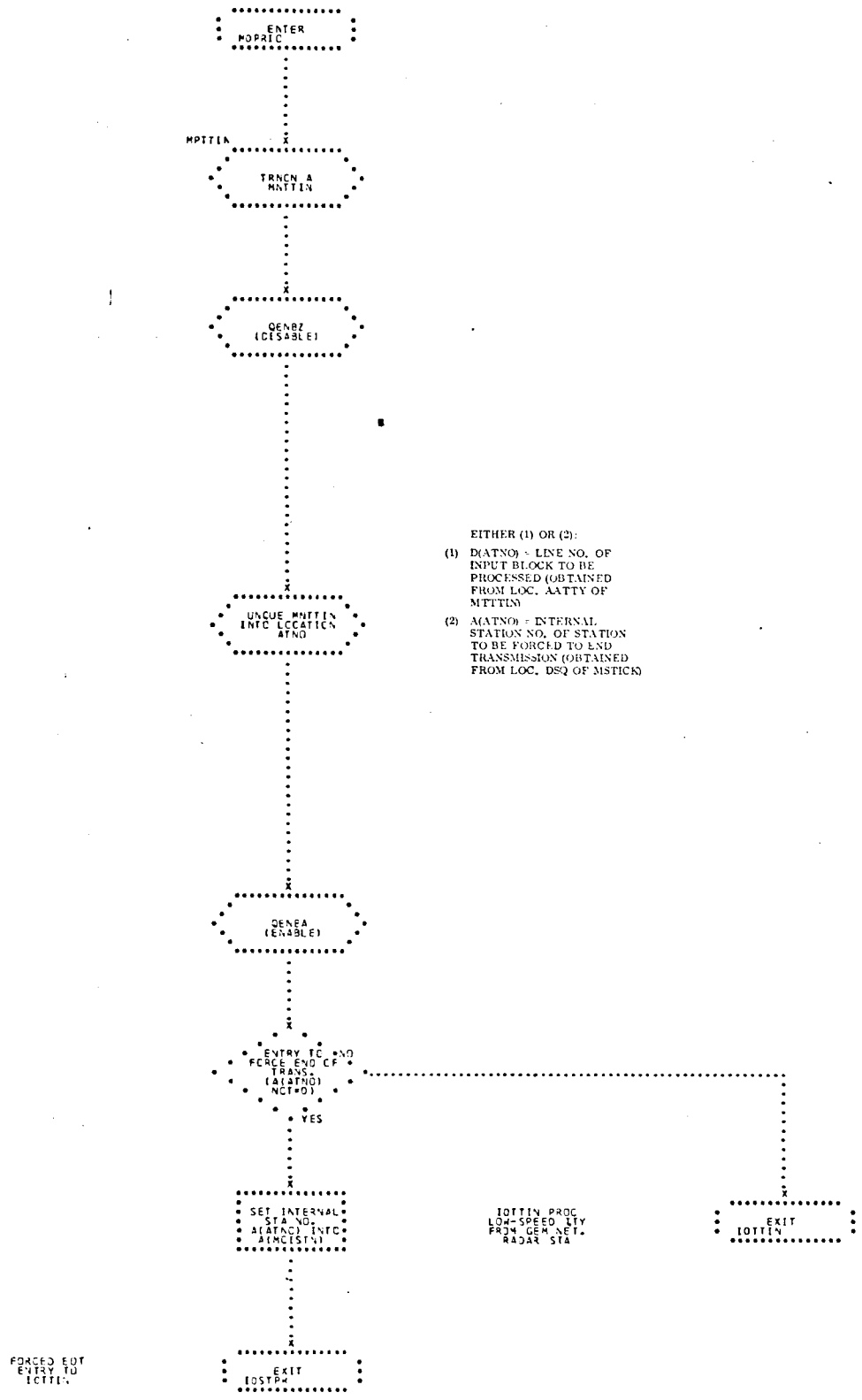
ENTER
MOPRIC
MPTTIN
TRNCN A
MNTTIN
QENBZ
(DISABLE)
UNQUE MNTTIN
INTO LOCATION
ATNO
EITHER (1) OR (2):
(1) D(ATNO) = LINE NO. OF INPUT BLOCK TO BE PROCESSED (OBTAINED FROM LOC. AATTY OF MTTTIN)
(2) A(ATNO) = INTERNAL STATION NO. OF STATION TO BE FORCED TO END TRANSMISSION (OBTAINED FROM LOC. DSQ OF MSTICK)
QENBA
(ENABLE)
ENTRY TO NO
FORCE END OF
TRANS.
(A(ATNO)
NOT=0)
YES
SET INTERNAL
STA NO.
A(ATNO) INTO
A(MCISTN)
IOTTIN PROC
LOW-SPEED LTY
FROM GEN NET.
RADAR STA
EXIT
IOTTIN
FORCED EOT
ENTRY TO
IOTTIN
EXIT
IOSTPH

## 45. IOTTIN - LOW SPEED TTY INPUT PROGRAM

IOTIN PROCESSES DATA RECEIVED OVER TTY LINES SENT BY RADAR OR TELEMETRY SITES. DATA IS SENT FROM SITES VIA TTY CIRCUITS AT 6 OR 10 CHARACTERS PER SECOND.

AT GODDARD, THE 16 TTY LINES TERMINATE IN SUBCHANNELS OF THE DCC. AS EACH 5-BIT TELETYPE CHARACTER IS RECEIVED, IT IS STORED IN LOW-ORDER POSITIONS (31 TO 35) OF A COMPUTER WORD WHOSE LOCATION IS SPECIFIED BY THE SUBCHANNEL'S ADDRESS REGISTER. AS EACH WORD IS STORED THE ADDRESS REGISTER IS INCREMENTED. AFTER SIX CHARACTERS ARE ENTERED IN A TMTIXX BLOCK ($1 \leq XX \leq 16$), THE ADDRESS REGISTER IS RESET AND A DCC GENERATED TRAP OCCURS. COMPUTER PROCESSING IS THEN INTERRUPTED, AND MTTTIN IS ENTERED. MTTTIN PACKS THE SIX CHARACTERS (EACH WITH A LEADING ZERO) IN ONE 36-BIT COMPUTER WORD. THIS WORD IS STORED IN THE APPROPRIATE 10-WORD AASXX BLOCK ASSIGNED TO THE SUBCHANNEL CAUSING THE TRAP ($1 \leq XX \leq 16$). WHEN THE 10-WORD BLOCK IS FILLED, THE TELETYPE LINE NUMBER ASSOCIATED WITH THE BLOCK IS PLACED IN THE DECREMENT OF CELL AATY, AND MPTTIN IS QUEUED.

IN ALL RADAR MESSAGES, TIME IS IN GMT AND ELEVATION ANGLES OF OBSERVATIONS BELOW THE HORIZON ARE IN COMPLEMENTED FORM E.G., -10 DEGREES WILL EQUAL 350 DEGREES.

IOTTIN RECEIVES INPUT FROM ONE AASXX BLOCK AT A TIME. IT SCANS ALL OF THE DATA TO DETERMINE WHETHER IT IS A RADAR MESSAGE GIVING SPACECRAFT POSITION DATA OR A PCM TELEMETRY MESSAGE CONTAINING SPACECRAFT INFORMATION.

UPON RECOGNITION, ONE OF THREE SEPARATE AND DISTINCT SECTIONS OF THE PROGRAM IS ENTERED TO PROCESS THE DATA.

THESE SECTIONS WILL BE DESCRIBED INDIVIDUALLY ON THE THE PAGES TO FOLLOW. (SEE FLOWCHART.)

INPUT

A) ALL SECTIONS

THE AC CONTAINS THE TELETYPE LINE NUMBER ASSOCIATED WITH THE 10-WORD (60 CHARACTER) AASXX PUT BLOCK.

B) RADAR

1) TMTIAC A 19-WORD TTY ACCEPTABILITY TABLE, ONE ENTRY FOR EACH RADAR STATION ORDERED BY INVERSE INTERNAL STATION NUMBER. ENTRIES CONTAINING A ZERO INDICATE ACCEPT MODE A NONZERO INDICATES NON-ACCEPT MODE. ENTRIES CAN BE SET MANUALLY BY IOTTIN IF SS5 IS DOWN AND THE INTERNAL STATION NUMBER (OCTAL) IS ENTERED VIA 7094 CONSOLE.

2) TMFRBK 12-WORD TABLE USED TO ASSIGN A TMRMXX RADAR MESSAGE BLOCK WHEN A STATION STARTS TRANSMISSION.

3) LTINB A 19-WORD IOTTIN LOG TABLE, ONE ENTRY FOR EACH RADAR STATION ORDERED BY INVERSE INTERNAL STATION NUMBER, TO INDICATE REPORTING STATION'S STATUS. ZERO INDICATES STATION HAS NOT BEEN TRANSMITTING, ZERO INDICACATES A STATION IS CURRENTLY TRANSMITTING. THE ADDRESS PORTION OF THE ENTRY REFERENCES A STATION'S ASSIGNED TMRMXX BLOCK, THE DECREMENT

CONTAINS A STATION'S OUTPUT STORAGE INDEX. WHEN THE DECREMENT IS GREATER THAN 1, THE STATION'S ASSIGNED TMRMXX IS NOT FULL, WHEN IT EQUALS 1, THE BLOCK IS FULL. WHEN THE BLOCK IS FULL AND THE ENTRY'S SIGN IS POSITIVE, THE OVERLAY FEATURE IS BEING EMPLOYED TO PERMIT IOTTIN TO PLACE THE 50 RADAR MESSAGES CONTAINING THE HIGHEST ELEVATIONS IN THE TMRMXX BLOCK. IF THE SIGN IS NEGATIVE, THE OVERLAY FEATURE IS SUPPRESSED.

4) AFTER APPROXIMATELY 8 MINUTES, RADAR STATIONS ARE FORCED TO END TRANSMISSION I.E., NO MORE DATA WILL BE ACCEPTED FROM THAT STATION UNTIL ANOTHER BEGINNING OF TRANSMISSION IS RECEIVED.

5) PCM
NO OTHER INPUT IS REQUIRED.

OUTPUT

A) ALL SECTIONS

D(TMTTIN+XX) INDICATES THE NUMBER OF NEW WORDS NEEDED TO FILL AASXX BLOCK, WHERE SS = TELETYPE LINE NUMBER.

B) RADAR

1) MQ CONTAINS INTERNAL STATION NUMBER OF THE REPORTING STATION THAT HAS BEGUN TRANSMISSION.

2) CONTAINS THE INITIAL LOCATION OF TMRMXX BLOCK ASSIGNED TO THE REPORTING STATION WHEN TRANSMISSION ENDS.

3. TMRMXX 203-WORD TABLE CONTAINING TIME, RANGE, AZIMUTH, AND ELEVATION FOR UP TO 50 RADAR MESSAGES, WHERE $1 \leq XX \leq 12$. TMRMXX FORMAT IS AS FOLLOWS -

| | | |
|---|---|---|
| A) | WORD 1 | CONTAINS INTERNAL STATION NUMBER IN ADDRESS |
| B) | WORD 2 | ADDRESS CONTAINS CURRENT NUMBER OF RADAR MESSAGES PLACED IN RADAR BLOCK (COUNT IN EXCESS OF 50 INDICATES THE NUMBER OF OVERLAID MESSAGES PLACED AT THE TOP OF THE RADAR BLOCK., THE DECREMENT CONTAINS THE OVERLAY INDEX. |
| C) | WORD 3 | BLANK (SET BY EDIT TO CONTAIN $t_{ca}$ ). |
| D) | WORD 4(N-1) + 4 | CONTAINS GMT OF OBSERVATION, MINUTES IN ADDRESS, SECONDS IN DECREMENT. (TIME IS INCREMENTED BY 24 HOURS OR MULTIPLE THEREOF, WHEN MESSAGE TIME IS AT LEAST 24 |

| | | |
|---|---|---|
| | | HOURS BEHIND CURRENT TIME). |
| E) | WORD 4(N-1) + 5 | CONTAINS RANGE IN GEMINI UNITS |
| F) | WORD 4(N-1) + 6 | CONTAINS AZIMUTH IN RADIANS |
| G) | WORD 4(N-1) + 7 | CONTAINS ELEVATION IN RADIANS, WHERE N IS $\leq$ 1 AND $\leq$ 50 |

C) PCM

1) TMPCMD A 100-WORD TABLE CONTAINING HEADER INFORMATION AND AVAILABLE NUMBER OF PARAMETERS TO BE CALIBRATED DEPENDING UPON THE INPUT FORMAT NUMBER.

HEADER

WORD 1. FORMAT NUMBER - INTERNAL FORMAT NUMBER IN BINARY.

2. SEQUENCE NUMBER - BCD-SIGN BIT ON INDICATES INVALID.

3. MODE INDICATOR - BCD-SIGN BIT ON INDICATES INVALID.

4. STATION ID - INTERNAL STATION NUMBER - BINARY 0 INDICATES INVALID.

5. G. E. T. (GROUND ELAPSED TIME) - HOURS - BINARY

6. G. E. T. - MINUTES - BINARY

7. G. E. T. - SECONDS - BINARY

8. S. E. T. (SPACECRAFT ELAPSED TIME) UNITS OF 125 MILLISECONDS - 24 BIT BINARY.

9. TR (TIME OF RETROFIRE GIVEN IN ONBOARD FORMATS ONLY) UNITS OF 125 MILLISECONDS - 24 BIT BINARY.

PARAMETERS

(A) CONTINGENCY FORMATS

WORD 10 - BLANK (NOT USED)

WORDS 11-150 - 8 BIT BINARY PARAMETERS.

(B) ONBOARD FORMATS

WORDS 10-150 - 24 BIT BINARY PARAMETERS WITH BIT 1 OF THE 24 BIT WORD AS A SIGN BIT.

(C) ERROR CODES

BIT S - ON INDICATES A PARITY ERROR.

BIT 1 - ON INDICATES MISSING DATA.

2) TMBCI1, TMBCI2, TMBCI3, TMBCI4, } 51 WORD B CORE COMMON ALTERNATING BCI TABLES FOR ONLINE PRINT MESSAGE INDICATING.

(A) WHETHER THE MESSAGE WAS PROCESSED OR REJECTED.

(B) THE TRANSMITTING STATION - PRINTED IN TTY OCTAL IF INVALID.

(C) FORMAT NUMBER - PRINTED IN TTY OCTAL IF INVALID.

(D) MODE INDICATOR - PRINTED IN TTY OCTAL IF INVALID.

(E) WHETHER G. E. T. WAS VALID OR NOT

(F) SEQUENCE NUMBER - PRINTED IN OCTAL.

(G) NUMBER OF PARITY ERRORS.

(H) NUMBER OF LOST MINOR FRAMES.

(I) NUMBER OF LOST MAJOR FRAMES.

METHOD

THE DESCRIPTION OF IOTTIN FOLLOWS THE PROGRAM LOGIC AND IS DIVIDED INTO MESSAGE RECOGNITION, STANDARD RADAR, HEXADECIMAL RADAR, AND PCM TELEMETRY SUMMARIES.

A) MESSAGE RECOGNITION

ON ENTRY, IOTTIN SCANS THE ENTIRE 10 WORD AASXX BLOCK FOR A≡, LINE FEED CHARACTER (OCTAL 10). WHEN ONE IS FOUND IT IS EITHER PART OF A BEGINNING OF RADAR OR PCM MESSAGE, ((BRM)≡↑↑, LINE FEED, FIGURES, OCTAL 103333), A BEGINNING OF A HEXADECIMAL MESSAGE OR PART OF A MAJOR SYNC IN A PCM MESSAGE, (<≡, CARRIAGE RETURN, LINE FEED, OR OCTAL 0210).

BRM

THE 34TH OR 38TH CHARACTER IS TESTED FOR A CARRIAGE RETURN, IF IT IS,THE MESSAGE IS A STANDARD RADAR MESSAGE AND WILL BE PROCESSED BY THE RADAR SECTION. THE 26TH, 27TH, AND 28TH CHARACTERS ARE TESTED FOR A↓<≡, LETTERS, CARRIAGE RETURN, LINE FEED (OCTAL 370210). IF PRESENT, THE MESSAGE IS A PCM TELEMETRY SUMMARY AND WILL BE PROCESSED BY THE PCM SECTION.

LINE FEED

THE 36TH CHARACTER IS TESTED FOR A CARRIAGE RETURN. IF PRESENT, THE MESSAGE IS PROBABLY A HEXADECIMAL RADAR MESSAGE AND CONTROL IS TRANSFERRED TO THE HEXADECIMAL SECTION. IF THE 36TH CHARACTER IS NOT A CARRIAGE RETURN OR IF THE HEXADECIMAL PROCESSING ENCOUNTERS BAD PARITY, IT IS ASSUMED TO BE PART OF A PCM MESSAGE. IF THERE IS AN INCOMPLETE ONE FOR THIS LINE, THE DATA IS SAVED UP TO THE WORD CONTAINING THE NEXT LINE FEED.

ON EXISTING, IOTTIN MOVES THE PART OF THE AASXX BLOCK NOT CHECKED TO THE TOP OF THE BLOCK, SETS THE TMTTIN ENTRY FOR THIS LINE TO THE NUMBER OF

NEW WORDS NECESSARY TO REFILL THE BLOCK (10 MINUS NUMBER OF WORDS SAVED) AND TRANSFERS TO MFTTIN.

B) PCM

THE PCM SECTION GOES THROUGH FOUR BASIC PROCESSES.

DATA COLLECTION
DATA VALIDATION
SYNC CHECKING
OUTPUT

1. DATA COLLECTION

DATA IS SAVED IN 50 WORD LOSXX BLOCKS. THERE ARE 10 OF THESE BLOCKS SHARED BY ALL 17 INPUT LINES.
AS DATA COMES IN OVER EACH TELETYPE LINE, A CHECK IS MADE OF THE LOSAV TABLE FOR A MINUS ONE IN THE DECREMENT. THIS INDICATES A FREE BLOCK AND IT IS THEN ASSIGNED TO THE TELETYPE LINE BY MEANS OF THE LLTRA TABLE. AS EACH PCM MESSAGE IS COMPLETED OR REJECTED THE BLOCK IS FREED FOR REUSE. WHEN A NEW BRM IS RECOGNIZED OR WHEN THE NUMBER OF CHARACTERS SAVED EQUALS THE NUMBER EXPECTED FOR THAT FORMAT, THE PROCESSING CONTINUES TO THE VALIDATION AND OUTPUT SECTIONS.

2) DATA VALIDATION

HEADER

(A) THE FORMAT NUMBER MUST BE ONE OF A PRE-DETERMINED SET OR THE MESSAGE WILL BE REJECTED.

(B) THE STATION IDENTIFICATION IS CHECKED AGAINST A PREDETERMINED SET. WHEN A VALID ID IS FOUND, THE INTERNAL STATION NUMBER IS PLACED IN THE OUTPUT TABLE. IF THE ID IS INVALID, IT IS PRINTED ON-LINE AND A ZERO IS PLACED IN THE OUTPUT TABLE.

VALID TELEMETRY STATIONS ARE CNV, BDA, CYI, CRO, HAW, GYM, TEX, RKV, CSQ, GTK, ANT, GBI.

(C) THE SEQUENCE NUMBER INDICATES THE STATIONS TO WHICH THE MESSAGES WILL BE REBROADCAST.

1 - TO ALL SITES
2 - ORIGINATOR AND MCC ONLY.
3 - ORIGINATOR AND MCC ONLY.
5 - ORIGINATOR AND MCC ONLY.
6 - TO ALL SITES
9 - TO ALL SITES (PRESENT IF MESSAGE IS TAPE PLAYBACK.)

IF THE SEQUENCE IS NON-NUMERIC, A MINUS WILL BE SET IN ITS CELL IN THE OUTPUT TABLE AND REBROADCAST WILL BE TO ALL SITES.

(D) THE GROUND ELAPSED TIME -(G.E.T.) IS THE TIME FROM LIFT-OFF. IT IS SENT IN HOURS, MINUTES AND SECONDS AND CONVERTED TO SECONDS BY IOTTIN. CURRENT GMT IS PICKED UP FROM THE HALF-SECOND CELL, CONVERTED TO SECONDS AND INCREASED BY A TOLERANCE OF 1 MINUTE. THIS TIME IS THEN USED FOR A REJECTION CHECK. THE MESSAGE WILL BE REJECTED IF THE MESSAGE IS NOT A TAPE PLAYBACK AND -

(1) G.E.T. IS NON-NUMERIC. (S.E.T. - BAD PARITY OR MISSION)

(2) MESSAGE G.E.T. IS LATER THAN CURRENT MACHINE G.E.T.

(3) MESSAGE G.E.T. IS EARLIER THAN CURRENT MACHINE G.E.T. BY MORE THAN AN ALLOWABLE DIFFERENCE.

IF A MESSAGE IS REJECTED, G.E.T. IS PRINTED IN TELETYPE OCTAL ON-LINE, OTHERWISE A VALID INDICATION IS PRINTED ON-LINE.

(FOR TAPE PLAYBACK THESE CHECKS ARE PERFORMED ON S.E.T., SPACECRAFT ELAPSED TIME).

(E) MODE INDICATOR -

(1) CONTINGENCIES - THE MODE MUST BE 0 OR 9. 9 INDICATES A TAPE PLAYBACK. IF NOT VALID, A MINUS IS SET IN ITS OUTPUT CELL AND IT IS ASSUMED TO BE 0.

(2) ONBOARD COMPUTER - THE MODE MUST BE ONE OF A PREDETERMINED SET. FROM THIS MODE THE INTERNAL FORMAT NUMBER IS DETERMINED AND CONSEQUENTLY THE PARAMETERS TO BE CALIBRATED. IF NOT VALID, THE MESSAGE THEREFORE, WILL BE REJECTED. GT3 VALID MODES ARE, 1 - PRELAUNCH, 2 - ASCENT, 3 - CATCH UP, 4 - RENDEZVOUS, AND 5 - REENTRY.

PARAMETERS

THE DATA PORTION OF THE MESSAGE IS IN THE FORM

123456

0XXXXP

WHERE BIT ONE IS THE LEADING ZERO ADDED BY THE CP AND BIT SIX IS THE PARITY BIT. THE PARITY WILL BE EVEN EXCEPT FOR TWO SPECIAL CONFIGURATIONS, 00000P, AND 01.01P, WHERE ODD PARITY IS ASSIGNED.

TO FORM THE DATA FOR EACH PARAMETER, THE LEADING ZEROS AND PARITY BITS WILL BE STRIPPED FROM TWO CONSECUTIVE CHARACTERS AND THEIR COMBINED 8 BITS OUTPUT IN A SINGLE CELL OF TMPCMD FOR CALIBRATION.

FOR ONBOARD COMPUTER FORMATS ONLY, THREE CONSECUTIVE EIGHT BIT QUANTITIES ARE THEN COMBINED TO FORM ONE PARAMETER. NEGATIVE NUMBERS WILL BE RECEIVED IN 2'S COMPLEMENT FORM WITH BIT ONE OF THE 24 BIT NUMBER ON. THESE ARE RECOMPLEMENTED. ALL PARAMETERS ARE THEN OUTPUT IN TMPCMD.

(3) SYNC CHECKING

THE DATA FOLLOWING THIS HEADER WILL BE RECEIVED IN THE FORM OF SIX CHARACTERS FOLLOWED BY A SPACE I.E., A MINOR FRAME FOLLOWED BY A CARRIAGE RETURN AND LINE FEED I.E., A MAJOR FRAME FOLLOWED BY A MAJOR SYNC. IF THE NUMBER OF PARAMETERS IN A FORMAT DOES NOT FILL THE LAST MINOR FRAME, ZEROS WILL BE ADDED TO FILL IT. THE MAJOR SYNC WILL BE ADDED ONLY WHEN THE DATA ENDS ON 3 MINOR FRAMES.
A SEARCH IS MADE OF THE MESSAGE TO LOCATE ALL MAJOR AND MINOR SYNCS. DATA WILL BE REJECTED FOR THE FOLLOWING REASONS AND THE 1 BIT SET IN RESPECTIVE CELLS OF TMPCMD.

(A) THE ENTIRE MESSAGE IS REJECTED IF ANY MAJOR SYNC IS MISSING.

(B) A MAJOR FRAME IS REJECTED IF THERE ARE -

(1) MORE THAN 21 OR LESS THAN 11 CHARACTERS BETWEEN MAJOR SYNCS.

(2) MORE OR LESS THAN 3 MINOR SYNCS BETWEEN MAJOR SYNCS.

(C) A MINOR FRAME IS REJECTED IF THERE ARE MORE OR LESS THAN 6 CHARACTERS BETWEEN MINOR SYNCS.

WHEN ALL POSSIBLE SYNCS ARE FOUND AND THE PARAMETERS CAN BE IDENTIFIED, THE 8 BITS WILL BE OUTPUT IN TMPCMD.

(4) OUTPUT

WHEN THE TMPCMD AND TMBCIX TABLES HAVE BEEN FILLED, AN INDICATOR, MCCTNB, IS SET NON-ZERO FOR MFTTIN. MCCLNL IS SET NON-ZERO TO INDICATE MYMESS MUST BE QUEUED FOR ON-LINE PRINTING. WHEN MFTTIN IS THEN ENTERED, DATA IS MOVED FROM THE A CORE TMPCMD TABLE TO A B CORE STACK TABLE, TMBPCM. MYCALB (THE PROGRAM WHICH WILL CALIBRATE THE PCM DATA) IS THEN QUEUED WITH THE CURRENT ADDRESS IN THE STACK TABLE. DURING LAUNCH, ALL ON-LINE PRINTING FOR PCM PROCESSING IS SUPPRESSED.

USAGE

PCM VARIABLE TABLES AND CONSTANTS

IN ORDER TO MEET REQUIREMENTS FOR EACH MISSION, CERTAIN CONSTANTS AND TABLES IN THE PROGRAM MUST BE CHANGED. THESE WOULD BE -

MTFMN CONSTANT MUST EQUAL THE NUMBER OF VALID CONTINGENCY FORMATS PLUS ONE FOR FORMAT 40.

LLFMN TABLE IN WHICH THE ADDRESS CONTAINS THE VALID FORMAT NUMBERS IN TELETYPE OCTAL CODE AND THE DECREMENT CONTAINS THE INTERNAL FORMAT NUMBER, E.G., 000011001503 WOULD BE FORMAT 9.

LLMDI CONSTANT EQUAL TO THE NUMBER OF VALID MODES FOR THE ONBOARD COMPUTER FORMAT.

LLF40 TABLE IN WHICH THE ADDRESS CONTAINS THE VALID MODE INDICATOR IN TELETYPE OCTAL CODE AND THE DECREMENT CONTAINS THE INTERNAL FORMAT NUMBERS.

LONSY BES TABLE IN WHICH THE ADDRESS CONTAINS THE NUMBER OF MAJOR FRAMES FOR EACH INTERNAL FORMAT NUMBER AND THE DECREMENT CONTAINS THE NUMBER OF MINOR FRAMES NOT INCLUDED IN A MAJOR FRAME.

LOFLG BES TABLE CONTAINING THE NUMBER OF CHARACTERS EXPECTED IN THE MESSAGE FOR EACH FORMAT NUMBER. TO PROVIDE FOR ERROR CASES, APPROXIMATELY 10 PERCENT IS ADDED TO THE COUNT.

MTTNO CONSTANT EQUAL TO THE NUMBER OF VALID TELEMETRY STATIONS.

LOTST TABLE IN WHICH THE ADDRESS CONTAINS THE EXTERNAL STATION NUMBER IN BCD AND THE DECREMENT CONTAINS THE INTERNAL STATION

NUMBER IN OCTAL E.G., CNV IS 000001000301, EXTERNAL NUMBER IS 31 AND, INTERNAL NUMBER IS 1.

LLSTA BCI TABLE CONTAINING A THREE LETTER CODE FOR EACH VALID TELEMETRY STATION AND MUST BE IN SAME ORDER AS LOTST TABLE.

GTDIF CONSTANT CONTAINING THE ALLOWABLE G.E.T. TOLERANCE IN SECONDS.

STDIF CONSTANT CONTAINING THE ALLOWABLE S.E.T. TOLERANCE IN SECONDS.

MTLNO CONSTANT EQUAL TO THE NUMBER OF SAVE BLOCKS WHICH PCM MAY USE PLUS ONE. FOR GT3 THIS EQUALS 11.

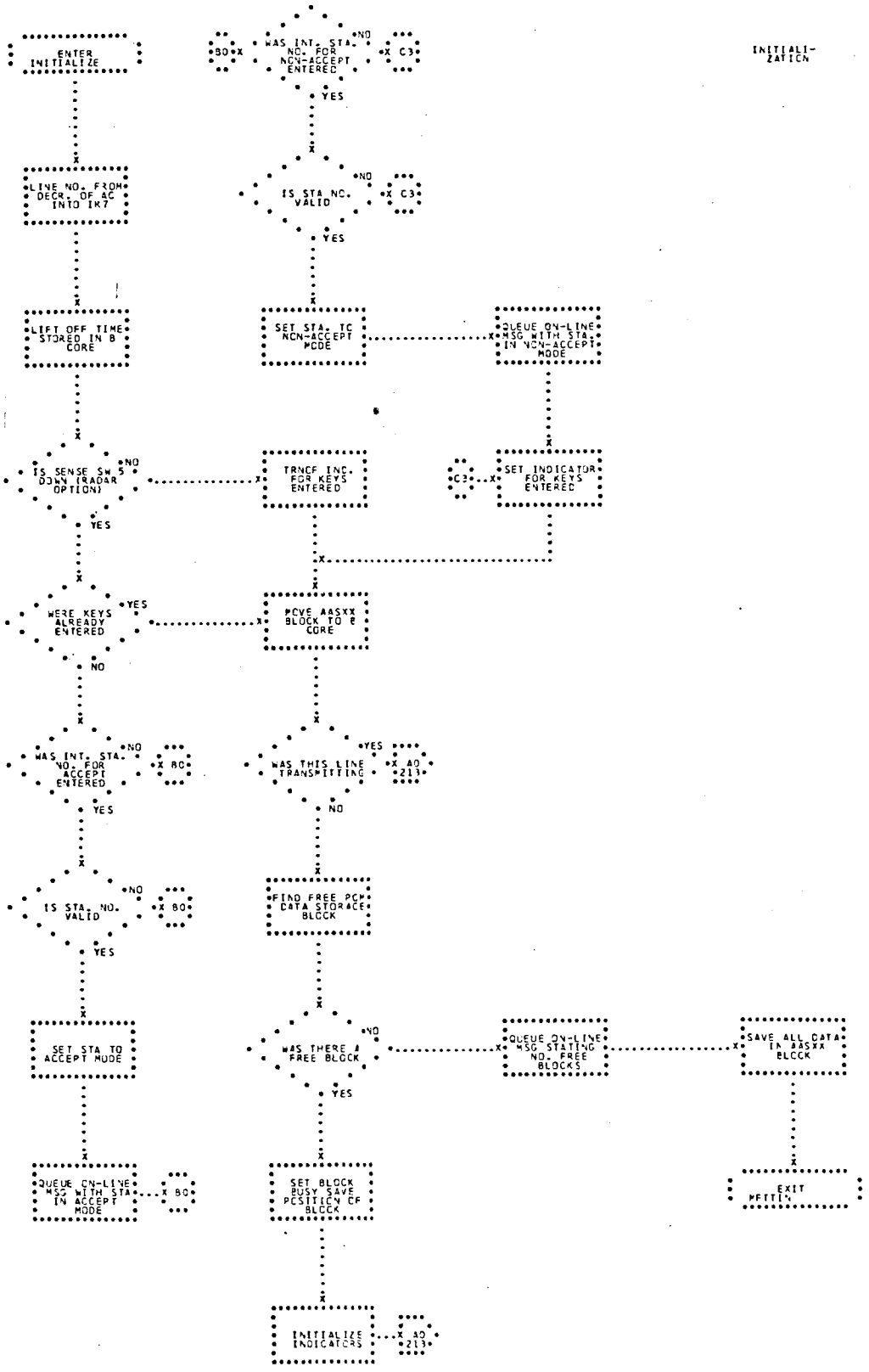
INITIALI-
ZATION
ENTER INITIALIZE
WAS INT. STA. NO. FOR NON-ACCEPT ENTERED
NO
YES
B0
C3
LINE NO. FROM DECR. OF AC INTO IK7
IS STA NO. VALID
NO
YES
C3
LIFT OFF TIME STORED IN B CORE
SET STA. TO NON-ACCEPT MODE
QUEUE ON-LINE MSG WITH STA. IN NON-ACCEPT MODE
IS SENSE SW 5 DOWN (RADAR OPTION)
NO
YES
TRNCF INC. FOR KEYS ENTERED
C3
SET INDICATOR FOR KEYS ENTERED
WERE KEYS ALREADY ENTERED
YES
NO
MOVE AASXX BLOCK TO B CORE
WAS INT. STA. NO. FOR ACCEPT ENTERED
NO
YES
B0
WAS THIS LINE TRANSMITTING
YES
NO
A0
213
IS STA. NO. VALID
NO
YES
B0
FIND FREE PCM DATA STORAGE BLOCK
SET STA TO ACCEPT MODE
WAS THERE A FREE BLOCK
NO
YES
QUEUE ON-LINE MSG STATING NO. FREE BLOCKS
SAVE ALL DATA IN AASXX BLOCK
QUEUE ON-LINE MSG WITH STA. IN ACCEPT MODE
B0
SET BLOCK BUSY SAVE POSITION OF BLOCK
EXIT MONITOR
INITIALIZE INDICATORS
A0
213

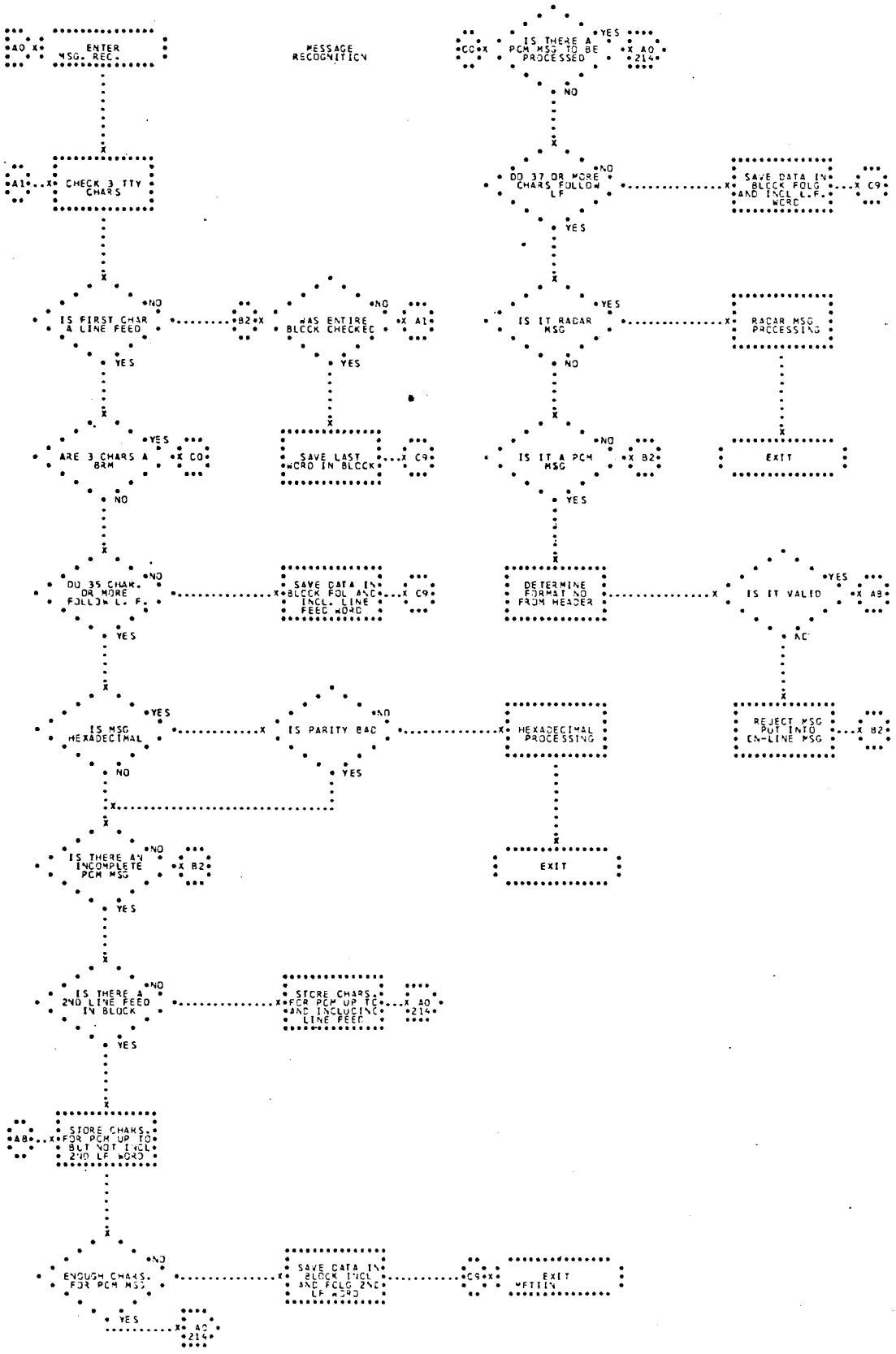
A0
ENTER MSG. REC.
MESSAGE RECOGNITION
C0
IS THERE A PCM MSG TO BE PROCESSED
YES
A0 214
NO
A1
CHECK 3 TTY CHARS
DO 37 OR MORE CHARS FOLLOW LF
NO
SAVE DATA IN BLOCK FOLG AND INCL L.F. WERC
C9
YES
IS FIRST CHAR A LINE FEED
NO
B2
WAS ENTIRE BLOCK CHECKED
NO
A1
YES
IS IT RADAR MSG
YES
RADAR MSG PROCESSING
NO
ARE 3 CHARS A BRM
YES
C0
SAVE LAST WORD IN BLOCK
C9
IS IT A PCM MSG
NO
B2
EXIT
YES
NO
DO 35 CHAR. OR MORE FOLLOW L. F.
NO
SAVE DATA IN BLOCK FOL AND INCL. LINE FEED WORD
C9
DETERMINE FORMAT NO FROM HEADER
IS IT VALID
YES
A9
YES
AC
IS MSG HEXADECIMAL
YES
IS PARITY BAD
NO
HEXADECIMAL PROCESSING
REJECT MSG PUT INTO EN-LINE MSG
B2
NO
YES
EXIT
IS THERE AN INCOMPLETE PCM MSG
NO
B2
YES
IS THERE A 2ND LINE FEED IN BLOCK
NO
STORE CHARS. FOR PCM UP TO AND INCLUDING LINE FEED
A0 214
YES
A8
STORE CHARS. FOR PCM UP TO BUT NOT INCL 2ND LF WORD
ENOUGH CHARS. FOR PCM MSG
NO
SAVE DATA IN BLOCK INCL AND FOLG 2ND LF WORD
C9
EXIT METTIN
YES
A0 214

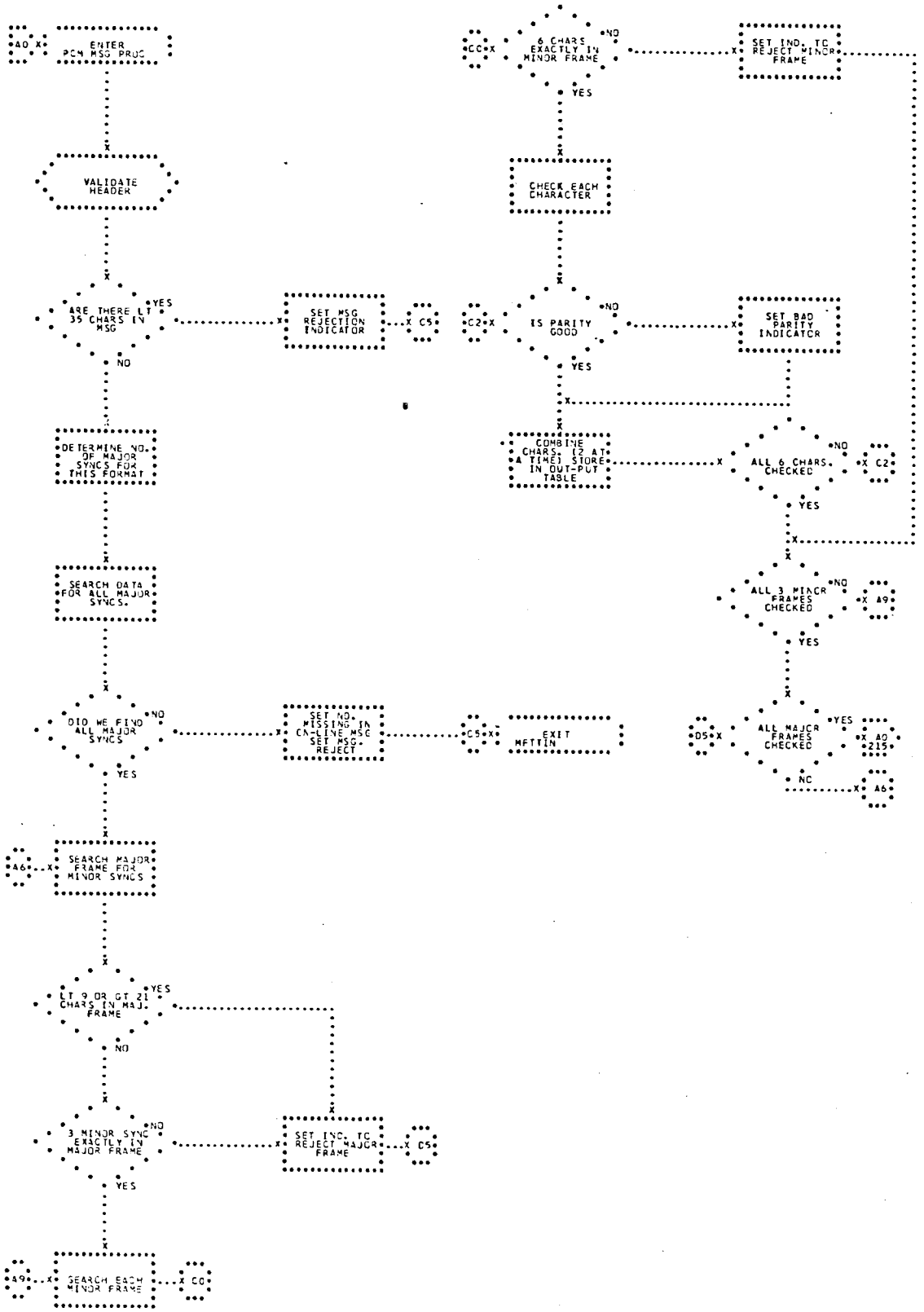
A0
ENTER PCM MSG PROC
VALIDATE HEADER
ARE THERE LT 35 CHARS IN MSG
YES
NO
SET MSG REJECTION INDICATOR
C5
DETERMINE NO. OF MAJOR SYNCS FOR THIS FORMAT
SEARCH DATA FOR ALL MAJOR SYNCS.
DID WE FIND ALL MAJOR SYNCS
SET NO. MISSING IN CA-LINE MSG SET MSG. REJECT
EXIT METTIN
A6
SEARCH MAJOR FRAME FOR MINOR SYNCS
LT 9 OR GT 21 CHARS IN MAJ. FRAME
3 MINOR SYNC EXACTLY IN MAJOR FRAME
SET INC. TC REJECT MAJOR FRAME
A9
SEARCH EACH MINOR FRAME
C0
C6
6 CHARS EXACTLY IN MINOR FRAME
SET IND. TC REJECT MINOR FRAME
CHECK EACH CHARACTER
C2
IS PARITY GOOD
SET BAD PARITY INDICATOR
COMBINE CHARS. (2 AT A TIME) STORE IN OUT-PUT TABLE
ALL 6 CHARS. CHECKED
C2
ALL 3 MINOR FRAMES CHECKED
A9
D5
ALL MAJOR FRAMES CHECKED
A0
215
A6

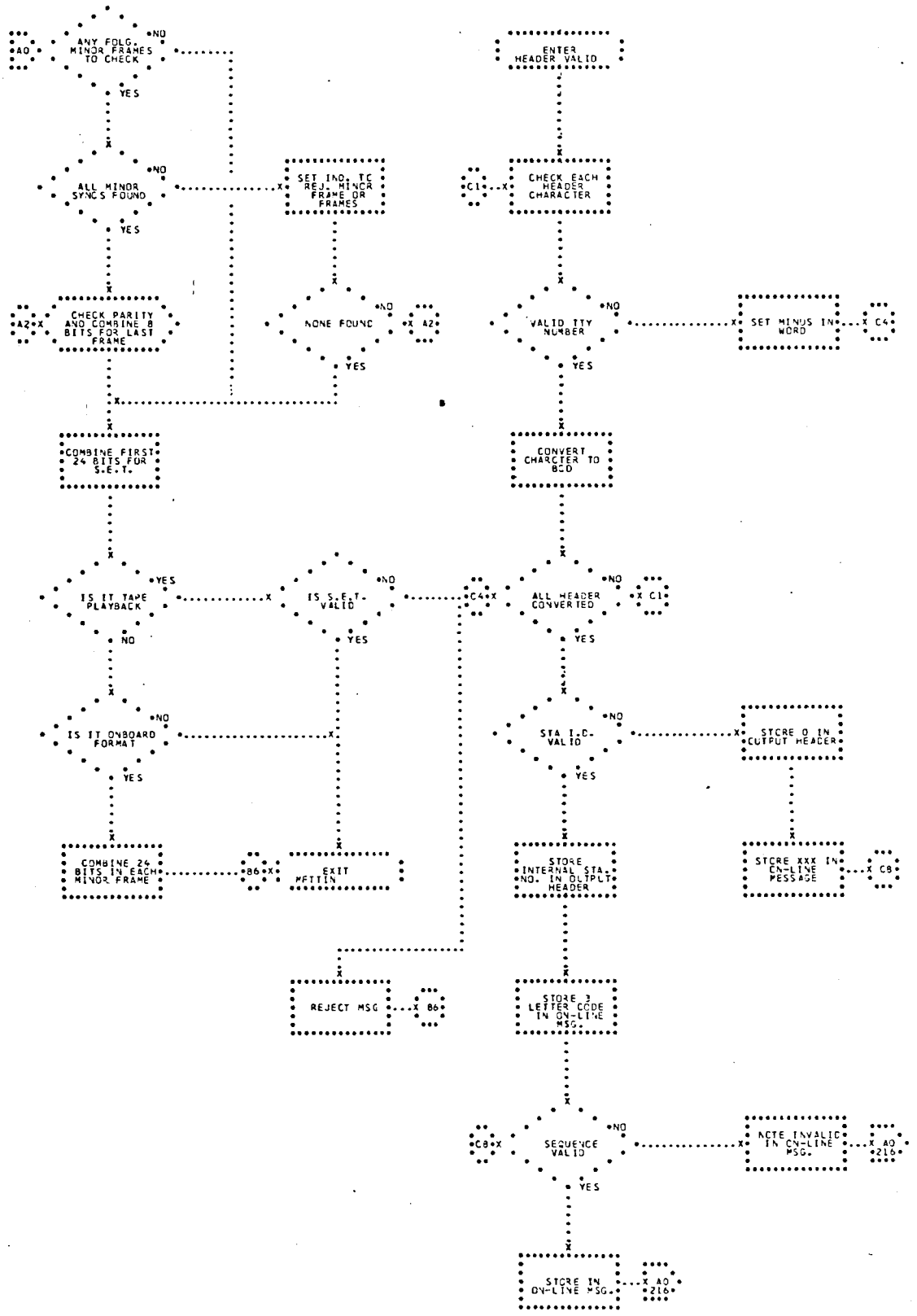
ANY FOLG. MINOR FRAMES TO CHECK
NO
YES
A0
ALL MINOR SYNCS FOUND
NO
YES
SET IND. TO REJ. MINOR FRAME OR FRAMES
CHECK PARITY AND COMBINE 8 BITS FOR LAST FRAME
A2
NONE FOUND
NO
YES
A2
COMBINE FIRST 24 BITS FOR S.E.T.
IS IT TAPE PLAYBACK
YES
NO
IS S.E.T. VALID
NO
YES
IS IT ONBOARD FORMAT
NO
YES
COMBINE 24 BITS IN EACH MINOR FRAME
B6
EXIT
REJECT MSG
B6
ENTER HEADER VALID
CHECK EACH HEADER CHARACTER
C1
VALID TTY NUMBER
NO
YES
SET MINUS IN WORD
C4
CONVERT CHARCTER TO BCD
ALL HEADER CONVERTED
NO
YES
C4
C1
STA I.D. VALID
NO
YES
STORE 0 IN OUTPUT HEADER
STORE INTERNAL STA. NO. IN OUTPUT HEADER
STORE XXX IN ON-LINE MESSAGE
C8
STORE 3 LETTER CODE IN ON-LINE MSG.
SEQUENCE VALID
NO
YES
C8
NOTE INVALID IN ON-LINE MSG.
A0
216
STORE IN ON-LINE MSG.
A0
216

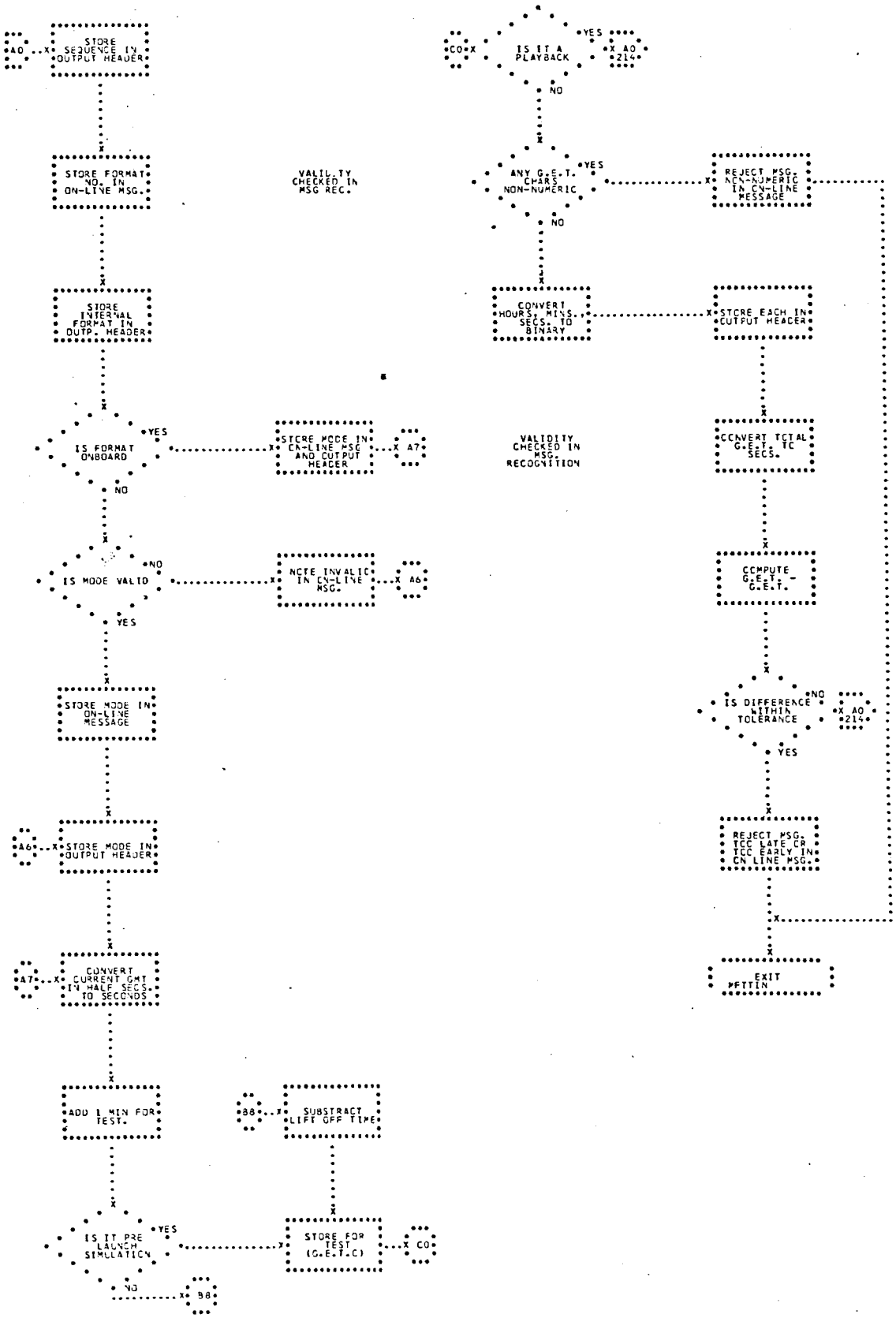
A0
STORE SEQUENCE IN OUTPUT HEADER
STORE FORMAT NO. IN ON-LINE MSG.
VALIDITY CHECKED IN MSG REC.
STORE INTERNAL FORMAT IN OUTP. HEADER
IS FORMAT ONBOARD
YES
NO
STORE MODE IN ON-LINE MSG AND OUTPUT HEADER
A7
IS MODE VALID
NO
YES
NOTE INVALID IN ON-LINE MSG.
A6
STORE MODE IN ON-LINE MESSAGE
A6
STORE MODE IN OUTPUT HEADER
A7
CONVERT CURRENT GMT IN HALF SECS. TO SECONDS
ADD 1 MIN FOR TEST.
B8
SUBSTRACT LIFT OFF TIME
IS IT PRE LAUNCH SIMULATION
YES
NO
B8
STORE FOR TEST (G.E.T.C)
C0
C0
IS IT A PLAYBACK
YES
NO
A0 214
ANY G.E.T. CHARS NON-NUMERIC
YES
NO
REJECT MSG. NON-NUMERIC IN ON-LINE MESSAGE
CONVERT HOURS, MINS., SECS. TO BINARY
STORE EACH IN OUTPUT HEADER
VALIDITY CHECKED IN MSG. RECOGNITION
CONVERT TOTAL G.E.T. TO SECS.
COMPUTE G.E.T. - G.E.T.
IS DIFFERENCE WITHIN TOLERANCE
NO
YES
A0 214
REJECT MSG. TOO LATE OR TOO EARLY IN ON LINE MSG.
EXIT PETTIN

## 46. MFTTIN - MONITOR SUFFIX TO IOTTIN

MFTTIN SUPERVISES ALL EXIT CONTROL FUNCTIONS ASSOCIATED WITH THE LOW-SPEED TELETYPE INPUT PROCESSOR IOTTIN. (SEE FLOWCHART.)

INPUT

PRIMARY INPUT TO MFTTIN FOR RADAR MESSAGES CONSISTS OF THE AC AND MQ REGISTERS, BOTH SET BY IOTTIN. THE AC CONTAINS INFORMATION RELATIVE TO THE TERMINATION OF TELETYPE TRANSMISSION BY A TRACKING STATION. IF THE AC IS ZERO, TERMINATION HAS NOT OCCURRED. IF THE AC IS NONZERO, TERMINATION IS INDICATED AND THE INITIAL ADDRESS (TMRMXX) OF THE STATION'S MESSAGE BLOCK WILL BE CONTAINED IN THE ADDRESS OF THE AC.

THE MQ CONTAINS INFORMATION RELATIVE TO THE INITIATION OF TELETYPE TRANSMISSION. IF THE MQ IS ZERO, INITIATION HAS NOT OCCURRED, IF NONZERO, INITIATION IS INDICATED AND THE INTERNAL STATION NUMBER OF THE REPORTING STATION WILL BE CONTAINED IN THE ADDRESS OF THE MQ.

OTHER INPUT INCLUDES -

A) COMMUNICATION CELLS -

| | |
|---|---|
| MCMINS | CONTAINS CURRENT GMT IN FIXED-POINT MINUTES. |
| MCREQU | CURRENT INPUT LINE NUMBER |
| MCLFTM | NON-ZERO INDICATES LIFT-OFF HAS OCCURRED. |
| MCPHSE | PREFIX EQUAL TO 7 INDICATES LAUNCH PHASE |
| MCCLNL | NON-ZERO INDICATES A PCM ON-LINE |

| | |
|---|---|
| | MESSAGE TO BE QUEUED TO MYMESS |
| MCCTNB | NON-ZERO INDICATES A PCM MESSAGE TO BE QUEUES TO MYCALB. |
| MCCPMN | CONTAINS NO. OF WORDS IN PCM MESSAGE |

B) TABLES -

TMRM01...TMRM12 203-WORD TABLES (MESSAGE BLOCKS) INTO WHICH A MAXIMUM OF 50 RADAR MESSAGES OF TIME, RANGE, AZIMUTH, AND ELEVATION MAY BE STORED. TABLES ARE ASSIGNED TO STATIONS AS NEEDED. THE ADDRESS OF THE FIRST LOCATION IN THE TABLE CONTAINS THE INTERNAL STATION NUMBER.

C) SUBROUTINES -

MSDEOV

MSLOGG

D) CONSTANTS -

```
K00008  DEC 8
K00010  DEC 10
K00217  DEC 217
KD0001  PZE ,,1
KD0002  PZE ,,2
KT0001  PZE ,1,
```

OUTPUT

OUTPUT FROM MFITIN FOR RADAR DATA RESULTS AT TWO DIFFERENT TIMES DURING THE OPERATION - FIRST WHEN TRANSMISSION IS INITIATED, AND SECOND WHEN TRANSMISSION IS TERMINATED -

A) AT INITIATION -

TM8MNS

19-WORD TABLE OF ENTRIES, ORDERED SEQUENTIALLY BY INTERNAL STATION NUMBER, INDI-

CATES TIME AT WHICH A STATION'S TRANSMISSION MUST BE COMPLETED (MCMINS+8).

AUY

QUEUE WORD FOR MYMESS WHOSE DECREMENT CONTAINS INTERNAL STATION NUMBER AND A QUEUE FOR MESSAGE NUMBER 1.

B) AT TERMINATION -

TM8MNS

TABLE WHICH HAS REPORTING STATION'S ENTRY SET TO ZERO.

TMTIAC

19-WORD TABLE, ORDERED SEQUENTIALLY BY INVERSE INTERNAL STATION NUMBER, CONTAINS TIME AT WHICH STATION MAY RESUME TRANSMISSION (MCMINS+10 MINUTES).

AUY

QUEUE WORD FOR MYMESS, CONTAINS INTERNAL STATION NUMBER AND QUEUE FOR MESSAGE NUMBER 2 IN ITS DECREMENT AND THE NUMBER OF MESSAGES (OBSERVATIONS) IN ITS ADDRESS. IF THE NUMBER OF MESSAGES IS ZERO, THE FOLLOWING IS PRINTED ON-LINE - N = 0, EDIT AND DC PROGRAMS BYPASSED.

TMFRBK

12-WORD REFERENCE TABLE USED TO ASSIGN OR RELEASE TMRMXX MESSAGE BLOCKS. AN ENTRY CORRESPONDING TO THE MESSAGE BLOCK ASSIGNED TO A TERMINATION STATION IS SET TO NEGATIVE TO RELEASE THE BLOCK.

TMRXX+1

MSDEOV RESETS ADDRESS OF TMRXX+1 TO 50 IF MESSAGE COUNT IS GREATER THAN 50.

METHOD

MFTTIN FIRST STORES THE AC AND MQ FOR PROCESSING OF RADAR INFORMATION. IT THEN STORES THE EXTRA WORD SAVED BY MTTTIN IF THERE IS ONE. (SEE MTHFSC FOR FURTHER DISCUSSION OF BUFFER FLUSHING LOGIC).

MFTTIN EXAMINES PCM COMMUNICATION CELLS AND QUEUES ON-LINE MESSAGES IF THE SYSTEM IS NOT IN THE LAUNCH PHASE. THE COLLECTED PCM MESSAGE IS STORED IN A STACK TABLE AND MYCALB QUEUED WITH THE ADDRESS.

MFTTIN WILL THEN DETERMINE WHETHER A STATION HAS INITIATED OR TERMINATED RADAR TRANSMISSION, AND, IF NEITHER CONDITION EXISTS, TRANSFER CONTROL TO MOPRIO. IF A STATION HAS INITIATED TRANSMISSION, MFTTIN QUEUES THE ON-LINE MESSAGE PROCESSOR MYMESS AND INCREMENTS THE CURRENT TIME (MCMINS) BY EIGHT MINUTES. THE UPDATED TIME IS THEN PLACED IN THE REPORTING STATION'S CORRESPONDING ENTRY IN TM8MNS. (ENTRIES IN TM8MNS ARE CHECKED EVERY MINUTE BY THE MONITOR TELETYPE INPUT CHECK SUBROUTINE MSTICK TO DETERMINE WHEN A REPORTING STATION EXCEEDS THE ALLOWABLE TRANSMISSION TIME OF APPROXIMATELY EIGHT MINUTES. IF THE TIME IS EXCEEDED, IOTTIN WILL BE QUEUED TO FORCE THE END OF TRANSMISSION.) AFTER THE ENTRY HAS BEEN PLACED IN TM8MNS, MFTTIN QUEUES MYMESS AND GIVES CONTROL TO MOPRIO.

WHEN A STATION HAS TERMINATED TRANSMISSION, MFTTIN RESETS THE ENTRY IN TM8MNS AND SETS AN ENTRY IN TMTIAC EQUAL TO THE CURRENT TIME (MCMINS) PLUS 10 MINUTES. THE TMTIAC ENTRY PREVENTS A STATION FROM RESUMING TRANSMISSION FOR APPROXIMATELY 10 MINUTES. (ENTRIES IN TMTIAC ARE CHECKED EVERY MINUTE BY THE MONITOR TELETYPE INPUT ACCEPTABILITY SUBROUTINE MSTIAC, WHICH SETS THE ENTRY TO

ZERO WHEN 10 MINUTES HAS ELAPSED.) ON COMPLETION OF TRANSMISSION, MFTTIN DETERMINES THE MESSAGE COUNT FROM THE ADDRESS OF THE SECOND WORD OF THE APPROPRIATE TMRMXX TABLE (TMRM01...TMRM12). IF THE COUNT IS ZERO, MFTTIN QUEUES MYMESS TO 1) PRINT THE MESSAGE N=0, EDIT AND D.C. PROGRAMS BYPASSED, AND 2) INDICATE THE STATION HAS ENDED TRANSMISSION. ALSO, THE ASSIGNED TMRMXX TABLE IS RELEASED BY SETTING THE APPROPRIATE ENTRY IN TMFRBK TO NEGATIVE. MFTTIN THEN GIVES CONTROL TO MOPRIO.

IF THE MESSAGE COUNT IS NONZERO, MFTTIN QUEUES THE EDIT ROUTINE EOLED1 WITH THE INITIAL ADDRESS OF THE APPROPRIATE RADAR MESSAGE BLOCK (TMRMXX) AND QUEUES MYMESS TO INDICATE THAT THE STATION HAS ENDED TRANSMISSION. THE QUEUE WORD FOR MYMESS, AUY, ALSO CONTAINS THE NUMBER OF MESSAGES IN THE BLOCK, MFTTIN THEN GIVES CONTROL TO MOPRIO.

IF THE MESSAGE COUNT IS GREATER THAN 50, INDICATING THERE ARE OVERLAID OBSERVATIONS (I.E., LATER OBSERVATIONS WHICH HAVE REPLACED EARLIER OBSERVATIONS IN THE BLOCK), MFTTIN GIVES CONTROL TO MSDEOV BEFORE QUEUEING EDIT AND THE MESSAGE ROUTINES. MSDEOV DETERMINES THE NUMBER OF OVERLAID OBSERVATIONS AND MOVES THEM TO THEIR PROPER POSITIONS IN THE BLOCK (I.E., NON-OVERLAID OBSERVATIONS ARE MOVED TO THE TOP OF THE BLOCK AND THE OVERLAID OBSERVATIONS ARE MOVED TO THE BOTTOM). THE MESSAGE COUNT IN THE ADDRESS OF THE SECOND WORD IN THE BLOCK (TMRMXX+1) IS RESET TO 50 BECAUSE THE MAXIMUM NUMBER OF OBSERVATIONS CAN BE ONLY 50. MESSAGE COUNTS IN EXCESS OF THIS NUMBER SPECIFY THE NUMBER OF OBSERVATIONS WHICH WERE OVERLAID. MFTTIN NOW QUEUES EDIT AND THE MESSAGE ROUTINES AND GIVES CONTROL TO MOPRIO.

USAGE

MFTTIN IS ENTERED FROM IOTTIN AND EXITS TO MOPRIO.

A) MACROS -

QENBA

QENBZ

QUEUE

TRNOF

B) PARAMETERS -

A

MNLED1

MNMESS

MNTTIN

MNSTNO

MNLOBS

MNUCBL

MNLCMB

MNCALB

C) STORAGE REQUIRED -

172 LOCATICNS

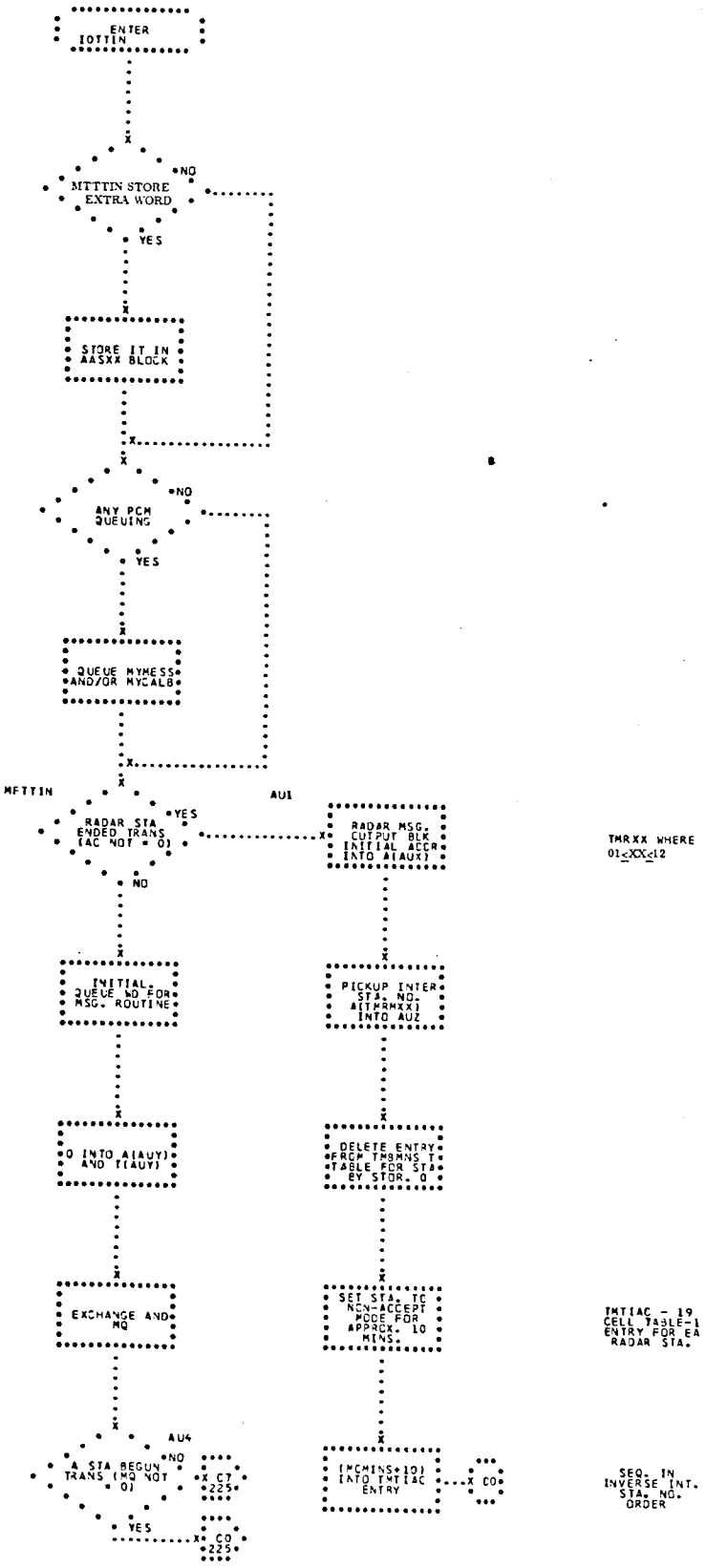
ENTER IOTTIN
MTTTIN STORE EXTRA WORD
NO
YES
STORE IT IN AASXX BLOCK
ANY PCM QUEUING
NO
YES
QUEUE MYMESS AND/OR MYCALB
MFTTIN
AU1
RADAR STA ENDED TRANS (AC NOT = 0)
YES
NO
RADAR MSG. OUTPUT BLK INITIAL ACCR INTO A(AUX)
TMRXX WHERE 01≤XX≤12
INITIAL. QUEUE WD FOR MSG. ROUTINE
PICKUP INTER STA. NO. A(TMRMXX) INTO AUZ
0 INTO A(AUY) AND T(AUY)
DELETE ENTRY FROM TMBMNS T TABLE FOR STA BY STOR. 0
EXCHANGE AND MQ
SET STA. TC NON-ACCEPT MODE FOR APPROX. 10 MINS.
TMTIAC - 19 CELL TABLE-1 ENTRY FOR EA RADAR STA.
AU4
A STA BEGUN TRANS (MQ NOT = 0)
NO
YES
C7 225
C0 225
(MCMINS+10) INTO TMTIAC ENTRY
C0
SEQ. IN INVERSE INT. STA. NO. ORDER

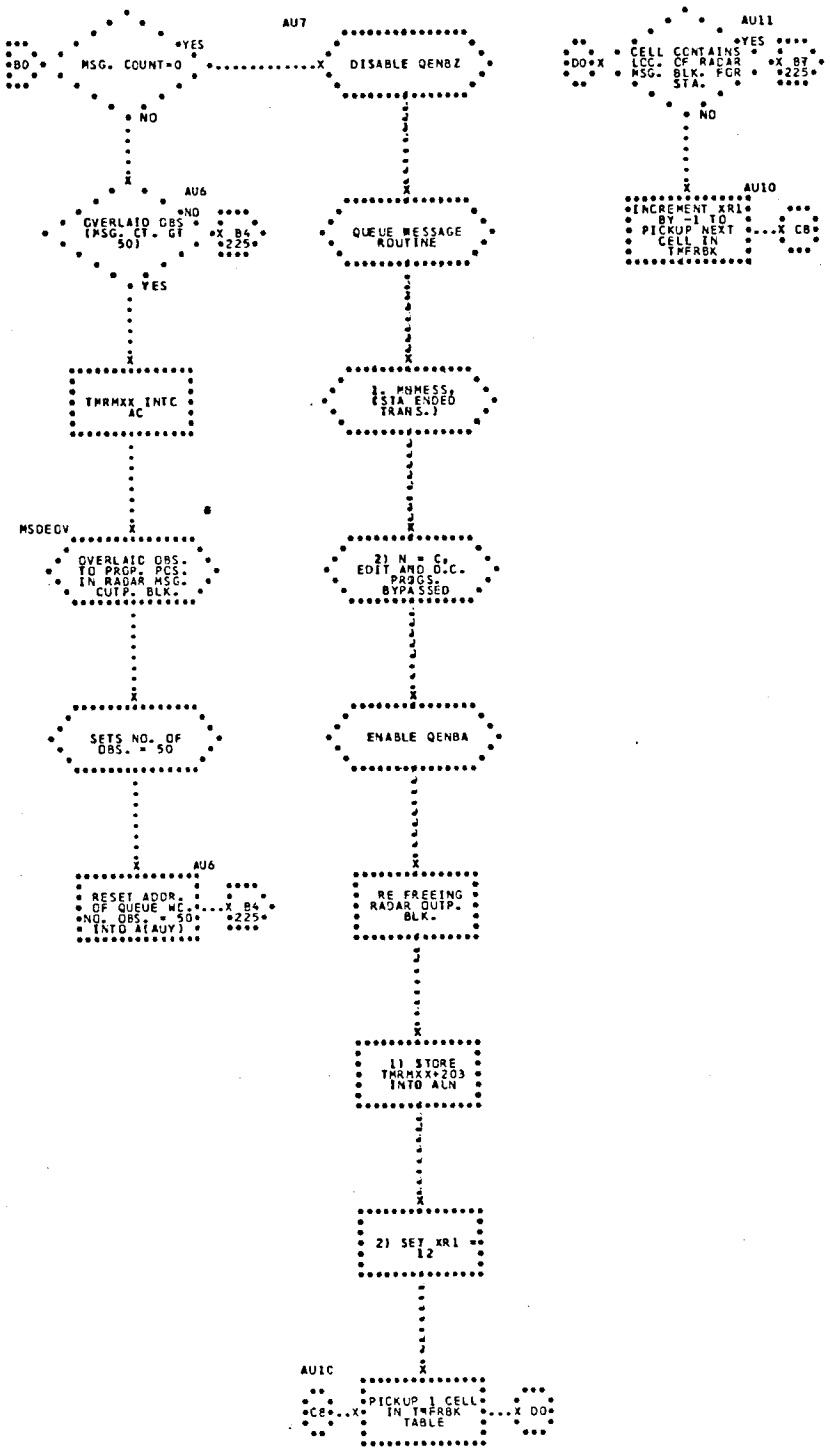
AU7
B0
MSG. COUNT=0
YES
NO
DISABLE QENBZ
AU11
D0
CELL CONTAINS LOC. OF RADAR MSG. BLK. FOR STA.
YES
NO
AU6
OVERLAID OBS (MSG. CT. GT 50)
NO
X B4 225
YES
QUEUE MESSAGE ROUTINE
AU10
INCREMENT XR1 BY -1 TO PICKUP NEXT CELL IN TMFRBK
X C8
TMRMXX INTC AC
1. MNMESS. (STA ENDED TRANS.)
MSDEOV
OVERLAID OBS. TO PROP. PCS. IN RADAR MSG. OUTP. BLK.
2) N = C. EDIT AND O.C. PROGS. BYPASSED
SETS NO. OF OBS. = 50
ENABLE QENBA
AU6
RESET ADDR. OF QUEUE WC. NO. OBS. = 50 INTO A(AUX)
X B4 225
RE FREEING RADAR OUTP. BLK.
1) STORE TMRMXX+203 INTO ALN
2) SET XR1 = 12
AU1C
C8
PICKUP 1 CELL IN TMFRBK TABLE
X D0

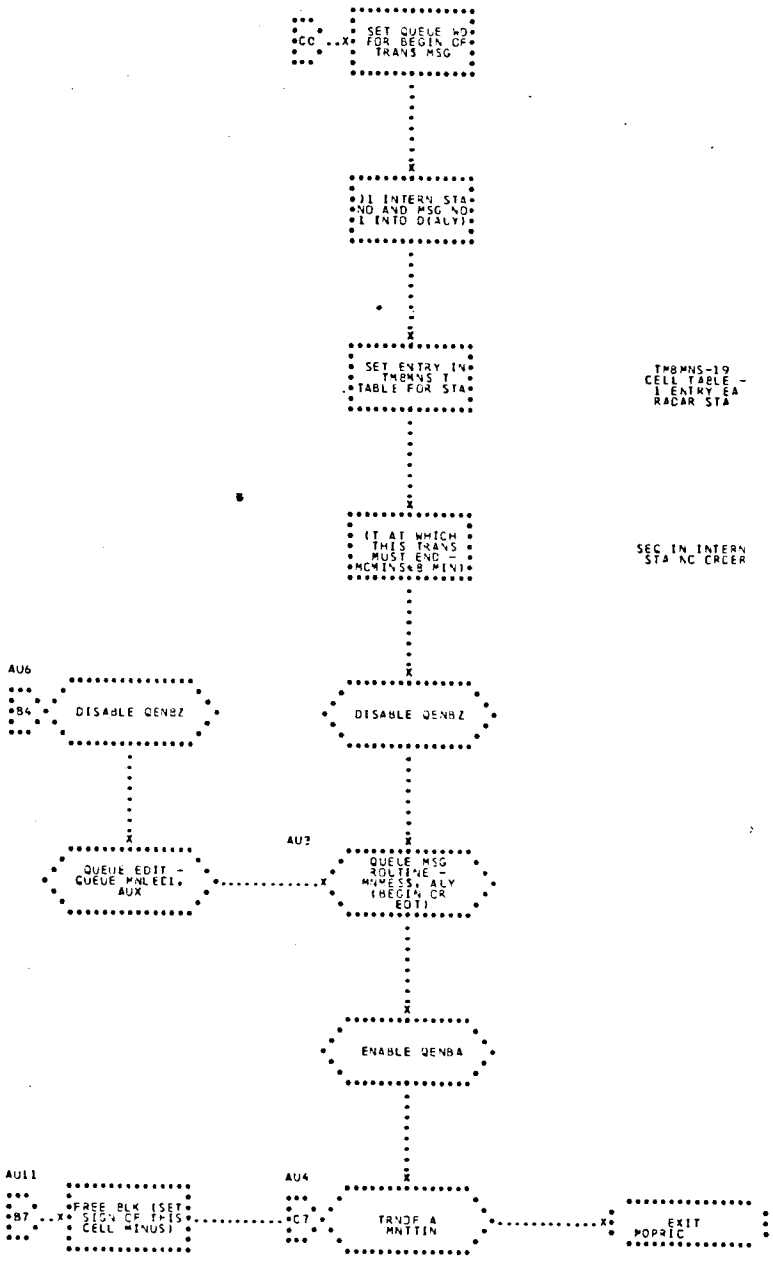
CC
SET QUEUE NO FOR BEGIN OF TRANS MSG
)1 INTERN STA NO AND MSG NO 1 INTO D(ALY)
SET ENTRY IN TMBMNS T TABLE FOR STA
TMBMNS-19 CELL TABLE - 1 ENTRY EA RADAR STA
(T AT WHICH THIS TRANS MUST END - MCMINS&B MIN)
SEQ IN INTERN STA NO ORDER
AU6
B4
DISABLE QENBZ
DISABLE QENBZ
AU2
QUEUE EDIT - QUEUE MNLEEI, AUX
QUEUE MSG ROUTINE - MNMESS, ALY (BEGIN OR EDIT)
ENABLE QENBA
AU11
B7
FREE BLK (SET SIGN OF THIS CELL MINUS)
AU4
C7
TRNDF A MNTTIN
EXIT MOPRIC

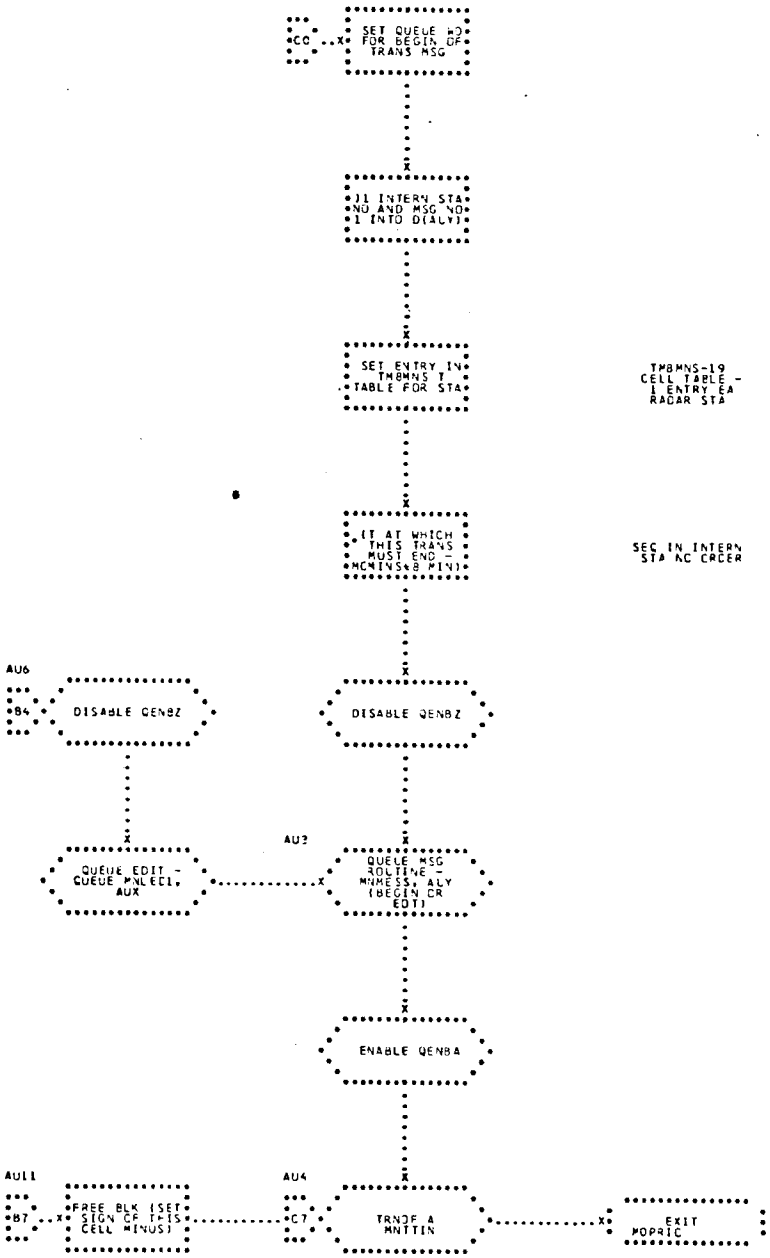
C0
SET QUEUE NO FOR BEGIN OF TRANS MSG
J1 INTERN STA NO AND MSG NO 1 INTO D(ALY)
SET ENTRY IN TMBMNS T TABLE FOR STA
TMBMNS-19 CELL TABLE - 1 ENTRY EA RADAR STA
(T AT WHICH THIS TRANS MUST END - MCMINS+8 MIN)
SEC IN INTERN STA NO ORDER
AU6
B4
DISABLE QENBZ
DISABLE QENBZ
AU3
QUEUE EDIT - QUEUE MNLECI, AUX
QUEUE MSG ROUTINE - MNMESS, ALY (BEGIN OR EDT)
ENABLE QENBA
AU11
B7
FREE BLK (SET SIGN OF THIS CELL MINUS)
AU4
C7
TRNOF A MNTTIN
EXIT MOPRIC

## 47. MSDEOV - MONITOR OVERLAY SORT SUBROUTINE

MSDEOV RECEIVES CCNTROL FROM MFTTIN TC MOVE OVERLAID RADAR OBSERVATIONS, IF ANY, TC THEIR TIME CRDERED POSITION AT THE BOTTOM OF THE RADAR MESSAGE BLCCK. (SEE FLOWCHART.)

### INPUT

THE ADDRESS PORTICN OF THE ACCUMULATOR MUST CONTAIN THE BASE ADDRESS OF THE RADAR MESSAGE BLOCK ON ENTRY TO MSDEOV.

### OUTPUT

OLTPUT FROM MSDEOV IS A RADAR MESSAGE BLOCK WITH OVERLAID OBSERVATICNS MOVED TC THEIR TIME CRDERED POSITION AT THE BOTTOM OF THE BLOCK.

### METHOD

MSDEOV RECEIVES CCNTRCL FROM MFTTIN ANC PREPARES THE RADAR MESSAGE BLOCK FOR INPUT TO EOLED1. THE ADDRESS PORTION OF THE SECOND WORD OF THE RADAR MESSAGE BLOCK CONTAINS A NUMBER REPRESENTING THE NUMBER CF OBSERVATIONS CONTAINED IN THE BLOCK, PLUS AN INCREMENT EQUAL TO THE NUMBER OF ANY OVERLAID OBSERVATICNS. TESTS ARE MADE TO DETERMINE THE MAGNITUDE OF THE NUMBER OF OVERLAID OBSERVATIONS. IF THE NUMBER IS FOUND TO BE EITHER LESS THAN OR EQUAL TO 50, INDICATING NO OVERLAID OBSERVATIONS, MSDEOV EXITS IMMEDIATELY TO MFTTIN. IF THE NUMBER IS FOUND TO BE AN EXACT MULTIPLE CF 50, INDICATING A FULLY OVERLAID BLOCK AND NO SORTING NEEDED, MSDEOV RESETS THE SECOND WORD OF THE BLOCK TO 50 ANC EXITS TC MFTTIN.

FINALLY, IF THE NUMBER IS FOUND TO BE GREATER THAN 50, BUT NOT AN EXACT MULTIPLE OF 50, IT IS REDUCED MODULO 50. THE RESULTING INCREMENT IS EQUAL TO THE NUMBER OF OVERLAID OBSERVATIONS WHICH MUST BE MOVED TO THEIR PROPER POSITION AT THE BOTTOM OF THE BLOCK. MSDEOV IS WRITTEN TO OPERATE IN EITHER A OR B CORE, WITH ALL STORAGE REFERENCES TO A CORE.

USAGE

MSDEOV IS ENTERED FROM AND EXITS TO MFTTIN.

A) CALLING SEQUENCE -

```
TSX     MSDEOV,4
RETURN
```

B) PARAMETERS -

MNLOBS

MNUCBL

C) STORAGE REQUIRED -

168 LOCATIONS

D) TIMING (7094) - 0.1 MILLISECOND (MINIMUM),
4.0 MILLISECONDS (MAXIMUM)

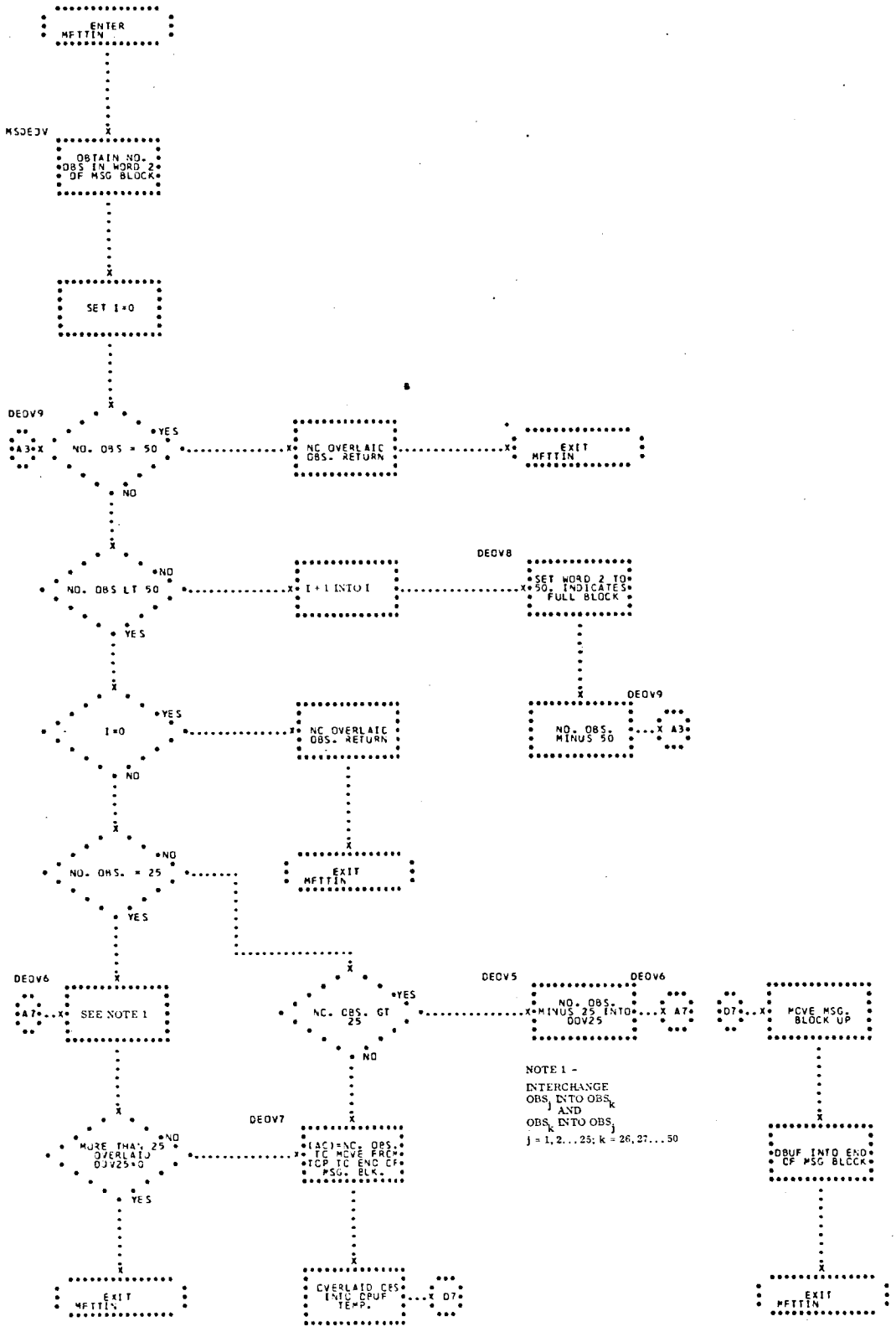
ENTER MFTTIN
MSDEJV
OBTAIN NO. OBS IN WORD 2 OF MSG BLOCK
SET I=0
DEOV9
A3
NO. OBS = 50
YES
NO
NO OVERLAID OBS. RETURN
EXIT MFTTIN
NO. OBS LT 50
NO
YES
I + 1 INTO I
DEOV8
SET WORD 2 TO 50. INDICATES FULL BLOCK
I=0
YES
NO
NO OVERLAID OBS. RETURN
DEOV9
NO. OBS. MINUS 50
A3
NO. OBS. = 25
NO
YES
EXIT MFTTIN
DEOV6
A7
SEE NOTE 1
NO. OBS. GT 25
YES
NO
DEOV5
DEOV6
NO. OBS. MINUS 25 INTO DOV25
A7
D7
MOVE MSG. BLOCK UP
NOTE 1 -
INTERCHANGE
OBS$_j$ INTO OBS$_k$
AND
OBS$_k$ INTO OBS$_j$
j = 1, 2 . . . 25; k = 26, 27 . . . 50
MORE THAN 25 OVERLAID DOV25=0
NO
YES
DEOV7
(AC)=NO. OBS. TO MOVE FROM TOP TO END OF MSG. BLK.
DBUF INTO END OF MSG BLOCK
EXIT MFTTIN
OVERLAID OBS INTO DBUF TEMP.
D7
EXIT MFTTIN

## 48. IOMANI - MANUAL INSERTION PROGRAM

IOMANI CONVERTS PAPER TAPE INPUT FROM TELETYPE CODE OR THE BCI INPUT FROM THE MESSAGE COMPOSER TO VARIOUS FORMATS REQUIRED BY PROCESSING PROGRAMS. TWENTY-SIX DIFFERENT CHARACTERS, AS LISTED UNDER (C) BELOW, ARE ACCEPTABLE TO IOMANI. PAPER TAPE INPUT CHARACTERS OTHER THAN THESE CAUSE REJECTION OF THE MESSAGE IF THEY CANNOT BE IGNORED. FORTY-EIGHT DIFFERENT CHARACTERS, AS LISTED UNDER (D) BELOW, ARE ACCEPTED TO IOMANI AS MESSAGE COMPOSER INPUT. (SEE FLOWCHART).

INPUT

FOR PAPER TAPE INPUT, EVERY MESSAGE MUST BE PRECEDED BY A 'BEGINNING OF MESSAGE' INDICATION OF AT LEAST SIX CONSECUTIVE FIGURE SHIFTS. IN ADDITION, THE INDICATOR SHOULD BE FOLLOWED BY A SLASH, AS SHOULD EVERY ITEM IN THE BODY OF THE MESSAGE. AN 'END OF MESSAGE' MUST BE INDICATED BY AN EXCLAMATION MARK AND AT LEAST 11 CONSECUTIVE LETTER SHIFTS.

IOMANI CAN IGNORE CERTAIN VALID CHARACTERS AND CERTAIN VIOLATIONS MESSAGE FORMAT - THE SLASH (/), PERIOD (.), CARRIAGE RETURN (CR), AND LINE FEED (LF) CHARACTERS MAY BE PLACED ANY WHERE IN THE MESSAGE TO FORMAT READABLE HARD COPY, HOWEVER, IOMANI DISREGARDS THEM IN PAPER TAPE INPUT.

FOR MESSAGE COMPOSER INPUT EVERY MESSAGE MUST BE PRECEDED WITH AN OPEN PARENTHESIS (, AND END WITH A CLOSE PARENTHESIS, ), AND WHERE EACH FIELD IS SEPARATED BY A SLASH, /.

INPUT TO IOMANI INCLUDES -

A) A(AC) - CONTAINS LOCATION OF INPUT BLOCK.

B) D(AC) - CONTAINS NUMBER OF WORDS IN BLOCK.

C) VALID CHARACTERS - PAPER TAPE INPUT

1) FIGURE SHIFT . . . . . (↑)
2) LETTER SHIFT . . . . . (↓)
3) SLASH . . . . . .(/)
4) PERIOD . . . . . (.)
5) SPACE . . . . . .( )
6) EXCLAMATION . . . . . .(!)
7) CARRIAGE RETURN . . . . .(CR)
8) LINE FEED . . . . . .(LF)
9) DASH . . . . . (-)
10) NUMBER SIGN . . . . . .(#)
11) LETTER A . . . . . (A)
12) LETTER B . . . . . (B)
13) LETTER I . . . . . (I)
14) LETTER O . . . . . (O)
15) LETTER R . . . . . (R)
16) LETTER T . . . . . (T)
17) TEN DIGITS . . . . . (0 THROUGH 9)

NOTE - (-) INDICATES MINUS, (#) INDICATES PLUS,
(!) INDICATES A COMPLETE MESSAGE.

D) MESSAGE COMPOSER INPUT

1) LETTERS . . . . . (A-Z)
2) NUMBERS . . . . . .(0-9)
3) EQUAL SIGN . . . . . (=)
4) PLUS SIGN . . . . . .(+)
5) MINUS . . . . . .(-)
6) PERIOD . . . . . (.)
7) OPEN PARENTHESIS . . . . ((
8) CLOSE PARENTHESIS . . . .())
9) DOLLAR SIGN . . . . . .($)

10) ASTERISK . . . . . (*)
11) BLANK . . . . . .( )
12) SLASH . . . . . .(/)
13) NUMBER SIGN . . . . . .(#)
14) COMMA . . . . . .(,)

OUTPUT

BEFORE IOMANI PROCESSES AN INCOMING MESSAGE, THE MESSAGE MUST BE COMPLETE, AND UNTIL A COMPLETE MESSAGE IS RECEIVED, IOMANI RETURNS TO MFMANI WITH A POSITIVE AC. THIS SAME RETURN WITH A NEGATIVE AC INDICATES THAT IOMANI HAS REJECTED THE MESSAGE WHICH MUST NOW BE REINSERTED. THE FOLLOWING CONDITIONS CAUSE A MESSAGE TO BE REJECTED -

A) PAPER TAPE INPUT

1. NINETEEN WORDS HAVE BEEN RECEIVED AND NONE CONSISTS ENTIRELY OF LETTER SHIFTS.
2. THE LAST FIELD IS NOT FOLLOWED BY AN EXCLAMATION MARK.
3. INVALID MESSAGE CODE IS INSERTED.
4. INVALID CHARACTER APPEARS IN MESSAGE.
5. FLOATING-POINT NUMBER GREATER THAN 10 IS ENTERED.

B) MESSAGE COMPOSER INPUT

12 WORD MESSAGE SIZE, EXCEPT t, r, v INSERTION (24 WORDS).

METHOD

THE QUEUE WORD TO IOMANI DETERMINES WHICH INPUT - IF (+) INDICATES PAPER TAPE INPUT AND IF MINUS (-) INDICATES MESSAGE COMPOSER INPUT.

FOR PAPER TAPE, IOMANI IS ENTERED WHEN X LOCATIONS

(INITIALLY SIX, THE SMALLEST COMPLETE MESSAGE) ARE FILLED. IF THE MESSAGE IS NOT COMPLETE, I.E., THE AC INDICATES THAT MORE WORDS ARE REQUIRED, IOMANI RETURNS CONTROL WITH AN INDICATION DEMANDING ONE MORE WORD. IF THE END OF MESSAGE IS NOT FOUND WITHIN 19 WORDS, THE MESSAGE IS REJECTED.

BEFORE FORMATTING THE PAPER TAPE INPUT DATA FOR USE BY THE APPROPRIATE PROCESSING PROGRAM, IOMANI CONVERTS THE TTY CODE TO BCD AND PACKS THE CHARACTER IN A WORKING STORAGE BLOCK T13SAV. DURING THE PACKING PROCESS, ANY CHARACTER THAT CONVERTS TO A BCD 13 IS DROPPED AND ANY CHARACTER CONVERTING TO A BCD 60 CAUSES A REJECTION OF THE MESSAGE. WHEN PACKING IS COMPLETED, IOMANI EXAMINES THE CODE AND EXITS TO THE APPROPRIATE SUFFIX PROGRAM. THE CODES USED BY IOMANI ARE LISTED IN TABLE 1.

FOR MESSAGE COMPOSER INPUT IOMANI ACCEPTS THE BCI DATA AND STORES THE DATA IN THE TI3SAV BLOCK. THEN IOMANI EXAMINES THE CODE AND EXITS TO THE APPROPRIATE SUFFIX PROGRAM.

FORMATS OF INPUT MESSAGES TO IOMANI ARE AS FOLLOWS -

A) PAPER TAPE INPUT

1. GMT AS f (λ, LRN) - λ, LRN
   /01/± X.XXXXXXX+XX/XXX/!
   LONGITUDE, LANDING REV NUMBER
   THIS MESSAGE WILL CAUSE THE MANEUVER
   REFLECTED AT THIS GMT IN THIS LRN REVOLUTION
   TO BE PRINTED ON-LINE.
2. ABORT/ORBIT SWITCH - A
   /02/X/!

IF A = 0, ABORT. IF A = 1, ORBIT SWITCH THROWN.

3. WEIGHT CHANGE – $\beta$, $O_W$, $P_W$, VEHICLE TAGGED
/03/±X.XXXXXXX±XX/±X.XXXXXXX±XX/±X.XXXXXXX±XX/X/!
PITCH ANGLE, ORBIT WEIGHT (LBS), PRE-RETRO FIRE WEIGHT (LBS)
REENTRY WEIGHT WILL BE COMPUTED AS THE PRE-RETRO FIRE WEIGHT MINUS THE WEIGHT OF THE RETRO-PACK AND RETRO-FUEL. THIS MESSAGE WILL CAUSE TTF, ETC TO BE UPDATED TO REFLECT THE CHANGE.

4. LIFTOFF – GMTLO, VEHICLE TAGGED
/04/DDHHMMSS/X/!
TIME OF LIFTOFF

5. VECTOR – APRN, $x, y, z, \dot{x}, \dot{y}, \dot{z}$, VEHICLE TAGGED
/05/XXX/XXXXXXXXXXXX/XXXXXXXXXXXX/XXXXXXXXXXXX/XXXXXXXXXXXX/XXXXXXXXXXXX/XXXXXXXXXXXX/DDHHMMSS/X/!
ANCHOR PT. REV NO., POSITION AND VELOCITY COMPONENTS (OCTAL), TIME.

6. RETROFIRE SETTING – GMTRS, $\phi_T$, $\lambda_T$, M, LRN, NAME
/06/DDHHMMSS/±X.XXXXXXX+XX/±X.XXXXXXX±XX/X/XXX/XX/!
RETROFIRE SETTING, LATITUDE AND LONGITUDE OF TARGET, M (NAVIGATION MODE) – 1 – ONBOARD GUIDANCE, 2 – ONBOARD GUIDANCE ($B_A$ REVERSAL EQUATIONS), 3 – BANK ANGLE REVERSAL, 4 – BANK ANGLE, GMTIR, 5 – CONTINGENCY, LANDING REV. NO. AND BCI NAME, E.G. 2 – 1 WILL BE

/002/01/ AND 2A WILL BE /002/21/.
NOMINAL ATTITUDES, SEQUENCE AND DURATION OF RETRO-FIRE WILL BE ASSUMED.

7. UPDATE PRIMARY AREA - $\phi_T$, $\lambda_T$, LRN, NAME
/07/±X.XXXXXXX±XX/±X.XXXXXXX±XX/XXX/XX/!

8. NOMINAL RETRO FIRE OR ZERO RETROS - GMTRF, $\phi_T$, $\lambda_T$, M, N
/08/DDHHMMSS/X.XXXXXXX±XX/±X.XXXXXXX±XX/X/X/!
TIME OF FIRING OF 1ST ROCKET, LATITUDE AND LONGITUDE OF TARGET, NAVIGATION MODE, N=1 MEANS NOMINAL RETROFIRE, N=0, ZERO RETROS. THIS MESSAGE WILL CAUSE THE PHASE CHANGE TO REENTRY, INTEGRATION THROUGH THRUST (IF ANY) ASSUMING NOMINAL RETROFIRE, COMPUTATION OF GUIDANCE PARAMETERS DEPENDING ON MODE AND GENERATION OF REENTRY TRAJECTORY FOR D.C., ACQ. AND DISPLAY PURPOSES.

9. NON-NOMINAL RETRO-FIRE OR IVI READOUTS - P, R, Y, GMTRF1, GMTRF2, GMTRF3, GMTRF4, $\phi_T$, $\lambda_T$, M, N
/09/±X.XXXXXXX+XX/±X.XXXXXXX±XX/±X.XXXXXXX±XX/DDHHMMSS/DDHHMMSS/DDHHMMSS/DDHHMMSS/±X.XXXXXXX±XX/±X.XXXXXXX±XX/X/X/!
PITCH (OR $\Delta\dot{x}$), ROLL (OR $\Delta\dot{y}$), YAW (OR $\Delta\dot{z}$), TIME OF FIRING OF RETROS 1, 2, 3, 4 IN THAT ORDER (NOT NECESSARILY CHRONOLOGICALLY), LATITUDE AND LONGITUDE OF TARGET, MODE, N=2 MEANS P, R, Y, N= 3 MEANS IVI READOUTS. GMTRFK = 0 MEANS RETRO K DIDN'T FIRE. LOGIC SAME AS 8, EXCEPT USE INSERTED ATTITUDES, ETC.

10. DENSITY FACTOR FOR ORBIT LIFETIME - D, I, N,

VEHICLE TAGGED
/10/±X.XXXXXXX±XX/± X.XXXXXXX±XX/XXX/X/!
DENSITY FACTOR, IMPACT ALTITUDE (NOW 425K FT) NO. OF REVS.

THIS MESSAGE WILL CAUSE INTEGRATION WITH THE INSERTED ATMOSPHERE FOR THE DESIRED NO. OF REVS. OR UNTIL IMPACT ALTITUDE IS REACHED, WHICHEVER COMES FIRST, AND ORBIT LIFETIME DISPLAYED.

11. D.C. ARC LENGTH AND WEIGHTING FACTOR -
/11/DDHHMMSS/±X.XXXXXXX±XX/X/!
D.C. ARC LENGTH, LOG OF BASE (WEIGHTING FACTOR), VEHICLE TAGGED

12. DENSITY FACTOR FOR ORBIT, REENTRY - $D_O$, $D_R$, VEHICLE TAGGED
/12/±X.XXXXXXX±XX/± X.XXXXXXX±XX/X/!
DENSITY MULTIPLYING FACTOR.
THIS MESSAGE WILL CAUSE ALL ORBIT AND REENTRY FUNCTIONS TO BE UPDATED TO REFLECT THE NEW ATMOSPHERE.

13. MANUAL TTF - $\phi_T$ , $\lambda_T$, LRN, KIND, B, $\Delta V$
/13/±X.XXXXXXX±XX/±X.XXXXXXX±XX/XXX/X/± X.XXXXXXX±XX/±X.XXXXXXX±XX/!
LATITUDE OF TARGET, LONGITUDE OF TARGET, LANDING REV. NO., KIND - 0 PRIMARY AREA, 1 CONTINGENCY AREA, BANK ANGLE, VELOCITY INCREMENT.
IF PRIMARY AREA, GMTRC, GMTRB (BASED ON $\beta$), AND MISSED DISTANCE, ETC, WILL BE COMPUTED AND DISPLAYED. ALSO, GMTRC, x, y, z, $\dot{x}$, $\dot{y}$, $\dot{z}$, $\phi_T$, $\lambda_T$ WILL BE CONVERTED TO TTY BY DCS LOAD

AND TRANSLATION PROGRAM. IF KIND = 1, COMPUTE GMTRC ONLY. THE $\Delta V$ WILL BE USED FOR THE OAMS BURN 12 MINS PRIOR TO RETRO-FIRE (FOR THIS TARGET ONLY) AND SHOULD BE SET TO 0 IF GMTRC IS REQUESTED WITH NO OAMS RETRO MANEUVER.

14. ADD (OR DELETE) AN ENTRY TO MANEUVER TABLE - GMTPS, $\Delta t$, $\Delta V$ , P, Y, T, VEHICLE TAGGED /14/DDHHMMSS/DDHHMMSS/$\pm$X.XXXXXXX$\pm$XX/$\pm$X.XXXXXXX $\pm$ XX/$\pm$X.XXXXXXX$\pm$XX/X/X/!
GMT OF PROPULSION SETTING, DURATION OF BURN, INCREMENTAL VELOCITY OF BURN, S/C PITCH, S/C YAW, THRUSTER INDICATOR - T=0 AFT, T=1 FORE, THRUSTERS. T=2 LEFT, T=3 RIGHT, T=4 DOWN, T=5 UP THRUSTERS.
THIS ENTRY WILL BE CHRONOLOGICALLY ORDERED IN THE MANEUVER TABLE (TMANUV). SEVERAL PROCEDURAL OPTIONS ARE AVAILABLE -

A. IF GMTPS CORRESPONDS TO A TIME IN THE TABLE, THE NEW PARAMETERS REPLACE THOSE ALREADY IN THE TABLE.
B. IF BOTH $\Delta t$ AND $\Delta V$ ARE 0, THIS ENTRY IS DELETED FROM THE TABLE.
C. IF $\Delta t \neq 0$ AND $\Delta V = 0$ , NORMAL INSERTION LOGIC IS BEGUN.
D. IF $\Delta t = 0$ AND $\Delta V \neq 0$, $\Delta V$ IS CONVERTED TO $\Delta t$ INTERNALLY.
E. IF $\Delta V$ IS NEGATIVE THIS ENTRY WILL BE PUT IN A SPECIAL TABLE FOR THE MANEUVER DCS UPDATE (MSG. NO. 25 WITH 0 ENTRY) AND NOT BE REFLECTED INTO THE ORBIT.

UPON RECEIPT OF THIS INSERTION, THE COMPUTER

PROGRAM WILL INITIATE AN AUTOMATIC CYCLE TO UPDATE EPHEMERIS - RELATED QUANTITIES SUCH AS DISPLAYS, ACQ. DATA, TTF, ETC., TO REFLECT THIS INSERTED MANEUVER.

15. CONFIRMATION OF A MANEUVER -
GMTPI, $\Delta t$ , $\Delta V$ . P, Y, T, VEHICLE TAGGED
15/DDHHMMSS/DDHHMMSS/$\pm$X.XXXXXXX$\pm$XX/$\pm$X.XXXXXXX$\pm$XX/$\pm$X.XXXXXXX$\pm$XX/X/X/!
GMT OF PROPULSION INITIATION, DURATION OF BURN, INCREMENTAL VELOCITY OF BURN, S/C PITCH, S/C YAW, THRUSTER INDICATOR - T=0 FORE, T=1 AFT.
THIS MESSAGE WILL CAUSE EDITING OF RADAR DATA BASED ON GMTPI AND GMTPI + $\Delta t$, INTEGRATION TABLES GENERATED BASED ON ACTUAL THRUST AND DIFFERENTIALLY CORRECTED USING PRE-THRUST AND POST THRUST DATA, DISPLAYS AND ACQ. DATA UPDATED TO REFLECT ACTUAL THRUST. CHANGE 'PHASE'.

16. PROPULSION PANEL COMPUTATIONS - GMTM, $\Delta h$ (OR $\delta$), T, W
/16/DDHHMMSS/$\pm$X.XXXXXXX$\pm$XX/X/X/!
GMT OF MANEUVER, AMOUNT TO RAISE PERIGEE (OR WEDGE ANGLE), THRUSTERS (SEE # 14), W=0-RAISE (OR LOWER) PERIGEE OR APOGEE AT PERIGEE OR APOGEE, 1-CIRCULARIZE ANYWHERE, 2-PLANE CHANGE.
THIS MESSAGE WILL CAUSE CALCULATION AND DISPLAY ON THE PROPULSION PANEL OF THE GMTPI, $\Delta t$, P, Y, $\Delta V$ NECESSARY TO PERFORM THE REQUESTED MANEUVER.

17. ORBIT NAVIGATION VECTOR - GMTFC

/17/DDHHMMSS/!

GMT THAT VECTOR IS DESIRED AT.

THIS MESSAGE CAUSED THE MANEUVER-REFLECTED $x$, $y$, $z$, $\dot{x}$, $\dot{y}$, $\dot{z}$ AT THIS GMT TO BE CALCULATED AND QUEUED FOR DCS TO CONVERT TO TTY AND PRINT ON-LINE.

18. RANGE BIAS, BEACON

/18/±X.XXXXXXX±XX/X/!

BEACON = 1 GEMINI BEACCN 2 ADAPTER BEACON 3 AGENA BEACON

19. CHANGE TARGET IN REENTRY - $\phi_T$, $\lambda_T$, M

/19/±X.XXXXXXX±XX/±X.XXXXXXX±XX/X/!

LATITUDE AND LONGITUDE OF TARGET, NAVIGATION MODE.

THIS MESSAGE WILL CAUSE GUIDANCE PARAMETERS AND REENTRY TRAJECTORY TO BE UPDATED TO HIT THE INSERTED TARGET USING THE INSERTED MODE.

20. SELECT BACKUP GUIDANCE PARAMETERS IN REENTRY - B, GMTXX, M

/20/±X.XXXXXXX±XX/DDHHMMSS/X/!

BANK ANGLE, GMT TO REVERSE BANK OR GMT TO ROLL, MODE.

THIS MESSAGE WILL CAUSE A REENTRY TRAJECTORY TO BE INTEGRATED AS A FUNCTION OF THE INSERTED PARAMETERS IF M=3, GMTXX=GMTRB, IF M=4, GMTXX=GMTIR, IF M=5, GMTXX IS BLANK.

21. RENDEZVOUS INPUTS - T, RT

/21/DDHHMMSS/±X.XXXXXXX±XX/!

PSEUDO TARGET ORBITAL PERIOD AND ORBITAL RADIUS (UNITS 100 YDS).

THE DCS PROGRAM WILL BE QUEUED WITH THIS

INFORMATION AND WILL CONVERT IT TO TTY FOR THE RENDEZVOUS UPDATE.

22. SEQUENCE COUNT - C

/22/XXX/!

UPDATES SEQUENCE COUNT FOR DCS MESSAGES AFTER RESTART, MANUAL D.C., ETC., FOR ANY OF THE 5 TYPES OF COMMAND LOADS.

23. ADDRESS DCS MESSAGE - $S_1$, $S_2$, CGMTS, $L_1$, $L_2$, $L_3$, $L_4$

/23/XX/XX/DDHHMMSS/X/X/X/X/!

$1 \leq S_i \leq 9$, DCS SITE ADDRESS INDICATOR, $S_1$ PRIMARY SITE $S_2$ BACKUP SITE IF ANY, $S_i$ - BDA-1, CYI-2, CRO-3, CSQ-4, GYM-5, HAW-6, MCC-7, RKV-8, TEX-9, COINCIDENT GMT SETTING, $L_i$ - 1,2,3,OR 4 REQUESTS FOR COMPLETE MESSAGES, WHERE $L_i$ IS TYPE OF COMMAND LOAD - 1-ORBIT NAVIGATION, 2-PRERETRO (MANUAL), 3-PRERETRO (AUTOMATIC), 4-MANEUVER, 5-RENDEZVOUS.

THIS MESSAGE WILL CAUSE THE HEADER TO BE PUT ON THE TTY MESSAGE AND THE MESSAGES STORED TO AWAIT THE TRANSMIT REQUEST.

24. DCS TRANSMIT - $L_i$

/24/X/!

INDICATION (SEE 23) OF WHICH LOAD AND TRANSLATION SHOULD BE TRANSMITTED.

CAUSES MESSAGE TO BE TRANSMITTED.

25. MANEUVER UPDATE FOR DCS - GMTPS

/25/DDHHMMSS/!

GMT PROPULSION SETTING

THIS INSERTION WILL CAUSE THE MANEUVER IN THE MANEUVER TABLE THAT CORRESPONDS TO THE

INSERTED TIME TO BE CONVERTED TO TTY AND THE DCS TRANSLATION MESSAGE PREPARED. IF THIS TIME IS ZERO, THE MANEUVER WILL BE TAKEN FROM A SPECIAL TABLE (SEE 14) INSTEAD OF THE MANEUVER TABLE.

26. SPARE

27. BACKUP D.C.-N, VEHICLE TAGGED
/27/XX/X/!
UPPER CORE·BLOCK NO.
UPPER CORE BLOCK ·NO. N WILL BE SELECTED FOR THE BACKUP D.C. (CURVE FIT) DURING ORBIT OR REENTRY.

28. BANK ANGLE DURING ORBIT - B
/28/±X.XXXXXXX±XX/!
THIS INSERTION WILL BE USED TO UPDATE THE PRE-MISSION SET BANK ANGLE USED IN ORBIT FOR COMPUTING GMTRC FOR ALL AUTOMATIC (STORED) PRIMARY AND CONTINGENCY AREAS AND ALSO USED IN REENTRY FOR THE CONTINGENCY TRAJECTORY.

29. DELTA V TABLE UPDATE - RN,ΔV
REVOLUTION NO., VELOCITY INCREMENT
/29/XXX/±X.XXXXXXX±XX/!
THIS MESSAGE WILL BE USED TO UPDATE A PRE-MISSION SET TABLE OF ΔV's AS FUNCTIONS OF REVOLUTION. THIS TABLE IS USED FOR ALL STORED PRIMARY AND CONTINGENCY AREAS, BY ASSOCIATING THE LRN OF THE TARGET WITH THE CORRESPONDING ΔV AND ASSUMING AN OAMS BURN OF THIS AMOUNT 12 MINS PRIOR TO RETRO FIRE, WHILE COMPUTING GMTRC.

NOTE - ALL ANGLES IN FLOATING PT. DEGREES. ALL

TIMES IN DAYS, HOURS, MINS, SECS. WEIGHTS IN FLOATING PT., LBS.

$\Delta h$ IN NAUTICAL MILES, $\Delta V$ IN FT/SEC.

VEHICLE TAGGED

1 = S/C

2 = AGENA

3 = TITAN

4 = ATLAS

B) MESSAGE COMPOSER

1. GMT ASf($\lambda$ , LRN) - $\lambda$ , LRN
   (01/$\pm$X.X/XXX/)
   LONGITUDE, LANDING REV NUMBER
   THIS WILL CAUSE THE MANEUVER REFLECTED GMT AT TIME IN THIS LRN REVOLUTION TO BE PRINTED ON LINE.
2. ABORT/ORBIT SWITCH - A
   (02/X/)
   IF A=0, ABORT. IF A=1, ORBIT SWITCH THROWN.
3. WEIGHT CHANGE - $\beta$ ,$O_W$ , $P_W$, VEHICLE TAGGED.
   (03/$\pm$X.X/$\pm$X.X/$\pm$X.X/X/)
   PITCH, ANGLE, ORBIT WEIGHT (LBS), PRE-RETRO WEIGHT (LBS) REENTRY WEIGHT WILL BE COMPUTED AS THE PRERETRO WEIGHT MINUS THE WEIGHT OF THE RETRO-PACK AND RETRO-FUEL. THIS MESSAGE WILL CAUSE TTF, ETC TO BE UPDATED TO REFLECT THE CHANGE.
4. LIFTOFF - GMTLO, VEHICLE TAGGED
   (04/DDHHMMSS/X/)
   TIME OF LIFTOFF
5. VECTOR - APRN, X, Y, Z, $\dot{X}$, $\dot{Y}$, $\dot{Z}$, t ,
   VEHICLE TAGGED

(05/XXX/XXXXXXXXXXXX/XXXXXXXXXXXX/
XXXXXXXXXXXX/XXXXXXXXXXXX/XXXXXXXXXXXX/
XXXXXXXXXXXX/DDHHMMSS/X)
ANCHOR PT REV NO. POSITION AND VELOCITY COMPONENTS (OCTAL), TIME.

6. RETROFIRE SETTING - GMTRS, $\phi_T$, $\lambda_T$, M, LRN, NAME
(06/DDHHMMSS/±X.X/±X.X/X/XXX/XX/)
RETROFIRE SETTING, LATITUDE AND LONGITUDE OF TARGET, M (NAVIGATION MODE) -1- ON BOARD GUIDANCE, 2- ONBOARD GUIDANCE ($B_A$ REVERSAL EQUATIONS), 3- BANK ANGLE REVERSAL, 4 - BANK ANGLE, GMTIR, 5- CONTINGENCY, LANDING REV NO. AND BCI NAME, E.G. 2-1 WILL BE /002/01 AND 2A WILL BE /002/21/. NOMINAL ATTITUDES, SEQUENCE AND DURATION OF RETROFIRE WILL BE ASSUMED.

7. UPDATE PRIMARY AREA - $\phi_T$, $\lambda_T$, LRN, NAME
(07/±X.X/±X.X/XXX/XX/)
LATITUDE AND LONGITUDE OF TARGET, LANDING REV. NO. AND BCI NAME. (SEE# 6)

8. NOMINAL RETRO FIRE OR ZERO RETRO - GMTRF, $\phi_T$, $\lambda_T$, M, N
08/DDHHMMSS/±X.X/±X.X/X/X)
TIME OF FIRING OF FIRST ROCKET, LATITUDE AND LONGITUDE OF TARGET, NAVIGATION MODE, N=1 MEANS NOMINAL RETROFIRE, N=0 RETROS. THIS WILL CAUSE THE PHASE CHANGE TO REENTRY, INTEGRATION THROUGH THRUST (IF ANY) ASSUMING NOMINAL RETROFIRE, COMPUTATION OF GUIDANCE PARAMETERS DEPENDING ON MODE AND GENERATION REENTRY TRAJECTORY FOR D.C. ACQUISITION AND

DISPLAY PURPOSES.

9. NON NOMINAL RETRO FIRE OR IVI READOUTS - P, R, Y, GMTRF1, GMTRF2, GMTRF3, GMTRF4, $\phi_T$, $\lambda_T$, M, N
(09/±X.X/±X.X/±X.X/DDHHMMSS/DDHHMMSS/DDHHMMSS/DDHHMMSS/±X.X/±X.X/X/X/)
PITCH (OR $\Delta\dot{X}$), ROLL (OR $\Delta\dot{Y}$), YAW (OR $\Delta\dot{Z}$), TIME OF FIRING OF RETROS 1, 2, 3 AND 4 IN THAT ORDER (NOT NECESSARILY CHRONOLOGICALLY) LATITUDE AND LONGITUDE OF TARGET, MODE, N=2 MEANS P, R, Y, N=3 MEANS IVI READOUT. GMTRK=0 MEANS RETRO K DIDN'T FIRE. LOGIC SAME AS 8, EXCEPT USE INSERTED ATTITUDES, ETC.

10. DENSITY FACTOR FOR ORBIT LIFETIME - D, I, N, VEHICLE TAGGED
(10/±X.X/±X.X/XXX/X/)
DENSITY FACTOR, IMPACT ALTITUDE (NOW 425 K FT) NO. OF REVS.
THIS MESSAGE WILL CAUSE INTEGRATION WITH THE INSERTED ATMOSPHERE FOR THE DESIRED NO. OF REVS. OR UNTIL IMPACT ALTITUDE IS REACHED, WHICHEVER COMES FIRST AND ORBIT LIFETIME DISPLAYED.

11. D.C. ARC LENGTH AND WEIGHTING FACTOR -
(11/DDHHMMSS/±X.X/X/)
D.C. ARC LENGTH, LOG OF THE BASE (WEIGHTING FACTOR), VEHICLE TAGGED

12. DENSITY FACTOR FOR ORBIT, REENTRY - $D_O$, $D_R$, VEHICLE TAGGED
(12/±X.X/X/)
DENSITY MULTIPLYING FACTOR.

THIS MESSAGE WILL CAUSE ORBIT AND REENTRY FUNCTIONS TO BE UPDATED TO REFLECT THE NEW ATMOSPHERE.

13. MANUAL TTF - $\phi_T$, $\lambda_T$, LRN, KIND, B, $\Delta V$
(13/±X.X/±X.X/XXX/X/±X.X/±X.X/)
LATITUDE OF TARGET, LONGITUDE OF TARGET, LANDING REV. NO., KIND - 0 PRIMARY AREA, 1 CONTINGENCY AREA, BANK ANGLE, VELOCITY INCREMENT.
IF PRIMARY AREA, GMTRC, GMTRB (BASED ON $\beta$), AND MISSED DISTANCE, ETC, WILL BE COMPILED AND DISPLAYED. ALSO GMTRC, X,Y,Z,$\dot{X}$,$\dot{Y}$,$\dot{Z}$, $\phi_T$, $\lambda_T$, WILL BE CONVERTED TO TTY BY DCS LOAD AND TRANSLATION PROGRAM. IF KIND = 1, COMPUTE GMTRC ONLY. THE $\Delta V$ WILL BE USED FOR THE OAMS BURN 12 MINS PRIOR TO RETROFIRE (FOR THIS TARGET ONLY) AND SHOULD BE SET TO ZERO IF GMTRC IS REQUESTED WITH NO OAMS RETRO MANEUVER.

14. ADD (OR DELETE) AN ENTRY TO THE MANEUVER TABLE -
GMTPS, $\Delta t$, $\Delta V$, P, Y, t, VEHICLE TAGGED
(14/DDHHMMSS/DDHHMMSS/±X.X/±X.X/±X.X/X/X/)
GMT OF PROPULSION SETTING, DURATION OF BURN, INCREMENTAL VELOCITY OF BURN, S/C PITCH, S/C YAW, THRUSTER INDICATOR -
T=0 AFT, T=1 FORE, T=2 LEFT, T=3 RIGHT, T=4 DOWN, T=5 UP THRUSTERS.
THIS ENTRY WILL BE CHRONOLOGICALLY ORDERED IN THE MANEUVER TABLE (TMANUV). SEVERAL PROCEDURAL OPTIONS ARE AVAILABLE -
A. IF GMTPS CORRESPONDS TO A TIME IN THE

TABLE, THE NEW PARAMETERS REPLACES THOSE ALREADY IN THE TABLE.

B. IF BOTH $\Delta t$ AND $\Delta V$ ARE 0, THIS ENTRY IS DELETED FROM THE TABLE.

C. IF $\Delta t \neq 0$ AND $\Delta V=0$, NORMAL INSERTION LOGIC IS BEGUN.

D. IF $\Delta t = 0$ AND $\Delta V \neq 0$, $\Delta V$ IS CONVERTED TO $\Delta t$ INTERNALLY.

E. IF $\Delta V$ IS NEGATIVE THIS ENTRY WILL BE PUT IN A SPECIAL TABLE FOR THE MANEUVER DCS UPDATE (MSG NO. 25 WITH 0 ENTRY) AND NOT TO BE REFLECTED INTO THE ORBIT.

UPON RECEIPT OF THIS INSERTION, THE COMPUTER PROGRAM WILL INITIATE AN AUTOMATIC CYCLE TO UPDATE EPHEMERIS RELATED QUANTITIES SUCH AS DISPLAYS, ACQ. DATA, TTF, ETC. TO REFLECT THIS INSERTED MANEUVER.

15. CONFIRMATION OF A MANEUVER -
GMTPI, $\Delta t$ , $\Delta V$ , P, Y, T, VEHICLE TAGGED,
(15/DDHHMMSS/DDHHMMSS/$\pm$X.X/$\pm$X.X/$\pm$X.X/X/X/)
GMT OF PROPULSION INITIATED, DURATION OF BURN, INCREMENTAL VELOCITY OF BURN, S/C PITCH, S/C YAW, THRUSTER INDICATOR -
T=0 AFT, T=1 FORE, T=2 LEFT, T=3 RIGHT, T=4 DOWN, T=5 UP THRUSTERS.
THIS MESSAGE WILL CAUSE EDITING OF RADAR DATA BASED ON GMTPI AND GMTIP+$\Delta t$, INTEGRATION TABLES GENERATED BASED ON ACTUAL THRUST AND DIFFERENTIALLY CORRECTED USING PRE-THRUST AND POST-THRUST DATA, DISPLAYS AND ACQ. DATA UPDATED TO REFLECT ACTUAL THRUST. CHANGE 'PHASE'.

OPERATING PROCEDURES FOR CONFIRMATION OF THRUST ARE -

A. $\Delta V = -0$, THE PRESENT ORBIT DEFINED VECTOR (TMREFL) IS PERTURBED TO REFLECT THE INSERTED MANEUVER PARAMETERS. EITHER A $\Delta t$ OR $\Delta V$ INDICATOR CAN BE SPECIFIED.

B. $\Delta V = +0$, THIS OPTION IS EXERCISED TO REDEFINE AND EXECUTE MANEUVER. THE NOMINAL MANEUVER PARAMETERS ARE REPLACED WITH THE INSERTED PARAMETERS AND A NEW VECTOR IS DERIVED.

C. $\Delta V = +0$, $\Delta t = 0$, THE PREVIOUS EXECUTED MANEUVER IS ERASED AND THE ORBIT IS RESTORED TO PRE-MANEUVER CONDITIONS.

16. PROPULSION PANEL COMPUTATIONS - GMTM, $\Delta h$ (OR $\delta$), T, W
(16/DDHHMMSS/$\pm$X.X/X/X/)
GMT OF MANEUVER, AMOUNT TO RAISE PERIGEE (A WEDGE ANGLE), T - THRUSTERS (SEE # 14), W=0, RAISE (OR LOWER) PERIGEE OR APOGEE AT PERIGEE OR APOGEE, W=1 TO CIRCULARIZE ANYWHERE, W=2 PLANE CHANGE.
THIS MESSAGE WILL CAUSE CALCULATION AND DISPLAY ON THE PROPULSICN PANEL OF THE GMTPI, $\Delta t$, P,Y, $\Delta V$ NECESSARY TO PERFORM THE REQUESTED MANEUVER.

17. ORBIT NAVIGATION VECTOR - GMTFC
(17/DDHHMMSS/)
GMT THAT VECTOR IS DESIRED AT.
THIS MESSAGE CAUSED THE MANEUVER-REFLECTED X,Y,Z, $\dot{X}$,$\dot{Y}$,$\dot{Z}$ AT THIS GMT TO BE CALCULATED AND QUEUED FOR DCS TO CONVERT TO TTY AND

PRINT ON LINE.

18. RANGE BIAS, BEACON
(18/±X.X/X/)
1. GEMINI BEACON
2. ADAPTER BEACON
3. AGENA BEACON

19. CHANGE TARGET IN REENTRY - $\phi_T$, $\lambda_T$, M
(19/±X.X/±X.X/X/)
LATITUDE AND LONGITUDE OF TARGET, NAVIGATION MODE. THIS MESSAGE WILL CAUSE GUIDANCE PARAMETERS AND REENTRY TRAJECTORY TO BE UPDATED TO HIT THE INSERTED TARGET USING THE INSERTED MODE.

20. SELECT BACKUP GUIDANCE PARAMETERS IN RE-ENTRY - $\beta$ , GMTXX, M
(20/±X.X/DDHHMMSS/X/)
BANK ANGLE, GTM TO REVERSE BANK OR GMT TO ROLL, MODE.
THIS MESSAGE WILL CAUSE A REENTRY TRAJECTORY TO BE INTEGRATED AS A FUNCTION OF THE INSERTED PARAMETERS IF M=3, GMTXX=GMTRB, IF M=4, GMTXX=GMTIR, IF M=5, GMTXX IS BLANK.

21. RENDEZVOUS INPUT - T, RT
(21/DDHHMMSS/±X.X/)
PSEUDO TARGET ORBITAL PERIOD AND ORBITAL RADIUS (UNITS 100 YDS).
THE DCS PROGRAM WILL BE QUEUED WITH THIS INFORMATION AND WILL CONVERT IT TO TTY FOR THE RENDEZVOUS UPDATE.

22. SEQUENCE COUNT - C
(22/XXX/)
UPDATES SEQUENCE COUNT FOR DCS MESSAGE AFTER

RESTART, MANUAL D.C., ETC, FOR ANY OF THE 5 TYPES OF COMMAND LOADS.

23. ADDRESS DCS MESSAGE - $S_1$, $S_2$, CGMTS, $L_1$, $L_2$, $L_3$, $L_4$
(23/XX/XX/DDHHMMSS/X/X/X/X/)
$1 \leq S_i \leq 9$, DCS SITE ADDRESS INDICATOR, $S_1$ PRIMARY SITE, $S_2$ BACKUP SITE IF ANY, $S_i$ BDA-1, CYI-2, CRO-3, CSQ-4, GYM=5, HAW-6, MCC-7, RKV-8, TEX-9, COINCIDENT GMT SETTING, $L_i$ - 1, 2, 3 OR 4 REQUESTS FOR COMPLETE MESSAGE, WHERE $L_i$ IS TYPE OF COMMAND LOAD - 1-ORBIT NAVIGATION, 2-PRE-RETRO (MANUAL), 3-PRE-RETRO (AUTOMATIC), 4-MANEUVER, 5-RENDEZVOUS.
THIS MESSAGE WILL CAUSE THE HEADER TO BE PUT ON THE TTY MESSAGE AND THE MESSAGES STORED TO AWAIT THE TRANSMIT REQUEST.

24. DCS TRANSMIT - $L_i$
(24/X/)
INDICATION (SEE # 23) OF WHICH LOAD AND TRANSLATION SHOULD BE TRANSMITTED.
CAUSES MESSAGE TO BE TRANSMITTED.

25. MANEUVER UPDATE FOR DCS - GMTPS
(25/DDHHMMSS/)
GMT PROPULSION SETTING
THIS INSERTION WILL CAUSE THE MANEUVER IN THE MANEUVER TABLE THAT CORRESPONDS TO THE INSERTED TIME TO BE CONVERTED TO TTY AND THE DCS TRANSLATION MESSAGE PREPARED. IF THIS TIME IS ZERO, THE MANEUVER WILL BE TAKEN FROM A SPECIAL TABLE (SEE # 14) INSTEAD OF THE MANEUVER TABLE.

26. SPARE

27. BACKUP D.C. - N, VEHICLE TAGGED
(27/XX/X/)
UPPER CORE BLOCK NO.
UPPER CORE BLOCK NO. N WILL BE SELECTED FOR THE BACKUP D.C. (CURVE FIT) DURING ORBIT OR REENTRY.

28. BANK ANGLE DURING ORBIT - B
(28/±X.X/)
THIS INSERTION WILL BE USED TO UPDATE THE PRE-MISSION SET BANK ANGLE USED IN ORBIT FOR COMPUTING GMTRC FOR ALL AUTOMATIC (STORED) PRIMARY AND CONTINGENCY AREAS ALSO USED IN REENTRY FOR THE CONTINGENCY TRAJECTORY.

29. DELTA V TABLE UPDATE - RN, $\Delta V$
REVOLUTION NO. VELOCITY INCREMENT
(29/XXX/±X.X/)
THIS MESSAGE WILL BE USED TO UPDATE A PRE-MISSION SET TABLE OF $\Delta V$'S AS A FUNCTION OF REVOLUTION. THIS TABLE IS USED FOR ALL STORED PRIMARY AND CONTINGENCY AREAS, BY ASSOCIATING THE LRN OF THE TARGET WITH THE CORRESPONDING $\Delta V$ AND ASSUMING AN OMES BURN OF THIS AMOUNT 12 MINS PRIOR TO RETRO FIRE, WHILE COMPUTING GMTRC.

NOTE - ALL ANGLES IN FLOATING POINT DEGREES.
ALL TIMES IN DAYS, HOURS, MINUTES, AND SECONDS. WEIGHTS IN FLOATING POINT LBS, $\Delta h$ IN NAUTICAL MILES, $\Delta V$ IN FT/SEC.
ALL FIELDS MUST END WITH A /. THE MAXIMUM NUMBER OF CHARACTERS FOR A FLOATING POINT

FIELD IS 9 WITH DECIMAL POINT. A FLOATING POINT ZERO MAY BE REPRESENTED BY /0/.

VEHICLE TAGGED

1 - S/C

2 - AGENA

3 - TITAN

4 - ATLAS

USAGE

A) PAPER TAPE INPUT

IOMANI IS ENTERED FROM PAPER TAPE INPUT VIA THE ASR'S, WITH THE SS 3 DOWN AND THE ASR ON LINE. SUB-CHANNELS 29 AND 30 OF THE DCC ARE USED FOR PAPER TAPE INPUT AND ARE ASSOCIATED WITH ASR'S 1 AND 2, RESPECTIVELY. INFORMATION IS FED IN AT SIX CHARACTERS PER SECOND, AND EACH MESSAGE IS READ IN TWICE. A PAUSE OF 15 SECONDS, HOWEVER, PRECEDES THE SECOND FEEDING.

B) MESSAGE COMPOSER INPUT

IOMANI IS ALSO ENTERED WITH BCI INPUT VIA THE MESSAGE COMPOSER. SUBCHANNEL 15 OF THE MODE $\pi$ DCC IS USED AND ASSOCIATED WITH THE MESSAGE COMPOSER.

FOR THE PAPER TAPE INPUT OR THE BCI MESSAGE COMPOSER INPUT, A MESSAGE IS INSERTED AND VERIFIED ON-LINE (ON-LINE PRINTER). THE MESSAGE WILL BE ACCEPTED UPON THE SECOND INSERTION, HOWEVER, THROUGH INTERROGATING THE PCC WITH A CODE AS A SUBSTITUTE FOR THE SECOND INSERTION.

IOMANI USES FIVE SUBROUTINES -

1. I3DEC - CONVERTS A SCIENTIFICALLY NOTATED NUMBER, IN THE FORM $\pm$X.XXXXXXX$\pm$XX, TO A FLOATING-POINT NUMBER. BEFORE ENTERING THE SUBROUTINE THE NUMBER MUST BE PLACED IN THE FIRST TWO WORDS OF THE BLOCK TI3DEC, LEFT-JUSTIFIED. UPON RETURN

FROM I3DEC THE FLOATING-POINT NUMBER IS CONTAINED IN THE AC.

2. I3SN - CONVERTS A UNIQUE BCD REPRESENTATION OF A 'SIGN' TO BINARY. UPON ENTRY TO THE SUBROUTINE THE AC MUST CONTAIN THE BCD CODE, RIGHT-JUSTIFIED, UPON EXIT THE SIGN BIT OF THE AC AND LOCATION I3TMP+2 WILL BE PROPERLY SET AND BITS 1 THROUGH 35 WILL BE ZERO.
3. I3FPS - CONVERTS BCD HOURS, MINUTES, AND SECONDS LOCATED IN THE AC TO BINARY. UPON RETURN, TWO FORMATS ARE GIVEN. IN THE CELL I3TMP THE DECREMENT WILL CONTAIN SECONDS AND THE ADDRESS WILL CONTAIN MINUTES. THE AC AND CELL I3TMP+1 WILL CONTAIN FIXED-POINT SECONDS RIGHT-JUSTIFIED.
4. I3CFI - VARIABLE WORD LENGTH CONVERT FIXED POINT OR FLOATING POINT NUMBER (MESSAGE COMPOSER).
5. I3DHM - CONVERTS DAYS, HOURS, MINUTES AND SECONDS TO MINUTES OR MINUTES AND SECONDS.

## IOMANI CODES (ASR)

| UNIQUE BCD CODE | OCTAL TTY CODE | TTY CHARACTER |
|---|---|---|
| 13 | 33 | ↑ |
| 13 | 37 | ↓ |
| 13 | 27 | / |
| 13 | 07 | . |
| 13 | 00 | SPACE |
| 26 | 26 | ! |
| 13 | 02 | CR |
| 13 | 10 | LF |
| 00 | 30 | - |
| 20 | 05 | # |
| 00 | 30 | A |
| 12 | 23 | B |
| 10 | 14 | I |
| 11 | 03 | O |
| 04 | 12 | R |
| 05 | 01 | T |
| 00 | 15 | 0 |
| 01 | 35 | 1 |
| 02 | 31 | 2 |
| 03 | 20 | 3 |
| 04 | 12 | 4 |
| 05 | 01 | 5 |
| 06 | 25 | 6 |
| 07 | 34 | 7 |
| 10 | 14 | 8 |
| 11 | 03 | 9 |
| 60 | ALL OTHERS | |

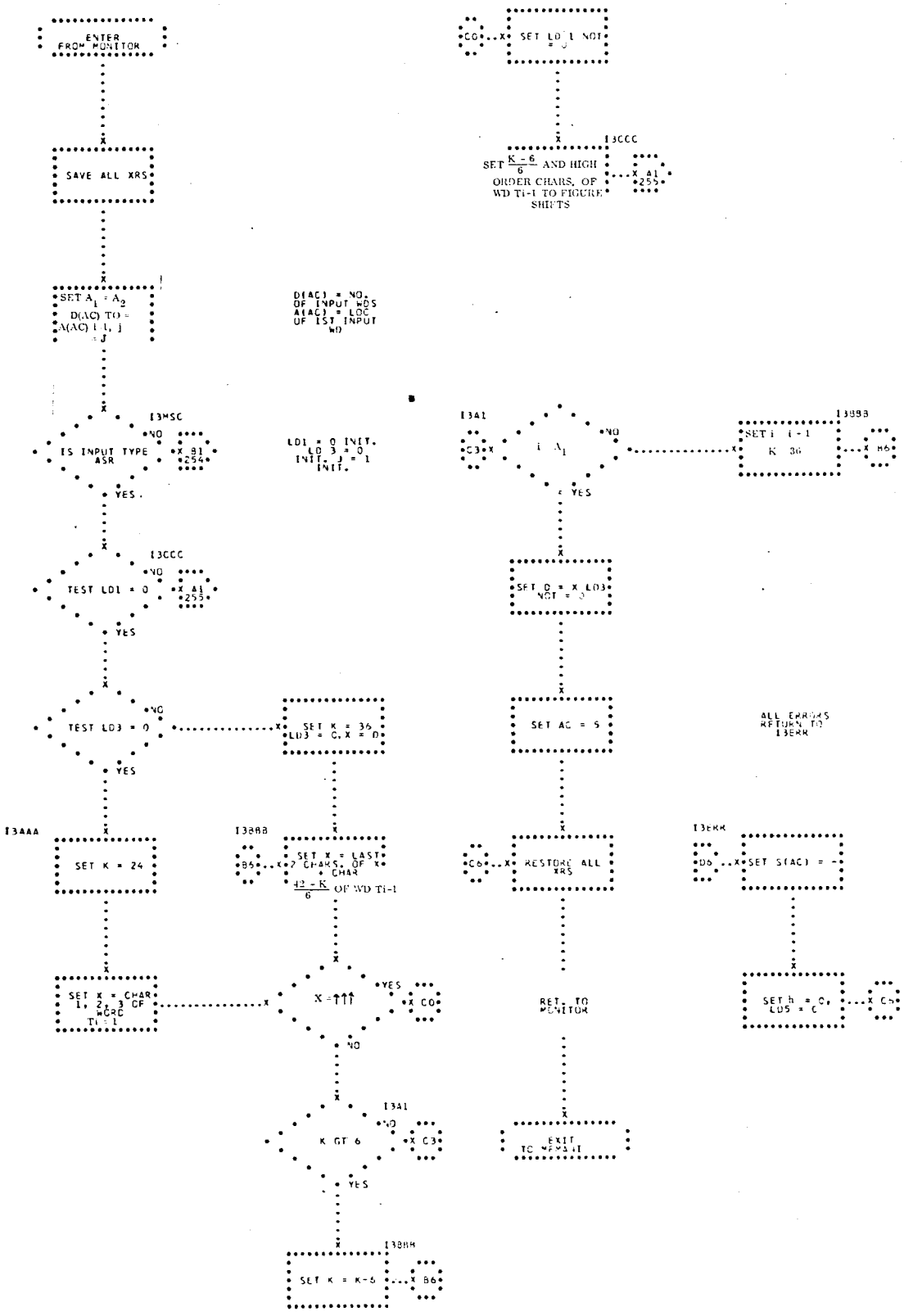
ENTER FROM MONITOR
SAVE ALL XRS
SET A1 = A2
D(AC) TO = A(AC) I 1, J = J
D(AC) = NO. OF INPUT WDS
A(AC) = LOC OF 1ST INPUT WD
I3MSC
IS INPUT TYPE ASR
NO
X B1 254
YES
LD1 = 0 INIT.
LD 3 = 0 INIT.
J = 1 INIT.
I3CCC
TEST LD1 = 0
NO
X A1 255
YES
TEST LD3 = 0
NO
SET K = 36, LD3 = C, X = D
YES
I3AAA
SET K = 24
I3BBB
B6
SET X = LAST 2 CHARS. OF X + CHAR
42 - K / 6 OF WD TI-1
SET X = CHAR 1, 2, 3 OF WORD TI-1
X = ↑↑↑
YES
X C0
NO
I3A1
K GT 6
NO
X C3
YES
I3BBB
SET K = K-6
X B6
C0
SET LD 1 NOT = 0
I3CCC
SET K - 6 / 6 AND HIGH ORDER CHARS. OF WD TI-1 TO FIGURE SHIFTS
X A1 255
I3A1
C3
i A1
NO
YES
I3BBB
SET i i - 1
K 36
X B6
SET D = X LD3 NOT = 0
SET AC = S
ALL ERRORS RETURN TO I3ERR
C6
RESTORE ALL XRS
RET. TO MONITOR
EXIT TO MONITOR
I3ERR
D6
SET S(AC) = -
SET h = C, LD5 = C
X C6

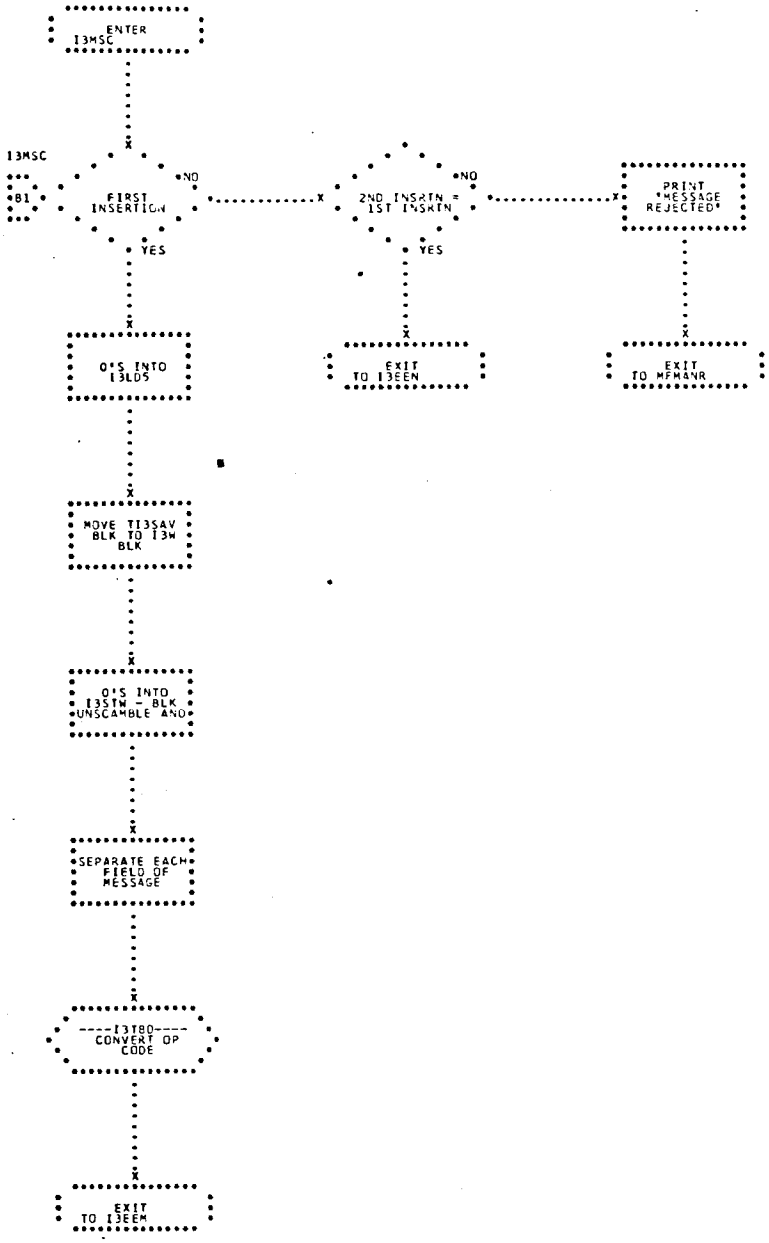
ENTER
I3MSC
I3MSC
B1
FIRST
INSERTION
NO
YES
2ND INSRTN =
1ST INSRTN
NO
YES
PRINT
'MESSAGE
REJECTED'
0'S INTO
I3LDS
EXIT
TO I3EEN
EXIT
TO MFMANR
MOVE TI3SAV
BLK TO I3W
BLK
0'S INTO
I3STW - BLK
UNSCAMBLE AND
SEPARATE EACH
FIELD OF
MESSAGE
----I3T80----
CONVERT OP
CODE
EXIT
TO I3EEM

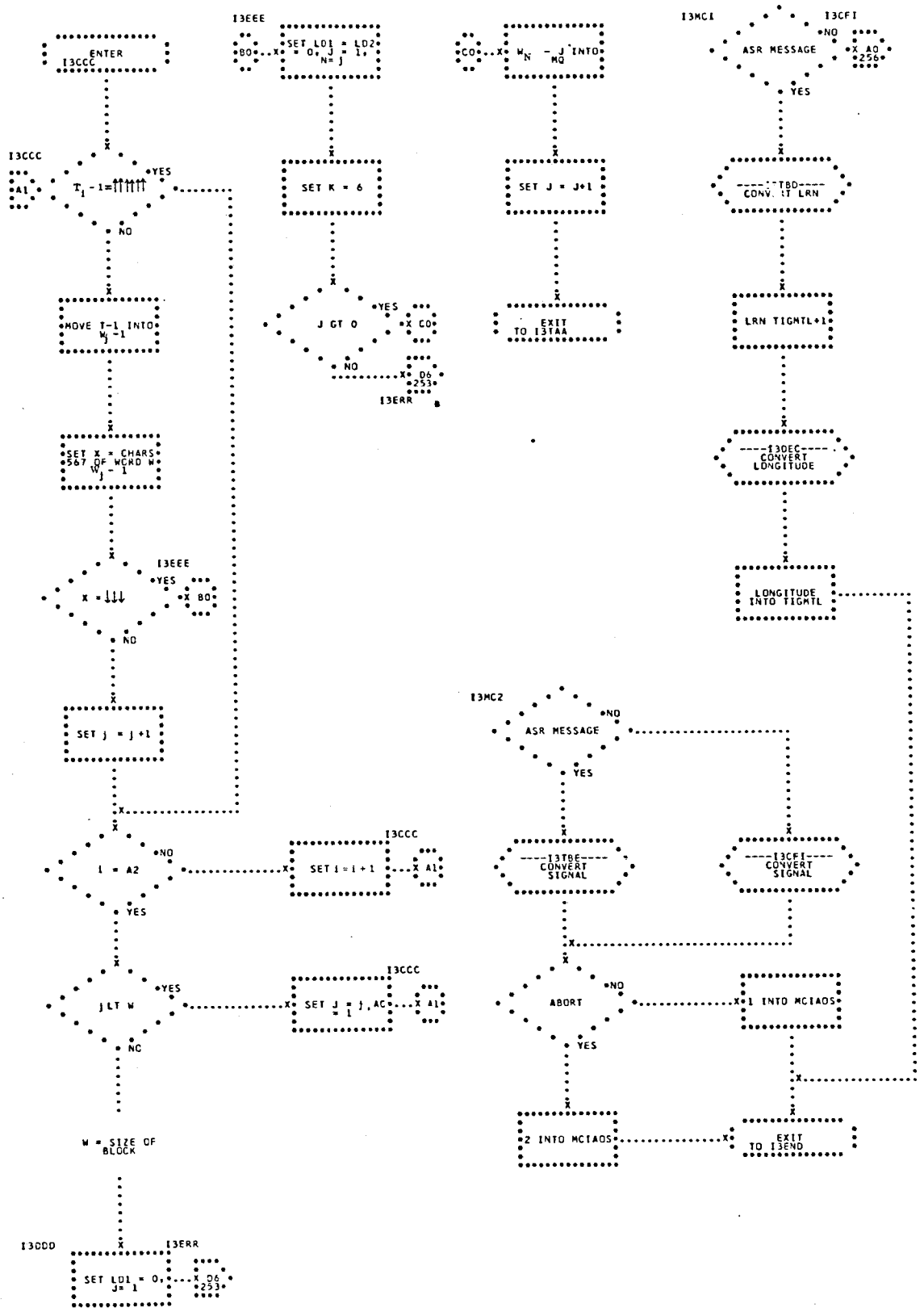
ENTER
I3CCC
I3CCC
A1
YES
NO
MOVE T-1 INTO
SET X = CHARS
567 OF WORD W
I3EEE
YES
NO
SET j = j +1
i = A2
NO
YES
SET i = i + 1
I3CCC
A1
j LT W
YES
NO
SET J = j, AC
= 1
I3CCC
A1
W = SIZE OF
BLOCK
I3DDD
I3ERR
SET LD1 = 0,
J= 1
D6
253
I3EEE
B0
SET LD1 = LD2
= 0, J = 1,
N= j
SET K = 6
J GT 0
YES
NO
C0
D6
253
I3ERR
C0
SET J = J+1
EXIT
TO I3TAA
I3MC1
I3CFI
ASR MESSAGE
NO
YES
A0
256
LRN TIGMTL+1
I3DEC
CONVERT
LONGITUDE
LONGITUDE
INTO TIGMTL
I3MC2
ASR MESSAGE
NO
YES
I3TBE
CONVERT
SIGNAL
I3CFI
CONVERT
SIGNAL
ABORT
NO
YES
1 INTO MCIAOS
2 INTO MCIAOS
EXIT
TO I3END

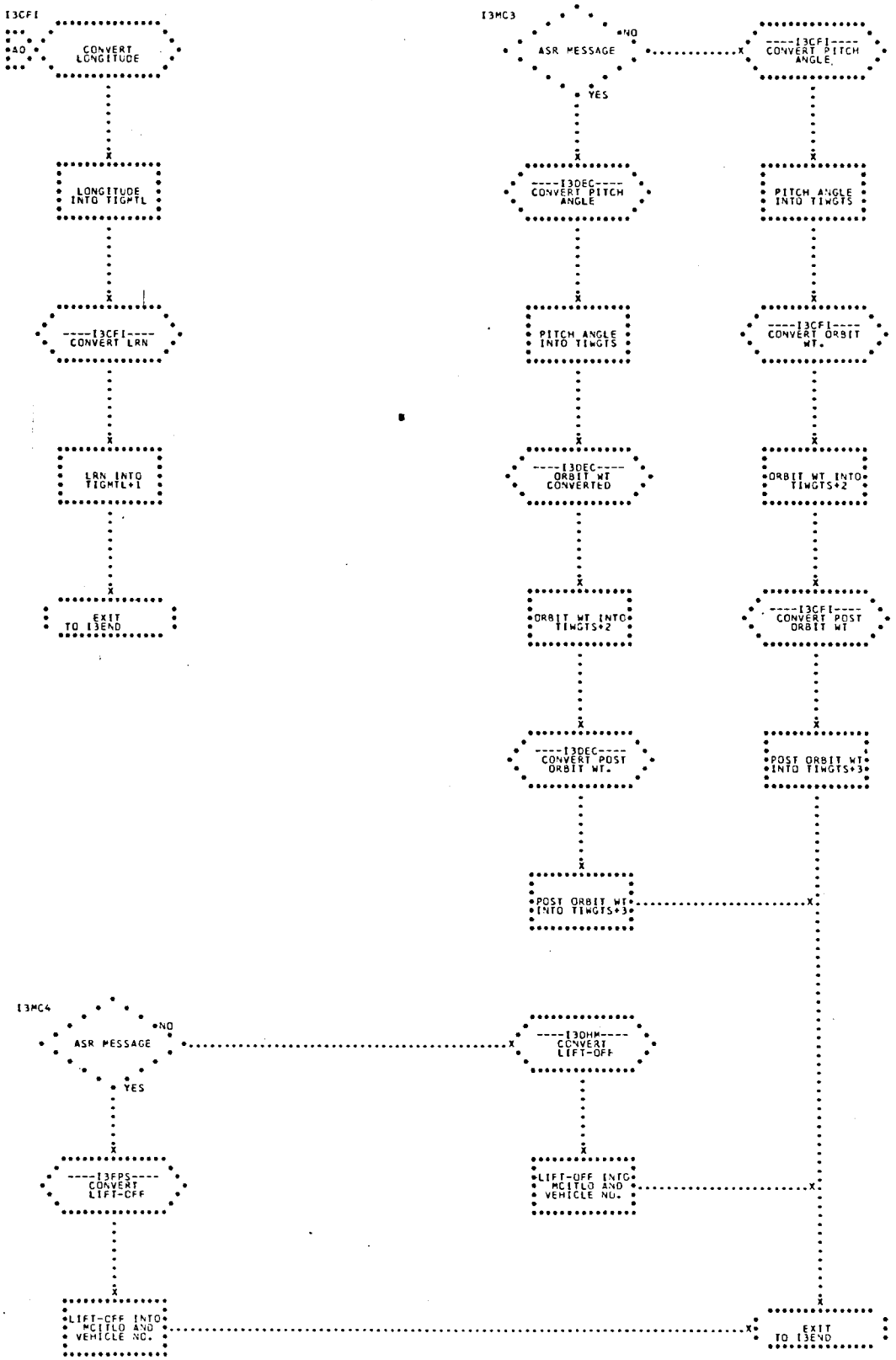
I3CFI
AO
CONVERT LONGITUDE
LONGITUDE INTO TIGMTL
----I3CFI----
CONVERT LRN
LRN INTO TIGMTL+1
EXIT TO I3END
I3MC3
ASR MESSAGE
NO
YES
----I3CFI----
CONVERT PITCH ANGLE
----I3DEC----
CONVERT PITCH ANGLE
PITCH ANGLE INTO TIWGTS
PITCH ANGLE INTO TIWGTS
----I3CFI----
CONVERT ORBIT WT.
----I3DEC----
ORBIT WT CONVERTED
ORBIT WT INTO TIWGTS+2
ORBIT WT INTO TIWGTS+2
----I3CFI----
CONVERT POST ORBIT WT
----I3DEC----
CONVERT POST ORBIT WT.
POST ORBIT WT INTO TIWGTS+3
POST ORBIT WT INTO TIWGTS+3
I3MC4
ASR MESSAGE
NO
YES
----I3DHM----
CONVERT LIFT-OFF
----I3FPS----
CONVERT LIFT-OFF
LIFT-OFF INTO MCITLO AND VEHICLE NO.
LIFT-OFF INTO MCITLO AND VEHICLE NO.
EXIT TO I3END

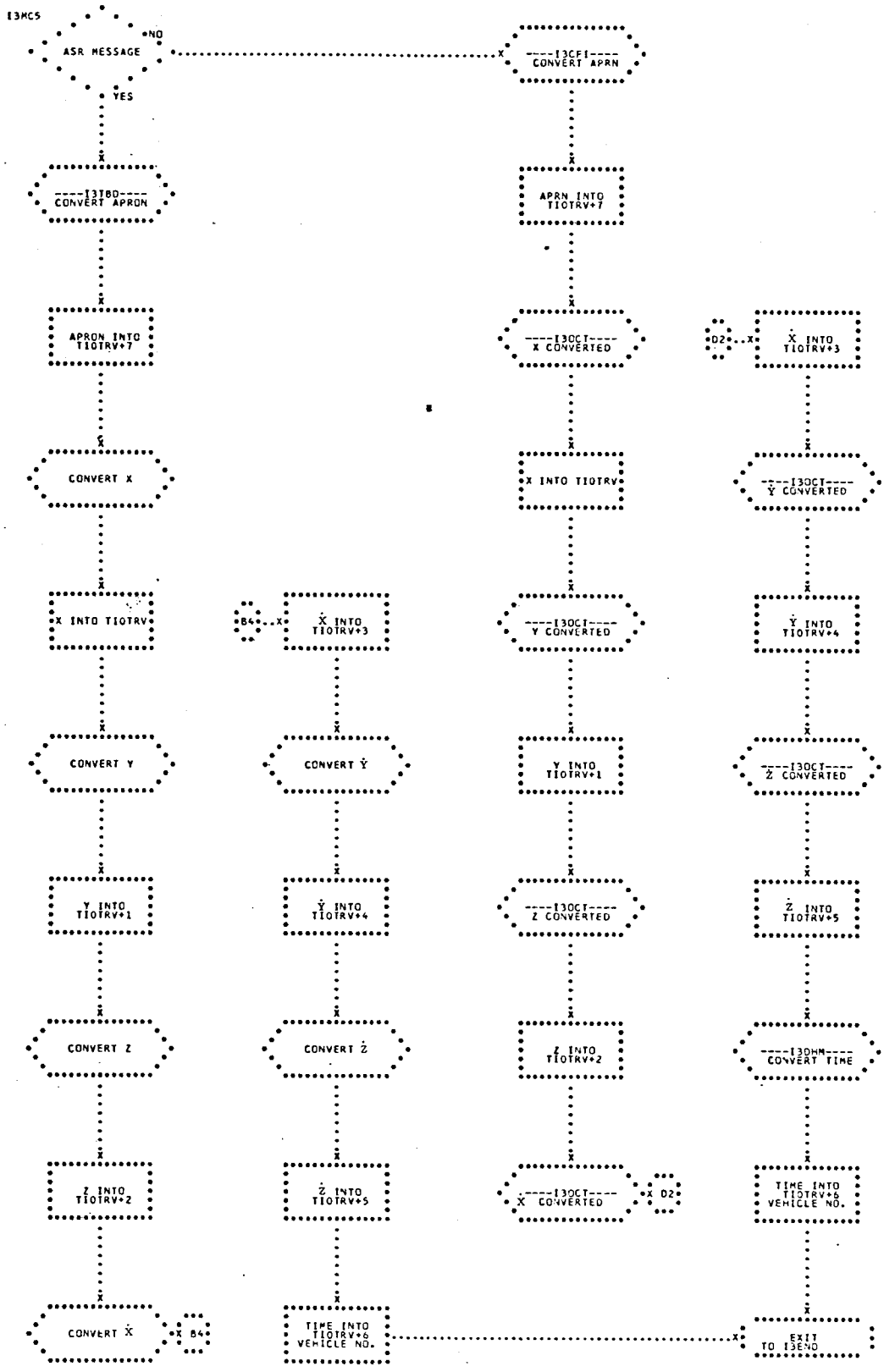
I3MCS
ASR MESSAGE
NO
YES
----I3CFI----
CONVERT APRN
----I3TBD----
CONVERT APRON
APRN INTO
TIOTRV+7
APRON INTO
TIOTRV+7
----I3OCT----
X CONVERTED
D2
X INTO
TIOTRV+3
CONVERT X
X INTO TIOTRV
----I3OCT----
Ẋ CONVERTED
X INTO TIOTRV
B4
Ẋ INTO
TIOTRV+3
----I3OCT----
Y CONVERTED
Ẏ INTO
TIOTRV+4
CONVERT Y
CONVERT Ẏ
Y INTO
TIOTRV+1
----I3OCT----
Ż CONVERTED
Y INTO
TIOTRV+1
Ẏ INTO
TIOTRV+4
----I3OCT----
Z CONVERTED
Ż INTO
TIOTRV+5
CONVERT Z
CONVERT Ż
Z INTO
TIOTRV+2
----I3DHM----
CONVERT TIME
Z INTO
TIOTRV+2
Ż INTO
TIOTRV+5
----I3OCT----
Ẋ CONVERTED
D2
TIME INTO
TIOTRV+6
VEHICLE NO.
CONVERT Ẋ
B4
TIME INTO
TIOTRV+6
VEHICLE NO.
EXIT
TO I3END

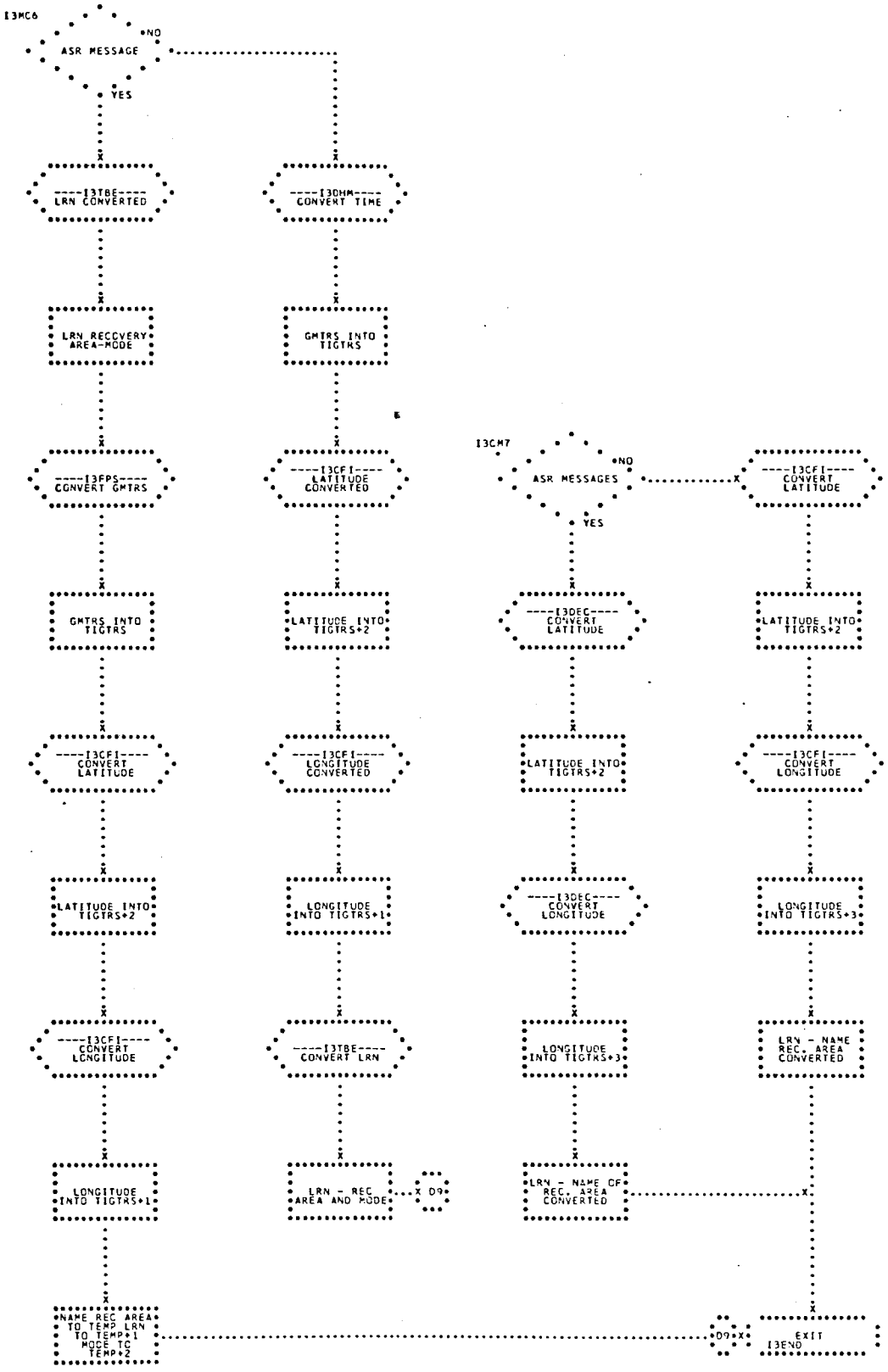
I3MC6
ASR MESSAGE
NO
YES
----I3TBE----
LRN CONVERTED
----I3DHM----
CONVERT TIME
LRN RECOVERY AREA-MODE
GMTRS INTO TIGTRS
----I3FPS----
CONVERT GMTRS
----I3CFI----
LATITUDE CONVERTED
GMTRS INTO TIGTRS
LATITUDE INTO TIGTRS+2
----I3CFI----
CONVERT LATITUDE
----I3CFI----
LONGITUDE CONVERTED
LATITUDE INTO TIGTRS+2
LONGITUDE INTO TIGTRS+1
----I3CFI----
CONVERT LONGITUDE
----I3TBE----
CONVERT LRN
LONGITUDE INTO TIGTRS+1
LRN - REC AREA AND MODE
D9
NAME REC AREA TO TEMP LRN TO TEMP+1 MODE TO TEMP+2
I3CM7
ASR MESSAGES
NO
YES
----I3CFI----
CONVERT LATITUDE
----I3DEC----
CONVERT LATITUDE
LATITUDE INTO TIGTRS+2
----I3CFI----
CONVERT LONGITUDE
----I3DEC----
CONVERT LONGITUDE
LONGITUDE INTO TIGTRS+3
LRN - NAME REC. AREA CONVERTED
LONGITUDE INTO TIGTRS+3
LRN - NAME OF REC. AREA CONVERTED
D9
EXIT
I3END

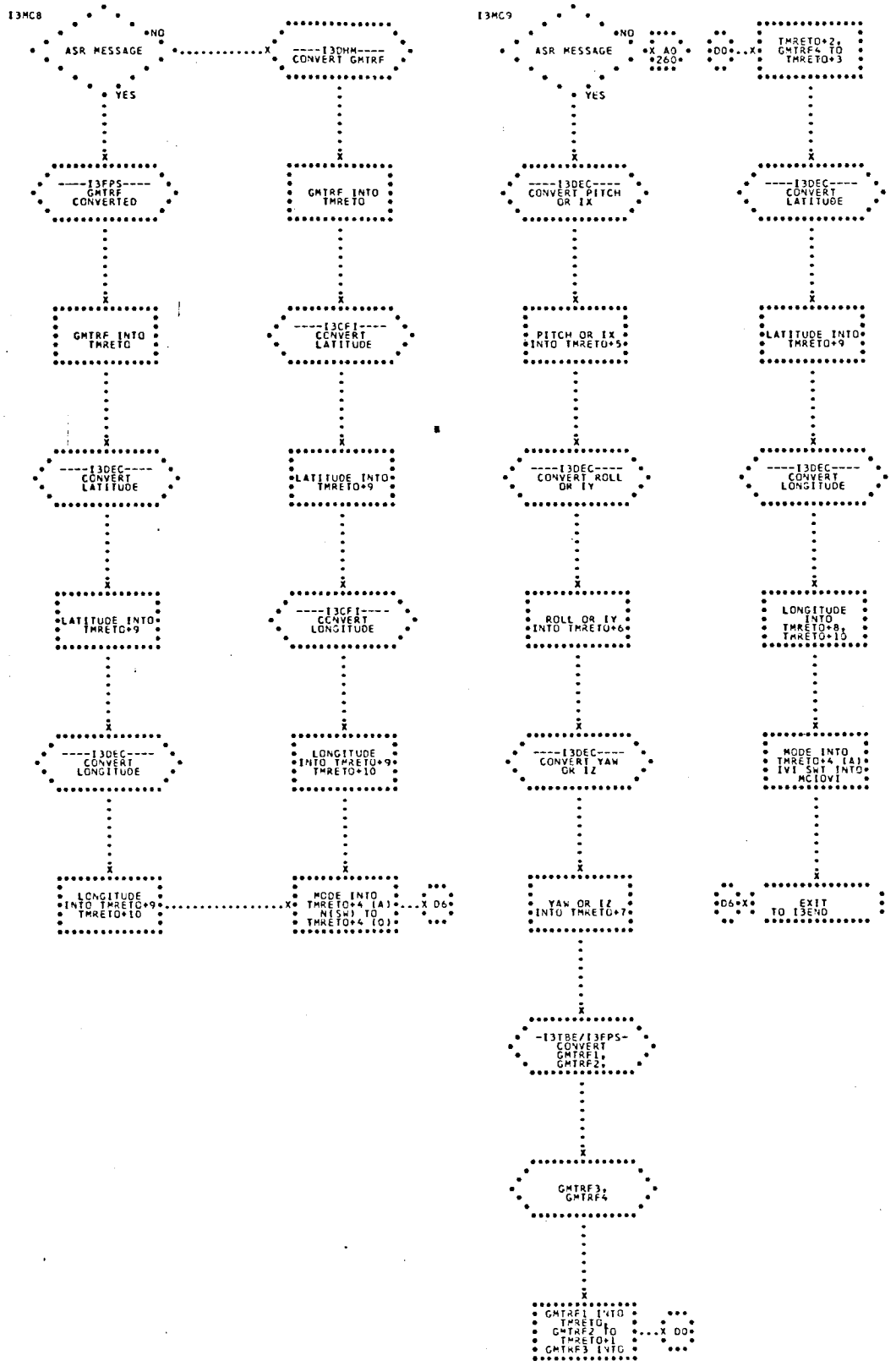
I3MC8
ASR MESSAGE
NO
YES
----I3OHM----
CONVERT GMTRF
----I3FPS----
GMTRF
CONVERTED
GMTRF INTO
TMRETO
GMTRF INTO
TMRETO
----I3CFI----
CONVERT
LATITUDE
----I3DEC----
CONVERT
LATITUDE
LATITUDE INTO
TMRETO+9
LATITUDE INTO
TMRETO+9
----I3CFI----
CONVERT
LONGITUDE
----I3DEC----
CONVERT
LONGITUDE
LONGITUDE
INTO TMRETO+9
TMRETO+10
LONGITUDE
INTO TMRETO+9
TMRETO+10
MODE INTO
TMRETO+4 (A)
N(SW) TO
TMRETO+4 (O)
D6
I3MC9
ASR MESSAGE
NO
YES
A0
260
D0
TMRETO+2,
GMTRF4 TO
TMRETO+3
----I3DEC----
CONVERT PITCH
OR IX
----I3DEC----
CONVERT
LATITUDE
PITCH OR IX
INTO TMRETO+5
LATITUDE INTO
TMRETO+9
----I3DEC----
CONVERT ROLL
OR IY
----I3DEC----
CONVERT
LONGITUDE
ROLL OR IY
INTO TMRETO+6
LONGITUDE
INTO
TMRETO+8,
TMRETO+10
----I3DEC----
CONVERT YAW
OR IZ
MODE INTO
TMRETO+4 (A)
IVI SWT INTO
MCIOVI
YAW OR IZ
INTO TMRETO+7
D6
EXIT
TO I3END
-I3TBE/I3FPS-
CONVERT
GMTRF1,
GMTRF2,
GMTRF3,
GMTRF4
GMTRF1 INTO
TMRETO,
GMTRF2 TO
TMRETO+1
GMTRF3 INTO
D0

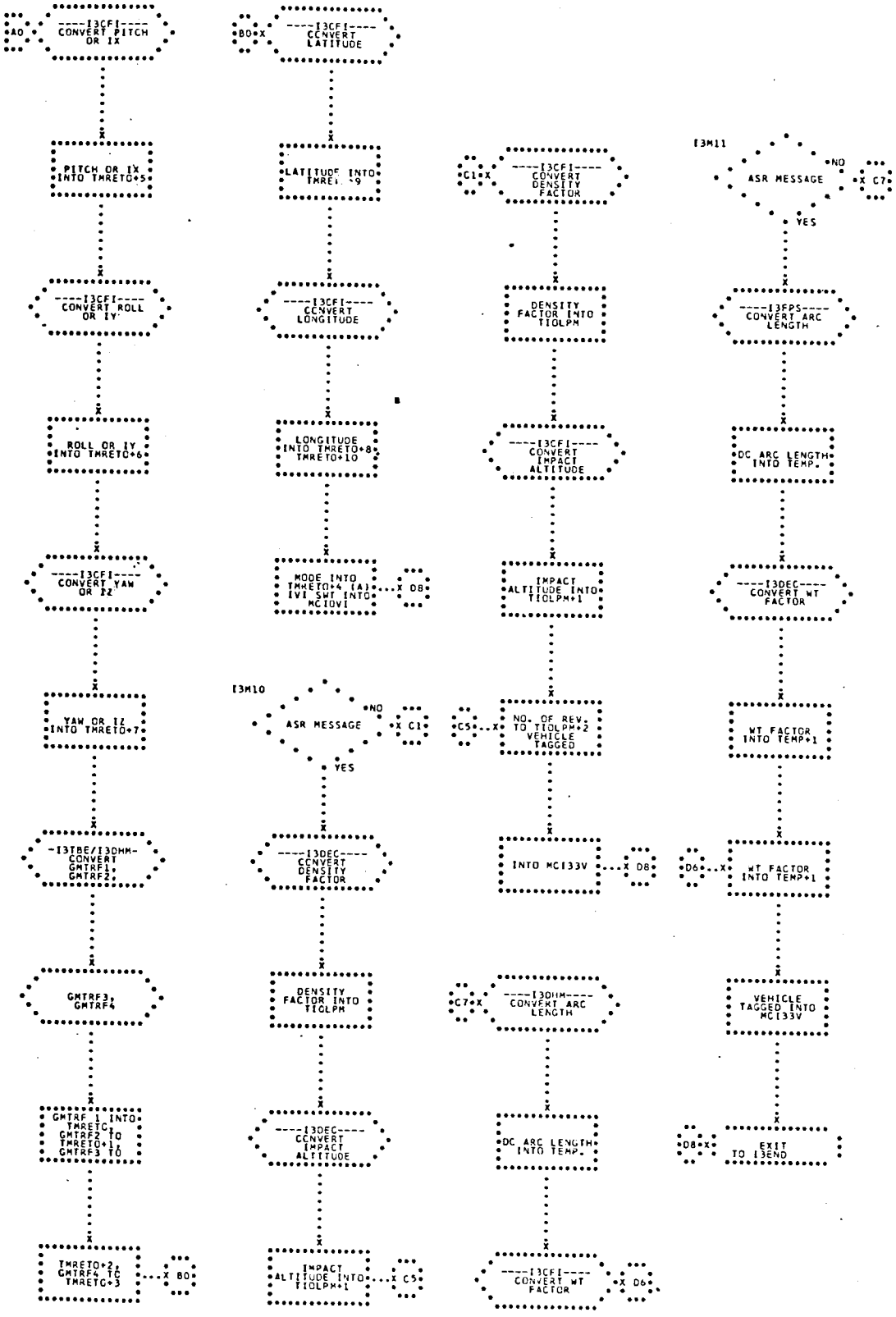
----I3CFI----
CONVERT PITCH OR IX
A0
PITCH OR IX INTO TMRETO+5
----I3CFI----
CONVERT ROLL OR IY
ROLL OR IY INTO TMRETO+6
----I3CFI----
CONVERT YAW OR IZ
YAW OR IZ INTO TMRETO+7
-I3TBE/I3OHM-
CONVERT GMTRF1, GMTRF2,
GMTRF3, GMTRF4
GMTRF 1 INTO TMRETO, GMTRF2 TO TMRETO+1, GMTRF3 TO
TMRETO+2, GMTRF4 TO TMRETO+3
B0
----I3CFI----
CONVERT LATITUDE
LATITUDE INTO TMRETO+9
----I3CFI----
CONVERT LONGITUDE
LONGITUDE INTO TMRETO+8, TMRETO+10
MODE INTO TMRETO+4 (A) IVI SWT INTO MCIOVI
D8
I3M10
ASR MESSAGE
NO
YES
C1
----I3DEC----
CONVERT DENSITY FACTOR
DENSITY FACTOR INTO TIOLPM
----I3DEC----
CONVERT IMPACT ALTITUDE
IMPACT ALTITUDE INTO TIOLPM+1
C5
C1
----I3CFI----
CONVERT DENSITY FACTOR
DENSITY FACTOR INTO TIOLPM
----I3CFI----
CONVERT IMPACT ALTITUDE
IMPACT ALTITUDE INTO TIOLPM+1
NO. OF REV. TO TIOLPM+2 VEHICLE TAGGED
INTO MCI33V
D8
----I3OHM----
CONVERT ARC LENGTH
DC ARC LENGTH INTO TEMP.
----I3CFI----
CONVERT WT FACTOR
D6
C5
I3M11
ASR MESSAGE
NO
YES
C7
----I3FPS----
CONVERT ARC LENGTH
DC ARC LENGTH INTO TEMP.
----I3DEC----
CONVERT WT FACTOR
WT FACTOR INTO TEMP+1
D6
WT FACTOR INTO TEMP+1
VEHICLE TAGGED INTO MCI33V
D8
EXIT TO I3END

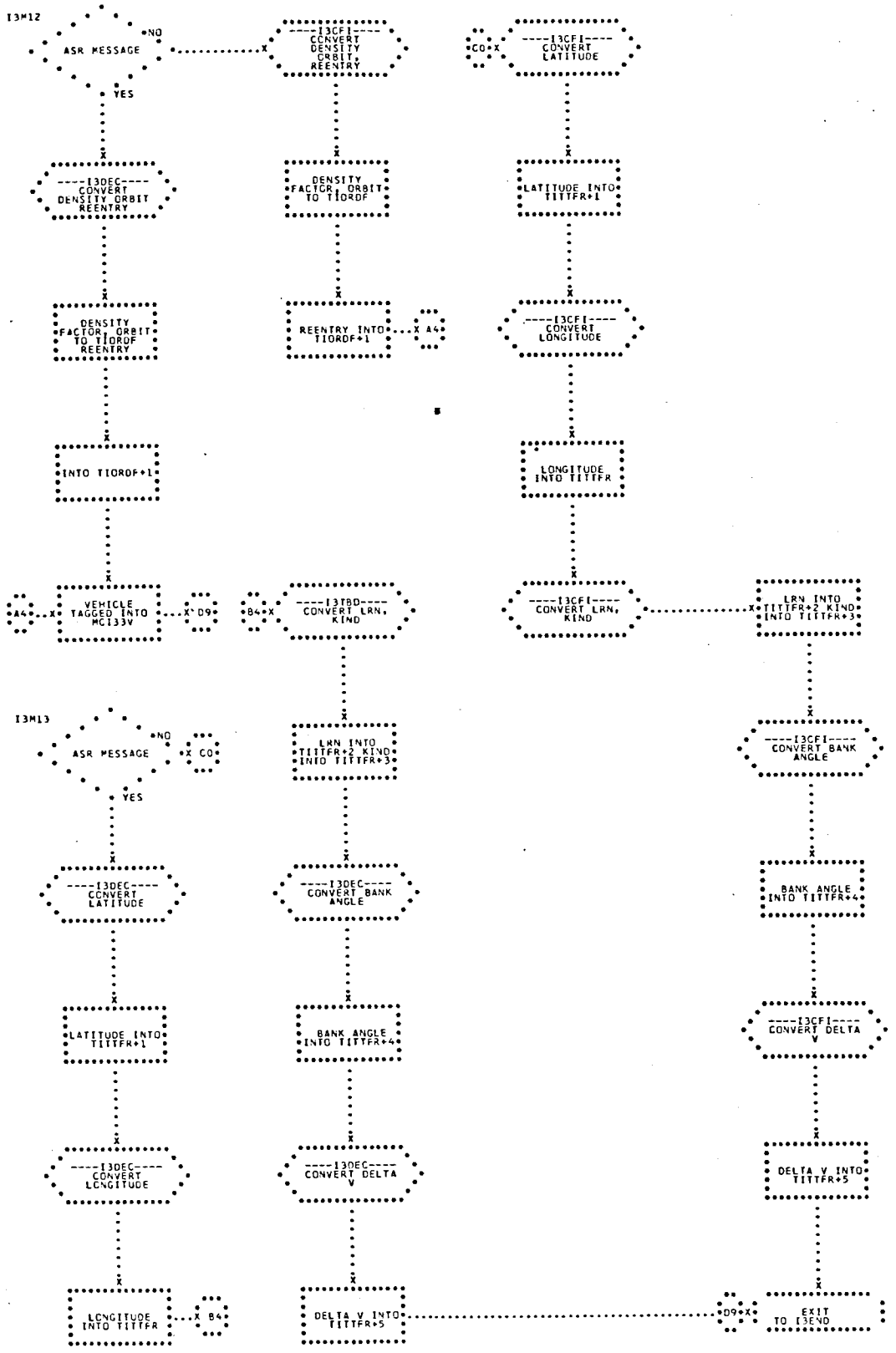
I3M12
ASR MESSAGE
NO
YES
----I3CFI----
CONVERT
DENSITY
ORBIT,
REENTRY
CO
----I3CFI----
CONVERT
LATITUDE
----I3DEC----
CONVERT
DENSITY ORBIT
REENTRY
DENSITY
FACTOR, ORBIT
TO TIORDF
LATITUDE INTO
TITTFR+1
DENSITY
FACTOR, ORBIT
TO TIORDF
REENTRY
REENTRY INTO
TIORDF+1
A4
----I3CFI----
CONVERT
LONGITUDE
INTO TIORDF+1
LONGITUDE
INTO TITTFR
A4
VEHICLE
TAGGED INTO
MC133V
D9
B4
----I3TBD----
CONVERT LRN,
KIND
----I3CFI----
CONVERT LRN,
KIND
LRN INTO
TITTFR+2 KIND
INTO TITTFR+3
I3M13
ASR MESSAGE
NO
YES
CO
LRN INTO
TITTFR+2 KIND
INTO TITTFR+3
----I3CFI----
CONVERT BANK
ANGLE
----I3DEC----
CONVERT
LATITUDE
----I3DEC----
CONVERT BANK
ANGLE
BANK ANGLE
INTO TITTFR+4
LATITUDE INTO
TITTFR+1
BANK ANGLE
INTO TITTFR+4
----I3CFI----
CONVERT DELTA
V
----I3DEC----
CONVERT
LONGITUDE
----I3DEC----
CONVERT DELTA
V
DELTA V INTO
TITTFR+5
LONGITUDE
INTO TITTFR
B4
DELTA V INTO
TITTFR+5
D9
EXIT
TO I3END

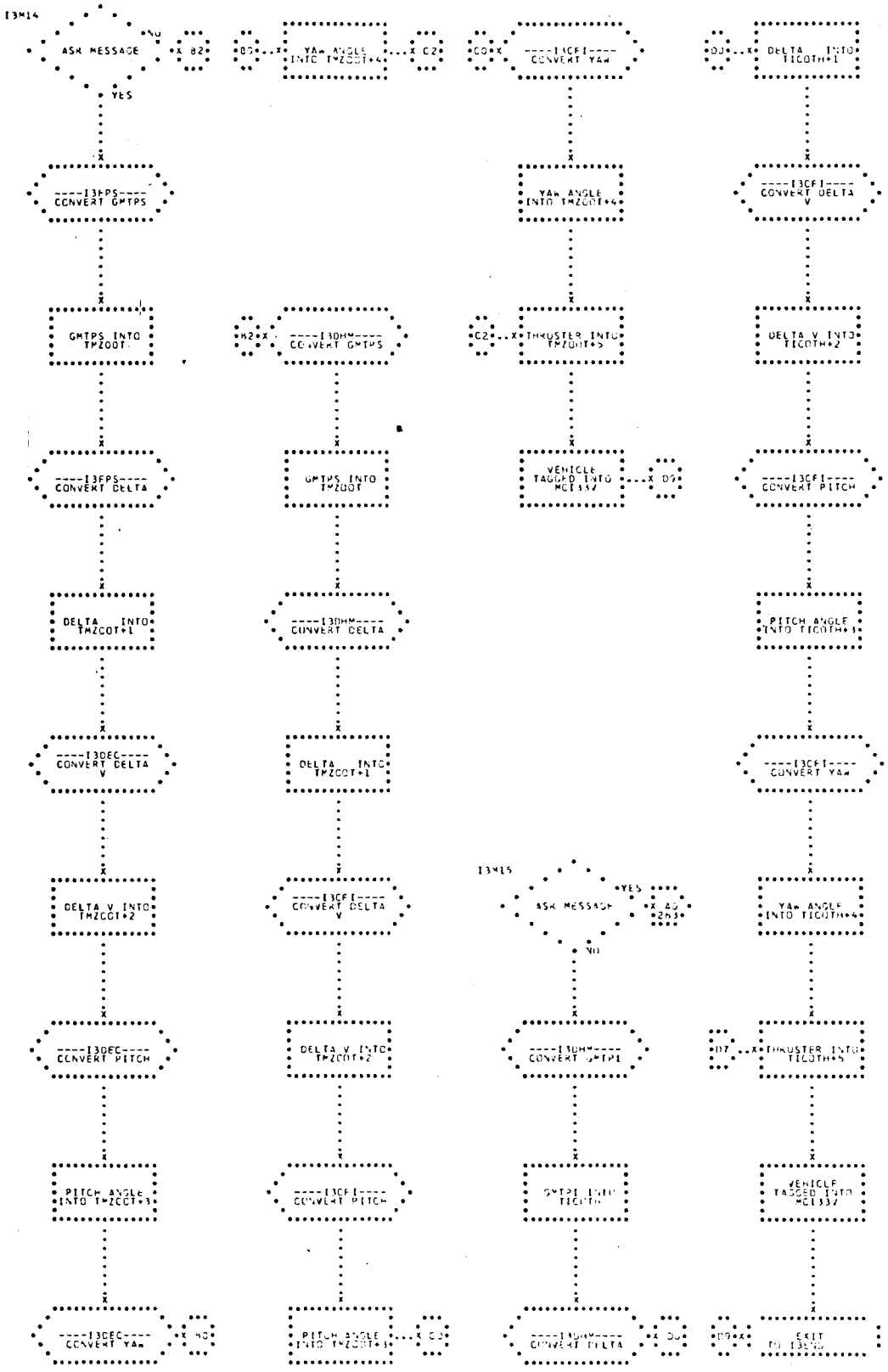
I3M14
ASR MESSAGE
NO
YES
B2
B0
YAW ANGLE INTO TMZOOT+4
C2
C0
----I3CFI---- CONVERT YAW
D0
DELTA INTO TICOTH+1
----I3FPS---- CONVERT GMTPS
YAW ANGLE INTO TMZOOT+4
----I3CFI---- CONVERT DELTA V
GMTPS INTO TMZOOT
B2
----I3DHM---- CONVERT GMTPS
C2
THRUSTER INTO TMZOOT+5
DELTA V INTO TICOTH+2
----I3FPS---- CONVERT DELTA
GMTPS INTO TMZOOT
VEHICLE TAGGED INTO MCI337
D9
----I3CFI---- CONVERT PITCH
DELTA INTO TMZOOT+1
----I3DHM---- CONVERT DELTA
PITCH ANGLE INTO TICOTH+3
----I3DEC---- CONVERT DELTA V
DELTA INTO TMZOOT+1
----I3CFI---- CONVERT YAW
DELTA V INTO TMZOOT+2
----I3CFI---- CONVERT DELTA V
I3M15
ASR MESSAGE
YES
NO
AG 263
YAW ANGLE INTO TICOTH+4
----I3DEC---- CONVERT PITCH
DELTA V INTO TMZOOT+2
----I3DHM---- CONVERT GMTPI
D7
THRUSTER INTO TICOTH+5
PITCH ANGLE INTO TMZOOT+3
----I3CFI---- CONVERT PITCH
GMTPI INTO TICOTH
VEHICLE TAGGED INTO MCI337
----I3DEC---- CONVERT YAW
PITCH ANGLE INTO TMZOOT+3
----I3DHM---- CONVERT DELTA
D9
EXIT TO I3END

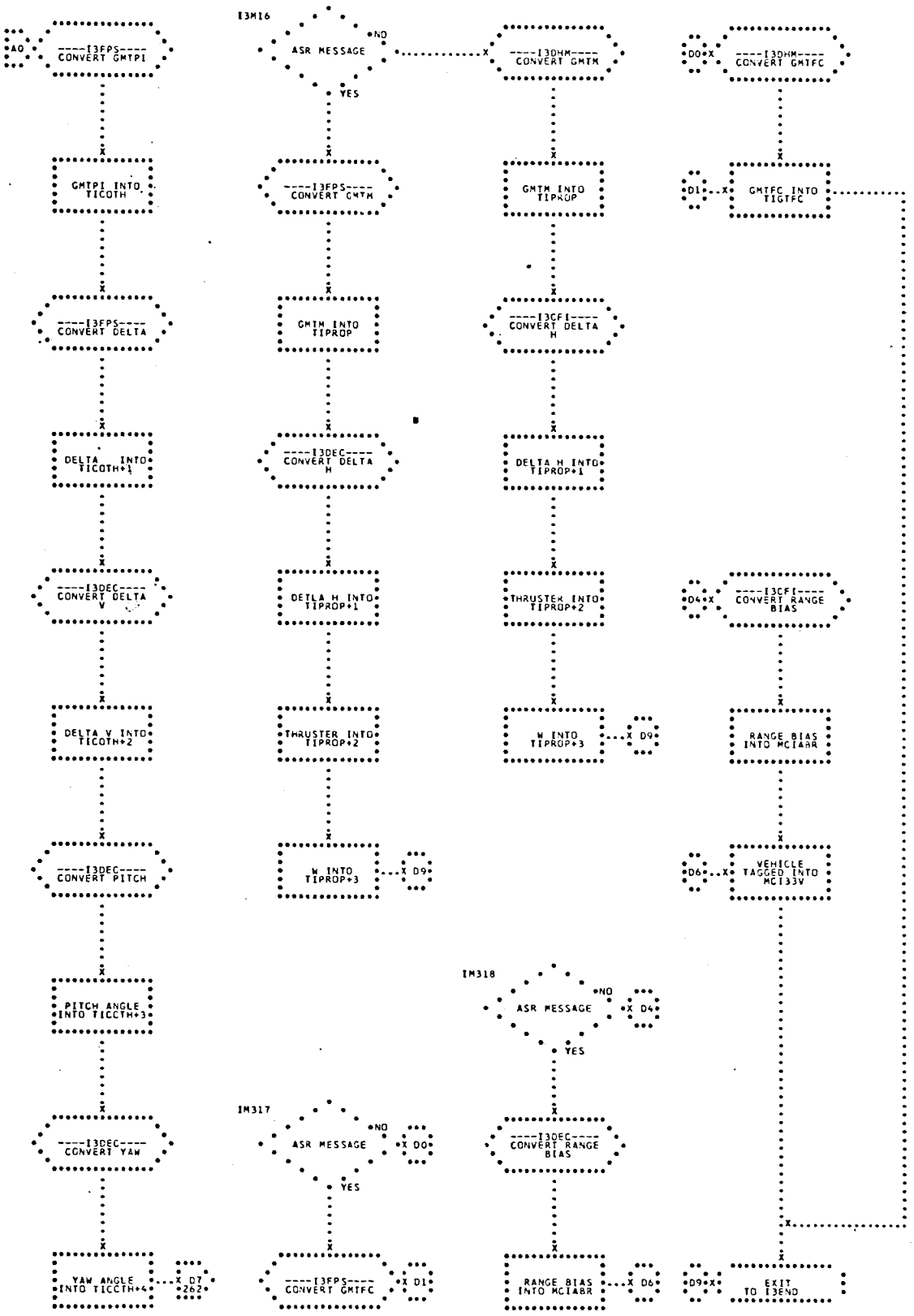
A0
----I3FPS----
CONVERT GMTPI
GMTPI INTO
TICOTH
----I3FPS----
CONVERT DELTA
DELTA INTO
TICOTH+1
----I3DEC----
CONVERT DELTA
V
DELTA V INTO
TICOTH+2
----I3DEC----
CONVERT PITCH
PITCH ANGLE
INTO TICCTH+3
----I3DEC----
CONVERT YAW
YAW ANGLE
INTO TICCTH+4
D7
262
I3M16
ASR MESSAGE
NO
YES
----I3FPS----
CONVERT GMTM
GMTM INTO
TIPROP
----I3DEC----
CONVERT DELTA
H
DELTA H INTO
TIPROP+1
THRUSTER INTO
TIPROP+2
W INTO
TIPROP+3
D9
IM317
ASR MESSAGE
NO
YES
D0
----I3FPS----
CONVERT GMTFC
D1
----I3DHM----
CONVERT GMTM
GMTM INTO
TIPROP
----I3CFI----
CONVERT DELTA
H
DELTA H INTO
TIPROP+1
THRUSTER INTO
TIPROP+2
W INTO
TIPROP+3
D9
IM318
ASR MESSAGE
NO
YES
D4
----I3DEC----
CONVERT RANGE
BIAS
RANGE BIAS
INTO MCIABR
D6
D0
----I3DHM----
CONVERT GMTFC
D1
GMTFC INTO
TIGTFC
D4
----I3CFI----
CONVERT RANGE
BIAS
RANGE BIAS
INTO MCIABR
D6
VEHICLE
TAGGED INTO
MCI33V
D9
EXIT
TO I3END

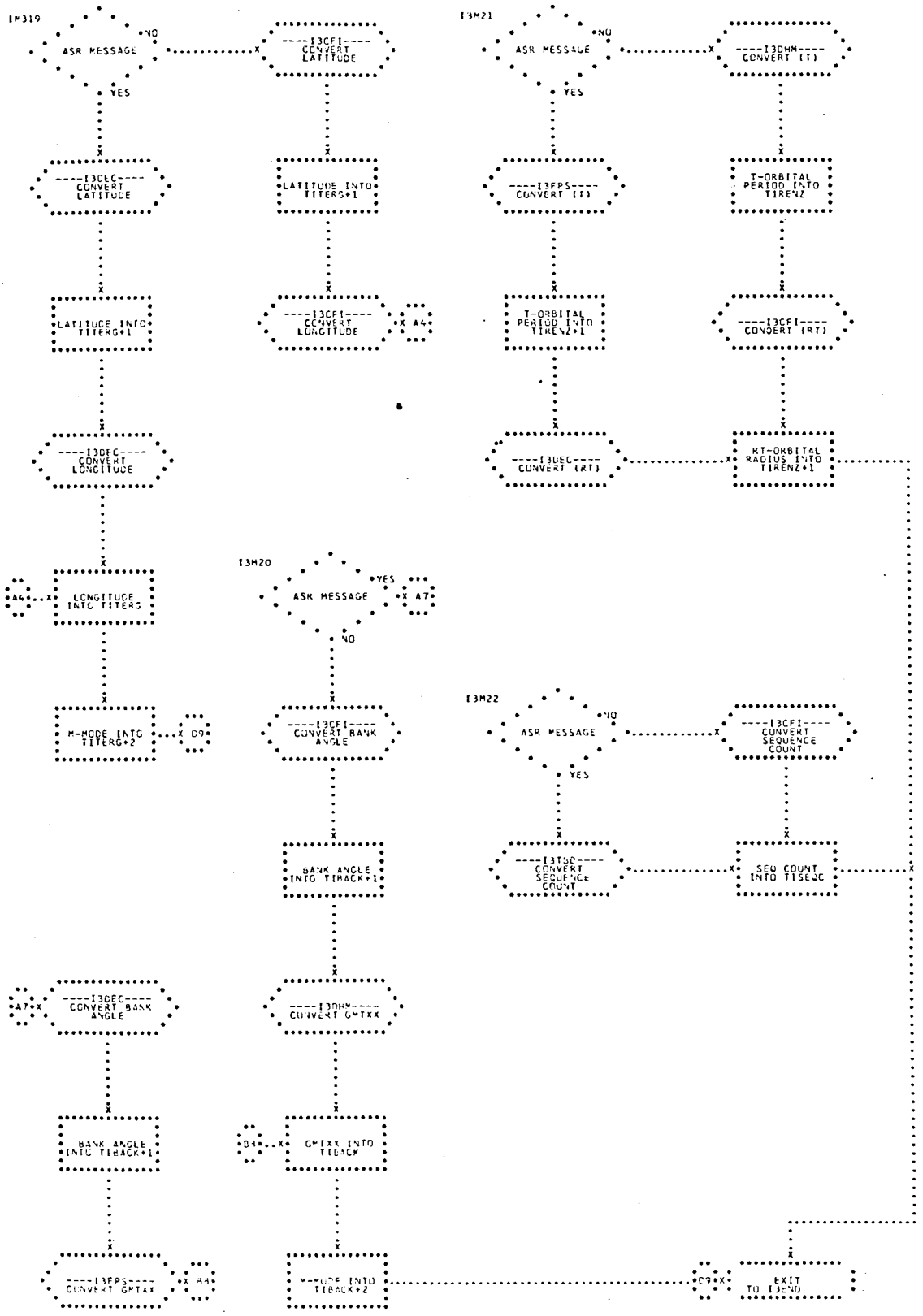
I3M19
ASR MESSAGE
NO
YES
----I3CFI----
CONVERT
LATITUDE
----I3CLC----
CONVERT
LATITUDE
LATITUDE INTO
TITERG+1
LATITUDE INTO
TITERG+1
----I3CFI----
CONVERT
LONGITUDE
A4
----I3DEC----
CONVERT
LONGITUDE
A4
LONGITUDE
INTO TITERG
M-MODE INTO
TITERG+2
D9
I3M20
ASR MESSAGE
YES
A7
NO
----I3CFI----
CONVERT BANK
ANGLE
BANK ANGLE
INTO TIBACK+1
A7
----I3DEC----
CONVERT BANK
ANGLE
----I3DHM----
CONVERT GMTXX
BANK ANGLE
INTO TIBACK+1
D4
GMTXX INTO
TIBACK
----I3FPS----
CONVERT GMTAX
A4
M-MODE INTO
TIBACK+2
D9
I3M21
ASR MESSAGE
NO
YES
----I3DHM----
CONVERT (T)
----I3FPS----
CONVERT (T)
T-ORBITAL
PERIOD INTO
TIRENZ
T-ORBITAL
PERIOD INTO
TIRENZ+1
----I3CFI----
CONVERT (RT)
----I3DEC----
CONVERT (RT)
RT-ORBITAL
RADIUS INTO
TIRENZ+1
I3M22
ASR MESSAGE
NO
YES
----I3CFI----
CONVERT
SEQUENCE
COUNT
----I3TDC----
CONVERT
SEQUENCE
COUNT
SEQ COUNT
INTO TISEQC
EXIT
TO I3END

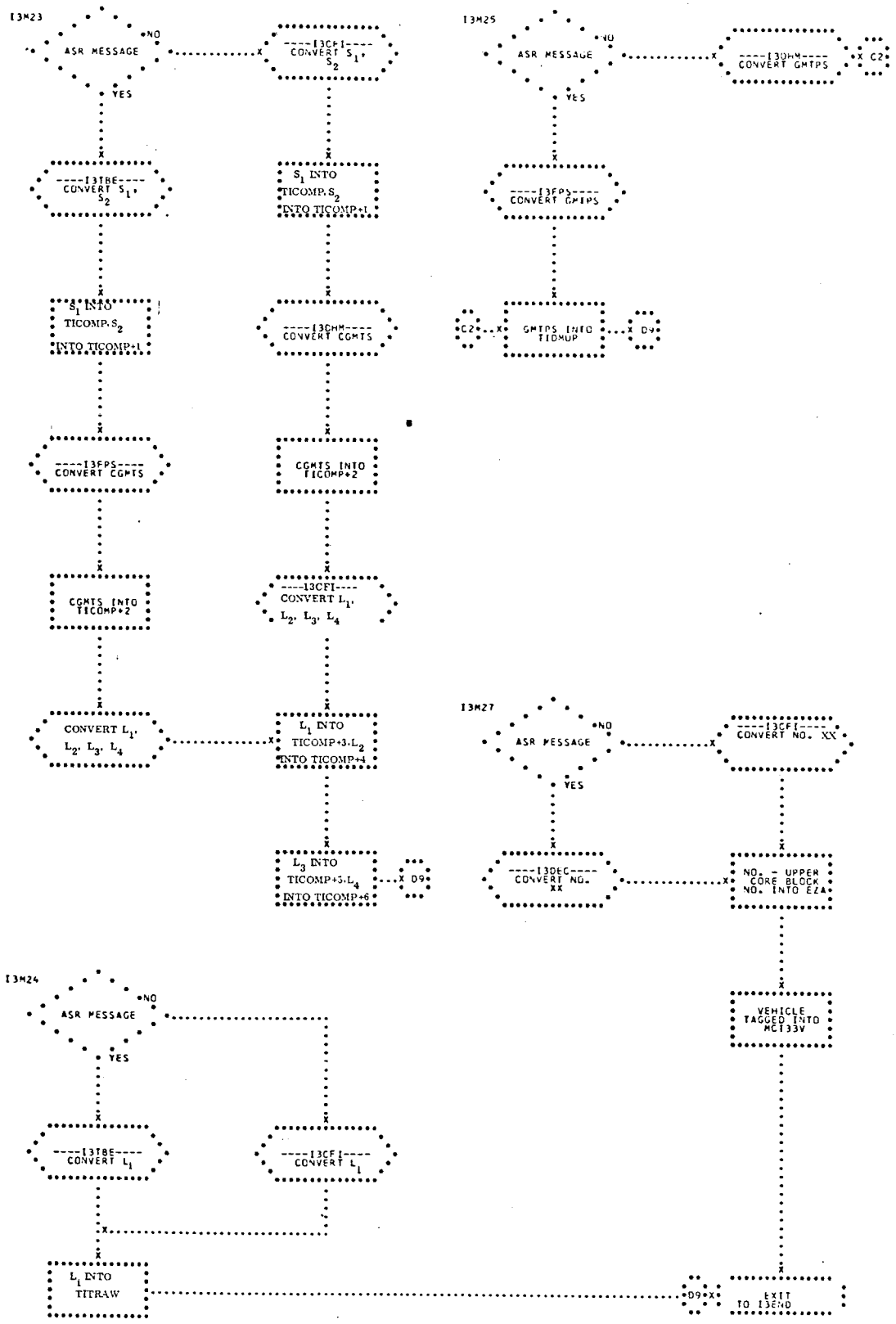
I3M23
ASR MESSAGE
NO
YES
----I3CFI----
CONVERT $S_1$, $S_2$
----I3TBE----
CONVERT $S_1$, $S_2$
$S_1$ INTO TICOMP, $S_2$ INTO TICOMP+1
$S_1$ INTO TICOMP, $S_2$ INTO TICOMP+1
----I3DHM----
CONVERT CGMTS
----I3FPS----
CONVERT CGMTS
CGMTS INTO TICOMP+2
CGMTS INTO TICOMP+2
----I3CFI----
CONVERT $L_1$, $L_2$, $L_3$, $L_4$
CONVERT $L_1$, $L_2$, $L_3$, $L_4$
$L_1$ INTO TICOMP+3, $L_2$ INTO TICOMP+4
$L_3$ INTO TICOMP+5, $L_4$ INTO TICOMP+6
D9
I3M25
ASR MESSAGE
NO
YES
----I3DHM----
CONVERT GMTPS
C2
----I3FPS----
CONVERT GMTPS
C2
GMTPS INTO TIDMUP
D9
I3M27
ASR MESSAGE
NO
YES
----I3CFI----
CONVERT NO. XX
----I3DEC----
CONVERT NO. XX
NO. - UPPER CORE BLOCK NO. INTO EZA
VEHICLE TAGGED INTO MCI33V
I3M24
ASR MESSAGE
NO
YES
----I3TBE----
CONVERT $L_1$
----I3CFI----
CONVERT $L_1$
$L_1$ INTO TITRAW
D9
EXIT TO I3END

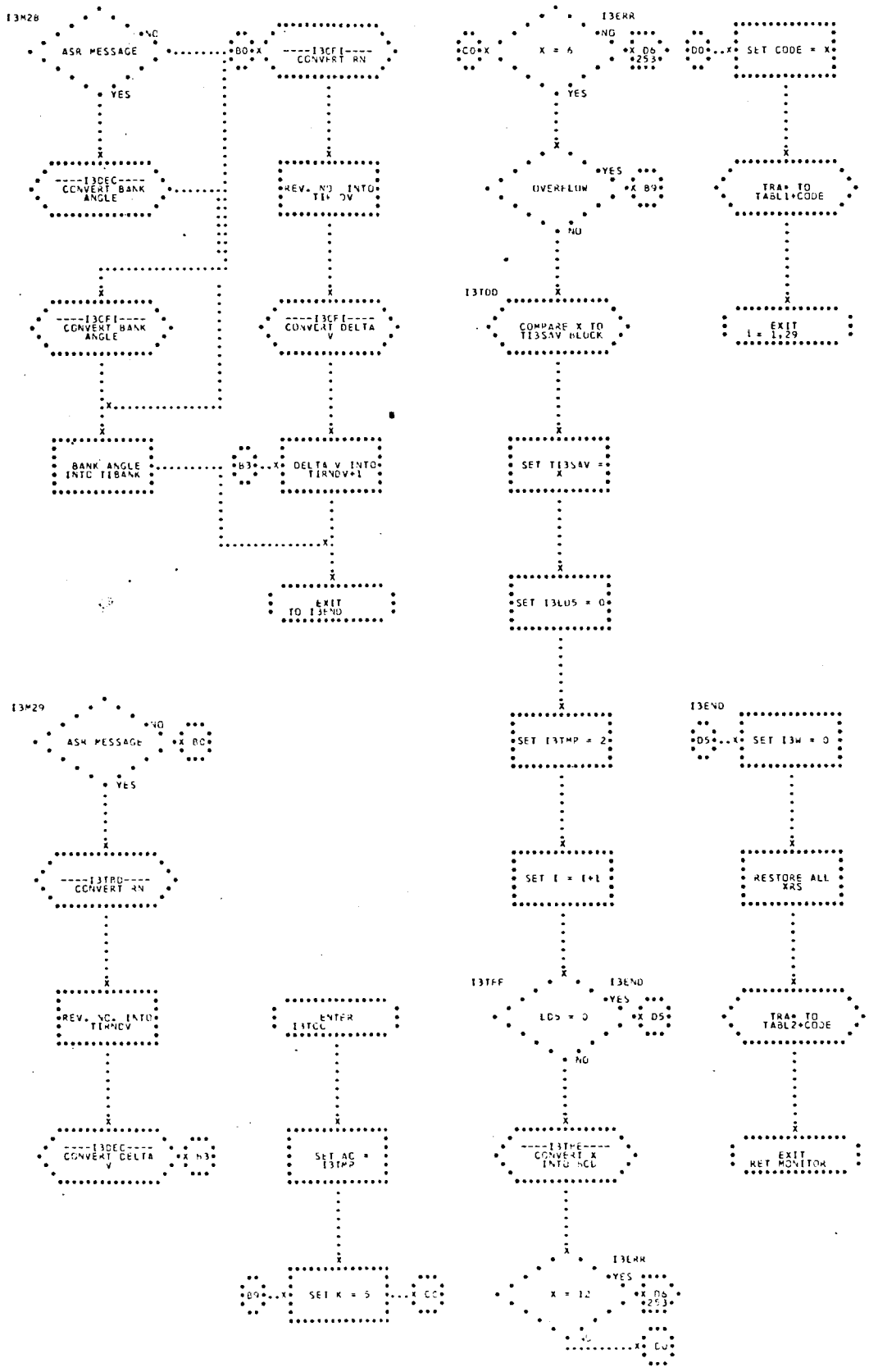
I3M28
ASR MESSAGE
NO
YES
B0
----I3CFI----
CONVERT RN
----I3DEC----
CONVERT BANK
ANGLE
REV. NO. INTO
TIRNDV
----I3CFI----
CONVERT BANK
ANGLE
----I3CFI----
CONVERT DELTA
V
BANK ANGLE
INTO TIBANK
B3
DELTA V INTO
TIRNDV+1
EXIT
TO I3END
I3ERR
C0
X = 6
NO
X D6
253
D0
SET CODE = X
YES
OVERFLOW
YES
X B9
NO
TRA. TO
TABL1+CODE
I3TOD
COMPARE X TO
TI3SAV BLOCK
EXIT
I = 1,29
SET TI3SAV =
X
SET I3LOS = 0
I3M29
ASR MESSAGE
NO
X B0
YES
SET I3TMP = 2
I3END
D5
SET I3W = 0
----I3TRD----
CONVERT RN
SET I = I+1
RESTORE ALL
XRS
REV. NO. INTO
TIRNDV
ENTER
I3TCC
I3TFF
LOS = 0
I3END
YES
X D5
TRA. TO
TABL2+CODE
NO
----I3DEC----
CONVERT DELTA
V
X B3
SET AC =
I3TMP
----I3THE----
CONVERT X
INTO BCD
EXIT
RET MONITOR
B9
SET K = 5
X C0
I3ERR
X = 12
YES
X D6
253
NO
X C0

| TABLE A1 | | TABLE A2 | |
|---|---|---|---|
| TABL1 | ERR | TABL2 | ERR |
| +1 | MC1 | +1 | MFMN01 |
| +2 | MC2 | +2 | MFMN02 |
| +3 | MC3 | +3 | MFMN03 |
| +4 | MC4 | +4 | MFMN04 |
| +5 | MC5 | +5 | MFMN05 |
| +6 | MC6 | +6 | MFMN06 |
| +7 | MC7 | +7 | MFMN07 |
| +8 | MC8 | +8 | MFMN08 |
| +9 | MC9 | +9 | MFMN09 |
| +10 | M10 | +10 | MFMN10 |
| +11 | M11 | +11 | MFMN11 |
| +12 | M12 | +12 | MFMN12 |
| +13 | M13 | +13 | MFMN13 |
| +14 | M14 | +14 | MFMN14 |
| +15 | M15 | +15 | MFMN15 |
| +16 | M16 | +16 | MFMN16 |
| +17 | M17 | +17 | MFMN17 |
| +18 | M18 | +18 | MFMN18 |
| +19 | M19 | +19 | MFMN19 |
| +20 | M20 | +20 | MFMN20 |
| +21 | M21 | +21 | MFMN21 |
| +22 | M22 | +22 | MFMN22 |
| +23 | M23 | +23 | MFMN23 |
| +24 | M24 | +24 | MFMN24 |
| +25 | M25 | +25 | MFMN25 |
| +26 | ERR | +26 | ERR |
| +27 | M27 | +27 | MFMN27 |
| +28 | M28 | +28 | MFMN28 |
| +29 | M29 | +29 | MFMN29 |

## 49. MFMANI - MONITOR SUFFIX TO IOMANI

WHEN IOMANI DETERMINES THAT EITHER A MESSAGE IS IN ERROR OR THE INCOMING MESSAGE IS INCOMPLETE, AN EXIT IS MADE TO MFMANI WHERE THE PROPER ACTION IS TAKEN. (SEE FLOWCHART.)

### INPUT

INPUT TO MFMANI IS DETERMINED BY THE CONTENTS OF THE ACCUMULATOR. A NEGATIVE ACCUMULATOR INDICATES A MESSAGE REJECTION, A POSITIVE ACCUMULATOR INDICATES A REQUEST BY IOMANI FOR MORE INPUT WORDS. IN THE LATTER CASE, THE NUMBER OF REQUIRED WORDS IS CONTAINED IN THE DECREMENT OF THE ACCUMULATOR.

### OUTPUT

CELLS TMTTIN+17, MCMPTE, AND MCWDCT ARE THE OUTPUT OF MFMANI, DEPENDING ON THE CONDITIONS OF THE RETURN FROM IOMANI.

| LOCATION | AC NEGATIVE | AC POSITIVE X LT/=6 | AC POSITIVE X GT 6 |
|---|---|---|---|
| D(TMTTIN+17) | 6 | X | 6 |
| A(MCMPTE) | 6 | X | 6 |
| A(MCWDCT) | 6 | X | X |

WHERE X IS THE NUMBER OF WORDS REQUESTED BY IOMANI.

### METHOD

IF MFMANI FINDS THE ACCUMULATOR NEGATIVE, THE MESSAGE WAS REJECTED AND THE FOLLOWING ON-LINE MESSAGE IS QUEUED - ''MANUAL INSERTION REJECTED, ENTER MESSAGE

AGAIN.'' MFMANI PROVIDES THE OUTPUT LISTED ABOVE, TURNS OFF THE A INDICATOR FOR IOMANI, AND EXITS TO MOPRIO.

IF THE ACCUMULATOR IS POSITIVE ON ENTRY, MFMANI COMPARES THE DECREMENT OF THE ACCUMULATOR TO SIX AND PROVIDES THE OUTPUT LISTED ABOVE ON THE BASIS OF THIS COMPARISON. THE A INDICATOR FOR IOMANI IS TURNED OFF, AND MFMANI EXITS TO MOPRIO.

USAGE

MFMANI IS ENTERED FROM IOMANI AND EXITS TO MOPRIO.

A) STORAGE REQUIRED - 28 LOCATIONS.

B) MACROS -

QENBA
QENBZ
QUEUE
TRNOF

C) PARAMETERS -

A
MNTTIN

D) COMMUNICATION CELLS -

MCMPTE
MCWDCT

E) TABLE -

TMTTIN

F) CONSTANTS -

KD0006

G) TIME REQUIRED -

1) MINIMUM - 0.047 MILLISECOND
2) MAXIMUM - 0.140 MILLISECOND

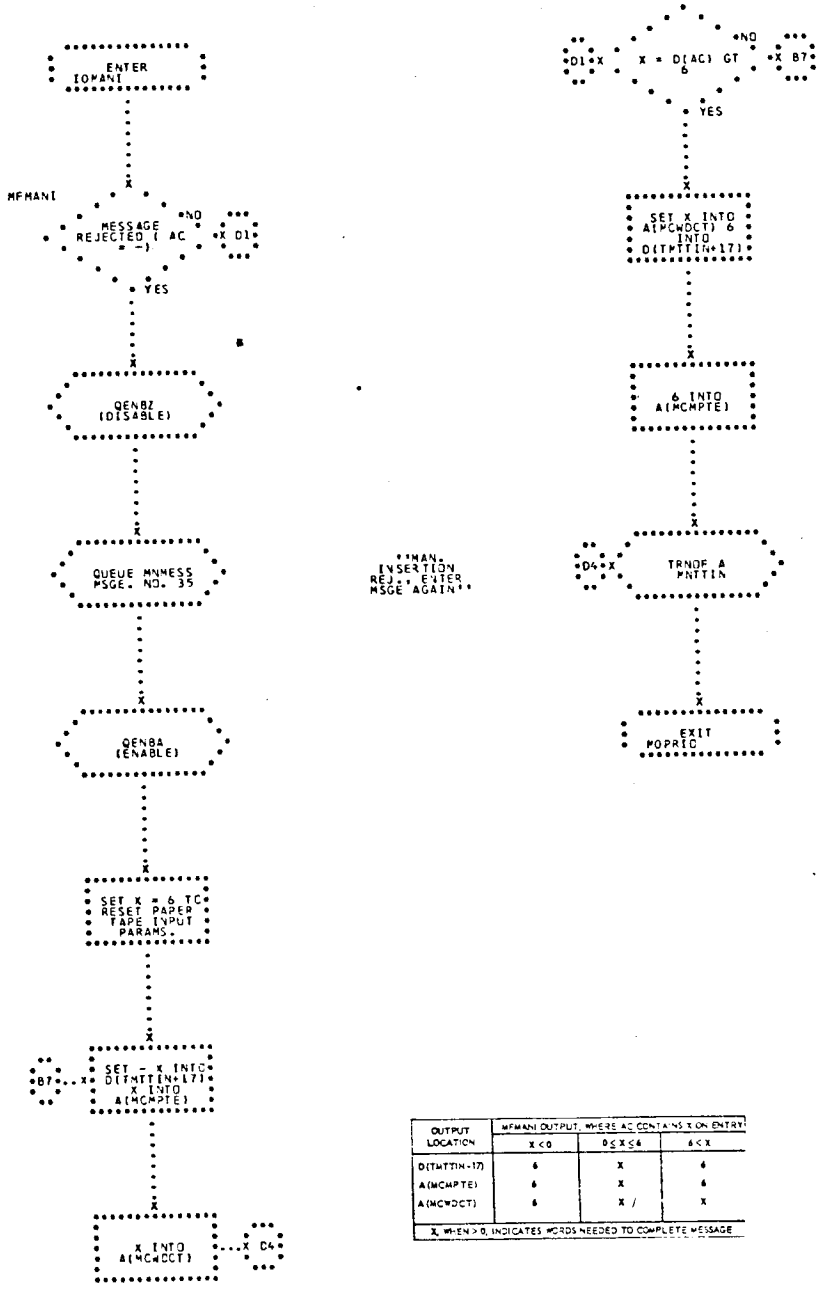


| OUTPUT LOCATION | MFMANI OUTPUT, WHERE AC CONTAINS X ON ENTRY | | |
|---|---|---|---|
| | $X < 0$ | $0 \leq X \leq 4$ | $4 < X$ |
| D(TMTTIN-17) | 6 | X | 6 |
| A(MCMPTE) | 6 | X | 6 |
| A(MCWDCT) | 6 | X / | X |

X, WHEN > 0, INDICATES WORDS NEEDED TO COMPLETE MESSAGE

## 50. MFMN01 - MONITOR LONGITUDE AND LANDING REVOLUTION NUMBER SUFFIX TO IOMANI

AFTER THE LONGITUDE (FLOATING-POINT DEGREES) AND LANDING REVOLUTION NUMBER POSITIVE INTEGER) HAVE BEEN INSERTED SUCCESSFULLY, MFMN01 RECEIVES CONTROL FROM IOMANI AND INITIATES THE CYCLE TO COMPUTE THE GMTRC FOR LANDING AT THIS LONGITUDE AND REVOLUTION. (SEE FLOWCHART)

INPUT

A) TIGMTL CONTAINS THE INSERTED LONGITUDE IN FLOATING POINT DEGREES.

B) TIGMTL+1 CONTAINS THE INSERTED REVOLUTION NUMBER IN THE ADDRESS.

OUTPUT

A) TIGMTL CONTAINS THE INSERTED LONGITUDE CONVERTED TO POSITIVE RADIANS.

B) TIGMTL+1 LRN

METHOD

IF THE PAPER TAPE INSERTION OF LONGITUDE AND LANDING REVOLUTION NUMBER DOES NOT COMPARE WITH THE LAST SUCH INSERTION, THE FOLLOWING TWO MESSAGES ARE PRINTED ON-LINE -

1. IQ... LONGITUDE DEGREES
2. IO... LANDING REVOLUTION NO.

IF THE INSERTION DOES COMPARE, THE PROCESSOR MYGMT6 IS QUEUED FOR COMPUTING THE GMTRC OF THE LONGITUDE AND LANDING REVOLUTION NUMBER.

USAGE

MFMN01 IS ENTERED FROM IOMANI AND EXITS TO MFMANR

A) STORAGE REQUIRED -

34 CELLS

B) PARAMETERS -

MNMESS

MNGMT6

C) TABLES -

TIGMTL

D) CONSTANTS -

K00360

KO.IDG

K00033

E) TIMING -

0.265 MILLISECONDS, MAXIMUM

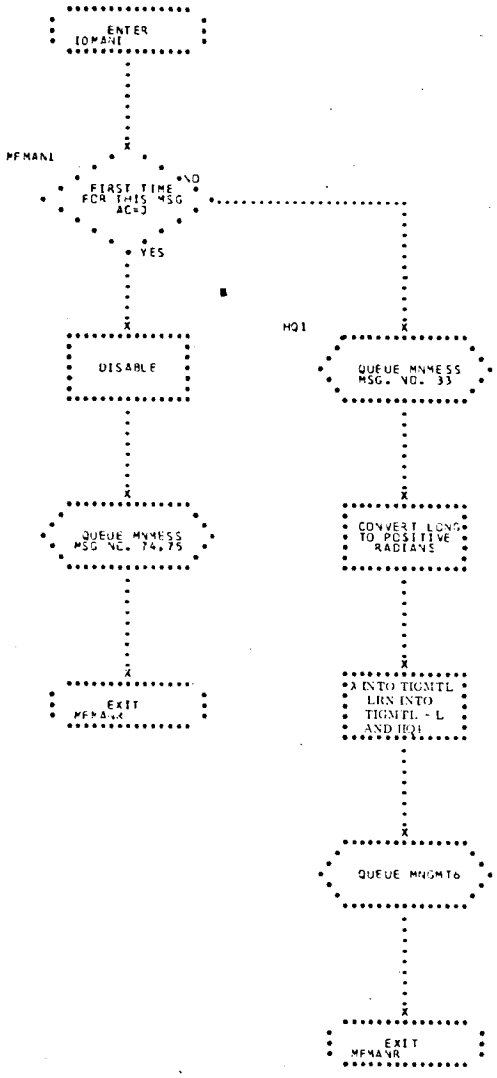
ENTER
IOMANI
MFMANI
FIRST TIME FOR THIS MSG AC=0
NO
YES
HQ1
DISABLE
QUEUE MNMESS MSG. NO. 33
QUEUE MNMESS MSG NO. 74,75
CONVERT LONG TO POSITIVE RADIANS
EXIT
MFMANX
λ INTO TIGMTL
LRN INTO TIGMTL - L
AND HQ1
QUEUE MNGMT6
EXIT
MFMANR

## 51. MFMN02 - MONITOR ABORT/ORBIT SWITCH SUFFIX TO IOMANI

MFMN02 RECEIVES CONTROL FROM IOMANI AFTER A SUCCESSFUL INSERTION OF THE ABORT-ORBIT SWITCH (1 FOR ORBIT, 2 FOR ABORT). THE PRIMARY PURPOSE OF MFMN02 IS TO EFFECT AN ON-LINE MESSAGE INDICATING A SUCCESSFUL INSERTION. (SEE FLOWCHART.)

INPUT

MCIAOS CONTAINS 1 FOR ORBIT OR 2 FOR ABORT.

OUTPUT

MCMAOS CONTAINS 1 FOR ORBIT OR 2 FOR ABORT.

METHOD

MFMN02 RECEIVES CONTROL FROM IOMANI AND QUEUES THE ON-LINE MESSAGE DEFINED BY THE MESSAGE NUMBER 256+C (MCIAOS). MCIAOS CONTAINS A 1 AND WILL INITIATE THE PRINTING. IQ. . . ORBIT SWITCH, WHEREAS A 2 WILL INITIATE THE PRINTING. IQ . . . ABORT SWITCH. THE DESIGNATED PHASE WILL BE ACCOMPLISHED AND MFMN02 WILL RETURN TO MFMANR.

USAGE

MFMN02 ENTERS FROM IOMANI AND EXITS TO MFMANR.

A) STORAGE REQUIRED -
   14 CELLS
B) PARAMETERS -
   MNMESS
C) COMMUNICATION CELLS -
   MCIAOS
   MCMAOS

D) CONSTANTS -

K00033

E) TIMING -

0.119 MILLISECOND, MAXIMUM

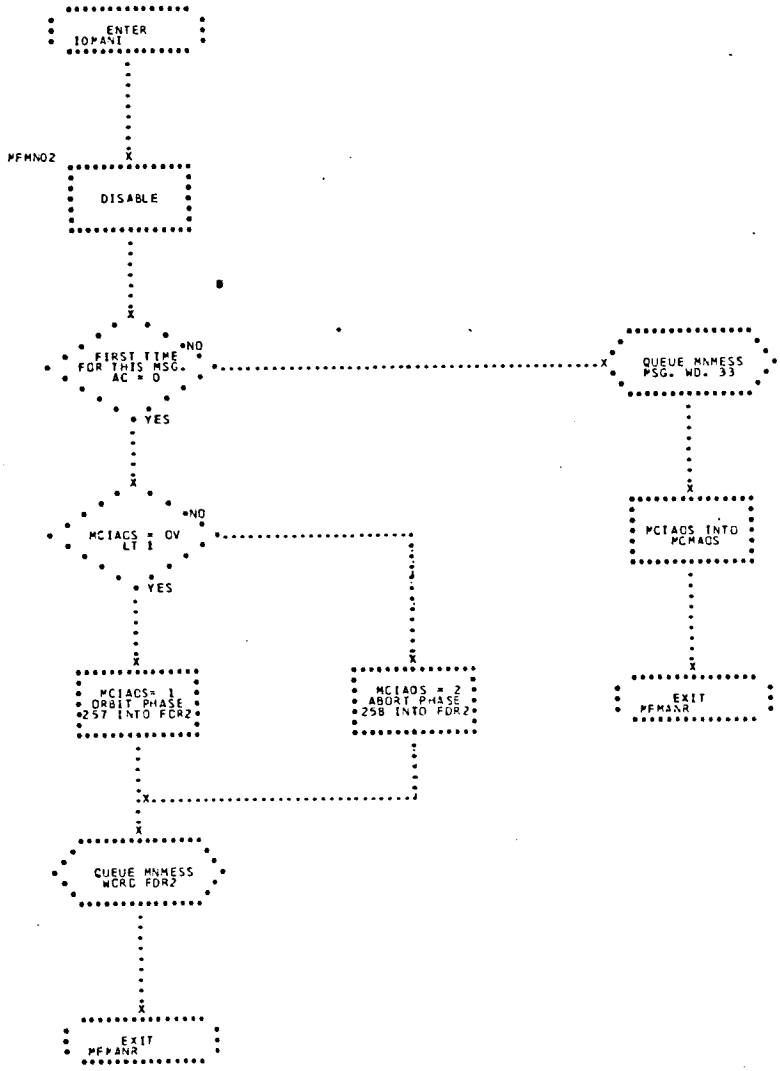
ENTER
IOMANI
MFMNO2
DISABLE
FIRST TIME
FOR THIS MSG.
AC = 0
NO
YES
QUEUE MNMESS
MSG. WD. 33
MCIAOS = OV
LT 1
NO
YES
MCIAOS INTO
MCMAOS
MCIAOS= 1
ORBIT PHASE
257 INTO FDR2
MCIAOS = 2
ABORT PHASE
258 INTO FDR2
EXIT
MFMANR
QUEUE MNMESS
WCRC FDR2
EXIT
MFMANR

## 52. MFMN03 - IOMANI SUFFIX FCR S/C WEIGHTS

CHANGES IN S/C WEIGHTS, DUE TO LOSS OF ATTITUDE FUEL AND OTHER EXPENDABLES, ARE SYSTEM-REFLECTEC VIA PAPER TAPE. THE SPECIFIC QUANTITIES INTRODUCED WITH THIS MESSAGE ARE S/C REENTRY PITCH, S/C ORBITAL WEIGHT AND S/C PRE-RETRO WEIGHT. USING THE INSERTED PRE-RETRO WEIGHT, AND KNOWING THE WEIGHT LOSS DUE TC RETRO-FIRE, A S/C REENTRY WEIGHT IS ALSO CALCULATED. A QUEUE IS THEN GIVEN TO MYOUR1 TO UPDATE THE PRESENT ORBIT TO REFLECT THESE INSERTED CHANGES. (SEE FLOWCHART.)

INPUT

C(AC)-Z FIRST INSERTION NZ SECCND INSERTION

TABLES -

| | |
|---|---|
| TIWGTS | BUFFER CONTAINING INSERTED QUANTITIES |
| TOSCCH + 13 | WEIGHT OF RETRO-PACK ANC FUEL |

OUTPUT

A) TABLES

| | |
|---|---|
| TOSCCH + 17 | LOCATION CONTAINING UPDATED S/C REENTRY PITCH |
| TMREST | UPDATED FOR RESTART TAPE - |
| + 11 | S/C ORBIT WEIGHT |
| + 24 | S/C PRE-RETRO WEIGHT |

B) COMMUNICATION CELLS

| | |
|---|---|
| MCOWGT | CONTAINING UPDATED S/C ORBIT WEIGHT |
| MCPWGT | CONTAINING UPDATED S/C PRERETRO WEIGHT |
| MCRWGT | CONTAINING UPDATED S/C REENTRY |

## WEIGHT

MFMN03 PROVIDES QUEUES FOR MYMESS TO PRINT-OUT INSERTED QUANTITIES AND ACCEPTANCE OF SECCND INSERTION, AND A QUEUE FOR MYOUR1 TO UPDATE PRESENT ORBIT.

### METHOD

ON THE FIRST INSERTION, THE REENTRY WEIGHT IS COMPUTED. THIS AND THE INSERTED VALUES ARE PREPARED FOR AN ON-LINE PRINT.

WITH THE SECOND INSERTICN, AN ACCEPTANCE MESSAGE QUEUE IS GIVEN MYMESS. S/C PITCH AND WEIGHTS ARE PLACED IN THEIR PROPER CELLS AND A QUEUE IS GIVEN TO MYOUR1.

### USAGE

ENTRY IS MADE FROM IOMANI AND EXIT TO MFMANR.

A) TABLES -
   - TIWGTS
   - TMREST
   - TOSCCH

B) COMMUNICATION CELLS -
   - MCOWGT
   - MCPWGT
   - MCRWGT

C) CCNSTANTS -
   - KM0001
   - K00033
   - K0.1DG

D) MACROS -
   - QENBZ
   - QUEUE

E) PARAMETERS -

MNMESS

MNOUR1

F) STORAGE REQUIRED -

30 LOCATIONS

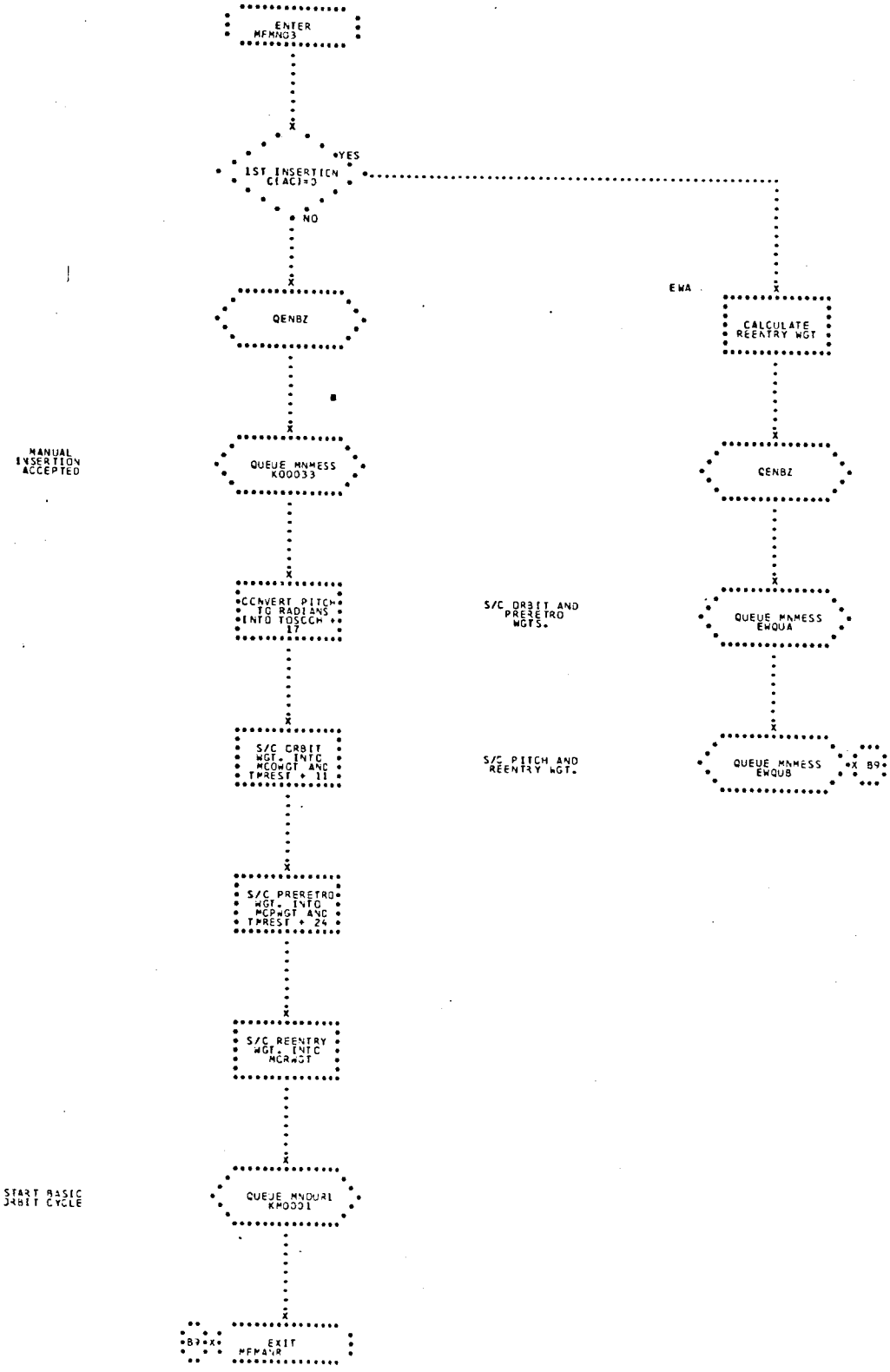
ENTER
MFMNO3
1ST INSERTION
C(AC)=0
YES
NO
QENBZ
MANUAL
INSERTION
ACCEPTED
QUEUE MNMESS
K00033
CONVERT PITCH
TO RADIANS
INTO TOSCCH +
17
S/C ORBIT
WGT. INTO
MCOWGT AND
TPREST + 11
S/C PRERETRO
WGT. INTO
MCPWGT AND
TPREST + 24
S/C REENTRY
WGT. INTO
MCRWGT
START BASIC
ORBIT CYCLE
QUEUE MNDURL
K00001
B3
EXIT
MFMAYR
EWA
CALCULATE
REENTRY WGT
QENBZ
S/C ORBIT AND
PRERETRO
WGTS.
QUEUE MNMESS
EWQUA
S/C PITCH AND
REENTRY WGT.
QUEUE MNMESS
EWQUB
B9

## 53. MFMN04 - MONITOR TIME OF LIFTOFF SUFFIX TO IOMANI

MFMN04 RECEIVES CONTROL FROM IOMANI AFTER A SUCCESSFUL PAPER TAPE INSERTION OF THE GREENWICH MEAN TIME AT LIFTOFF. (SEE FLOWCHART.)

INPUT

| | | |
|---|---|---|
| A) | MCHFSC | CONTAINS CURRENT GMT IN FIXED POINT HALF-SECONDS. |
| B) | MCGTLO | CONTAINS GMT OF LIFTOFF IN FIXED POINT SECONDS. THIS IS THE TIME CONTAINED ON THE INSERTED PAPER TAPE MESSAGE. |
| C) | MCLNCH | MASK TO TURN ON THE LAUNCH LIGHT ON THE OPERATIONS CONTROL CONSOLE. |

OUTPUT

| | | |
|---|---|---|
| A) | TMREST + 30 | CONTAINS CURRENT GMT IN FIXED POINT HALF-SECONDS. |
| B) | TMREST + 21 | CONTAINS GMT OF LIFTOFF IN FIXED POINT SECONDS. |
| C) | MCLFTM | CONTAINS INSERTED GMT OF LIFTOFF IN FLOATING POINT SECONDS. |

METHOD

THE METHOD OF MFMN04 IS SHOWN IN THE FLOWCHART.

USAGE

MFMN04 IS ENTERED FROM IOMANI AND EXITS TO MFMANR.

A) CCNSTANTS -

KCH233

B) MACROS -

QENBA

QENBZ

QUEUE

C) PARAMETERS -

A

MNMESS

MNSENS

MNTTIN

D) COMMUNICATION CELLS -

MCHFSC

MCGTLO

MCLFTM

E) TABLES -

TMREST

TMTTIN

F) STORAGE REQUIRED -

26 LOCATIONS

G) TIME REQUIRED -

1) MINIMUM - 0.161 MILLISECOND

2) MAXIMUM - 0.231 MILLISECCND

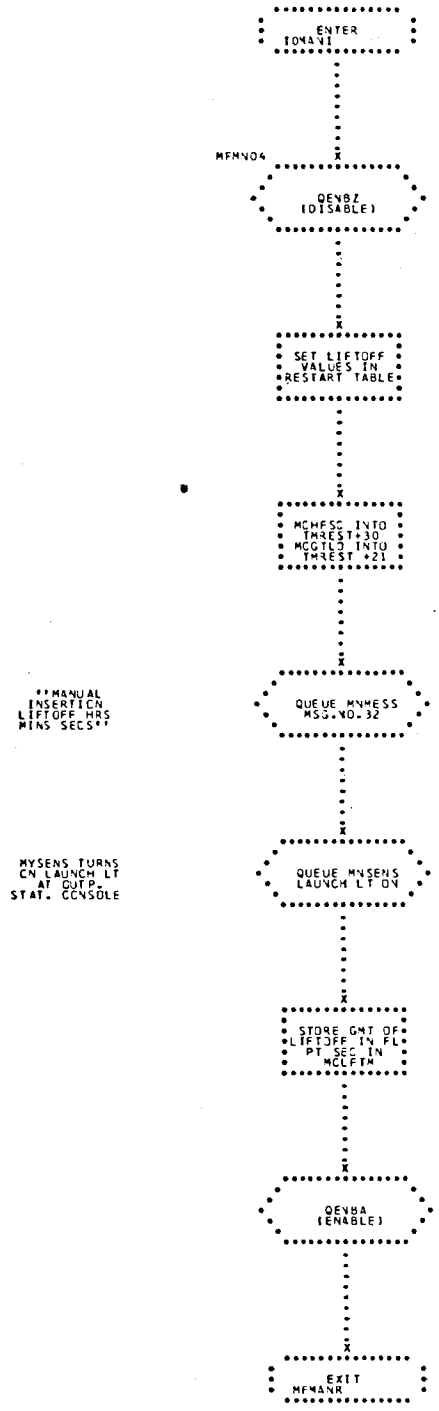
ENTER
IOMAVI
MFMN04
QENBZ
(DISABLE)
SET LIFTOFF
VALUES IN
RESTART TABLE
MCHFSC INTO
TMREST+30
MCGTLO INTO
TMREST +21
**MANUAL
INSERTION
LIFTOFF HRS
MINS SECS**
QUEUE MNMESS
MSG.NO.32
MYSENS TURNS
ON LAUNCH LT
AT OUTP.
STAT. CONSOLE
QUEUE MNSENS
LAUNCH LT ON
STORE GMT OF
LIFTOFF IN FL
PT SEC IN
MCLFTM
QENBA
(ENABLE)
EXIT
MFMANR

## 54. MFMN05 - MONITOR R AND V SUFFIX TO IOMANI

MFMN05 RECEIVES CCNTROL FROM IOMANI AFTER THE SUCCESSFUL MANUAL INSERTICN OF A PÔSITION OR VELOCITY VECTOR FOR THE NUMERICAL INTEGRATICN PROGRAM (SEE FLOWCHART.)

INPUT -

| | | |
|---|---|---|
| A) | MCNRRF | CCNTAINS AN INDICATION CF THE NUMBER OF RETROROCKETS FIRED - ONE, TWO OR THREE. |
| B) | MCMINS | CCNTAINS CURRENT GMT IN FX. PT. MINUTES |
| C) | MCGTIN | CONTAINS GMT OF S/C INSERTION INTO ORBIT IN FX. PT. SECONDS. |
| D) | TNINT1 | CRBIT INTEGRATION TABLE. |
| E) | TNINT2 | REENTRY INTEGRATION TABLE. |
| F) | TIOTRV | TABLE CONTAINING INTEGRATION PARAMETERS. |

OUTPUT

A) ORBIT

| | | |
|---|---|---|
| TDRANV | X | COMPONENT |
| +1 | Y | COMPONENT |
| +2 | Z | COMPONENT |
| +3 | DX | COMPONENT |
| +4 | DY | COMPONENT |
| +5 | DZ | COMPONENT |
| +6 | T | |
| +7 | RN | |

B) REENTRY

| | | |
|---|---|---|
| TDRANV | X | COMPONENT |
| +1 | Y | COMPONENT |
| +2 | Z | COMPONENT |
| +3 | DX | COMPONENT |
| +4 | DY | COMPONENT |
| +5 | DZ | COMPONENT |
| +6 | T | |

METHOD

MFMN05 RECEIVES CONTROL FROM IOMANI. IF THE AC IS ZERO IT INDICATES THE FIRST INSERTION OF THE MESSAGE (R, V, T). IF THE AC IS NONZERO IT INDICATES THE SECOND INSERTION OF THE MESSAGE. FOR ORBIT PHASE THE R,V,T, RN IS SAVED IN TDRANV TABLE AND MNOUR1 IS QUEUED. FOR REENTRY PHASE THE R,V,T, IS SAVED IN TDRANV TABLE AND MNREV2 IS QUEUED. A TEST IS MADE FOR DETERMINING IF DC IS IN PROCESS THEN THE MESSAGE IS REJECTED.

USAGE

MFMN05 IS ENTERED FROM IOMANI AND EXITS TO MFMANR.

A) STORAGE REQUIRED - 75 LOCATIONS.

B) MACROS -

| | |
|---|---|
| QENBA | QUEUE |
| QENBZ | TRNON |

C) PARAMETERS -

| | |
|---|---|
| MNMESS | MNOUR1 |
| MNREN2 | MNCCMN |

D) COMMUNICATION CELLS -

| | |
|---|---|
| MCNRRF | MCSSDC |
| MCMAN5 | MCFRDC |
| MCDCIP | |

E) TABLES -

| | |
|---|---|
| TMSTOR | TDRANV |
| TIOTRV | TDCDEF |

F) CONSTANTS -

| | |
|---|---|
| K00003 | K00087 |
| K00060 | K00294 |

G) TIME REQUIRED -

1) MINIMUM - 0.013 MILLISECOND

2) MAXIMUM - 0.322 MILLISECOND

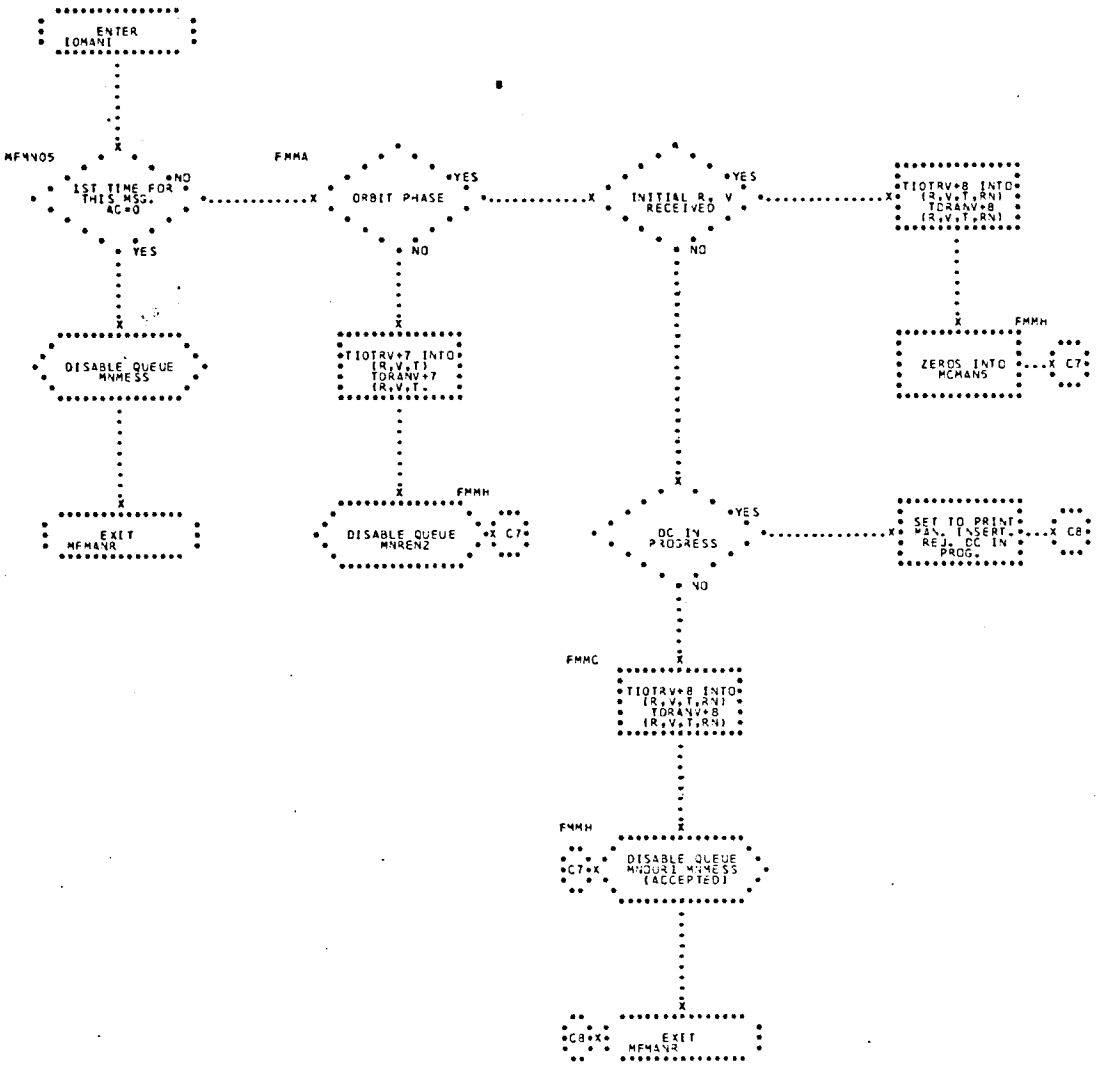
ENTER
IOMANI
MFMNOS
IST TIME FOR THIS MSG. AC=0
NO
YES
DISABLE QUEUE MNMESS
EXIT MFMANR
FMMA
ORBIT PHASE
YES
NO
TIOTRV+7 INTO (R,V,T) TDRANV+7 (R,V,T.
FMMH
DISABLE QUEUE MNRENZ
C7
INITIAL R, V RECEIVED
YES
NO
TIOTRV+8 INTO (R,V,T,RN) TDRANV+8 (R,V,T,RN)
FMMH
ZEROS INTO MCMANS
C7
DC IN PROGRESS
YES
NO
SET TO PRINT MAN. INSERT REJ. DC IN PROG.
C8
FMMC
TIOTRV+8 INTO (R,V,T,RN) TDRANV+8 (R,V,T,RN)
FMMH
C7
DISABLE QUEUE MNOURI MNMESS (ACCEPTED)
C8
EXIT MFMANR

## 55. MFMN06 - MONITOR CAPSULE CLOCK SETTING TO IOMANI

MFMN06 RECEIVES CONTROL AFTER THE SUCCESSFUL MANUAL INSERTION OF A NEW SPACECRAFT CLOCK SETTING (GMT). THE ON-LINE MESSAGE PROCESSOR IS QUEUED TO EFFECT THE GENERATION OF A NEW REENTRY TABLE AND OF UPDATING THE CAPE KENNEDY DISPLAYS. THE B INDICATOR IS TURNED ON TO INITIATE WRITING A RECORD ON THE RESTART TAPE. (SEE FLOWCHART.)

INPUT

A) TIGTRS CONTAINS GMTRS FIXED POINT SECONDS.
B) TIGTRS+1 CONTAINS MODE.
C) TIGTRS+2 CONTAINS LATITUDE OF TARGET (DEGREES).
D) TIGTRS+3 CONTAINS LONGITUDE OF TARGET (DEGREES)
E) TIGTRS+4 CONTAINS - ADDRESS - NAME OF RECOVERY AREA DECREMENT - LANDING REVOLUTION NUMBER.

OUTPUT

A) MFMN06 UPDATES THE RESTART TABLE BY STORING THE GMTRS IN TMREST+16, THE MODE IN TMREST+17, THE LONGITUDE IN TMREST+18, THE LATITUDE IN TMREST +19 AND THE CURRENT TIME IN TMREST+21.
B) APPROPRIATE MESSAGE IN ON-LINE MESSAGE QUEUE.
C) B INDICATOR FOR WRITING RESTART TAPE (MNWRRS).
D) TMGTRS CONTAINS GMTRS FIXED POINT SECONDS.
E) TMGTRS+1 CONTAINS MODE.

F) TMGTRS+2 CONTAINS LONGITUDE OF TARGET (RADIANS)
G) TMGTRS+3 CONTAINS LATITUDE OF TARGET (RADIANS)
H) TMGTRS+4 CONTAINS - ADDRESS - NAME OF RECOVERY AREA DECREMENT - LANDING REVOLUTION NUMBER.

METHOD

MFMN06 RECEIVES CONTROL FROM IOMANI, DISABLES THE COMPUTER, UPDATES THE RESTART TABLE, AND QUEUES THE ON-LINE MESSAGE - MANUAL INSERTION ACCEPTED. SETTING IS HRS MINS SECS. THE COMPUTER IS ENABLED AND AN INDICATION IS MADE (B FOR MNWRRS) TO EFFECT THE WRITING OF A NEW RECORD ON THE RESTART TAPE. CONTROL IS THEN GIVEN TO MFMANR.

USAGE

MFMAN6 IS ENTERED FROM IOMANI AND EXITS TO MFMANR.

A) STORAGE REQUIRED -
28 LOCATIONS.

B) MACROS -
QENBZ QENBA
QUEUE TRNON

C) PARAMETERS -
B
MNMESS
MNWRRS

D) COMMUNICATION CELLS -
MCRNTB
MCESAB

E) TABLES -

TIGTRS

TMGTRS

TMREST

F) CONSTANTS -

K00360

K0.1DG

K000P1

G) TIME REQUIRED -

0.148 MILLISECOND.

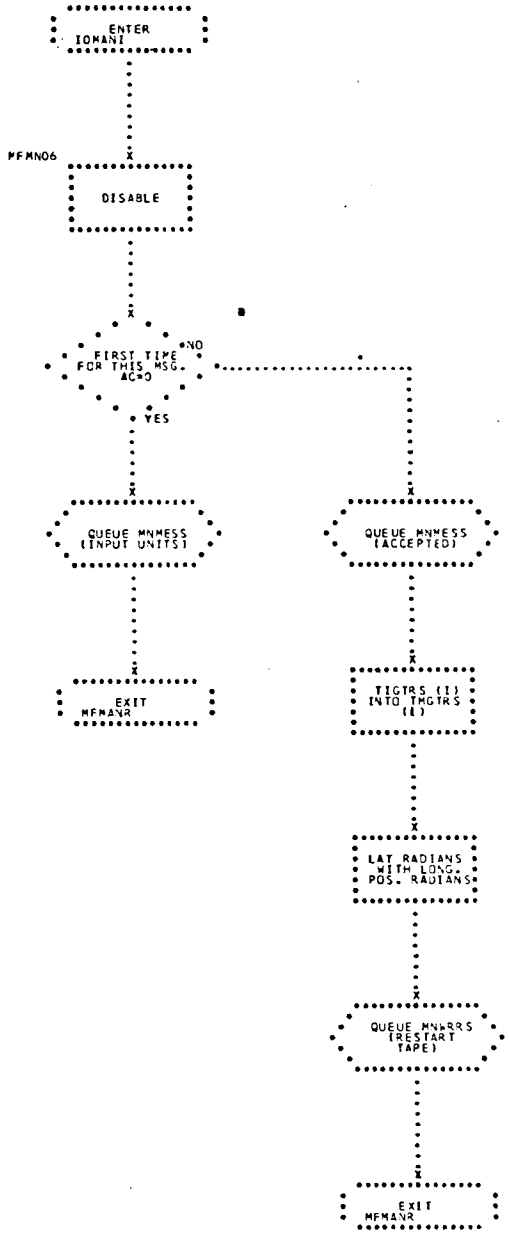
ENTER
IOMANI
MFMN06
DISABLE
FIRST TIME
FOR THIS MSG.
AG=0
NO
YES
QUEUE MNMESS
(INPUT UNITS)
QUEUE MNMESS
(ACCEPTED)
EXIT
MFMANR
TIGTRS (I)
INTO TMGTRS
(I)
LAT RADIANS
WITH LONG.
POS. RADIANS
QUEUE MNMRRS
(RESTART
TAPE)
EXIT
MFMANR

## 56. MFMNO7 - MONITCR UPDATE PRIMARY AREA SUFFIX TO IOMANI

MFMNO7 RECEIVES CCNTROL FROM IOMANI AFTER SUCCESSFUL MANUAL INSERTION OF THE UPDATED PRIMARY AREA MESSAGE. THE INSERTED NAME AND LANDING REVCLUTICN NUMBER WILL DETERMINE WHICH PRIMARY AREA TO UPCATE. (SEE FLOWCHART.)

INPUT

A) TIGTRS — CCNTAINING THE INFORMATICN FOR UPDATING THE DESIRED PRIMARY AREA OF THE FOLLOWING FORMAT -

| | | |
|---|---|---|
| TIGTRS | ZERO | |
| +1 | ZERO | |
| +2 | LATITUDE | IN FL. PT. DEGREES |
| +3 | LCNGITUDE | IN FL. PT. DEGREES |
| +4 | CONTAINS | ADDRESS, NAME OF DECREMENT, LANDING REVOLUTION NUMBER. |

B) TMPLON — CONTAINING LRNS AND NAMES OF PRIMARY AREAS

OUTPUT

| | | |
|---|---|---|
| TMLMPT | CCNTAINS THE PRIMARY AREA TABLE. | |
| TMLMPT | LCNGITUDE IN FL. PT. RADIANS | |
| +1 | LATITUDE IN FL. PT. RADIANS | |
| +2 | LCNGITUDE | |
| +3 | LATITUDE | |
| +3 | LATITUDE | |
| +3 | LATITUDE | |
| ETC. | | |

METHOD

IF THE PAPER TAPE INSERTION OF LONGITUDE, LATITUDE, NAME AND LANDING REVOLUTION NUMBER DOES NOT AGREE WITH THE LAST SUCH INSERTION, THE FOLLOWING MESSAGES ARE PRINTED ON LINE.

IQ . . . LAT ,, LONG

IQ . . . (LRN,NAME) PRIMARY AREA.

IF THE INSERTION DOES COMPARE AND THE CORRESPONDING LRN AND NAME INSERTED AGREE WITH LRN AND NAME OF THE TMPLON TABLE, THE INSERTED PRIMARY AREA IS UPDATED IN THE TMLMPT TABLE. HOWEVER, IF THIS LRN AND NAME IS NOT FOUND IN THE TMPLON TABLE, THE FOLLOWING MESSAGE IS PRINTED ON LINE -

'PRIMARY AREA NOT FOUND IN TABLE'

USAGE

MRMN07 IS ENTERED FROM IOMANI AND EXITS TO MFMANR.

A) STORAGE REQUIRED -

33 LOCATIONS

B) MACROS -

QENBA

QENBZ

QUEUE

C) PARAMETERS -

MNMESS

D) COMMUNICATION CELLS -

MNNUPA

E) TABLES -

TIGTRS

TMPLON

TMLMPT

F) CONSTANTS -

K00033

K00360

K00350

K0.1DG

G) TIMING -

0.647 MILLISECONDS, MAXIMUM

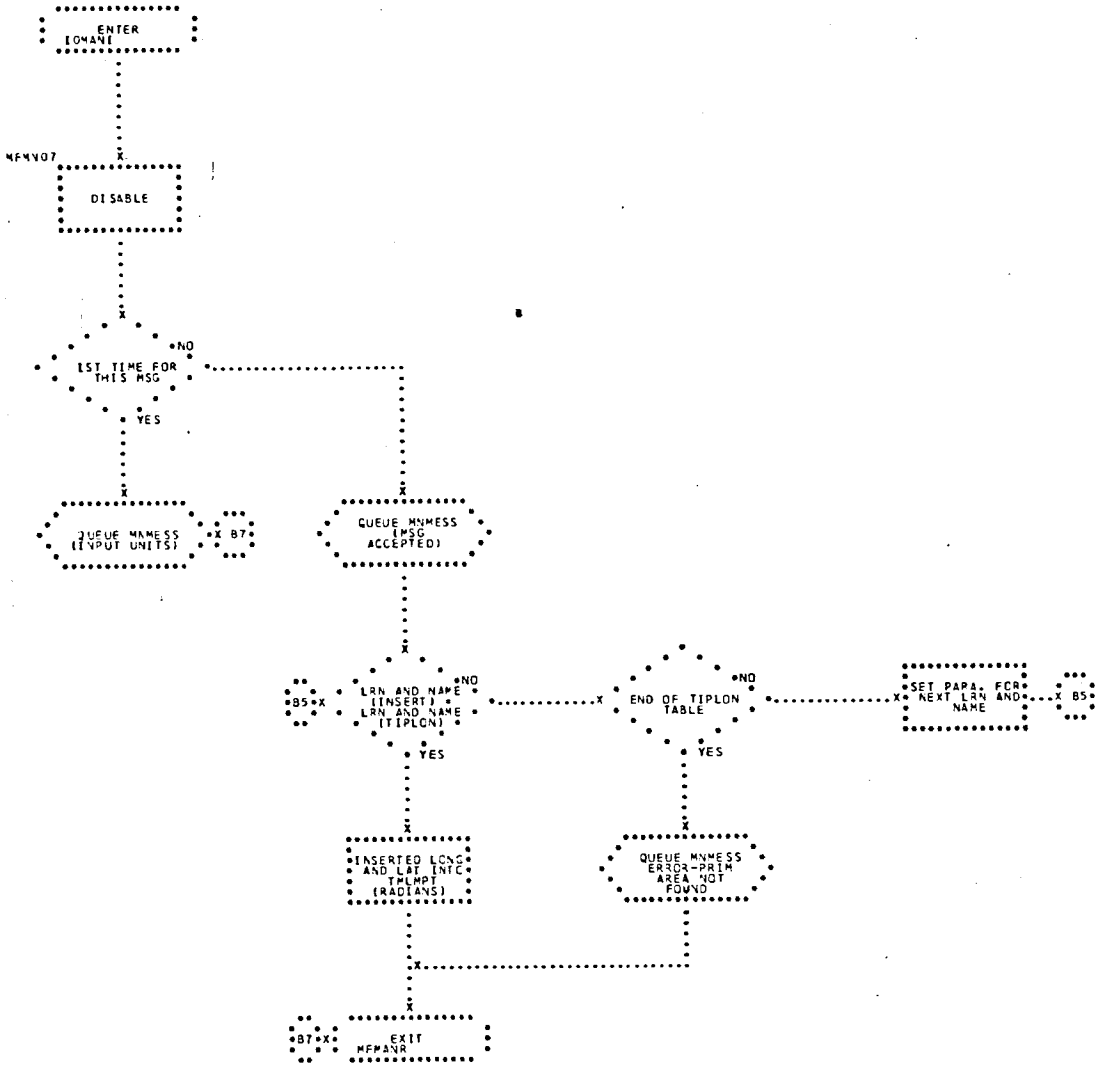
ENTER
IOMANI
MFMV07
DISABLE
1ST TIME FOR
THIS MSG
NO
YES
QUEUE MNMESS
(INPUT UNITS)
B7
QUEUE MNMESS
(MSG
ACCEPTED)
B5
LRN AND NAME
(INSERT)
LRN AND NAME
(TIPLON)
NO
YES
END OF TIPLON
TABLE
NO
YES
SET PARA. FOR
NEXT LRN AND
NAME
B5
INSERTED LONG
AND LAT INTO
TMLMPT
(RADIANS)
QUEUE MNMESS
ERROR-PRIM
AREA NOT
FOUND
B7
EXIT
MFMANR

## 57. MFMNO8 - MONITOR RETROFIRE SUFFIX TO IOMANI (NOMINAL RETROFIRE AND NON-NOMINAL RETROFIRE)

MFMNO8 RECEIVES CONTROL FROM IOMANI AFTER SUCCESSFUL MANUAL INSERTION OF THE NOMINAL OR NON-NOMINAL RETROFIRE MESSAGE. IN ADDITION TO EFFECTING THE APPROPRIATE ON-LINE MESSAGE, MFMNO8 DETERMINES BETWEEN NOMINAL AND NON-NOMINAL RETROFIRE AND INITIALIZES THE PROGRAMS NEEDED DURING THE TRANSITION FROM ORBIT TO REENTRY, MYREST, OR FROM ABORT TO REENTRY, MNABRT. IN THE ABORT-TO-REENTRY TRANSITION, DCC SUBCHANNELS 1 AND 2 ARE DEACTIVATED BECAUSE THE HIGH-SPEED INPUT TO THE SYSTEM IS NO LONGER NEEDED. (SEE FLOWCHART.)

INPUT

| | |
|---|---|
| AC | WHEN ZERO, INDICATES THE FIRST TIME THROUGH MFMNO8 WITH A NEW RETROFIRE MESSAGE. NON-ZERO INDICATES THAT THE PREVIOUSLY INSERTED RETROFIRE MESSAGE HAS BEEN ACCEPTED. |
| MCIOVI | CONTAINS 1 FOR PITCH, ROLL, AND YAW<br>2 FOR IVI'S (IX, IY, IZ.) |
| MCRRLC | A 2-WORD CELL, THE FIRST WORD INITIALLY CONTAINING ZERO AND THE SECOND WORD CONTAINING THE MASK REQUIRED TO TURN OFF THE PCC RETROROCKET LIGHTS. |
| MCTABT | WHEN ZERO, INDICATES THE ORBIT PHASE, WHEN NONZERO, INDICATES THE ABORT PHASE. |
| TMRETO | A TABLE CONTAINING THE NOMINAL OR NON-NOMINAL RETROFIRE INFORMATION ACCORDING TO THE FOLLOWING FORMATS - |

1. NOMINAL RETROFIRE

| | | |
|---|---|---|
| TMRETO | | GMTRF (RETROFIRE TIME) FIXED POINT SECONDS |
| | +1 | 0 |
| | +2 | 0 |
| | +3 | 0 |
| | +4 | 0 OR 1-DECREMENT, MODE - ADDRESS |
| | +5 | 0 |
| | +6 | 0 |
| | +7 | 0 |
| | +8 | LONGITUDE OF TARGET FLOATING POINT DEGREES |
| | +9 | LATITUDE OF TARGET FLOATING POINT DEGREES |
| | +10 | 0 |

2. NON-NOMINAL RETROFIRE

| | | |
|---|---|---|
| TMRETO | | GMTRF 1 |
| | +1 | GMTRF 2 |
| | +2 | GMTRF 3 |
| | +3 | GMTRF 4 |
| | +4 | 2-DECREMENT, MODE ACCUMULATOR |
| | +5 | PITCH - FLOATING POINT DEGREE OR IXI |
| | +6 | ROLL - FLOATING POINT DEGREES OR IYI |
| | +7 | YAW - FLOATING POINT DEGREES OR IZI |
| | +8 | LONGITUDE OF TARGET - FLOATING POINT DEGREES |

| | |
|---|---|
| +9 | LATITUDE OF TARGET - FLOATING POINT DEGREES |
| +10 | 0 |

OUTPUT

MFMN08 CONVERTS THE VALUES PITCH, ROLL, YAW, AND LATITUDE FROM FLOATING POINT DEGREES TO FLOATING POINT RADIANS, ALSO LONGITUDE FROM FLOATING POINT DEGREES TO POSITIVE RADIANS.

METHOD

MFMN08 RECEIVES CONTROL FROM IOMANI, DETERMINES IF THE MANUAL INSERTION WAS NOMINAL OR NON-NOMINAL RETROFIRE. IF NOMINAL, RETROFIRE WITH ZERO RETROS OR NON-NOMINAL, RETROFIRE WITH PITCH, ROLL, AND YAW TO IVIS.

MFMN08 DISABLES THE COMPUTER, AND INTERROGATES THE AC. IF THE AC IS ZERO, INDICATING THE FIRST INSERTION OF A NEW RETROFIRE MESSAGE, MYMESS IS QUEUED WITH THE CONTENTS OF TMRETO FOR ON-LINE PRINTING. PRINTING ALLOWS THE MACHINE OPERATION TO CONFIRM THE INSERTED MESSAGE. IF THE AC WAS NON-ZERO ON ENTRY, INDICATING THAT THE SAME RETROFIRE MESSAGE HAS BEEN SUCCESSFULLY INSERTED TWICE AND THUS CONFIRMED, THE FOLLOWING ON-LINE MESSAGE IS QUEUED - MANUAL INSERTION ACCEPTED. MFMN08 THEN WILL INTERROGATE THE PCC LIGHTS TO SHOW THAT THE RETROFIRE HAS BEEN ACCOMPLISHED (MCRRLC AND MCRRLC+1).

THE LAST CHECK PERFORMED BY THE PROGRAM IS TO DETERMINE IF THE TRANSITION IS FROM ORBIT TO REENTRY OR FROM HIGH ABORT TO REENTRY. IF MCTABT IS ZERO, INDICATING ORBIT-TO-REENTRY INTERFACE, THE B IS TURNED ON FOR MYREST BEFORE CONTROL GOES TO MFMANR.

USAGE

MFMN08 IS ENTERED FROM IOMANI AND EXITS TO MFMANR.

A) CONSTANTS -

| | |
|---|---|
| K00105 | K00149 |
| K00342 | K00360 |

B) MACROS -

| | |
|---|---|
| QENBZ | TRNON |
| QUEUE | QPLSF |

C) PARAMETERS -

| | |
|---|---|
| B | MNREST |
| MNMESS | MNABRT |
| MNSENS | |

D) COMMUNICATION CELLS -

| | |
|---|---|
| MCIOVI | MCTABT |
| MCRRLC | MCNAN2 |

E) TABLES -

TMRETO

TMRTCO

F) STORAGE REQUIRED - 132 LOCATIONS.

G) TIME REQUIRED -

0.732 MILLISECONDS (AVERAGE)

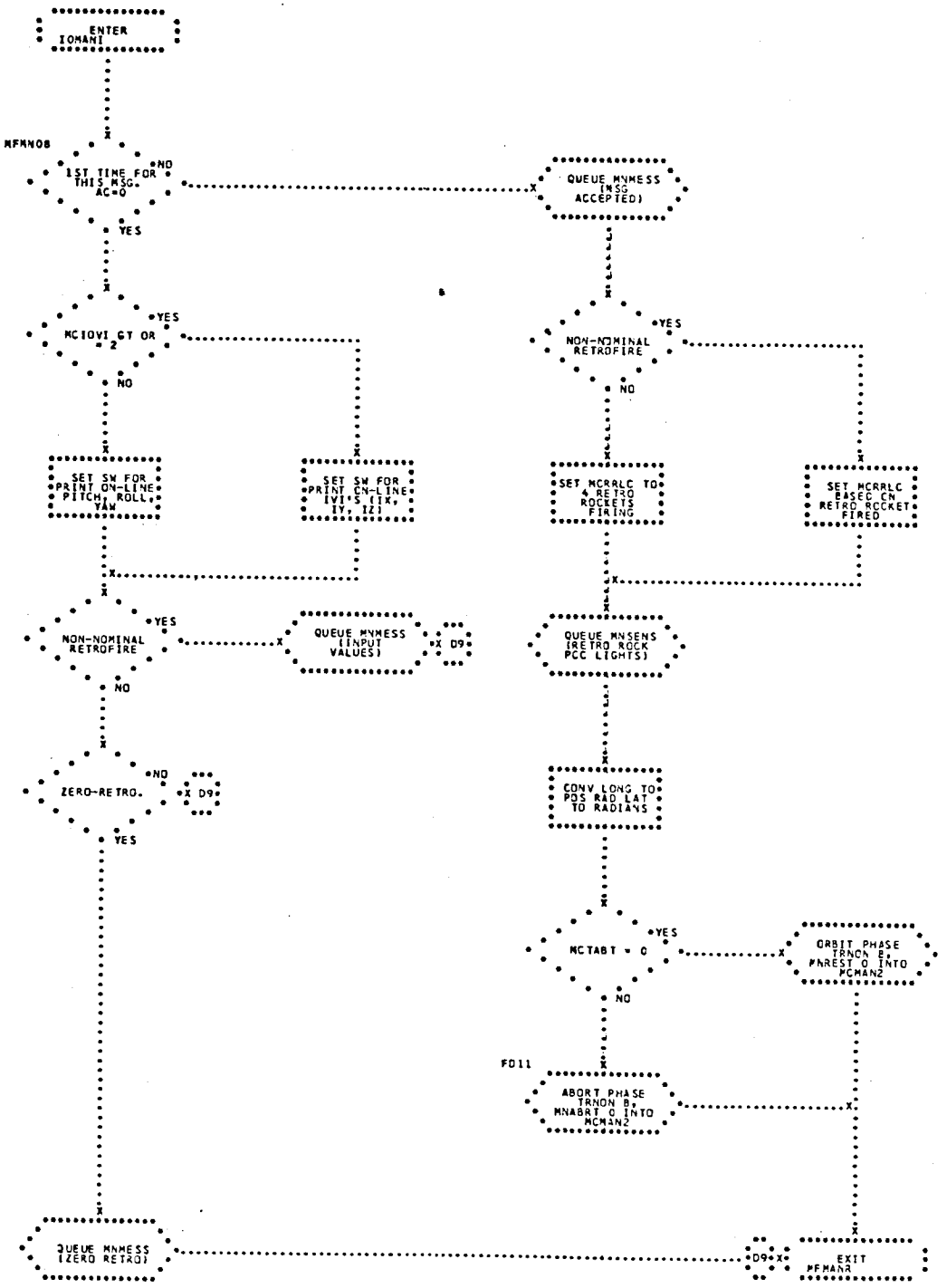
ENTER
IOMANI
MFMN08
1ST TIME FOR THIS MSG. AC=0
NO
YES
QUEUE MNMESS (MSG ACCEPTED)
MCIOVI GT OR = 2
YES
NO
NON-NOMINAL RETROFIRE
YES
NO
SET SW FOR PRINT ON-LINE PITCH, ROLL, YAW
SET SW FOR PRINT ON-LINE IVI'S (IX, IY, IZ)
SET MCRRLC TO 4 RETRO ROCKETS FIRING
SET MCRRLC BASED ON RETRO ROCKET FIRED
NON-NOMINAL RETROFIRE
YES
NO
QUEUE MNMESS (INPUT VALUES)
D9
QUEUE MNSENS (RETRO ROCK PCC LIGHTS)
ZERO-RETRO.
NO
D9
YES
CONV LONG TO POS RAD LAT TO RADIANS
MCTABT = 0
YES
NO
ORBIT PHASE TRNON B, MNREST 0 INTO MCMAN2
FD11
ABORT PHASE TRNON B, MNABRT 0 INTO MCMAN2
QUEUE MNMESS (ZERO RETRO)
D9
EXIT MFMAN8

## 58. MFMN10 - IOMANI SUFFIX FOR ORBIT LIFETIME PARAMETERS

CONTROL PARAMETERS FOR DETERMINING S/C REVOLUTION CAPABILITY ARE THREE IN NUMBER - 1) ATMOSPHERIC DENSITY COEFFICIENT, 2) IMPACT ALTITUDE, AND 3) REQUESTED REVOLUTION LIMIT. THESE INSERTED QUANTITIES ARE PLACED IN APPROPRIATE LOCATIONS AND A REQUEST IS GIVEN TO COMPUTE REVOLUTION CAPABILITY AS A FUNCTION OF THESE QUANTITIES. (SEE FLOWCHART.)

INPUT

C(AC)-Z FIRST INSERTION. NZ SECOND INSERTION

A) TABLE -

TIOLPM BUFFER CONTAINING LIFETIME PARAMETERS

B) COMMUNICATION CELL -

MCHFSC CURRENT GMT HALF-SECOND COUNT

OUTPUT

TIDRAG TABLE USED FOR COMPUTATION OF REVOLUTION CAPABILITY

TMREST UPDATED FOR RESTART TAPE -

+13 LIFETIME DENSITY FACTOR

+14 REVOLUTION LIMIT

+15 IMPACT ALTITUDE

+21 RECORD REQUEST TIME

MFMN10 PROVIDES THE FOLLOWING QUEUES FOR -

1) MYMESS TO PRINT-OUT INSERTED QUANTITIES AND ACCEPTANCE OF SECOND INSERTION.

2) MYWRRS TO WRITE RECORD NO. 1 (TMREST) ON RESTART TAPE.

B IS TURNED ON FOR MYLIF8 TO PERFORM REVOLUTION CAPABILITY COMPUTATIONS.

METHOD

INSERTED PARAMETERS ARE PREPARED FOR AN ON-LINE PRINT ON THE FIRST INSERTION.

ON THE SECOND INSERTION, A MYMESS QUEUE IS GIVEN TO CONFIRM MESSAGE ACCEPTANCE. TIDRAG AND TMREST ARE UPDATED WITH THE INSERTED VALUES. MYWRRS IS QUEUED TO WRITE THE RESTART TAPE AND MYLIF8 HAS ITS B LIST TURNED ON. AN EXIT IS THEN MADE TO MFMANR.

USAGE

ENTRY IS MADE FROM IOMANI AND EXIT MFMANR.

A) TABLES -
   TIOLPM
   TIDRAG
   TMREST
B) CONSTANTS -
   K00033
   K000P1
   KFTOER
C) COMMUNICATION CELL -
   MCHFSC
D) PARAMETERS -
   MNMESS
   MNWRRS
   MNLIF8
   B

E) MACROS -

QENBZ

QUEUE

QENBA

TRNON

F) STORAGE REQUIRED -

36 LOCATIONS

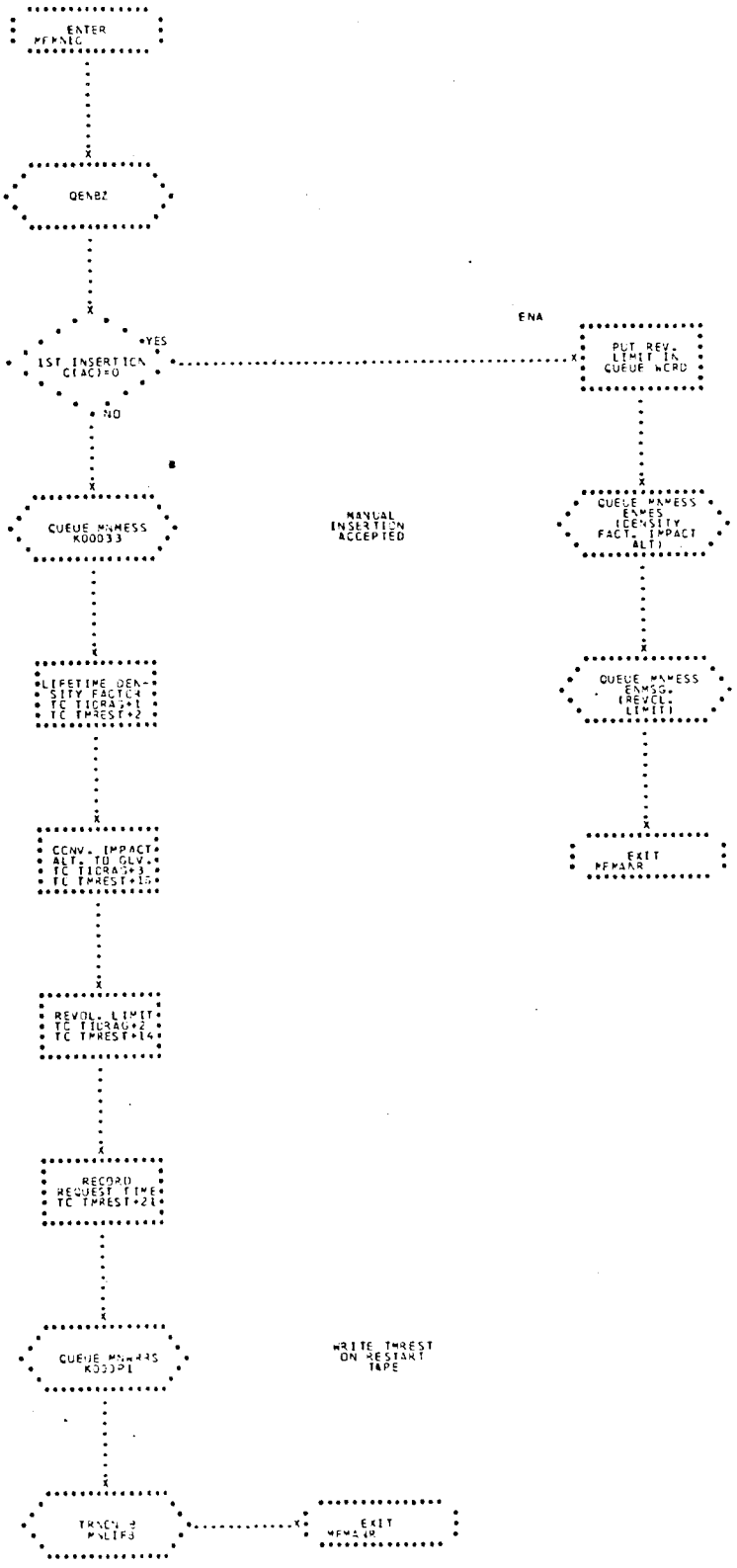
ENTER
QENBZ
1ST INSERTION
C(AC)=0
YES
NO
ENA
PUT REV. LIMIT IN QUEUE WORD
QUEUE MNMESS K00033
MANUAL INSERTION ACCEPTED
QUEUE MNMESS ENMES (DENSITY FACT. IMPACT ALT)
LIFETIME DENSITY FACTOR
QUEUE MNMESS ENMSG. (REVOL. LIMIT)
CONV. IMPACT ALT. TO GLV.
EXIT
REVOL. LIMIT
RECORD REQUEST TIME
QUEUE MNMESS
WRITE TMREST ON RESTART TAPE
EXIT

## 59. MFMN11 - IOMANI SUFFIX FOR D.C. PARAMETERS

TWO DIFFERENTIAL CORRECTION PARAMETERS ARE INSERTED UNDER THE CONTROL OF MFMN11. THESE ARE ARC LENGTH AS A FUNCTION OF TIME AND A WEIGHTING FACTOR, INSERTED AS THE $LOG_e$ OF THAT FACTOR. FUTURE ORBIT SOLUTIONS WILL THEN REFLECT THESE INSERTED VALUES. (SEE FLOWCHART.)

INPUT

C(AC)-Z FIRST INSERTION. NZ SECOND INSERTION

A) TABLE -

TI3SAV 9TH AND 10TH LOCATIONS OF THIS BUFFER CONTAIN INSERTED VALUES.

B) COMMUNICATION CELL -

MCHFSC CURRENT GMT IN HALF-SECONDS

OUTPUT

A) TABLE -

TMREST UPDATED FOR RESTART TAPE -

+ 9 D.C. ARC LENGTH

+10 D.C. WEIGHTING FACTOR

+21 RECORD REQUEST TIME

B) COMMUNICATION CELLS -

MCARCL CONTAINS UPDATED ARC LENGTH

MCCBCB CONTAINS UPDATED ARC LENGTH

MCWGFC CONTAINS UPDATED WEIGHTING FACTOR

MCCBCA CONTAINS UPDATED WEIGHTING FACTOR

MFMN11 PROVIDES THE FOLLOWING QUEUES FOR -

1) MYMESS TO PTINT-OUT INSERTED QUANTITIES AND ACCEPTANCE OF SECOND INSERTION.

2) MYMWRRS TO WRITE RECORD NO. 1 (TMREST) ON

RESTART TAPE.

METHOD

ARC LENGTH AND WEIGHTING FACTOR ARE READIED FOR AN ON-LINE PRINT ON THE FIRST INSERTION. MYMESS IS QUEUED TO CONFIRM MESSAGE ACCEPTANCE ON THE NEXT INSERTION. THE TWO PARAMETERS ARE STORED IN THEIR APPROPRIATE LOCATIONS AND MYWRRS IS QUEUED TO WRITE RECORD NO. 1 (TMREST) ON THE RESTART TAPE. EXIT IS THEN MADE TO MFMANR.

USAGE

ENTRY IS MADE FROM IOMANI AND EXIT TO MFMANR.

A) TABLES -
   TI3SAV
   TMREST

B) CONSTANTS -
   K00033
   K000P1
   KCH233

C) COMMUNICATION CELLS -
   MCARCL
   MCWGFC
   MCCBCB
   MCCBCA
   MCHFSC

D) PARAMETERS -
   MNMESS
   MNWRRS

E) MACROS -
   QENBZ
   QUEUE

F) STORAGE REQUIRED - 27 LOCATIONS

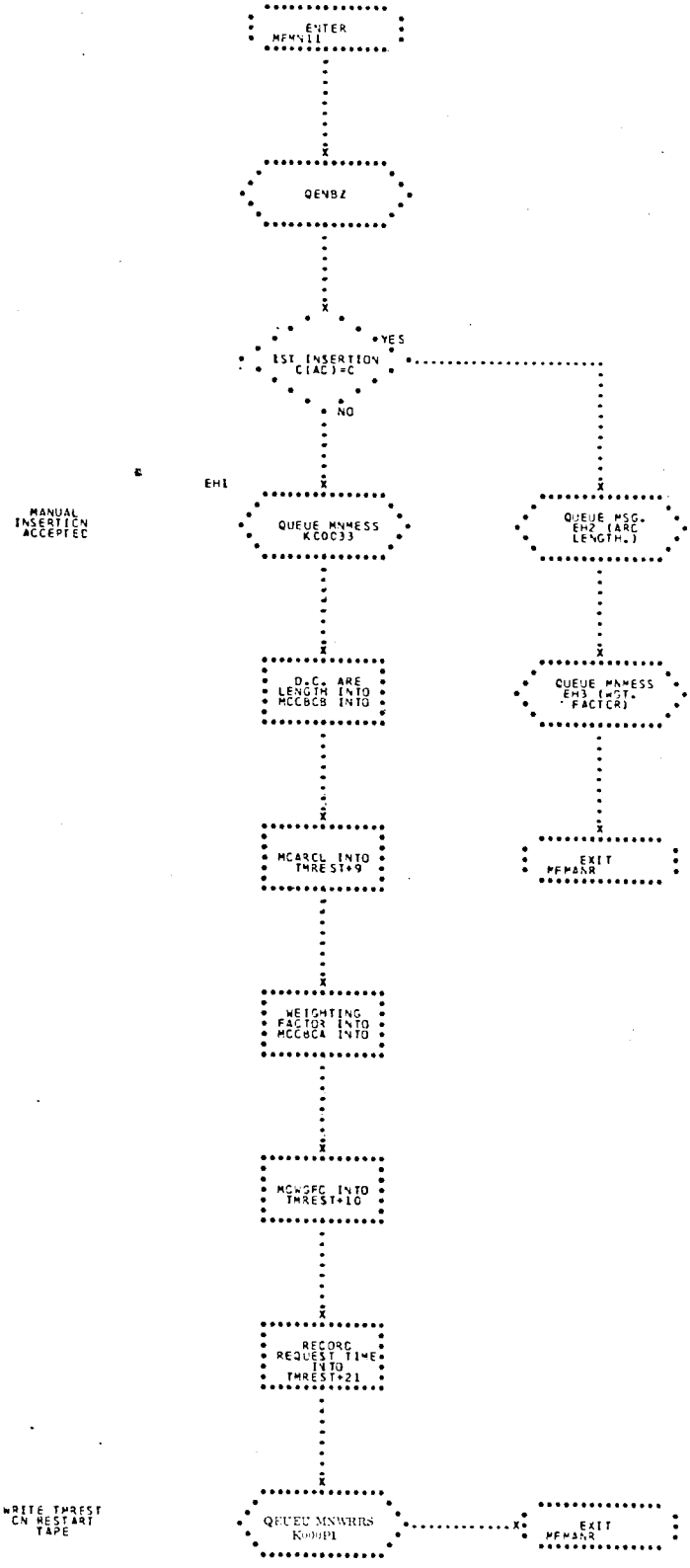
ENTER MFMN11
QENBZ
YES
IST INSERTION C(AC)=C
NO
EH1
MANUAL INSERTION ACCEPTED
QUEUE MNMESS K00C33
QUEUE MSG. EH2 (ARC LENGTH.)
D.C. ARE LENGTH INTO MCCBCB INTO
QUEUE MNMESS EH3 (WGT. FACTOR)
MCARCL INTO THREST+9
EXIT MFMANR
WEIGHTING FACTOR INTO MCCBCA INTO
MCWGFC INTO THREST+10
RECORD REQUEST TIME INTO THREST+21
WRITE THREST ON RESTART TAPE
QEUEU MNWRRS K00P1
EXIT MFMANR

## 60. MFMN12 - IOMANI SUFFIX FOR ORBIT, REENTRY DENSITY FACTOR

THE ATMOSPHERIC DENSITY FACTOR FOR ORBIT AND REENTRY, EXCLUSIVE OF REVOLUTION CAPABILITY DETERMINATION, IS SYSTEM-INTRODUCED UNDER THE CONTROL OF MFMN12. (SEE FLOWCHART.)

INPUT

A) C(AC)-Z FIRST INSERTION NZ SECOND INSERTION

B) TIORDF BUFFER CONTAINING INSERTED QUANTITY

OUTPUT

A) TIDRAG O-R DENSITY FACTOR PLACED IN THIS TABLE

B) TMREST O-R DENSITY FACTOR PLACED IN THIS LOCA-
+12 TION

MFMN12 PROVIDES QUEUES FOR THE FOLLOWING -

A) MYMESS TO PRINT-OUT INSERTED QUANTITY AND ACCEPTANCE OF SECOND INSERTION.

B) MYOUR1 TO INITIATE BASIC ORBIT CYCLE.

METHOD

THE DENSITY FACTOR IS PRINTED OUT ON THE FIRST INSERTION. ON THE SECOND INSERTION, A MESSAGE ACCEPTANCE QUEUE IS GIVEN MYMESS, TABLES ARE UPDATED, MYOUR1 IS QUEUED AND AN EXIT IS MADE TO MFMANR.

USAGE

ENTRY IS MADE FROM IOMANI AND EXIT TO MFMANR

A) TABLES -

TIORDF

TMREST

TIDRAG

B) CONSTANTS -

KM0001

K00033

C) PARAMETERS -

MNMESS

MNOUR1

D) MACROS -

QENBZ

QUEUE

E) STORAGE REQUIRED -

15 LOCATIONS

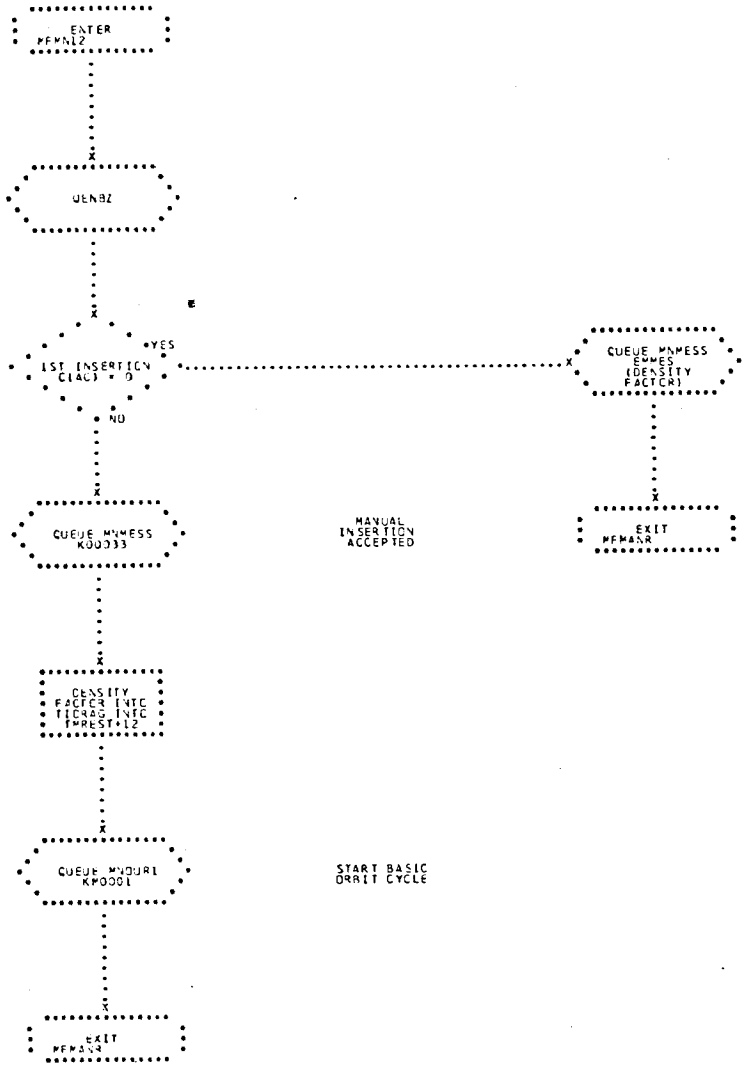
ENTER
MFMN12
QENBZ
1ST INSERTION
C(AC) = 0
YES
NO
CUEUE MNMESS
EMMES
(DENSITY
FACTCR)
CUEUE MNMESS
K00033
MANUAL
INSERTION
ACCEPTED
EXIT
MFMANR
DENSITY
FACTCR INTC
TICRAG INTC
TMREST+12
CUEUE MNQUR1
KP0001
START BASIC
ORBIT CYCLE
EXIT
MFMANR

## 61. MFMN13 - MONITOR MANUAL TTF SUFFIX TO IOMANI

MFMN13 RECEIVES CONTROL FROM IOMANI AFTER THE SUCCESSFUL MANUAL INSERTION OF THE QUANTITIES FOR MANUAL TIME-TO-FIRE (TTF), A PRIMARY AREA OR A CONTINGENCY AREA. (SEE FLOWCHART.)

INPUT

| | | |
|---|---|---|
| A) | TITTFR | LATITUDE IN FLOATING POINT DEGREES |
| B) | TITTFR+1 | LONGITUDE IN FLOATING POINT DEGREES |
| C) | TITTFR+2 | LRN IN FIXED POINT |
| D) | TITTFR+3 | 0=PRIMARY AREA. 1=CONTINGENCY AREA |
| E) | TITTFR+4 | BANK ANGLE IN FLOATING POINT |
| F) | TITTFR+5 | DELTA V IN FLOATING POINT |

OUTPUT

| | | |
|---|---|---|
| A) | TMTARG | TABLE UPDATED WITH TTF QUANTITIES FOR MNTTF4 PROGRAM |

METHOD

MFMN13, RECEIVING CONTROL FROM IOMANI, DISABLES THE COMPUTER AND INTERROGATES THE AC. IF THE AC IS ZERO IT INDICATES THE FIRST INSERTION OF THE MESSAGE. IF IT IS NOT ZERO IT INDICATES THE SECOND INSERTION OF THE MESSAGE. PROGRAM MNTTF4 IS QUEUED FOR COMPUTING THE TTF FOR THE PRIMARY OR CONTINGENCY AREA OF THE TARGET INSERTED. IN ADDITION, THE DELTA V IS USED FOR THE OAMS BURN 12 MINUTES PRIOR TO RETROFIRE TIME.

USAGE

MFMN13 IS ENTERED FROM IOMANI AND EXITS TO MFMANR

A) STORAGE REQUIRED -

46 LOCATIONS

B) MACROS -

QENBZ

QUEUE

C) PARAMETERS -

MNMESS

MNTTF4

D) CONSTANTS -

K00033

K00360

K.1RAD

E) TABLES -

TITTFR

TMTARG

F) TIMING -

0.346 MILLISECONDS, MAXIMUM

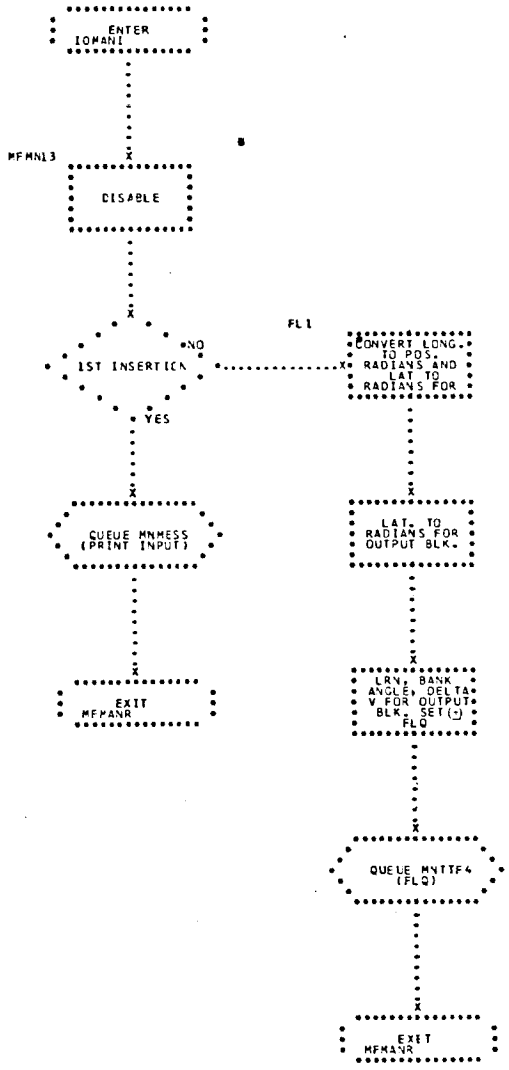
ENTER
IOMANI
MFMN13
DISABLE
1ST INSERTION
NO
YES
FL1
CONVERT LONG. TO POS. RADIANS AND LAT TO RADIANS FOR
QUEUE MNMESS (PRINT INPUT)
LAT. TO RADIANS FOR OUTPUT BLK.
EXIT MFMANR
LRN, BANK ANGLE, DELTA-V FOR OUTPUT BLK. SET(J) FLQ
QUEUE MNTTF4 (FLQ)
EXIT MFMANR

## 62. MFMN14 - IOMANI SUFFIX FROM MANEUVER TABLE UPDATES

MANUAL UPDATES OF THE S/C MANEUVER TABLE (TMANUV) ARE INITIALIZED UNDER THE PROGRAM CONTROL OF MFMN14. THROUGH AN INTERROGATION OF THE INSERTED PARAMETERS, THE DESIRED TYPE OF UPDATE MAY BE DETERMINED AND PASSED ON TO THE UPDATE PROCESSOR, MYTABU. THE INSERTED PARAMETERS INCLUDE GMT OF PROPULSION SETTING (GMTPS), DELTA TIME OF PROPULSION INTERVAL, DELTA VELOCITY OF MANEUVERS, S/C PITCH, S/C YAW AND THRUSTER INDICATOR. (SEE FLOWCHART.)

UPDATE REQUESTS FALL INTO THREE CLASSIFICATIONS -

1) MANEUVER INSERTION AS A FUNCTION OF TIME - THE MANEUVER WILL BE CHRONOLOGICALLY ORDERED IN TMANUV.
2) MANEUVER INSERTION AS A FUNCTION OF VELOCITY - THE DELTA VELOCITY IS CONVERTED TO DELTA TIME AND LOGIC PROCEEDS AS IN 1).
3) MANEUVER DELETION - THE MANEUVER ASSOCIATED WITH THE INSERTED GMTPS WILL BE DROPPED FROM TMANUV.

A SPECIAL REQUEST IS GENERATED IF THE INSERTED DELTA VELOCITY IS MINUS, SUCH AN ENTRY WILL CAUSE THE MANEUVER PARAMETERS TO BE PLACED INTO THE OAMS DECAY MANEUVER TABLE, TMODSO, AND THE QUEUEING OF MYTABU IS BYPASSED.

INPUT

C(AC)-Z FIRST INSERTION. NZ SECOND INSERTION

A) TABLES -

TMZOOT CONTAINS INSERTED QUANTITIES
TMTHUR CONTAINS BCI NAMES OF THRUSTERS
TOSCCH CONTAINS S/C CHARACTERISTICS

B) COMMUNICATION CELL -

MCOMIP NZ INDICATES A MANEUVER IS IN PROGRESS

OUTPUT

A) TABLES -

TMZOOT CONTAINS INSERTED MANEUVER PARAMETERS

TMODSO CONTAINS DECAY-SAFE MANEUVER PARAMETERS

B) MFMN14 PROVIDES QUEUES FOR THE FOLLOWING -

1) MYMESS TO PRINT OUT INSERTED QUANTITIES, SECOND INSERTION ACCEPTANCE AND INVALID INSERTIONS.

2) MYTABU TO UPDATE S/C MANEUVER TABLE.

METHOD

QUEUES ARE GIVEN TO MYMESS TO PRINT OUT THE INSERTED QUANTITIES ON THE FIRST INSERTION.

RECEIPT OF THE SECOND INSERTION CAUSES THE PROGRAM LOGIC TO PROCEED AS FOLLOWS - MCOMIP IS EXAMINED TO DETERMINE IF THE MISSION HAS ENTERED A S/C THRUST PERIOD. IF IT HAS, MYMESS IS QUEUED WITH A MESSAGE STATING INSERTION REJECTION DUE TO PRESENCE OF A BURN PERIOD. IF NOT, MYMESS RECEIVES A SECOND INSERTION ACCEPTANCE QUEUE.

DELTA VELOCITY IS THEN EXAMINED TO ASCERTAIN IF SUCH AN UPDATE IS REQUESTED. IF SO, DELTA VELOCITY IS CONVERTED TO DELTA TIME.

$$\Delta t = \frac{M \cdot v}{\dot{M}v + 2g\ T \cos \xi}$$

WHERE

| | | |
|---|---|---|
| M | = S/C WEIGHT | (LBS.) |
| $\dot{M}$ | = MASS EXPULSION RATE | (LBS./SEC.) |
| g | = ACCELERATION DUE TO GRAVITY | $(FT./SEC)^2$) |
| t | = THURST LEVEL | (LBS.) |

v = VELOCITY (FT./SEC.)

$\xi$ = THRUSTER CANT ANGLE. (RAD.)

IF VELOCITY IS ZERO, DELTA TIME IS EXAMINED. A ZERO TIME IMPLIES A MANUAL DELETION, AND MYTABU IS QUEUED WITH THE -GMTPS. A LIMIT TEST IS PERFORMED ON THE DELTA TIME, IF IT EXCEEDS SOME COMPILED VALUE, MYMESS IS QUEUED TO PRINT A MESSAGE OF THE INVALID MANEUVER. OTHERWISE, GMTPC IS FORMED AS GMTPS+$\Delta$t, AND S/C PITCH AND YAW ARE CONVERTED FROM DEGREES TO RADIANS. MYTABU IS QUEUED WITH THE + GMTPS FOR A TMANUV UPDATE, BUT FOR A DECAY-SAFE MANEUVER, THE S/C PARAMETERS ARE PLACED INTO TMODSO. EXIT IS THEN MADE TO MFMANR.

TMZOOT AND TMODSO ARE FORMATTED AS SUCH -

| TABLE | GMTPS | GMT FX. SECS |
|---|---|---|
| +1 | GMTPC | GMT FX. SECS |
| +2 | t ,,TI | A(FX. SECS.),,D(FX. PT.) |
| +3 | S/C PITCH | FL. RAD. |
| +4 | S/C YAW | FL. RAD. |

USAGE

ENTRY IS MADE FROM IOMANI AND EXITS TO MFMANR.

A) TABLES -

TMZOOT

TOSCCH

TMTHUR

TMODSO

B) CONSTANTS -

K000.5

K00033

KACCDG

KCH233

K0.1DG

K00057

K00338

C) COMMUNICATION CELL -

MCOMIP

D) SUBROUTINES -

COS

GEMWGT

E) PARAMETERS -

MNMESS

MNTABU

F) MACROS -

QENBZ

QUEUE

QENBA

G) STORAGE REQUIRED - 97 LOCATIONS

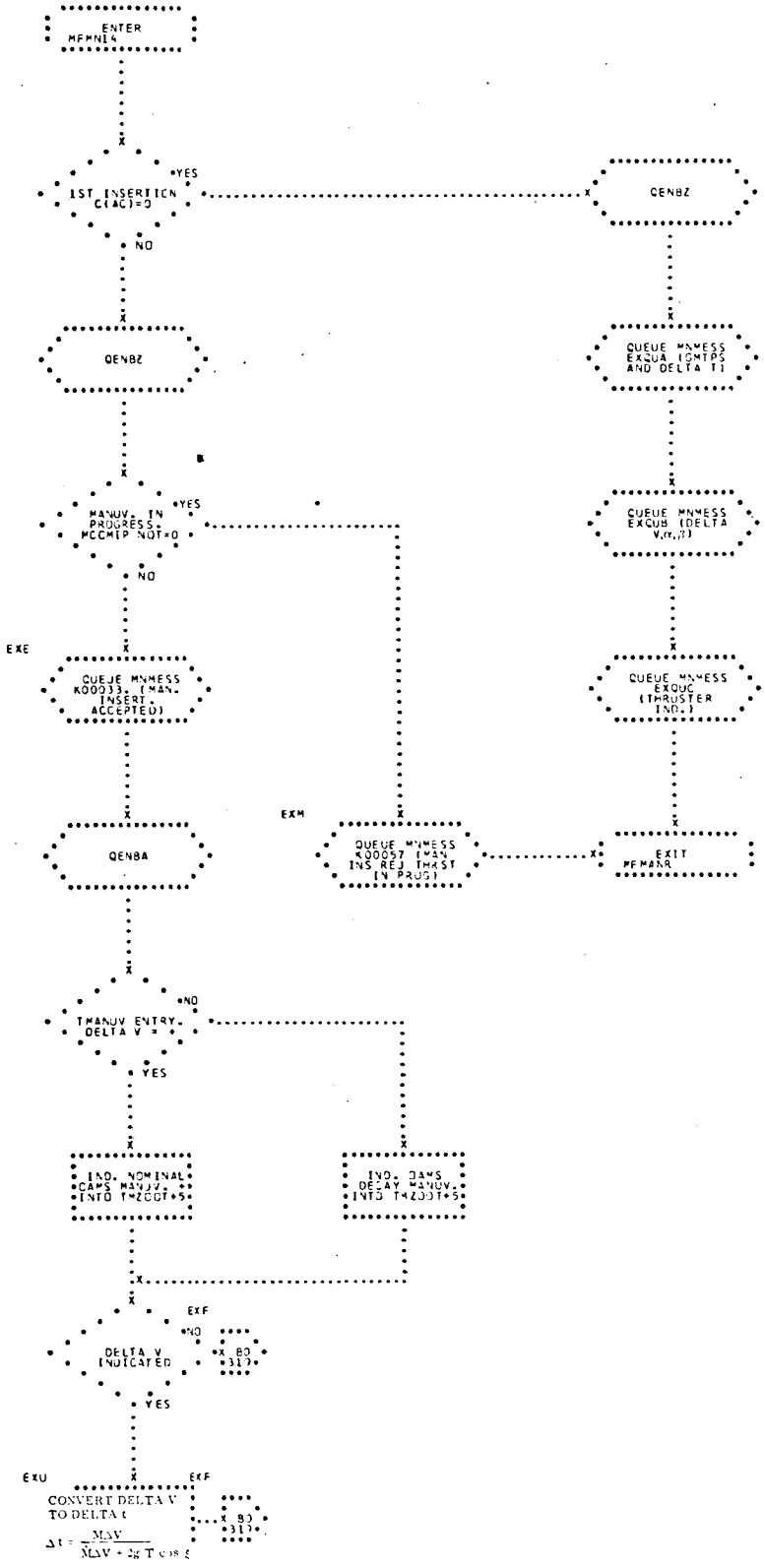
ENTER
MFMN14
1ST INSERTION
C(AC)=0
YES
NO
QENBZ
QUEUE MNMESS
EXQUA (OMTPS
AND DELTA T)
MANUV. IN
PROGRESS.
MCCMIP NOT=0
YES
NO
QUEUE MNMESS
EXQUB (DELTA
V,α,β)
EXE
QUEUE MNMESS
K00033. (MAN.
INSERT.
ACCEPTED)
QUEUE MNMESS
EXQUC
(THRUSTER
IND.)
EXM
QENBA
QUEUE MNMESS
K00057 (MAN.
INS.REJ.THAST
IN PROG)
EXIT
MFMANR
TMANUV ENTRY.
DELTA V =
NO
YES
IND. NOMINAL
CAMS MANUV. +
INTO T=ZCOT+5
IND. CAMS
DELAY MANUV.
INTO T=ZOOT+5
EXF
DELTA V
INDICATED
NO
YES
EXU
EXF
CONVERT DELTA V
TO DELTA t
$\Delta t = \frac{M\Delta V}{M\Delta V + \Delta g\, T \cos \xi}$

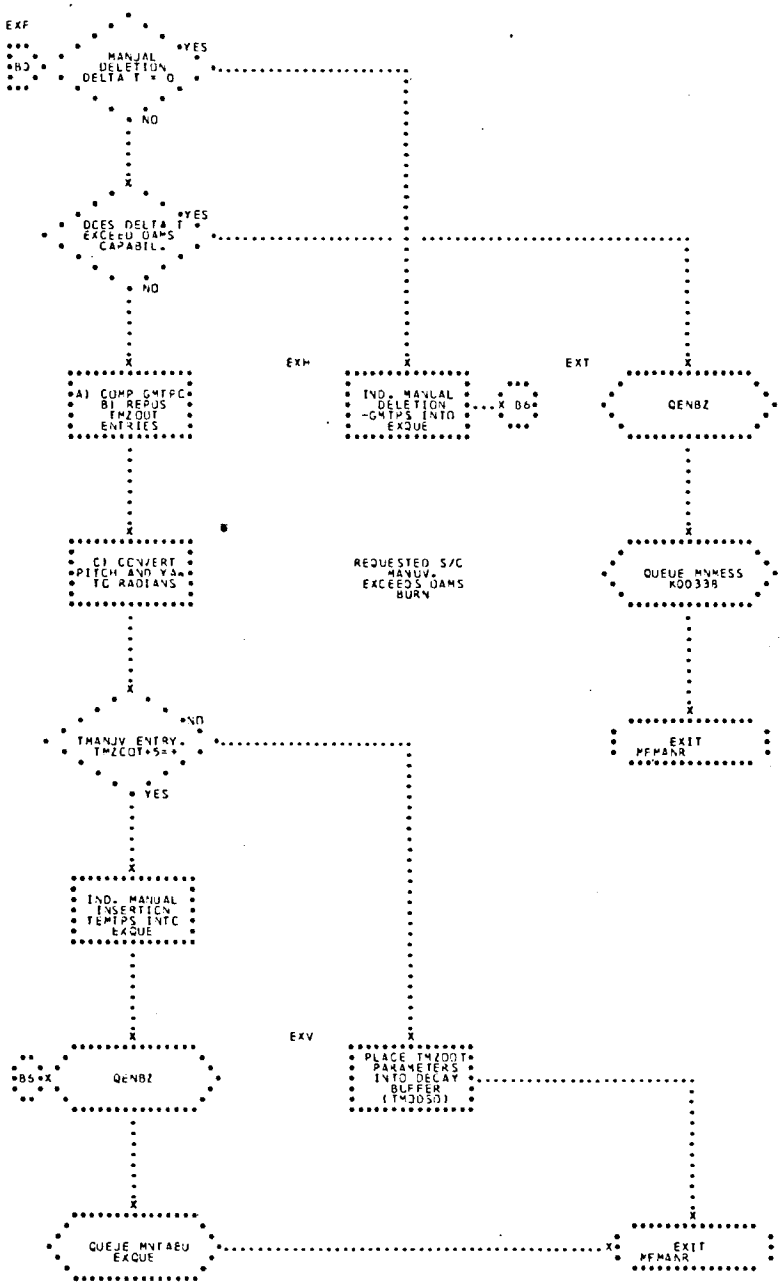
EXF
B0
MANUAL DELETION DELTA T = 0
YES
NO
DOES DELTA T EXCEED OAMS CAPABIL.
YES
NO
EXH
EXT
A) COMP GMTPC B) REPOS TMZOOT ENTRIES
IND. MANUAL DELETION -GMTPS INTO EXQUE
B6
QENBZ
C) CONVERT PITCH AND YAW TO RADIANS
REQUESTED S/C MANUV. EXCEEDS OAMS BURN
QUEUE MNMESS K00338
TMANUV ENTRY. TMZOOT+5=+
NO
YES
EXIT MFMANR
IND. MANUAL INSERTION TEMTPS INTO EXQUE
EXV
B5
QENBZ
PLACE TMZOOT PARAMETERS INTO DECAY BUFFER (TM0050)
QUEUE MNTABU EXQUE
EXIT MFMANR

## 63. MFMN15 - IOMANI SUFFIX FOR CONFIRMATION OF A MANEUVER

THIS SUFFIX INTRODUCES PROPULSION PARAMETERS AS A MEANS OF CONFIRMING AN ORBITAL MANEUVER. THEY ARE GMT OF PROPULSION INITIATION, DELTA TIME OF THRUST INTERVAL, DELTA VELOCITY OF MANEUVER, S/C PITCH, S/C YAW AND THRUSTER INDICATOR. WITH THIS INFORMATION, THE MANEUVER CONFIRMATION PROGRAM IS QUEUED TO PRODUCE A VECTOR REFLECTING MANEUVER COMPLETION. (SEE FLOWCHART.)

INPUT

C(AC)-Z FIRST INSERTION. NZ SECOND INSERTION

THE FOLLOWING TABLES CONTAINING -

| | |
|---|---|
| TICOTH | INSERTED QUANTITIES |
| TMTHUR | BCI NAMES OF THRUSTERS |
| TMCODW + 2 | S/C WEIGHT |

OUTPUT

A) TABLES -

| | |
|---|---|
| TICOTH | MANEUVER PARAMETERS USED BY MYCOTO |

B) QUEUES FOR THE FOLLOWING -

1) MYMESS TO PRINT OUT INSERTED QUANTITIES AND ACCEPTANCE OF SECOND INSERTION.
2) MYCOTO TO GENERATE A MANEUVER-REFLECTING VECTOR.

METHOD

WITH THE FIRST INSERTION, THE THRUSTER INDICATOR IS SET-UP FOR PRINTING AND MYMESS IS QUEUED TO PRINT OUT THE

INSERTED VALUES.

MYMESS IS QUEUED WITH AN ACCEPTANCE MESSAGE UPON INDICATION OF THE SECOND INSERTION. DELTA VELOCITY IS CONVERTED TO DELTA TIME IF SO NEEDED (SEE MFMN14). S/C PITCH AND YAW ARE CONVERTED TO RADIANS, MYCOTO IS QUEUED AND EXIT IS MADE TO MFMANR.

USAGE

ENTRY IS MADE FROM IOMANI AND EXIT TO MFMANR.

A) STORAGE REQUIRED -
   82 LOCATIONS
B) TABLES -
   TICOTH, TOTUC3, TOTUC2
   TOTUC1, TMCODW, TMTHUR
C) CONSTANTS -
   K00033, K00.5, KACCDG,
   KCH233, K0.1DG
D) COMMUNICATION CELLS -
   MCOWGT, MCI32V
E) MACROS -
   QENBZ, QUEUE, QENBA
F) SUBROUTINES -
   BBBCOS, EWNAM

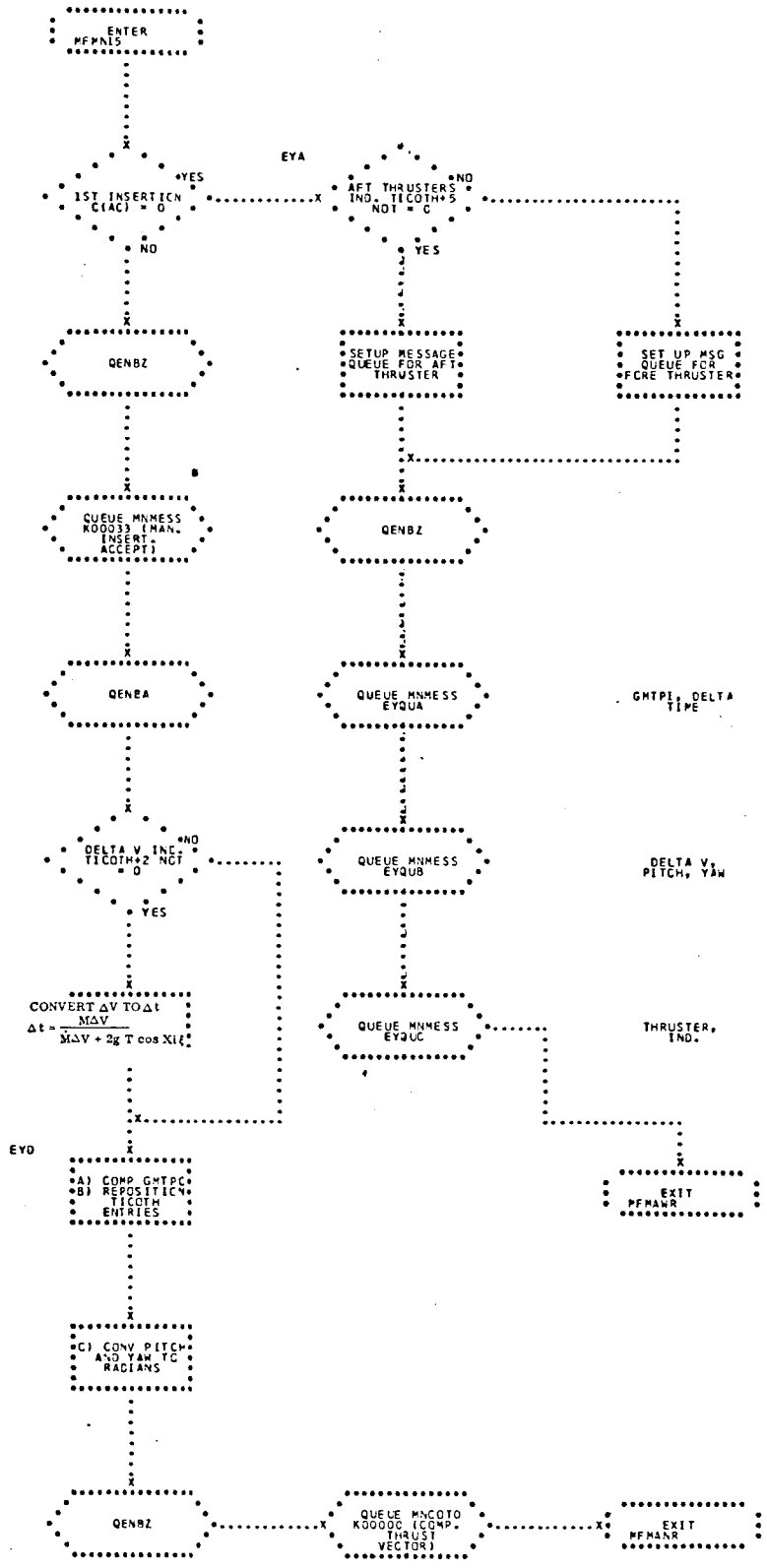
ENTER MFMN15
1ST INSERTION C(AC) = 0
YES
NO
EYA
AFT THRUSTERS IND. TICOTH+5 NOT = 0
NO
YES
QENBZ
SETUP MESSAGE QUEUE FOR AFT THRUSTER
SET UP MSG QUEUE FOR FORE THRUSTER
QUEUE MNMESS K00033 (MAN. INSERT. ACCEPT)
QENBZ
QENBA
QUEUE MNMESS EYQUA
GMTPI, DELTA TIME
DELTA V INC. TICOTH+2 NOT = 0
NO
YES
QUEUE MNMESS EYQUB
DELTA V, PITCH, YAW
CONVERT ΔV TO Δt
Δt = MΔV / (MΔV + 2g T cos XIE)
QUEUE MNMESS EYQUC
THRUSTER, IND.
EYD
A) COMP GMTPC
B) REPOSITION TICOTH ENTRIES
EXIT MFMANR
C) CONV PITCH AND YAW TO RADIANS
QENBZ
QUEUE MNCOTO K00000 (COMP. THRUST VECTOR)
EXIT MFMANR

## 64. MFMN16 - IOMANI SUFFIX FOR PROPULSION PANEL COMPUTATIONS

A REQUEST TO COMPUTE S/C PARAMETERS TO EXECUTE SOME PLANNED MANEUVER IS INITIATED BY MFMN16. THE MANUALLY INSERTED QUANTITIES INCLUDE GMT OF MANEUVER INITIATION, A MANEUVER DELTA, THRUSTER INDICATOR AND FUNCTION TYPE.

THE MANEUVER DELTA POSSESSES TWO OPTIONS, WEDGE ANGLE OR DELTA HEIGHT. FUNCTION TYPE SPECIFIES ONE OF THREE CHOICES -

1) TYPE 0-PERFORM A HEIGHT CHANGE ON THE LINE OF APSIDES.
2) TYPE 1-CIRCULARIZE ANYWHERE ON ORBIT.
3) TYPE 2-PERFORM OUT-OF-PLANE MANEUVER USING WEDGE ANGLE.

USING THIS INFORMATION, MYMUV7 WILL THEN CALCULATE THE DESIRED PARAMETERS AND DISPLAY THEM ON THE S/C PROPULSION PANEL. (SEE FLOWCHART.)

INPUT

C(AC)-Z FIRST INSERTION. NZ SECOND INSERTION

THE FOLLOWING TABLES CONTAINING -

| | |
|---|---|
| TIPROP | INSERTED PROPULSION QUANTITIES |
| TMTHUR | BCI NAMES OF THRUSTERS |

OUTPUT

A) TIPROP-TABLE OF MANUALLY INSERTED PROPULSION QUANTITIES.
B) QUEUES FOR MYMESS TO PRINT-PUT INSERTED QUANTITIES AND ACCEPTANCE OF SECOND INSERTION.
C) THE B-BIT IS TURNED ON FOR MYMUV7.

METHOD

THE INSERTED QUANTITIES ARE READIED FOR PRINT-OUT ON THE FIRST INSERTION. MYMESS IS QUEUED WITH AN ACCEPTANCE MESSAGE ON THE SECOND INSERTION. NEXT FUNCTION TYPE IS EXAMINED. IF = 0, DELTA HEIGHT IS CONVERTED FROM NAUTICAL MILES TO GEMINI LENGTH UNITS, IF = 2, WEDGE ANGLE IS CONVERTED FROM DEGREES TO RADIANS. FOR A FUNCTION TYPE = 1, THE MANEUVER DELTA IS MEANINGLESS, THEREFORE THE INSERTED VALUE SHOULD BE ZERO TO PRESERVE CONSISTENCY. MYMUV7 HAS ITS B BIT TURNED ON AND THE SUFFIX EXITS TO MFMANR.

USAGE

ENTRY IS MADE FROM IOMANI AND EXIT TO MFMANR

A) TABLES -
   TIPROP
   TMTHUR

B) CONSTANTS -
   K00033
   K0.1DG
   KCGUNM

C) MACROS -
   QENBZ
   QUEUE
   TRNON

D) PARAMETERS -
   MNMESS
   MNMUV7
   B

E) STORAGE REQUIRED -
   40 LOCATIONS

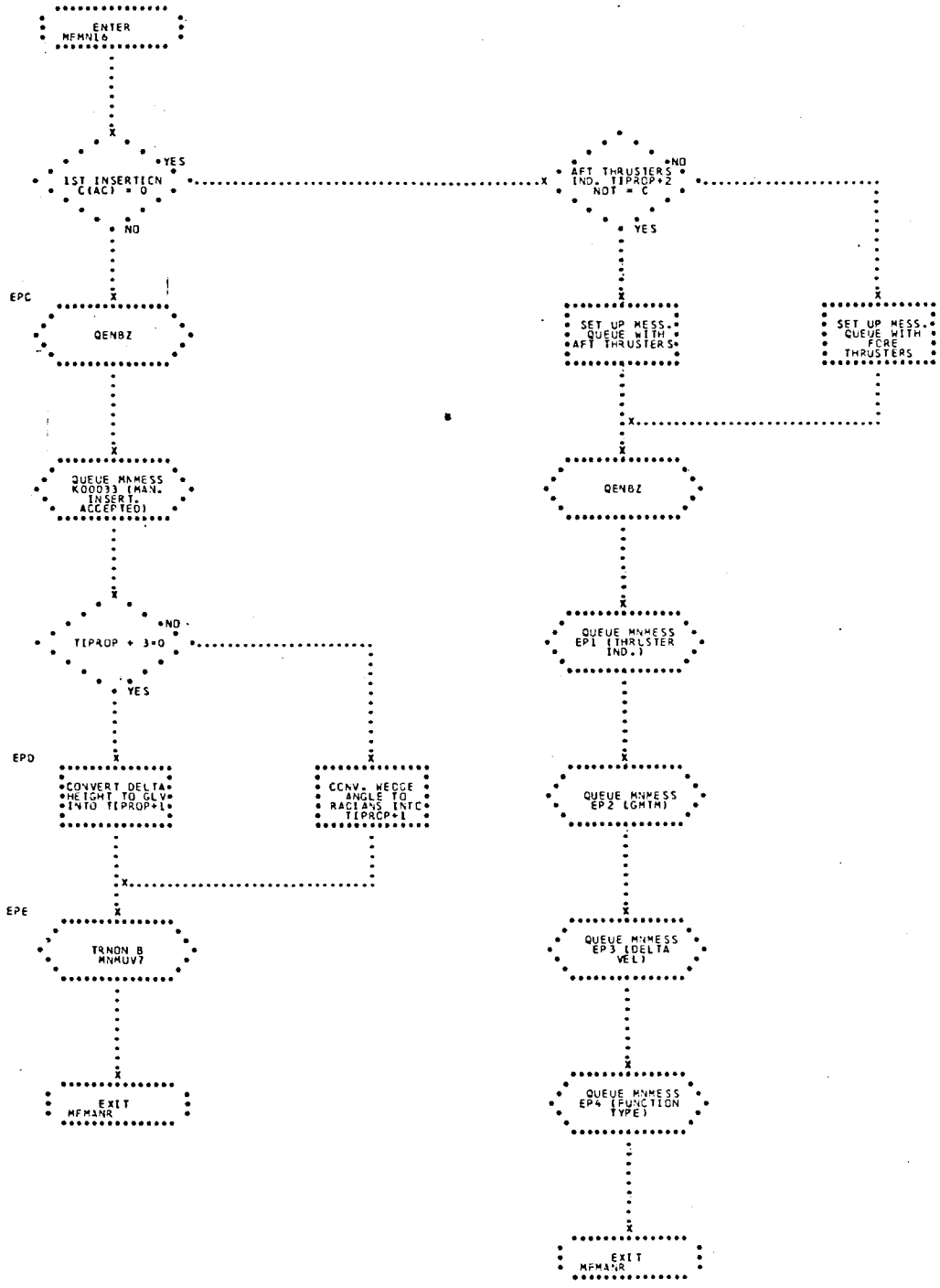
ENTER
MFMN16
1ST INSERTION
C(AC) = 0
YES
NO
AFT THRUSTERS
IND. TIPROP+2
NOT = C
NO
YES
EPC
QENBZ
SET UP MESS.
QUEUE WITH
AFT THRUSTERS
SET UP MESS.
QUEUE WITH
FORE
THRUSTERS
QUEUE MNMESS
K00033 (MAN.
INSERT.
ACCEPTED)
QENBZ
TIPROP + 3=0
NO
YES
QUEUE MNMESS
EP1 (THRUSTER
IND.)
EPD
CONVERT DELTA
HEIGHT TO GLV
INTO TIPROP+1
CONV. WEDGE
ANGLE TO
RADIANS INTO
TIPROP+1
QUEUE MNMESS
EP2 (GMTM)
EPE
TRNON B
MNMOV7
QUEUE MNMESS
EP3 (DELTA
VEL)
EXIT
MFMANR
QUEUE MNMESS
EP4 (FUNCTION
TYPE)
EXIT
MFMANR

## 65. MFMN17 - MONITOR ORBIT NAVIGATION VECTOR SUFFIX TO IOMANI

MFMN17 RECEIVES CONTROL FROM IOMANI AFTER THE SUCCESSFUL MANUAL INSERTION OF THE ORBIT NAVIGATION VECTOR GMTFC. (SEE FLOWCHART.)

INPUT

TIGTFC GMT AT WHICH VECTOR IS DESIRED.

OUTPUT

HZ1 GMT OF VECTOR DESIRED.

METHOD

UPON RECEIVING CONTROL FROM IOMANI, MFMN17 DISABLES THE COMPUTER AND INTERROGATES THE AC. IF THE AC IS ZERO IT INDICATES THE FIRST INSERTION OF THE MESSAGE. IF IT IS NOT ZERO IT INDICATES THE SECOND INSERTION OF THE MESSAGE. THIS MESSAGE WILL CAUSE THE MANEUVER REFLECTED X, Y, Z, $\dot{X}$, $\dot{Y}$, $\dot{Z}$ AT THIS GMT TO BE CALCULATED AND QUEUED FOR DCS TO CONVERT TO TTY AND PRINT ONLINE.

USAGE

MFMN17 IS ENTERED FROM IOMANI AND EXITS TO MFMANR

A) STORAGE REQUIRED -
   12 LOCATIONS

B) MACROS -
   QENBZ
   QUEUE

C) PARAMETERS -

MNMESS

MNNAV5

D) CONSTANTS -

K00033

E) TABLE -

TIGTFC

F) TIMING -

0.087 MILLISECONDS, MAXIMUM

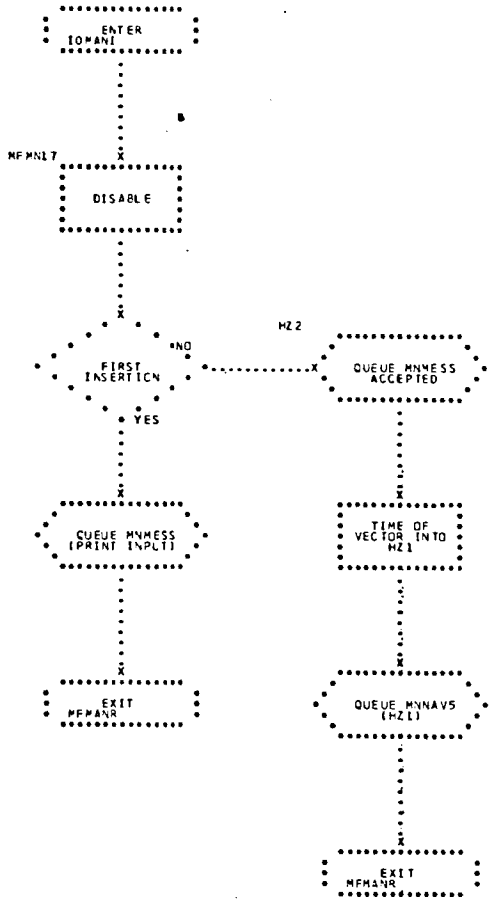
ENTER
IOMANI
MFMNI7
DISABLE
FIRST
INSERTION
NO
YES
HZ2
QUEUE MNMESS
ACCEPTED
QUEUE MNMESS
(PRINT INPUT)
TIME OF
VECTOR INTO
HZ1
EXIT
MFMANR
QUEUE MNNAVS
(HZ1)
EXIT
MFMANR

## 66. MFMN18 - MONITOR RANGE ADAPTER BEACON SUFFIX TO IOMANI

MFMN18 RECEIVES CONTROL FROM IOMANI AFTER THE SUCCESSFUL MANUAL INSERTION OF THE RANGE ADAPTER BEACON VALVE. (SEE FLOWCHART.)

INPUT

MCIRAB CONTAINS THE INSERTED RANGE ADAPTER VALVE.

OUTPUT

MCARAB CONTAINS RANGE ADAPTER VALVE.

METHOD

ON RECEIVING CONTROL FROM IOMANI, MFMN18 DISABLES THE COMPUTER AND INTERROGATES THE AC. IF AC IS ZERO IT INDICATES THE FIRST INSERTION OF THE MESSAGE, AND IF THE AC IS NOT ZERO IT INDICATES THE SECOND INSERTION OF THE MESSAGE. THE FINAL VALVE FOR RANGE ADAPTER BEACON IS STORED IN MCARAB.

USAGE

MFMN18 IS ENTERED FROM IOMANI AND EXITS TO MFMANR.

A) STORAGE REQUIRED -
   13 LOCATIONS
B) MACROS -
   QENBZ
   QUEUE
C) PARAMETERS -
   MNMESS

D) CCNSTANTS -
K00033

E) COMMUNICATICN CELLS -
MCIRAB
MCARAB

F) TIMING -
0.091 MILLISECONDS, MAXIMUM

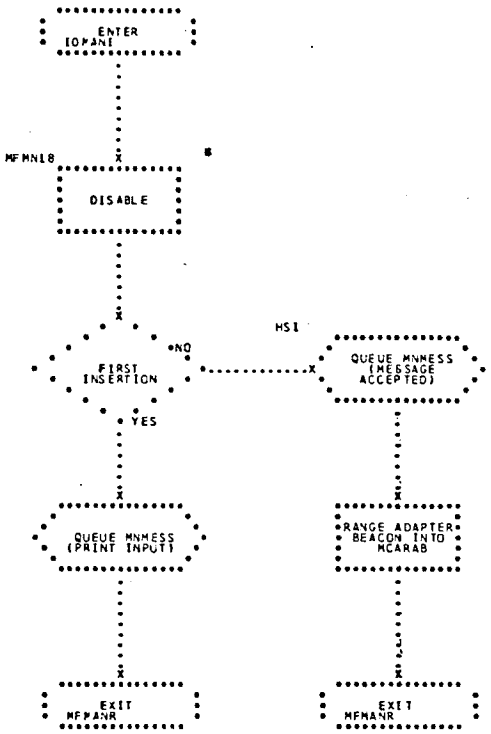
ENTER
MFMN18
DISABLE
HSI
NO
FIRST INSERTION
QUEUE MNMESS (MESSAGE ACCEPTED)
YES
QUEUE MNMESS (PRINT INPUT)
RANGE ADAPTER BEACON INTO MCARAB
EXIT
EXIT

## 67. MFMN19 - MONITOR CHANGE TARGET IN REENTRY SUFFIX TO IOMANI

MFMN19 RECEIVES CONTROL FROM IOMANI AFTER A SUCCESSFUL INSERTION OF THE NEW REENTRY TARGET, THE LONGITUDE, LATITUDE AND MODE. (SEE FLOWCHART.)

INPUT

| | | |
|---|---|---|
| A) | TITERG | LONGITUDE FLOATING POINT DEGREES |
| B) | TITERG+1 | LATITUDE FLOATING POINT DEGREES |
| C) | TITERG+2 | MODE, INTEGER |

OUTPUT

| | | |
|---|---|---|
| A) | TMRTCO | NOT USED |
| B) | TMRTCO+1 | MODE, INTEGER |
| C) | TMRTCO+2 | LONGITUDE (+) FLOATING POINT RADIANS |
| D) | TMRTCO+3 | LATITUDE FLOATING POINT RADIANS |

METHOD

UPON RECEIVING CONTROL FROM IOMANI, MFMN19 DISABLES THE COMPUTER AND INTEGRATES THE AC. IF THE AC IS ZERO IT INDICATES THE FIRST INSERTION OF THE MESSAGE, AND IF THE AC IS NOT ZERO IT INDICATES THE SECOND INSERTION OF THE MESSAGE. PROGRAM MNREN2 IS QUEUED TO UPDATE THE GUIDANCE PARAMETERS AND THE REENTRY TRAJECTORY.

USAGE

MFMN19 IS ENTERED FROM IOMANI AND EXITS TO MFMANR

A) STORAGE REQUIRED -
37 LOCATIONS

B) MACROS -

QENBZ

QUEUE

C) PARAMETERS -

MNMESS

MNREN2

D) CCNSTANTS -

K00033

E) COMMUNICATION CELL -

MCNRRF

F) TABLES -

TITERG

TMRTCO

G) TIMING -

0.239 MILLISECCNDS, MAXIMUM

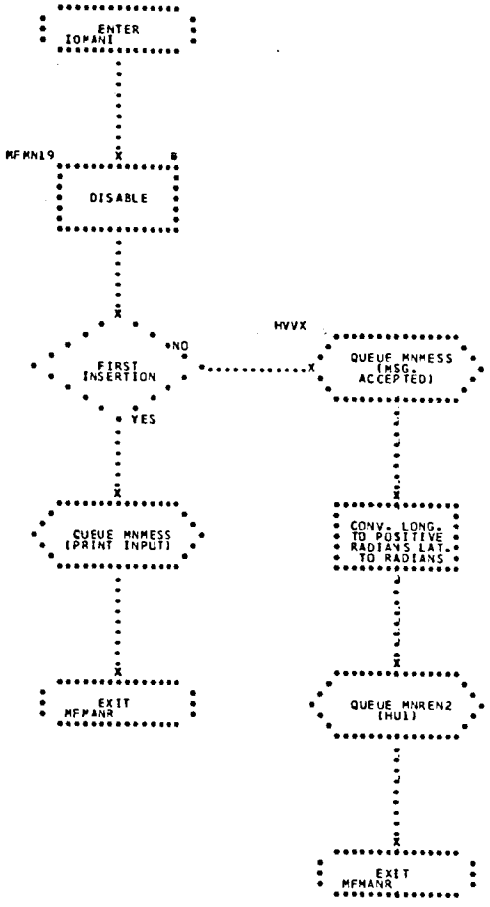
ENTER
IOMANI
MFMN19
DISABLE
FIRST
INSERTION
NO
YES
HVVX
QUEUE MNMESS
(MSG.
ACCEPTED)
QUEUE MNMESS
(PRINT INPUT)
CONV. LONG.
TO POSITIVE
RADIANS LAT.
TO RADIANS
EXIT
MFMANR
QUEUE MNREN2
(HU1)
EXIT
MFMANR

## 68. MFMN20 - MONITOR SELECT BACKUP GUIDANCE PARAMETERS IN REENTRY

MFMN20 RECEIVES CONTROL FROM IOMANI AFTER THE SUCCESSFUL MANUAL INSERTION OF THE BANK ANGLE AND THE GMT TO REVERSE BANK OR THE GMT TO ROLL. THESE QUANTITIES ARE USED TO INITIATE A REENTRY TRAJECTORY TO BE INTEGRATED. (SEE FLOWCHART.)

INPUT

| | | |
|---|---|---|
| A) | TIBACK | BANK ANGLE |
| B) | TIBACK+1 | GMT TO REVERSE BANK OR GMT TO ROLL |
| C) | TIBACK+2 | MODE |

OUTPUT

| | | |
|---|---|---|
| A) | TMRTCO | A 2 |
| B) | TMRTCO+1 | MODE |
| C) | TMRTCO+5 | BANK ANGLE |
| D) | TMRTCO+6 | GMT TO REVERSE BANK OR GMT TO ROLL |

METHOD

UPON RECEIVING CONTROL FROM IOMANI, MFMN20 DISABLES THE COMPUTER AND INTERROGATES THE AC. IF THE AC IS ZERO IT INDICATES THE FIRST INSERTION OF THE MESSAGE, AND IF THE AC IS NOT ZERO IT INDICATES THE SECOND INSERTION OF THE MESSAGE. THE PROGRAM MNREN2 IS QUEJED FOR GENERATING A REENTRY TRAJECTORY.

USAGE

MFMN20 IS ENTERED FROM ICMANI AND EXITS TO MFMANR

A) STORAGE REQUIRED -

39 LOCATIONS

B) MACROS -

QENBZ

QUEUE

C) PARAMETERS -

MNMESS

MNREN2

D) CONSTANTS -

K00033

E) CCMMUNICATION CELL -

MCNRRF

F) TABLES -

TIBACK

TMRTCO

G) TIMING -

0.247 MILLISECONDS, MAXIMUM

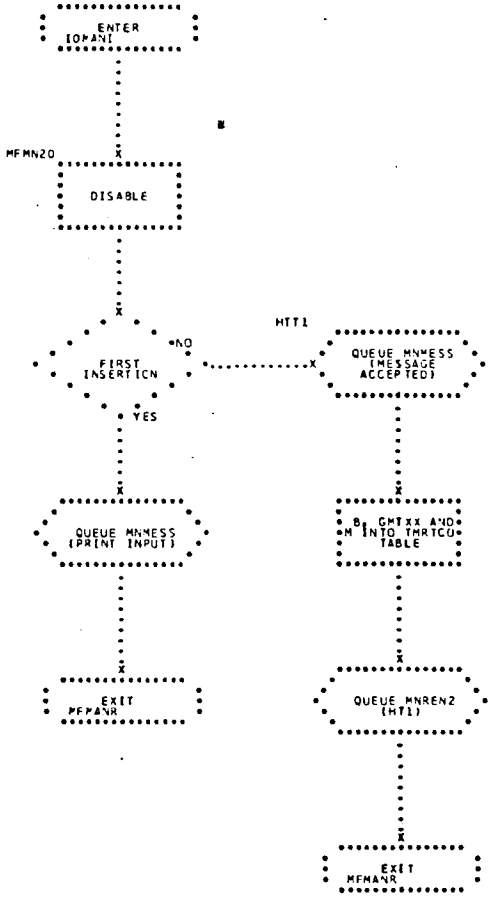
ENTER
IOMANI
MFMN20
DISABLE
FIRST
INSERTION
NO
YES
HTT1
QUEUE MNMESS
(MESSAGE
ACCEPTED)
QUEUE MNMESS
(PRINT INPUT)
B, GMTXX AND
M INTO THRTCO
TABLE
EXIT
MFMANR
QUEUE MNREN2
(HT1)
EXIT
MFMANR

## 69. MFMN21 - MONITOR RENDEZVOUS INPUTS SUFFIX TO IOMANI

MFMN21 RECEIVES CONTROL FROM IOMANI AFTER THE SUCCESSFUL MANUAL INSERTION FOR RENDEZVOUS INPUTS - PSEUDO TARGET ORBITAL PERIOD, AND ORBITAL RADIANS. (SEE FLOWCHART.)

INPUT

A) TIRENZ ORBITAL PERIOD

B) TIRENZ+1 ORBITAL RADIUS

OUTPUT

A) TDCSRZ ORBITAL PERIOD FLOATING POINT SECONDS

B) TDCSRZ+1 ORBITAL RADIUS

METHOD

UPON RECEIVING CONTROL FROM IOMANI, MFMN21 DISABLES THE COMPUTER AND INTERROGATES THE AC. IF THE AC IS ZERO IT INDICATES THE FIRST INSERTION OF THE MESSAGE, AND IF THE AC IS NOT ZERO IT INDICATES THE SECOND INSERTION OF THE MESSAGE. AFTER INTERROGATION THE DCS PROGRAM, MNPDCS, WILL BE QUEUED WITH THIS INFORMATION AND WILL CONVERT IT TO TTY FOR THE RENDEZVOUS UPDATE.

USAGE

MFMN21 IS ENTERED FROM IOMANI AND EXITS TO MFMANR.

A) STORAGE REQUIRED -
18 LOCATIONS

B) MACROS -

QENBZ

QUEUE

C) PARAMETERS -

MNMESS

MNPDCS

D) CONSTANTS -

K00033

E) TABLES -

TIRENZ

TDCSRZ

F) TIMING -

0.113 MILLISECONDS, MAXIMUM

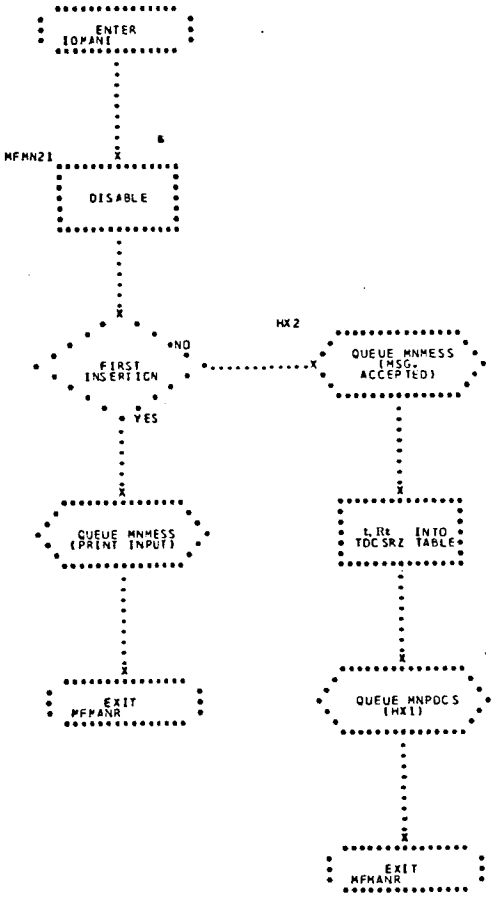
ENTER
IOMANI
MFMN21
DISABLE
FIRST
INSERTION
NO
YES
HX2
QUEUE MNMESS
(MSG.
ACCEPTED)
QUEUE MNMESS
(PRINT INPUT)
L.RE INTO
TDCSRZ TABLE
EXIT
MFMANR
QUEUE MNPDCS
(HX1)
EXIT
MFMANR

## 70. MFMN22 - MONITOR SEQUENCE COUNT SUFFIX TO IOMANI

MFMN22 RECEIVES CONTROL FROM IOMANI AFTER THE SUCCESSFUL MANUAL INSERTION FOR UPDATING THE SEQUENCE COUNT. THE SEQUENCE COUNT MAY BE UPDATED FOR ANY OF THE 5 TYPES OF COMMAND LOADS. (SEE FLOWCHART.)

INPUT

TISEQC SEQUENCE COUNT

OUTPUT

MCSEQ(N) UPDATED SEQUENCE COUNT WHERE N = 1,5

METHOD

UPON RECEIVING CONTROL FROM IOMANI, MFMN22 DISABLES THE COMPUTER AND DETERMINES WHICH COMMAND LOAD FOR UPDATING THE SEQUENCE COUNT.

USAGE

MFMN22 IS ENTERED FROM IOMANI AND EXITS TO MFMANR

A) STORAGE REQUIRED -
   31 LOCATIONS
B) MACROS -
   QENBZ
   QUEUE
C) PARAMETERS -
   MNMESS
D) CONSTANTS -
   K00033
E) TABLES -
   TISEQC

F) COMMUNICATION CELLS -

MCSEQ1

MCSEQ2

MCSEQ3

MCSEQ4

MCSEQ5

G) TIMING -

0.264 MILLISECONDS, MAXIMUM

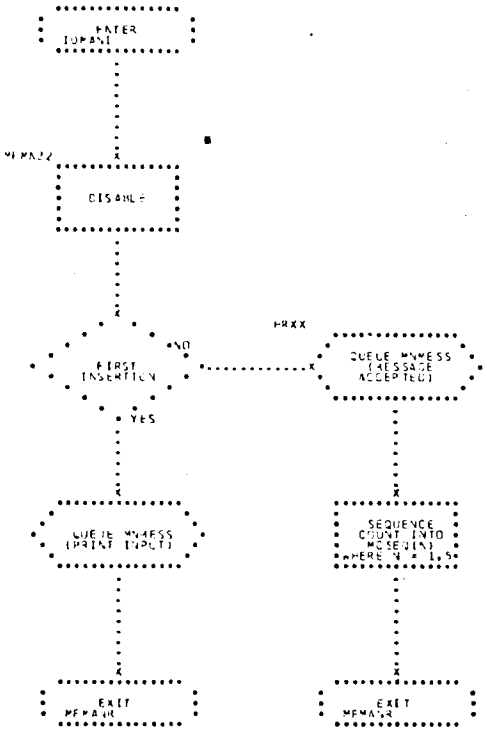
ENTER
IOMANI
MFMA22
DISABLE
FIRST
INSERTION
NO
YES
FRXX
QUEUE MNMESS
(MESSAGE
ACCEPTED)
QUEUE MNMESS
(PRINT INPUT)
SEQUENCE
COUNT INTO
MCSEQ(N)
WHERE N = 1,5
EXIT
MFMANR
EXIT
MFMANR

## 71. MFMN23 - MONITOR ADDRESS DCS MESSAGE SUFFIX TO IOMANI

MFMN23 RECEIVES CONTROL FROM IOMANI AFTER THE SUCCESSFUL MANUAL INSERTION FOR ADDRESSING A DCS MESSAGE. (SEE FLOWCHART.)

INPUT

| | | | |
|---|---|---|---|
| A) | TICOMP | (S1) | PRIMARY SITE |
| B) | TICOMP+1 | (S2) | BACKUP SITE |
| C) | TICOMP+2 | (L1) | * |
| D) | TICOMP+3 | (L2) | * |
| E) | TICOMP+4 | (L3) | * |
| F) | TICOMP+5 | (L4) | * |
| G) | TICOMP+6 | GMT SETTING | |

* $L_i$ IS THE TYPE OF COMMAND LOAD
1-ORBIT NAVIGATION
2-PRERETRO (MANUAL)
3-PRERETRO (AUTOMATIC)
4-MANEUVER
5-RENDEZVOUS

OUTPUT

TMQDCS DCS MESSAGE TABLE

METHOD

UPON RECEIVING CONTROL FROM IOMANI, MFMN23 DISABLES THE COMPUTER AND QUEUES PROGRAM MNPDCS. MNPDCS SETS UP THE HEADER TO BE PUT ON THE TTY MESSAGE. THIS MESSAGE IS STORED TO AWAIT THE TRANSMIT REQUEST.

USAGE

MFMN23 IS ENTERED FROM ICMANI AND EXITS TO MFMANR.

A) STORAGE REQUIRED -
82 LOCATIONS

B) MACROS -
QENBZ
QUEUE

C) PARAMETERS -
MNMESS
MNPDCS

D) CCNSTANTS -
K00033

E) TABLES -
TICOMP
TMQDCS

F) TIMING -
0.539 MILLISECCNDS, MAXIMUM

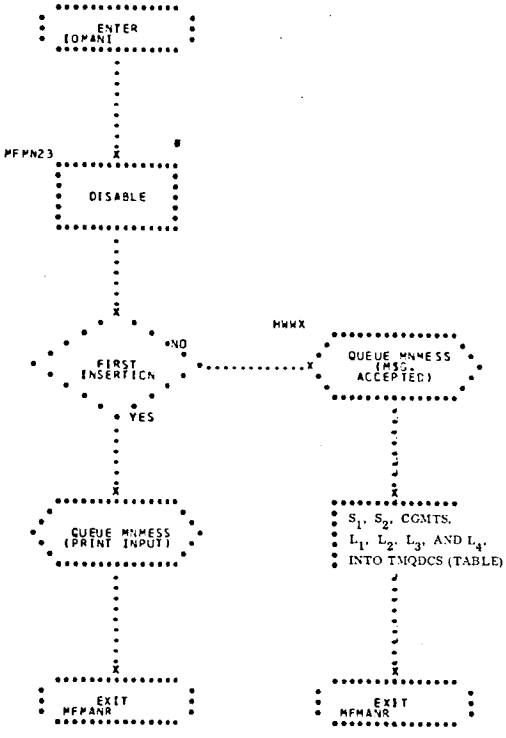
ENTER
(OMANI
MFMN23
DISABLE
FIRST
INSERTION
NO
YES
MMMX
QUEUE MNMESS
(MSG
ACCEPTED)
QUEUE MNMESS
(PRINT INPUT)
$S_1$, $S_2$, CGMTS,
$L_1$, $L_2$, $L_3$, AND $L_4$,
INTO TMQDCS (TABLE)
EXIT
MFMANR
EXIT
MFMANR

## 72. MFMN24 - MONITOR DCS TRANSMIT SUFFIX TO IOMANI

MFMN24 RECEIVES CONTROL FROM IOMANI AFTER THE SUCCESSFUL MANUAL INSERTION OF WHICH LOAD AND TRANSLATION SHOULD BE TRANSMITTED. (SEE FLOWCHART.)

INPUT

TITRAW THE INSERTED LOAD AND TRANSLATION NUMBER TO BE TRANSMITTED

OUTPUT

TMQDC2 THE LOAD AND TRANSLATION NUMBER TO BE TRANSMITTED.

METHOD

UPON RECEIVING CONTROL FROM IOMANI, MFMN24 DISABLES THE COMPUTER AND QUEUES THE PROGRAM MNTDCS (LOAD, TRANSLATE, AND TRANSMIT).

USAGE

MFMN24 IS ENTERED FROM IOMANI AND EXITS TO MFMANR.

A) STORAGE REQUIRED -
   17 LOCATIONS
B) MACROS -
   QENBZ
   QUEUE
C) PARAMETERS -
   MNMESS
   MNTDCS
D) CONSTANTS -
   K00033

E) TABLES -

TITRAW

TMQDC2

F) TIMING -

0.112 MILLISECONDS, MAXIMUM

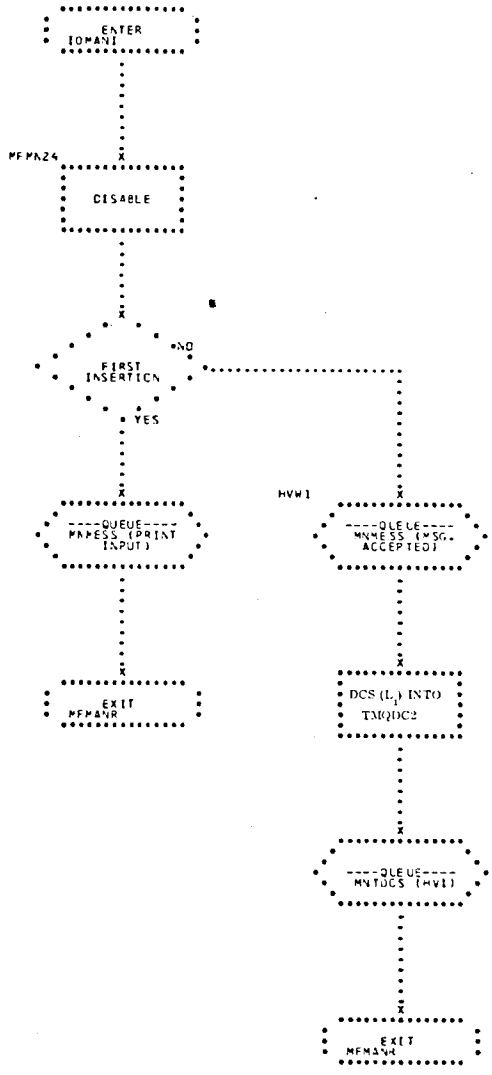
ENTER
IOMANI
MFMA24
DISABLE
FIRST
INSERTION
NO
YES
HVW1
----QUEUE----
MAMESS (PRINT
INPUT)
----QUEUE----
MNMESS (MSG.
ACCEPTED)
EXIT
MFMANR
DCS (L1) INTO
TMQDC2
----QUEUE----
MNTDCS (HV1)
EXIT
MFMANR

## 73. MFMN25 - IOMANI SUFFIX FOR DCS MANEUVER UPDATE

WITH THE INSERTED GMTPS, MFMN25 CONSTRUCTS THE INPUT REQUIRED BY DCS TO PREPARE A MANEUVER UPDATE TRANSLATION MESSAGE. USING THE MANEUVER PARAMETERS CORRESPONDING TO THE INSERTED GMTPS, THE MANEUVER VELOCITY AND INCREMENTAL VELOCITY COMPONENTS ARE CALCULATED. THESE PARAMETERS ARE THEN PLACED IN A BUFFER FOR USE BY THE DCS PROGRAM. (SEE FLOWCHART.)

INPUT

C(AC) - Z FIRST INSERTION, NZ SECOND INSERTION

A) TABLES -

| | |
|---|---|
| TIDMUP | LOCATION CONTAINING INSERTED GMTPS |
| TMANUV | S/C MANEUVERS |
| TOSCCH | S/C CHARACTERISTICS |
| TMODSO | DECAY-SAFE MANEUVER |

B) COMMUNICATION CELL -

| | |
|---|---|
| MCMANC | CELL CONTAINING NUMBER OF MANEUVERS IN TMANUV |

OUTPUT

A) TABLES -

| | |
|---|---|
| TDCSMV | CONTAINING PARAMETERS NEEDED BY DCS FOR MANEUVER UPDATE MESSAGE. |
| TMQDC3 | CONTAINING QUEUE WORD FOR MYPDCS |

B) QUEUES FOR THE FOLLOWING -

1) MYMESS TO PRINT-OUT INSERTED QUANTITY AND SECOND INSERTION ACCEPTANCE.

2) MYPDCS TO GENERATE MANEUVER UPDATE MESSAGE.

METHOD

THE GMTPS IS PRINTED OUT ON THE FIRST INSERTION. ON THE SECOND INSERTION MYMESS IS QUEUED WITH AN INDICATION OF MESSAGE ACCEPTANCE. IF THE INSERTED GMTPS = 0, TMODSO IS USED AS THE INPUT TABLE, OTHERWISE TMANUV IS USED. THE DELTA TIME ASSOCIATED WITH THE GMTPS IS CONVERTED TO DELTA VELOCITY BY MEANS OF THE FOLLOWING FORMULA -

$$\Delta v = \frac{2_g \, Tt \cos}{M - \dot{M}t}$$

WHERE

| | | |
|---|---|---|
| M = | S/C WEIGHT | (LBS.) |
| M = | MASS EXPULSION RATE | (LBS./SEC.) |
| T = | THRUST LEVEL | (LBS.) |
| G = | ACCELERATION DUE TO GRAVITY | (FT./SEC. ) |
| T = | DELTA TIME | (SECS.) |
| = | THRUSTER CANT ANGLE | (RAD.) |

BASED ON THE COMPUTED VELOCITY, THE INCREMENTAL VELOCITY COMPONENTS ARE DERIVED.

| FORE THRUSTERS | AFT THRUSTERS |
|---|---|
| $\Delta V_x = -\Delta v \cos \alpha \cos \beta$ | $\Delta V_x = +\Delta v \cos \alpha \cos \beta$ |
| $\Delta V_y = +\Delta v \sin \alpha$ | $\Delta V_y = -\Delta v \sin \alpha$ |
| $\Delta V_z = +\Delta v \cos \alpha \sin \beta$ | $\Delta V_z = -\Delta v \cos \alpha \sin \beta$ |

WHERE

$\alpha$ = S/C pitch

$\beta$ = S/C yaw

THE MANEUVER PARAMETERS AND VELOCITY COMPONENTS ARE THEN ARRANGED IN TDCSMV AS FOLLOWS -

| TDCSMV | GMTPS | GMT FX. SECS. |
|---|---|---|
| +1 | S/C PITCH | FL. DEGS. |
| +2 | S/C YAW | FL. DEGS. |
| +3 | $\Delta V_X$ | FL. FT/SEC |
| +4 | $\Delta V_Y$ | FL. FT/SEC |
| +5 | $\Delta V_Z$ | FL. FT/SEC |
| +6 | $\Delta v$ | FL. FT/SEC |
| +7 | $\Delta t$ | FX. SECS. |

MYPDCS IS THEN QUEUED WITH TMQDC3 AND EXIT IS MADE TO MFMANR.

USAGE

A) TABLES -

TMANUV

TOSCCH

TDCSMV

TIDMUP

TMODSO

B) CONSTANTS -

K00033

KCH233

K77777

K000.5

KACCDG

KRTDEG

C) COMMUNICATION CELL -

MCMANC

D) MACROS -

QENBZ

QUEUE

QENBA

E) PARAMETERS -

MNMESS

MNPDCS

F) SUBROUTINES -

SIN

COS

GEMWGT

G) STORAGE REQUIRED - 105 LOCATIONS

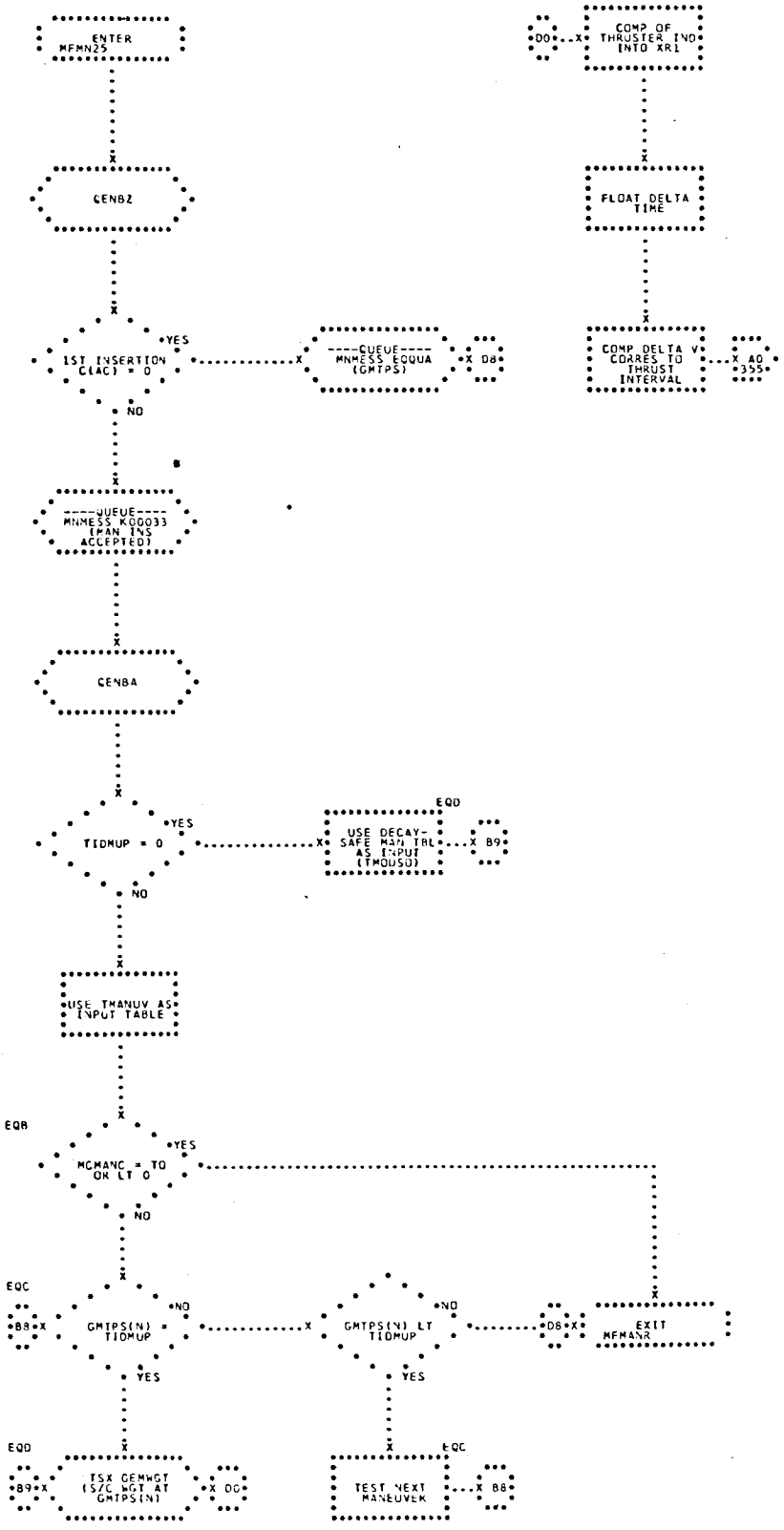
ENTER MFMN25
CENBZ
1ST INSERTION C(AC) = 0
YES
NO
----QUEUE---- MNMESS EQQUA (GMTPS)
D8
----QUEUE---- MNMESS K00033 (MAN INS ACCEPTED)
CENBA
TIDMUP = 0
YES
NO
EQD
USE DECAY-SAFE MAN TBL AS INPUT (TMOUSD)
B9
USE TMANUV AS INPUT TABLE
EQB
MCMANC = TO OR LT 0
YES
NO
EQC
B8
GMTPS(N) = TIDMUP
NO
YES
GMTPS(N) LT TIDMUP
NO
YES
D8
EXIT MFMANR
EQD
B9
TSX CEMWGT (S/C WGT AT GMTPS(N)
D0
EQC
TEST NEXT MANEUVER
B8
D0
COMP OF THRUSTER IND INTO XR1
FLOAT DELTA TIME
COMP DELTA V CORRES TO THRUST INTERVAL
A0
355

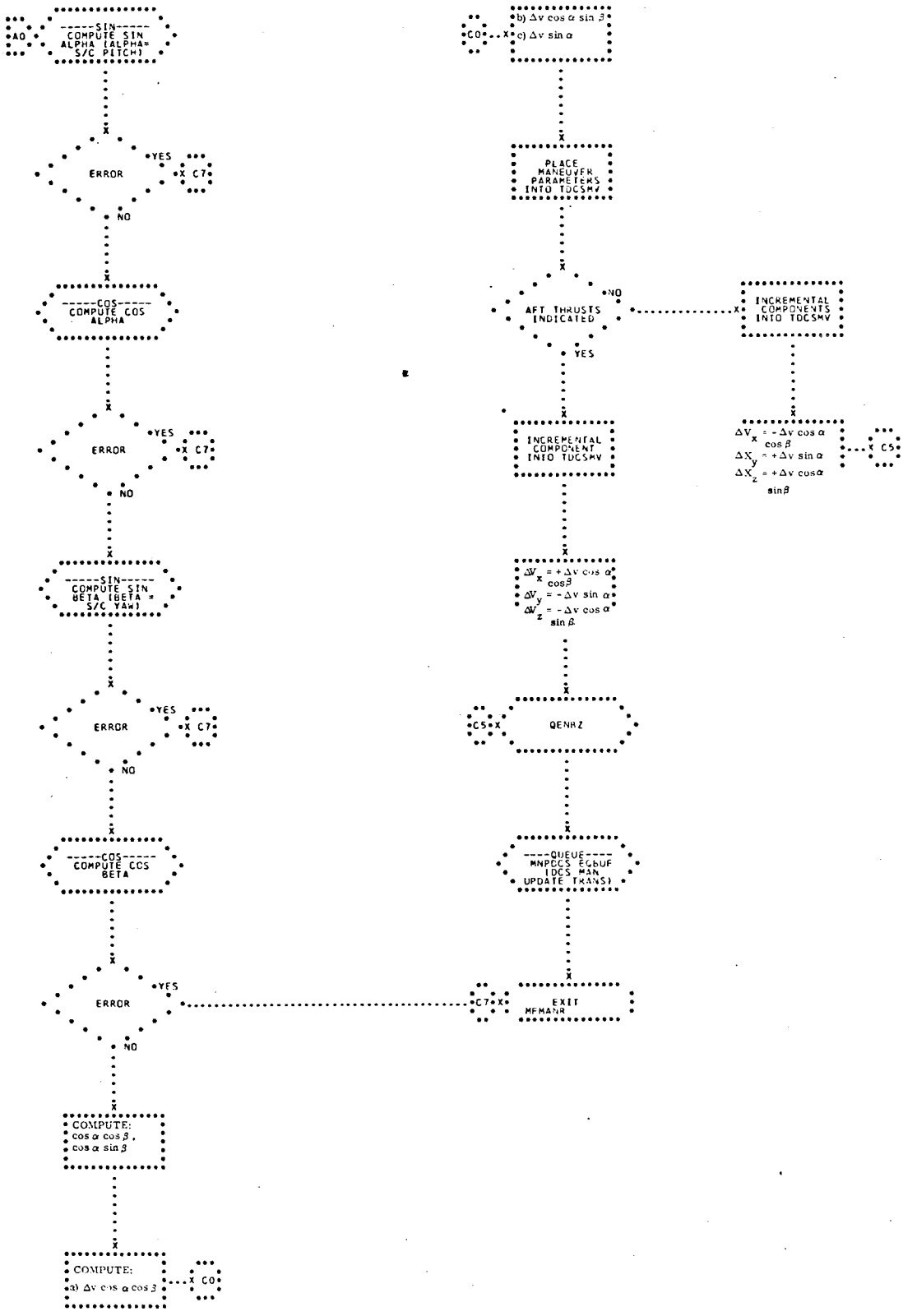
A0
-----SIN-----
COMPUTE SIN
ALPHA (ALPHA=
S/C PITCH)
ERROR
YES
C7
NO
-----COS-----
COMPUTE COS
ALPHA
ERROR
YES
C7
NO
-----SIN-----
COMPUTE SIN
BETA (BETA =
S/C YAW)
ERROR
YES
C7
NO
-----COS-----
COMPUTE COS
BETA
ERROR
YES
C7
NO
COMPUTE:
cos α cos β ,
cos α sin β
COMPUTE:
a) Δv cos α cos β
C0
C0
b) Δv cos α sin β
c) Δv sin α
PLACE
MANEUVER
PARAMETERS
INTO TDCSMV
AFT THRUSTS
INDICATED
NO
YES
INCREMENTAL
COMPONENTS
INTO TDCSMV
INCREMENTAL
COMPONENT
INTO TDCSMV
ΔVx = -Δv cos α
cos β
ΔXy = +Δv sin α
ΔXz = +Δv cos α
sin β
C5
ΔVx = +Δv cos α
cos β
ΔVy = -Δv sin α
ΔVz = -Δv cos α
sin β
C5
QENRZ
----QUEUE----
MNPCCS EGBUF
(DCS MAN
UPDATE TRANS)
C7
EXIT
MFMANR

## 74. MFMN26 - IOMANI SUFFIX FOR CONFIRMATION OF A MANEUVER

CONFIRMATION OF A S/C MANEUVER USING INCREMENTAL VELOCITY COMPONENTS IS INITIATED BY MFMN26. UPON RECEIPT OF THESE COMPONENTS, MYCOTO IS QUEUED TO PRODUCE A VECTOR REFLECTING THE INSERTED MANEUVER. (SEE FLOWCHART.)

INPUT

A) C(AC) Z FIRST INSERTION, NZ SECOND INSERTION

B) TICTIC TABLE CONTAINING INSERTED QUANTITIES.

OUTPUT

A) TICTIC TABLE OF PARAMETERS USED BY MYCOTO

B) QUEUES PROVIDED FOR THE FOLLOWING -

1) MYMESS TO PRINT-OUT INSERTED QUANTITIES AND ACCEPTANCE OF SECOND INSERTION.

2) MYCOTO TO GENERATE A MANEUVER-REFLECTING VECTOR.

METHOD

THE INSERTED GMTPI AND VELOCITY COMPONENTS ARE PLACED IN MYMESS QUEUES FOR ON-LINE PRINTING ON THE 1ST INSERTION. WITH AN INDICATION OF THE SECOND INSERTION, MYMESS AND MYCOTO ARE QUEUED AND EXIT IS MADE TO MFMANR.

USAGE

ENTRY IS MADE FROM IOMANI AND EXIT TO MFMANR.

A) TABLE -

TICTIC

B) CCNSTANTS -

KM0000

K00033

C) MACROS -

QENBZ

QUEUE

D) PARAMETERS -

MNMESS

MNCOTO

E) STORAGE REQUIRED - 14 LOCATICNS

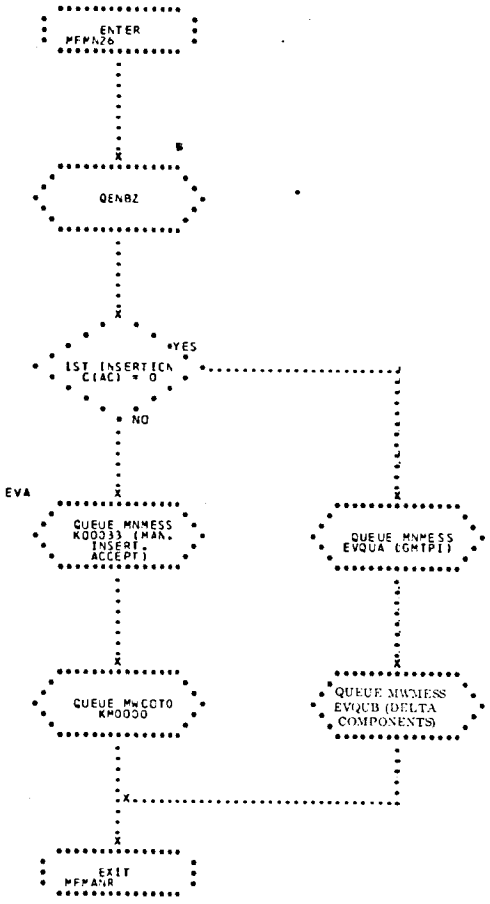
ENTER
MFMN26
QENBZ
YES
1ST INSERTION
C(AC) = 0
NO
EVA
QUEUE MNMESS
K00033 (MAN.
INSERT.
ACCEPT)
QUEUE MNMESS
EVQUA (GMTPI)
QUEUE MWCOTO
KM0030
QUEUE MWMESS
EVQUB (DELTA
COMPONENTS)
EXIT
MFMANR

## 75. MFMN27 - MONITOR BACKUP D.C. SUFFIX TO IOMANI

MFMN27 RECEIVES CONTROL FROM IOMANI AFTER THE SUCCESSFUL MANUAL INSERTION HAS BEEN COMPLETED - A QUANTITY N DESIGNATING WHICH UPPER CASE BLOCK NUMBER. (SEE FLOWCHART.)

INPUT

EZA THE UPPER CORE BLOCK NUMBER

METHOD

UPON RECEIVING CONTROL FROM IOMANI, MFMN27 DISABLES THE COMPUTER AND QUEUES THE PROGRAM MNBUDC (BACKUP TO DC) WITH THE REQUESTED UPPER CORE BLOCK NUMBER.

USAGE

MFMN27 IS ENTERED FROM IOMANI AND EXITS TO MFMANR.

A) STORAGE REQUIRED -
   12 LOCATIONS
B) MACROS -
   QENBZ
   QUEUE
C) PARAMETERS -
   MNMESS
   MNBUDC
D) CONSTANTS -
   K00033
E) TIMING -
   0.097 MILLISECONDS, MAXIMUM

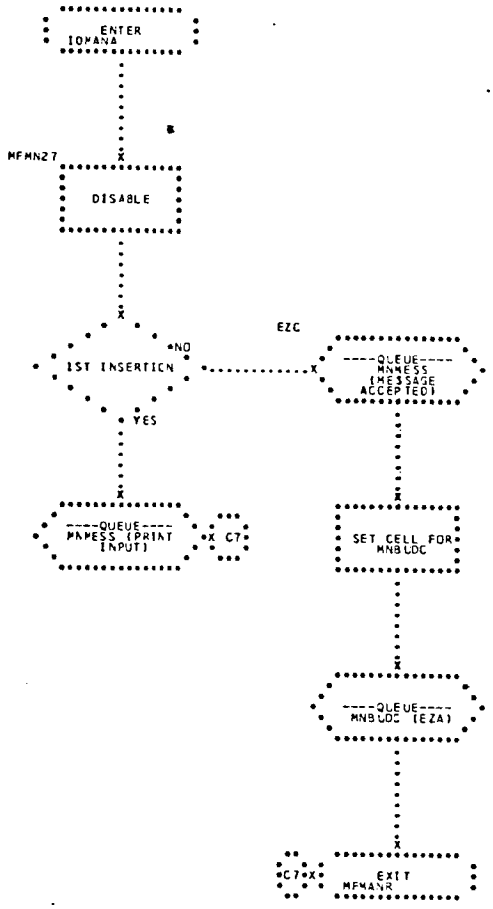
ENTER
IOMANA
MFMN27
DISABLE
EZC
NO
1ST INSERTION
YES
----QUEUE----
MNMESS (MESSAGE
ACCEPTED)
----QUEUE----
MNMESS (PRINT
INPUT)
X C7
SET CELL FOR
MNBLOC
----QUEUE----
MNBLOC (EZA)
C7 X
EXIT
MFMANR

## 76. MFMN28 - MONITOR BANK ANGLE UPDATE DURING ORBIT SUFFIX TO IOMANI

MFMN28 RECEIVES CONTROL FROM IOMANI AFTER THE SUCCESSFUL MANUAL INSERTION OF THE BANK ANGLE QUANTITY. (SEE FLOWCHART.)

INPUT

| | | |
|---|---|---|
| A) | TIBANK | BANK ANGLE |
| B) | TMGTRS+1 | MODE |

OUTPUT

| | | |
|---|---|---|
| A) | TOSCCH+31 | BANK ANGLE |
| B) | MCRNTB | ZERO IF MCDE = 5 |

METHOD

MFMN28 RECEIVES CONTROL FROM IOMANI AND UPDATES THE PREMISSION SET BANK ANGLE QUANTITY. THIS QUANTITY IS USED IN ORBIT FOR COMPUTING GMTRC FOR ALL AUTOMATIC PRIMARY AND CONTINGENCY AREAS, AND ALSO IS USED IN REENTRY FOR THE CONTINGENCY TRAJECTORY BY QUEUING THE PROGRAMS MNQNEA AND MNQPRA.

USAGE

MFMN28 IS ENTERED FROM IOMANI AND EXITS TO MFMANR.

A) STORAGE REQUIRED -
   17 LOCATIONS

B) MACROS -
   QENBZ
   QUEUE

C) PARAMETERS -

MNMESS

MNQNEA

MNQPRA

D) COMMUNICATION CELLS -

MCRNTB

E) TABLES -

TIBANK

TOSCCH

TMGTRS

F) CONSTANTS -

K00005

K00033

G) TIMING -

0.103 MILLISECONDS, MAXIMUM

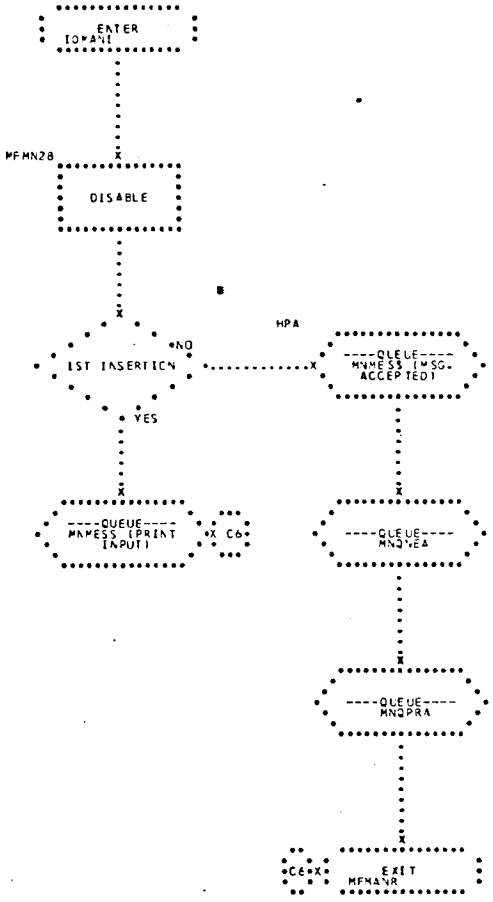
ENTER
IOMAN
MFMN28
DISABLE
B
HPA
NO
IST INSERTION
----QUEUE----
MNMESS (MSG-
ACCEPTED)
YES
----QUEUE----
MNMESS (PRINT
INPUT)
X C6
----QUEUE----
MNQWEA
----QUEUE----
MNQPRA
C6 X
EXIT
MFMANR

## 77. MFMN29 - MONITOR DELTA V TABLE UPDATE SUFFIX TO IOMANI

MFMN29 RECEIVES CCNTROL FROM IOMANI AFTER THE SUCCESSFUL MANUAL INSERTION OF THE REVOLUTION NUMBER AND DELTA QUANTITIES. (SEE FLOWCHART.)

INPUT

| | | |
|---|---|---|
| A) | TIRNDV | THE REVOLUTICN NUMBER |
| B) | TIRNDV+1 | THE DELTA V |

OUTPUT

| | |
|---|---|
| TMDELV | DELTA V TABLE UPDATED BY THE ASSCCIATED NUMBER. |

METHOD

MFMN29 RECEIVES CCNTROL FROM IOMANI, AND BASED ON THE REVOLUTION NUMBER, UPDATES THE PREMISSICN SET TABLE OF DELTA V'S AS A FUNCTION OF REVCLUTICN. AFTER THE UPDATING, THE PROGRAM MNQNEA AND MNQPRA ARE QUEUED.

USAGE

MFMN29 IS ENTERED FROM IOMANI AND EXITS TO MFMANR.

A) STORAGE REQUIRED - 19 LOCATICNS

B) MACROS -

QENBZ

QUEUE

C) PARAMETERS -

MNMESS

MNQNEA

MNQPRA

D) TABLES -

TIRNDV

TMDELV

E) CONSTANTS -

K00004

K00033

F) TIMING -

0.116 MILLISECONDS, MAXIMUM

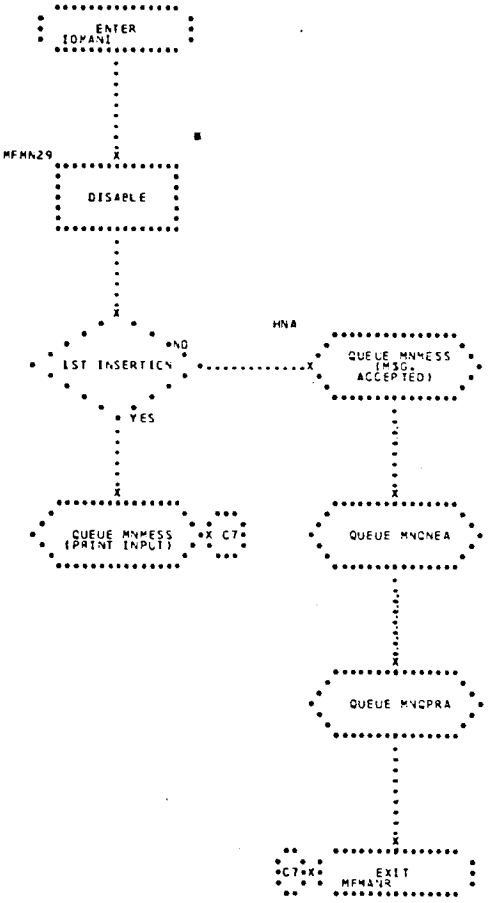
ENTER
IOMANI
MFMN29
DISABLE
1ST INSERTION
NO
YES
HNA
QUEUE MNMESS
(MSG.
ACCEPTED)
QUEUE MNMESS
(PRINT INPUT)
X C7
QUEUE MNQNEA
QUEUE MNQPRA
C7 X
EXIT
MFMANR

## 78. MFMANR - MONITOR GENERAL IOMANI SUFFIX EXIT

MFMANR RECEIVES CONTROL FROM THE SUFFIX PROGRAMS TO IOMANI. COUNTING CELLS (MCMPTE, MCWDCT, AND TMTTIN +17) WHICH ARE USED BY MPTTIN AND MTTTIN FOR INPUT CONTROL ARE RESET BY MFMANR AND THE A INDICATOR IS TURNED OFF. CONTROL IS THEN GIVEN TO MOPRIO. (SEE FLOWCHART.)

### INPUT

THERE ARE NO INPUT REQUIREMENTS FOR MFMANR.

### OUTPUT

A) TMTTIN +17 - DECREMENT CONTAINS SIX IN FIXED-POINT (THE NUMBER OF WORDS TO BE PROCESSED BY MTTTIN PRIOR TO NEXT ENTRY TO MPTTIN).

B) MCMPTE - CONTAINS SIX IN FIXED POINT (THE NUMBER OF WORDS TO BE RECEIVED BY MPTTIN PRIOR TO ENTRY TO IOMANI).

C) MCWDCT - CONTAINS SIX IN FIXED POINT (THE NUMBER OF WORDS REQUIRED TO COMPLETE THE MESSAGE).

### METHOD

MFMANR RECEIVES CONTROL FROM ONE OF THE SUFFIXES TO IOMANI, RESETS THE APPROPRIATE COUNTERS, TURNS OFF THE A INDICATOR, AND GIVES CONTROL TO MOPRIO.

### USAGE

MFMANR IS ENTERED FROM A SUFFIX PROGRAM TO IOMANI AND EXITS TO MOPRIO.

A) STORAGE REQUIRED - SEVEN LOCATIONS

B) MACRO -

TRNOF

C) PARAMETERS -

A AND MNTTIN

D) COMMUNICATICN CELLS -

MCMPTE AND MCWDCT

E) TABLE -

TMTTIN

F) TIME REQUIRED - 0.031 MILLISECOND

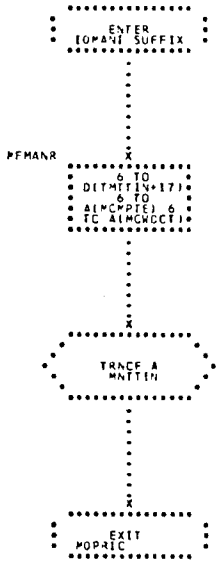
ENTER
IOMANT SUFFIX
REMANR
6 TO
DITMITIN+17)
6 TO
AIMCMPTE) 6
TC AIMCMXCCT)
TRACE A
MNTTIN
EXIT
MOPRIC

## 79. TIMING CONTROL

THREE SUBCHANNELS OF THE DCC MOD I PROVIDE THE GEMINI PROGRAMMING SYSTEM WITH ALL NECESSARY TIMING FACILITIES. THE TIMING SUBCHANNELS OF THE DCC MOD I ALLOW THE GEMINI PROGRAMMING SYSTEM TO ENTER AND MAINTAIN THE TIME BASE (GMT) FOR PROJECT GEMINI AND TO CONTROL THE EXECUTION OF VARIOUS PROGRAMS AT A PROGRAM CONTROLLED TIME PERIOD. THE TIMING SUBCHANNELS USED IN THE GEMINI PROGRAMMING SYSTEM AND THEIR ASSOCIATED MONITOR PROCESSORS ARE DESCRIBED BELOW.

SUBCHANNEL 7, WHEN ACTIVATED, INCREMENTS A CELL IN COMPUTER CORE STORAGE EVERY 8-1/3 MILLISECONDS. WHEN THE COUNT REACHES 59, THE NEXT 8-1/3 MILLISECONDS INCREMENT RESETS THE COUNT TO ZERO (60 INCREMENTS OF 8-1/3 MILLISECONDS COMPRISE A HALF-SECOND INTERVAL) WHEREUPON SUBCHANNEL 7 CAUSES AN AUTOMATIC INTERRUPT OF THE COMPUTER. BY COMBINING AN ABSOLUTE TIME (GMT) IN HALF-SECONDS WITH THE 8-1/3 MILLISECOND COUNTER, THE GEMINI PROGRAMMING SYSTEM HAS ACCESS TO REAL TIME WITH AN ACCURACY OF 8-1/3 MILLISECONDS. THE HALF-SECOND INTERRUPT SUBCHANNEL IS ACTIVATED WHEN GMT IS ENTERED INTO THE COMPUTER (SEE SUBCHANNEL 8 BELOW) AND IS NOT DEACTIVATED UNTIL PROCESSING FOR THE MISSION IS TERMINATED. WHEN THE HALF-SECOND INTERRUPT SUBCHANNEL IS ACTIVATED, A 1 IN THE SIGN BIT OF THE MASK ADDRESSED BY THE PSLF INSTRUCTION RESETS THE 8-1/3 MILLISECOND COUNTER TO ZERO. THE SIGN BIT OF THE PSLF MASK MUST BE ZERO THEREAFTER.

INTERRUPTS ON SUBCHANNEL 7 ARE SERVICED BY THE MONITOR HALF-SECOND TRAP PROCESSOR, MTHFSC. THIS TRAP PROCESSOR CONTROLS A HALF-SECOND TIMING TABLE WHICH PROVIDES A MEANS OF TIMING SET INTERVALS WITHIN MONITOR, AS WELL AS A MEANS OF INFORMING THE MONITOR MAIN CONTROLLER PRIORITY PROGRAM (MOPRIO) AT SET INTERVALS THAT THE CYCLE, OR TIME RELATED, PROGRAMS SHOULD BE ENTERED. THE MONITOR MINUTE PROCESSOR, MYMINS, RECEIVES CONTROL EVERY TIME ITS ENTRY IN THE HALF-SECOND TIMING TABLE IS REDUCED TO ZERO.

SUBCHANNEL 8, WHEN ACTIVATED, INTERRUPTS THE COMPUTER IN SYNCHRONIZATION WITH AN EXTERNAL TIMING PULSE. THE EXTERNAL TIMING PULSE FOR THE GEMINI PROGRAMMING SYSTEM IS RECEIVED FROM THE NATIONAL BUREAU OF STANDARDS' RADIO STATION WWV AND PRODUCES A COMPUTER INTERRUPT EVERY MINUTE (ACCURATE TO ONE MILLISECOND). THIS SUBCHANNEL IS SERVICED BY TWO TRAP PROCESSORS. THE MONITOR INITIAL WWV TRAP PROCESSOR, MTWWVI, RECEIVES CONTROL WITH EACH WWV INTERRUPTS UNTIL AFTER THE GMT TIME BASE IS ENTERED INTO THE COMPUTER. WHEN MTWWVI HAS ESTABLISHED THE TIME BASE AND INITIALIZES THE TIMING CELLS OF THE GEMINI PROGRAMMING SYSTEM, MTWWVI REPLACES ITS OWN ENTRY IN THE DCC CONTROL TABLE WITH THE ENTRY FOR THE MONITOR WWV TRAP PROCESSOR, MTWWWV. THIS TRAP PROCESSOR MAINTAINS A ONE-MINUTE TIME CELL AND EXAMINES THE OTHER TIME CELLS FOR DEVIATIONS FROM THE WWV STANDARD.

SUBCHANNEL 9, WHEN ACTIVATED, DECREMENTS A SPECIFIED CELL IN COMPUTER CORE STORAGE EVERY 8-1/3 MILLISECONDS. WHEN THE CELL IS REDUCED TO ZERO, SUBCHANNEL 9 CAUSES AN AUTOMATIC INTERRUPT OF THE COMPUTER AND THE INTERRUPT DEACTIVATES THE SUBCHANNEL. SUBCHANNEL 9 MAY TIME ANY INTERVAL FROM 8-1/3 MILLISECONDS (1 IN THE SPECIFIED CELL) TO 4.25 SECONDS (250 IN THE SPECIFIED CELL) THIS SUBCHANNEL IS USED BY THE RESTART PROGRAM, MYSRST, TO TIME TAPE BACKSPACING.

A GENERAL FLOW DIAGRAM FOR THE DCC TIMING CONTROL IS SHOWN.

DCC TIMING CONTROL TABLE

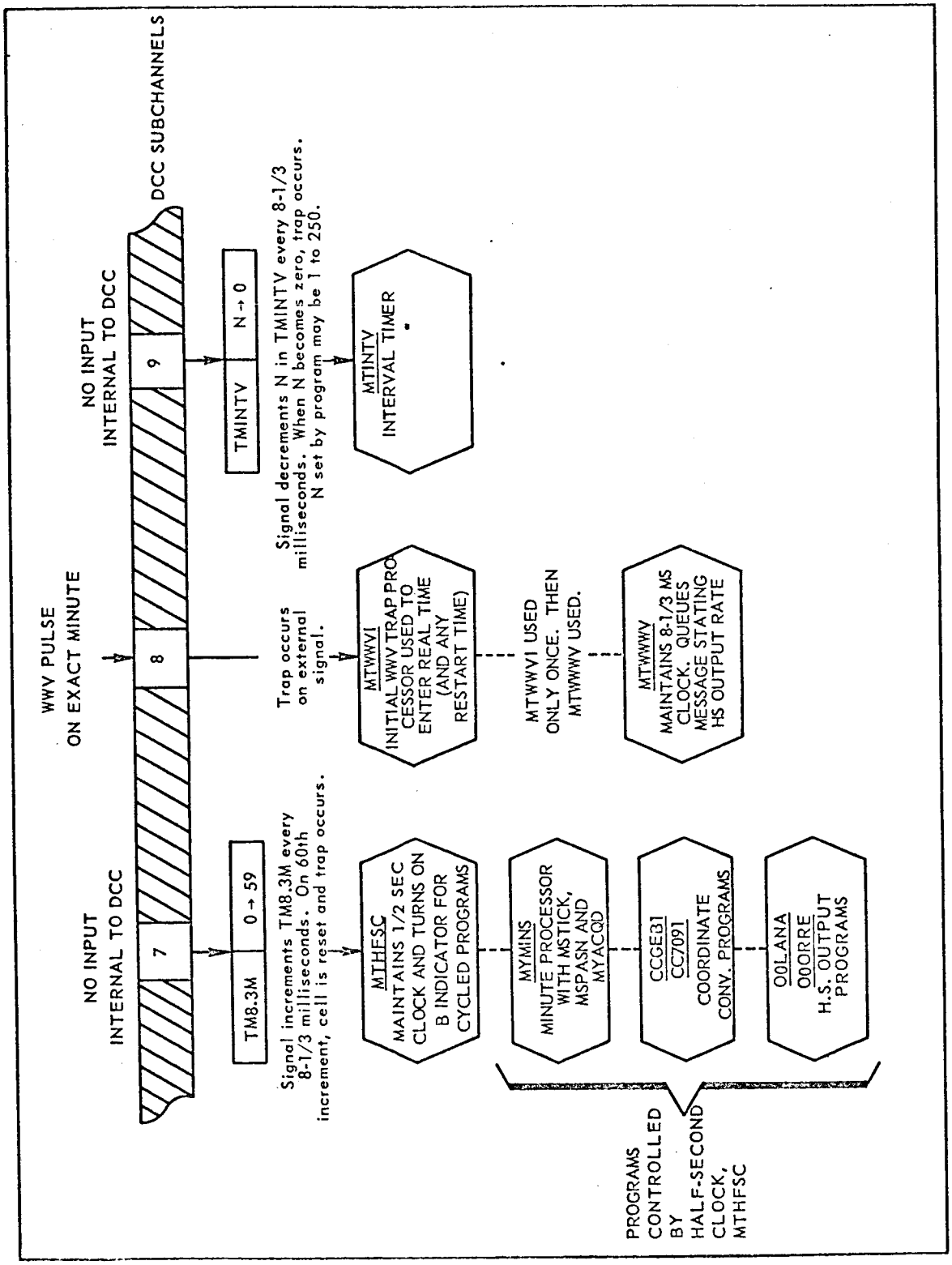

## 80. MTWWVI - MONITOR INITIAL WWV TRAP PROCESSOR

MTWWVI PROVIDES THE TIME BASE FOR ALL DATA PROCESSING OPERATIONS IN PROJECT GEMINI BY ENTERING THE GREENWICH MEAN TIME (GMT) INTO THE IBM 7094 COMPUTER. (SEE FLOWCHART).

INPUT

A) THE GMT TIME MUST BE ENTERED IN OCTAL IN THE COMPUTER CONSOLE KEYS AS FOLLOWS -

| S | 1 5 | 6 11 | 12 17 | 18 23 | 24 29 | 30 35 |
|---|---|---|---|---|---|---|
| 1 | | Orbit No. (octal) | | Day of Mission (octal) | Hours (octal) | Minutes (octal |

| KEYS | CONTENTS |
|---|---|
| S | 1 |
| 1-5 | ZERO |
| 6-11 | ORBIT NO. IN OCTAL RIGHT JUSTIFIED |
| 12-17 | ZERO |
| 18-23 | DAY OF MISSION IN OCTAL, RIGHT JUSTIFIED (FIRST DAY = 0) |
| 24-29 | HOURS IN OCTAL, RIGHT JUSTIFIED |
| 30-35 | MINUTES IN OCTAL, RIGHT JUSTIFIED |

B) CONSTANTS -

| | | |
|---|---|---|
| K00001 | DEC | 1 |
| K00024 | DEC | 24 |
| K00060 | DEC | 60 |
| K00063 | DEC | 63 |
| K04095 | DEC | 4095 |

OUTPUT

A) TABLE -

| | |
|---|---|
| TMRTCC | THE TWENTY-FOURTH LOCATION OF THIS THIRTY-TWO LOCATION TABLE CONTAINS TTR MTWWWV TO GOVERN THE TRANSFER OF CONTROL FOLLOWING FUTURE MINUTE TRAPS. |

B) COMMUNICATION CELLS -

| | |
|---|---|
| MCHFSC | CONTAINS GMT IN FX. PT. HALF-SECS. B35 |
| MCMINS | CONTAINS GMT IN FX. PT. MINS. B35 |
| MCORBN | CONTAINS ORBIT NUMBER IN FX. PT. B35 |
| MCPRTM | CONTAINS GMT IN FX. PT. HALF-SECS. B35 |
| MCTRV2 | CONTAINS GMT IN FX. PT. SECS. B35 |
| MCWWVI | CONTAINS GMT IN FX. PT. 8.3 MS B35 |

METHOD

DURING THE EXECUTION OF MYINIT, SUBCHANNEL 8 OF THE DCC IS ACTIVATED AND EVERY MINUTE THEREAFTER, A TRAP OCCURS IN SYNCHRONIZATION WITH THE WWV ONE MINUTE PULSE. MORTCC GIVES CONTROL TO MTWWVI WHICH EXAMINES THE CONTENTS OF THE CONSOLE KEYS. IF THE SIGN KEY IS UP, MTWWVI TRANSFERS CONTROL DIRECTLY TO MOPRIO.

THE TIME AT WHICH INITIALIZATION OF THE GEMINI REAL TIME SYSTEM IS TO TAKE PLACE MUST BE ENTERED MANUALLY AT THE COMPUTER CONSOLE. WHEN MTWWVI FINDS THE SIGN KEY IN A DOWN POSITION, THE ORBIT NUMBER, DAYS, HOURS, AND MINUTES ENTERED IN THE KEYS ARE PROCESSED AND BECOME THE BASE FOR THE GEMINI PROGRAMMING SYSTEM.

MTWWVI THEN REPLACES THE TRANSFER TO ITSELF IN THE TMRTCC TABLE WITH A TTR MTWWWV, THUS ASSURING THAT ALL FUTURE MINUTE TRAPS WILL BE PROCESSED BY MTWWWV. AFTER

QUEUEING THE MESSAGE ROUTINE TO PRINT OUT THE BASE TIME AND ORBIT NUMBER, MTWWVI EXITS TC MOPRIO.

USAGE

MTWWVI IS ENTERED FROM MORTCC FOLLOWING A TRAP ON DCC SUBCHANNEL 8 AND EXITS TO MOPRIO.

A) STORAGE REQUIRED - 58 LOCATICNS

B) TIMING (7094) -

1) SIGN KEY UP, 0.006 MILLISECCND

2) SIGN KEY DOWN, 0.176 MILLISECCND

C) MACRO - QUEUE

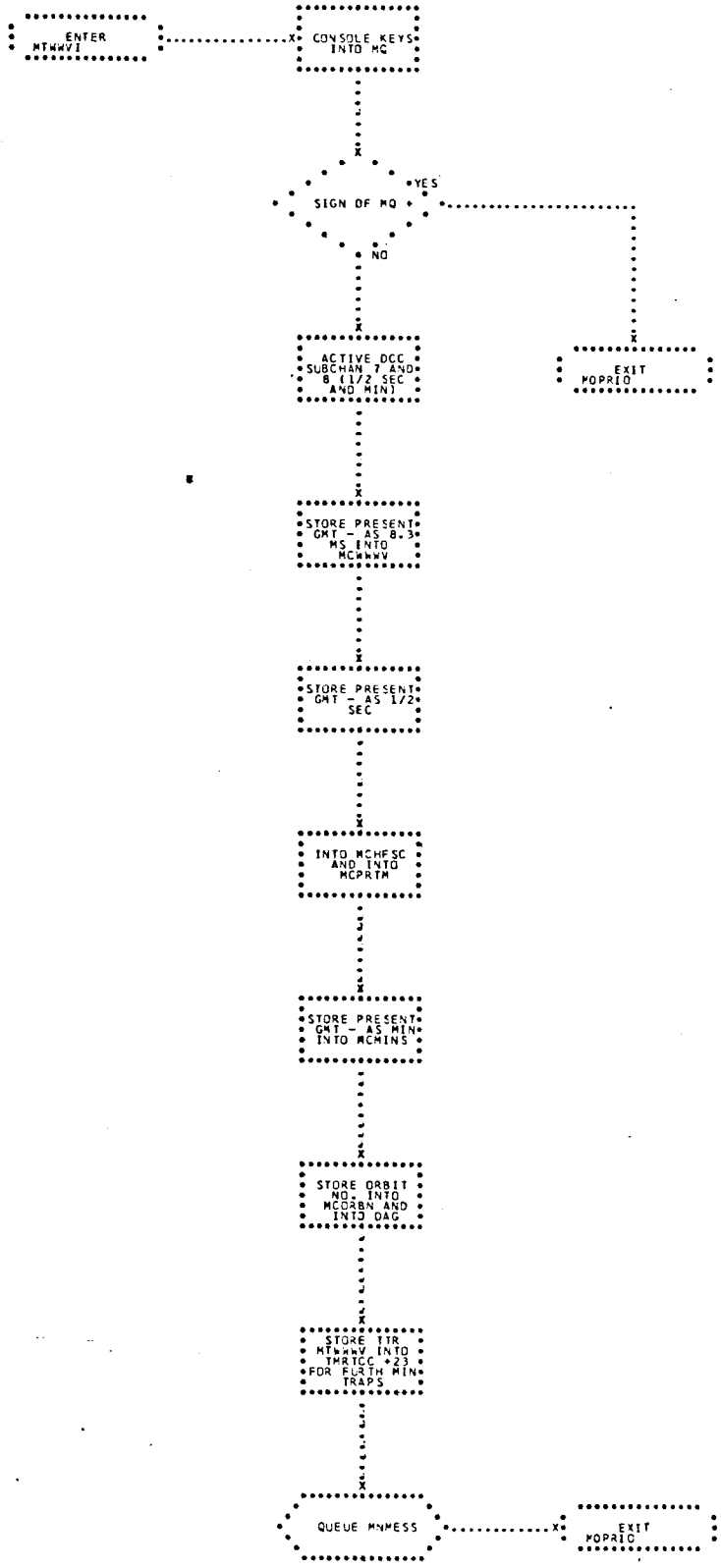


| MSG. NO. | MSG. |
|---|---|
| 42 | NORMAL OPERATION BEGUN |
| 221 | THE WWV TIME ENTERED IS (GMT) DAY, HRS, MINS, SECS. |
| 237 | THE ORBIT NUMBER ENTERED IN KEYS IS _____. |

## 81. MTWWV - MONITOR WWV TRAP PROCESSOR

AFTER MTWWVI ENTERS THE TIME INTO THE GEMINI PROGRAMMING SYSTEM, MTWWVI REPLACES ITS OWN ENTRY IN TMRTCC WITH THE ENTRY FOR MTWWWV SO THAT ALL SUBSEQUENT WWV TRAPS ARE SERVICED BY MTWWWV. THIS TRAP PROCESSOR MUST UPDATE THE 8-1/3 MILLISECOND COUNT CELL AND QUEUE AN ON-LINE MESSAGE WHICH INDICATES THE EXPECTED AND ACTUAL QUANTITY OF HIGH-SPEED OUTPUT DATA TRANSMITTED TO CAPE KENNEDY IN THE PAST MINUTE. (SEE FLOWCHART.)

INPUT

A) COMMUNICATION CELLS -

MCWWV — CONTAINS GMT IN FX. PT. 8-1/3 MILLISECONDS AT THE LAST WWV TRAP.

MCBJMN — CONTAINS THE NUMBER OF THE ON-LINE MESSAGES TO BE QUEUED BY MTWWWV. THE FOUR POSSIBLE MESSAGES HAVE A STANDARD FORMAT - HS OUTPUT TRANS RATE TO CAPE-EXPECTED N, ACTUAL X, WHERE N DEPENDS UPON THE MESSAGE NUMBER IN MCBJMN (A FUNCTION OF MISSION PHASE) AND X IS CONTAINED IN MCHOMS -

| PHASE | MCBJMN | N | X |
|---|---|---|---|
| LAUNCH | 162 | 240 | MCHOMS |
| REENTRY | 163 | 40 | MCHOMS |
| ORBIT | 164 | 20 | MCHOMS |
| ABORT | 165 | 120 | MCHOMS |

MCHOMS — PROVIDES THE VARIABLE FIELD FOR EACH OF THE FOUR MESSAGES. ITS VALUE IS COMPUTED BY MTHSOD, THE HIGH-SPEED

OUTPUT TRAP PROCESSOR WHICH SERVICES SUBCHANNEL 3.

B) CONSTANT -

K07200 DEC 7200

OUTPUT

A) COMMUNICATION CELLS -

MCHOMS THE COUNTER FOR HIGH-SPEED OUTPUT TO CAPE KENNEDY IS RESET TO ZERO.

MCWWWV UPDATED TO CONTAIN THE PRESENT GMT IN FX. PT. 8-1/3 MILLISECONDS.

METHOD

ON EVERY ENTRY, MTWWWV QUEUES AN ON-LINE MESSAGE WHICH SPECIFIES THE EXPECTED AND THE ACTUAL TRANSMISSION RATE FOR HIGH-SPEED DATA SENT TO CAPE KENNEDY DURING THE PAST ONE MINUTE AND UPDATES THE 8-1/3 MILLISECOND GMT CLOCK CELL.

USAGE

MTWWWV IS ENTERED FROM MORTCC FOLLOWING A TRAP ON DCC SUBCHANNEL 8 AND EXITS TO MOPRIO.

A) MACRO -

QUEUE

B) STORAGE REQUIRED -

13 LOCATIONS

C) TIMING (7094) -

0.028 MILLISECOND

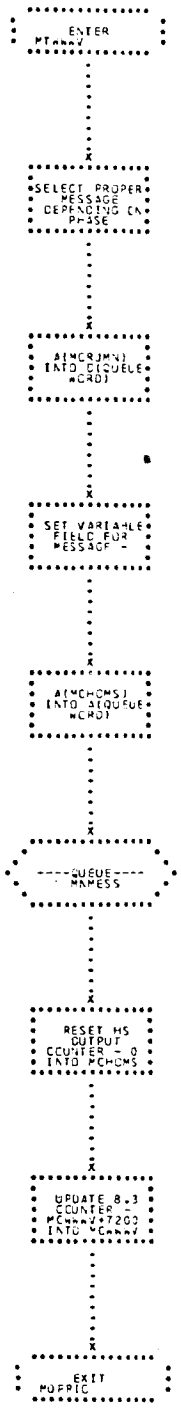


MCBJMN DETERMINES N
N = 120 LAUNCH
N = 60 ABORT
N = 10 ORBIT
N = 20 REENTRY

"HS OUTPUT TRANS. RATE TO CAPE, EXPECTED N ACTUAL X."

(7200 = NO. 8.3 MS PER MIN.)

## 82. MTHFSC - MONITOR HALF-SECOND TRAP PROCESSOR

MTHFSC IS ENTERED EVERY TIME A TRAP OCCURS ON DCC MOD 1 SUBCHANNEL 7 INDICATING THE PASSAGE OF A HALF-SECOND OF REAL TIME. IT UPDATES TIME CELLS, INITIATES THOSE PROGRAMS WHICH MUST BE ENTERED WITH A SPECIFIED FREQUENCY AND PERFORMS OTHER CONTROL FUNCTIONS. (SEE FLOWCHART.)

INPUT

1) TABLES -

| | | |
|---|---|---|
| TM8.3M | TMORTN | TMS1IP |
| TMANUV | TMPRIO | TMTLSL |
| TMCYCL | TMPROI | TMTTIN |
| TMCYNO | TMRTCC | |
| TMNMSK | TMS1GB | |

2) COMMUNICATION CELLS -

| | | |
|---|---|---|
| MCOEAV | MCHFS1 | MCPHSE |
| MCCFHP | MCMANC | MCSCGB |
| MCCHEN | MC1MBT | MCSCIP |
| MCFVEC | MCLLBT | MCSCHG |
| MCFVE2 | MCNACQ | |

3) CONSTANTS -

| | | |
|---|---|---|
| K00001 | KD0001 | K77777 |
| K00002 | KD0012 | KCH600 |
| K00004 | KM0000 | KFLTRS |
| K00005 | KM7777 | |

OUTPUT

1) TABLES -

| | | | |
|---|---|---|---|
| TMCYCL | TMPROI | TMSCGB | TMSCIP |

2) COMMUNICATION CELLS -

| | | | |
|---|---|---|---|
| MCHFSC | MCPSEL | MCMIDA | MCPOST |
| MCCHEN | MCFVE2 | MCCMIP | MCBETA |
| MCACTV | MCFVEC | MCPROI | |

METHOD

SENSE SWITCH 6 IS USED IN THE GEMINI REAL TIME SYSTEM FOR TWO PURPOSES -

1) TO FORCE THE ADDITION AT THE TIME OF LIFT-OFF TO THE VECTOR TIMES ENTERING THE SYSTEM
2) TO GIVE A DUMP OF THE SYSTEM (WHEN USED WITH KEY 2).

WHEN MTHFSC RECEIVES CONTROL, IF FIRST TESTS THE STATUS OF THIS SWITCH. IF THE SECOND OPTION HAS BEEN EXERCISED, AN IMMEDIATE TRANSFER IS MADE TO MSUERR FOR THE DUMP.

OTHERWISE, MTHFSC UPDATES THE HALF-SECOND COUNT CELL, MCHFSC. IT THEN SEARCHES THE TMTLSL TABLE TO DETERMINE WHETHER ANY LOW SPEED TELETYPE DATA BUFFERS MUST BE FLUSHED DURING THIS ENTRY. IF ANY BUFFERS MUST BE EMPTIED, MTHFSC PACKS THE LAST DATA WORD FROM THE DCC MOD 1 INPUT TABLE INTO THE BUFFER, FILLS THE UNUSED WORDS OF THE BUFFER WITH 'LETTER SHIFTS', QUEUES THE FULL BUFFER TO THE INPUT PROGRAM, MPTTIN, AND LOGS THE DATA.

NEXT, MTHFSC UPDATES THE SELECTED SOURCE IDENTIFICATION AND, IF AVERAGE VECTORS PROCESSING IN LAUNCH IS NOT IN PROGRESS, SETS THE MISSING DATA CELL FOR IP-3600 AND B/GE DATA. THE OUTPUT FROM THE STRIP CHARTS PROCESSOR FOR THE ABOVE DATA SOURCES IS THEN MOVED TO THE BUFFERS WHICH SERVE AS INPUT TO THE LAUNCH MAIN CALCULATIONS PROGRAM, MPCOMN.

IF MANUAL CONTROL OF DIFFERENTIAL CORRECTION HAS BEEN REQUESTED (SENSE SWITCH 4 DOWN) AND THE MASK

IDENTIFYING THE STATIONS TO BE INCLUDED IN THE DIFFERENTIAL CORRECTION HAS CHANGED FROM THE PREVIOUS ENTRY, THE MANUAL DIFFERENTIAL CORRECTION CONTROL PROGRAM MPDIFM, IS QUEUED WITH THE NEW MASK.

THE MTHFSC STORES THE INDICATION OF THE TRANSMISSION MADE FOR THIS COMPUTER IN MCBETA. IF THE SIGN OF MCBETA INDICATES THAT THIS COMPUTER HAS ENTERED THE TRANSMITTING MADE IN THE LAST HALF-SECOND, THE HIGH-SPEED OUTPUT PROGRAMS ARE IMMEDIATELY REINITIALIZED SO THAT PROCESSING MAY START ANEW. IN ADDITION, IN THE ORBIT AND REENTRY PHASES, THE ACQUISITION DATA LIGHTS CURRENTLY ON ARE TURNED OFF.

AFTER UPDATING THE MANEUVER TABLES TO REFLECT THE LATEST MANEUVER IN PROCESS, MTHFSC INITIATES THOSE PROGRAMS WHICH CAN BE ENTERED IN THIS HALF-SECOND AND EXITS TO MOPRIO.

USAGE

MTHFSC IS ENTERED FROM MORTCC AND EXITS TO MTHFSC.

1) STORAGE REQUIRED - 236 LOCATIONS
2) MACROS USED - QUEUE, TRNON
3) PARAMETERS USED - MNHSOO, MNDIFM, MNGDFP, MNLANA, MNORRE, MNSENS, MNTTIN, MM
4) SUBROUTINES USED - MSUERR, MSLOGG

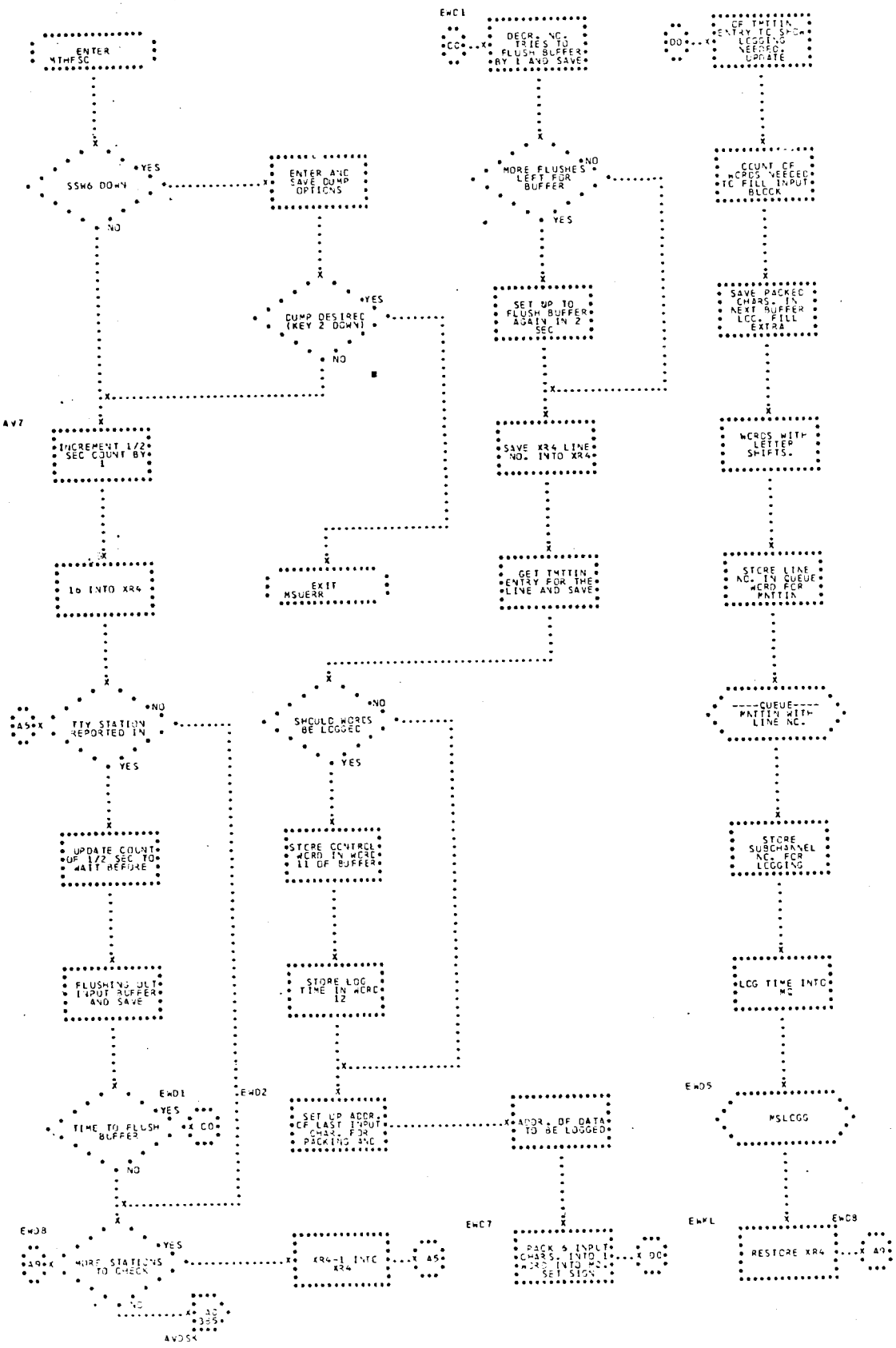
ENTER MTHFSC
SSW6 DOWN
YES
NO
ENTER AND SAVE DUMP OPTIONS
DUMP DESIRED (KEY 2 DOWN)
YES
NO
AV7
INCREMENT 1/2 SEC COUNT BY 1
16 INTO XR4
EXIT MSUERR
TTY STATION REPORTED IN
NO
YES
A5
UPDATE COUNT OF 1/2 SEC TO WAIT BEFORE
FLUSHING OUT INPUT BUFFER AND SAVE
EWD1
EWD2
TIME TO FLUSH BUFFER
YES
NO
CO
EWD8
A9
MORE STATIONS TO CHECK
YES
NO
XR4-1 INTO XR4
A5
AC 385
AVDSK
EWC1
CO
DECR. NO. TRIES TO FLUSH BUFFER BY 1 AND SAVE
MORE FLUSHES LEFT FOR BUFFER
NO
YES
SET UP TO FLUSH BUFFER AGAIN IN 2 SEC
SAVE XR4 LINE NO. INTO XR4
GET TMTTIN ENTRY FOR THE LINE AND SAVE
SHOULD WORDS BE LOGGED
NO
YES
STORE CONTROL WORD IN WORD 11 OF BUFFER
STORE LOG TIME IN WORD 12
SET UP ADDR. OF LAST INPUT CHAR. FOR PACKING AND
ADDR. OF DATA TO BE LOGGED
EWC7
PACK 6 INPUT CHARS. INTO 1 WORD INTO MQ. SET SIGN
DO
DO
OF TMTTIN ENTRY TO SHOW LOGGING NEEDED. UPDATE
COUNT OF WORDS NEEDED TO FILL INPUT BLOCK
SAVE PACKED CHARS. IN NEXT BUFFER LOC. FILL EXTRA
WORDS WITH LETTER SHIFTS.
STORE LINE NO. IN QUEUE WORD FOR MNTTIN
----QUEUE---- MNTTIN WITH LINE NO.
STORE SUBCHANNEL NO. FOR LOGGING
LOG TIME INTO MQ
EWD5
MSLOGG
EWKL
EWD8
RESTORE XR4
A9

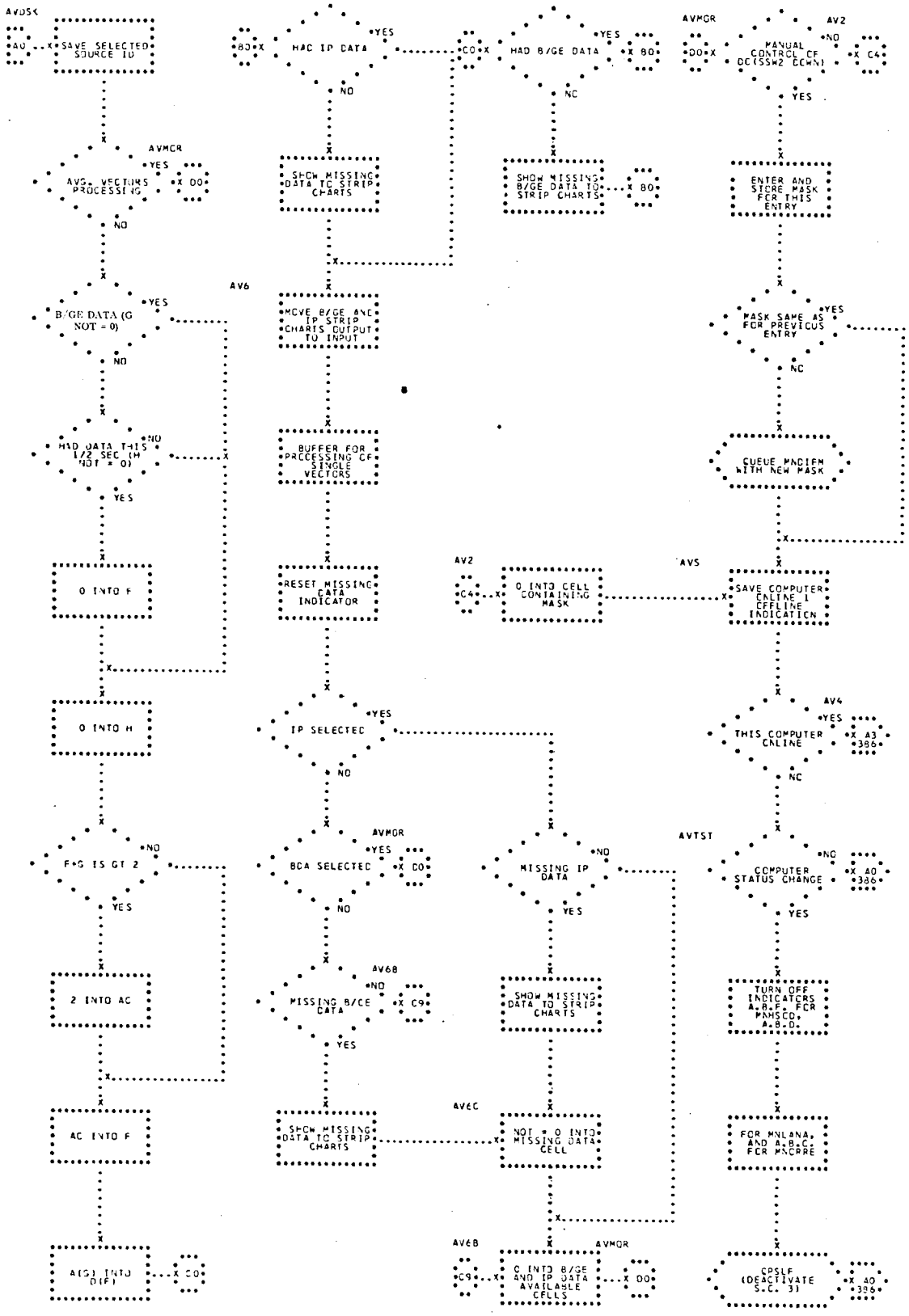
AVDSK
A0
SAVE SELECTED SOURCE ID
B0
HAD IP DATA
YES
NO
C0
HAD B/GE DATA
YES
NO
D0
MANUAL CONTROL OF DC(SSW2 DOWN)
NO
YES
C4
AVMOR
AVG. VECTORS PROCESSING
YES
NO
D0
SHOW MISSING DATA TO STRIP CHARTS
SHOW MISSING B/GE DATA TO STRIP CHARTS
B0
ENTER AND STORE MASK FOR THIS ENTRY
AV6
B/GE DATA (G NOT = 0)
YES
NO
MOVE B/GE AND IP STRIP CHARTS OUTPUT TO INPUT
MASK SAME AS FOR PREVIOUS ENTRY
YES
NO
HAD DATA THIS 1/2 SEC (H NOT = 0)
NO
YES
BUFFER FOR PROCESSING OF SINGLE VECTORS
QUEUE MODEM WITH NEW MASK
0 INTO F
RESET MISSING DATA INDICATOR
AV2
C4
0 INTO CELL CONTAINING MASK
AVS
SAVE COMPUTER ONLINE I OFFLINE INDICATION
0 INTO H
IP SELECTED
YES
NO
AV4
THIS COMPUTER ONLINE
YES
NO
A3
386
F+G IS GT 2
NO
YES
AVMOR
BOA SELECTED
YES
NO
C0
MISSING IP DATA
NO
YES
AVTST
COMPUTER STATUS CHANGE
NO
YES
A0
386
2 INTO AC
AV6B
MISSING B/GE DATA
NO
YES
C9
SHOW MISSING DATA TO STRIP CHARTS
TURN OFF INDICATORS A,B,E, FOR MMSCD, A,B,D,
AC INTO F
SHOW MISSING DATA TO STRIP CHARTS
AV6C
NOT = 0 INTO MISSING DATA CELL
FOR MNLANA, AND A,B,C, FOR MNCRRE
A(G) INTO D(F)
C0
AV6B
C9
0 INTO B/GE AND IP DATA AVAILABLE CELLS
AVMOR
D0
CPSLF (DEACTIVATE S.C. 3)
A0
386

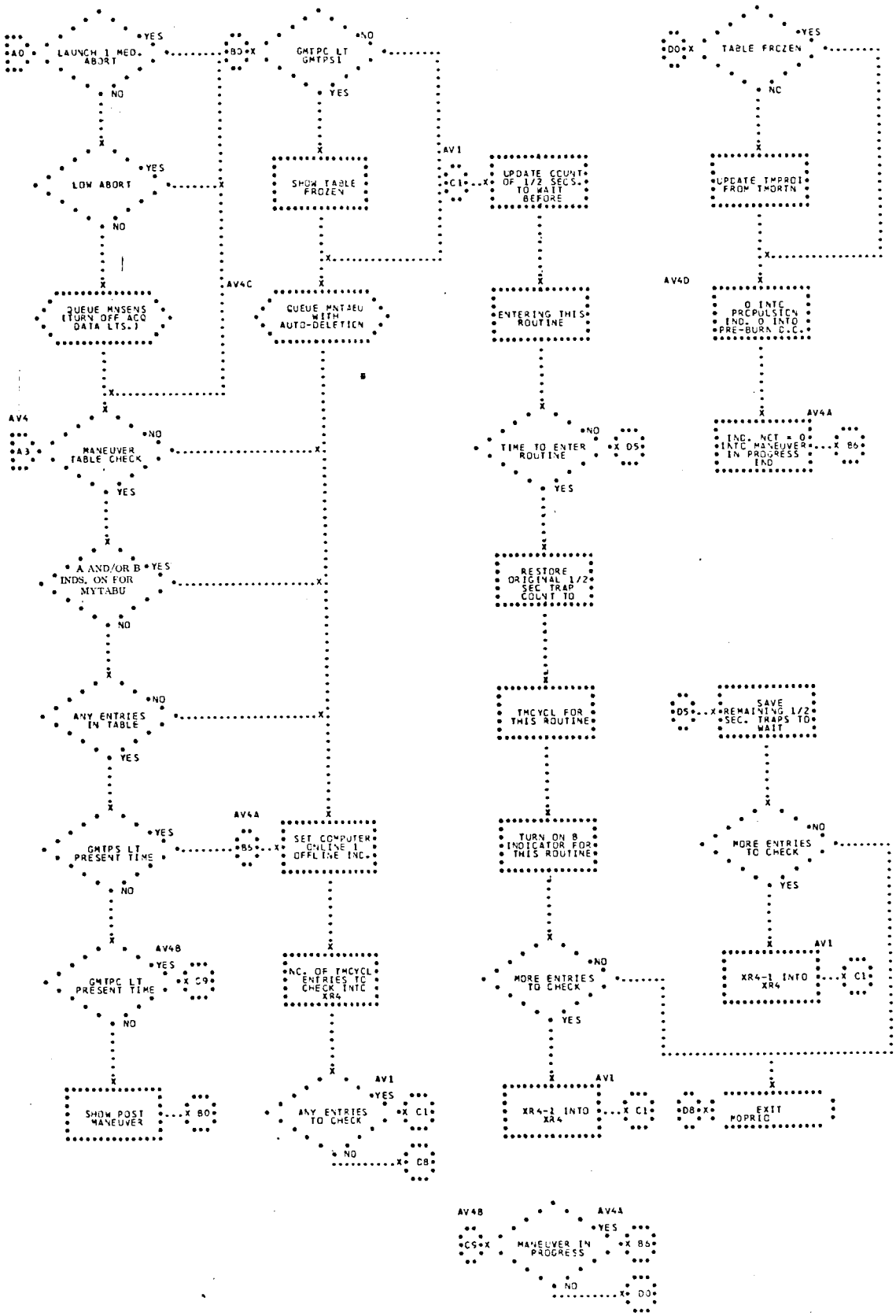
A0
LAUNCH 1 MED. ABORT
YES
NO
B0
GMTPC LT GMTPS1
NO
YES
LOW ABORT
YES
NO
SHOW TABLE FROZEN
AV1
C1
UPDATE COUNT OF 1/2 SECS. TO WAIT BEFORE
D0
TABLE FROZEN
YES
NO
UPDATE TMPROI FROM TMORTN
QUEUE MNSENS (TURN OFF ACQ DATA LTS.)
AV4C
QUEUE MNTABU WITH AUTO-DELETION
ENTERING THIS ROUTINE
AV4D
0 INTC PROPULSION IND. 0 INTO PRE-BURN C.C.
AV4
A3
MANEUVER TABLE CHECK
NO
YES
TIME TO ENTER ROUTINE
NO
D5
YES
AV4A
INC. NCT = 0 INTC MANEUVER IN PROGRESS IND
B6
A AND/OR B INDS. ON FOR MYTABU
YES
NO
RESTORE ORIGINAL 1/2 SEC. TRAP COUNT TO
ANY ENTRIES IN TABLE
NO
YES
TMCYCL FOR THIS ROUTINE
D5
SAVE REMAINING 1/2 SEC. TRAPS TO WAIT
GMTPS LT PRESENT TIME
YES
NO
AV4A
B5
SET COMPUTER ONLINE 1 OFFLINE INC.
TURN ON B INDICATOR FOR THIS ROUTINE
MORE ENTRIES TO CHECK
NO
YES
AV4B
GMTPC LT PRESENT TIME
YES
NO
C9
INC. OF TMCYCL ENTRIES TO CHECK INTO XR4
MORE ENTRIES TO CHECK
NO
YES
AV1
XR4-1 INTO XR4
C1
SHOW POST MANEUVER
B0
AV1
ANY ENTRIES TO CHECK
YES
NO
C1
C8
AV1
XR4-1 INTO XR4
C1
D8
EXIT MOPRIC
AV4B
C9
AV4A
MANEUVER IN PROGRESS
YES
NO
B6
D0

## 83. MYMINS - MONITOR MINUTE PROCESSOR

THE GMT MINUTE COUNT FOR THE REAL-TIME SYSTEM IS MAINTAINED BY THE MINUTE PROCESSOR, MYMINS. UPON THE COMPLETION OF 120 HALF-SECOND INTERRUPTS, MTHFSC TURNS ON THE MYMINS B-BIT, WITH A SUBSEQUENT UPDATE OF THE MINUTE COUNT. IN ADDITION, OTHER TIME RELATED FUNCTIONS ARE INTERROGATED TO DETERMINE THE NECESSITY FOR FURTHER PROCESSING. OTHER TIME RELATED FUNCTIONS INCLUDE -

COMMENCEMENT OF A NEW DAY, MONTH OR YEAR
ORBIT DISPLAY TABLE REGENERATION
PRIMARY RECOVERY AREA UPDATE
CONTINGENCY RECOVERY AREA UPDATE
REENTRY TABLE GENERATION
APOGEE-PERIGEE REDEFINITION
ACQUISITION DATA CHECK
TELETYPE INPUT TIME CHECK

SHOULD FURTHER PROCESSING BE INDICATED FOR ANY OF THE ABOVE FUNCTIONS, STEPS ARE TAKEN TO QUEUE OR READY THE PROPER ROUTINE OR THE NECESSARY LOGIC IS EXECUTED WITHIN MYMINS. (SEE FLOWCHART.)

INPUT

B BIT IS TURNED ON BY MTHFSC

A) TABLES -

| | |
|---|---|
| TMONTH | CONTAINS DAYS PER MONTH |
| TMTYMO | CONTAINS TTY MONTH CODES |
| TMREFL+6 | CONTAINS TIME TAG OF PRESENT ORBIT DEFINING VECTOR |
| TMGTRS | CONTAINS GMT OF RETRO-FIRE SETTING |

| | |
|---|---|
| TMAPG3 | CONTAINS TIME OF NEXT APOGEE IN FIXED SECONDS |
| TMPER3 | CONTAINS TIME OF NEXT PERIGEE IN FIXED SECONDS |

B) COMMUNICATION CELLS -

| | |
|---|---|
| MCMINS | CONTAINS CURRENT GMT IN FIXED POINT MINUTES, IS ORIGINALLY SET BY MTWWVI WHEN TIME IS ENTERED INTO THE COMPUTER |
| MCPHSE | CONTAINS THE PREFIX INDICATING CURRENT MISSION PHASE |
| MCDATE | CONTAINS CURRENT BCI MONTH AND DAY |
| MCMNTH | CONTAINS CURRENT MONTH |
| MCDAYS | CONTAINS CURRENT DAY OF MONTH |
| MCOEAV | NZ = ORBIT EPHEMERIS AVAILABLE, Z = NOT AVAILABLE |
| MCYYYY | CONTAINS PRIMARY AREA HOLD TIMES |
| MCXXXX | CONTAINS CONTINGENCY AREA HOLD TIMES |
| MCRNTB | Z = REENTRY TABLE NOT GENERATED BASED ON CURRENT GMTRS. NZ = RE-ENTRY TABLE HAS BEEN GENERATED |
| MCHFSC | CONTAINS CURRENT GMT IN HALF-SECONDS |

OUTPUT

THE FOLLOWING COMMUNICATION CELLS ARE UPDATED OR SET -

| | |
|---|---|
| MCMINS | UPDATED GMT MINUTE COUNT |
| MCDATE | UPDATED BCI MONTH AND DAY |
| MCDAYS | UPDATED DAY OF MONTH |
| MCMNTH | UPDATED MONTH |
| MCTYDT | UPDATED TTY MONTH AND DAY |

| | |
|---|---|
| MCMODA | QUEUE WORD FOR ON-LINE PRINT-OUT OF DATE |
| MCRNTB | SET N Z FOR REENTRY TABLE GENERATION |
| MCESAB | SET TO INFINITY WHEN REENTRY TABLE GENERATION IS BYPASSED |

B BIT IS TURNED ON FOR MYAPE3 AND MYACQD.

MYMINS PROVIDES QUEUES FOR MYMESS, MYOUR1, MYQPRA, MYQWEA.

METHOD

UPON ENTRY THE GMT MINUTE COUNT IS INCREMENTED BY ONE AND RESTORED INTO MCMINS. A CHECK IS MADE TO DETERMINE WHETHER A NEW DAY, MONTH, OR YEAR HAS BEEN ENTERED, AND IF SO, APPROPRIATE DATE CELLS ARE ADJUSTED AND AN ON-LINE MESSAGE IS QUEUED TO PRINT OUT THE NEW DATE.

IF THE MISSION PHASE IS REENTRY, MYACQD IS READIED, BUT IF THE MISSION PHASE IS LAUNCH OR ABORT, THE PROGRAM EXIT IS TAKEN IMMEDIATELY. AN INDICATION OF ORBIT PHASE REQUIRES THE EXECUTION OR INITIALIZATION, WHEN APPLICABLE, OF THE FOLLOWING FUNCTIONS -

1) AN ORBIT EPHEMERIS REGENERATION WHEN THE TABLE BEGINNING TIME IS 30 OR MORE MINUTES OLDER THAN PRESENT TIME
2) CHECKING FOR A PRIMARY RECOVERY AREA UPDATE ONCE PRESENT TIME IS GREATER THAN THE TIME OF THE PREVIOUS UPDATE PLUS 15 MINUTES
3) CHECKING FOR A CONTINGENCY RECOVERY AREA UPDATE ONCE PRESENT TIME IS GREATER THAN THE TIME OF THE PREVIOUS UPDATE PLUS 2 MINUTES
4) GENERATION OF A REENTRY DISPLAY TABLE WHEN PRESENT TIME IS WITHIN 50 MINUTES OF THE MISSION GMTRS

5) REDEFINITION OF APOGEE AND PERIGEE WHEN PRESENT TIME EXCEEDS THE COMPUTED TIMES OF EITHER APOGEE OR PERIGEE
6) MYACQD IS READIED FOR A SECTOR EXAMINATION
7) EXAMINATION OF TTY INPUT TO DETERMINE END OF TRANSMISSION ON A TIME BASIS

USAGE

ENTRY AND EXIT VIA MOPRIC.

A) TABLES -

TMONTH
TMTYMO
TMREFL
TMGTRS
TMAPG3
TMPER3

B) CONSTANTS -

| | |
|---|---|
| K00001 | K00000 |
| K01440 | K00030 |
| K00012 | KM0000 |
| K000010 | K06000 |

C) SUBROUTINES -

MSTICK

D) COMMUNICATION CELLS -

MCMINS
MCMNTH
MCDATE

E) PARAMETERS -

| | |
|---|---|
| MNMINS | MNQNEA |
| MNMESS | MNAPE3 |
| MNOUR1 | MNACQD |
| MNQPRA | A |
| | B |

F) MACROS -

TRNON
TRNOF
QENBZ
QUEUE
QENBA

G) STORAGE REQUIRED - 210 LOCATIONS

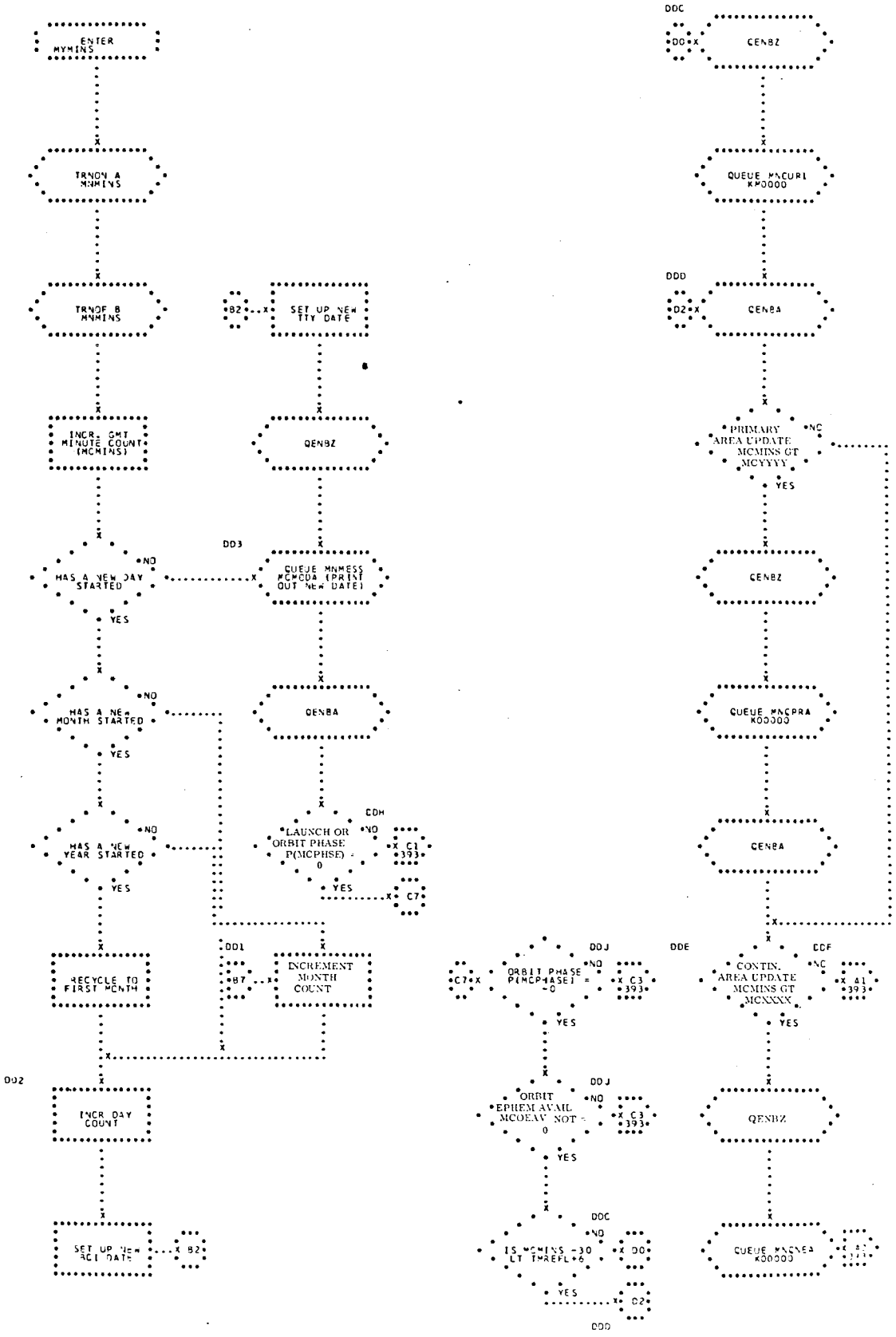
ENTER MYMINS
TRNON A MNMINS
TRNOF B MNMINS
INCR. GMT MINUTE COUNT (MCMINS)
HAS A NEW DAY STARTED
NO
YES
HAS A NEW MONTH STARTED
NO
YES
HAS A NEW YEAR STARTED
NO
YES
RECYCLE TO FIRST MONTH
INCR DAY COUNT
SET UP NEW ACI DATE
B2
SET UP NEW TTY DATE
QENBZ
DD3
QUEUE MNMESS MCMODA (PRINT OUT NEW DATE)
QENBA
CDH
LAUNCH OR ORBIT PHASE P(MCPHSE) = 0
NO
YES
C1 393
C7
DD1
B7
INCREMENT MONTH COUNT
DD2
DDC
DD0
CENBZ
QUEUE MNCURI KP0000
DDD
D2
CENBA
PRIMARY AREA UPDATE MCMINS GT MCYYYY
NO
YES
CENBZ
QUEUE MNCPRA K00000
CENBA
DDE
CDF
CONTIN. AREA UPDATE MCMINS GT MCNXXX
NO
YES
QENBZ
QUEUE MNCNEA K00000
DDJ
ORBIT PHASE P(MCPHASE) = 0
NO
YES
C3 393
DDJ
ORBIT EPHEM AVAIL MCOEAV NOT = 0
NO
YES
C3 393
DDC
IS MCMINS -30 LT TMAEPL+6
NO
YES
D0
D2
DDD

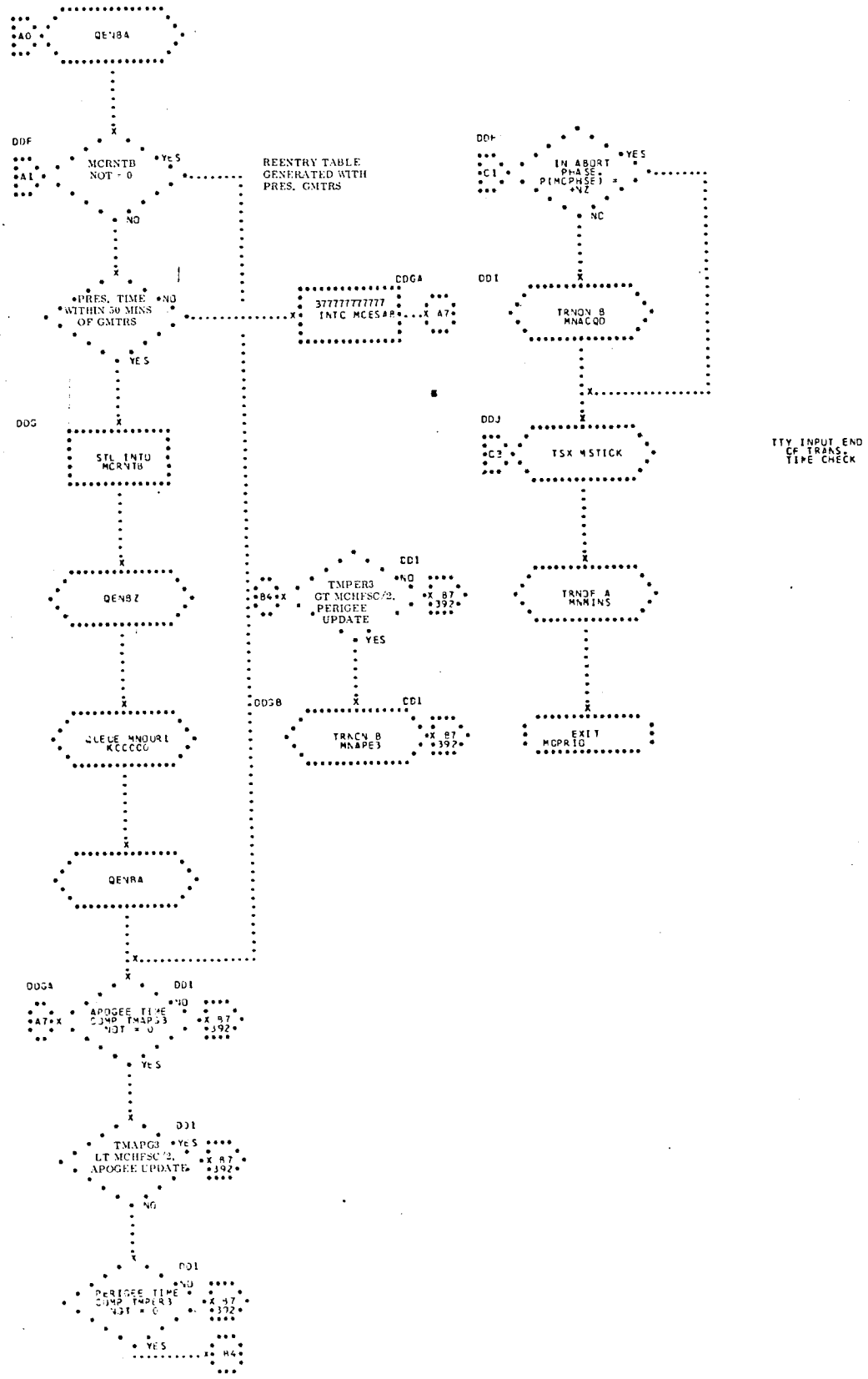
QENBA
A0
DDF
A1
MCRNTB NOT = 0
YES
NO
REENTRY TABLE GENERATED WITH PRES. GMTRS
PRES. TIME WITHIN 50 MINS OF GMTRS
NO
YES
DDG
STL INTO MCRNTB
QENBZ
QUEUE MNOUR1 KCCCCO
QENBA
DDGA
A7
377777777777 INTO MCESAB
A7
DDGB
B4
TMPER3 GT MCHFSC/2, PERIGEE UPDATE
DD1
NO
YES
TRNON B MNAPE3
B7 392
DDF
C1
IN ABORT PHASE, P(MCPHSE) = +NZ
YES
NO
DDI
TRNON B MNACQD
DDJ
C3
TSX MSTICK
TRNOF A MNMINS
EXIT MCPRIO
TTY INPUT END OF TRANS. TIME CHECK
DDGA
A7
APOGEE TIME COMP TMAPG3 NOT = 0
DD1
NO
YES
B7 392
TMAPG3 LT MCHFSC/2, APOGEE UPDATE
DD1
YES
NO
B7 392
PERIGEE TIME COMP TMPER3 NOT = 0
DD1
NO
YES
B7 392
B4

## 84. MSTICK - TTY INPUT CHECK SUBROUTINE

EACH MINUTE OF OPERATION, MSTICK IS GIVEN CONTROL BY MYMINS TO DETERMINE IF ANY OF THE LOW-SPEED TRACKING STATIONS ARE DELINQUENT IN ENDING TRANSMISSION. (SEE FLOWCHART.)

INPUT

A) TM8MNS - TABLE OF MNSTNO CELLS (THE NUMBER OF TRACKING STATIONS, CURRENTLY EQUAL TO 22). EACH CELL CONSISTS OF AN ENTRY FOR ONE OF THE RADARS IN THE MERCURY TRACKING NETWORK.
INITIALLY EACH CELL CONTAINS ZERO, BUT WHEN TTY INPUT IS RECEIVED FROM THE RADAR STATION, THE TIME TRANSMISSION BEGAN PLUS EIGHT MINUTES IS STORED IN THE APPROPRIATE TM8MNS ENTRY.

B) MCMINS - CONTAINS CURRENT GMT IN FIXED POINT MINUTES.

OUTPUT

A) MINUS ZERO IS STORED IN THE ENTRY OF TM8MNS FOR THE DELINQUENT TRACKING STATION.

B) IOTTIN IS QUEUED WITH THE DELINQUENT TRACKING STATION INTERNAL IDENTIFICATION NUMBER.

METHOD

MSTICK DETERMINES IF A TRACKING STATION IS DELINQUENT IN ENDING TRANSMISSION BY COMPARING THE TIME OF THE BEGINNING OF TRANSMISSION PLUS EIGHT MINUTES TO THE

CURRENT GMT. IF THE TRANSMISSION TIME PLUS EIGHT MINUTES IS LESS THAN THE CURRENT GMT, THE TRACKING STATION IS CONSIDERED DELINQUENT.

USAGE

MSTICK IS USED ONLY BY MYMINS.

A) CALLING SEQUENCE -

```
        TSX     MSTICK,4
        RETURN
```

B) STORAGE REQUIRED -

32 LOCATIONS

C) PARAMETERS -

MNTTIN

MNSTNO

D) COMMUNICATICN CELLS -

MCSUBR

MCTIND

MCMINS

E) TABLES -

TM8MNS

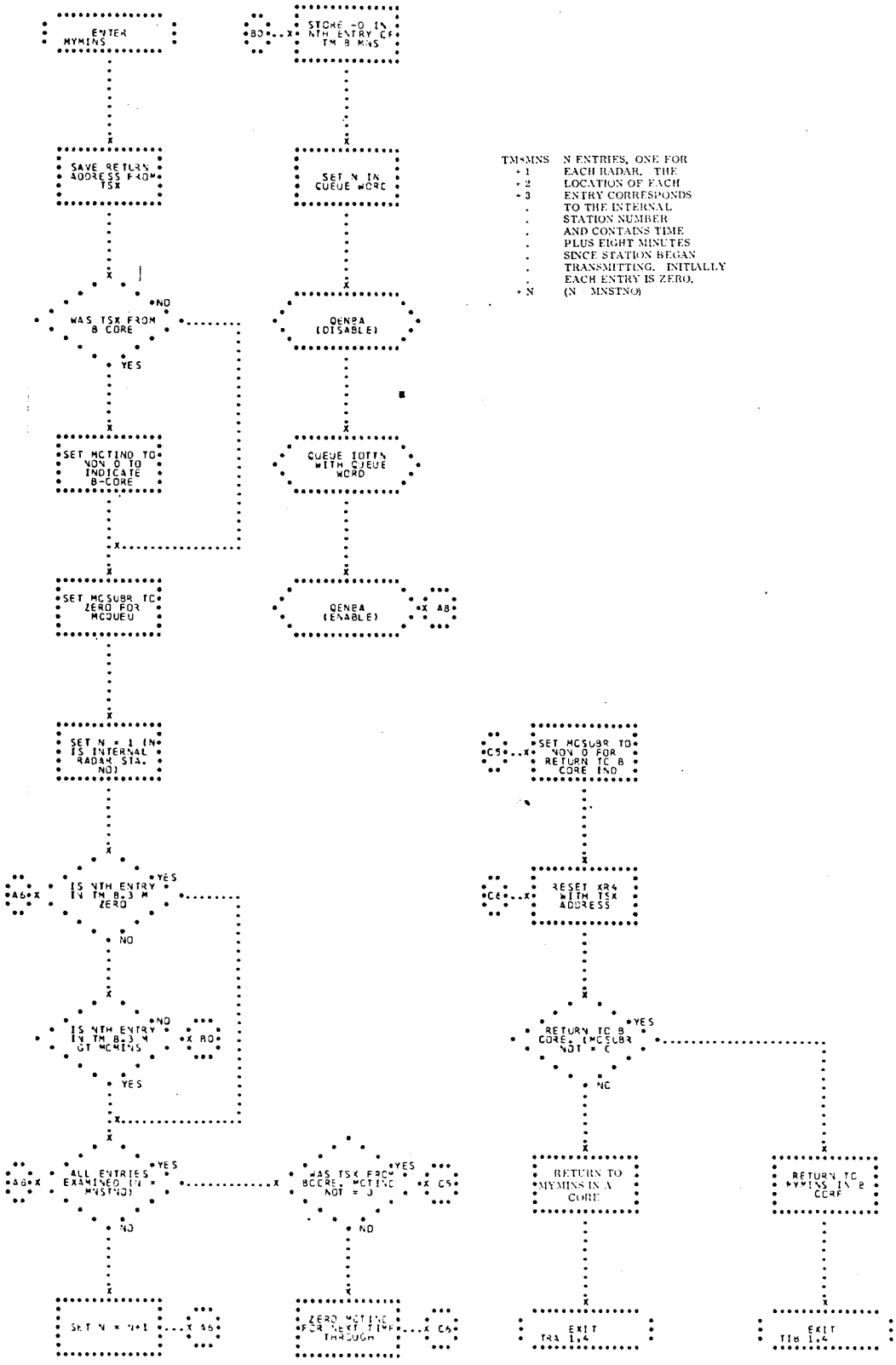


| | |
|---|---|
| TM+MNS | N ENTRIES, ONE FOR |
| +1 | EACH RADAR. THE |
| +2 | LOCATION OF EACH |
| +3 | ENTRY CORRESPONDS |
| . | TO THE INTERNAL |
| . | STATION NUMBER |
| . | AND CONTAINS TIME |
| . | PLUS EIGHT MINUTES |
| . | SINCE STATION BEGAN |
| . | TRANSMITTING. INITIALLY |
| . | EACH ENTRY IS ZERO. |
| +N | (N = MNSTNO) |

## 85. MTERTC - MONITOR REAL-TIME CHANNEL ERROR TRAP PROCESSOR

MTERTC RECEIVES CONTROL ONLY IF THE DCC INITIATES A TRAP ON ONE OF THE UNASSIGNED SUBCHANNELS. THIS TRAP PROCESSOR PROVIDES INPUT TO THE ON-LINE MESSAGE PROCESSOR FOR A MESSAGE WHICH STATES THAT AN ERRONEOUS REAL-TIME TRAP HAS OCCURRED. MTERTC SPECIFIES THE RESPONSIBLE SUB-CHANNEL. (SEE FLOWCHART.)

INPUT

ON ENTRY TO MTERTC, INDEX REGISTER 4 CONTAINS THE NUMBER OF THE SUBCHANNEL RESPONSIBLE FOR THE TRAP.

OUTPUT

MTERTC STORES AN ENTRY IN THE INPUT TABLE FOR MYMESS. THIS ENTRY DESIGNATES A STANDARD ERROR MESSAGE AND PROVIDES THE NUMBER OF THE RESPONSIBLE SUBCHANNEL.

METHOD

MTERTC RECEIVES CONTROL FROM MORTCC FOLLOWING A DCC TRAP ON AN UNASSIGNED SUBCHANNEL, WITH THE NUMBER OF THE SUBCHANNEL IN INDEX REGISTER 4. MTERTC STORES XR4 IN THE QUEUE WORD TO PRINT OUT THE MESSAGE - AN ERRONEOUS TRAP OCCURRED ON THE DCC, SUB-CH. NO.___, AND STORES THIS WORD FOR INPUT TO MYMESS.

USAGE

MTERTC IS ENTERED FROM MORTCC FOLLOWING A TRAP ON AN UNASSIGNED DCC SUBCHANNEL AND EXITS TO MOPRIO.

A) STORAGE REQUIRED -
5 LOCATIONS

B) MACRO -
QUEUE

C) PARAMETER -
MNMESS

D) TIME REQUIRED -
0.107 MILLISECOND

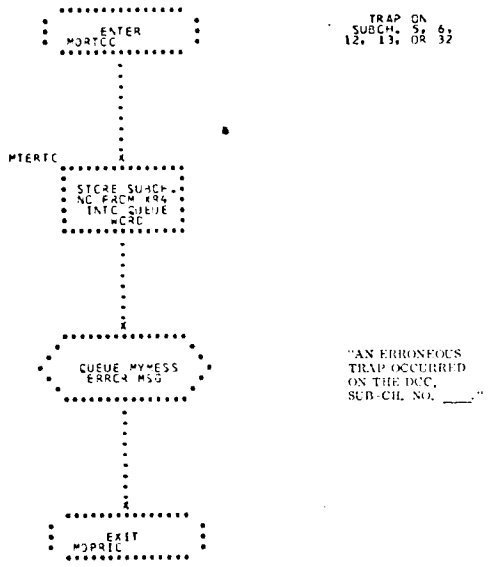
ENTER
MDRTCC
TRAP ON
SUBCH. 5, 6,
12, 13, OR 32
MTERTC
STORE SUBCH
NO FROM R94
INTO QUEUE
WORD
QUEUE MYMESS
ERROR MSG
"AN ERRONEOUS
TRAP OCCURRED
ON THE DCC,
SUB-CHL NO. ____."
EXIT
MDPRIC

## 86. MTCPCC - MONITOR PROGRAM CONTROL CONSOLE CHANNEL TRAP PROCESSOR

MTCPCC SERVICES TRAPS RESULTING FROM PCC DATA TRANSMISSIONS VIA DATA CHANNEL C. (SEE FLOWCHART.)

### INPUT

THERE ARE NO INPUT REQUIREMENTS FOR THIS PROGRAM.

### OUTPUT

OUTPUT FROM MTCPCC CONSISTS OF SETTING A COMMON STORAGE CELL, MCPCCJ, TO ZERO.

### METHOD

UPON THE INITIAL INTERRUPT FROM THE PCC, MORTCC TURNS ON THE B INDICATOR FOR MYOPCC. MYOPCC STORES A TTR (TRAP TRANSFER) TO MTCPCC IN LOCATION 00017 AND INITIATES TRANSMISSION OF TWO 36-BIT WORDS FROM THE PCC. WHEN THE TRANSFER IS COMPLETE, A TRAP TO LOCATION 00017 OCCURS AND MTCPCC RECEIVES CONTROL.

MTCPCC SAVES THE MACHINE CONDITIONS, TURNS ON THE B INDICATOR FOR MYOPCC AND UNSUPPRESSES OTHER CHANNEL C USERS. A COMMON STORAGE CELL, MCPCCJ, IS SET TO ZERO AND CONTROL IS RETURNED TO MOPRIO.

### USAGE

MTCPCC IS ENTERED FROM LOCATION 00017 FOLLOWING A CHANNEL C TRAP, AND EXITS TO MOPRIO.

A) COMMUNICATION CELL -
MCPCCJ

B) PARAMETERS -

MNOPCC

MNWRRS

MNRRRS

MNSRST

MNDDCP

MNRSYS

B

H

L

J

G

C) STORAGE REQUIRED -

10 LOCATIONS

D) TIME REQUIRED -

0.040 MILLISECOND

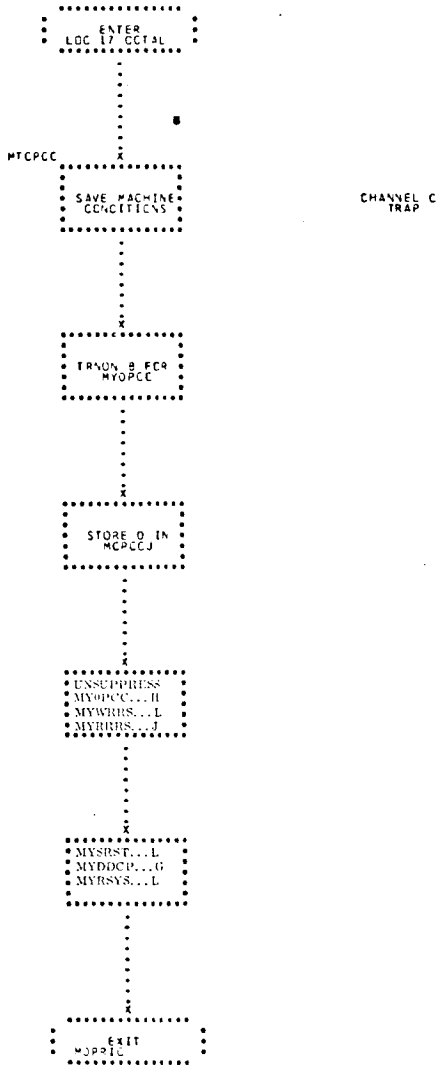
ENTER
LOC 17 OCTAL
MTCPCC
SAVE MACHINE
CONDITIONS
CHANNEL C
TRAP
TRNON B FOR
MYOPCC
STORE 0 IN
MCPCCJ
UNSUPPRESS
MYOPCC...H
MYWRBS...L
MYRBBS...J
MYSRST...L
MYDDCP...G
MYRSYS...L
EXIT
MOPRIC

## 87. MYOPCC - MONITOR PROGRAM CONTROL CONSOLE PROCESSOR

MYOPCC MOVES DATA FROM THE PCC INTO CORE STORAGE (TMOCHC) AND PROVIDES ON-LINE VERIFICATION OF PCC ENTRY SWITCH SETTINGS. (SEE FLOWCHART.)

INPUT

A) COMMUNICATION CELLS -

MCPCCJ WHEN NONZERO, INDICATES THAT INITIALIZATION HAS NOT TAKEN PLACE.

MCTIMM COMMON STORAGE CELL THAT CONTAINS TIME OF PCC INTERRUPT.

OUTPUT

OUTPUT FROM MYOPCC CONSISTS OF A 6-CELL TABLE. FOR THE FIRST INTERRUPT, CELLS 1 AND 2 CONTAIN PCC WORDS 1 AND 2 AND CELL 3 CONTAINS THE INTERRUPT TIME, FOR THE SECOND INTERRUPT, CELLS 4, 5, AND 6 ARE USED AS CELLS 1, 2, AND 3, RESPECTIVELY.

THE LOCATION OF THE FIRST WORD IS PLACED IN THE QUEUE TABLES OF MYKEYS AND MYMESS BY THE QUEUE MACRO.

METHOD

BEFORE MYOPCC RECEIVES CONTROL FOR THE FIRST TIME, MCPCCJ WILL HAVE BEEN SET TO A NONZERO BY MORTCC. AFTER TESTING THIS CELL, MYOPCC PROCEEDS TO SET UP TMOCHC. CHANNEL C IS THEN SELECTED AND TWO WORDS ARE READ IN UNDER AN IOCT WITH A WORD COUNT OF TWO. CONTROL IS RETURNED TO MOPRIO WHERE AN ENABLE INSTRUCTION RESULTS IN EITHER AN IMMEDIATE TRAP TO LOCATION 00017 OR CONDITIONS THE COMPUTER TO TRAP ON COMPLETION OF THE I/O COMMAND.

BEFORE THE SECOND ENTRY, MOPCOJ IS SET TO ZERO IN THE TRAP PROCESSOR MTOPCC. ON THE SECOND ENTRY MYOPCC TESTS THIS CELL. A ZERO IN MOPCOJ RESULTS IN MYMESS AND MYKEYS BEING QUEUED WITH THE LOCATION OF THE FIRST WORD READ FROM THE SWITCHES, AFTER WHICH CONTROL IS RETURNED TO MOPRIO.

USAGE

MYOPCC IS ENTERED FROM AND EXITS TO MOPRIO.

A) MACROS -

QENBZ, QUEUE, TRNON, AND TRNOF

B) PARAMETERS -

A, B, MNWRRS, MNRRRS, MNSRST, MNDDCP, MNRSYS, MNOPCC, MNMESS, AND MNKEYS

C) STORAGE REQUIRED - 41 LOCATIONS

D) TIME REQUIRED -

1) FIRST ENTRY - 0.164 MILLISECOND

2) SECOND ENTRY - 0.046 MILLISECOND

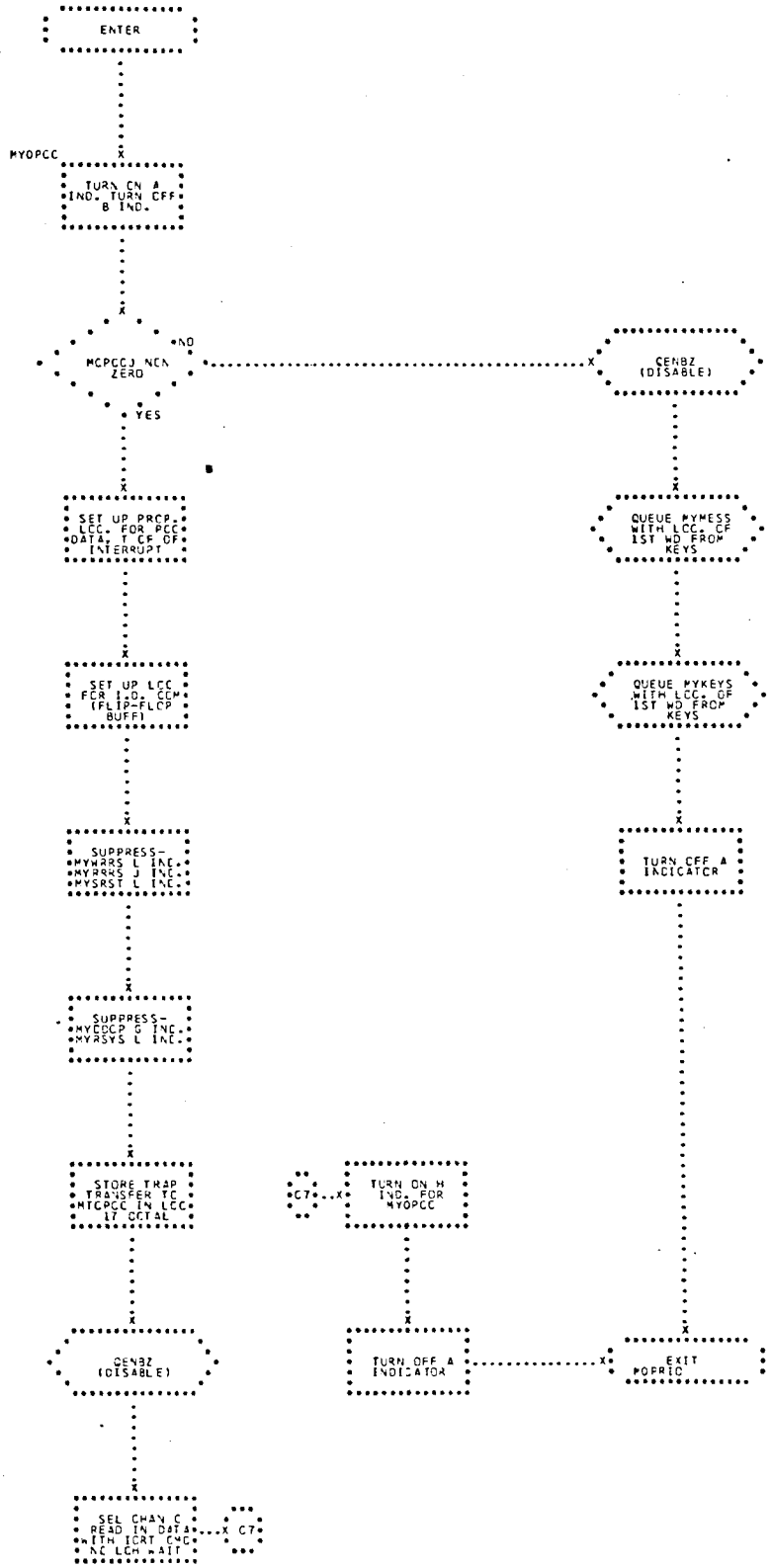
ENTER
MYOPCC
TURN ON A IND. TURN OFF B IND.
MCPCCJ NCN ZERO
NO
YES
CENBZ (DISABLE)
SET UP PRCP. LCC. FOR PCC DATA, T CF CF INTERRUPT
QUEUE MYMESS WITH LCC. OF 1ST WD FROM KEYS
SET UP LCC FOR I.O. CCM (FLIP-FLOP BUFF)
QUEUE MYKEYS WITH LCC. OF 1ST WD FROM KEYS
SUPPRESS- MYWRRS L INC. MYRRRS J INC. MYSRST L INC.
TURN OFF A INDICATOR
SUPPRESS- MYCOCP G INC. MYASYS L INC.
STORE TRAP TRANSFER TO MTCPCC IN LCC 17 OCTAL
C7
TURN ON H IND. FOR MYOPCC
CENBZ (DISABLE)
TURN OFF A INDICATOR
EXIT POPRIO
SEL CHAN C READ IN DATA WITH ICRT CMD NO LCH WAIT
C7

## 88. MYKEYS - MONITOR PROCESSOR TO USE PCC ENTRY KEYS

MYKEYS IS ENTERED FROM MYCPCC TO DETERMINE WHICH OPTION IN THE PCC CODE KEYS IS BEING REQUESTED AND TO GIVE CONTROL TO THE APPROPRIATE SUBROUTINE TO PROCESS THE ENTRY KEYS. (SEE FLOWCHART.)

### INPUT

THE INPUT TO MYKEYS CONSISTS OF A QUEUE WORD WHOSE ADDRESS CONTAINS THE LOCATION OF THE FOLLOWING 3-WORD TABLE -

| | |
|---|---|
| TABLE+0 | CONTAINS THE DELETE WORD OF THE ENTRY KEYS (WORD 1) |
| TABLE+1 | CONTAINS THE INSERT WORD OF THE ENTRY KEYS (WORD 2) |
| TABLE+2 | CONTAINS THE TIME THE TRAP REQUESTED A READING OF THE PCC ENTRY SWITCHES. THE LOW ORDER 9 BITS OF THIS WORD CONTAIN THE COUNT OF THE NUMBER OF 8-1/3 MILLISECONDS THAT HAVE ELAPSED SINCE THE LAST HALF-SECOND TRAP. THE REMAINING BITS CONTAIN THE CURRENT GMT COUNT IN HALF-SECONDS. |

### OUTPUT

THE OUTPUT OF MYKEYS CONSISTS OF GIVING CONTROL TO THE SUBROUTINE WHOSE CODE BIT WAS INSERTED IN BITS 31-36 OF ONE OF THE CONTROL WORDS (WORD 1 OR WORD 2).

METHOD

THE DELETE WORD (TABLE+0) IS EXAMINED FOR CODE BITS. THE ASSIGNED CODE BITS FOR THE DELETE WORD ARE -

| | |
|---|---|
| 000001 (PCUPD) | ADDRESSING A DCS MESSAGE |
| 000010 (PCTRN) | INITIATE TRANSMISSION OF A DCS TTY MESSAGE |

IF NONE OF THE DELETE WORD CODE BITS ARE ON, THE CODE BITS OF THE INSERT WORD ARE THEN EXAMINED. THE ASSIGNED CODE BITS ARE AS FOLLOWS FOR THE INSERT WORD -

| | |
|---|---|
| 000000 (KEYTL) | INSERTION OR DELETION OF TELEMETRY. WHEN USING THIS OPTION, THE CHANGING OF A PCC SWITCH POSITION FROM THE 'INSERT' OR 'DELETE' POSITION TO THE 'NEUTRAL' POSITION IS CONSIDERED A RESET OF THAT SWITCH AND NULLIFIES THE PREVIOUS SETTING. |
| 000001 (KEYDC) | INSERTION OR DELETION OF ENTRIES IN THE TMSTMS TABLE. EACH KEY IS ASSIGNED AN UPPER CORE BLOCK NUMBER, I.E., KEY NUMBER 1 REFERS TO UPPER CORE BLOCK NUMBER 1, ETC. MOVING KEY 30 TO THE 'INSERT' POSITION IS INTERPRETED AS A REQUEST FOR A 'FORCED' D. C. THIS KEY IN THE NEUTRAL OR 'DELETE' POSITIONS IS NOT INTERPRETED. |
| 000010 (KEYCF) | CADFISS USE OF THE RADAR STATIONS. THE NUMERICAL DESIGNATION OF THE KEYS CORRESPONDS TO THE INTERNAL STATION NUMBER OF A RADAR SITE. |

PLACING A STATION KEY IN THE 'INSERT' POSITION CAUSES IOTTIN TO IGNORE THE INPUT FROM THAT STATION UNTIL SUCH TIME AS THAT SAME KEY IS PLACED IN THE 'DELETE' POSITION. PLACING A STATION KEY IN THE 'DELETE' POSITION WILL CAUSE AN OVERRIDE OF THE '10 MINUTE DELAY BEFORE RETRANSMISSION CHECK' INITIATED IN IOTTIN.

000100 (KEYDE) THE NUMERICAL DESIGNATION OF THE KEYS CORRESPONDS TO THE INTERNAL STATION NUMBER OF A RADAR SITE. PLACING STATION KEY IN THE 'INSERT' POSITION CAUSES MPDIFC TO ASSIGN THE DATA FROM THAT STATION TO AN UPPER CORE BLOCK. HOWEVER, NO ENTRY IS MADE IN THE TMSTMS TABLE AND NO D. C. IS PERFORMED FOR THAT STATION. THIS OPTION REMAINS IN EFFECT UNTIL THE STATION KEY IS PLACED IN THE 'DELETE' POSITION.

001000 (KEYRT) THIS OPTION IS USED TO ENTER THE GMT OF RETROFIRE AND ASSUMES NOMINAL ATTITUDE AND NUMBER OF RETROS FIRED. TIME IS ENTERED IN OCTAL IN THE 'INSERT' WORD ACCORDING TO THE FOLLOWING FORMAT -

SWITCHES - 12 TO 18 HOURS
19 TO 24 MINUTES
25 TO 30 SECONDS

NOTE-THIS OPTION DOES NOT CHECK FOR MINUTES OR SECONDS IN EXCESS OF 60.

010000 (KEPCM) PCM CALIBRATION TABLE UPDATE

100000 (KEYFN) FORCE RADAR END OF TRANSMISSION

IF THE CODE BIT FOR ANY OF THE ABOVE OPTIONS IS ON, CONTROL IS TRANSFERRED TO THE SUBROUTINE THAT PROCESSED THIS PARTICULAR TYPE REQUEST. THE CODE BITS MAY NOT BE USED AS ENTRY KEYS SINCE THESE 6 BITS ARE MASKED OFF FROM THE REST OF THE WORD.

USAGE

A) MACROS -

QENBA, QENBZ, TRNON, TRNOF, QUEUE, UNQUE.

B) STORAGE REQUIRED -

857 LOCATIONS

C) TIMING -

.3 MILLISECOND

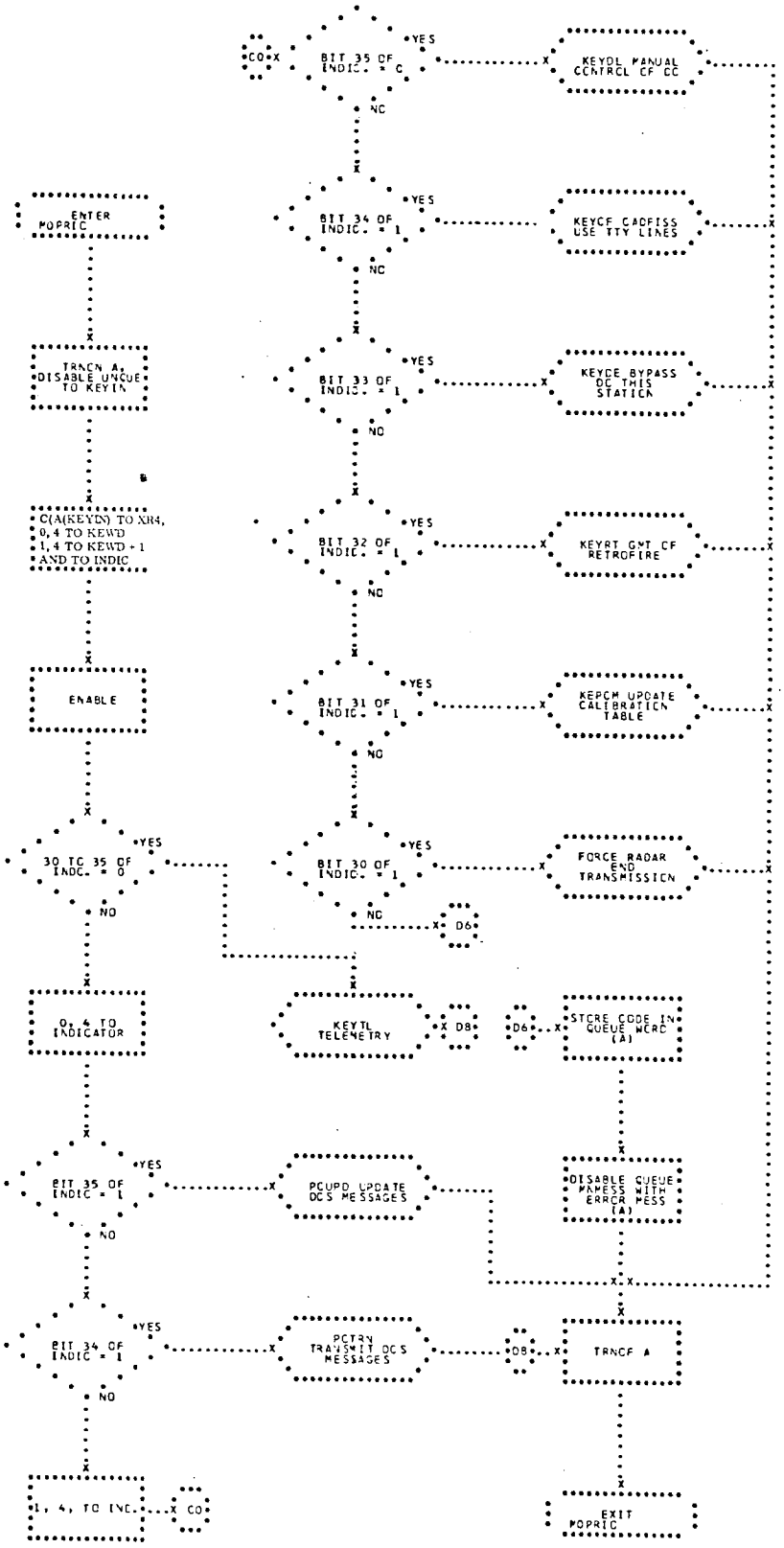
ENTER MOPRIC
TRNCN A, DISABLE UNCUE TO KEYIN
C(A(KEYIN) TO XR4, 0,4 TO KEWD 1,4 TO KEWD + 1 AND TO INDIC
ENABLE
30 TO 35 OF INDIC. = 0
YES
NO
0, 4 TO INDICATOR
BIT 35 OF INDIC = 1
YES
NO
BIT 34 OF INDIC = 1
YES
NO
1, 4, TO INC.
CO
BIT 35 OF INDIC. = 0
YES
NO
KEYOL MANUAL CONTROL OF CC
BIT 34 OF INDIC. = 1
YES
NO
KEYCF CADFISS USE TTY LINES
BIT 33 OF INDIC. = 1
YES
NO
KEYCE BYPASS DC THIS STATION
BIT 32 OF INDIC. = 1
YES
NO
KEYRT GVT OF RETROFIRE
BIT 31 OF INDIC. = 1
YES
NO
KEPCM UPDATE CALIBRATION TABLE
BIT 30 OF INDIC. = 1
YES
NO
D6
FORCE RADAR END TRANSMISSION
KEYTL TELEMETRY
D8
D6
STORE CODE IN QUEUE WORD (A)
PCUPD UPDATE DCS MESSAGES
DISABLE QUEUE MAMESS WITH ERROR MESS (A)
PCTRY TRANSMIT DCS MESSAGES
D8
TRNCF A
EXIT MOPRIC

## 89. KEYTL - TELEMETRY SUBROUTINE TO MYKEYS

THE PURPOSE OF KEYTL IS TO CHANGE THE INCOMING TELEMETRY SEQUENCE THROUGH THE USE OF THE P. C. C. (SEE FLOWCHART.)

INPUT

| | |
|---|---|
| KEWD | DELETIONS TO BE MADE IN THE TELEMETRY SEQUENCE. |
| KEWD+1 | INSERTIONS TO BE MADE IN THE TELEMETRY SEQUENCE. |
| KEYTM | TIME OF THE P.C.C. INTERRUPT |
| MCLTTL | PREVIOUS EFFECTIVE TELEMETRY SEQUENCE |

OUTPUT

| | |
|---|---|
| MCDTWD | DELETE MASK |
| MCITWD | INSERT MASK |
| MCLTTL | EFFECTIVE TELEMETRY AS MODIFIED BY THE P.C.C. MASKS. |

THE FOLLOWING CELLS ARE SET OR RESET AS INDICATED BY THE P.C.C. ENTRY.

| | | |
|---|---|---|
| MCPRGL | LIFT SWITCH 2, SET NON-ZERO | FX PT |
| MCLIFT | LIFT SWITCH 1, SET NON-ZERO | FX PT |
| MCABPS | ABORT PHASE STARTED,SET NON-ZERO | FX PT |
| MCGTLO | TIME OF LIFT OFF | FX PT SECS |
| MCORPS | ORBIT PHASE STARTED,SET NON-ZERO | FX PT |
| MCSELL | SELECTED LINE, 1,2,4 | FX PT |
| MCNRRF | NUMBER OF RETROS FIRED, 0-4 | FX PT |
| MCLFTM | TIME OF LIFT OFF | FL PT SECS |
| MC1RRF | TIME RETRO 1 FIRED | FL PT SECS |
| MC2RRF | TIME RETRO 2 FIRED | FL PT SECS |

| | | |
|---|---|---|
| MC3RRF | TIME RETRO 3 FIRED | FL PT SECS |
| MC4RRF | TIME RETRO 4 FIRED | FL PT SECS |
| MCSCUT | TIME OF SECOND STAGE CUT OFF | FL PT SECS |
| MCSCTI | TIME OF S/C THRUSTING INDICATION | FL PT SECS |
| MCABMC | TIME OF ABORT MODE 3 | FL PT SECS |
| MCERRS | TIME OF EMERGENCY RETRO SALVO | FL PT SECS |
| MCAAAB | TIME OF ASTRONAUT ACTUATED ABORT | FL PT SECS |
| MCSPSE | TIME OF SPACECRAFT SEPARATION | FL PT SECS |

METHOD

THE PROGRAM MAKES THE NECESSARY ALTERATIONS TO THE INCOMING TELEMETRY SEQUENCE AS DETERMINED BY THE DELETE AND INSERT MASKS SET IN THE KEYS OF THE P.C.C. AND READ IN BY MYOPCC.

THIS ROUTINE WILL BE USED ONLY DURING LAUNCH PHASE, AS A CHECK, MYKEYS PROHIBITS ENTRY DURING ANY OTHER PHASE AS INDICATED BY THE LAST 6-BITS OF THE P.C.C. ENTRY KEYS. SHOULD A P.C.C. INTERRUPT OCCUR DURING A PHASE OTHER THAN LAUNCH, AND THE CODE OF THE P.C.C. ENTRY KEYS INDICATES LAUNCH, THE ROUTINE WILL NOT BE EXECUTED BECAUSE OF A CHECK ON THE PREFIX OF MCPHSE TO DETERMINE IF LAUNCH PHASE IS INDICATED.

KEY DESIGNATIONS ON THE P.C.C. CONSOLE ARE AS FOLLOWS -

| | | |
|---|---|---|
| 1-7 | BLANK | |
| 8-10 | SELECTED LINE,<br>001 BURROUGHS,<br>010 BDA.,<br>100 IP7094 | SS1,SS2,SS3 |
| 11 | RETRO 1 FIRED | RR1 |

| | | |
|---|---|---|
| 12 | RETRO 3 FIRED | RR3 |
| 13 | RETRO 2 FIRED | RR2 |
| 14 | RETRO 4 FIRED | RR4 |
| 15 | SECOND STAGE CUTOFF | SECO |
| 16 | S/C THRUSTING INDICATION | STI |
| 17-18 | LIFT SWITCHES, 01 LIFT | LS1, LS2 |
| | 11 NO LIFT | |
| 19 | LIFT OFF | LO |
| 20 | ABORT MODE 3 | AM3 |
| 21 | EMERGENCY RETRO SALVO | ERS |
| 22 | ASTRONAUT ACTUATED ABORT | AAA |
| 23 | S/C SEPARATION | SPS |
| 24 | ABORT PHASE STARTED | APS |
| 25 | ORBIT PHASE STARTED | OPS |
| 26-30 | SPARES | S |
| 31-36 | PHASE CODE | |

KEYTL, USING TWO ROUTINES, IITPCC AND IITPRO, ERASES AND STORES TIMES RESPECTIVELY, IN THE APPROPRIATE COMMUNICATION CELLS CALLED FOR BY THE P.C.C. ENTRIES. LIFT OFF, HOWEVER, CANNOT BE DELETED THROUGH USE OF THE P.C.C. ONCE IT HAS BEEN ESTABLISHED.

IITPCC WILL BE UTILIZED IF THE DELETE MASK IS NOT SOLID ONE-BITS. THE CONDITIONS TO BE DELETED, I.E., THOSE BITS WHICH ARE ZEROS, ARE DETERMINED AND THE APPROPRIATE COMMUNICATION CELLS SET TO ZERO.

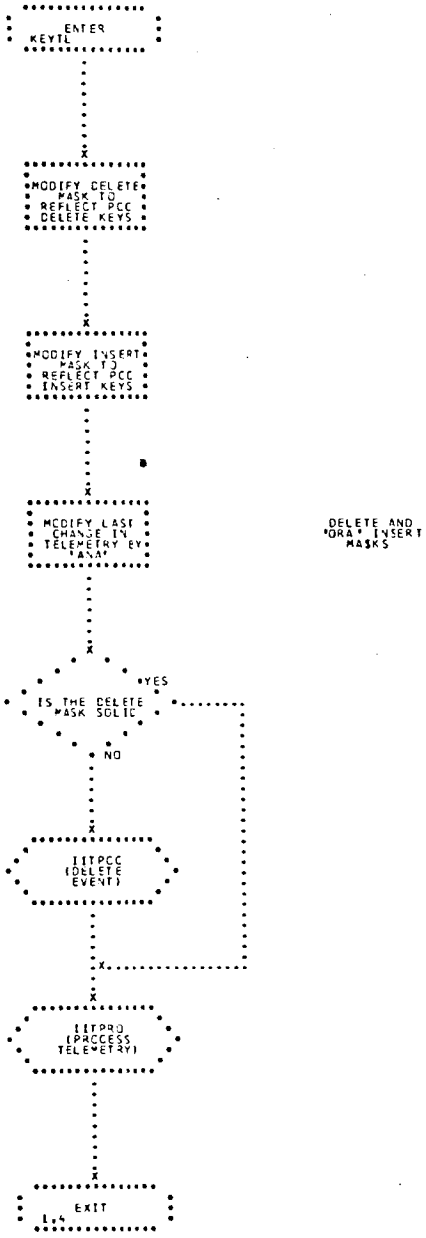
ENTER
KEYTL
MODIFY DELETE MASK TO REFLECT PCC DELETE KEYS
MODIFY INSERT MASK TO REFLECT PCC INSERT KEYS
MODIFY LAST CHANGE IN TELEMETRY BY 'ANA'
DELETE AND 'ORA' INSERT MASKS
YES
IS THE DELETE MASK SOLID
NO
IITPCC (DELETE EVENT)
IITPRO (PROCESS TELEMETRY)
EXIT

## 90. KEYDC - MONITOR SUBROUTINE TO CONTROL INSERTION AND DELETION OF ENTRIES IN THE TMSTMS TABLE

KEYDC RECEIVES CONTROL FROM MYKEYS TO DELETE OR INSERT ENTRIES IN TMSTMS AND TO FORCE DIFFERENTIAL CORRECTION WHEN REQUESTED. (SEE FLOWCHART.)

INPUT

INPUT TO KEYDC CONSISTS OF PCC ENTRY SWITCH WORDS LOCATED IN KEWD AND KEWD+1.

OUTPUT

QUEUE WORDS FOR MPDIFM IN THE FOLLOWING FORMAT -

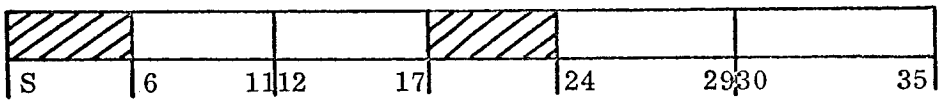


EACH OF THE TWO 6-BIT SUBFIELDS (24-29, 30-35) IN THE ADDRESS FIELD CAN CONTAIN THE BLOCK NUMBER OF AN EDITED LOW-SPEED DATA BLOCK WHOSE ENTRY IS TO BE INSERTED IN TMSTMS. EACH OF THE TWO SUBFIELDS (6-11, 12-17) IN THE DECREMENT CAN CONTAIN THE BLOCK NUMBER OF AN EDITED LOW-SPEED DATA BLOCK WHOSE ENTRY IS TO BE DELETED FROM TMSTMS. A NEGATIVE SIGN INDICATES DIFFERENTIAL CORRECTION IS DESIRED.

METHOD

THE NUMBER OF EACH PCC ENTRY SWITCH CORRESPONDS TO THE NUMBER OF A LOW-SPEED EDITED DATA BLOCK IN THE 32K

BUFFER MODULE, I. E., SWITCH POSITION NUMBER 1 REFERS TO DATA BLOCK NUMBER 1, ETC., UP TO PCC SWITCHING NUMBER 29.

PCC ENTRY SWITCH WORD 1, THE DELETE WORD, IS EXAMINED FIRST. THE NUMBER CORRESPONDING TO EACH OF THE ENTRY SWITCH POSITIONS CONTAINING 1-BITS IS PLACED IN THE DECREMENT SUBFIELDS OF QUEUE WORDS FOR MPDIFM. TWO SWITCH POSITION NUMBERS MAY BE ENTERED IN EACH DECREMENT FIELD (ONE NUMBER IN EACH SUBFIELD). AS ENTRIES ARE MADE, THE QUEUE WORDS ARE SAVED IN A TEMPORARY TABLE.

AFTER PCC WORD 1 HAS BEEN EXAMINED, PCC WORD 2, THE INSERT WORD, IS PROCESSED. THE NUMBER CORRESPONDING TO EACH OF THE SWITCH POSITIONS CONTAINING 1-BITS IS PLACED IN THE ADDRESS SUBFIELDS OF THE SAME QUEUE WORDS AS USED FOR PCC WORD 1 (AGAIN, TWO SWITCH POSITION NUMBERS PER ADDRESS FIELD MAY BE ENTERED).

AFTER ENTRY SWITCH WORDS 1 AND 2 HAVE BEEN EXAMINED, MPDIFM IS QUEUED WITH EACH ENTRY FROM THE TEMPORARY TABLE. AS EACH QUEUE WORD IS PROCESSED, BUT BEFORE THE QUEUE IS GIVEN, THE NEXT ENTRY IN THE TEMPORARY TABLE IS EXAMINED TO DETERMINE IN ADVANCE WHEN THE LAST QUEUE WORD WILL BE PROCESSED. WHEN THE LAST QUEUE WORD IS REACHED, ENTRY SWITCH 30 OF PCC WORD 2 IS EXAMINED TO DETERMINE IF DIFFERENTIAL CORRECTION IS REQUESTED. CORRECTION IS INDICATED ONLY WHEN SWITCH 30 IS IN THE 1-BIT POSITION. IN THIS CASE, THE SIGN OF THE LAST QUEUE WORD IS SET TO NEGATIVE BEFORE THE QUEUE IS GIVEN-DIFFERENTIAL CORRECTION CAN BE FORCED WHILE NEITHER INSERTING NOR DELETING ENTRIES FROM TMSTMS.

USAGE

A) CALLING SEQUENCE -

```
TSX     KEYDC,4
RETURN
```

NOTE - ONLY INDEX REGISTER 4 IS SAVED.

B) MACROS -

QENBA
QENBZ
QUEUE

C) PARAMETERS -

MNDIFM
MNUCMB

D) CONSTANTS -

K00006
KM0000

E) PCC ENTRY SWITCH CODE -

C0001 IN BIT POSITIONS 31 TO 36 OF WORD 2

F) STORAGE REQUIRED -

86 LOCATIONS INCLUDING MACROS
AND TEMPORARY TABLE STORAGE

G) TIMING (7094) -

0.119 MILLISECOND (MINIMUM)
2.434 MILLISECOND (MAXIMUM)

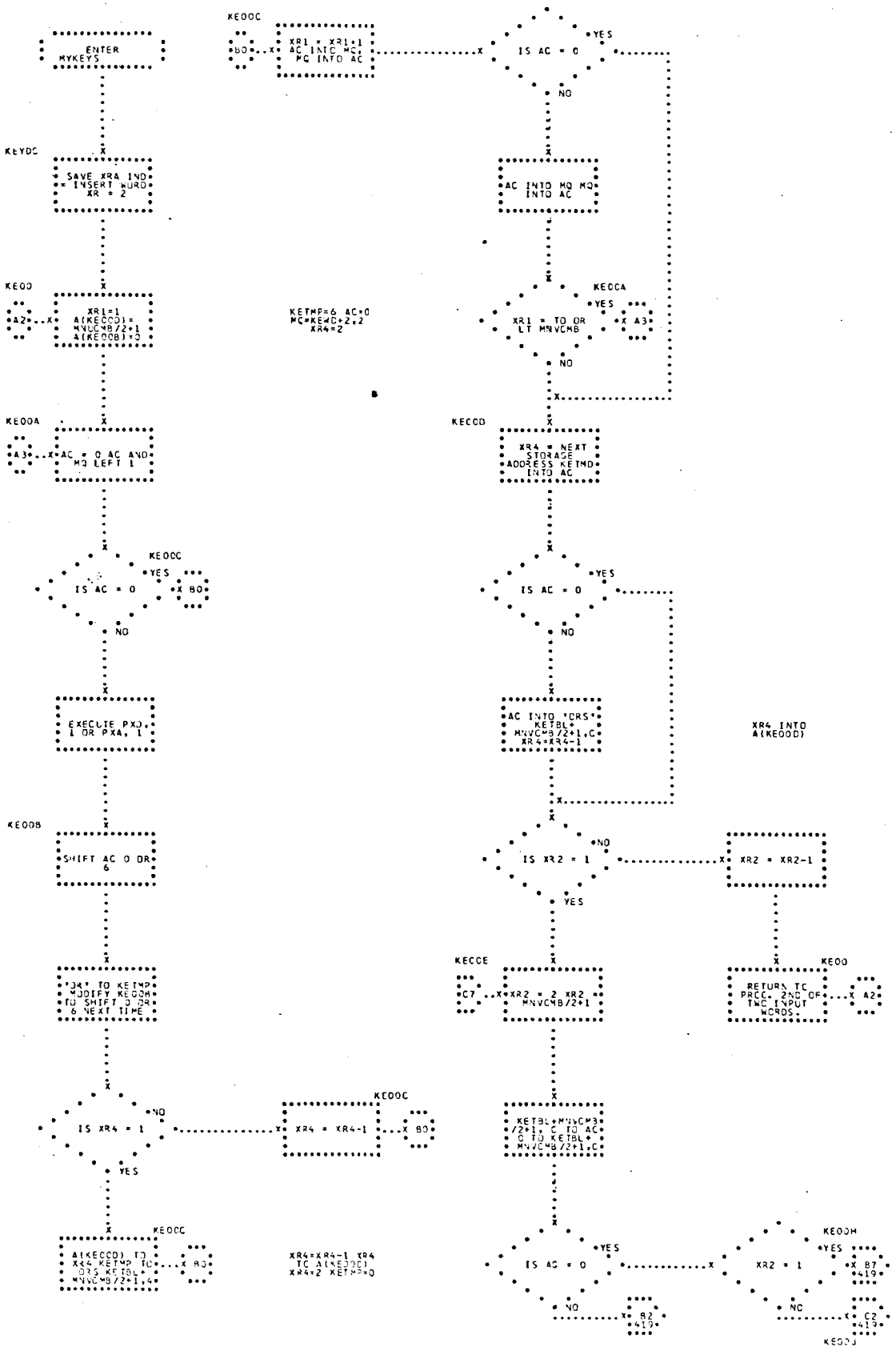
ENTER MYKEYS
KEYDC
SAVE XRA IND = INSERT WORD XR = 2
KEOO
A2
XR1=1 A(KECOD)= MNVCMB/2+1 A(KEOOB)=0
KEOOA
A3
AC = 0 AND MQ LEFT 1
KEOOC
IS AC = 0
YES
B0
NO
EXECUTE PXD, I OR PXA, I
KEOOB
SHIFT AC 0 OR 6
'OR' TO KETMP MODIFY KEOOA TO SHIFT 0 OR 6 NEXT TIME
IS XR4 = 1
NO
YES
KEOOC
A(KECOD) TO XR4 KETMP TO ORS KETBL+ MNVCMB/2+1,C
B0
KEOOC
XR4 = XR4-1
B0
XR4=XR4-1 XR4 TO A(KECOD) XR4=2 KETMP=0
KEOOC
XR1 = XR1+1 AC INTO MQ MQ INTO AC
KETMP=6 AC=0 MQ=KEWD+2,2 XR4=2
IS AC = 0
YES
NO
AC INTO MQ MQ INTO AC
KEOOA
XR1 = TO OR LT MNVCMB
YES
A3
NO
KECOD
XR4 = NEXT STORAGE ADDRESS KETMD INTO AC
IS AC = 0
YES
NO
AC INTO 'ORS' KETBL+ MNVCMB/2+1,C XR4=XR4-1
XR4 INTO A(KEOOD)
IS XR2 = 1
NO
YES
XR2 = XR2-1
KECOE
C7
XR2 = 2 XR2 = MNVCMB/2+1
KEOO
RETURN TO PROC. 2ND OF TWO INPUT WORDS.
A2
KETBL+MNVCMB/2+1, C TO AC 0 TO KETBL+ MNVCMB/2+1,C
IS AC = 0
YES
NO
B2
419
KEOOH
XR2 = 1
YES
NO
B7
419
C2
419
KEOOJ

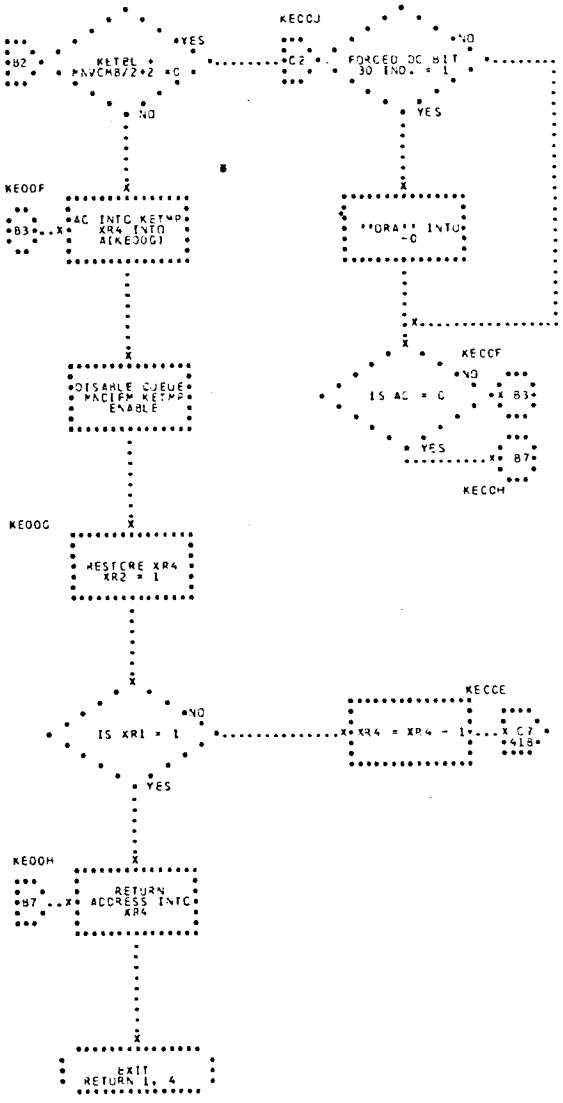
KEOOJ
B2
KETBL + MNVCMB/2+2 =0
YES
NO
C2
FORCED DC BIT 30 IND. = 1
NO
YES
KEOOF
B3
AC INTO KETMP XR4 INTO A(KEOOG)
"ORA" INTO -0
DISABLE QUEUE MNDIFM KETMP ENABLE
KECCF
IS AC = 0
NO
B3
YES
B7
KECCH
KEOOG
RESTORE XR4 XR2 = 1
IS XR1 = 1
NO
YES
KECCE
XR4 = XR4 - 1
C7 418
KEOOH
B7
RETURN ADDRESS INTO XR4
EXIT RETURN 1, 4

## 91. KEYCF - MONITOR SUBROUTINE TO INDICATE CADFISS USE OF RADAR STATIONS

KEYCF RECEIVES CONTROL FROM MYKEYS TO IDENTIFY RADAR STATIONS BEING USED FOR CADFISS TESTS. (SEE FLOWCHART.)

INPUT

INPUT TO KEYCF CONSISTS OF TWO PCC ENTRY SWITCH WORDS IN LOCATIONS KEWD AND KEWD+1.

OUTPUT

A) UPDATE PCC SENSE LIGHTS 1 TO 19 TO SHOW RADAR STATIONS BEING USED FOR CADFISS TESTS.

B) UPDATE TMTIAC, A TABLE REFERENCED BY IOTTIN TO DETERMINE WHEN INCOMING DATA IS FOR CADFISS USE.

METHOD

PCC ENTRY SWITCHES 1 TO 19 CORRESPOND TO THE INTERNAL STATION NUMBERS OF THE RADAR SITES. PCC WORD 1 IS CONSIDERED THE DELETE WORD AND WORD 2, THE INSERT WORD. WHEN A BIT POSITION IN THE INSERT WORD CONTAINS A 1, THE CORRESPONDING PCC SENSE LIGHT (1 TO 19) IS TURNED ON AND THE ASSIGNED LOCATION IN TMTIAC IS SET TO NONZERO. A 1-BIT IN THE DELETE WORD HAS THE OPPOSITE EFFECT, I.E., THE CORRESPONDING PCC SENSE LIGHT (1 TO 19) IS TURNED OFF AND THE ASSIGNED LOCATION IN TMTIAC IS RESET.

TMTIAC IS ORDERED INVERSELY BY INTERNAL STATION NUMBER AND IS EXAMINED BY IOTTIN. IF THE LOCATION IN TMTIAC CORRESPONDING TO THE STATION CURRENTLY REPORTING IS NONZERO, IOTTIN WILL DISREGARD THAT INPUT. INPUT FROM

THE STATION WILL BE IGNORED UNTIL SUCH TIME AS THE CORRESPONDING ENTRY IN TMTIAC IS RESET.

PLACING A STATION SWITCH IN THE DELETE POSITION WILL OVERRIDE THE 10-MINUTE DELAY BEFORE THE RETRANSMISSION CHECK IS INITIATED BY IOTTIN.

USAGE

A) CALLING SEQUENCE -

```
TSX     KEYCF,4
        RETURN
```

NOTE - ONLY INDEX REGISTER 4 IS SAVED.

B) STORAGE REQUIRED - 42 LOCATIONS INCLUDING MACROS, EXCLUDING TMTIAC.

C) MACROS - QENBA, QENBZ, QUEUE

D) PARAMETERS - MNSENS, MNSTNO

E) CONSTANTS - KM0000, KM7777

F) TABLES - TMLFCD, TMLSCD

NOTE - THE LENGTH OF TMTIAC IS MNSTNO, WHICH IS CURRENTLY EQUATED TO 19.

G) PCC ENTRY SWITCH CODE - 000010 IN BIT POSITIONS 31 TO 36 OF A WORD A.

H) TIMING (7094) -

0.699 MILLISECOND (MINIMUM)
0.879 MILLISECOND (MAXIMUM)

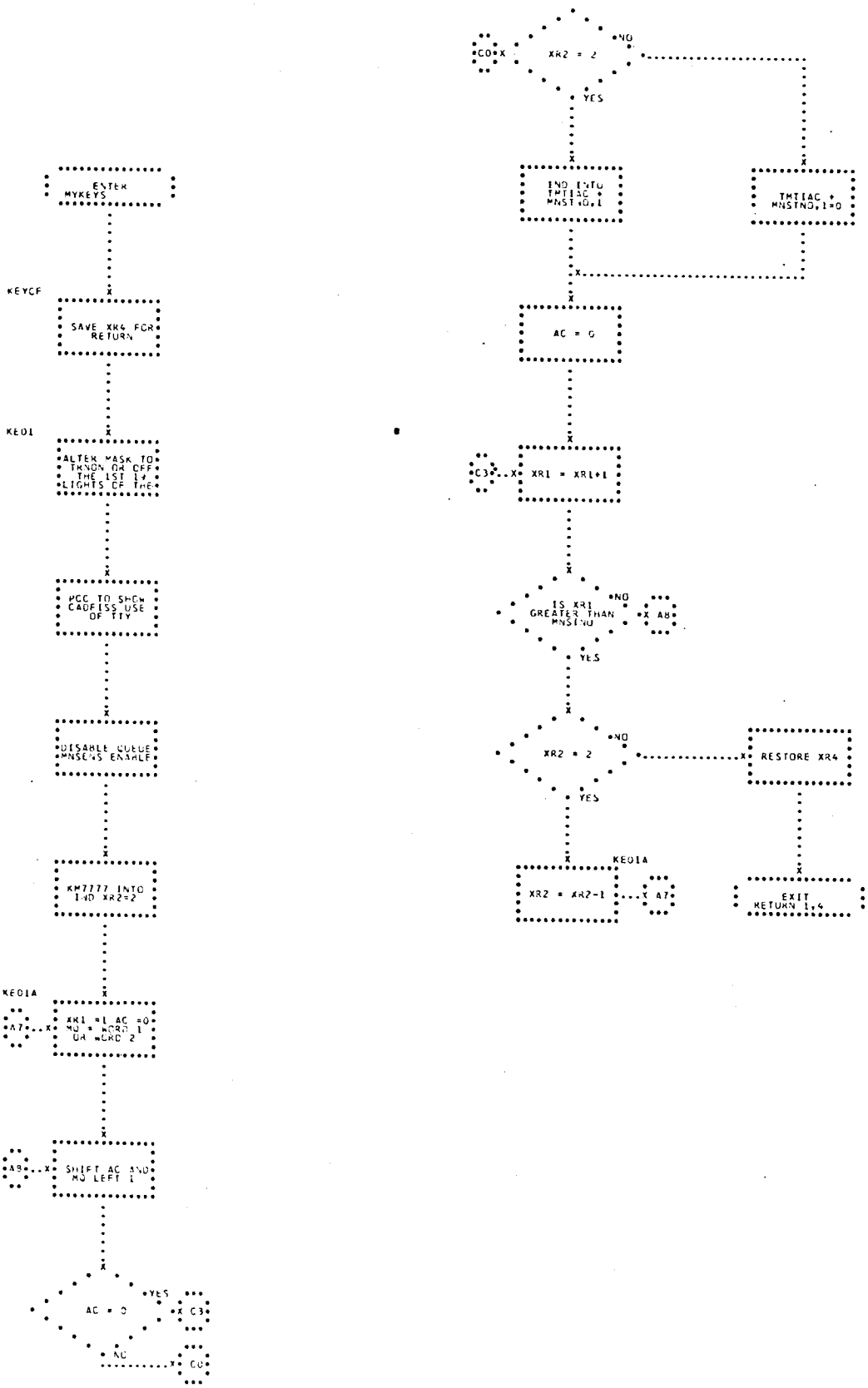
ESTER MYKEYS
KEYCF
SAVE XR4 FOR RETURN
KEOI
ALTER MASK TO TKNON OR OFF THE 1ST 14 LIGHTS OF THE
PCC TO SHOW CADFISS USE OF TTY
DISABLE QUEUE MNSENS ENABLE
KM7777 INTO IND XR2=2
KEOIA
XR1 =1 AC =0 MQ = WORD 1 OR WORD 2
A7
SHIFT AC AND MQ LEFT 1
A8
AC = 0
YES
C3
NO
C0
XR2 = 2
NO
C0
YES
IND IXTU TMTIAC + MNSTND,1
TMTIAC + MNSTND,1=0
AC = 0
C3
XR1 = XR1+1
IS XR1 GREATER THAN MNSTND
NO
A8
YES
XR2 = 2
NO
RESTORE XR4
YES
KEOIA
XR2 = XR2-1
A7
EXIT RETURN 1,4

## 92. KEYDE - MONITOR SUBROUTINE TO BYPASS DIFFERENTIAL CORRECTION FOR A STATION

KEYDE RECEIVES CONTROL FROM MYKEYS TO BYPASS DIFFERENTIAL CORRECTION FOR DESIGNATED RADAR STATIONS. (SEE FLOWCHART.)

INPUT

INPUT TO KEYDE CONSISTS OF PCC ENTRY SWITCH WORDS LOCATED IN KEWD AND KEWD+1.

OUTPUT

OUTPUT FROM KEYDE CONSISTS OF TMBPDC, A TABLE REFERENCED BY MPDIFC WHICH IDENTIFIES RADAR STATIONS TO BE ASSIGNED BUFFERS IN THE 32K BUFFER MODULE, BUT FOR WHICH NO ENTRY IS TO BE MADE IN TMSTMS AND NO DIFFERENTIAL CORRECTION IS TO BE PERFORMED.

METHOD

PCC ENTRY SWITCHES 1 TO 29 CORRESPOND TO THE INTERNAL STATION NUMBERS OF THE RADAR SITES. THE PCC ENTRY WORD 1 IS CONSIDERED THE DELETE WORD AND WORD 2, THE INSERT WORD. WHEN A SWITCH IS SET TO THE 1-BIT POSITION IN THE INSERT WORD, THE ASSIGNED LOCATION IN TMBPDC IS SET TO NONZERO. A SWITCH SET TO THE 1-BIT POSITION IN THE DELETE WORD HAS THE OPPOSITE EFFECT. THE ASSIGNED LOCATION IN TMBPDC IS RESET.

TMBPDC IS ORDERED INVERSELY BY INTERNAL STATION NUMBER AND IS EXAMINED BY MPDIFC. IF THE LOCATION IN TMBPDC CORRESPONDING TO THE STATION CURRENTLY BEING PROCESSED IS NONZERO, MPDIFC WILL ASSIGN THE DATA FROM THIS

STATION TO A BUFFER IN THE 32K BUFFER MODULE, BUT NO ENTRY WILL BE MADE IN TMSTMS AND NO DIFFERENTIAL CORRECTION FOR THAT STATION WILL BE PERFORMED. INPUT FROM THE STATION WILL CONTINUE TO BE PROCESSED IN THIS MANNER UNTIL SUCH TIME AS THE CORRESPONDING ENTRY IN TMBPDC IS RESET TO ZERO.

USAGE

A) CALLING SEQUENCE -

```
TSX     KEYDE,4
        RETURN
```

NOTE - ONLY INDEX REGISTER 4 IS SAVED.

B) STORAGE REQUIRED - 16 LOCATIONS EXCLUDING TMBPDC

C) PARAMETERS - MNSTNO

D) TABLES - TMBPDC

NOTE - THE LENGTH OF TMBPDC IS MNSTNO, WHICH IS CURRENTLY EQUATED TO 19.

E) PCC ENTRY SWITCH CODE -
000100 IN BIT POSITIONS 31 TO 36 OF WORD 2.

F) TIMING (7094) - 0.479 MILLISECOND (MINIMUM)
0.650 MILLISECOND (MAXIMUM)

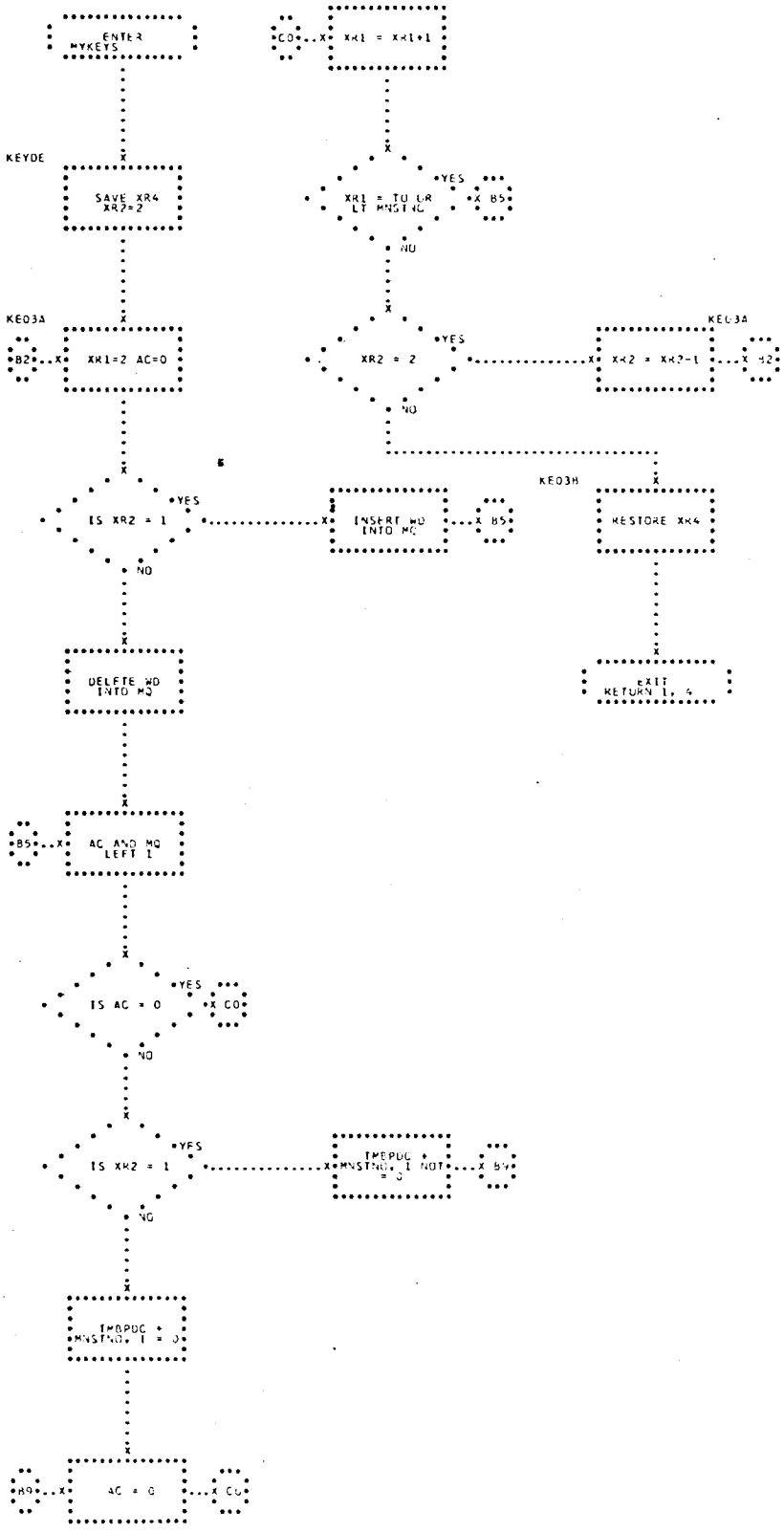
ENTER MYKEYS
KEYDE
SAVE XR4 XR2=2
KE03A
B2
XR1=2 AC=0
IS XR2 = 1
YES
NO
DELETE WD INTO MQ
B5
AC AND MQ LEFT 1
IS AC = 0
YES
CO
NO
IS XR2 = 1
YES
NO
IMBPUC + MNSTNO, I = 0
B9
AC = 0
CO
CO
XR1 = XR1+1
XR1 = TO OR LT MNSTNO
YES
B5
NO
XR2 = 2
YES
NO
KE03A
XR2 = XR2-1
B2
KE03B
INSERT WD INTO MQ
B5
RESTORE XR4
EXIT RETURN 1, 4

## 93. KEYRT - MONITOR SUBROUTINE TO ACCEPT GMT OF RETROFIRE

KEYRT RECEIVES CONTROL FROM MYKEYS TO ENTER THE GMT OF RETROFIRE - KEYRT ASSUMES THE ATTITUDE AND NUMBER OF RETROROCKETS FIRED TO BE NOMINAL. (SEE FLOWCHART.)

INPUT

INPUT TO KEYRT CONSISTS OF A PCC ENTRY SWITCH WORD IN KEWD+1.

OUTPUT

A) A QUEUE TO PRINT AN ON-LINE MESSAGE SHOWING THE DECIMAL EQUIVALENT IN HOURS, MINUTES, AND SECONDS OF THE OCTAL TIME ENTERED IN THE PCC SWITCHES.

B) A QUEUE TO LIGHT THE FOUR RETROROCKETS INDICATOR LIGHTS ON THE PCC CONSOLE.

C) THE B INDICATOR ON FOR EITHER MYREST OR MABORT.

METHOD

PCC ENTRY WORD 2 (KEWD+1) IS THE ONLY WORD EXAMINED FOR THE GMT OF RETROFIRE -

| SWITCHES | UNIT OF TIME |
|---|---|
| 12 TO 18 | HOURS |
| 19 TO 24 | MINUTES |
| 25 TO 30 | SECONDS |

KEYRT ASSUMES THAT THE NUMBERS ENTERED IN EACH FIELD ARE RIGHT-JUSTIFIED OCTAL AND DOES NOT ERROR CHECK FOR MINUTES OR SECONDS IN EXCESS OF 60 DECIMAL. THE MAXIMUM NUMBER OF HOURS WHICH CAN BE ENTERED IS 127 DECIMAL.

AFTER TMRETO HAS BEEN RESET TO ZERO, THE TIME ENTERED IN THE SWITCHES IS CONVERTED TO FIXED-POINT SECONDS, B35, AND STORED IN BOTH TMRETO AND A MESSAGE QUEUE WORD. THE PCC MASKS, CONTROLLING THE FOUR RETRO-ROCKET INDICATOR LIGHTS ON THE PCC CONSOLE, ARE INITIALIZED TO TURN ON THE LIGHTS. MYMESS IS THEN QUEUED TO PRINT ON-LINE THE DECIMAL EQUIVALENT IN HOURS, MINUTES AND SECONDS OF THE OCTAL TIME ENTERED IN THE SWITCHES, AND MYSENS IS QUEUED TO TURN ON THE THREE PCC RETRO-ROCKET INDICATOR LIGHTS.

A CHECK IS MADE TO DETERMINE IF THE SYSTEM IS IN A HIGH ABORT. IF MCTABT IS NONZERO, INDICATING A HIGH ABORT, SUBCHANNELS 1 AND 2 OF THE DCC ARE DEACTIVATED AND THE B INDICATOR TURNED ON FOR MABORT. OTHERWISE, THE B INDICATOR FOR MYREST IS TURNED ON. CONTROL THEN RETURNS TO MYKEYS.

USAGE

A) CALLING SEQUENCE -

```
TSX     KEYRT,4
        RETURN
```

NOTE - ONLY IR4 IS SAVED.

B) STORAGE REQUIRED - 54 LOCATIONS INCLUDING MACROS.

C) MACROS - QENBA, QENBZ, QPSLF, QUEUE AND TRNON

D) PARAMETERS - MNMESS, MNREST, MNABRT, AND MNSENS

E) CONSTANTS - K00120

F) COMMUNICATION CELLS -

MCACTV, MCRRLC, AND MCTABT

G) TABLES - TMRETO

H) TIMING (7094) - 0.322 MILLISECOND (MINIMUM)

0.339 MILLISECOND (MAXIMUM)

NOTE - TIMING INCLUDES TIME REQUIRED OF ALL MACROS.

I) PCC ENTRY SWITCH CODE -

001000 IN BIT POSITIONS 31 TO 36 OF WORD 2.

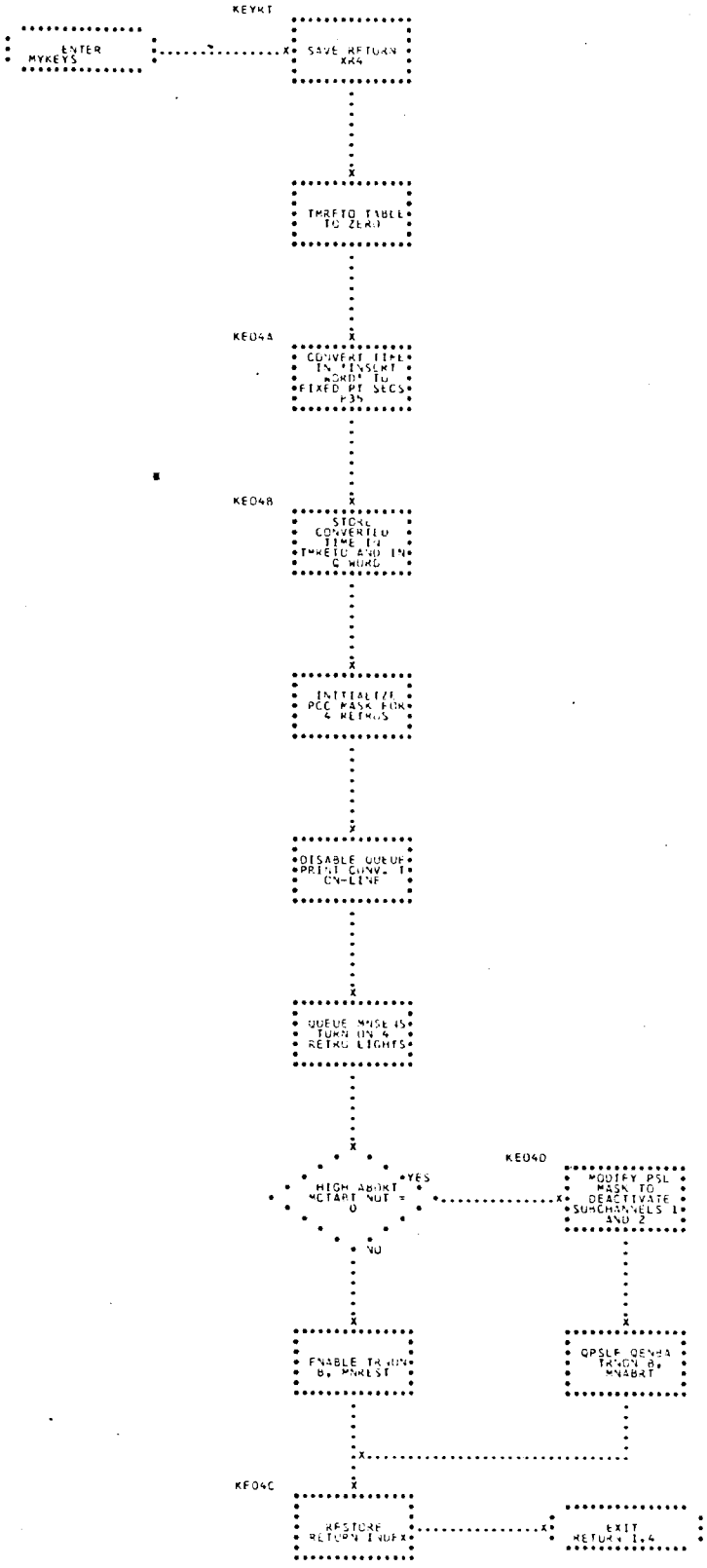
KEYRT
ENTER MYKEYS
SAVE RETURN XR4
TMRETO TABLE TO ZERO
KE04A
CONVERT TIME IN 'INSERT WORD' TO FIXED PT SECS P35
KE04B
STORE CONVERTED TIME IN TMRETO AND IN Q WORD
INITIALIZE PCC MASK FOR 4 RETROS
DISABLE QUEUE PRINT CONV. T ON-LINE
QUEUE MNSENS TURN ON 4 RETRO LIGHTS
HIGH ABORT MCTABT NOT = 0
YES
NO
KE04D
MODIFY PSL MASK TO DEACTIVATE SUBCHANNELS 1 AND 2
ENABLE TRNON B, MNREST
QPSLF QENBA TRNON B, MNABRT
KE04C
RESTORE RETURN INDEX
EXIT RETURN 1,4

## 94. OOORRE - PLOTBOARD AND WALL MAP DISPLAYS DURING ORBIT AND REENTRY

OOORRE OPERATES ON DATA FOUND IN TMORRE DURING ORBIT AND REENTRY, TO PRODUCE A CONTINUOUS STRING OF 440 BITS IN TMOLAB. OOORRE TAKES TWO PASSES TO DISPLAY ALL THE QUANTITIES DESIRED. THE SET OF QUANTITIES DISPLAYED IN ONE PASS ARE DESIGNATED THE ODD SUBFRAME, AND THE SET OF QUANTITIES DISPLAYED IN THE NEXT PASS THE EVEN SUBFRAME. (SEE FLOWCHART.)

INPUT

A) TABLE -

TMORRE CONTAINING DATA TO BE DISPLAYED

B) COMMUNICATION CELL -

MCHFSC NUMBER OF HALF SECOND TRAPS SINCE THE LAST MINUTE TRAP

C) CONDITIONS ON ENTRY -

AC $\geq$ 0 ORBIT

AC $<$ 0 REENTRY

OUTPUT

A) TABLE -

TMOLAB CONTAINS BIT STRING TO BE DISPLAYED

B) ACTIVE DISPLAYS -

PLOTBOARDS 1-4, WALL MAP, FLIGHT DYNAMICS OFFICER DISPLAYS, RETOR-FIRE CONSOLE, WALL DIGITAL, AND PROPULSION PANEL.

METHOD

THE OUTPUT FROM OOORRE IS A 440-BIT STRING CONTAINED IN THE 14-LOCATION TABLE TMOLAB. THIS TABLE IS RECOMPUTED EACH PASS, AND ITS CONTENTS ARE USED TO PROVIDE THE DISPLAYS DURING THAT SUBFRAME.

DURING REENTRY A SUBFRAME IS SENT EVERY THREE SECONDS. DURING ORBIT A SUBFRAME IS SENT EVERY SIX SECONDS.

THE BITS IN TMOLAB ARE CODED AS FOLLOWS - FOR THE WALL MAP, PLOTBOARDS, STRIP CHARTS, AND FDO, EACH VALUE IS SCALED TO A 10-BIT QUANTITY AND ZERO OFFSET ACCORDING TO THE PARTICULAR RANGE OF EACH DISPLAY. IF THE PARTICULAR RANGE IS EXCEEDED, (1777) OCTAL IS PACKED INTO TMOLAB IN PLACE OF THE EXCEEDING VALUE. IF THE MINIMUM RANGE IS EXCEEDED, THE VALUE IS REPLACED BY ZERO.

FOR THE RETRO, WALL DIGITAL, PROPULSION PANEL, AND SOME OF THE FDO QUANTITIES - EACH VALUE IS CONVERTED TO A CONDENSED BCD CODE. NO CHECK IS MADE FOR VALUES OUTSIDE THE RANGE OF THE DISPLAYS. SUCH VALUES WILL BE INCORRECTLY CODED AND PACKED.

OOORRE CAUSES A TIME MARK TO BE SENT THE FIRST PASS THROUGH. SUBSEQUENTLY, A TIME MARK IS SENT EVERY 10 MINUTES DURING ORBIT AND EVERY 10 SECONDS DURING REENTRY.

USAGE

A) ENTRY IS MADE BY THE MONITOR THROUGH MPORRE.
   EXIT IS MADE BY TRANSFERRING TO MFORRE.

B) COMMON CELLS -
   MCHFSC

C) TABLE -

TMCRRE

TMOLAB

D) CONSTANTS -

| | | |
|---|---|---|
| K86400 | DEC | 86400 |
| K01200 | DEC | 1200 |
| K05000 | DEC | 5000 |
| KCH233 | OCT | 233000000000 |
| K0018K | DEC | +.18000000E5 |
| KMNMSK | OCT | 777777777 |
| K00000 | DEC | 0 |
| K00020 | DEC | 20 |
| K00001 | DEC | 1 |
| K00060 | DEC | 60 |
| K00256 | DEC | 256 |
| K00.PI | DEC | +.31415927E1 |
| KKK2PI | DEC | +.62831853E1 |
| K.1RAD | DEC | +.57295780E2 |
| K00010 | DEC | 10 |
| K0C002 | DEC | 2 |
| KTM007 | OCT | -700000 |
| K00MAX | OCT | -377777777777 |
| K0.MPR | DEC | +.34377468E4 |
| K15360 | DEC | 15360 |
| K0C027 | DEC | 27 |
| KTGMSK | OCT | 700000 |
| KLLCW5 | OCT | 7400 |
| KLLCW6 | OCT | 4400 |
| KI3MK1 | OCT | 77777 |
| K00377 | OCT | 377 |
| K01023 | DEC | 1023 |
| KLLCW9 | OCT | 26400 |

E) SUBROUTINES -

| | |
|---|---|
| OOPAC | PACKS BITS CONSECUTIVELY INTO TMOLAB |
| OOCTI | CHANGES TIME IN FIXED POINT SECONDS TO BCD HRS., MINS., AND SECS. |
| OOBCX | CONVERTS FIXED POINT NUMBERS TO BCD. |
| OOBCF | CONVERTS FLOATING POINT NUMBERS TO BCD |
| OOAGL | CONVERTS RADIANS TO HRS., MINS., AND SECS. IN BCD |
| OOTIM | CONVERTS MINUTES IN ADDRESS OF AC SECONDS IN DECREMENT OF AC INTO HRS., MINS., AND SECS. IN BCD |
| OOMDQ | CONDENSES BCD OUTPUT |
| OOOSC | CHECKS, SCALES, AND PACKS PLOTBOARD, WALL MAP DATA |

F) STORAGE REQUIRED -

OOORRE - 452 CELLS

INTERNAL SUBROUTINES - 437 CELLS

G) TIMING -

| | SUBFRAME | |
|---|---|---|
| PHASE | ODD | EVEN |
| ORBIT | 17.8 MILLISECS | 18.6 MILLISECS |
| REENTRY | 17.8 MILLISECS | 18.6 MILLISECS |

# TMOLAB OUTPUT FORMAT
## (SHEET 1 OF 2)

ODD SUBFRAME

| | | | | | | | | | | |
|---|---|---|---|---|---|---|---|---|---|---|
| WORD 1 | | $\phi$ | | | | | | | | |
| | S 3 | 4 | | | | | | | | 35 |
| WORD 2 | | $\phi_{\text{min delay IP}}/\phi_{\text{IP}}$ | $\lambda_{PP}$ | $\phi_{PP}$ | $\phi$ | | | | | |
| | S 3 | 4 | 5 6 | 15 16 | 25 26 | | | | | 35 |
| WORD 3 | | GTRS/TALC | ODD/EVEN SUBFRAME | DATA SOURCE | $\phi_{\text{min delay IP}}/\phi_{\text{IP}}$ | $\lambda_{\text{min delay IP}}/\lambda_{\text{IP}}$ | | | | |
| | S 3 | 4 14 | 15 16 | 17 18 | 27 28 | 35 | | | | |
| WORD 4 | | $\phi_{\text{IP}_{SCA}}/\phi_{\text{IP}}$ | BERMUDA GO | $\text{GMTLC}_{SCA}/\text{GMTLC}$ | GTRS/TLRC | | | | | |
| | S 3 | 4 7 | 8 | 9 21 | 22 | 35 | | | | |
| WORD 5 | | NO GO | GO | BERMUDA NO GO | $\lambda_{\text{IP}_{SCA}}/\lambda_{\text{IP}}$ | $\phi_{\text{IP}_{SCA}}/\phi_{\text{IP}}$ | | | | |
| | S 3 | 4 | 5 | 6 | 7 23 | 24 | | | | |
| WORD 6 | | $h_{ap}/\gamma$ | PERIGEE ALT./ZERO | | | | | | | |
| | S 3 | 4 19 | 20 | 35 | | | | | | |
| WORD 7 | | REVOLUTION NO. | REV. CAPABILITY | i | BERMUDA SOLUTION READY | $h_{ap}/\gamma$ | | | | |
| | S 3 | 4 9 | 10 21 | 22 33 | 34 | 35 | | | | |
| WORD 8 | | GMTRS/TSRF | IP NO GO | IP GO | B/GE NO GO | B/GE GO | PLUS OF $V-V_{GO}$ | MINUS OF $V-V_{GO}$ | REV NO. | |
| | S 3 | 4 23 | 24 | 25 | 26 | 27 | 28 | 29 | 30 | 35 |
| WORD 9 | | $\lambda_{\text{min delay IP}}/\lambda_{\text{IP}}$ | $\phi_{\text{min delay IP}}/\phi_{\text{IP}}$ | $\lambda_{PP}$ | $\phi_{PP}$ | GMTRS UNITS BIT OF TENS OF DAYS | | | | |
| | S 3 | 4 | 5 14 | 15 24 | 25 34 | 35 | | | | |
| WORD 10 | | $\phi$ | V | h | GMTRS 21 BIT OF TEN OF DAYS | $\lambda_{\text{min delay IP}}/\lambda_{\text{IP}}$ | | | | |
| | S 3 | 4 5 | 6 15 | 16 25 | 26 | 27 | 35 | | | |
| WORD 11 | | h | $t_E$ | SPARE | $a - \bar{R}$ | $\phi$ | | | | |
| | S 3 | 4 6 | 7 16 | 17 | 18 27 | 28 | 35 | | | |

# TMOLAB OUTPUT FORMAT
## (SHEET 2 OF 2)

| | | | | | |
|---|---|---|---|---|---|
| WORD 12 | | $h_{ap}$ | $t_E$ | $h_{ap}/\gamma$ | h |
| | S 3 | 4 8 | 9 18 | 19 28 | 29 35 |

| | | | | | | |
|---|---|---|---|---|---|---|
| WORD 13 | | V | TIME MARK | SPARE | $t_E$ | $\lambda_{ap}$ |
| | S 3 | 4 18 | 19 | 20 | 21 30 | 31 35 |

| | | | | | |
|---|---|---|---|---|---|
| | PROPULSION DISPLAY | PANEL CONTROL | GMTRS DAYS | h | V |
| S 11 | 12 | | 13 16 | 17 32 | 33 35 |

EVEN SUBFRAME
(ONLY WORDS DIFFERING IN FORMAT SHOWN)

| | | | | | | |
|---|---|---|---|---|---|---|
| WORD 3 | | $GMTRC_{SCA, MPA, MCA}/\phi$ | ODD EVEN SUBFRAME | DATA SOURCE | $\lambda_{min\ delayIP}/\lambda_{IP}$ | $\phi_{min\ delayIP}/\phi_{IP}$ |
| | S 3 | 4 14 | 15 16 | 17 | 18 27 | 28 35 |

| | | | | |
|---|---|---|---|---|
| WORD 4 | | $ESTRC_{SCA, MPA, MCA}/\phi$ | $GMTRC_{SPA}/GMTRF$ | $GMTRC_{SCA, MPA, MCA}/\phi$ |
| | S 3 | 4 6 | 7 26 | 27 35 |

| | | | |
|---|---|---|---|
| WORD 5 | | $ESTRC_{SPA}/GETRC$ | $ESTRC_{SCA, MPA, MCA}/\phi$ |
| | S 3 | 4 12 | 13 35 |

| | | | |
|---|---|---|---|
| WORD 6 | | $\nabla t_{PI}/ZERO$ | $ESTRC_{SPA}/GETRC$ |
| | S 3 | 4 18 | 19 35 |

| | | | | |
|---|---|---|---|---|
| WORD 7 | | $\Delta V/ZERO$ | GMTPI/GMTRB(GMTIR) | $\Delta t_{PI}/ZERO$ |
| | S 3 | 4 | 5 24 | 25 35 |

| | | | | | | |
|---|---|---|---|---|---|---|
| WORD 8 | | SPARES | PROPULSION DISPLAY | PANEL CONTROL | YAW ($\alpha$)/ZERO | $\Delta V/ZERO$ |
| | S 3 | 4 9 | 10 | | 11 24 | 25 35 |

| | | | | | | | | |
|---|---|---|---|---|---|---|---|---|
| WORD 13 | | PROP. PANEL DISPLAY CONTROL | PITCH ($\beta$)/BANK * | TIME MARK | SPARE | $t_E$ | $\lambda_{ap}$ |
| | S 3 | 4 | 5 18 | 19 | 20 | 21 30 | 31 35 |

| | | | |
|---|---|---|---|
| WORD 14 | | SPARES | $RECOVERY\ AREA_{SCA, MPA, MCA}$ |
| | S 11 | 12 20 | 21 35 |

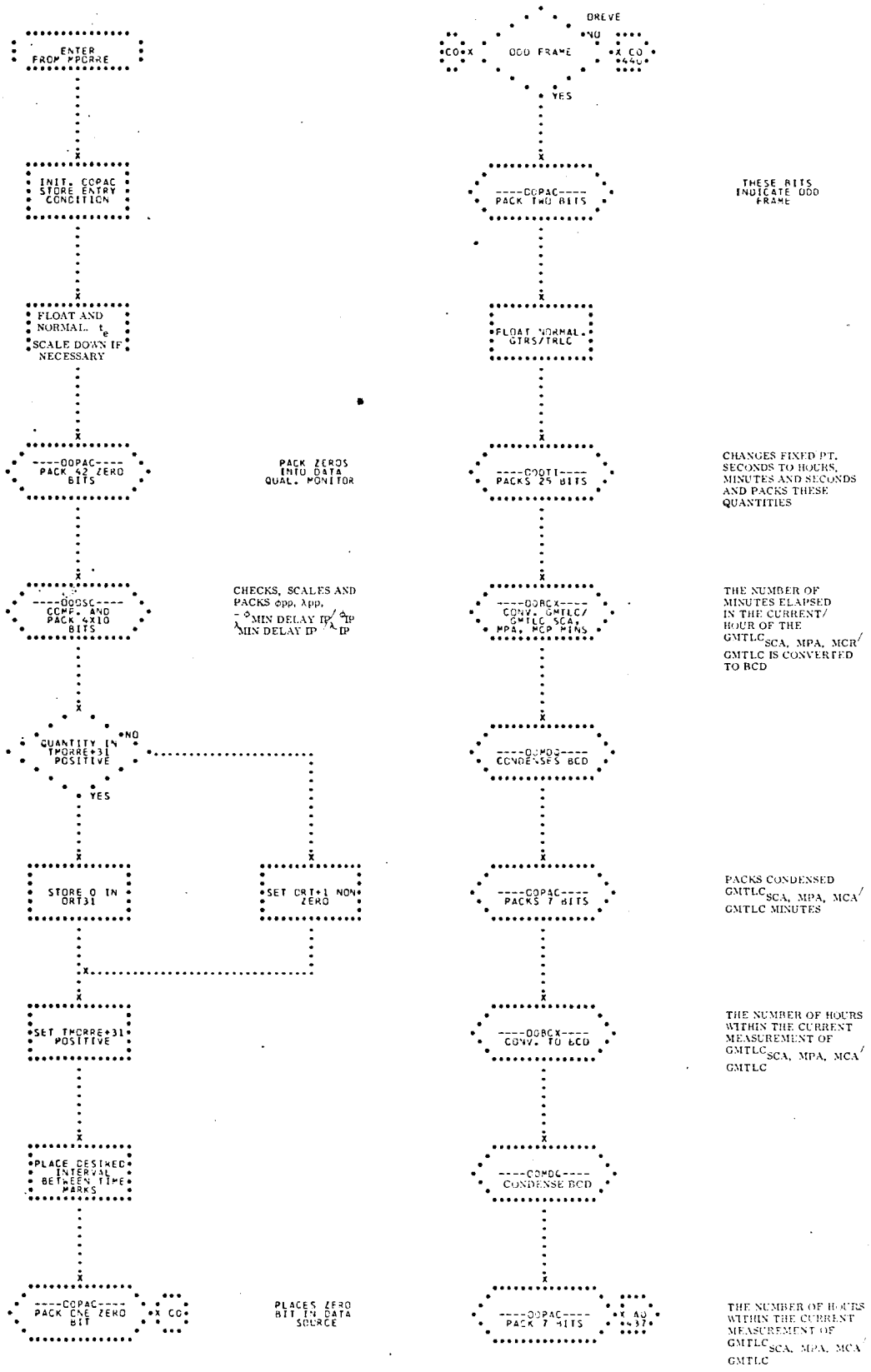
ENTER FROM MPORRE
INIT. COPAC STORE ENTRY CONDITION
FLOAT AND NORMAL. $t_e$ SCALE DOWN IF NECESSARY
----OOPAC---- PACK 42 ZERO BITS
PACK ZEROS INTO DATA QUAL. MONITOR
----OOOSC---- COMP. AND PACK 4X10 BITS
CHECKS, SCALES AND PACKS $\phi$pp, $\lambda$pp, $-\phi$MIN DELAY IP/$\phi$IP $\lambda$MIN DELAY IP/$\lambda$IP
QUANTITY IN TMORRE+31 POSITIVE
NO
YES
STORE 0 IN ORT31
SET ORT+1 NON ZERO
SET TMORRE+31 POSITIVE
PLACE DESIRED INTERVAL BETWEEN TIME MARKS
----COPAC---- PACK ONE ZERO BIT
X CO
PLACES ZERO BIT IN DATA SOURCE
DREVE
NO
CO X
ODD FRAME
X CO 440
YES
----COPAC---- PACK TWO BITS
THESE BITS INDICATE ODD FRAME
FLOAT NORMAL. GTRS/TRLC
----OOOTI---- PACKS 25 BITS
CHANGES FIXED PT. SECONDS TO HOURS, MINUTES AND SECONDS AND PACKS THESE QUANTITIES
----OOBCX---- CONV. GMTLC/ GMTLC SCA, MPA, MCP MINS
THE NUMBER OF MINUTES ELAPSED IN THE CURRENT/ HOUR OF THE GMTLC SCA, MPA, MCR/ GMTLC IS CONVERTED TO BCD
----OOMOJ---- CONDENSES BCD
----COPAC---- PACKS 7 BITS
PACKS CONDENSED GMTLC SCA, MPA, MCA/ GMTLC MINUTES
----OOBCX---- CONV. TO BCD
THE NUMBER OF HOURS WITHIN THE CURRENT MEASUREMENT OF GMTLC SCA, MPA, MCA/ GMTLC
----COMOG---- CONDENSE BCD
----OOPAC---- PACK 7 BITS
X AU 437
THE NUMBER OF HOURS WITHIN THE CURRENT MEASUREMENT OF GMTLC SCA, MPA, MCA/ GMTLC

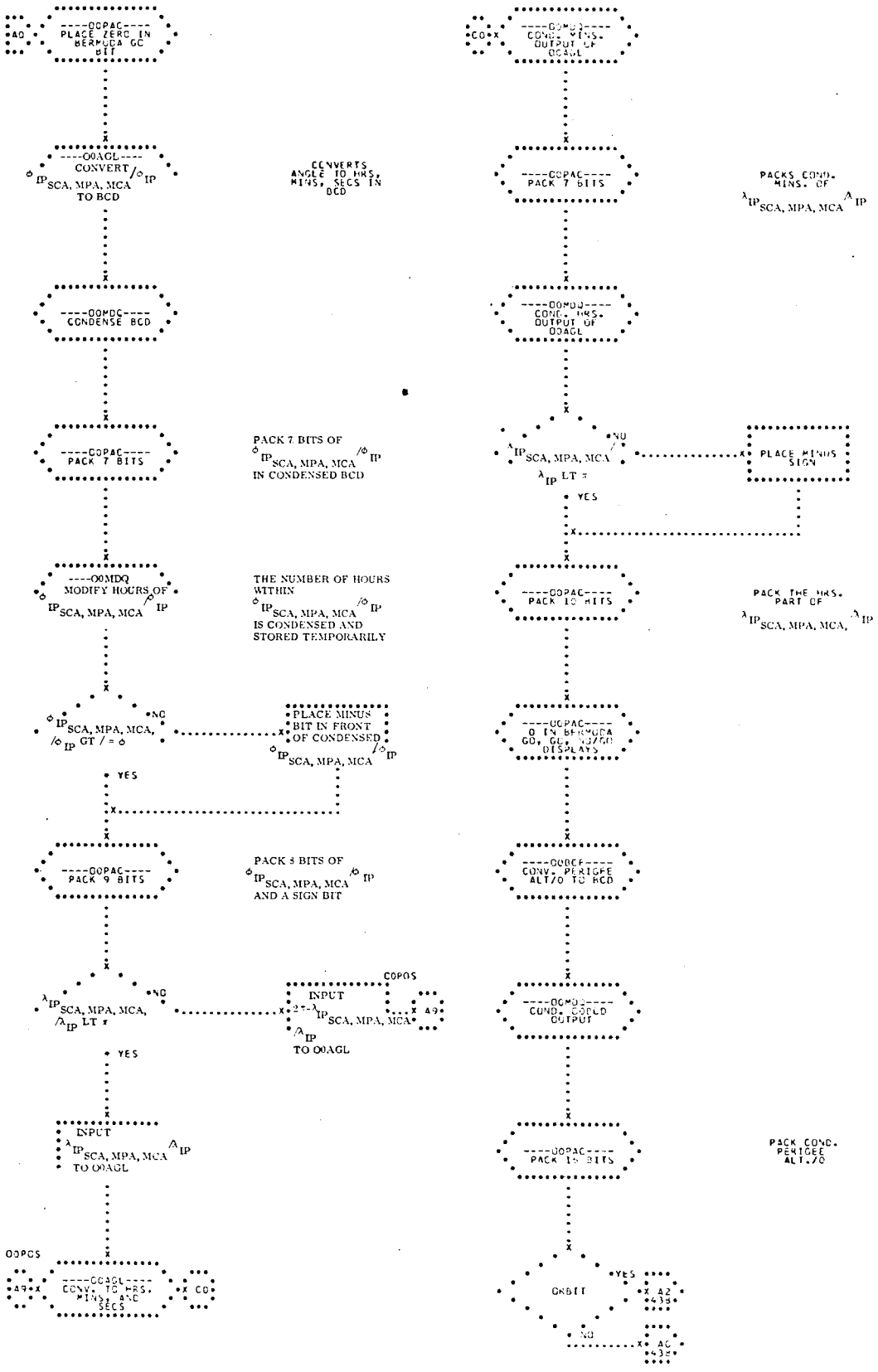
----00PAC----
PLACE ZERO IN BERMUDA GC BIT
A0
----00AGL----
CONVERT $\phi_{IP_{SCA, MPA, MCA}}$ $/\phi_{IP}$ TO BCD
CONVERTS ANGLE TO HRS, MINS, SECS IN BCD
----00MDC----
CONDENSE BCD
----00PAC----
PACK 7 BITS
PACK 7 BITS OF $\phi_{IP_{SCA, MPA, MCA}}$ $/\phi_{IP}$ IN CONDENSED BCD
----00MDQ
MODIFY HOURS OF $\phi_{IP_{SCA, MPA, MCA}}$ $/\phi_{IP}$
THE NUMBER OF HOURS WITHIN $\phi_{IP_{SCA, MPA, MCA}}$ $/\phi_{IP}$ IS CONDENSED AND STORED TEMPORARILY
$\phi_{IP_{SCA, MPA, MCA,}}$ $/\phi_{IP}$ GT / = $\phi$
NO
PLACE MINUS BIT IN FRONT OF CONDENSED $\phi_{IP_{SCA, MPA, MCA}}$ $/\phi_{IP}$
YES
----00PAC----
PACK 9 BITS
PACK 8 BITS OF $\phi_{IP_{SCA, MPA, MCA}}$ $/\phi_{IP}$ AND A SIGN BIT
$\lambda_{IP_{SCA, MPA, MCA,}}$ $/\lambda_{IP}$ LT $\pi$
NO
COPOS
INPUT $2\pi-\lambda_{IP_{SCA, MPA, MCA}}$ $/\lambda_{IP}$ TO 00AGL
A9
YES
INPUT $\lambda_{IP_{SCA, MPA, MCA}}$ $/\lambda_{IP}$ TO 00AGL
00POS
----00AGL----
CONV. TO HRS, MINS, AND SECS
A9
C0
----00MDQ----
COND. MINS. OUTPUT OF 00AGL
C0
----00PAC----
PACK 7 BITS
PACKS COND. MINS. OF $\lambda_{IP_{SCA, MPA, MCA}}$ $/\lambda_{IP}$
----00MDQ----
COND. HRS. OUTPUT OF 00AGL
$\lambda_{IP_{SCA, MPA, MCA}}$ $/\lambda_{IP}$ LT $\pi$
NO
PLACE MINUS SIGN
YES
----00PAC----
PACK 10 BITS
PACK THE HRS. PART OF $\lambda_{IP_{SCA, MPA, MCA,}}$ $/\lambda_{IP}$
----00PAC----
0 IN BERMUDA GO, GO, GO/GO DISPLAYS
----00BCE----
CONV. PERIGEE ALT/0 TO BCD
----00MDQ----
COND. CODED OUTPUT
----00PAC----
PACK 15 BITS
PACK COND. PERIGEE ALT./0
ORBIT
YES
A2
NO
A0

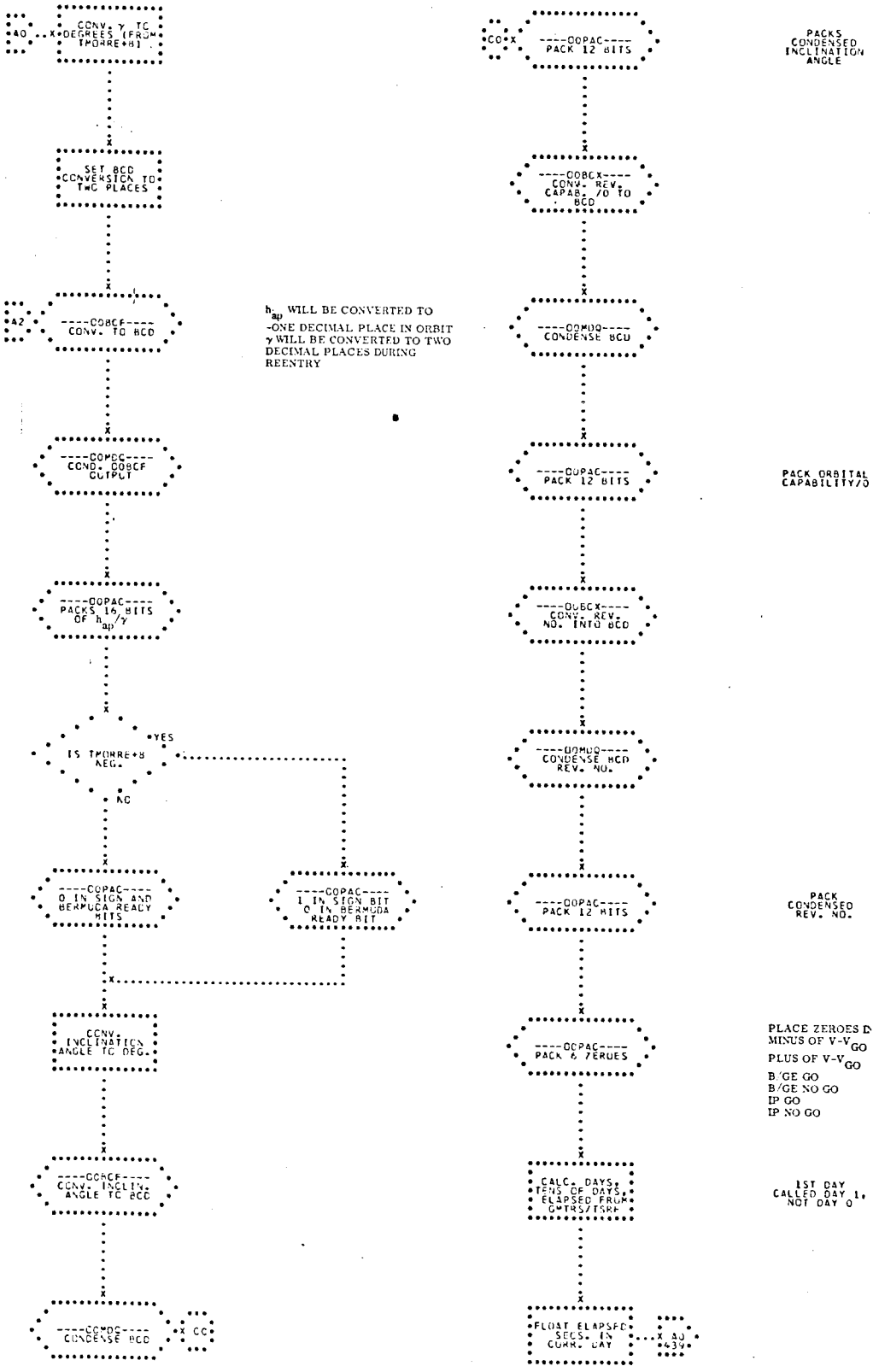
A0
CONV. γ TO DEGREES (FROM TMORRE+8)
SET BCD CONVERSION TO TWO PLACES
A2
----COBCF---- CONV. TO BCD
$h_{ap}$ WILL BE CONVERTED TO -ONE DECIMAL PLACE IN ORBIT
γ WILL BE CONVERTED TO TWO DECIMAL PLACES DURING REENTRY
----COMDG---- COND. COBCF OUTPUT
----COPAC---- PACKS 16 BITS OF $h_{ap}$/γ
IS TMORRE+8 NEG.
YES
NO
----COPAC---- 0 IN SIGN AND BERMUDA READY BITS
----COPAC---- 1 IN SIGN BIT 0 IN BERMUDA READY BIT
CONV. INCLINATION ANGLE TO DEG.
----COBCF---- CONV. INCLIN. ANGLE TO BCD
----COMDG---- CONDENSE BCD
C0
----COPAC---- PACK 12 BITS
PACKS CONDENSED INCLINATION ANGLE
----COBCX---- CONV. REV. CAPAB. /0 TO BCD
----COMDG---- CONDENSE BCD
----COPAC---- PACK 12 BITS
PACK ORBITAL CAPABILITY/0
----COBCX---- CONV. REV. NO. INTO BCD
----COMDG---- CONDENSE BCD REV. NO.
----COPAC---- PACK 12 BITS
PACK CONDENSED REV. NO.
----COPAC---- PACK 6 ZEROES
PLACE ZEROES IN
MINUS OF V-$V_{GO}$
PLUS OF V-$V_{GO}$
B/GE GO
B/GE NO GO
IP GO
IP NO GO
CALC. DAYS, TENS OF DAYS, ELAPSED FROM GMTRS/TSRF
1ST DAY CALLED DAY 1, NOT DAY 0
FLOAT ELAPSED SECS. IN CORR. DAY
A0 439

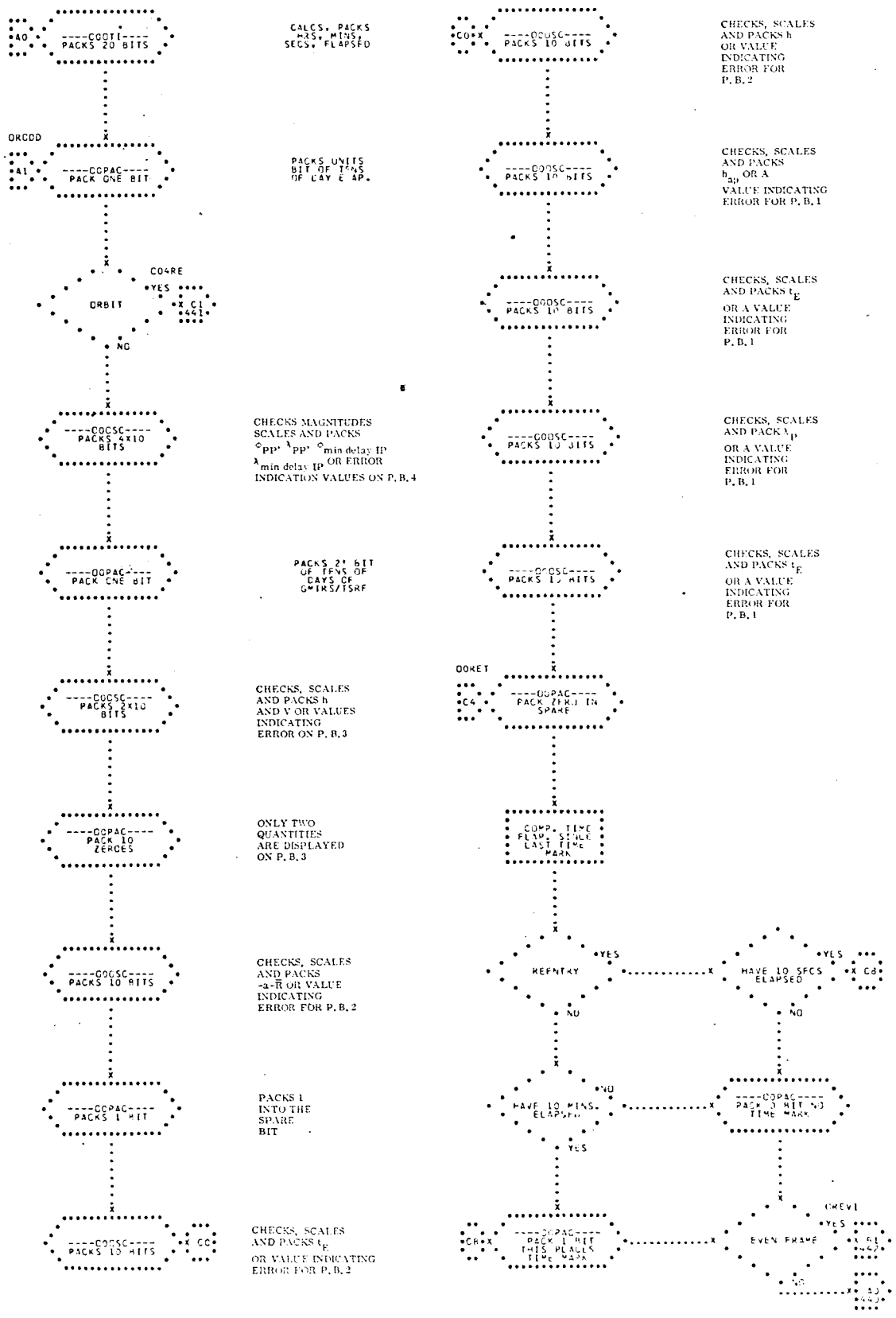
A0
----OOOTI----
PACKS 20 BITS
CALCS, PACKS HRS, MINS, SECS, ELAPSED
ORCDD
A1
----OOPAC----
PACK ONE BIT
PACKS UNITS BIT OF TENS OF DAY E AP.
C04RE
ORBIT
YES
X C1 441
NO
----OOCSC----
PACKS 4X10 BITS
CHECKS MAGNITUDES SCALES AND PACKS $\phi_{PP}$, $\lambda_{PP}$, $\phi_{min\ delay\ IP}$ $\lambda_{min\ delay\ IP}$ OR ERROR INDICATION VALUES ON P. B. 4
----OOPAC----
PACK ONE BIT
PACKS 2' BIT OF TENS OF DAYS OF GMTRS/TSRF
----OOCSC----
PACKS 2X10 BITS
CHECKS, SCALES AND PACKS h AND V OR VALUES INDICATING ERROR ON P. B. 3
----OOPAC----
PACK 10 ZEROES
ONLY TWO QUANTITIES ARE DISPLAYED ON P. B. 3
----OOCSC----
PACKS 10 BITS
CHECKS, SCALES AND PACKS -a-$\bar{R}$ OR VALUE INDICATING ERROR FOR P. B. 2
----OOPAC----
PACKS 1 BIT
PACKS 1 INTO THE SPARE BIT
----OOCSC----
PACKS 10 BITS
X C0
CHECKS, SCALES AND PACKS $t_E$ OR VALUE INDICATING ERROR FOR P. B. 2
C0 X
----OOCSC----
PACKS 10 BITS
CHECKS, SCALES AND PACKS h OR VALUE INDICATING ERROR FOR P. B. 2
----OOCSC----
PACKS 10 BITS
CHECKS, SCALES AND PACKS $h_{ap}$ OR A VALUE INDICATING ERROR FOR P. B. 1
----OOCSC----
PACKS 10 BITS
CHECKS, SCALES AND PACKS $t_E$ OR A VALUE INDICATING ERROR FOR P. B. 1
----OOCSC----
PACKS 10 BITS
CHECKS, SCALES AND PACK $\lambda_P$ OR A VALUE INDICATING ERROR FOR P. B. 1
----OOCSC----
PACKS 10 BITS
CHECKS, SCALES AND PACKS $t_E$ OR A VALUE INDICATING ERROR FOR P. B. 1
OORET
C4
----OOPAC----
PACK ZERO IN SPARE
COMP. TIME FLAP. SINCE LAST TIME MARK
REENTRY
YES
NO
HAVE 10 SECS ELAPSED
YES
X C8
NO
HAVE 10 MINS. ELAPSED
NO
YES
----OOPAC----
PACK 0 BIT NO TIME MARK
CREV1
C8 X
----OOPAC----
PACK 1 BIT THIS PLACES TIME MARK
EVEN FRAME
YES
X C1 442
NO
X A0 440

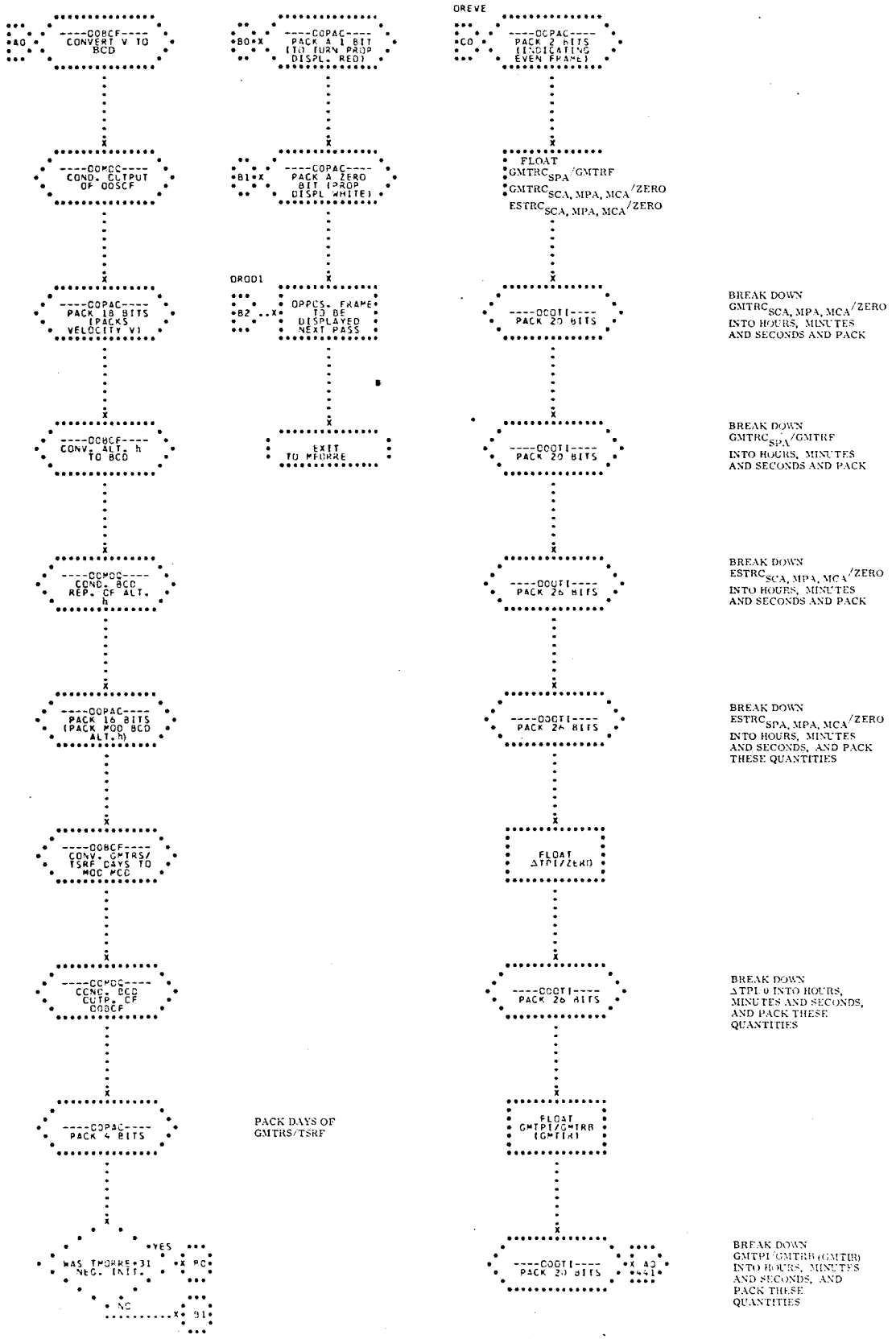
A0
----00BCF----
CONVERT V TO BCD
----00MCC----
COND. OUTPUT OF 00SCF
----COPAC----
PACK 18 BITS (PACKS VELOCITY V)
----00BCF----
CONV. ALT. h TO BCD
----CCMCC----
COND. BCD REP. OF ALT. h
----COPAC----
PACK 16 BITS (PACK MOD BCD ALT.h)
----00BCF----
CONV. GMTRS/ TSRF DAYS TO MOD BCD
----CCMCC----
COND. BCD OUTP. OF 00BCF
----COPAC----
PACK 4 BITS
YES
WAS TMORRE+31 NEG. INIT.
NO
B1
B0
----COPAC----
PACK A 1 BIT (TO TURN PROP DISPL. RED)
----COPAC----
PACK A ZERO BIT (PROP DISPL WHITE)
OR001
B2
OPPCS. FRAME TO BE DISPLAYED NEXT PASS
EXIT TO MFORRE
PACK DAYS OF GMTRS/TSRF
OREVE
C0
----OCPAC----
PACK 2 BITS (INDICATING EVEN FRAME)
FLOAT
GMTRC$_{SPA}$/GMTRF
GMTRC$_{SCA, MPA, MCA}$/ZERO
ESTRC$_{SCA, MPA, MCA}$/ZERO
----OOOTI----
PACK 20 BITS
BREAK DOWN GMTRC$_{SCA, MPA, MCA}$/ZERO INTO HOURS, MINUTES AND SECONDS AND PACK
----OOOTI----
PACK 20 BITS
BREAK DOWN GMTRC$_{SPA}$/GMTRF INTO HOURS, MINUTES AND SECONDS AND PACK
----OOOTI----
PACK 26 BITS
BREAK DOWN ESTRC$_{SCA, MPA, MCA}$/ZERO INTO HOURS, MINUTES AND SECONDS AND PACK
----OOOTI----
PACK 26 BITS
BREAK DOWN ESTRC$_{SPA, MPA, MCA}$/ZERO INTO HOURS, MINUTES AND SECONDS, AND PACK THESE QUANTITIES
FLOAT
ΔTPI/ZERO
----OOOTI----
PACK 26 BITS
BREAK DOWN ΔTPI/0 INTO HOURS, MINUTES AND SECONDS, AND PACK THESE QUANTITIES
FLOAT
GMTPI/GMTRB (GMTIR)
----OOOTI----
PACK 20 BITS
A0
441
BREAK DOWN GMTPI/GMTRB (GMTIR) INTO HOURS, MINUTES AND SECONDS, AND PACK THESE QUANTITIES

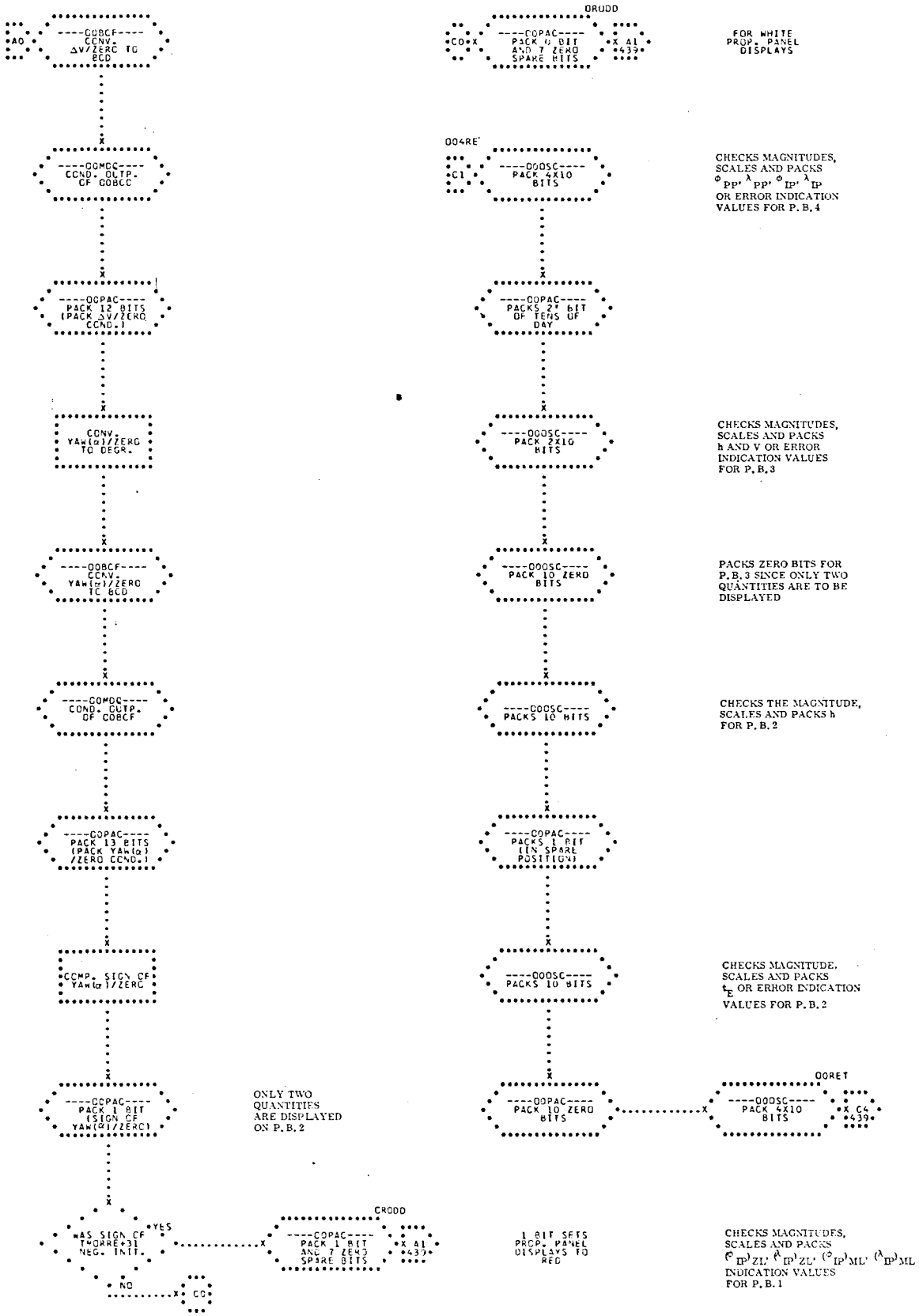
A0
----00BCF----
CONV.
ΔV/ZERO TO
BCD
----00MDC----
COND. OUTP.
OF 00BCC
----00PAC----
PACK 12 BITS
(PACK ΔV/ZERO
COND.)
CONV.
YAW(α)/ZERO
TO DEGR.
----00BCF----
CONV.
YAW(α)/ZERO
TO BCD
----00MDC----
COND. OUTP.
OF 00BCF
----00PAC----
PACK 13 BITS
(PACK YAW(α)
/ZERO COND.)
COMP. SIGN OF
YAW(α)/ZERO
----00PAC----
PACK 1 BIT
(SIGN OF
YAW(α)/ZERO)
WAS SIGN OF
TMORRE+31
NEG. INIT.
YES
NO
CO
CRODD
----00PAC----
PACK 1 BIT
AND 7 ZERO
SPARE BITS
X A1
439
ONLY TWO
QUANTITIES
ARE DISPLAYED
ON P.B.2
CRODD
CO
----00PAC----
PACK 0 BIT
AND 7 ZERO
SPARE BITS
X A1
439
FOR WHITE
PROP. PANEL
DISPLAYS
004RE'
C1
----000SC----
PACK 4X10
BITS
CHECKS MAGNITUDES,
SCALES AND PACKS
φPP, λPP, φIP, λIP
OR ERROR INDICATION
VALUES FOR P.B.4
----00PAC----
PACKS 2' BIT
OF TENS OF
DAY
----000SC----
PACK 2X10
BITS
CHECKS MAGNITUDES,
SCALES AND PACKS
h AND V OR ERROR
INDICATION VALUES
FOR P.B.3
----000SC----
PACK 10 ZERO
BITS
PACKS ZERO BITS FOR
P.B.3 SINCE ONLY TWO
QUANTITIES ARE TO BE
DISPLAYED
----000SC----
PACKS 10 BITS
CHECKS THE MAGNITUDE,
SCALES AND PACKS h
FOR P.B.2
----00PAC----
PACKS 1 BIT
(IN SPARE
POSITION)
----000SC----
PACKS 10 BITS
CHECKS MAGNITUDE,
SCALES AND PACKS
tE OR ERROR INDICATION
VALUES FOR P.B.2
----00PAC----
PACK 10 ZERO
BITS
00RET
----000SC----
PACK 4X10
BITS
X C4
439
1 BIT SETS
PROP. PANEL
DISPLAYS TO
RED
CHECKS MAGNITUDES,
SCALES AND PACKS
(φIP)ZL, (λIP)ZL, (φIP)ML, (λIP)ML
INDICATION VALUES
FOR P.B.1

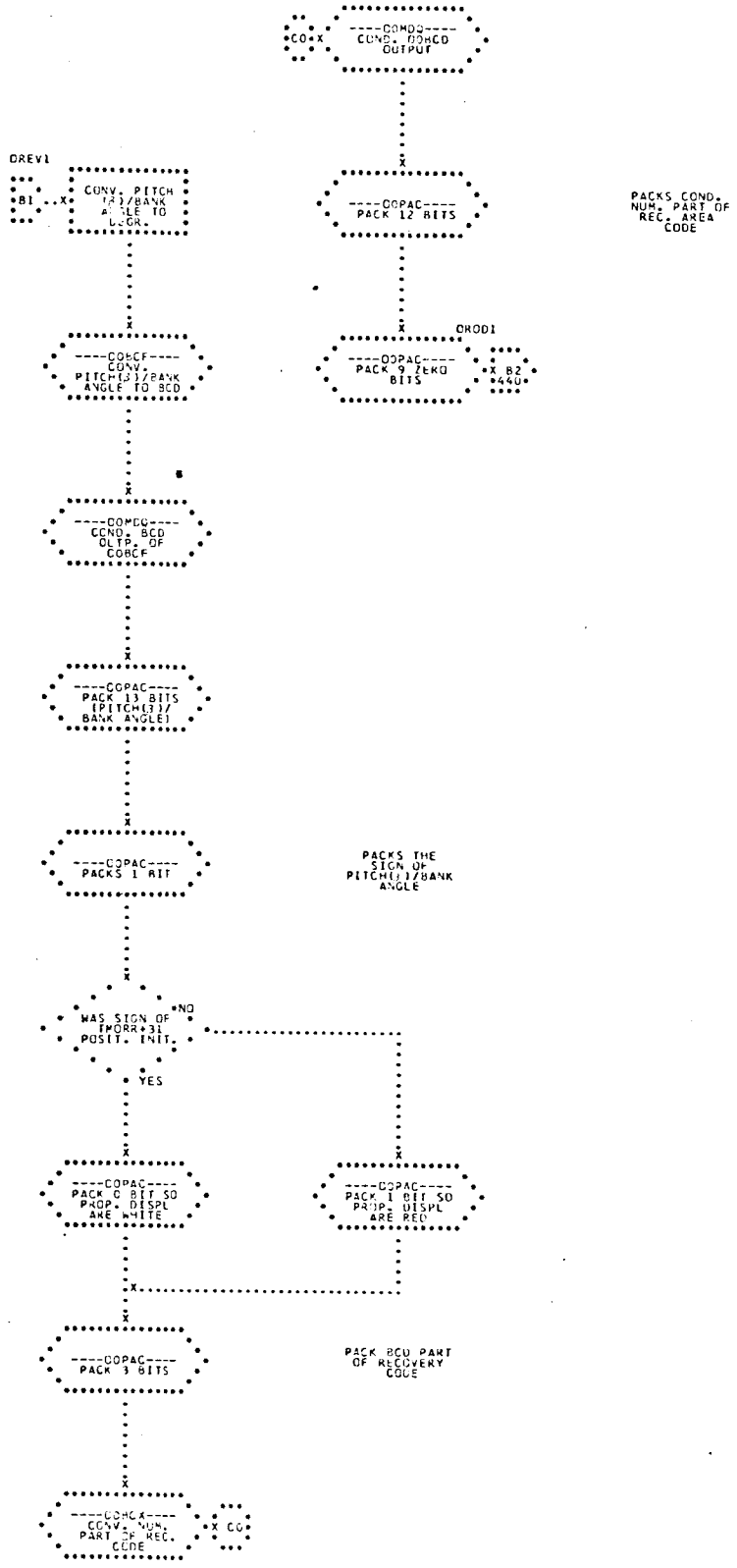
CO X
----COMDQ----
COND. OOBCD
OUTPUT
OREV1
B1 ..X
CONV. PITCH
(B)/BANK
ANGLE TO
DEGR.
----COPAC----
PACK 12 BITS
PACKS COND.
NUM. PART OF
REC. AREA
CODE
----COBCF----
CONV.
PITCH(B)/BANK
ANGLE TO BCD
ORODI
----COPAC----
PACK 9 ZERO
BITS
X B2
440
----COMDQ----
COND. BCD
OUTP. OF
COBCF
----COPAC----
PACK 13 BITS
(PITCH(B)/
BANK ANGLE)
----COPAC----
PACKS 1 BIT
PACKS THE
SIGN OF
PITCH(B)/BANK
ANGLE
WAS SIGN OF
TMORR+31
POSIT. INIT.
NO
YES
----COPAC----
PACK 0 BIT SO
PROP. DISPL
ARE WHITE
----COPAC----
PACK 1 BIT SO
PROP. DISPL
ARE RED
----COPAC----
PACK 3 BITS
PACK BCD PART
OF RECOVERY
CODE
----COBCX----
CONV. NUM.
PART OF REC.
CODE
X CO

## 95. OOAGL/OOTIM - TIME MEASURE TO BCD DEGREES CONVERSION

THESE PROGRAMS CONVERT ANGULAR (OOAGL) OR TIME MEASURE (OOTIM) TO BCD DEGREES (OR HOURS), MINUTES, AND SECONDS. (SEE FLOWCHART.)

INPUT

OOAGL/OOTIM USE THE OOBCF/OOBCX ROUTINE. INPUT TO OOAGL/OOTIM CONSISTS OF -

A) ANGLE-THE NUMBER TO BE CONVERTED, A, MUST BE FLOATING/POINT RADIANS ($0 \leq A \leq \pi$) AND LOCATED IN THE MQ UPON ENTRANCE.

B) TIME-THE WORD TO BE CONVERTED MUST BE PLACED IN THE ACCUMULATOR UPON ENTRANCE AND HAVE THE FOLLOWING FORMAT -

SECONDS IN THE DECREMENT
MINUTES IN THE ADDRESS

OUTPUT

A) BCD SECONDS IN THE LOW-ORDER END OF OOSEC.

B) BCD MINUTES IN THE LOW-ORDER END OF OOMIN.

C) BCD DEGREES (OR HOURS) IN THE LOW-ORDER END OF OOHRD.

USAGE -

A) CALLING SEQUENCE -

1) ANGULAR INPUT

```
ALPHA        TSX        OOAGL,4
ALPHA + 1               NORMAL RETURN
```

2) TIME INPUT

| | | |
|---|---|---|
| ALPHA | TSX | OOTIM,4 |
| ALPHA + 1 | | NORMAL RETURN |

B) STORAGE REQUIRED (NOT INCLUDING BCD) -

| | |
|---|---|
| INSTRUCTIONS | 26 |
| ERASABLE STORAGE | 1 |
| CONSTANTS | 4 |
| TOTAL | 31 |

C) TIMING -

40 TO 88 MACHINE CYCLES, NOT INCLUDING BCD.

355 TO 709 MACHINE CYCLES, INCLUDING BCD (4.26 MS TO 8.51 MS).

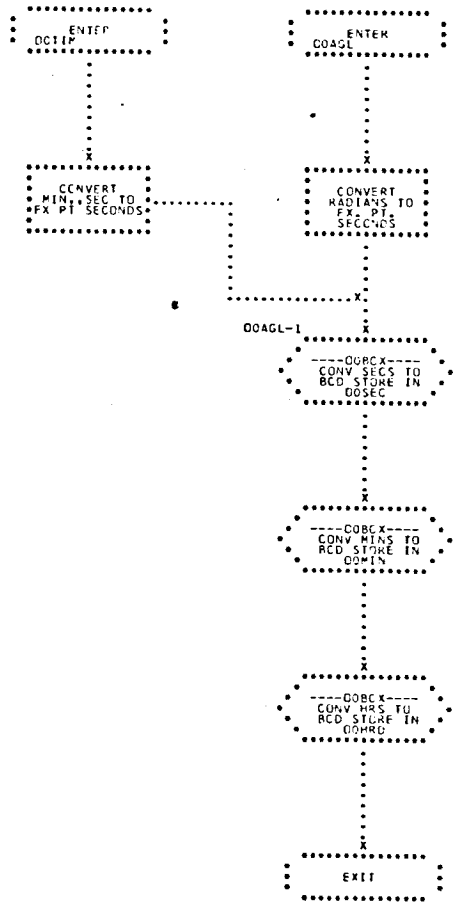
ENTER
DCTIM
ENTER
COAGL
CONVERT
MIN.,SEC TO
FX PT SECONDS
CONVERT
RADIANS TO
FX. PT.
SECONDS
DOAGL-1
----OGBCX----
CONV SECS TO
BCD STORE IN
DOSEC
----OGBCX----
CONV MINS TO
BCD STORE IN
DOMIN
----OGBCX----
CONV HRS TO
BCD STORE IN
DOHRS
EXIT

## 96. OOBCF/OOBCX - BINARY CODED DECIMAL CONVERSION

THESE PROGRAMS CONVERT A POSITIVE-FIXED (OOBCX) OR FLOATING-POINT NUMBER (OOBCF) TO ITS BCD EQUIVALENT, INSERTING A BCD DECIMAL POINT IF DESIRED. (SEE FLOW-CHART.)

INPUT

A) PLACE THE NUMBER TO BE CONVERTED IN THE ACCUMULATOR IF IT IS IN FLOATING-POINT FORM. IF A FIXED-POINT NUMBER, PLACE IT IN THE ACCUMULATOR AND MQ SCALED B35.

B) NO NUMBER CAN BE CONVERTED INTO MORE THAN 11 BCD DECIMAL DIGITS. IF A DECIMAL POINT IS TO BE INSERTED, NO MORE THAN 10 DECIMAL DIGITS CAN BE USED.

C) NO FLOATING-POINT NUMBER WHICH HAS A CHARACTERISTIC GREATER THAN (233) OCTAL CAN BE CONVERTED WITH THIS SUBROUTINE.

D) ALL NUMBERS TO BE CONVERTED MUST BE POSITIVE.

OUTPUT

THE CONVERTED NUMBER APPEARS IN THE ACCUMULATOR AND MQ AS FOLLOWS -

BITS 6 THROUGH 35 OF THE AC AND BITS 5, 1-35 OF THE MQ CONTAIN THE BCD NUMBER AND DECIMAL POINT WHEN DESIRED. BITS P, 1 THROUGH 5 OF THE ACCUMULATOR WILL CONTAIN A BINARY NUMBER EQUAL TO D + Z + X WHERE X IS THE NUMBER OF DIGITS IN THE INTEGRAL PORTION OF THE ANSWER I.E., THE TOTAL NUMBER OF BCD CHARACTERS PACKED. IF D = X

= 0, THEN THIS NUMBER WILL BE 1+Z. (D AND Z ARE DEFINED IN THE CALLING SEQUENCE.)

USAGE

A) CALLING SEQUENCE -

```
FLOATING-POINT INPUT        FIXED-POINT INPUT
ALPHA      TSX  OOBCF,4     ALPHA      TSX  OOBCX,4
ALPHA + 1  PZE  Z,,D        ALPHA + 1  PZE  Z,,D
ALPHA + 2  NORMAL RETURN    ALPHA + 2  NORMAL RETURN
```

WHERE D = THE NUMBER OF DECIMAL DIGITS TO THE RIGHT OF THE DECIMAL POINT TO BE CONVERTED TO BCD. THE PROGRAM WILL ROUND THE CONVERTED NUMBER TO D DECIMAL PLACES.

Z = THE DECIMAL POINT INDICATOR

Z = 1 IF A BCD DECIMAL POINT IS TO BE INSERTED IN THE ANSWER

Z = 0 IF NO DECIMAL POINT IS DESIRED.

B) STORAGE REQUIRED -

| | |
|---|---|
| INSTRUCTIONS AND TABLES | 101 |
| ERASABLE STORAGE | 7 |
| CONSTANTS | 5 |
| TOTAL | 113 |

C) TIMING -

105 TO 468 MACHINE CYCLES

(1.26 MSEC TO 5.62 MSEC)

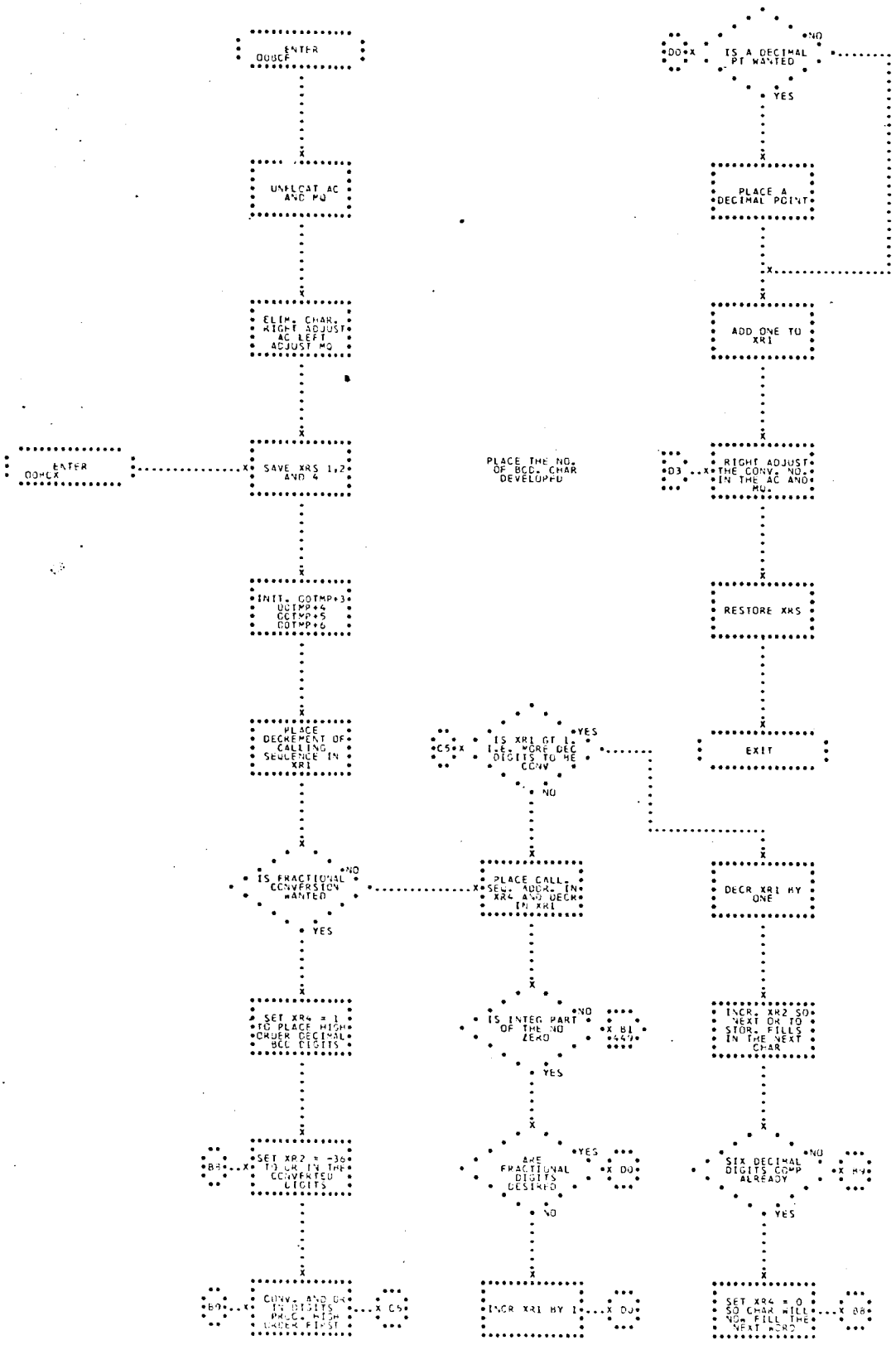
ENTER 00BCF
UNFLOAT AC AND MQ
ELIM. CHAR. RIGHT ADJUST AC LEFT ADJUST MQ
ENTER 00HCX
SAVE XRS 1,2 AND 4
INIT. GOTMP+3 GOTMP+4 GOTMP+5 GOTMP+6
PLACE DECREMENT OF CALLING SEQUENCE IN XR1
IS FRACTIONAL CONVERSION WANTED
NO
YES
SET XR4 = 1 TO PLACE HIGH ORDER DECIMAL BCD DIGITS
B8
SET XR2 = -36 TO OR IN THE CONVERTED DIGITS
B9
CONV. AND OR IN DIGITS PROC. HIGH ORDER FIRST
C5
PLACE THE NO. OF BCD. CHAR DEVELOPED
C5
IS XR1 GT 1. I.E. MORE DEC DIGITS TO BE CONV
YES
NO
PLACE CALL. SEQ. ADDR. IN XR4 AND DECR IN XR1
IS INTEG PART OF THE NO ZERO
NO
B1 449
YES
ARE FRACTIONAL DIGITS DESIRED
YES
D0
NO
INCR XR1 BY 1
D0
D0
IS A DECIMAL PT WANTED
NO
YES
PLACE A DECIMAL POINT
ADD ONE TO XR1
D3
RIGHT ADJUST THE CONV. NO. IN THE AC AND MQ.
RESTORE XRS
EXIT
DECR XR1 BY ONE
INCR. XR2 SO NEXT OR TO STOR. FILLS IN THE NEXT CHAR
SIX DECIMAL DIGITS COMP ALREADY
NO
B9
YES
SET XR4 = 0 SO CHAR WILL NOW FILL THE NEXT WORD
B8

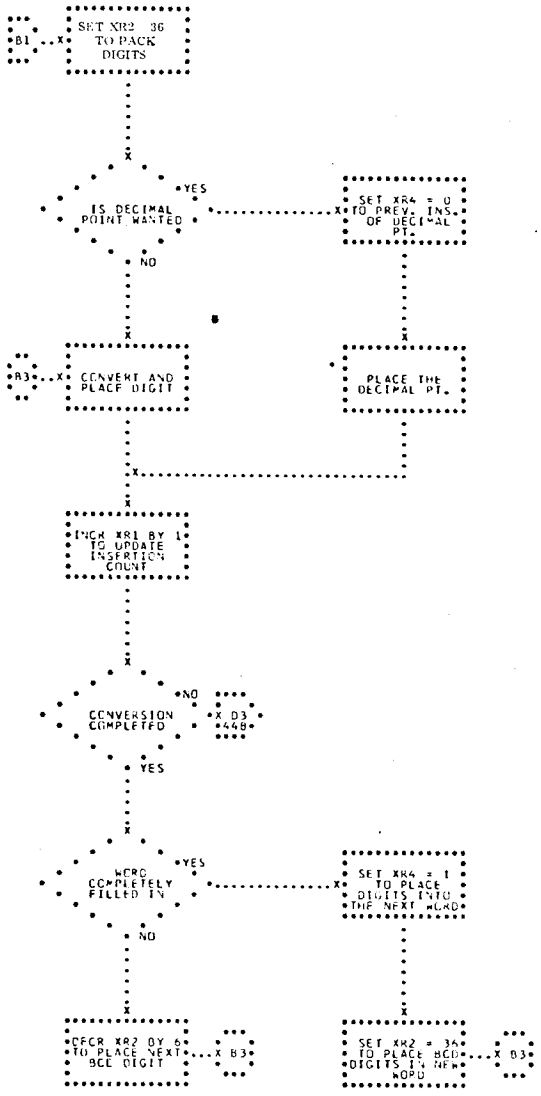
B1
SET XR2 36 TO PACK DIGITS
YES
IS DECIMAL POINT WANTED
SET XR4 = 0 TO PREV. INS. OF DECIMAL PT.
NO
B3
CONVERT AND PLACE DIGIT
PLACE THE DECIMAL PT.
INCR XR1 BY 1 TO UPDATE INSERTION COUNT
NO
CONVERSION COMPLETED
X B3 448
YES
YES
WORD COMPLETELY FILLED IN
SET XR4 = 1 TO PLACE DIGITS INTO THE NEXT WORD
NO
DECR XR2 BY 6 TO PLACE NEXT BCD DIGIT
X B3
SET XR2 = 36 TO PLACE BCD DIGITS IN NEW WORD
X B3

## 97. OOPAC - PACKING ROUTINE

OOPAC PACKS N NUMBER OF BITS (32 BITS PER WORD) LOCATED IN THE ACCUMULATOR INTO A BLOCK OF SEQUENTIAL WORDS. (SEE FLOWCHART.)

### INPUT

THE BITS TO BE PACKED MUST BE PLACED IN THE LOW-ORDER END OF THE ACCUMULATOR. THE NUMBER OF BITS, N, TO BE PACKED ON ANY ONE PASS IS INDICATED IN THE CALLING SEQUENCE AND MUST BE OF THE FOLLOWING MAGNITUDE -

$\phi \leq N \leq X$ WHERE X = 440 MINUS THE NUMBER OF BITS ALREADY PACKED INTO THE OUTPUT BLOCK.

IF N EXCEEDS 35, THE LOGICAL ACCUMULATOR IS PACKED, AND THEREAFTER ZEROS ARE PACKED UNTIL N IS SATISFIED.

### OUTPUT

AFTER 40 BITS ARE PACKED, THE PACKED BITS WILL APPEAR IN THE 32 LOW-ORDER POSITIONS OF 14 SEQUENTIAL WORDS STARTING AT LOCATION TMOLAB. THE BITS ARE PACKED FROM THE LOW ORDER END TO THE HIGH ORDER END OF EACH WORD AND FROM TMOLAB TO TMOLAB + 13. (ONLY 24 BITS WILL BE PACKED INTO TMOLAB + 13).

TO INITIATE THE PACKING OF A NEW OUTPUT BLOCK, LOCATION PALIM MUST BE SET TO ZERO. THIS MUST BE CONTROLLED BY THE MAIN PROGRAM.

### USAGE

A) CALLING SEQUENCE -

```
ALPHA        TSX     OOPAC, 4
ALPHA + 1    PZE     N
ALPHA + 2            RETURN
```

WHERE N = NUMBER OF BITS TO BE PACKED.

B) STORAGE REQUIRED -

| | |
|---|---|
| INSTRUCTIONS AND TABLES | 60 |
| (INCLUDES 13 LOCATIONS FOR TMOLAB) | |
| ERASABLE STORAGE | 1 |
| TOTAL | 61 |

C) TIMING -

50 TO 76 MACHINE CYCLES

(600 MICROSECONDS TO 812 MICROSECONDS) (BASED ON $N \leq 32$)

NOTE -

1) XR1 AND ADDRESS OF PAWCT ARE USED TO DETERMINE WHICH WORD OF TMOLAB ARE CURRENTLY BEING PACKED.

2) DECREMENT OF PABCT IS USED TO DETERMINE THE NUMBER OF BITS ALREADY PACKED IN THE LAST TMOLAB WORD. XR2 CONTAINS EITHER THE NUMBER OF BITS ALREADY PACKED OR (MOST OF THE TIME) THE NUMBER OF BITS TO BE PACKED.

3) XR4 AND PATCT'S DECREMENT CONTAIN THE TOTAL NUMBER OF BITS PACKED THUS FAR.

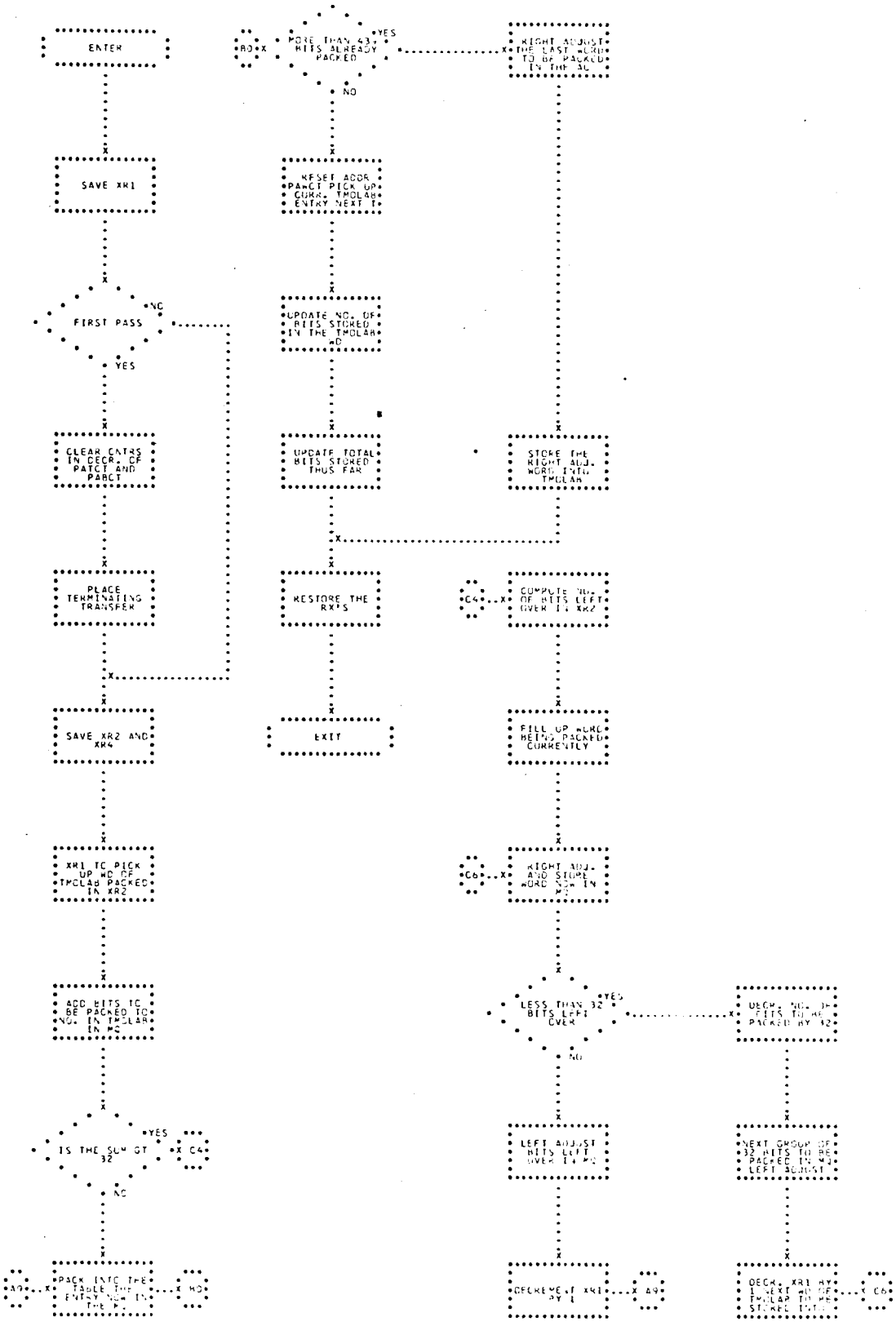
ENTER
SAVE XR1
FIRST PASS
NO
YES
CLEAR CNTRS IN DECR. OF PATCT AND PABCT
PLACE TERMINATING TRANSFER
SAVE XR2 AND XR4
XR1 TO PICK UP WD OF TMOLAB PACKED IN XR2
ADD BITS TO BE PACKED TO NO. IN TMOLAB IN MQ
IS THE SUM GT 32
YES
NO
C4
PACK INTO THE TABLE THE ENTRY NOW IN THE MQ
A9
NO
MORE THAN 43 BITS ALREADY PACKED
YES
NO
B0
RESET ADDR. PABCT PICK UP CURR. TMOLAB ENTRY NEXT T
UPDATE NO. OF BITS STORED IN THE TMOLAB
UPDATE TOTAL BITS STORED THUS FAR
RESTORE THE RX'S
EXIT
RIGHT ADJUST THE LAST WORD TO BE PACKED IN THE AC
STORE THE RIGHT ADJ. WORD INTO TMOLAB
COMPUTE NO. OF BITS LEFT OVER IN XR2
C4
FILL UP WORD BEING PACKED CURRENTLY
RIGHT ADJ. AND STORE WORD SUM IN MQ
C6
LESS THAN 32 BITS LEFT OVER
YES
NO
DECR. NO. OF BITS TO BE PACKED BY 32
LEFT ADJUST BITS LEFT OVER IN MQ
NEXT GROUP OF 32 BITS TO BE PACKED IN MQ LEFT ADJUST
DECREMENT XR1 BY 1
A9
DECR. XR1 BY 1 NEXT WD OF TMOLAB TO BE STORED INTO
C6

## 98. OOOSC - SCALING SUBROUTINE

OOOSC CHECKS THAT THE QUANTITIES IN TMORRE TO BE SCALED ARE WITHIN BOUNDS. THESE QUANTITIES ARE THEN SCALED AND PACKED INTO TMOLAB, EACH QUANTITY OCCUPYING 10 BITS. (SEE FLOWCHART.)

INPUT

THE CALLING SEQUENCE DESCRIBING THE BASE ADDRESS OF THE BLOCK TO BE SCALED, THE LENGTH OF THE BLOCK, AND THE SCALE FACTORS AND BOUNDING VALUES TO BE USED.

OUTPUT

FOR EACH QUANTITY, TEN BITS OF SCALED INFORMATION IN TMOLAB.

METHOD

EACH QUANTITY IS CHECKED AGAINST THE ENTRIES IN TRMIN AND TRMAX CORRESPONDING TO THE SCALE FACTORS DESIRED. IF THE QUANTITY IS TOO LARGE, A MAXIMUM 10-BIT VALUE IS PACKED. IF THE QUANTITY IS TOO SMALL, TEN ZERO BITS ARE PACKED. IF THE VALUE IS WITHIN BOUNDS, THEN THE QUANTITY IS SCALED AND PACKED INTO TEN BITS.

USAGE

A) CALLING SEQUENCE -

```
TSX     OOOSC
P A, T, D
RETURN
```

T = NUMBER OF CONSECUTIVE TMORRE ENTRIES TO BE SCALED.

A = INITIAL ADDRESS RELATIVE TO TMORRE OF BLOCK IN TMORRE TO BE SCALED.

D = INITIAL ADDRESS RELATIVE [illegible]SCL, TRMIN, TRMAX OF SCALING FACTORS AND BOUNDING VALUES

IF P IS NEGATIVE, COMPARE WITH $2\pi$ . OTHERWISE, SKIP THE COMPARISON.

B) STORAGE REQUIRED -

117 CELLS

C) NOTE -

1) THE COMPLEMENT OF THE DECREMENT OF THE CALLING SEQUENCE WORD IS PLACED IN XR1, AND IS USED TO PICK UP THE [illegible] TO BE SCALED.

2) THE COMPLEMENT OF THE ADDRESS OF THE CALLING SEQUENCE WORD IS PLACED IN XR2. IT IS USED TO PICK UP THE BOUNDING AND SCALE VALUES.

3) THE TAG OF THE CALLING SEQUENCE WORD IS PLACED IN XR3, IT DETERMINES THE NUMBER OF CONSECUTIVE WORDS TO BE PICKED UP.

4) THE SIGN OF THE CALLING SEQUENCE DETERMINES WHETHER A COMPARISON WITH $\pi$ WILL BE MADE OR NOT.

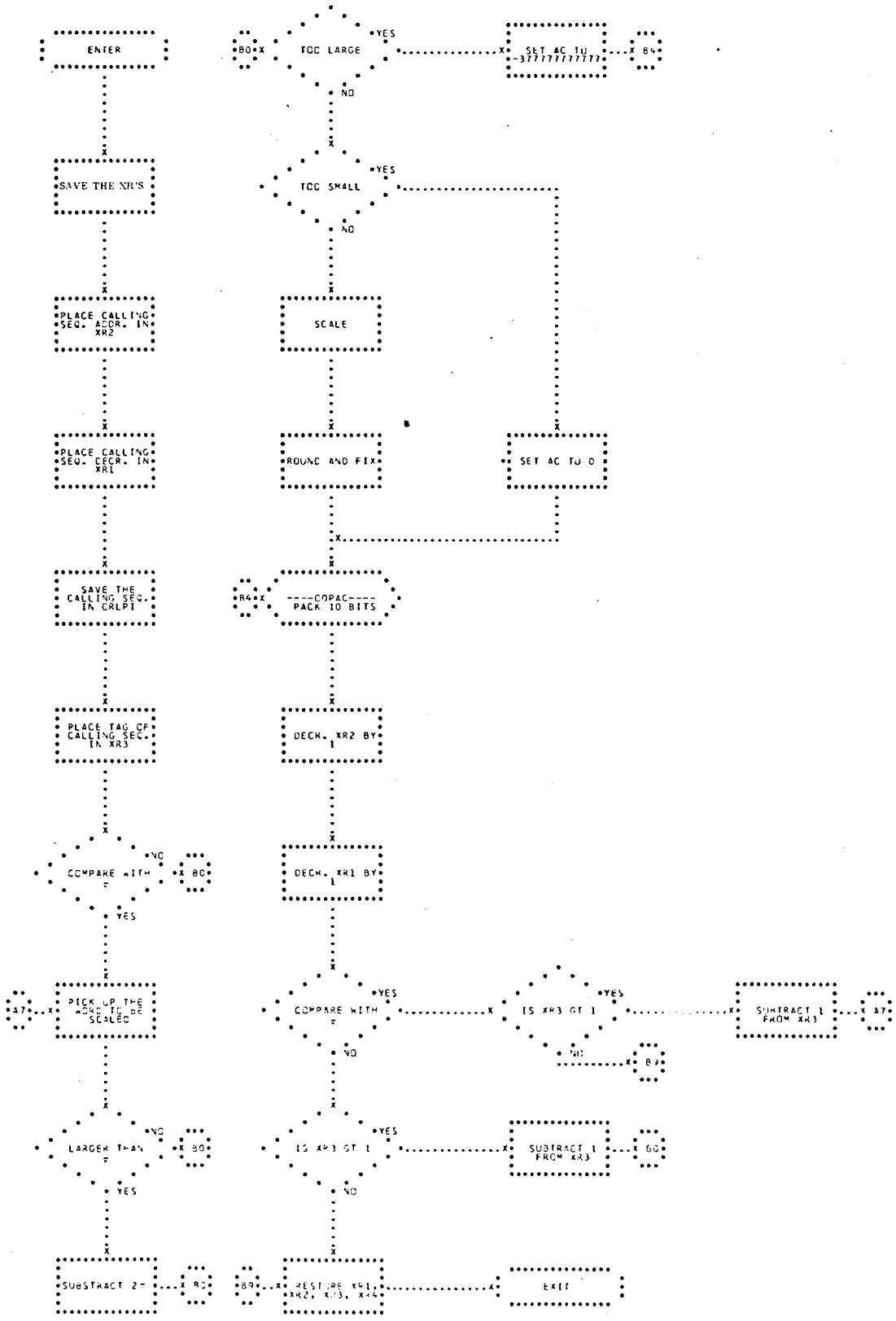
ENTER
B0
TOO LARGE
YES
SET AC TO -377777777777
B4
NO
SAVE THE XR'S
TOO SMALL
YES
NO
PLACE CALLING SEQ. ADDR. IN XR2
SCALE
PLACE CALLING SEQ. ADDR. IN XR1
ROUND AND FIX
SET AC TO 0
SAVE THE CALLING SEQ. IN CRLPT
R4
----COPAC----
PACK 10 BITS
PLACE TAG OF CALLING SEQ. IN XR3
DECR. XR2 BY 1
COMPARE WITH =
NO
B0
YES
DECR. XR1 BY 1
A7
PICK UP THE WORD TO BE SCALED
COMPARE WITH =
YES
NO
IS XR3 GT 1
YES
NO
B7
SUBTRACT 1 FROM XR3
A7
LARGER THAN =
NO
B0
YES
IS XR3 GT 1
YES
NO
SUBTRACT 1 FROM XR3
B0
SUBSTRACT 2=
B0
B9
RESTORE XR1, XR2, XR3, XR4
EXIT

## 99. OOOTI - TIME CONVERSION PROGRAM

OOOTI CONVERTS TIME TO BCD RECORDS, MINUTES AND HOURS USING OOBCX. THESE ARE CONDENSED BY OOMDQ. SEVEN BITS OF THE MODIFIED MINUTES AND SECONDS ARE PACKED USING OOPAC, AND THE NUMBER OF BITS OF THE MODIFIED BCD HOURS SPECIFIED IN THE CALLING SEQUENCE IS PACKED AGAIN USING OOPAC. (SEE FLOWCHART.)

INPUT

A. FIRST WORD OF CALLING SEQUENCE GIVES THE LOCATION OF TIME TO BE CONVERTED.

B. SECOND WORD OF CALLING SEQUENCE GIVES THE NUMBER OF BITS OF HOURS TO BE PACKED.

OUTPUT

7 BITS OF CONDENSED SECONDS ARE PACKED INTO TMOLAB.

7 BITS OF CONDENSED MINUTES ARE PACKED INTO TMOLAB.

THE REQUIRED NUMBER OF BITS FROM THE HOUR MEASURE ARE PACKED INTO TMOLAB.

METHOD

OOOTI USES OOBCD, OOMDQ, OOPAC REPEATEDLY TO CONVERT TO BCD, CONDENSE, AND PACK.

USAGE

A. TSX 000TI, 4
PZE A
PZE N
RETURN
A = LOCATION OF TIME TO BE CONVERTED.
N = NUMBER OF HOUR BITS TO BE PACKED.

B) STORAGE REQUIRED -
49 CELLS

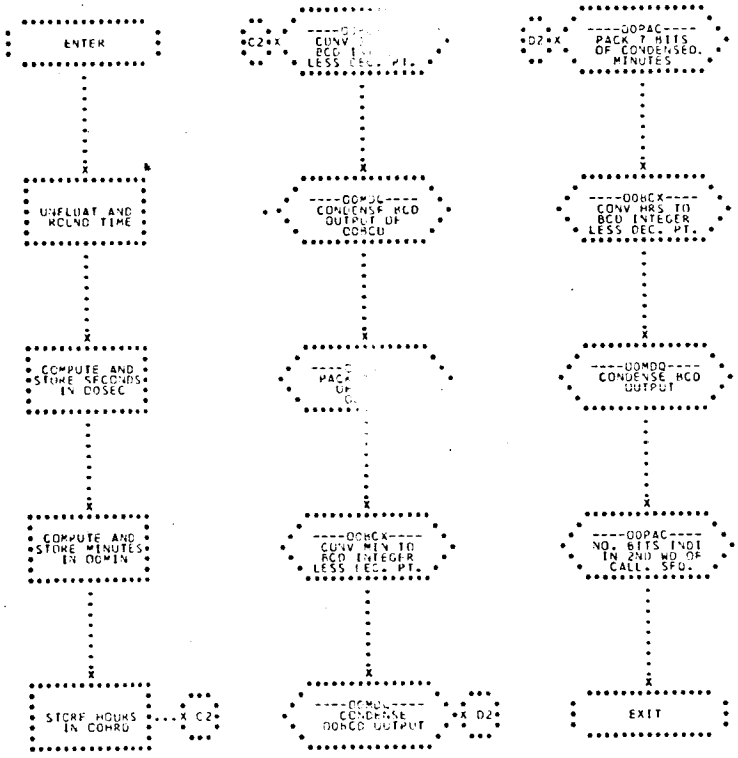
ENTER
UNFLOAT AND ROUND TIME
COMPUTE AND STORE SECONDS IN DOSEC
COMPUTE AND STORE MINUTES IN DOMIN
STORE HOURS IN DOHRD
C2
CONDENSE BCD OUTPUT OF DOBCD
CONV MIN TO BCD INTEGER LESS DEC. PT.
CONDENSE DOBCD OUTPUT
D2
PACK 7 BITS OF CONDENSED. MINUTES
CONV HRS TO BCD INTEGER LESS DEC. PT.
CONDENSE BCD OUTPUT
NO. BITS INDI IN 2ND WD OF CALL. SEQ.
EXIT

## 100. OOMDQ - BCD TO MODIFIED BCD CHARACTERS

OOMDQ CONVERTS SIX BCD CHARACTERS TO SIX MODIFIED BCD CHARACTERS. (SEE FLOWCHART.)

INPUT

THE 6-CHARACTER BCD NUMBER IN THE MQ.

OUTPUT

THE NUMBER CONVERTED INTO SIX CONDENSED CHARACTERS IN CONVERTED BCD FORMAT RIGHT ADJUSTED IN THE AC.

METHOD

EVERY DECIMAL DIGIT (0-9) MAY BE REPRESENTED BY FOUR BINARY BITS. THIS MAY BE DONE BY CONVERTING EACH DIGIT TO ITS BCD REPRESENTATION AND TRUNCATING THE TWO LEADING BITS (ALWAYS ZERO FOR DIGITS).

THE NUMBER CONSISTING OF SIX BCD CHARACTERS IS PLACED IN THE MQ. THE TWO FORMAT BITS OF EACH BCD CHARACTER ARE REMOVED AND THE REMAINING FOUR BITS ARE INJECTED INTO THE LOW-ORDER END OF THE AC. THUS, THE 6-CHARACTER (36 BIT) BCD NUMBER IS CONVERTED TO A 24-BIT REPRESENTATION, RIGHT ADJUSTED IN THE AC.

USAGE

A. CALLING SEQUENCE -

```
TSX     OOMDQ,4
RETURN
```

B. STORAGE REQUIRED -

15 CELLS

EXAMPLES

IN THE MQ, THE NUMBER 987654 WILL APPEAR AS -

001001 001000 000111 000110 000101 000100

THIS WILL BE CONVERTED TO

1001 1000 0111 0110 0101 0100

IN THE AC BY OMITTING THE UNDERLINED BITS.

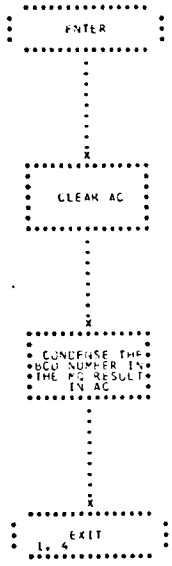
ENTER
CLEAR AC
CONDENSE THE
BCD NUMBER IN
THE MQ RESULT
IN AC
EXIT
1, 4

## 101. PCUPD - SUBROUTINE TO ADDRESS A DCS MESSAGE

(SEE FLOWCHART.)

INPUT

THE INPUT TO PCUPD CONSISTS OF A THREE WORD TABLE SUPPLIED BY MYOPCC. THE ADDRESS OF THE FIRST WORD IS CONTAINED IN XR4.

| | |
|---|---|
| TABLE+0 | CONTAINS THE DELETE WORD OF THE PCC ENTRY KEYS. |
| TABLE+1 | CONTAINS THE INSERT WORD OF THE PCC ENTRY KEYS. |
| TABLE+2 | CONTAINS THE TIME [illegible] TRAP REQUESTED A READING OF THE PCC ENTRY KEYS. |

THE WORD CONTAINED IN TABLE + 0 IS ALSO CONTAINED IN THE SENSE INDICATORS ON ENTRY TO PCUPD.

OUTPUT

THE OUTPUT OF PCUPD CONSISTS OF A QUEUE WORD TO MNPDCS CONTAINING THE ADDRESS OF A SIX WORD BLOCK. THE CONTENTS OF THE BLOCK ARE AS FOLLOWS -

| | |
|---|---|
| BLOCK+0 | DECREMENT CONTAINS A 2<br>ADDRESS CONTAINS $T_1$ |
| BLOCK+1 | ADDRESS CONTAINS $T_2$ |
| BLOCK+2 | ADDRESS CONTAINS $T_3$ |
| BLOCK+3 | ADDRESS CONTAINS $T_4$ |
| BLOCK+4 | CONTAINS CGMTS IN HALF-SECONDS, FIXED-POINT, RIGHT-JUSTIFIED. |
| BLOCK+5 | DECREMENT CONTAINS $S_1$<br>ADDRESS CONTAINS $S_2$ |

WHERE $T_1$, $T_2$, $T_3$, $T_4$ ARE THE TYPES OF TELETYPE MESSAGES (1 THROUGH 5) TO BE ADDRESSED. ANY NUMBER FROM ONE TO FOUR DIFFERENT TYPE MESSAGES MAY BE ADDRESSED FROM THE SAME PCC REQUEST.

TYPE 1 IS ORBIT NAVIGATION

TYPE 2 IS MANUAL PRE-RETRO

TYPE 3 IS AUTOMATIC PRE-RETRO

TYPE 4 IS MANEUVER

TYPE 5 IS RENDEZVOUS

$S_1$ IS THE PRIMARY SITE NUMBER, AND $S_2$ IS THE BACKUP SITE NUMBER.

BDA = 1

CYI = 2

CRO = 3

CSQ = 4

GYM = 5

HAW = 6

CNV = 7

RKV = 8

TEX = 9

NO BACKUP SITE IS REQUIRED, BUT THERE MUST BE A PRIMARY SITE.

BLOCK+4 IS NOT COMPUTED AT THE TIME OF THIS WRITING, AND NO ATTEMPT TO DO SO IS FORESEEABLE IN THE NEAR FUTURE.

METHOD

MYKEYS EXAMINES THE DELETE WORD (TABLE+0) OF THE PCC ENTRY KEYS AND TRANSFERS TO PCUPD WHEN THE CODE BIT IS ON (KEY 36). PCUPD THEN EXAMINES THE DELETE WORD FOR OTHER CODE BITS. IF ANY ARE ON, MYMESS IS QUEUED TO INDICATE AN ERROR IN THE CODE KEYS. THE DELETE WORD IS THEN EXAMINED FOR A BACKUP SITE KEY. IF NONE IS FOUND, THE

ADDRESS OF BLOCK+5 IS SET TO ZERO. IF THERE IS A BACKUP SITE KEY ON, THE CORRESPONDING SITE NUMBER IS STORED IN THE ADDRESS OF BLOCK+5. IF MORE THAN ONE BACKUP SITE IS ENTERED, MYMESS IS QUEUED TO INDICATE AN ERROR IN THE ENTRY KEYS. NEXT, THE DELETE WORD IS AGAIN EXAMINED FOR TYPES TO BE ADDRESSED. AT LEAST ONE KEY MUST BE ON AND AS MANY AS FOUR MAY BE ON PER INTERRUPT. AS THESE KEYS ARE FOUND, THE TYPE NUMBERS THEY REPRESENT ARE STORED SEQUENTIALLY IN THE ADDRESSES OF BLOCK+0 TO BLOCK+3. IF NONE WAS ENTERED, OR IF MORE THAN FOUR WERE ENTERED, OR IF ANY OTHER KEYS IN THE DELETE WORD OTHER THAN TYPE KEYS, BACKUP SITE KEY, AND CODE KEYS WERE ON, MYMESS IS QUEUED FOR THE ERROR MESSAGE CONCERNING THE ENTRY KEYS. THE INSERT WORD IS EXAMINED NEXT FOR THE PRIMARY SITE, WHICH WHEN FOUND IS STORED IN THE DECREMENT OF BLOCK+5. IF NONE IS ENTERED OR IF MORE THAN ONE IS ENTERED, OR IF ANY OTHER KEYS OTHER THAN THOSE USED FOR PRIMARY SITE SELECTION ARE ON, MYMESS IS QUEUED FOR THE ERROR MESSAGE. ON ALL ERROR KEY SETTINGS, EXIT IS MADE IMMEDIATELY TO MOPRIO AFTER QUEUEING THE ERROR MESSAGE WITHOUT QUEUEING MNPDCS. IF NO ERRORS HAVE BEEN FOUND, MNPDCS IS THEN QUEUED WITH THE ADDRESS OF THE SIX-WORD DATA TABLE. THE QUEUE WORD IS DCSBA. MYMESS IS ALSO QUEUED WITH THE SAME INFORMATION IN A DIFFERENT FORMAT FOR ON-LINE VERIFICATION OF THE INSERTED QUANTITIES.

THE SITE KEY DESIGNATION IS AS FOLLOWS FOR THE PCC ENTRY KEYS -

KEY 20 - BDA
KEY 21 - CYI
KEY 22 - CRC
KEY 23 - CSC

KEY 24 - GYM
KEY 25 - HAW
KEY 26 - CNV
KEY 27 - RKV
KEY 28 - TEX

THE SAME KEY IS USED FOR THE PRIMARY AND BACKUP SITE SELECTION. IN THE INSERT POSITION, IT IS INTERPRETED AS A PRIMARY SITE, IN THE DELETE POSITION AS A BACKUP SITE.

THE TYPE KEY DESIGNATION IS AS FOR THE PCC ENTRY KEYS (IN THE DELETE POSITION)

KEY 1 - TYPE 1 (ORBIT NAVIGATION)
KEY 2 - TYPE 2 (MANUAL PRE-RETRO)
KEY 3 - TYPE 3 (AUTOMATIC PRE-RETRO)
KEY 4 - TYPE 4 (MANEUVER)
KEY 5 - TYPE 5 (RENDEZVOUS)

USAGE

A) MACROS -
QENBA, QENBZ,
QUEUE, TRNOF

B) STORAGE REQUIRED -
A CORE - 26 CELLS
B CORE - 164 CELLS

C) TIMING -
MINIMUM - .018 MS.
MAXIMUM - .327 MS.

D) PCC CODE KEYS -
000001 - IN DELETE POSITION
31 36

E) PCC ENTRY KEYS -

ONE KEY BETWEEN KEYS 20-28 INCLUSIVE IN THE INSERT POSITION FOR THE PRIMARY SITE, ONE KEY IN THE DELETE POSITION THE SAME AS ABOVE FOR THE BACKUP SITE (NOT REQUIRED), AT LEAST ONE AND AS MANY AS FOUR KEYS BETWEEN 1-5 INCLUSIVE FOR THE TYPE MESSAGE TO BE ADDRESSED.

NOTE - THE PCC IS NOT CURRENTLY USED FOR ADDRESSING DCS TELETYPE MESSAGES SINCE NO PROGRAM IS CURRENTLY IN THE SYSTEM TO COMPUTE CGMTS. THE MANUAL INSERTION ASR'S ARE USED FOR ADDRESSING DCS MESSAGES.

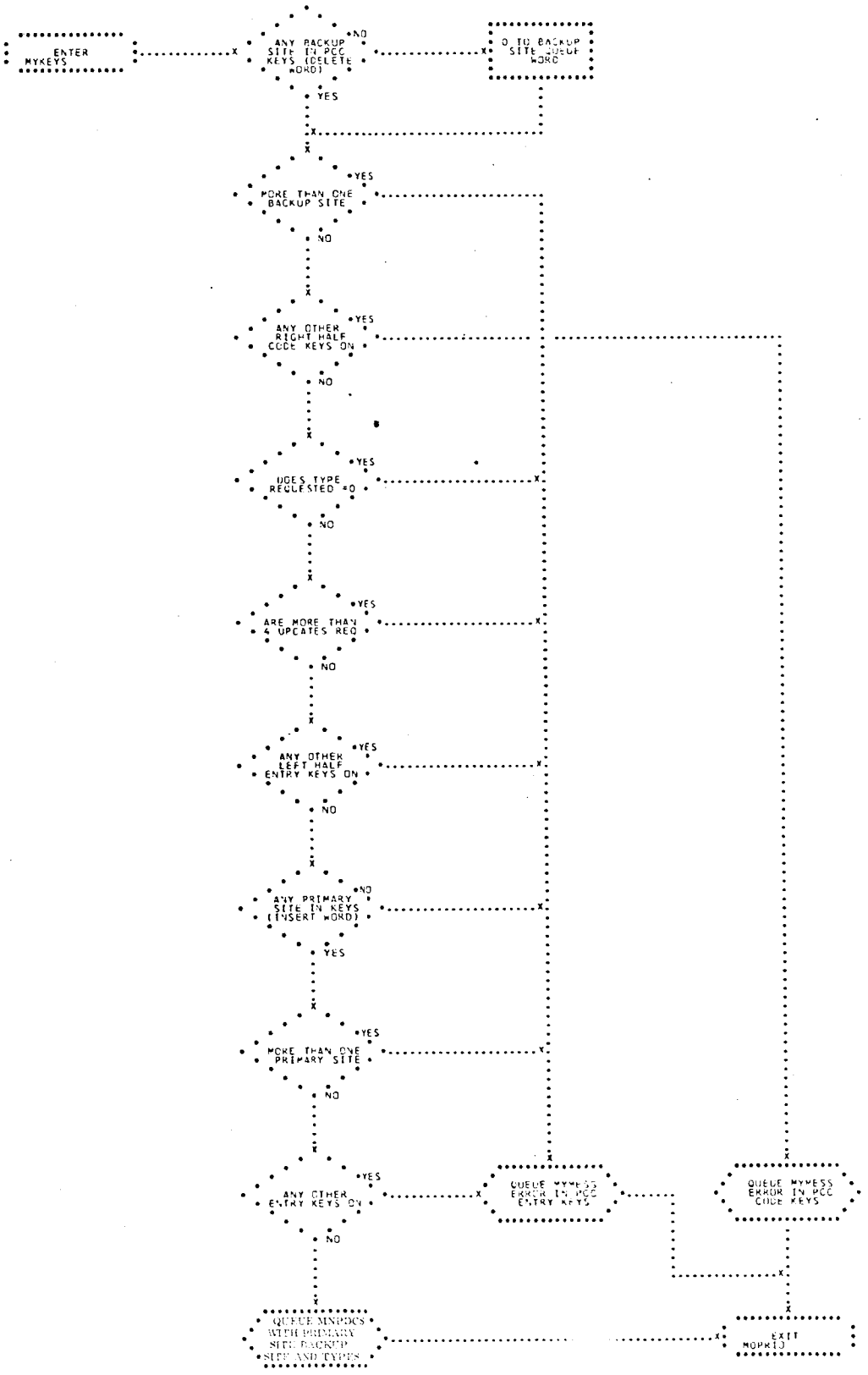
ENTER MYKEYS
ANY BACKUP SITE IN PCC KEYS (DELETE WORD)
NO
YES
0 TO BACKUP SITE QUEUE WORD
MORE THAN ONE BACKUP SITE
YES
NO
ANY OTHER RIGHT HALF CODE KEYS ON
YES
NO
DOES TYPE REQUESTED =0
YES
NO
ARE MORE THAN 4 UPDATES REQ
YES
NO
ANY OTHER LEFT HALF ENTRY KEYS ON
YES
NO
ANY PRIMARY SITE IN KEYS (INSERT WORD)
NO
YES
MORE THAN ONE PRIMARY SITE
YES
NO
ANY OTHER ENTRY KEYS ON
YES
NO
QUEUE MYMESS ERROR IN PCC ENTRY KEYS
QUEUE MYMESS ERROR IN PCC CODE KEYS
QUEUE MNPDCS WITH PRIMARY SITE BACKUP SITE AND TYPES
EXIT MOPR(1)

## 102. PCTRN - SUBROUTINE TO TRANSMIT A DCS MESSAGE

PCTRN IS A MONITOR SUBROUTI[illegible] TO INITIATE TRANSMISSION OF A DCS TELETYPE MESSAG[illegible] FLOWCHART.)

INPUT

THE INPUT TO PCTRN IS A THREE WORD TABLE SUPPLIED BY MYOPCC. THE ADDRESS OF THE FIRST WORD IS CONTAINED IN XR4.

THE CONTENTS OF THE TABLE ARE AS FOLLOWS -

TABLE + 0 CONTAINS THE DE[illegible]TE WORD OF THE PCC ENTRY KEYS.

TABLE + 1 CONTAINS THE IN[illegible] OF THE PCC ENTRY KEYS.

TABLE + 2 CONTAINS THE TIME THE TRAP REQUESTED A READING OF THE PCC ENTRY KEYS. PCTRN DOES NOT MAKE USE OF THIS WORD.

THE WORD CONTAINED IN TABLE + 0 IS ALSO CONTAINED BY THE SENSE INDICATORS ON ENTRY TO PCTRN.

OUTPUT

THE OUTPUT OF PCTRN CONSIST[illegible] A QUEUE WORD TO MNTDCS, CONTAINING THE ADDRESS OF [illegible]R WORD WHICH HAS THE DCS REQUEST NUMBER (3) IN THE DECREMENT AND THE TYPE NUMBER TO BE TRANSMITTED IN THE ADDRESS (1,2,3,4 OF 5). QUE1L, QUE2L, QUE3L, QUE4L, OR QUE5L IS THE QUEUE WORD DEPENDING ON THE TYPE TO BE TRANSMITTED. ALSO ONE OF THE FOLLOWING CELLS TRAR1, TRAR2, TRAR[illegible], TRAR4, OR TRAR5 WILL CONTAIN A QUEUE WORD FOR MYMESS D[illegible]DING ON THE TYPE TO BE TRANSMITTED.

METHOD

MYKEYS EXAMINES THE DELETE WORD (TABLE + 0) AND TRANSFERS TO PCTRN WHEN THE CODE BIT KEY IS ON (KEY 35). PCTRN THEN EXAMINES THE DELETE WORD FOR OTHER CODE BITS. IF ANY ARE FOUND, MYMESS IS QUEUED TO INDICATE AN ERROR IN THE PCC CODE KEY SETTING. IF NO OTHER CODE BITS ARE FOUND, THE INSERT WORD (TABLE + 1) IS EXAMINED FOR ZERO. IF IT IS NON-ZERO, AGAIN MYMESS IS QUEUED TO INDICATE AN ERROR IN THE KEY SETTING. IF IT IS ZERO, ENTRY KEYS 1 THRU 5 OF THE DELETE WORD (TABLE + 0) ARE EXAMINED TO DETERMINE WHICH TYPE DCS MESSAGE IS DESIRED TO BE TRANSMITTED. THE FORMAT IS AS FOLLOWS -

KEY 1 - TYPE 1 (ORBIT NAVIGATION)
KEY 2 - TYPE 2 (MANUAL PRE-RETRO)
KEY 3 - TYPE 3 (AUTOMATIC PRE-RETRO)
KEY 4 - TYPE 4 (MANEUVER)
KEY 5 - TYPE 5 (RENDEZVOUS)

ONLY ONE TYPE OF MESSAGE MAY BE REQUESTED PER INTERRUPT. IF MORE THAN ONE IS REQUESTED OR IF ANY OTHER ENTRY KEYS ARE ENTERED, MYMESS IS QUEUED TO INDICATE AN ERROR IN THE ENTRY KEYS. ON ALL ERROR KEY SETTINGS, EXIT IS MADE TO MOPRIO WITHOUT QUEUING MNTDCS. OTHERWISE, MNTDCS IS QUEUED, THEN EXIT IS MADE TO MOPRIO.

USAGE

A) MACROS -
QENBA, QENBZ, QUEUE, TRNOF

B) STORAGE REQUIRED -
A CORE - 18 CELLS
B CORE - 105 CELLS

C) TIMING -

MINIMUM .094 MS. (INC. MACROS)

MAXIMUM 2.34 MS. (INC. MACROS)

D) CODE KEYS -

000010 IN DELETE WORD OF PCC ENTRY KEYS

31 - 36 (KEY 35)

E) ENTRY KEYS -

KEY 1,2,3,4 OR 5 IN DELETE WORD OF PCC ENTRY KEYS

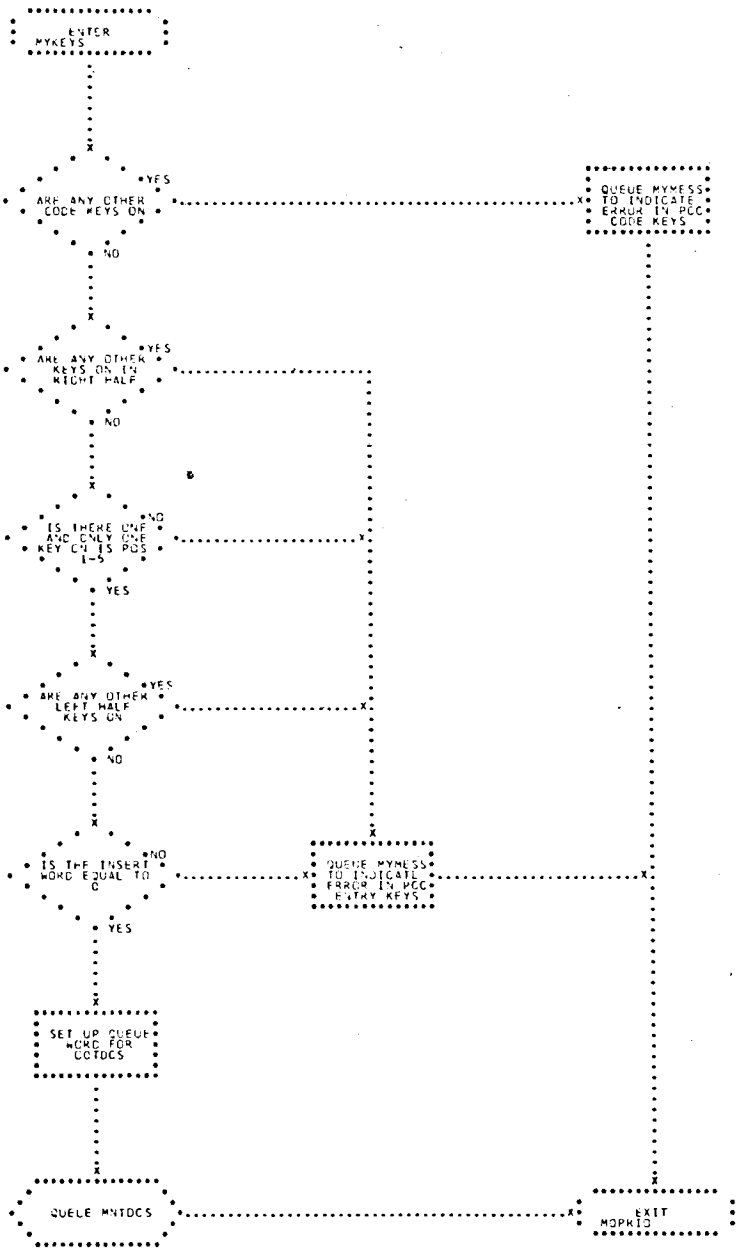
ENTER
MYKEYS
ARE ANY OTHER CODE KEYS ON
YES
NO
QUEUE MYMESS TO INDICATE ERROR IN PCC CODE KEYS
ARE ANY OTHER KEYS ON IN RIGHT HALF
YES
NO
IS THERE ONE AND ONLY ONE KEY ON IN POS 1-5
NO
YES
ARE ANY OTHER LEFT HALF KEYS ON
YES
NO
IS THE INSERT WORD EQUAL TO 0
NO
YES
QUEUE MYMESS TO INDICATE ERROR IN PCC ENTRY KEYS
SET UP QUEUE WORD FOR CCTDCS
QUEUE MNTDCS
EXIT
MOPKIO

## 103. CONTROL DURING PHASE CHANGE AND RESTART

THE GEMINI ORBITAL MISSION PROCEEDS FROM PRELAUNCH TO IMPACT VIA THE LAUNCH, HOLD, OR [illegible] REENTRY PHASES. DURING LAUNCH, EXCEPTIONS TO THE [illegible]UENCE MAY INVOLVE A LOW ABORT (BEFORE ABORT MODE CHANGE-OVER, AM3) OR A HIGH ABORT (AFTER ABORT MODE CHANGEOVER AND GO/NO-GO COMPUTATIONS). ONCE INSERTION HAS BEEN ATTAINED, THERE IS NO EXCEPTION TO THE SEQUENCE, I.E., ORBIT YIELDS ONLY TO REENTRY. DURING THE ORBIT AND REENTRY PHASES, SITUATIONS MAY ARISE DUE TO ERROR IN COMPUTATIONS OR MECHANICAL MALFUNCTION WHICH REQUIRE A RESTA[illegible] OF THE GEMINI REAL TIME SYSTEM.

### CONTROL DURING PRELAUNCH

BEFORE LOADING THE GEMINI REAL TIME SYSTEM FOR AN ACTUAL MISSION, FINAL MODIFICATIONS ARE MADE TO THE PROGRAM. THE SYSTEM TAPE IS WRITTEN IN ABSOLUTE BINARY WITH SPECIAL ERROR CORRECTING CODES, AND THE PROGRAM IS PRECEDED BY A SELF-LOADING SEQUENCE.

THE FINAL MODIFICATIONS TO THE PROGRAM ARE INCORPORATED BY MXMODS, AN EXTERNAL PR[illegible] WHICH PROVIDES THE CAPABILITIES FOR MODIFYING A SQUOZ[illegible] TAPE. THE OUTPUT OF THIS PROGRAM IS A MODIFICATION TAPE WHICH SERVES AS INPUT TO SOS MODIFY AND LOAD PASS. SOS THEN EDITS THE DATA AND WRITES IT ONTO THE DISK. MXSTW1 READS THE DATA FROM THE DISK TO PRODUCE A SELF-LOADING FILE AS THE FIRST FILE OF THE GEMINI SYSTEM TAPE. IT THEN WRITES THE REMAINDER OF THE GEMINI SYSTEM TAPE WITH ERROR CORRECTION CODES USING THE MSWECC SUBROUTINE. THE SELF-LOADING TAPE IS NOW PLACED ON TAPE UNIT A1. WHEN THE LOAD TAPE

BUTTON IS PRESSED, THE SELF-LOADING SEQUENCE BRINGS IN THE FIRST FILE CONTAINING THE LOADING PROGRAM, MXLOAD. THIS PROGRAM READS IN THE NEXT FILE ON THE TAPE, RECORD BY RECORD, WITH THE MSLOAD SUBROUTINE. MSLOAD REMOVES THE ERROR CORRECTION CODES USING THE MSRECC SUBROUTINE AND STORES THE RECORD IN THE PROPER LOCATION IN CORE STORAGE.

WHEN THE GEMINI SYSTEM TAPE HAS BEEN READ SUCCESSFULLY INTO THE IBM 7094 CORE STORAGE, INITIALIZATION OF THE GEMINI REAL TIME SYSTEM BEGINS. WHILE WAITING FOR THE GMT BASE TIME TO BE ENTERED (DONE ON THE FIRST WWV MINUTE SIGNAL RECEIVED BY THE COMPUTER), MYINIT TURNS ON THE B INDICATOR FOR THE STATION CHARACTERISTICS TAPE PROCESSOR, MYSCRD AND, THEN BY USE OF THE QTSX MACRO, SUPPRESSES ITSELF UNTIL THE STATION CHARACTERISTICS TAPE HAS BEEN READ.

WHEN THE LAST STATION CHARACTERISTICS BLOCK HAS BEEN READ, MYSCRD UNSUPPRESSES MYINIT TO ALLOW INITIALIZATION OF THE GEMINI SYSTEM TO BE COMPLETED. MOPRIO RETURNS CONTROL TO MYINIT WHICH EXAMINES TMSTCH TO DETERMINE WHETHER MYSCRD SUCCESSFULLY READ THE STATION CHARACTERISTICS TAPE. IF TMSTCH IS ZERO, MYSCRD HAS ALREADY QUEUED AN ON-LINE MESSAGE INDICATING THAT THE STATION CHARACTERISTICS TAPE HAS BEEN READ SUCCESSFULLY AND MYINIT CONTINUES THE INITIALIZATION PROCESS. IF TMSTCH IS NON-ZERO, MYINIT QUEUES AN ON-LINE MESSAGE GIVING THE USER THE OPTION OF EITHER CONTINUING OR RELOADING THE SYSTEM. IF THE FORMER IS CHOSEN, INITIALIZATION PROCEEDS FROM THAT POINT, IF THE LATTER, THE INITIALIZATION PROCESS BEGINS AGAIN.

104. MYDUMP - MONITOR ROUTINE TO DUMP 'A' CORE ON TAPE AT LAUNCH/ORBIT INTERFACE

SEE FLOWCHART.

INPUT

THE INPUT TO MYDUMP CONSISTS OF LOCATIONS 0-77777 OCTAL OF A-CORE.

OUTPUT

THE OUTPUT OF MYDUMP IS WRITTEN IN BINARY ON TAPE A3 AND CONTAINS ALL OF A-CORE AS ONE RECORD.

METHOD

MCDUMP IS SET NON-ZERO IN THE SUFFIX OF CCMAIN. THE B BIT IS TURNED CN FOR MYDUMP AND THE G BIT IS TURNED ON FOR ITSELF (CCMAIN). CCMAIN THEN LCOPS ON A ZERO TEST OF MCDUMP. THE FIRST TRAP OF ANY KIND TAKES CONTROL FROM CCMAIN. SINCE CCMAIN IS SUPPRESSED IT CANNOT BE REENTERED UNTIL MYDUMP AND MTDUMP HAVE COMPLETED PROCESSING. WHEN MOPRIO GIVES CONTROL TO MYDUMP, THE CHANNEL A TRAP LOCATION (LOC 13 OCTAL) IS SET UP WITH A TRAP TRANSFER TO MTDUMP. ALL OTHER CHANNEL A USERS ARE SUPPRESSED (MYRCAL, MYMESS, AND MYCLUP) AND THE I/O COMMAND IS INITIATED. AT THE CCMPLETICN OF THE DATA TRANSFER TO TAPE, AN A CHANNEL TRAP RESULTS AND TRANSFERS TO MTDUMP.

USAGE

A) A-CORE STORAGE -
20 CELLS (INCLUDING MACROS)

B) TIMING -
.028 MS

C) MACROS -
TRNON
TRNOF

SEE MXDUMP FOR PROCESSING THE A3 TAPE.

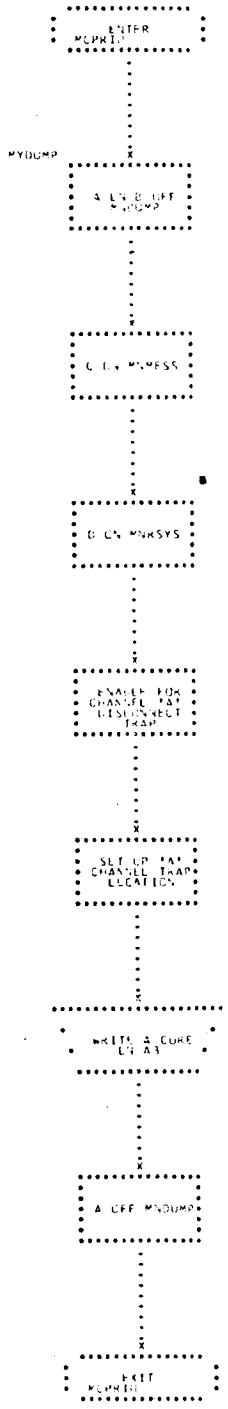
ENTER MCPRIO
MYDUMP
A ON B OFF MNDUMP
C ON MNMESS
D ON MNRSYS
ENABLE FOR CHANNEL 'A' DISCONNECT TRAP
SET UP 'A' CHANNEL TRAP LOCATION
WRITE A CORE ON A3
A OFF MNDUMP
EXIT MCPRIO

## 105. MTDUMP - TRAP PROCESSOR FOR MYDUMP

MTDUMP GETS CONTROL AFTER MYDUMP HAS COMPLETED THE WRITING OF CORE CNTO A-3. (SEE FLOWCHART.)

INPUT

NONE

OUTPUT

MCDUMP IS SET TO 0.

METHOD

MTDUMP IS ENTERED WHEN THE CHANNEL COMPLETES THE I/O COMMAND GIVEN IN MYDUMP AND DISCONNECTS, CAUSING A CHANNEL TRAP. MCDUMP IS SET TO ZERO TO INDICATE TO CCMAIN THAT THE I/O HAS BEEN COMPLETED. MTDUMP THEN TURNS OFF THE G FOR CCMAIN SO IT MAY BE REENTERED AND UNSUPPRESSES THE OTHER CHANNEL OF USERS, NAMELY - MYRCAL, MYMESS, AND MYCLUP.

USAGE

A) STORAGE -
   A CORE
B) MACROS -
   TRNOF
C) TIMING -
   13 MILLISECONDS

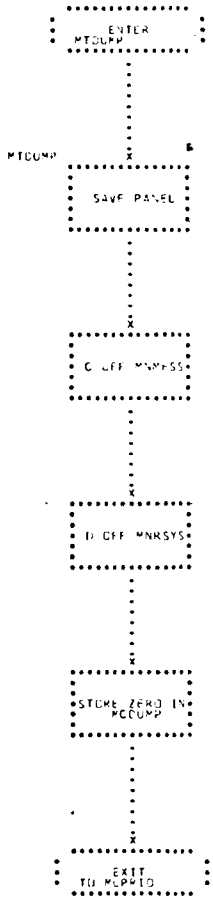
ENTER
MTCUMP
MTCUMP
SAVE PANEL
C OFF MNRFSS
D OFF MNRSYS
STORE ZERO IN
MCCUMP
EXIT
TO MCPMIO

## 106. MSWECC - MONITOR SUBROUTINE TO WRITE ERROR CORRECTION CODES

MSWECC INSERTS ERROR CORRECTION WORDS INTO A DATA RECORD. (SEE FLOWCHART.)

INPUT

A 1-WORD CALLING SEQUENCE ARRANGED AS FOLLOWS -

ADDRESS - ADDRESS OF A CONTINUOUS BLOCK OF DATA INTO WHICH ERROR CORRECTION WORDS ARE TO BE INSERTED.

DECREMENT - BLOCK LENGTH

OUTPUT

LET K BE THE LEAST INTEGER SUCH THAT $2^K - K > N+1$ WHERE N IS THE BLOCK LENGTH. THE OUTPUT IS -

1) AN EXPANDED CONTINUOUS BLOCK OF N+K+2 WORDS STARTING AT THE SAME ADDRESS, WITH THE K+2 CHECK WORDS INTERSPERSED WITHIN THE RECORD.
2) THE NUMBER N+K+2 IN THE ADDRESS OF THE ACCUMULATOR.

METHOD

LET A BE THE INITIAL BLOCK ADDRESS
N BE THE RECORD LENGTH (NUMBER OF DATA WORDS).

IF A,B ARE INTEGERS, LET (A/B) BE THE LEAST INTEGER $\leq$ A/B.

THE DATA BLOCK MAY CONTAIN NO MORE THAN 502 WORDS. THE ADD AND CARRY LOGICAL SUM OF THE N DATA WORDS WITH A WORD CONTAINING THE CONSTANT 1 IS THEN APPENDAGED TO THE RECORD (PLACED IN ADDRESS A+N).

IF K IS THE MINIMAL INTEGER SUCH THAT $2^K > N+K+1$, THE RECORD OF N+1 WORDS DEVELOPED ABOVE IS EXPANDED INTO A RECORD OF N+K+1 WORDS BY INSERTING K ZERO WORDS AT LOCATIONS A-1+2 L=0, 1, 2,...,K-1.

THESE K ZERO WORDS ARE REPLACED BY K HAMMING WORDS AS FOLLOWS -

1) THE HAMMING WORD AT A IS THE EXCLUS[illegible] LOCATIONS A+2L, WHERE

$$L=1,2,\ldots,\frac{N+1+K}{2}$$

2) THE HAMMING WORDS AT $A-1+2^L < 0 \leq L$ K-1 ARE COMPUTED AS FOLLOWS -

THE $I^{th}$ HAMMING WORD IS THE EXCLUSIVE OR OF ALL THE WORDS IN LOCATIONS $A-1+(2L+1)2^{i-1} + J$, WHERE

$$L=0,1,\ldots,\frac{N+K+1-2^{i-1}}{2^i}$$

IF L=0 $J=1,2,\ldots,2^{i-1}-1$

IF 0 L $\frac{N+K+1-2^{i-1}}{2^i}$ $J=0,1,2,\ldots,2^{i-1}-1$

IF $L=\frac{N+K+1-2^{i-1}}{2^i}$ $J=0,1,\ldots,N+K+1-\left[2\left(\frac{N+K+1-2^{i-1}}{2^i}\right)+1\right]2^{i-1}$

THE N+1+K RESULTING WORDS ARE THEN EXCLUSIVELY ORED TOGETHER, AND THE SUM IS PLACED IN A+N+1+K. OUR ORIGINAL RECORD OF N WORDS HAS BEEN EXPANDED TO A RECORD OF N+1+K+1 = N+K+2 WORDS.

NOTE THAT CORRECTING AN ENCODED RECORD [illegible]ONE AS FOLLOWS -

IF THE $V^{th}$ BIT OF THE $I^{th}$, $J^{th}$ AND $K^{th}$ E[illegible]USIVE OR SUMS OF THE HAMMING WORD WITH THE WORDS COMPRISING IT

IS NON-ZERO, THEN THE $V^{th}$ BIT OF THE DATA WORD AT $A-1+2^{i-1}+2^{J-1}+2^{K-1}$ IS IN ERROR AND SHOULD BE INVERTED.

USAGE

A) CALLING SEQUENCE -

```
TSX        MSWECC,4
BLOCK ADDRESS,,BLOCK LENGTH
RETURN
```

B) STORAGE REQUIRED -

213 LOCATIONS

C) TIME REQUIRED -

(1.1+.1IN) MILLISECONDS

D) SYMBOLS USED IN THE FLOW CHART -

A INITIAL ADDRESS OF BLOCK

N NUMBER OF DATA WORDS

K MINIMAL INTEGER $2^K > N+K+1$, NUMBER OF HAMMING WORDS.

i CONTENTS OF AQR+3 AT PLACES USED IN FLOW CHART

$Q_i$ $N+1+K/2^i$

INTERNAL STORAGE USAGE

| THE CELL | GENERALLY CONTAINS |
|---|---|
| AQK | A |
| AQK+1 | N+1 |
| AQK+2 | K |
| AQK+3 | K-1,i |
| AQK+4 | $2^{K-1}, 2^{i-1}, Q_i/2^i$ |

| | |
|---|---|
| AQK+5 | $2^{K-2}, 2^{i-2}, 2^{i-1}$ |
| AQK+6 | N+1+K |
| AQK+7 | $2^{i}$ |
| AQK+8 | $Q_i$ |

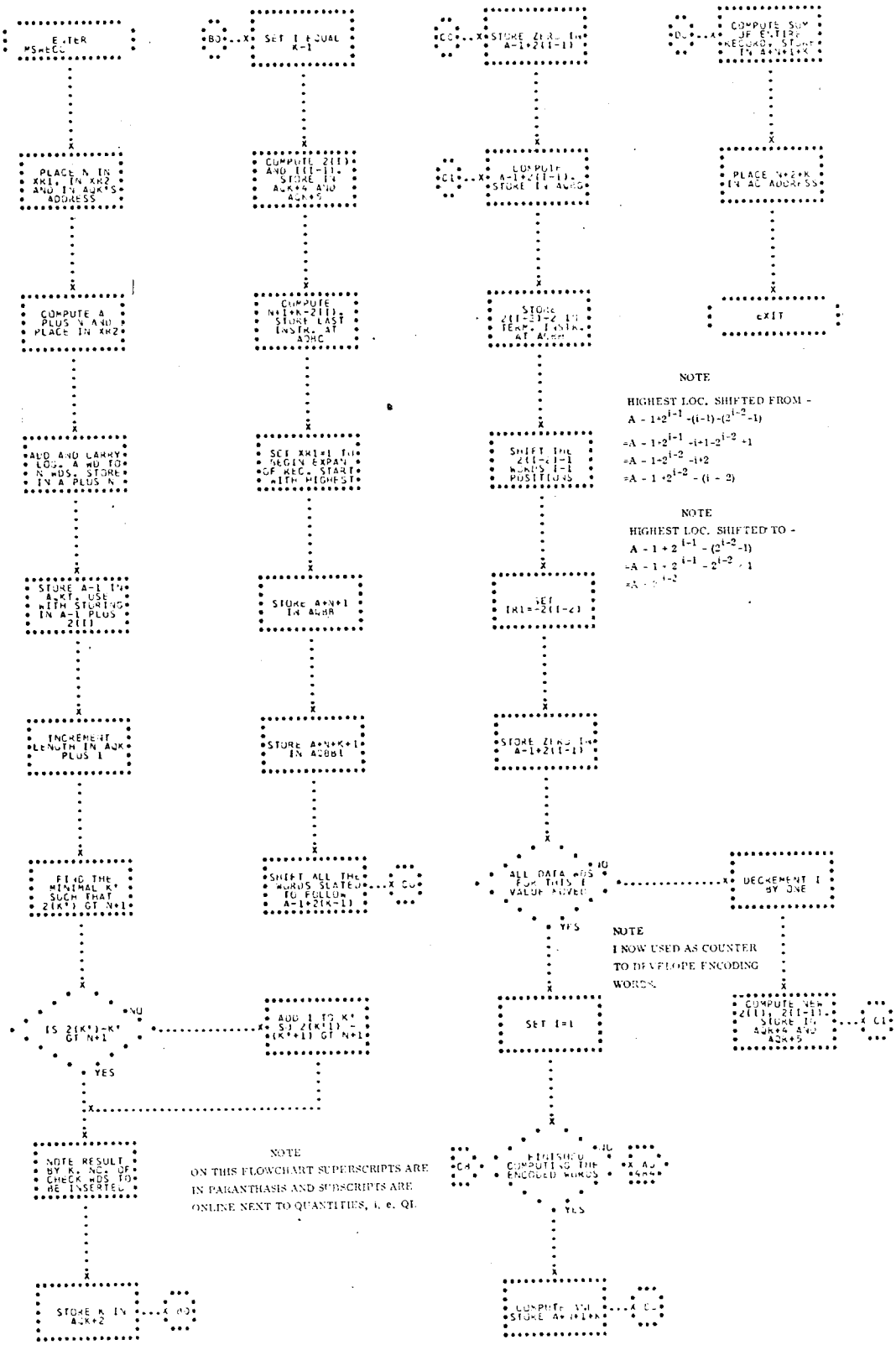


NOTE

ON THIS FLOWCHART SUPERSCRIPTS ARE IN PARANTHASIS AND SUBSCRIPTS ARE ONLINE NEXT TO QUANTITIES, i. e. $Q_i$.

NOTE

HIGHEST LOC. SHIFTED FROM -

$A - 1 + 2^{i-1} - (i-1) - (2^{i-2} - 1)$

$= A - 1 + 2^{i-1} - i + 1 - 2^{i-2} + 1$

$= A - 1 + 2^{i-2} - i + 2$

$= A - 1 + 2^{i-2} - (i - 2)$

NOTE

HIGHEST LOC. SHIFTED TO -

$A - 1 + 2^{i-1} - (2^{i-2} - 1)$

$= A - 1 + 2^{i-1} - 2^{i-2} + 1$

$= A - 1 + 2^{i-2}$

NOTE

I NOW USED AS COUNTER TO DEVELOPE ENCODING WORDS.

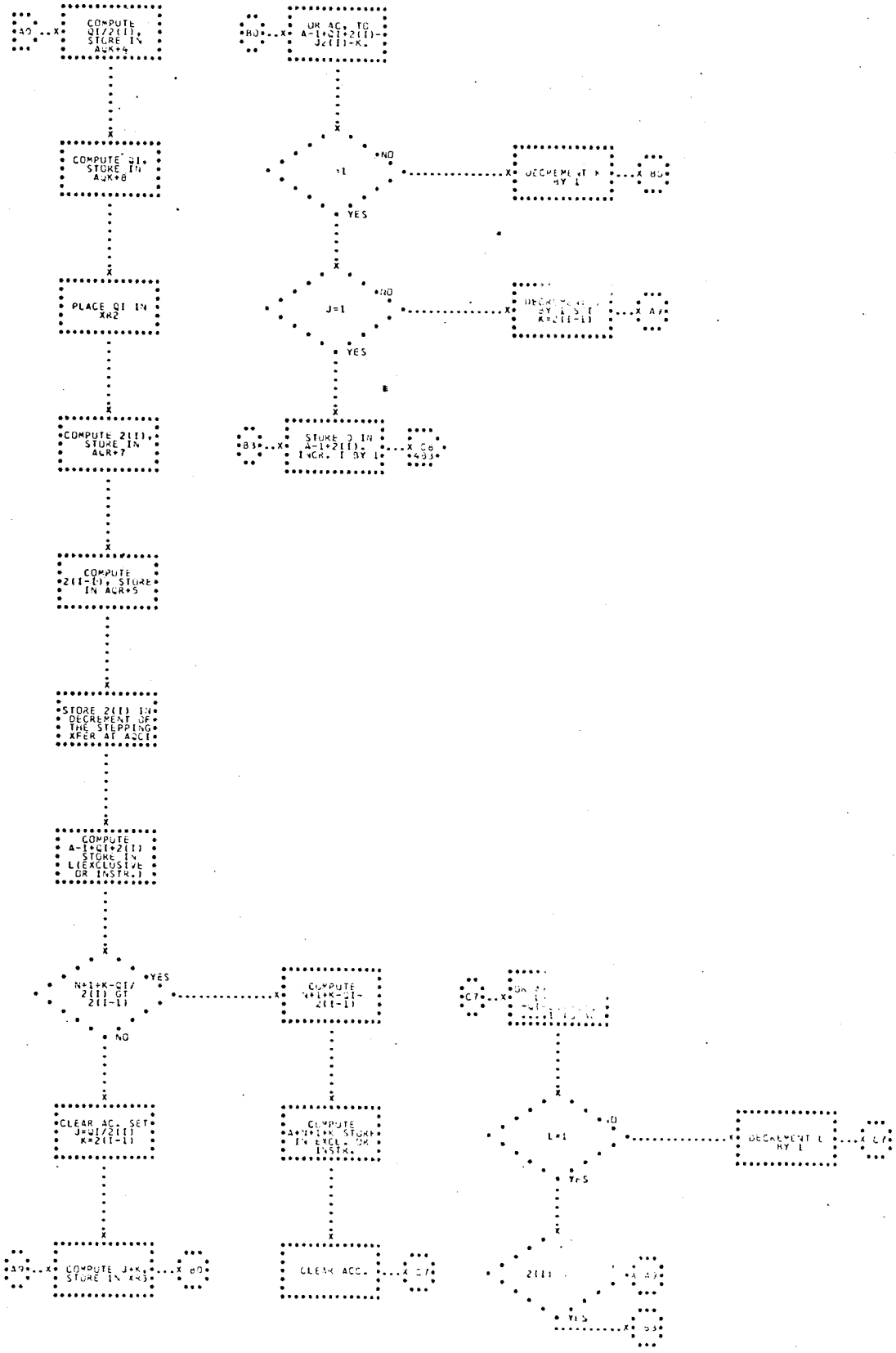
COMPUTE QI/2(I), STORE IN AQK+4
COMPUTE QI, STORE IN AQK+8
PLACE QI IN XR2
COMPUTE 2(I), STORE IN AQR+7
COMPUTE 2(I-1), STORE IN AQR+5
STORE 2(I) IN DECREMENT OF THE STEPPING XFER AT AQCI
COMPUTE A-1+QI+2(I) STORE IN L(EXCLUSIVE OR INSTR.)
N+1+K-QI/2(I) GT 2(I-1)
YES
NO
CLEAR AC. SET J=QI/2(I) K=2(I-1)
COMPUTE J+K, STORE IN XR3
COMPUTE N+1+K-QI-2(I-1)
COMPUTE A+N+1+K STORE IN EXCL. OR INSTR.
CLEAR ACC.
OR AC, TO A-1+QI+2(I)-J2(I)-K.
J=1
STORE 0 IN A-1+2(I). INCR. I BY 1
DECREMENT K BY 1
DECREMENT L BY 1
L=1
2(I)
YES
NO

## 107. MSRECC - MONITOR SUBROUTINE TO READ ERROR CORRECTION CODES

MSRECC CHECKS AND IF NECESSARY, ATTEMPTS TO CORRECT RECORDS INTO WHICH MSWECC HAS INSERTED ERROR CORRECTION WORDS. IF THE RECORD IS CORRECT OR HAS BEEN CORRECTED, THE CHECK WORDS ARE REMOVED SO THE ORIGINAL RECORD IS REPRODUCED. (SEE FLOWCHART)

INPUT

A 1-WORD CALLING SEQUENCE ARRANGED AS FOLLOWS -

ADDRESS - INITIAL (LOWEST) ADDRESS OF A CONTINUOUS BLOCK OF DATA INTO WHICH ERROR CORRECTION WORDS HAVE BEEN INSERTED BY MSWECC.

DECREMENT - THE NUMBER OF DATA WORDS IN THE RECORD.

OUTPUT

A) COMMUNICATION CELL -

MCRECC NUMBER OF ERRORS THAT HAVE OCCURRED

B) INPUT RECORD SIZE IN THE ADDRESS OF AC.

C) THE CORRECTED RECORD WITH HAMMING WORDS REMOVED, STARTING AT THE SAME LOCATION AS THE INPUT RECORD.

METHOD

LET A BE THE INITIAL BLOCK LOCATION.

LET N BE THE NUMBER OF DATA WORDS.

LET K BE THE NUMBER OF HAMMING CHECK WORDS INSERTED.

THE INPUT RECORD SIZE IS N+1+K+1 (CHECK MSWECC).

MSRECC CHECKS THE RECORD BY EXCLUSIVELY ORING EACH HAMMING WORD WITH THE DATA WORDS USED TO COMPUTE IT. IF ANY OF THESE SUMS ARE NON-ZERO, THE RECORD IS EXAMINED BIT BY BIT AND ERRONEOUS BITS ARE CORRECTED, IF POSSIBLE.

IF CORRECTIONS HAVE BEEN SUCC[illegible] THE HAMMING WORDS AT LOCATIONS $A-1+2^L$ (L=0,1,..., K-1) ARE REMOVED AND THE RECORD IS RESTORED TO ITS ORIGINAL CONDITION, FOLLOWED BY THE ADD AND CARRY LOGICAL SUM WORD COMPUTED BY MSWECC. THE ADD AND CARRY LOGICAL SUM APPENDAGED BY MSWECC IS THEN RECOMPUTED AND CHECKED AGAINST ITS FORMER VALUE.

IF CORRECTION IS SUCCESSFUL, [illegible] NORMAL EXIT ENSUES.

NOTE - IF THE $V^{th}$ BIT OF THE [illegible], $J^{th}$, AND $K^{th}$ SUMS OF THE HAMMING WORD WITH THE DATA WORDS COMPRISING IT (LOOK AT METHOD - MSWECC) IS NON-ZERO, THEN THE $V^{th}$ BIT OF THE WORD AT $A-1+2^{i-1}+2^{V-1}+2^{K-1}$ IS E[illegible]

USAGE

A) CALLING SEQUENCE -

```
TSX      MSRECC,4
BLOCK ADDRESS ,, BLOCK LEN
ERROR    RETURN
NORMAL   RETURN
```

B) STORAGE REQUIRED -

331 LOCATION

C) TIME REQUIRED -

1.3 + .11N + .02E MILLISECONDS

WHERE N IS THE NUMBER OF DATA WORDS
E IS THE NUMBER OF ERRORS

D) SYMBOLS USED IN FLOW CHART -

| | |
|---|---|
| A | BLOCK ORIGIN |
| N | NUMBER OF DATA WORDS |
| K | NUMBER OF HAMMING WORDS |
| i | CONTENTS OF AQR+4 |
| $Q_i$ | GREATEST MULTIPLE [illegible] N+1+K |
| V | THE 36-$V^{th}$ BIT IS TESTED DURING ERROR PROCEDURE |
| $P_V$ | THE NUMBER IN THE MQ COMPRISED OF THE $V^{th}$ BITS OF ALL THE EXCLUSIVE OR OF EACH HAMMING SUM WITH THE WORDS COMPRISING IT. I.E., THE ERRONEOUS $V^{th}$ BITS OF THE HAMMING WORDS. |

INTERNAL LOCATION [illegible]NT

| LOCATION | GENERALLY [illegible]AINS |
|---|---|
| AQR | A |
| AQR+1 | N+1 |
| AQR+2 | K |
| AQR+3 | N+1+K |
| AQR+4 | i |
| AQR+5 | $Q_i/2^i$, $2^{V-1}$, $2^{i-1}$ |
| AQR+6 | $Q_i$, $2^i$ |
| AQR+7 | $2^i$ |
| AQR+8 | $2^{i-1}$ |

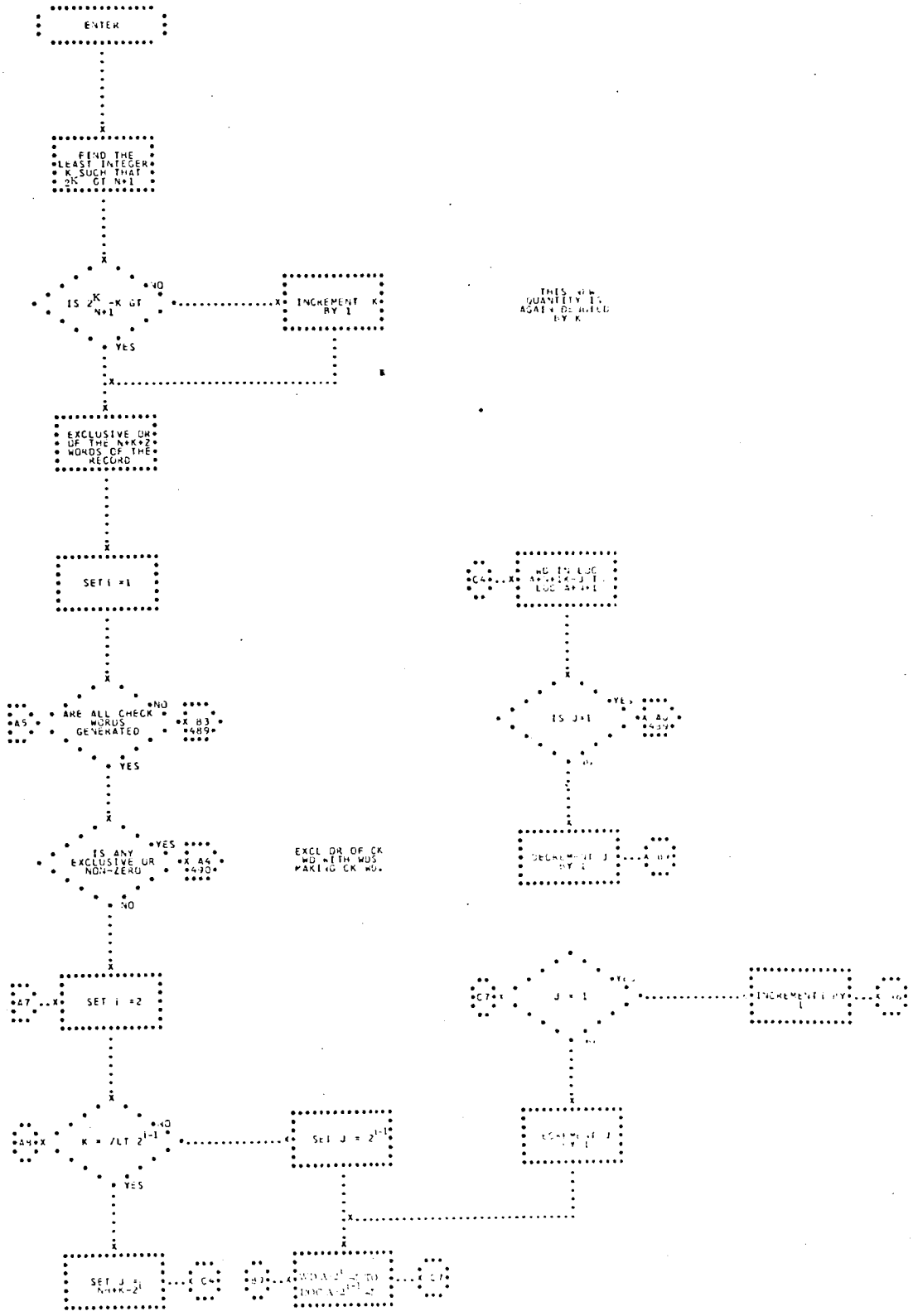
ENTER
FIND THE LEAST INTEGER K SUCH THAT 2K GT N+1
IS 2K -K GT N+1
NO
YES
INCREMENT K BY 1
THIS NEW QUANTITY IS AGAIN DEVIATED BY K
EXCLUSIVE OR OF THE N+K+2 WORDS OF THE RECORD
SET i =1
ARE ALL CHECK WORDS GENERATED
A5
X B3 489
IS ANY EXCLUSIVE OR NON-ZERO
X A4 490
EXCL OR OF CK WD WITH WDS MAKING CK WD.
SET i =2
A7
K = /LT 2i-1
A8
SET J = 2i-1
SET J = N+K-2i
C4
C7
IS J=1
J = 1
INCREMENT i BY 1

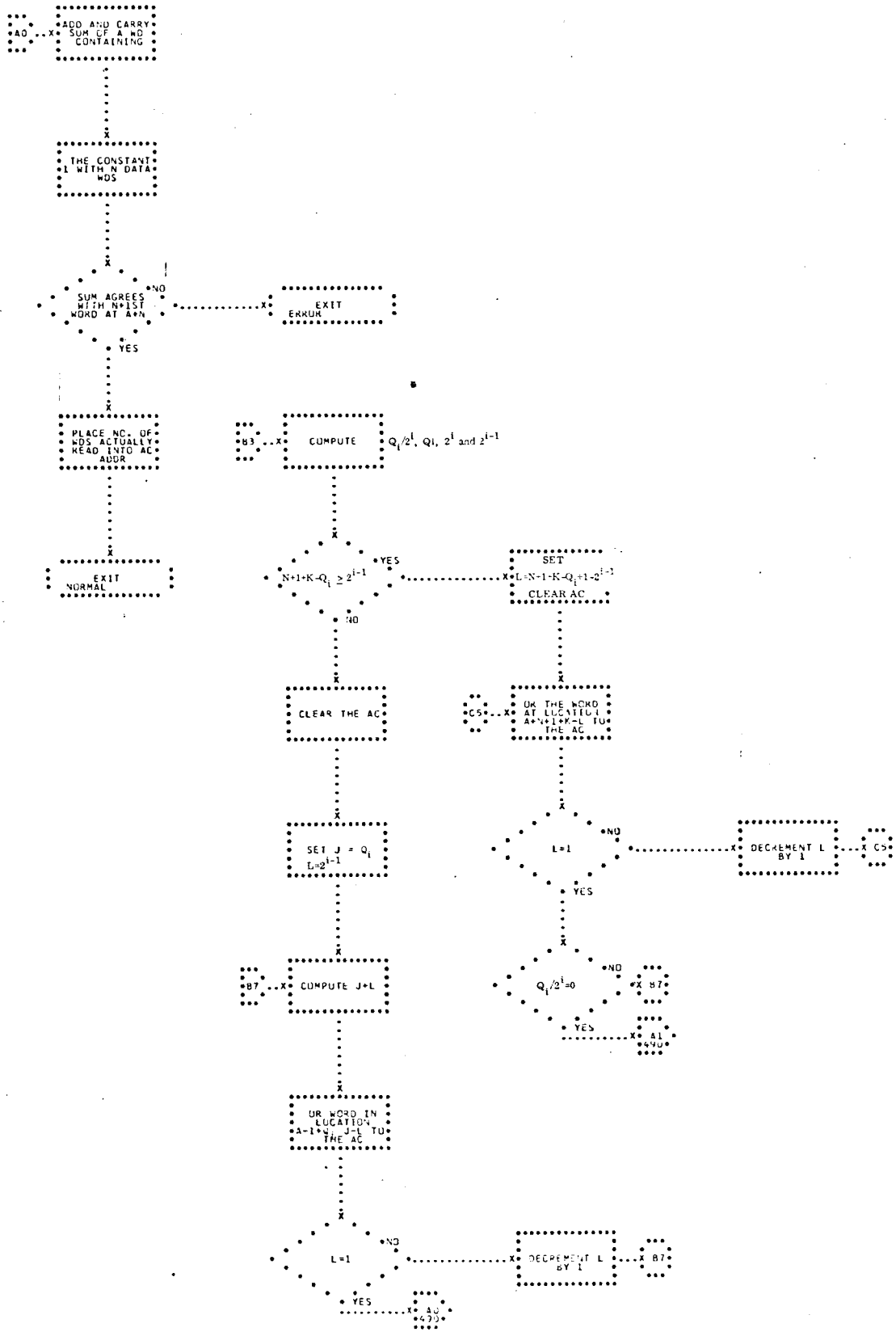
A0
ADD AND CARRY SUM OF A AND CONTAINING
THE CONSTANT 1 WITH N DATA WDS
SUM AGREES WITH N+1ST WORD AT A+N
NO
EXIT ERROR
YES
PLACE NO. OF WDS ACTUALLY READ INTO AC ADDR
EXIT NORMAL
B3
COMPUTE
$Q_i/2^i$, Qi, $2^i$ and $2^{i-1}$
$N+1+K-Q_i \geq 2^{i-1}$
YES
SET $L=N-1-K-Q_i+1-2^{i-1}$ CLEAR AC
NO
CLEAR THE AC
C5
OR THE WORD AT LOCATION A+N+1+K-L TO THE AC
SET J = $Q_i$ $L=2^{i-1}$
L=1
NO
DECREMENT L BY 1
C5
YES
B7
COMPUTE J+L
$Q_i/2^i=0$
NO
B7
YES
A1 490
OR WORD IN LOCATION A-1+N-J-L TO THE AC
L=1
NO
DECREMENT L BY 1
B7
YES
A0 490

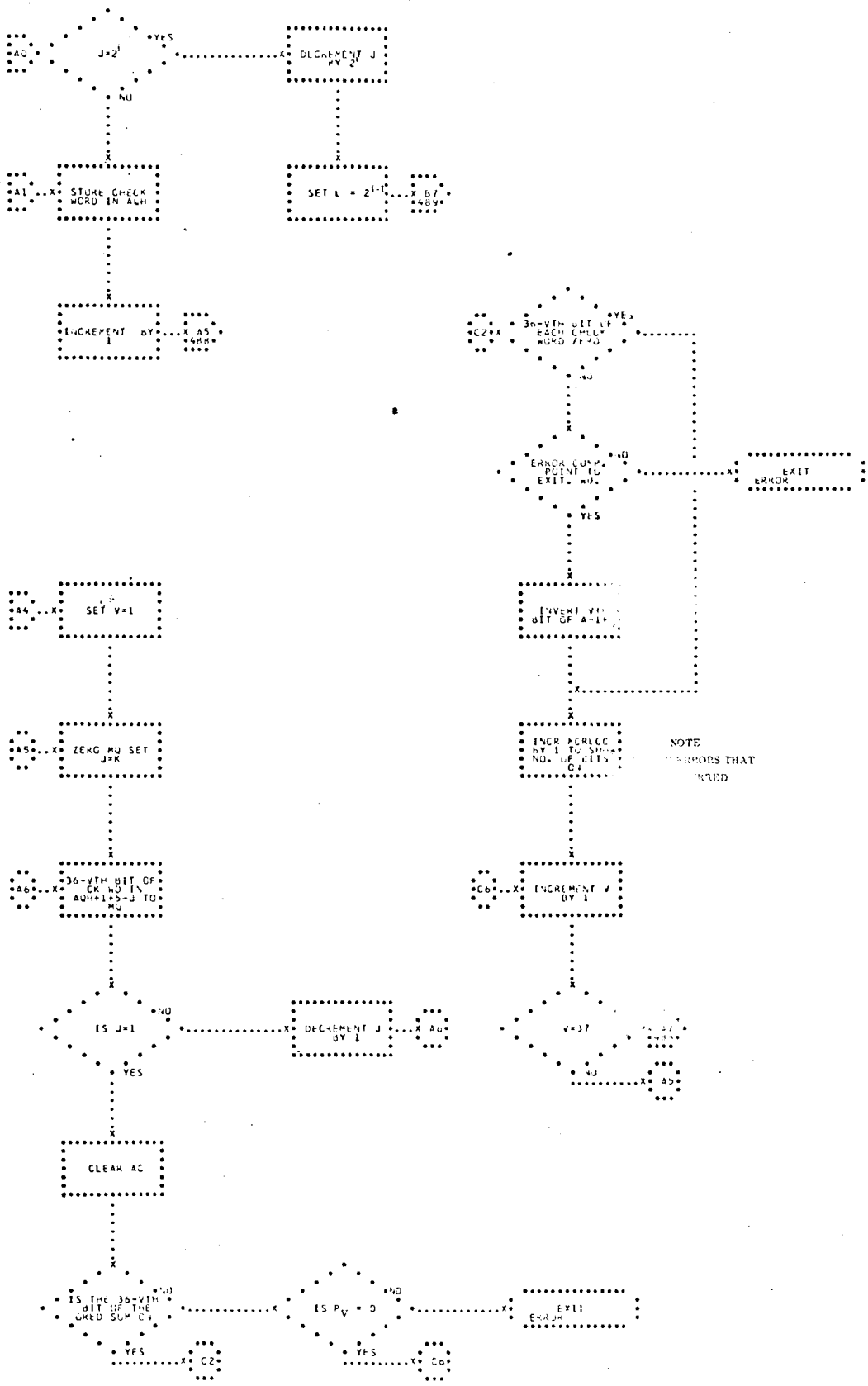
A0
J=2^i
YES
NO
DECREMENT J BY 2^i
A1
STORE CHECK WORD IN ACH
SET L = 2^(i-1)
B7
INCREMENT I BY 1
A5
C2
36-VTH BIT OF EACH CHECK WORD ZERO
ERROR COMP. POINT TO EXIT. NO.
EXIT ERROR
A4
SET V=1
INVERT VTH BIT OF A-1
A5
ZERO NO SET J=K
INCR ACRLCC BY 1 TO STORE NO. OF BITS
NOTE
ERRORS THAT
ISSUED
A6
36-VTH BIT OF CK WD IN AOH+1+5-J TO MQ
C6
INCREMENT J BY 1
IS J=1
DECREMENT J BY 1
A0
V=37
A5
CLEAR AC
IS THE 36-VTH BIT OF THE CKED SUM C?
IS P_V = 0
EXIT ERROR
C2
C6

## 108. MOINIT - MAIN CONTROLLER INITIALIZATION PROGRAM

AFTER THE GEMINI REAL TIME SYSTEM HAS BEEN LOADED INTO CORE STORAGE, VARIOUS INDICATORS AND CELLS MUST BE SET TO THEIR INITIAL CONDITIONS IN [illegible]ION FOR MISSION COMPUTATIONS. MOINIT BEGINS THE PROCESS OF INITIALIZATION AND SETS CONTROLS FOR THE MONITOR INITIALIZATION PROCESSOR, MYINIT, TO COMPLETE THE PROCESS. (SEE FLOWCHART.)

INPUT

A) TABLES -

TMNMSK — A 23-LOCATION T[illegible]AINING, IN THE FIRST 21 LOCATI[illegible] OCTAL MASKS TO TURN ON (SET TO ONE) INDICATORS A THROUGH U AND, IN THE LAST TWO LOCATIONS, COMPOSITE OCTAL MASKS TO TURN ON (1) INDICATORS C-Q AND S-U AND (2) INDICATORS A AND B.

TMREFR — THE MONITOR REFERENCE TABLE CONSISTING OF ONE ENTRY, IN ORDER OF PRIORITY, FOR EACH ROU[illegible] THE PRIORITY TABLE. THE DECR[illegible] OF EACH ENTRY CONTAINS EITHER THE NUMBER OF THE FILE ON THE JOB TAPE IN WHICH THE ROUTINE CAN BE FOUND OR THE NUMBER OF THE DISK BUFFER USED BY THE ROUTINE IF THE ROUTINE RESIDES ON THE DISK. THE PREFIX OF EACH ENTRY IN[illegible]TES WHERE THE ROUTINE IS LOCATED [illegible]LLY -

-0 ROUTINE IS IN A OR B CORE

+1 ROUTINE IS ON TAPE
+2 ROUTINE IS ON DISK

B) ADDRESSES -

TMBF01 THE ADDRESS OF THE FIRST LOCATION OF THE DISK BUFFERING REFERENCE TABLES

TMHSB5, ENDDCC THE FIRST AND LAST LOCATIONS OF THE DCC INPUT AND OUTPUT BUFFERS

TMMPRK, TMLHBD THE FIRST AND LAST LOCATIONS OF THE LAUNCH OUTPUT TABLES

TMRM01, TMRM06 THE FIRST AND LAST LOCATIONS OF THE RADAR DATA BLOCKS

FCABCL, LCABCL THE FIRST AND LAST LOCATIONS OF THE A-CORE AND B-CORE COMMUNICATIONS TABLE

FCEXCB, LCEXCB THE FIRST AND LAST LOCATIONS OF THE TABLE CONTAINING THE PRIORITY/ROUTINE NUMBERS OF THOSE ROUTINES EXECUTED IN B-CORE

C) CONSTANTS -

| | | |
|---|---|---|
| K00000 | DEC | 0 |
| K40007 | OCT | 44017 |
| KD0001 | PZE | 0,0,1 |

D) COMMUNICATION CELLS -

MCXXXX OCT 377777777777

MCWWWV CONTAINS, DURING AN UNSIMULATED RUN, THE CURRENT GMT IN FIXED POINT 8.3 MILLISECONDS, B35. IN A SIMULATED RUN, THIS CELL IS ZERO.

E) PARAMETERS -

NN NUMBER OF ROUTINES IN PRIORITY LIST

```
B   EQU 2  (INDICATOR B)
C   EQU 3  (INDICATOR C)
D   EQU 4  (INDICATOR D)
E   EQU 5  (INDICATOR E)
H   EQU 8  (INDICATOR H)
R   EQU 18 (INDICATOR R)
MNBFLX     NUMBER OF ENTRIES PER FILE IN THE DISK
           BUFFERING REFERENCE TABLES

           PRIORITY/ROUTINE NO. OF -
MNACQD          MYACQD
MNDIFC          MPDIFC
MNDIFK          MPDIFK
MNDIFM          MPDIFM
MNEDBD          MPEDBD
MNINIT          MYINIT
MNLED1          MPLED1
MNLED2          MPLED2
MNORMC          MPORMC
MNTABU          MYTABU
MUDUMP     EQU 3      BINARY CORE DUMP TAPE
MULTP1     EQU 6      LOGGING TAPE
MULTP2     EQU 7      AUXILIARY LOGGING TAPE
MUREST     EQU 9      RESTART TA
MUTAPA     EQU 1      CHANNEL A SYSTEM TAPE
MUTAPB     EQU 8      CHANNEL B SYSTEM TAPE
```

F) SUBROUTINES -

```
MSCHEK     CHECKS FOR OVERLAP OF PROGRAMS IN CORE
           STORAGE
MYPSLF     ACTIVATES/DEACTIVATES SUBCHANNELS OF
           DCC
```

OUTPUT

A) TABLES -

TMBFO1 THE TAG OF THE FIRST OF 3-WORD ENTRIES FOR EACH FILE BUFFERED FROM DISK STORAGE IS SET TO ALL ONES

TMFRPR THE MONITOR PRIORITY REFERENCE TABLE CONSISTING OF ONE CELL FOR EACH OF THE NN ROUTINES IN THE PRIORITY LIST. THE ADDRESS OF EACH WORD CONTAINS THE PRIORITY/ROUTINE NUMBER, THE DECREMENT CONTAINS ZERO, IF THE ROUTINE IS TO BE EXECUTED IN A-CORE, OR ONE, IF THE ROUTINE IS TO BE EXECUTED IN B-CORE.

TMPRIO THE MONITOR PRIORITY TABLE CONSISTING OF ONE ENTRY FOR EACH OF THE NN ROUTINES IN THE PRIORITY LIST. SUPPRESSION BITS ARE TURNED ON IN THE TMPRIO ENTRIES FOR CERTAIN ROUTINES.

B) COMMUNICATION CELLS -

BOLSTY CONTAINS A TRANSFER TO THE OUTPUT PROGRAM, OOLSTY

BSDISK CONTAINS A TRANSFER TO THE DISK BUFFERING PROGRAM, MSDISK

MYENBA CONTAINS THE ENABLE MASK FOR THE CHANNELS USED IN THE GEMINI REAL TIME SYSTEM

C) CORE LOCATIONS (OCTAL) -

2 CONTAINS TTR MTQTSX

4 CONTAINS TTR MORTCC

10 CONTAINS TTR MTFLPT

METHOD

MOINIT RECEIVES CONTROL FROM MXLOAD AFTER THE GEMINI REAL TIME SYSTEM HAS BEEN LOADED INTO CORE STORAGE AND ONTO THE DISK. IT TURNS OFF THE TRANSFER TRAP MODE, FLOATING TRAP MODE, AND MULTIPLE TAG MODE INDICATORS. ALL CHANNELS OF THE COMPUTER AND SUBCHANNELS OF THE DCC ARE THEN DISABLED. AFTER TURNING OFF THE I/O CHECK LIGHT, MOINIT ENTERS SUBROUTINE MSCHEK TO DETERMINE WHETHER PROGRAMS OF THE GEMINI REAL TIME SYSTEM OVERLAP IN CORE STORAGE. IF OVERLAP IS FOUND, MSCHEK PRINTS AN ON-LINE MESSAGE STATING WHICH PROGRAMS ARE AFFECTED. THE USER THEN HAS THE OPTION OF CONTINUING NORMAL FLOW OR OF REPAIRING THE ERROR, REMAKING JOB TAPES, AND STARTING AGAIN.

IF THE FORMER OPTION IS SELECTED UPON RETURN FROM MSCHEK, MOINIT INITIALIZES THE TRANSFER TRAP LOCATIONS FOR TRAPS RESULTING FROM EXECUTION OF THE QTSX MACRO (LOCATION 2), THE DCC (LOCATION 4), AND FLOATING POINT UNDER FLOW OR OVERFLOW (LOCATION 10). THE ENABLE MASK IS TURNED ON FOR THE MONITOR INITIALIZATION PROCESSOR, THEN SET UP, AND THE TAGS OF THE FIRST OF THE 3-WORD ENTRIES IN THE DISK BUFFERING TABLES FOR EACH BUFFERED FILE ARE SET TO ALL ONES. THE B-INDICATOR (READY) IS THEN TURNED ON FOR THE MONITOR INITIALIZATION PROCESSOR, MYINIT.

NEXT, MOINIT REWINDS ALL TAPES USED IN THE GEMINI REAL TIME SYSTEM AND TURNS OFF THE END-OF-FILE AND REDUNDANCY INDICATORS FOR EACH CHANNEL. THE FIRST FIVE RADAR DATA BLOCKS, THE DCC INPUT AND OUTPUT BLOCKS AND THE LAUNCH OUTPUT BLOCKS ARE THEN CLEARED, AND THE A- AND B-CORE COMMUNICATION TABLE IS MOVED INTO UPPER B-CORE.

THE DECREMENT OF TMFRPR ENTRY FOR EACH ROUTINE EXECUTED IN B-CORE IS SET TO ONE, AND THE R-BIT IS TURNED ON IN THE TMPRIO ENTRY FOR EACH ROUTINE NOT CURRENTLY IN CORE STORAGE. LASTLY, MOINIT SUPPRESSES CERTAIN ROUTINES, EITHER UNTIL THE ORBIT PHASE HAS BEEN ENTERED OR UNTIL THE SUBCHANNEL SUPPLYING INPUT HAS BEEN ACTIVATED, AND ACTIVATES THE SUBCHANNELS OF THE DCC. CONTROL IS THEN GIVEN TO MOPRIO.

USAGE

MOINIT IS ENTERED FROM MXLOAD AND EXITS TO MOPRIO.

A) STORAGE REQUIRED -
   104 LOCATIONS

B) TIMING REQUIRED (7094) -
   DOES NOT AFFECT REAL-TIME MISSION

C) MACRO -
   TRNON

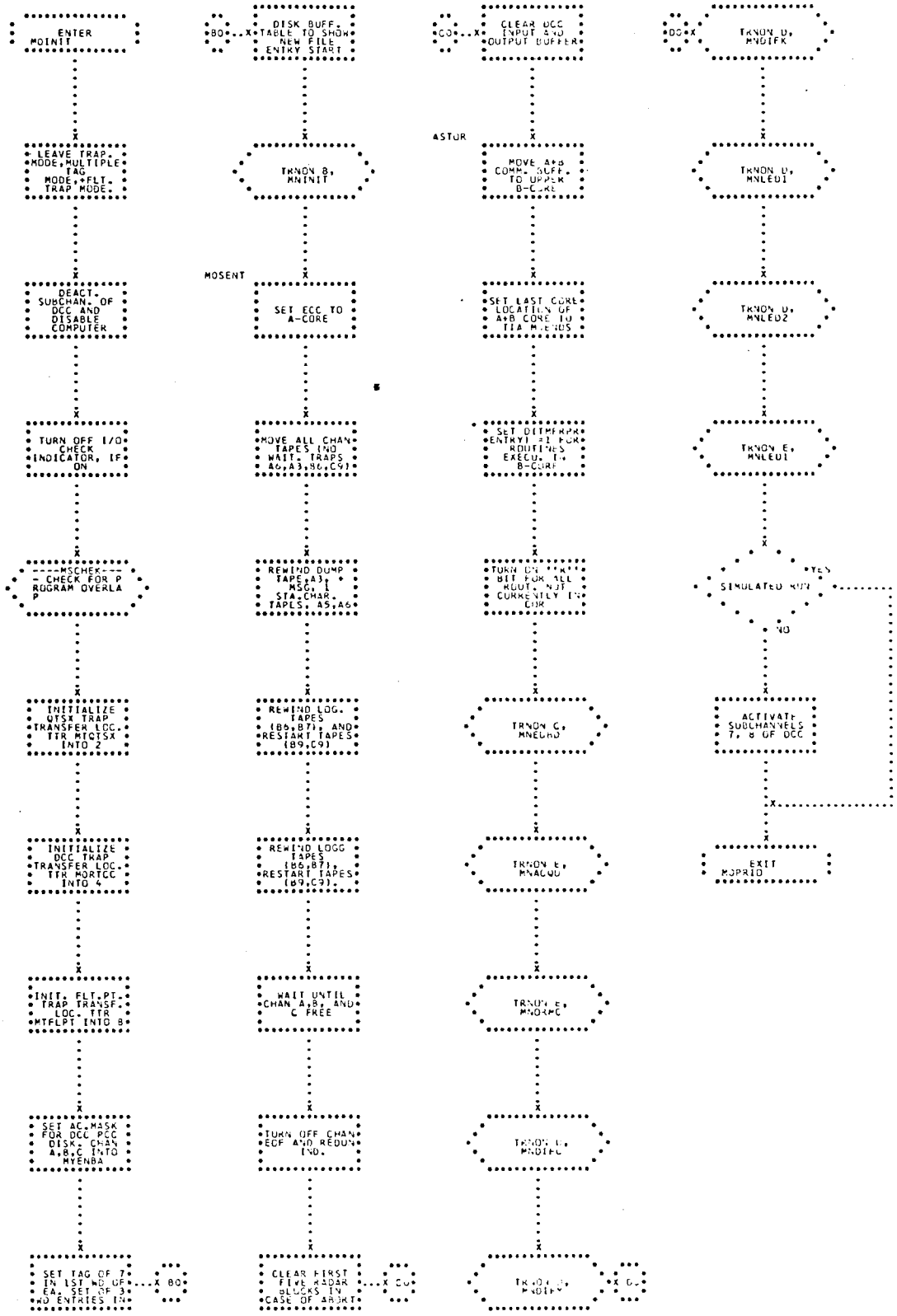
ENTER MOINIT
LEAVE TRAP. MODE,MULTIPLE TAG MODE,+FLT. TRAP MODE.
DEACT. SUBCHAN. OF DCC AND DISABLE COMPUTER
TURN OFF I/O CHECK INDICATOR, IF ON
----MSCHEK---- CHECK FOR PROGRAM OVERLAP
INITIALIZE QTSX TRAP TRANSFER LOC. TTR MTQTSX INTO 2
INITIALIZE DCC TRAP TRANSFER LOC. TTR MORTCC INTO 4
INIT. FLT.PT. TRAP TRANSF. LOC. TTR MTFLPT INTO 8
SET AC.MASK FOR DCC PCC DISK. CHAN A,B,C INTO MYENBA
SET TAG OF 7 IN 1ST WD OF EA. SET OF 3 WD ENTRIES IN
BO
DISK BUFF. TABLE TO SHOW NEW FILE ENTRY START
TRNON B, MNINIT
MOSENT
SET ECC TO A-CORE
MOVE ALL CHAN TAPES (NO WAIT. TRAPS A6,A3,B6,C9)
REWIND DUMP TAPE,A3, + MSG, 1 STA.CHAR. TAPES, A5,A6
REWIND LOG. TAPES (B6,B7), AND RESTART TAPES (B9,C9)
REWIND LOGG TAPES (B6,B7), RESTART TAPES (B9,C9).
WAIT UNTIL CHAN A,B, AND C FREE
TURN OFF CHAN EOF AND REDUN IND.
CLEAR FIRST FIVE RADAR BLOCKS IN CASE OF ABORT
CO
CLEAR DCC INPUT AND OUTPUT BUFFER
ASTOR
MOVE A+B COMM. BUFF. TO UPPER B-CORE
SET LAST CORE LOCATION OF A+B CORE TO TIA MNENDS
SET DITMFRPR ENTRY1 =1 FOR ROUTINES EXECU. IN B-CORE
TURN ON "R" BIT FOR ALL ROUT. NOT CURRENTLY IN COR
TRNON C, MNEDBD
TRNON E, MNACQD
TRNON E, MNORMC
TRNON D, MNDIFC
TRNON D, MNDIFK
DO
TRNON D, MNLED1
TRNON D, MNLED2
TRNON E, MNLED1
SIMULATED RUN
YES
NO
ACTIVATE SUBCHANNELS 7, 8 OF DCC
EXIT MOPRIO

## 109. MYINIT - MONITOR INITIALIZATION PROCESSOR

MYINIT CONTINUES THE PREPARATION OF THE GEMINI REAL TIME SYSTEM FOR DATA RECEIVING, PROCESSING, AND TRANSMISSION. (SEE FLOWCHART.)

INPUT

A) TABLES -

TMONTH A 12-LOCATION TABLE CONTAINING IN EACH LOCATION THE BCD NAME OF THE MONTH AND LAST DAY OF THE MONTH.

TMTYMO A 12-LOCATION TABLE CONTAINING IN EACH LOCATION THE TTY CODE NAME OF THE MONTH.

TMSTCH THE FIRST CELL IN THE STATION CHARACTERISTICS REFERENCE TABLE IS SET TO ZERO WHEN THE CHARACTERISTICS TAPE HAS BEEN READ.

B) COMMUNICATION CELLS

MCORBN CONTAINS NON-ZERO IF ENTRY IS FOR RESTART PROCEDURE, OTHERWISE ZERO.

C) CONSTANTS -

K00010 DEC 10
K00013 DEC 13
K00024 DEC 24
K00060 DEC 60
K00063 DEC 63

OUTPUT

A) COMMUNICATION CELLS -

MCACTV THE ACTIVATION MASK FOR SUBCHANNELS OF THE DCC IS UPDATED TO INCLUDE ADDITIONAL

SUBCHANNELS -

1) NORMAL OPERATION - ADDITIONAL SUB-CHANNELS 1, 2, 7, 8, 28, 29, 30 ARE PLACED IN THE MASK
2) RESTART OPERATION - ADDITIONAL SUB-CHANNELS 7, 8, 29 ARE PLACED IN THE MASK.

MCDATE CONTAINS THE BCD NAME OF THE CURRENT MONTH AND THE CURRENT DAY AS ENTERED THROUGH THE KEYS.

MCDAYS CONTAINS CURRENT DAY AS ENTERED THROUGH THE KEYS.

MCHFS1 CONTAINS, IN ITS ADDRESS, THE NUMBER OF ROUTINES IN TMCYCL EXAMINED BY THE HALF-SECOND TRAP PROCESSOR, MTHFSC.

MCMNTH CONTAINS CURRENT OCTAL MONTH AS ENTERED THROUGH THE KEYS.

MCREST CONTAINS RESTART TIME CONVERTED TO SECONDS FROM THE DAYS, HOURS, MINUTES, AND SECONDS FORMAT ENTERED THROUGH THE KEYS.

MCSPD3 SIGN SET NEGATIVE, IF IN RESTART, TO INDICATE TO THE SANBORN PLOT ROUTINE (OOLPBD) THAT IT IS PLOTTING OBSERVED MINUS COMPUTED VALUES RATHER THAN STRIP-CHARTS VALUES.

MCTTR2 SAME FORMAT AS MCREST

MCTYDT CONTAINS THE TTY CODE NAME AND THE CURRENT DAY AS ENTERED THROUGH THE KEYS.

METHOD

UPON ENTRY, MYINIT ACTIVATES SUBCHANNEL 8 OF THE DCC (THE MINUTE CLOCK) AND HALTS TO ALLOW THE USER TO ENTER THE OCTAL MONTH AND DAY IN THE KEYS -

| S | 1 23 | 24 29 | 30 35 |
|---|---|---|---|
| | | CURRENT NO. (OCTAL) | CURRENT DAY (OCTAL) |

| KEY(S) | CONTENTS |
|---|---|
| S-23 | ZERO |
| 24-29 | NO. OF CURRENT MONTH IN OCTAL, RIGHT JUSTIFIED |
| 30-35 | CURRENT DAY IN OCTAL, RIGHT JUSTIFIED |

THE SIGN KEY IS USED ONLY WHEN [illegible]ING THE TIME OF THE BEGINNING OF NORMAL OPERATION. T[illegible] SHOULD BE RESET BEFORE CURRENT DATE IS ENTERED. IN ADDITION, CHECKS ARE MADE BY MYINIT TO DETERMINE WHETHER (1) A MONTH HAS BEEN ENTERED IN THE KEYS, (2) THE MONTH ENTERED IN KEYS DOES NOT EXCEED 12 DECIMAL, AND (3) THE CURRENT DAY ENTERED IN THE KEYS DOES NOT EXCE[illegible] THE MAXIMUM NUMBER OF DAYS IN THE CURRENT MONTH.

IF ANY OF THE ABOVE CONDITIONS IS NOT MET, MYINIT PRINTS AN ERROR MESSAGE ON-LINE AND HALTS TO ALLOW FOR CORRECTION OF THE ERROR. WHEN THE START BUTTON IS AGAIN PRESSED, MYINIT REPEATS ALL THE ABOVE CHECKS AND ACTS ACCORDINGLY.

ONCE MYINIT HAS FOUND THAT NO ERR[illegible] CONDITION EXISTS, IT SAVES THE MONTH AND DAY IN [illegible]ATE IN BCD AND IN MCTYDT IN TTY CODE. THE MESSAGE ROUTINE IS THEN QUEUED TO PRINT THE MONTH AND DAY ON-LINE.

THE B-INDICATORS IN THE PRIORITY TABLE ARE TURNED ON FOR THE PROGRAMS WHICH READ THE CALIBRATION FILE (MYRCAL) AND THE STATION CHARACTERISTI[illegible] FILE (MYSCRD).

UNTIL THESE FILES HAVE BEEN READ, THE CALIBRATION PROGRAM (MYCALB) IS SUPPRESSED BY MYINIT. AFTER THE STATION CHARACTERISTICS FILE HAS BEEN READ, MYINIT HALTS TO PREVENT CYCLING THROUGH THE OUTPUT PROGRAM UNTIL START IS DEPRESSED.

WHEN THE START BUTTON IS PRESSED, MYINIT DETERMINES WHETHER THIS IS A NORMAL OPERATION OR A RESTART PROCEDURE.

FOR A NORMAL OPERATION, THE CELL MCHFS1 IS SET TO THE NUMBER OF ENTRIES IN TMCYCL TO BE EXAMINED BY THE HALF-SECOND TRAP PROCESSOR, MTHFSC. SUBCHANNELS 1, 2, 7, 8, 28, 29, AND 30 OF THE DCC ARE THEN ACTIVATED, AND CONTROL PASSES TO MOPRIO. THE GEMINI REAL TIME SYSTEM IS NOW READY FOR DATA TRANSMISSION, PROCESSING, AND OUTPUT.

FOR A RESTART, MYINIT STOPS TO ALLOW THE USER TO SET THE RESTART TIME IN THE KEYS -

| S | 1 — 11 | 12 — 17 | 18 — 23 | 24 — 29 | 30 — 35 |
|---|---|---|---|---|---|
| | | DAY OF MISSION (OCTAL) | HOUR (OCTAL) | MINS (OCTAL) | SECS (OCTAL) |

| KEY(S) | CONTENTS |
|---|---|
| S-11 | ZERO |
| 12-17 | DAY OF MISSION IN OCTAL, RIGHT JUSTIFIED (FIRST DAY = 0) |
| 18-23 | HOURS IN OCTAL, RIGHT JUSTIFIED |
| 24-29 | MINUTES IN OCTAL, RIGHT JUSTIFIED |
| 30-35 | SECONDS IN OCTAL, RIGHT JUSTIFIED |

WHEN START IS PRESSED, THE TIME IN THE KEYS IS CONVERTED TO FIXED POINT SECONDS, SAVED, AND PRINTED ONLINE. THE RESTART PROGRAM, MYSRST, IS READIED TO PROCESS THE RESTART TAPES BUT IS ALSO SUPPRESSED UNTIL THE SUFFIX TO THE MAIN LAUNCH CALCULATIONS PROGRAM, MFCCMN, CAN BE ENTERED. INDICATIONS ARE THEN SET FOR THE SANBORN

PLOTTER PROGRAM, OOLPBD, TO PLOT ORBITAL VALUES RATHER THAN STRIP CHART VALUES, AND SUBCHANNELS 7, 8, 29, AND 30 OF THE DCC ARE ACTIVATED. CONTROL THEN PASSES TO MOPRIO.

USAGE

MYINIT IS ENTERED FROM AND EXITS TO MOPRIO.

A) STORAGE REQUIRED -

132 LOCATIONS

B) TIMING 7094 -

INDETERMINANT BECAUSE IT DEPENDS ON THE TIME SYSTEM INITIALIZATION BY MTWWVI AND ON THE TIME PROCESSING OF THE STATION CHARACTERISTICS FILE BY MYSCRD TAKES. IN ADDITION, SINCE MYINIT MUST BE EXECUTED PRIOR TO DATA PROCESSING, THE TIMING CONSIDERATIONS HAVE NO EFFECT ON REAL-TIME SYSTEM OPERATION.

C) MACROS -

QENBZ

QENBA

TRNON

TRNOF

QUEUE

QPSLF

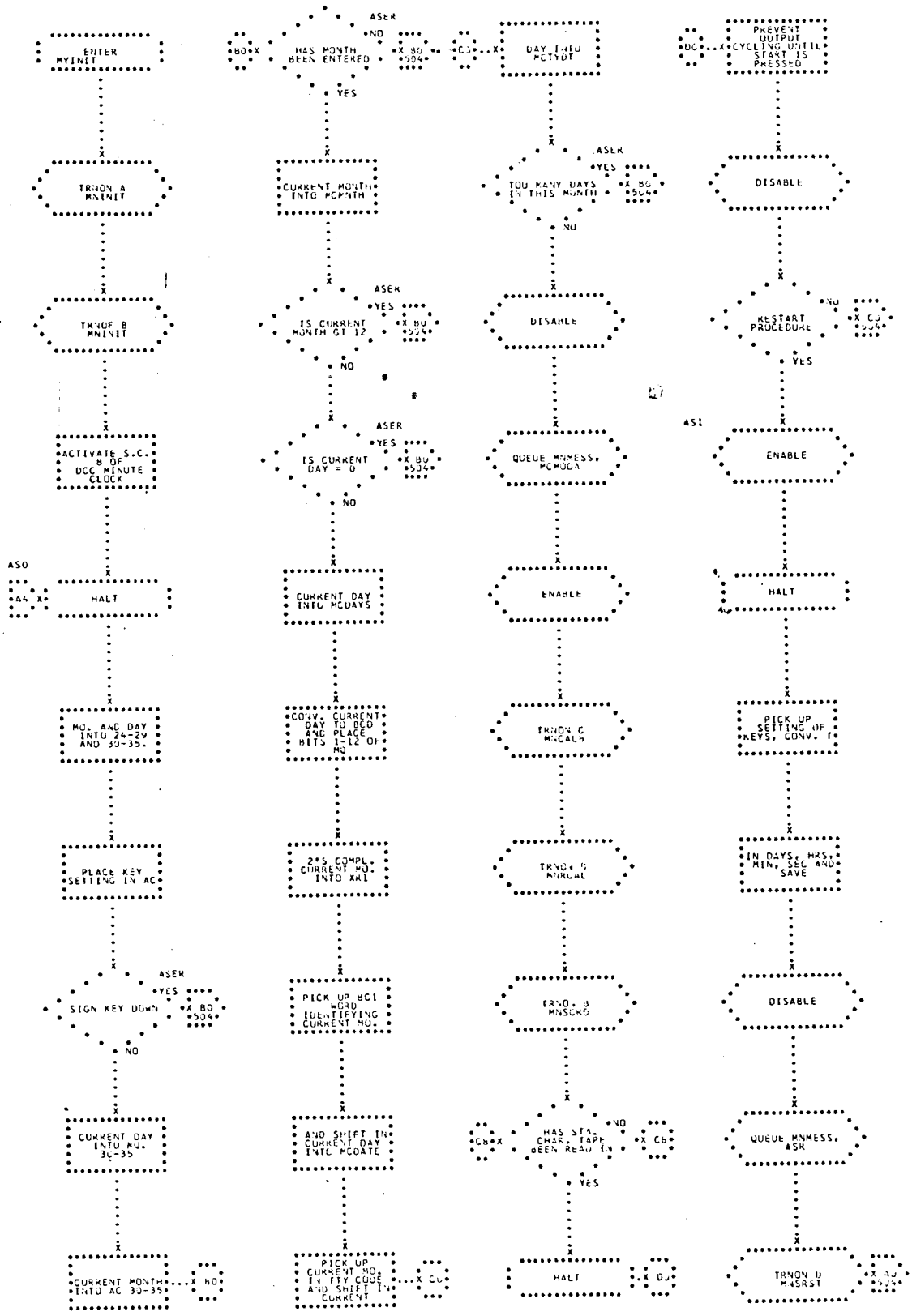
ENTER MYINIT
TRNON A MNINIT
TRNOF B MNINIT
ACTIVATE S.C. 8 OF DCC MINUTE CLOCK
ASO
A4
HALT
MO. AND DAY INTO 24-29 AND 30-35.
PLACE KEY SETTING IN AC
ASER
YES
SIGN KEY DOWN
X BO 504
NO
CURRENT DAY INTO MO. 30-35
CURRENT MONTH INTO AC 30-35
X BO
ASER
NO
BO
HAS MONTH BEEN ENTERED
X BO 504
YES
CURRENT MONTH INTO MCMNTH
ASER
YES
IS CURRENT MONTH GT 12
X BO 504
NO
ASER
YES
IS CURRENT DAY = 0
X BO 504
NO
CURRENT DAY INTO MCDAYS
CONV. CURRENT DAY TO BCD AND PLACE BITS 1-12 OF MO
2'S COMPL. CURRENT MO. INTO XR1
PICK UP BCI WORD IDENTIFYING CURRENT MO.
AND SHIFT IN CURRENT DAY INTO MCDATE
PICK UP CURRENT MO. IN TTY CODE AND SHIFT IN CURRENT
X CO
DAY INTO MCTYDT
ASER
YES
TOO MANY DAYS IN THIS MONTH
X BO 504
NO
DISABLE
QUEUE MNMESS, MCMODA
ENABLE
TRNON C MNCALB
TRNO. D MNRCAL
TRNO. B MNSCRD
NO
C8
HAS STA. CHAR. TAPE BEEN READ IN
X C8
YES
HALT
X DO
PREVENT OUTPUT CYCLING UNTIL START IS PRESSED
DISABLE
NO
RESTART PROCEDURE
X CO 504
YES
ASI
ENABLE
HALT
PICK UP SETTING OF KEYS, CONV. T
IN DAYS, HRS, MIN, SEC AND SAVE
DISABLE
QUEUE MNMESS, ASR
TRNON D MNSRST
X AO 504

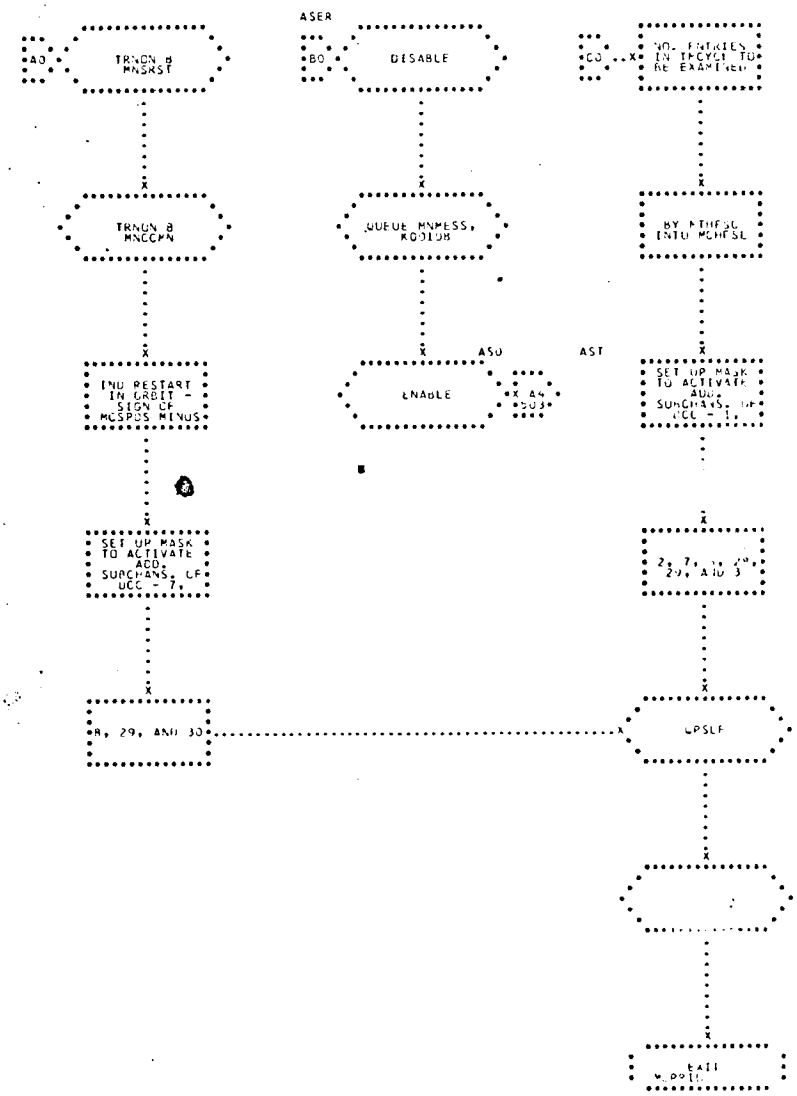
ASER
A0
TRNON B MNSRST
B0
DISABLE
C0
NO. ENTRIES IN TMCYCL TO BE EXAMINED
TRNON B MNCCMN
QUEUE MNMESS, K0010B
BY MTHFSC INTO MCHFSL
ASO
AST
IND RESTART IN ORBIT - SIGN OF MCSPOS MINUS
ENABLE
A4 503
SET UP MASK TO ACTIVATE ADD. SUBCHANS. OF UCC - 1.
SET UP MASK TO ACTIVATE ADD. SUBCHANS. OF UCC - 7.
2, 7, 8, 28, 29, AND 3
8, 29, AND 30
UPSLF
EXIT

## 110. MYSCRD - MONITOR STATION CHARACTERISTICS TAPE PROCESSOR

MYSCRD FUNCTIONS ONLY DURING THE INITIALIZATION PHASE OF THE GEMINI PROGRAMMING SYSTEM. THIS PROCESSOR IS USED IN CONJUNCTION WITH ITS TRAP PROCESSOR, MTENST, TO READ INTO CORE STORAGE THE STATION CHARACTERISTICS FROM THE STATION CHARACTERISTICS TAPE. MYSCRD INITIATES TRANSMISSION OF ONE RECORD INTO CORE STORAGE. WHEN TRANSMISSION IS COMPLETED, A TRAP OCCURS AND MTENST RECEIVES CONTROL AND CHECKS FOR AN ERROR IN TRANSMISSION. MYSCRD RECEIVES CONTROL AGAIN, PROCESSES THE RECORD JUST READ, AND, IF MORE RECORDS REMAIN TO BE PROCESSED, MYSCRD INITIATES TRANSMISSION OF THE NEXT RECORD. THE CYCLE CONTINUES UNTIL ALL RECORDS HAVE BEEN READ AND PROCESSED. (SEE FLOWCHART.)

THE STATION CHARACTERISTICS TAPE READING CYCLE IS ILLUSTRATED IN FIGURE 1. THE STATION CHARACTERISTICS BLOCK IS ILLUSTRATED IN TABLE 1.

INPUT

A) TABLES -

TMSTCH A 25-CELL TABLE WITH THE FOLLOWING FORMAT -

```
TMSTCH OCT  -377 777 777 777
  +  1 PZE  TMCHAR-1
  +  2 PZE  TMCHAR + MNCHAR-1
  +  3 PZE  TMCHAR + 2* MNCHAR-1
  +  4 PZE  TMCHAR + 3* MNCHAR-1
     .
     .
```

+ 24 PZE TMCHAR + MNCHAR-1

THE FIRST CELL IS USED AS AN INTERNAL INDICATOR FOR MYSCRD AND AS A COMMUNICATION CELL BY MYINIT. INITIALLY, TMSTCH HAS THE VALUE SHOWN ABOVE. IN THE FIRST PASS THROUGH MYSCRD, WHEN TRANSMISSION IS INITIATED TO READ THE IDENTIFICATION RECORD, A 5 IS STORED IN TMSTCH. ON THE SECOND ENTRY TO MYSCRD, IF THE ERROR CORRECTION CODES ARE SUCCESSFULLY REMOVED FROM STATION CHARACTERISTICS BLOCK, A 6 IS STORED IN TMSTCH. AFTER THE LAST STATION CHARACTERISTICS BLOCK HAS BEEN READ AND ERROR-CORRECTED, TMSTCH IS CLEARED. TMSTCH + 1 CONTAINS THE LOCATION PRECEDING THE PERMANENT CORE LOCATION OF STATION CHARACTERISTICS BLOCK FOR THE FIRST RADAR STATION, THE CAPE KENNEDY AN/PFS-16. SYMBOLICALLY, THIS LOCATION IS - TMCHAR-1 (THE LOCATION OF THE FIRST WORD IN THE BLOCK IS TMCHAR). TMSTCH+2 CONTAINS THE LOCATION PRECEDING THE PERMANENT CORE STORAGE LOCATION OF THE STATION CHARACTERISTICS BLOCK FOR THE SECOND RADAR STATION. THE GRAND BAHAMA ISLAND AN/FPS-16 -TMCHAR + MNCHAR-1. TMSTCH+17 CONTAINS THE LOCATION PRE-

CEDING THE PERMANENT CORE STORAGE LOCATION OF THE STATION CHARACTERISTICS BLOCK FOR THE LAST RADAR STATION, THE EGLIN VERLORT - TMCHAR +16* MNCHAR-1. THE NEXT TWO LOCATIONS IN TMSTCH R[illegible] TO THE TWO BERMUDA RADARS. THE LAST FIVE ENTRIES IN TMSTCH ARE REFERENCE STATION CHARACTERISTICS BLOCKS FOR THE FIVE NONRADAR TELEMETRY STATIONS IN THE GEMINI NETWORK.

TMBFBK — A TEMPORARY STORAGE BUFFER INTO WHICH THE STATION CHARACTERISTICS TAPE RECORDS AR[illegible] AND ARE ERROR-CORRECTED PRIOR TO BEING MOVED TO PERMANENT LOCATIONS.

B) COMMUNICATION CELLS -

MUSCTP AND

MUSCT1 — TAPE UNIT ADDRES[illegible] OF THE PRIMARY AND AUXILIARY STATION CHARACTERISTICS TAPES, A7 AND 8, RESPECTIVELY. THE TAPES MUST BE WRITTEN IN BINARY WITH ERROR CORRECTION CODES INCLUDED. THE NUMBER [illegible] STATION CHARACTERISTICS RECORDS, MNSCNO, AND THE WORD LENGTH OF EACH RECORD, MNCHAR, ARE SPECIFIED AS PARAMETERS AND AS SUCH MAY ASSUME ANY VALUE. THE TAPE CONSISTS OF ONE FILE.

MCSCER — USED BY MYSCRD AND MTENST IN READING THE STATION CHA[illegible]RISTICS TAPE. IF MTENST RECEIVES CONTROL ON A TRAP

FOLLOWING AN END-OF-FILE, INSTEAD OF THE IORT COMMAND, THE SIGN OF MCSCER IS SET TO NEGATIVE TO IND CATE THIS FACT TO MYSCRD. MCSCER IS ALSO USED BY MYSCRD TO INDIC ETHER THE PRIMARY OR AUXILIARY TAPE IS BEING USED. WHEN THE CONTENTS OF MCSCER ARE ZERO, THE PRIMARY TAPE IS BEING READ.

C) PARAMETERS -

MNCHAR PARAMETER DESIGNATING THE NUMBER OF WORDS, I.E., THE LENGTH OF A STATION CHARACTERISTICS BL TER THE ERROR CORRECTION CODES HAVE BEEN REMOVED. MNCHAR HAS THE VALUE OF 34.

MNSCNO PARAMETER DESIGNATING THE NUMBER OF STATION CHARACTERISTICS BLOCKS TO BE READ INTO CORE STORA . MNSCNO HAS THE VALUE OF 24. MNSCNO IS ONE LESS THAN THE NUMBER OF RECORDS ON THE STATION CHARACTERISTICS TAPE, SINCE THE FIRST RECORD IS AN IDENTIFICATION RECORD.

D) CONSTANTS -

```
K00001  DEC   1
K00005  DEC   5
K00006  DEC   6
K00084  DEC  84
K00270  DEC 270
```

E) SUBROUTINE -

MSRECC

OUTPUT

A) TABLES -

TMSTCH — THE CONTENTS OF THIS LOCATION MAY BE CHANGED DEPENDING ON THE ENTRY TO MYSCRD.

TMCHAR — THE STATION CHARACTERISTICS BLOCKS ARE STORED IN THEIR RESPECTIVE LOCATIONS IN TMCHAR.

B) COMMUNICATION CELL -

MCSCER — SET TO INDICATE WHICH STATION CHARACTERISTICS TAPE IS CURRENTLY BEING PROCESSED.

C) CONSTANT -

KLAMDO — CONTAINS LONGITUDE OF GREENWICH AT MIDNIGHT PRECEDING LAUNCH IN FLOATING POINT RADIANS.

METHOD

MYSCRD INITIALLY RECEIVES CONTROL AFTER ITS B INDICATOR IS TURNED ON BY MYINIT. THEREAFTER, THE B INDICATOR FOR MYSCRD IS TURNED ON BY MTENST AFTER EACH TRAP WHICH FOLLOWS THE READING OF A RECORD FROM THE STATION CHARACTERISTICS TAPE. FOR EVERY ENTRY, MYSCRD TURNS ITS OWN A INDICATOR ON AND B INDICATOR OFF. THE PROGRAMS WHICH USE CHANNEL A, MYMESS, MYCORD, AND MYRSYS, AND THE PROGRAMS WHICH USE THE MSRECC SUBROUTINE, MYRRRS, MYSRST, AND MYRSYS, ARE SUPPRESSED AND THE INSTRUCTION TTR MTENST IS STORED IN THE CHANNEL A TRAP CONTROL LOCATION 00013.

THE NOMINAL SEQUENCE OF OPERATIONS BY MYSCRD IS GIVEN BELOW -

A) ON THE INITIAL ENTRY TO MYSCRD, A 5 IS STORED IN

TMSTCH, THE PRIMARY STATION CHARACTERISTICS TAPE IS REWOUND, AND THE I/O COMMAND IS GIVEN TO READ THE FIRST (IDENTIFICATION) RECORD INTO CORE STORAGE. THE A INDICATOR FOR MYSCRD IS TURNED OFF AND CONTROL RETURNS TO MOPRIO.

B) ON THE SECOND PASS MYSCRD USES THE ERROR CORRECTION CODE READER SUBROUTINE, MSRECC, TO REMOVE THE ERROR CORRECTION CODES FROM THE IDENTIFICATION RECORD FIRST READ. IF A NORMAL RETURN IS GIVEN FROM THIS SUBROUTINE, THE VALUE FOR THE LONGITUDE OF ARIES IS TAKEN FROM THE SEVENTH LOCATION OF THE IDENTIFICATION RECORD AND STORED IN THE PROVIDED LOCATION, KLAMDO. A 6 IS STORED IN TMSTCH TO INDICATE THE FIRST RECORD HAS BEEN PROCESSED. MYSCRD THEN GIVES THE I/O COMMAND TO READ THE FIRST STATION CHARACTERISTICS RECORD INTO CORE. THE A INDICATOR FOR MYSCRD IS TURNED OFF AND CONTROL RETURNS TO MOPRIO.

C) ON EVERY SUCCESSIVE PASS EXCEPT THE LAST, MYSCRD USES THE MSRECC SUBROUTINE TO REMOVE THE ERROR CORRECTION CODES, STORES THE CORRECTED STATION CHARACTERISTICS BLOCK IN THE PREASSIGNED LOCATION, AND INITIATES TRANSMISSION OF THE NEXT RECORD.

IF AT ANY TIME AN END-OF-FILE PRODUCES A TRAP ON CHANNEL A DURING THE READING OF STATION CHARACTERISTICS TAPE OR IF ANY RECORD READ CANNOT BE ERROR-CORRECTED BY MSRECC, MYSCRD RESETS THE TMSTCH INDICATOR CELL, CHANGES THE ADDRESS FIELDS FOR THE INSTRUCTIONS WHICH CONTROL THE STATION CHARACTERISTICS TAPE AND ATTEMPTS TO READ THE AUXILIARY STATION CHARACTERISTICS TAPE. ANY FURTHER ERROR ENCOUNTERED PRODUCES AN ON-LINE PRINT WHICH STATES-

NEITHER STATION CHARACTERISTICS TAPE CAN BE ERROR CORRECTED. WHEN THIS OCCURS THERE IS NO ALTERNATIVE TO RELOADING THE SYSTEM.

ON THE FINAL ENTRY TO MYSCRD, TMSTCH IS CLEARED TO SIGNAL MYINIT THAT THE STATION CHARACTERISTICS TAPE HAS BEEN READ SUCCESSFULLY AND AN ON-LINE MESSAGE PROVIDES THE SAME INFORMATION TO THE COMPUTER PERSONNEL. THE PROGRAMS SUPPRESSED ON THE ORIGINAL ENTRY TO MYSCRD ARE UNSUPPRESSED AND CONTROL IS TRANSFERRED TO MOPRIO. BARRING A SYSTEM RESTART, MYSCRD IS NOT USED AGAIN. SUPPRESSED AND CONTROL IS TRANSFERRED TO MOPRIO. BARRING A SYSTEM RESTART, MYSCRD IS NOT USED AGAIN.

USAGE

MYSCRD IS ENTERED FROM AND EXITS TO MOPRIO.

A) STORAGE REQUIRED -
   108 LOCATIONS

B) MACROS -
   QENBA,
   QENBZ,
   QUEUE,
   TRNOF,
   TRNON

C) ABSOLUTE LOCATION -
   00013

D) TIME REQUIRED -
   1) MINIMUM - 0.152 MILLISECOND
   2) MAXIMUM - 4.87 MILLISECONDS
      MOST OF MAXIMUM TIME GIVEN - APPROXIMATELY 4.04 MILLISECONDS - IS TAKEN BY THE MSRECC SUBROUTINE. HOWEVER, TIME IS NOT EXTREMELY CRITICAL FOR MYSCRD SINCE THE PRO-

CESSOR FUNCTIONS ONLY IN THE PRELAUNCH (OR PRESTART) PHASE.

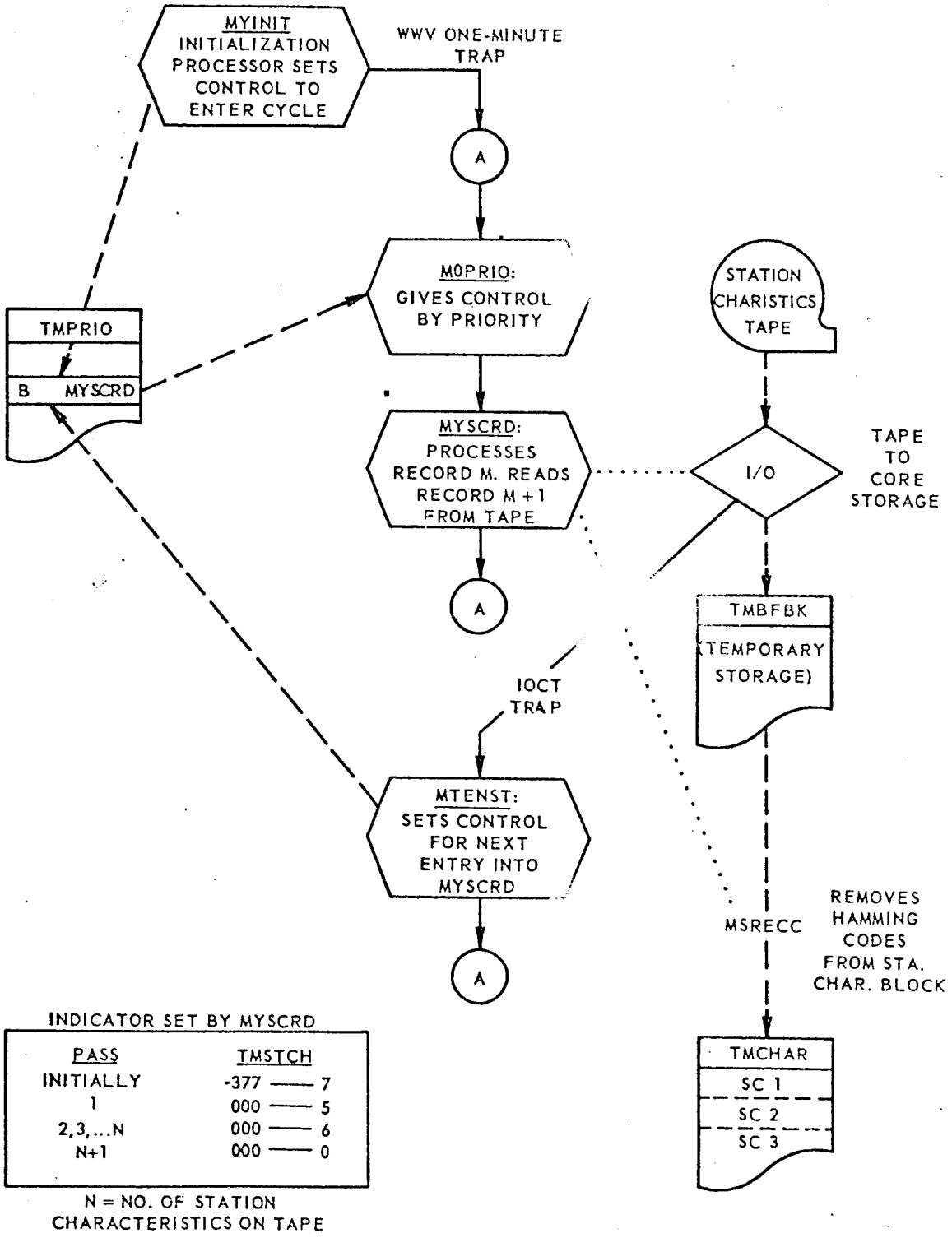


FIGURE 1. STATION CHARACTERIST TAPE READING CYCLE

## TABLE 1. STATION CHARACTERISTICS BLOCK CONTENTS

| Word No. | | |
|---|---|---|
| 1 | Prefix: | Site type (0 = AN/FPS-16; 1 = Verlort; 2 = telemetry) |
| | Decrement: | Earth sector number |
| | Address: | DCC input subchannel number |
| 2 | Prefix: | Other radars at this site (7 = AN/FPS-16; 1 = Verlort; 0 = none) |
| | Address: | Internal station number |
| 3 | DCC Output | Subchannel mask (Subchannel 10=PZE 0, 0, 16; Subchannel 11 = PZE 0, 0, 8) |
| 4, 5 | Station Name: (in BCD) | |

| | Item | Source | Source Format | Source Unit | Converted Format | Converted Unit |
|---|---|---|---|---|---|---|
| 6 | Geodetic longitude ($\lambda$) | Given | Dec. | DMS* | Flt. -Pt. | Radians |
| 7 | Geodetic latitude ($\phi$) | Given | Dec. | DMS* | Flt. -Pt. | Radians |
| 8 | Geocentric latitude ($\phi'$) | Computed | | | Flt. -Pt. | Radians |
| 9 | sin $\phi$ | Computed | | | Flt. -Pt. | Radians |
| 10 | cos $\phi$ | Computed | | | Flt. -Pt. | Radians |
| 11 | $R_s \sin(\phi-\phi')$ | Computed | | | Flt. -Pt. | Earth radii |
| 12 | $R_s \cos(\phi-\phi')$ | Computed | | | Flt. -Pt. | Earth radii |
| 13 | Radius from earth center to sta.($R_s$) | Computed | | | Flt. -Pt. | Earth radii |
| 14 | Altitude above ellipsoid (H) | Given | Dec. | Meters | Flt. -Pt. | Earth radii |
| 15 | Local vertical deflection Longitude ($\Delta\lambda$) | Given | Dec. | DMS* | Flt. -Pt. | Radians |
| 16 | Local vertical deflection Latitude ($\Delta\phi$) | Given | Dec. | DMS* | Flt. -Pt. | Radians |
| 17 | Calibrated boresight elevation | Given | Dec. | DMS* | Flt. -Pt. | Radians |
| 18 | Calibrated boresight azimuth | Given | Dec. | DMS* | Flt. -Pt. | Radians |
| 19 | Inertial longitude at reference time | Computed | | | Flt. -Pt. | Radians |
| 20 | Air pressure at ground level ($P_q$) | Given | Dec. | Millibars | Flt. -Pt. | Millibars |
| 21 | Temperature at ground level ($T_g$) | Given | Dec. | °C | Flt. -Pt. | °K |
| 22 | Water vapor content at ground level ($e_g$) | Given | Dec. | Millibars | Flt. -Pt. | Millibars |
| 23 | Azimuth deviation from true north | Given | Dec. | DMS* | Flt. -Pt. | Radians |
| 24 | Square root of weight 1 (range) | Given | Dec. | | Flt. -Pt. | - |
| 25 | Square root of weight 2 (azimuth) | Given | Dec. | | Flt. -Pt. | - |
| 26 | Square root of weight 3 (elevation) | Given | Dec. | | Flt. -Pt. | - |
| 27 | Modulus (n-1) | Computed | | | Flt. -Pt. | - |
| 28 | R sin ($\phi-\phi'$) | Computed | | | Flt. -Pt. | Earth radii |
| 29 | R cos ($\phi-\phi'$) | Computed | | | Flt. -Pt. | Earth radii |
| 30 | sin $\phi'$ | Computed | | | Flt. -Pt. | Radians |
| 31 | cos $\phi'$ | Computed | | | Flt. -Pt. | Radians |
| 32 | Boresight elevation correction ($C_3$)** | Computed | | | Flt. -Pt. | Radians |
| 33 | Boresight azimuth correction ($C_2$)** | Computed | | | Flt. -Pt. | Radians |
| 34 | Open for expansion | | | | | |

*DMS - degrees, minutes and seconds
**Original input - raw radar reading

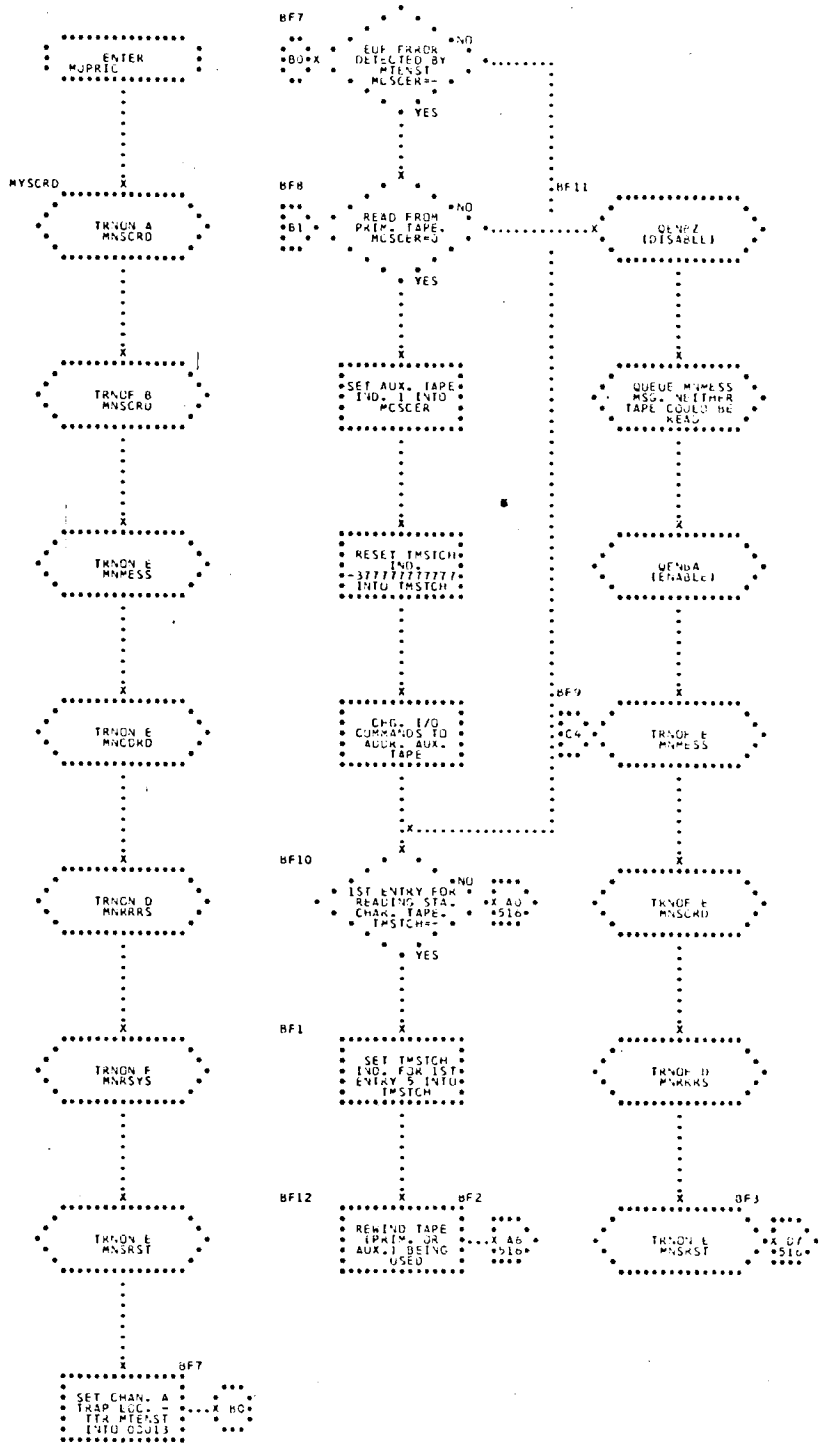
ENTER MOPRIC
MYSCRD
TRNON A MNSCRD
TRNOF B MNSCRD
TRNON E MNMESS
TRNON E MNCDRD
TRNON D MNRRRS
TRNON F MNRSYS
TRNON E MNSRST
BF7
SET CHAN. A TRAP LOC. - TTR MTENST INTO 00013
BF7
B0
EOF ERROR DETECTED BY MTENST MCSCER=-
NO
YES
BF8
B1
READ FROM PRIM. TAPE. MCSCER=0
NO
YES
SET AUX. TAPE IND. 1 INTO MCSCER
RESET TMSTCH IND. -377777777777 INTO TMSTCH
CHG. I/O COMMANDS TO ADDR. AUX. TAPE
BF10
1ST ENTRY FOR READING STA. CHAR. TAPE. TMSTCH=-
NO
A0 516
YES
BF1
SET TMSTCH IND. FOR 1ST ENTRY 5 INTO TMSTCH
BF12
BF2
REWIND TAPE (PRIM. OR AUX.) BEING USED
A6 516
BF11
QENBZ (DISABLE)
QUEUE MNMESS MSG. NEITHER TAPE COULD BE READ
QENBA (ENABLE)
BF9
C4
TRNOF E MNMESS
TRNOF E MNSCRD
TRNOF D MNRRRS
BF3
TRNON E MNSRST
D7 516

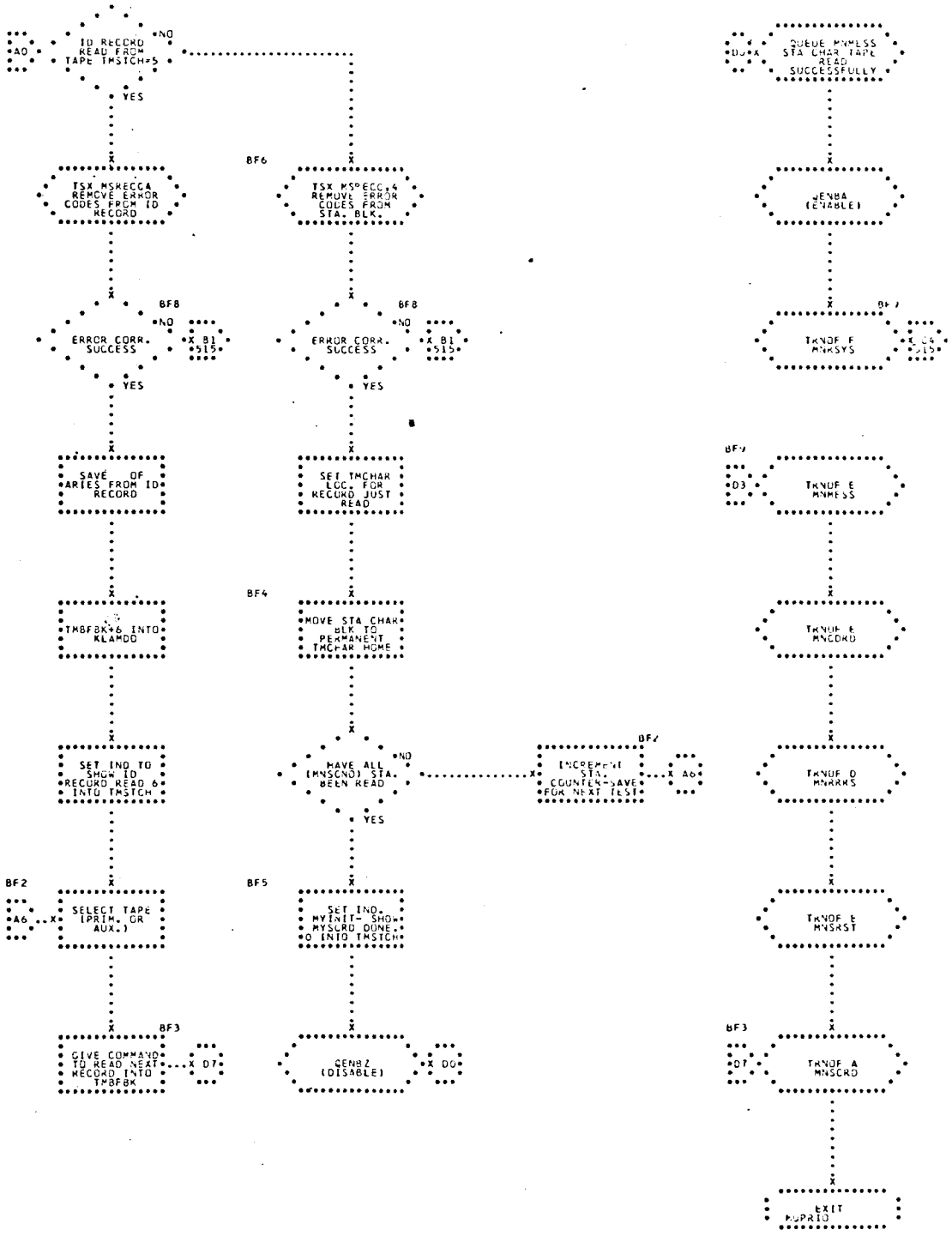
A0
ID RECORD READ FROM TAPE TMSTCH+5
NO
YES
TSX MSHECCA REMOVE ERROR CODES FROM ID RECORD
BF8
ERROR CORR. SUCCESS
NO
X B1 515
YES
SAVE OF ARIES FROM ID RECORD
TMBFBK+6 INTO KLAMDO
SET IND TO SHOW ID RECORD READ 6 INTO TMSTCH
BF2
A6
SELECT TAPE (PRIM. OR AUX.)
BF3
GIVE COMMAND TO READ NEXT RECORD INTO TMBFBK
X D7
BF6
TSX MSPECC,4 REMOVE ERROR CODES FROM STA. BLK.
BF8
ERROR CORR. SUCCESS
NO
X B1 515
YES
SET TMCHAR LOC. FOR RECORD JUST READ
BF4
MOVE STA CHAR BLK TO PERMANENT TMCHAR HOME
HAVE ALL (MNSCND) STA. BEEN READ
NO
YES
BF5
SET IND. MYINIT- SHOW MYSCRD DONE. 0 INTO TMSTCH
GENBZ (DISABLE)
X D0
BF7
INCREMENT STA. COUNTER-SAVE FOR NEXT TEST
X A6
D0
QUEUE MNMESS STA CHAR TAPE READ SUCCESSFULLY
GENBA (ENABLE)
BF7
TKNOF E MNKSYS
X C4 515
BF7
D3
TKNOF E MNMESS
TKNOF E MNCORD
TKNOF D MNRRKS
TKNOF E MNSRST
BF3
D7
TKNOF A MNSCRD
EXIT MUPRIO

## 111. MTENST - MONITOR STATION CHARACTERISTICS TAPE TRAP PROCESSOR

MTENST RECEIVES CONTROL FROM THE CHANNEL A TRAP FOLLOWING THE READING OF A RECORD FROM THE STATION CHARACTERISTICS TAPE INTO CORE STORAGE. THIS TRAP PROCESSOR CHECKS TO DETERMINE IF AN END-OF-FILE CAUSED THE TRAP AND SETS AN INDICATOR FOR MYSCRD BASED ON THIS DETERMINATION. (SEE FLOWCHART.)

### INPUT

THE SOLE INPUT TO MTENST CONSISTS OF THE LOCATION SET BY THE COMPUTER WHEN THE TRAP OCCURRED, LOCATION 00012. A 1 IN BIT POSITION 15 IS INDICATIVE OF A TRAP PRODUCED BY AN END-OF-FILE SENSED IN READING THE TAPE.

### OUTPUT

IF THE TRAP WAS THE RESULT OF AN END-OF-FILE, THE SIGN OF MCSCER IS SET TO NEGATIVE TO INDICATE THIS CONDITION TO MYSCRD.

### METHOD

MTENST RECEIVES CONTROL FROM THE CHANNEL A TRAP FOLLOWING THE READING OF A RECORD (OR AN END-OF-FILE, IF AN ERROR OCCURS) FROM THE STATION CHARACTERISTICS TAPE INTO CORE STORAGE. THE TRAP PROCESSOR EXECUTES THE SAVE MACRO TO PRESERVE THE CONDITION OF THE INTERRUPTED PROGRAM. MTENST EXAMINES BIT POSITION 15 OF LOCATION 00012. IF THE BIT IS A 1, AN END-OF-FILE HAS BEEN READ AND MTENST SETS THE SIGN OF MCSCER TO NEGATIVE.

THE B INDICATOR IS TURNED ON TO CONTINUE THE PROC-

ESSING OF THE STATION CHARACTERISTICS TAPE BY MYSCRD AND THE SUPPRESSION BITS SET BY MYSCRD FOR MYMESS AND MYCDRD, WHICH SHARE CHANNEL A WITH MYSCRD, ARE TURNED OFF AND PROGRAM CONTROL TRANSFERS TO MOPRIO.

USAGE

MTENST IS ENTERED FROM A TRAP TRANSFER INSTRUCTION (TTR MTENST) IN THE CHANNEL A TRAP CONTROL LOCATION (00013) AND EXITS TO MOPRIO.

A) STORAGE REQUIRED -
18 LOCATIONS

B) MACROS -
SAVE, TRNOF, TRNON

C) PARAMETERS -
B, E, MNCDRD, MNMESS, MNSCRD

D) COMMUNICATION CELL -
MCSCER

E) ABSOLUTE LOCATION -
00012

F) TIME REQUIRED -
0.152 MILLISECOND.

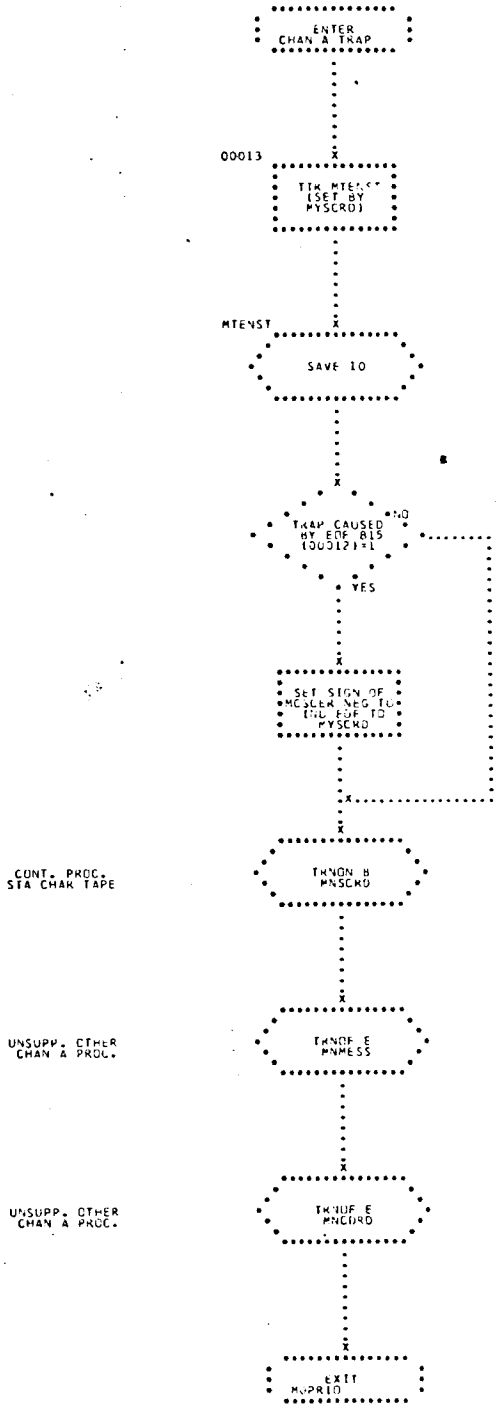
ENTER
CHAN A TRAP
00013
TTK MTENST
(SET BY
MYSCRD)
MTENST
SAVE IO
TRAP CAUSED
BY EOF 815
(00012)=1
NO
YES
SET SIGN OF
MCSCBR NEG TO
IND EOF TO
MYSCRD
CONT. PROC.
STA CHAR TAPE
TRNON B
MNSCRD
UNSUPP. OTHER
CHAN A PROC.
TRNOF E
MNMESS
UNSUPP. OTHER
CHAN A PROC.
TRNOF E
MNCORD
EXIT
MNPRIO

## 112. MYWRRS - MONITOR RESTART TAPE WRITER

MYWRRS INITIATES TRANSMISSION TO WRITE A RECORD ON THE RESTART TAPES. (SEE FLOWCHART.)

INPUT

A) TABLES -

TMRSYS — A 265-LOCATION TABLE WHICH SERVES AS THE RESTART TAPE BUFFER.

RADAR BLOCK — A 203-WORD TABLE CONTAINING THREE CONTROL WORDS AND 200 WORDS OF EDITED RADAR DATA FOR A STATION. THE FORMAT OF THE CONTROL WORDS IS AS FOLLOWS -

| WORD | A | D |
|---|---|---|
| 1 | INITIAL STATION NUMBER | 0 |
| 2 | NUMBER RADAR MSGS. | 0 |
| 3 | RELATIVE POSITION OF $T_{ca}$ IN RADAR BLOCK | 0 |

THE FOLLOWING TABLES COMPRISE THE VARIOUS RECORDS ON THE RESTART TAPE -

TMDATA — CONTAINS SUCCESSIVE 3-WORD ENTRIES SUCH THAT EACH BLOCK IS ASSOCIATED WITH ONE OF 25 REPORTING RADAR STATIONS WHOSE EDITED DATA HAS BEEN PLACED IN A DATA BLOCK IN UPPER (B) CORE. THE FIRST WORD OF EACH 3-WORD BLOCK CONTAINS THE INTERNAL STATION NUMBER IN THE ADDRESS AND THE ORBIT NUMBER OF THE DATA IN THE DECREMENT. THE ADDRESS OF THE SECOND WORD CON-

TAINS THE NUMBER OF EDITED RADAR MESSAGES AND THE DECREMENT CONTAINS THE LOCATION OF THE UPPER CORE RADAR BLOCK CONTAINING THE DATA. THE THIRD WORD CONTAINS THE TIME OF CLOSEST APPROACH (I.E., THE TIME OF MINIMUM RANGE OF THE DATA) WITH MINUTES IN THE ADDRESS, SECONDS IN THE DECREMENT.

TMSTMS — A 25-LOCATION TABLE CONTAINING AN ENTRY FOR EACH OF THE REPORTING STATIONS. EACH ENTRY CONTAINS IN ITS ADDRESS THE LOCATION OF THE TMDATA BLOCK ASSIGNED TO THE REPORTING STATION TO BE USED IN THE DIFFERENTIAL CORRECTION. ENTRIES ARE ORDERED ACCORDING TO THE TIME OF CLOSEST APPROACH WITH THE ENTRY FOR THE MOST RECENT TIME FIRST.

TMTIAC — A 22-LOCATION STATION CONTAINING AN ENTRY FOR EACH OF THE REPORTING STATIONS. EACH ENTRY INDICATES, WHEN ZERO, THE EDITED DATA FOR THIS STATION IS TO BE USED BY DIFFERENTIAL CORRECTION. WHEN NON-ZERO, USE OF THE EDITED DATA BY DIFFERENTIAL CORRECTION IS SUPPRESSED.

TMREST — A 30-LOCATION TABLE CONTAINING THE CURRENT ORBIT DEFINING VECTOR AND ASSOCIATED NUMERICAL INTEGRATION PARAMETERS.

TMORTN — A 3-LOCATION TABLE CONTAINING IN

FIXED POINT SECONDS THE GMT OF (1) THE INITIATION OF PROPULSION FOR THE PREVIOUS MANEUVER, $GMTPS_{i-1}$, (2) THE COMPLETION OF PROPULSION FOR THE PREVIOUS MANEUVER, $GMTPC_{i-1}$, (3) THE INITIATION OF PROPULSION FOR THE CURRENT MANEUVER, $GMTPS_i$.

TMANUV — A 50-LOCATION TABLE CONTAINING THE FIVE PARAMETER WORDS FOR EACH OF TEN MANEUVERS. THE FIRST WORD OF EACH FIVE WORD BLOCK CONTAINS THE GMT OF INITIATION OF PROPULSION IN FIXED POINT SECONDS (GMTPS), THE SECOND WORD CONTAINS THE GMT OF THE COMPLETION OF PROPULSION IN FIXED POINT SECONDS (GMTPC). THE THIRD WORD CONTAINS IN THE ADDRESS THE DURATION OF PROPULSION ($\Delta T$) IN FIXED POINT SECONDS AND IN THE DECREMENT THE THRUSTER INDICATION - 0 IF FORE-FIRING THRUSTERS ARE TO BE USED, 1 IF AFT. THE FOURTH AND FIFTH WORDS CONTAIN THE PITCH AND YAW ANGLES TO BE USED IN FLOATING POINT RADIANS.

TMCODP — A 10-LOCATION TABLE CONTAINING THE FIVE PARAMETER WORDS FOR EACH OF THE TWO PREVIOUS MANEUVERS.

TMCODV — A 24-LOCATION TABLE CONTAINING THE LAST THREE ORBIT DEFINING VECTORS WITH THEIR ASSOCIATED TIMES AND ORBIT NUMBERS. THE VECTORS ARE IN FLOATING POINT GEMINI UNITS, THE

TIMES ARE IN FIXED POINT MINUTES, AND THE ORBIT NUMBERS ARE FIXED POINT.

TMCODW — A 4-LOCATION TABLE CONTAINING THE PRE- AND POST- MANEUVER SPACECRAFT WEIGHTS IN FLOATING POINT POUNDS FOR THE LAST TWO MANEUVERS.

TMPROI — A 3-LOCATION TABLE CONTAINING IN FIXED POINT SECONDS THE GMT OF (1) THE COMPLETION OF PROPULSION FOR THE LAST MANEUVER, $GMTPC_{i-1}$, (2) THE INITIATION OF PROPULSION FOR THE CURRENT MANEUVER, $GMTPS_i$ AND (3) THE COMPLETION OF PROPULSION FOR THE CURRENT MANEUVER, $GMTPC_i$.

B) COMMUNICATION CELLS -

MCHFSC — CONTAINS CURRENT GMT IN FIXED POINT ONE-HALF SECOND INCREMENTS.

MCWWWV — CONTAINS CURRENT GMT IN FIXED POINT 8.3 MILLISECOND INCREMENTS DURING A REAL-TIME RUN - ZERO DURING A SIMULATED RUN.

THE FOLLOWING CELLS ARE PART OF THE TMREST RECORD WRITTEN ON THE RESTART TAPE -

MCMANC — CONTAINS NUMBER OF VALID MANEUVERS IN TMANUV TABLE IN FIXED POINT.

MCPROI — NON-ZERO IF PROPULSION IN PROGRESS - ZERO OTHERWISE.

C) CONSTANT -

K00001 DEC 1 FIXED POINT ONE

D) PARAMETERS -

```
A     EQU 1    INDICATOR A
B     EQU 2    INDICATOR B
C     EQU 3    INDICATOR C
D     EQU 4    INDICATOR D
E     EQU 5    INDICATOR E
G     EQU 7    INDICATOR G
M     EQU 13   INDICATOR M
MNOPCC         PRIORITY NUMBER OF MYOPCC
MNBUDC         PRIORITY NUMBER OF MPBUDC
MNCPNI         PRIORITY NUMBER OF MPCPNI
MNDDCP         PRIORITY NUMBER OF MYDDCP
MNDIFC         PRIORITY NUMBER OF MPDIFC
MNDIFK         PRIORITY NUMBER OF MPDIFK
MNDIFM         PRIORITY NUMBER OF MPDIFM
MNFPPR         PRIORITY NUMBER OF MYFPPR
MNLED1         PRIORITY NUMBER OF MPLED1
MNLED2         PRIORITY NUMBER OF MPLED2
MNQNEA         PRIORITY NUMBER OF MYQNEA
MNQPRA         PRIORITY NUMBER OF MYQPRA
MNRRRS         PRIORITY NUMBER OF MYRRRS
MNSRST         PRIORITY NUMBER OF MYSRST
MNSTLT         PRIORITY NUMBER OF MYSTLT
MNTABU         PRIORITY NUMBER OF MYTABU
MNWRRS         PRIORITY NUMBER OF MYWRRS
MNBTOA         EQU 1-PARAMETER TO INDICATE MOVE
               FROM B-CORE TO A-CORE.
MUREST         EQU 9-PARAMETER TO DESIGNATE TAPE
               UNIT IN WHICH RESTART TAPE IS
               PLACED.
```

THE FOLLOWING PARAMETERS ARE USED TO GOVERN THE LENGTH OF THE RECORD WRITTEN ON THE RESTART TAPE -

| | |
|---|---|
| MNDATA | NUMBER WORDS IN TMDATA |
| MNLTMS | NUMBER WORDS IN TMSTMS |
| MNSTNO | NUMBER WORDS IN TMSTNO |
| MNHDAT | NUMBER ERROR CORRECTION WORDS IN TMDATA, TMSTMS, TMSTNO RECORD. |
| MNLRST | NUMBER WORDS IN TMREST |
| MNMORT | NUMBER WORDS IN TMORTN |
| MNMANU | NUMBER WORDS IN TMMANUV |
| MNCODP | NUMBER IN TMCODP |
| MNTOGA | NUMBER WORDS IN TMCODP, TMCODV |
| MNTOGB | NUMBER WORDS IN TMCODP, TMCODV, TMCODW. |
| MNTOGC | NUMBER WORDS IN TMCODP, TMCODV, TMCODW, TMPROI. |
| MNTOGD EQU | MNTOGC+1 |
| MNTOGE EQU | MNTOGD+1 |
| MNHRST | NUMBER ERROR CORRECTION WORDS IN TMREST RECORD. |
| MNRADR | NUMBER WORDS IN RADAR BLOCK. |
| MNHRAD | NUMBER ERROR CORRECTION WORDS IN RADAR DATA RECORD. |

E) SUBROUTINES -

| | |
|---|---|
| MSMOVE | SUBROUTINE TO MOVE DATA BETWEEN A AND B CORES. |
| MSWECC | SUBROUTINE TO ENCODE ERROR CORRECTING WORDS. |

OUTPUT

A) COMMUNICATION CELLS -

| | |
|---|---|
| MCCHBC | SET NON-ZERO TO INDICATE CHANNELS B |

| | |
|---|---|
| | AND C ARE IN USE. |
| MCNRES | IF RECORD JUST WRITTEN WAS A TMREST RECORD, THIS CELL IS UPDATED TO CONTAIN CURRENT COUNT OF TMREST RECORDS ON RECORDS ON RESTART TAPE. |
| MCWRRS | CONTAINS UNQUEUED ENTRY TO MYWRRS. |
| MCWRSS | I/O COMMAND CONTAINING LENGTH OF RECORD BEING WRITTEN IN TAPE. |

METHOD

THE FIRST RECORD WRITTEN ON THE RESTART TAPE IS A NUMERICAL INTEGRATION, MANEUVER INFORMATION RECORD CONTAINING THE MISSION CONDITIONS AT INJECTION INTO ORBIT. THEREAFTER, WHEN A RADAR STATION ENDS TRANSMISSION, THE EDITED RADAR DATA BLOCK AND THE CORRESPONDING, DIFFERENTIAL CORRECTION CONTROL TABLES, TMDATA, TMSTMS, AND TMTIAC, ARE WRITTEN ON THE RESTART TAPE. AFTER THE DIFFERENTIAL CORRECTION HAS BEEN COMPUTED ON THE STATION AND THE ORBIT REDEFINED, THE TMREST RECORD IS WRITTEN ON THE TAPE. IN ADDITION, THIS RECORD IS WRITTEN AS A RESULT OF A MANUAL INSERTION OF CERTAIN ORBITAL PARAMETERS WHICH DOES NOT INITIATE THE BASIC ORBIT UPDATING CYCLE.

WHEN MYWRRS RECEIVES CONTROL FROM PRIO, IT TURNS ITS OWN A INDICATOR ON. IT THEN SUPPRESSES ALL OTHER CHANNEL B AND C USERS AND ALL PROGRAMS BUFFERED FROM DISK STORAGE INTO THE CORE STORAGE AREA OCCUPIED BY MYWRRS AND ITS TRAP PROCESSORS (MTWRRS AND MYWRS1) UNTIL THE TRAP HAS BEEN PROCESSED. AFTER INDICATING THAT CHANNELS B AND C ARE IN USE, MYWRRS UNQUEUES THE NEXT ENTRY IN ITS QUEUE TABLE INTO MCWRRS. IT THEN PLACES A TRAP TRANSFER INSTRUCTION TO MTWRS1 IN THE CHANNEL B TRAP LOCATION

($15_8$) AND, IF THIS IS A REAL TIME RUN, A TRAP TRANSFER INSTRUCTION TO MTWRRS IN THE CHANNEL C TRAP LOCATION ($17_8$). THE PRESENT GMT IN 1/2 SECONDS IS SAVED IN THE FIRST LOCATION OF THE RESTART TAPE BUFFER, TMRSYS. (THIS TIME IS WRITTEN ON THE RESTART TAPE ONLY WITH THE TMDATA, TMSTMS, AND TMTIAC RECORD. ALL OTHER RECORDS HAVE GMT TIMES CONTAINED WITHIN THE DATA).

THE TYPE OF RECORD TO BE WRITTEN ON THE RESTART TAPE IS DETERMINED FROM THE PREFIX OF THE UNQUEUED ENTRY IN MCWRRS -

| P(MCWRRS) | A(MCWRRS) | RECORD TYPE | TABLES IN RECORD |
|---|---|---|---|
| 0 | 0 | DIFFERENTIAL CORRECTION CONTROL | TMDATA, TMSTMS TMTIAC |
| 1 | 0 | NUMERICAL INTEGRATION MANEUVER INFORMATION | TMREST, TMORTN, TMANUV, TMCODP, TMCODV, TMCODW, TMPROI, MCMANC, MCPROI |
| 2 | L(RADAR DATA) | RADAR DATA | UPPER CORE BLOCK CONTAINING RADAR DATA (203 WORDS) |

AFTER THE TABLES COMPRISING THE DESIRED RECORD HAVE BEEN MOVED INTO THE RESTART TAPE BUFFER, THE SUBROUTINE MSWECC IS ENTERED TO EXPAND THE RECORD BY INTERSPERSING ERROR CORRECTION WORDS WITH THE DATA. SINCE IDENTIFICATION OF EACH RECORD IS BASED ONLY ON ITS LENGTH, THE CORRECT WORD COUNT FOR THE RECORD (INCLUDING THE ERROR CORRECTION WORDS) IS PLACED IN THE I/O COMMAND USED TO WRITE THE RECORD ON THE TAPE. THIS COMMAND IS THEN ISSUED TO WRITE THE CHANNEL B RESTART TAPE AND, IN A

REAL-TIME RUN, THE CHANNEL C RESTART T[illegible] MYWRRS THEN SUPPRESSES ITSELF UNTIL THE TRAP HAS B[illegible] SERVICED, TURNS OFF ITS A INDICATOR AND EXITS TO MOPRIO.

USAGE

MYWRRS IS ENTERED FROM AND EXITS TO MOPRIO. ENTRY TO MYWRRS RESULTS FROM ONE OF THE FOLLOWING QUEUES -

A) MYOUR1 TO WRITE NUMERIC[illegible]RATION,
MFMN06 MANEUVER INFORMATION RECORD.
MFMNIO
MFMN11

B) MPDIFC TO WRITE DIFFERENTIAL CORRECTION
MPDIFM CONTROL RECORD.

C) MSLCUC (SUBROUTINE OF M[illegible] TO WRITE
RADAR DATA RECORD.

D) STORAGE REQUIRED -
122 LOCATIONS

E) MACROS -
TRNON
TRNOF
QUENBA
QENBZ
UNQUE

| LOCATION | QUANTITY | UNIT | OBTAINED FROM-OR RESTORED TO |
|---|---|---|---|
| TMREST | GREATEST TIME TAG OF DATA USED TO COMPUTE r, v VECTORS | FX. PT. GMT SEC. | MCTLST |
| +1 | $R_x$ | FLT. PT. G.L.U. | TDRANV |
| +2 | $R_y$ | FLT. PT. G.L.U. | +1 |
| +3 | $R_z$ | FLT. PT. G.L.U. | +2 |
| +4 | $V_x$ | FLT. PT. G.V.U. | +3 |
| +5 | $V_y$ | FLT. PT. G.V.U. | +4 |
| +6 | $V_z$ | FLT. PT. G.V.U. | +5 |
| +7 | VECTOR TIME TAG | FX. PT. GMT MIN. | |
| +8 | ANCHOR POINT REV. NUMBER | FX. PT. | +7 |
| +9 | ARC LENGTH | FLT. PT. | MCARCL |
| +10 | WEIGHTING FACTOR | FLT. PT. | MCWGFC |
| +11 | WEIGHT FOR CURRENT ORBIT | FLT. PT. | MCOWGT |
| +12 | DENSITY FACTOR FOR ORBIT AND REENTRY | FLT. PT. | TIDRAG |

| LOCATION | QUANTITY | UNIT | OBTAINED FROM-OR RESTORED TO |
|---|---|---|---|
| +13 | DENSITY FACTOR FOR ORBIT LIFETIME | FLT. PT. | +1 |
| +14 | DESIRED NO. REVOLUTIONS | FX. PT. | +2 |
| +15 | IMPACT ALTITUDE | FLT. PT. G.L.U. | +3 |
| +16 | RETROFIRE SETTING, GMTRS | FX. PT. GMT SEC. | TMGTRS |
| +17 | NAVIGATION MODE, M | FX. PT. | +1 |
| +18 | LONGITUDE OF TARGET, $\lambda_t$ | FLT. PT. RADIANS | +2 |
| +19 | LATITUDE OF TARGET, $\phi_t$ | FLT. PT. RADIANS | +3 |
| +20 | GMT OF LIFT-OFF | FX. PT. SECONDS | MCGTLO |
| +21 | TIME OF QUEUE TO WRITE VECTOR ON TAPE | FX. PT. GMT SEC | |
| +22 | GMT OF INSERTION INTO ORBIT | FX. PT. GMT SEC | MCGTIN |
| +23 | GMT OF END OF POWERED FLIGHT | FX. PT. GMT SEC | MCPFLD |