8-32-63-2

LIBRARY MATERIAL

NASA CONTRACT NAS 8-5024

FIRST PRESENTATION

AUGUST 6, 1963 AT MARSHALL SPACE FLIGHT CENTER

N67-81476
(ACCESSION NUMBER)
(THRU)
81
(PAGES)
none
(CODE)
(NASA CR OR TMX OR AD NUMBER)
(CATEGORY)
FACILITY FORM 602

EARLY MANNED INTERPLANETARY MISSION STUDY

PREPARED BY LOCKHEED MISSILES & SPACE COMPANY

A GROUP DIVISION OF LOCKHEED AIRCRAFT CORPORATION

8-32-63-2

NASA CONTRACT NAS 8-5024

FIRST PRESENTATION

AUGUST 6, 1963 AT MARSHALL SPACE FLIGHT CENTER

EARLY MANNED INTERPLANETARY MISSION STUDY

PREPARED BY LOCKHEED MISSILES & SPACE COMPANY
A GROUP DIVISION OF LOCKHEED AIRCRAFT CORPORATION

ORBIT OPERATIONS AND LAUNCH VEHICLES

ORBIT OPERATIONS AND LAUNCH VEHICLE

During the first reporting period, heavy emphasis was placed on determining orbit launch window requirements for a Venus flyby in 1974 and a Mars round trip flyby mission in 1975. Two orbit launch techniques, resulting from in-house study of these problems, are compared. The applicability of various sized nuclear orbit launch boosters is shown. Finally, modifications to the Saturn V launch vehicle are suggested to strengthen the S-IC and S-II stages to handle nuclear third stages.

ORBIT OPERATIONS AND LAUNCH VEHICLE

FIRST PERIOD STUDY TOPICS

- ORBIT LAUNCH WINDOWS
- ORBIT LAUNCH TECHNIQUES
- NUCLEAR STAGE APPLICABILITY
- SATURN V MODIFICATIONS

EARTH ESCAPE LAUNCH CONDITIONS

During preliminary system studies of interplanetary missions, it is generally assumed that launch from orbit occurs with an instantaneous burn at perigee of an escape hyperbola with the plane of departure lying in the orbit plane. This is a fair analysis for high acceleration launch stages with launch occurring just as the hyperbolic asymptote passes through the orbit plane.

More likely escape conditions are illustrated here. The hyperbolic asymptote and the orbit plane are both in motion and will be co-planar for only short periods. The rest of the time, an angle ϕ will exist between them. As a result of this angle and the use of foreseable launch stages, ignition cannot necessarily occur at perigee of the launch hyperbola, finite burning time must be considered, and a turning maneuver is required.

The turning maneuver can be made as illustrated. Another method is to put part of the required energy increase and turning maneuver into the initial launch burn and to complete the turning and achieve the desired hyperbolic excess speed in a second burn occurring several days later. This is called "dual burn" and has several advantages over the single burn shown here.

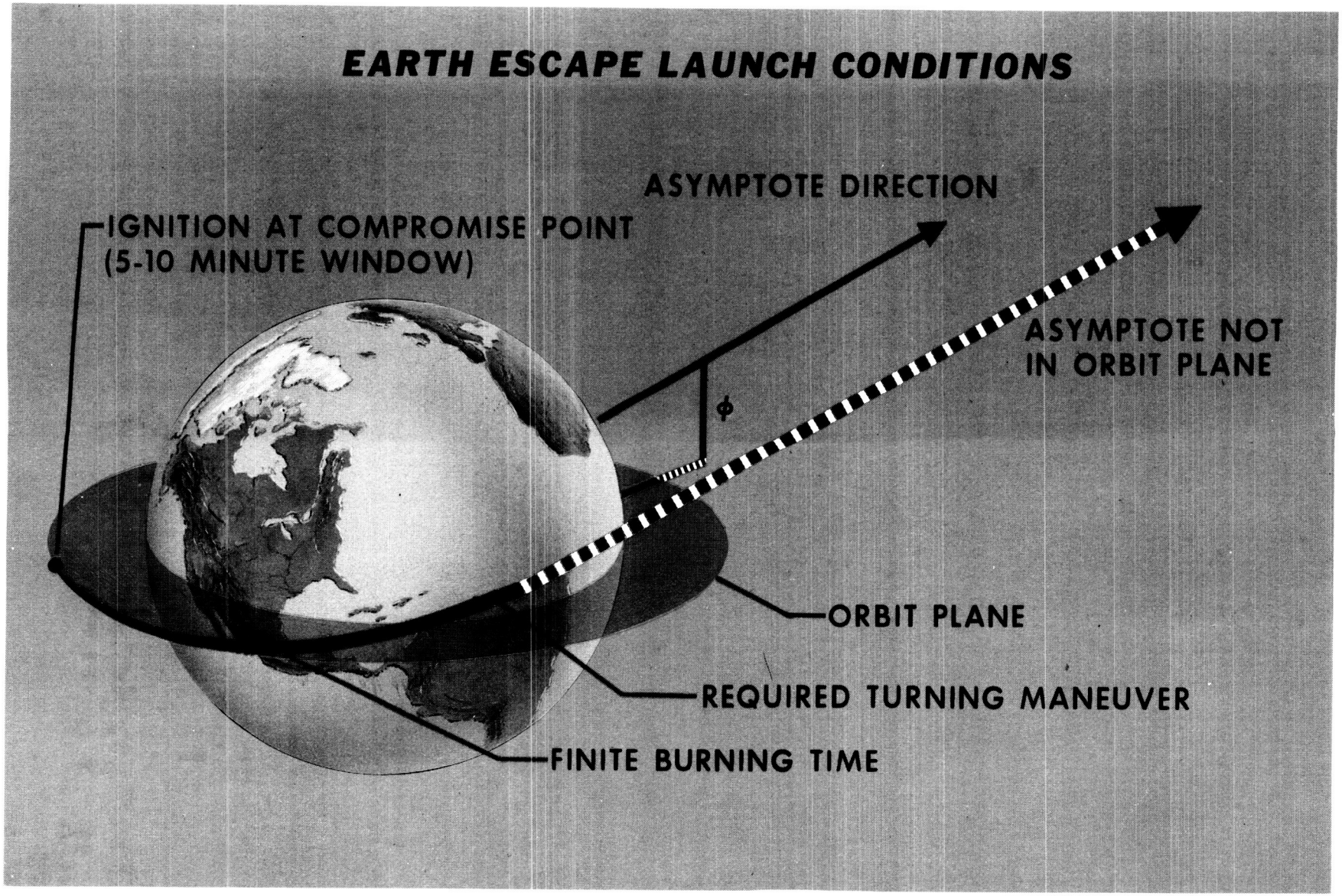
EARTH ESCAPE LAUNCH CONDITIONS
ASYMPTOTE DIRECTION
IGNITION AT COMPROMISE POINT
(5-10 MINUTE WINDOW)
ASYMPTOTE NOT
IN ORBIT PLANE
ϕ
ORBIT PLANE
REQUIRED TURNING MANEUVER
FINITE BURNING TIME

COMPARISON OF EARTH ESCAPE METHODS

Considering impulsive burn, the required ΔV to achieve various hyperbolic excess speeds is shown for three values of out-of-plane angle ϕ. The increase in single burn ΔV as the hyperbolic excess speed approaches zero is attributed to the required selection of a launch point which is a compromise between the optimum considering turning alone (90 degrees from the asymptote) and the launch point considering only energy increase alone (perigee of the hyperbola approximately 180 degrees from the asymptote).

Note the advantage of the dual burn for maneuvers at the low hyperbolic speeds. As the required speed increases, it is best to put more and more of the needed ΔV into the first burn and, hence, dual and single burns merge. The shaded areas deptic regions of interest for a Venus flyby in 1974 and a Mars low-energy ("cool") flyby in 1975. Both can be considered as typical for their respective trajectory type regardless of year of opposition or conjunction.

If one considers any required ΔV input above the $\phi = 0$ line as a penalty due to the fact that a turning maneuver is necessary, this ΔV "penalty" is large for single burns at low hyperbolic speeds and decreases as the speed increases. For dual burns, the penalty is zero for parabolic escape, increases to a maximum near the point where dual and single burn merge, then decreases at the higher hyperbolic excess speeds.

COMPARISON OF EARTH ESCAPE METHODS

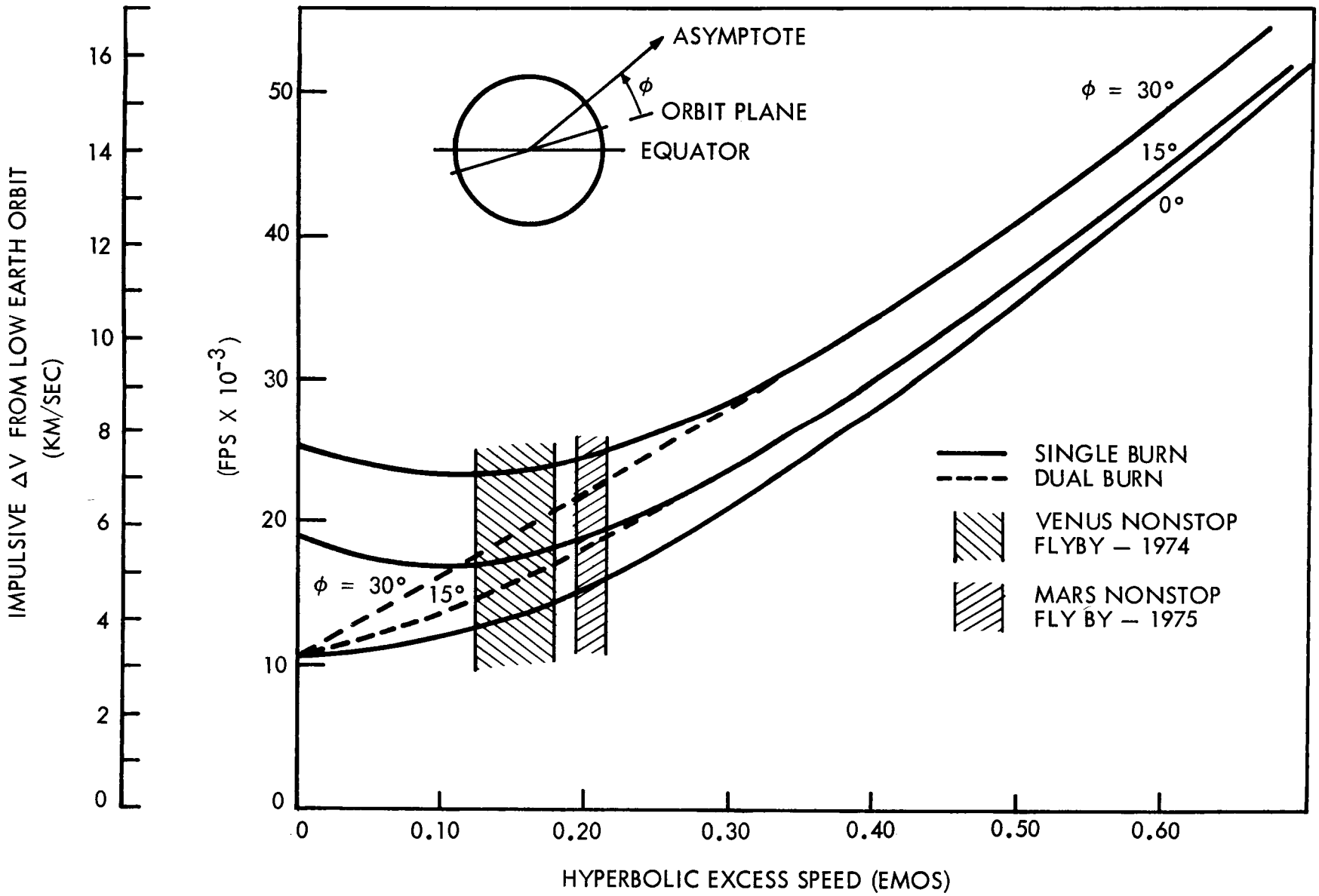

VELOCITY IMPULSE FOR PLANE CHANGE ONLY

The ΔV penalty resulting from a turning maneuver (described in the preceding illustration) is shown in detail here. Note that, for even small angles of 15 degrees, the penalty is appreciable.

The advantage of the dual burn in cutting this penalty, especially for the Venus mission, is quite apparent. However, if the angle ϕ can be kept to very low values while the hyperbolic excess speed is near minimum for either of these missions, the single burn should be sufficient. This could be done by using an Earth orbit inclined at the value for the hyperbolic asymptote declination on the nominal launch date, using highly inclined orbits to cut down orbit regression, or using other techniques to cut down the orbit plane motion.

VELOCITY IMPULSE FOR PLANE CHANGE ONLY

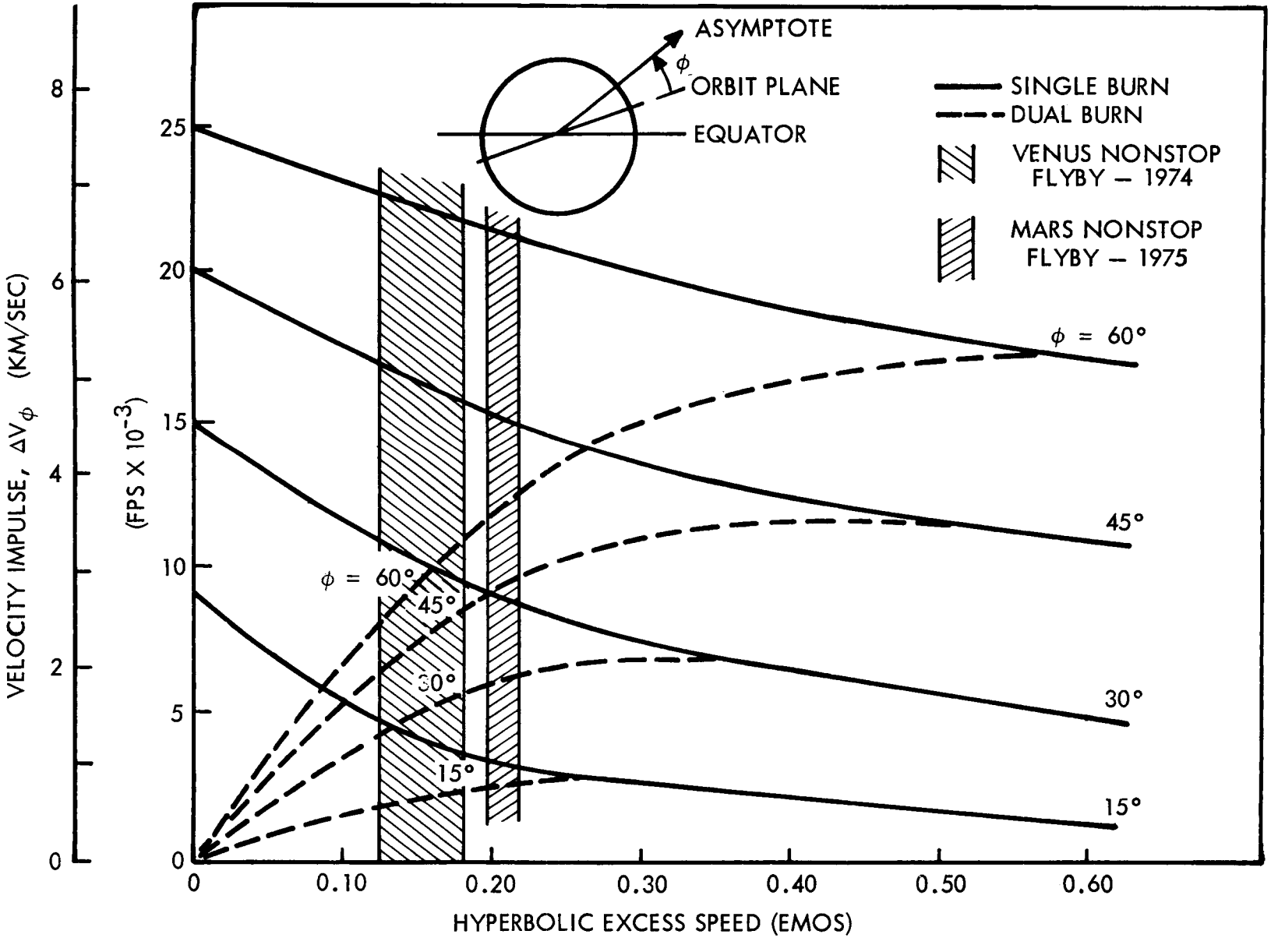

RELATIVE MOTION OF ASYMPTOTE AND ORBIT PLANE

Shown here is the angle that arises due to the motion of the departure asymptote and orbit plane for a year-long round trip flyby past Venus and a 22-month flyby past Mars. The Earth orbit inclination was arbitrarily selected at 30 degrees for the Venus mission corresponding to an approximate due-east launch from AMR. On the nominal launch date (date of minimum hyperbolic excess speed in the favorable launch period) for the Mars mission, the declination of the departure asymptote was 33 degrees. Thus, an orbit inclined at this value was selected. The occurrence of such a high declination is unusual and will not occur again until 1984, but it does illustrate the advantage of having the orbit inclination at or near the required asymptote declination.

For the Venus mission, note that asymptote and orbit plane meet on three occassions though they pass each other rapidly. No value is shown earlier than 20 days before the nominal date because trajectory data show that no missions of the type desired (flyby at 500 nm altitude) exist during this period.

For the Mars mission, the asymptote and Earth orbit plane are slow to pull away from each other because the declination of the asymptote is so high. Once separation begins, maximum values of separation angle occur which are comparable with those of the Venus mission.

RELATIVE MOTION OF ASYMPTOTE AND ORBIT PLANE

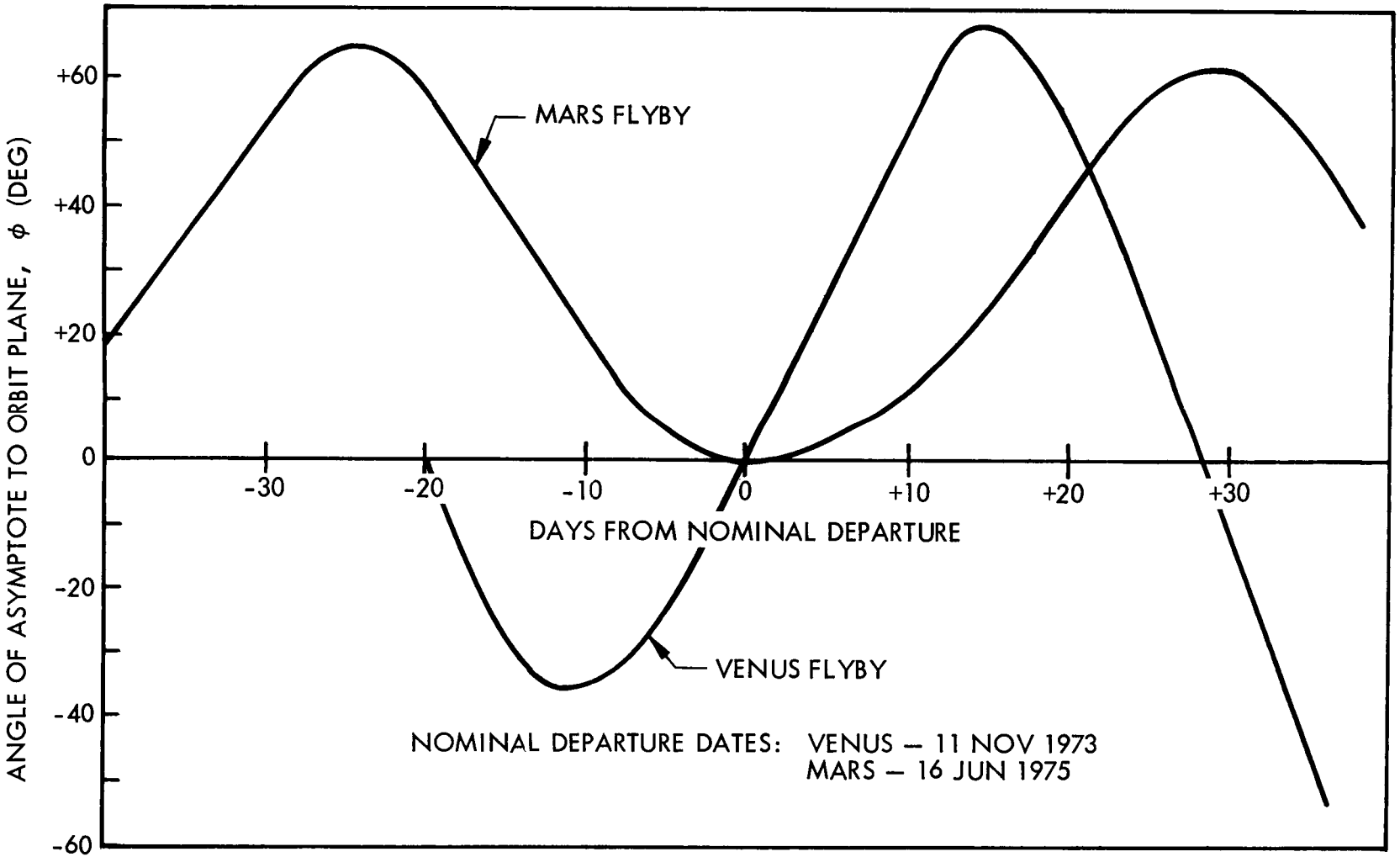

VELOCITY PENALTY FOR PLANE CHANGE ONLY (VENUS)

Matching up the variation of the angle separating departure asymptote and orbit plane with the appropriate ΔV penalty associated with that angle results in the daily variation of this penalty for both single and dual burns.

Note how rapidly the ΔV builds up around each zero point. Note also that, for this Venus mission, dual burn can cut the penalty in half throughout the launch period.

VELOCITY PENALTY FOR PLANE CHANGE ONLY

ROUND TRIP FLYBYS: VENUS 1974

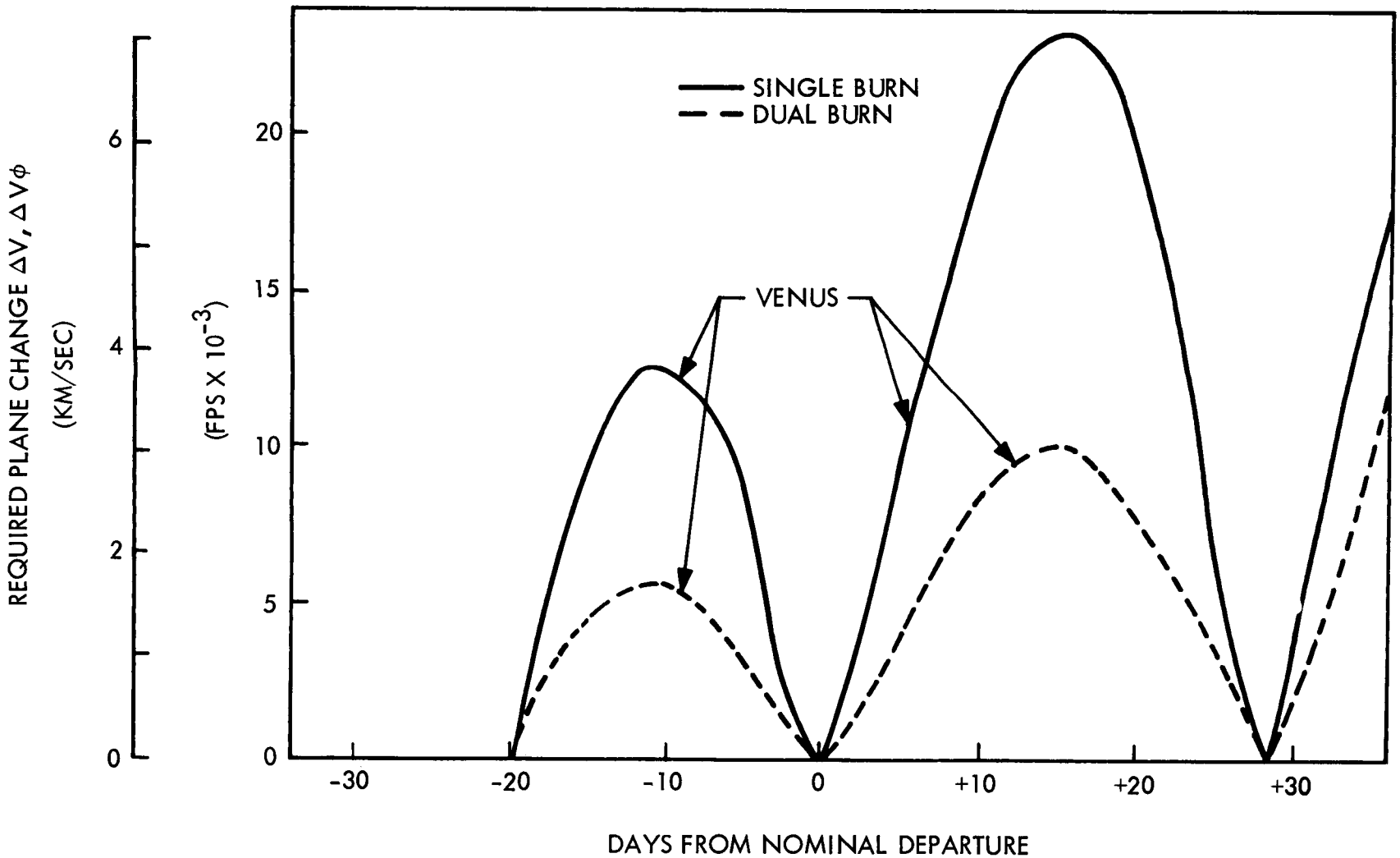

VELOCITY PENALTY FOR PLANE CHANGE ONLY (MARS)

The variation of the velocity penalty due to the angle ϕ for the Mars mission is shown here. Note that the slow separation of orbit plane and asymptote around the zero point (because the required asymptote declination is unusually high for this particular year), the ΔV penalty is slow to build up. Also, because the separation angle is small while the required hyperbolic excess speed is at its lowest value, little savings are obtained from the dual burn technique for two weeks on either side of the nominal launch date. However, it can be seen that, for energy limited propulsion systems, the required plane change maneuver could have a profound effect upon boost system evaluation.

VELOCITY PENALTY FOR PLANE CHANGE ONLY

ROUND TRIP FLYBYS: MARS 1975

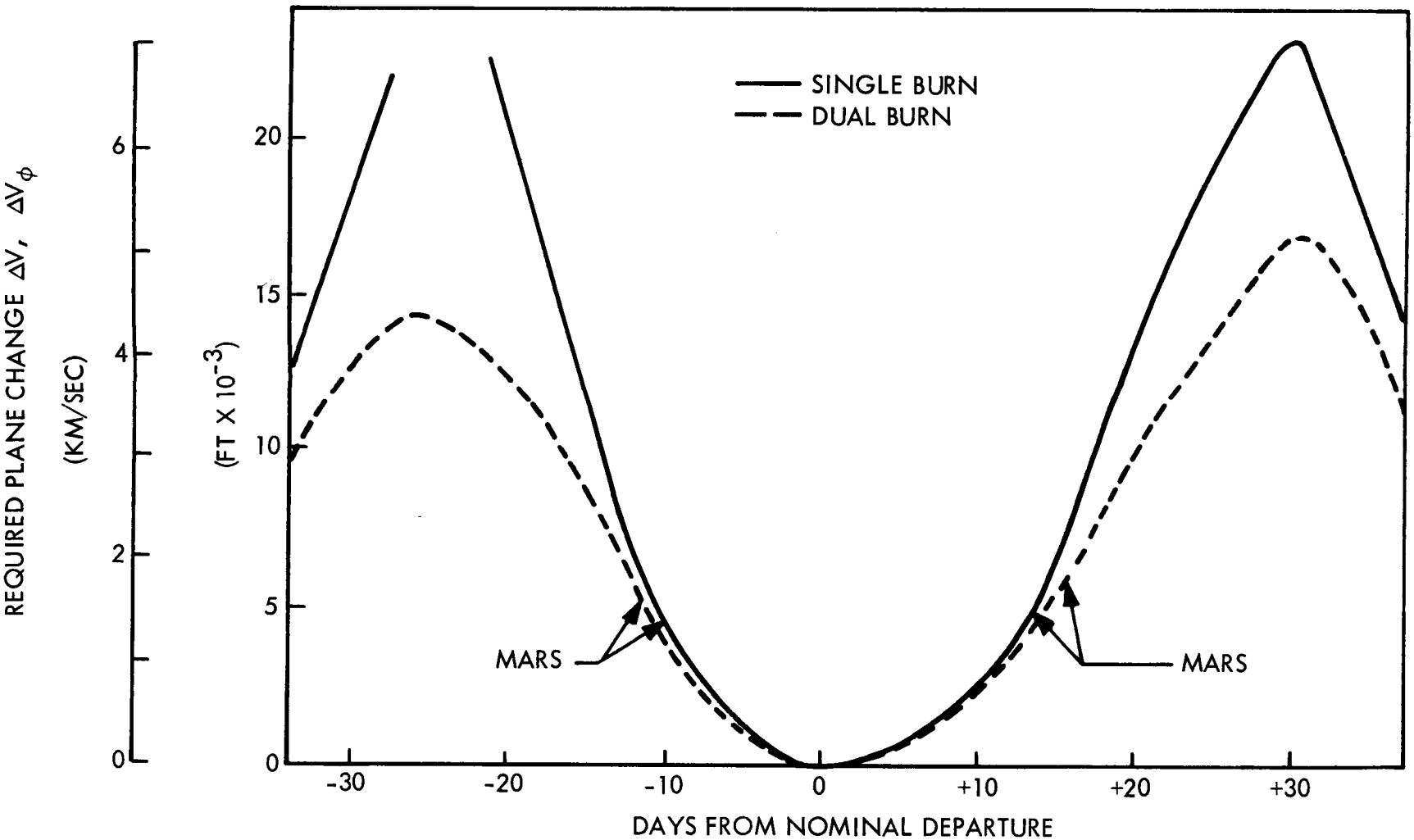

NUCLEAR STAGES

To relate the velocity requirements for the varying launch geometry to actual systems, a definition of such systems is required. Some of the Saturn nuclear stages and engines considered in this analysis are shown. An S-N 4 stage was also considered for the Venus flyby.

The primary difference between dual and single burn requirements for nuclear stages is the need for engine restart and for proper tank insulation.

NUCLEAR STAGES

VENUS FLYBY | MARS FLYBY

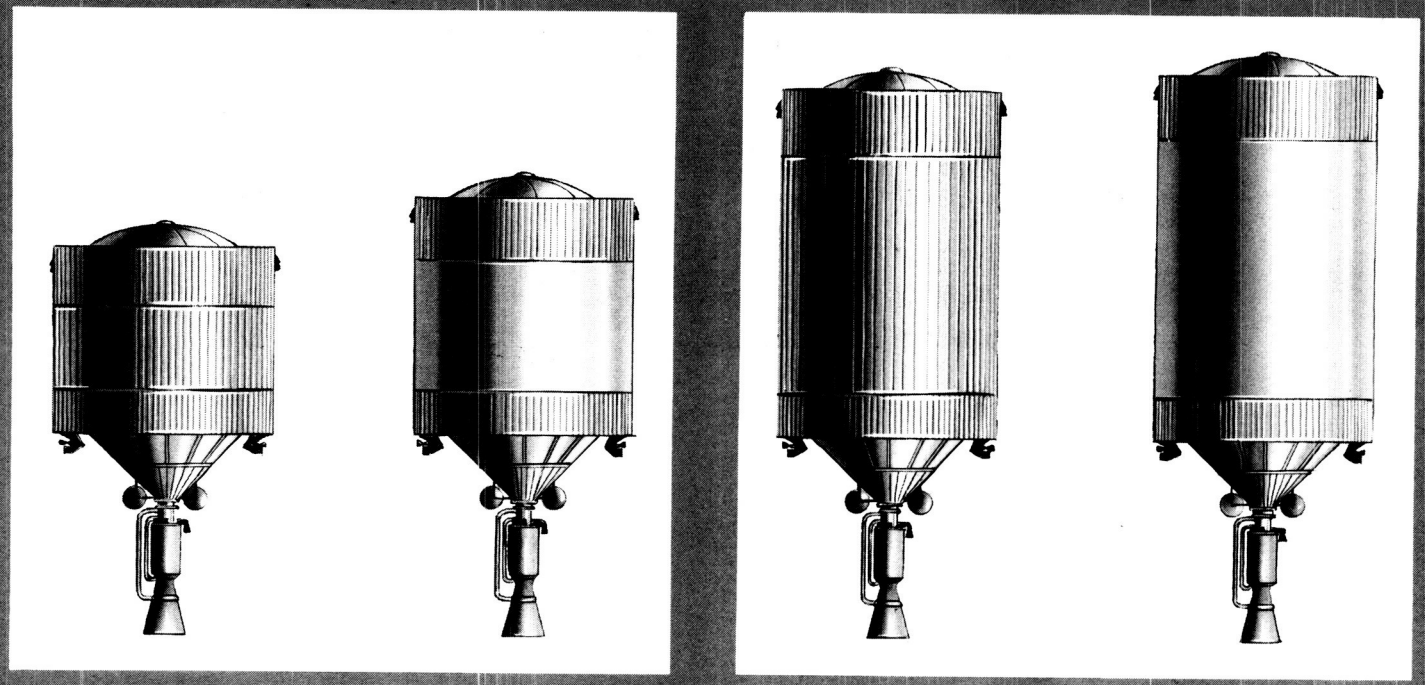

MOD	1A	2B	2A	3A
S-N	1	2	3	4
CAPACITY (lb)	100,000	120,000	180,000	180,000
USE	SINGLE BURN	DUAL BURN	SINGLE BURN	DUAL BURN

S-N 2 STAGE CONFIGURATION

One of the possible concepts for insulating the nuclear stages for the dual burn requirement utilizes an exterior insulation of three layers as shown in the enlarged view. A honeycomb structure fills in the space between the exterior longitudinal stiffeners. Prior to tanking the stage, this structure is filled with helium to prevent air from liquefying and solidifying next to the exterior skin. Sheets of super insulation are placed on top of this structure and the entire system is covered by an aluminum sheet, at least 0.02 inches thick, which doubles as a meteoroid shield.

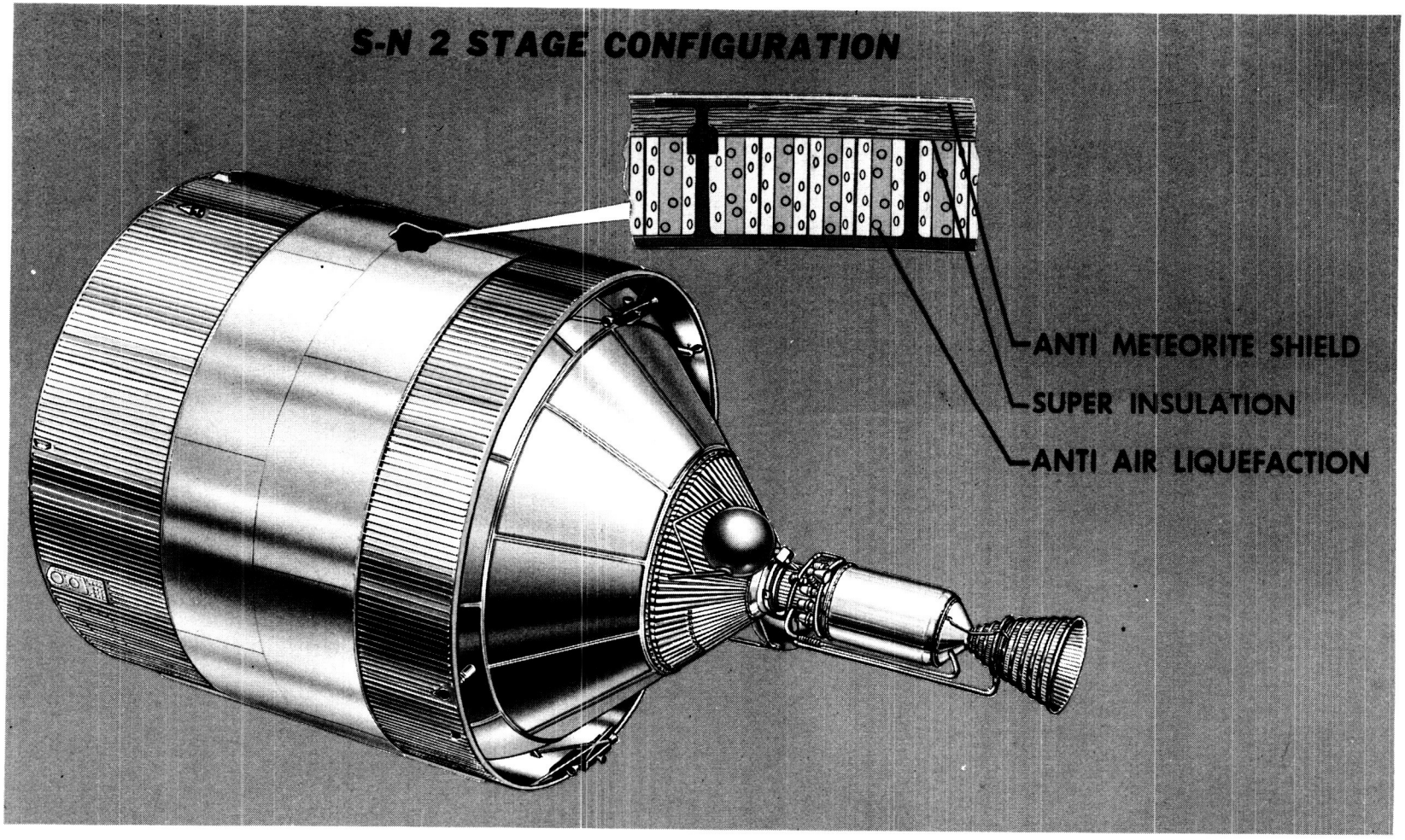
S-N 2 STAGE CONFIGURATION
ANTI METEORITE SHIELD
SUPER INSULATION
ANTI AIR LIQUEFACTION

LAUNCH WINDOW COMPARISON

This figure shows the importance of launch window considerations on orbit launch booster selection. The ΔV requirements (considering gravity losses) to inject a 100,000-lb payload toward Venus using a Mod 1 nuclear engine and a 100,000-lb capacity stage is shown. If one considers only energy requirements alone, a launch window of 22 days is possible and the system looks very attractive. However, for the real-life situation of both energy and plane change requirements, the launch window shrinks to only 1/2 day.

LAUNCH WINDOW COMPARISON

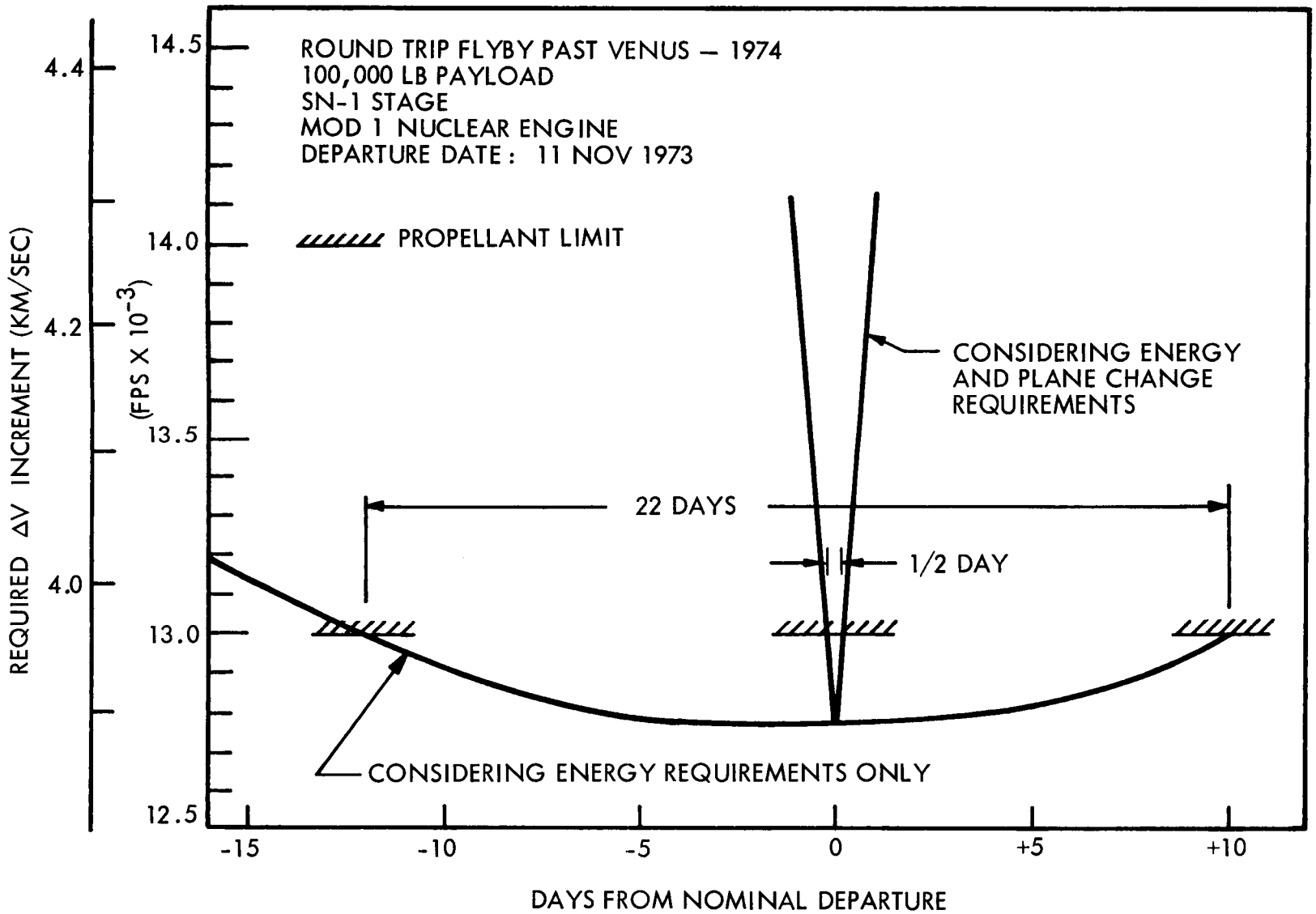

AVAILABLE LAUNCH WINDOW

One obvious way to overcome the problem shown in the preceding figure is to increase the propellant capacity of the escape stage. If a 180,000-lb capacity stage is used, three launch windows are available to inject the same payload on the same mission.

When dual burn of a nuclear stage is considered, one must account for the impulse derived during engine cooldown following first burn. This operation is significant, because it is not unusual for 10,000 lb or more of propellant to be used. In this figure, it was assumed that the bulk of this propellant was lost for useful work (a very conservative assumption). Nevertheless, the total launch window is increased almost 50 percent over the single burn value. If little cooldown loss occurs, a launch window of nearly 3-1/2 weeks duration appears possible, followed three weeks later by a second opportunity lasting 5 days.

AVAILABLE LAUNCH WINDOWS

ROUND TRIP FLYBY PAST VENUS-1974

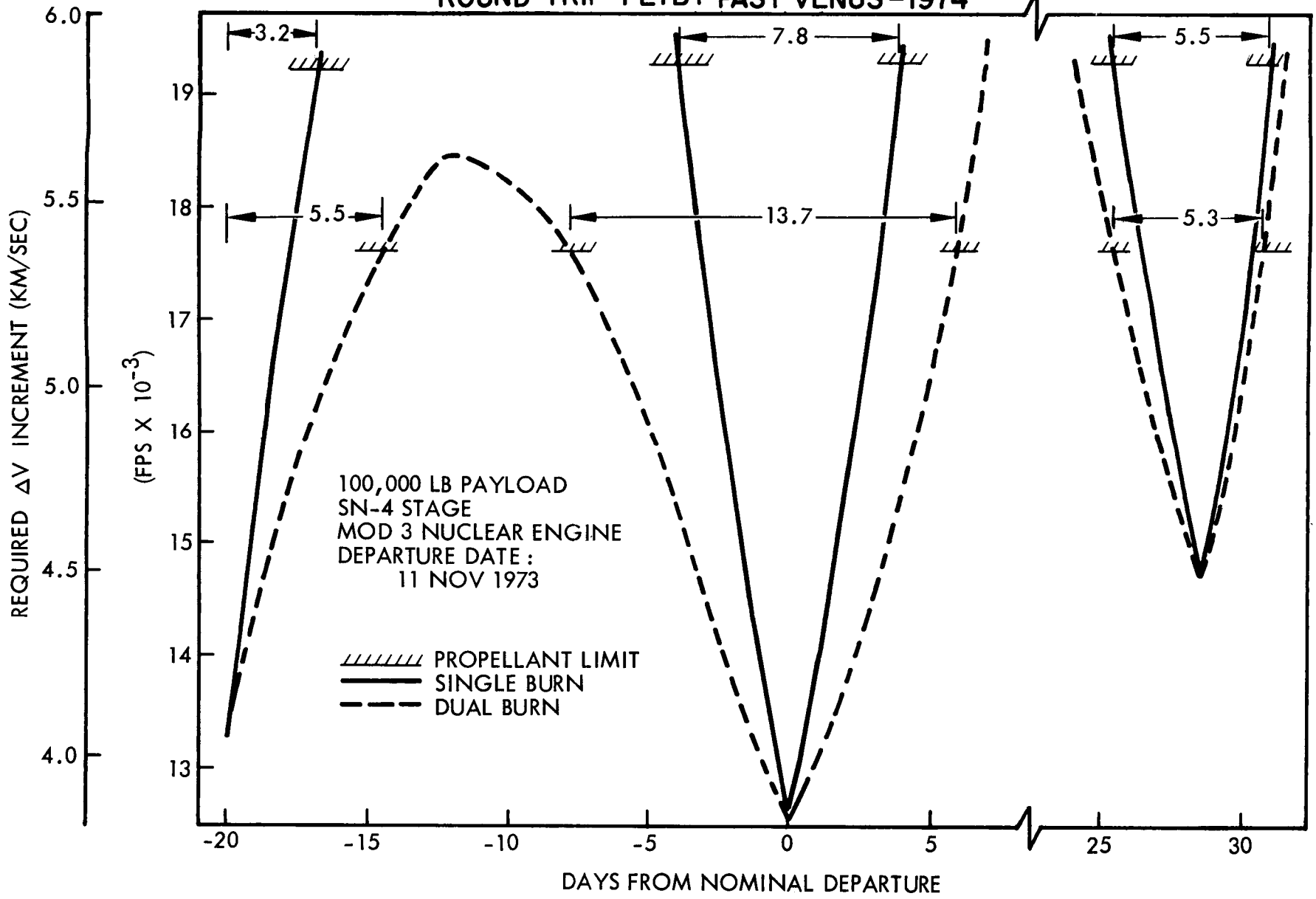

AVAILABLE LAUNCH WINDOWS (MARS)

The injection of a 100,000-lb payload onto a Mars flyby in 1975 using a 180,000-lb capacity stage results in a substantial window about the nominal launch date. The lowest curve shows the necessary velocity input if one considered hyperbolic speed requirements only. The upper curves show the real-life case of energy plus plane change requirements. Note the difference this makes in launch windows one would obtain.

Note also that, for this particular case, nothing is gained by considering dual burn. In fact, if one considers any cooldown losses (as shown in the illustration), dual burn results in a shortening of launch window.

AVAILABLE LAUNCH WINDOWS

ROUND TRIP FLYBY PAST MARS – 1975

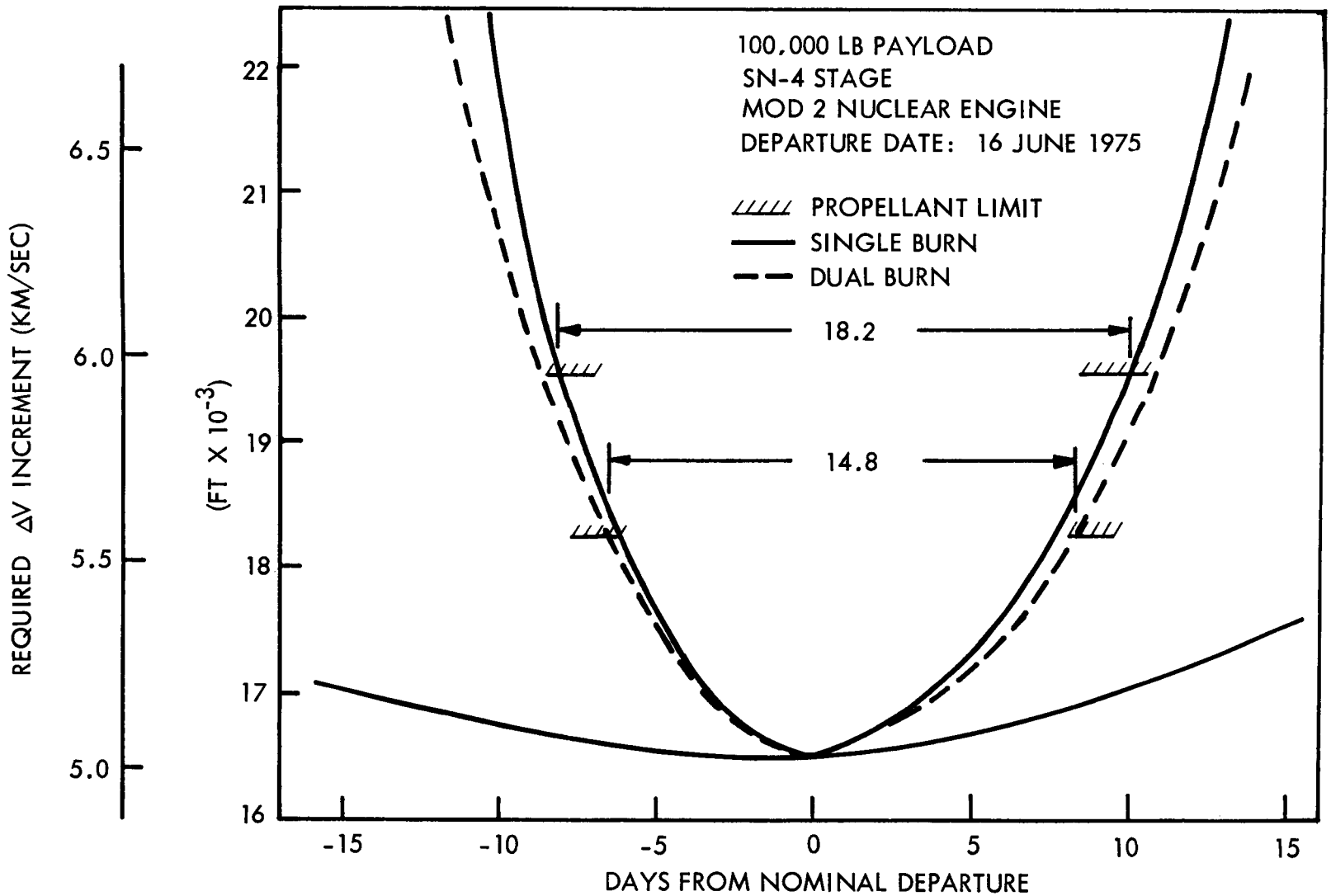

PAYLOAD AND LAUNCH WINDOW TRADEOFF

To make the preceding figure complete, launch opportunities for the 1975 Mars flyby using the 180,000-lb capacity stage with single burn of both Mod 2 and Mod 3 engines is shown for a wide range of injected payloads.

Note that launch window decreases with increasing payload as one would expect. However, the decrease is not very severe until a "pinch-out" point is reached. Note also that little is gained in launch window by going from the Mod 2 to Mod 3 engine as long as the payload stays below 125,000 lb (54,000 kg).

PAYLOAD AND LAUNCH WINDOW TRADEOFF

ROUND TRIP FLYBY PAST MARS – 1975

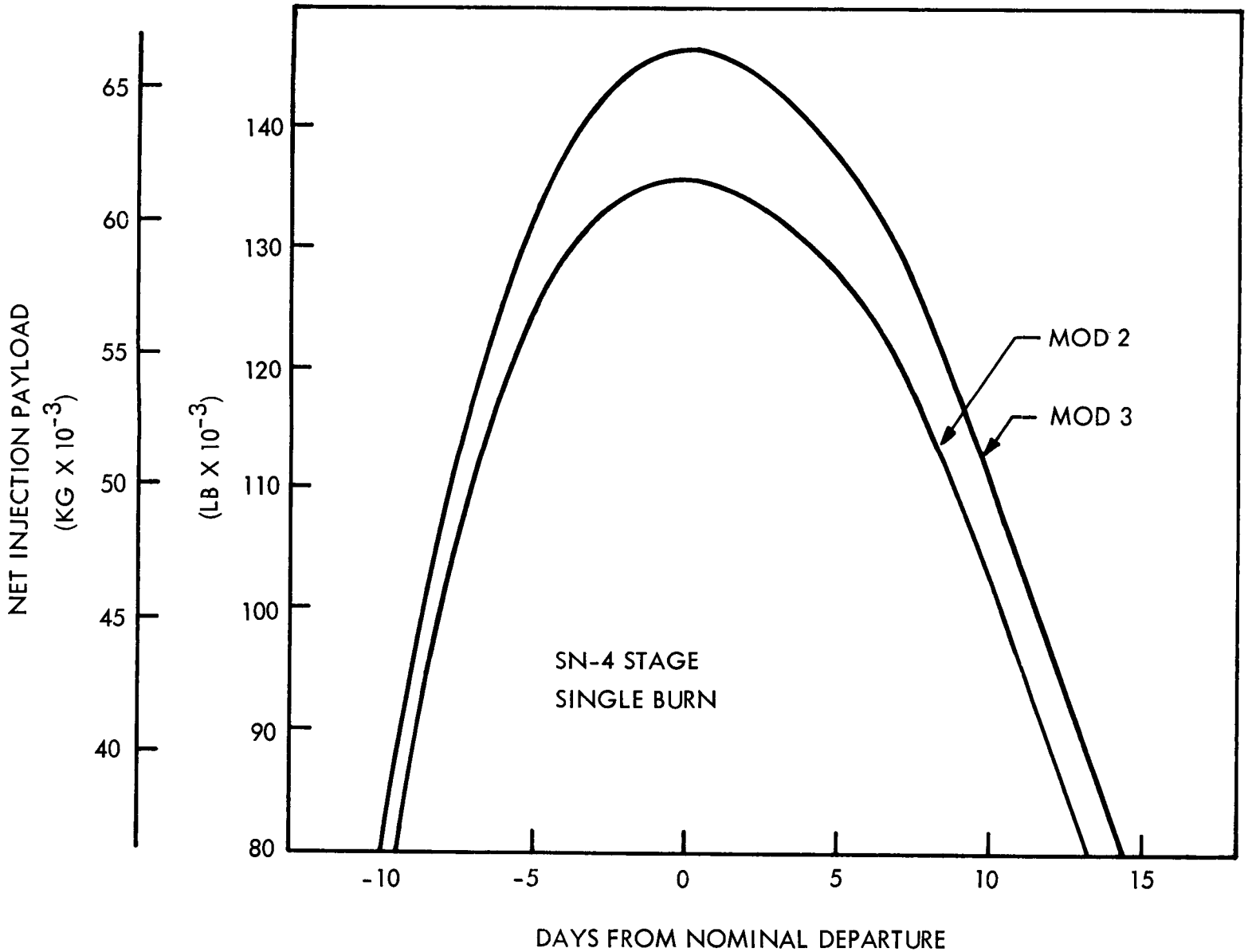

NUCLEAR STAGE COMPARISON

To obtain insight into required nuclear stage sizes for the Mars mission, various nuclear stages with different engines were compared on the basis of launch window. Note that minimum stage size should not go below the 160,000 – 180,000 lb size. Note also that 3 – 4 days of additional launch window is obtained by going from the Mod 1 to Mod 2 engine, but little is gained by switching to the Mod 3. It was also found that launch windows of at least a few days appear possible for any opposition within present limits imposed on full power time for each engine concept.

NUCLEAR STAGE COMPARISON

ROUND TRIP FLYBY PAST MARS — 1975

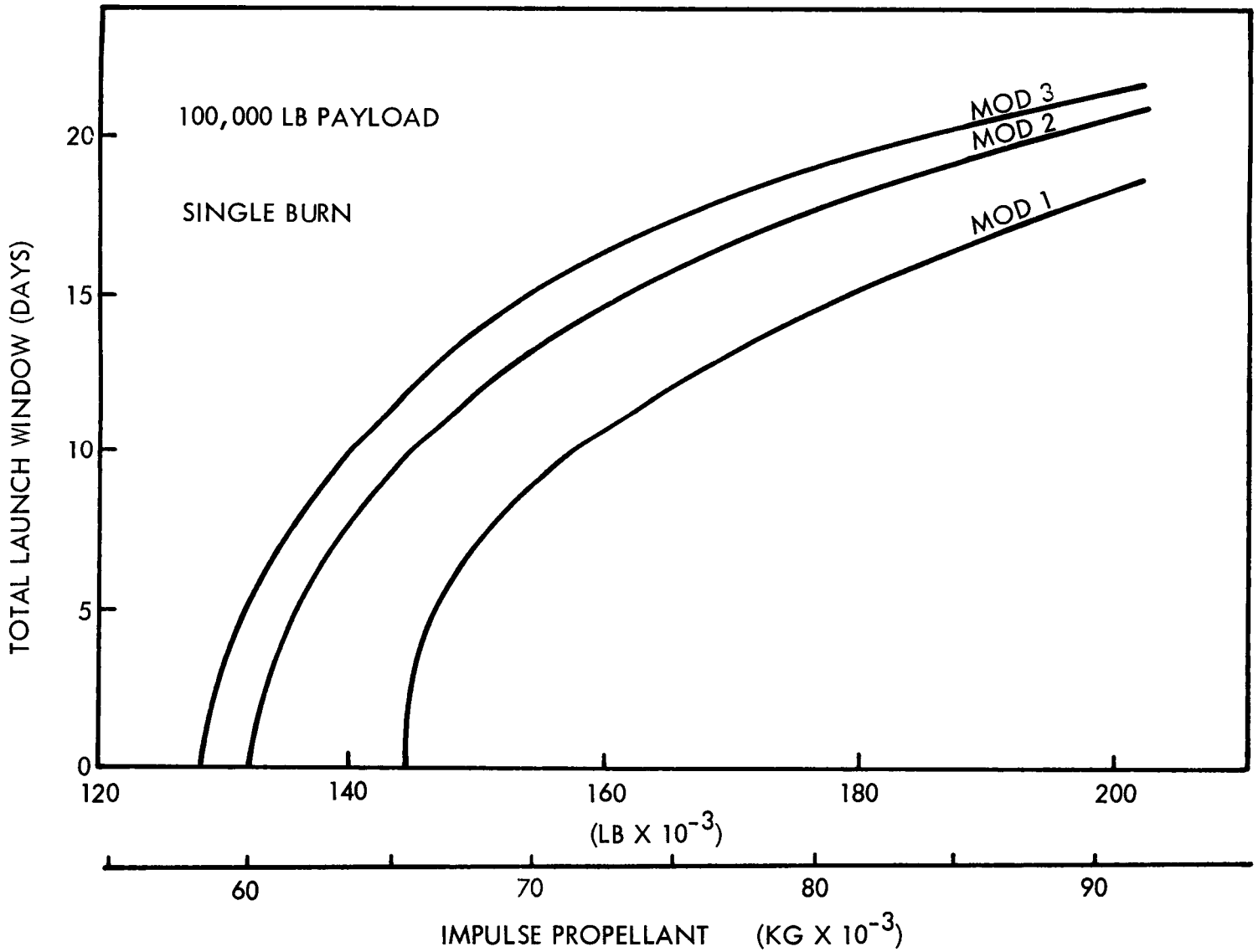

S-IC MODIFICATIONS

Research by RIFT Follow-on Applications at LMSC has disclosed that, with large nuclear third stages, some stiffening of the S-IC tank walls may be necessary. One scheme is to leave the outstanding leg of the longitudinal stiffeners at their full 1.85-inch width rather than machine them to 1.3 inches wide between ring frames.

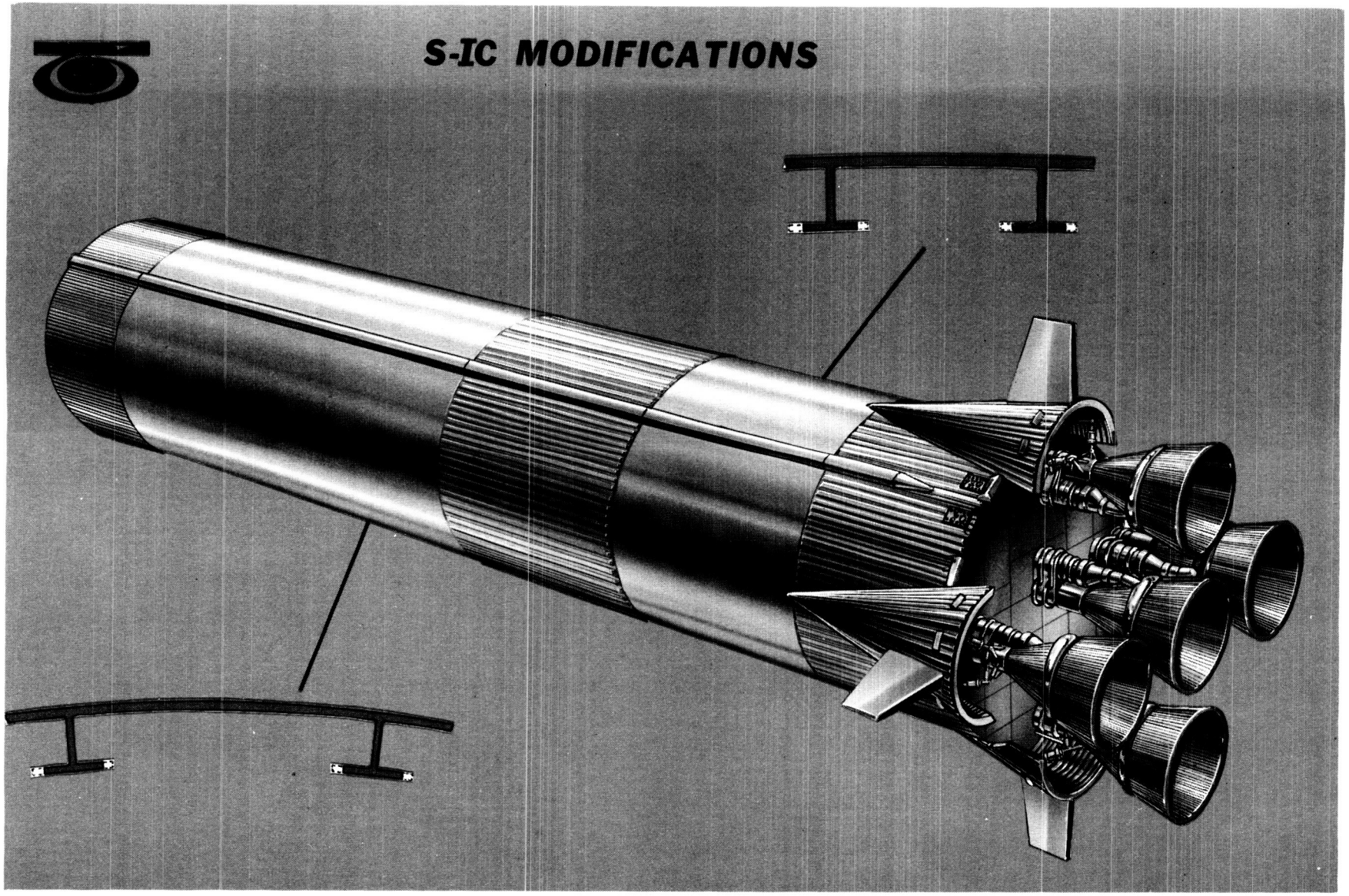
S-IC MODIFICATIONS

S-II STAGE MODIFICATIONS

Definite modification of the S-II stage of the Saturn V launch booster will be required to place nuclear boosters with payloads into orbit. This arises because the bending moments on the S-II are at least twice as great as for the presently planned Apollo space payload.

Modifications suggested by RIFT Follow-on Applications at LMSC are shown. They include increasing the longitudinal stiffener width from 0.125 to 0.710 inches in the cylinder wall area and replacing the exterior extrusion stiffeners presently used on the forward skirt with extrusions similar in size to those used on the aft skirt.

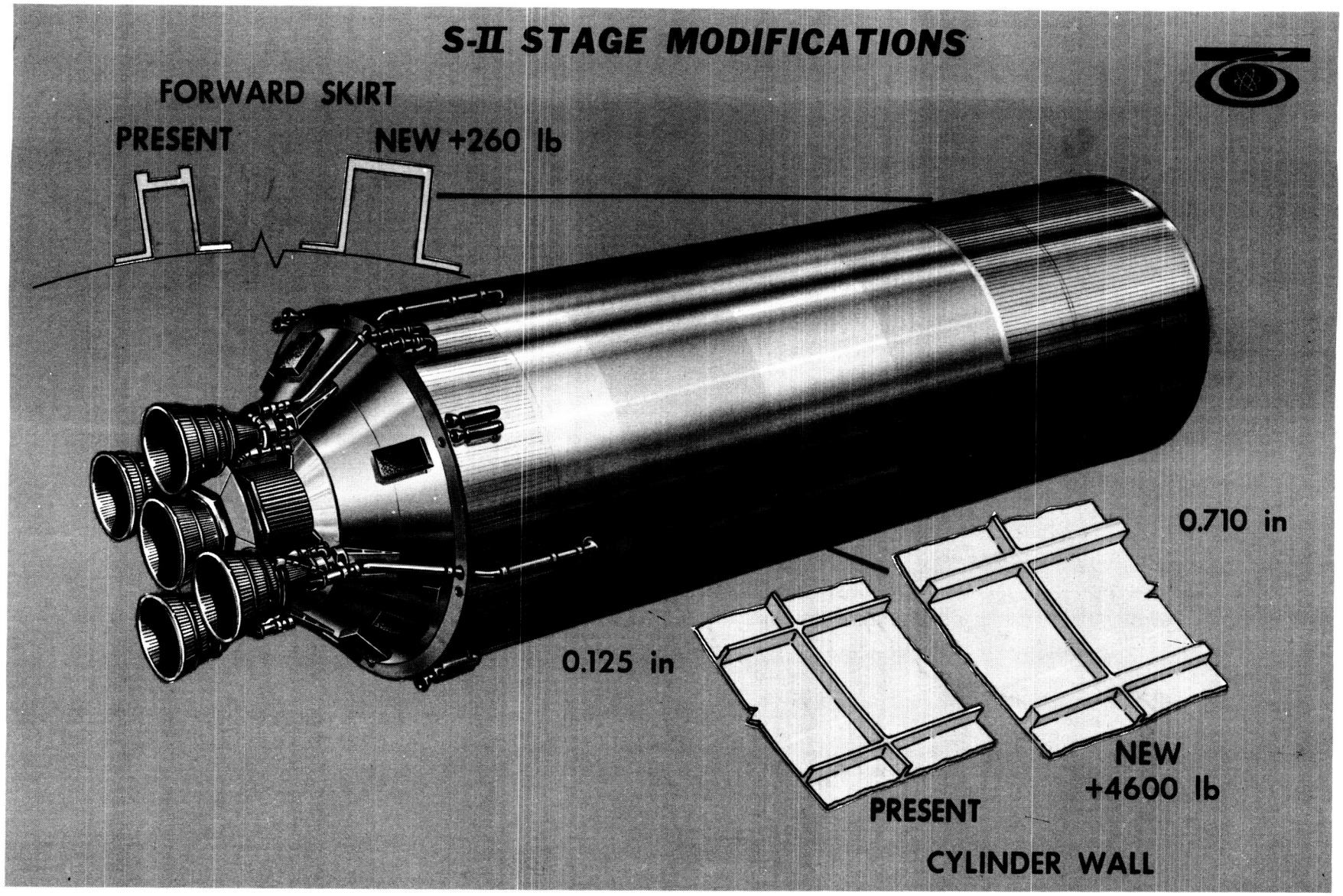
S-II STAGE MODIFICATIONS
FORWARD SKIRT
PRESENT
NEW +260 lb
0.710 in
0.125 in
NEW
+4600 lb
PRESENT
CYLINDER WALL

CONCLUSIONS AND RECOMMENDATIONS

As a result of work during this reporting period several conclusions can be stated:

- The problem of launch window and required plane changes must be a major consideration in the selection of orbit launch systems and operations.
- A special dual burn technique could be very helpful in reducing ΔV requirements for launch from orbit, but more work is needed to obtain the best split of energy input between the two firings considering both single and two separate propulsions systems.
- Either the Mod 1 or Mod 2 engine appears satisfactory although the Mod 2 is certainly preferred. Full power running time of the Mod 1 could be the biggest stumbling block to its full utilization.
- An SN-4 size of approximately 160,000 – 180,000 lb capacity appears to be a minimum requirement for the nuclear stage.
- Some modification of the Saturn V, particularly the S-II stage, appears necessary.

It is recommended that the following work be done during the next period:

- Analyze tandem clustering of two nuclear, two chemical, and nuclear/chemical combinations to determine applicability to the orbit launch requirements.
- Look at possible modifications of the S-II stage to utilize it as an orbit launch booster. This can be done only if necessary design information is readily available.
- A better definition of the operations required in orbit is needed. However, this requires more detailed definition of the payload.
- If time permits, further study of the orbit launch window and plane change problem should be conducted. This should be primarily directed toward determining the effect of orbit inclination selection, techniques for slowing orbit regression, and further study of the dual burn method.

CONCLUSIONS AND RECOMMENDATIONS

CONCLUSIONS

- PLANE CHANGE CAN BE MAJOR PROBLEM
- DUAL BURN MAY BE HELPFUL
- MOD 1 OR MOD 2 ENGINE SATISFACTORY
- SN-4 SIZE IS APPROXIMATE MINIMUM
- MODIFICATION OF SATURN V APPEARS NECESSARY

RECOMMENDATIONS

- ANALYSIS OF TANDEM CLUSTERING
- MODIFICATION OF S-II
- DEFINITION OF PROBABLE ORBIT OPERATIONS
- FURTHER STUDY OF PLANE CHANGE PROBLEM

LIFE SUPPORT

RADIATION EXPOSURE

The ERD (Equivalent Residual Dose) concept is an approximation to be used with great caution. Different tissues have widely varying sensitivities. Duration of exposure, type of radiation, and recovery times all affect the ERD.

The ERD is only to be interpreted as the equivalent acute dose. Chronic effects must be considered separately.

RADIATION EXPOSURE

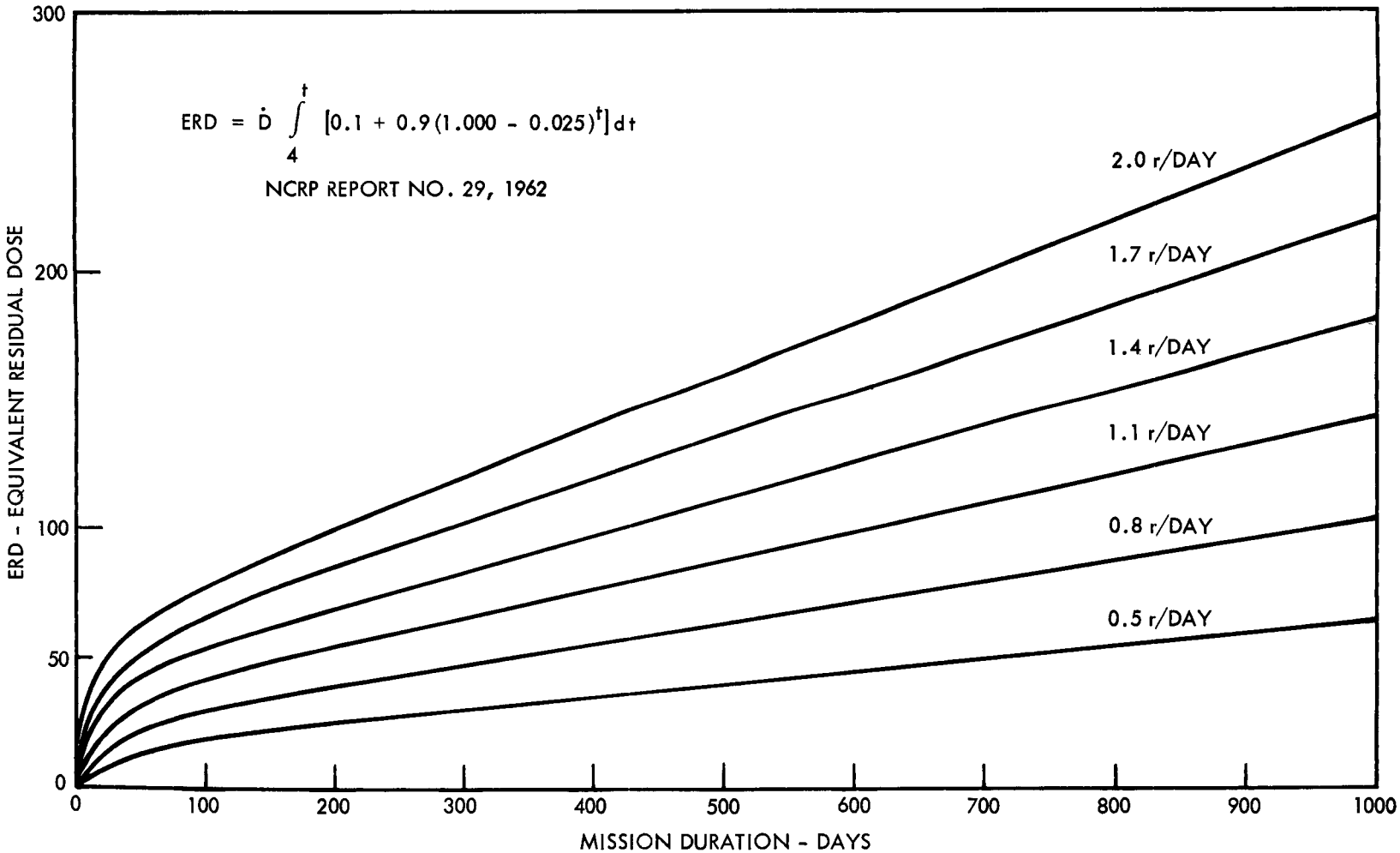

EXPECTED EFFECTS OF ACUTE WHOLE-BODY RADIATION

DOSE IN REMS	PROBABLE EFFECT
0 - 50	NO OBVIOUS EFFECT, POSSIBLY MINOR BLOOD CHANGES
50 - 100	VOMITING AND NAUSEA FOR ABOUT 1 DAY IN 5 TO 10 PERCENT OF PERSONNEL. FATIGUE BUT NO SERIOUS DISABILITY
100 - 150	VOMITING AND NAUSEA FOR ABOUT 1 DAY, FOLLOWED BY OTHER SYMPTOMS OF RADIATION SICKNESS IN ABOUT 25 PERCENT OF PERSONNEL. NO DEATHS ANTICIPATED
150 - 200	VOMITING AND NAUSEA FOR ABOUT 1 DAY, FOLLOWED BY OTHER SYMPTOMS OF RADIATION SICKNESS IN ABOUT 50 PERCENT OF PERSONNEL. NO DEATHS ANTICIPATED
200 - 350	VOMITING AND NAUSEA IN NEARLY ALL PERSONNEL ON FIRST DAY, FOLLOWED BY OTHER SYMPTOMS OF RADIATION SICKNESS. ABOUT 20 PERCENT DEATHS WITHIN 2 to 6 WEEKS AFTER EXPOSURE; SURVIVORS CONVALESCENT FOR ABOUT THREE MONTHS

ADAPTED FROM GLASSTONE (ED.), THE EFFECTS

LIFE SHORTENING FROM RADIATION

For a 300 to 1000 day mission involving doses of about 15 rads per solar event, a line nearer to the continuous than to the single exposure line would probably be applicable. Extrapolation to humans offers a degree of uncertainty.

The continuous exposure line shown is idealized from a number of animal experiments of different dose rates and durations. It might be considered applicable to dose rates less than 10 rads per day.

LIFE SHORTENING FROM RADIATION
((ANIMAL EXPERIMENTS)
COMPILED BY WEBB ASSOCIATES

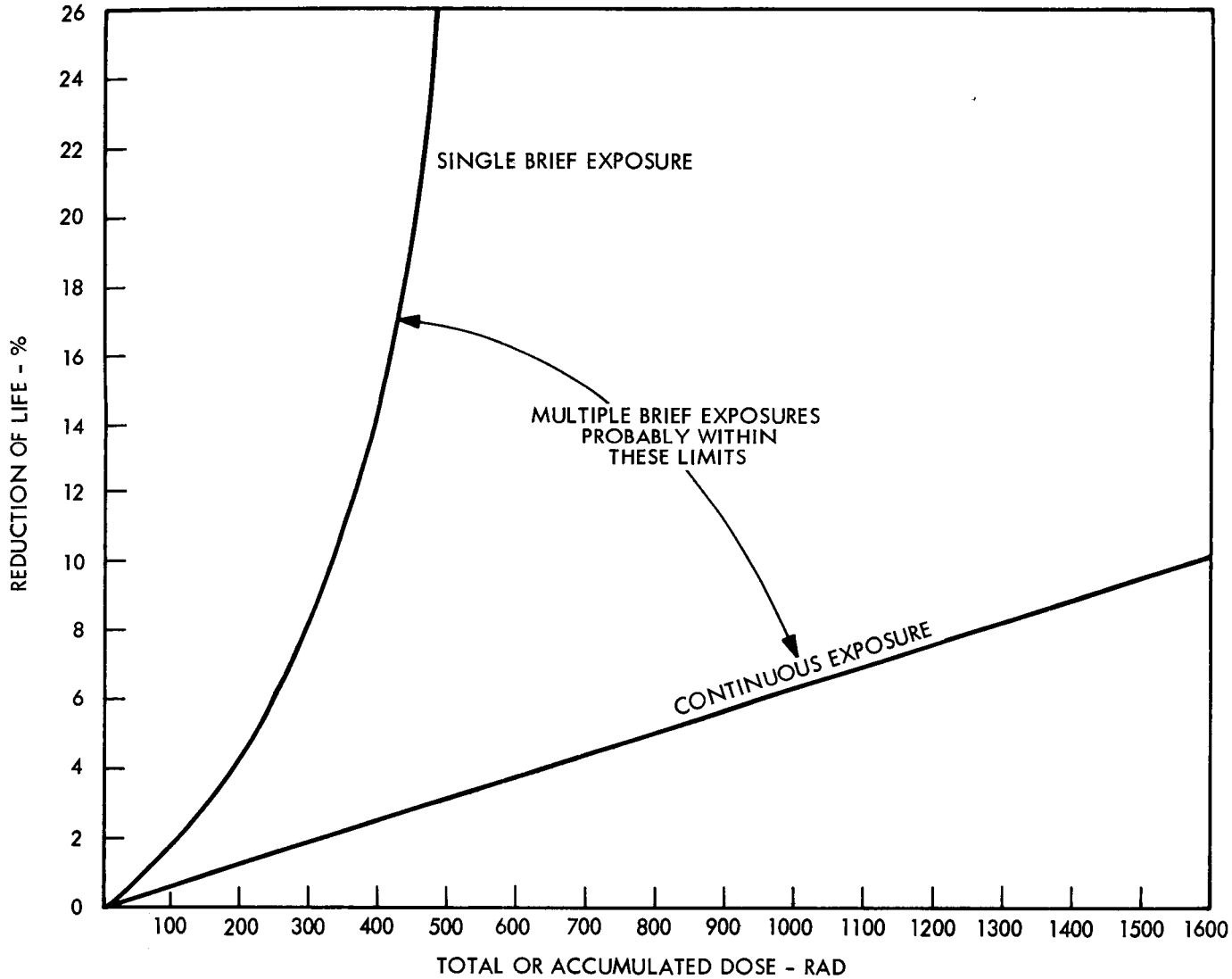

POWER REQUIREMENTS

Power requirements are generally applicable to mission durations from 300 to 1000 days. Refrigeration power would, however, rise approximately linearly with duration. The value shown is for 10 percent of the diet for 365 days. Thermal control power is quite sensitive to the power dissipated from other sources (6 kw assumed here) and to the atmospheric composition (360 torr, 1/2 O_2, 1/2 N_2).

LIFE SUPPORT AND ENVIRONMENT CONTROL SYSTEM

POWER REQUIREMENTS FOR INTERPLANETARY MISSIONS
ASSUMED POWER DISSIPATED FROM OTHER SOURCES - 6KW

SUBSYSTEM	OPEN (WATTS)				CLOSED (WATTS)			
	3 MEN	6 MEN	9 MEN	12 MEN	3 MEN	6 MEN	9 MEN	12 MEN
GAS SUPPLY	6	10	15	20	-	-	-	-
CO_2 REMOVAL	160	300	450	600	150	300	450	600
ATMOSPHERE PURIFICATION	12	18	25	40	12	18	25	40
REFRIGERATION	250	500	750	1,000	250	500	750	1,000
FOOD PREPARATION	40	60	90	120	40	60	90	120
THERMAL CONTROL	2,900	3,500	4,000	4,500	3,500	4,900	6,100	7,200
URINE DISTILLATION	-	-	-	-	150	300	450	600
CO_2 REDUCTION	-	-	-	-	400	800	1,200	1,600
CH_4 PYROLYSIS	-	-	-	-	150	300	450	600
UTILITY WATER DISTILLATION	375	750	1,125	1,500	375	750	1,125	1,500
UTILITY WATER HEATING	25	50	75	100	25	50	75	100
WATER ELECTROLYSIS	-	-	-	-	1,000	2,000	3,000	4,000
WASTE INCINERATION	150	300	450	600	150	300	450	600
TOTAL (AVERAGE)	3,718	5,488	7,080	8,480	6,002	10,278	14,140	17,960
TOTAL (PEAK)	5,600	7,900	10,000	12,000	9,500	14,400	19,000	23,900

SEMI-CLOSED LIFE SUPPORT AND ENVIRONMENTAL CONTROL SYSTEM

Values shown include gas supply, CO_2 removal, contamination control, food and water, crew support equipment, temperature and humidity control, regeneration equipment, sterilization, sound and vibration control, pressure suits, and utility water. Regeneration of atmospheric water, urine, utility water, and carbon dioxide is assumed. Container weights, equipment, redundancies, and tools were included. Power penalties were not.

The curves are dotted below 300 days since different systems would be applicable.

SEMI-CLOSED LIFE SUPPORT AND ECS SYSTEM

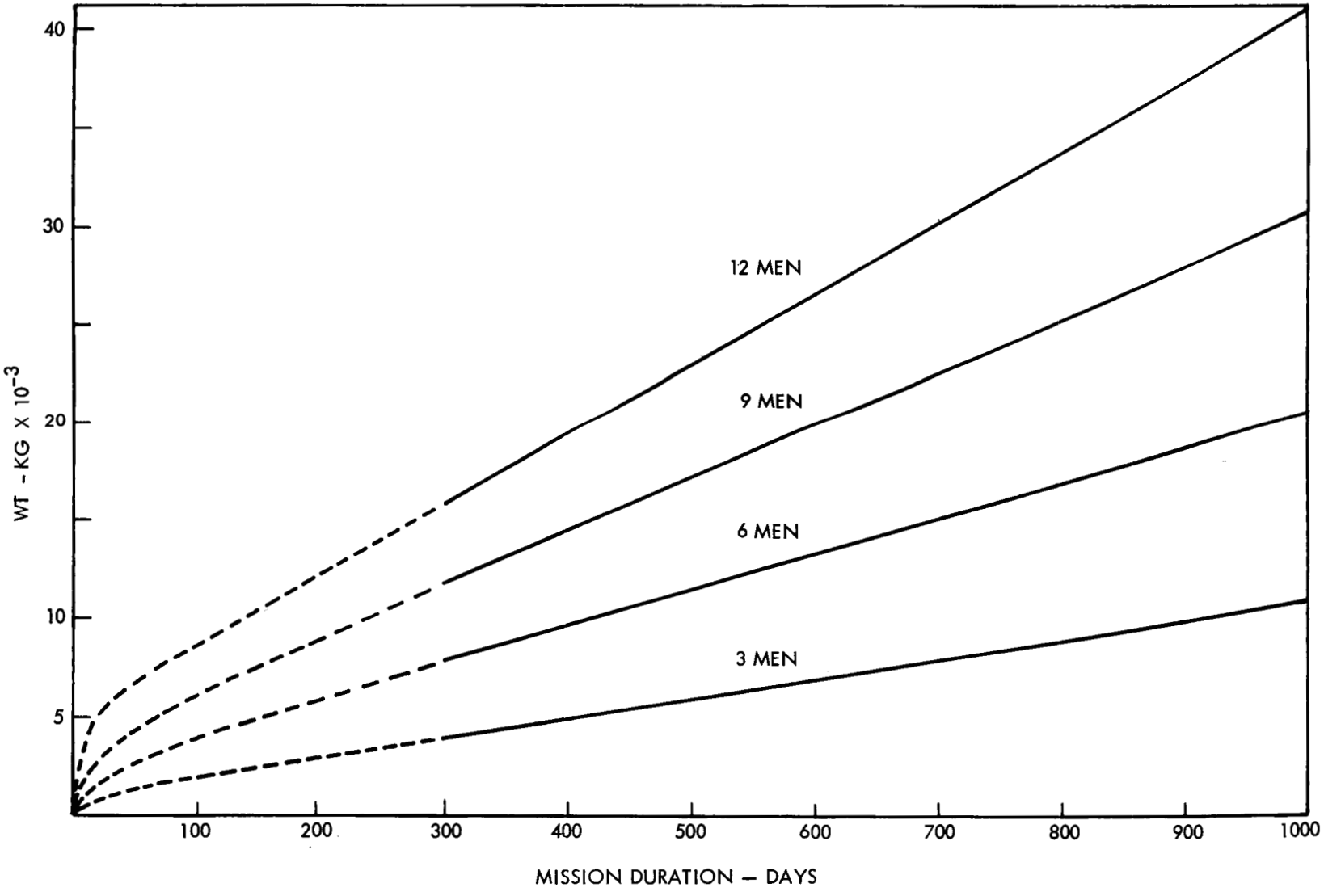

ENVIRONMENTAL CONTROL SYSTEM SCHEMATIC

The environmental control system for the EMPIRE vehicle provides (1) oxygen for breathing and cabin leakage makeup by the electrolysis of excess water; (2) nitrogen for cabin pressurization by liquid cryogenic storage; (3) carbon dioxide removal, by an electro-dialysis adsorption cell; (4) temperature control, by heat rejection to a space radiator cooling system with controlled air reheat; (5) humidity control, by condensation-separation at a constant dew point in the temperature control heat exchanger; (6) urine recovery, by vapor compression distillation; (7) water supply, by recovery of condensed atmospheric water and by hydrogenation of carbon dioxide, (8) trace contaminant removal, by filter, activated charcoal and catalytic burner; and (9) carbon dioxide hydrogenation by a Sabatier reactor with hydrogen recovery by a methane pyrolizer.

Cabin air is circulated through the temperature and humidity control equipment by the main cabin fan and through the trace contaminant removal and CO_2 removal system by a secondary fan. Oxygen and nitrogen supplies are connected to the crew compartment through pressure regulators. The urine distillation unit exhausts to the electrolysis cell which feeds oxygen to the cabin oxygen storage tank and hydrogen to the CO_2 reduction unit. Water from the CO_2 reduction unit is fed to the cabin water storage tank.

ENVIRONMENTAL CONTROL SYSTEM SCHEMATIC

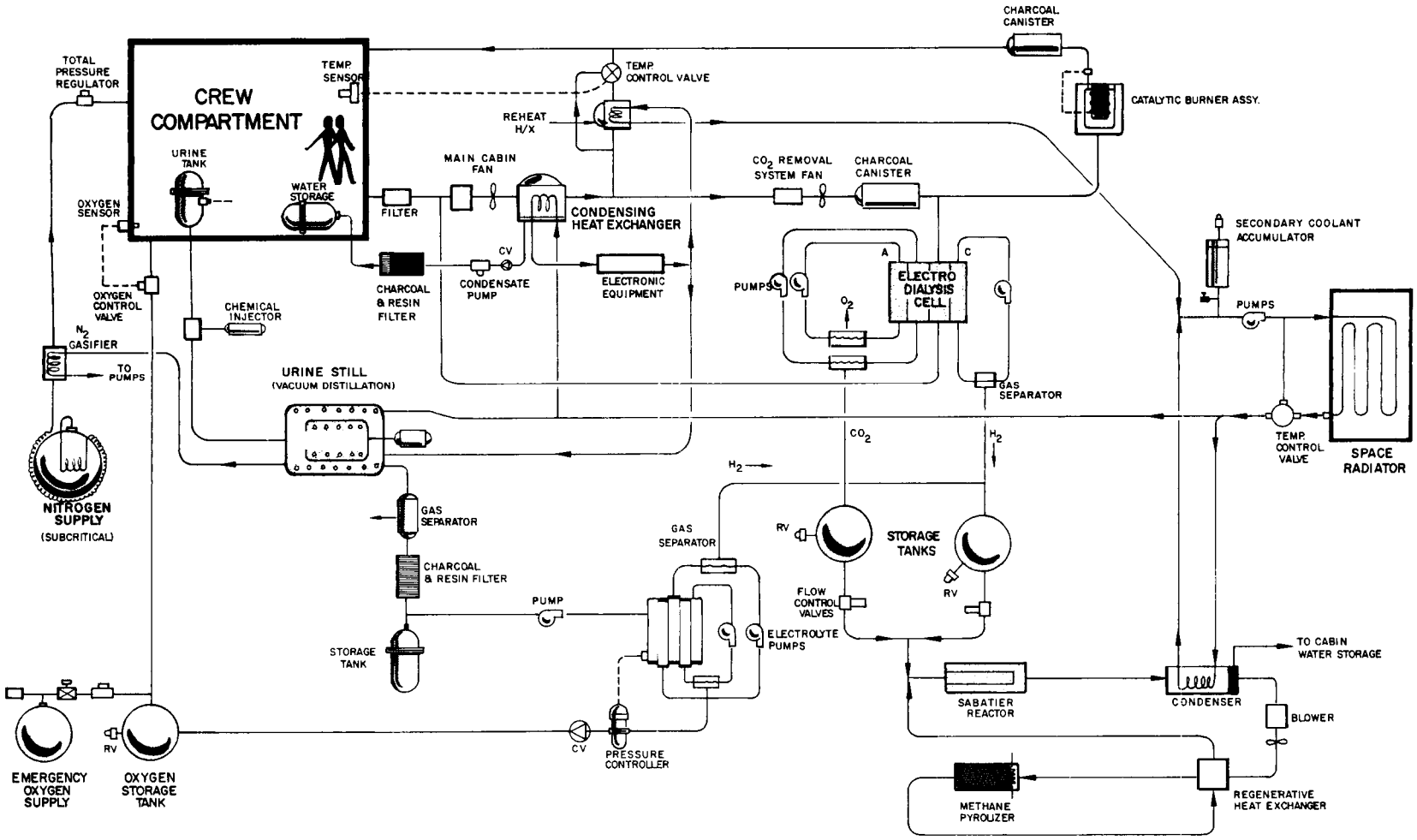

INSTRUMENTATION

ORBITAL DATA-HANDLING SYSTEM (ON BOARD)

The diagram illustrates the central role of the space-vehicle crew, particularly in the orbital pre-landing subphase, performing the key functions of evaluation, decision, and action on landing craft commitment – also operating in the automatic/manned-override control loops providing: (1) Sensor and other equipment selection, pointing, programming, priority, mode; (2) Data consignment to the proper slot – as well as re-programming the computer; (3) Tracking remote vehicles, and exerting command and control, as required.

The efficiency with which the crew performs these operations is a function of the efficacy of the supporting display, providing timely, readily readable, integrated presentation of (1) the dynamic tracking picture; and (2) sensed site and environmental data, properly collated, reference-aided; and provided with suitable accuracy, resolution, and dynamic range.

In the pre-launch subphase, data is collected by onboard sensors or – via the data link – from remote, unmanned orbiters and probes. After suitable processing it is distributed, in accordance with programmed or manned control, to display, storage, or direct transmission, via the data link, the Earth.

Remote-vehicle tracking is another onboard sensory function, with command and control (minimized to the extent feasible) exerted by the space crew via the data link.

ORBITAL DATA-HANDLING SYSTEM
(ON BOARD)

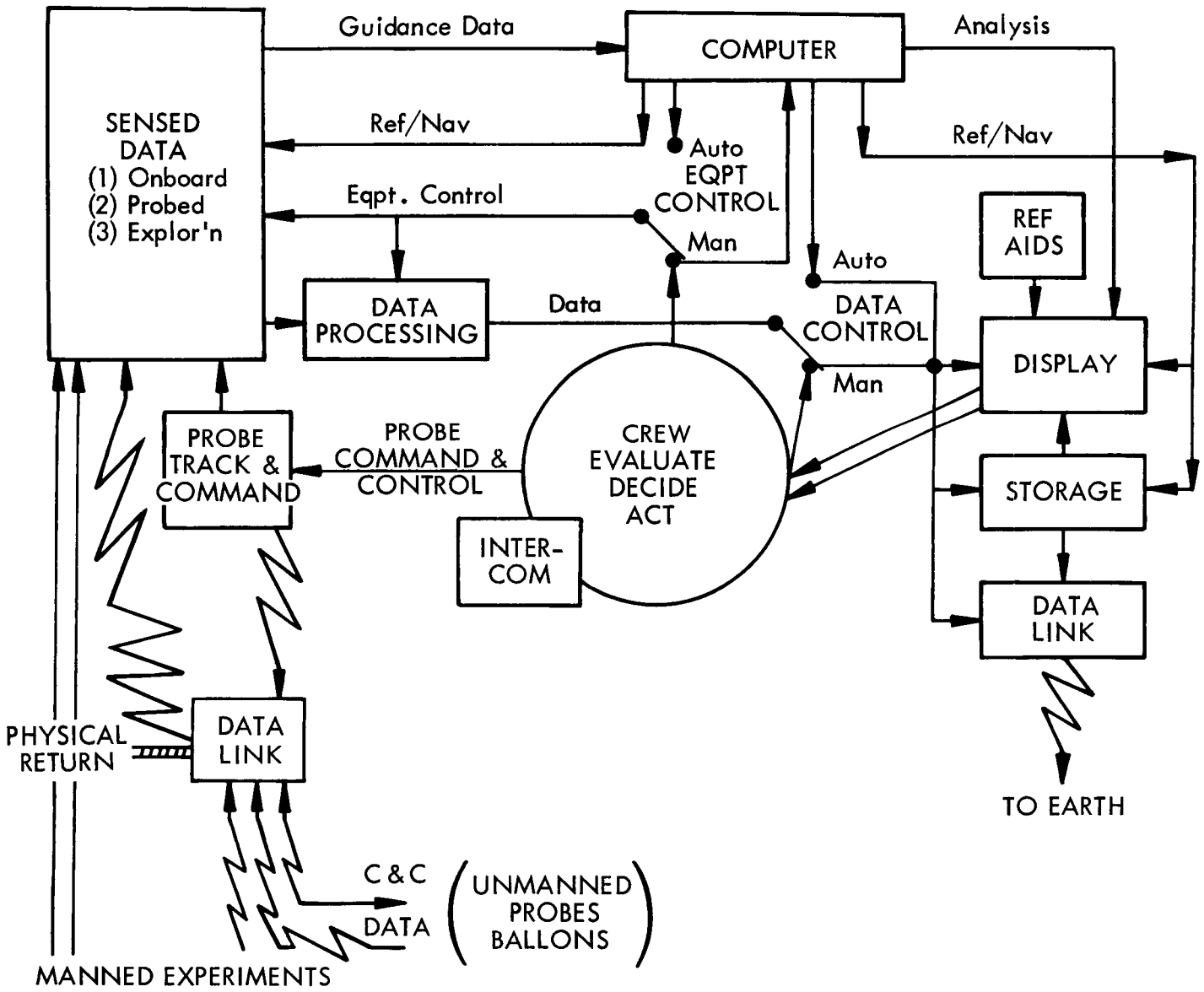

RESOLUTION CAPABILITIES

The diagram reviews the familiar relationship between angular resolution, altitude, and ground resolution – shown at the bottom in terms of both the conventional horizontal resolution directly below the space vehicle, and the corresponding vertical (or stereo) resolution at 45 degrees oblique.

The earlier EMPIRE study examined the requirements for high-resolution Mars photography from flyby and orbiting missions and produced a set of sample system parameters, including camera focal length and aperture, film resolution and sensitivity, frame time and angular stability tolerance in terms of assumed best and worst light conditions predictable on Mars.

Future studies will attempt to resolve the problems of correlating and integrating the onboard reconnaissance with closeup probe TV pictures and other sensed data, obtained by unmanned probes launched from orbit to the planet surface.

The slanted lines of the figure show fine to coarse angular resolution as operational values, i.e., resolution specified after degradation due to angular instabilities. The first solid line (1 second of arc) is a value advanced as the resolution limit for a fine photographic system, a limit established, in the main, by air turbulence and bubbles. Fast frame times minimize these transmission effects and reduce the stringency of stability requirements, as well. However, they also present severe film-sensitivity requirements in view of the predictable low light level incident on Mars (4/9 of Earth), and presumable low reflectance and contrast on the planet. Further environmental data is needed to clarify these requirements.

The inset table relates angular resolution to focal length for a sample photographic and TV system.

RESOLUTION CAPABILITIES

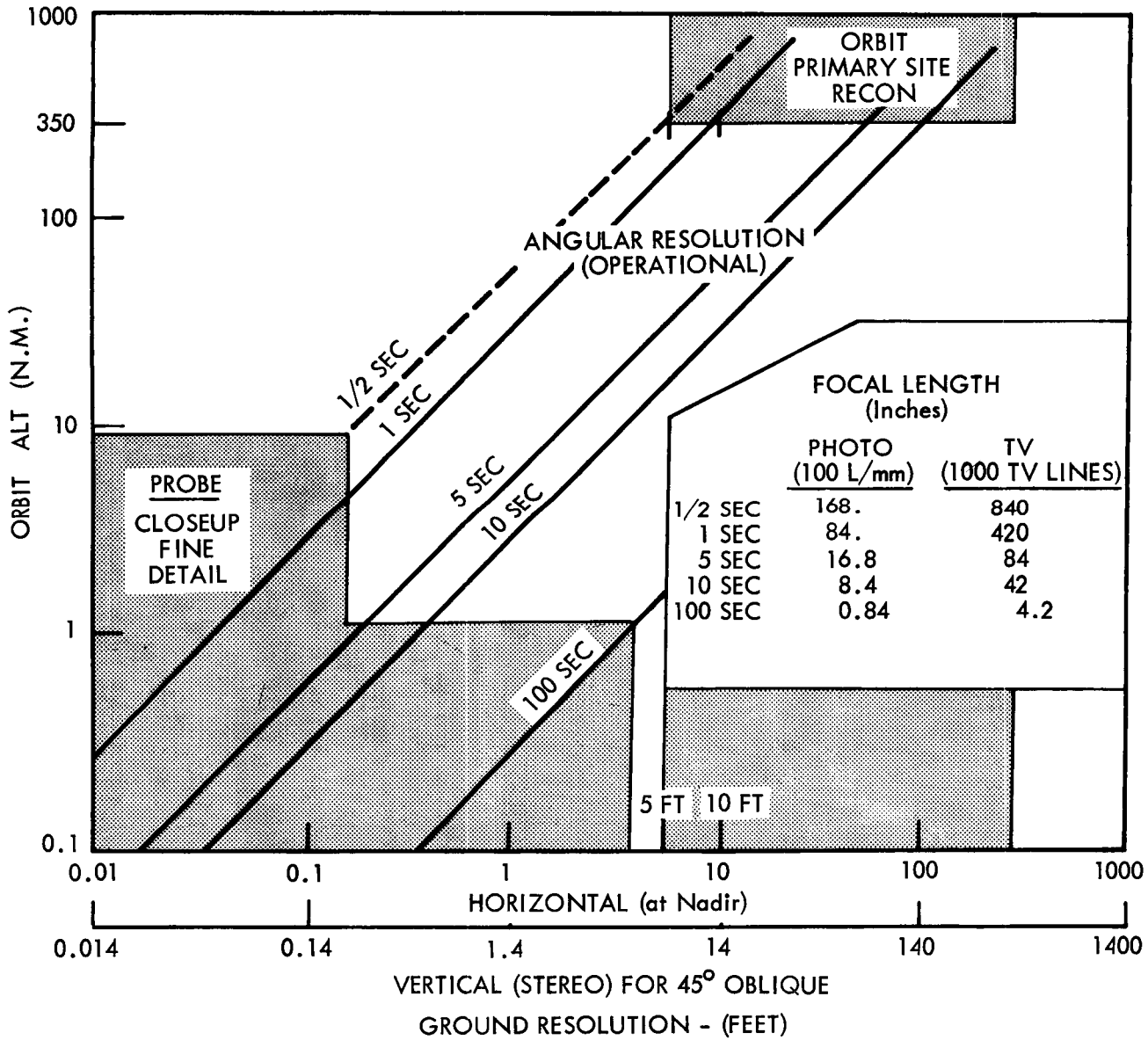

FOCAL LENGTH (Inches)

	PHOTO (100 L/mm)	TV (1000 TV LINES)
1/2 SEC	168.	840
1 SEC	84.	420
5 SEC	16.8	84
10 SEC	8.4	42
100 SEC	0.84	4.2

ATTITUDE STABILITY REQUIRED

This chart relates the resolution characteristics to angular stability requirements.

ATTITUDE STABILITY REQ'D
EXPOSURE DURATION OF 10^{-3} SEC

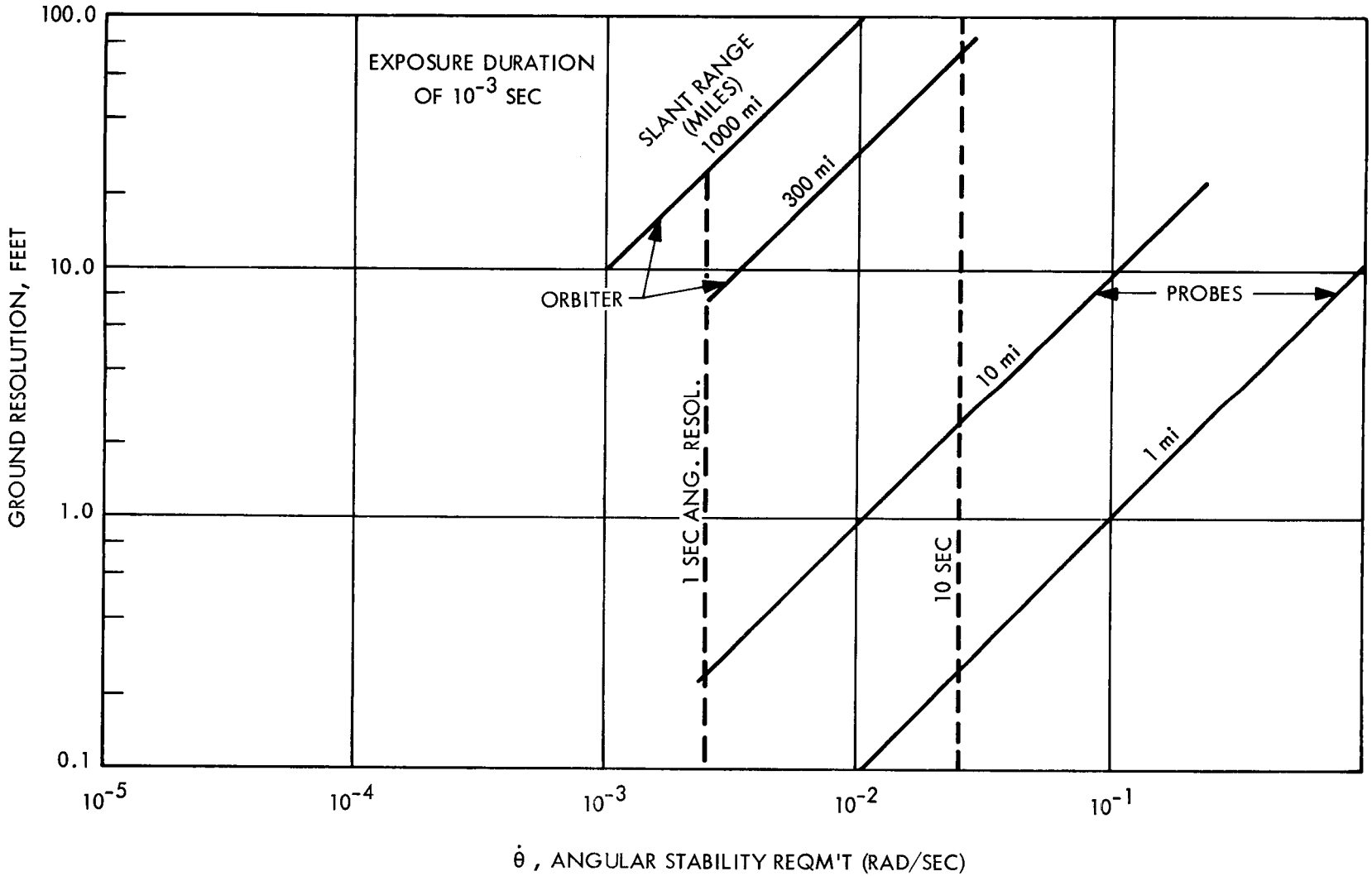

PRE LANDING SENSED DATA REQUIRED

The table presents a simplified list of the data required by the onboard crew in order to select and evaluate a potential landing site and to make the landing decision. The final complement of instrumentation will be a function of the degree of safe-landing assurance sought before committing the landing craft.

The list show requires the onboard system and crew to correlate – in place and time – data from four sources; (1) Pre-mission observations and experiments; (2) Onboard sensors; (3) "Balloon"-borne Sensors – either slow-descent vehicles launched from orbit, or floaters released by landing probes; and (4) Probe-borne sensors – on unmanned vehicles launched to the planet surface from the orbiting vehicle.

Pre-mission Reference – Stored in the space vehicle in suitable form for ready comparison with orbital reconnaissance data, these will include planetary maps to the refinement feasible, and environmental curves with corresponding go/no-go tolerances. Also established prior to the mission will be a well-defined set of exploration goals and preferred landing area.

Mapping – A small, crude, dual- or tri-lens mapping camera will be used to map the planet in sufficient detail to provide comparison with premission reference maps and located gross landmarks.

Site Detail – To find safe landing sites within the inspected regions, fine ground resolution is required in both the horizontal and vertical coordinates. From a 350-nautical-mile orbit, a telephoto camera of about 14-foot focal length would be required to provide horizontal ground resolution of 5 feet immediately below the vehicle.

The use of multiband sensing – films in the I-R, optical, and U-V regions, as well as I-R imaging systems and microwave detectors – will be explored in order to increase the information collected from orbit. Laser radar is a potential candidate for obtaining fine contour resolution.

Other weather, surface, and landing environment data are shown in the chart to be sampled.

PRE–LANDING SENSED DATA REQUIRED

DATA		EQPT	
PRE-MISSION REF		STORAGE	ONBOARD
MAPPING	– Sufficient to orient	STEREO MAPPER (Crude)	ONBOARD
SITE DETAIL	HORIZONTAL	TELEPHOTO CAMERA > 10 FT. FL.	ONBOARD
	VERTICAL	HI-RES STEREO	ONBOARD
ALTITUDE		RADAR	ONBOARD
SURFACE	LIGHT, HEAT	SENSITOMETER, IR	ONBOARD
WEATHER: - ALOFT	WINDS	RADAR TRACKER	ONBOARD
	DENSITY, CHEMISTRY, RAD	STANDARD INSTRUMENTS	"BALLOONS"
SURFACE	GUSTS, CHEMISTRY, RAD etc	STANDARD INSTRUMENTS	"BALLOONS"
SURFACE HARDNESS		PENETRATION VS TIME INSTRUMENTS	LANDING PROBES
PLANET CLOSEUP	Photos	TV, Stereo	LANDING PROBES
	Bio Experiments	Anaerobe Detector, etc.	LANDING PROBES

SURFACE EXPERIMENTS

Achievement of the scientific goals of the mission will involve overlap of the various techniques listed below.

Topographical survey (aided by standard surveyor's tools)

Ecological study. Implemented by precise identification of each sample or measurement with its horizontal site, height or depth, and surrounding environment

Comparative geography. Exploring the distinction between planet light-dark areas (or polar/non-polar margins) within feasible mobility limits

Geology:	Formation and Structure Natural Resources H_2O H_2O Forming) Materials O_2 Forming)	Chemistry:	Air Surface Subsoil Life forms
Biology:	(Chemical, photometric, growth test, etc.) Anaerobic Bacteria Higher plant life, etc.	Photography & TV (UV, Visual and IR)	Formation Color Atmospheric effects Possibly movement and change (by motion picture)
Physical:	Air, Weather, Wind Photometry Seismology Radiation, Magnetism, Gravity, etc.		

SURFACE EXPERIMENTS

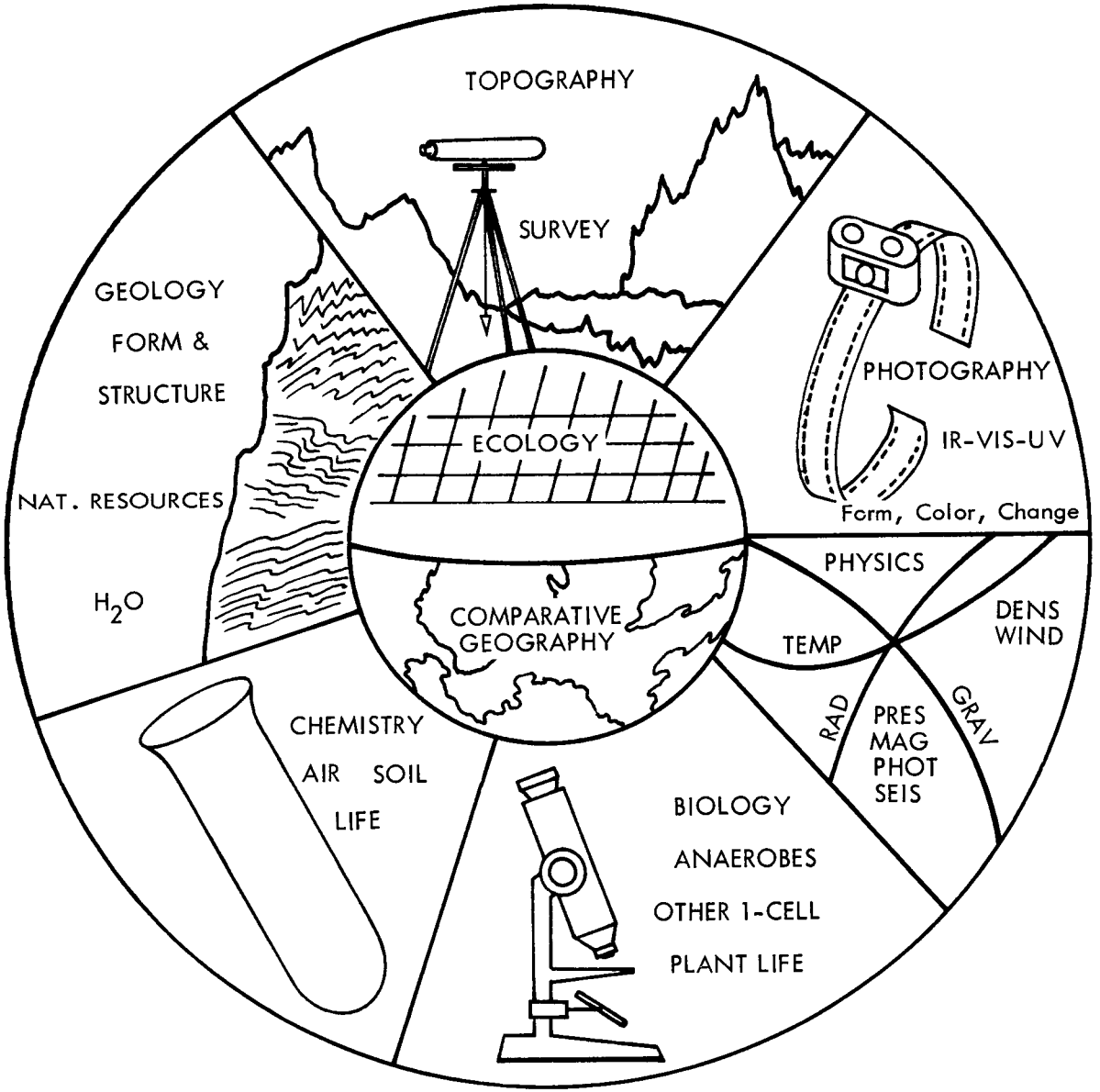

DESIGN

SIX MAN NUCLEAR POWERED ROTATING SPACECRAFT

The spacecraft shown was designed with three radial spokes to which a nuclear power supply and the manned modules are attached. The crew of 6 within these modules is 85 feet from the spin axis, and as the spacecraft rotates at 4 rpm the crew experiences a 0.4 g field. The location of the Mars capture and escape propellant within the general spacecraft is important in providing a stable rotating platform because of the large variation in its mass. At Earth escape the mass of the propellant is greater than that of the spacecraft while at Mars escape the final propellant is consumed, the tanks jettisoned and only the basic spacecraft remains. With the propellant mounted along the sides of the hub parallel to the spin axis as shown, the spacecraft is stable when the tanks are full for the outbound leg; in Mars orbit when part of the propellant has been consumed and during the return leg when all tanks have been jettisoned. The excursion module is attached to the front of the hub where it is readily accessible and has docking provisions for rendezvous in Mars orbit. Stability of the spacecraft is not affected in this arrangement and the docking area can be shadow shielded from the reactor.

At launch the spacecraft is folded into a compact package and erected in Earth orbit. The propulsion system is launched separately and then attached to the spacecraft in Earth orbit. The crew is launched in the Earth reentry vehicle, an Apollo type vehicle, which is attached to the command center module. On orbit the command center would be fully operational in the minimum amount of time. During the high thrust phases, at Earth escape and Mars retro, the spokes would be retracted to minimize the structural bending problems and would be extended for the outbound and inbound trips. Earth escape propulsion would be mounted along the spin axis behind the hub; however the spacecraft would not be rotating during the high thrust phase. The nozzle for the Mars propulsion phase would also be mounted behind the hub along the spin axis.

SIX MAN NUCLEAR POWERED ROTATING SPACECRAFT

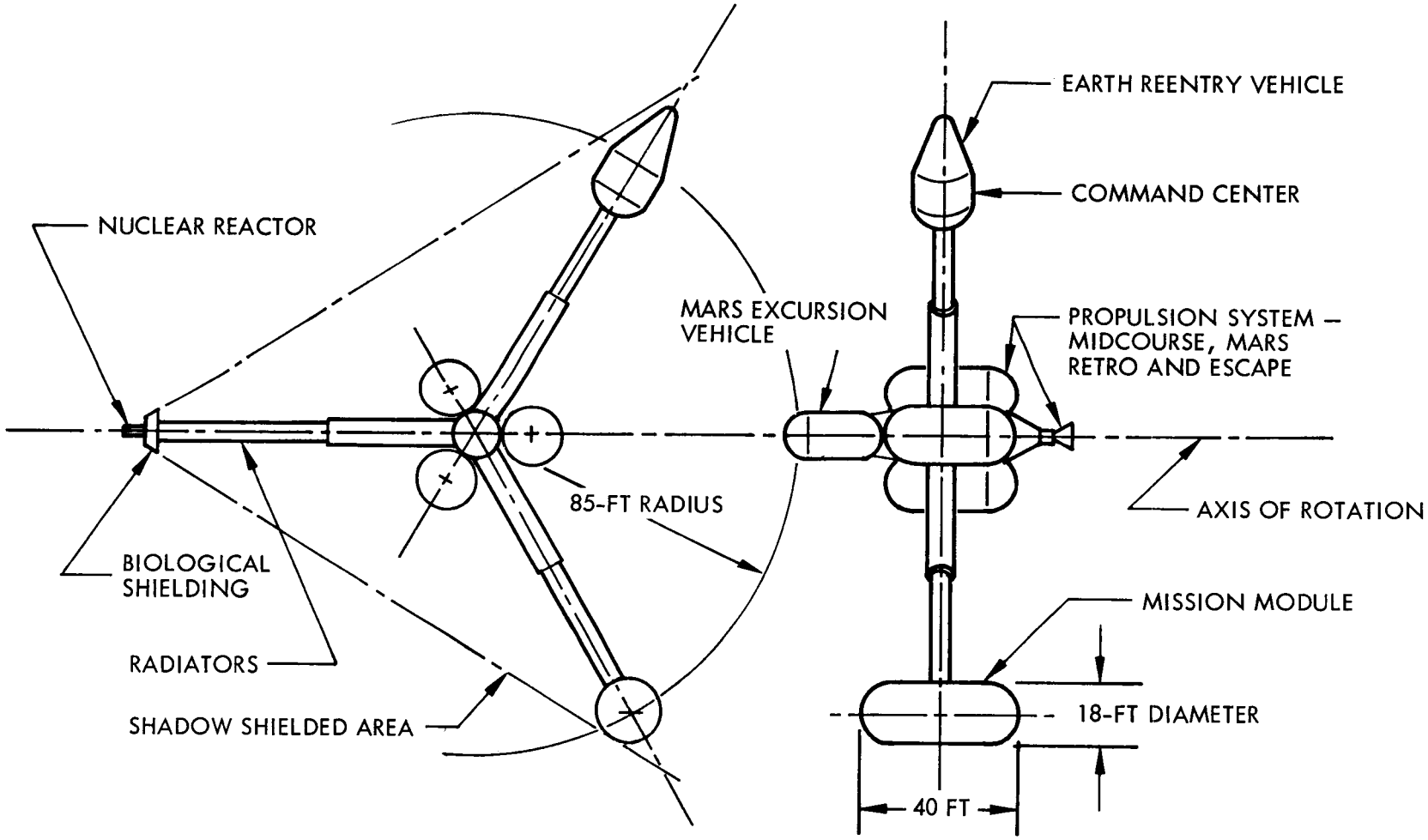

MISSION MODULE – 6 MAN ROTATING SPACECRAFT

The mission module is a cylinder 18 feet in diameter and 40 feet long enclosed by hemispherical ends. The cross section shows the configuration's two decks. The upper deck has a main center aisle with equipment on both sides, the lower deck has the equipment in the center and an aisle on either side. This arrangement permits easy access to the pressure vessel wall structure to both sides of the equipment for examination, test, and repair; and provides a good man-machine arrangement. All equipment is mounted on rails and can be moved into the aisle for quick servicing.

A control center would be installed at one end of the upper deck, a recreation area at the opposite end. The lower deck could have a dining area at one end and experimental equipment at the other. The mission module would weigh the same as the manned modules at the end of the other spoke so that the crew would have the same g field in both areas.

MISSION MODULE- 6 MAN ROTATING SPACECRAFT

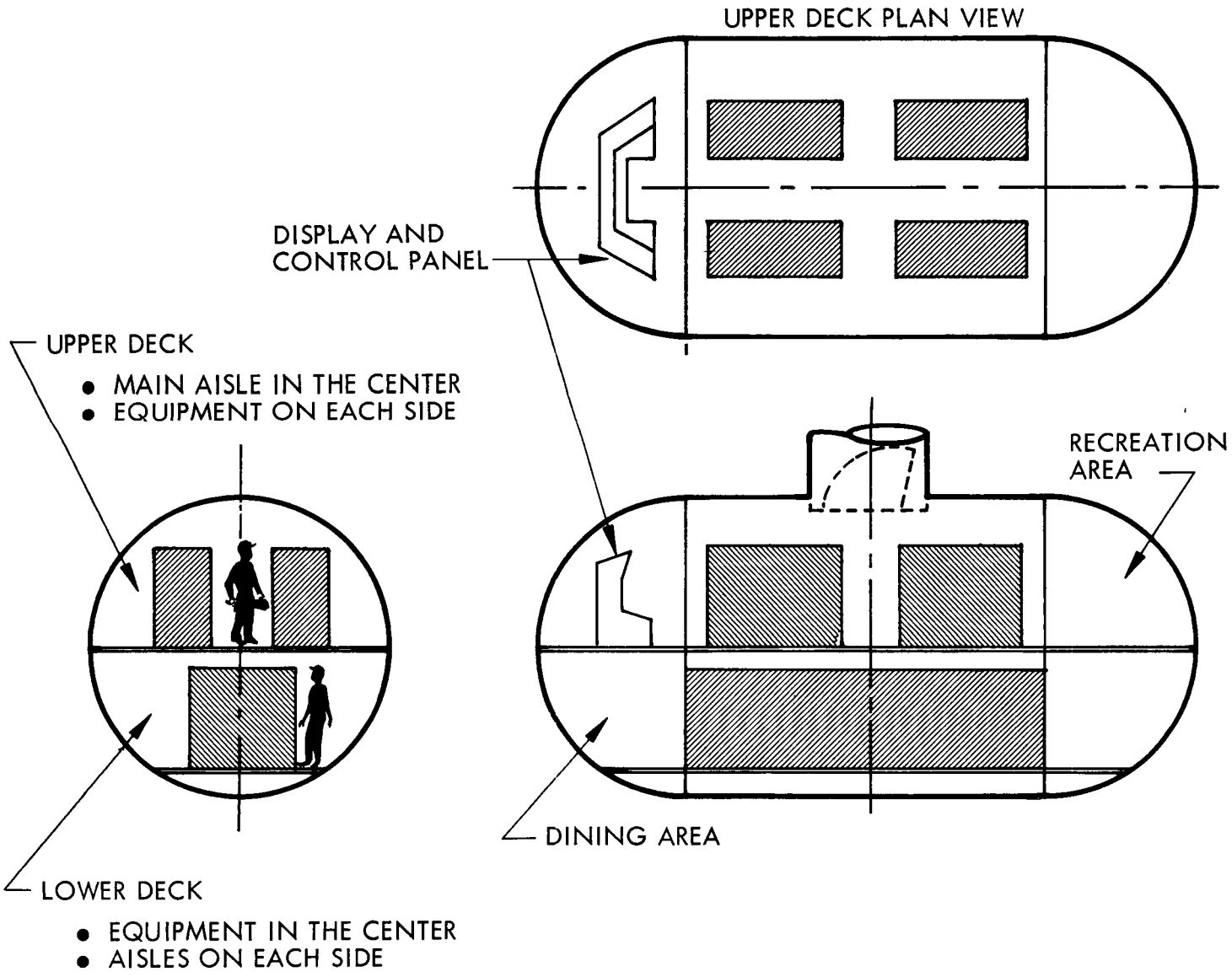

MISSION ANALYSIS

DIRECT STOP/RENDEZVOUS MODE
LOCATION OF MINIMUM MASS TRIPS

The one-way stopover trips are indicated by the series of parallel lines overlaid on hyperbolic excess speed contours. The effective total trip time is the duration as felt by the stopover crew, including 10 day orbital capture at the planet. Rendezvous of the stopover vehicle is accomplished with a "pickup" vehicle executing a round trip flyby to the planet. Combining the mass required on Earth parking orbit for both vehicles yields minimum mass for each effective total trip time. Overall minimum for this type of pickup trajectory is indicated. Leftmost darkened region is for chemical Earth escape propulsion, the other for nuclear.

DIRECT STOP / RENDEZVOUS MODE

LOCATION OF MINIMUM MASS TRIPS

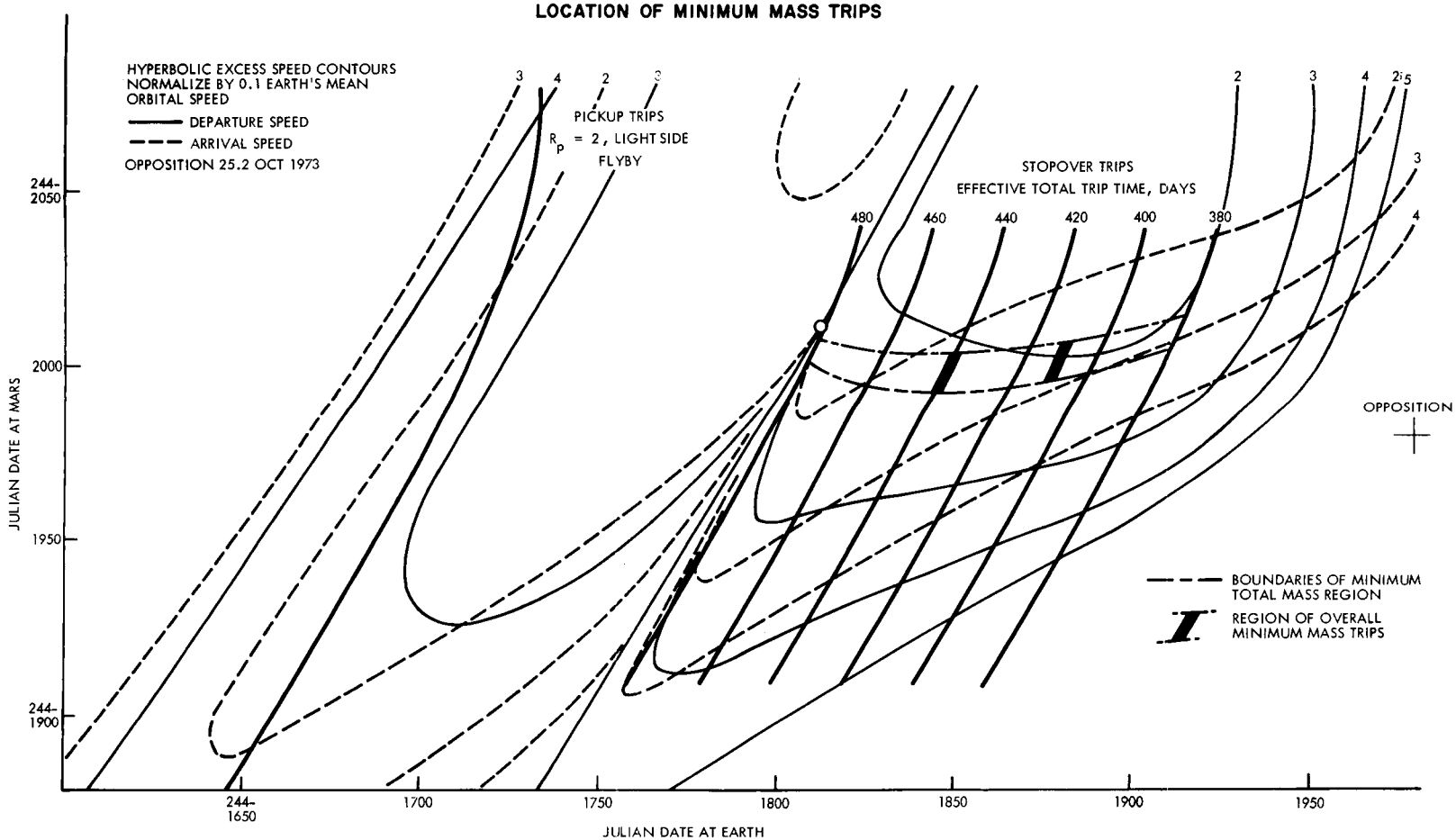

DIRECT STOP/RENDEZVOUS
LOCATION OF MINIMUM MASS TRIPS

A different round trip flyby trajectory is used for the pickup vehicle. Pickup vehicle arrives at the planet at the same R_p, but on the darkside of the planet. Corresponding one-way trajectories are as marked. Boundaries of minimum total mass region are indicated for this type of pickup.

DIRECT STOP/ RENDEZVOUS MODE
LOCATION OF MINIMUM MASS TRIPS

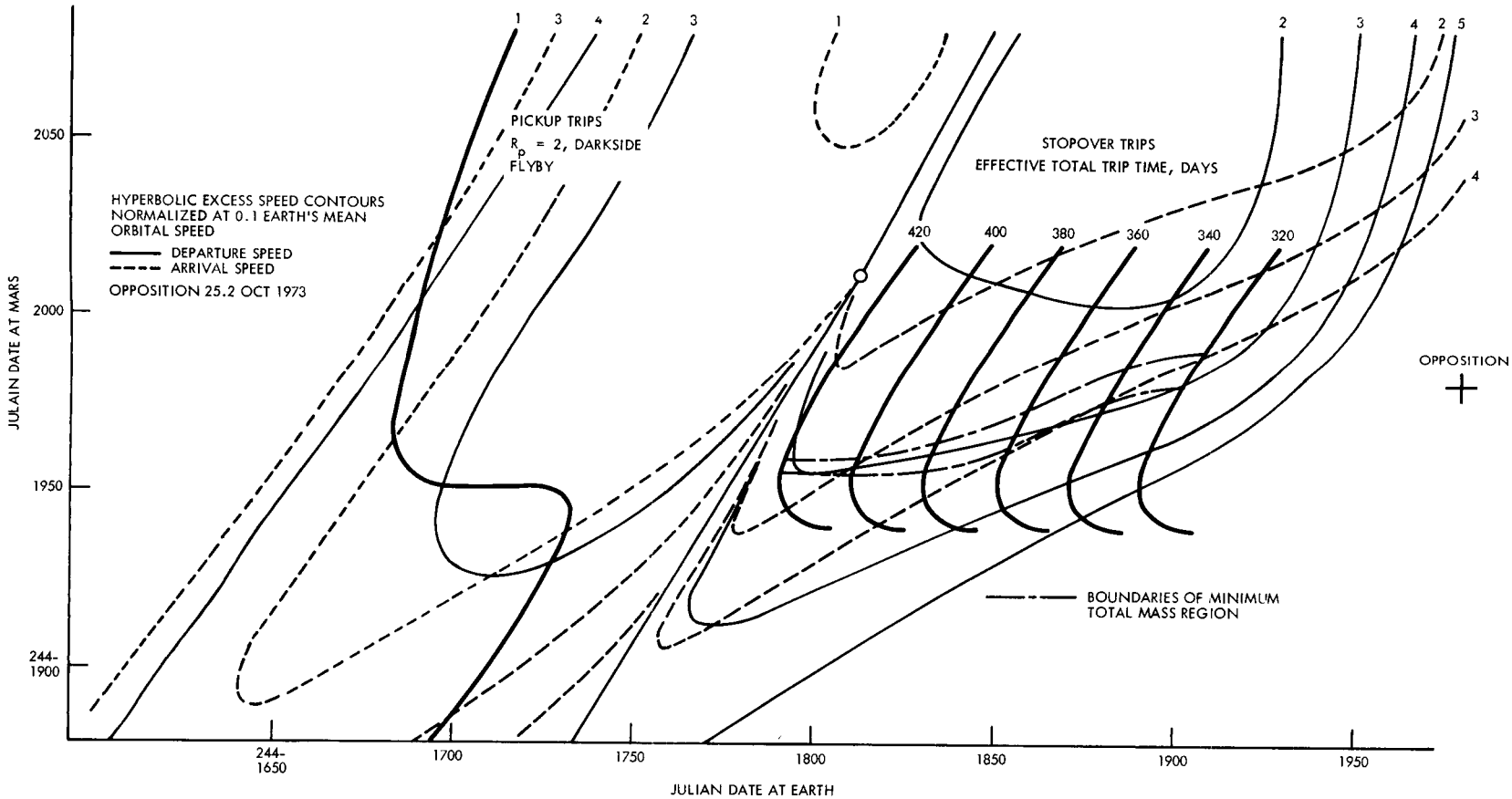

ESTIMATE OF MINIMUM TOTAL MASS

Masses of the pickup and corresponding stopover vehicles are determined for each Julian date of pickup and a given total trip time. Sum of the two gives the minimum total mass to be placed on Earth parking orbit.

ESTIMATE OF MINIMUM TOTAL MASS

DIRECT STOP/RENDEZVOUS

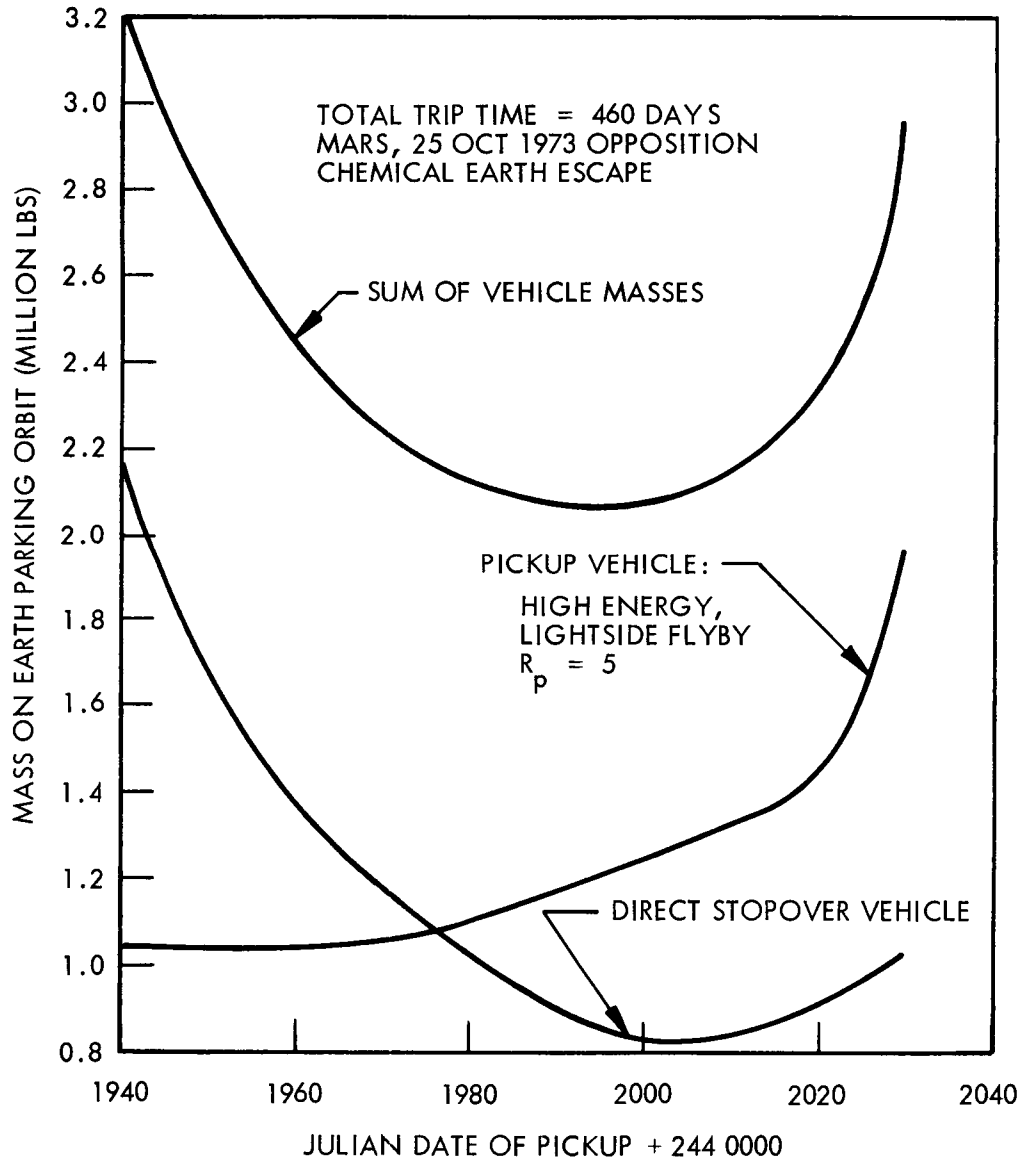

DETERMINATION OF MINIMUM MASS TRIPS

Optimum trips for both chemical (O_2/H_2) and nuclear Earth escape systems are determined by the sum of the pickup and stopover vehicle masses. The pickup Julian date, orbital stopover duration and effective total trip time identifies the optimum trajectory parameters for each vehicle. Each optimum is unique for the given total trip time.

DETERMINATION OF MINIMUM MASS TRIPS

TOTAL TRIP TIME = 460 DAYS

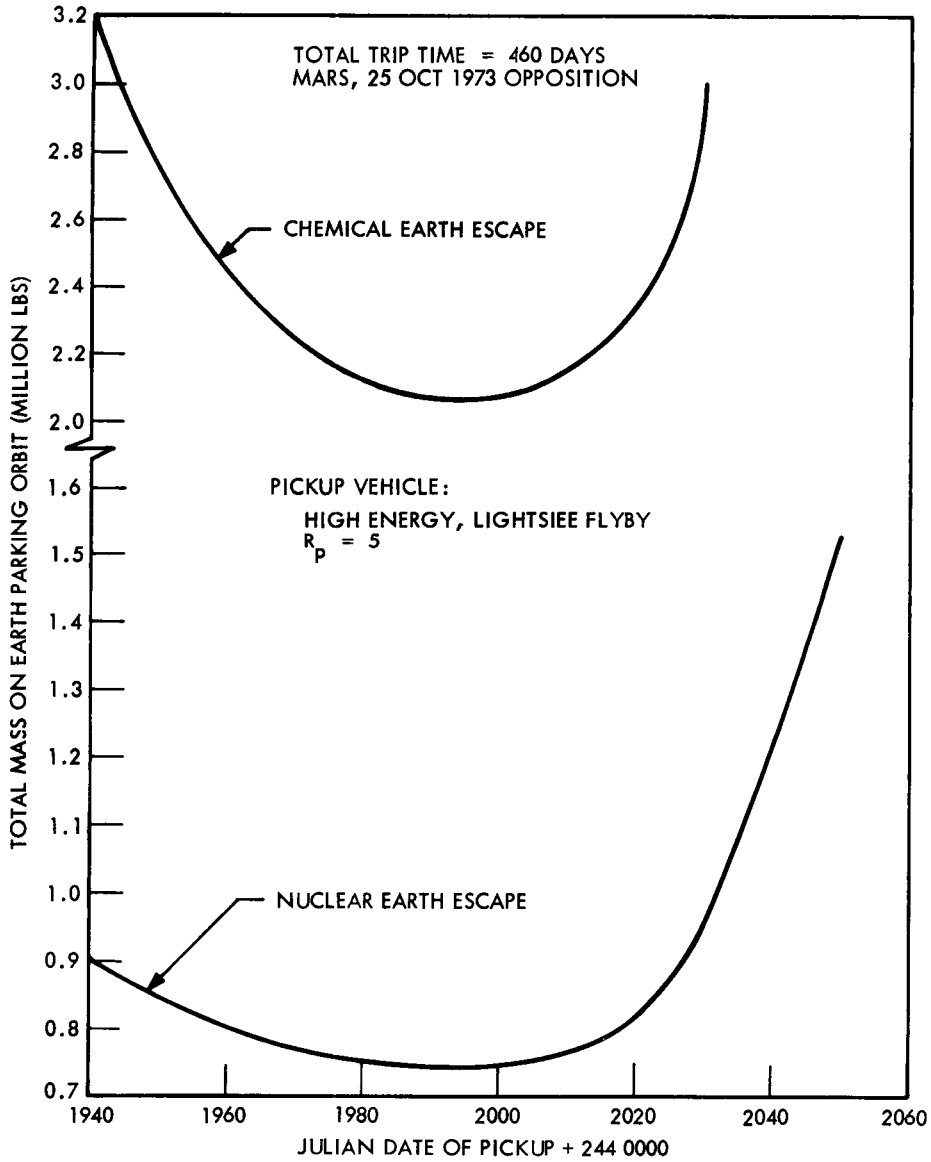

TWO VEHICLE MISSION REQUIREMENTS

Single vehicle stopover ("standard") is compared with direct stop/rendezvous operational mode. Advantages are shown for the darkside and lightside flyby and for the pickup vehicle passage distance. Shorter effective total trip times are available through the use of the two-vehicle concept. Overall minimum mass is approximately the same as in the standard stopover.

TWO-VEHICLE MISSION REQUIREMENTS

DIRECT STOP/RONDEZVOUS OPERATIONAL MODE AT MARS
CHEMICAL EARTH ESCAPE

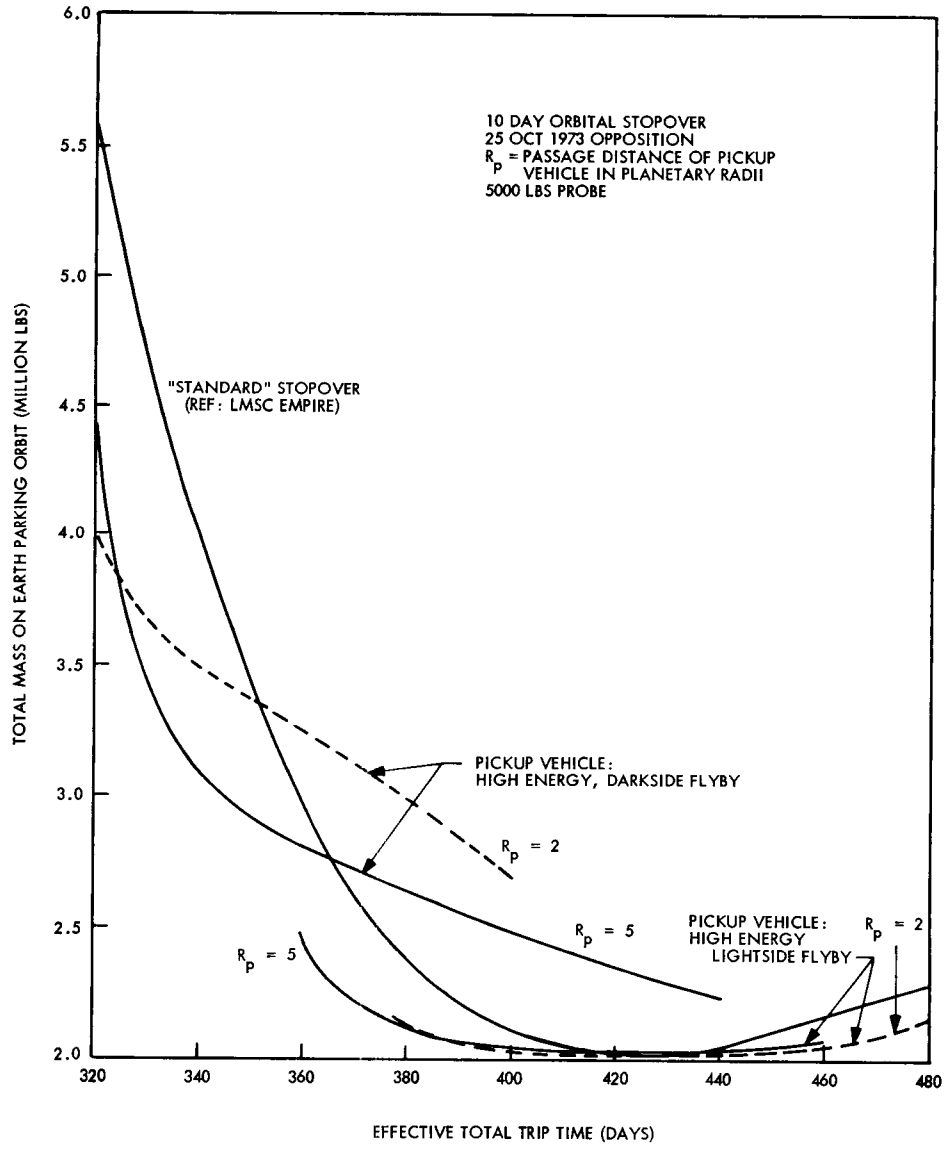

TWO VEHICLE MISSION REQUIREMENTS

Use of nuclear escape propulsion for both vehicles changes relative comparison of the dark and lightside flybys and the passage distance. Both types of pickup trajectories yield lower mass requirements than the standard mission. The darkside flyby is consistently better than the standard,whereas in the chemical case there was a crossover.

TWO-VEHICLE MISSION REQUIREMENTS
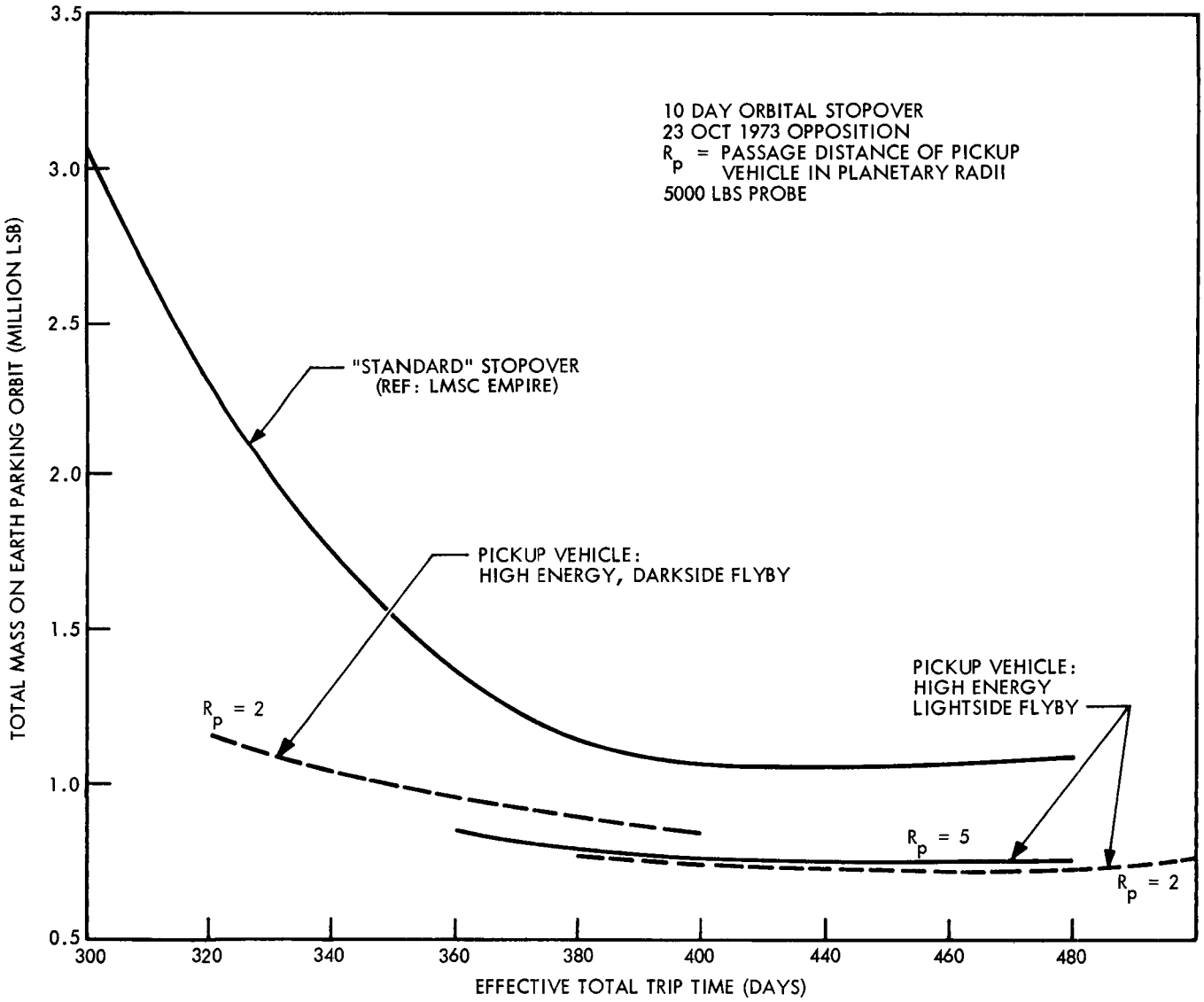
DIRECT STOP/RENDEZVOUS OPERATIONAL MODE AT MARS NUCLEAR EARTH ESCAPE