PUBLICATION NO. U-3557

RE-ENTRY AND SPACE SYSTEMS PROGRAMS

PROGRAM PLAN

FLIGHT HARDWARE DEVELOPMENT AND DELIVERY FOR THE LUNAR PENETROMETER SYSTEM APPLICABLE TO THE APOLLO PROGRAM

CASE FILE COPY

FACILITY FORM 602

N67-85456
(ACCESSION NUMBER)

306
(PAGES)

CR-87537
(NASA CR OR TMX OR AD NUMBER)

(THRU)

(CODE)

(CATEGORY)

PHILCO
A SUBSIDIARY OF Ford Motor Company
AERONUTRONIC DIVISION
FORD ROAD/NEWPORT BEACH, CALIFORNIA

27 APRIL 1966

Publication No. U-3557

RE-ENTRY AND SPACE SYSTEMS PROGRAMS

PROGRAM PLAN
FLIGHT HARDWARE DEVELOPMENT AND DELIVERY FOR THE LUNAR PENETROMETER SYSTEM APPLICABLE TO THE APOLLO PROGRAM

Prepared for:

National Aeronautics and Space Administration
Langely Research Center
Hampton, Virginia

Contract No. NASI-4923

Approved: R. S. Kraemer
R. S. Kraemer, Program Engineer

V. Skoro
V. Skoro, Program Supervisor

W Hostetler
W. Hostetler, Manager, Space Programs

27 April 1966

AERONUTRONIC
DIVISION OF PHILCO CORPORATION
A SUBSIDIARY OF Ford Motor Company,
FORD ROAD/NEWPORT BEACH, CALIFORNIA

CONTENTS

SECTION		PAGE
1	INTRODUCTION AND SUMMARY	1-1
2	MISSION OBJECTIVES	
	2.1 Apollo Interfaces	2-2
	2.2 LSP Interfaces	2-2
	2.3 Competing Characteristics	2-2
	2.4 Reliability Philosophy Affecting Design	2-3
	2.5 Experimental Philosophy Affecting Design	2-3
3	SYSTEM DESIGN CHARACTERISTICS	
	3.1 System Functional Description	3-1
	3.2 System Preliminary Design	3-6
4	PERFORMANCE SPECIFICATIONS	4-1
5	DEVELOPMENT PLAN	5-1
	5.1 Subsystem Development	5-2
	5.2 System Development	5-11
	5.3 Facility Requirements	5-15
6	QUALIFICATION AND ACCEPTANCE TEST PLANS	
	6.1 Qualification Test Plan	6-1
	6.2 Acceptance Test Plan	6-3

CONTENTS (Continued)

SECTION		PAGE
7	MANUFACTURING PLAN	
	7.1 Introduction	7-1
	7.2 Equipment and Tooling	7-2
	7.3 Setback Charts	7-12
	7.4 Make-or-Buy List	7-12
8	AEROSPACE GROUND EQUIPMENT (AGE) AND FACTORY SUPPORT EQUIPMENT (FSE)	
	8.1 Requirements and Interface Constraints	8-1
	8.2 Preliminary Description of AGE	8-7
9	RELIABILITY AND QUALITY ASSURANCE	
	9.1 Reliability	9-1
	9.2 Reliability Tasks	9-1
	9.3 General Quality Control Plan	9-8
10	FIELD SUPPORT	
	10.1 Field Support Plan	10-1
	10.2 Support Requirements	10-2
	10.3 Personnel Requirements	10-2
	10.4 Facility Requirements	10-3
	10.5 Equipment Requirements	10-3
	10.6 Field Support Plan Documentation	10-3
	10.7 Support Concept	10-3
	10.8 Specialized Repair Equipment	10-4
	10.9 Special Tools and Test Equipment	10-4
	10.10 Preservation, Packaging, Packing and Marking	10-5
	10.11 Storage Requirement	10-5
11	SCHEDULES	11-1

CONTENTS (Continued)

SECTION		PAGE
12	MANAGEMENT PLAN	
	12.1 Program Management	12-1
	12.2 Schedule Control	12-2
	12.3 Configuration Management	12-2
	12.4 Data Management.	12-3
13	PROGRAM COSTS AND MANPOWER REQUIREMENTS	
	13.1 Basis of Costs and Manpower Requirements . . .	13-1
	13.2 Cost Matrix.	13-2
	13.3 Total Program Costs.	13-2
	13.4 Manpower Requirements.	13-5

SECTION 1

INTRODUCTION AND SUMMARY

The purpose of the lunar penetrometer of the Apollo System is to obtain direct measurement of the surface characteristics of the moon's surface without requiring a manned lunar landing.

This document presents a program plan for the flight hardware development of the following items of the lunar penetrometer system:

(1) Penetrometers

(2) Data relay

(3) Penetrometer structure and ejection mechanism

(4) Aerospace Ground Equipment (AGE)

The effort defined in this program plan constitutes a 37-month effort commencing in May 1966 and terminating in May 1969. Included in this plan are the following:

(1) A description of mission objectives

(2) System design characteristics

(3) Draft performance specifications of the data relay and penetrometer subsystems

(4) Remaining development required for ultimate flight hardware delivery (this effort complements that effort accomplished by Aeronutronic, A Division of Philco Corporation, for the Langley Research Center, National Aeronautics and Space Administration, under Contract NAS1-4923).

(5) Qualification and acceptance test plans

(6) Aerospace Ground Equipment requirements

(7) A manufacturing plan

(8) Reliability and quality assurance requirements

(9) Field support requirements

(10) Schedules

(11) A management plan

(12) Program costs and manpower requirements

The following assumptions/requirements were utilized in the preparation of the program plan:

(1) The program will commence May 1966

(2) Hardware will be supplied for three Apollo flights

(3) Hardware deliveries (for each of the Apollo flights) will be made in December 1967, March 1968 and June 1968 with flights occuring nine months after hardware delivery.

Considering the above time constraints the total program schedule is considered feasible. However, as indicated in Section 11, Schedules, careful attention must be given schedules and schedule performance due to several critical long lead time procurements and several parallel activities. Total costs for the Lunar Penetrometer Program as defined in this program plan are estimated at $8.56 million with peak annual costs occuring in 1968 at $4.21 million for the year.

SECTION 2

MISSION OBJECTIVES

The exploration of the moon requires direct measurement of its surface characteristics, both to extend fundamental knowledge of the moon and to provide for selection of safe landing sites for the Apollo Lunar Excursion Module (LEM). It is, therefore, contemplated that one or more manned lunar exploration flights of the Apollo Program will be assigned to perform a survey of the lunar surface from lunar orbit without requiring a manned lunar landing. Such survey missions would include Lunar Survey Probe (LSP) packages deployed from an orbiting Apollo spacecraft. These probe packages would contain impact acceleration-measuring projectiles, called penetrometers, to be deployed from the probe package to impact upon the lunar surface. It is then the objective of the lunar penetrometer system to obtain data on the lunar surface penetration resistance and bearing strength at dispersed points over a sampling area approximating the potential landing CEP of the LEM. These data shall be obtained with definition sufficient to certify the site as having sufficient bearing strength to permit a safe landing of the LEM vehicle. Moreover, the system shall be operable at a sufficiently early date to permit the obtaining of such data prior to the first scheduled landing of the LEM.

The LSP packages are to be mounted on four sides of the LEM descent stage and are, therefore, constrained to the dimensional space between the LEM and the adapter shroud on the Saturn V booster. This places a restraint on the penetrometer system to have a maximum diameter of no greater than 26 inches. Similarily, a weight restraint is that the lunar penetrometer system weigh no more than 100 pounds. Other firm criteria, such as the environment from launch to deployment, are listed under Section 4, Performance Specifications.

The general design philosophy for the lunar penetrometer system is established by the guidelines listed below.

2.1 APOLLO INTERFACES

Interfaces with the Apollo launch vehicle shall be minimized. Specifically, every attempt shall be made to minimize functional requirements on the part of the Apollo crew as a condition for success of the site certification mission.

2.2 LSP INTERFACES

Other potential payloads are planned for the LSP package. Hence, every attempt shall be made to eliminate unique requirements of the lunar penetrometer system on the LSP package that would detract from its potential compatibility with alternate payloads. This dictates that the penetrometer system be largely independent of the probe package with regards to power supply, communications system, and structural integrity.

2.3 COMPETING CHARACTERISTICS

Tradeoffs of competing characteristics in the design of the penetrometer system shall be resolved in the following order of priority:

(1) Correlation of data with actual surface characteristics. Emphasis shall be placed on the accurate measurement of "soft" surface characteristics; the characteristics of a hard surface shall be indicated but need not be measured with great accuracy

(2) Reliability of data measurement and return to earth

(3) Confidence of meeting schedule

(4) Preflight checkout simplicity and shelf lifetime

(5) Ease of fabrication and producibility of system

(6) Cost

(7) Ability to derive characteristics of the lunar surface other than penetration resistance and bearing strength

2.4 RELIABILITY PHILOSOPHY AFFECTING DESIGN

Design techniques employed insofar as possible to achieve a high reliability shall include the following:

(1) Minimization of required functions

(2) Simplification of function

(3) Use of proved components

(4) Use of passive rather than active components

(5) Arrangement of functions in parallel rather than in series

(6) Minimization of dependence on the nature of the lunar terrain

(7) Redundancy: After all elements of the system are adequately ruggedized, redundancy shall be employed to the extent permitted within the weight limitation, but shall in general not be employed where failure sensing and active switching would be required to utilize a redundant element

(8) Use of conservative design margins

2.5 EXPERIMENTAL PHILOSOPHY AFFECTING DESIGN

2.5.1 PRELAUNCH ENVIRONMENTAL CONTROL

The lunar penetrometer system design shall be based primarily on environments expected from the time of final mating onto the Apollo vehicle, onward through launching and operational deployment. Prior to this mating, the system and its components shall not be subjected to environments beyond flight acceptance levels, and the burden of protection from over-exposure shall be on the operators and facilities rather than on the penetrometer system itself. Clean air-conditioned working areas, special handling fixtures, air transport, electrical overload protection, and other such measures external to the penetrometer system shall be used to the extent practical to maintain the environment within the design limits.

2.5.2 OPERATING CONDITION AT LAUNCH

The design objectives shall be to obtain a high mission reliability without dependence on checkout instrumentation, control, and correction of deficiencies in the lunar penetrometer system after completion of assembly and mating to

the LSP package. Hence, subsystems must be designed to maintain operating ability and to hold calibration from the time of the assembly to flight. Provisions for checkout testing after completion of the assembly shall be provided, but only to the extent that they can be demonstrated to increase the net probability of success for the mission when the added complexity to provide checkout testing is considered.

2.5.3 IN-FLIGHT FAILURE DETECTION

Failure detection methods should be employed only to the extent that they do not detract from the reliability of achieving the primary mission objective.

2.5.4 FUNCTION AFTER IN-FLIGHT FAILURE

Interdependence between subsystems should be minimized to the extent practical, so that the probability of at least partial data return is maximized. For example, the failure of one penetrometer shall in no way prevent the return of valid data from the remaining penetrometers.

2.5.5 TEST PHILOSOPHY AFFECTING DESIGN

In general, designs shall not be unduely compromised to accommodate testing. However, when subsystem acceptance tests are the only way of determining readiness for flight, the design must of necessity incorporate adequate test provisions.

SECTION 3

SYSTEM DESIGN CHARACTERISTICS

3.1 SYSTEM FUNCTIONAL DESCRIPTION

The system design concept formulated to accomplish the overall site certification mission objectives of the Lunar Survey Probe is indicated in Figure 3-1. The LSP package delivers a survivable capsule and the lunar penetrometer system to nominally zero velocity relative to the lunar surface at an altitude between 943 and 3770 feet. Penetrometers launched from the hovering probe package impact the lunar surface at a vertical velocity of between 100 to 200 ft/sec and a horizontal velocity of less than 30 ft/sec. The penetrometers and the survivable capsule are deployed simultaneously so that the relative landing position of the survivable capsule and the penetrometers is not influenced by any residual lateral velocity of the prove package. The penetrometers are to impact the surface at a nominal distance of from 200 to 500 feet from the landed survivable capsule with the specific target distance to be selected at a later date to be compatible with the visual survey system in the survivable capsule.

The design of the lunar penetrometer system has been matched to the system requirements listed in Table 3.1. The system utilizes eight separate penetrometer spheres of 8.5 inch diameter. A relatively low density is achieved in the penetrometer through the use of a balsa wood impact limiter. The limiter prevents the generation of excessive peak accelerations during impact on very hard surfaces, while at the same time giving the low density for the penetrometer assembly as desired to produce adequate acceleration signal levels during impact even on

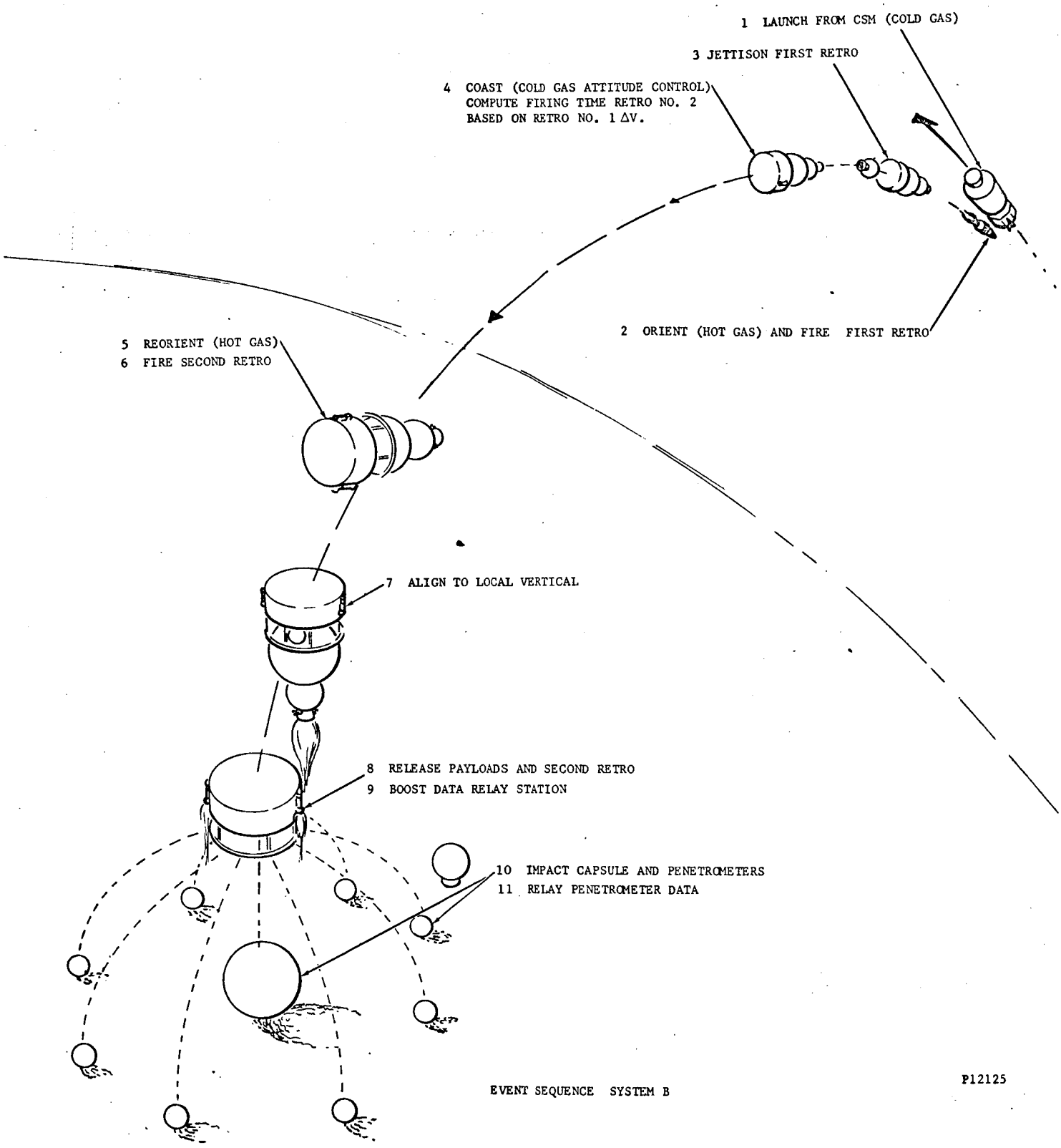

FIGURE 3-1 APOLLO SITE CERTIFICATION MISSION PROFILE

very soft materials. Impact acceleration readings versus time are transmitted from the impacting penetrometers to the hovering data relay portion of the lunar penetrometer system. The data relay amplifies the signals and re-transmits them to receiving gear aboard the Apollo orbiting vehicle (a combination of the Apollo Command Module and Service Module hereafter designated as the CSM).

TABLE 3.1

LUNAR PENETROMETER DESIGN REQUIREMENTS

Penetrometers	
Number	8
Diameter (Nominal)	8.5 In.
Impact Velocity, Vertical	100 - 200 Ft/Sec
Lateral	0 - 30 Ft/Sec
Lunar Surface, Density (ρ)	10 - ∞ Lb/Ft^3
Bearing Strength	<12 - ∞ Lb/In.^{2}
Sensing and Transmitting Error	$\pm$ 10 Percent
Data Relay	
Range, From Penetrometer	2 Nm
From Apollo CSM	100 Nm
Total Assembly	
Diameter	26 In.
Height	15.3 In.
Weight	$\leq$100 Lb

A functional block diagram for the complete lunar penetrometer system is shown in Figure 3-2. An omnidirectional accelerometer incorporated into the penetrometer sphere senses the impact acceleration independent of the direction or nature of impact on the lunar surface. The output of the accelerometer amplitude modulates a 40 kc subcarrier. The modulation characteristic is divided into two linear ranges of different steps to increase the sensitivity to low acceleration levels (soft lunar surface) and de-emphasize the measurement sensitivity at high accelerations (very hard lunar surface). The use of the subcarrier, which frequency modulates the carrier, prevents the data from being distorted by small deviations in the transmitter carrier frequency during impact. The carrier frequency is tuned to a specific value for each of the separate penetrometer spheres, but is nominally 440 Mc.

A transmitter output power of approximately 0.5 watts radiated through a cross loop omnidirectional antenna provides a more than adequate communications margin over the 2 nautical mile maximum distance to the data relay, even under conditions of a possible worst-case burial in a highly magnetic lunar surface material.

The data relay must consider the possibility of simultaneous penetrometer impacts, hence eight separate FM receivers are provided, each tuned to the frequency of its matching penetrometer transmitter. Because a dual polarized antenna must be employed on the penetrometer to provide true omnidirectional coverage, the data relay requires two oppositely polarized receiving antennas. Diversity combining of the received signals is provided through antenna switching when the received signals from any one antenna drops below the acceptable threshold strength. The received signals frequency modulate a subcarrier which, in turn, phase modulates the 260 Mc VHF transmitter in the data relay. With hemispherical coverage in the transmitting antenna, 40 watts of output power from the data relay transmitter provides a comfortable communications margin over the 100 nautical mile transmitting distance to the CSM, even assuming a conservatively low gain for the CSM receiving antenna. Data received aboard the CSM are tape recorded for later transmission to Earth via the CSM unified S-band system. While the exact nature of the CSM receiving equipment is not yet well-defined, no major incompatibilities are known with CSM gear and it appears likely that little modifications will be required to accommodate the penetrometer data.

A much more specific description of the lunar penetrometer system functional characteristics is provided in Section 4, Performance Specifications.

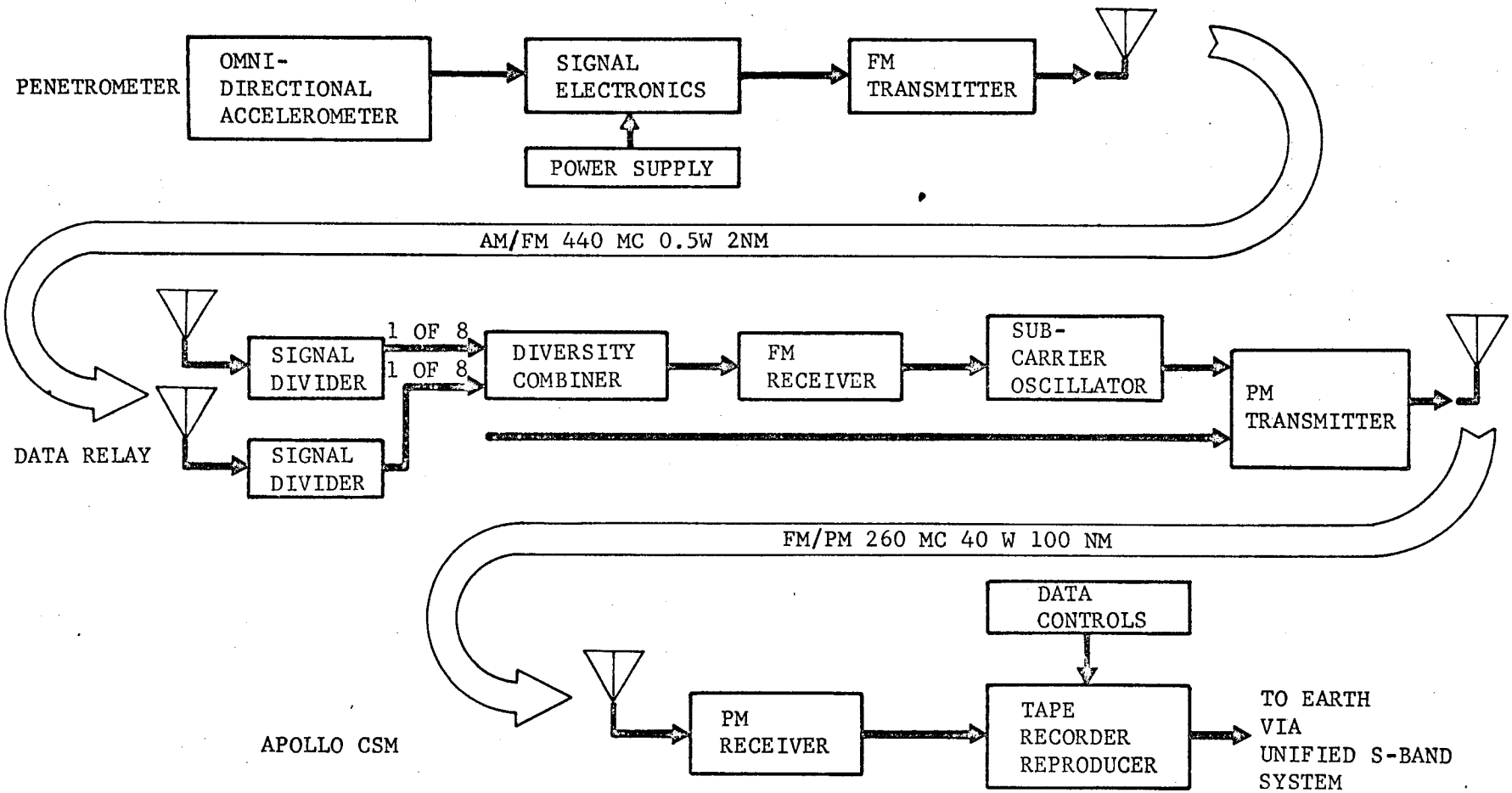

FIGURE 3-2 PENETROMETER SYSTEM FUNCTIONAL BLOCK DIAGRAM

3.2 SYSTEM PRELIMINARY DESIGN

A comprehensive physical description of the lunar penetrometer system is contained in Section 3.3 of the Final Report, Aeronutronic Report No. U-3556; only a brief summary description will be included here. The overall system layout is shown in Figure 3-3. A hexagonal structure forms the central core and structural backbone of the assembly. This core carries not only all loads generated within the lunar penetrometer system, but also transfers rocket thrust loads from the delivery vehicle interface (lower attach point) to the survivable capsule interface (upper attach point).

Data relay modules are assembled onto a central spider structure to form a complete package for functional checkout. The data relay package is then inserted into the hexagonal structure, which provides its main structural support. The eight ejection mechanism subassemblies are inserted through the walls of the hexagonal structure, which provides restraint to react to the ejection forces. Probe connectors are inserted through the ejection mechanism to provide the prelaunch interface between the data relay package and each penetrometer subsystem. The separation of the probes upon deployment of each penetrometer sphere provides a means for activating the power supply and telemetry system within the penetrometer.

The data relay receiving and transmitting antennas are also mounted to the central structure. These devices are telescoped to remain within the allowable envelope for the LSP package and are automatically deployed upon release of the penetrometer spheres while hovering above the lunar surface.

The eight penetrometer spheres are mounted alternately staggered in two planes to fit within the allowable envelope. Each penetrometer mounts with its ejection mechanism subassembly on a face of the hexagonal central structure. Adapting structures are provided for each penetrometer to resist all acceleration and vibration loads encountered during the pre-deployment transit. Each of the two planes of penetrometers is restrained by a peripheral strap. Deployment is initiated by activating redundant pyrotechnic bolt cutters which sever the straps and simultaneously release all eight penetrometers.

Weights, volumes, and power requirements for the subsystems and total assembly are summarized in Table 3.2.

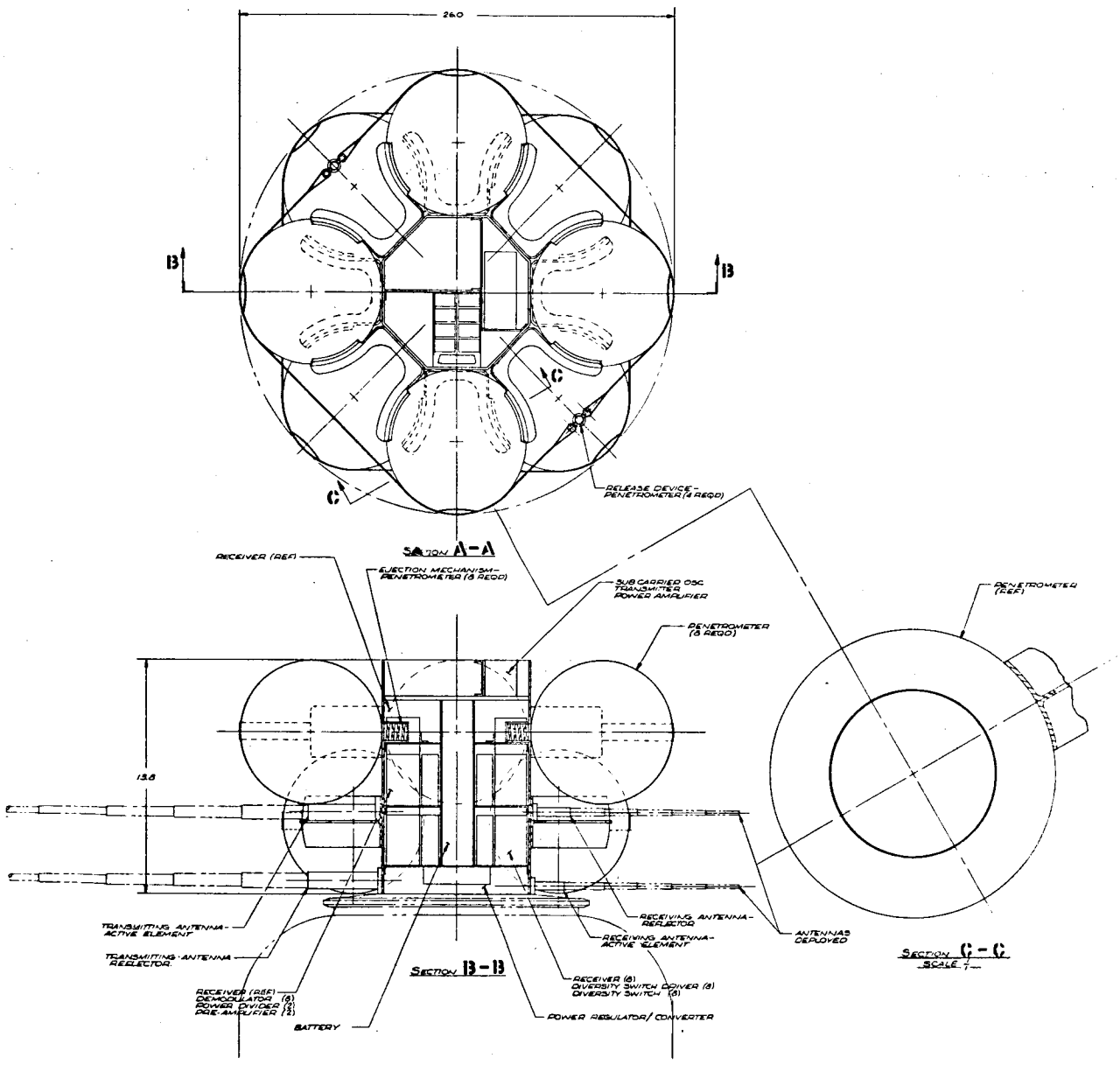

FIGURE 3-3. LUNAR PENETROMETER SYSTEM LAYOUT

TABLE 3.2

PRELIMINARY WEIGHTS, VOLUMES, AND POWER REQUIREMENTS

	Weight (lbs)		Volume (in.^{3})		Power Watts		Power Watt-Hr.	
Penetrometers								
Telemetry (Fully Potted)	1.46		11.1					
Power Supply	0.40		5.9		6.4		2.64*	
Structure	0.54		5.4					
Antenna	0.26		8.1					
Impact Limiter	1.67		275.0					
Resin and Cover	0.52		16.0					
Sub-Total	4.85		321.5		6.4		2.64	
Subsystem Total (8 Pen)		38.80		2572.0		51.2		21.2*
Data Relay								
Pre-Amps & Pwr. Divids. (2 ea.)	1.20		25.0		0.6		0.09	
Receivers (8)	12.0		144.0		4.8		0.80	
Data Processing	7.0		139.0		15.8		2.60	
Transmitter	6.0		83.0		119.2		19.90	
Converter/Regul.	1.0		16.0		62.2(loss)		10.40	
Control & Junction Box	0.3		10.0					
Battery	3.5		50.0					
Antennas	1.0		30.0					
Connectors & Wiring	6.5		100.0					
Mounting Structure	7.0		100.0					
Voids	---		163.0					
Subsystem Total		45.50		860.0		202.6		76.0**
Structure and Ejection Mechanism								
Primary Structure	9.5		86.0					
Ejection Springs (8)	1.5		15.0					
Retention Straps (2)	0.4		2.0					
Bolt Cutters	0.4		2.0					
Brackets & Misc.	2.0		20.0					
Voids	---		3793.0					
Subsystem Total		13.8		3918.0				
SYSTEM TOTAL		98.1		7350.0		253.8		93.3

*Assuming 2 minutes of operation and factor of 12.6 design margin.
**Assuming 10 minutes of operation and factor of 2.25 design margin.

SECTION 4

PERFORMANCE SPECIFICATIONS

The purpose of this section is to present a compilation of functional and/or performance specifications which delineate subsystem and assembly performance requirements and interfaces. The specifications include both performance requirements achieved during the preliminary design phase and those required by development and test findings.

The specification tree of Figure 4-1 has been constructed to illustrate subsystem and assembly breakdowns. The two principal subsystems are defined based on current contract work while the existence of additional functions and interfaces are acknowledged by reference to a Structure and Delivery Subsystem. The specifications are presented in the following pages according to increasing numerical sequence.

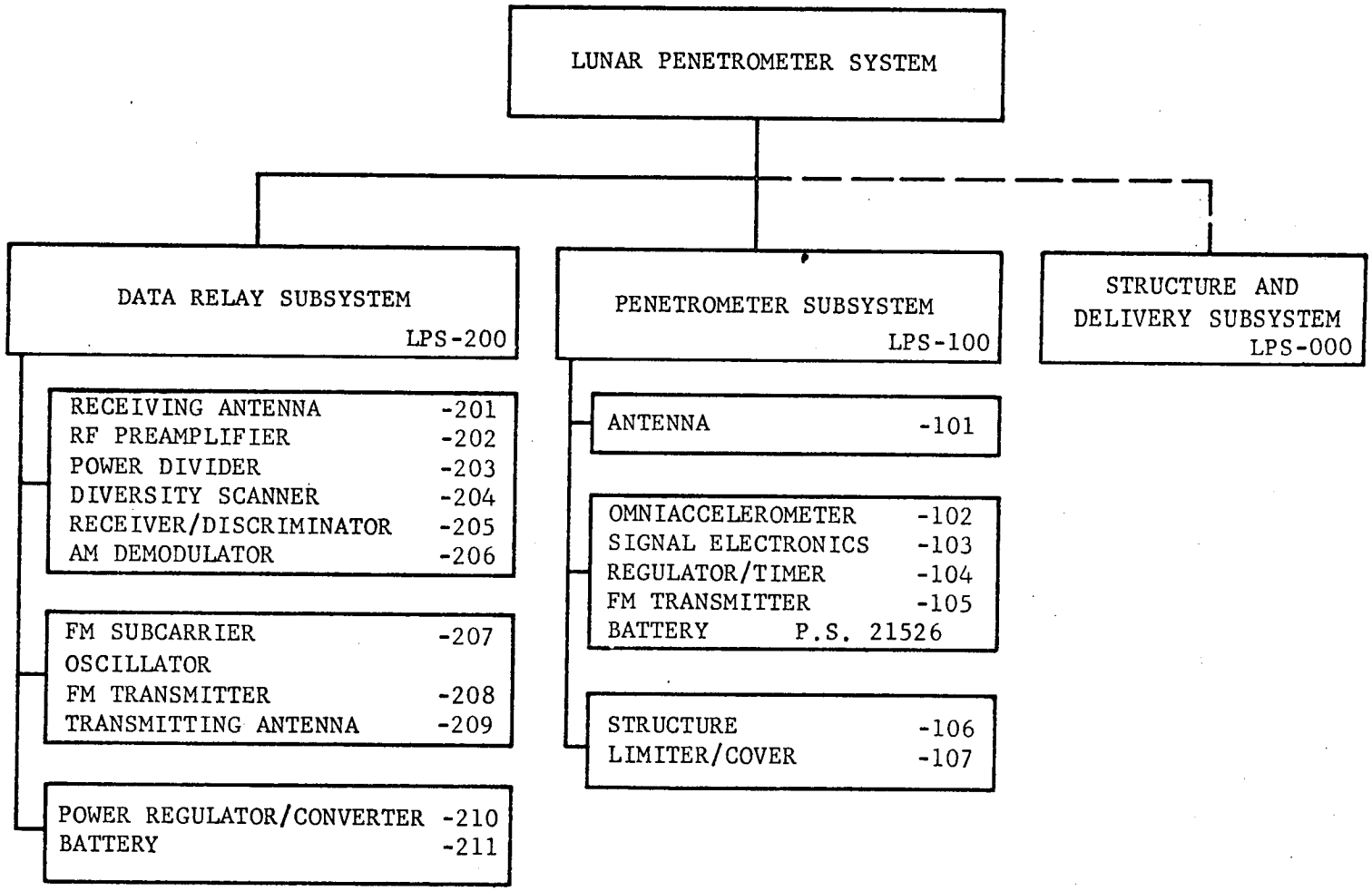

FIGURE 4-1. LUNAR PENETROMETER SYSTEM SPECIFICATION TREE

FUNCTIONAL SPECIFICATION

LUNAR PENETROMETER SYSTEM

PENETROMETER SUBSYSTEM

AERONUTRONIC
DIVISION OF PHILCO CORPORATION
A SUBSIDIARY OF Ford Motor Company,
FORD ROAD/NEWPORT BEACH, CALIFORNIA

SECTION 1

SCOPE

1.1 GENERAL

This specification defines the functional requirements of the individual penetrometers which form part of a Lunar Penetrometer System applicable to the Apollo program. It does not serve to define the requirements of the associated equipment, such as the Data Relay Subsystem, the Apollo CSM telecommunications equipment, and ground support equipment; however, it does describe functional interfaces with this equipment. Performance requirements of subassemblies within the penetrometer are defined in separate specifications.

1.2 MISSION OBJECTIVES

The Lunar Penetrometer System is intended for use in a Lunar Survey Probe mission to measure certain of the physical properties of the Lunar surface. The physical properties of interest, including bearing strength, hardness, and penetrability, are defined as those which establish the ability of a spacecraft to land on the Lunar surface in a position acceptable for surface exploration and re-launch operations. The penetrometer concept involves multiple spherical probes impacting the Lunar surface at velocities in the range of 100 to 200 ft/sec. and sensing the resultant dynamic impact accelerations. The individual penetrometer spheres contain complete telemetry equipment for transmitting the measured data to a nearby Data Relay aboard a hovering space probe from which they were deployed. It is an objective for the penetrometers to measure the characteristics of surfaces ranging from hard rock to fine dust just capable of supporting its own weight. A further objective is that a penetrometer function properly even in the event it penetrates and becomes buried in the Lunar surface.

It is intended that the Lunar Penetrometer System be an integrated part of a Lunar Survey Probe vehicle which will be on board an Apollo CSM which orbits the Moon. The probe vehicle will be separated from the CSM and enter a powered descent trajectory to investigate the Lunar surface at

a specific location. When the probe is near the surface and at nearly zero velocity, a salvo of eight penetrometers will be deployed in a circular pattern to impact the Lunar surface. Impact data from the penetrometers will be transmitted to Data Relay equipment aboard the probe for re-transmission at a higher power level to the more distant orbiting Apollo CSM.

1.3 DESCRIPTION

A cross-sectional view of a design concept for a Penetrometer is shown in Figure 1. The outer two inches of the 8.5" diameter sphere is balsa wood which provides the function of energy absorption during impact on hard surfaces. It also increases measurement accuracy in soft materials by providing a lower density sphere. Surrounding the inner 3.5 inch diameter metal sphere is an isotropic antenna subsystem which extends to a diameter of 4.5 inches. The inner sphere houses an omnidirectional accelerometer, signal processing electronics, a transmitter, a battery power supply, and power regulator/timer. A block diagram for the telemetry and electronic subassemblies making up the Penetrometer Subsystem is shown in Figure 2.

SECTION 2

APPLICABLE DOCUMENTS

The following documents are applicable to this specification to the extent indicated. The majority of the specifications are listed for reference purposes.

SPECIFICATION	TITLE
LPS-200	Data Relay Subsystem, Functional Specification
LPS-101	Antenna, Performance Specification
LPS-102	Omni-directional Accelerometer, Performance Specification
LPS-103	Signal Electronics, Performance Specification
LPS-104	Power Regulator/Timer, Performance Specification
LPS-105	Transmitter, Performance Specification
LPS-106	Structure, Performance Specification
LPS-107	Impact Limiter/Cover, Performance Specification
21426	Omni-directional Accelerometer Lunar Penetrometer System (Procurement Specification)
21526	Battery, Penetrometer (Procurement Specification)

DRAWING	
21216	Lunar Penetrometer, Prototype No. 3 (Top Assembly)
13958	Lunar Penetrometer, Prototype No. 3 (Drawing List)

SECTION 3

MISSION REQUIREMENTS

3.1 PRE-LAUNCH PERIOD

The penetrometer shall be capable of being delivered to the launch area six (6) months prior to the launch date. During the six-month period, storage will be at normal room temperatures. The penetrometer shall have the capability of being turned on electrically for test purposes, calibrated electrically by inserting test signals, electronically re-charged, and operated from external power sources.

3.2 LAUNCH TO DEPLOYMENT PERIOD

During this period, the penetrometer will be installed within the Data Relay which is part of the Lunar Survey Probe. The penetrometer shall be provided with a positive switch to permit it to be turned on either shortly before or as it is deployed from the Data Relay. The preferred condition is turning on as it separates from the Data Relay to prevent receiver overloading if a penetrometer fails to separate.

3.3 DEPLOYMENT TO IMPACT PERIOD

It shall be possible for a mission to utilize a salvo of eight penetrometers without causing mutual interference of radiated signals. The penetrometers will be deployed in a manner to minimize spinning but the penetrometers shall not be dependent on attitude orientation for either sensing impact acceleration or transmitting data signals.

A penetrometer shall be deployed in a manner such that its impact velocity is within the following ranges:

Vertical Velocity = 100 to 200 ft/sec.
Horizontal Velocity = 0 to 30 ft/sec.

SECTION 4

PERFORMANCE REQUIREMENTS

This section defines the functional requirements which are directly related to the primary objective of measuring surface conditions.

4.1 OPERATING TIME

The penetrometer shall be capable of operating for a minimum period of one minute after it is separated from the delivery probe.

4.2 ACCELERATION SENSING

The penetrometer shall measure impact accelerations in any direction corresponding to impact velocities of 100 to 200 ft/sec. The acceleration range shall be from 50 to 7,000 g's, with the greatest accuracy placed on the lower portion of the range. The acceleration sensing transducer and associated circuitry shall have a nominally flat response up to 2,000 Hz and a minimum time constant of two seconds.

The accuracy design objective for the complete penetrometer system shall be to measure acceleration with an error not to exceed ±10% of the reading. The apportionment of allowable error to assemblies within the penetrometer and data relay is controlled by the individual assembly performance specifications.

4.3 DATA TRANSMISSION

The penetrometer shall be capable of transmitting the measured acceleration data a distance of two nautical miles by employing a quasi-isotropic antenna and a nominal 0.5-watt FM transmitter in the 432 to 453 MHz UHF frequency range. RF wave transmission will characteristically exhibit all possible states of polarization.

4.4 IMPACT PROTECTION

The penetrometer shall include an outer layer of energy absorbing material to insure the measurement integrity of the penetrometer device while subject to impact against a hard surface at any velocity not exceeding 200 ft/sec. The energy absorbing material shall act to limit the inner impact acceleration to a nominal 7,000 g's.

4.5 PHYSICAL REQUIREMENTS

The penetrometer shall be spherical with a nominal outer-diameter dimension of 8.5 inches. It shall be a design objective for the penetrometer to maintain this spherical shape during surface impact except for impacting hard surfaces when the impact limiting material must deform to absorb kinetic energy.

Total weight of the penetrometer in its surface impacting condition shall be a nominal five (5) pounds.

SECTION 5

ENVIRONMENTAL REQUIREMENTS

This section defines the environmental requirements for the penetrometer as whole, rather than for the subassemblies within the penetrometer. Subassembly environmental requirements are defined in the performance specifications for each particular subassembly.

These environmental requirements are subject to change because the exact environmental conditions for the Lunar Survey Probe delivery vehicle are undefined. The stated requirements are typical for a payload aboard a solid-motor vehicle carried on an Apollo spacecraft.

In summary, the penetrometer must meet the following environmental and operational conditions:

(1) Shipping conditions in a protective container.
(2) Storage for six (6) months.
(3) Operation in the atmosphere for checkout purposes, subject to pre-launch and range safety operational limitations.
(4) Launch and transit in space in an inoperative status for five (5) days as part of a Lunar Survey Probe integrated into an Apollo spacecraft.
(5) Deployment from the Lunar Survey Probe in an operating status to impact the Lunar surface.

5.1 IMPACT SHOCK

The penetrometer shall perform within the stated requirements during an impact, normal to the surface, against a hard, flat, unyielding surface at 200 ft/sec. This impact can be in any axis.

5.2 PRESSURE

The penetrometer shall perform within the stated requirements at environmental pressures ranging from a sea level atmospheric to space vacuum. It shall operate after a spaceflight of five (5) days during which it is stored in an inoperative condition at space vacuum.

5.3 TEMPERATURE

The penetrometer shall operate correctly within the temperature range of +60 to +100°F. It shall withstand temperatures from +0° to + 100°F in the non-operating condition.

5.4 ACCELERATION

The penetrometer shall withstand, in the non-operating condition, a constant 15 g acceleration for five (5) minutes in any direction.

It shall also withstand, in the non-operating condition, storage during a spaceflight under zero g conditions for five (5) days.

5.5 HUMIDITY

The penetrometer shall withstand, in either operating or non-operating condition, exposure to humidity conditions of 0 to 100 percent relative humidity.

5.6 VIBRATION

The penetrometer shall withstand, in the non-operating condition, the following vibration conditions in any axis:

SINE = 10 g rms, constant octave sine sweep in 5 minutes, 5 to 2,000 cps, limited to ±0.1 inch.

RANDOM = 10 g rms, random vibration for 5 minutes, band limited to 100 to 2,000 cps.

SECTION 6

NOTES

6.1 DEFINITIONS

CSM	Command/Service Module of the Apollo Spacecraft
Hz	Cycles per second
MHz	Megacycles per second
g	Acceleration unit equal to the acceleration of gravity at the surface of Earth
^{o}F	Degrees Fahrenheit
FM	Frequency modulation

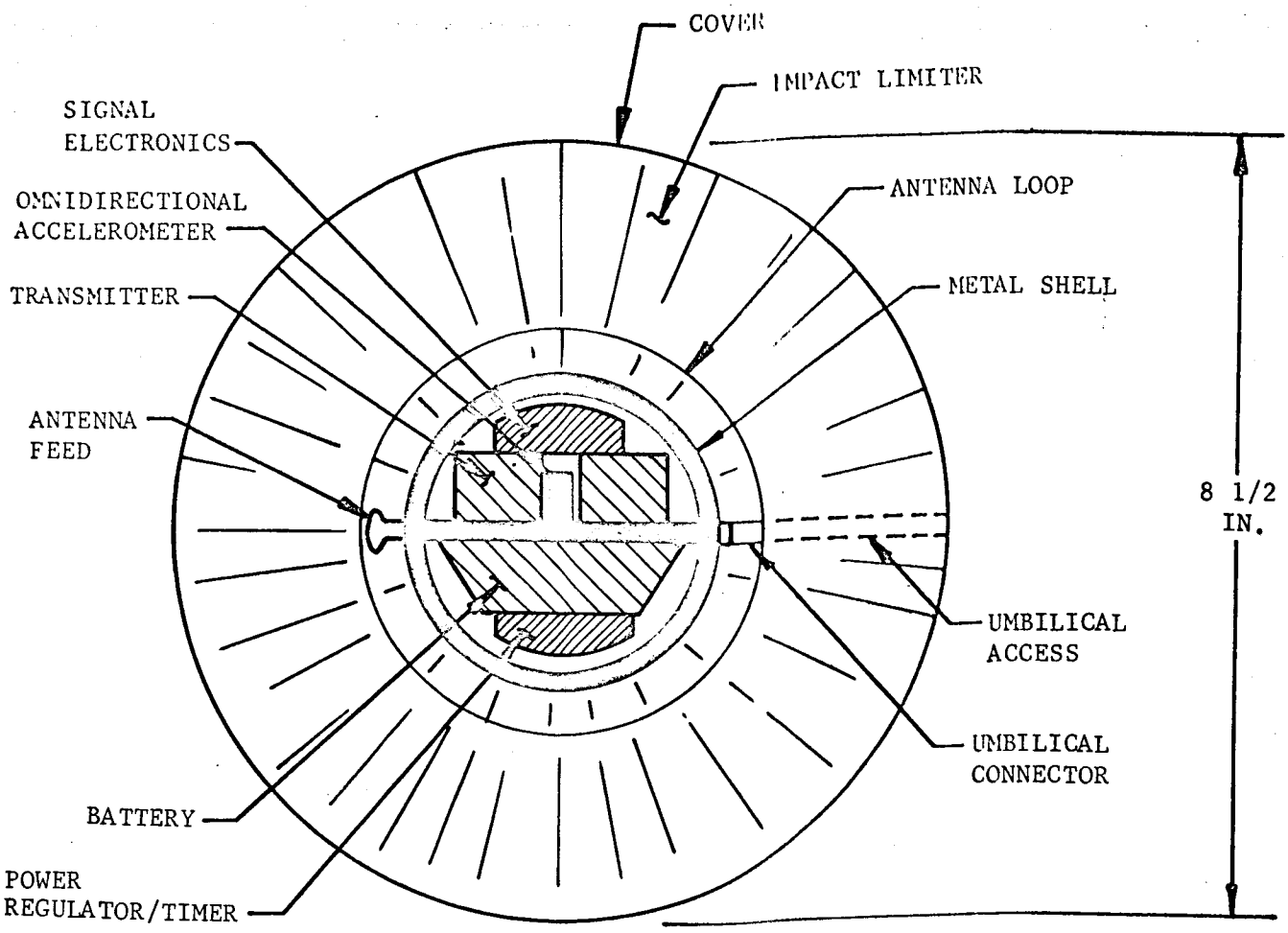

F03757 U

FIGURE 1. DESIGN CONCEPT FOR THE PENETROMETER

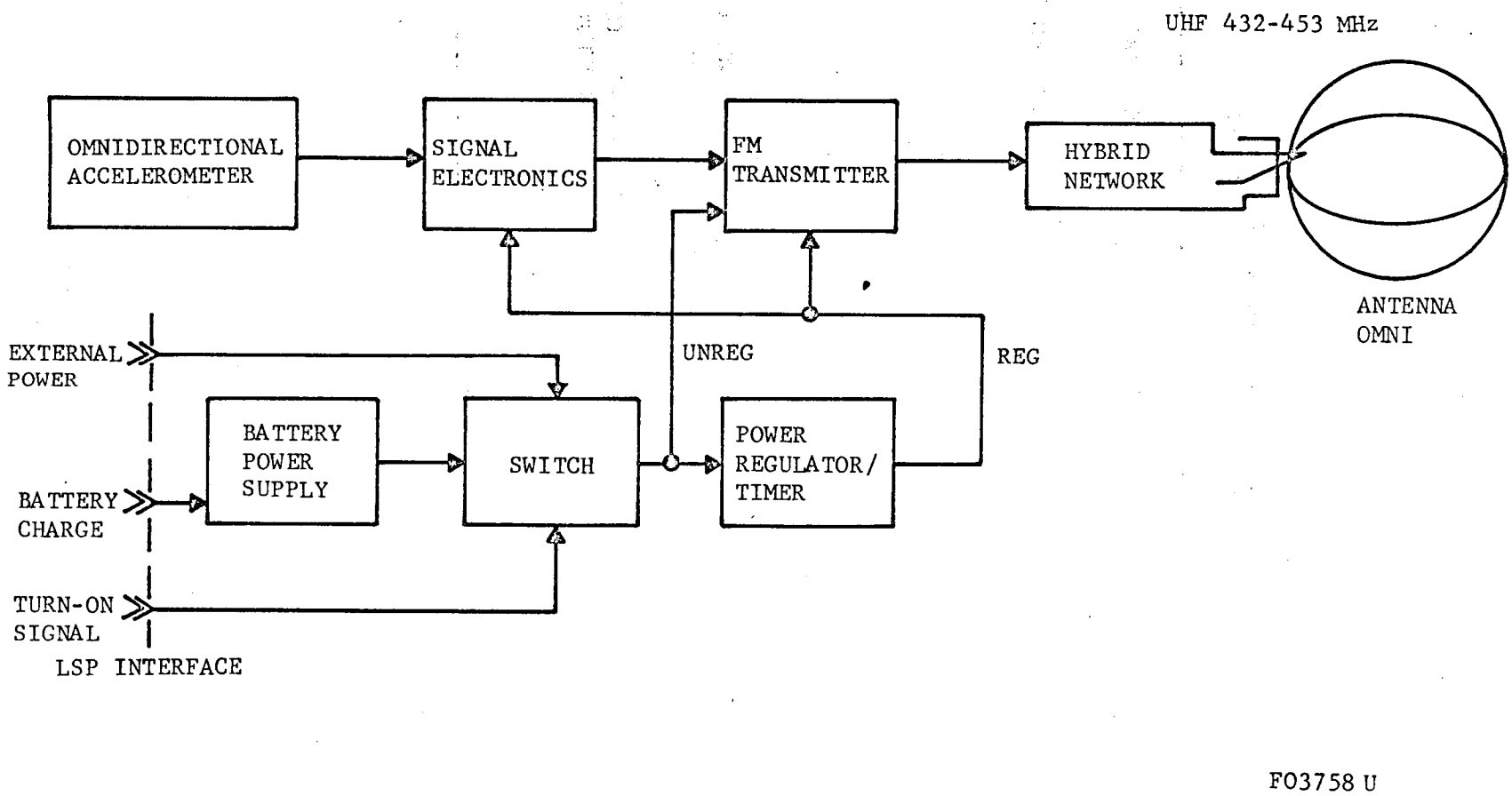

FIGURE 2. BLOCK DIAGRAM OF PENETROMETER SUBSYSTEM

PERFORMANCE SPECIFICATION

LUNAR PENETROMETER SYSTEM

Antenna Assembly

Penetrometer Subsystem

AERONUTRONIC
DIVISION OF PHILCO CORPORATION
A SUBSIDIARY OF Ford Motor Company,
FORD ROAD/NEWPORT BEACH, CALIFORNIA

SECTION 1

SCOPE

This specification defines the performance requirements of the Antenna Assembly which is part of a Lunar Penetrometer Subsystem. The function of the antenna is to radiate a radio-frequency signal from the penetrometer sphere as it impacts the Lunar surface and measures the resulting acceleration.

The antenna assembly described by this document shall include the following:

(1) The radiating antenna elements.
(2) The support structure to attach the antenna elements to the payload sphere.
(3) The antenna feed loops.
(4) A cover to shield the termination of the feed loops.
(5) A hybrid network to provide load isolation between the radiating elements and the transmitter.
(6) The associated cables to couple the antenna assembly elements to the transmitter.

SECTION 2

APPLICABLE DOCUMENTS

The following documents shall form a part of this specification to the extent specified herein.

2.1 SPECIFICATIONS

LPS-100,	Penetrometer Subsystem, Functional Specification
LPS-200,	Data Relay Subsystem, Functional Specification
LPS-104,	Power Regulator/Timer, Performance Specification
LPS-105,	Transmitter, Performance Specification
LPS-106,	Structure, Performance Specification
LPS-107,	Impact Limiter/Cover, Performance Specification
21526,	Battery, Penetrometer (Procurement Specification)

2.2 DRAWINGS

25328	Spacer, Dielectric, Meridional
22672	Spacer, Equatorial
22673	Retainer, Spacer
24862	Antenna Loop Shield
25378	Antenna Feed Assembly
21216	Lunar Penetrometer
13843	Printed Circuit Board, Antenna
25379	Feed Loop Assembly, Diverted
25380	Feed Loop Assembly, Non-Diverted

2.2 DRAWINGS (continued)

25381	Sleeve, Insulating
13844	Artwork, Antenna
13809	Transmitter Assembly

SECTION 3

PERFORMANCE REQUIREMENTS

3.1 GENERAL

The antenna assembly shall perform as part of a Penetrometer to accomplish the mission objectives as described in LPS-100, Functional Specification for the Lunar Penetrometer Subsystem. The antenna shall provide an isotropic radiated field around a 3-1/2 inch diameter spherical telemetry package which contains a 0.5 watt transmitter operating at some specified frequency in the 432 to 453 mc range. The outside of the antenna and telemetry package will be covered with a two-inch thick shell of balsa wood to protect against damage when impacting a rigid surface at 200 ft/sec. The entire penetrometer, including the antenna, must operate during this (and any less severe) impact against the Lunar surface. It shall be a design goal that the complete penetrometer operate under conditions of burial in the Lunar surface.

3.2 ELECTRICAL

3.2.1 DESCRIPTION

The antenna assembly shall consist of two orthogonal loops centered around the 3-1/2 inch diameter spherical payload structure with approximately 0.5 inches spacing between the loop radiators and the sphere. The two loops are fed in phase-quadrature to produce an approximate turnstile pattern. The loop radiators are self-resonant slow wave structures photo-etched on a flexible fiberglass base and supported by polypropylene rings.

The antenna feed consists of two orthogonal feed loops which inductively couple the power into the radiating structures. Power is delivered to the feed loops by means of a transmission line hybrid network which divides the total transmitter power into two phase-quadrature components and also provides a large degree of load isolation. Tuning is controlled principally by the detail geometry of the slow wave radiating structure.

3.2.2 FREQUENCY

The antenna assembly shall operate at some specified center frequency in the band of 432 to 453 mc. The antenna design shall be such that this tuning range can be achieved with only minor modifications to the slow-wave structure.

3.2.3 BANDWIDTH

The antenna assembly shall operate over a one mc bandwidth centered about the specified center frequency.

3.2.4 PATTERN AND GAIN

The minimum gain over the total solid angle of 4π steradians shall not be less than -6 db. It should be noted that this value includes a -1.0 db transmission line circuit loss.

3.2.5 POLARIZATION

Not to be specified.

3.2.6 VSWR

VSWR at the input to each feed loop shall not exceed 1.3. VSWR at the hybrid input (with feed cables connected to feed loops) shall not exceed 1.5.

3.2.7 HYBRID

The transmission line hybrid shall be of the design type shown in Figure 1.

a. VSWR. The VSWR at the input terminal of the hybrid, with the hybrid feed cables open circuited, shall not exceed 1.5.

b. Power. The hybrid feed shall be capable of continuously dissipating 400 mw. This requirement can be tested by delivering 400 mw power into the hybrid input with the hybrid feed cables open or short circuited.

3.3 MECHANICAL

3.3.1 CONFIGURATION

The antenna assembly shall closely conform to the design configuration as illustrated in the developmental drawings listed in Section 2.2 of this specification. The dimensions, tolerances, materials, and finishes given in the referenced drawings shall be followed closely. Those dimensions which affect interfaces with other assemblies of the penetrometer shall not be changed without requesting or making corresponding changes in the Performance Specifications of the other assemblies which are listed in Section 2.1.

3.3.2 TEST CONNECTOR ACCESS HOLE

As indicated in the developmental drawings listed in Section 2.2, the radiating antenna loops and spacer structure shall include a hole in the equatorial area to provide access to an electrical connector.

3.3.3 EPOXY COMPATIBILITY

All portions of the antenna assembly shall be compatible with encapsulation or bonding epoxy. The antenna elements and spacer structures on the outside of the penetrometer metal sphere will be bonded with epoxy to the balsa impact limiter and the metal shell. All parts within the metal shell will be subjected to vacuum encapsulation with epoxy.

3.3.4 ASSEMBLY AND DISASSEMBLY

There shall be provisions to conveniently assemble and disassemble the antenna assembly before epoxy is applied, to allow functional checkout of the complete penetrometer. This "dry assembly" shall be considered a requirement during the assembly testing procedure.

3.3.5 WEIGHT

Total weight of the antenna assembly shall not exceed 0.3 pounds.

3.4 ENVIRONMENTAL

3.4.1 GENERAL

The antenna shall function for a period of one minute commencing at penetrometer deployment, through approach and final impact of the Lunar surface after a space flight of five days. It will be subjected to normal handling, storage, shipping, and launch environments before the space flight.

3.4.2 SHOCK

The antenna shall perform satisfactorily during a 7,000 g, 1.5 millisecond shock in any direction, corresponding to a velocity change of 200 ft/sec. The shock will occur during a crushing process in the balsa which will subject the antenna to compressive forces of approximately 1,000 psi.

3.4.3 TEMPERATURE

The antenna shall operate satisfactorily within the temperature range of $+60^{\circ}$ to $+100^{\circ}$F. It shall withstand temperatures from $+0^{\circ}$ to $+100^{\circ}$F in the non-operating condition.

3.4.4 PRESSURE

The antenna shall operate satisfactorily within the pressure range from atmospheric to space vacuum. The antenna shall perform after exposure to space vacuum conditions for a period of five days.

3.4.5 ACCELERATION

The antenna shall withstand in the non-operating condition a constant 15 g acceleration for five minutes in any direction.

3.4.6 VIBRATION

The antenna shall withstand in the non-operating condition the following vibration conditions in any axis:

Sine = 10 g rms, constant octave sine sweep in 5 minutes 20 to 2,000 Hz

Random = 10 g rms, random vibration for 5 minutes, band limited to 100 to 2,000 Hz

SECTION 4

QUALITY ASSURANCE

4.1 QUALIFIED COMPONENTS

The antenna assembly shall make full utilization of all components, materials, designs and assembly techniques which have been previously tested and qualified for this application.

4.2 QUALITY CONTROL

The antenna shall be fabricated from materials which have been inspected and are fully identified as to type and source.

All fabrication and assembly operations shall be inspected for conformance with approved drawings and assembly procedures.

4.3 DESIGN QUALIFICATIONS

The design qualification of the antenna assembly shall be demonstrated by documented tests of a functional and environmental nature. The environmental tests shall be at least as severe as the environmental requirements.

4.4 FLIGHT ACCEPTANCE

The suitability of all antenna assembly hardware for flight use shall be demonstrated by documented acceptance tests which shall include complete functional tests and restricted environmental tests.

SECTION 5

NOTES

5.1 DEFINITIONS

VSWR	-	Voltage Standing Wave Ratio
MHZ	-	Megacycle per second
g	-	acceleration unit equal to the Earth's gravitational acceleration
psi	-	pounds per square inch
^{o}F	-	degrees Fahrenheit
rms	-	root mean square
Hz	-	cycles per second

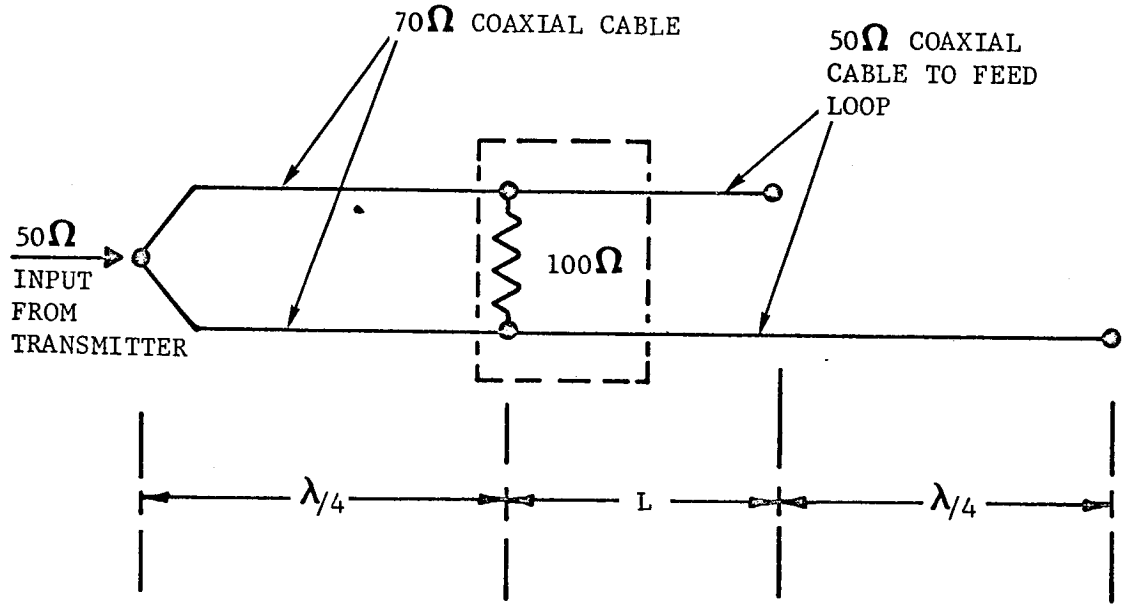

F03759 U

FIGURE 1. HYBRID CONCEPT FOR ANTENNA ASSEMBLY

PERFORMANCE SPECIFICATION

LUNAR PENETROMETER SYSTEM

Omni-directional Accelerometer

Penetrometer Subsystem

AERONUTRONIC
DIVISION OF PHILCO CORPORATION
A SUBSIDIARY OF Ford Motor Company,
FORD ROAD/NEWPORT BEACH, CALIFORNIA

SECTION 1

SCOPE

This specification defines the performance requirements of the Omni-Directional Accelerometer which is part of the Lunar Penetrometer Subsystem. The function of the accelerometer is to provide voltage signals proportional to accelerations encountered when the Penetrometer impacts on the Lunar surface. The output signal shall be independent of the direction of application of accelerations and shall always be positive with respect to the case.

SECTION 2

APPLICABLE DOCUMENTS

The following documents shall form a part of this specification to the extent specified herein.

2.1 SPECIFICATIONS

LPS-100	Penetrometer Subsystem, Functional Specification
LPS-200	Data Relay Subsystem, Functional Specification
LPS-103	Signal Electronics, Performance Specification
21426	Omni-directional Accelerometer Lunar Penetrometer System (Procurement Specification)

2.2 DRAWINGS

Figure 1	Outline Drawing 2404-M1 Omni-directional Accelerometer
21216	Lunar Penetrometer
13797	Wiring Diagram
309136	Accelerometer Cable
24923	Accelerometer Adaptor
24890	Accelerometer Adaptor Nut

SECTION 3

PERFORMANCE REQUIREMENT

3.1 GENERAL

The omni-directional accelerometer shall perform as part of a Penetrometer to accomplish the mission objective as described in LPS-100, Functional Specification for the Lunar Penetrometer Subsystem. The accelerometer shall be used as a transducer for acceleration measurements up to 10,000g, resulting in impulse velocity changes to 250 feet per second. The accelerometer will be fastened to metallic structures in the penetrometer by a mounting stud in an appropriate cavity.

3.2 TRANSDUCER CHARACTERISTICS

3.2.1 TRANSDUCTION PRINCIPLE

The transducer element shall be piezoelectric.

3.2.2 OPEN CIRCUIT VOLTAGE SENSITIVITY

The minimum sensitivity shall be 1.0 millivolts per g.

3.2.3 AMPLITUDE LINEARITY

The linearity shall not vary more than ±10% deviation from sensitivity at 1000g, 1/2 sine, 3 millisecond shock over the range of 50 to 5000g, and ±15% to 11,000g under the same conditions.

3.2.4 SENSITIVITY PATTERN

The deviation of isotropic sensitivity shall not exceed ±5% at any one g level in the range of 50 to 5000g.

3.2.5 FREQUENCY RESPONSE

The sensitivity as a function of a 1/2 sine shock period shall not deviate more than ±10% from the 1000g, 3 millisecond value over the range of 1 millisecond to 100 milliseconds when used with a load resistance of 10^{12} ohms or greater.

3.2.6 TEMPERATURE COEFFICIENT OF SENSITIVITY

The sensitivity shall remain within ±2% of the nominal sensitivity in the $+60^{\circ}F$ to $+100^{\circ}F$ range.

3.2.7 MAXIMUM IMPACT RATING

The accelerometer shall withstand 20,000g.

3.3 ELECTRICAL CHARACTERISTICS

3.3.1 CAPACITANCE

The capacitance shall not be less than 300 picofarads, however, as a design goal shall be as large as possible without degrading the open circuit voltage sensitivity.

3.3.2 INTERNAL LEAKAGE RESISTANCE

Signal terminal to case resistance shall be greater than 2×10^{10} ohms.

3.3.3 SIGNAL POLARITY

The output signal shall be positive with respect to case regardless of direction of applied acceleration.

3.3.4 DEPOLARIZATION

No degradation of performance characteristics shall result from the application of ±50 volts DC to the signal terminals at $+60^{\circ}C$.

3.4 MECHANICAL

The accelerometer shall be no larger than the envelope drawing shown in Figure 1. Mounting shall be a 10 - 32 stud. Electrical connector is optional.

3.5 ENVIRONMENTAL REQUIREMENTS

3.5.1 HUMIDITY

The accelerometer shall withstand 95% relative humidity per MIL-STD 810A.

3.5.2 STORAGE TEMPERATURE

The accelerometer shall function following 5-day storage periods at +32°F and +120°F.

3.5.3 PRESSURE

The accelerometer shall function at pressures of 0 to 14.7 psia.

3.5.4 TRANSPORTATION LAUNCH VIBRATION

The accelerometer shall withstand vibration environments of 10g rms (sine) log sine sweep 20 - 2000 Hz in 5 minutes and 10g rms (random) vibration bandwidth 100 to 2000 Hz for a duration of 5 minutes.

SECTION 4

QUALITY ASSURANCE

4.1 QUALIFIED COMPONENTS

The omni-directional accelerometer shall make full utilization of all components, materials, designs and assembly techniques which have been previously tested and qualified for this application.

4.2 QUALITY CONTROL

The omni-accelerometer shall be fabricated from materials which have been inspected and are fully identified as to type and source.

All fabrication and assembly operations shall be inspected for conformance with approved drawings and assembly procedures.

4.3 DESIGN QUALIFICATION

The design qualification of the omni-accelerometer shall be demonstrated by documented tests of a functional and environmental nature. The environmental tests shall be at least as severe as the environmental requirements.

4.4 FLIGHT ACCEPTANCE

The suitability of omni-directional accelerometer for flight use shall be demonstrated by documented acceptance tests which shall include complete functional tests and restricted environmental tests.

SECTION 5

NOTES

5.1 DEFINITIONS

psia	pounds per square inch absolute pressure
Hz	cycles per second
g	acceleration unit equal to the acceleration of gravity at the surface of Earth
^{o}F	degrees Fahrenheit

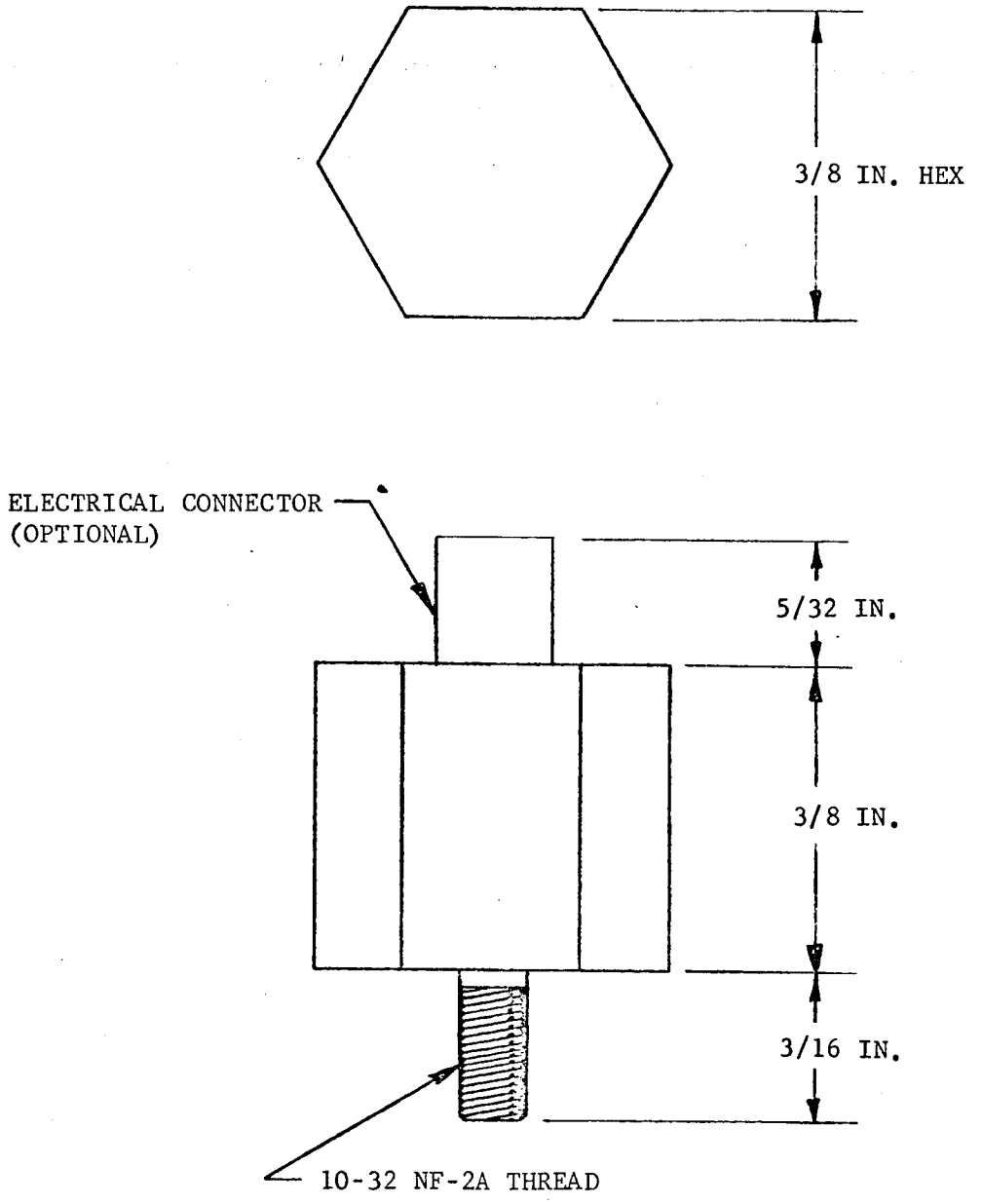

F03760 U

FIGURE 1. OMNIDIRECTIONAL ACCELEROMETER, 2404 M1 OUTLINE ENVELOPE

PERFORMANCE SPECIFICATION

LUNAR PENETROMETER SYSTEM

Signal Electronics Assembly

Penetrometer Subsystem

AERONUTRONIC
DIVISION OF PHILCO CORPORATION
A SUBSIDIARY OF Ford Motor Company,
FORD ROAD/NEWPORT BEACH, CALIFORNIA

SECTION 1

SCOPE

This specification defines the performance requirements of the Signal Electronics Assembly which is part of the Lunar Penetrometer Subsystem. The function of the signal electronics shall be to sense, amplify, and compress the signal generated by an omni-directional accelerometer upon lunar impact and, in addition, to cause this signal to amplitude modulate a subcarrier. The signal electronics shall also provide such filtering as necessary to limit the signal bandwidth.

The signal electronics described by this document shall include the following:

(1) First Amplifier Stage
(2) Second Amplifier Stage
(3) Amplitude Modulator (Chopper)
(4) Multivibrator
(5) Active High-Pass Filter

SECTION 2

APPLICABLE DOCUMENTS

The following documents shall be applicable to this specification to the extent indicated herein.

2.1 SPECIFICATIONS

LPS-100,	Penetrometer Subsystem, Functional Specification
LPS-200,	Data Relay Subsystem, Functional Specification
LPS-102,	Omni-directional Accelerometer, Performance Specification
LPS-104,	Power Regulator/Timer, Performance Specification
LPS-105,	Transmitter, Performance Specification
LPS-106,	Structure, Performance Specification
LPS-107,	Impact Limiter/Cover, Performance Specification

2.2 DRAWINGS

24916	Signal Electronics Schematic
13807	Signal Electronics Assembly
24909	Board No. 1 Assembly
24912	Board No. 2 Assembly
309136	Accelerometer Cable (Endevco)
21216	Lunar Penetrometer

SECTION 3

PERFORMANCE REQUIREMENTS

3.1 GENERAL

The Signal Electronics Assembly shall perform as a part of the penetrometer to accomplish the mission objectives described in the Functional Specification, LPS-100, for the Lunar Penetrometer Subsystem. The signal electronics shall amplify, filter, and compress the signal generated by an omni-directional accelerometer and cause this signal to amplitude modulate a 40 KHz subcarrier and also provide such filtering as necessary to control the data bandwidth and eliminate undesirable harmonics and switching transients.

3.2 ELECTRICAL

3.2.1 DESCRIPTION

The signal electronics assembly shall consist of the circuits indicated in the block diagram of Figure 1. These are as follows: First Amplifier Stage, Second Amplifier Stage, Amplitude Modulator (Chopper), Active High-Pass Filter, and Multivibrator.

Electrical Performance Requirements are listed in Table 1.

TABLE 1

ELECTRICAL PERFORMANCE REQUIREMENTS

Data Frequency Response	5 Hz to 2K Hz
Input Signal Range	0 volts to +8 volts
Input Impedance	Controllable from 10^9 to 10^{13} ohms resistance shunted by 10 to 3000 uuf to ground.
Input Time Constant	2 sec. minimum
Gain Transfer Function	See Figure 2
Subcarrier Frequency	40 KHz $\pm$ 1 KHz
Output Signal Level	2.5V (RMS) Min. at max. input level
Output Impedance	$\angle$5K ohms
Residual Output Level (for 0input signal)	10 mv (RMS) max.
Supply Voltages	
(a)	+17V $\pm$ 1% @ 30 ma (nom.)
(b)	-3.3V $\pm$ 1% @ 24 ma (nom.)
(c)	-5.5 to -7.5V @ 6 ma (nom.)

3.2.2 FIRST AMPLIFIER STAGE

The first amplifier stage shall utilize a matched MOS FET differential pair coupled to an integrated, high-gain, operational-type amplifier. The input impedance shall be greater than 10^{13} ohms with capacitance to positive supply less than 2 pf and shall be adjustable to obtain the proper sensitivity and time constant by adding a resistor and capacitor in shunt. The gain of this stage shall be a maximum of one (1) but can be precisely adjustable to a lower value by the use of a voltage divider. The output impedance shall be 1500 ohms. The amplifier shall respond only to positive going input signals.

3.2.3 SECOND AMPLIFIER STAGE

The second amplifier stage shall employ a matched MOS FET differential pair and an integrated high-gain amplifier. This stage shall provide the gain-compression characteristic required by the penetrometer. The stage gain shall be changed from a high value (approximately 44) to one (1) at a predetermined input level. This characteristic is illustrated in Figure 2. In addition, the stage shall function as a three-pole active filter with a cut-off frequency of 2 KHz. Signals above this frequency will be reduced at 18 db per octave. AC coupling shall be employed to limit the low frequency response and hence eliminate any thermally-induced outputs from the accelerometer or from the first stage. The output impedance of the second stage shall be less than 200 ohms.

3.2.4 AMPLITUDE MODULATOR

A series-shunt chopper shall be employed to sample the output of the second amplifier at a 40 KHz rate. MOS FET's shall be used as the switching devices to minimize offset errors and reduce power requirements. The MOS devices shall be selected for low-pinch off voltages to insure that they are capable of being turned off completely.

3.2.5 MULTIVIBRATOR

A multivibrator shall be used to drive the MOS FET chopper. A matched pair of NPN transistors will be used to insure a symmetrical square wave is produced and to minimize any thermal effects. Diode networks shall be added to improve the rise times, provide reliable starting, and prevent excessive base-emitter back bias. The frequency shall be 40 KHz ± 1 KHz. The drive for the choppers will be taken from each collector.

3.2.6 HIGH-PASS FILTER

The active high-pass filter shall remove the low frequency components from the modulated 40 KHz subcarrier. A FET-transistor combination shall be used to provide a high input impedance, low output impedance, and gain very close to one. The cut-off frequency shall be at 35 KHz and lower frequencies will be reduced at 12 db per octave. A low-pass section shall be added after the stage to reduce the higher harmonics of 40 KHz present in the AM wave and switching transients produced by the chopper.

3.3 MECHANICAL

3.3.1 CONFIGURATION

The signal electronics shall closely conform to the design configuration as illustrated in the developmental drawings listed in Section 2.2 of this specification.

The dimensions, tolerances, materials, and finishes given in the referenced drawings shall be followed closely. Those dimensions which affect interfaces with other assemblies of the penetrometer shall not be changed without requesting or making corresponding changes in the Performance Specifications of the other assemblies which are listed in Section 2.1.

3.3.2 EPOXY COMPATIBILITY

All component parts of the signal electronics shall be compatible with bonding and encapsulation epoxy resins and techniques. The electrical performance of the signal electronics shall not be adversely affected by the potting materials or methods employed.

3.3.3 WEIGHT

Total weight of the signal electronics shall not exceed 0.71 pounds.

3.4 ENVIRONMENTAL

3.4.1 GENERAL

The signal electronics shall function for a period of one minute as it approaches and impacts the lunar surface after a space flight of several days. It will be subjected to normal handling, storage, shipping, and launch environments before the space flight.

3.4.2 SHOCK

The signal electronics shall meet the requirements of Table 1 during a 7,000 g, 1.5 millisecond shock in any direction, corresponding to a velocity change of 200 ft/sec. The shock will occur during a crushing process in the balsa which will subject the signal electronics to compressive forces of approximately 1,000 psi.

3.4.3 TEMPERATURE

The signal electronics shall operate satisfactorily within any 20° increment within the temperature range of $+60^{\circ}F$ to $+100^{\circ}F$. It shall withstand temperatures from $+0^{\circ}$ to $+100^{\circ}F$ in the non-operating condition.

3.4.4 PRESSURE

The signal electronics shall operate satisfactorily within the pressure range from atmospheric to space vacuum. The signal electronics shall perform after exposure to space vacuum conditions for a period of five days.

3.4.5 ACCELERATION

The signal electronics shall withstand in the non-operating condition a constant of 15 g acceleration for five minutes in any direction.

3.4.6 VIBRATION

The signal electronics shall withstand in the non-operating condition the following vibration conditions in any axis:

Sine = 10 g rms, constant octave sine sweep in 5 minutes 20 to 2,000 Hz

Noise = 10 g rms, random vibration for 5 minutes, band limited to 100 to 2,000 Hz

SECTION 4

QUALITY ASSURANCE

4.1 QUALIFIED COMPONENTS

The signal electronics shall make full utilization of all components, materials, designs, and assembly techniques which have been previously tested and qualified for this application.

4.2 QUALITY CONTROL

The signal electronics shall be fabricated from materials which have been inspected and are fully identified as to type and source.

All fabrication and assembly operations shall be inspected for conformance with approved drawings and assembly procedures.

4.3 DESIGN QUALIFICATIONS

The design qualifications of the signal electronics shall be demonstrated by documented tests of a functional and environmental nature. The environmental tests shall be at least as severe as the environmental requirements.

4.4 FLIGHT ACCEPTANCE

The suitability of all signal electronics hardware for flight use shall be demonstrated by documented acceptance tests which shall include complete functional tests and restricted environmental rests.

SECTION 5

NOTES

5.1 DEFINITIONS

KHz	=	kilocycles per second
Hz	=	cycles per second
RMS	=	root mean square
MV	=	millivolt
MA	=	milliampere
MOS	=	metal oxide semiconductor
FET	=	field effect transistor
AM	=	amplitude modulation

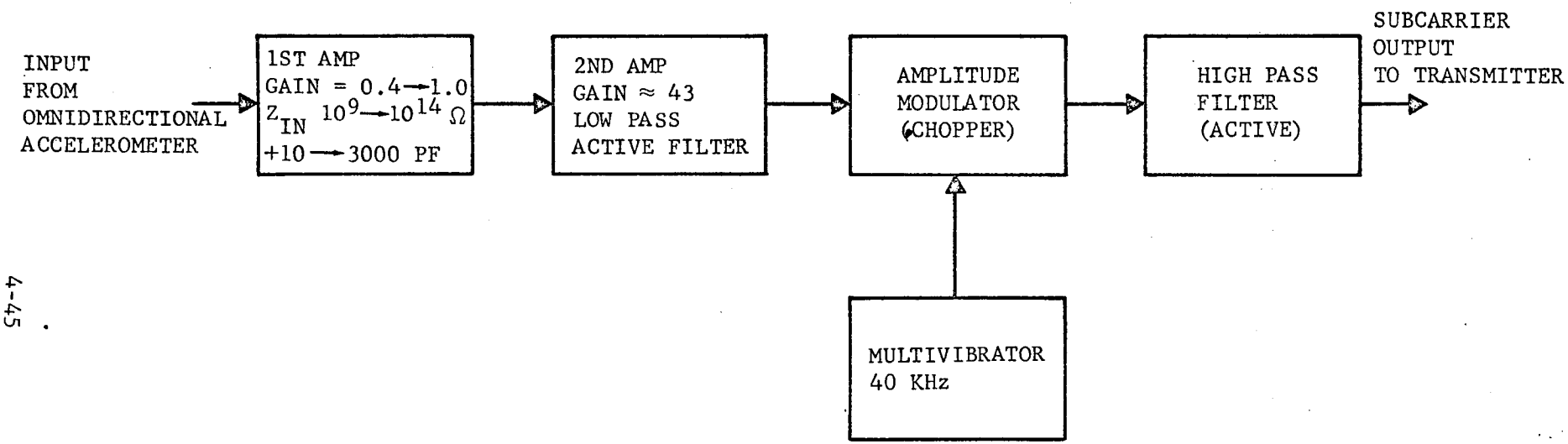

F03761 U

FIGURE 1. SIGNAL ELECTRONICS BLOCK DIAGRAM

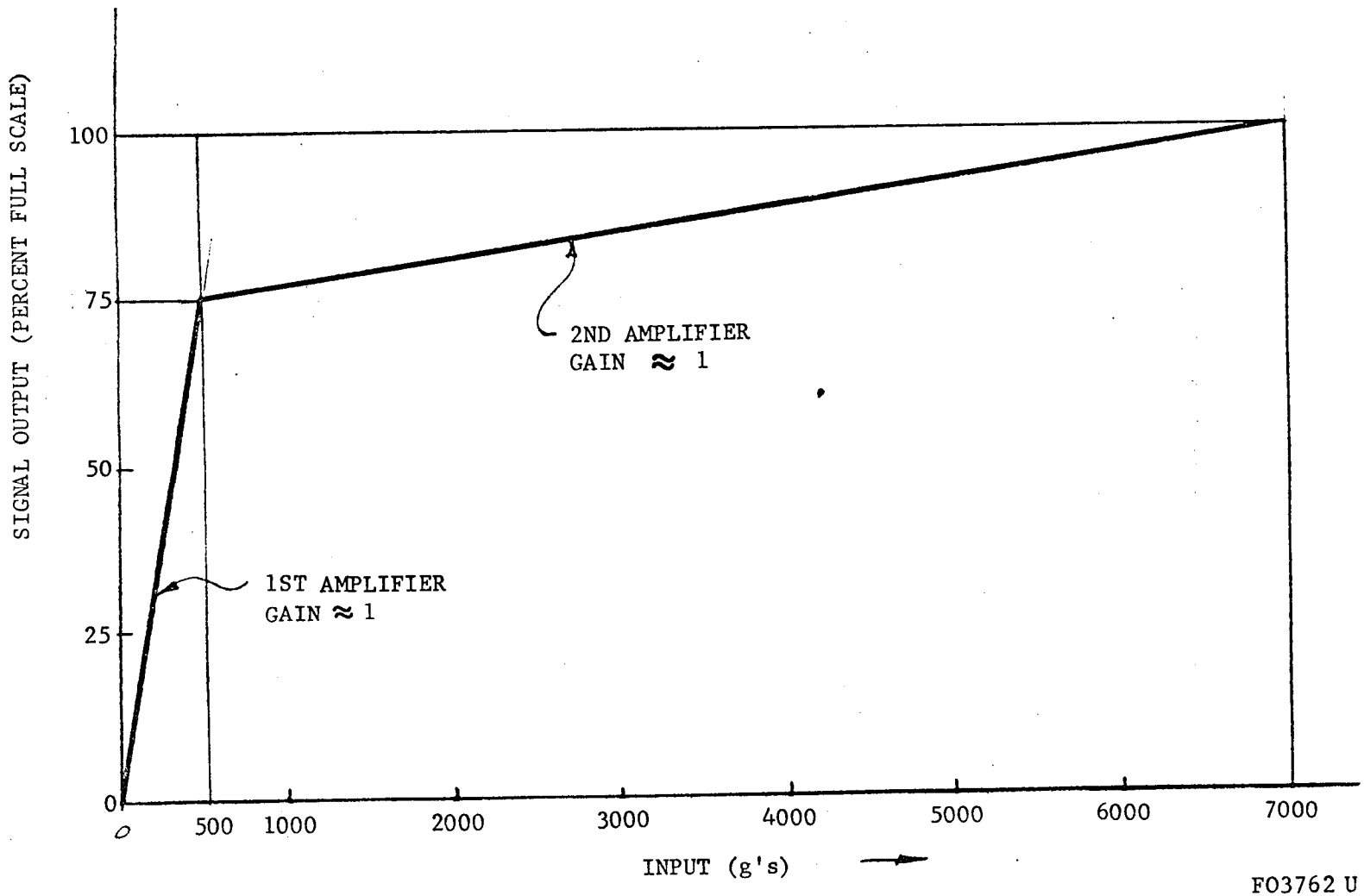

FIGURE 2. SIGNAL ELECTRONICS COMPRESSION CHARACTERISTICS

PERFORMANCE SPECIFICATION

LUNAR PENETROMETER SYSTEM

Power Regulator/Timer Assembly

Penetrometer Subsystem

AERONUTRONIC
DIVISION OF PHILCO CORPORATION
A SUBSIDIARY OF Ford Motor Company,
FORD ROAD/NEWPORT BEACH, CALIFORNIA

SECTION 1

SCOPE

This specification defines the performance requirements of the Power Regulator/Timer Assembly portion of the Penetrometer Subsystem. The function of the Regulator/Timer is to control the time that battery power is applied to the Penetrometer circuitry upon receiving a start signal, and to regulate the battery voltage to the extent required by the Penetrometer assemblies.

SECTION 2

APPLICABLE DOCUMENTS

The following documents shall be applicable to this specification to the extent indicated herein.

2.1 SPECIFICATIONS

LPS-100	Penetrometer Subsystem, Functional Specification
LPS-200	Data Relay Subsystem, Functional Specification
LPS-102	Omnidirectional Accelerometer, Performance Specification
LPS-105	Transmitter, Performance Specification
LPS-101	Antenna, Performance Specification
LPS-106	Signal Electronics, Performance Specification
LPS-108	Impact Limiter Cover, Performance Specification
LPS-107	Structure, Performance Specification
21526	Battery, Penetrometer (Procurement Specification)

2.2 DRAWINGS

24904	Board Assembly
24908	Board Detail
24905	Artwork
24907	Housing
24906	Schematic

SECTION 3

PERFORMANCE REQUIREMENTS

3.1 GENERAL

The regulator/timer shall perform as a part of the penetrometer to accomplish the mission objectives described in the Functional Specification, LPS-100, for the Lunar Penetrometer. The regulator/timer shall control the time interval that battery power is applied to the penetrometer circuitry and regulate such power as required by the associated assemblies.

3.2 ELECTRICAL

3.2.1 INPUT POWER

The positive input voltage will range from +22 volts to +32 volts. The negative input voltage will range from -5 volts to -7 volts.

3.2.2 POWER OUTPUTS

The following outputs shall be provided:

(1) +31.5 volts (nominal) @ 90 ma (nominal)

(2) +17 volts ± 0.5 volts @ 100 ma (nominal). The regulation shall be ± 5%.

(3) -6 volts (nominal) @ 6 ma (nominal). This voltage is unregulated.

(4) -3.3 volts ± 0.2 volts @ 24 ma (nominal). The regulation shall be ± 5%.

3.2.3 TRANSIENT RESPONSE

The voltage variation on the +17 volts and -3.3 volt outputs shall not change more than 50 millivolts for a 10% step-function change in load or input voltage.

3.2.4 STANDBY CURRENT DRAIN

The current drain of the circuits when not activated shall not exceed 10 microamperes.

3.2.5 TIMING INTERVAL AND INITIATION

The timing interval shall be variable (by adjusting an internal timing resistor) from 15 seconds to 100 seconds ± 10%. The timing interval shall be started from an input trigger signal which is initiated in conjunction with the penetrometer deployment action.

3.3 MECHANICAL

3.3.1 CONFIGURATION

The power regulator/timer shall closely conform to the design configuration as illustrated in the following developmental drawings:

24904	Board Assembly
24908	Board Detail
24905	Artwork
24907	Housing

The dimensions, tolerance, materials, and finishes given in the above drawings shall be followed closely. Those dimensions which affect interfaces with other assemblies of the penetrometer shall not be changed without requesting or making corresponding changes in the Performance Specifications of the other assemblies which are listed in Section 2.1 of this specification.

3.3.2 EPOXY COMPATIBILITY

All component parts of the power regulator/timer shall be compatible with bonding and encapsulation epoxy resins and techniques. The electrical performance of the power regulator/timer shall not be adversely affected by the potting materials or methods employed.

3.3.3 WEIGHT

Total weight of the power regulator/timer assembly shall not exceed 0.4 oz. unpotted.

3.4 ENVIRONMENTAL

3.4.1 GENERAL

The power regulator/timer shall function for a period of one minute as it approaches and impacts the Lunar surface after a space flight of several days. It will be subjected to normal handling, storage, shipping, and launch environments before the space flight.

3.4.2 SHOCK

The power regulator/timer shall meet the requirements herein during a 7,000 g 1.5 millisecond shock in any direction, corresponding to a velocity change of 200 ft/sec. The shock will occur during a crushing process in the balsa which will subject the power regulator/timer to compressive forces of approximately 1,000 psi.

3.4.3 TEMPERATURE

The power regulator/timer shall operate satisfactorily within any 20° increment within the temperature range of 60°F to 100°F. It shall withstand temperatures from 0° to 100°F in the non-operating condition.

3.4.4 PRESSURE

The power regulator/timer shall operate satisfactorily within the pressure range from atmospheric to space vacuum. The power regulator/timer shall perform after exposure to space vacuum conditions for a period of five days.

3.4.5 ACCELERATION

The power regulator/timer shall withstand in the non-operating condition a constant 15g acceleration for five minutes in any direction.

3.4.6 VIBRATION

The power regulator/timer shall withstand in the non-operating condition the following vibration conditions in any axis:

Sine = 10 g rms, constant octave sine sweep in 5 minutes
20 to 2,000 Hz

Noise = 10 g rms, random vibration for 5 minutes, band limited to 100 to 2,000 Hz.

SECTION 4

QUALITY ASSURANCE

4.1 QUALIFIED COMPONENTS

The power regulator/timer assembly shall make full utilization of all components, materials, designs, and assembly techniques which have been previously tested and qualified for this application.

4.2 QUALITY CONTROL

The power regulator/timer shall be fabricated from materials which have been inspected and are fully identified as to type and source.

All fabrication and assembly operations shall be inspected for conformance with approved drawings and assembly procedures.

4.3 DESIGN QUALIFICATIONS

The design qualifications of the power regulator/timer assembly shall be demonstrated by documented tests of a functional and environmental nature. The environmental tests shall be at least as severe as the environmental requirements.

4.4 FLIGHT ACCEPTANCE

The suitability of all power regulator/timer hardware for flight use shall be demonstrated by documented acceptance tests which shall include complete functional tests and restricted environmental tests.

PERFORMANCE SPECIFICATION

LUNAR PENETROMETER SYSTEM

Transmitter Assembly

Penetrometer Subsystem

4-54

AERONUTRONIC
DIVISION OF PHILCO CORPORATION
A SUBSIDIARY OF Ford Motor Company,
FORD ROAD NEWPORT BEACH, CALIFORNIA

SECTION 1

SCOPE

This specification defines the performance requirements of the Transmitter Assembly portion of the Lunar Penetrometer Subsystem. The transmitter provides the UHF telemetering link between the impacting penetrometer sphere and a remote data processing system.

The transmitter assembly defined in this specification shall consist of the following:

(1) The varactor diode frequency modulator

(2) The Colpitts oscillator

(3) The broad-band, multistage buffer amplifier

(4) The frequency doubler/driver amplifier

(5) The frequency doubler/power amplifier.

SECTION 2

APPLICABLE DOCUMENTS

The following documents shall be applicable to this specification to the extent indicated herein.

2.1 SPECIFICATIONS

LPS-100 Penetrometer Subsystem, Functional Specification

LPS-200 Data Relay Subsystem, Functional Specification

LPS-101 Antenna, Performance Specification

LPS-103 Signal Electronics, Performance Specification

LPS-104 Power Regulator/Timer, Performance Specification

LPS-106 Structure, Performance Specification

21526 Battery, Penetrometer (Procurement Specification)

2.2 DRAWINGS

13809 Transmitter Assembly

24902 Telemetry Assembly

24920 Oscillator Buffer-Transmitter

13812 Cover, Oscillator Buffer

13811 Quadrupler Assembly, Transmitter

13810 Oscillator Buffer Assembly, Transmitter

24922 Cover, Bottom, Transmitter

24918 Shield, Transmitter

21216 Lunar Penetrometer

SECTION 3

PERFORMANCE REQUIREMENTS

3.1 GENERAL

The transmitter assembly shall perform as a component part of a Penetrometer to accomplish the mission objectives as set forth in LPS-100, Functional Specification for the Lunar Penetrometer Subsystem. The transmitter shall convert the amplitude modulated, constant frequency subcarrier supplied by the signal electronics to a frequency modulated RF carrier. The transmitter shall provide a carrier power of 0.5 watt at some specified center frequency within the band of 432 to 453 MHz.

3.2 ELECTRICAL

3.2.1 DESCRIPTION

The transmitter assembly shall consist of the circuit modules indicated in the block diagram of Figure 1. These modules shall be defined as follows: A varactor diode frequency modulator, Colpitts oscillator, and a broad-band, multistage buffer amplifier, all of which shall operate as class A stages at a frequency one-fourth that of the transmitter's final output frequency. The fourth stage or module shall consist of the frequency doubler/driver amplifier; the final module shall be the frequency doubler/power amplifier stage.

Electrical performance requirements are listed in Table 1.

TABLE 1

ELECTRICAL PERFORMANCE REQUIREMENTS

Output Frequency, f_o	
Channel 1	432 MHz
Channel 2	435 MHz
Channel 3	438 MHz
Channel 4	441 MHz
Channel 5	444 MHz
Channel 6	447 MHz
Channel 7	450 MHz
Channel 8	453 MHz
Supply Voltage	
a). Oscillator-Buffer	+17V ± 1% @ 65 ma nom.
b). Doublers	+22 to 30V @ 114 ma nom.
Data Modulation Deviation, $\Delta f_o(D)$	±160 KHz, max. at 432 - 453 MHz
Modulation Sensitivity	±80 KHz/volt at 432 - 453 MHz
Modulation Linearity	1%
Impact Induced Deviation, $\Delta f_o(i)$	±80 KHz, max. @ 7000g
Thermal Induced Deviation, $\Delta f_o(t)$	±66 KHz, max.
RF Power Output, P_{out}	500 mw min. (into 50 ohm resistive load) @ 30 volts
DC to RF Efficiency, η	10% min.
Spurious RF Power Output	30 db below carrier

TABLE I

ELECTRICAL PERFORMANCE REQUIREMENTS (CONTINUED)

Thermal Frequency Coefficient (max.)	6.6 KHz/^{o}F at 432 - 453 MHz
Thermal Range	$\Delta T \leq 20^{o}$ within the range of $+60^{o}$F to $+100^{o}$F
Long Term Center Frequency Drift (1 year storage 0°F to 100°F)	$\pm$250 KHz
Output Impedance	50 ohms nominal
Modulation Input Impedance	5K ohms resistive shunted by 300 $\mu\mu$f

3.2.2 OSCILLATOR

The transmitter oscillator shall utilize a Colpitts configuration operating over the frequency range of 108 MHz to 113.25 MHz. The tuned circuit shall consist of a metalized glass inductor ($+10_{ppm}TC$) and Corning Glass capacitors ($+140_{ppm}TC$). A ($-1500_{ppm}5pf$) ceramic capacitor will be employed to compensate for the thermally-induced changes of encapsulation materials, tank circuit elements, and transistor input characteristics. The oscillator circuit shall include two transistors, the basic oscillator and a direct coupled isolation amplifier or buffer. No tuned circuits shall be used in this or following buffer stages which minimize oscillator frequency pulling due to tuned circuit detuning. An epoxy-pack 2N2563 transistor (2N918 equivalent) shall be used as the oscillator and first buffer. Collector current will be adjusted in the 6 to 8 milliampere range for operation in the maximum f_t range. Transistors shall be selected with f_t's of 750 MHz minimum at 8 milliamperes collector current. Oscillator-buffer power output shall be 10 milliwatts. The module shall be encapsulated with a minimum amount of epoxy to prevent excessive frequency shift attributable to dielectric constant temperature coefficient.

3.2.3 MODULATOR

A PC 116 varicap shall be used as the voltage variable capacity to frequency-modulate the rf carrier. The varicap shall be loosely coupled across the oscillator tank circuit to provide only a small (500 KHz) frequency control. This will be employed to minimize varicap-induced frequency shift with temperature and to achieve an adequate fine tuning range to provide adjustment of carrier center frequency. Modulation sensitivity shall be approximately 20 KHz per volt at the oscillator frequency or 80 KHz per volt at the quadrupled output frequency.

3.2.4 THREE-STAGE BUFFER AMPLIFIER

A three-stage untuned buffer amplifier shall be employed to provide oscillator isolation from any tuned circuit impedance variations in the following class C frequency doubler stages. The buffers shall provide only 5 db of forward power gain (10 mw input and 30 mw output). The degree of oscillator isolation shall be determined by the buffer reverse gain which shall be on the order of 35 db (loss). The worst-case buffer load mismatch shall not cause more than 1KHz of oscillator frequency shift. Since the overall buffer power gain is a direct function of transistor f_t, selected devices may be required. Buffer output power shall be measured with a 50-ohm termination.

The basic module shall be completely encapsulated.

3.2.5 DOUBLER MODULE

This module shall consist of two cascaded push-push doubler stages. Performance requirements shall be:

(1)	RF input power:	30 mw min.
(2)	RF output power:	500 mw min. into 50 ohms @ 30V
(3)	Spurious output:	30 db below carrier
(4)	Supply voltage range:	+22 to +30V dc
(5)	Stability:	No spurious oscillations over the supply voltage range or over a 4:1 VSWR at the output terminals. Output power shall fall off smoothly with increasing VSWR with no discontinuities or spurious modes.

The doubler module shall be completely encapsulated.

3.3 MECHANICAL

3.3.1 CONFIGURATION

The transmitter assembly shall closely conform to the design configuration as illustrated in the developmental drawings listed in Section 2.2 of this specification. The dimensions, tolerances, materials, and finishes given in the referenced drawings shall be followed closely. Those dimensions which affect interfaces with other assemblies of the penetrometer shall not be changed without requesting or making corresponding changes in the Performance Specifications of the other assemblies which are listed in Section 2.1.

3.3.2 EPOXY COMPATIBILITY

All component parts of the transmitter assembly shall be compatible with bonding and encapsulation epoxy resins and techniques. The electrical performance of the transmitter shall not be adversely affected by the potting materials or methods employed.

3.3.3 WEIGHT

Total weight of the transmitter assembly shall not exceed 0.75 pounds.

3.4 ENVIRONMENTAL

3.4.1 GENERAL

The transmitter shall function for a period of one minute commencing with penetrometer deployment, during approach and at final impact of the Lunar surface, after a space flight of several days. It will be subjected to normal handling, storage, shipping, and launch environments before the space flight.

3.4.2 SHOCK

The transmitter shall meet the requirements of Table I during a 7,000g, 1.5 millisecond shock in any direction, corresponding to a velocity change of 200 ft/sec. The shock will occur during a crushing process in the balsa which will subject the transmitter to compressive forces of approximately 1,000 psi.

3.4.3 TEMPERATURE

The transmitter shall operate satisfactorily within any 20°F increment within the temperature range of +60°F to +100°F. It shall withstand temperatures from +0° to +100°F in the non-operating condition.

3.4.4 PRESSURE

The transmitter shall operate satisfactorily within the pressure range from atmospheric to space vacuum. The transmitter shall perform after exposure to space vacuum conditions for a period of five days.

3.4.5 ACCELERATION

The transmitter shall withstand in the non-operating condition a constant 15 g acceleration for five minutes in any direction.

3.4.6 VIBRATION

The transmitter shall withstand in the non-operating condition the following vibration conditions in any axis:

Sine = 10 g rms, constant octave sine sweep in 5 minutes 20 to 2,000 Hz

Noise = 10 g rms, random vibration for 5 minutes, band limited to 100 to 2,000 Hz

SECTION 4

QUALITY ASSURANCE

4.1 QUALIFIED COMPONENTS

The transmitter assembly shall make full utilization of all components, materials, designs, and assembly techniques which have been previously tested and qualified for this application.

4.2 QUALITY CONTROL

The transmitter shall be fabricated from materials which have been inspected and are fully identified as to type and source.

All fabrication and assembly operations shall be inspected for conformance with approved drawings and assembly procedures.

4.3 DESIGN QUALIFICATIONS

The design qualifications of the transmitter assembly shall be demonstrated by documented tests of a functional and environmental nature. The environmental tests shall be at least as severe as the environmental requirements.

4.4 FLIGHT ACCEPTANCE

The suitability of all transmitter assembly hardware for flight use shall be demonstrated by documented acceptance tests which shall include complete functional tests and restricted environmental tests.

SECTION 5

NOTES

5.1 DEFINITIONS

MHz =	megacycles per second
KHz =	kilocycles per second
Hz =	cycles per second
ma =	milliampere
mw =	milliwatt
nom =	nominal
max =	maximum
ΔT =	temperature increment or change
ppm^{TC} =	parts per million, temperature coefficient

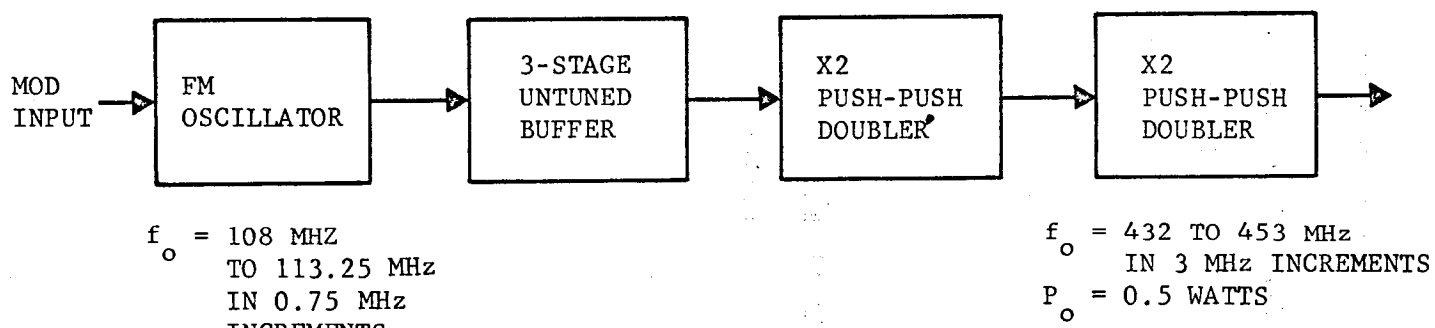

FO3763 U

FIGURE 1. TRANSMITTER SUBASSEMBLY BLOCK DIAGRAM

LPS 106

PERFORMANCE SPECIFICATION

LUNAR PENETROMETER SYSTEM

Structure Assembly

Penetrometer Subsystem

4-66

AERONUTRONIC
DIVISION OF PHILCO CORPORATION
A SUBSIDIARY OF Ford Motor Company,
FORD ROAD/NEWPORT BEACH, CALIFORNIA

SECTION 1

SCOPE

This specification defines the performance requirements for the Structure Assembly which is part of a Lunar Penetrometer Subsystem.

The structure assembly described by this document shall include the following elements:

(1) Center Structure
(2) Upper Structure
(3) Lower Structure
(4) Coupling Nut, lower structure

SECTION 2

APPLICABLE DOCUMENTS

The following documents shall form a part of this specification to the extent specified herein.

2.1 SPECIFICATIONS

LPS-100	Penetrometer Subsystem, Functional Specification
LPS-101	Antenna, Performance Specification
LPS-107	Impact Limiter/Cover, Performance Specification

2.2 DRAWINGS

25377	Payload Assembly
22590	Center Structure
21234	Upper Structure
21235	Lower Structure
22649	Coupling Nut, Lower Structure
21216	Lunar Penetrometer

SECTION 3

PERFORMANCE REQUIREMENTS

3.1 GENERAL

The Structure Assembly shall perform as part of a Lunar Penetrometer Subsystem to accomplish the mission objectives as described in LPS-100, Penetrometer Subsystem, Functional Specification. The structure shall provide mechanical support to a 3.5 inch diameter spherical telemetry package housed within an 8.5 inch diameter spherical balsa wood impact limiter during a 200 ft/sec. impact with a rigid surface.

3.2 MECHANICAL

3.2.1 DESCRIPTION

The structure assembly shall be fabricated in three pieces as follows: (1) a primary center webbed structure shall form the chassis upon which the telemetry assembly will be built up and the omni-directional accelerometer will be mounted, (2) an upper structure shall be threaded to the center structure and will house the telemetry electronics, and (3) a lower structure shall be retained to the center structure by a threaded equatorial coupling nut and will house the power supply and timer/regulator assembly.

The center structure shall be provided with access holes for attachment of the antenna feed assembly and for access to the electrical checkout connectors.

The four antenna spacers shall be attached to the structure by nylon fasteners and bonded into position following final assembly of the structure.

3.2.2 CONFIGURATION

The structure assembly shall closely conform to the design configuration as illustrated in the developmental drawing listed in Section 2.2 of this specification.

The dimensions, tolerances, materials, and finishes given in the referenced drawings shall be followed closely. Those dimensions which affect interfaces with other assemblies of the penetrometer shall not be changed without requesting or making corresponding changes in the Performance Specifications of the other assemblies which are listed in Section 2.1.

3.2.3 STRUCTURAL REQUIREMENTS

The structure shall be capable of supporting itself and a fully potted 1.90 pound telemetry assembly without incurring permanent deformation when subjected to a 7,000g deceleration load in any direction which is reacted by a balsa wood impact limiter with a force of the form $P_o \cos \phi$ (where ϕ varies from $-\pi/2$ to $+\pi/2$ radians from the point of impact).

3.2.4 ANTENNA MOUNTING

3.2.4.1 Antenna Feed Assembly

Provision shall be made for the installation, mounting, and retention of the antenna feed assembly in the center structure.

3.2.4.2 Antenna Spacers

Provision shall be made for the mounting of the antenna spacers to the structure.

3.2.5 CONNECTOR ACCESS

Two holes shall be provided in the center structure for mounting and access to electrical checkout connectors.

3.2.6 SURFACE FINISH

All surfaces (excluding threads) shall be treated to provide a bonding surface capable of developing the full strength capabilities of a MIL-A-8623, Type I epoxy resin system.

3.2.7 BATTERY ACCESS

The lower portion of the structure shall be designed to allow replacement of the battery pack following final assembly and potting.

3.2.8 WEIGHT

The weight of the structure assembly shall not exceed 0.54 pounds.

3.3 ELECTRICAL

3.3.1 CONTINUITY

Electrical continuity shall exist between all portions of the structural sphere following final assembly to provide a proper ground plane for the antenna assembly.

3.4 ENVIRONMENTAL

3.4.1 SHOCK

The structure shall perform satisfactorily during a 7000g 1.5 millisecond shock in any direction.

3.4.2 TEMPERATURE

The structure shall perform satisfactorily within the temperature range of $+0\ ^{\circ}F$ to $+100^{\circ}F$.

3.4.3 PRESSURE

The structure shall perform satisfactorily within the pressure range from atmospheric to space vacuum.

3.4.4 ACCELERATION

The structure shall withstand a constant 15g acceleration for five minutes in any direction.

3.4.5 VIBRATION

The structure shall withstand the following vibration conditions in any axis:

Sine - 10g rms, constant octave sine sweep in 5 minutes, 5 to 2000 Hz, limited to ±0.1 inch.

Noise - 10g rms, random vibration for 5 minutes, band limited to 100 - 2000 Hz.

SECTION 4

QUALITY ASSURANCE

4.1 QUALIFIED COMPONENTS

The structure assembly shall make full utilization of all materials, designs, and assembly techniques which have been previously tested and qualified for this application.

4.2 QUALITY CONTROL

The structure shall be fabricated from materials which have been inspected and are fully identified as to type and source.

All fabrication and assembly operations shall be inspected for conformance with approved drawings and assembly procedures.

4.3 DESIGN QUALIFICATION

The design qualification of the structure assembly shall be demonstrated by documented tests of a functional and environmental nature. The environmental tests shall be at least as severe as the environmental requirements.

PERFORMANCE SPECIFICATION

LUNAR PENETROMETER SYSTEM

Impact Limiter/Cover Assembly

Penetrometer Subsystem

4-73

AERONUTRONIC
DIVISION OF PHILCO CORPORATION
A SUBSIDIARY OF Ford Motor Company,
FORD ROAD NEWPORT BEACH, CALIFORNIA

SECTION 1

SCOPE

This specification defines the performance requirements for the Impact Limiter/Cover Assembly which is a part of the Lunar Penetrometer Subsystem. It shall be the function of this limiter/cover assembly to dissipate the kinetic energy of impact upon a hard, unyielding, surface and thereby limit the deceleration loads to a level at which the instrument complement can function as a measuring device.

The impact limiter assembly described by this document shall include the following:

(1) The energy absorbing material
(2) The external cover.

SECTION 2

APPLICABLE DOCUMENTS

The following documents shall form a part of this specification to the extent specified herein.

2.1 SPECIFICATION

LPS-100	Penetrometer Subsystem, Functional Specification
LPS-101	Antenna, Performance Specification
LPS-106	Structure, Performance Specification

2.2 DRAWINGS

21216	Lunar Penetrometer
22695-1	Hemisphere Assembly
22737	Icosahedron Assembly
22738	Tetrahedron
22794	Balsa Block
24874	Sleeve, Probe

SECTION 3

PERFORMANCE REQUIREMENTS

3.1 GENERAL

The impact limiter assembly shall perform as part of a Penetrometer Subsystem to accomplish the mission objectives as described in LPS-100, Functional Specification for the Lunar Penetrometer Subsystem. The limiter shall limit the deceleration loads applied to a 3.5 inch diameter spherical telemetry package landed at 200 ft/sec. on a hard unyielding surface to a level of 7000 g's. This limiter shall provide omnidirectional impact protection and shall allow the isotropic radiation of energy from a 4.5 inch diameter antenna assembly.

3.2 MECHANICAL

3.2.1 DESCRIPTION

The limiter shall be constructed of tetrahedral balsa wood segments bonded together in the form of an Icosahedron and machined to a specified internal and external spherical radius. The internal contour shall additionally be provided with two orthogonal grooves to provide proper interfacing with the antenna assembly. The external cover shall be constructed of mylar and fiberglass reinforced plastic.

3.2.2 CONFIGURATION

The limiter assembly shall closely conform with the design configuration illustrated in the developmental drawings listed in Section 2.2 of this specification.

The dimensions, tolerances, materials, and finishes given in the referenced drawings shall be followed closely. Those dimensions which affect interfaces with other assemblies of the penetrometer shall not be charged without approved, corresponding changes in the Performance Specifications of the other assemblies which are listed in Section 2.1.

3.2.3 VELOCITY CAPABILITY

The impact limiter shall be capable of dissipating the kinetic energy of a 5-pound sphere (including limiter) landing at 200 ft/sec.

3.2.4 PEAK DECELERATION

The peak deceleration experienced by the payload shall be restricted to less than 7000 g's.

3.2.5 TEST CONNECTOR ACCESS HOLES

As indicated in the developmental drawings listed in Section 2.2, the limiter shall be provided with two holes in the equatorial plane to provide access to electrical connectors. Also, provision shall be made for filling one of these holes with a plug of limiter material following final electrical checkout.

3.2.6 EXTERNAL COVER

The external cover shall function to prevent limiter damage in handling, provide limiter integrity during impact, and prevent excessive loss of balsa wood moisture during transit.

3.2.6.1 Strength

The cover shall exhibit a nominal ultimate strength of at least 400 pounds per unit inch of width.

3.2.6.2 Permeability

The permeability of the cover to water vapor shall not exceed that of 1/4 mil mylar film.

3.2.7 WEIGHT

3.2.7.1 Impact Limiter

The total weight of the impact limiter material shall not exceed 1.67 pounds.

3.2.7.2 Resin

The total weight of the resin utilized in bonding the limiter segments and installing the payload shall not exceed 0.2 pounds.

3.2.7.3 Cover

The total weight of the Mylar - FRP external cover shall not exceed 0.32 pounds.

3.3 ENVIRONMENTAL

3.3.1 TEMPERATURE

The limiter and cover assembly shall perform satisfactorily within the temperature range +40°F to +100°F.

3.3.2 PRESSURE

The limiter and cover assembly shall operate satisfactorily within the pressure range from atmospheric to space vacuum. The assembly shall perform its function after exposure to a space vacuum condition for a period of five days.

3.3.3 ACCELERATION

The limiter and cover assembly shall withstand a constant 15g acceleration for 5 minutes in any direction.

3.3.4 VIBRATION

The limiter and cover assembly shall withstand the following vibration conditions in any axis:

Sine: 10g rms, constant octave sine sweep in 5 minutes, 5 to 2,000 Hz limited to ±0.1 inch.

Noise: 10g rms, random vibration for five minutes, band limited to 100 to 2,000 Hz.

SECTION 4

QUALITY ASSURANCE

4.1 QUALIFIED COMPONENTS

The limiter and cover assembly shall make full utilization of all materials, designs and assembly techniques which have been previously tested and qualified for this application.

4.2 QUALITY CONTROL

The limiter and cover assembly shall be fabricated from materials which have been inspected and are fully identified as to type and source.

All fabrication and assembly operations shall be inspected for conformance with approved drawings and assembly procedures.

4.3 DESIGN QUALIFICATION

The design qualification of the limiter and cover assembly shall be demonstrated by documented tests of a functional and environmental nature. The environmental tests shall be at least as severe as the environmental requirements.

LPS 200

FUNCTIONAL SPECIFICATION

LUNAR PENETROMETER SYSTEM

DATA RELAY SUBSYSTEM

4-80

AERONUTRONIC
DIVISION OF PHILCO CORPORATION
A SUBSIDIARY OF Ford Motor Company,
FORD ROAD/NEWPORT BEACH, CALIFORNIA

SECTION 1

SCOPE

1.1 GENERAL

This specification defines the functional requirements of the Data Relay which forms part of a Lunar Penetrometer System applicable to the Apollo program. It does not serve to define the requirements of the associated equipment, such as the penetrometers, Apollo CSM telecommunication equipment, and ground support equipment; however, it does describe functional interfaces with this equipment. Performance requirements of subassemblies within the Data Relay are defined in separate specifications.

1.2 MISSION OBJECTIVES

The Lunar Penetrometer System is intended for use in a Lunar Survey Probe mission to measure certain of the physical properties of the Lunar surface. The physical properties of interest, including bearing strength, hardness, and penetrability, are defined as those which establish the ability of a spacecraft to land on the Lunar surface in a position acceptable for surface exploration and relaunch operations. The penetrometer concept involves impacting the Lunar surface with a group of spherical probes at velocities from 100 to 200 ft/sec. and sensing the resultant dynamic accelerations. The individual penetrometer spheres contain complete telemetry equipment for transmitting the measured data to the nearby Data Relay aboard a hovering space probe from which they were deployed. The Data Relay performs the data acquisition and transmission functions to complete a relay communication link to the orbiting CSM.

A set of eight penetrometers and the Data Relay comprise the Lunar Penetrometer System which will be an integrated part of a Lunar Survey Probe vehicle which, in turn, is carried aboard a Lunar orbiting Apollo CSM. The probe vehicle will be separated from the CSM and enter a powered descent trajectory to investigate the Lunar surface at a specific location. When the probe is near the surface and at nearly zero velocity, a salvo of eight penetrometers will be deployed in a

circular pattern to impact the surface. Data from each penetrometer will be transmitted to the Data Relay in the hovering probe. The Data Relay will, in real time, retransmit all the combined multichannel impact data at a higher power level to the more distant orbiting Apollo CSM. A combination of the regular and mission peculiar telecommunication equipment in the CSM will receive the relayed data and retransmit it to Earth over the unified S-band system for analysis by automatic data computing equipment.

1.3 DESCRIPTION

The Data Relay will consist of an integral portion of the Lunar Survey Probe vehicle which is designated to the Lunar Penetrometer System. It shall consist of the necessary structure to contain and deploy the penetrometers; the necessary receiving equipment to receive the UHF RF signals radiated by the penetrometers; the equipment to re-transmit the combined data at a specific VHF RF frequency for reception by the orbiting CSM; and a self-contained source of electrical power. This specification will contain only general mechanical requirements for the data relay because the details of the probe vehicle design are not defined.

A conceptual design for the Data Relay is shown in Figure 1. Antenna locations are only illustrative since their specific configurations and locations will be determined by the remainder of the probe vehicle. Dual receiving antennas are shown to provide polarization diversity reception. As shown, the penetrometers will be deployed by springs when the restraining band is cut upon command. The central portion of the cylindrical section contains all the electronic equipment.

Figure 2 is a block diagram of the electrical equipment which is incorporated in the data relay. As mentioned, two polarization diverse receiving antennas are shown because the penetrometers will not be attitude stabilized and therefore can furnish radiated signals with various polarization states. Signals from the two receiving antennas are fed to RF amplifiers and then to two power dividers. The power dividers allow a possible total of eight receivers to be used with either antenna. At the input to each FM receiver is an RF switch to automatically switch to the unused antenna at any time the received signal drops below a preset threshold value. Each of the eight receivers is tuned to receive the transmission from one of the specific eight penetrometers.

The FM receivers, operating in the 432 - 453 MHz range, each contain wideband discriminators. Output signals from the eight receivers go to 40 KHz AM demodulators which produce analog output signals corresponding to the

measured acceleration signals. These analog signals then are used to frequency modulate eight constant-bandwidth subcarrier oscillators (SCO), each at a different non-interfering frequency. The SCO signals are combined into a composite signal which modulates the transmitter to relay the data 100 nautical miles to the orbiting CSM spacecraft.

SECTION 2

APPLICABLE DOCUMENTS

The following documents are applicable to this specification to the extent indicated herein. The performance specification for the assemblies within the data relay are listed for reference purposes.

Specification	Title
LPS-100	Penetrometer Subsystem, Functional Specification
LPS-201	Receiving Antenna, Performance Specification
LPS-202	Preamplifier, Performance Specification
LPS-203	Power Divider, Performance Specification
LPS-204	Diversity Scanner, Performance Specification
LPS-205	Receiver/Discriminator, Performance Specification
LPS-206	AM Demodulator, Performance Specification
LPS-207	Subcarrier Oscillator Subassembly, Performance Specification
LPS-208	Transmitter, Performance Specification
LPS-209	Transmitting Antenna, Performance Specification
LPS-210	Power Regulator/Converter, Specification
LPS-211	Battery, Performance Specification

SECTION 3

MISSION REQUIREMENTS

3.1 PRE-LAUNCH PERIOD

The Data Relay shall be capable of being delivered to the launch area six (6) months prior to the launch date, in conjunction with the complete Penetrometer complement. During the six-month period, storage will be at normal room temperatures. The Data Relay shall have the capability of being turned on electrically for test purposes, functionally tested by hard line or radiated test signals, electronically recharged, and operated from external power sources. Interface and systems integration testing will be accomplished in conjunction with the parent vehicle and launch facility.

3.2 LAUNCH TO DEPLOYMENT PERIOD

During this period, the Data Relay will be incorporated as an integral part of Lunar Survey Probe. Prior to probe separation, the Data Relay (and Penetrometer Subsystems) will have the capability of furnishing status and engineering data to the primary vehicle or CSM. Following separation, the probe vehicle with its integral Data Relay enter a powered descent trajectory to investigate the Lunar surface. The Data Relay operating cycle must encompass that period designated for the Penetrometers and is initiated on command from the probe vehicle. When the probe has achieved its final operational-deployment position, the Data Relay ejection salvo will be initiated, resulting in the deployment of Penetrometers.

3.3 DEPLOYMENT TO IMPACT PERIOD

The Data Relay shall be capable of receiving VHF Transmissions from the individual Penetrometer Subsystems following their deployment through final impact. Real time relay transmission of the combined multichannel impact data shall occur via the VHF data transmission link to the orbiting CSM. Polarization diversity reception shall enhance signal reception properties which may be degraded during the penetrometer deployment or impact periods.

SECTION 4

PERFORMANCE REQUIREMENTS

This section defines the functional requirements which of necessity concentrate on the electrical performance characteristics. Only general reference is made to the mechanical requirements because affected probe vehicle design and interface details are not defined.

4.1 OPERATING TIME

The Data Relay shall be capable of operating for a maximum period of ten (10) minutes, with the Penetrometer deployment sequence tentatively scheduled immediately following the mid-point of the specified period. Operation before and after Penetrometer deployment and impact will be thus constrained.

4.2 DEPLOYMENT OF PENETROMETER

The deployment cycle will be initiated on command from the parent probe vehicle main sequencer. Command signals initiation shall be assumed present only following the completion of a satisfactory sequence of events by the probe vehicle. The manner of deployment shall incorporate a pyrotechnic initiated release of "ball" restraining bands with subsequent individual spring ejection of each Penetrometer. The ejection shall be accomplished in salvo, i.e., a simultaneous discharge of Penetrometers, within the limits of the nominal mechanical tolerances involved.

4.3 DATA ACQUISITION

The Data Relay shall provide eight (8) channel AM/FM reception of UHF signals in 432 - 453 MHz frequency band over slant ranges up to two (2) nautical miles. Channel frequency assignments shall conform to individual Penetrometer design frequencies which employ a 3 MHz frequency spacing within the specified band. Polarization diversity reception shall be provided to accommodate the variations in Penetrometer orientation during deployment which can result in radiated signals with various polarization states.

The block diagram of Figure 2 depicts the basic relay functional elements. The acquisition function shall include dual diversity channel preamplification and power division, diversity scanning, and eight (8) channel FM carrier and AM subcarrier demodulation. The configuration shall allow the eight (8) receiver channels to be used with either polarization antenna by means of the diversity scanning operation. In this basic operating mode, the individual receiver inputs are automatically switched to the opposite diversity channel whenever the continuously monitored signal level falls below a preset threshold. The outputs of the data acquisition section are analog signals corresponding to the measured acceleration signals.

Overall receiving system noise figure shall be 6 db. VHF signal rejection shall be provided in the receiving transmission line to minimize effects of the high power emanating from the relay transmitting antenna. Mission geometry relative to Data Relay receiving antenna aspect angle coverage requirements is currently undefined, consequently coverage details will remain unspecified until probe vehicle configuration and deployment profiles receive definition.

4.4 DATA TRANSMISSION

The Data Relay shall be capable of transmitting the multichannel measured acceleration data a distance of 100 nautical miles to the orbiting CSM. The relay radio link shall employ an FM/FM VHF transmission system with a nominal 40-watt FM transmitter output power operating at a nominal RF frequency of 260 MHz. An eight (8) channel constant bandwidth subcarrier modulation will be applied to the RF carrier. The individual Penetrometer measured acceleration data (i.e., output of the data acquisition section) shall be applied to FM the eight (8) subcarrier channels. The block diagram of Figure 2 shows the conventional VHF data transmission functional elements. Transmitting antenna aspect angle coverage requirements will remain unspecified for reasons explained in the preceding paragraph.

4.5 DATA HANDLING

The accuracy design objective for the complete Lunar Penetrometer System shall be to measure acceleration with an error not to exceed ±10% of the reading. The apportionment of error to Penetrometer and Data Relay Subsystems is controlled by the individual subassembly performance specifications. Data frequency response and dynamic range requirements shall therefore be consistent with the previously specified accuracy goal.

4.6 POWER SUPPLY

The Data Relay power supply requirements shall be met with a self-contained rechargeable battery pack furnishing an unregulated nominal +28 volt DC output. An electrochemical secondary battery of the silver zinc type shall be given preference because of its high energy density and drain rate properties. Sufficient battery capacity shall be provided to facilitate brief status checks in addition to accommodating the basic relay 10-minute operating period. A DC/DC converter and Regulator shall also be furnished to provide multiple regulated output voltage taps to the various relay subassemblies. Voltage regulation requirements shall be dictated by the individual subassembly power requirements.

Provision shall be included to facilitate the application of external power for use in functional test and checkout operations.

4.7 PHYSICAL REQUIREMENTS

The Data Relay Subsystem shall be configured in conjunction with the full complement of Penetrometer Subsystems and the Lunar Survey Probe. For illustration purposes the layout of Figure 1 will identify a typical configuration. The Data Relay subassemblies shall be housed in an octagonal center section having nominal dimensions of 9 inches (across flats) x 13.8 inches high. Eight 8.5-inch diameter balls are clustered in two levels of four each, resulting in a nominal overall outer diameter of 26 inches x 13.8 inches high. Supporting structure, ball ejection and restraining mechanism, and antenna assemblies will be constrained within the basic 26 inches diameter x 13.8 inch height envelope prior to relay operation. When operation commences, antenna and penetrometer deployment will occur and the envelope constraint will no longer apply for these elements. The basic Data Relay Subsystem nominal weight and volume estimates shall be 44 pounds and 650 cubic inches, respectively, based upon the typical configuration of Figure 2. Penetrometer Subsystems with their associated deployment mechanism are not included in the preceding estimates. The individual relay subassembly performance specifications will convey more detailed physical data.

SECTION 5

ENVIRONMENTAL REQUIREMENTS

5.1 GENERAL

This section defines the environmental requirements for the Data Relay Subsystem rather than for the subassemblies with the Data Relay. Subassembly environmental requirements are defined in the performance specifications for each particular subassembly.

These environmental requirements are subject to change because the exact environmental conditions for the Lunar Survey Probe delivery vehicle are undefined. The stated requirements are typical for a payload aboard a solid-motor vehicle carried on an Apollo spacecraft.

In summary, the Data Relay must meet the following environmental and operational conditions:

(1) Shipping conditions in a protective container.
(2) Storage for six (6) months.
(3) Operation in the atmosphere for checkout purposes, subject to range safety and launch operational limitations.
(4) Launch and transit in space in an inoperative status for five (5) days as part of a Lunar Survey Probe integrated into an Apollo spacecraft.

(5) Operation from the Lunar Survey Probe in a data acquisition and relay transmission mode in conjunction with Penetrometer deployment operations and impact of the Lunar surface.

5.2 PRESSURE

The Data Relay shall perform within the stated requirements at environmental pressures ranging from a sea level atmospheric to space vacuum. It shall operate after a spaceflight of five (5) days during which it is stored in an inoperative condition at space vacuum.

5.3 TEMPERATURE

The Data Relay shall operate correctly within the temperature range of +60 to +100°F. It shall withstand temperatures from 0° to +100°F in the nonoperating condition.

5.4 ACCELERATION

The Data Relay shall withstand, in the non-operating condition, a constant 15 g acceleration for five (5) minutes in any direction.

It shall also withstand, in the non-operating condition, storage during a spaceflight under zero g conditions for five (5) days.

5.5 HUMIDITY

The Data Relay shall withstand, in either operating or non-operating condition, exposure to humidity conditions of 0 to 100 percent relative humidity.

5.6 VIBRATION

The Data Relay shall withstand, in the non-operating condition, the following vibration conditions in any axis:

SINE = 10 g rms, constant octave sine sweep in 5 minutes, 5 to 2,000 cps, limited to ±0.1 inch.

RANDOM = 10 g rms, random vibration for 5 minutes, band limited to 100 to 2,000 cps.

SECTION 6

NOTES

6.1 DEFINITIONS

CSM	Command/Service Module of the Apollo Spacecraft
Hz	Cycles per second
MHz	Megacycles per second
g	Acceleration unit equal to the acceleration of gravity at the surface of Earth
^{o}F	Degrees Fahrenheit
FM	Frequency modulation
AM	Amplitude modulation

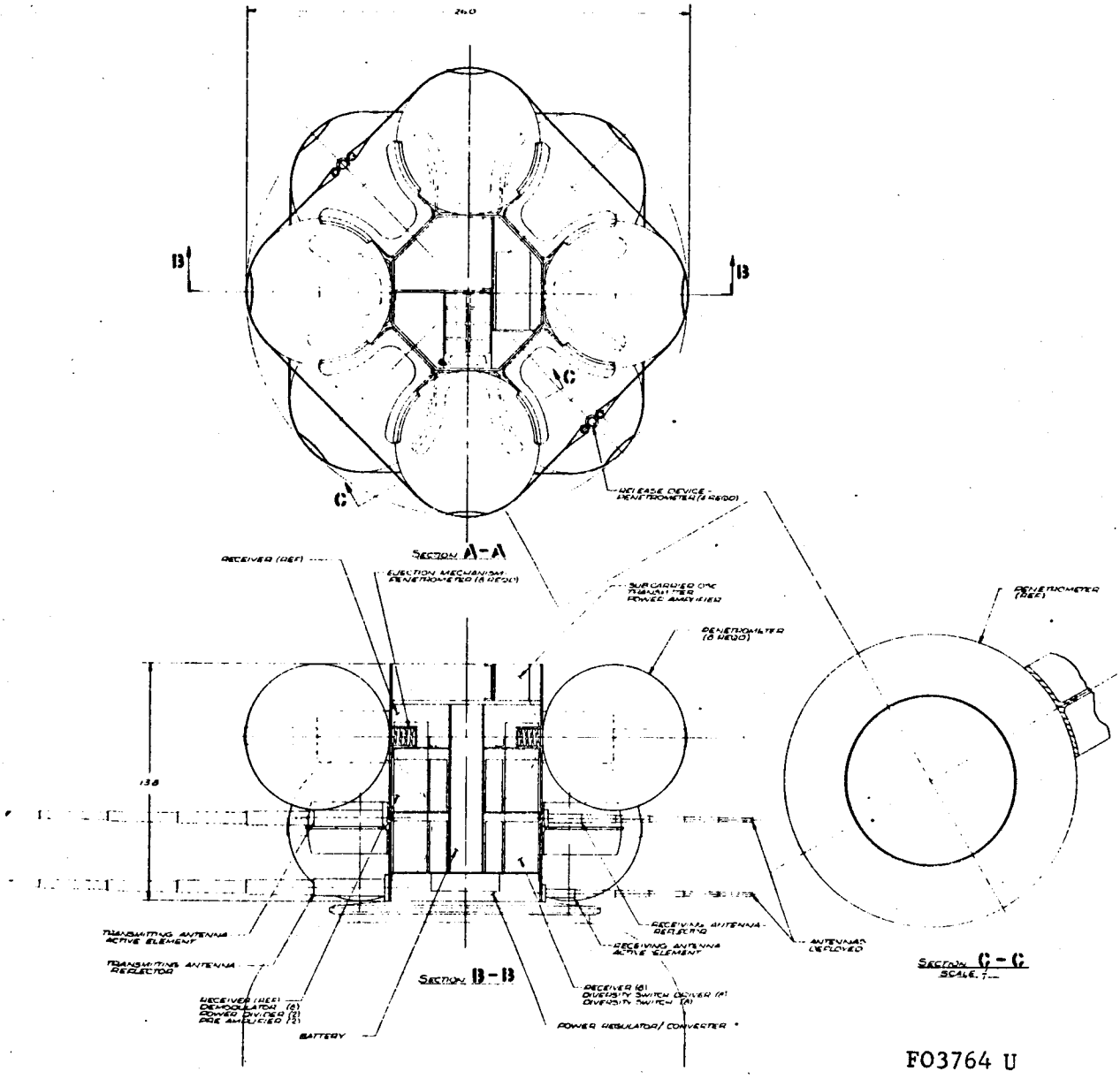

FIGURE 1. DATA RELAY SUBSYSTEM

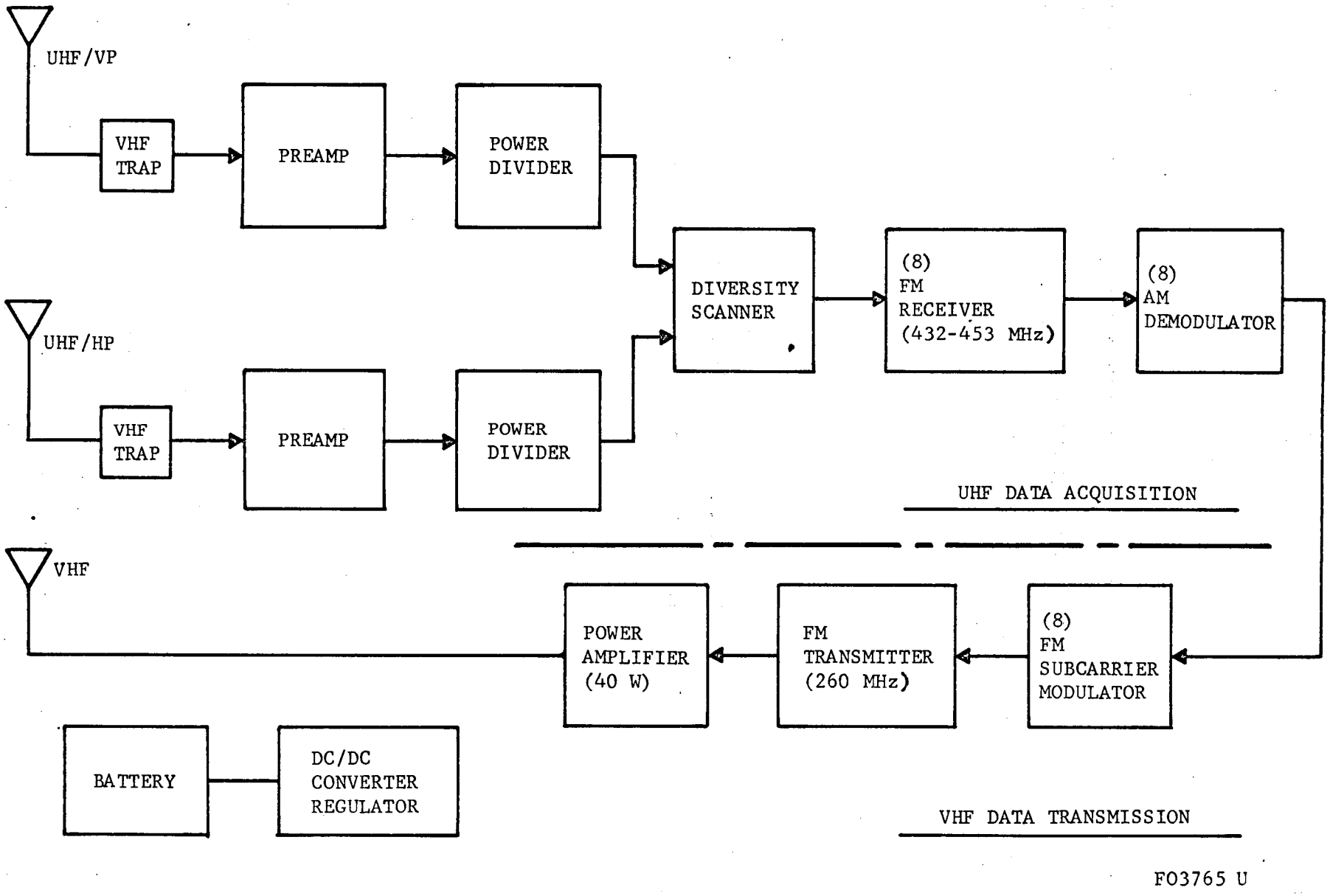

FIGURE 2. DATA RELAY SUBSYSTEM BLOCK DIAGRAM

LPS 201

PERFORMANCE SPECIFICATION

LUNAR PENETROMETER SYSTEM

Receiving Antenna Assembly

Data Relay Subsystem

4-94

AERONUTRONIC
DIVISION OF PHILCO CORPORATION
A SUBSIDIARY OF Ford Motor Company,
FORD ROAD/NEWPORT BEACH, CALIFORNIA

SECTION 1

SCOPE

This specification defines the performance requirements of the Data Relay Subsystem receiving antenna for use with the LSP Delivery Vehicle (DV). The function of the antenna is to receive a UHF radio frequency signal from the penetrometer sphere as the sphere impacts the lunar surface and measures the resulting acceleration. The antenna assembly described by this document shall include the following:

(1) The radiating antenna elements.

(2) The associated structure to attach the antenna to the LSP DV and effect deployment of the antenna elements.

(3) The antenna matching system.

SECTION 2

APPLICABLE DOCUMENTS

The following documents shall form a part of this specification to the extent specified herein:

2.1 SPECIFICATIONS

LPS-200	Data Relay Subsystem, Functional Specification
LPS-100	Penetrometer Subsystem, Functional Specification
LPS-101	Antenna Assembly, Performance Specification
LPS-202	Preamplifier, Performance Specification
LPS-203	Power Divider, Performance Specification
LPS-204	Diversity Scanner, Performance Specification
LPS-205	Receiver/Discriminator, Performance Specification
LPS-208	Transmitter, Performance Specification
LPS-209	Transmitting Antenna, Performance Specification

SECTION 3

PERFORMANCE REQUIREMENTS

3.1 GENERAL

The receiving antenna assembly shall perform as part of the Lunar Penetrometer System to accomplish the mission objectives as described in LPS-200, Functional Specification for the Data Relay Subsystem. The antenna assembly shall provide for polarization diversity reception in the UHF 432-453 MHz range over an approximate hemisphere directed toward the lunar surface. The antenna assembly shall include a means of deployment of the antenna elements as required by the mechanical constraints of the vehicle design.

3.2 ELECTRICAL

3.2.1 DESCRIPTION

The antenna assembly shall consist of two orthogonal quarter-wave monopole elements mounted parallel to the roll plane, having separate output terminals as required for polarization diversity. Additional elements active or passive shall be included as required to provide pattern coverage in the hemispherical volume directed toward the lunar surface. Matching networks shall be included to provide the specified VSWR and bandwidth characteristics, if required.

3.2.2 FREQUENCY AND BANDWIDTH

The antenna subsystem shall operate over the frequency range from 432 to 453 MHz.

3.2.3 PATTERN AND GAIN

Minimum gain for each orthogonal element with its associated reflector, shall not be less than +3db over a $\pm 45^{\circ}$ angle relative to the vehicle roll axis which shall be directed toward the lunar ground.

3.2.4 POLARIZATION

The antenna assembly shall provide two orthogonal horizontal polarization components to separate terminals as required for a polarization diversity receiving system.

3.2.5 VSWR

The VSWR's looking into the input terminals associated with the two orthogonal sets of elements shall not exceed 2.0 over the specified operating band.

3.3 MECHANICAL

3.3.1 CONFIGURATION

The antenna assembly shall conform to the general design configuration as illustrated in the conceptual drawing of Figure 1 of Performance Specification for the Data Relay Subsystem, LPS-200.

3.3.2 WEIGHT

Total weight of the antenna assembly shall be a nominal 1.2 pounds.

3.4 ENVIRONMENTAL

3.4.1 GENERAL

The antenna assembly shall function for a period of 10 minutes, commencing at antenna deployment through penetrometer deployment and final impact, after a space flight of 5 days. It will be subjected to normal handling, storage, shipping, and launch environments before space flight.

3.4.2 PRESSURE

The antenna assembly shall perform within the stated requirements at environmental pressures ranging from a sea level atmospheric to space vacuum. It shall operate after a space flight of five (5) days during which it is stored in an inoperative condition at space vacuum.

3.4.3 TEMPERATURE

The antenna assembly shall operate correctly within the temperature range of +60 to +100°F. It shall withstand temperatures from +0° to +100°F in the non-operating condition.

3.4.4 ACCELERATION

The antenna assembly shall withstand, in the non-operating condition, a constant 15g acceleration for five (5) minutes in any direction.

It shall also withstand, in the non-operating condition, storage during a space flight under zero g conditions of five (5) days.

3.4.5 HUMIDITY

The antenna assembly shall withstand, in either operating or non-operating condition, exposure to humidity conditions of 0 to 100 percent relative humidity.

3.4.6 VIBRATION

The antenna assembly shall withstand, in the non-operating condition, the following vibration conditions in any axis:

SINE	=	10 g rms, constant octave sine sweep in 5 minutes 5 to 2,000 Hz limited to ± 0.1 inch.
RANDOM	=	10 g rms, random vibration for 5 minutes, band limited to 100 to 2,000 Hz.

SECTION 4

QUALITY ASSURANCE

4.1 QUALIFIED COMPONENTS

The antenna assembly shall make full utilization of all components, materials, designs and assembly techniques which have been previously tested and qualified for this application.

4.2 QUALITY CONTROL

The antenna shall be fabricated from materials which have been inspected and are fully identified as to type and source.

All fabrication and assembly operations shall be inspected for conformance with approved drawings and assembly procedures.

4.3 DESIGN QUALIFICATION

The design qualification of the antenna assembly shall be demonstrated by documented tests of a functional and environmental nature. The environmental tests shall be at least as severe as the environmental requirements.

4.4 FLIGHT ACCEPTANCE

The suitability of all antenna assembly hardware for flight use shall be demonstrated by documented acceptance tests which shall include complete functional tests and restricted environmental tests.

SECTION 5

NOTES

5.1 DEFINITIONS

LSP-DV	- Lunar Survey Probe - Data Vehicle
VSWR	- Voltage Standing Wave Ratio
MHz	- Megacycle per second
g	- Acceleration unit equal to the Earth's gravitational acceleration
psi	- pounds per square inch
^{o}F	- degrees Fahrenheit
rms	- root mean square
Hz	- cycles per second

PERFORMANCE SPECIFICATION

LUNAR PENETROMETER SYSTEM

Preamplifier Assembly

Data Relay Subsystem

4-102

AERONUTRONIC

DIVISION OF PHILCO CORPORATION

A SUBSIDIARY OF Ford Motor Company,

FORD ROAD/NEWPORT BEACH, CALIFORNIA

SECTION 1

SCOPE

This specification defines the performance requirements of the Preamplifier Assembly which is part of the Data Relay Subsystem.

The low-noise preamplifier shall be utilized between the receiving antenna and power divider to set the noise figure or sensitivity of the data relay receiving system. The preamplifier gain shall be sufficiently high to render insignificant the contributions of the loss in the power divider and the noise figure of the receiver to the overall system noise figure. In addition the preamplifier shall be capable of handling the signal levels normally encountered in the data relay operations with a reasonable safety margin.

SECTION 2

APPLICABLE DOCUMENTS

The following documents shall form apart of this specification to the extent specified herein.

2.1 SPECIFICATIONS

LPS-200	Data Relay Subsystem, Functional Specification
LPS-100	Penetrometer Subsystem, Functional Specification
LPS-201	Receiving Antenna, Performance Specification
LPS-203	Power Divider, Performance Specification
LPS-204	Diversity Scanner, Performance Specification
LPS-205	Receiver/Discriminator, Performance Specification
LPS-208	Transmitter, Performance Specification
LPS-209	Transmitting Antenna, Performance Specification
LPS-211	Battery, Performance Specification
LPS-210	Power Regulator/Converter, Performance Specification

2.2 DRAWINGS

Figure 1, Preamplifier, Installation Drawing

SECTION 3

PERFORMANCE REQUIREMENTS

3.1 GENERAL

The preamplifier assembly shall perform as part of the overall Lunar Penetrator System to accomplish the mission objectives as described in LPS-200, Functional Specification for the Data Relay Subsystem.

3.2 ELECTRICAL

3.2.1 CENTER FREQUENCY

The preamplifier shall have a center frequency of 442.5 MHz.

3.2.2 BANDWIDTH

The preamplifier shall have a 3 db bandwidth in excess of 40 MHz.

3.2.3 INPUT/OUTPUT IMPEDANCE AND VSWR

The input and output impedance shall be 50 ohms with a maximum VSWR of 1.5:1.

3.2.4 POWER GAIN

The power gain of the preamplifier shall be a minimum of 30 db at the center frequency.

3.2.5 NOISE FIGURE

The noise figure of this device shall be less than 6 db.

3.2.6 OUTPUT CAPABILITY

The preamplifier shall have a linear output capability of 0 dbm minimum. This implies a maximum input level of -30 dbm. However, a +20 dbm input level will not be catastrophic.

3.2.7 POWER SUPPLY REQUIREMENTS

The power supply will be required to supply both +12 volts @ 16 ma and -6V volts @ 32 ma with $\pm$ 1% regulation.

3.3 MECHANICAL

3.3.1 CONFIGURATION

The preamplifier shall be configured in accordance with the outline drawing shown in Figure 1.

3.3.2 RF CONNECTORS

All RF connectors shall be per Figure 1.

3.3.3 VOLUME

The volume of the preamplifier including connectors shall not exceed 6.4 cubic inches.

3.3.3 WEIGHT

The weight of the preamplifier including connectors shall not exceed 0.30 pounds.

3.4 ENVIRONMENTAL

3.4.1 GENERAL

The preamplifier assembly shall function for a period of 10 minutes, commencing at relay antenna deployment through penetrometer deployment and final impact, after a space flight of 5 days. As part of the Data Relay Subsystem it will be subjected to normal handling, storage, shipping, and launch environments before the space flight.

3.4.2 TEMPERATURE

The preamplifier shall operate satisfactorily within the temperature range of +60 to +100°F. It shall withstand temperatures from 0° to +100°F in the non-operating condition.

3.4.3 PRESSURE

The preamplifier assembly shall operate satisfactorily within the pressure range from atmospheric to space vacuum. The assembly shall perform after exposure to space vacuum conditions for a period of five days.

3.4.4 ACCELERATION

The preamplifier shall withstand in the non-operating condition a constant 15 g acceleration for five minutes in any direction.

3.4.5 VIBRATION

The preamplifier shall withstand in the non-operating condition the following vibration conditions in any axis:

Sine = 10 g rms, constant octave sine sweep in 5 minutes 5 to 2,000 Hz

Noise = 10 g rms, random vibration for 5 minutes, band limited to 100 to 2,000 Hz

SECTION 4

QUALITY ASSURANCE

4.1 QUALIFIED COMPONENTS

The preamplifier shall make full utilization of all components, materials, designs and assembly techniques which have been previously tested and qualified for this application.

4.2 QUALITY CONTROL

The preamplifier shall be fabricated and assembled from materials which have been inspected and are fully identified.

All fabrication and assembly operations shall be inspected for conformance with approved drawings and assembly procedures.

4.3 DESIGN QUALIFICATION

The design qualifications of the preamplifier shall be demonstrated by documented tests of a functional and environmental nature. The environmental tests shall be at least as severe as the environmental requirements.

4.4 FLIGHT ACCEPTANCE

The suitability of the preamplifier for flight use shall be demonstrated by documented acceptance tests which shall include complete functional tests and restricted environmental tests.

REV

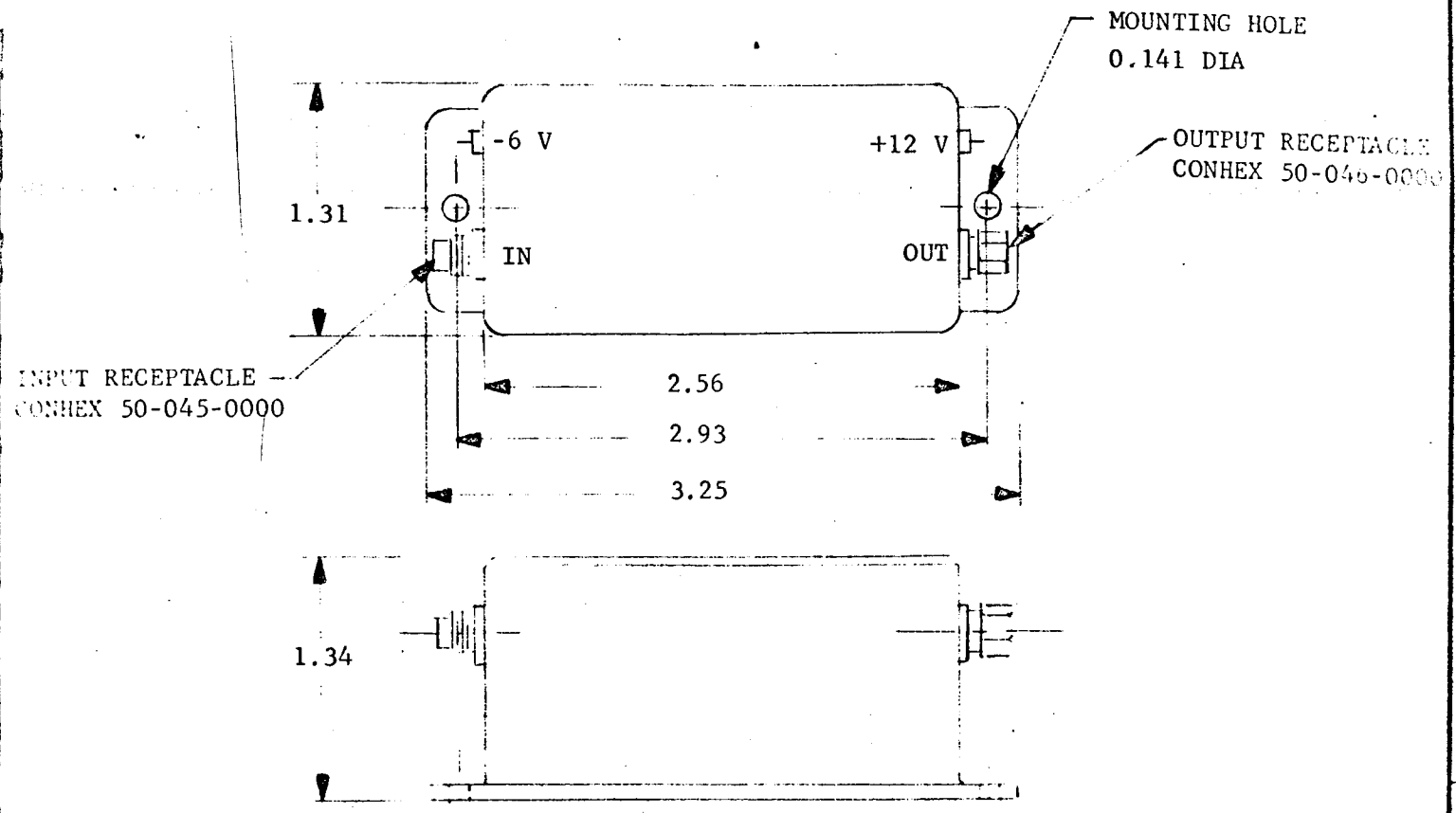

OUTLINE DRAWING

SIZE	CODE IDENT NO.	
A	09205	FIGURE 1. PREAMPLIFIER ASSEMBLY
SCALE		SHEET

PERFORMANCE SPECIFICATION

LUNAR PENETROMETER SYSTEM

Power Divider Assembly

Data Relay Subsystem

4-110

AERONUTRONIC
DIVISION OF PHILCO CORPORATION
A SUBSIDIARY OF Ford Motor Company,
FORD ROAD/NEWPORT BEACH, CALIFORNIA

SECTION 1

SCOPE

This specification defines the performance requirements of the Power Divider Assembly which is part of the Data Relay Subsystem. The power divider shall provide an even distribution of power between a single antenna and eight receivers. In addition, it shall provide the necessary isolation between output ports, preventing spurious responses possible when the different receiver local oscillator frequencies interact.

SECTION 2

APPLICABLE DOCUMENTS

The following documents shall form a part of this specification to the extent specified herein.

2.1 SPECIFICATIONS

LPS-200	Data Relay Subsystem, Functional Specification
LPS-100	Penetrometer Subsystem, Functional Specification
LPS-201	Receiving Antenna, Performance Specification
LPS-202	Preamplifier, Performance Specification
LPS-204	Diversity Scanner, Performance Specification
LPS-205	Receiver/Discriminator, Performance Specification
LPS-210	Power Regulator/Converter, Performance Specification
LPS-211	Battery, Performance Specification

2.2 DRAWINGS

Figure 1 Power Divider, Installation Drawing

SECTION 3

PERFORMANCE REQUIREMENTS

3.1 GENERAL

The Power Divider Assembly shall perform as part of the overall Lunar Penetrometer System to accomplish the mission objectives as described in LPS-200, Functional specification for the Data Relay Subsystem.

3.2 ELECTRICAL

3.2.1 INPUT FREQUENCY RANGE

The power divider shall cover the eight-receiver frequency range of 432 MHZ to 453 MHZ.

3.2.2 INSERTION LOSS

The insertion loss (over the 8-way division loss) shall not exceed 1 db over the specified frequency range.

3.2.3 INPUT/OUTPUT IMPEDANCE & VSWR

The input and output impedance shall be 50 ohms with a VSWR not to exceed 1.5:1.

3.2.4 ISOLATION

The isolation between output ports shall be 30 db minimum.

3.3 MECHANICAL

3.3.1 CONFIGURATION

The power divider shall be configured in accordance with the outline drawing shown in Figure I.

3.3.2 RF CONNECTORS

All RF connectors shall be per Figure 1.

3.3.3 VOLUME

The volume of the power divider including connectors shall not exceed 6 cubic inches.

3.3.4 WEIGHT

The weight of the power divider including connectors shall not exceed 0.3 pound.

3.4 ENVIRONMENTAL

3.4.1 GENERAL

The power divider assembly shall function for a period of 10 minutes, commencing at relay antenna deployment through penetrometer deployment and final impact, after a space flight of 5 days. As part of the Data Relay Subsystem it will be subjected to normal handling, storage, shipping, and launch environments before the space flight.

3.4.2 TEMPERATURE

The power divider shall operate satisfactorily within the temperature range of $+60^{\circ}$ to $+100^{\circ}$F. It shall withstand temperatures from 0° to $+100^{\circ}$F in the non-operating conditions.

3.4.3 PRESSURE

The power divider shall operate satisfactorily within the pressure range from atmospheric to space vacuum. The power divider shall perform after exposure to space vacuum conditions for a period of five days.

3.4.4 ACCELERATION

The power divider shall withstand in the non-operating condition a constant 15 g acceleration for five minutes in any direction.

3.4.5 VIBRATION

The power divider shall withstand in the non-operating condition the following vibration conditions in any axis:

Sine	=	10 g rms, constant octave sine sweep in 5 minutes 20 to 2,000 Hz
Noise	=	10 g rms, random vibration for 5 minutes, band limited to 100 to 2,000 Hz

SECTION 4

QUALITY ASSURANCE

4.1 QUALIFIED COMPONENTS

The power divider shall make full utilization of all components, materials, designs and assembly techniques which have been previously tested and qualified for this application.

4.2 QUALITY CONTROL

The power divider shall be fabricated and assembled from materials which have been inspected and are fully identified.

All fabrication and assembly operations shall be inspected for conformance with approved drawings and assembly procedures.

4.3 DESIGN QUALIFICATION

The design qualification of the power divider shall be demonstrated by documented tests of a functional and environmental nature. The environmental tests shall be at least as severe as the environmental requirements.

4.4 FLIGHT ACCEPTANCE

The suitability of the power divider for flight use shall be demonstrated by documented acceptance tests which shall include complete functional test and restructed environmental tests.

SECTION 5

NOTES

5.1 ACCEPTABLE SOURCE

The Model 8U-50 power divider manufactured by Adams-Russell, Waltham, Massachusetts, appears to meet the requirements of this specification, but has not been environmentally qualified.

REV

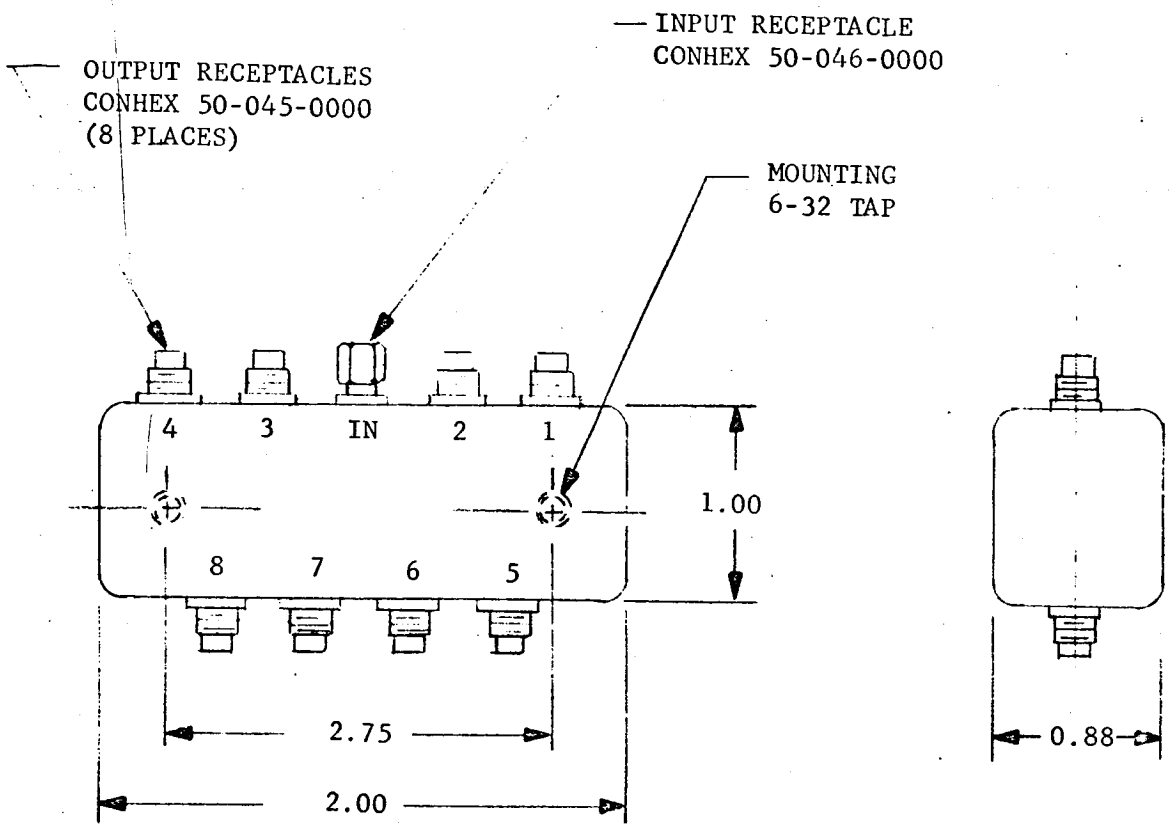

OUTLINE DRAWING

CODE IDENT NO.	SIZE	
09205	A	FIGURE 1. POWER DIVIDER ASSEMBLY
SCALE		SHEET 4-118

THIS PAGE INTENTIONALLY LEFT BLANK

LPS 204

PERFORMANCE SPECIFICATION

LUNAR PENETROMETER SYSTEM

Diversity Scanner Assembly

Data Relay Subsystem

4-120

AERONUTRONIC
DIVISION OF PHILCO CORPORATION
A SUBSIDIARY OF Ford Motor Company,
FORD ROAD/NEWPORT BEACH, CALIFORNIA

SECTION 1

SCOPE

This specification defines the performance requirements of the Diversity Scanner Assembly which is part of the Data Relay Subsystem. This assembly shall be employed to perform the actual RF switching function required for antenna (or scanning) diversity. It shall consist of an RF switch made up of two isolated diode gates, only one of which shall be normally on at any one time. The switch shall be controlled by a driver circuit which will be a conventional flip-flop with one control input being the "true" flip-flop output and the other control input being its complement. The driver circuit, in turn, shall be operated by a comparator signal which shall be generated whenever the RF carrier signal under observation falls below a preset threshold level. Included within the driver circuitry shall be a free-running clock providing a scan rate compatible with the maximum spin rate of the penetrometer balls. A total of eight Diversity Scanner Assemblies are required to satisfy the eight-channel requirement for the Data Relay.

SECTION 2

APPLICABLE DOCUMENTS

The following documents shall form a part of this specification to the extent specified herein.

2.1 SPECIFICATIONS

LPS-200	Data Relay Subsystem Functional Specification
LPS-100	Penetrometer Subsystem, Functional Specification
LPS-203	Power Divider, Performance Specification
LPS-205	Receiver/Discriminator, Performance Specification
LPS-210	Power Regulator/Converter, Performance Specification

2.2 DRAWINGS

Figure 1	RF Diversity Switch, Outline Drawing
Figure 2	Diversity Driver, Outline Drawing

SECTION 3

PERFORMANCE REQUIREMENTS

3.1 GENERAL

The Diversity Scanner Assembly shall perform as part of the overall Lunar Penetrometer System to accomplish the mission objectives as described in LPS-200, Functional Specification for the Data Relay Subsystem. This assembly shall perform the antenna switching or diversity scanning function required in the relay receiver channel. The diversity scanner shall perform the detail functions of level detection, level comparison, switch driver circuit operation and RF switching. Interface requirements shall exist between the subject assembly and the antenna and receiver input/output terminals.

3.2 ELECTRICAL

3.2.1 RF SWITCH INPUT FREQUENCY

The frequency range over which the RF switch shall function is 432 MHz to 453 MHz.

3.2.2 RF SWITCH INSERTION LOSS

The insertion loss of the "on" switch shall not exceed 3 db, assuming 50 ohm source and load.

3.2.3 RF SWITCH ISOLATION

The isolation of the "off" switch shall be 40 db minimum.

3.2.4 CONTROL LEVEL

The driver shall produce a control voltage to the switch to be turned off (corresponding to the channel whose noise level is above the preset threshold) of 0 volts nominal and insignificant current, and a voltage of +12 volts nominal @ 20 ma to the diode switch to be turned on.

3.2.5 DRIVER INPUT NOISE BANDWIDTH

The driver input noise bandwidth is 350 KHz. Input filtering should include a trap at the subcarrier frequency (40 KHz) such that signal will not give an erroneous noise level indication.

3.2.6 DRIVER INPUT NOISE LEVEL

The input noise level shall range from a "quiet" receiver level of 10 millivolts rms to a no-signal condition of 250 millivolts rms.

3.2.7 DRIVER NOISE LEVEL THRESHOLD

The noise level threshold shall be adjustable, over a 10 db range, from 250 millivolts rms to 80 millivolts rms.

3.2.8 DRIVER INPUT IMPEDANCE

The driver input impedance shall be greater than 1000 ohms over the noise bandwidth.

3.2.9 DRIVER SCAN RATE

The internal scan rate shall be a nominal 5000 Hz.

3.2.10 POWER SUPPLY REQUIREMENTS

The power supply must be able to furnish to both units a total of +12 volts @ 50 ma and -6 volts @ 50 ma, ± 1% regulation.

3.3 MECHANICAL

3.3.1 CONFIGURATION

The diversity scanner assembly shall be configured in accordance with the outline drawings shown in Figure 1 and 2.

3.3.2 RF CONNECTORS

All RF connectors shall be per Figures 1 and 2.

3.3.3 VOLUME

The volume of the RF diversity switch including connectors shall not exceed 1 cubic inch while that of the driver shall not exceed 6 cubic inches.

3.3.4 WEIGHT

The weight of the RF diversity switch including connectors shall not exceed 0.1 pounds, while that of the driver shall not exceed 0.3 pounds.

3.4 ENVIRONMENTAL

3.4.1 GENERAL

The diversity scanner assembly shall function for a period of 10 minutes, commencing at relay antenna deployment through penetrometer deployment and final impact, after a space flight of 5 days. As part of the Data Relay Subsystem, it will be subjected to normal handling, storage, shipping, and launch environments before the space flight.

3.4.2 TEMPERATURE

The diversity scanner shall operate satisfactorily within the temperature range of +60° to +100° F. It shall withstand temperatures from 0° to +100°F in the non-operating condition.

3.4.3 PRESSURE

The diversity scanner shall operate satisfactorily within the pressure range from atmospheric to space vacuum. The assembly shall perform after exposure to space vacuum conditions for a period of five days.

3.4.4 ACCELERATION

The diversity scanner shall withstand in the non-operating condition a constant 15 g acceleration for five minutes in any direction.

3.4.5 VIBRATION

The diversity scanner shall withstand in the non-operating condition the following vibration conditions in any axis:

Sine	=	10 g rms, constant octave sine sweep in 5 minutes, 5 to 2,000 Hz.
Noise	=	10 g rms, random vibration for 5 minutes, band limited to 100 to 2,000 Hz.

SECTION 4

QUALITY ASSURANCE

4.1 QUALIFIED COMPONENTS

The diversity scanner shall make full utilization of all components, materials, designs, and assembly techniques which have been previously tested and qualified for this application.

4.2 QUALITY CONTROL

The diversity scanner shall be fabricated and assembled from materials which have been inspected and are fully identified.

All fabrication and assembly operations shall be inspected for conformance with approved drawings and assembly procedures.

4.3 DESIGN QUALIFICATION

The design qualifications of the diversity scanner shall be demonstrated by documented tests of a functional and environmental nature. The environmental tests shall be at least as severe as the environmental requirements.

4.4 FLIGHT ACCEPTANCE

The suitability of the diversity scanner for flight use shall be demonstrated by documented acceptance tests which shall include complete functional tests and restricted environmental tests.

REV

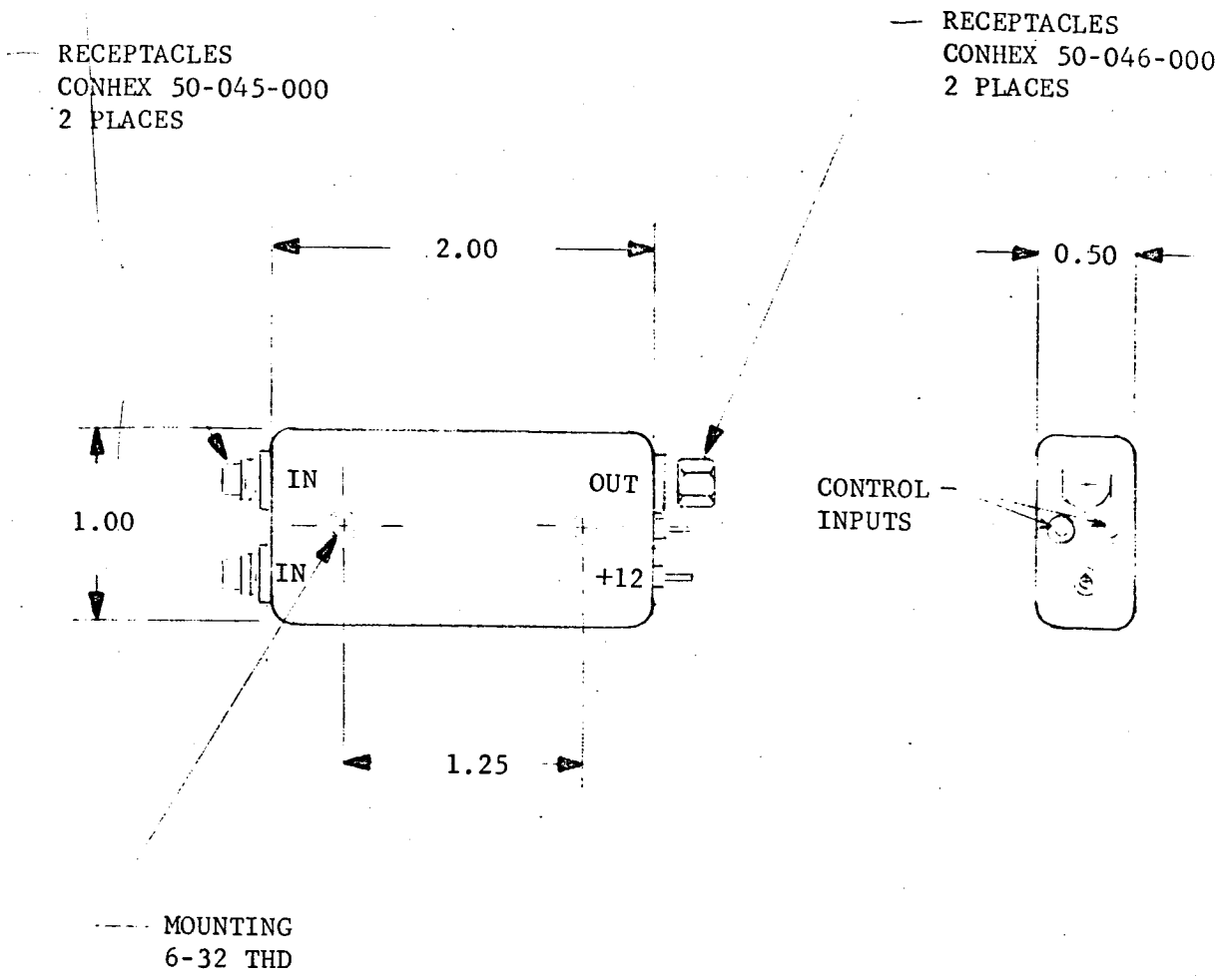

RF DIVERSITY SWITCH
OUTLINE DRAWING
NUMBER REQUIRED - 8

SIZE	CODE IDENT NO.	
A	09205	FIGURE 1. SWITCH, DIVERSITY SCANNER ASSEMBLY
SCALE		SHEET

REV

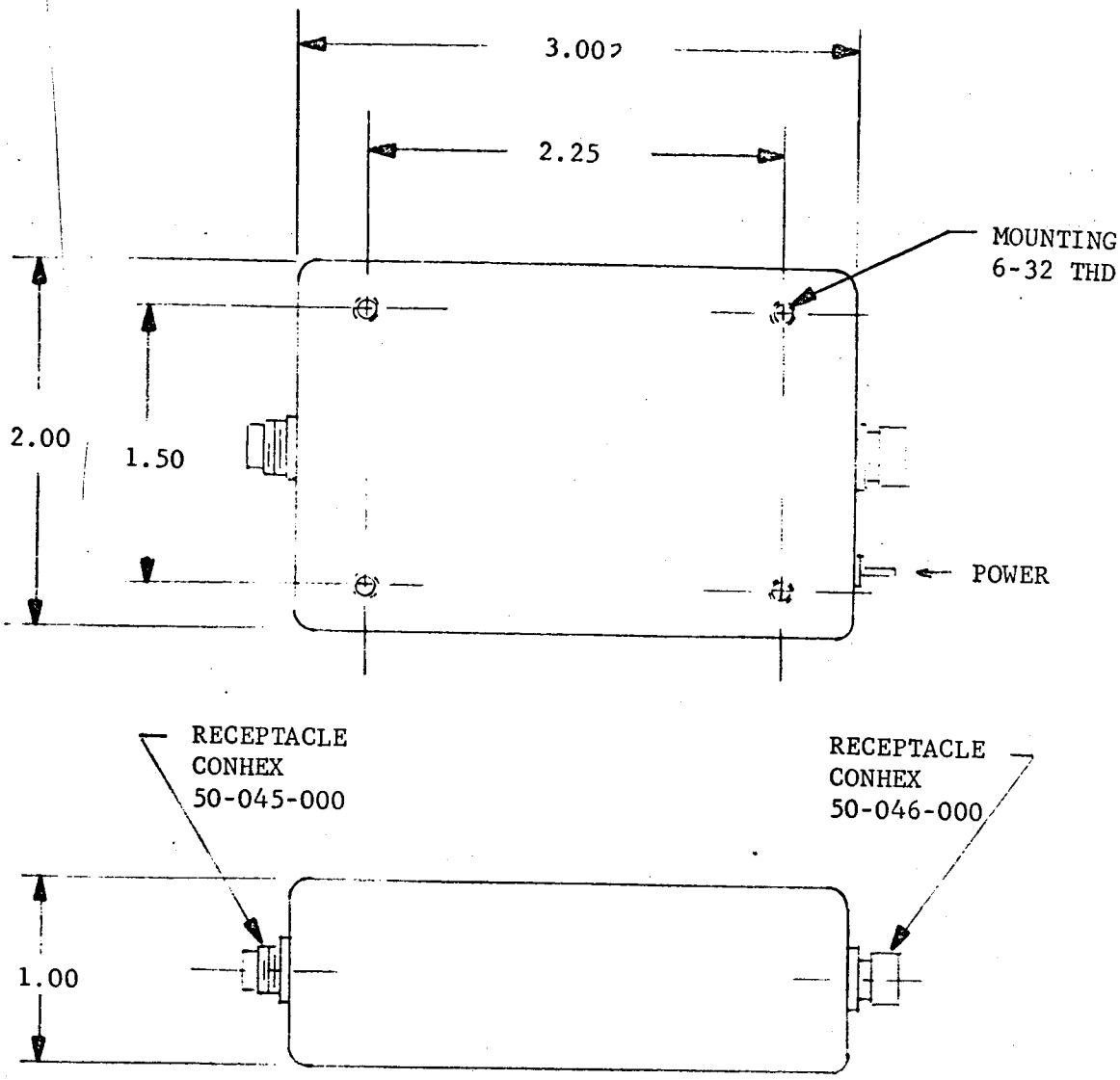

DIVERSITY DRIVER
OUTLINE DRAWING
NUMBER REQUIRED - 8

SIZE	CODE IDENT NO.	
A	09205	FIGURE 2. DRIVER, DIVERSITY SCANNER ASSEMBLY
SCALE		SHEET

LPS 205

PERFORMANCE SPECIFICATION

LUNAR PENETROMETER SYSTEM

Receiver/Discriminator Assembly

Data Relay Subsystem

4-129

AERONUTRONIC
DIVISION OF PHILCO CORPORATION
A SUBSIDIARY OF Ford Motor Company,
FORD ROAD/NEWPORT BEACH, CALIFORNIA

SECTION 1

SCOPE

This specification defines the performance requirements of a Receiver/ Discrimator Assembly of which a set of eight are required as part of the Data Relay Subsystem. Each assembly must accept an input from the Power Divider and perform the required operations to detect the penetrometer RF carrier and provide video subcarrier output signal to the AM demodulator and subsequent retransmission. Each of the eight receiver assemblies is tuned to a different penetrometer carrier channel from 432 MHz to 453 MHz with a 3 MHz spacing. Each assembly must provide an output indicating signal strength for use in the Diversity Scanner Assembly.

SECTION 2

APPLICABLE DOCUMENTS

The following documents shall form a part of this specification to the extent specified herein.

2.1 SPECIFICATIONS

LPS-200	Data Relay Subsystem, Functional Specification
LPS-100	Penetrometer Subsystem, Functional Specification
LPS-201	Receiving Antenna, Performance Specification
LPS-202	Preamplifier, Performance Specification
LPS-203	Power Divider, Performance Specification
LPS-204	Diversity Scanner, Performance Specification
LPS-206	AM Demodulator, Performance Specification
LPS-210	Power Regulator/Converter, Performance Specification
LPS-211	Battery, Performance Specification

2.2 DRAWINGS

Figure 1, Receiver/Discriminator, Installation Drawings

SECTION 3

PERFORMANCE REQUIREMENTS

3.1 GENERAL

The Receiver/Discriminator Assembly shall perform as part of the overall Lunar Penetrometer System to accomplish the mission objectives as described in LPS-200, Functional Specification for the Data Relay Subsystem.

3.2 ELECTRICAL

3.2.1 GENERAL

The Data Relay Subsystem receiving system shall include eight individual receiver/discriminator assemblies as required to cover the eight channel frequencies assigned to the penetrometers.

In the overall configuration of eight receivers, each tuned to frequencies spaced just 3 MHz apart, the first local oscillators shall be as far removed as possible from the input frequencies while still maintaining good spurious rejection. It is therefore required that a double-conversion receiver be utilized, such that a practical discriminator center frequency will result. Mixer spurious responses, image rejections and inter-receiver local oscillator rejection shall be taken into account in selecting suitable receiver designs. The desired receiver shall conform to the characteristics depicted in Figure 1.

The preselector shall be completely passive, i.e., basically a double-tuned circuit. The tuned circuit shall be of the conventional L-C type to minimize size. However, if difficulty is encountered in obtaining the required selectivity, resonant cavities may be considered.

The first local oscillator shall utilize a crystal-controlled oscillator and a frequency doubler. (It has been shown that the harmonics of the crystal oscillator can be quite obnoxious in creating spurs. By using a low order multiplier this problem is eliminated. It is recognized that, in doing so,

the requirements on the crystal are rather strict, requiring operation beyond the limit of present-day practice (125 MHz). However, with a careful design, using seventh overtone units, an acceptable unit is practical.)

The first mixer shall be a conventional type with signal injection at the base and local-oscillator injection at the emitter. A balanced mixer is not required.

The first IF shall be a double-tuned circuit with sufficient selectivity. The output shall feed into mixer No. 2 which will be similar to the first mixer.

The 25 MHz IF filter will be employed to establish the receiver bandwidth of 700 KHz. The 25 MHz IF amplifier shall consist of three stages, the first two having AGC. AGC shall be employed to prevent overloading in the early stages which will reduce the possibility of detuning effects and the generation of undesired spurs. In addition, it will provide a signal level indication with the required dynamic range to control the Diversity Scanner Assembly. The AGC detector and amplifier shall be of conventional design. An external low impedance IF output shall also be furnished for monitoring purposes and possible use of IF selection diversity.

The limiter shall be designed to begin limiting on receiver noise. The limiter output shall work into a conventional Foster-Seeley discriminator having a linear response at least as wide as the IF bandwidth. A video filter shall be employed to remove unwanted carrier and noise components. An output amplifier shall be included to provide the required output drive level.

The construction of each receiver/discriminator assembly shall include good shielding and decoupling of power supply lines so that internal frequencies are contained. A single power supply voltage shall be used. This should cause no difficulties in the output stages as only AC response will be required in the output by the subcarrier data signal. Integrated circuit or other miniaturization approaches shall be considered when a definite space, weight, or performance advantage is recognized.

3.2.2 FREQUENCY

Eight receiver/discriminator assemblies shall be required to satisfy the eight-channel coverage as follows:

Channel 1	432 MHz
Channel 2	435 MHz

Channel 3	438 MHz
Channel 4	441 MHz
Channel 5	444 MHz
Channel 6	447 MHz
Channel 7	450 MHz
Channel 8	453 MHz

3.2.3 IF BANDWIDTH/SELECTIVITY

The final IF bandwidth of each receiver shall be 700 KHz between the 3 db points. The skirt selectivity shall be 30 db/octave (Min.) to at least -60db.

3.2.4 VIDEO BANDWIDTH

The video bandwidth (-3 db) of each receiver shall be 350 KHz. This is determined by the low pass filter following the FM discriminator. The low frequency response (-3 db) must extend to 20 KHz or lower.

3.2.5 NOISE FIGURE

The noise figure of each receiver shall be 15 db (Max.).

3.2.6 INPUT IMPEDANCE & VSWR

The input impedance of each receiver shall be 50 ohms with an input VSWR of 1.5:1 (Max.).

3.2.7 OUTPUT IMPEDANCE

Both the IF and discriminator output impedances shall be nominally 50 ohms.

3.2.8 AGC CONTROL

The AGC control range in each receiver shall be 50 db Min.

3.2.9 FREQUENCY STABILITY

The combined frequency stability of the two receiver local oscillators shall be $\pm$ 10 KHz over the environment specified.

3.2.10 DISCRIMINATOR OUTPUT SENSITIVITY & LINEARITY

The discriminator output shall be linear within ± 2% over a minimum frequency deviation of ± 300 KHz with a voltage output sensitivity of 1 volt/100 KHz deviation.

3.2.11 MAXIMUM RF INPUT LEVEL

The maximum RF input level for normal linear receiver operation shall be -20 dbm. However, input levels of 0 dbm shall not cause damage.

3.2.12 IF OUTPUT CAPABILITY

The IF output (external equipment) capability shall be 0 dbm (into 50 ohms).

3.2.13 DISCRIMINATOR OUTPUT CAPABILITY

The discriminator output, operating into a 3,000 ohm load, shall be linear over the specified linear discriminator range.

3.2.13 LOCAL OSCILLATOR REJECTION AT RF INPUT

The local oscillator power at the receiver RF input shall not exceed 200×10^{-12} watts. This conforms to the requirements specified in MIL-I-6181.

3.2.14 POWER SUPPLY REQUIREMENTS

The power supply will be required to provide +12 volts @ 50 ma. to each receiver/discriminator assembly.

3.3 MECHANICAL

3.3.1 CONFIGURATION

A single receiver/discriminator assembly shall conform to the outline drawing shown in Figure 2.

3.3.2 RF CONNECTORS

All RF connectors shall be per Figure 2.

3.3.3 VOLUME

The volume of each receiver assembly shall not exceed 18 cubic inches.

3.3.4 WEIGHT

The weight of each receiver assembly shall not exceed 1.5 pounds.

3.4 ENVIRONMENTAL

3.4.1 GENERAL

The receiver/discriminator assembly shall function for a period of 10 minutes, commencing at relay antenna deployment through penetrometer deployment and final impact, after a space flight of 5 days. As part of the Data Relay Subsystem, it will be subjected to normal handling, storage, shipping, and launch environments before the space flight.

3.4.2 TEMPERATURE

The receiver/discriminator assembly shall operate satisfactorily within the temperature range of $+60^{\circ}$ to $+100^{\circ}$F. It shall withstand temperatures from 0° to $+100^{\circ}$F in the non-operating condition.

3.4.3 PRESSURE

The receiver/discriminator assembly shall operate satisfactorily within the pressure range from atmospheric to space vacuum. The assembly shall perform after exposure to space vacuum conditions for a period of five days.

3.4.4. ACCELERATION

The receiver/discriminator assembly shall withstand in the non-operating condition a constant 15 g acceleration for five minutes in any direction.

3.4.5 VIBRATION

The receiver/discriminator assembly shall withstand in the non-operating condition the following vibration conditions in any axis:

Sine =	10 g rms, constant octave sine sweep in 5 minutes 20 to 2,000 Hz
Noise =	10 g rms, random vibration for 5 minutes, band limited to 100 to 2,000 Hz.

SECTION 4

QUALITY ASSURANCE

4.1 QUALIFIED COMPONENTS

The receiver/discriminator assembly shall make full utilization of all components, materials, designs and assembly techniques which have been previously tested and qualified for this application.

4.2 QUALITY CONTROL

The receiver/discriminator assembly shall be fabricated and assembled from materials which have been inspected and are fully identified.

All fabrication and assembly operations shall be inspected for conformance with approved drawings and assembly procedures.

4.3 DESIGN QUALIFICATION

The design qualification of the receiver/discriminator assembly shall be demonstrated by documented tests of a functional and environmental nature. The environmental tests shall be at least as severe as the environmental requirements.

4.4 FLIGHT ACCEPTANCE

The suitability of the receiver/discriminator assembly for flight use shall be demonstrated by documented acceptance tests which shall include complete functional tests and restricted environmental tests.

SECTION 5

NOTES

5.1 DEFINITIONS

Hz	-	cycles per second
MHz	-	megacycles per second
P_t	-	transmitter output power
LSP	-	Lunar Survey Probe
VSWR	-	voltage standing wave ratio
^oF	-	degree Fahrenheit
^oC	-	degree Centigrade

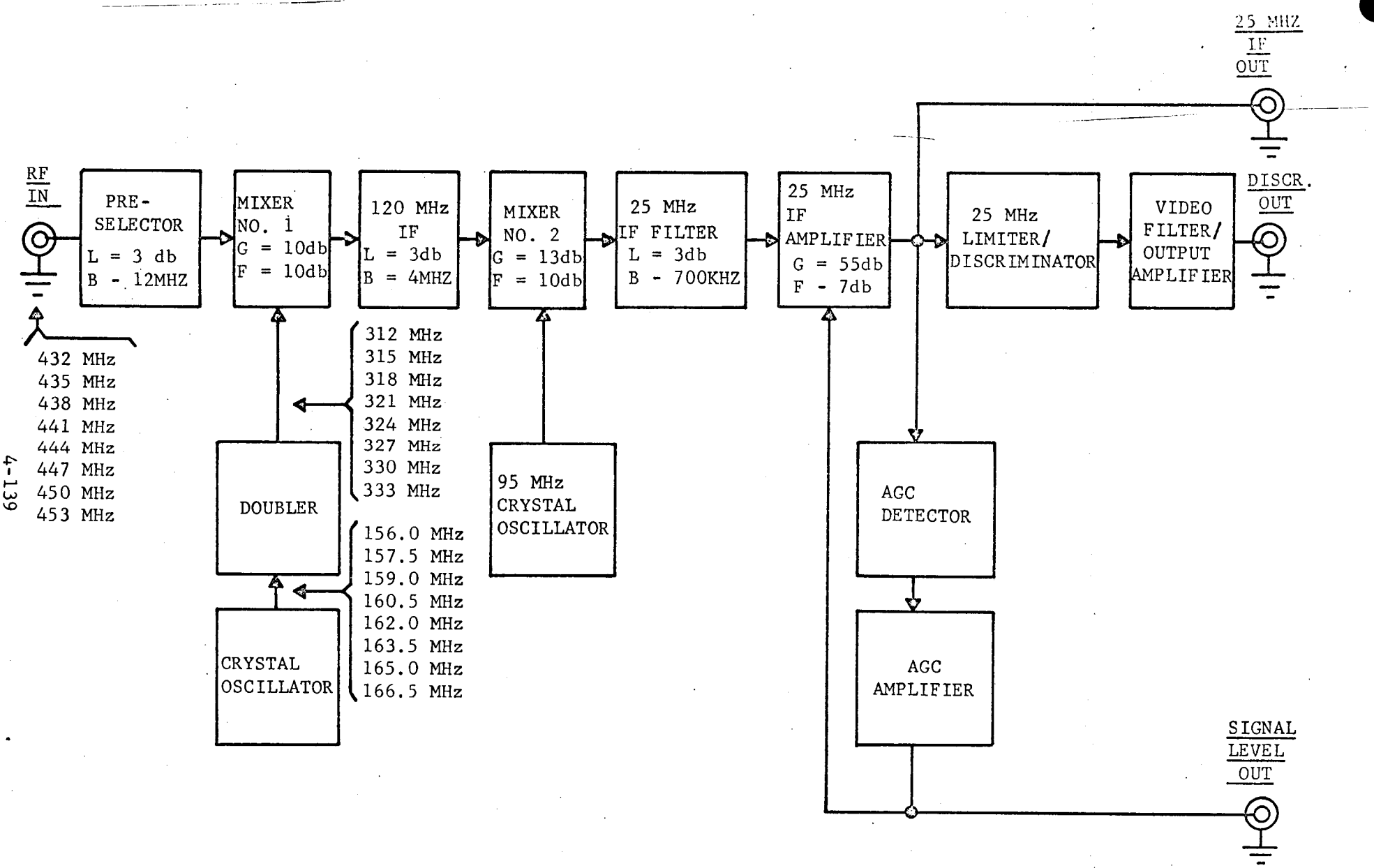

FIGURE 1 BLOCK DIAGRAM - DATA RELAY SUBSYSTEM RECEIVER/DISCRIMINATOR

F03766 U

REV

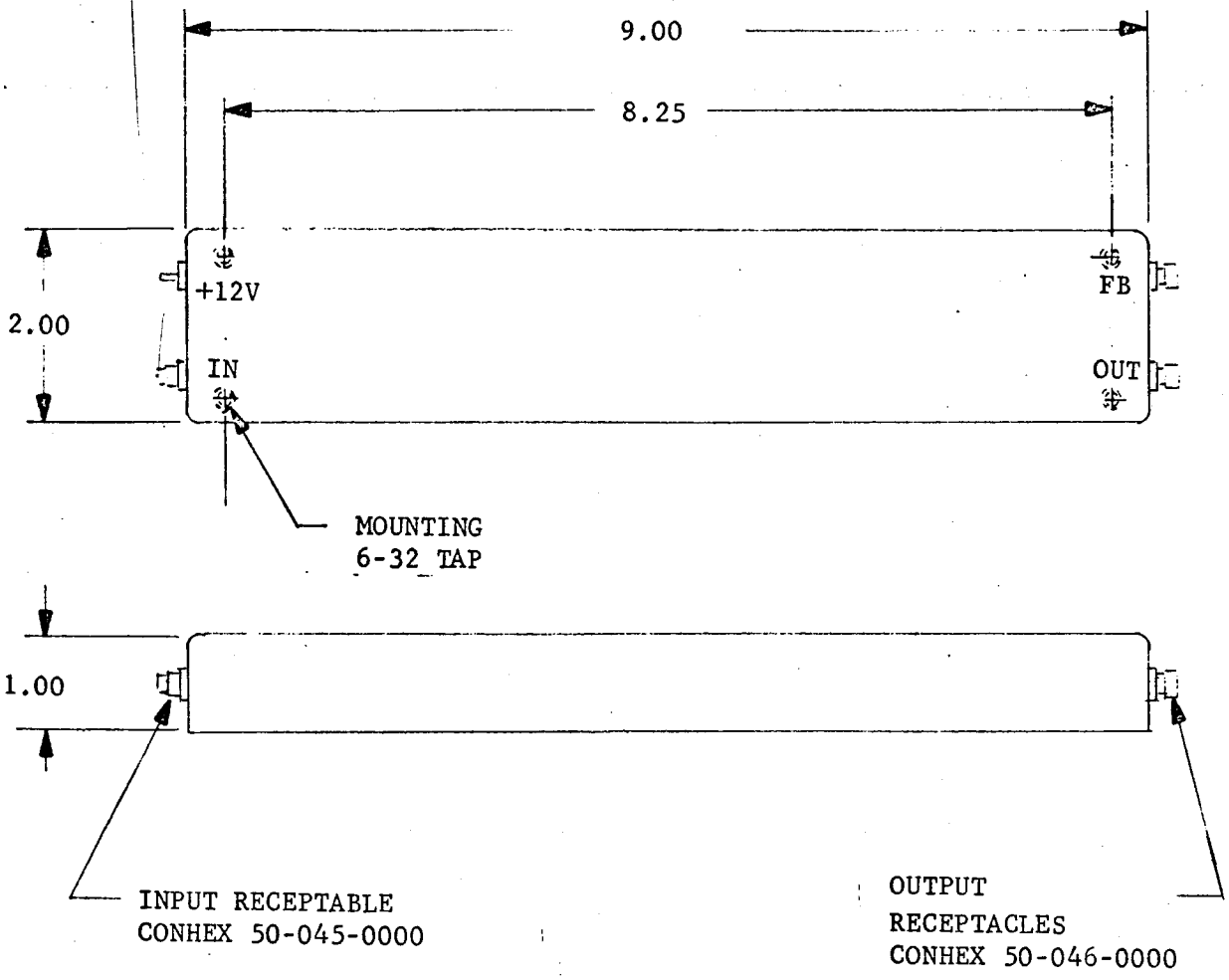

OUTLINE DRAWING

SIZE	CODE IDENT NO.	FIGURE 2. RECEIVER/DISCRIMINATOR ASSEMBLY
A	09205	
SCALE		SHEET 11

ARD 7878

LPS 206

PERFORMANCE SPECIFICATION

LUNAR PENETROMETER SYSTEM

AM Subcarrier Demodulator Assembly

Data Relay Subsystem

4-141

AERONUTRONIC
DIVISION OF PHILCO CORPORATION
A SUBSIDIARY OF Ford Motor Company,
FORD ROAD/NEWPORT BEACH, CALIFORNIA

SECTION 1

SCOPE

This specification defines the performance requirements of the Subcarrier Demodulator Assembly which is part of the Data Relay Subsystem. A total of eight such essemblies are required to satisfy the eight channel requirement for the Data Relay.

The individual subcarrier demodulator utilizes the AM subcarrier output from the receiver discriminator to perform envelope detection, the envelope being a function of the lunar impact measurement. The resulting output, after amplification and level correction, is applied as modulation to an associated FM subcarrier channel of the Data Relay Subsystem FM/FM eight channel data transmission link.

SECTION 2

APPLICABLE DOCUMENTS

The following documents shall form a part of this specification to the extent specified herein.

2.1 SPECIFICATIONS

LPS-200	Data Relay Subsystem, Functional Specification
LPS-100	Penetrometer Subsystem, Functional Specification
LPS-204	Diversity Scanner, Performance Specification
LPS-205	Receiver/Discriminator, Performance Specification
LPS-207	Subcarrier Oscillator Subassembly, Performance Specification
LPS-210	Power Regulator/Converter, Performance Specification

2.2 DRAWINGS

Figure 1, AM Subcarrier Demodulator, Outline Drawing

SECTION 3

PERFORMANCE REQUIREMENTS

3.1 GENERAL

The AM Subcarrier Demodulator Assembly shall perform as part of the overall Lunar Penetrometer System to accomplish the mission objectives as described in LPS-200, Functional Specification for the Data Relay Subsystem. A total of eight identical AM subcarrier demodulator assemblies are required to satisfy the eight channel Data Relay requirement. This specification shall identify the requirements for a single AM subcarrier demodulator assembly.

3.2 ELECTRICAL

3.2.1 INPUT SUBCARRIER FREQUENCY

The input subcarrier frequency shall be 40 KHz $\pm$ 2.5 KHz.

3.2.2 INPUT DATA FREQUENCY

The input data frequency can range from DC to 2KHz. An output low pass filter should be provided with a cutoff of 2 KHz.

3.2.3 MINIMUM DETECTABLE INPUT LEVEL

The minimum detectable input level shall be less than 5 millivolts rms.

3.2.4 FULL SCALE INPUT LEVEL

The full scale input level shall be nominally 707 millivolts rms. The internal circuitry however, must be able to handle up to one volt rms input and still retain linearity.

3.2.5 OUTPUT LEVEL

The output level shall be 0 volts for 0 in and +5 volts for full scale input. Internal zero and gain controls should be provided to handle "full scale" inputs from 500 millivolts rms to 1 volt rms.

3.2.6 OUTPUT LINEARITY

Output linearity shall be $\pm$ 2%.

3.2.7 INPUT IMPEDANCE

The input impedance shall be greater than 5000 ohms.

3.2.8 OUTPUT IMPEDANCE

The output impedance shall be less than 1000 ohms.

3.2.9 POWER SUPPLY REQUIREMENTS

The power supply must be able to furnish +12 volts @ 25 ma. and -6 volts @ 15 ma. with $\pm$ 1% regulation.

3.3 MECHANICAL

3.3.1 CONFIGURATION

The subcarrier demodulator shall be configured in accordance with the outline drawing shown in Figure 1.

3.3.2 RF CONNECTORS

All RF connectors shall be per Figure 1.

3.3.3 VOLUME

The volume of the subcarrier demodulator including connectors shall not exceed 6 cubic inches.

3.3.4 WEIGHT

The weight of the subcarrier demodulator including connectors shall not exceed 0.3 pounds.

3.4 ENVIRONMENTAL

3.4.1 GENERAL

The subcarrier demodulator assembly shall function for a period of 10 minutes, commencing at relay antenna deployment through penetrometer deployment and final impact, after a space flight of 5 days. As part of the Data Relay Subsystem, it will be subjected to normal handling, storage, shipping, and launch environments before the space flight.

3.4.2 TEMPERATURE

The subcarrier demodulator shall operate satisfactorily within the temperature range of $+60^{\circ}$ to $+100^{\circ}$F. It shall withstand temperatures from 0° to 100°F in the non-operating condition.

3.4.3 PRESSURE

The subcarrier demodulator shall operate satisfactorily within the pressure range from atmospheric to space vacuum. The assembly shall perform after exposure to space vacuum conditions for a period of five days.

3.4.4 ACCELERATION

The subcarrier demodulator shall withstand in the non-operating condition a constant 15 g acceleration for five minutes in any direction.

3.4.5 VIBRATION

The subcarrier demodulator shall withstand in the non-operating condition the following vibration conditions in any axis:

Sine = 10 g rms, constant octave sine sweep in 5 minutes, 5 to 2,000 Hz.

Noise = 10 g rms random vibration for 5 minutes, band limited to 100 to 2,000 Hz.

SECTION 4

QUALITY ASSURANCE

4.1 QUALIFIED COMPONENTS

The subcarrier demodulator shall make full utilization of all components, materials, designs, and assembly techniques which have been previously tested and qualified for this application.

4.2 QUALITY CONTROL

The subcarrier demodulator shall be fabricated and assembled from materials which have been inspected and are fully identified.

All fabrication and assembly operations shall be inspected for conformance with approved drawings and assembly procedures.

4.3 DESIGN QUALIFICATION

The design qualifications of the subcarrier demodulator shall be demonstrated by documented tests of a functional and environmental nature. The environmental tests shall be at least as severe as the environmental requirements.

4.4 FLIGHT ACCEPTANCE

The suitability of the subcarrier demodulator for flight use shall be demonstrated by documented acceptance tests which shall include complete functional tests and restricted environmental tests.

REV

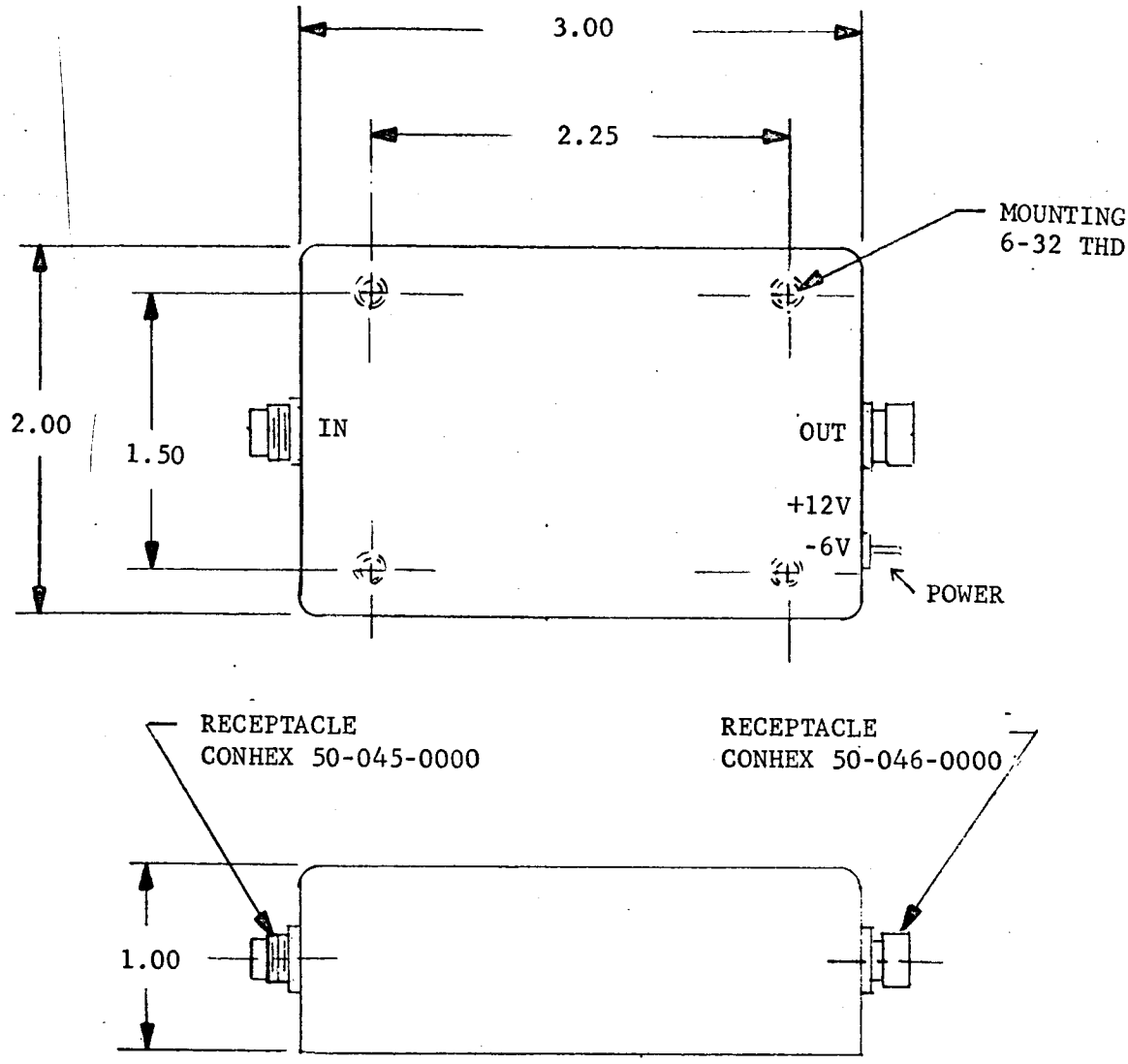

OUTLINE DRAWING
NUMBER REQUIRED - 8

SIZE	CODE IDENT NO.	
A	09205	FIGURE 1. AM SUBCARRIER DEMODULATOR ASSEMBLY
SCALE		SHEET 7

LPS 207

PERFORMANCE SPECIFICATION

LUNAR PENETROMETER SYSTEM

Subcarrier Oscillator Subassembly

Data Relay Subsystem

4-149

AERONUTRONIC
DIVISION OF PHILCO CORPORATION
A SUBSIDIARY OF Ford Motor Company,
FORD ROAD/NEWPORT BEACH, CALIFORNIA

SECTION 1

SCOPE

This specification defines the performance requirements of the Subcarrier Oscillator Subassembly which is a part of the Data Relay Subsystem of the Lunar Penetrometer System. This subassembly shall be comprised of a set of eight constant bandwidth FM subcarrier oscillators for bands 1C through 8C with a suitable mounting chassis, connector, etc. to form a single subassembly meeting the requirements of this specification. The eight analog acceleration signals from the AM Demodulator, LPS-206, will be applied to the Subcarrier Oscillator Subassembly for retransmission in the FM/FM format.

SECTION 2

APPLICABLE DOCUMENTS

2.1 SPECIFICATIONS

LPS-200 Data Relay Subsystem, Functional Specification
LPS-100 Penetrometer Subsystem, Functional Specification
LPS-206 AM Demodulator, Performance Specification
LPS-208 Transmitter, Performance Specification
LPS-210 Power Regulator/Converter, Performance Specification
LPS-211 Battery, Performance Specification

2.2 DRAWINGS

Figure 1 Subcarrier Oscillator Subassembly, Outline Drawing

SECTION 3

PERFORMANCE REQUIREMENTS

3.1 GENERAL

The Subcarrier Oscillator Subassembly shall perform as part of the overall Lunar Penetrometer System to accomplish the mission objectives as described in LPS-200, Functional Specification for the Data Relay Subsystem.

3.2 ELECTRICAL

3.2.1 SUBCARRIER FREQUENCIES:

Channel No.	Center Frequency	Deviation
1C	12.5 KHz	±2 KHz
2C	20.8 "	±2 "
3C	29.2 "	±2 "
4C	37.5 "	±2 "
5C	45.8 "	±2 "
6C	54.2 "	±2 "
7C	62.5 "	±2 "
8C	70.8 "	±2 "

3.2.2 INPUT VOLTAGE: 0 to +5 volts.

3.2.3 INPUT IMPEDANCE: 100 K ohms minimum.

3.2.4 INTELLIGENCE RESPONSE: Within ±0.5 db from dc to 2 KHz with ± 2 KHz deviation.

3.2.5 LINEARITY: ±0.25% or better with ±2 KHz deviation.

3.2.6 OUTPUT VOLTAGE: At each subcarrier frequency adjustable 0 to 0.4 volts RMS or more across a common load of 500 K ohms resistance and 100 pf capacitance in parallel.

3.2.7 AMPLITUDE MODULATION: ±0.5 db or less for ±2 KHz deviation.

3.2.8 SUBCARRIER DISTORTION: Total rms harmonic distortion in the subcarrier output 1% or less.

3.2.9 FREQUENCY STABILITY: The subcarrier frequency shall remain stable within ±80 Hz anywhere within the input voltage range of 0 to +5 volts after a five-minute warmup including effects of power supply variation and temperature within the range of +60°F to +150°F.

3.2.10 POWER INPUT:

a) Supply Voltage: +28 vdc ±5%
b) Ripple, Noise, etc.: 0.8V p to p maximum
c) Current: 50 ma maximum.

3.3 MECHANICAL

The subassembly shall conform to the installation drawing of Figure 1.

3.3.1 SIZE: 35 cubic inches maximum.

3.3.2 WEIGHT: 1.40 pounds maximum.

3.3.3 MOUNTING: Lugs, threaded inserts, and other suitable means for attachment to an equipment tray.

3.3.4 CONNECTORS: Suitable connector(s) and mate(s) to carry the input signals and power to the individual modules, with basic subassembly input/output connector as in Figure 1.

3.3.5 CONTROLS: Sensitivity, frequency, and output level of each subcarrier, all accessible at top of unit.

3.3.6 TEST POINTS: Individual subcarrier output signals, all accessible at top of unit.

3.4 ENVIRONMENTAL

3.4.1 GENERAL

The Subcarrier Oscillator Subassembly shall function for a period of 10 minutes, commencing at relay antenna deployment through penetrometer deployment and final impact, after a space flight of 5 days. As part of the Data Relay Subsystem it will be subjected to normal handling, storage, shipping, and launch environments before the space flight.

3.4.2 TEMPERATURE

The subcarrier oscillator (SCO) subassembly shall operate satisfactorily within the temperature range of +60°to +100°F. It shall withstand temperatures from 0° to +100°F in the nonoperating condition.

3.4.3 PRESSURE

The SCO subassembly shall operate satisfactorily within the pressure range from atmospheric to space vacuum. The subassembly shall perform after exposure to space vacuum conditions for a period of five days.

3.4.4 ACCELERATION

The SCO subassembly shall withstand in the non-operating condition a constant 15 g acceleration for five minutes in any direction.

3.4.5 VIBRATION

The SCO subassembly shall withstand in the non-operating condition the following vibration conditions in any axis:

Sine = 10 g rms, constant octave sine sweep in 5 minutes
20 to 2,000 Hz

Noise = 10 g rms, random vibration for 5 minutes,
band limited to 100 to 2,000 Hz

SECTION 4

QUALITY ASSURANCE

4.1 QUALIFIED COMPONENTS

The SCO subassembly shall make full utilization of all components, materials, designs, and assembly techniques which have been previously tested and qualified for this application.

4.2 QUALITY CONTROL

The SCO subassembly shall be fabricated from materials which have been inspected and are fully identified as to type and source.

All fabrication and assembly operations shall be inspected for conformance with approved drawings and assembly procedures.

4.3 DESIGN QUALIFICATION

The design qualification of the SCO subassembly shall be demonstrated by documented tests of a functional and environmental nature. The environmental tests shall be at least as severe as the environmental requirements.

4.4 FLIGHT ACCEPTANCE

The suitability of all SCO subassembly hardware for flight use shall be demonstrated by documented acceptance tests which shall include complete functional tests and restricted environmental tests.

REV

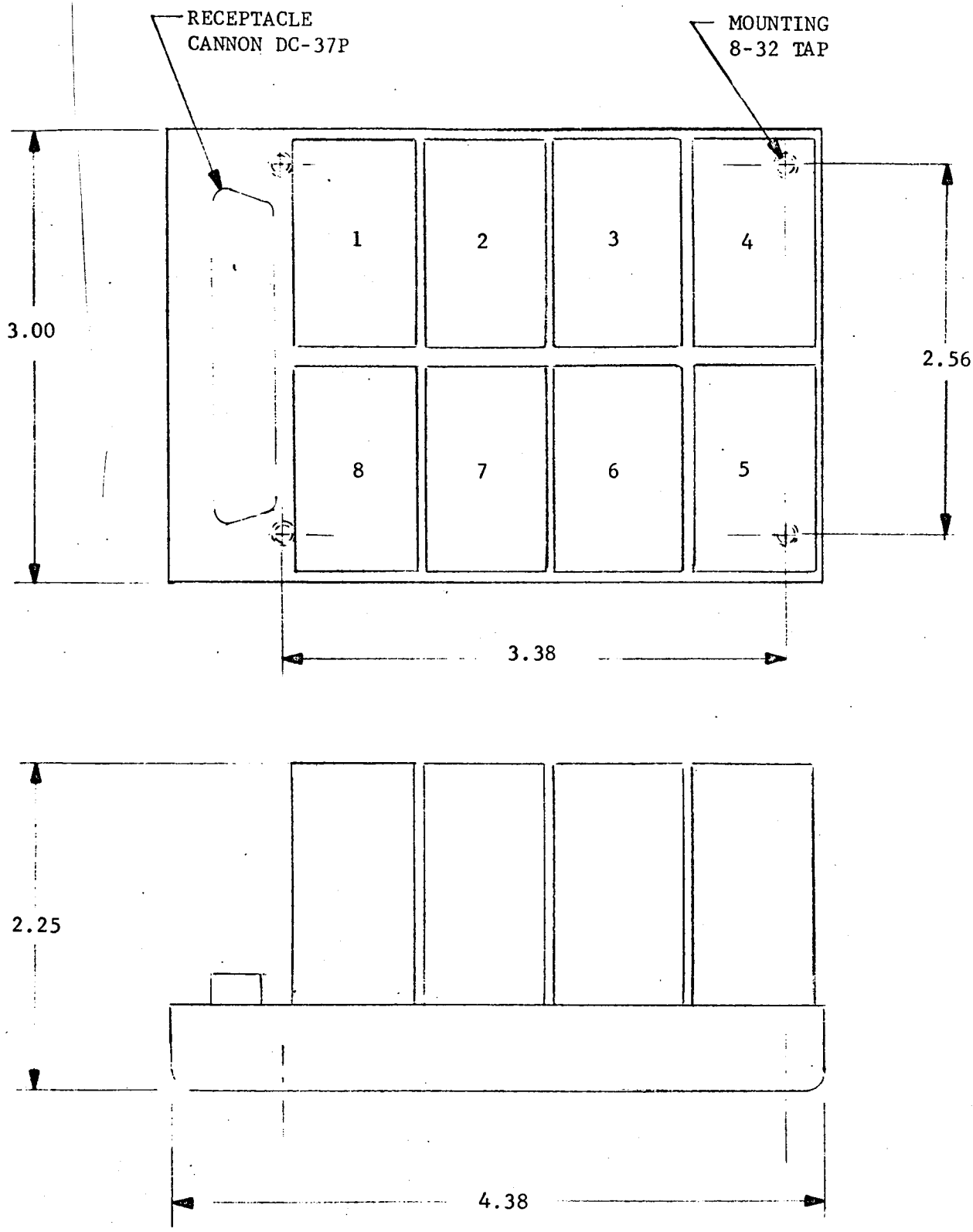

SIZE	CODE IDENT NO.	
A	09205	FIGURE 1. SUBCARRIER OSCILLATOR
SCALE		SHEET 7

ARD 7878

LPS 208

PERFORMANCE SPECIFICATION

LUNAR PENETROMETER SYSTEM

Transmitter Assembly

Data Relay Subsystem

4-157

AERONUTRONIC
DIVISION OF PHILCO CORPORATION
A SUBSIDIARY OF Ford Motor Company,
FORD ROAD NEWPORT BEACH, CALIFORNIA

SECTION 1

SCOPE

This specification defines the performance requirements of the Transmitter Assembly portion of the Data Relay Subsystem of the Lunar Penetrometer System. This transmitter provides the FM telemetering link between the Data Relay and the Apollo CSM.

The transmitter subsystem defined in this specification shall consist of the following:

(1) Feedback stabilized final frequency voltage controlled oscillator with modulation amplifier.

(2) Buffer-Driver stages

(3) Frequency control stages

(4) 40-Watt output amplifier

SECTION 2

APPLICABLE DOCUMENTS

The following documents shall be applicable to this specification to the extent indicated herein.

2.1 SPECIFICATIONS

LPS-200 Data Relay Subsystem, Functional Specifications

LPS-100 Penetrometer Subsystem, Functional Specification

LPS-201 Receiving Antenna, Performance Specification

LPS-207 Subcarrier Oscillator Subassembly, Performance Specification

LPS-530-001 EMI Control, General Specification (Grumman)

LPS-209 Transmitting Antenna, Performance Specification

LPS-210 Power Regulator/Converter, Performance Specification

LPS-211 Battery, Performance Specification

2.2 DRAWINGS

Figure 1, Transmitter Assembly Functional Block Diagram

Figure 2, Transmitter Power Amplifier, Outline Drawing

Figure 3, Transmitter 10-Watt Exciter, Outline Drawing

SECTION 3

PERFORMANCE REQUIREMENTS

3.1 GENERAL

The Transmitter Assembly shall perform as a component part of a Data Relay to accomplish the mission objectives as set forth in LPS-200, Functional Specification for Data Relay Subsystem. The transmitter carrier will be frequency modulated by the combined output of eight FM subcarrier oscillators. The transmitter shall provide a 40-watt power output at a nominal frequency of 260 MHZ.

3.2 ELECTRICAL

3.2.1 DESCRIPTION

The transmitter assembly shall consist of the major circuit solid-state modules shown in the functional block diagram of Figure 1. These modules shall be defined as follows:

(1) A 260 MHz voltage-controlled L-C oscillator, including a differential amplifier modulation amplifier, a varactor frequency control element, and a Class A buffer amplifier.

(2) A voltage regulator module.

(3) A 260 MHz amplifier driver module.

(4) Frequency control stages including crystal-controlled mixer injection source, mixer, IF amplifier, wideband discriminator, and low-pass filter.

(5) A 40-watt power amplifier

The electrical performance requirements are listed in Table 1.

TABLE 1

Electrical Performance Characteristics

Frequency:	260 MHz $\pm$ 0.005%, including drift and thermal coefficient, independent of load VSWR
Power Output:	40 watts carrier and modulation sidebands nominal into 50 ohms resistive at 36 VDC
Carrier Deviation:	$\pm$ 125 KHz
Modulation Sensitivity:	100 KHz/volt peak-to-peak
Modulation Response:	$\pm$ 1 db from 500 Hz to 100 KHz
Modulation Input Impedance:	100K ohms minimum shunted by 300 pf
Modulation Linearity:	Within $\pm$ 1% from best fit straight line of modulation characteristic.
Antenna Conducted Spurious Output:	All spurious limited to: (with modulation) db (down from carrier) = $57 + \log_{10} P_t$
Incidental FM:	1 KHz peak maximum
Incidental AM:	1 KHz maximum for 250 KHz deviation
Power Line Conducted and Radiated:	Meets MIL-1-26600
Temperature:	60°F to $+100^{\circ}$F (base plate)
Power Requirements:	+36 V $\pm$ 5% @ 3 amp +28 V $\mp$ 5% @ 0.4 amp

3.2.2 ELECTROMAGNETIC INTERFERENCE

3.2.2.1 Conducted and Radiated Interference

All non-antenna radiated and power line conducted interface (harmonic, spurious, or fundamental) shall meet the requirements of LSP-530-001.

3.2.2.2 Susceptibility

LSP-530-001 defines the transmitter requirements for RF and audio susceptibility.

3.3 MECHANICAL

3.3.1 ENVELOPE DIMENSIONS

The envelope dimensions (nominal) for the 40-watt power amplifier and the 10-watt exciter module are shown in Figures 2 and 3.

3.3.2 WEIGHT

Total weight for both transmitter modules shall not exceed 5 pounds.

3.3.3 MOUNTING PROVISIONS

The transmitter modules shall include sufficient 10-32 tapped inserts to provide an adequate thermal path to the relay structure.

3.3.4 MATERIALS

No materials which will outgas, evaporate, or sublimate will be used in the transmitter.

3.3.5 EXTERIOR FINISH

The exterior surface of the transmitter modules will be electroless nickel plated or gold plated.

3.3.6 ENCAPSULATION

Encapsulation material and techniques shall be specified and approved by Aeronutronic.

3.4 ENVIRONMENTAL

3.4.1 GENERAL

The Transmitter Assembly shall function for a period of 10 minutes, commencing at relay antenna deployment through penetrometer

deployment and final impact, after a space flight of 5 days. As part of the Data Relay Subsystem, it will be subjected to normal handling, storage, shipping, and launch environments before the space flight.

3.4.2 TEMPERATURE

The transmitter shall operate satisfactorily within the temperature range of +60° to +100°F. It shall withstand temperatures from 0° to +100°F in the non-operating conditions. Operating temperatures are those of the base-plate.

3.4.3 PRESSURE

The transmitter shall operate satisfactorily within the pressure range from atmospheric to space vacuum. The transmitter shall perform after exposure to space vacuum conditions for a period of five days.

3.4.4 ACCELERATION

The transmitter shall withstand in the non-operating condition a constant 15 g acceleration for five minutes in any direction.

3.4.5 VIBRATION

The transmitter shall withstand in the non-operating condition the following vibration conditions in any axis:

Sine - 10 g rms, constant octave sine sweep in 5 minutes 20 to 2,000 Hz.

Noise - 10 g rms, random vibration for 5 minutes, band limited to 100 to 2,000 Hz.

SECTION 4

QUALITY ASSURANCE

4.1 QUALIFIED COMPONENTS

The transmitter assembly shall make full utilization of all components, materials, designs and assembly techniques which have been previously tested and qualified for this application.

4.2 QUALITY CONTROL

The transmitter assembly shall be fabricated from materials and components which have been inspected and are fully identified as to type and source.

All fabrication and assembly operations shall be inspected for conformance with approved drawings and assembly procedures.

4.3 DESIGN QUALIFICATION

The design qualification of the transmitter assembly shall be demonstrated by documented tests of a functional and environmental nature. The environmental tests shall be at least as severe as the encironmental requirements.

4.4 FLIGHT ACCEPTANCE

The suitability of all transmitter assembly hardware for flight use shall be demonstrated by documented acceptance tests which shall include complete functional tests and restricted environmental tests.

SECTION 5

NOTES

5.1 DEFINITIONS

Hz	- cycles per second
MHz	- megacycles per second
P_t	- transmitter output power
LSP	- Lunar Survey Probe
VSWR	- voltage standing wave ratio
^{o}F	- degree Fahrenheit
^{o}C	- degree Centigrade
EMI	- Electromagnetic Interference

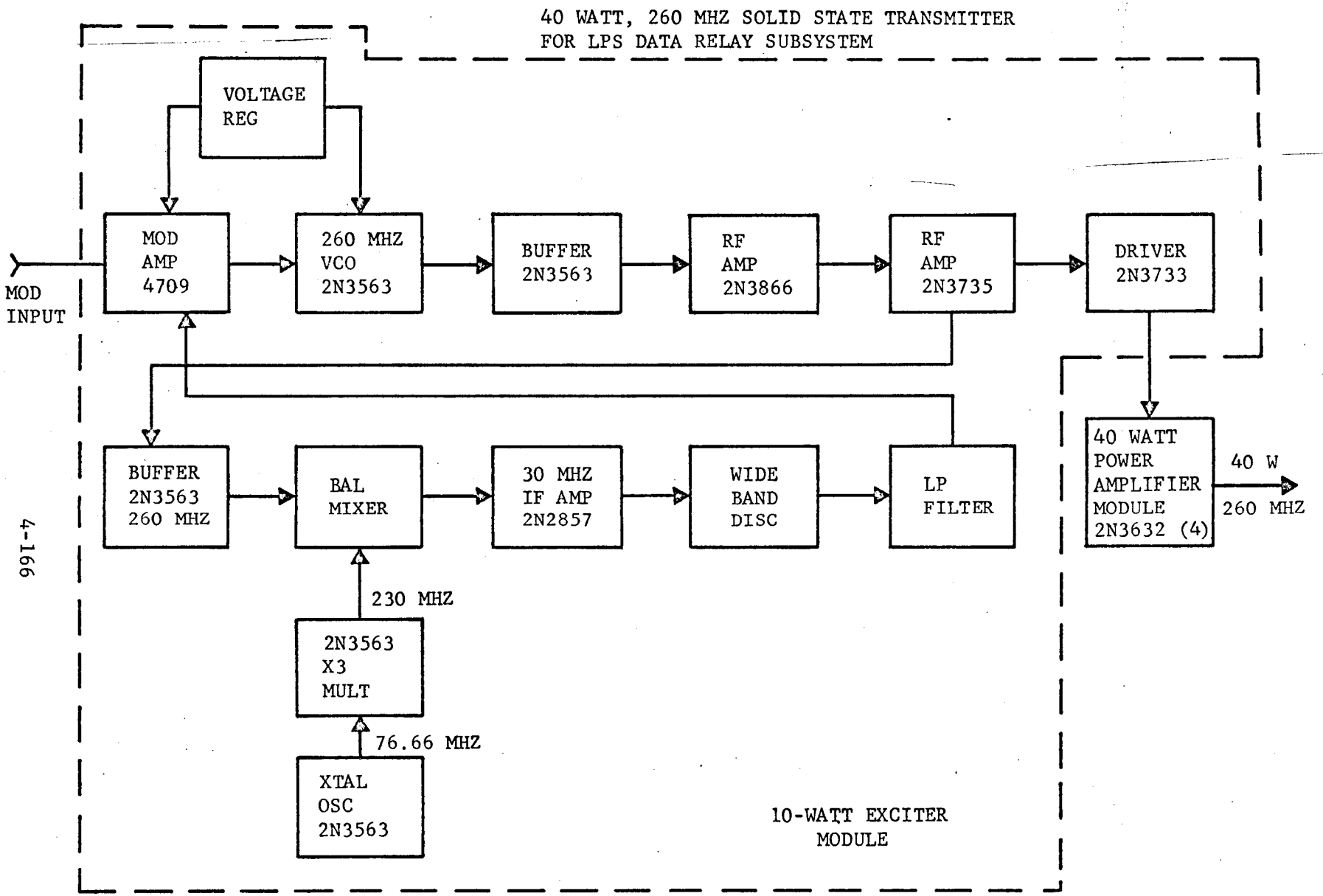

FIGURE 1. TRANSMITTER ASSEMBLY FUNCTIONAL BLOCK DIAGRAM

REV

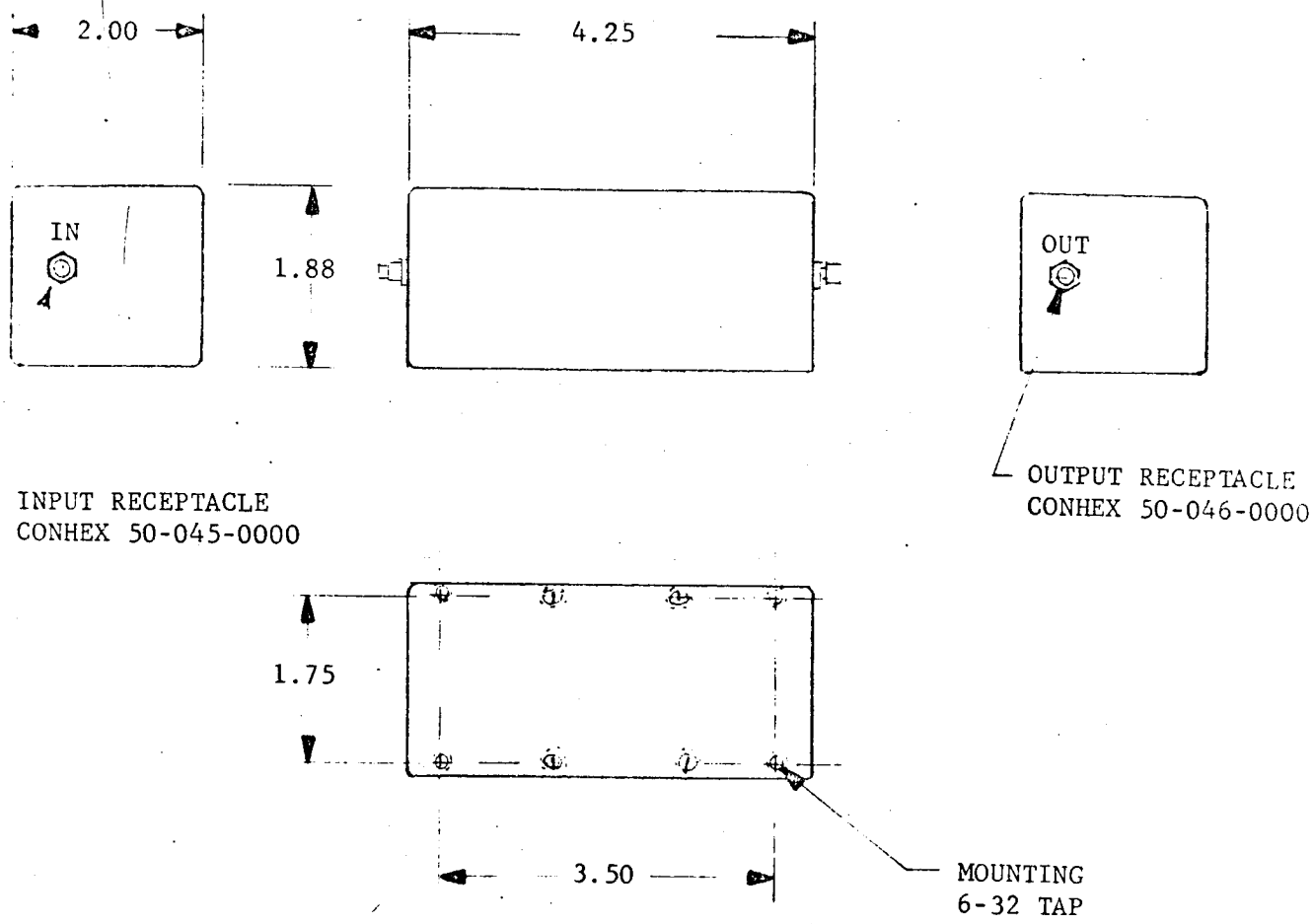

OUTLINE DRAWING

SIZE	CODE IDENT NO.	
A	09205	FIGURE 2. TRANSMITTER ASSEMBLY, POWER AMPLIFIER
SCALE		SHEET 10

REVISIONS			
SYM	DESCRIPTION	DATE	APPROVED

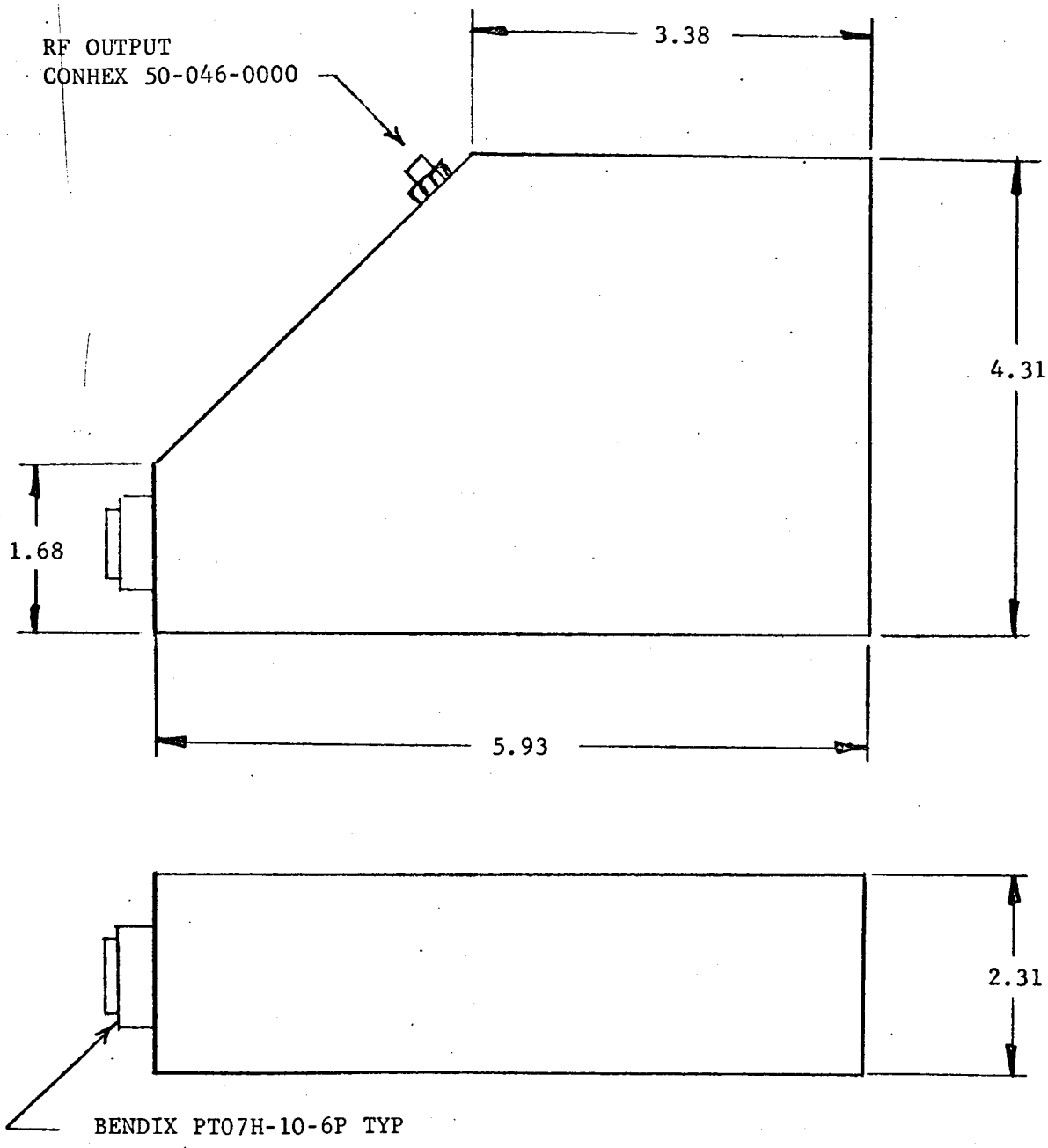

4-168 OUTLINE DRAWING

LPS 208

CODE IDENT NO.	SIZE	FIGURE 3. TRANSMITTER ASSEMBLY, 10-WATT EXCITER
	A	
SCALE		SHEET OF

LPS 209

PERFORMANCE SPECIFICATION

LUNAR PENETROMETER SYSTEM

Transmitting Antenna Assembly

Data Relay Subsystem

4-169

AERONUTRONIC
DIVISION OF PHILCO CORPORATION
A SUBSIDIARY OF Ford Motor Company,
FORD ROAD NEWPORT BEACH, CALIFORNIA

SECTION 1

SCOPE

This specification defines the performance requirements of the Data Relay Subsystem transmitting antenna for use with the LSP Delivery Vehicle (DV). The function of the antenna is to transmit a VHF radio frequency signal from the LSP DV to the orbiting Apollo Command/Service Module (CSM). The antenna assembly described by this document shall include the following:

(1) Antenna elements.

(2) Associated structure to attach the antennas to the LSP DV.

(3) Hybrid junction.

SECTION 2

APPLICABLE DOCUMENTS

The following documents shall form a part of this specification to the extent specified herein:

2.1 SPECIFICATIONS

LPS - 200 Data Relay Subsystem, Functional Specification

LPS - 100 Penetrometer Subsystem, Functional Specification

LPS - 201 Receiving Antenna, Performance Specification

LPS - 101 Antenna Assembly, Performance Specification

LPS - 208 Transmitter, Performance Specification

SECTION 3

PERFORMANCE REQUIREMENTS

3.1 GENERAL

The Transmitting Antenna Assembly shall perform as part of the Lunar Penetrometer System to accomplish the mission objectives as described in LPS-200, Functional Specification for the Data Relay Subsystem. The antenna assembly shall provide for radiation of a data relay VHF signal from the LSP DV to the Apollo CSM and/or LEM vehicles. The antenna assembly shall include a means of deployment of the antenna elements as required by the mechanical constraints of the vehicle design.

3.2 ELECTRICAL

3.2.1 DESCRIPTION

The antenna radiating elements shall consist of two orthogonal quarter-wave monople elements mounted parallel to the roll plane. Additional elements shall be included as required to provide pattern coverage in the hemispherical volume directed away from the lunar surface. Matching networks shall be included if required to provide the specified VSWR and bandwidth characteristics.

3.2.2 FREQUENCY AND BANDWIDTH

The antenna assembly shall operate at a center frequency of 260 MC with a bandwidth approximately 5 MHz.

3.2.3 PATTERN AND GAIN

Minimum gain for each orthogonal element with its associated reflector, shall not be less than -3 db over the hemisphere directed away from lunar ground.

3.2.4 POLARIZATION

The antenna assembly shall provide two orthogonal horizontal polarization components to separate terminals. These terminals

shall be connected to a 90° hybrid junction as required to make available both right and left circular polarization. On-axis polarization axial ratio shall not exceed 2 db.

3.2.5 VSWR

The VSWR's looking into the input terminals associated with the two orthogonal sets of elements shall not exceed 2.0 over the specified operating band. VSWR looking into either of the hybrid output terminals shall not exceed 2.5.

3.3 MECHANICAL

3.3.1 CONFIGURATION

The antenna assembly shall conform to the general design configuration as illustrated in the conceptual drawing of Figure 1 of LPS-200, Data Relay Subsystem, Performance Specification.

3.3.2 WEIGHT

Total weight of the antenna assembly shall be a nominal 0.7 pounds.

3.4 ENVIRONMENTAL

3.4.1 GENERAL

The transmitting antenna assembly shall function for a period of 10 minutes, commencing at relay antenna deployment through penetrometer deployment and final impact, after a space flight of 5 days. As part of the Data Relay Subsystem, it will be subjected to normal handling, storage, shipping, and launch environments before the space flight.

3.4.2 TEMPERATURE

The antenna assembly shall operate satisfactorily within the temperature range of +60° to +100°F. It shall withstand temperatures from 0° to +100°F in the non-operating condition.

3.4.3 PRESSURE

The antenna assembly shall operate satisfactorily within the pressure range from atmospheric to space vacuum. The antenna shall perform after exposure to space vacuum conditions for a period of five days.

3.4.4 ACCELERATION

The antenna assembly shall withstand in the non-operating condition a constant 15g acceleration for five minutes in any direction.

3.4.5 VIBRATION

The antenna shall withstand in the non-operating condition the following vibration conditions on any axis:

SINE = 10 g rms, constant octave sine sweep in 5 minutes 20 to 2,000 Hz.

NOISE = 10 g rms, random vibration for 5 minutes, band limited to 100 to 2,000 Hz.

SECTION 4

QUALITY ASSURANCE

4.1 QUALIFIED COMPONENTS

The transmitting antenna assembly shall make full utilization of all components, materials, designs and assembly techniques which have been previously tested and qualified for this application.

4.2 QUALITY CONTROL

The antenna shall be fabricated from materials which have been inspected and are fully identified as to type and source.

All fabrication and assembly operations shall be inspected for conformance with approved drawings and assembly procedures.

4.3 DESIGN QUALIFICATION

The design qualification of the antenna assembly shall be demonstrated by documented tests of a functional and environmental nature. The environmental tests shall be at least as severe as the environmental requirements.

4.4 FLIGHT ACCEPTANCE

The suitability of all antenna assembly hardware for flight use shall be demonstrated by documented acceptance tests which shall include complete functional tests and restricted environmental tests.

SECTION 5

NOTES

5.1 DEFINITIONS

LSP-DV	-	Lunar Survey Probe, Data Vehicle
VSWR	-	Voltage Standing Wave Ratio
MHz	-	Megacycle per second
g	-	acceleration unit equal to the Earth's gravitational acceleration
psi	-	pounds per square inch
^{o}F	-	degrees Fahrenheit
rms	-	root mean square
Hz	-	cycles per second
CSM	-	Command Service Module
LEM	-	Lunar Excursion Module

LPS 210

PERFORMANCE SPECIFICATION

LUNAR PENETROMETER SYSTEM

Power Regulator/Converter Assembly

Data Relay Subsystem

4-177

AERONUTRONIC
DIVISION OF PHILCO CORPORATION
A SUBSIDIARY OF Ford Motor Company,
FORD ROAD NEWPORT BEACH, CALIFORNIA

SECTION 1

SCOPE

This specification defines the performance requirements of the Power Regulator/Converter Assembly which is part of the Data Relay Subsystem. The assembly specified will supply the power requirements from a raw battery source for the relay subsystem utilizing diversity combination and no redundance in transmission. If diversity combination is not used or if full transmission redundance is desired, it is recommended that two independent converter/regulator regulator/converter assemblies, as defined by this specification, be used.

SECTION 2

APPLICABLE DOCUMENTS

2.1 SPECIFICATIONS

LPS-200	Data Relay Subsystem, Functional Specification
LPS-100	Penetrometer Subsystem, Functional Specification
LPS-202	Preamplifier, Performance Specification
LPS-203	Power Divider, Performance Specification
LPS-204	Diversity Scanner, Performance Specification
LPS-205	Receiver/Discriminator, Performance Specification
LPS-206	AM Demodulator, Performance Specification
LPS-207	Subcarrier Oscillator Subassembly, Performance Specification
LPS-208	Transmitter, Performance Specification
LPS-211	Battery, Performance Specification

2.2 DRAWINGS

Figure 2, Envelope Drawing DC-DC Converter/Regulator

SECTION 3

PERFORMANCE REQUIREMENTS

3.1 GENERAL

The Power Regulator/Converter Assembly shall perform as part of the overall Lunar Penetrometer System to accomplish the mission objectives as described in LPS-200, Functional Specification for the Data Relay Subsystem.

This specification defines the use of a combined converter and regulator assembly which employs a switching input pre-regulator to achieve good efficiency. This configuration shall function as denoted in the diagram of Figure 1. Other configurations may be used if the requirements are met. However, an assembly of highest efficiency and smallest weight is desired.

3.2 ELECTRICAL

3.2.1 INPUT

a.	Voltage	+28 V ± 4 V
b.	Current	7.4 amp nominal

3.2.2 OUTPUT NO. 1

a.	Voltage - Initial tolerance with nominal input of +28 V and load of 3 amp	+36 V ± 5%
b.	Voltage stability against input variations	± 2% max. change
c.	Stability against load changes of ± 20%	± 5% max. change
d.	Ripple, noise, etc.	1 V peak-to-peak max.

3.2.3 OUTPUT NO. 2

a. Voltage - Initial tolerance with nominal input of +28 V and load of 0.45 amp	+28 V ± 5%
b. Voltage stability against input variations	± 3% max. chg.
c. Stability against load changes of ± 20%	± 5% max. chg.
d. Ripple, noise, etc.	0.8 V, peak-to-peak, max.

3.2.4 OUTPUT NO. 3

a. Voltage - Initial tolerance with nominal input of +28 V and load of 1.6 amp	+12 V ± 5%
b. Voltage stability against input variations	± 1% max. chg.
c. Stability against load changes of ± 20%	± 2% max. chg.
d. Ripple, noise, etc.	0.1 V peak-to-peak max.

3.2.5 OUTPUT NO. 4

a. Voltage - Initial tolerance with nominal input of +28 V and load of 0.8 amp	-6 V ± 5%
b. Voltage stability against input variations	± 1% max. chg.
c. Stability against load changes of ± 20%	± 2% max. chg.
d. Ripple, noise, etc.	0.05 V peak-to-peak max.

3.2.6 EFFICIENCY

a. Minimum	70%
b. Average, taken for inputs of +24, +28, +32 volts and nominal output currents	75%

3.2.7 Operating time, mounted to aluminum heat sink at +120°F	Continuous

3.3 MECHANCIAL

The unit shall conform to the envelope drawing of Figure 2.

3.3.1 VOLUME — 16 in.^{3} max.

3.3.2 WEIGHT — 16 oz. max.

3.4 ENVIRONMENTAL

3.4.1 GENERAL

The power regulator/converter assembly shall function for a period of 10 minutes, commencing at relay antenna deployment through penetrometer deployment and final impact, after a space flight of 5 days. As part of the Data Relay Subsystem it will be subjected to normal handling, storage, shipping, and launch environments before the space flight.

3.4.2 TEMPERATURE

The regulator/converter assembly shall operate satisfactorily within the temperature range of +60° to +100°F. It shall withstand temperatures from 0° to +100°F in the non-operating condition.

3.4.3 PRESSURE

The regulator/converter assembly shall operate satisfactorily within the pressure range from atmospheric to space vacuum. The assembly shall perform after exposure to space vacuum conditions for a period of five days.

3.4.4 ACCELERATION

The regulator/converter assembly shall withstand in the non-operating condition a constant 15 g acceleration for five minutes in any direction.

3.4.5 VIBRATION

The regulator/converter assembly shall withstand in the non-operating condition the following vibration conditions in any axis:

Sine = 10 g rms, constant octave sine sweep in 5 minutes 20 to 2,000 Hz

Noise = 10 g rms, random vibration for 5 minutes, band limited to 100 to 2,000 Hz.

SECTION 4

QUALITY ASSURANCE

4.1 QUALIFIED COMPONENTS

The power regulator/converter assembly shall make full utilization of all components, materials, designs and assembly techniques which have been previously tested and qualified for this application.

4.2 QUALITY CONTROL

The regulator/converter assembly shall be fabricated from materials which have been inspected and are fully identified as to type and source.

All fabrication and assembly operations shall be inspected for conformance with approved drawings and assembly procedures.

4.3 DESIGN QUALIFICATION

The design qualification of the regulator/converter assembly shall be demonstrated by documented tests of a functional and environmental nature. The environmental tests shall be at least as severe as the environmental requirements.

4.4 FLIGHT ACCEPTANCE

The suitability of all regulator/converter assembly hardware for flight use shall be demonstrated by documented acceptance tests which shall include complete functional tests and restricted environmental tests.

SECTION 5

NOTES

5.1 DEFINITIONS

Hz - cycles per second

^{o}F - degree Fahrenheit

rms - root mean square

REV

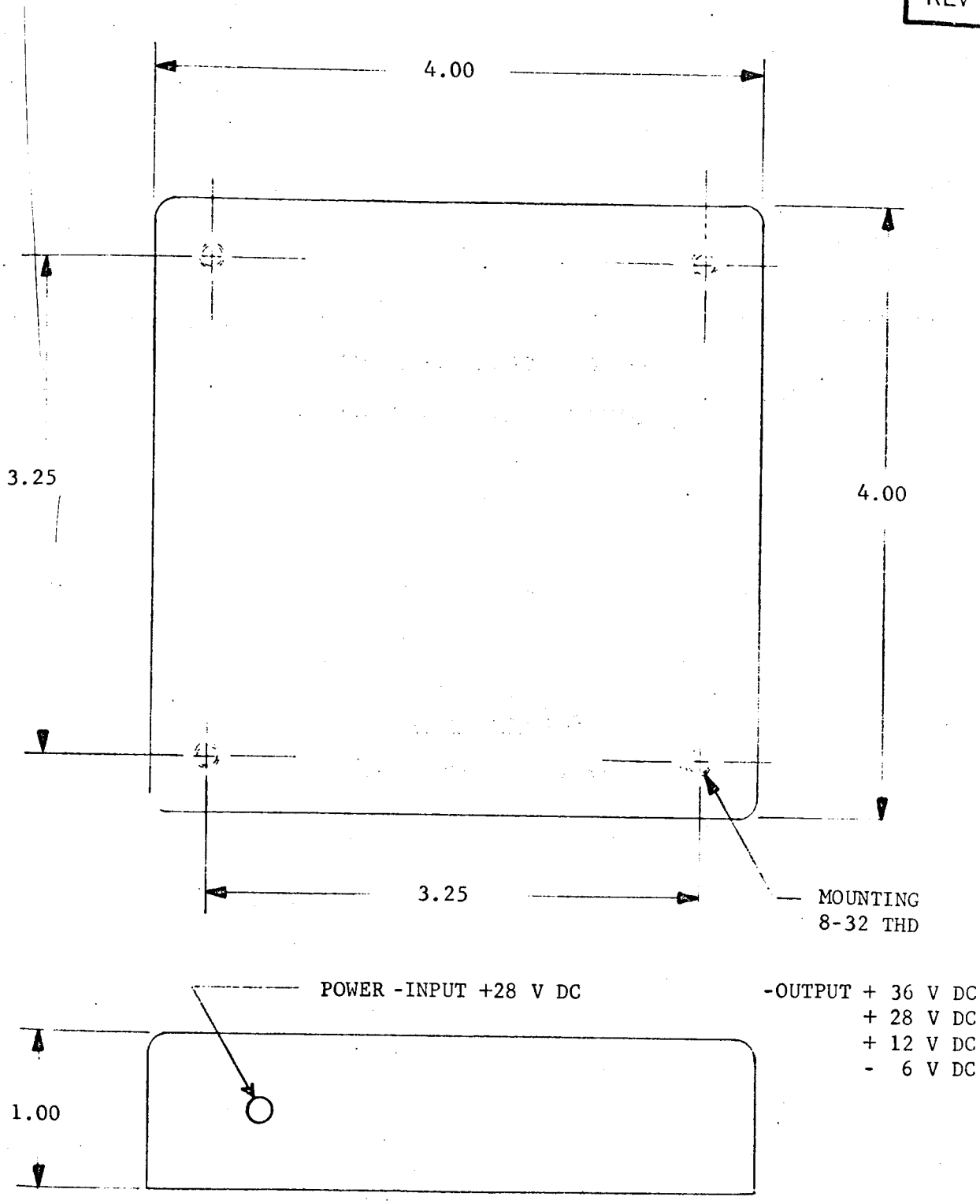

OUTLINE DRAWING

SIZE	CODE IDENT NO.	
A	09205	FIGURE 2. POWER REGULATOR/CONVERTER ASSEMBLY
SCALE		SHEET 8

PERFORMANCE SPECIFICATION

LUNAR PENETROMETER SYSTEM

Battery Assembly

Data Relay Subsystem

4-186

AERONUTRONIC
DIVISION OF PHILCO CORPORATION
A SUBSIDIARY OF Ford Motor Company,
FORD ROAD/NEWPORT BEACH, CALIFORNIA

SECTION 1

SCOPE

This specification defines the performance requirements of the Battery Assembly which is part of the Data Relay Subsystem. The battery must power all electrical and electronic assemblies comprising the Lunar Penetrometer System Data Relay. The battery shall provide an operational period of 10 minutes minimum with an additional reserve of 100% capacity to allow for stand-time and other loss factors. The battery specified will supply the power requirements for the relay subsystem utilizing diversity combination and no redundance in transmission. If diversity combination is not used or if full transmission redundance is desired, it shall be recommended that two independent batteries, as defined by this specification, be utilized.

SECTION 2

APPLICABLE DOCUMENTS

2.1 SPECIFICATIONS

LPS-200	Data Relay Subsystem, Functional Specification
LPS-100	Penetrometer Subsystem, Functional Specification
LPS-202	Preamplifier, Performance Specification
LPS-204	Diversity Scanner, Performance Specification
LPS-205	Receiver/Discriminator, Performance Specification
LPS-206	AM Demodulator, Performance Specification
LPS-207	Subcarrier Oscillator Subassembly, Performance Specification
LPS-208	Transmitter, Performance Specification
LPS-210	Power Regulator/Converter, Performance Specification

2.2 DRAWINGS

Figure 1, Envelope Drawing, Battery Assembly

SECTION 3

PERFORMANCE REQUIREMENTS

3.1 GENERAL

The Battery Assembly shall perform as part of the overall Lunar Penetrometer System to accomplish the mission objectives as described in LPS-200, Functional Specification for the Data Relay Subsystem.

3.2 ELECTRICAL

3.2.1 VOLTAGE	28 VDC $\pm$ 4 V
3.2.2 POLARITY	Positive (WRT System Gnd)
3.2.3 CURRENT	7.4 amps nominal
3.2.4 OPERATING TIME	10 minutes, minimum (without recharge)
3.2.5 CAPACITY	76 watt-hours (one-hour discharge)
3.2.6 CHARGE/DISCHARGE CYCLES	10 minimum

3.2.7 STORAGE

The battery shall be capable of performing as specified after being stored for one year at temperatures between 30°F and 40°F. Recharging of the battery may be performed to obtain compliance with this requirement.

3.3 MECHANICAL

3.3.1	VOLUME	50 cubic inches max.
3.3.2	WEIGHT	3.5 pounds max.
3.3.3	TERMINALS	Screw Type, 8-32 or heavier

3.3.4 SEALING

The battery shall be hermetically sealed and capable of operation in any orientation or pressure from zero to one earth atmosphere.

3.4 ENVIRONMENTAL

The battery shall function for a period of 10 minutes, commencing at relay antenna deployment through penetrometer deployment and final impact, after a space flight of 5 days. As part of the Data Relay Subsystem it will be subjected to normal handling, storage, shipping and launch environments before the space flight.

3.4.1 TEMPERATURE

The battery shall operate satisfactorily within the temperature range of $+60^{\circ}$ to $+100^{\circ}$F. It shall withstand temperatures from $+32^{\circ}$ to $+100^{\circ}$F in the non-operating condition.

3.4.2 PRESSURE

The battery shall operate satisfactorily within the pressure range from atmospheric to space vacuum. The battery shall perform after exposure to space vacuum conditions for a period of five days.

3.4.3 ACCELERATION

The battery shall withstand in the non-operating condition a constant 15 g acceleration for five minutes in any direction.

3.4.4 VIBRATION

The battery shall withstand in the non-operating condition the following vibration conditions in any axis:

Sine = 10 g rms, constant octave sine sweep in 5 minutes 20 to 2,000 Hz

Noise = 10 g rms random vibration for 5 minutes, band limited to 100 to 2,000 Hz

SECTION 4

QUALITY ASSURANCE

4.1 QUALIFIED COMPONENTS

The battery assembly shall make full utilization of all components, materials, designs and assembly techniques which have been previously tested and qualified for this application.

4.2 QUALITY CONTROL

The battery shall be fabricated from materials which have been inspected and are fully identified as to type and source.

All fabrication and assembly operations shall be inspected for conformance with approved drawings and assembly procedures.

4.3 DESIGN QUALIFICATION

The design qualification of the battery assembly shall be demonstrated by documented tests of a functional and environmental nature. The environmental tests shall be at least as severe as the environmental requirements.

4.4 FLIGHT ACCEPTANCE

The suitability of all battery assembly hardware for flight use shall be demonstrated by documented acceptance tests which shall include complete functional tests and restricted environmental tests.

SECTION 5

NOTES

5.1 DEFINITIONS

Hz	- cycles per second
^{o}F	- degree Fahrenheit
WRT	- with respect to
Gnd	- Ground

REV

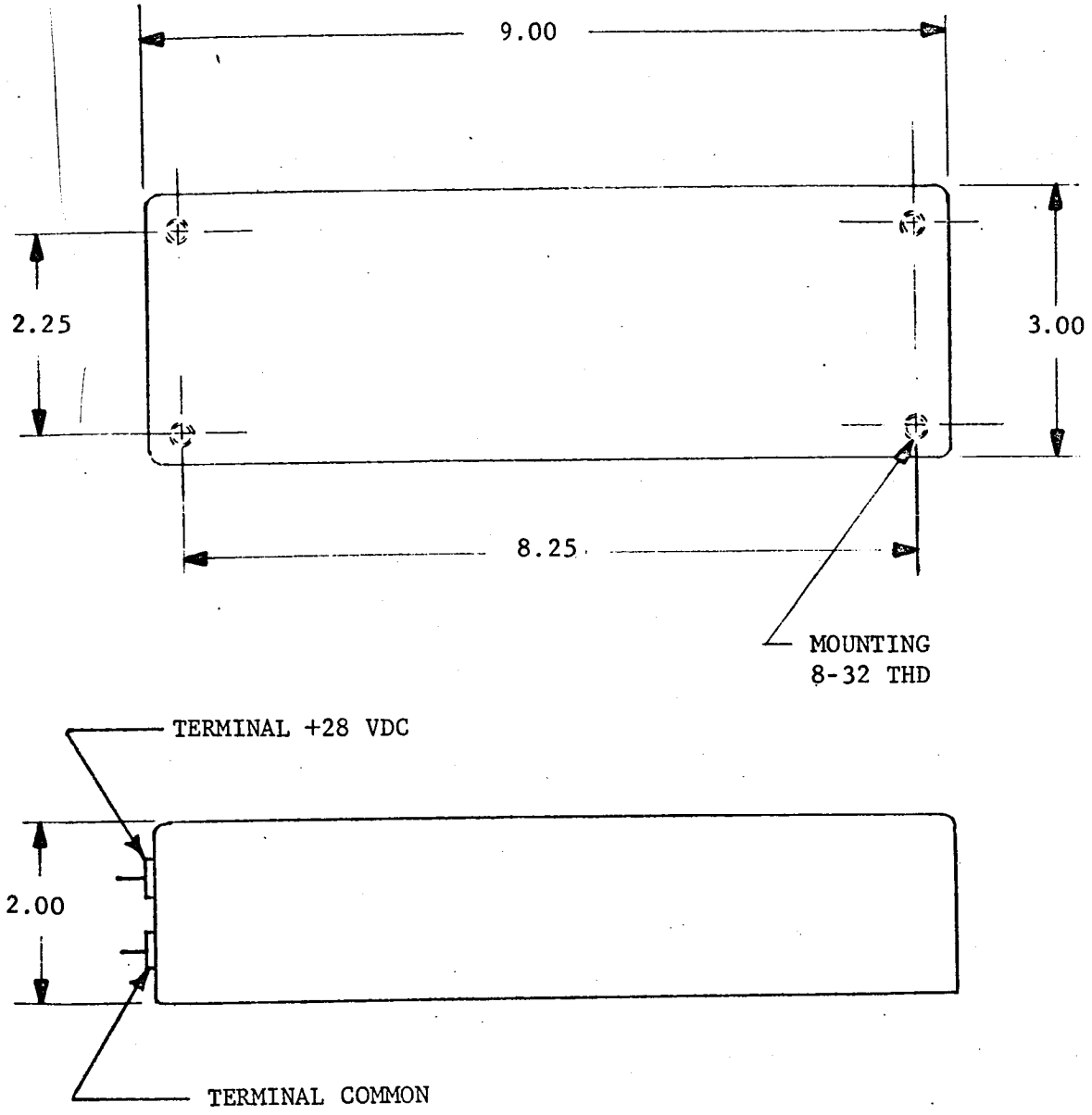

OUTLINE DRAWING

SIZE	CODE IDENT NO.	
A	09205	FIGURE 1. BATTERY ASSEMBLY
SCALE		SHEET 8

ARD 7878
SEPT 65

SECTION 5

DEVELOPMENT PLAN

The accompanying final report on the lunar penetrometer system presents a quite comprehensive assessment of the developmental status of each major subsystem within the lunar penetrometer system. As a general summary status on the penetrometer subsystem, the basic design has been demonstrated to be sound. Three prototypes have been assembled and tested, with the latter two units demonstrating good functional capability and a high degree of ruggedness. There are still difficulties in achieving the fabrication of consistently good quality units for several of the penetrometer modules, specifically the omnidirectional accelerometer, the battery, and the transmitter oscillator. Further development is required to either modify the design for greater case of producibility or else to develop improved fabrication techniques. An additional problem in the battery area is that the only fully qualified unit is of foreign manufacture, and an American equivalent must be developed and qualified.

The data relay subsystem was developed only to the extent of a functional engineering model. While the functional performance of the engineering model has been adequate for the test program to date, further functional improvement in the receiver is required to increase the ability to handle signals over the anticipated wide range of signal strengths. The entire subsystem must then be redesigned into a flight packaging configuration, and the entire assembly must be tested and qualified to demonstrate its functional capability within the expected flight environment.

Any new receiving equipment required aboard the CSM is not included as a part of this program plan. For purposes of conducting system tests, the CSM receiving gear will continue to be simulated using ground station equipment.

An assumption in this development plan is that "go-ahead" on the effort will commence on 2 May 1966. As indicated in Section 11, Schedules, effort will be required to evaluate various design improvement features for the penetrometer and data relay so that preliminary design of the complete system would be concluded prior to 1 September 1966. Unless this milestone is reached, the delivery of flight hardware on the required schedule would be highly doubtful. Thus, it is assumed that the effort from May to September 1966 will be sufficient to evaluate various competing subsystem concepts so as to permit the completion of a quite thorough preliminary design, and that detailed design on all flight subsystems will begin immediately in September.

The required development will be discussed below, covering first the subsystem development effort, followed by a discussion of development effort on the complete lunar penetrometer system assembly.

5.1 SUBSYSTEM DEVELOPMENT

5.1.1 PENETROMETER

As mentioned previously, it is assumed that sufficient effort will have been conducted prior to September to permit the detailed design of all penetrometers modules to begin immediately after this date. Some modules will already be qualified for basic design suitability, while others will require considerable effort to qualify their design. For example, the battery will definitely be a new item, the transmitter will probably have a new crystal-controlled oscillator in place of the present L-C module, and the timer/regulator module will be a new design tailored for flight usage rather than strictly for developmental test purposes as in the prototype penetrometer. More specific effort on the individual penetrometer modules will be described below.

a. Omnidirectional Accelerometer. The omnidirectional accelerometer is described in Section 4 of Performance Specification LPS-102. The presently used accelerometer was developed by the ENDEVCO Corporation to meet Aeronutronic Specification No. 21426, and is designated as ENDEVCO Model 2402-M1. Selected units have met all specifications with the exception of being slightly off the target value of maximum nonisotropic errors of ± 5 percent. However, the consistency from unit to unit has not been good, requiring a further refinement in the manufacturing techniques. An alternate unit, the Model M2 may actually be delivered in place of the M1. The M2 unit is slightly larger but is still compatible with the volume available within the penetrometer assembly. This unit promises to be more readily producible at the expense of a slightly lower but still acceptable frequency response. However, the M2 model has not yet proven its ability to withstand the high level shock environment. To stand this high level shock environment, ENDEVCO is investigating the feasibility of a steel backed crystal. Results from this investigation should be forthcoming in May. Regardless of which model accelerometer is selected, the units would be purchased at a fixed

price per unit from ENDEVCO. Developmental effort consists of re-qualifying the redesigned unit for compliance to its specified performance as listed in Performance Specification LSP-102. Testing will include measurement of sensitivity to the thermal environment, degree of humidity, measurement of electrical characteristics, and determination of dynamic response to a full range of acceleration pulses in all directions. In addition to design qualification, each accelerometer used in the program will be fully calibrated under dynamic conditions using both a drop tester and a pneumatic ram to cover both the required acceleration levels and the velocity range.

b. Signal Electronics. The signal electronics module is described in Performance Specification DPS-103. The prototype signal electronics modules have generally performed well from the standpoint of both electrical and mechanical design, however, certain refinements will be incorporated into the flight module design. These modifications will probably include the provision for insertion of a calibration signal at the input to the first stage of the signal electronics. In addition, an ordinary field-effect transistor may well be substituted for the present MOS-FET's, if the ordinary FET's are found to be more resistant to space radiation effects. Design modifications are also contemplated to reduce and offset a turn-on transient which exists in the present prototype penetrometers. Minor repackaging is required to increase clearances in general and to eliminate the possibility of accidental shorts.

Evaluation testing is required to evaluate these design improvements over the full range of functional and environmental conditions, which must of necessity include dynamic testing under high level shock conditions. This latter module testing will be conducted first at high acceleration levels but low-energy conditions using a drop tester, and then under both high acceleration levels and high energy (high velocity) impact conditions.

c. Transmitter. The penetrometer transmitter is described in Performance Specification LPS-105. The transmitters in the prototype penetrometers utilize an L-C oscillator design. Achieving a stable carrier frequency during impact was made difficult by the fact that all electrical components have shock transients in at least one directional plane. However, intensive development effort produced an oscillator stable to 1 part of 10^4, when subjected to impacts at 200 ft/sec against a rigid surface. Because of the use of a subcarrier, this amount of frequency shift causes no distortion in the data signal and is quite acceptable. However, the transmitters are difficult to match with the receivers in the data relay subsystem because of the extent of effort required to set their initial frequency and a tendency toward a long term drift in frequency as the potting compound in the oscillator module ages. For these reasons, coupled with promising initial test results on crystal oscillators, it is probable that the flight transmitter design will incorporate a crystal-controlled oscillator module. Since the crystal oscillator operates at only 1/2 to 1/3 the frequency of the present L-C oscillator, the design of a crystal-controlled flight transmitter will

be almost entirely new, although incorporating proven design features. A head start on this redesign effort has been assumed during the extended effort prior to September 1966. However, considerable development effort is contemplated to establish a flight design configuration which minimizes the frequency shift characteristics during high-order impact. Testing effort must include electrical testing, thermal soak and transient testing, and evaluation during both low order and high order impact tests, as described above for the signal electronics module.

d. Antenna. The omnidirectional antenna is described in Performance Specification LPS-101. The prototype antenna is performing quite satisfactorily and developmental effort is confined to the area of detail refinement. For example, the feed structure will be refined to improve the VSWR as measured at the feed loop terminals. Interactions of the antenna with the balsa limiter, cable placement, etc., will be investigated as a means of further improving the isotropic characteristics of the radiated pattern. The polarization sense will be evaluated over a full spherical pattern to verify the necessity for polarization diversity reception in the data relay subsystem. The final design for the antenna will be evaluated for radiation efficiency before, during, and after high-order impact.

e. Regulator/Timer. The voltage regulator module is described in Performance Specification LPS-104. The present prototype module performs three functions: it converts the raw battery input into three different regulated voltages for use by the signal electronics module, it provides for initiation switching, and it also provides a timed turn-off after initiation to conserve battery energy for repetitive testing. This latter function will have to be modified to provide for acceptance testing but without jeopardizing the reliability of the flight unit in the actual operational usage. Reliability considerations would normally dictate no timed turn-off. As with other modules of the penetrometer, the new design for the regulator/timer will be fully evaluated for functional performance over its complete range of environments.

f. Battery. The penetrometer battery is described in Functional Specification 21526. The battery used in the prototype penetrometers was designated as fabricated from selected Jupiter Type B-80 cells and is designated for developmental purposes only. These batteries have a high energy reserve, are quite reliable under shock, and appear to meet all requirements for a flight battery, although they have not yet been fully evaluated for shelf-life. However, the Jupiter cells are manufactured in Hungary, and a reliable domestic source for an equivalent battery is required. As previously discussed, it is assumed that this American source will have been selected prior to September 1966, and flight-type battery development will have been initiated. However, the Phase II program will have to continue to support the development of this battery, including full

evaluation testing of units delivered from the battery supplier. Whether the new battery is a special design tailored to the penetrometer requirement or else is composed of American equivalents of the Jupiter button cell, it is contemplated that several cycles of redesign and testing will be required to produce a unit that reliably meets all requirements for the penetrometer application. The development program must therefore provide for considerable test effort on the battery, including testing for functioning in the full range of temperature and shock environments as well as shelf-life behavior during long-term storage.

g. Structure. The penetrometer structure is defined in Performance Specification LPS-106. The structure for the prototype penetrometer has been satisfactory in all regards and only detail refinements are contemplated for the flight design. Thus, an evaluation of surface finishes will be performed to further improve epoxy bonding of the impact limiter to the external surface of the structure. The contemplated changes in the test probe connectors will also require minor modifications to the structure design. Other than a bonding evaluation mentioned above, no separate tests are planned on the structure as an individual module. Rather, its evaluations testing will occur during tests of complete penetrometer assemblies.

h. Impact Limiter. The Impact Limiter for the penetrometer is described in Performance Specification LPS-107. Like the structure, the impact limiter and its cover have performed well during the development of the prototype penetrometer. However, the bonding to the structure has not been consistent. Effort to improve this adhesion has been discussed in the preceding paragraph. No major development of the impact limiter is contemplated other than refinements to incorporate small changes, such as the altered test probes, but the impact limiters will be more thoroughly evaluated for conformance to all environmental requirements, such as impact absorbing characteristics after long-term exposure to a vacuum environment.

i. Penetrometer Assemblies. The complete penetrometer assembly is physically described in Performance Specification LPS-100. After a detailed design of the flight penetrometer assembly has been completed, three successive prototype models will be fabricated and subjected to extensive evaluation testing to verify the suitability of the flight-type design. The general test approach for the penetrometers, as well as for all other subsystems, is to perform this testing under conditions in excess of the design requirements, typically 15 to 25 percent in excess of the design environmental or functional condition. Thus, a design margin of safety is established in the design, providing a high degree of confidence of passing later formal qualification testing at the design level of environment. Such evaluation testing for the penetrometers includes complete functional testing over the environmental ranges for temperature, vibration, humidity, vacuum, impact shock, and shelf-life. Minor changes are contemplated from one prototype unit to the next, but the final prototype unit should be

essentially an exact duplicate of the final flight design. The final design review of the flight penetrometer design is not scheduled until after testing of this third prototype unit.

Additional penetrometers must be fabricated, checked out, and calibrated for utilization in system testing described below. For example, eight penetrometers are required for the Functional and Environmental System Test Model. Assuming that four of these penetrometers can be reconditioned, four new penetrometers are required to make a total of eight to be delivered to the delivery system contractor as a part of the Delivery System Compatibility Test Model. An additional eight penetrometers are required for the System Field Test Model. Extensive operational and reliability data will be acquired on the penetrometer assembly during the course of tha above outlined system testing.

Inherent to the outlined program are supporting functions such as the procurement of parts, evaluation testing of breadboard circuits, system design, drawing check and release, preparation of parts and drawing lists, and coordination with the reliability and quality control activities in the qualification of components and in the preparation of procedures for qualification tests and flight acceptance tests.

5.1.2 DATA RELAY

There is a possibility of making a number of simplifications in the data relay subsystem. For example, in the testing to date, under admittedly strong signal conditions, there have been no data drop-outs noted during single antenna receptions under a variety of reception circumstances. Further evaluation may indicate that the probability of signal loss is sufficiently low under even worse case field conditions to eliminate the requirement for dual receiving antennas and diversity combination in the data relay.

No effort has been extended to date in packaging the data relay to a flight configuration. As the environmental conditions for the data relay are relatively mild compared to those for the penetrometer subsystem, this flight packaging effort is believed to be quite straightforward, and no serious development problems are anticipated. Specific areas of effort are as described below:

a. Receiving Antenna. The receiving antenna is described in Performance Specification LPS-201. A pair of orthogonally polarized antennas are required to ensure reception from the penetrometers under all orientation conditions. Crossed dipoles over a ground plane were utilized in the engineering functional model and performed quite well electrically. However, this configuration is not suited to the anticipated LSP probe packaging arrangement, and therefore, the design has been modified as described in LPS-201 for the flight hardware. Detailed design on the new receiving

antenna will begin after a full definition of the LSP probe package and a completed preliminary design for the Lunar Penetrometer System. Major functional development will emphasize matching with the data relay transmitter and achieving the desired radiation pattern and efficiecy when coupled to the LSP probe package configuration. It is contemplated that the most severe environmental condition will be the vibration spectrum during launch and lunar retro. Much of the significant antenna testing will occur during tests of the overall system as described in the following paragraphs of this report.

b. Preamplifier. The data relay preamplifier is described in Functional Specification LPS-202. The planned flight configuration of the data relay utilizes a low-noise, broadband preamplifier between each receiving antenna and the 8-eay power divider which follows. This sets the noise figure for the receiving system ahead of the rather lossy broadband power divider which is presently utilized in the engineering model. It is planned that the preamplifier will be a purchased off-the-shelf item but requiring some repackaging. Relatively little development effort is contemplated in achieving this repackaging and testing is mainly required to verify the ability of the purchased units to meet the functional and environmental requirements.

c. Power Divider. The power divider is described in Performance Specification LPS-203. The power divider utilized in the present engineering model of the data relay is an off-the-shelf broadband 8-way divider which appears to be usable for flight in all respects. Its one drawback is that, due to high loss, it necessitates use of a broadband preamplifier to set the noise figure for the system. A failure mode can be conceived in which one penetrometer might hand-up in the data relay while operating, and overload the preamplifier causing the loss of all eight data channels. However, due to the strap-release method contemplated for releasing the penetrometers and the fact that each penetrometer is not initiated until it is deployed, the probability of such a failure mode occurring appears completely remote. Thus, the development plan is predicted on the utilization of the existing power divider with further testing required only to verify performance after minor repackaging and to better evaluate its functional characteristics over the full range of environmental conditions.

d. Receiver Discriminator. The receiver discriminator is described in Performance Specification LPS-205. The discriminator is a solid-state FM unit operating in the UHF region from 432 to 453 Mc using standard FM discrimination. In addition to packaging for flight use, some functional redesign of the present discriminator in the engineering model is required to improve its dynamic signal range. Also, the present units do not have an optimum selection of the IF frequencies. When their design was begun, direct modulation of the penetrometer transmitter was planned, with an approximate two-megacycle reception bandwidth. When the AM/FM modulation method was adopted in the penetrometer, an attempt was made to modify the receivers to operate in a narrower 700 kilocycle IF bandwidth. As a result,

the second IF is low in frequency, complicating the discriminator design and resulting in internal spurs in the receiver. To correct these deficiencies, development effort will include a redesign to incorporate new IF and local oscillator frequencies. After good bench performance is achieved in the modified flight design, functional testing will be extended over the full range of environmental conditions in temperature and vibration.

e. Diversity Combiner. The diversity combiner portion of the data relay is described in Performance Specification LPS-204. Diversity combination in the data relay is required to permit the use of only eight receivers rather than 16. The present design of the engineering model utilizes antenna switching diversity. This method of diversity combination is the simplest to implement and requires the least hardware. However, tradeoff studies should be conducted to evaluate alternate approaches which still appear promising, such as IF selection diversity of maximal ratio diversity, the use of 16 receivers without switching, or, as discussed earlier, the possible utilization of only a single receiving antenna with no switching required. For the purposes of this development plan it is assumed that the presently utilized antenna switching diversity combiner will continue to be utilized without major change. Hence, developmental effort is confined to packaging for flight use and evaluation of the flight design over the range of expected flight environments. Functional testing with spinning penetrometers will also be performed prior to the initiation of full-scale system tests.

f. AM Demodulator. The demodulator is described in Performance Specification LPS-206. This unit is a relatively simple circuit functioning as a full wave rectifier and filter to demodulate the incoming AM subcarrier of the penetrometer signal. The present unit in the engineering model performs well electrically and merely needs to be packaged and evaluation tested for flight use. No particular problems are foreseen in accomplishing this repackaging effort.

g. FM Subcarrier Oscillator Unit. This oscillator unit is described in Performance Specification LPS-207. The FM subcarrier unit employed in the present engineering model is a procured item which is manufactured in quantity for missile and space telemetry usage. It is believed that this unit can be qualified for flight use without modification. Evaluation testing will be performed to verify its ability to function properly over the full contemplated range of environmental conditions.

h. Transmitter. The data relay transmitter is described in Performance Specification LPS-208. This unit is a solid-state 40-watt transmitter operating in the VHF band at 260 megacycles. The brassboard unit in the engineering model performs nearly as desired and needs relatively little further electrical development. It is presently packaged in two units, one having all the low level stages up to a 10-watt output, and a separate

40-watt power amplifier driven by the 10-watt stage. If as expected, the CSM receiving antenna gain is better than presently assumed, then it may be possible to utilize only the 10-watt stage without the 40-watt final stage. In either event, the developmental effort during Phase II is largely in the repackaging of the unit and testing it to evaluate its performance over the range of anticipated environmental conditions.

i. Transmitting Antenna. The data relay transmitting antenna is described in Performance Specification LPS-209. Hemispherical coverage in an upward direction is desired to ensure communication with the orbiting CSM. A vertical monopole with a ground plane was employed in the engineering model. It is believed that this configuration will probably conflict with the configuration of the LPS probe package, and an alternate configuration is envisioned utilizing a turnstile erected on the side of the main assembly structure. Subsystem developmental testing will largely concern itself with proper matching with the transmitter and assuming ability to withstand the vibration environment. The more meaningful evaluation will occur during testing of the complete system assembled on the probe package for measurement of radiation pattern and interference effects in the actual operational configuration.

j. Power Regulator/Converter. The regulator/converter is described in Performance Specification LPS-210. The requirements for voltage regulation in the data relay are not stringent and a straightforward regulator/converter design can be utilized. No special developmental problems are contemplated for this unit, however, it must be an all new design developed or procured to meet the exact data relay requirements. The testing sequence is quite straightforward through the phases of electrical bench testing followed by functional performance under the operational environmental conditions.

k. Battery. The battery for the data relay is described in Performance Specification LPS-211. The energy requirements for operation of the data relay can be readily supplied by a sealed silver-zinc battery. These units will be procured from a reliable vendor, with a good probability of being able to use an existing sealed configuration of pile-type battery with relatively minor modifications. Batteries characteristically have been rather troublesome components in space systems, and effort will include comprehensive testing of the procured unit. Early in the program, battery units will be diverted into cycle testing and shelf-life evaluation. No great difficulty is contemplated in getting flight-type batteries to meet all functional and environmental requirements, since such requirements for the data relay are not nearly so severe as those for the penetrometer. Moreover, there is much better access to the data relay batteries, so that units can be serviced, replaced, or even placed in cold storage and installed just before installation on the launch vehicle.

1. Data Relay Assembly. The complete data relay subsystem is described in Performance Specification LPS-200. Four complete prototype data relay assemblies will be fabricated, checked out, and functionally tested. One of these units is strictly for subsystem developmental purposes, and testing of this unit must be completed prior to the final design review of a flight-type configuration. The other three assemblies are scheduled for utilization in various system test models, i.e., one each in the Functional and Environmental Test Model, the Delivery System Compatibility Test Model, and the Field Test Model. The combination of test results from these various assemblies in a variety of operational conditions should provide a high degree of confidence in the reliability of the flight-type data relay subsystem. The comments listed above under the penetrometer subsystem (Paragraph 5.1.1) covering developmental test philosophy support activities, etc., apply also to the development of the data relay subsystem.

5.1.3 STRUCTURE AND EJECTION MECHANISM

a. Ejection Mechanism. The function of the ejection mechanism is to eject each penetrometer at the desired lateral velocity of nominally 7 fps. No effort has been expended on this device under the program to date, and it cannot be well defined until completion of the overall system preliminary design. However, a simple spring ejector is contemplated. While a developmental effort is required to select the desired spring characteristics and to evaluate the functional performance of the ejector and its release mechanism, no difficult developmental problems are contemplated. Ejection functional testing will be simplified through the use of dummy penetrometer spheres of the proper mass and size. While testing will be performed under all significant environmental conditions, the more meaningful environments are expected to be vibration and retro acceleration. Two sets of prototype ejector units are planned for developmental testing, with an additional three complete sets required for assembly into the system test models as described above for the data relay.

b. Structure. The structure for the lunar penetrometer system assembly is physically pictured and described in Section 3. All other subsystems are integrated onto this structural core. The data relay subsystem is fitted into the central housing portion of the structure, the ejection mechanisms are mounted through the structural walls, and the eight penetrometers are mounted in their adaptors around the periphery of the structure.

As previously discussed, it is assumed that the preliminary design of the structure will be well-defined at the beginning of the Phase II effort. Preliminary structural design concepts will be formulated and evaluated during this earlier phase. Detailed design effort will begin with Phase II, including the analysis of a mathematical model of the spring-mass damped elements which make up the assembly. The theoretical dynamic response of these systems to imposed vibration, acceleration, and shock excitation will

be obtained by use of a dynamic analyzer digital computer program. Given a description of the assembly and statements evaluating the properties of various elements and excitations in that system, the digital program can quickly determine response data at selected points in the structure (for example, at module interfaces) in terms of accelerations, deflections, and loads. Where dictated by this evaluation, additional load isolators or vibration dampers will be incorporated into the design to reduce acceleration and stress levels to acceptable values. The digital program makes it possible to readily determine where simple changes in structural design can achieve the desired results by decoupling elements or by shifting the natural frequency to a region of low excitation in the input vibration spectrum.

A developmental prototype structure will be subjected to loading and vibration tests to verify its integrity. Compatibility with interfacing subsystems will be verified by performing a penetrometer deployment test and then antenna deployment tests with the prototype structure.

As will be described later, five structures will be required for system testing. The first system test configuration is a Structural Dynamics Model incorporating dummy subsystems to simulate the penetrometers and data relay. This model is subjected to the full range of acceleration and vibration environmental conditions. A second system configuration is the Thermal Test Model, which again utilizes a full structure but with other dummy subsystems matching the heat transfer characteristics of the overall assembly. This model will be subjected to the anticipated thermal environment expected during transit in space. The remaining three structures are delivered for incorporation into the Functional and Environmental Test Model, the Delivery System Compatibility Test Model, and the Field Test Model. The combined input from the subsystem and system tests should provide a high confidence level in the structure design.

5.2 SYSTEM DEVELOPMENT

It is a deliberate attempt of this development plan to place a heavy emphasis on system testing, predicated on the belief that conflicts and interfaces can be analyzed only approximately and that the true subsystem and interactions are only fully determined by testing the complete system assembly.

To emphasize the systems approach, a substantial systems integration effort is maintained throughout the design and development effort. System trade-off analyses will be performed to evolve the design of an optimum system to meet the mission objectives. Subsystem optimization will be subordinated to be compatible with the overall best system characteristics. Subsystem design specifications will be closely analyzed and coordinated to ensure the maintenance of compatible interfaces between subsystem elements. This systems integration effort will include close technical liaison with cognizant NASA personnel and the probe package delivery system contractor.

Subcontractor items will be controlled just as tightly as in-house developed subsystems to ensure overall system compatibility, both as to physical and functional make-up as well as schedule performance. System integration effort will also include a close control of all drawings released to ensure subsystem physical compatibility.

Systems engineers will have the over-view responsibility for all systems tests, including test planning, test direction, and post test data analysis to ensure that all such tests produce a maximum of useful data pertinent to the overall system operation. The system test master plan incorporates the assembly and testing of five distinct system models. These are designated the Structural Dynamics Model, the Thermal Test Model, the Functional and Environmental Test Model, the Delivery System Compatibility Test Model, and the Field Test Model.

5.2.1 STRUCTURAL DYNAMICS MODEL

The structural analysis approach has been described in a preceding paragraph. The validity of the computer dynamic analysis will be verified through the assembly and testing of a test model which dynamically simulates the complete lunar penetrometer system assembly. This Structural Dynamics Model will consist of a flight configuration structure complete with ejection mechanisms and antenna but with dummy modules to simulate the data relay subsystem and the eight penetrometers. The mass, center of gravity, and mounting stiffness of all dummy components will be carefully simulated in order to obtain a true representation of system dynamic characteristics. The system dynamic response will be obtained by monitoring the transmissibility response of all critical components while the entire system is subjected to the vibration spectrum prescribed at its mounting interface. This will permit an early confirmation of the environments anticipated at the mounting interfaces of various subsystems. Excessive environments will be mitigated through vibration isolation techniques; where vibration isolation is not adequate, the subsystem design will be modified to meet the new environmental conditions. The test of the Structural Dynamics Model is scheduled as early as possible in the program to allow adequate time for any such redesign.

5.2.2 THERMAL TEST MODEL

A Thermal Test Model of the complete assembly will be assembled and tested to verify the predicted flight thermal environment. To properly simulate space radiative heat transfer, all appropriate surfaces of this model will be coated with anticipated flight model finish material to match the correct solar absorbtivity and infrared emissivity characteristics. All internal heat sources will be simulated, as required. Careful simulation will permit the use of dummy modules in the data relay and dummy penetrometer spheres on the Thermal Test Model, thereby permitting its test very early in the program to verify the design thermal environment for all subsystems.

The Thermal Test Model assembly will be subjected to the anticipated range of transit thermal environments, appropriately modified by the presence of the anticipated Apollo-mounted radiative heatshield. This test must be performed in a vacuum environment to eliminate unrealistic convection heat transfer, and the radiation source must be a reasonable approximation of the solar radiation spectrum. Temperatures will be recorded at all significant modules in the assembly with particular emphasis on the electronic modules in the data relay and in the penetrometer spheres.

5.2.3 FUNCTIONAL AND ENVIRONMENTAL TEST MODEL

The first complete assembly of the lunar penetrometer system with all flight design elements is designated the Functional and Envrionmental Test Model. The assembly of this model is scheduled as early as possible in the program to provide an early evaluation of the suitability of the system design over its full range of functional and environmental requirements. All portions of the system will be functional, including eight fully functioning penetrometer spheres.

Functional testing will be initiated first with particular emphasis on interaction between subsystems. Electromagnetic interference (EMI) tests are an example of this early emphasis on subsystem interactions. EMI can be defined as any induced radiated or conducted electrical disturbance which causes undesirable responses or malfunctioning in any electrical equipment device or system. This interference may be narrow-band, generated by modulated or unmodulated CW signal sources, or broadband interference from all other EM noise or energy sources. Specifically, EMI levels must be sufficiently low to prevent any intermodulation effects between the penetrometer transmitter, the data relay receiver, and the data relay transmitter, as well as between these elements any any pyrotechnic initiators utilized in the ejection mechanism.

Functional testing will then progress into an evaluation of system performance in the expected range of flight environments. Environmental exposures will include exceleration, vibration, and vacuum. For example, antenna deployment will be tested under conditions of lunar hovering propulsion vibration and under a vacuum environment. Under somewhat restricted laboratory conditions, the complete functioning cycle of the system will be tested including the deployment of all eight penetrometers, erection of antennas, and the reception and transmission of eight simultaneous penetrometer signals.

5.2.4 DELIVERY SYSTEM COMPATIBILITY TEST MODEL

The second complete lunar penetrometer system assembly to be fabricated will be delivered to the LSP delivery system for overall system compatibility tests. Such tests are mandatory to verify that interfaces and interactions between all elements of the overall LSP probe package are

compatible. Full support will be given to the delivery vehicle contractor for the conduct of these compatibility tests. Contemplated tests include subjection to launch and retro vibration and acceleration loads, exposure to long-term (several days) solar radiation in a vacuum environment, and complete functional testing of the overall probe assembly. EMI testing will receive emphasis to determine that there are no undesirable interactions between the lunar penetrometer system, the LSP delivery vehicle, the Saturn and Apollo stages, onboard experiments, instrumentation, telemetry systems, destruct systems, ground equipment, etc. Acceptable EMI levels must be defined for the lunar petrometer system and close compliance to these levels maintained in all deliverable flight items.

The Delivery System Compatibility Test Model needs eight operational penetrometers to validly check out complete system compatibility. However, these penetrometers need not necessarily be in new condition. Accordingly, it is planned to rework four penetrometers from either the developmental prototype units and/or those from the Functional and Environmental Test Model to provide half of the complement of eight penetrometers on the Compatibility Test Model.

5.2.5 FIELD TEST MODEL

The Field Test Model is a complete lunar penetrometer system assembly and very close to flight configuration. This model will be employed to conduct functional tests under conditions simulating actual operational usage. Field tests will include deployment of all eight penetrometers from the airborne field test model at a launch altitude to produce nominal design levels of penetrometer surface impact velocity. The complete communications link will be checked out by relaying impact signals from the eight penetrometers through the data relay and on to a ground station simulation of the CSM receiving gear. A varied terrain will be selected for the test site to demonstrate the ability of the penetrometers to correctly characterize one surface material from another. It is not contemplated that the field test will indicate the need for any signficiant redesign of the flight hardware. However, the field tests are scheduled for completion prior to final assembly of the qualification test system so that minor refinements in the assembly can still be incorporated if deemed necessary. There is also a 1-1/2 month gap between the scheduled assembly of the Functional and environmental Test Model and the Field Test Model so that the latter can be upgraded to the latest flight design configuration. The field test than provides the confirmation of the flight design under simulated operational conditions prior to conducting the formal qualification tests of the flight design system.

Full documentation will be provided on all of the above outlined system testing. A master test plan will be prepared delineating and scheduling all significant development tests. Incorporated into this plan will be a development test "tree" showing the interrelations between the various tests and the feedback paths for the test results. A

detailed test plan will be prepared for each test which outlines the test objectives and describes the test content, test equipment, facilities, and hardware requirements. Accompanying the test plan is a comprehensive test procedure detailing each step required in the execution of the test plan. Test plans are prepared by the assigned Systems Engineer in conjunction with the Test Engineer and must be approved by the Program Engineer. Test Procedures are prepared by the Test Engineer and must be approved by the Systems Engineer. Immediately following the conduct of the test, a Test Report is issued by the Test Engineer presenting all data output. A follow-up test analysis report is then issued by the Systems Engineer, Test Engineer, and any appropriate subsystem cognizant engineers, presenting an analysis and interpretation of the test results, listing conclusions, and detailing the indicated modifications required in the system and/or subsystem design.

Reliability engineers will monitor all system development tests and will submit independent analyses of the test results and recommendations for system design improvements.

5.3 FACILITY REQUIREMENTS

Specific facility requirements will be detailed in each test plan prepared during the development program. General facility requirements are as follows:

5.3.1 ACCELERATION

Acceleration loads will be simulated first by static compression loading and secondly by centrifuge testing. It is planned that the lunar penetrometer system contractor will do centrifuge testing of only individual subsystems, thereby reducing the facility requirements to a relatively small centrifuge. Full-scale testing on a large centrifuge facility will be the responsibility of the LSP delivery vehicle contractor. The Delivery System Compatibility Test Model is provided for this purpose.

5.3.2 VIBRATION

A medium-sized shaker facility is required to accommodate testing of the complete lunar penetrometer system assembly at vibration levels greater than the 3-sigma stress levels predicted for actual flight. A control console capable of both sinusoidal and random noise input is required. These facilities are standard and no special requirements are envisioned.

5.3.3 SHOCK

The principal shock environment is associated with the penetrometer impacting on the lunar surface. A launcher (e.g., the HYGE) is required capable of accelerating at least five pounds up to a velocity of 250 fps for impact against a rigid surface. No shock facility is required for the complete system assembly.

5.3.4 VACUUM

To truly simulate the space environment it would be desirable to have a vacuum chamber capable of exposing the complete assembly to an environmental pressure of less than 10^{-12} mm of mercury. However, due to the size and outgassing nature of the assembly, this is not deemed a practical system requirement. A more practical requirement for the vacuum facility is for one that will expose the assembly to a pressure of 10^{-4} mm or mercury or less. Any good quality vacuum facility can provide this pressure.

5.3.5 TEMPERATURE

A solar simulation source is required for thermal tests on conjunction with testing in the vacuum facility. Exact simulation of both energy level and solar radiation spectrum is very difficult to achieve with uniformity over an area sufficient to encompass the lunar penetrometer system assembly. However, the penetrometer system is not expected to be particularly sensitive to the thermal environment and, hence a solar simulator producing a reasonable approximation of the solar spectrum in the more critical wavelengths will be adequate for this program. Further analysis may show tungsten or quartz lanps to suffice rather than the more complex mercury/xenon arrangements.

Inherent in the above outlined developmental effort is the execution of design drawings for the subsystems and system assembly. Major design milestones include the formal design reviews on the preliminary design, the prototype design, and the flight design for both subsystems and the overall system assembly. These are among the more important milestones of the program schedule and feature participation by all activities concerned with the lunar penetrometer system including engineering, manufacturing, cost analysis, reliability assessment, procurement, vendor control, and quality control. All developmental test results are assessed in the design review meetings to ensure the development of the most reliable system to meet all mission design objectives.

SECTION 6

QUALIFICATION AND ACCEPTANCE TEST PLANS

6.1 QUALIFICATION TEST PLAN

Qualification tests will be performed to insure and demonstrate the satisfactory design and manufacture of equipment for operational use. A detailed qualification test plan will be prepared and submitted for approval 45 days before the scheduled start of qualification testing. The plan will be in conformance with Section 4.3 (Qualification Tests) of NASA Quality Control Specification NPC 200-2. The penetrometer, data relay, and structure/eject mechanism are units that will be subjected to qualification testing. Representative production units will be subjected to acceptance tests (as indicated in Section 9 of this report) prior to the qualification tests specified in the qualification test plan.

Quality Control will inspect and verify conformance of configuration of all samples allocated to qualification testing. All qualification test procedures will be reviewed by Quality Control to assure, as a minimum, that required equipment is designated that characteristics to be verified are clearly designated, that tolerances are specified, and that the format of data sheets is adequate to show objective evidence of the results of all tests. Inspection will witness all qualification tests but no tests will be run unless an approved test procedure exists. Inspection will verify the results of all tests and will certify the test data sheets.

The qualification test plan will include the functional tests to be performed before, during, and/or after exposure to the environments. The functional tests will include those necessary to verify the performance requirements of the respective subsystem design specifications.

The environments to which the test items will be subjected are laboratory simulations of the expected worst case environments of prelaunch, launch, midcourse, deployment, and lunar impact.

The environments to which each of various subsystems will be exposed are as shown in the matrix below:

	Sample Size	Humidity	Vibration	Temperature (Operating)	Acceleration	Impact Shock (Operating)
Penetrometer	8	X	X	X		X
Data Relay Station	3	X		X	X	
Structure and Eject Mechanism	1	X		X	X	

In addition to these subsystem qualification tests, the entire system assembly will be qualified by thorough functional testing following exposure to the design level of vibration.

The environmental criteria is as follows:

(1) Humidity per MIL STD 810, Method 507

(2) Vibration in each of 3 orthogonal axes

(a) Sine - 10 grms constant octave sweep in 5 minutes, 5 to 2000 cps, limited to $\pm$0.1 inch amplitude.

(b) Random - 10 grms, band limited white noise for 5 minutes, 100 to 2000 cps.

(3) Temperature - 32F to 100F

(4) Impact Shock

(a) Impact normal to a hard, flat unyielding surface at 200 feet per second.

(b) Hyge thrusting and retaining shock at 450 g.

(5) Acceleration - constant 15 g, 5 minutes per direction per axis.

6.2 ACCEPTANCE TEST PLAN

Acceptance tests will be conducted on equipment to be delivered for qualification tests and flight. These tests are performed to ensure that the flight items have been fabricated and assembled per design and to assure the quality of workmanship, i.e., to discover faults and weaknesses which could potentially lead to failure during flight. These tests must be at a nondamaging level and are primarily low level vibration and functional performance tests on deliverable flight hardware.

Forty-five days prior to the start of qualification test deliveries of hardware, a detailed acceptance test plan will be prepared in conformance with Section 7.4 (Inspection and Test Performance) of NASA Quality Control Specification NPC 200-2. The quality control functions for acceptance will be as outlined in the preceding paragraphs describing quality testing and in Section 9 of this program plan which describes the reliability and quality assurance plans.

The detailed acceptance test plan will include the following:

(1) Acceptance inspection requirements

(2) Functional tests to verify the requirements of Section 3 of the design specification

(3) Vibration tests of the penetrometer and data relay station at 5 g peak to peak limited to $\pm$ 0.1 inch amplitude. The test will be a constant octave sweep in five minutes, from 5 to 2000 cps.

Prior to start of acceptance testing, customer approval will be obtained on this detailed test plan.

SECTION 7

MANUFACTURING PLAN

7.1 INTRODUCTION

This section describes techniques, considerations, and methods required to produce the following items of the lunar penetrometer system:

(1) Penetrometers (including impact limiter)

(2) Data relay

(3) Ejection mechanism

(4) AGE

A brief discussion of these items from a manufacturing standpoint follows.

a. Penetrometer. This assembly consists of many small mechanical details and electronic subassemblies which are assembled into the final penetrometer assembly. This final penetrometer assembly is encased by a balsa impact limiter.

All mechanical details are normal type components, fabricated and assembled with conventional shop equipment. Special tooling will be required to maintain engineering tolerances.

All electronic components can be fabricated and assembled in a standard electronic area. Subassemblies will be tested at this level to ensure proper function in the final assembly stages. Encapsulation of components will be accomplished with special welded module encapsulation molds. An assembly sequence for the lunar penetrometer is shown in Figure 7-1.

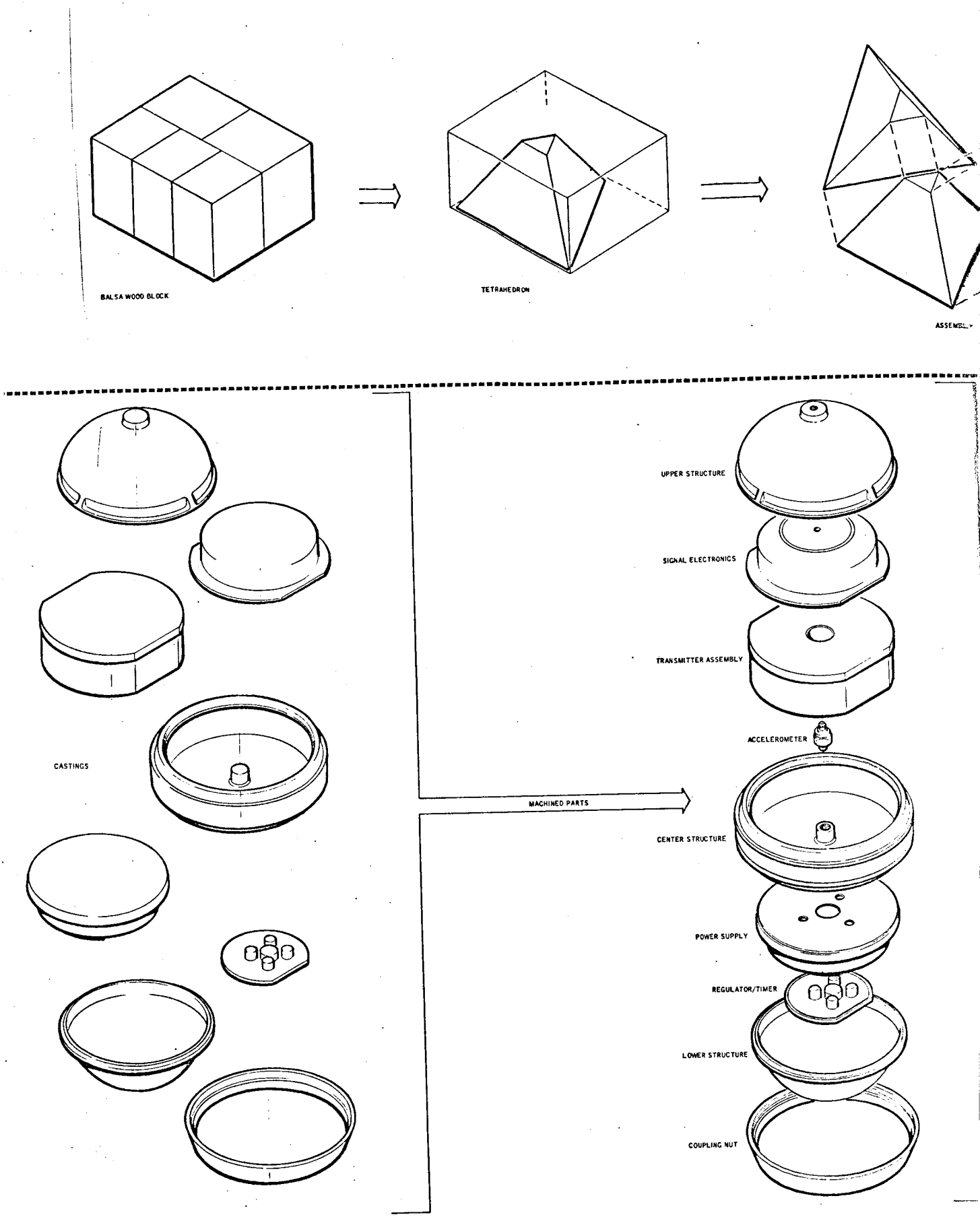

FIGURE 7-1. ASSEMBLY SEQUENCE

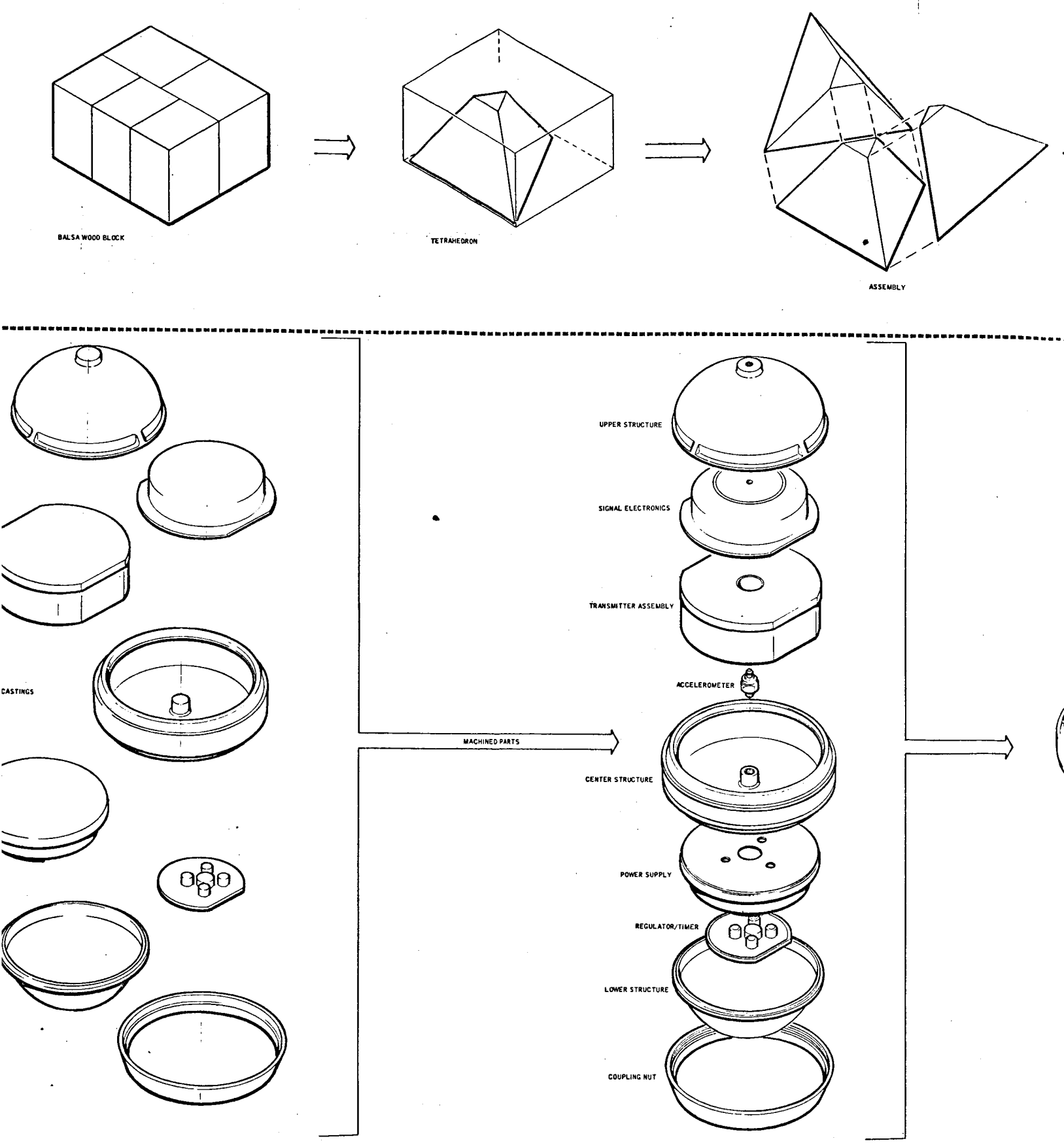

JRE 7-1. ASSEMBLY SEQUENCE

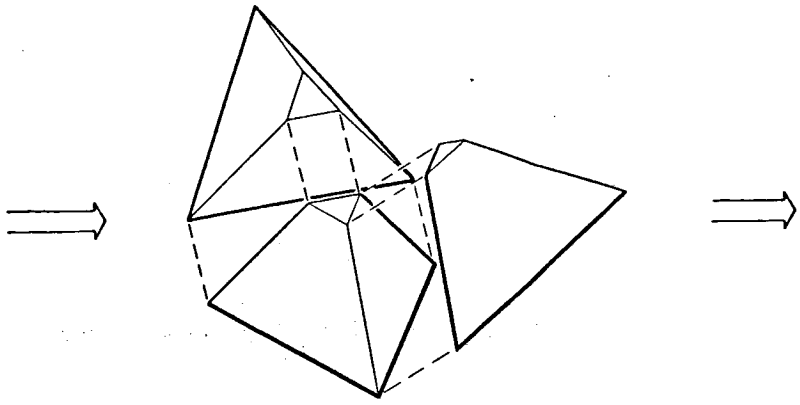

ASSEMBLY

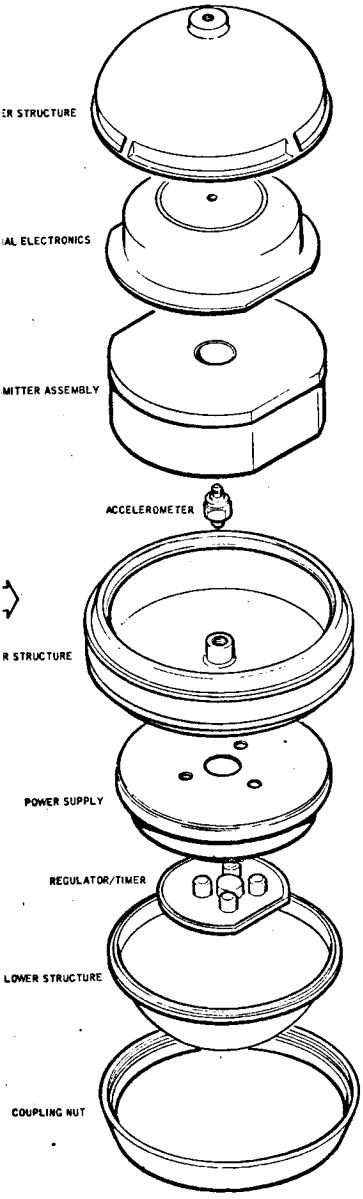

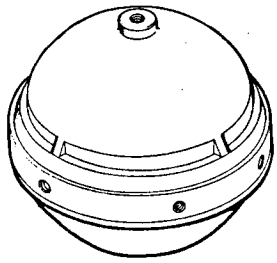

TELEMETRY ASSEMBLY

LUNAR PENETROMETER ASSEMBLY

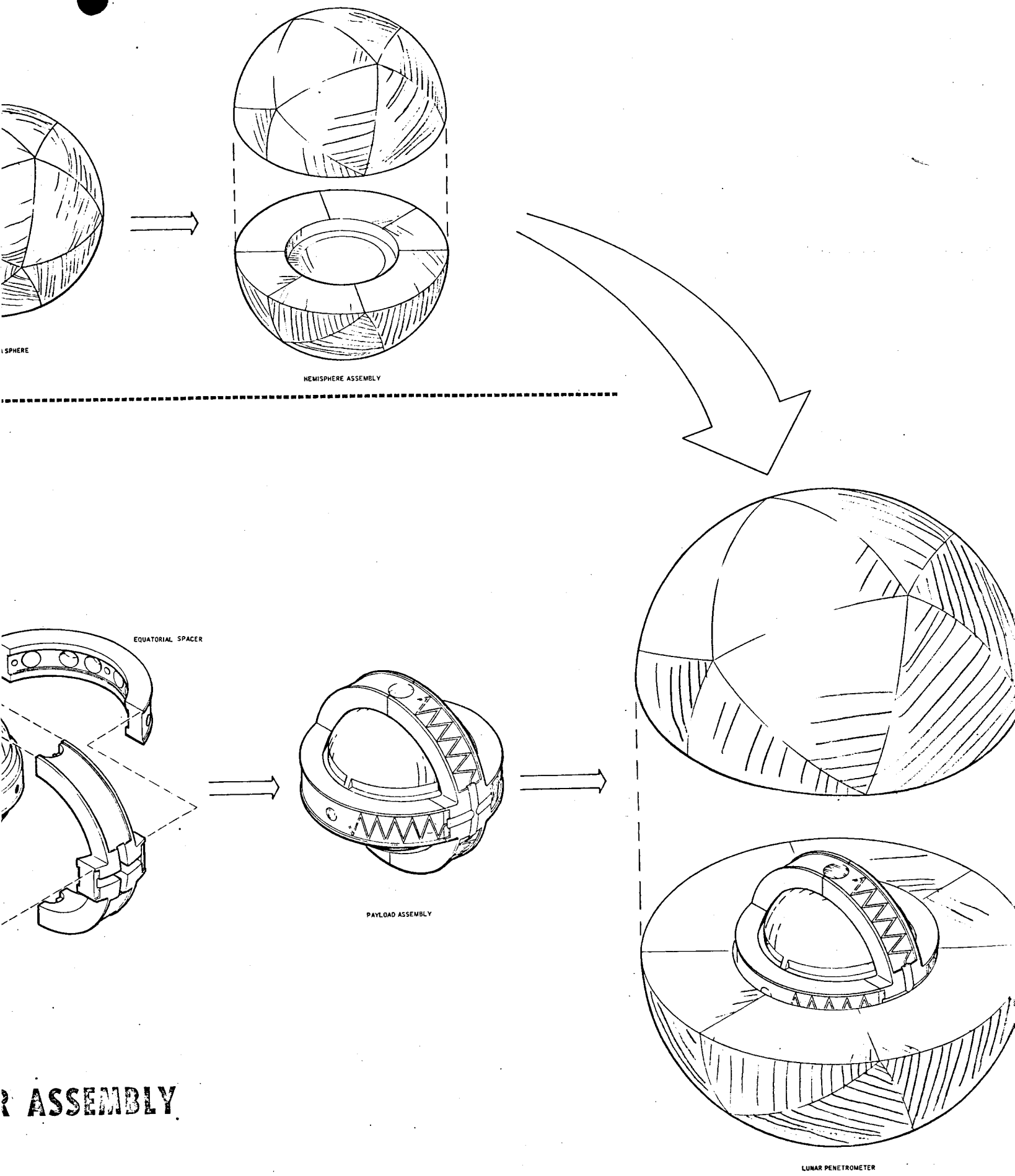

FIGURE 7-1. ASSEMBLY SEQUENCE (CONT.)

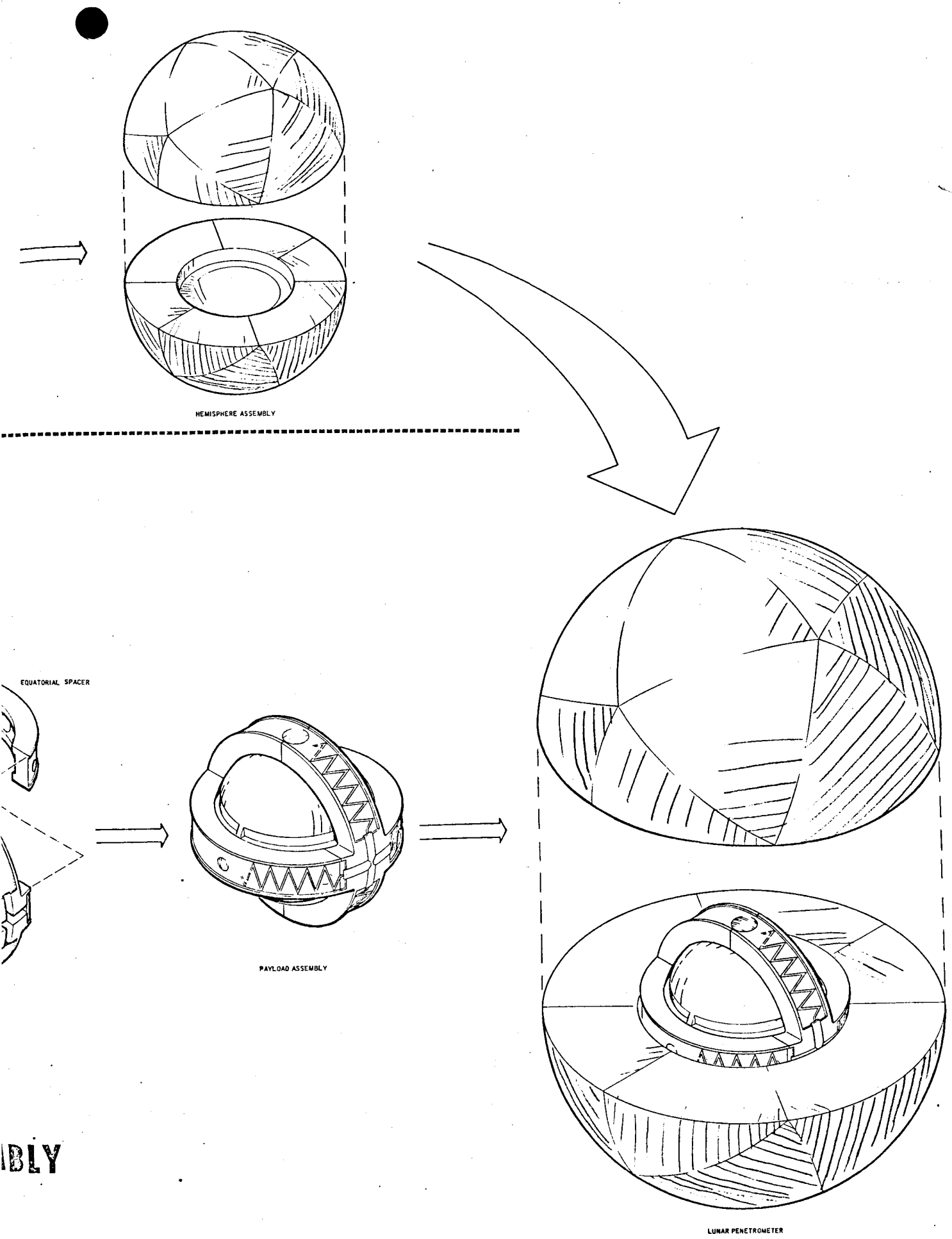

FIGURE 7-1. ASSEMBLY SEQUENCE (CONT.)

b. Data Relay. This assembly consists of standard electronics. Conventional techniques such as simple and complex wiring of component boards and internal harnesses will be utilized during assembly.

Electronic subassembly will be performed at work stations utilizing location fixtures for positioning of components. Any required encapsulation will be performed utilizing normal techniques. Also, minimal special tooling is required to maintain engineering tolerances.

Subassemblies will be tested at this level to ensure proper function in the final assembly. All mechanical fabrication can be done in a conventional shop.

c. Ejection Mechanism. The detail components of the ejection mechanism can be fabricated by conventional techniques. General purpose standard precision machines, equipment, and special tooling will be utilized in cutting forming and shaping components. No fabrication problems are anticipated in this area.

d. AGE. The AGE equipment consists of complete consoles and panels assembled together for checkout of the penetrometer and data relay. These consoles, panels, boxes and cables will be fabricated and assembled in both mechanical and electrical shops. All detail components will require testing prior to final assembly and checkout.

There are no operations in the fabrication and assembly of this equipment that will require any special equipment, tooling or checkout equipment.

Inasmuch as development remains to be accomplished on the above items, the detailed manufacturing plans will be prepared toward the latter part of the development phases for the items. Under Aeronutronic Contract NAS1-4923, development was accomplished on the penetrometer and data relay in which prototype penetrometers were built and a data relay breadboarded. No development was performed on the AGE or ejection mechanism.

7.2 EQUIPMENT AND TOOLING

An equipment and tooling list covering the lunar penetrometer system is given in Table 7-1.

TABLE 7.1

EQUIPMENT AND TOOLING LIST

EQUIPMENT LIST	TOOLING LIST
Probe Sleeve	Hemisphere Assembly
Engine Lathe	Holding Fixture
Hemisphere Assembly	Lathe Fixture
Band Saw	Template
Tracer Lathe	Holding Fixture
Dumore Ground Attachment	Lathe Fixture
Lucas Horizontal Boring Mill	Template
No. 3 Horizontal Mill	Tetrahedron
Rotary Table	Holding Fixture
Tracer Lathe	Payload Assembly
Icosahedron Assembly	Assembly Fixture
Oven	Lower Structure (Machining)
Tetrahedron	Soft Jaws
Table Saw	Tracer Template
Lower Structure (Machining)	Soft Jaws
Turret Lathe	Tracer Template
Turret Lathe	Coupling Nut
Coupling Nut	Soft Jaws
Turret Lathe	Turn Fixture
Engine Lathe	Mill Fixture
Engine Lathe	Spacer Retainer
No. 2 Vertical Mill	Soft Jaws
Spacer Retainer	Upper Structure (Machining)
Turret Lathe	Soft Jaws
Turret Lathe	Tracer Template
	Soft Jaws
	Tracer Template
	Soft Jaws
	Mill Fixture

TABLE 7.1 (Continued)

EQUIPMENT LIST

Upper Structure

Turret Lathe
Turret Lathe
Engine Lathe
No. 3 Vertical Mill
Hartford Superspacer

Center Structure

Hardinge Chucker
Hardinge Chucker
Engine Lathe
Engine Lathe
No. 2 Horizontal Mill
Hartford Superspacer
No. 2 Vertical Mill
4 SPDL Drill

Accelerometer Adapter

Turret Lathe
Turret Lathe
S.S. Drill Press
Tanks

Accelerometer Nut

Turret Lathe
No. 2 Vertical Mill
Hartford Superspacer
Tanks

Antenna Loop Shield Assembly

No. 2 Horizontal Mill
S.S. Drill

Upper Shield

No. 2 Vertical Mill
No. 2 Vertical Mill
4 SPDL Drill

TOOLING LIST

Center Structure (Machining)

Soft Jaws
Soft Jaws
Comparator Chart
Soft Jaws
THD Gage
Soft Jaws
THD Ring Gage
Mill Fixture
Mill Fixture
Indexing Drill Jig
Drill Plate

Accelerometer Adapter

Soft Jaws
Split Ring
Drill Fixture

Antenna Loop Shield Assembly

Drill Jig

Upper Shield

Specification Vise Jaws
Drill Jig

Lower Shield

Specification Vise Jaws
Template
Drill Jig

Housing (Machining)

Soft Jaws
Mill Fixture
Turn Fixture
Drill Jig

Housing Plug

Drill Jig

TABLE 7.1 (Continued)

EQUIPMENT LIST

Lower Shield

No. 2 Vertical Mill
Tracer Mill
4 SPDL Drill

Housing (Machining)

Turret Lathe
No. 2 Horizontal Mill
Turret Lathe
2 SPDL Drill
Tanks

Housing Plug

Engine Lathe
6 SPDL Drill
Tanks

Spacer

Hardinge Chucker

Signal Adapter

Band Saw
Hardinge Chucker
Hardinge Chucker
No. 2 Vertical Mill

Signal Board No. 1

Assembly Station and Tools
Assembly Station and Tools
Flow or Dip Facility
Test Console

Signal Board No. 2

Assembly Station and Tools
Assembly Station and Tools
Flow or Dip Facility
Test Console

TOOLING LIST

Signal Adapter

Soft Jaws
Holding Fixture

Oscillator Cover

Lathe Fixture
Mill Fixture
Mill Fixture
Template
Drill Jig

Transmitter Cover

Lathe Fixture
Mill Fixture
Drill Jig

Shield

Lathe Fixture
Mill Fixture
Template
Drill Plate

Housing (Machining)

Mill Fixture
Lathe Fixture
Mill Fixture
Box Drill Jig

Oscillator Insert

Lathe Fixture
Mill Fixture
Specification Vise Jaws
Mill Fixture
Drill Jig

Buffer Insert

Lathe Fixture
Mill Fixture
Template
Specification Vise Jaws
Drill Jig

TABLE 7.1 (Continued)

EQUIPMENT LIST

Oscillator Cover

Lathe
No. 2 Horizontal Mill
Rotary Table
Tracer Mill
2 SPDL Drill
Tanks

Transmitter Cover

Lathe
No. 2 Horizontal Mill
Rotary Table
2 SPDL Drill
Tanks

Shield

Turret Lathe
Tracer Mill
2 SPDL Drill

Oscillator Buffer Assembly

Assembly Station and Tools
Assembly Station and Tools
Assembly Station and Tools
Test Console

Housing (Machining)

No. 2 Vertical Mill
No. 2 Horizontal Mill
Turret Lathe
No. 2 Vertical Mill
Rotary Table
6 SPDL Drill
Tanks

Oscillator Insert

Engine Lathe
No. 2 Horizontal Mill
Rotary Table
No. 2 Horizontal Mill
No. 2 Vertical Mill
6 SPDL Drill

TOOLING LIST

Housing (Machining)

Mill Fixture
Lathe Fixture
Mill Fixture
Box Drill Jig
Mill Fixture

Quad Insert

Lathe Fixture
Mill Fixture
Specification Vise Jaws
Drill Jig

Amplifier Insert

Lathe Fixture
Mill Fixture
Specification Vise Jaws
Drill Jig

Upper Housing

Drill Jig
Lathe Fixture
Soft Jaws
Mill Fixture

Battery Insulator

Template
Full Size Template

Battery Insulator

Template
Full Size Template

Center Housing

Drill Jig
Lathe Fixture
Mill Fixture
Drill Jig

TABLE 7.1 (Continued)

EQUIPMENT LIST

Buffer Insert

Engine Lathe
No. 2 Horizontal Mill
Rotary Table
No. 2 Horizontal Mill
No. 2 Horizontal Mill
6 SPDL Drill

Quadrupler Assembly

Assembly Station and Tools
Assembly Station and Tools
Assembly Station and Tools
Test Console

Housing (Machining)

No. 2 Vertical Mill
No. 2 Horizontal Mill
Turret Lathe
No. 2 Vertical Mill
6 SPDL Drill
No. 2 Vertical Mill
Tanks

Quad Insert

Engine Lathe
No. 2 Horizontal Mill
Rotary Table
No. 2 Horizontal Mill
6 SPDL Drill

Amplifier Insert

Engine Lathe
No. 2 Horizontal Mill
Rotary Table
No. 2 Horizontal Mill
6 SPDL Drill

TOOLING LIST

Battery Insulator

Full Size Template

Lower Housing

Drill Jig
Turn Fixture
Mill Fixture
Mill Fixture

Diverted Feed Loop Assembly

Mold (Existing)

"H" Section Assembly

Drill Jig

Upper "H" Section

Drill Jig

Lower "H" Section

Drill Jig

TABLE 7.1 (Continued)

EQUIPMENT LIST

Upper Housing

6 SPDL Drill
Engine Lathe
Engine Lathe
No. 3 Vertical Mill
Rotary Table

Battery Insulator

Shear
Weidemann

Battery Insulator

Shear
Weidemann

Center Housing

No. 2 Vertical Mill
4 SPDL Drill
Engine Lathe
No. 2 Horizontal Mill
No. 3 Vertical Mill
Rotary Table
6 SPDL Drill

Lower Housing

No. 2 Vertical Mill
No. 2 Vertical Mill
4 SPDL Drill
Engine Lathe
No. 2 Horizontal Mill
No. 3 Vertical Mill
Rotary Table

Assembly Timer Board

Pigtailer
Assembly Station and Tools
Flow and Dip Facility
Test Stand

TABLE 7.1 (Continued)

EQUIPMENT LIST

Hybrid Network Assembly

Assembly Station and Tools
Assembly Station and Tools
Assembly Station and Tools
Meter

"H" Section Assembly

Tanks

Upper "H" Section

Vertical Mill
S.S. Drill

Lower "H" Section

Vertical Mill
S.S. Drill

The following is a list of the tooling and assembly fixtures which will be required for the fabrication of the balsa wood impact limiter.

Quantity	Description
1	Indexing saw fixture
1	Saw gage fixture
1	Template, O. D.
1	Lathe fixture
1	Holding fixture
1	Cutter
1	Template, I. D.
1	Saw fixture

7.3 SETBACK CHARTS

A setback chart, Figure 7-2, portrays the total and individual lead time required from procurement of raw material and hardware through fabrication, subassembly, assembly, test, and delivery. This chart is compatible to the schedules given in Section 11.

Particular attention should be paid to procurement of several long lead items which must be defined and ordered very early in the program or as soon as a firm definition is available.

The dates indicated in the setback charts depict a typical lead time requirement for procurement, fabrication, subassembly if all previous milestones are met earlier in the program such as drawing release per schedule, advance material requisitions for long lead items and the availability of hardware is still available in the time spans indicated.

7.4 MAKE-OR-BUY LIST

A typical make-or-buy list for the lunar penetrometer program is presented in Table 7.2. This make-or-buy list is compatible with the schedules given in Section 11.

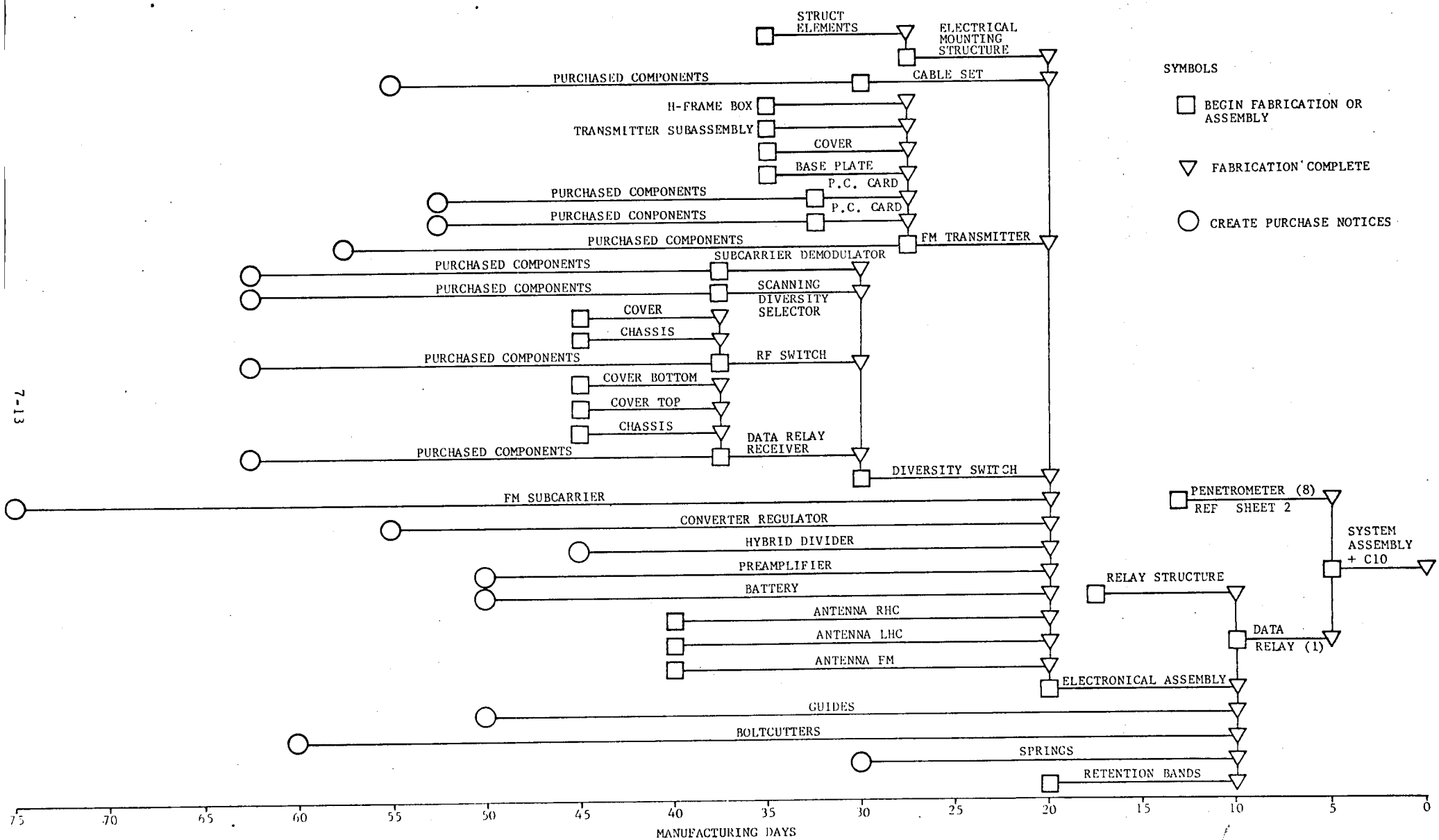

FIGURE 7-2. SET BACK CHART

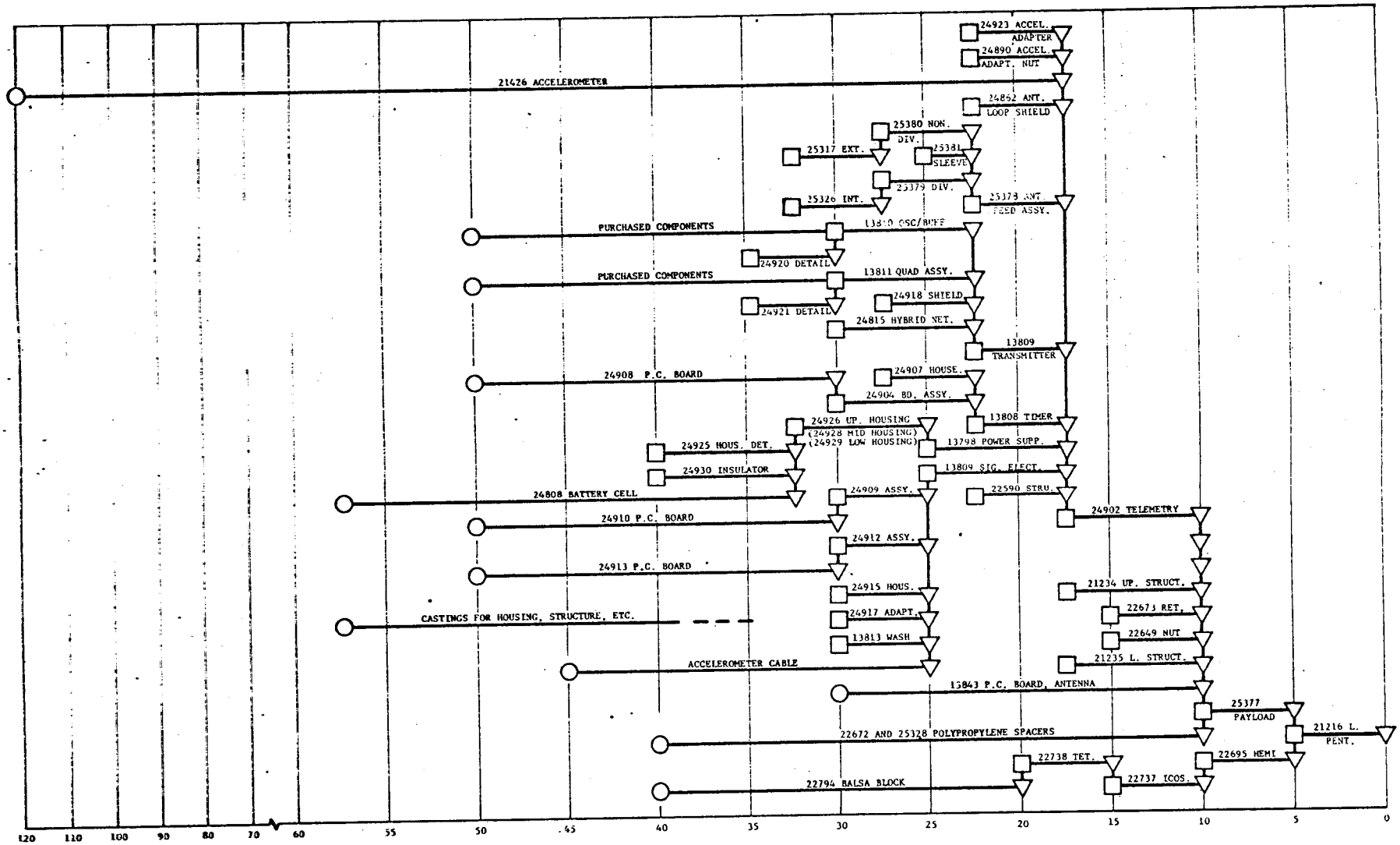

FIGURE 7-2. SET BACK CHART (CONT.)

TABLE 7-2

MAKE OR BUY STRUCTURE

LUNAR PENETROMETER

Part Description	Quantity	Make	Buy
Lunar Penetrometer Assembly	1	X	
Hemisphere Assembly	2	X	
Icosahedron Assembly	1	X	
Tetrahedron	20	X	
Balsa Wood Block	20		X
Payload Assembly	1	X	
Telemetry Assembly	1	X	
Center Structure (Machining)	1	X	
Center Structure (Casting)	1		X
Signal Electrical Assembly	1	X	
Housing (Machining)	1	X	
Housing (Casting)	1		X
Housing Plug	1	X	
Washer	1		X
Spacer	5	X	
Signal Adapter	1	X	
Signal Board Assembly No. 1	1	X	
Signal Board No. 1	1		X
Signal Board Assembly No. 2	1	X	
Signal Board No. 2	1		X
Transmitter Assembly	1	X	
Oscillator Buffer Assembly	1	X	
Housing (Machining)	1	X	
Housing (Casting)	1		X
Oscillator Insert	1	X	
Buffer Insert	1	X	

TABLE 7.2 (Continued)

Part Description	Quantity	Make	Buy
Quadrupler Assembly	1	X	
Housing (Machining)	1	X	
Housing (Casting)	1		X
Quad Insert	1	X	
Amplifier Insert	1	X	
Oscillator Cover	1	X	
Transmitter Cover	1	X	
Shield	1	X	
Power Supply Assembly	1	X	
Upper Battery Subassembly	1	X	
Upper Housing	1	X	
Insulator	1	X	
Insulator	1	X	
Battery Cell	2		X
Battery Cell	10		X
Center Battery Subassembly	1	X	
Center Housing	1	X	
Insulator	1	X	
Battery Cell	8		X
Lower Battery Subassembly	1	X	
Lower Housing	1	X	
Battery Cell	5		X
Timer Regulator Assembly	1	X	
Timer Housing	1		X
Timer Board Assembly	1	X	
Timer Board	1		X
Accelerometer Assembly	1		X
Accelerometer Adapter	1	X	
Accelerometer Nut	1	X	

TABLE 7.2 (Continued)

Part Description	Quantity	Make	Buy
Shield Assembly	1	X	
Upper Shield	1	X	
Lower Shield	1	X	
Antenna Feed Assembly	1	X	
Diverted Feed Loop Assembly	1	X	
Interior Feed Loop	1		X
Nondiverted Feed Loop Assembly	1	X	
Exterior Feed Loop	1		X
Insulating Sleeve	1		X
Hybrid Network Assembly	1	X	
"H" Section Assembly	1	X	
Upper "H" Section	1	X	
Lower "H" Section	1	X	
Lower Structure (Machining)	1	X	
Lower Structure (Casting)	1		X
Coupling Nut	1	X	
Meridional Spacer	1		X
Meridional Spacer	1		X
Equatorial Spacer	2		X
Spacer Retainer	2	X	
Antenna Assembly	2		X
Upper Structure (Machining)	1	X	
Upper Structure (Casting)	1		X
Probe Sleeve	2	X	
Signal Probe Assembly	1		X
Battery Charge Probe Assembly	1		X

TABLE 7.2 (Continued)

DATA RELAY ASSEMBLY

Part Description	Quantity	Make	Buy
Data Relay Assembly	1	X	
Antenna RHC	1	X	
Antenna LHC	1	X	
Antenna FM	1	X	
Preamp 300 to 600 Mc	2		X
Hybrid Divider	2		X
Battery	1		X
Converter Regulator	1		X
FM Subcarrier Unit	1		X
Diversity Switch Assembly	1	X	
FM Transmitter	1	X	
Cable Set	1	X	
Diversity Switch Assembly	1	X	
Data Relay Receiver	8	X	
RF Switch	8	X	
Scanning Diversity Selector	8	X	
Subcarrier Demodulator	8	X	
Data Relay Receiver	1	X	
Chassis	1	X	
Cover Top	1	X	
Cover Bottom	1	X	
Transistor	6		X
Transistor	7		X
Capacitors	14		X
Capacitors	22		X
Capacitor Trimmer	14		X
Filtercoms	5		X
Diode	2		X

TABLE 7.2 (Continued)

Part Description	Quantity	Make	Buy
Xtals	2		X
Video Amp	3		X
Toroid Coil	2		X
Toroid Coil	1		X
Toroid	12		X
Toroid	1		X
Potentiometers	1		X
Connectors	5		X
Resistors	24		X
Miscellaneous Electrical Hardware	1 set		X
Standard Attach Hardware	1 set		X
RF Switch	1	X	
Chassis	1	X	
Cover	1	X	
Capacitor	8		X
Choke RF	6		X
Diode	2		X
Resistors	4		X
Diode Zener	2		X
Connectors RF	3		X
Filtercoms	3		X
Miscellaneous Electrical Hardware	1 set		X
Standard Attach Hardware	1 set		X
Scanning Diversity Selector	1	X	
PC Board	1		X
Flip Flop	1		X
Resistor	24		X
Capacitor	17		X
Diode	4		X

TABLE 7.2 (Continued)

Part Description	Quantity	Make	Buy
Transistor	3		X
Transistor	1		X
Coils	2		X
Potentiometers Variable	2		X
TO-S Type IC	2		X
Miscellaneous Electrical Hardware	1 set		X
Standard Attach Hardware	1 set		X
Subcarrier Demodulator	1	X	
PC Board	1		X
Diode	4		X
Capacitor	17		X
Resistors	27		X
Variable Choke	2		X
Resistor Variable	4		X
TO-S Type IC	3		X
Transistor	1		X
Transistor	1		X
Transistor	1		X
Miscellaneous Electrical Hardware	1 set		X
Standard Attach Hardware	1 set		X
FM Transmitter	1	X	
Base Plate	1	X	
Cover	1	X	
PC Card Assembly	1	X	
PC Card Assembly	1	X	
Connector	6		X
Transmitter Subassembly	1	X	
H Frame Box	1	X	
Covers	4	X	

TABLE 7.2 (Continued)

Part Description	Quantity	Make	Buy
Transistor	4		X
Transistor	6		X
Transistor	2		X
Transistor	2		X
Transistor	1		X
Transistor	2		X
Transistor	2		X
Transistor	6		X
Capacitor Variable	25		X
Capacitor Bypass	50		X
Capacitor Tuning	60		X
RF Chokes	20		X
Crystal Quartz	1		X
Toroidal Forms	30		X
Coax Jacks	6		X
RFI Filters	10		X
Diode Zener	3		X
RF Diode	1		X
Resistor	150		X
Amplifier	1		X
RF Gasket	5 ft		X
Term Teflon	100		X
Power Connector	1		X
Miscellaneous Electrical Hardware	1 set		X
Standard Attach Hardware	1 set		X
Cable Set	1		X
Connectors	192		X
Coax Wire	1400 ft		X
Coax Wire	5 ft		X

SECTION 8

AEROSPACE GROUND EQUIPMENT (AGE) AND FACTORY SUPPORT EQUIPMENT (FSE)

FSE is defined as that tooling and special equipment required only at the factory for all fabrication, assembly, and testing. AGE is defined as the special equipment required at the launch site, for the purposes of functioning, calibrating, monitoring, and physical loading of the penetrometers in the Launch Mechanism and handling the LSP. AGE shall also include shipping containers. Duplicate AGE used at the factory site will not be considered as FSE.

A detailed investigation of the preliminary hardware design and the factory-to-launch sequence has enabled certain pieces of FSE and AGE to be defined. Additional study and further flight hardware definition during the design phase will be used to completely define all special equipment for this program. Preliminary lists of FSE and AGE have been developed using the following methods.

8.1 REQUIREMENTS AND INTERFACE CONSTRAINTS

8.1.1 AGE

The AGE requirements were defined using an operational analysis of the factory-to-launch sequence (see Table 8.1). Basic assumptions which contributed to the AGE definition were: (1) tests on the telemetry transmitters and related systems will be limited to ascertaining that the system is radiating and not be concerned with the level of radiation; (2) a penetrometer, data relay and system check will be made upon receipt of each assembly at AMR to determine operational readiness and not operational values; (3) testing beyond continuity checks will be held to a minimum; (4) confirmation checks of vehicle readiness will be conducted only at the

TABLE 8.1

GENERAL TASK ACTIVITY AND TYPE OF EQUIPMENT REQUIRED

Task	Activity	Class AGE	Class FSE	Type of Equipment Required
Fabrication and Assembly	1. Machining, molding		X	1. Tooling - gages, molds, dies, holding and clamping devices, assembly fixtures.
	2. Bonding, welding, fastening, wiring, installation.		X	2. Handling fixtures.
			X	3. Electrical checkout equipment.
	3. Assembly, handling.		X	4. Test fixtures.
	4. In-process tests.			
Development	1. Produce development hardware.		X	1. Breadboards, mockups, dummies.
			X	2. Environmental test fixtures.
	2. Development tests.	X	X	3. Electrical checkout equipment.
	3. Handling.	X	X	4. Test fixtures.
			X	5. Handling fixtures.
Acceptance	1. Environmental tests.	X	X	1. Environmental test fixtures.
	2. Functional.		X	2. Electrical checkout equipment.
	3. Handling.	X	X	3. Mechanical test fixture.
			X	4. Handling fixtures.
Environmental Tests	1. Environmental.		X	1. Environmental test fixtures.
	2. Functional checkout.	X	X	2. Electrical checkout equipment.
	3. Handling.	X	X	3. Mechanical test fixtures.
			X	4. Handling fixtures.
Transport	1. Protection during shipping.	X		1. Containers with support structure and shock absorbing material.
	2. Storage.	X		
Offsite (Aerojet/NAA, AMR)	1. Functional checkout.	X		1. Electrical checkout equipment.
	2. Handling.	X		2. Handling fixtures.

Assembly area; (5) LPS contractor will not perform checkout during the countdown; (6) charging of the batteries will be provided for and will be used on an "as required" basis only; and (7) maintenance or major repair to the data relay station which required disassembly will require returning the assembly to the factory.

These assumptions are consistent with the testing philosophy adopted for the program and will assure confidence in the hardware and yet minimize the size and complexity of the AGE console at AMR. The mechanical and electrical AGE required for this program are defined and discussed below:

a. Mechanical AGE. Physical handling of the vehicle must be provided for throughout the activities. The requirements are lifting, positioning, and providing limited mobility. The interface constraints consist of (1) the LPS configuration, (2) the position of the center of gravity, and (3) careful handling of the LPS to avoid damage to penetrometers, retaining straps and system electronics.

In examining the requirements and the constraints, equipment concepts have been generated which meet the objectives. A handling fixture which mates with the vehicle at its center of gravity constitututes the basic adapting hardware. This fixture, when assembled to a hoisting yoke, can be connected to a hoisting device for lifting the vehicle in a horizontal or vertical position. The vehicle assembled in handling fixture may be installed on a maintenance dolly which will provide for positioning and limited mobility. A preliminary list of AGE, including description and use is shown in Table 8.2.

b. Electrical AGE. Three types of tests which require AGE equipment will be performed at offsite areas (Aerojet/NAA and AMR). They are:

(1) Penetrometer and data relay tests upon receipt of the parts;

(2) System readiness after the LPS has been assembled;

(3) Continuity checks after the vehicle is mated to the lunar delivery system.

Each test below will be performed in the sequence described. Before proceeding to an advanced test, it will be required that the LPS Subsystem successfully complete the previous tests. If a failure is detected, the LPS subsystem (penetrometer, data relay or launch mechanism) will be shipped back to LPS contractor's facility for repair (minor adjustments or repairs may be made at the discretion of the Senior Engineer under Q.C. surveillance).

TABLE 8.2

DESCRIPTION AND FUNCTION OF MECHANICAL AGE AND FSE

Item	Description	Function
1. LPS Dolly Adapter	Mates with LPS and also with rail dolly. Provides means of rotating LPS through 360 degrees.	Used in conjunction with the rail dolly during assembly and transportation of the LPS.
2. LPS Rail Dolly	Standard rail dolly with large size casters.	Used to transport LPS inside buildings.
3. LPS Transport Trailer	Standard rail dolly with large rubber-tired wheels.	Used for in-plant transport of LPS (used in conjunction with dolly adapter).
4. LPS System Sling	Consists of shackle, cross bar, cables, and PLS attach bracketry.	Used to handle, position and lift the LPS during assembly, environmental tests, preparation for shipping, and during mating with CSM.
5. Data Relay Sling	Consists of shackle cross member, cables, and data relay attach brackets.	Used during transport of the data relay assembly and also to lower the data relay package into the launch mechanism during mating of the two units.
6. Penetrometer Loading Clamp	Supports the penetrometer launch mechanism, provides holder for penetrometer spheres, and means of compressing ejection springs.	Used to hold the ejection mechanism during installation of the data relay package and used to install the penetrometers in the ejection mechanisms.

TABLE 8.2 (Continued)

Item	Description	Function
7. Spring Calibrator	Spring compress mechanism, load cell, and dial indicator.	Depress penetrometer eject springs a specified amount, read dial indicator to determine if spring meets the requirements.
8. Moment of Inertia		Determine moment of inertia of LPS while it is being rotated at a specified velocity.
9. Weight and cg	Holding fixture so that LPS can be positioned in three planes, 90 degrees apart, over two knife edges (two scales).	Determine weight and cg of LPS.
10. Spin Balance	Fixture to mate the LPS (SK27657) with the Gisholt spin balance machine.	Spin balance LPS.
11. Penetrometer Shock	Pneumatic accelerator capable of imparting a shock pulse to penetrometer spheres as shown in Figure 8-1.	Used to impart controlled shock pulse to the penetrometer for calibrating the accelerometer.
12. Clamping Mechanism, LPS Adapter (2 required) Vibration Fixture, LPS Shock Fixture, LPS Vibration Fixture, Penetrometer hyge Adapter, Penetrometer Ejection Velocity and Reaction Fixture	The noted fixtures have hole patterns to mate with the various environmental test machines and means of securing the LPS and the penetrometer. The clamping mechanism is a universal adapter for securing the LPS to the various fixtures.	Used to attach the LPS to the various environmental test machines to simulate the flight, shipping and storage environments.
13. Vacuum Chamber Cold Wall		

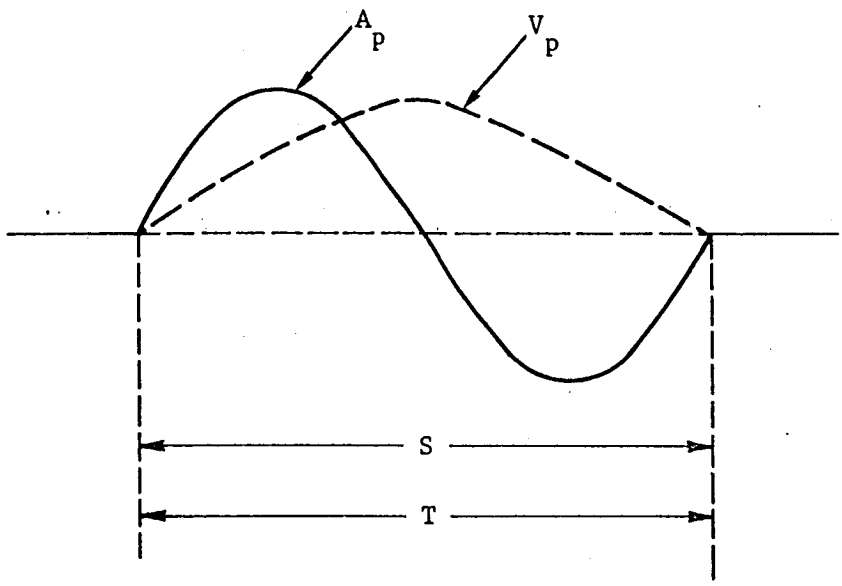

SHAPE = ONE CYCLE SINUSOID (APPROXIMATE)

PEAK ACCELERATION (A_p) = 5000g

PEAK VELOCITY (V_p) = 3000 IN/SEC. = 250 ST/SEC

AVERAGE VELOCITY (V_{avg}) = $\frac{2}{\pi} V_p$ = 1910 IN/SEC

STROKE (S) = 20 IN

DURATION (T) = $\frac{S}{V_{avg}} = \frac{20 \text{ IN}}{1910 \text{ IN/SEC}}$ = 10.6 M SEC.

FIGURE 8-1. PENETROMETER SPHERE SHOCK PULSE

The AGE will be rack mounted and will provide: external power for test operation; electrical activation; switching; exercising limited ground station operation; battery charging; and continuity checks of the data relay, penetrometers, and launch mechanism.

8.1.2 FSE.

The FSE requirements have been obtained by performing a factory operations analysis. This analysis assures that each activity which occurs will have the appropriate equipment. FSE general task activities and types of equipment required are also presented in Table 8.1. A significant observation is that many of the activities and FSE hardware items are common to the various tasks of the program.

a. Electrical FSE. The electrical checkout equipment listed as FSE is in addition to the previously discussed AGE test console. These FSE items will consist primarily of small, specialized assemblies of test equipment required to provide the more precise tests at the factory during component and subassembly tests. This is consistent with the testing philosophy for AMR. Since these items will not be used at the launch facility, they are classed as FSE.

Separate specialized assemblies will be required for each of the functions listed in Table 8.1 (for tests conducted at the LPS contractor's site) and will be built up using patch boards as required to conserve equipment tie-up time and gain maximum utilization and mobility.

b. Mechanical FSE. The mechanical FSE hardware is also in addition to the items listed as AGE. This equipment includes special handling fixtures for the major subassemblies, structural mockup sections and modified sling fixtures, test fixtures, hoists, and associated equipment. Design of these items will be based on the detail part configurations but the need for them is recognized and planned for. A preliminary listing of the mechanical FSE is shown in Table 8.2.

8.2 PRELIMINARY DESCRIPTION OF AGE

8.2.1 ELECTRICAL AGE

A preliminary analysis of the lunar penetrometer system and acceptance test requirements has indicated that rack mounted laboratory test equipment would provide the most efficient manner of checking out and calibrating the lunar penetrometer system. Based on this, preliminary design concepts of test consoles and equipment have been generated.

Test equipment and test requirements would be finalized during the AGE selection and design phase of the contract.

The electrical AGE will be mounted in several checkout consoles (one for penetrometer, two for data relay, two for LPS) which will consist primarily of control panels, power supplies and commercially available laboratory test equipment (signal generators, oscilloscopes, recorders, frequencies counters, VTVM's etc.). The AGE equipment will provide:

(a) External power for test operation.

(b) Circuitry for switching, exercising, monitoring, and checkout of the LPS.

(c) An LPS receiver to monitor and record outputs of the data relay station.

A discussion of these test consoles is as follows:

a. Penetrometer Test Console. It is possible to perform onsite and offsite acceptance testing of the lunar penetrometer system using non-integrated standard laboratory test equipment with a control panel; however, from problems encountered during the Penetrometer Impact Test Program, it appears that this would be very inefficient, time consuming and expensive.

The following example in testing and calibrating prototype penetrometers is cited in justification of rack mounted test equipment. The penetrometer has two umbilical plugs with a total of 18 external connections which are now individually connected to various pieces of test equipment power supplies, and battery charging fixtures in lieu of an integrated test console with wiring harness. The test console will save considerable labor and will greatly reduce the possibility of internal damage to the penetrometer caused by errors in connection.

The test console will be made up entirely of standard pieces of laboratory equipment, all of which will be of continued utility on other programs. The Hewlett Packard counter (see Table 8.3), with converter, printer, and accessories, is required to measure and record the carrier frequencies. This is a very repetitive measurement during turn-on transient and long-term stability tests. The Tektronix 422 scope and HP412A AC voltmeter are needed to measure and observe waveforms at internal penetrometer test points and input calibration signals. The HP3300A function generator with accessories generates very low frequency sine, triangle, and square wave signals which simulate acceleration pulses and are used for dynamic checkout of the signal electronics. The three power supplies, HP721A, are needed to power the penetrometer. The Moseley X-Y plotter will be used to plot the transfer function of the signal electronics. This is a primary calibration function and would be laborious and inaccurate to do by hand due to the nonlinear signal compression employed. The digital

voltmeter is necessary to obtain accurate calibration of scale factor. The cabinet consoles will house all the above equipment, permitting portability and permanent interconnection. It will also contain a cradle for the penetrometer and a working surface for recording data. A preliminary list of the general types of laboratory equipment which will be mounted in the Penetrometer Test Console (4 feet wide) is shown in Table 8.3.

TABLE 8.3

LIST OF TYPES OF EQUIPMENT REQUIRED FOR TEST CONSOLE

5245L Counter, Hewlett-Packard 5245L

50 to 500 Mc Converter, Hewlett-Packard 5253B

Printer, Opt. 14 Hewlett-Packard 562A

Printer Accessories, Hewlett-Packard

Scope, Tektronix 422

Voltmeter, Hewlett-Packard 412A

Function Generator, Hewlett-Packard 3300A

Function Generator Accessories, Hewlett-Packard

Power Supply, Hewlett-Packard 721A

X-Y Plotter, Moseley 2D2

Digital Voltmeter, Trymetrics Model 4400 P1 with 400M plug-in

Strip Chart Recorder, Rustrack

Camera and Close-up Accessories, Polaroid

b. Data Relay Test Console. The data relay test console consists of commercial test equipment mounted in standard enclosures with a minimum of custom subassemblies. Its purpose is to provide measurement capability for all of the data relay functional parameters.

Part of the console generates precisely known signals for an input to the data relay. Those signals consist of up to eight modulated carriers

in the 432 to 453 MH_Z band and simulate transmitting penetrometer balls. The following data relay front-end measurements may be obtained:

(1) Receiving antenna VSWR.

(2) Receiver quieting sensitivity.

(3) Diversity switching sensitivity.

(4) Adjacent channel interference.

The remainder of the console is used to measure data relay power supply condition and monitor the transmitting or output section of the relay. Equipment is included to perform the following measurements:

(1) Transmitter frequency.

(2) Transmitter output power.

(3) RF spectrum.

(4) Transmitter antenna VSWR.

(5) FM subcarrier frequency.

(6) Composite subcarrier video frequency spectrum.

(7) Subcarrier modulation sensitivity.

Because the penetrometers utilize data amplitude compression, a data expander (which performs the complementary function) is also provided. An oscillograph recorder is used to store analog data.

c. LPS Test Console. In general, the laboratory test equipment which will be mounted in the system test console will be a combination of some of the equipments that are mounted in the penetrometer test console and the data relay test console. Some additional equipment will probably be required. Also, there will be differences in the control panel.

8.2.2 MECHANICAL AGE

Mechanical AGE consists of fixtures for lifting and handling the LPS, fixtures for calibration and acceptance test and containers for shipping and storage. See Table 8.4 for a preliminary list of these fixtures.

TABLE 8.4

PRELIMINARY LIST - AEROSPACE GROUND EQUIPMENT AND FACTORY SUPPORT EQUIPMENT

AGE AND FSE	FSE			AGE					
	Aeronutronic Site			Offsite Integration			AMR		
	Qual. Test	Test Program Support	Assembly and C/O	Aerojet	NAA	Contractor Area	Integration Area	Launch	Total Units
1. Electrical Checkout									
A. Penetrometer C/O Console	SN1	SN2	SN3	SN5		SN4			5
B. Relay C/O Console	SN1	SN2	SN3	SN5		SN4			5
C. LPS System C/O Console	SN1	SN2	SN3	SN5		SN4	SN4		5
D. Launch Monitor Checkout Panel	SN1			SN2				SN3	3
2. Mechanical Equipment									
A. Handling									
1. LPS System Adapter	SN1	SN1	SN2, 3, 4	SN5		SN6	SN6		6
2. LPS System Sling	SN1	SN1	SN2, 3, 4	SN5		SN6	SN6		6
3. LPS System Dolly	SN1	SN1	SN2, 3, 4	SN5		SN6	SN6		6
4. Data Relay Sling	SN1	SN1	SN2, 3, 4	SN5		SN5			5
5. Penetrometer Loading Clamp	SN1	SN2	SN3	SN4		SN5			5
B. Calibration and Acceptance Test									
1. Spring Calibrator	SN1	SN2	SN3	SN4		SN5			5
2. Moment of Inertia	SN1	SN1	SN1	SN2		SN3			3
3. Weight and Center of Gravity	SN1	SN1	SN1	SN2		SN3			3
4. Spin Balance	SN1	SN1	SN1	SN2		SN3			3
5. Penetrometer Shock Calibrator	SN1	SN1	SN1	SN2		SN3			3
C. Environmental Test									
1. LPS Vibration Fixture		SN1	SN1						1
2. LPS Shock Fixture		SN1	SN1						1
3. Penetrometer Vibration Fixture		SN1	SN1						1
4. Penetrometer Hyge Adapter		SN1	SN1						1
5. Vacuum Chamber Cold Wall		SN1							1
6. Ejection Velocity and Reaction Fixture		SN1	SN1						1
D. Shipping Containers									
1. Penetrometer Box				SN1 - 8		SN8 - 40			40
2. Relay and Launch Box				SN1		SN2			2
3. Penetrometer Console Box				SN1		SN2			2
4. Relay Console Box				SN1		SN2			2
5. LPS Console Box				SN1		SN2			2
6. Handling Fixtures Box				SN1		SN2			2
7. Load Clamp				SN1		SN2			2
8. Calibration and Test Fixture Box				SN1		SN2			

a. Handling Fixtures. In general, handling fixtures will consist of mechanical assemblies used to position, raise and lower the LPS and to provide limited mobility. They will also be used during final assembly.

b. Calibration and Acceptance Test. The mechanical AGE consists of fixtures for penetrometer eject spring calibration, LPS spin balance, penetrometer shock calibration, LPS weight and cg determination, and LPS moment of inertia.

c. Containers. Packaging and shipping of the re-entry vehicle and its associated components and AGE will be designed utilizing the applicable requirements of BSD Exhibit 63-6.

Constraints upon the development of containers are:

(1) BSD Exhibit 63-6, Level C, Minimum Military Package shall guide the design and fabrication of containers.

(2) Container will be of minimum weight and cube consistent with, and providing the adequate protection required in anticipated shipping, handling, and storage environments.

(3) Packaging of hazardous materials, i.e., explosive bolts, and squibs, shall be in accordance with AFM 71-4, ICC Tariffs 15, or other applicable regulations depending on the mode of transportation.

(4) Packaging methods used will be such that no special handling equipment will be required.

Within these bounds, the requirements can be met with low cost disposable wooden or corrugated fiberboard containers.

SECTION 9

RELIABILITY AND QUALITY ASSURANCE

9.1 RELIABILITY

The noncritical rating of the lunar penetrometer system (LPS) has dictated the type and extent of the reliability effort to be performed.

That portion of the Apollo lunar landing site certification equipment covered herein includes only the eight penetrometer balls, the ball support structure and eject mechanisms, and the data relay electronics required to relay the acceleration versus time profiles from all eight of the balls to the orbiting Apollo CSM. This group of equipment has no direct interface with the manned CSM. Therefore, a catastrophic failure could in no way jeopardize Apollo crew safety and/or mission success.

In this regard, the LPS reliability program recommended in this section has been designed to give the same degree of assurance that the LPS will achieve mission success as other non-manrated space missions. The NASA reliability publication, NPC 250-1, has been used as a guideline in designing the reliability program.

9.2 RELIABILITY TASKS

This section contains a description of the reliability tasks to be performed on the lunar penetrometer program.

9.2.1 DESIGN REVIEWS

Design reviews should be performed to thoroughly evaluate all aspects of the hardware design. These reviews are to be performed throughout the design phase of the program on both a formal and informal basis as a

continuing activity. All designs are to be evaluated by reviewing concept design documents, layouts, drawings, and specifications to provide for the earliest possible detection of potential reliability problems so that effective and timely corrective action may be taken. During this activity, tradeoffs between standard or proven designs versus new concepts will be resolved to best advantage and tradeoff of performance among components, assemblies, and subassemblies will be achieved commensurate with good reliability engineering practices.

Formal design reviews will occur at the various hardware development milestones during the program and afford the means for all affected disciplines (reliability, engineering, program office, manufacturing, quality control, etc.) to re-evaluate the total progress of the product.

Reliability contributions to these formal design reviews should include presentation of problem areas identified by the components application reviews, failure mode and effect analyses, and/or reliability assessments, and to cause initiation of corrective action.

9.2.2 RELIABILITY APPORTIONMENT

Reliability apportionments, as such, will not be performed on the lunar penetrometer program inasmuch as a system or mission reliability requirement does not exist.

Early in the effort defined in this program plan, reliability design goals will be established for the penetrometer and data relay assemblies and their subassemblies on the basis of the reliability prediction effort during the development phase of the program. An anticipated growth factor will be included in this prediction. These goals will be included in the design specifications.

9.2.3 RELIABILITY ASSESSMENTS

Initial reliability predictions of the penetrometer and data relay equipment have been made during the Aeronutronic penetrometer development phase of the program. These predictions will be updated periodically as part of the reliability assessment effort to reflect design changes.

Reliability predictions will be obtained by using basic part failure rates from MIL-HDBK-217, modified to account for expected environmental stresses per MIL-STD-756 and part derating. Published failure data from other sources as well as previous and current Aeronutronic experience will be utilized for predictions on components and assemblies not covered by MIL-HDBK-217 such as the accelerometer and battery cells.

9.2.4 FAILURE MODE AND EFFECT ANALYSES

Detailed Failure Mode and Effect Analyses (FMEA) will be performed to the critical part level on all subassemblies of both the penetrometer and data relay assemblies. First, each critical part failure mode and the rate at which each failure mode occurs will be determined. Then, the effect on each of the critical part failure modes on the subassembly, assembly and penetrometer mission will be determined. A recommended format to be utilized for the FMEA is included as Figure 9-1.

The FMEA's will be used to uncover critical failure areas as well as to provide an important criterion for test planning and establishment of checkout procedures, use time, logging requirements, and the required frequency of monitoring during checkout. The FMEA's will be performed early in the program and updated periodically or as critical changes in the design dictate.

9.2.5 COMPONENT APPLICATION REVIEW

Component application lists will be reviewed and recommendations made as to the adequacy of the component applications.

9.2.6 DESIGN SPECIFICATIONS

Reliability will review and concur in all design specifications to assure that each specification adequately states mission profile performance requirements, environmental criteria, pertinent test criteria, safety margins, derating factors, and apportioned reliability goal.

9.2.7 RELIABILITY SURVEILLANCE

Failure reports will be initiated immediately upon the indication of a failure during development, manufacturing, or field use of the equipment. The report is reviewed immediately upon receipt and classified into one of the following categories: (a) reliability problem, (b) minor failures or discrepancies, (c) found investigation needed, and (d) no reliability significance.

Copies of all failure reports generated on those failures classified either (a), (b), or (c) above which occur during or subsequent to the time the subassembly (includes all but piece parts such as resistors, capacitors, transistors, etc.) begins its first test for its intended design function will be submitted to the NASA/LRC within three days of occurrence.

FAILURE MODE AND EFFECT ANALYSIS
LUNAR PENETROMETER SYSTEM

Page_____of_____

Assembly_____

Date_____

Subassembly_____

Schematic No._____

PART	PART NUMBER	CIRCUIT SYMBOL	FAILURE MODE	FAILURE MODE FAILURE RATE	EFFECT ON			REMARKS
					SUBASSEMBLY	ASSEMBLY	MISSION	

FIGURE 9-1. FAILURE MODE AND EFFECT ANALYSIS FORMAT

An Nonconforming Material Report (NMR) will be used to report failures in areas surveyed by Quality Control.

A Trouble/Failure Report (TFR) will be used to report failure in all areas where there is no Quality Control coverage, as in development testing.

Reliability problem reports will be initiated for all failures which are judged "critical" or "repetitive" or where statistical analysis indicates unsatisfactory trends in performance data. Minor failures and discrepancies will be included in the Monthly Reliability Summary. All "reliability problems" listed will be followed until the cause of failure is determined and satisfactory corrective action is obtained.

Whenever a "reliability problem" is identified for which the cause of failure cannot be determined by preliminary analysis, a failure analysis will be initiated. The analysis consists of the testing which is necessary to determine the cause of the failure and the corrective action required to prevent recurrence of the problem. The results of the failure analysis will be documented on a Failure Analysis Report and reported to responsible technical personnel on a periodic basis. A failure analysis and corrective action flow diagram is included as Figure 9-2.

9.2.8 EQUIPMENT LOGS

Throughout the development of inspection and test phases in operations prior to Government use, a separate log for each major component subsystem and system will be maintained as a means of documenting the history of the item. Each log will be identified to the equipment to which it pertains, will be maintained in chronological order and account for all periods of time including idle periods for any numbers of the items. In general, entries will be made to the equipment log each time it is tested, a malfunction is detected, turned on, turned off, stored, removed from storage, and repaired and/or maintained.

9.2.9 SUBCONTRACTOR AND SUPPLIER CONTROL

As a part of the evaluation of all potential suppliers and subcontractors, Reliability will continue to survey proposed supplier performance data and/or the proposed design for acceptability. Reliability will determine the appropriate scope for the suppliers and subcontractors reliability programs. Appropriate reliability requirements will be included in procurement specifications. Specific reliability requirements will vary according to the criticality and complexity of the hardware being procured. However, any or all of the following will be included as appropriate in the specification or procurement package:

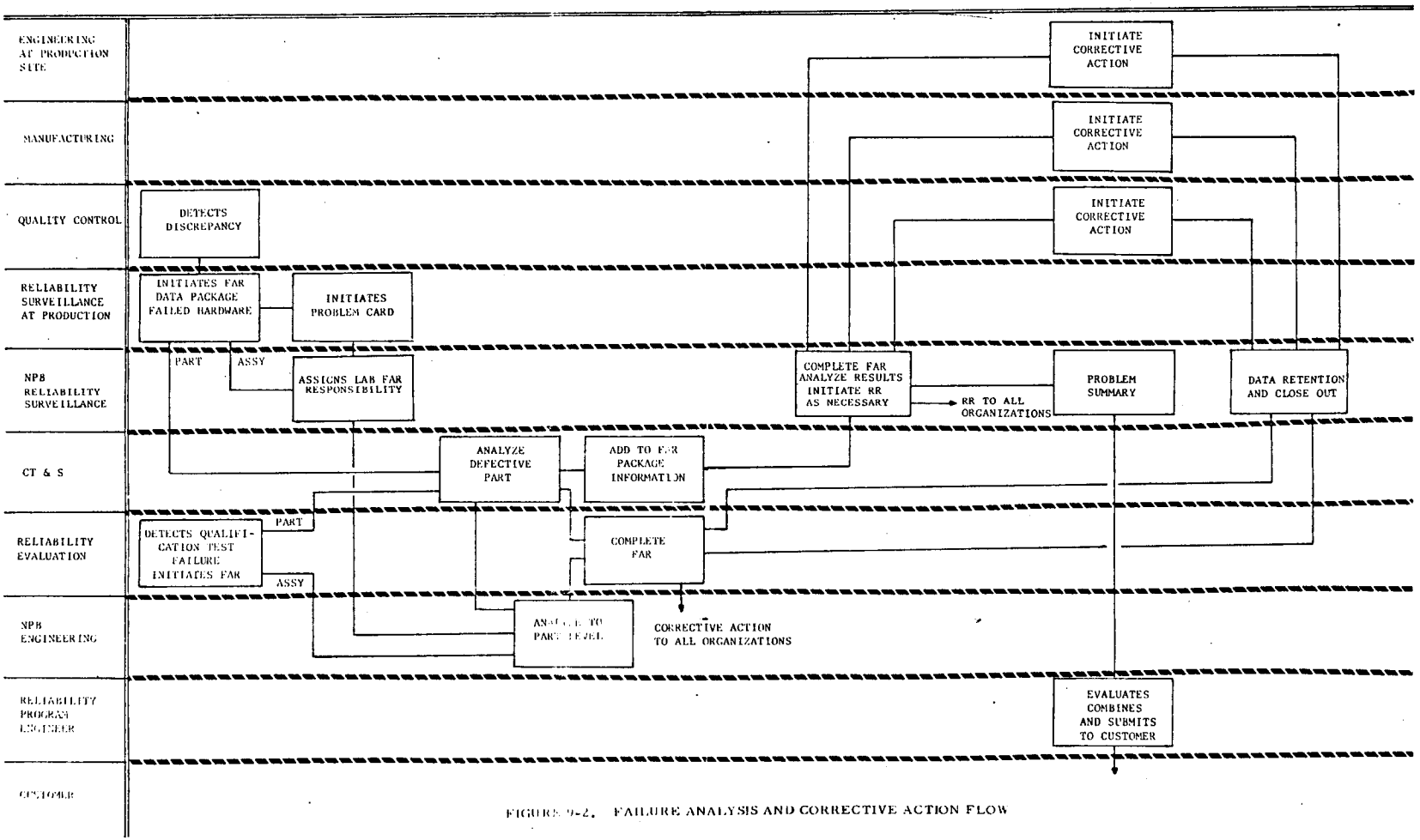

FIGURE 9-2. FAILURE ANALYSIS AND CORRECTIVE ACTION FLOW

(a) Failure mode studies.
(b) Design review.
(c) Parts selection and control.
(d) Reliability testing.
(e) Production processes controls for reliability.
(f) Record and equipment logs.
(g) Data collection.
(h) Failure reporting and analysis.
(i) Reliability education.
(j) Periodic problem and progress reports.

Those suppliers chosen to maintain a data collection and failure analysis system will submit failure reports within 24 hours of all critical failures which occur during the suppliers acceptance testing.

Suppliers and subcontractors which are chosen as major suppliers will be reviewed and audited periodically by the Reliability Department. The content of the review for a particular supplier will be dependent upon many factors, determined from the type of product being procured and the scope of the contract with the supplier. During the initial supplier survey, a checklist will be used as a baseline for the reviews held later at the supplier. Areas that are found to need improvement will be brought to the attention of the supplier and his performance measured against the baseline survey. In this manner, a continuous record of supplier reliability program performance can be maintained. Also, reliability will monitor supplier and subcontractor hardware failure analyses as necessary to assure that these analyses and corrective actions stemming from the analyses are carried to completion.

9.2.10 RELIABILITY EVALUATION

a. Qualification Test Program. Reliability will prepare qualification test requirements, review qualification test plans, and monitor the qualification tests. Reliability will assist in failure analysis and issue Reliability Recommendations for corrective actions when warranted. Reliability will analyze qualification test results and submit a Reliability Analysis Report summarizing tests performed, failures, corrective actions, retests, and a system reliability assessment.

b. Acceptance Test Program. Reliability will assist in the preparation of acceptance test requirements and review acceptance test procedures for critical assemblies and components. For further details on qualification and acceptance tests, refer to Sections 6.

9.2.11 COMPONENT TECHNOLOGY AND STANDARDS

a. Parts Program. A comprehensive parts and materials reliability program will be conducted to provide assurance that the items selected, procured and installed in penetrometer program equipments are adequate for their intended purpose and compatible with system reliability and environmental requirements.

b. Parts Selection and Application. Reliability will assist in selection, application, and procurement of detail parts to use parts that have been proven reliable, that have been qualified to the expected environmental conditions, and that reduce the number of styles of each generic type.

c. Qualified Parts List. A list of parts (except miscellaneous hardware items such as fasteners, sheet metal parts, brackets, castings, etc.), that have been qualified in prototype testing or to pertinent specifications will be prepared for use by Purchasing for procurement and Engineering for guidance in selection of parts for design. The approved supplier for each item listed will be identified and qualification status noted. Parts breakdown lists and drawings will be reviewed as necessary to maintain current data.

d. Specifications and Qualification Tests. Part procurement specifications and specification control drawings will be reviewed for completeness and clarity of the technical requirements and for adequacy from the standpoint of reliability requirements.

9.2.12 FAILURE ANALYSIS

Parts specialists will assist in the failure recurrence prevention program by performing analyses on failed parts to determine cause and mode of failure. The failure analysis may range from detailed visual examination to detailed chemical or metallurgical analysis and may require special controlled testing designed to recreate the failure.

9.3 GENERAL QUALITY CONTROL PLAN

The following is a general description of functions to be performed during the contract period to assure not only the conformance to all requirements in NASA NPC 200-2, but also the conformance to all provisions of the

contract and the Statement of Work. The quality program will be subjected to continuous evaluation, review, and inspection. In addition, the quality program will be planned and developed in conjunction with other functions that are necessary to satisfy contract requirements. The program will provide for the early and prompt detection of actual or potential deficiencies or conditions which could result in unsatisfactory quality. It will provide timely and effective corrective action and will include objective evidence of quality conformance.

9.3.1 PLANNING

Within 45 days after contract award, a quality program plan will be available for review. This plan will include flow charts or tabulations, proposed revisions or additions to present quality operations, time schedules, and organization structure.

9.3.2 PURCHASED MATERIAL

The acceptability of purchased material will be verified by the various functions of the Quality Assurance Department and Receiving Inspection. Control will be maintained from the initial phase of purchasing through the acceptance of the material or services. Subcontractors will be required to maintain a quality program that conforms to either NASA NPC 200-2 or 200-3, which will be dependant on the type of purchase being made.

a. Supplier Evaluation. All suppliers, including special process vendors, proposed for use on the lunar penetrometer production program will be subject to approval by Quality Assurance. If the supplier cannot be qualified from historical records as being capable of meeting the requirements of NASA NPC 200-2, a pre-award survey will be conducted at his facility. The survey will be performed in accordance with a Vendor Survey Check List to establish the adequacy of the supplier's overall quality program. Upon conclusion of the survey, the Vendor Survey Request and Report will be completed and permanently filed. This report will summarize pertinent information and indicate the results of the survey. Basic conformance to NASA NPC 200-2 is a minimum requirement for adequate assurance that a supplier structure has the capability of systematic controls necessary to continuously furnish quality materials.

b. Purchase Order Review. All purchase orders prior to placement by Purchasing will be reviewed to insure that:

(1) Selected supplier is on the Quality Assurance Approved List.

(2) Source inspection is specified when required.

(3) Complete technical requirements are included, e.g.,

(a) Drawings and specifications (to the applicable revisions).

(b) Acceptance test procedures.

(4) Objective quality evidence (certifications, test reports, conformance records) is specified when required.

c. Source Inspection. Source inspection of purchased items will be provided when one or more of the following conditions exist:

(1) Item is of a complex nature.

(2) Costly special measuring or test equipment is required.

(3) Source inspection is more economical than receiving inspection.

(4) Item is to be delivered directly from supplier's plant to contractor's customer.

d. Receiving Inspection. All purchased material will be subject to inspection upon receipt. Inspection Instruction Sheets for each procured item will be prepared by Quality Control engineers. Typical receiving inspection functions are as follows:

(1) Inspect for damage and evidence of Aeronutronic inspection of source inspected items.

(2) Perform dimensional or functional inspection on a 100 percent basis, or in accordance with MIL-STD-105D.

(3) Perform the physical and chemical analysis of raw material to verify validity of the supplier's certifications.

e. Approved Supplier List. An Approved Supplier List will be maintained and be used for the selection of various types of suppliers. Included on this list will be special process suppliers who have been surveyed and approved by Special Process Quality Control Engineers. In order to maintain good control on special process suppliers, their facilities are resurveyed at frequent intervals. A supplier's name will be entered on the Approved Supplier List by category, when a Quality Assurance evaluation indicates an approved rating.

The Approved Supplier List will be published quarterly, with revisions as surveys and resurveys dictate. This list will be available for review and approval for use on the lunar penetrometer production program.

f. Vendor Corrective Action. Inspection history of incoming material, by part number, will be maintained and analyzed periodically. Requests for corrective action will be submitted to suppliers whose records indicate a condition of repetitive or excessive discrepancies.

9.3.3 FABRICATED PARTS

All phases of in-house fabrication will be controlled to assure acceptability of the manufactured end item. The following paragraphs describe the various methods that will be used on the lunar penetrometer production program.

a. Acceptance Criteria. To insure that all applicable contract, drawing, and specification requirements are obtained in the completed articles, the following standards will be utilized.

(1) Material and Process Specifications. Material and process specifications will be developed and written by Manufacturing Engineering and require the review and approval of Quality Control. These documents describe standard materials and procedures to be used in the fabrication and assembly process to attain the necessary standards of quality and reliability.

(2) Engineering Drawings. Engineering drawings will be produced in accordance with a Drawing Room Manual and be reviewed by Quality Control to determine the inspectability of the design. In addition, a Quality Control representative will be a member of the Engineering Change Board to review and provide approval of all drawing changes from the viewpoint of Quality Control.

(3) Acceptance Test Procedures. Quality Control Engineering will review all Acceptance Test Procedures to insure that all required test and contract criteria are contained within the procedures. The initial procedures will include as a minimum the following:

(a) Identification of the article.

(b) Test objectives.

(c) Test equipment to be used.

(d) Condition during test.

(e) Acceptance criteria.

b. Inspection and Planning.

(1) Processing Document Review. Manufacturing Process Documents will be prepared to plan the work through manufacturing and will be reviewed and approved by the Quality Control prior to the release. The primary purpose of the review is to assure that adequate inspection points have been provided for during the critical stages of fabrication and assembly. Verifications will also be made to assure that the process operations are adequate to meet all the requirements of the drawings and applicable specifications. No inspections will be performed unless Manufacturing Process Documents are approved by Quality Control.

(2) Acceptance Test Procedure Review. Acceptance test procedures will be reviewed by Quality Control. The procedures will be approved after evaluation, and if it is determined that they perform their intended purpose. The review will be performed to determine that:

(a) The purpose of the test is obtained.

(b) Proper tolerances are specified consistent with design specifications.

(c) Data sheet is formulated and includes, as a minimum, provisions for recording all the necessary data, the identity of person(s) who performed the test and the Quality Control person verifying the test, part number, and part name.

(d) Test equipment required is adequate.

c. Inspection. Assembly inspection and acceptance testing will be as follows:

(1) In-process Inspection. The phases of the manufacturing processes that require in-process inspections will be determined by Quality Control and will be included in the Manufacturing Process documents prior to approval by Quality Control. Inspection will verify that:

(a) Fabrication has been accomplished properly and in the proper sequence.

(b) Proper material has been used.

(c) Parts have been fabricated to drawing requirements.

(d) Special processes have been accomplished as specified on drawings and process specifications.

(2) Test Inspection. In-process and final assembly acceptance testing of subassemblies, assemblies, and end items will be monitored by Quality Control personnel to assure conformance with approved test procedures. Inspection will also verify the following:

(a) The unit under test is an accepted part.

(b) All test equipment is as specified and within current calibration periods.

(c) All data obtained from test are correct and complete.

(3) Final Inspection. All detail parts, subassemblies and assemblies will receive final inspection. Inspection will verify that:

(a) The parts have had the necessary in-process inspection.

(b) Parts have not been damaged by handling or transportation.

(c) Parts have been properly identified.

(d) Objective evidence of product acceptance has been recorded.

(4) Shipping Inspection. All hardware delivered under the lunar penetrometer production program will be controlled in accordance with established shipping inspect on instructions. Inspection will verify that:

(a) Material has not been physically damaged.

(b) Material has been properly identified and has been accepted as a final item by inspection.

(c) Shipping papers have been properly completed and that the material is in conformance with shipping paper requirements as to quantity, type, etc.

(d) Material has been packaged properly in accordance with applicable shipping instructions.

(5) Inspection Status. Inspection status will be identified in accordance with established Quality Control Manual procedures, and will be indicated by one or more of the following.

(a) Ink inspection stamp impression on part.

(b) Steel inspection stamp impression on part.

(c) Bagging and tagging of small parts where other methods would be detrimental to the parts.

(d) Inspection Acceptance Status on the Job Control Traveler. Parts that are discrepant and cannot be reworked to blueprint requirements will be tagged with a red rejection tag and handled as outlined in the paragraph entitled Nonconforming Material.

(6) Stamp Control. Inspection stamps will be controlled and used as outlined in established Quality Control Manual procedures. The control of inspection stamps will be the responsibility of the Inspection Section. Upon issuance of stamps, inspector's name, date of issue, type of stamp, stamp number, and signature of inspector will be recorded. Stamps will be periodically reviewed to determine that the impressions are clear and legible and that serial numbers are readily identifiable. All stamps which will not produce clear and legible impressions will be taken out of circulation.

d. Failures. Any deviation from the approved final acceptance test procedure will be defined as a failure. All failures will be documented on Nonconforming Material Reports.

e. Fabrication Controls

(1) Tooling. Quality Control will maintain records of acceptance, rework, modification, and periodic inspection history for production tooling, jigs, or fixtures. The standard cycle of such inspection is determined by the construction limits, tolerances, type and degree of usage applied to each unit, and in accordance with standards established by the Quality Control Department.

(2) Test Equipment. Quality Control will maintain records of test equipment used during the fabrication operations. Standard calibration cycles, established by Quality Control will be enforced.

(3) Raw Materials. Materials and articles undergoing fabrication or assembly will be identified and will maintain this identification either on the fabricated articles or on records traceable to the fabricated articles. Controls will ensure that only conforming material and articles are used. Materials and articles with limited useful life will not be used beyond their useful limits.

(4) Process Control. Nondestructive and destructive tests will be conducted, where required, on materials, processes, and parts to assure that the product is of the highest quality and that all applicable specifications are satisfied. Nondestructive test methods such as microscopic, X-ray, ultrasonic, Magnaflux, and penetrant inspection will be employed to determine that problems and potential problem areas of materials and processes are minimized. Personnel performing these functions will be certified by the Quality Assurance Department.

9.3.4 CONTROL OF GOVERNMENT FURNISHED PROPERTY

Upon receipt of Government furnished property, an inspection will be performed to verify completeness and identification. Examination will also be made to determine whether there was any damage caused by transportation. Any material found damaged will be reported to the Government representative. Periodic surveillance of material in storage will be performed to preclude damage caused by mishandling or deterioration. All Government furnished measuring and test equipment will be calibrated and maintained at prescribed intervals to assure its continued accuracy.

9.3.5 NONCONFORMING MATERIAL

a. General. A system will be provided for the review, control, and disposition of nonconforming material. Each nonconformance shall be reviewed, a disposition made by personnel vested with this responsibility, and positive corrective action taken to prevent recurrence of similar discrepancies. The quality problem will be continually audited to assure the method for controlling discrepant material provides for the following:

(1) Diversion of material from the normal flow.

(2) Adequate corrective action.

(3) Identification of material that has been submitted to Material Review.

(4) Materials covered by review board forms shall remain in a "bond" status until properly dispositioned.

b. Preliminary Material Review and Material Review Board

(1) Preliminary Material Review decisions will be made by Inspection Supervision or a designated Quality Control Engineer, when necessary, to cover the following conditions.

(a) Items are reworkable or may be completed to meet drawing and specification requirements.

(b) Item is obviously scrap or is uneconomical to rework.

(c) Items have an acceptable method of rework established by previous mutual consent of the Material Review Board.

(d) Items that have been previously submitted to the Material Review Board and dispositioned "OK as is."

(2) The Material Review Board shall review and disposition nonconforming material that does not fall into a category outlined in the paragraph above. The Material Review Board shall be composed of authorized representatives of Engineering and Quality Control Engineering, together with the resident NASA Quality Control representative, if required.

(3) All deviations will be reported on Nonconforming Material Reports in accordance with established procedures.

c. Purchased Parts. When Receiving Inspection determines that subcontractors' delivered items or material will not meet the requirements of the purchasing documents or applicable specifications, the articles are withheld from production stock as nonconforming. Disposition of such material will be in conformance with established procedures.

d. Contractor Manufactured Material. When inspection encounters materials such as machine parts which have been machined beyond the drawing requirements; electrical components which have been damaged by manufacturing technique or process, or are unsuitable for further use; materials which have been damaged due to transportation, storage or environment; and materials which have exceeded their shelf life, such material shall be segregated and positively identified. Disposition of such material will be in conformance with Section 8 (Nonconforming Material) of NASA Quality Publication NPC 200-2.

9.3.6 INSPECTION, MEASURING, AND TEST EQUIPMENT

Procedures shall be provided for the calibration of all inspection, measuring, and test equipment. Calibration of equipment will be accomplished as prescribed intervals to assure continued accuracy. Interval adjustments will be made on the basis of prior calibration data. A control system will be maintained for the timely recall of equipment for calibration at these

prescribed intervals. Calibration labels are applied to equipment at the time of calibration and indicate the date calibrated, next calibration due date, and the stamp of the calibration technician. A calibration record system will be maintained. An individual record will be maintained for every item of inspection, measuring, or test equipment. The record will contain the description, location, condition, calibration due date, and calibration history.

All calibrations performed will be referenced to standards which are calibrated by Contractor Primary Standard Laboratory or an outside calibration source. Calibrations performed by the Contractor Standards Laboratory will be traceable to the National Bureau of Standards. Outside calibration services will be obtained only after verification that calibrations are certified as being traceable to the National Bureau of Standards. An accuracy ratio of greater than 4:1 will be maintained for calibration standards wherever state-of-the-art limitations do not apply. All standards will be maintained, calibrated, and utilized in laboratory areas which have been especially provided for this purpose and which have the necessary temperature, humidity, vibration, and cleanliness controls necessary to assure measurements of continued accuracy.

Periodic calibration of production tools, jigs, and/or fixtures which control or affect dimensions or locations will be checked and/or calibrated at random intervals. In many cases First Article qualification will be employed to verify the integrity of such tooling.

9.3.7 STORAGE AND HANDLING OF MATERIAL

A system will be maintained for the control of handling and storing material for all phases of the program to preclude possible damage. Surveys will periodically be conducted for the purpose of assuring proper protection of the quality of the products and preventing damage, loss, deterioration, degradation, or substitution. These controls will extend to storage of material under cold temperature conditions and to materials susceptible to age deterioration.

Early in the program, consideration will be given to special handling requirements so that special procedures or fixtures will be available as required.

9.3.8 TRAINING AND CERTIFICATION OF PERSONNEL

All persons performing nondestructive testing and persons performing selected production processes (such as welding, soldering, magnetic particle, and bonding) will be certified by means of written, oral, and practical demonstration testing by the Quality Assurance Department. Records of certifications will be maintained. Each person certified will be issued a card showing his certified capability and the expiration date or requalification date.

No personnel will be permitted to perform work or tests requiring certification until certified.

A training program will be formulated to indoctrinate product quality calibration and inspection personnel of their responsibilities for achieving quality and reliability goals. This training program will include as appropriate product familiarization, test equipment familiarization, processing and manufacturing techniques, inspection techniques and methods, quality control methods and systems, statistical quality control, and packaging and handling techniques. Management will be periodically informed of the status of this training program.

9.3.9 DOCUMENTATION AND CORRECTIVE ACTION

a. Documentation. Records will be maintained for all phases of the Quality Control operation during the lunar penetrometer production program and will be available to the customer representative upon request. The minimum requirement for all records will include the following:

(1) Inspections performed on incoming material.

(2) Inspections performed during manufacture and test.

(3) Certification of special processes and personnel.

(4) Calibration and inspection of inspection tools, gages, and test equipment.

(5) Inspection stamp control.

(6) Material Review Board actions.

(7) Corrective action taken.

b. Corrective Action. Corrective action will be obtained in accordance with established procedures for corrective action of nonconforming material. Quality Control Engineering will be responsible for implementing the corrective action system. The corrective action system will be implemented by such means as:

(1) Sending of corrective action forms requesting action to the activity responsible for discrepant material (including suppliers).

(2) Requiring corrective action prior to release of material from a Material Review Board withhold area.

(3) Using a follow-up system to assure that all necessary required action has been taken and that the action is effective.

9.3.10 AUDIT OF PRODUCT QUALITY PERFORMANCE

The adequacy of Quality Control procedures, inspections, tests, process controls, and certifications utilized during the penetrometer program will be audited as part of the product quality program. The purpose of the Quality Audit will be to provide management with current factual data portraying effectiveness and efficiency in the quality assurance system.

The audit functions will include examination of controlling features of the design and manufacturing specifications to assure completeness and an accurate reflection of contract requirements; evaluation of special processes; evaluation of the existence and adequacy of procedures; review of inspection instructions, test practices, and adherence to approved manufacturing processes and specifications; review of calibration activities; review of methods employed in control of engineering information; evaluation of product quality by reinspection of samples of product that have previously passed or failed inspection and/or test; review of objectives evidence and traceability of records, and audit of packaging, storage, and shipment practices and procedures. The audits shall be performed on a random, unannounced basis so that audits may be most effective in revealing quality deficiencies requiring correction.

Results of each audit will be reported to management. The report will summarize the findings of the audit, specify any areas of deficiency, and indicate appropriate corrective action. Frequent follow-up reviews of deficient areas will be made until it is determined that all required corrections have been accomplished.

Summary reports will be prepared quarterly to reflect the overall performance of the product quality program and will include corrective action taken, recommendations, and unresolved problems. These summary reports will be submitted to management for their information.

SECTION 10

FIELD SUPPORT

It is recommended that the field test operations to be implemented by the lunar penetrometer system contractor in support of the lunar penetrometer system test program be entirely based upon a team concept, wherein a test team, consisting of a Senior Test Engineer and one or more support technicians, are responsible for each vehicle. This team would observe and assist in the final assembly and checkout of the vehicle at the penetrometer contractor's facility and then accompany it to an offsite integration area (Aerojet or NAA) where they will be responsible for the checkout and mating of the lunar penetrometer system to the lunar delivery system.

This team would also be responsible for subsystem checkout (penetrometers and data relay), final assembly and integration with the lunar delivery system at the AMR hangar site. In this manner, the team assigned to the vehicle will be completely familiar with the vehicle and thus be vastly more efficient than making different crews responsible for assembly and checkout in each of the three different areas (LPS contractor, Aerojet/NAA, and AMR). In addition to the launch team at AMR, there would be a permanently assigned Senior Test Engineer and a Quality Control Inspector.

10.1 FIELD SUPPORT PLAN

A Field Support Plan will be prepared 120 days prior to the initial flight of the first lunar penetrometer system. This plan will present the detail tasks to be performed at AMR, the facilities required, and participating agencies' responsibilities as they affect the prelaunch checkouts. Some of the content of this plan would be as follows:

a. LPS Contractor Operations. This portion of the Field Support Plan will present the plan and sequence of events, milestones, and

operations from the time of the final assembly and acceptance of the flight hardware through its shipment to the launch site.

b. Aerojet/NAA Operations. This portion of the Field Plan will present a detailed description of all events, milestones, and operations for which Aeronutronic is responsible, from the time of delivery of the flight articles and their associated support equipment to the Aerojet/NAA integration area and continuing through assembly and checkout activities.

c. AMR Operations. This portion of the Field Support Plan will present a detailed description of all events, milestones, and operations for which the LPS contractor is responsible, from the time of delivery of lunar penetrometer subassemblies (penetrometer spheres, data relay, launch mechanism, pyrotechnics, etc.) to AMR. The LPS contractor will perform receiving inspection, final assembly, and checkout of the LPS at AMR, and also perform those continuity checks and LPS system functions that are deemed necessary after the LPS is mated to the lunar delivery system.

10.2 SUPPORT REQUIREMENTS

The following are the specific tasks necessary for field support of the LPS program. Activities will have to be coordinated with all participating agencies.

a. Receiving Inspection. A visual inspection of all parts and subassemblies will be made when received at the launch site to ensure that parts are not visually damaged during shipment and that all necessary components are present. Each major subassembly (penetrometers, data relays, and launch mechanism) will be functionally checked (continuity, exercise, etc.) as required.

b. LPS Assembly. Penetrometer spheres, launch mechanism (including data relay, pyrotechnics, penetrometer restraining straps, etc.) will be shipped separately to AMR. The LPS will be assembled at the AMR assembly area and mated with the lunar delivery system.

c. Checkout and Calibration. The complete LPS shall be subjected to a field checkout and calibration in accordance with prepared procedures. Continuity and function checks (as required) will be performed on the LPS after it has been mated with the lunar delivery system.

10.3 PERSONNEL REQUIREMENTS

It is recommended that one Senior Test Engineer and one Quality Control man be at the AMR integration area on a full-time basis. The engineer will be responsible for the conduct at the test site and will represent the LPS contractor in matters of policy, security, and general coordination. The Quality Control support man will perform receiving inspection and will monitor LPS assembly and tests.

This permanent party would be augmented by factory personnel at the time of hardware delivery for each flight. The Senior Test Engineer from the group will be responsible for all prelaunch functions associated with the vehicle.

10.4 FACILITY REQUIREMENTS

The facilities required to support the Field Support Plan are as follows:

(1) An office of sufficient area for two desks, one file cabinet, one conference table and chairs will be required.

(2) A working area for performing LPS subsystems (penetrometer, data relay, and launch mechanism) inspection and checkout will be required.

(3) An electrical checkout area is required in which checkout and calibration of the LPS will be performed. This area should have rf shielding.

10.5 EQUIPMENT REQUIREMENTS

The equipment necessary to support the Field Support Plan is listed in Figure 8-4 of Section 8 of this program plan. Maximum use of GFE equipment is planned.

10.6 FIELD SUPPORT PLAN DOCUMENTATION

Test documentation requirements and test data schedule will be supplied at the initial phase of the program and will be issued for NASA approval.

10.7 SUPPORT CONCEPT

Three levels of maintenance activity for the LPS program are recommended. They are as follows:

a. Factory Maintenance. In addition to the functions traditionally referred to as maintenance which are associated with the checkout of the item when it first leaves the contractor's facility, factory maintenance will consist of relay data system repairs, penetrometer recalibration, data relay antenna repairs, data relay structure repairs, launch mechanism repairs, and data relay electronic module repairs. The requirements for specialized skills, test equipment, and tools to conduct these maintenance tasks would make it uneconomical to perform the maintenance at any location other than the LPS contractor facility.

b. Assembly Area Maintenance. The maintenance tasks associated with assembly area operations, including mating of the LPS with the lunar delivery system, are dynamic balancing of the system, functional checking of the LPS system, adjustment of electronic equipment, and replacement of faulty modules.

c. Launch Site Maintenance. At the launch site, maintenance tasks are limited to assisting the launch contractor in assembly and checkout as requested. In the event LPS equipment is required in the launch control building, the LPS contractor would provide fault isolation and module replacement maintenance capability. Any failure of the LPS equipment which necessitates removal from the delivery system will require transportation of the hardware to the assembly area for inspection and repair.

All support functions identified in relation to the levels of maintenance are to be performed by LPS contractor factory or field personnel. There will be no formal training requirements for other personnel.

LPS contractor personnel will qualify all AGE developed, peculiar to the LPS program, to the level defined by the appropriate model specification and will perform all activities required to maintain AGE peculiar to LPS in a qualified usable condition. All handling and installation support equipment shall be designed to have a factor of safety of 5.

The results of the maintenance analysis conducted for the LPS system will define the items of spares required to support the field support task. To the maximum extent possible, the provisioning of spares will be minimized by early delivery of hardware for a subsequent test wherein the extra system can serve as a back-up for the assigned system. A spare parts provisioning list will be prepared which will define the items and stockage level where spare parts must be provided.

Engineering procedures will be used as the method of documenting assembly, checkout, and calibration instructions.

10.8 SPECIALIZED REPAIR EQUIPMENT

The use of specialized repair equipment for the LPS program will be limited to only those items which might be identified as unique to either the instrumentation system maintenance or the maintenance of the equipment required for penetrometer calibration. If specialized repair equipment is indicated, it will be identified as closely as possible to a commercially available device and will be brought to the attention of NASA for screening Air Force surplus property records.

10.9 SPECIAL TOOLS AND TEST EQUIPMENT

Any special tools and test equipment as well as factory support equipment which will be required to support the LPS program will be identified in

the preparation of the detailed test plan, the maintenance analysis and the manufacturing plan.

10.10 PRESERVATION, PACKAGING, PACKING AND MARKING

Packaging data shall be submitted to NASA where special heat sensitive or shock items are identified. The following criteria will be considered during the design and development of packaging:

(1) Minimum protective processes shall be used to afford adequate protection during normal handling, transit, and storage.

(2) Standard commercial packaging to provide necessary protection and which will not result in an increase in cost when compared with military packaging will, in the interest of economy, be given first consideration for use.

10.11 STORAGE REQUIREMENT

The LPS program end items delivered to NASA will require no unusual storage conditions. The temporary storage requirement is only that the storage area provide shelter from rain. No humidity, temperature, or freedom from dust and air pollutants requirement is imposed upon the storage area.

Total storage area required at AMR shall not exceed the volume of two complete sets of LPS enclosed in the shipping containers.

SECTION 11

SCHEDULES

The preliminary program plan schedules for the lunar penetrometer work effort contained in this program plan are attached in both NASA PERT and bar-milestone formats. This schedule is consistent with the three proposed penetrometer flight delivery dates of December 1967, March 1968, and June 1968. The bar-milestone schedule is divided in three sections for convenience. Figure 11-1 includes development, fabrication, and testing of the structure and ejection mechanism as well as the penetrometers. Flight hardware procurement, fabrication, and delivery are also shown in Figure 11-1 for all the subsystems. Figure 11-2 indicates the functional improvements, packaging redesign, and prototype and qualification testing to be accomplished on the data relay subsystem. Flight schedule items are also shown in Figure 11-2 under Penetrometer System Development and Fabrication. Figure 11-3 includes the Quality Assurance, AGE, and tooling requirements for the program. Figure 11-4 shows the entire program in PERT format.

The principal problems in meeting these schedules include: the design, fabrication and testing of a flight data relay, the completion of flight design for the penetrometer, and the procurement of flight parts.

The data relay subsystem must be redesigned and repackaged due to the anticipated requirement to handle the wide range of signal strengths.

The relatively short time remaining until the fabrication of flight hardware must begin dictates that many activities occur in parallel. Fabrication of the system models, for example, will overlap system testing and field tests, and procurement of flight parts will occur at the same time as systems testing. Also, fabrication of flight systems must begin before qualification testing is complete.

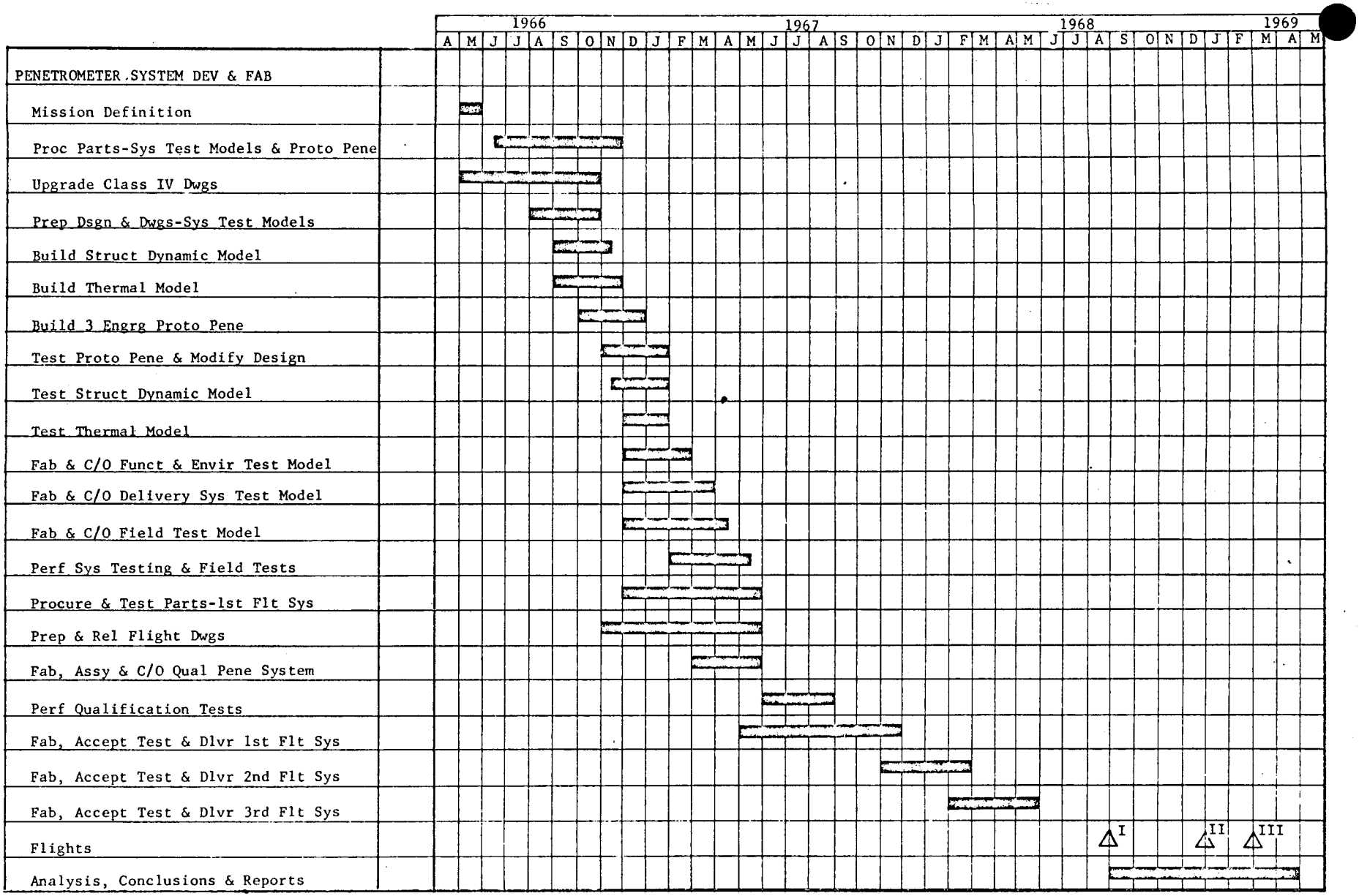

FIGURE 11-1. SCHEDULE FOR PENETROMETER SYSTEM DEVELOPMENT AND FABRICATION

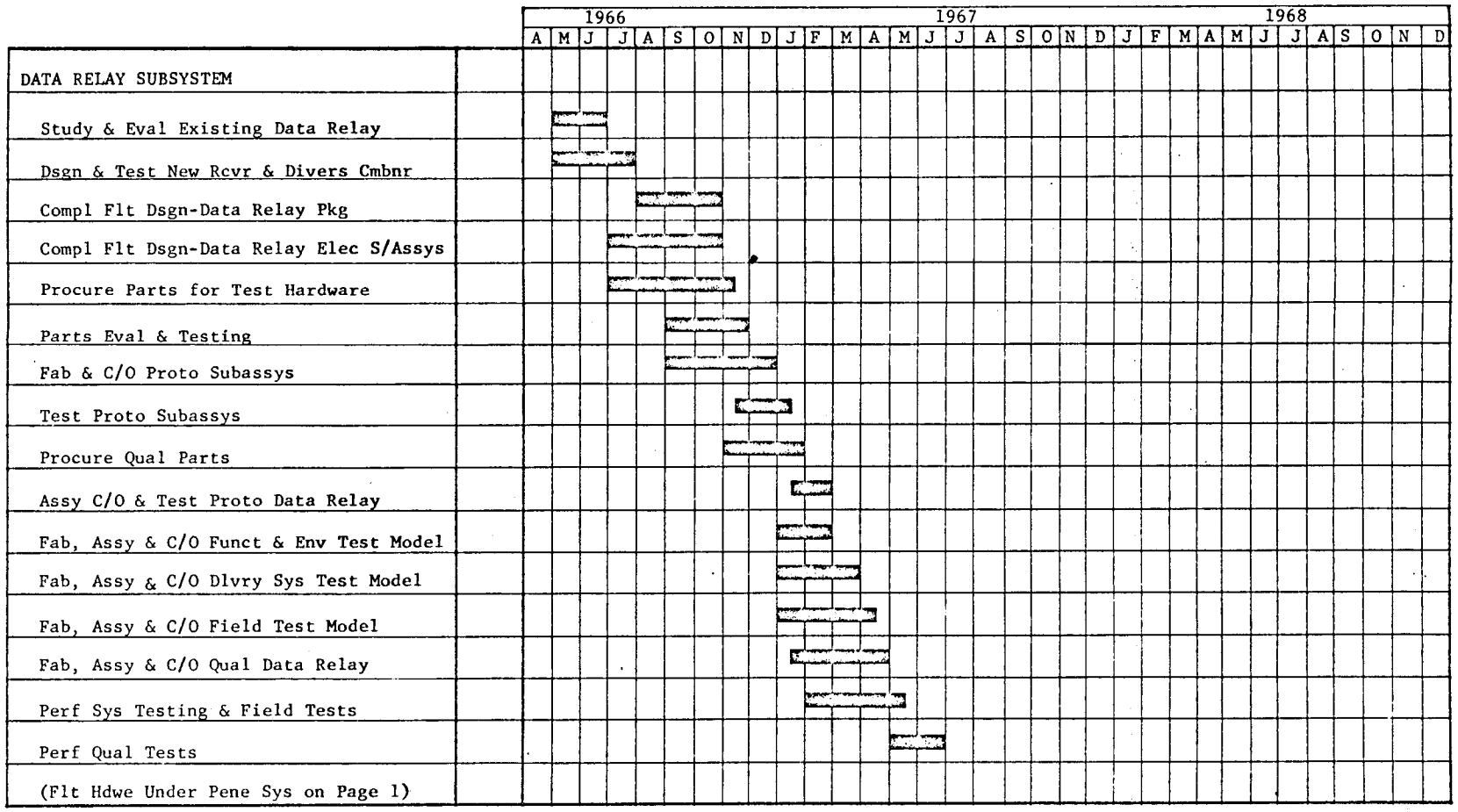

FIGURE 11-2. SCHEDULE FOR DATA RELAY SUBSYSTEM

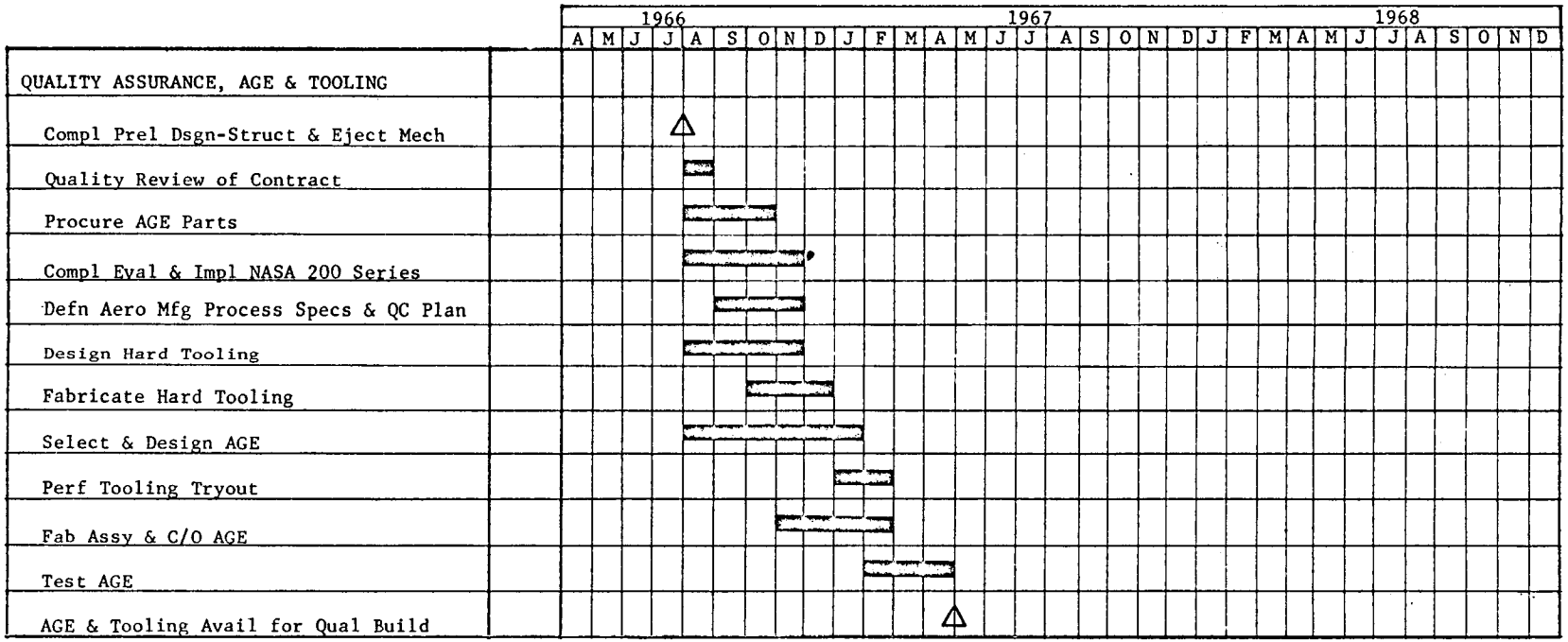

FIGURE 11-3. SCHEDULE FOR QUALITY ASSURANCE, AGE, AND TOOLING

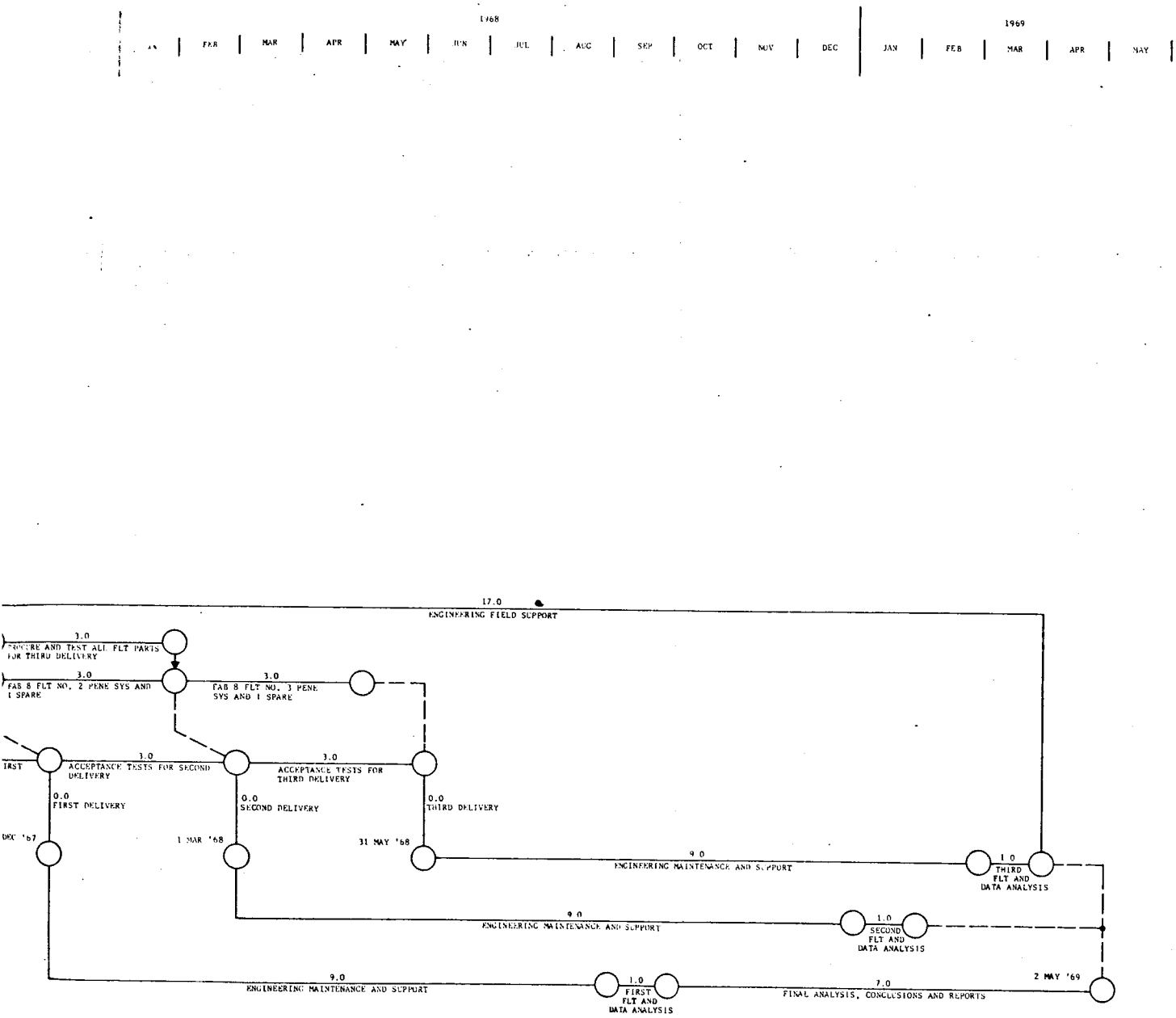

FIGURE 11-4.. LUNAR PENETROMETER PROGRAM IN PERT FORMAT

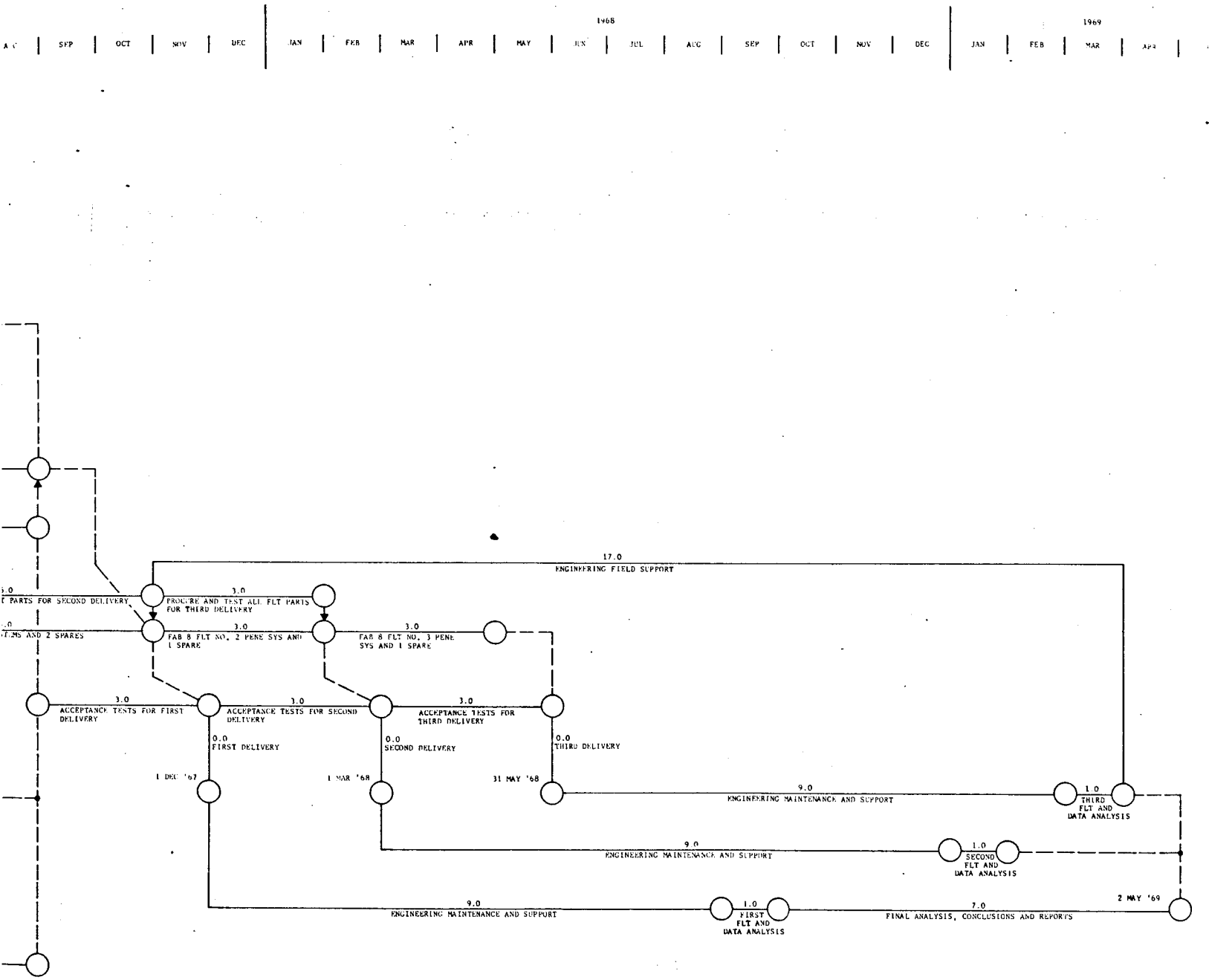

FIGURE 11-4.. LUNAR PENETROMETER IN PERT FORMAT

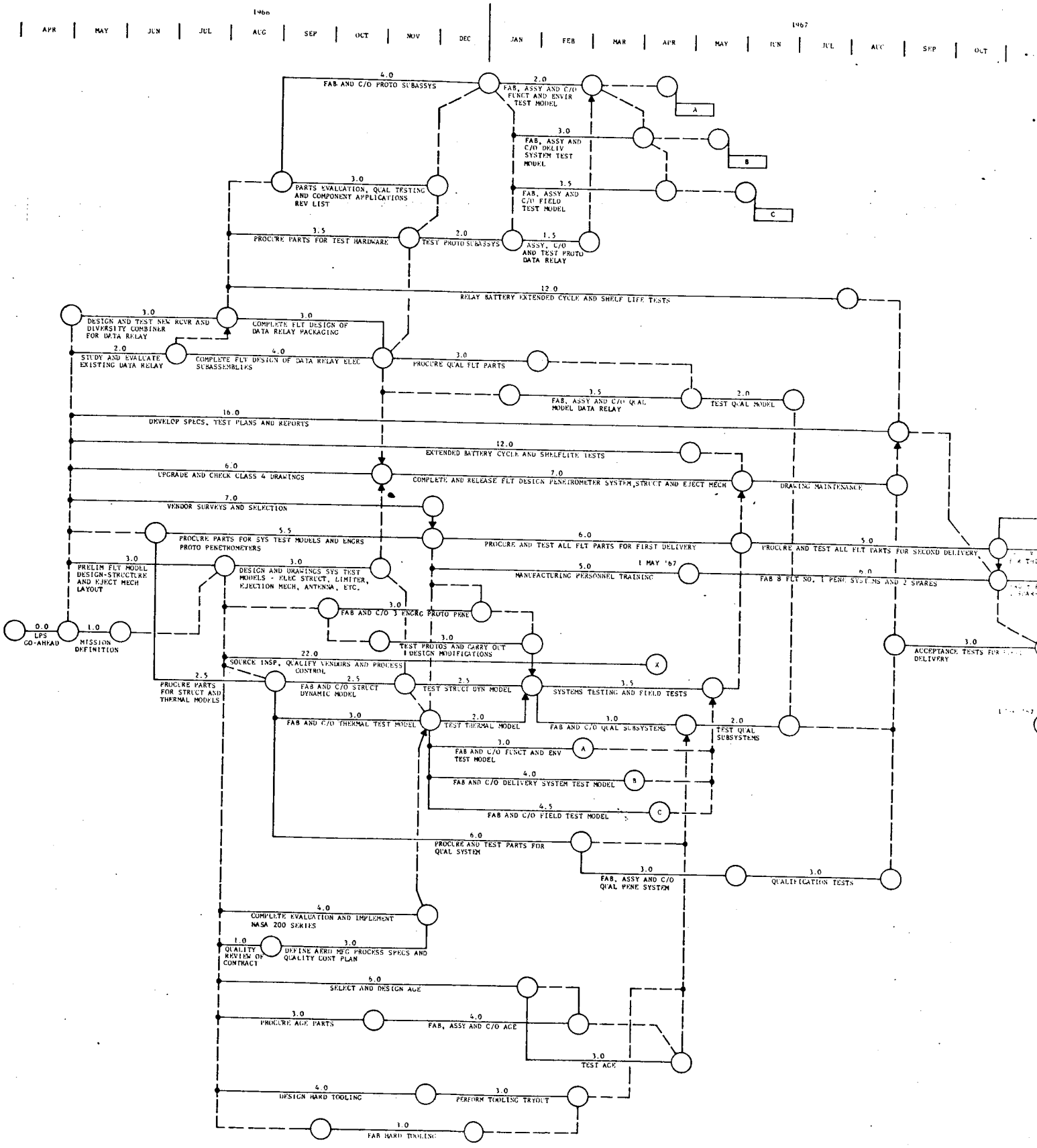
1966
APR
MAY
JUN
JUL
AUG
SEP
OCT
NOV
DEC
1967
JAN
FEB
MAR
APR
MAY
JUN
JUL
AUG
SEP
OCT
4.0
FAB AND C/O PROTO SUBASSYS
2.0
FAB, ASSY AND C/O FUNCT AND ENVIR TEST MODEL
A
3.0
FAB, ASSY AND C/O DELIV SYSTEM TEST MODEL
B
3.0
PARTS EVALUATION, QUAL TESTING AND COMPONENT APPLICATIONS REV LIST
3.5
FAB, ASSY AND C/O FIELD TEST MODEL
C
3.5
PROCURE PARTS FOR TEST HARDWARE
2.0
TEST PROTO SUBASSYS
1.5
ASSY, C/O AND TEST PROTO DATA RELAY
12.0
RELAY BATTERY EXTENDED CYCLE AND SHELF LIFE TESTS
3.0
DESIGN AND TEST NEW RCVR AND DIVERSITY COMBINER FOR DATA RELAY
3.0
COMPLETE FLT DESIGN OF DATA RELAY PACKAGING
2.0
STUDY AND EVALUATE EXISTING DATA RELAY
4.0
COMPLETE FLT DESIGN OF DATA RELAY ELEC SUBASSEMBLIES
3.0
PROCURE QUAL FLT PARTS
3.5
FAB, ASSY AND C/O QUAL MODEL DATA RELAY
2.0
TEST QUAL MODEL
16.0
DEVELOP SPECS, TEST PLANS AND REPORTS
12.0
EXTENDED BATTERY CYCLE AND SHELFLITE TESTS
6.0
UPGRADE AND CHECK CLASS 4 DRAWINGS
7.0
COMPLETE AND RELEASE FLT DESIGN PENETROMETER SYSTEM, STRUCT AND EJECT MECH
DRAWING MAINTENANCE
7.0
VENDOR SURVEYS AND SELECTION
5.5
PROCURE PARTS FOR SYS TEST MODELS AND ENGRS PROTO PENETROMETERS
6.0
PROCURE AND TEST ALL FLT PARTS FOR FIRST DELIVERY
5.0
PROCURE AND TEST ALL FLT PARTS FOR SECOND DELIVERY
3.0
PRELIM FLT MODEL DESIGN-STRUCTURE AND EJECT MECH LAYOUT
3.0
DESIGN AND DRAWINGS SYS TEST MODELS - ELEC STRUCT, LIMITER, EJECTION MECH, ANTENNA, ETC.
5.0
MANUFACTURING PERSONNEL TRAINING
1 MAY '67
6.0
FAB 8 FLT NO, 1 PENE SYSTEMS AND 2 SPARES
3.0
FAB AND C/O 3 ENGRG PROTO PENE
0.0
LPS GO-AHEAD
1.0
MISSION DEFINITION
3.0
TEST PROTOS AND CARRY OUT DESIGN MODIFICATIONS
X
3.0
ACCEPTANCE TESTS FOR DELIVERY
22.0
SOURCE INSP, QUALIFY VENDORS AND PROCESS CONTROL
2.5
PROCURE PARTS FOR STRUCT AND THERMAL MODELS
2.5
FAB AND C/O STRUCT DYNAMIC MODEL
2.5
TEST STRUCT DYN MODEL
3.5
SYSTEMS TESTING AND FIELD TESTS
3.0
FAB AND C/O THERMAL TEST MODEL
2.0
TEST THERMAL MODEL
3.0
FAB AND C/O QUAL SUBSYSTEMS
2.0
TEST QUAL SUBSYSTEMS
3.0
FAB AND C/O FUNCT AND ENV TEST MODEL
A
4.0
FAB AND C/O DELIVERY SYSTEM TEST MODEL
B
4.5
FAB AND C/O FIELD TEST MODEL
C
6.0
PROCURE AND TEST PARTS FOR QUAL SYSTEM
3.0
FAB, ASSY AND C/O QUAL PENE SYSTEM
3.0
QUALIFICATION TESTS
4.0
COMPLETE EVALUATION AND IMPLEMENT NASA 200 SERIES
1.0
QUALITY REVIEW OF CONTRACT
3.0
DEFINE AERO MFG PROCESS SPECS AND QUALITY CONT PLAN
6.0
SELECT AND DESIGN AGE
3.0
PROCURE AGE PARTS
4.0
FAB, ASSY AND C/O AGE
3.0
TEST AGE
4.0
DESIGN HARD TOOLING
3.0
PERFORM TOOLING TRYOUT
3.0
FAB HARD TOOLING

It is assumed that detailed design of all penetrometer modules will begin in September 1966. In addition to the possible problems of parallel fabrication and testing, considerable effort will be required to qualify design of several of the penetrometer modules.

Procurement of flight parts is another potential problem area if early procurement action is not taken. Long lead procurements, paced by the necessity to develop a domestic source for the battery, may prove to be holding items to the early start of flight fabrication.

Assembly of the functional and environmental test model is scheduled as early in the program as possible to permit an early evaluation of the suitability of the system design.

Design reviews coincident with completion of preliminary, prototype, and flight design are major milestones where all development test results will be assessed to ensure development of the most reliable system.

A major assumption in this schedule is that the preliminary design of the complete system is completed prior to September 1966. As demonstrated in the sections preceding, timely completion of this activity is almost mandatory to accommodate the large amount of design and testing work to be accomplished before fabrication of flight units can begin.

The total program schedule is feasible within the constraints described. It is apparent, however, that due to the large number of critical and parallel activities, careful attention must be given schedules and schedule performance.

SECTION 12

MANAGEMENT PLAN

The Management Plan consists of recommendations for the essential functions and activities necessary to implement and control the design, development, qualification testing, and production program previously described. In summary these activities are:

(1) Program Management.

(2) Schedule Control.

(3) Configuration Management.

(4) Data Management.

12.1 PROGRAM MANAGEMENT

The Program Manager is responsible for all aspects of the program. This includes program planning, scheduling and schedule control, cost control, technical control, subcontract management, program reporting and liaison with NASA. His team conducts the work within the technical requirements, schedules, and budgets that he establishes.

The Program Manager performs the following major tasks:

(1) Acts as the sole point of contact between the contractor and NASA.

(2) Interprets contractual requirements.

(3) Issues all budgets and work schedules.

(4) Issues design criteria and initiates design activities.

(5) Approves all drawings and specifications.

(6) Chairs the Configuration Control Committee with authority to approve or disapprove unilaterally any change proposal.

(7) Approves all test directives.

(8) Approves all subcontracts and major purchases.

(9) Releases all hardware for fabrication.

12.2 SCHEDULE CONTROL

Schedule control for the penetrometer hardware development program will consist of the NASA PERT system, augmented by the line-of-balance scheduling technique during the production phase of the program.

The line-of-balance method helps management compare a production program's progress with its objective. The comparison is made by examination of a simple chart which discloses shortages or overages in parts, components, and subassemblies. These items are selected in advance as being the materials or operations regarded as critical or potentially limiting to the program. The selection of materials and operations to be monitored is one of the chief differences between line-of-balance and other systems; most control or surveillance systems consider all factors regardless of their importance to the program.

The line-of-balance system will be established during the production planning stages. It will be used to determine optimum production and assembly rates for the selected items, and then used throughout the program's production period to monitor performance.

The use of PERT on the development phase and line-of-balance on the production phase is considered advantageous for continuity of control from program inception to the terminal production item.

12.3 CONFIGURATION MANAGEMENT

The penetrometer hardware development program will include a configuration management program which is applicable to each contract end item. Configuration management will define and identify the items that successfully complete qualification tests and control the identity of these items during production to assure interchangeability. The configuration management will be in accordance with the Apollo Configuration Management Manual NPC 500-1.

The degree of configuration control is related to the First Article Configuration Inspection (FACI). Before FACI, during development and qualification tests, the detail design is reconciled with system requirements. Changes are implemented according to procedures which are keyed to quick-response and proper authorization. During this period, the detail system and critical component specifications and acceptance test procedures are developed and approved.

The FACI will be conducted for each hardware end item and its purpose will be to establish the production configuration baseline. First article hardware configuration will be compared with the designs and specifications. Exact relationship between the deliverable units and the qualification test configuration will be reviewed. The validity of the Acceptance Test Procedures will be confirmed by comparing test methods and data with the specified performance described in the specifications.

At the completion of the FACI, the production design and test documentation will be approved by NASA. Further changes to the end item configuration must be approved by the cognizant NASA representative.

12.4 DATA MANAGEMENT

The Program Manager will provide a central control point for all data management actions. He will monitor the timely collection of data and maintain surveillance, through appropriate functional activities, to assure standardization and economy in the preparation, publication, and distribution of the data.

The data and reports to be provided for NASA approval or information are listed below.

Data Title	Frequency	NASA Approval Copies or Information	
1. NASA Financial Management Plan (NASA Form 533)	Monthly - 15 days following end of reporting period	1	Information
2. NASA PERT Network	Bi-weekly	1	Information
3. Monthly Progress Report	Monthly - 15 days following end of reporting period	10	Information
4. Quality Status Report	Monthly - 15 days following end of reporting period	10	Information

Data Title	Frequency	NASA Approval Copies or Information	
5. Reliability Progress Reports	Monthly - 15 days following end of reporting period	10	Information
6. Quality Program Plan	45 days after contract award	10	Approval
7. Reliability Program Plan	45 days after contract award	10	Approval
8. Qualification Test Plan	2 months after contract award	10	Approval
9. Qualification Status List	2 months after contract award and monthly thereafter until qualification is complete	5	Final submittal requires approval
10. Engineering Drawings and Specifications	Prior to Qualification Test	5 1	Information Repro
11. Reliability Evaluation Program Review Reports	30 days following Program Review	5	Approval
12. Design Review Reports	21 days following Design Review	5	Information
13. Qualification Test Reports - Preliminary	10 days after Test	5	Information
14. Qualification Test Reports - Final	30 days after Tests	5	Information
15. Production Plan	3 months prior to FACI	10	Approval
16. Line-of-Balance Summary Chart	Bi-weekly starting at 3 months prior to FACI	1	Information
17. Production Drawings and Specifications	2 weeks prior to FACI	5 1	Approval Repro

Data Title	Frequency	NASA Approval Copies or Information	
18. End Item Acceptance Test Plan	2 weeks prior to FACI	10	Approval
19. Final Report	30 days after last deliverable item	50 1	Approval Repro
20. Interface Control Documentation	45 days after contract award	5 1	Approval Repro

SECTION 13

PROGRAM COSTS AND MANPOWER REQUIREMENTS

13.1 BASIS OF COSTS AND MANPOWER REQUIREMENTS

The program cost estimates included herein are based upon implementation of the development, test, reliability, quality assurance, field support and management functions defined in the preceding sections of this program plan and on the production and delivery of the following quantities of flight hardware (for three Apollo missions):

AGE	One set
Penetrometers	224 production units
Data Relay	28 production units
Structure and Ejection Mechanism	28 production units

The schedule for completion of the tasks in this program plan is as indicated in the bar charts and PERT network shown in Section 11. These schedules assume a program go-ahead of May 1966 and flight hardware delivery dates of December 1967, March 1968, and June 1968. Flights are to occur nine months after hardware delivery and the program is due for completion in May 1969.

13.2 COST MATRIX

Costs were accumulated in accordance with subtasks of the following six major categories:

(1) General (which includes program management and reports).

(2) AGE (and factory and checkout equipment).

(3) Penetrometers.

(4) Data relays.

(5) Penetrometer structure and ejection mechanisms.

(6) Systems.

In addition, costs were accumulated by performing organizations. Also, the costs were divided in the categories of nonrecurring and recurring costs. Nonrecurring costs were those costs accumulated through completion of qualification testing of the hardware, while recurring costs were those costs accumulated after completion of the qualification tests (or simply, those costs associated with delivery of hardware after all development and qualification testing has been completed). These detail costs are reflected in Table 13.1.

13.3 TOTAL PROGRAM COSTS

The total program estimated costs are shown in Figure 13-1. This is a cumulative curve totaling $8.56 million for the program effort defined in this program plan. The costs by year are as follows.

Period	Cost (Millions of Dollars)
May 1966 through December 1966	2.46
January 1967 through December 1967	4.21
January 1968 through December 1968	1.62
January 1969 through May 1969	0.27
Total	8.56

TABLE 13.1

DETAILED COSTS (THOUSANDS OF DOLLARS)

		Electrical Engineering -Antennas	Program Management	Program Engineering	Systems Engineering	Electrical Engineering	Mechanical Engineering	Test Engineering	Production Control	Manufacturing Engineering	Material	Manufacturing	Q. C. Inspection	Q. C. Engineer	Qual Assur Off-site	Qual Assur Process Control	Reliability	Purchasing	Tool Design	Tool Fabrication	TOTALS
General																					
Program Management	Nonrecurring		185																		185
Data and Reports	Nonrecurring		118																		118
Program Management	Recurring		372																		372
Data and Reports	Recurring		123																		123
Age and Factory Checkout Equipment (FSE)																					
Design, Develop and Qual Test (Includes Dev Hardware)	Nonrecurring					34	64	229									2				329
Design and Build of Test Equipment	Nonrecurring							78		1	3	2						1			85
Processing, Training, Vendor Selection, Etc.	Nonrecurring														2	2					4
Manufacturing and Qualification of Hardware	Nonrecurring																				
Manufacturing of Flight Hardware	Recurring						12	30	47	13	388	59	17	6		2	5	25			464
Sustaining Production Effort	Recurring																				140
Penetrometer																					
Design, Develop and Qual Test (Includes Dev Hardware)	Nonrecurring	54				573	91	136									32				886
Design and Build of In Process Test Equipment	Nonrecurring	13				66		53	2	1	4	2	3	1				1			146
Design and Build of Special Tooling and Gages	Nonrecurring										4		5						7	32	48
Processing, Training, Vendor Selection, Etc.	Nonrecurring								14	27		2	2		8	7	2	3			65
Manufacturing and Qual of Hardware	Nonrecurring										19	15	3	2							39
Manufacturing of Flight Hardware	Recurring										555	280	74								909
Sustaining Production Effort	Recurring	18				155	16	50	96	16				27		24	38	31			471
Data Relay																					
Design, Develop and Qual Test (Includes Dev Hardware)	Nonrecurring	36				460	65	127									34				722
Design and Build of In Process Test Equipment	Nonrecurring					39		55	2	1	1	4	1	1				1			105
Design and Build of Special Tooling and Gages	Nonrecurring										1		1						2	9	13
Processing, Training, Vendor Selection, Etc.	Nonrecurring								9	22		11	2	2	11	2	3	2			64
Manufacturing of Qual Hardware	Nonrecurring										14	15	3								32
Manufacturing of Flight Hardware	Recurring										389	285	65								739
Sustaining Production Effort	Recurring	17				114	9	49	89	73				24		6	45	27			453
Penetrometer Structure and Eject Mech;																					
Design, Development and Qual of Test (Includes Dev Hardware)	Nonrecurring						88	69						1		3	6				163
Design and Build of In Process Test Equipment	Nonrecurring							25			1		2						2	9	29
Design and Build of Special Tooling and Gages	Nonrecurring								4	20		1	1	1	1	2		1			14
Processing, Training, Vendor Selection, Etc.	Nonrecurring										1	5	1								31
Manufacturing of Qual Hardware	Nonrecurring																				7
Manufacturing of Flight Hardware	Recurring						9	35	28	22	71	102	14	7		12	6	3			187
Sustaining Production Effort	Recurring																				122
Systems																					
Systems Integration	Nonrecurring			58	311																369
System Design, Develop and Qual (Includes Dev Hardware)	Nonrecurring					101		94					3				26				224
Systems Integration	Recurring			94	298																392
System Flight Hardware Acceptance Test	Recurring						5	138	14	14		71	10	3							255
Field Support	Recurring							220							39						259
		138	798	152	609	1,542	359	1,390	305	210	1,451	854	207	75	61	60	199	95	11	50	8,[illegible]

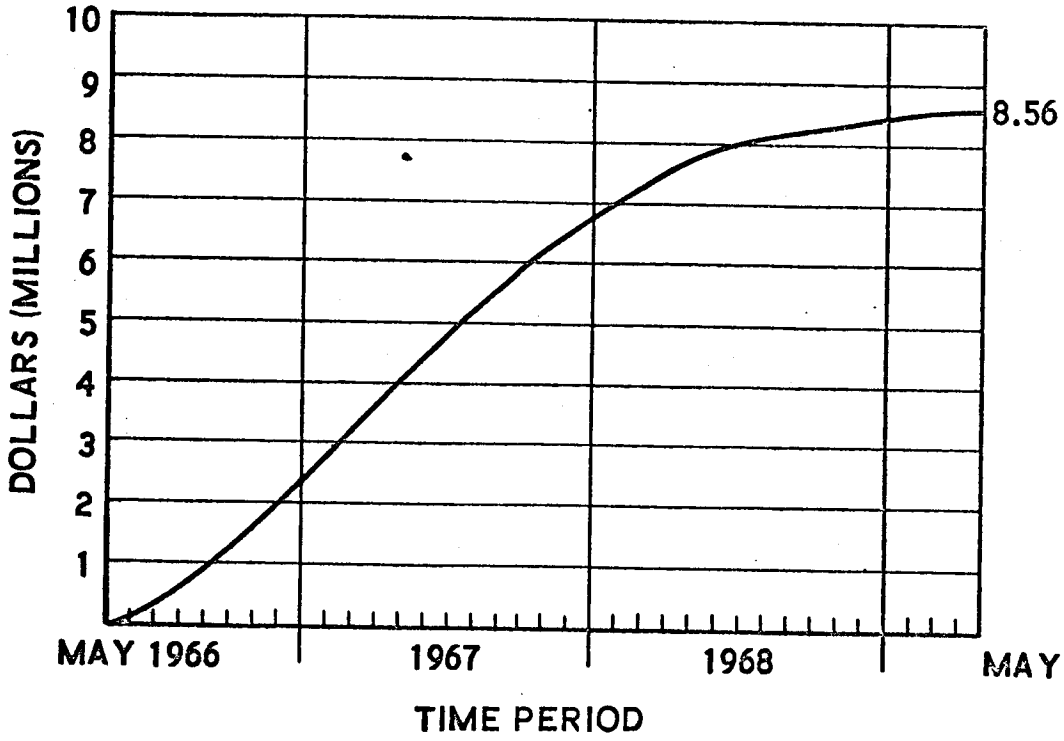

FIGURE 13-1. TOTAL PROGRAM ESTIMATED COSTS

A detailed cost breakdown is shown in Table 13.1. As reflected in this table, recurring costs total $4,886,000 while nonrecurring costs total $3,678,000. Total labor costs (of the $8.564 million total) are $6,271,000.

13.4 MANPOWER REQUIREMENTS

Manpower requirements (by heads) for implementation of the effort contained in this program plan are indicated in Table 13.2

As indicated in Table 13.2, a total of 3068 man months is required. Of this total, 1679 man months are engineering while 1389 man months are manufacturing. Peak manpower requirements occur in the month of February 1967 where a total of 166 people are required. This manpower loading is plotted in Figure 13-2.

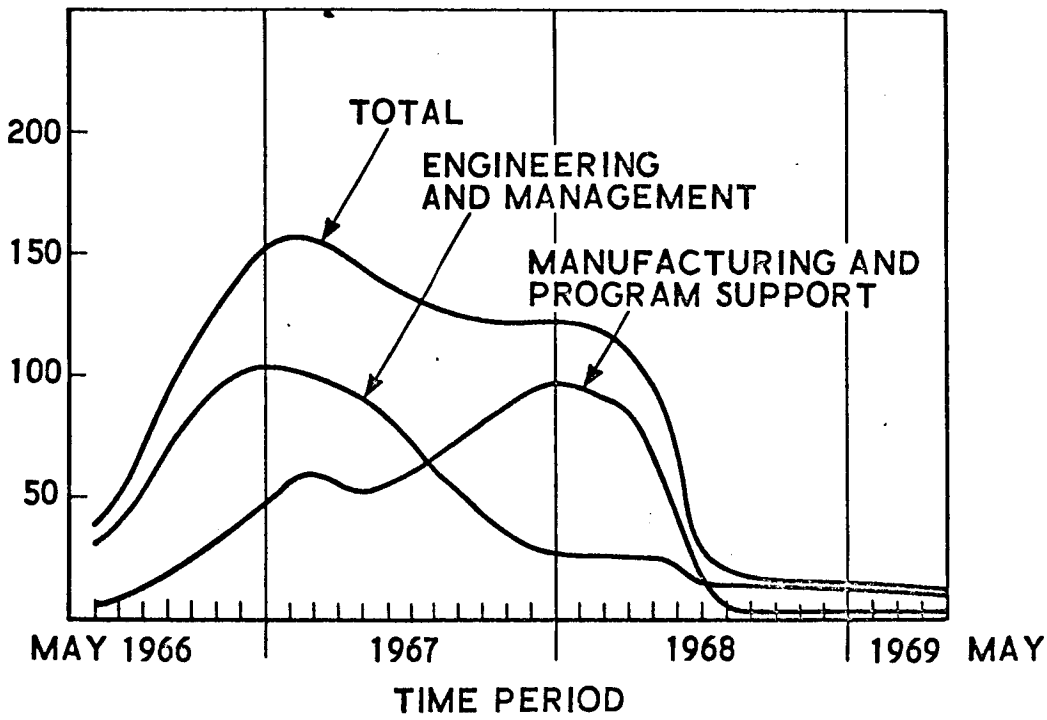

FIGURE 13-2. MANPOWER LOADING

TABLE 13.2

PROGRAM MANPOWER REQUIREMENTS

	Month												
	Jan	Feb	Mar	Apr	May	June	July	Aug	Sept	Oct	Nov	Dec	Total
1966													
Engineering					34	41	54	79	96	93	88	92	577
Manufacturing					6	8	11	18	22	29	31	45	170
1967													
Engineering	90	91	93	78	78	73	62	45	43	37	35	35	760
Manufacturing	69	75	53	50	55	60	65	74	76	81	88	93	839
1968													
Engineering	34	32	32	27	26	17	12	14	14	15	20	20	263
Manufacturing	90	85	80	66	47	1	1	1	1	1	1	1	375
1969													
Engineering	20	18	14	17	10								79
Manufacturing	1	1	1	1	1								5
TOTAL													3068