5050

CATION-EXCHANGE RESIN-CATALYZED CONDENSATION AND POLYMERIZATION OF ALDEHYDES

A Thesis Submitted to

Case Institute of Technology

in Partial Fulfillment of the Requirements

for the Degree of

Doctor of Philosophy

by

Murray L. Pinns

1958

LIBRARY COPY
MAY 9 1967
LEWIS LIBRARY, NASA
CLEVELAND, OHIO
CASE FILE COPY

N67-86783
(ACCESSION NUMBER)
(THRU)
52
(PAGES)
(CODE)
CR-80229
(NASA CR OR TMX OR AD NUMBER)
(CATEGORY)
FACILITY FORM 602

5050

CATION-EXCHANGE RESIN-CATALYZED CONDENSATION AND POLYMERIZATION OF ALDEHYDES

A Thesis Submitted to

Case Institute of Technology

in Partial Fulfillment of the Requirements

for the Degree of

Doctor of Philosophy

by

Murray L. Pinns

1958

5050

ABSTRACT

A study was made of the use of strongly acid cation-exchange resins to catalyze the self-condensation and polymerization of aliphatic aldehydes and cyclohexanone. Of 10 aldehydes tested, only those of lower molecular weight gave appreciable yields of pure compounds. Near or below room temperature, propionaldehyde, n-butyraldehyde, and isobutyraldehyde, gave para-aldehydes. At reflux, propionaldehyde, n-butyraldehyde, isovaleraldehyde, and n-caproaldehyde were converted to dialkyl acroleins. Isobutyraldehyde was converted to the alkyl hydroxytrioxane. Cyclohexanone yielded cyclohexenyl cyclohexanone. The addition of water or solvent hindered the catalysis, but re-use of the catalyst had little effect if water of dehydration was removed. Approximately maximum conversion was achieved in one hour by the use of 25 percent Amberlite IR-120 or Dowex 50, based on the weight of aldehyde. All runs at reflux produced a distillation residue which is suggested to be a linear polymer based on a polyoxymethylene chain.

5050

ACKNOWLEDGEMENT

The author wishes to express deep gratitude to Professor Melvin J. Astle for his help and guidance. The author also wants to thank the Case Institute of Technology for its financial aid in the form of a Graduate Fellowship and the National Advisory Committee for Aeronautics for financial aid under its Graduate Study Program.

TABLE OF CONTENTS

	Page
ACKNOWLEDGEMENT	ii
ABSTRACT	iii
INTRODUCTION	1
EXPERIMENTAL PROCEDURES	3
Preparation of Cation-Exchange Resins	3
Preparation of Aldehydes and Cyclohexanone	3
Reaction Procedures	3
Separation and Identification of Products	4
RESULTS AND DISCUSSION	6
Effect of Reaction Conditions on the Reactions of n-Butyraldehyde	6
Repeatability	6
Effect of reaction temperature (table II)	6
Effect of reaction time (table III)	8
Effect of quantity of Catalyst (table IV)	9
Effect of inert solvent (table V)	10
Effect of added water (table VI)	11
Effect of re-use of the catalyst (table VII)	11
Comparison of Amberlite IR-120 with Dowex 50×8 (table VIII)	13
Reactions of Other Aldehydes	14
Reactions near or below room temperature	14
Reactions at reflux	15
Condensation of Cyclohexanone	16
Distillation Residues	18
SUMMARY OF RESULTS	20
APPENDIXES	
A - DISCUSSION OF THE ACID-CATALYZED CONDENSATION OF ALDEHYDES	22
B - USE OF CATION-EXCHANGE RESINS TO CATALYZE REACTIONS OF CARBONYL COMPOUNDS	30
C - DISCUSSION OF SOME DETAILS OF EXPERIMENTAL WORK	34
REFERENCES	44

5050

INTRODUCTION

The use of cation-exchange resins in place of soluble acids as catalysts for chemical reactions has been given considerable attention in recent years and has been thoroughly reviewed by Astle (1) and by McGarvey and Kunin (2). The acid-catalyzed condensation of aldehydes is discussed in Appendix A, and the use of cation-exchange resins to catalyze the reactions of carbonyl compounds is reviewed in Appendix B.

The purpose of the present investigation was to extend the work of Durr and coworkers (3,4,5) on the self-condensation of aliphatic aldehydes and cyclohexanone in the presence of strongly acid cation-exchange resins. Durr reported the formation of dialkyl acroleins from the 4-, 6-, and 7-carbon-atom normal aliphatic aldehydes and cyclohexylidene cyclohexanone from cyclohexanone in the presence of Amberlite IR-120 at 130° to 150°, generally above the normal reflux temperature of the carbonyl compounds. At ambient temperature he obtained no product from n-butyraldehyde or n-heptaldehyde, but obtained paraldehyde from acetaldehyde. He also studied the effect of some reaction conditions on the crotonization of n-heptaldehyde.

In the present investigation, an extensive study has been made of the effect of the following variables on the polymerization and self-condensation of n-butyraldehyde: (a) Reaction temperature from about 30° to 80°, (b) reaction time from 1/2 to 12 hours, (c) quantity of catalyst from 5 to 25 percent of the weight of aldehyde, (d) brand of

cation resin (Amberlite IR-120 and Dowex 50), (e) repeated re-use of the catalyst, (f) addition of a nonreactive solvent, and (g) addition of a small quantity of water.

With the results of this study as a background, nine other aldehydes and cyclohexanone were treated with one of the resins. A hypothesis is offered to explain the relative reactivity of some of the aldehydes and to indicate a possible structure of the distillation residues which were obtained.

5050

5050

EXPERIMENTAL PROCEDURES

Preparation of Cation-Exchange Resins

To prepare the acid form, the resins as received were treated with about 500 ml of 7 to 9 percent hydrochloric acid per 100 grams, washed free of acid and chloride, rinsed with acetone, air-dried, and finally vacuum dried for 8 hours at 60° to 65° under about 100 mm absolute pressure.

Preparation of Aldehydes and Cyclohexanone

All these compounds except 2-methyl valeraldehyde were commercial products which were dried, distilled, stored under nitrogen in dark bottles, and used within 10 days. The 2-methyl valeraldehyde was synthesized by the low-pressure hydrogenation of an ethanol solution of 2-methyl - 3-ethyl acrolein over Raney nickel. The boiling ranges and refractive indices of the compounds compared favorably with those reported in the literature (listed in appendix C).

Reaction Procedures

The ion-exchange resin (generally 25g) and carbonyl compound (generally 100g) were mixed under one of the reaction procedures described below. (For the reaction of n-butyraldehyde with cyclohexanone, 0.6 mole butyraldehyde was added over a period of about two hours to 25 grams resin suspended in 0.6 mole cyclohexanone.) At the end of the desired reaction time, the resin-catalyst was filtered off and washed with about 20 grams reagent grade benzene which was added to the

filtrate. The filtrate and benzene wash were observed to be free of suspended resin. If the resin was to be used again, it was washed with benzene or acetone until the air-dried resin was substantially odorless.

5050

In one procedure, the reaction mixture was shaken under nitrogen in a 300 ml iodination flask on a mechanical shaker. Exothermic heat raised the batch temperature briefly to about 40° when Amberlite IR-120 was used or to about 70° when Dowex-50 was used, and the temperature then returned to ambient. At the end of the reaction period, the resin showed little change in appearance.

In another procedure, the reaction mixture was stirred in a flask equipped with a condenser, nitrogen bubbler, magnetic stirrer, and as the occasion required, a Dean-Stark water trap. Reaction temperature was maintained with a heating mantle or ice-salt bath as needed. During reflux reactions, the initially transparent, amber, spherical particles of ion-exchange resin became opaque, dark, and irregularly shaped.

Separation and Identification of Products

The filtrates were distilled with a 10-inch or 12-inch packed, heated column under reduced pressure. Refractive indices and infra-red spectra were taken of the fractions and residues. The infra-red absorption peaks are discussed in appendix C. Approximate molecular weights were determined cryoscopically in benzophenone. Determinations made on known compounds and on duplicate samples of unknowns indicated that the results were reliable to two significant figures. When the product was believed to be a substituted trioxane,

confirmation was sought by heating the product with a trace of p-xylene - 2-sulfonic acid, distilling, and identifying the original aldehyde, which should be regenerated by this procedure. Densities of the products and melting points of their 2, 4-dinitrophenylhydrazones were determined when needed, and some molar refractions were calculated.

5050

5050

RESULTS AND DISCUSSION

Effect of Reaction Conditions on the Reactions of n-Butyraldehyde

In all runs, 100 grams n-butyraldehyde was used, and unless otherwise indicated, the catalyst was 25 grams fresh Amberlite IR-120, acid form. The products and their properties are listed in table I.

Repeatability. - The results of triplicate runs carried out at reflux for 6 hours indicated that the over-all conversions agreed within 10 percentage points. The relative proportions of products showed a little more variation, possibly as the result of normal variations in the distillation procedure.

Effect of reaction temperature (table II). - The product which was formed depended on the reaction temperature. In addition to a distillation residue which was obtained in all runs, refluxing for one hour at 73° to 80° converted 62 percent of the butyraldehyde to 2-ethyl - 3-propyl acrolein, in agreement with Durr's finding (4). On the other hand, stirring for one hour at 27° to 31° converted 48 percent of the butyraldehyde to parabutyraldehyde (2,4,6-tripropyl - 1,3,5-trioxane) and only one percent to ethyl propyl acrolein. At a little higher temperature, 33° to 45°, a little more dialkyl acrolein and a little less parabutyraldehyde were formed.

TABLE I. - REACTION DATA AND DESCRIPTION OF PRODUCTS

Run no.	Starting material	Reaction conditions	Conversion, percent	Product	Properties of product: Boiling range, Found, °C	Boiling range, Found, mm	Boiling range, Lit., °C	Boiling range, Lit., mm	Refractive index n_D^{20} Found	Refractive index n_D^{20} Lit.	Molecular weight, Found	Molecular weight, Calculated	Infra-red absorption peaks (g): -OH	>C=O (conj.)	>C=O (not conj.)	>C=C<	-C-O-C-O-C-	Melting point of 2,4-dinitrophenyl hydrazone, °C: Found (corr.)	Melting point, Lit.	Acid treatment converts to starting mat'l
98	Propionaldehyde	Reflux 6 hr, 50°-62°	>41	2-Methyl-3-ethyl acrolein	28	8	136.8(6)	760	1.4491	1.4488(6)	---	---	w.	s	-	s	-	161.9-162.4	161(6)	------
98	"	" " "	18	Distillation residue	-----	-------	--------	---	1.4770	---------	260	---	v.w.	s	m	w	s	------	------	------
117	"	Stir 3 hr, -31°-0°	75	Parapropionaldehyde	45-50	2.2-4.7	169-70(35)	760	1.4170	---------	180	174	----	-	-	-	s	------	------	Yes
103	Crotonaldehyde	Reflux 1 hr, 94°	14	Distillation residue	-----	-------	--------	---	------	---------	---	---	----	m	m	w	s	------	------	------
88	n-Butyraldehyde	Reflux 1 hr, 68°-73°	62	2-Ethyl-3-propyl acrolein(a)	42-45	1.8-2.0	173(6)	760	1.4528	1.4518(6) (e)	---	---	v.w.	s	-	s	-	------	------	------
85	"	Stir 1 hr, 27°-31°	48	Parabutyraldehyde(b)	77-85	3	105-8(6)	12	1.4261	---------	210	216	----	-	-	-	s	------	------	Yes
49	"	Shake 18 hr, 25°-40°	35	Mixture	80-95	4	--------	---	1.4300-81	---------	---	---	w.	m	m	s	s	------	------	No
56	"	Reflux 6 hr, 73°-87°	16	Distillation residue	-----	-------	--------	---	---------	---------	---	---	w.	m	m	w	s	------	------	No
96	Isobutyraldehyde	Reflux 6 hr, 62°-65°	33	5,5 Dimethyl-2,4 di-isopropyl-6-hydroxy-1,3-dioxane(c)	102	3	110-11(7)	8	1.4438	1.4461(7)	226	216	m	-	w	-	s	------	------	Partly
92	"	Reflux 6 hr, 60°-63°	27	Distillation residue	-----	-------	--------	---	1.4621	---------	>380	---	v.w.	m	m	w	s	------	------	No
90	"	Stir 50 min, 27°-45°	91	Paraisobutyraldehyde	58.1-58.9(m.p.)	-------	58-60(6) (m.p.)	---	------	---------	210	216	----	-	-	-	s	------	------	Yes
111	Isovaleraldehyde	Reflux 1 hr, 90°-91°	22	2-Isopropyl-3-isobutyl acrolein	45-50	2-3	63(8)	5	1.4459	1.4440(8)	---	---	----	s	-	s	-	------	------	------
111	"	" " "	9	Distillation residue	----------	-------	--------	---	1.4508	---------	>270	---	v.w.	m	m	w	s	------	------	------
123	2-Methyl valeraldehyde	30 g, Stir 80 min, 1° to 20°	4	Distillation residue	----------	-------	--------	---	---------	---------	---	---	----	-	-	-	-	------	------	------
108	2-Ethyl butyraldehyde	Reflux 3 hr, 104°-119°	41	Distillation residue	----------	-------	--------	---	1.502	---------	---	---	v.w.	-	w	-	w	------	------	------
121	n-Caproaldehyde	Reflux 1 hr, 105°-109°	9	2-Butyl-3-amyl acrolein	68-93	2	110(9)	7	1.4519	1.4540(9) (f)	---	---	----	s	-	s	-	------	------	------
121	"	" " "	21	Distillation residue	----------	-------	--------	---	1.515	---------	---	---	v.w.	s	m	s	s	------	------	------
106	2-Ethyl caproaldehyde	Reflux 6 hr, 136°-150°	60	Distillation residue	----------	-------	--------	---	1.497	---------	540	---	----	-	w	-	w	------	------	No
92	Benzaldehyde	Stir 30 min, 25°	0	No reaction	----------	-------	--------	----	---------	---------	---	---	----	-	-	-	-	------	------	------
128	Cyclohexanone	Reflux 1 hr, 106°-115°	23	1-Cyclohexenyl-2-cyclohexanone(d)	114-8	3	269-70(10)	---	1.5070	1.5093(11)	184	178	----	-	s	s	-	154.6-155.0	154.5-155(12)	------
116	"	Reflux 5 hr, 113°-169°	-100	Resinous polymer	----------	-------	--------	---	---------	---------	---	---	----	-	s	-	-	------	------	------
112	Cyclohexanone, n-Butyraldehyde	0.6 Mole each, Reflux 2 hr, 78°-91°	20	2-Cyclohexylidene butyraldehyde	68-78	2	95-100(13)	3	1.4798	1.4800(13)	---	---	----	s	-	s	-	134.0-134.5	134(13)	------
112	"	" " "	23	Distillation residue	----------	-------	--------	---	---------	---------	---	---	----	m	m	s	m	------	------	------
115	"	0.6 Mole each, Stir 3 hr, 30°-33°	9	Not identified	71	1.8	--------	---	1.4690	---------	153	---	v.w.	s	-	s	s	------	------	------

(a). d_4^{20} 0.860 g/cm^3 $[R]_D$ found 39.6; calculated by summation (without exaltation) 38.7 cc.

(b). d_4^{20} 0.923 g/cm^3 $[R]_D$ found 60.2; calculated by summation 60.3 cc.

(c). d_4^{20} 0.947 g/cm^3 $[R]_D$ found 60.5; calculated by summation 60.2 cc.

(d). d_4^{20} 1.003 g/cm^3 $[R]_D$ found 52.8; calculated by summation 52.8 cc.

(e). At 25° cc.

(f). At 22° cc.

(g). s strong, m medium, w weak, v w very weak.

TABLE II. - EFFECT OF REACTION TEMPERATURE

Run no.	Reaction conditions	Percent conversion to				
		2-Ethyl - 3-propyl acrolein	Para-butyral-dehyde	Mix-ture	Distil-lation residue	Total
47	Refluxed 1 hr., 73° to 80°	62	0	0	7	69
65	Stirred 1 hr., 33° to 45°	8	32	0	6	46
85	Stirred 1 hr.,	1	48	0	9	58

5050

Effect of reaction time (table III). - Refluxing for more than one hour had only a minor effect on the over-all conversion, but increased the distillation residue a little at the expense of the ethyl propyl acrolein. Stirring for one hour at about 25° to 45° gave somewhat more parabutyraldehyde and ethyl propyl acrolein than did stirring for only 30 minutes. However, shaking for 18 hours in this temperature range or stirring for 6 hours at 47° to 56° no longer gave parabutyraldehyde as a pure product. Instead, vacuum distillation of the reaction products gave a fraction which was a mixture of compounds that could not be separated. This mixture, more fully discussed in appendix C, represented 12 to 35 percent of the starting material and may have been the result of continuous decomposition during distillation. Its physical properties and infra-red spectrum suggest it consisted of 5-ethyl - 2,4-dipropyl - 6-hydroxy - 1,3-dioxane, butyraldol, parabutyraldehyde, and ethyl propyl acrolein. The formation of a product at ambient temperature is in contrast to Durr's report that

5050

butyraldehyde underwent no reaction in the presence of Amberlite IR-120 at this temperature (4).

TABLE III. - EFFECT OF REACTION TIME

Run no.	Reaction conditions	Percent conversion to				
		2-Ethyl - 3-propyl acrolein	Para-butyral-dehyde	Mix-ture	Distil-lation residue	Total
47	Refluxed 1 hr., 73° to 80°	62	0	0	7	69
Av. 52-56	Refluxed 6 hr., 73° to 87°	61	0	0	14	75
73	Refluxed 12 hr., 71° to 112°	54	0	0	19	73
58	Stirred 6 hr., 47° to 56°(a)	38	0	12	7	57
72	Stirred 30 min, 25° to 43°	1	28	0	6	35
65	Stirred 1 hr., 33° to 45°	8	32	0	9	49
49	Shaken 18 hr., 25° to 40°(b)	15	0	35	17	67

(a) Refluxed under reduced pressure. Reflux time was 6 hrs in an attempt to maximize the formation of ethyl propyl acrolein.

(b) At 40° for less than 1 hr.

Effect of quantity of catalyst (table IV). - The use of 5 or 10 grams instead of 25 grams Amberlite IR-120 per 100 grams butyraldehyde decreased the conversion to substituted acrolein by 37 percentage points during 6 hours reflux. The quantity of residue formed was fairly constant. This result disagrees with Durr's report that the effect of increasing the quantity of catalyst had little effect above

5 to 10 grams of IR-120 per 100 grams n-heptaldehyde reacted at 145° to 150° for two hours (4). However, the higher reaction temperature and higher molecular weight of the aldehyde he used may explain the difference.

TABLE IV. - EFFECT OF QUANTITY OF CATALYST AT REFLUX

Run no.	Reaction conditions	Percent conversion to				
		2-Ethyl - 3-propyl acrolein	Para-butyral-dehyde	Mix-ture	Distil-lation residue	Total
55	5g IR-120; 6 hr., 73° to 76°	24	0	3	22	49
51	10g IR-120; 6 hr., 74° to 84°	43	0	0	15	58
Av. 52-56	25g IR-120; 6 hr., 73° to 80°	61	0	0	14	75

Effect of inert solvent (table V). - Dilution of the butyraldehyde with an equal weight of benzene decreased the conversion to ethyl propyl acrolein, had little effect on the quantity of distillation residue, and caused the appearance of some of the mixture previously observed only at lower temperatures.

TABLE V. - EFFECT OF INERT SOLVENT AT REFLUX

Run no.	Reaction conditions	Percent conversion to				
		2-Ethyl - 3-propyl acrolein	Para-butyral-dehyde	Mix-ture	Distil-lation residue	Total
50	1 hr., 73°; 1:1 aldehyde: benzene	18	0	11	5	34
47	1 hr., 73° to 80° no solvent	62	0	0	7	69
53	6 hr., 73°; 1:1 aldehyde: benzene	43	0	3	14	60
Av. 52-56	6 hr., 73° to 87° no solvent	61	0	0	14	75

5050

Effect of added water (table VI). - The data for two runs show that the addition of 10 ml deionized water prior to refluxing markedly decreased the conversion to substituted acrolein. When the resin catalyst from one of these runs was re-used after being vacuum-dried, its catalytic activity was substantially restored. Evidently the water interfered with the catalysis, possibly by being sorbed at the active sites on the resin surface or by clogging the pores in the particles.

TABLE VI. - EFFECT OF ADDED WATER AT REFLUX

Run no.	Reaction conditions	Percent conversion to				
		2-Ethyl - 3-propyl acrolein	Para-butyral-dehyde	Mix-ture	Distil-lation residue	Total
70	1 hr., 65° to 67°; 10 ml water	6	0	0	3	9
68	1 hr., 67°; 10 ml water	13	0	0	11	24
74	1 hr., 69° to 73°; resin from run 70 vacuum dried	50	0	0	22	72
47	1 hr., 73° to 80°; no water	62	0	0	7	69

Effect of re-use of the catalyst (table VII). - When the same portion of Amberlite IR-120 was shaken for 18 hours with each of six successive portions of butyraldehyde, the over-all conversion was similar in each run, although the relative proportions of products showed some variation. Approximately the same result was obtained by stirring at 25° to 45°. A parallel series of runs in which the same resin was used seven times under reflux at 67° to 81° gave a different result. There was about a 30 percent decrease in total conversion and about a

60 percent decrease in ethyl propyl acrolein. Just before the same portion of resin was used for the eighth time it was heated for $4\frac{1}{2}$ hours at 65° under 28 inches vacuum, whereupon its catalytic activity was restored substantially to the original level. Since this result

5050

TABLE VII. - EFFECT OF RE-USE OF CATALYST

Run no.	Reaction conditions	Percent conversion to				
		2-Ethyl - 3-propyl acrolein	Para-butyral-dehyde	Mix-ture	Distil-lation residue	Total
47	1st use; 1 hr at 73° to 81°	62	0	0	7	69
48	2nd use; 1 hr at 74° to 81°	50	0	0	15	65
69	4th use; 1 hr at 67° to 69°	15	0	9	10	34
71	5th use; 1 hr at 67° to 72°	22	0	0	20	42
75	6th use; 1 hr at 69° to 72°	41	0	0	23	64
77	7th use; 1 hr at 68° to 69°	21	0	0	22	43
82	8th use, vacuum dried; 1 hr at 68° to 75°	50	0	0	18	68
49	1st use, shaken 18 hrs at 25° to 40°	15	0	35	17	67
59	2nd use, shaken 18 hrs at 25° to 40°	5	0	37	14	56
62	4th use, shaken 18 hrs at 25° to 40°	1	0	38	28	67
66	6th use, shaken 18 hrs at 25° to 40°	12	0	38	19	69
65	1st use, stirred 1 hr at 25° to 41°	8	32	0	8	48
76	3rd use, stirred 1 hr at 25° to 45°	6	22	0	26	54

was analogous to the deactivation of the resin by the deliberate addition of water and its reactivation by drying, the loss of activity during re-use was probably the result of the water produced along with the formation of ethyl propyl acrolein. By the same reasoning, re-use at lower temperatures caused no deactivation because much less of the acrolein was formed.

5050

Comparison of Amberlite IR-120 with Dowex 50×8 (table VIII). - Although these resins have similar chemical structures and exchange capacities (manufacturer's data), Dowex appeared to have greater catalytic activity. For example, in the shaking procedure, Dowex raised

TABLE VIII. - COMPARISON BETWEEN DOWEX 50 AND AMBERLITE IR-120

Run no.	Reaction conditions	Percent conversion to				
		2-Ethyl - 3-propyl acrolein	Para-butyral-dehyde	Mix-ture	Distil-lation residue	Total
78	Dowex; reflux 1 hr., 71° to 78°	47	0	0	18	65
47	Amberlite; reflux 1 hr., 73° to 81°	62	0	0	7	69
80	Dowex; reflux 6 hr., 69° to 86°	65	0	0	15	80
Av. 52-56	Amberlite; reflux 6 hr., 73° to 87°	61	0	0	14	75
79	Dowex; shake 18 hrs., 25° to 74°	36	0	25	16	77
49	Amberlite; shake 18 hrs., 25° to 40°	15	0	35	17	67
81	Dowex; stir 1 hr., 26° to 71° (no external heat)	36	0	21	13	70
87	Dowex; stir 1 hr., 27° to 30°	9	57	0	13	79
85	Amberlite; stir 1 hr., 27° to 31°	1	48	0	9	58

the temperature of butyraldehyde to over 70° while Amberlite raised it to 40°. While the two resins gave similar results under reflux, Dowex produced much more ethyl propyl acrolein during the shaking procedure and more parabutyraldehyde when stirred at 27° to 30°. These differences may be attributable to the smaller particle size and hence greater specific surface of Dowex 50.

5050

Reactions of Other Aldehydes

The self-condensation of nine other aldehydes was attempted by the stirring procedure. There were three aldehydes with two hydrogen atoms on the alpha carbon atom (propionaldehyde, isovaleraldehyde, n-caproaldehyde), five with only one alpha hydrogen atom (crotonaldehyde, isobutyraldehyde, 2-methyl valeraldehyde, 2-ethyl butyraldehyde, 2-ethyl caproaldehyde), and benzaldehyde. Unless otherwise indicated, the catalyst was Dowex 50. The products and their properties are listed in table I. The detailed results are tabulated in appendix C.

Reactions near or below room temperature. - The only products formed near or below room temperature were the cyclic trimers (para - aldehydes) of propionaldehyde and isobutyraldehyde. Of the other aldehydes, only isovaleraldehyde has been reported to form the cyclic trimer (14). In no case was any meta-aldehyde detected. The conversion to parapropionaldehyde was better at -31° to 0° (75 percent) than at 27° to 45° while a temperature of 23° to 30° was more favorable for the formation of paraisobutyraldehyde (91 percent conversion) than was -13° to -4°.

5050

Reactions at reflux. - All three of the aldehydes with two hydrogen atoms on the alpha carbon atom yielded dialkyl acroleins, but only the two of lower molecular weight underwent substantial conversion. This trend is contrary to Durr's finding that as much as 71 percent of n-heptaldehyde was converted to the acrolein, but his reaction temperature was a little higher (150°).

Propionaldehyde refluxed for 6 hours at 50° to 62° gave a 41 percent yield of 2-methyl - 3-ethyl acrolein and 18 percent distillation residue. Refluxing for one hour at 90° to 91° converted 22 percent of isovaleraldehyde to 2-isopropyl - 3-isobutyl acrolein, while one hour at 105° to 109° converted only 9 percent of caproaldehyde to 2-butyl - 3-amyl acrolein. The conversions to residue were 9 and 21 percent, respectively. Attempts were made to approach Durr's higher conversions of caproaldehyde by continuously removing water of reaction so as to raise the reaction temperature to 155°, and by substituting Amberlite IR-120 for Dowex 50, but the only result was less of the substituted acrolein (4 and 0 percent) and more distillation residue (54 and 34 percent).

Of three aldehydes with one alkyl group on the alpha carbon which were refluxed with Dowex 50 for 1 to 6 hours, only isobutyraldehyde was extensively converted (33 percent) to a distillable product. The product appeared to be 5, 5-dimethyl - 2, 4-diisopropyl - 6-hydroxydioxane contaminated with a minor quantity of isobutyraldol which could not be removed even upon redistillation. Saunders (7) has similarly found that this alkyl hydroxydioxane tends to dissociate to the aldol during vacuum distillation. About 25 percent of the

isobutyraldehyde was converted to distillation residue and 5 to 10 percent to paraisobutyraldehyde. Refluxing isobutyraldehyde always gave some paraisobutyraldehyde, and when the reflux reaction was carried out for only one hour, the conversion to para-aldehyde was almost 20 percent.

5050

Refluxing 2-ethyl butyraldehyde at 107° or 2-ethyl caproaldehyde at 109° for one hour gave no distillable product and only 6 to 7 per cent distillation residue. Forcing the reaction by refluxing for 3 to 6 hours and continuously removing water so that the reaction temperature rose to as high as 155° resulted in a 60 percent conversion to distillation residue but only 4 to 6 percent conversion to a distillable material which was probably a product of decomposition. It thus appears that of all the aldehydes tested, only those of lowest molecular weight were to a significant extent converted to simple products. This is consistent with Hammett's finding that the relative rate constant for the cation resin-catalyzed hydrolysis of esters decreased 10-fold from methyl acetate to ethyl caproate (15).

Condensation of Cyclohexanone

Cyclohexanone refluxed with Dowex 50×8 for one hour at 106° to 115° was 23 percent converted to 1-cyclohexenyl - 2-cyclohexanone and 25 percent to distillation residue. The properties of the products are listed in table I. Durr (16) working with Amberlite IR-120 and Dietrich (17) working with a resorcinol-formaldehyde sulfonic acid resin, reported the product to be 1-cyclohexylidene - 2-cyclohexanone.

However, the following evidence indicates the product to be cyclohexenyl cyclohexanone:

1. The infra-red spectrum indicated the carbonyl group was not conjugated to the carbon-carbon double bond.

2. The melting point of the 2, 4-dinitrophenylhydrazone (154.6° to 155.0°) agreed with that published for this derivative of cyclohexenyl cyclohexanone (12), not with 129° to 130° published for the derivative of cyclohexylidene cyclohexanone (18).

3. The molar refraction, 52.8, indicated there was no exaltation, as would be expected from the conjugated system in cyclohexylidene cyclohexanone.

The wide range and similarity of the published values of the boiling ranges, refractive indices, and densities of the two compounds preclude their use in identification, and the melting points of the oxime and semicarbazone of cyclohexenyl cyclohexanone have not been reported in the literature.

When cyclohexanone was refluxed with Dowex 50 for 5 hours at 113° to 169° and water was continuously separated, it was almost completely converted to a thermoplastic semisolid resinous material. When 0.6 mole butyraldehyde was refluxed with 0.6 mole cyclohexanone and the catalyst for an hour, about 23 percent of it was converted to what was probably 2-cyclohexylidene butyraldehyde (properties listed in table I). Lambert, Durr, and Millet (13) carried out a similar reaction, and called their product 2-cyclohexylidene butyraldehyde. The two products had very similar boiling ranges and refractive indices, and the 2, 4-dinitrophenyl hydrazones had like melting points.

5050

In addition, the infra-red spectrum was appropriate. A similar procedure with butyraldehyde and cyclohexanone, but carried out at 30° to 33°, converted a few percent of the butyraldehyde to ethyl propyl acrolein and about 9 percent to an unsaturated product which was not satisfactorily identified. The molecular weight, 153, corresponded to the dehydrated product of one mole each of aldehyde and ketone, but the infra-red spectrum (table I) indicated that the compound was not the same as the one previously described as cyclohexylidene butyraldehyde.

5050

Distillation Residues

Examination of the infra-red spectra of the distillation residues from the self-condensation of all the aldehydes tested (table I) indicates that all the residues contained -C-O-C-O-C- and unconjugated carbonyl groups. In addition, the residues from the aldehydes with two hydrogen atoms on the alpha carbon atom also contained conjugated carbonyl and carbon-carbon double bonds. The residues were viscous, thermoplastic materials whose molecular weights (table I) corresponded to 3 to 7 moles of aldehyde, depending on how much allowance was made for loss of water of dehydration. This information suggests that the residues were linear polymers based on a -C-O-C-O-C- chain analogous to that suggested by Staudinger for certain acetaldehyde polymers (19) and that the mechanism of their formation is independent of any aldolization reaction. The carbonyl and carbon-carbon double bonds must then be located in groups attached to the main chain, indicating that some of the side groups were at least dimers of the original aldehydes.

Since the distillable, linear products which have been discussed previously were dimers or dehydrated dimers, it might be expected that the side groups were mostly formed first and the polymer chain afterward. It may be significant that, unlike the cyclic trimers which also contain the -C-O-C-O-C- structure, the residues did not yield the original carbonyl compound when heated with acid (table I). According to the foregoing theory, even if the chain were hydrolyzed, the hydrolyzate would consist of dimers or higher polymers (dehydrated in some cases) of the original compound. A relatively high temperature would be required to distill them, and if liberated slowly they would probably form new -C-O-C-O-C chains as fast as the old ones were broken in the presence of the acid catalyst.

5050

5050

SUMMARY OF RESULTS

When each of 10 aldehydes and cyclohexanone was treated with a strongly acid cation-exchange resin at atmospheric pressure, the following results were obtained:

1. Only the lower molecular weight aldehydes were converted to simple, distillable products.

2. Near or below room temperature, cyclic trimers (paraaldehydes, trialkyl trioxanes) were substantially the only distillable products. Only propionaldehyde, butyraldehyde, and isobutyraldehyde formed cyclic trimers.

3. At reflux, a derivative of the aldol was substantially the only distillable product.

(a) Propionaldehyde, n-butyraldehyde, isovaleraldehyde, and n-caproaldehyde, having two hydrogen atoms on the alpha carbon, gave the 2,3-dialkyl acrolein.

(b) Isobutyraldehyde gave the alkyl hydroxydioxane.

(c) Cyclohexanone gave 1-cyclohexenyl-2-cyclohexanone.

4. At reflux, all the above carbonyl compounds and also 2-methyl valeraldehyde, 2-ethyl butyraldehyde, 2-ethyl caproaldehyde, and crotonaldehyde gave more or less distillation residue. This residue was substantially the only product obtained from the last-named aldehydes. (Benzaldehyde, which was tested only at room temperature, gave no product.)

5. The following factors were found to influence the batchwise conversion of butyraldehyde to 2-ethyl-3-propyl acrolein during reflux in the presence of Amberlite IR-120:

(a) Substantially maximum conversion was obtained in one hour.

(b) The quantity of Amberlite required for maximum conversion was greater than 10 percent of the weight of aldehyde. Good results were obtained with 25 percent Amberlite.

(c) Addition of an inert solvent decreased the conversion.

(d) Addition of a small quantity of water greatly decreased the conversion.

(e) Repeated re-use did not appreciably affect the extent of conversion if the catalyst was dried after every second run. (When the reaction was run near room temperature, no drying was needed even after six runs.)

(f) Substitution of Dowex 50×8 for the Amberlite IR-120 did not appreciably affect the extent of conversion at reflux, but Dowex 50 was a more vigorous catalyst at ambient temperature.

5050

5050

APPENDIX A

DISCUSSION OF THE ACID-CATALYZED CONDENSATION OF ALDEHYDES

Aldehydes undergo three types of acid-catalyzed condensation: (1) aldolization, sometimes followed by dehydration, (2) formation of cyclic trimers or tetramers, and (3) formation of resinous polymers. Aldolization is limited to those aldehydes which have at least one hydrogen atom on the alpha carbon atom. A subsequent dehydration to form an 2,3-dialkyl acrolein occurs upon warming, particularly in the presence of acid or iodine, if there were two hydrogen atoms on the alpha carbon atom. Cyclic trimerization, which is favored by room temperature or colder, has been reported for a number of unbranched or slightly branched aliphatic aldehydes, and the products are known as para-aldehydes. The formation of meta-aldehydes, which are also cyclic polymers but have different physical properties, is favored by temperatures below zero.

Aldolization and dehydration. - It has long been recognized that the aldol (or ketol) condensation is fundamentally similar to other carbonyl condensation reactions which go under a variety of names, e.g., Claisen, Knovenagel, Michael, Perkin, and which involve the lability of a hydrogen atom on the alpha carbon atom. Although these reactions are customarily conducted with a strongly basic catalyst,

the use of amine salts, metal alcoholates, or acids is well known for some of them. The aldehyde self-condensation can be carried out with strong acids of either the Lewis or protonic type. If the original aldehyde had two alpha hydrogen atoms, the acid catalyst will also promote the dehydration of all or part of the product. As examples, Wurtz (20) prepared aldol by treating acetaldehyde with aqueous hydrochloric acid at room temperature and then converted it to acrolein by distillation. Backes (21) obtained propionaldol and 2-methyl-3-ethyl acrolein by treating propionaldehyde in benzene with phosphorus oxychloride at 0°. The use of cation-exchange resins by Durr and in the present investigation to achieve similar results with higher aldehydes has already been discussed in the main section.

Zuffanti and Luder (22) have pointed out that aldolization can be catalyzed by either bases or acids because the carbonyl group can be considered to be amphoteric. For example,

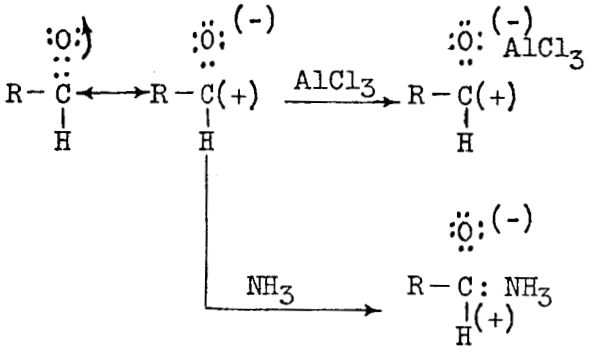

Toward a sufficiently strong acid, the carbonyl group behaves as a base. This mechanism has been discussed by Lapworth and Hann (23), reviewed by Watson (24), and somewhat elaborated by Arndt and Eistert (25).

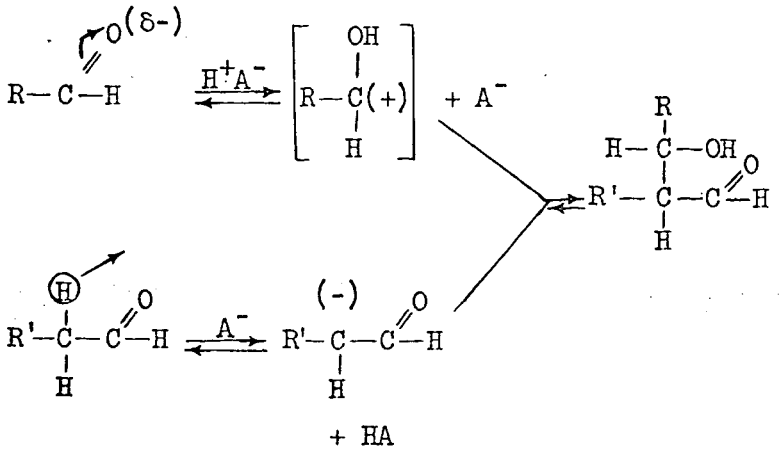

The above mechanism is supported by the fact that it can also be used to explain deuterium exchange and certain racemization reactions of carbonyl compounds. A variation which involves keto-enol tautomerism has been proposed by Bodendorf (26):

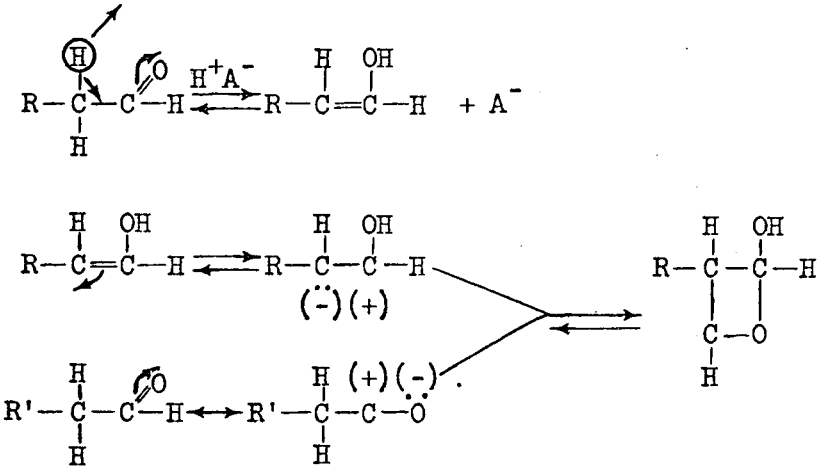

The four-membered ring then opens

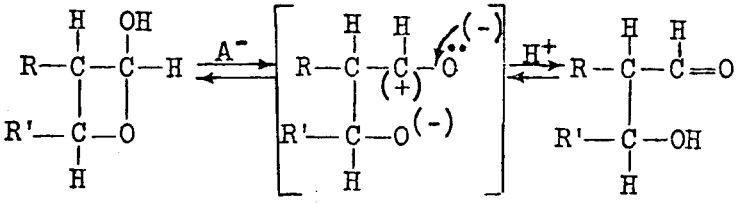

The obvious objection to the latter mechanism is the high energy state represented by the highly strained four-membered ring. On the other

hand, Backes (27) claims that ultraviolet absorption data indicate that this ring form normally exists in equilibrium with the linear aldol structure.

Backes says that the four-membered ring explains why heating aldol results only in partial dehydration of the compound. This fact can, however, also be explained by the finding by Spath (27a), Saunders (7), and Alexander (28), and their coworkers that aldol, propionaldol, butyraldol, and isobutyraldol normally change to alkyl-substituted hydroxydioxanes which are trimers of the original aldehydes. The existence of the alkyl trioxane from isobutyraldehyde is supported by the synthesis of its ethoxy derivative (29), and offers the theoretical advantage of the stability of a relatively unstrained six-membered ring. It is sufficiently similar to the four-membered ring to account for Backes' ultraviolet absorption, and it equally well explains the partial dehydration and partial reversion to aldehyde upon being heated.

Saunders (7) found that the conversion of isobutyraldehyde to 2,4-diisopropyl-5,5-dimethyl-6-hydroxy-1,3-dioxane occurs spontaneously on standing (time not specified) at room temperature without a catalyst. Separation of either the pure alkyl hydroxydioxane or the pure aldol is very difficult, and, since the two appear to form an equilibrium mixture, the existence of a reasonably pure preparation is probably transitory. Distillation under suitable vacuum (13 mm according to Alexander and Marvell (29), 40 to 50 mm according to Spath (27a)) converts the alkyl hydroxydioxane to isobutyraldehyde, isobutyraldol,

and higher-boiling products. Spath says that repeated distillation is needed in order to obtain the pure aldol, and that the addition of one percent of adipic acid facilitates the process.

The condensation of n-butyraldehyde also yields the trimer, 5-ethyl-2,4-dipropyl-6-hydroxy-1,3-dioxane, and the occurrence of this compound in the course of the present investigation is discussed in appendix C.

The mechanism of the formation of the alkyl hydroxydioxanes may be:

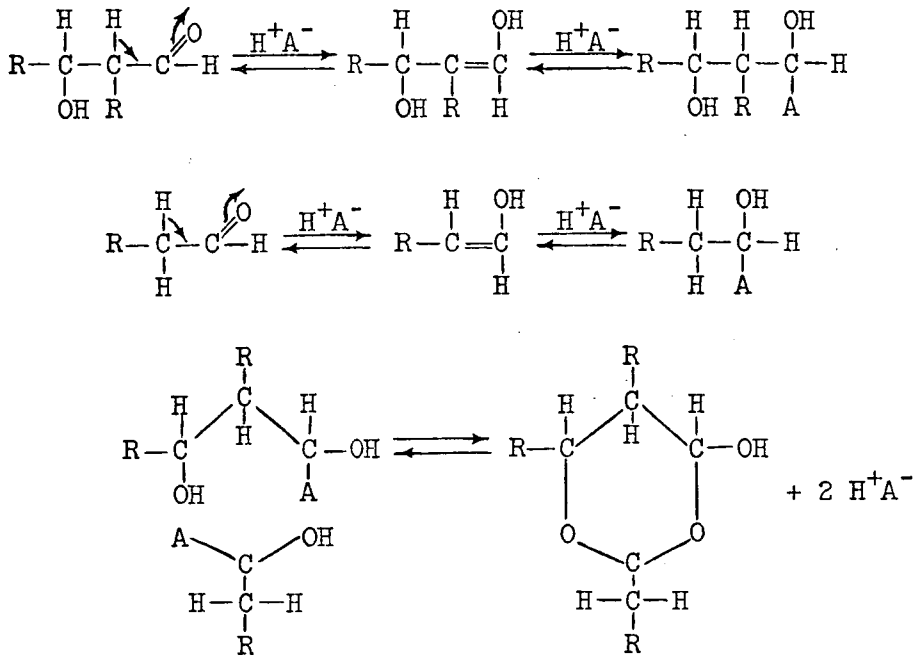

Both the acid- and base-catalyzed aldolization and crotonization of aldehydes results in the formation of some viscous higher molecular weight materials which have been referred to as distillation residues in the main body of this paper. Aside from occasionally mentioning their existence, investigators have done little to characterize these

materials. The RESULTS AND DISCUSSION section contains a hypothesis as to their structure.

Formation of cyclic and linear polymers. - In 1872, Barbaglia (30) treated cold isobutyraldehyde with chlorine and obtained the crystalline compound now known to be the cyclic trimer paraisobutyraldehyde or 2,4,6-triisopropyl-1,3,5-trioxane. Later Demtschenko (31) obtained the same result with concentrated sulfuric acid, gaseous hydrogen chloride, and phosphorus pentachloride. The analogous trialkyl trioxanes have been prepared from the normal 2-, 3-, 4-, 6-, 11-, 13-, 14-, 15-, 16-, and 17-carbon normal aldehydes, from trimethyl acetaldehyde, 2-methyl butyraldehyde, and isovaleraldehyde (32), (33), and (14). The general method of preparation is to introduce a strong Lewis acid into the aldehyde at or below room temperature. The reaction occurs readily, except in the case of formaldehyde.

In addition to the para-aldehydes, some cyclic polymers of acetaldehyde, propionaldehyde, and butyraldehyde which have been called meta-aldehydes have an analogous structure but different physical properties. The most common one, metaldehyde, is said by Fieser (34) to be a cyclic tetramer, and Franke (14) has claimed that metabutyraldehyde is a tetramer. Metapropionaldehyde was thought to be a tetramer, but Orndorff and Balcom (35) concluded that it is the cis-form of parapropionaldehyde. They also decided metaldehyde and paraldehyde are cis- and trans-isomers, but Fieser's opinion on this point is more widely held today. Gerding (36) and Aoki (37) have

5050

concluded from infrared and electron-diffraction data that liquid paraldehyde is a mixture of the cis- and trans-isomers of the puckered ring $(CH_3CHO)_3$. The difference between meta- and para-aldehydes is apparently not completely understood as yet.

A much higher molecular weight polymer is obtained if acetaldehyde is frozen and then allowed to warm up to room temperature. Removal of the unreacted aldehyde leaves a rubbery solid whose molecular weight is about 510,000 (38). Staudinger (19) has suggested that it is a linear polymer with the structure $\left(\begin{array}{c} H \\ | \\ C \\ | \\ CH_3 \end{array}\!\!-\!\!O\right)_x$. This theory is supported by infrared and X-ray diffraction data and by the physical properties of the polymer (40, 41).

The mechanism of the formation of the cyclic and linear polymers has not been properly studied, but Bevington (42) has reviewed the available information. Stepanow (43) and coworkers have devised a theory which is based on their observation that some 2,4,6-tri-(bromomethyl)-1,3,5-trioxane is formed during the bromination of acetaldehyde at low temperature. They suggest that the substituted trioxane is formed from 1-bromoethanol, which was identified as an intermediate, and which in turn may have been formed from hydrogen bromide and acetaldehyde. The mechanism is as follows:

5050

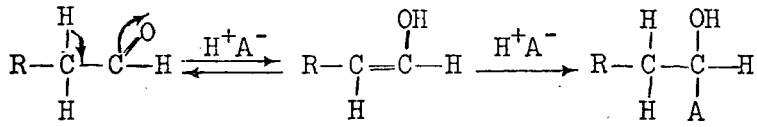

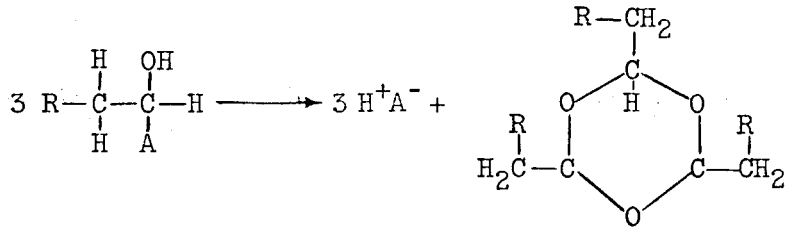

Presumably a similar mechanism could account for the very high molecular weight linear acetaldehyde polymer discussed in this appendix as well as for the distillation residues which are hypothesized in the main section to be based on a -C - O - C - O - C- chain.

5050

5050

APPENDIX B

USE OF CATION-EXCHANGE RESINS TO CATALYZE REACTIONS OF CARBONYL COMPOUNDS

The use of ion-exchange resins as catalysts for organic reactions has been thoroughly reviewed in references (1) and (2), and therefore the topic will be considered only briefly here.

The strongly acid cation-exchange resins commonly used today are cross-linked styrene-divinylbenzene copolymers. Manufacturers do not recommend their use in water at temperatures above 125°, But Astle says that they can be used in nonaqueous systems with little decomposition up to 180° (1). An older, less effective kind of resin is the sulfonated phenol-aldehyde type.

Helfferich (44), among others, has listed the advantage of using ion-exchange resins instead of soluble acids or bases. Some advantages are: (1) The catalyst can be removed easily, (2) In some instances side reactions can be suppressed or an otherwise minor product can become a major one, (3) In manufacturing processes, corrosion of metal equipment can be avoided, and (4) Continuous production in a bed or column of catalyst is potentially possible.

Ion-exchange catalysis must occur on the surface or within the pores of the heterogeneous catalyst. Surface area, pore size, swelling effect of the liquid phase, and diffusion rates into the resin particles become factors which may influence the rate and even the

course of the reaction. Helfferich (45) has pointed out the relationship of some of these parameters. It can be postulated that the liquid in the resin pores is a homogeneous system in which the resin is a dissolved electrolyte. If the reactant is also dissolved in a solvent, the concentration of reactant in the liquid in the pores may well be different from the concentration in the bulk of the liquid. Then, if the velocity of the reaction rather than the rate of diffusion is the rate determining step for the reaction $AB \rightarrow A + B$, the rate can be expressed as

$$\left(-\frac{dn}{dt}\right)_{overall} = -\frac{d\bar{n}}{dt} = -\overline{V}kc\lambda \qquad (A)$$

where

n = number moles total reactant

$\bar{n}$ = number moles reactant in pores

t = time

$\overline{V}$ = pore volume

$\bar{k}$ = reaction rate constant in pores

c = reactant concentration in bulk of liquid

$\bar{c}$ = reactant concentration in liquid in pores

$\lambda = \bar{c}/c$

While equation (A) indicates the relationship of some of the parameters involved, numerical values of some of them would be very difficult to obtain. If the diffusion were the rate-controlling step, the analysis would become much more complex, but Helfferich says that λ would still be an important factor.

5050

Another factor believed to govern the rate of catalysis is the change in entropy which occurs when a reactant molecule becomes attached to the resin to form a transition state complex. It is to this change in entropy that Haskell and Hammet (15) have attributed the decrease in relative rate of hydrolysis when esters of increasing chain length are treated with an acid ion-exchange resin.

Cation-exchange resins have been used to catalyze a number of reactions involving carbonyl compounds. They catalyze not only hydrolysis of esters, but also the formation of esters. Thus, Astle and coworkers (46) have found that uniquely good yields of monoesters of diethylene glycol were obtained by the use of Amberlite IR-120. Paulson and coworkers (47) have hydrolyzed casein with Dowex-50 and obtained substantially the same result as by using hydrochloric acid. Bodamer and Kunin (48) have inverted sucrose by using either strongly or weakly acid resins and found that the rate of inversion is improved by increasing the porosity and decreasing the particle size of the resin. Klein and Banchero (49) converted acetone to mesityl oxide by the use of Dowex-50, and obtained diacetone alcohol as a major by-product. The alcohol is not normally obtainable when a soluble acid is used. They suggest that when diffusion is the rate-controlling step, the rate of reaction appears to be proportional to the mass of resin. When reaction velocity is rate-controlling, the rate appears to be proportional to the resin surface area. Astle, Zaslowski, and Lafyatis (50) used various strongly acid resins to obtain good yields of dioxolanes and trioxocanes from aldehydes and

5050

vicinal glycols. Durr's study of cation resin-catalyzed self-condensation of aliphatic aldehydes and cyclohexanone has been discussed in the main section. He has also used Amberlite IR-120 to condense various aliphatic aldehydes with benzaldehyde and cyclohexanone and to prepare assorted acetals of furfural (4) (13) (51). Ueno (52) has used a sulfonated polystyrene to convert acetaldehyde to paraldehyde and metaldehyde.

5050

5050

APPENDIX C

DISCUSSION OF SOME DETAILS OF EXPERIMENTAL WORK

Reactants

A list of the boiling ranges and refractive indices of the carbonyl compounds used as reactants in this investigation is given in table IX. The best values reported in the literature are shown for comparison.

Infrared Examination of Products

The fractions obtained by vacuum distillation were examined with a Perkin-Elmer model 21 infrared spectrometer. The peak at about 3 microns for hydroxyl is almost unmistakable. Peaks for conjugated and unconjugated aldehyde and ketone carbonyl, for conjugated and unconjugated carbon-carbon double bonds and for ethers had to be examined more carefully. Table X lists the absorption peaks for these groups as they appeared in all the distilled compounds and also gives authoritative values from the literature for comparison. In order to make the comparison, it was necessary to correct the observed wavelengths of the peaks because of constant and transient errors in the spectrometer. To do this the average values for $-CH_2$ and $-CH_3$ given by Bellamy (53) (2962 cm^{-1} or 3.38 microns for $-CH_3$, 2926 cm^{-1} or 3.42 microns for $-CH_2-$) were arbitrarily assigned to the appropriate peaks, and all other peaks were corrected for the difference between observed

5050

TABLE IX. - PROPERTIES OF ALDEHYDES AND CYCLOHEXANONE

Carbonyl compound	Boiling range			Refractive index n_D^{20}	
	Found		Literature (ref. 6)	Found	Literature (ref. 6)
	Temperature, °C	Press, mm	Temperature (at 760 mm), °C		
Propionaldehyde	46.5-47.5	741	48.8	1.3630	[a]1.3646
n-Butyraldehyde	72.5-73.0	743	74.7	1.3800	1.3843
Isobutyraldehyde	62-63	748	64	1.3730	1.3730
Crotonaldehyde	52-54	132	102.15	1.4365	1.4362
Isovaleraldehyde	56-57	250	92.5	1.3912	1.3923
n-Caproaldehyde	71-73	97	128.1,131	1.4058	1.4039,1.4068
2-Ethyl butyraldehyde	56-57	92	117	1.4011	1.4025
2-Methyl valeraldehyde	95-97	400	116, 119-121	1.4008	Not reported in literature
2-Ethyl caproaldehyde	49-50	12	160, 162-165	1.4178	1.4150
Benzaldehyde	78-79	27	178.9	1.5451	1.5460
Cyclohexanone	66	29	155.7	1.4492	1.4507

[a]At. 19°.

5050

TABLE X. - INFRA-RED ABSORPTION PEAKS FOR IDENTIFICATION OF FUNCTIONAL GROUPS

Run no.	Compound	Observed peaks, μ, for			Correction, μ	Corrected peak for group, μ	Average corrected peak, cm^{-1}	Literature value, cm^{-1}
		CH_3	CH_2	Group				
	Aldehyde >C=O (not conjugated)							
	2-Methyl valeraldehyde	3.47		5.84	-0.09	5.75		1720 to
	Isobutyraldehyde	3.43		5.82	-.01	5.81	1730	1740(53)
	Aldehyde >C=O (conjugated with >C=C<)							
	2-Methyl-3-ethyl acrolein	3.45		5.97	-0.07	5.90		
88	2-Ethyl-3-propyl acrolein	3.43		5.94	-.05	5.89		
98	2-Methyl-3-ethyl acrolein	3.41		5.94	-.03	5.91		1680 to
111	2-Isopropyl-3-isobutyl acrolein	3.44		5.93	-.06	5.87	1695	1705(53)
121	2-Butyl-3-amyl acrolein	3.53		6.01	-.15	5.86		
	Ketone >C=O (not conjugated)							
	Cyclohexanone		3.50	5.90	-0.08	5.82		1705 to
128	Cyclohexenyl cyclohexanone		3.47	5.85	-.05	5.80	1722	1725(53)
	Ketone >C=O (conjugated with >C=C<)							
115	Unidentified cyclo-hexanone-butyraldehyde product		3.50	5.98	-0.08	5.90		
116	Cyclohexanone polymer		3.38	5.89	0	5.89		1665 to
112	2-Cyclohexylidene butyraldehyde		3.43	5.92	-.01	5.91	1695	1685(53)
	>C=C< (conjugated with >C=O)							
88	2-Ethyl-3-propyl acrolein	3.43		6.10	-0.05	6.05		
98	2-Methyl-3-ethyl acrolein	3.41		6.09	-.03	6.06		1621 to
	2-Methyl-3-ethyl acrolein	3.45		6.13	-.07	6.06		1647(53)
111	2-Isopropyl-3-isobutyl acrolein	3.44		6.14	-.06	6.08	1652	
121	2-Butyl-3-amyl acrolein	3.53		6.19	-.15	6.04		
	>C=C< (not conjugated)							
128	1-Cyclohexenyl-2-cyclohexanone		3.47	6.20	-0.05	6.15	1625	1620 to 1680(53)
	-C-O-C-O-C- [a]							
	Paraldehyde	3.41		8.60 9.15	-0.03	8.57 9.12		
90	Paraisobutyraldehyde	3.42		8.65 9.15	-.04	8.61 9.11		
117	Parapropionaldehyde	3.45		8.63 9.18	-.07	8.57 9.11		
85	Parabutyraldehyde	3.44		8.65 9.12	-.06	8.59 9.06		
98	Propionaldehyde distillation residue	3.42		8.70 9.02	-.04	8.66 8.98		
116	Cyclohexanone polymer		3.42	8.58 8.90	0	8.58 8.90		
121	Caproaldehyde distillation residue	3.52		8.65 9.30	-.14	8.51 9.16	Range: 8.51μ to 8.69μ and 8.90μ to 9.16μ	Range(54) 8.4μ to 8.6μ and 9.05μ to 9.15μ
126	5,5-Dimethyl-2,4-diisopropyl-6-hydroxydioxane	3.45		8.60 8.72 9.15	-.03	8.57 8.69 9.12		

[a] -C-O-C-O-C-group gave two or three peaks, as indicated.

and assigned wavelength. The resulting corrected values for the desired peaks fell within a narrow range and agreed quite well with values given in the literature (table X). The literature values were all taken from Bellamy, except for the values for -C-O-C-O-C- which Bellamy does not discuss in sufficient detail. The values for the ether were taken from Tschamler and Leutner (54).

5050

Examination of the Mixed Product Obtained

by Refluxing Butyraldehyde

The main section of this paper describes as a mixture one of the products obtained by shaking butyraldehyde and Amberlite IR-120 at ambient temperature or refluxing them under reduced pressure. The same result was obtained in replicate runs. A number of unsuccessful attempts were made to separate the components by distillation. In the most elaborate attempt, the mixture collected from a number of runs was combined and distilled in a Todd column. Typically, the pot temperature had to be kept much higher than the head temperature in order to continue even a very slow rate of distillation. Three fractions were taken at head temperatures of 51.5 to 65°, 65° down to 61°, and 61° down to 59° at 1.2 to 1.7 mm. A very viscous residue remained in the pot. The infrared spectra of the three fractions were identical with one another and with that of the starting material. The refractive indices, n_D^{20}, of the fractions were very similar, 1.4360 to 1.4371, but considerably lower than that of the starting material, 1.4525. They were also much more fluid. Over a period of 52 days, the refractive indices of the fractions rose to 1.4510

and they became viscous again. This behavior on standing is typical of aldols (55). However, neither the physical properties and infrared spectra of the fractions (table I) nor the analyses for aldehyde and hydroxyl groups were consistent with those expected of pure butyraldol. Analytical procedures described in Smith and Shriner (56) gave an average of 4.9 percent hydroxyl and 11.1 percent aldehyde, compared to 11.8 and 20.3 percent respectively calculated for pure butyraldol. All these data point to butyraldol containing a considerable proportion of other material. The other material would have to consist of compounds which might reasonably be expected to form and would have to account for the elevated boiling range, the depressed refractive index, and the conjugated aldehyde and carbon-carbon double bond peaks in the infrared spectrum.

The work of Saunders (56) and Spath (27a) and their coworkers indicates that the difficulty of isolating pure butyraldol is very great. Both have found that the alkaline condensation of butyraldehyde at 0° to 20° yields the cyclic trimer 5-ethyl-2,4-dipropyl-6-hydroxy-1,3-dioxane, which can be considered as the reaction product of butyraldol with butyraldehyde. Spath found that the compound reverted to aldol and aldehyde to varying extents during distillation under pressures even down to 0.1 mm, and Saunders has stated that the aldol cannot be fractionated without partial dehydration.

In the present investigation, in which distillations were run under 1.2 to 5 mm, the conditions would be conducive to partial distillation and partial decomposition of the alkyl hydroxydioxane, fol-

lowed by partial dehydration of the aldol. It is also likely that parabutyraldehyde, which tends to form at the reaction temperatures which were used and has a boiling range similar to that of the mixture, may also have distilled over. The properties of the compounds which have been named are listed below and are not inconsistent with the proposal that they constituted the mixture.

	Boiling range, °C	n_D^{20}	Functional groups
5-ethyl-2,4-dipropyl--6-hydroxy-1,3-dioxane	None reported	1.4495 (27a)	-OH,-C-O-C-O-C-
butyraldol	100-101 at 10.5 mm (27a)	1.4409 (27a)	-OH,-CHO (not conj.)
parabutyraldehyde	103-110 at 12 mm (6)	1.4261 (table I)	-C-O-C-O-C-
2-ethyl-3-propyl acrolein	173 (6)	1.4518 (6)	-CHO(conj) and -C=C- (conj)

Detailed Experimental Results

Table XI lists the experimental conditions under which all the runs were made with all the carbonyl compounds (except butyraldehyde) and the results which were obtained.

Attempt to Use a Weakly Acid Cation-Exchange Resin and its Amine Salts to Catalyze the Self-Condensation of Butyraldehyde

In view of the high catalytic activity of the weak-acid salts of weakly basic anion-exchange resins in promoting Knovenagel and

5050

TABLE XI. - CONDENSATION OF OTHER ALDEHYDES

Run no.	Aldehyde or ketone	Reaction conditions (a)	Percent conversion to				
			2,3-Dialkyl acrolein	Para-aldehyde	Other products	Distil-lation residue	Total
109	Paraformaldehyde (80g)	Refluxed 4 hr with 180g benzene	0	0	0	0	0
101	Formalin, 37% (200g)	Stirred 3/4 hr at -3° to 24° and $3\frac{3}{4}$ hr at 24° to 79°	0	0	0	0	0
97	Propionaldehyde	Stirred 1 hr at 27° to 45°	0	60	3	7	70
117	"	Stirred 3 hr at -31° to 0°	0	75	0	0	75
98	"	Refluxed 6 hr at 50° to 62°	41[b]	0	0	18	59[a]
102	Crotonaldehyde	Stirred 1 hr at 25° to 31°	0	0	2	6	8
103	"	Refluxed 1 hr at 94°	0	0	9	14	23
90	Isobutyraldehyde	Stirred 50 min at 23° to 30°	0	91	0	0	91
95	"	Stirred 5 hr at -13° to -4°	0	25	0	0	25
91	"	Refluxed 1 hr at 59° to 65°	0	18	26[e]	14	58
92	"	Refluxed 6 hr at 60° to 63°	0	7	40[e]	27	74
96	"	Refluxed 6 hr at 62° to 65°	0	10	33[e]	25	68
126	"	Refluxed 6 hr at 65° to 86°	0	5	26[e]	21	52
111	1-Valeraldehyde (59g)	Stirred 1 hr at 28°, then refluxed 1 hr at 90° to 91°	22	0	0	9	31
123	2-Methyl valeraldehyde (30g)	Stirred $1\frac{1}{3}$ hr at 1° to 20°	0	0	0	4	4
127	" " "	Stirred 1 hr at 10° to 18° and 1 hr at 25° to 29°	0	0	6	0	6
107	2-Ethyl butyraldehyde	Refluxed 1 hr at 107°. No water takeoff.	0	0	0	6	6
108	" "	Refluxed 3 hr at 104° to 119°. 13.3 ml water removed.	0	0	6	41	47
110	" "	Refluxed 3 hr at 107° to 121° with 0.2g hydroquinone added. 9.7 ml water removed.	0	0	3	23	29
113	" "	Refluxed 1 hr at 105° to 110°, 1g G-2854 surfactant added. 3 ml water removed.	0	0	2	11	13
124	" " (72g)	Refluxed 2 hr at 116° to 118° with 36g dimethylformamide	0	0	0	8	8
119	n-Caproaldehyde	Refluxed 1 hr at 105° to 109°	9	0	0	21	30
120	"	Refluxed 1 hr at 118° to 155°. 4 ml water removed.	0	0	3	54	57
121	"	Refluxed 1 hr at 104° to 134° with 25g IR-120. 11 ml water removed.	4	0	0	34	38
122	" (58g)	Refluxed 3 hr at 105° to 127° with 3g IR-120. 1.3 ml water removed.	0	0	4	10	14
99	2-Ethyl caproaldehyde	Stirred 1 hr at 89° to 109°	0	0	0	7	7
100	" " (dried)	Refluxed 6 hr at 111° to 127°	0	0	0	15	15
106	" "	Refluxed 6 hr at 136° to 150° 11.5 ml water removed.	0	0	6	60	66
93	Benzaldehyde	Stirred 30 min at 25°, then 1 hr at 77° to 83°	0	0	0	15	15
116	Cyclohexanone	Refluxed 5 hr at 113° to 169°. 14 ml water removed.	0	0	0	~100	~100
128	"	Refluxed 1 hr at 106° to 115°	23[c]	0	0	10	33
112	Cyclohexanone (0.6 mole) n-Butyraldehyde (0.6 mole)	2/3 Of aldehyde added slowly to ketone at room temperature. After last 1/3 added, refluxed 1 hr at 79° to 89°.	23[f]	0	4	23	50
115	" "	Aldehyde slowly added to ketone with stirring at 29° to 33°. Stirred 3 hr.	11[d]	0	0	25	36

[a]Unless otherwise indicated, 100g carbonyl compound was treated with 25g. Dowex 50x 8.

[b]Some methyl ethyl acrolein lost during distillation, so actual conversion larger than indicated.

[c]1-Cyclohexenyl-2-cyclohexanone.

[d]2 Percent 2-ethyl-3-propyl acrolein and 9 percent unidentified unsaturated compound.

[e]5,5-Dimethyl-2,4 diisopropyl-6-hydroxydioxane contaminated with some isobutyraldol.

[f]Probably 2-cyclohexylidene-butyraldehyde.

aldol condensations (57) (58), it seemed likely that amine salts of weakly acid cation-exchange resins might perform the same function. To this end, attempts were made to prepare the pyridine and 2-ethylhexylamine salts of Amberlite IRC-50, and to treat butyraldehyde with the salt form of the resin.

5050

Amberlite IRC-50 was shaken with three portions of 9 percent hydrochloric acid (each portion contained 600 miliequivalents HCl per 100 g resin in as-received condition), washed until the effluent gave no test for chloride, rinsed with acetone, air-dried, and finally vacuum dried. This resin had an exchange capacity of 8.93 milliequivalents per gram.

The amine salts were made by treating the resin with excess ammonia or pyridine in water or with 2-ethylhexylamine in benzene, washing with the same solvent, air drying, and then vacuum drying. It was observed that the wash liquid always gave a basic color to pH paper moistened with water, and the dried resin had a strong odor of the amine. Rewashing and drying only gave more of the basic effluent without removing the odor.

An experiment was run to determine whether the amine odor of the resin and the basicity of the effluent were significant. Each of five 10 gram samples of IRC-50 (acid form) were shaken for 24 hours with 100 ml of an aqueous solution of 23.70 grams pyridine. The solutions were decanted, and the samples were rinsed with water. The samples were subjected to 0, 1, 3, 6, or 9 24-hour shakings with 150 ml portions of deionized water, rinsed with acetone, air-dried,

and finally vacuum dried. The quantity of pyridine was determined in the decanted liquid and wash waters by means of ultra-violet absorption (Beckmann DU spectrophotometer). The results, shown in table XII, indicate that pyridine was still being extracted even after 9 washings. At this point only 1.7 g pyridine, or 24 percent of the exchange capacity, remained on the resin.

The dried, pyridine-treated IRC-50 which had not been shaken with water, and the one which had been shaken with water once were each shaken with 40 g freshly distilled butyraldehyde. In both cases, the only condensation product obtained was about one gram of distillation residue, approximately the same result obtained by refluxing the acid form of IRC-50 with butyraldehyde for one hour. It therefore appears that neither the acid form nor the pyridine-treated form of IRC-50 promotes the self-condensation of butyraldehyde.

5050

5050

TABLE XII. - THE EXTRACTION OF PYRIDINE FROM

TEN GRAMS PYRIDINE-TREATED AMBERLITE IRC-50

Liquid	Volume (avg), ml	Pyridine content (avg), g/ml	Pyridine in liquid (avg), g
Decanted treating solution	73	0.177	12.9
Rinse water	100	.0385	3.9
First water shaking and rinse	250	.0128	3.2
Second " " " "	250	3.98×10^{-3}	1.0
Third " " " "	250	1.40×10^{-3}	.35
Fourth " " " "	250	7.39×10^{-4}	.19
Fifth " " " "	250	4.45×10^{-4}	.11
Sixth " " " "	250	4.40×10^{-4}	.11
Seventh " " " "	250	3.02×10^{-4}	.08
Eighth " " " "	250	2.52×10^{-4}	.06
Ninth " " " "	250	1.88×10^{-4}	.05
Total pyridine recovered			22.0 g
Pyridine in treating solution			23.70 g
Pyridine left on resin			1.7 g

REFERENCES

1. Astle, Melvin J., Ion Exchangers in Organic and Biochemistry. Calvin Calmon and T. R. E. Kressman, ed. Interscience Publishers Inc., New York, 1957, chapter 36.

2. McGarvey, Francis X., and Kunin, Robert, Ion Exchange Technology, F. C. Nachod and Jack Schubert, ed. Academic Press, Inc., New York, 1956, Chapter 11.

3. Durr, Georges, Compt. rend, 237, 1012 (1953).

4. Durr, Georges, Ann. Chem., [13]1, 84 (1956).

5. Mastagli, Pierre, and Durr, Georges V., Bull. soc. chim., 1955, 268.

6. Huntress, Ernest Hamlin, and Mulliken, Samuel Parsons, Identification of Pure Organic Compounds. John Wiley and Sons, Inc., New York, 1941.

7. Saunders, Robert H., Murray, M. J., and Cleveland, Forrest F., J. Am. Chem. Soc., 65, 1714 (1943).

8. Schorigin, Paul, Issaguljang, W., and Gussewe, A., Ber., 66B, 1431 (1933).

9. McElvain, S. M., et al., J. Am. Chem. Soc., 76, 5736 (1934).

10. Reese, Johannes, Ber, 75B, 384 (1942).

11. Massina, M. P., J. Gen. Chem. (U.S.S.R.), 8, 1264 (1938), Chem. Abst., 33, 4204.

12. Dreiding, Andre S., and Pratt, Richard J., J. Am. Chem. Soc., 75, 3717 (1953).

5050

13. Lambert, Paulette, Durr, Georges, and Millet, Gerard, Compt. rend., 238, 251 (1954).

14. Franke, Adolf, and Wozelka, Hermann, Monats., 33, 349 (1912).

15. Haskell, V. C. and Hammett, L. P., J. Am. Chem. Soc., 71, 1284 (1949).

16. Durr, Georges, Compt. rend., 236, 1571 (1953).

17. Dietrich, Wilhelm, German patent 857,960, Dec. 4, 1952. Chem. Abst. 47, 11240 (1953).

18. Venus - Danilova, D., et al., J. Gen. Chem. (U.S.S.R.), 23, 1561 (1953). Translation by Consultants Bureau.

19. Staudinger, A., Trans. Faraday Soc., 32, 250 (1936).

20. Wurtz, A., Ber., 5, 326 (1872).

21. Backes, Michel, Bull. soc. chim., 9, 60 (1942). Chem. Abst., 37, 5023 (1943).

22. Zuffanti, Savero, and Luder, W. F., J. Chem. Ed., 21, 485 (1944).

23. Lapworth, Arthur, and Hann, A. C. Osborn, J. Chem. Soc., 81, 1508 (1902).

24. Watson, H. B., Trans. Faraday Soc., 37, 713 (1941).

25. Arndt, F., and Eistert, B., Ber., 69B, 2381 (1936).

26. Bodendorf, K., Ber., 67B, 1338 (1934).

27. Backes, M., Compt. rend., 200, 1669 (1935).

27a. Spath, Ernst, Lorenz, Rudolf, and Freund, Else, Ber., 76B, 1196 (1943).

28. Alexander, Elliot R., and Marvell, Elliot N., J. Am. Chem. Soc., 72, 1396 (1950).

5050

29. Alexander, Elliot R., and Marvell, Elliot N., J. Am. Chem. Soc., 72, 3944 (1950).

30. Barbaglia, G. A., Ber., 5, 1052 (1872).

31. Demtschenko, St., Ber., 6, 1176 (1873).

32. Le Sueur, Henry Rondel, J. Chem. Soc., 87, 1888 (1905).

33. Stephen, Henry, J. Chem. Soc., 127, 1874 (1925).

34. Fieser, Louis F., and Fieser, Mary A., Organic Chemistry, 2nd ed. D. C. Heath and Co., Boston, 1950, p. 202.

35. Orndorff, W. R., and Balcom, L. L., Am. Chem. J., 16, 645 (1894).

36. Gerding, H., and Lecomte, J., Rec. trav. chem., 58, 614 (1939).

37. Aoki, Koichiro, J. Chem. Soc. Japan, 74, 110 (1953). Chem. Abst. 47, 5191.

38. Letort, Morice, Compt. rend., 202, 767 (1936).

39. Omitted.

40. Rigby, H. A., Danby, C. J., and Hinshelwood, C. N., J. Chem. Soc. 1948, 234.

41. Sutherland, G. B. B. M., Philpotts, A. R., and Twigg, G. H., Nature, 157, 267 (1946).

42. Bevington, J. C., Quart. Rev. 6, 141 (1952).

43. Stepanow, A., Preobraschensky, N., and Schtschukina, R., Ber., 59, 2533 (1926).

44. Helferich, Friedrich, Angew. Chem., 66, 241 (May 7, 1954).

45. Helferich, Friedrich, J. Am. Chem. Soc., 76, 5567 (1954).

46. Astle, Melvin J., Schaeffer, B., and Obenland, C. O., J. Am. Chem. Soc., 77, 3643 (1955).

5050

47. Paulson, Jack C., Deatherage, Fred E., and Almy, Emory F., J. Am. Chem. Soc., 78, 2039 (1953).

48. Bodamer, George, and Kunin, Robert, Ind. Eng. Chem., 43, 1082 (1951).

49. Klein, F. G., and Banchero, J. T., Ind. Eng. Chem., 48, 1278 (1956).

50. Astle, Melvin J., Zaslowski, Joel A., and Lafyatis, Paul G., Ind. Eng. Chem., 46, 787 (1954).

51. Mastagli, Pierre, et al., Bull. soc. chem., 20, 693 (1953).

52. Ueno, Kagehira, Japan patent 6158 (1951). Chem. Abst. 47, 9996 (1953).

53. Bellamy, L. J., The Infrared Spectra of Complex Molecules. John Wiley and Sons, Inc., New York, 1954, pp. 31, 37, 115-116.

54. Tschamler, H., and Leutner, R., Monats., 83, 1502 (1952).

55. Saunders, Robert H., and Murray, M. J., J. Am. Chem. Soc., 65, 1309 (1943).

56. Smith, Walter T., and Shriner, Ralph L., The Examination of New Organic Compounds. John Wiley and Sons, Inc., New York, 1956.

57. Gergel, William Christopher, Anion Exchange Resins as Catalysts for the Knoevenagel Reaction. M.S. Thesis, Case Inst. of Tech., Dept. of Chemistry, 1955.

58. Desai, J. C., Ion Exchange Resins as Catalysts for the Aldol Condensation Reactions. M.S. Thesis, Case Inst. of Tech., Dept. of Chemistry, 1956.

5050