SCR 328-II

N68-15366

A STUDY OF THE CRITICAL COMPUTATIONAL PROBLEMS ASSOCIATED WITH STRAPDOWN INERTIAL NAVIGATION SYSTEMS

VOLUME II

COMPUTATIONAL ERROR ANALYSIS COMPUTER PROGRAM - USER'S MANUAL

SUBMITTED TO

NATIONAL AERONAUTICS AND SPACE ADMINISTRATION
ELECTRONICS RESEARCH CENTER
CAMBRIDGE, MASSACHUSETTS

United Aircraft Corporate Systems Center

UA
DIVISION OF UNITED AIRCRAFT CORPORATION

FARMINGTON, CONNECTICUT 06032

287

SCR 328-II

A STUDY OF THE CRITICAL COMPUTATIONAL PROBLEMS ASSOCIATED WITH STRAPDOWN INERTIAL NAVIGATION SYSTEMS

VOLUME II

COMPUTATIONAL ERROR ANALYSIS
COMPUTER PROGRAM-USER'S MANUAL

CONTRACT NAS 12-91

SUBMITTED TO

NATIONAL AERONAUTICS AND SPACE ADMINISTRATION
ELECTRONICS RESEARCH CENTER
CAMBRIDGE, MASSACHUSETTS

February 23, 1967

UNITED AIRCRAFT
CORPORATE SYSTEMS CENTER
Division of United Aircraft Corporation
Farmington, Connecticut

FOREWORD

This final report was prepared by United Aircraft Corporate Systems Center for NASA Electronics Research Center as fulfillment of Contract No. NAS 12-91. The work described in this report was initiated by United Aircraft Corporate Systems Center under a company funded research program and extended and documented herein for NASA Electronics Research Center under the above-referenced contract. The principle goals of the contract are: (1) to develop analytical models of the computational errors associated with the computational process of strapdown inertial navigators and (2) by using these models, to establish the computational requirements of strapdown navigators for the various phases of flight of typical missions. This report is divided into two volumes. The first volume, NASA CR 968, describes the analytical models of the computational errors of strapdown navigators and reports upon specific hardware application studies and computational requirements. The second volume describes in detail the digital computer program developed under this program that permits rapid evaluation of strapdown associated computational errors for restrained sensor systems.

2

TABLE OF CONTENTS

Section		Page
I	SUMMARY	1
II	INTRODUCTION	5
	A. Program Usage and Capability	5
	B. General Program Description	8
III	INPUT/OUTPUT	11
	A. Input	11
	1. Description	11
	2. Format	13
	B. Output	13
IV	DETAILED PROGRAM DESCRIPTION	17
	A. Technical Approach	17
	B. Assumptions and Definitions	19
	C. Organization	23
V	REFERENCES	26

APPENDICES

A. DICTIONARY OF VARIABLES

B. SUBROUTINE DESCRIPTIONS

C. PROGRAM LISTING

D. INPUT DATA DECK DESCRIPTION

E. EXAMPLE RUN

LIST OF ILLUSTRATIONS

Figure		Page
1	Functional Schematic of the CEACP	9
2	Alternative Open Loop Error Analysis Procedures	18
3	Coordinate Frames	22
4	First Level Flow Diagram of the CEACP	25

LIST OF TABLES

Table		Page
I	Error Sources and Environments Included in the CEACP	2
II	Program Options	3
III	Error Sources Included in the CEACP	7
IV	Input Data Description	12
V	Possible Input Data Setup Cases	14
VI	Abbreviations Used in Output	16

I. SUMMARY

This report describes the Computational Error Analysis Computer Program (CEACP) (UACSC Deck No. C513), which evaluates strapdown attitude computational errors and their effects upon navigational accuracy. The computational parameters evaluated by the program are presented in Table I. The errors are evaluated for a restrained sensor system operating in an unbounded navigation mode typical of boost and short term space missions.

The program incorporates the computational models presented in Volume I of this report and employs them to calculate the computational attitude errors for specified angular environments and computational processes. The angular environments and computational processes that can be evaluated by this program in any combination are shown in Table I. CEACP also evaluates the effect of these attitude errors upon velocity and position accuracy. The latter errors are established by computing position and velocity with and without the attitude errors and then differencing the results. An open loop integration of the equations of motion is employed to establish position and velocity during thrusting phases of flight and a closed form solution of the two body equations of motion is used during free flight phases.

CEACP provides flexibility in both the design of the flight to be analyzed and in the form of input data accepted. Any combination of free and/or powered flight segments (up to a maximum of 9) may be specified with the reference position, velocity, and attitude as well as the errors in each of these quantities due to each error source printed at the end of each flight segment. During unpowered phases of flight, the program will accommodate elliptic, parabolic, or hyperbolic trajectories.

Several alternative input options have been provided in CEACP as shown in Table II. The flexibility of input reduces the amount of precomputation necessary to prepare these data for use in this program. This flexibility is provided because the data necessary to specify trajectories, particularly during thrusting phases, can come from many different sources such as other computer programs whose data may very well be expressed in several alternative forms (units and coordinate frames). These options encompass most of the normal variations encountered in the specification of trajectory profiles.

The CEACP is written entirely in the FORTRAN IV (version 13) source language for use on an IBM 7090/7094 direct coupled or compatible system. The program is structured in the form of a main control program that calls several subroutines in a sequence determined by the input data. Execution time of the program will vary depending upon the particular trajectory being investigated and the desired accuracy

TABLE I

ERROR SOURCES AND ENVIRONMENTS INCLUDED IN THE CEACP

A. Error Source

1. Initial Conditions

   Velocity
   Position
   Alignment

2. Integration Scheme and Interval

   Rectangular
   2nd Order Runge-Kutta
   4th Order Runge-Kutta

3. Word Length

4. Accelerometer Data Coordinate Transformation Process

   2nd Order
   4th Order

5. Gyro Quantization

B. Environments

1. Quasi-Steady Angular Rates

2. Sinusoidal Angular Motion

3. Coning Angular Motion

4. Single Axis Angular Vibration

5. Nominal Thrust Profile

TABLE II

PROGRAM OPTIONS

- Units

  Metric or English
  Radians or Degrees
  L/T^2 or g's

- Trajectory Data Input Coordinate Frame (Variable between flight segments)

  Any Inertial Frame
  Body Frame
  Wind Axis Frame

- Flight Profile Data Specified as Acceleration or Specific Force

- Free Flight Attitude Propagation

  Constant in Inertial Frame
  Constant in Local Frame
  Integrated Numerically

- Flight Segment Cutoff Variable

  Radius
  Range Angle
  Time (powered flight only)

- Initial Conditions Specification

  Vehicle Latitude, Longitude
  Six Inertial Components of Position and Velocity

- Arbitrary Alignment of Sensor Input Axes Relative to Vehicle Body Axes

of the results (i.e., the size of the increment selected for use in the numerical integration of the equations of motion to propagate the attitude errors into position and velocity errors.) A typical execution time is approximately two minutes as typified by the example run included in Appendix E.

Sections II and III of this report provide the necessary information to operate the program. Section IV presents a technical description of the methods employed and the assumptions and definitions used in writing the program. A dictionary of program variables, a description of the subroutines, a program listing, a detailed description of the input data deck and an example run are provided in Appendices A through E, respectively.

II. INTRODUCTION

In the design and analysis of inertial navigation systems, three broad categories of error sources may be distinguished: sensor errors, scheme errors, and computational errors. The first of these categories is associated with the non-ideal or non-deterministic behavior of the system hardware. Scheme errors are associated with the approximations employed and the uncertainties in the mathematical models used to describe the system and the unobservable forces acting on it. The computational errors are associated with the necessary numerical solution of the navigation equations employing the data generated by the sensors. These errors arise from the techniques used to solve the equations, the finite rate at which they are solved, and the precision with which the numerical data are represented and manipulated. The CEACP was written to facilitate the investigation of the last class of system errors for the computational process peculiar to strapdown navigation systems that utilize sensors of the restrained class that operate in an unbounded navigation mode.

The design objective in preparing the CEACP was to provide an efficient, economical, and flexible means whereby the effect of strapdown attitude computational errors may be evaluated. When used alone this program is an efficient aid in the design evaluation and selection of the strapdown computational process for a given mission or missions. When used in conjunction with similar programs for the evaluation of sensor and scheme errors, the CEACP forms a part of the formulation for a complete system error analysis.

A. Program Usage and Capability

The CEACP evaluates the navigated position, velocity, and attitude errors that result from the errors in the strapdown computational processes of attitude determination and accelerometer data coordinate conversion. These error sources represent the combined effects of the computational processes employed and the flight environment both the quasi-steady and dynamic. In addition, the CEACP has the capability of evaluating the navigation errors that arise from the uncertainties in the conditions used to initialize the attitude, velocity, and position integration at the commencement of the flight. Table I lists the error sources that may be investigated by using the CEACP and the environments that excite many of the error sources. Each of these error sources vary in the way in which they are coupled with the flight environment. First, the initial condition errors are idependent of both the vehicle environment and the computational process while the roundoff error is a function of the computer word length and the computational frequency. The remaining error sources are functions of both the computational process and the vehicle environment. All of the angular environments listed excite a computational trunca-

tion error which is a function of the integration scheme and computational frequency. The sinusoidal angular environment also excites the acceleration data coordinate transformation error which is a function of the computational scheme and is computational frequency. The coning motion must also consider the effect of gyro quantization in conjunction with the computational frequency. The strapdown attitude computational process and the flight environment combine to produce seven distinct types of computational errors all of which are modeled within this program. These plus the initial condition errors result in a total of 10 types of error sources as listed in Table III, which are evaluated by the CEACP. Numbers 2 through 10 comprise the nine (3 each of position, velocity, and attitude) initial condition errors and numbers 11 through 27 comprise the seven team errors due to the combined effects of the computational process and flight environment.

Each error source listed in Table III is assumed to act independently and their effects on the resulting navigation accuracy is evaluated independently. This evaluation of each error source separately has the advantage of pointing out to the designer using the program the areas in which the computational process under investigation may be overdesigned or underdesigned. In this manner, the areas in which trade-offs may be most significantly used to achieve a balanced computational process are made apparent. The total system error is obtained by root sum squaring the contributions of the individual error sources. To obtain trade-off data, a series of runs, that sequentially vary the computational parameters would be performed.

The reference position, velocity, and attitude and the errors in each of these quantities for each error source are printed out at the end of each flight segment. A flight segment is defined as a portion of the trajectory that is separated from other flight segments by a discontinuity in one or more of the inputted data. Such a discontinuity may occur at a vehicle staging point, or at any point where the dynamic environment or the computational process is changed. A new flight segment must also be defined whenever a transition between powered and free flight is desired. In addition to the above "natural" flight segments, the user may define additional segments (a total of 9 segments can be accepted) at points along the trajectory where an error printout is desired.

The CEACP provides flexibility in the coordinate frames and units of the input data necessary to specify the trajectory for use in this program. This flexibility is required as trajectory data may come from any one of many different sources and in several alternate forms. To reduce the amount of pre-computational required for the use of the CEACP, several alternative input options as listed in Table II have been provided. These options encompass most of the normally encountered variations in the specification of trajectory profiles and are intended predominantly to facilitate the preparation of the tabular data that defines the time history of vehicle angular rates and accelerations. These input options are intended to eliminate the need for

TABLE III

ERROR SOURCES INCLUDED IN CEACP (1)

1.	Reference Case - No errors present
2. -4.	Initial Position Errors
5. -6.	Initial Velocity Errors
7. -10.	Initial Alignment Errors
11.	Constant Rate Truncation (2)
12. -14.	Sinusoidal Rate Truncation (on X, Y, Z Body Axes) (2)
15. -17.	Roundoff (on X, Y, X Body Axes) (3)
18. -20.	Coning Truncation (on X, Y, Z Body Axes) (2)
21. -23.	Vibratory Truncation (on X, Y, Z Body Axes) (2)
24. -26.	Gyro Quantization (on X, Y, Z Body Axes)
27.	Size Effect (4)

---

(1) The numbering of the error sources in this table corresponds to their numbering and order in the printout.

(2) For three integration schemes and any computational frequency.

(3) For any word length.

(4) For two computational processes.

the user to change the units of his data and the coordinate frames in which it is expressed. This capability is provided in the CEACP to reduce both the possibility of errors and the time required in preparation of the input data for the program. Other options allow the user to select the variable on which each flight segment is to be terminated and a simplified means of propagating vehicle attitude through the free flight phases of the trajectory.

B. General Program Description

The CEACP is an open loop error analysis program similar to those generally used for evaluation of the effects of inertial sensor errors on navigation accuracy. The program is termed open loop because no guidance function is provided. The angular rates and accelerations assumed to be experienced by the vehicle are simply integrated open loop to advance the vehicle along the trajectory until the specified value of a termination variable is exceeded. A functional schematic of the CEACP is presented in Figure 1.

As shown in Figure 1, the program is quite similar in appearance to a typical strapdown navigation loop. With the switches open, the inputted trajectory data are used just as sensor outputs would be used in an actual flight. The vehicle angular rates are integrated to obtain the transformation matrix between the body and inertial coordinate frames. This matrix is then used to resolve the specific force data into the inertial frame where they are summed with the results of the gravity computations and doubly integrated to obtain the vehicle position and velocity.

The open loop integration of the equations of motion is done once for the reference trajectory with the error switches open and repeated for each error source with the appropriate switch closed. The reference trajectory and the trajectory including the effects of each error source are propagated in this manner to the end of each flight segment when the errors are evaluated and the next flight segment is initialized using the end conditions for each error source of the preceding segment. The effects of each error source is individually assessed by differencing the result of the reference trajectory integration with that of trajectory obtained with the error source present.

The errors due to the computational process are introduced as an equivalent drift rate or acceleration bias terms which are added to the true quasi-steady environment. These bias terms are obtained from the error models described in Volume I of this report. The specified computational process and dynamic environment are used with these models (which are a function of both the flight environment and the computational process) to compute effective vector perturbations deonted by $\Delta\omega$ and

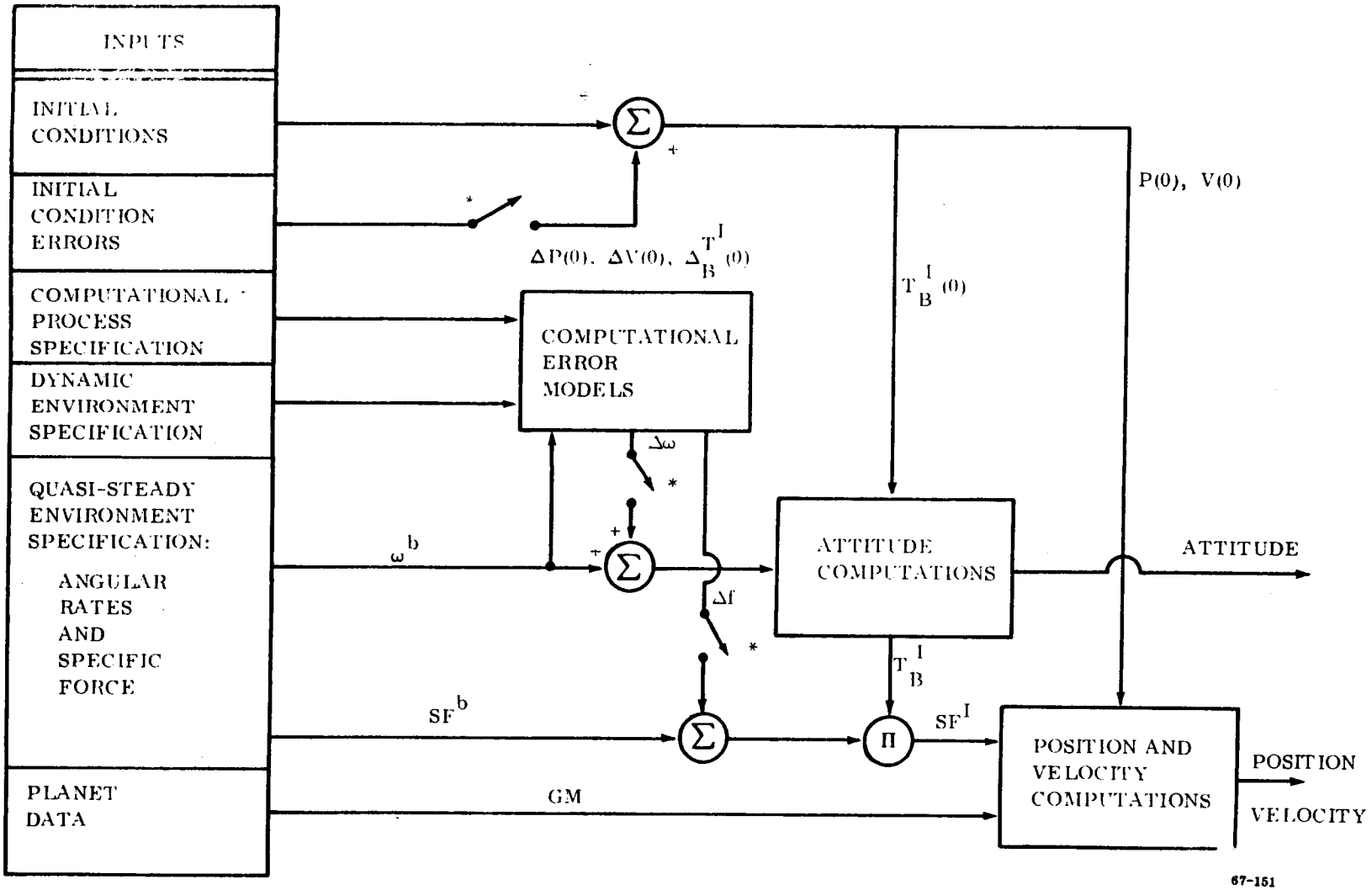

* OPEN FOR REFERENCE TRAJECTORY;
CLOSED FOR ERROR RUNS

Figure 1 Functional Schematic of the CEACP

Δf in Figure 1 which are added to the inputted time history of the vehicle angular rates and accelerations. It is assumed that the dynamic environment is characterized by a mean of zero, which results in negligible deviations in the trajectory flow and that its effects are principally upon the computational process in its following of the high frequency vehicle or sensor package motion.

When the specific force acting on the vehicle is zero, the attitude and the position tracking computations become uncoupled. This corresponds to free or unpowered flight when the accelerometer data is ignored and vehicle position and velocity are obtained by integrating the computed gravitational acceleration alone. To reduce program execution time, the CEACP replaces the open loop integration of the gravity model with an analytic solution for vehicle position and velocity, using an inverse square gravity model. In actual flight a knowledge of inertial flight attitude continues to be obtained during the free flight portions of the flight by integrating the gyro outputs. This capability is retained in the program whereby the user may input a time history of the vehicle angular rates, which are integrated open loop to propagate attitude through periods of unpowered flight. The CEACP, however, also provides two other options for the propagation of vehicle attitude through these periods with the assumption that vehicle attitude remains constant with respect to either the inertial frame or with respect to the local geocentric frame. When either of these options are selected, analytic solutions are employed to propagate true attitude to the end of the free flight phase and to compute the attitude error that is encurred during this phase of the flight. These options are provided to reduce program execution time.

III. INPUT/OUTPUT

The procedure to prepare the input data for the CEACP and to interpret its output are described in this section which in turn is supported by Appendices A through E. This program is entirely written in FORTRAN IV (version 13) source language for use in an IBM 7090/7094 direct coupled or compatible system and conforms to the FORTRAN language defined in Reference 1.

A. Input

The purpose of this section is to define the input data that are required to run this program and the manner or format in which they must be prepared for each of the program options. Appendix D provides a detailed card-by-card input data deck description for each option while Appendix E presents an example run, both the listing of the input and the printout.

1. Description

In order to facilitate the preparation of a complete list of data required to run this program, the input data have been grouped and ordered to conform to a logical description of an inertial navigation problem. This ordering also accomplishes the task of minimizing the number of cards that need to be prepared for the simulated flight. The input data is divided into three groups:

1. Group I
2. Group II
3. Name List

The major data contained in each of these groups are listed in Table IV. A detailed card-by-card description of input data is presented in Appendix D. Group I data define the required characteristics of the primary body and navigation system that remain fixed for the entire flight independent of the number of flight segments plus program control. The navigation system characteristics defined are the orientation of the sensor input axes relative to the vehicle axes and the initial flight condition and their errors. Program control defines the number of segments of the flight and the program options that are to be employed. The latter are selected on a basis of convenience of available trajectory data.

Group II data, in general, define the quasi-steady trajectory characteristics for a phase of flight and the program and option control to be employed during the flight phase. There is a block of Group II data associated with each phase of flight and the data blocks are ordered chronologically from the beginning of the flight (after the Group I data) to the final phase.

TABLE IV

INPUT DATA DESCRIPTION

I. GROUP I DATA

A. Primary Body Physical Data
   1. Mass
   2. Radius
   3. Rotation Rate

B. Instrument Transformations
   1. Transformation from accelerometer to body frame
   2. Transformation from gyro to body frame

C. Initial Conditions
   1. Position (3 I frame components or latitude and longitude)
   2. Velocity (3 I frame components or computed from latitude and longitude)
   3. Initial attitude
   4. Azimuth heading

D. Initial Condition Errors
   1. Position errors
   2. Velocity errors (computed by program if latitude and longitude used to specify position)
   3. Alignment errors.

E. Program Control Variables
   1. Number of flight segments
   2. Options employed associated with input data

II. GROUP II DATA

A. Flight Segment Identification

B. Termination Variable and Conditions

C. Tabular Data
   1. Acceleration of specific force
   2. Body rates

D. Program Control Variables
   1. Coordinate frame of tabular data
   2. Free or powered
   3. Units of input
   4. New Name List data for particular segment

III. NAME LIST DATA
A. Computational Process Specification
B. Dynamic Environment Specification

The third and final group of data, Name List, defines the computational processes and the dynamic environment to be used in each flight segment. The computational processes and the dynamic environments selectable are listed in Table I. As in the case of Group II data, there is a Name List block of data for each flight segment. In setting up the cards containing the input data, each Name List group follows the Group II data of the appropriate phase and precedes the Group II data of the next phase.

Name List, and I/O feature of FORTRAN IV, version 13, requires that only the data of the Name List data group (of flight segment j) that differ from the preceding Name List data group (flight segment j-1) need be included in the Name List data group of flight segment (j); for the Name List data that are the same for succeeding flight segments, no new Name List cards or data need be included. Thus, if the computational processes and the dynamic environment are the same for all flight segments, name list data cards need only be prepared for the first flight segment and placed following the Group II data of the first flight segment.

2. Format

With the many options provided in the CEACP, there are a number of different data set up possibilities for the input data, in particular for Group II data. Table V lists the different deck setups while Appendix D presents a detailed card by card description. Using these descriptions the data employed to setup the included example run presented in Appendix E is also presented in this appendix. For convenience the Group II data options have been divided into free and powered flight phases.

In the description of the various cases for each group of data in Appendix D, the card sequence number refers to the relative location of the card within the group and not the absolute location of the card in the input data deck. A typical trajectory consists of a block of Group I data followed by several blocks of Group II and Name List data: Group II (1st flight segment); Name List (1st flight segment); Group II (2); Name List (2); Group II (3), etc. Only those data from a particular name list group that differ from the preceding name list group need be included. If there are no changes in the name list data between successive flight segments, the Group II variable ICHANG is set equal to zero and the name list data block omitted.

B. Output

The output of the CEACP is a printout listing the input data, the pertinent data at the end of each flight segment, and trajectory data and error summaries at the end of the last flight segment. Appendix E contains an example run. In the printout,

TABLE V

POSSIBLE INPUT DATA SETUP CASES

A. GROUP I DATA

Case 1: Initial position and velocity are in the inertial frame.

Case 2: Initial conditions specified as latitude and longitude.

B. GROUP II DATA

I. Free Flight Segments

Case 1: Segment terminated on radius, attitude propagated as a constant in the local or inertial frame.

Case 2: Segment terminated on range angle, attitude propagated as a constant in the local or inertial frame.

Case 3: Segment terminated on range angle, attitude integrated open loop, tabular data in I, W, or B frame.

Case 4: Segment terminated on range angle, attitude integrated open loop, tabular data in L frame.

Case 5: Segment terminated on radius, attitude integrated open loop, tabular data in I, W or B frame.

Case 6: Segment terminated on radius, attitude integrated open loop, tabular data in L frame.

II. Powered Flight Segments

Case 1: Segment terminated on range angle, tabular data in I or B frame.

Case 2: Segment terminated on time, tabular data in I or B frame.

Case 3: Segment terminated on range angle, tabular data in W frame.

Case 4: IFUSE = 1 or 2, tabular data in I or B frame.

Case 5: Segment terminated on range angle, tabular data in L frame.

Case 6: Segment terminated on time, tabular data in L frame.

Case 7: IFUSE = 1 or 2, tabular data in L frame.

Case 8: IFUSE = 1 or 2, tabular data in W frame.

Case 9: Segment terminated on time, tabular data in W frame.

all the trajectory descriptions and program options employed appear structured as sentences similar to comment cards to defining the data or options exercised. The abbreviations that appear in the printout are defined in Table VI.

For each flight segment, the trajectory characteristics (including rate and specific force), the computational processes, and the dynamic environments employed in that segment are displayed. This is followed by a description of the reference trajectory at the end of the flight segment:

- Position and velocity
- Time
- Orientation of the local frame relative to the inertial frame and the orientation of the vehicle relative to the inertial frame

This description of the reference trajectory at the end of the flight segment is followed by a presentation of the errors associated with each error source. The error sources are numbered 2 through 27 in accordance with Table III. The errors associated with each error source are displayed in a number of ways to provide flexibility in analysis. First, the attitude, velocity and position relative to the inertial frame computed with the error sources is presented. Next, these quantities differenced with the reference trajectory data are presented first in the inertial frame and then in the local frame. In addition to these data, the magnitude of the error source (expressed as an equivalent angular rate or specific force as generated by the error models) is presented.

Following the last flight segment, the flight summary presents the attitude, position and velocity of the trajectory at the end of each flight segment. The error source summary presents the position and velocity errors associated with each error source for each flight segment expressed in the local coordinate frames.

TABLE VI

ABBREVIATIONS USED IN OUTPUT

DELCR	- Crossrange position error
DELCRDØT	- Crossrange velocity error
DELDR	- Downrange position error
DELDRDØT	- Downrange velocity error
DELRA	- Radial position error
DELARDØT	- Radial velocity error
AX, AY, AZ	- Three components of vehicle acceleration or specific force
WX, WY, WZ	- Three components of vehicle angular rates
SFX, SFY, SFZ	- Three components of vehicle specific force expressed in accelerometer frame
DELXI, DELYI, DELZI	- Three components of position error in inertial coordinates
DELVXI, DELVYI, DELVZI	- Three components of velocity error in inertial coordinates
DELVEL	- Velocity magnitude error
DELGAM	- Flight path angle error
DELPSI	- Out-of-plane velocity angle
DELAZ	- Initial azimuth alignment error
OPVERT	- Initial out-of-plane vertical missalignment angle
IPVERT	- Initial in-plane vertical missalignment angle
ECM	- Free flight error transition matrix

IV. DETAILED PROGRAM DESCRIPTION

This section discusses the functional approach employed in writing the CEACP, states the assumptions upon which the program is based, and defines the coordinate frames employed including the transformations used to resolve data between them. Finally, a flow diagram of the main or control program is presented. This diagram includes all the major functional subroutines illustrating their functional relationships.

A. Technical Approach

Navigation system performance may be evaluated by many different techniques. The differences arise predominantly in the manner in which the effect of error sources upon system errors are obtained and the forcing functions described. A commonly employed technique for the description of the forcing functions is an open loop technique used when a priori knowledge of all the significant forces acting on the vehicle is available. Hence a complete time history of the vehicle angular rate and acceleration (or specific force) vectors is available. The vehicle angular rate and acceleration data may be used in either of two ways to obtain the navigation errors.

The first method employs linearized error models to obtain the navigation error. The equations of motion with and without the effects of the error source are differenced to obtain the linearized error model. This error model is then integrated to yield the position velocity and attitude errors. This technique is illustrated schematically in Figure 2. A disadvantage of this technique is that any errors incurred in the numerical integration process used to integrate the attitude and the position error equations will appear as system errors. The second method, which is also illustrated in Figure 2, performs an actual integration of the equations of motion. The effect of each error source on the performance of the system is obtained by differencing the results of the trajectory integration first with and then without the error source present. The aforementioned error encountered in integrating the equations of motion is approximately the same for the integrations with and without the computational errors. Thus, the differencing process eliminates the problem of the first approach. Care must be exercised in the use of this latter technique to insure that the precision (word length) of the computer employed is sufficient to retain the effects of each error source in the calculations as the effect of the error source is obtained by differencing two large numbers.

CEACP employs the second of these techniques, i.e., the simulation of the equations of motion, to evaluate the system errors accrued in the attitude computational process of a strapdown navigator during powered flight. This method was used as opposed to that shown in Figure 2, because it minimizes the effects of the

```
      SUBROUTINE MATMUL(A,I,K,B,J,C)
      DIMENSION A(I,K),B(K,J),C(I,J)
      DO 300 L = 1,I
      DO 200 M = 1,J
      C(L,M) = 0.
      DO 100 N = 1,K
      C(L,M) = C(L,M) + A(L,N) * B(N,M)
  100 CONTINUE
  200 CONTINUE
  300 CONTINUE
      RETURN
      END
```

```
      SUBROUTINE MATRAN(A,B)
      DIMENSION A(3,3),B(3,3)
      DO 20 M = 1,3
      DO 10 L = 1,3
      B(L,M) = A(M,L)
   10 CONTINUE
   20 CONTINUE
      RETURN
      END
```

```
      SUBROUTINE INVERS(A,AINVER)
      DIMENSION A(3,3),ATRAN(3,3),XI(3,3),AINVER(3,3),ERROR(3,3),
     1          TEMP(3,3),TEMP1(3,3)
      DATA((XI(I,J),I =1,3), J = 1,3) /1.0,0.,0.,0.,1.0,0.,0.,0.,1.0/
      ITER = 0
      ALPHA = 1.0E-6
      CALL MATRAN(A,ATRAN)
   50 CALL MATMUL(A,3,3,ATRAN,3,TEMP)
      DO 200 I = 1,3
      DO 100 J = 1,3
      ERROR(I,J) = XI(I,J) - TEMP(I,J)
  100 CONTINUE
  200 CONTINUE
      SUM = 0.
      DO 400 I = 1,3
      DO 300 J = 1,3
      SUM = SUM + ERROR(I,J) ** 2
  300 CONTINUE
  400 CONTINUE
      IF(SUM - ALPHA) 1000,1000,500
  500 ITER = ITER + 1
      IF(ITER - 20) 550,550,1100
  550 DO 700 I = 1,3
      DO 600 J = 1,3
      TEMP1(I,J) = 2. * XI(I,J) - TEMP(I,J)
  600 CONTINUE
  700 CONTINUE
      CALL MATMUL(ATRAN,3,3,TEMP1,3,TEMP)
      DO 900 I = 1,3
      DO 800 J = 1,3
      ATRAN(I,J) = TEMP(I,J)
  800 CONTINUE
  900 CONTINUE
      GO TO 50
 1000 DO 1050 L = 1,3
      DO 1025 M = 1,3
      AINVER(L,M) = ATRAN(L,M)
 1025 CONTINUE
 1050 CONTINUE
      RETURN
 1100 WRITE(6,10)
   10 FORMAT(//43HOMATRIX INVERSION ROUTINE DOES NOT CONVERGE)
      STOP
      END
```

```
SUBROUTINE INTPLT (X1,Y1,X2,Y2,X,Y)
Y = (1. / (X2 - X1)) * (Y1 * (X2 - X) - Y2 * (X1- X))
RETURN
END
```

```
      SUBROUTINE AGONY(ARG1,ARG2,ANS)
      DATA PI/3.1415927/
      ANUM = ABS(ARG1)
      DENOM = ABS(ARG2)
      IF(ANUM - DENOM) 50,51,51
   50 ARG3 = ANUM / DENOM
      ANS = ATAN(ARG3)
      GO TO 52
   51 ARG3 = DENOM / ANUM
      ANS = ATAN(ARG3)
      ANS = .5 * PI - ANS
   52 IF(ARG1) 53,54,54
   53 IF(ARG2) 55,56,56
   55 ANS = ANS + PI
      GO TO 58
   56 ANS = 2. * PI - ANS
      GO TO 58
   54 IF(ARG2) 57,58,58
   57 ANS = PI - ANS
   58 RETURN
      END
```

```
      SUBROUTINE ERROR
C     DETERMINES  VELOCITY AND POSITION ERRORS FOR ERROR SOURCE ES
      INTEGER ES,ESMAX
      COMMON OMEG(3,3),TLI(3,3),TEMP1(3,50),TEMP2(3,50),W(3,50),A(3,50)
     1        ,WTEMP(3,1),ATEMP(3,1),T(50),TBI(3,3),TIB(3,3),TBG(3,3),
     2        TGB(3,3),ALPHA(50),BETA(50),TWB(3,3),IADRSE,RP,GCON,XMASS,
     3        X,Y,Z,DELTS,DTOTWO,IFRAME,VX,VY,VZ,NPTS,TIA(3,3),TAI(3,3)
     4        ,TAIOLD(3,3),TAINEW(3,3),TTOTAL(27,10),TIME,TMAX,XTRUE(10)
     5        ,YTRUE(10),ZTRUE(10),VXTRUE(10),VYTRUE(10),VZTRUE(10),
     6        A1DOT,A2DOT,A3DOT,DELRA(3,27,10),DELVD(3,27,10),D1,D2,D3,
     7        D1TRUE(10),D2TRUE(10),D3TRUE(10),DOTOLD(3,3),DOTNEW(3,3),
     8        AXOLD,AXNEW,AYOLD,AYNEW,AZOLD,AZNEW,VXOLD,VXNEW,VYOLD,
     9        VYNEW,VZOLD,VZNEW,GX,GY,GZ,DT(27,10),TBISAV(3,3,27,10)
      COMMON ES,ESMAX,IOPT,IVAR,IFUSE,PAR(7,7),ECM(7,7),ADOT(3,3),
     1        FIDOT(3,3),DEL(3,1),FNPI,PIDTWO,PI
     2        ,IOOPR,IGORLT,IUNITS,RRATE,IES,IESMAX,TBA(3,3),TAB(3,3)
     3        ,RMAX,THETAE,R,THETA,KELY,EN
     4       ,RSS1(10),RSS2(10),RSS3(10),RSS4(10),RSS5(10),RSS6(10)
     5       ,RSS7(10),ERRMAG(27),ERRDC(3,27),HOLD(10),SAVE(10),
     6       F12MAT(3,1),F14MAT(3,1),F16MAT(3,1),QUANT,ARM(10),PSD(10),
     7       PSDE(10),KE,ICON
      COMMON AMPSS(10),FREQ(10),DCOS(3,10),DCS1(3,5),DCS2(3,5),
     1        KSS,ACONSS(5),FCONSS(5),DUMMY(3,3),ICHANG
     2       ,ISCHME,IWDSIZ,COMPFQ,NSS,DELXI(27,10),DELYI(27,10),
     3       DELVXI(27,10),DELVYI(27,10),DELVZI(27,10),DELZI(27,10)
     4       ,F13MAT(3,1),F15MAT(3,1)
      DEL(1,1) = X - XTRUE(IES)
      DEL(2,1) = Y - YTRUE(IES)
      DEL(3,1) = Z - ZTRUE(IES)
      TEMP1(1,1) = VX
      TEMP1(2,1) = VY
      TEMP1(3,1) = VZ
      CALL MATMUL(TIA,3,3,TEMP1,1,ADOT)
      CALL TRTAD
      CALL MATMUL(TIA,3,3,DEL,1,TEMP1)
      DO 100 I = 1,3
      DELRA(I,ES,IES) = TEMP1(I,1)
  100 CONTINUE
      DELVD(1,ES,IES) = D1 - D1TRUE(IES)
      DELVD(2,ES,IES) = D2 - D2TRUE(IES)
      DELVD(3,ES,IES) = D3 - D3TRUE(IES)
      RETURN
      END
```

APPENDIX D

INPUT DATA DECK DESCRIPTIONS

In the description of the various cases (defined in Table D-I for each group of data in this appendix, the card sequence number refers to the relative location of the card within the group and not the absolute location of the card in the input data deck. A typical trajectory consists of a block of Group I data followed by several blocks of Group II and Name List data: Group II (1st flight segment), Name List (1st flight segment); Group II (2), Name List (2); Group II (3), etc. Only those data from a particular name list group that differ from the preceding name list group need be included. If there are no changes in the name list data between successive flight segments, the Group II variable ICHANG is set equal to zero and the name list data block omitted.

The asterisks that appear in the descriptions of the various cases (in the tables that follow) are defined as follows:

*	This value must be used for this case
**	Units are rad/sec or deg/sec depending on the value of IDØRR.
***	Units are radians or degrees depending on the value of IDØRR.
****	Units are meters/sec^2, ft/sec^2, or g's depending on the values of IUNITS and IGØRLT.
*****	Units are meters or feet depending on the value of IUNITS.
******	Units are kilograms or slugs depending on the value of IUNITS.

TABLE D-I

POSSIBLE INPUT DATA SETUP CASES

A. GROUP I DATA

Case 1: Initial position and velocity are in the inertial frame.

Case 2: Initial conditions specified as latitude and longitude.

B. GROUP II DATA

I. Free Flight Segments

Case 1: Segment terminated on radius, attitude propagated as a constant in the local or inertial frame.

Case 2: Segment terminated on range angle, attitude propagated as a constant in the local or inertial frame.

Case 3: Segment terminated on range angle, attitude integrated open loop, tabular data in I, W, or B frame.

Case 4: Segment terminated on range angle, attitude integrated open loop, tabular data in L frame.

Case 5: Segment terminated on radius, attitude integrated open loop, tabular data in I, W or B frame.

Case 6: Segment terminated on radius, attitude integrated open loop, tabular data in L frame.

II. Powered Flight Segments

Case 1: Segment terminated on range angle, tabular data in I or B frame.

Case 2: Segment terminated on time, tabular data in I or B frame.

Case 3: Segment terminated on range angle, tabular data in W frame.

Case 4: IFUSE = 1 or 2, tabular data in I or B frame.

Case 5: Segment terminated on range angle, tabular data in L frame.

Case 6: Segment terminated on time, tabular data in L frame.

Case 7: IFUSE = 1 or 2, tabular data in L frame.

Case 8: IFUSE = 1 or 2, tabular data in W frame.

Case 9: Segment terminated on time, tabular data in W frame.

GROUP I DATA DESCRIPTIONS

CASE 1.

Card #	Variable Name	Units		Function or Definition	Format
1				comment card	12A6
2	IFSMAX			number of flight segments + 1	16I5
	IUNITS			0 = data in metric units 1 = data in English units	
	IPØSFR		*	0 = initial position and velocity are in inertial frame 1 = initial conditions specified as latitude and longitude	
3.	XMASS		*****	mass of primary body	5E15.8
	RP		*****	radius of primary body	
	RRATE	deg/sec		rotational rate of primary body	
4	TGB(1,J), J = 1,3			row 1 of transformation matrix from gyro frame to body frame	5E15.8
5	TGB(2,J), J = 1,3			row 2 of transformation matrix from gyro frame to body frame	5E15.8
6	TGB(3,J), J = 1,3			row 3 of transformation matrix from gyro frame to body frame	5E15.8
7	TAB(1,J), J = 1,3			row 1 of transformation matrix from accelerometer frame to body frame	5E15.8
8	TAB(2,J), J = 1,3			row 2 of transformation matrix from accelerometer frame to body frame	5E15.8
9	TAB(3,J), J = 1,3			row 3 of transformation matrix from accelerometer frame to body frame	5E15.8
10	X		*****	initial inertial X component of position	5E15.8
	Y		*****	initial inertial Y component of position	
	Z		*****	initial inertial Z component of position	

Card #	Variable Name	Units	Function or Definition	Format
11	VX		***** initial inertial X component of velocity	5E15.8
	VY		***** initial inertial Y component of velocity	
	VZ		***** initial inertial Z component of velocity	
12	TBI(1,J), J = 1,3		row 1 of initial transformation matrix from body frame to inertial frame	5E15.8
13	TBI(2,J), J = 1,3		row 2 of initial transformation matrix from body frame to inertial frame	5E15.8
14	TBI(3,J), J = 1,3		row 3 of initial transformation matrix from body frame to inertial frame	5E15.8
15	AZ	radians	initial azimuth heading	5E15.8
	DELRA(1,2,1)	meters	initial radial position error	
	DELRA(2,3,1)	meters	initial downrange position error	
	DELRA(3,4,1)	meters	initial crossrange position error	
16	DRADØT	meters/sec	initial radial velocity error	5E15.8
	DDRDØT	meters/sec	initial downrange velocity error	
	DCRDØT	meters/sec	initial crossrange velocity error	
17	DELAZ	radians	initial azimuth alignment error	5E15.8
	FØPV	radians	initial out of plane vertical error	
	FIPV	radians	initial in plane vertical error	

CASE 2.

Card #	Variable Name	Units		Function or Definition	Format
1				comment card	18A6
2	IFSMAX			number of flight segments + 1	16I5
	IUNITS			0 = data in metric units 1 = data in English units	
	IPØSFR			0 = initial position and velocity are in inertial frame 1 = initial conditions specified as latitude and longitude	
3	XMASS		*****	mass of primary body	5E15.8
	RP		*****	radius of primary body	
	RRATE	deg/sec		rotational rate of primary body	
4	TGB(1,J), J = 1,3			row 1 of transformation matrix from gyro frame to body frame	5E15.8
5	TGB(2,J), J = 1,3			row 2 of transformation matrix from gyro frame to body frame	5E15.8
6	TGB(3,J), J = 1,3			row 3 of transformation matrix from gyro frame to body frame	5E15.8
7	TAB(1,J), J = 1,3			row 1 of transformation matrix from accelerometer frame to body frame	5E15.8
8	TAB(2,J), J = 1,3			row 2 of transformation matrix from accelerometer frame to body frame	5E15.8
9	TAB(3,J), J = 1,3			row 3 of transformation matrix from accelerometer frame to body frame	5E15.8
10	G1	degrees		vehicle latitude at launch	5E15.8
	G2	degrees		vehicle longitude at launch	

Card #	Variable Name	Units	Function or Definition	Format
11	TBI(1,J) J = 1,3		row 1 of initial transformation matrix from body frame to inertial frame	5E15.8
12	TBI(2,J) J = 1,3		row 2 of initial transformation matrix from body frame to inertial frame	5E15.8
13	TBI(3,J) J = 1,3		row 3 of initial transformation matrix from body frame to inertial frame	5E15.8
14	AZ	radians	initial azimuth heading	5E15.8
	DELRA(1,2,1)	meters	initial radial position error	
	DELRA(2,3,1)	meters	initial downrange position error	
	DELRA(3,4,1)	meters	initial crossrange position error	
15	DELAZ	radians	initial azimuth alignment error	5E15.8
	FØPV	radians	initial out of plane vertical error	
	FIPV	radians	initial in plane vertical error	

37

GROUP II DATA DESCRIPTIONS

FREE FLIGHT SEGMENTS

CASE 1.

Card #	Variable Name	Units	Function or Definition	Format
1	KFLY	*	1 = flight segment is free flight 2 = flight segment is powered flight	16I5
	ICHANG		0 = no changes in data for error models 1 = at least one change in data for error models	
2	IVAR	*	1 = free flight terminated on radius 2 = free flight terminated on range angle	16I5
	IØPT		1 = attitude constant in inertial frame 2 = attitude constant in local frame 3 = attitude integrated open loop	
3	RMAX	**	value of radius on which flight segment is to be terminated	E15.8,I5

CASE 2.

Card #	Variable Name	Units		Function or Definition	Format
1	KFLY		*	1 = flight segment is free flight 2 = flight segment is powered flight	16I5
	ICHANG			0 = no changes in data for error models 1 = at least one change in data for error models	
2	IVAR		*	1 = free flight terminated on radius 2 = free flight terminated on range angle	16I5
	IØPT			1 = attitude constant in inertial frame 2 = attitude constant in local frame 3 = attitude integrated open loop	
3	THETAF	radians		value of range angle on which flight segment is to be terminated	5E15.8

CASE 3.

Card #	Variable Name	Units		Function or Definition	Format
1	KFLY		*	1 = flight segment is free flight 2 = flight segment is powered flight	16I5
	ICHANG			0 = no changes in data for error models 1 = at least one change in data for error models	
2	IVAR		*	1 = free flight terminated on radius 2 = free flight terminated on range angle	16I5
	IØPT		*	1 = attitude constant in inertial frame 2 = attitude constant in local frame 3 = attitude integrated open loop	
3	THETAF	radians		value of range angle on which flight segment is to be terminated	5E15.8
4	DELTS	seconds		integration increment used in integrating attitude open loop	E15.8,I5
	IFRAME			1 = tabular data in L frame 2 = tabular data in I frame 3 = tabular data in W frame 4 = tabular data in B frame	
5	NPTS			number of points of tabular data for this flight segment	16I5
	IDØRR			1 = input body rates are in degrees/sec 2 = input body rates are in radians/sec	
6 thru X	T(I)	seconds		time associated with I^{th} point of tabular data	5E15.8
	W(1,I)		**	C_X component of vehicle angular rate at T(I)	
	W(2,I)		**	C_Y component of vehicle angular rate at T(I)	
	W(3,I)		**	C_Z component of vehicle angular rate at T(I)	

N.B.
(1) C = I,W,B depending on IFRAME
(2) X = NPTS + 5
(3) I varies from 1 to NPTS

CASE 4.

Card #	Variable Name	Units		Function or Definition	Format
1	KFLY		*	1 = flight segment is free flight 2 = flight segment is powered flight	16I5
	ICHANG			0 = no changes in data for error models 1 = at least one change in data for error models	
2	IVAR			1 = free flight terminated on radius * 2 = free flight terminated on range angle	16I5
	IØPT			1 = attitude constant in inertial frame 2 = attitude constant in local frame * 3 = attitude integrated open loop	
3	THETAF	radians		value of range angle on which flight segment is to be terminated	5E15.8
4.	DELTS	seconds		integration increment used in integrating attitude open loop	E15.8,I5
	IFRAME		*	1 = tabular data in L frame 2 = tabular data in I frame 3 = tabular data in W frame 4 = tabular data in B frame	
5	TLI(1,J), J= 1,3			row 1 of transformation matrix from the L frame to I frame	5E15.8
6	TLI(2,J), J=1,3			row 2 of transformation matrix from the L frame to I frame	5E15.8
7	TLI(3,J), J= 1,3			row 3 of transformation matrix from the L frame to the I frame	5E15.8
8	NPTS			number of points of tabular data for this flight segment	16I5
	IDØRR			1 = input body rates are in degrees/sec 2 = input body rates are in radians/sec	

Card #	Variable Name	Units		Function or Definition	Format
9	T(I)	seconds		time associated with I^{th} point of tabular data	5E15.8
thru	W(1,I)		**	L_X component of vehicle angular rate at T(I)	
X	W(2,I)		**	L_Y component of vehicle angular rate at T(I)	
	W(3,I)		**	L_Z component of vehicle angular rate at T(I)	

N.B.(1) I varies from 1 to NPTS
(2) X = NPTS + 8

CASE 5.

Card #	Variable Name	Units		Function or Description	Format
1	KFLY		*	1 = flight segment is free flight 2 = flight segment is powered flight	16I5
	ICHANG			0 = no changes in data for error models 1 = at least one change in data for error models	
2	IVAR		*	1 = free flight terminated on radius 2 = free flight terminated on range angle	16I5
	IØPT		*	1 = attitude constant in inertial frame 2 = attitude constant in local frame 3 = attitude integrated open loop	
3	RMAX		****	value of radius on which flight segment is to be terminated	E15.8,I5
	N				
4	DELTS	seconds		integration increment used in integrating attitude open loop	E15.8,I5
	IFRAME			1 = tabular data in L frame 2 = tabular data in I frame 3 = tabular data in W frame 4 = tabular data in B frame	
5	NPTS			number of points of tabular data for this flight segment	16I5
	IDØRR			1 = input body rates are in degrees/sec 2 = input body rates are in radians/sec	
6	T(I)	seconds		time associated with I^{th} point of tabular data	5E15.8
thru	W(1,I)		**	C_X component of vehicle angular rate at T(I)	
X	W(2,I)		**	C_Y component of vehicle angular rate at T(I)	
	W(3,I)		**	C_Z component of vehicle angular rate at T(I)	

N.B.
(1) C = I,W,B depending in IFRAME
(2) X = NPTS + 5
(3) I varies from 1 to NPTS

CASE 6.

Card #	Variable Name	Units		Function or Definition	Format
1	KFLY		*	1 = flight segment is free flight 2 = flight segment is powered flight	16I5
	ICHANG			0 = no changes in data for error models 1 = at least one change in data for error models	
2	IVAR		*	1 = free flight terminated on radius 2 = free flight terminated on range angle	16I5
	IØPT		*	1 = attitude constant in inertial frame 2 = attitude constant in local frame 3 = attitude integrated open loop	
3	RMAX		*****	value of radius on which flight segment is to be terminated	E15.8,I5
	N				
4	DELTS	seconds		integration increment used in integrating attitude open loop	E15.8,I5
	IFRAME		*	1 = tabular data in L frame 2 = tabular data in I frame 3 = tabular data in W frame 4 = tabular data in B frame	
5	TLI(1,J), J = 1,3			row 1 of transformation matrix from the L frame to I frame	5E15.8
6	TLI(2,J), J = 1,3			row 2 of transformation matrix from the L frame to I frame	5E15.8
7	TLI(3,J), J = 1,3			row 3 of transformation matrix from the L frame to I frame	5E15.8
8	NPTS			number of points of tabular data for this flight segment	16I5
	IDØRR			1 = input body rates are in degrees/sec 2 = input body rates are in radians/sec	

Card #	Variable Name	Units		Function or Description	Format
9	T(I)	seconds		time associated with I^{th} point of tabular data	5E15.8
thru	W(1,I)		**	L_X component of vehicle angular rate at T(I)	
X	W(2,I)		**	L_Y component of vehicle angular rate at T(I)	
	W(3,I)		**	L_Z component of vehicle angular rate at T(I)	

N.B.
(1) I varies from 1 to NPTS
(2) X = NPTS + 8

POWERED FLIGHT SEGMENTS

CASE 1.

Card #	Variable Name	Units	Function or Definition	Format
1	KFLY		1 = flight segment is free flight * 2 = flight segment is powered flight	16I5
	ICHANG		0 = no changes in data for error models 1 = at least one change in data for error models	
2	IFUSE		1 = powered flight terminated on radius for for truth model and on time for error models - termination time being time in flight for truth model. 2 = powered flight terminated on radius 3 = powered flight terminated on time * 4 = powered flight terminated on range angle	16I5
	IFRAME		1 = tabular data in E frame 2 = tabular data in I frame 3 = tabular data in W frame 4 = tabular data in B frame	
	NPTS		number of points of tabular data for this flight segment	
	IA/PSF		1 = tabular data is acceleration where appropriate 2 = tabular data is specific force where appropriate	
	IN/RLT		1 = tabular data is in g's where appropriate 2 = tabular data is ℓ/t² where appropriate	
	ILØRR		1 = tabular data is expressed in degrees where appropriate 2 = tabular data is expressed in radians where appropriate	
3	THETAF	radians	value of range angle on which flight segment is to be terminated integration increment	5E15.8
	DELTS	seconds	integration increment	

Card #	Variable Name	Units	Function or Definition	Format
4,5 thru X,X+1	T(I)	seconds	time associated with I^{th} point of tabular data	5E15.8
	W(1,I)	**	Cx component of vehicle angular rate at T(I)	
	W(2,I)	**	Cy component of vehicle angular rate at T(I)	
	W(3,I)	**	Cz component of vehicle angular rate at T(I)	
	A(1,I)	****	Cx component of vehicle acceleration (or specific force) at T(I)	
	A(2,I)	****	Cy component of vehicle acceleration (or specific force) at T(I)	
	A(3,I)	****	Cz component of vehicle acceleration (or specific force) at T(I)	

N.B.

(1) C = I or B depending on IFRAME
(2) X = NPTS + 3
(3) I varies from 1 to NPTS

CASE 2.

Card #	Variable Name	Units	Function or Definition	Format
1	KFLY		1 = flight segment is free flight * 2 = flight segment is powered flight	16I5
	ICHANG		0 = no changes in data for error models 1 = at least one change in data for error models	
2	IFUSE		1 = powered flight terminated on radius for truth model and on time for error models - termination time being time in flight for truth model. 2 = powered flight terminated on radius * 3 = powered flight terminated on time 4 = powered flight terminated on range angle	16I5
	IFRAME		1 = tabular data in L frame 2 = tabular data in I frame 3 = tabular data in W frame 4 = tabular data in B frame	
	NPTS		number of points of tabular data for this flight segment	
	IAØRSF		1 = tabular data is acceleration where appropriate 2 = tabular data is specific force where appropriate	
	IGØRLT		1 = tabular data is in g's where appropriate 2 = tabular data is in ℓ/t^2 where appropriate	
	IDØRR		1 = tabular data is expressed in degrees where appropriate 2 = tabular data is expressed in radians where appropriate	
3	TMAX	seconds	time at which flight segment is to be terminated	5E15.8
	DELTS	seconds	integration increment	

UNITED AIRCRAFT CORPORATE SYSTEMS CENTER

Card #	Variable Name	Units		Function or Definition	Format
4,5	T(I)	seconds		time associated with I^{th} point of tabular data	5E15.8
thru	W(1,I)		**	Cx component of vehicle angular rate at T(I)	
X,X+1	W(2,I)		**	Cy component of vehicle angular rate at T(I)	
	W(3,I)		**	Cz component of vehicle angular rate at T(I)	
	A(1,I)		****	Cx component of vehicle acceleration (or specific force) at T(I)	
	A(2,I)		****	Cy component of vehicle acceleration (or specific force) at T(I)	
	A(3,I)		****	Cz component of vehicle acceleration (or specific force) at T(I)	

N.B.

(1) C = I or B depending on IFRAME
(2) X = NPTS + 3
(3) I varies from 1 to NPTS

CASE 3.

Card #	Variable Name	Units	Function or Definition	Format
1	KFLY		1 = flight segment is free flight 2 = flight segment is powered flight	16I5
	ICHANG		0 = no changes in data for error models 1 = at least one change in data for error models	
2	IPUSE		1 = powered flight terminated on radius for truth model and on time for error models - termination time being time in flight for truth model. 2 = powered flight terminated on radius 3 = powered flight terminated on time 4 = powered flight terminated on range angle	16I5
	IFRAME		1 = tabular data in I frame 2 = tabular data in I frame 3 = tabular data in W frame 4 = tabular data in F frame	
	NPTS		number of points of tabular data for this flight segment	
	IA/RSF		1 = tabular data is acceleration where appropriate 2 = tabular data is specific force where appropriate	
	IG/RLT		1 = tabular data is in g's where appropriate 2 = tabular data is in ℓ/t^2 where appropriate	
	IL/RR		1 = tabular data is expressed in degrees where appropriate 2 = tabular data is expressed in radians where appropriate	
3	THETAF	radians	value of range angle on which flight segment is to be terminated	5E15.8
	DELTS	seconds	integration increment	

Card #	Variable Name	Units		Function or Definition	Format
4,5 thru X,X+1	T(I)	seconds		time associated with I^{th} point of tabular data	5E15.6
	W(1,I)		**	Wx component of vehicle angular rate at T(I)	
	W(2,I)		**	Wy component of vehicle angular rate at T(I)	
	W(3,I)		**	Wz component of vehicle angular rate at T(I)	
	A(1,I)		****	Wx component of vehicle acceleration (or specific force) at T(I)	
	A(2,I)		****	Wy component of vehicle acceleration (or specific force) at T(I)	
	A(3,I)		****	Wz component of vehicle acceleration (or specific force) at T(I)	
	ALPHA (I)		***	angle of attack at T(I)	
	BETA (I)		***	angle of sideslip at T(I)	

N.B.

(1) X = NPTS + 3
(2) I varies from 1 to NPTS

CASE 4.

Card #	Variable Name	Units		Function or Definition	Format
1	KFLY		*	1 = flight segment is free flight 2 = flight segment is powered flight	16I5
	ICHANG			0 = no changes in [illegible] 1 = at least one change in data for error models	
2	IFUSE			1 = powered flight terminated on radius for truth model and on time for error models - termination time being time in flight for truth model. 2 = powered flight terminated on radius 3 = powered flight terminated on time 4 = powered flight terminated on range angle	16I5
	IFRAME			1 = tabular data in I frame 2 = tabular data in I frame 3 = tabular data in X frame 4 = tabular data in E frame	
	NPTS			number of points of tabular data for this flight segment	
	IA/RSF			1 = tabular data is acceleration where appropriate 2 = tabular data is specific force where appropriate	
	IG/PLT			1 = tabular data is in g's where appropriate 2 = tabular data is expressed in ℓ/t² where appropriate	
	IL/AP			1 = tabular data is expressed in degrees where appropriate 2 = tabular data is expressed in radians where appropriate	
3	RMAX		****	value of radius on which flight segment is to be terminated	5E15.8
	DELTS	seconds		integration increment	

Card #	Variable Name	Units		Function or Definition	Format
4,5	T(I)	seconds		time associated with I^{th} point of tabular data	5E15.8
thru	W(1,I)		**	Cx component of vehicle angular rate at T(I)	
X,X+1	W(2,I)		**	Cy component of vehicle angular rate at T(I)	
	W(3,I)		**	Cz component of vehicle angular rate at T(I)	
	A(1,I)		****	Cx component of vehicle acceleration (or specific force) at T(I)	
	A(2,I)		****	Cy component of vehicle acceleration (or specific force) at T(I)	
	A(3,I)		****	Cz component of vehicle acceleration (or specific force) at T(I)	

N.B.

(1) C = I or B depending on IFRAME
(2) X = NPTS + 3
(3) I varies from 1 to NPTS

CASE 5.

Card #	Variable Name	Units	Function or Definition	Format
1	KFLT		1 = flight segment is free flight * 2 = flight segment is powered flight	16I5
	ICHANG		[illegible] data for error models [illegible] change in data for error models	
2	IFUSE		1 = powered flight terminated on radius for truth model and on time for error models - termination time being time in flight for truth model. 2 = powered flight terminated on radius 3 = powered flight terminated on time 4 = powered flight terminated on range angle	16I5
	IFRAME		1 = tabular data in L frame 2 = tabular data in I frame 3 = tabular data in E frame 4 = tabular data in P frame	
	NPTS		number of points of tabular data for this flight segment	
	IAØRCF		1 = tabular data is acceleration where appropriate 2 = tabular data is specific force where appropriate	
	IQØRIM		1 = tabular data is in [illegible] where appropriate 2 = tabular data is in [illegible] where appropriate	
	IDØRR		1 = tabular data is expressed in degrees where appropriate 2 = tabular data is expressed in radians where appropriate	
3	THETAF	radians	value of range angle on which flight segment is to be terminated	5E15.8
	DELTS	seconds	integration increment	

Card #	Variable Name	Units	Function or Definition	Format
4	TLI(1,J), J = 1,3		row 1 of transformation matrix from the L frame to the I frame	5E15.8
5	TLI (2,J), J = 1,3		row 2 of transformation matrix from the L frame to the I frame	5E15.8
6	TLI (3,J), J = 1,3		row 3 of transformation matrix from the L frame to the I frame	5E15.8
7,8 thru X,X+1	T(I)	seconds	time associated with I^{th} point of tabular data	5E15.8
	W(1,I)	**	Lx component of vehicle angular rate at T(I)	
	W(2,I)	**	Ly component of vehicle angular rate at T(I)	
	W(3,I)	**	Lz component of vehicle angular rate at T(I)	
	A(1,I)	***	Lx component of vehicle acceleration (or specific force) at T(I)	
	A(2,I)	***	Ly component of vehicle acceleration (or specific force) at T(I)	
	A(3,I)	***	Lz component of vehicle acceleration (or specific force) at T(I)	

N.B.

(1) X = NPTS + 6
(2) I varies from 1 to NPTS

CASE 6.

Card #	Variable Name	Units		Function or Definition	Format
1	[illegible]			1 = flight segment is free flight	16I5
			*	2 = flight segment is powered flight	
	ICHANG			0 = no changes in data for error models 1 = at least one change in data for error models	
2	IFUSE			1 = powered flight terminated on radius for truth model and on time for error models - termination time being time in flight for truth model. 2 = powered flight terminated on radius	16I5
			*	3 = powered flight terminated on time 4 = powered flight terminated on range angle	
	IFRAME		*	1 = tabular data in L frame 2 = tabular data in I frame 3 = tabular data in W frame 4 = tabular data in N frame	
	NPTS			number of points of tabular data for this flight segment	
	IA/RSF			1 = tabular data is acceleration where appropriate 2 = tabular data is specific force where appropriate	
	IG/RST			1 = tabular data in in g's where appropriate 2 = tabular data is in ℓ/t where appropriate	
	ID/RR			1 = tabular data is expressed in degrees where appropriate 2 = tabular data is expressed in radians where appropriate	
3	TMAX	seconds		time at which flight segment is to be terminated	5E15.8
	DELTS	seconds		integration increment	

Card #	Variable Name	Units		Function or Definition	Format
4	TLI(1,J), J = 1,3			row 1 of transformation matrix from the L frame to the I frame	5E15.8
5	TLI(2,J), J = 1,3			row 2 of transformation matrix from the L frame to the I frame	5E15.8
6	TLI(3,J), J = 1,3			row 3 of transformation matrix from the L frame to the I frame	5E15.8
7,8 thru X,X+1	T(I)	seconds		time associated with I^{th} point of tabular data	5E15.8
	W(1,I)		**	Lx component of vehicle angular rate at T(I)	
	W(,I)		**	Ly component of vehicle angular rate at T(I)	
	W(3,I)		**	Lz component of vehicle angular rate at T(I)	
	A(1,I)		***	Lx component of vehicle acceleration (or specific force) at T(I)	
	A(2,I)		***	Ly component of vehicle acceleration (or specific force) at T(I)	
	A(3,I)		***	Lz component of vehicle acceleration (or specific force) at T(I)	

N.B.

(1) X = NPTS + 6
( ) I = varies from 1 to NPTS

72

CASE 7.

Card #	Variable Name	Units	Function or Definition	Format
1	[illegible]		1 = flight segment is free flight * 2 = flight segment is powered flight	16I5
	[illegible]		0 = [illegible] in data for error [illegible] 1 = at least one change in data for error models	
2	IFUSE		1 = powered flight terminated on radius for truth model and on time for error models - termination time being time in flight for truth model. 2 = powered flight terminated on radius 3 = powered flight terminated on time 4 = powered flight terminated on range angle	16I5
	IFRAME		* 1 = tabular data in L frame [illegible] = tabular data in I frame 3 = tabular data in W frame 4 = tabular data in B frame	
	NPTS		number of points of tabular data for this flight segment	
	IAØRSF		1 = tabular data is acceleration where appropriate 2 = tabular data is specific force where appropriate	
	IGØRLT		1 = tabular data is in g's where appropriate 2 = tabular data is expressed in ℓ/t^2 where appropriate	
	IDØRR		1 = tabular data is expressed in degrees where appropriate 2 = tabular data is expressed in radians where appropriate	
3	RMAX		value of radius on which flight segment is to be terminated	5F15.8
	DELTS	Seconds	integration increment	

Card #	Variable Name	Units		Function or Definition	Format
4	TLI(1,J), J = 1,3			row 1 of transformation matrix from the L frame to the I frame	5E15.8
5	TLI(2,J), J = 1,3			row 2 of transformation matrix from the L frame to the I frame	5E15.8
6	TLI(3,J), J = 1,3			row 3 of transformation matrix from the L frame to the I frame	
7,8 thru X,X+1	T(I)	seconds		time associated with I^{th} point of tabular data	5E15.8
	W(1,1)		**	Lx component of vehicle angular rate at T(I)	
	W(2,I)		**	Ly component of vehicle angular rate at T(I)	
	W(3,I)		**	Lz component of vehicle angular rate at T(I)	
	A(1,I)		****	Lx component of vehicle acceleration (or specific force) at T(I)	
	A(2,I)		****	Ly component of vehicle acceleration (or specific force) at T(I)	
	A(3,I)		****	Lz component of vehicle acceleration (or specific force) at T(I)	

N.B.

(1) X = NPTS + 6
(2) I varies from 1 to NPTS

CASE 8.

Card #	Variable Name	Units		Function of Definition	Format
1	[illegible]		*	1 = flight segment is free flight 2 = flight segment is powered flight	16I5
	ICHANG			1 = at least one change in data for error models	
2	IFUSE			1 = powered flight terminated on radius for truth model and on time for error models termination time being time in flight for truth model. 2 = powered flight terminated on radius 3 = powered flight terminated on time 4 = powered flight terminated on range angle	16I5
	IFRAME		*	1 = tabular data in [illegible] frame 2 = tabular data in I frame 3 = tabular data in W frame 4 = tabular data in F frame	
	NPTS			number of points of tabular data for this flight segment	
	IAØRSF			1 = tabular data is acceleration where appropriate 2 = tabular data is specific force where appropriate	
	IGØRLT			1 = tabular data is in [illegible] where appropriate 2 = tabular data is in [illegible] where appropriate	
	IDØRR			1 = tabular data is expressed in degrees where appropriate 2 = tabular data is expressed in radians where appropriate	
3	RMAX		*****	value of radius on which flight segment is to be terminated	5E15.8
	DELTS	seconds		integration increment	

Card #	Variable Name	Units		Function or Definition	Format
4,5	T(I)	seconds		time associated with I^{th} point of tabular data	5E15.8
thru	W(1,I)		**	Wx component of vehicle angular rate at T(I)	
X.Ne1	W(2,I)		**	Wy component of vehicle angular rate at T(I)	
	W(3,I)		**	Wz component of vehicle angular rate at T(I)	
	A(1,I)		****	Wx component of vehicle acceleration (or specific force) at T(I)	
	A(2,I)		****	Wy component of vehicle acceleration (or specific force) at T(I)	
	A(3,I)		****	Wz component of vehicle acceleration (or specific force) at T(I)	
	ALPHA(I)		***	angle of attack at T(I)	
	BETA(I)		***	angle of sideslip at T(I)	

N.B.

(1) X = NPTS + 3
(2) I varies from 1 to NPTS

CASE 9.

Card #	Variable Name	Units	Function or Definition	Format
1	[illegible]		1 = flight segment is free flight * 2 = flight segment is powered flight	16I5
	IMANG		0 = no changes in data for error models 1 = at least one change in data for error models	
2	IFUSE		1 = powered flight terminated on radius for truth model and or time for error models - termination time being time in flight for truth model. 2 = powered flight terminated on radius * 3 = powered flight terminated on time 4 = powered flight terminated on range angle	16I5
	IFRAME		1 = tabular data in L frame 2 = tabular data in I frame * 3 = tabular data in W frame 4 = tabular data in B frame	
	NPTS		number of points of tabular data for this flight segment	
	IA∅RSF		1 = tabular data is acceleration where appropriate 2 = tabular data is specific force where appropriate	
	IG∅ELF		1 = tabular data is in g's where appropriate 2 = tabular data is in ℓ/t^2 where appropriate	
	ID∅RR		1 = tabular data is expressed in degrees where appropriate 2 = tabular data is expressed in radians where appropriate	
3	TMAX	seconds	time at which flight segment is to be terminated	5E15.8
	DELTS	seconds	integration increment	

Card #	Variable Name	Units		Function or Definition	Format
4,5	T(I)	seconds		time associated with I^{th} point of tabular data	5E15.8
thru	W(1,I)		**	Wx component of vehicle angular rate at T(I)	
X,X+1	W(2,I)		**	Wy component of vehicle angular rate at T(I)	
	W(3,I)		**	Wz component of vehicle angular rate at T(I)	
	A(1,I)		****	Wx component of vehicle acceleration (or specific force) at T(I)	
	A(2,I)		****	Wy component of vehicle acceleration (or specific force) at T(I)	
	A(3,I)		****	Wz component of vehicle acceleration (or specific force)at T(I)	
	ALPHA (I)		***	angle of attack at T(I)	
	BETA (I)		***	angle of sideslip at T(I)	

N.B.

(1) X = NPTS +3
(2) I varies from 1 to NPTS

NAME LIST VARIABLES

Variable	Units	Max. Dimensions	Definition or Function
ISØPMP			1 = 1st order integration scheme 2 = 2nd order integration scheme 3 = 4th order integration scheme
IWDSIZ			computer word size, excluding sign bit
CØMPFQ	Hz		computer frequency
NSS			number of sinusoidal rates
AMPSS(I)	rad/sec	10	amplitude of Ith sinusoid
FREQ(I)	Hz	10	frequency of Ith sinusoid
DCØS (I,J)		3,10	I^{th} direction cosine of Jth sinusoidal rate vector
ARM (I)	meters	10	moment arm associated with I^{th} sinusoid
KSS			number of coning sinusoidal pairs
ACØNSS (I)	rad/sec	5	amplitude of Ith coning sinusoid pair
FCØNSS (I)	Hz	5	frequency of the Ith coning sinusoid pair
DCS1 (I,J)		3,5	I^{th} direction cosine of the first sinusoid of the Jth pair
DCS2 (I,J)		3,5	I^{th} direction cosine of the second sinusoid of the Jth pair
ICØN			1 = 2nd order coordinate scheme process 2 = 4th order coordinate scheme process

Variable	Units	Max. Dimensions	Definition or Function
QUAN	arcseconds		gyro quantization
KP			number of points of tabular data specifying vibratory power spectral density
PSD (I)	rad/sec	10	amplitude of the power density spectrum at the Ith frequency
PSDF (I)	Hz	10	frequency at the Ith point

APPENDIX E

EXAMPLE RUN

A. INTRODUCTION

CEACP is intended to provide a simple and efficient means whereby the contribution of strapdown attitude computational errors to the total navigation system error may be evaluated for a selected mission. To illustrate the use of the program in this capacity, this appendix postulates a problem and presents a step-by-step procedure for its solution using CEACP. Included is a description of the problem, its translation to an input data deck for CEACP and finally the print-out obtained when this input data was processed by CEACP. This example is not intended to illustrate all the input data options available to the user of CEACP, but uses as many as is consistent with the specification of a realistic problem.

B. PROBLEM DESCRIPTION

The hypothetical mission considered in this example consists of direct ascent into a 108 n mi circular parking orbit, one revolution in orbit and then injection onto a lunar transfer ellipse. This particular mission was selected because it provides a spectrum of dynamic environments in which the system must operate and consequently a range of computational requirements. The necessary data to generate a reference trajectory for this mission is presented in Table E-I.

During all phases of the flight a sinusoidal environment is present due to the attitude control system limit cycles and, in addition, during those portions of the flight in the atmosphere, aerodynamic load acting on the vehicle produce an additional sinusoidal environment. All thrusting phases of flight are accompanied by a random angular rate environment produced by the random component of the translational environment due to flexure of structure upon which the inertial sensor package is mounted. In orbit the environment is serene, consisting only of the quasi-steady pitch rate to control the vehicle to the local frame and a single sinusoidal produced by the roll axis control system limit cycle. This environment is presented in detail in Table E-II. The computational process to be investigated is presented in Table E-III.

TABLE E-I

DESCRIPTION OF REFERENCE TRAJECTORY

1.1 Launch is from Atlantic Missile Range

1.2 Body X, Y, Z axes are aligned with the vehicle roll, yaw, pitch axes, respectively. At launch, the roll axis is vertical and the yaw axis points due East, the pitch axis then completes the right handed orthogonal triad.

1.3 The initial azimuth heading is 1.5707963 rads and the following initial condition errors apply:

Radius	=	10 meters
Downrange	=	20 meters
Crossrange	=	20 meters
Azimuth misalignment	=	9.70×10^{-5} rads
In-plane Vertical Misalignment Angle	=	4.85×10^{-5} rads

1.4 Launch vehicle closely approximates an Atlas Centaur.

TABLE E-II

DYNAMIC ENVIRONMENT

II.1 Sinusoidal Environment

Control System Induced

.0348 rads/sec at 2 Hz. on all three axes during powered flight

.000178 rads/sec at .005 Hz. on roll axis during free flight.

Atmospherically Induced

during first 80 sec of boost

.024 rads/sec at 2.2 Hz.

.0332 rads/sec at 6.0 Hz.

.0227 rads/sec at 9.6 Hz.

on yaw and pitch axes

during next 60 sec of boost

.0437 rads/sec at 4.0 Hz.

.0524 rads/sec at 9.6 Hz.

.0284 rads/sec at 14.0 Hz.

on yaw and pitch

II.2 Coning Environment

No coning environment was specified since this depends upon the breakdown mechanism of the particular structure to which the inertial sensors are mounted.

II.3 Vibratory Environment

During all thrusting phases of flight, random vibratory angular environment is present and may be specified by the following tabular power spectral density.*

* CEACP assumes these points to be joined by straightline segments when plotted on log-log paper and fits a curve to them accordingly.

Frequency	$\Theta(f)$
10 cps	$.304 \times 10^{-5}$ (rads/sec)^2/cps
40	$.304 \times 10^{-5}$
100	$.915 \times 10^{-4}$
200	$.915 \times 10^{-4}$
500	$.304 \times 10^{-5}$
670	$.304 \times 10^{-6}$

II. 4 Size Effect

The sinusoidal environment effects the accelerometer data through the centrifugal acceleration which results from this environment. To compute this error, a moment arm of 9.15 meters was assumed to be associated with all sinusoids on the pitch and yaw axes for the atmospheric portion of the flight (first 140 sec) and of 3.05 meters during the remainder of the flight.

TABLE E-III

COMPUTATIONAL PROCESS

III.1	First order attitude integration scheme
III.2	Computational frequency of 100 Hz. during thrusting phases and 10 Hz. during free flight
III.3	27 bit effective data word length
III.4	4th order coordinate conversion scheme
III.5	Gyro quantization was taken as zero since its error is excited only by a coning environment

C. INPUT DATA LISTING

A listing of the input data deck generated from the problem description presented in the previous section is presented in this section. This data was prepared using the rules set forth in Section III and Appendix D of this report. The number next to the entries in the data listing, refer to the numbering of the data items as specified in the tabular description of the problem in Tables E-I through III.

In preparing the data for this example a five segment flight was used with segments as follows:

1. Time 0 to 80 sec at which a discontinuity in atmospherically induced sinusoidal environment data occurs.

2. Time 80 to 140 sec at which a discontinuity in atmospherically induced sinusoidal environment data occurs.

3. Time 140 to 560 sec second stage to beginning of free flight segment.

4. One orbit of free flight ($\Theta = 2\pi$).

5. 165 sec burn for injection into lunar transfer ellipse.

These flight segments have been labeled in the data listing to indicate the data pertaining to each.

DATA LISTING

```
                EXAMPLE  RUN
          6          1
        5.983      E 24 6.378390  E 06 4.17       E-03
        1.0
                        1.0
                                        1.0
        1.0
                        1.0
                                        1.0
I.1     28.319          80.0
I.2     0.88034                        -0.47434
                        1.0
        0.47434                         0.88034
I.3     1.5707963       10.0            20.0            20.0
        9.70       E-05 4.85       E-05 4.85       E-05
          2     1
          3     4     7     2     2     2
        80.0            0.5
I.4     0.              0.              0.              0.              12.22
        0.
        10.                                             0.              13.11
        0.
        20.                                             0.0082          13.75
        0.
        34.                                             0.0115          15.30
        0.
        40.                                             0.0115          15.88
        0.
        44.                                             0.0132          16.50
        0.
        80.                                             0.0132          22.30
        0.
II-     $NAM1 ISCHME = 1, IWDSIZ = 27, COMPEQ = 100., ICON = 2, NSS = 9,
&       AMPSS = 2*.0240, 2*.0332, 2*.0227, 3*.0348, FREQ = 2*2.2, 2*6.0, 2*9.6,
III     3*2.0, DCOS(1,1) = 0., DCOS(1,2) = 0., DCOS(1,3) = 0., DCOS(1,4) = 0.,
        DCOS(1,5) = 0., DCOS(1,6) = 0., DCOS(1,7) = 0., DCOS(1,8) = 0.,
        DCOS(1,9) = 1., DCOS(2,1) = 1., DCOS(2,2) = 0., DCOS(2,3) = 1.,
        DCOS(2,4) = 0., DCOS(2,5) = 1., DCOS(2,6) = 0., DCOS(2,7) = 0.,
        DCOS(2,8) = 1., DCOS(2,9) = 0., DCOS(3,1) = 0., DCOS(3,2) = 1.,
        DCOS(3,3) = 0., DCOS(3,4) = 1., DCOS(3,5) = 0., DCOS(3,6) = 1.,
        DCOS(3,7) = 1., DCOS(3,8) = 0., DCOS(3,9) = 0., KSS = 0.
        PSDF = 10.,40.,100.,200.,500.,670., PSD = 2*3.04E-6,2*9.15E-5,3.04E-6,
        3.04E-7, KF = 6, QUANT = 0., ARM = 6*9.15, 2*9.15, 0.$
          2     1
          3     4     6     2     2     2
        60.0            0.5
I.4     80.                                             0.0132          22.30
        0.
        84.                                             0.0093          23.80
        0.
        90.                                             0.0093          23.10
        0.
        94.                                             0.0060          29.30
        0.
        120.                                            0.0050          37.80
        0.
        140.                                            0.0035          52.50
        0.
II      $NAM1 AMPSS = 2*.0437, 2*.0524, 2*.0284, FREQ = 2*4.0, 2*9.6, 2*14.0 $
          2     1
          3     4    12     2     2     2
        420.0           1.0
I.4     140.            0.              0.              0.0035          9.76
        0.
```

```
          150.                                          0.          11.59
          0.
          160.                                          0.          11.59
          0.
          164.                                          0.0015      11.90
          0.
          230.                                          0.0035      16.48
          0.
          236.                                          0.0015      17.70
          0.
          240.                                          0.          0.
          0.
          248.                                          0.0015      7.94
          0.
          290.                                          0.0015      9.15
          0.
          430.                                          0.0025      12.80
          0.
          440.                                          0.000       13.10
          0.
          560.                                          0.          20.74
          0.
II        $NAM1 NSS = 3, AMPSS = 3*.0348, FREQ = 2*2., ARM = 0., 2*3.05,
          DCOS(1,1) = 1., DCOS(2,1) = 0., DCOS(3,1) = 0.$
             1    1
             2    2
          6.2832
II & III  $NAM1 COMPFQ = 10., NSS = 1, AMPSS = .178E-3, FREQ = .005, KF = 0$
             2    1
             3    4    2    2    1    1
          163.          2.0
          0.                                                        1.242
          0.
          165.                                                      2.820
          0.
II & III  $NAM1 COMPFQ = 100., NSS = 3, AMPSS = .0348, FREQ = 2., KF = 6$
          6
```

D. OUTPUT

This section contains the printout obtained from CEACP when the data deck described in the previous section is processed using CEACP. The printout consists of three major sections:

1. Reproduction of Group I input data.

2. A flight segment by flight segment breakdown including the input data, reference trajectory and errors for each error source.

3. A summary by flight segments of the reference trajectory and the position and velocity errors for each error source.

EXAMPLE RUN OUTPUT

```
EXAMPLE [illegible]

TRAJECTORY CONSISTS OF 5 SEGMENTS

ALL DATA IN METRIC UNITS

PRIMARY BODY DATA
        MASS = 0.59[illegible]0000E 25 KILOGRAMS          RADIUS = 0.63783500E 07 METERS          ROTATIONAL RATE = 0.41700000E-02 DE

TRANSFORMATION MATRIX FROM GYRO FRAME TO BODY FRAME
     0.10000000E 01      -0.                    -0.
    -0.                   0.10000000E 01        -0.
    -0.                  -0.                     0.10000000E 01

TRANSFORMATION MATRIX FROM ACCELEROMETER FRAME TO BODY FRAME
     0.10000000E 01      -0.                    -0.
    -0.                   0.10000000E 01        -0.
    -0.                  -0.                     0.10000000E 01

LAUNCH POINT COORDINATES
        LATITUDE =  28.31900001 DEGREES          LONGITUDE =  80.00000000 DEGREES

INITIAL INERTIAL COORDINATES
        X = 0.56153069E 07 METERS          Y = 0.              METERS          Z = 0.30252581E 07 METERS
       VX = 0.             METERS/SEC      VY = 0.40960622E 03 METERS/SEC      VZ = 0.             METERS/SEC

INITIAL TRANSFORMATION MATRIX FROM BODY FRAME TO INERTIAL FRAME
     0.88034000E 00      -0.                    -0.47434000E 00
    -0.                   0.10000000E 01        -0.
    -0.47434000E 00      -0.                     0.88034000E 00

AZIMUTH HEADING = 0.15707963E 01

INITIAL CONDITION ERRORS

        DELRA = 0.10000000E 02          DELDR = 0.20000000E 02          DELCR = 0.20000000E 02

     DELRADOT = 0.                   DELCRDOT =-0.49591064E-04       DELCRDOT = 0.15270007E-11

INERTIAL ALIGNMENT ERRORS

        DELAZ = 0.97000000E-04          DPVERT = 0.48500000E-04          IPVERT = 0.48500000E-04
```

65	ERROR DEFINITION
2	INITIAL RADIAL POSITION
3	INITIAL DOWNRANGE POSITION
4	INITIAL CROSSRANGE POSITION
5	INITIAL RADIAL VELOCITY
6	INITIAL DOWNRANGE VELOCITY
7	INITIAL CROSSRANGE VELOCITY
8	AZIMUTH ALIGNMENT
9	INPLANE VERTICAL MISALIGNMENT ANGLE
10	OUT OF PLANE VERTICAL MISALIGNMENT ANGLE
11	CONSTANT RATE TRUNCATION
12	SINUSOIDAL RATE TRUNCATION (X BODY AXIS)
13	SINUSOIDAL RATE TRUNCATION (Y BODY AXIS)
14	SINUSOIDAL RATE TRUNCATION (Z BODY AXIS)
15	ROUNDOFF (X BODY AXIS)
16	ROUNDOFF (Y BODY AXIS)
17	ROUNDOFF (Z BODY AXIS)
18	CONING TRUNCATION (X BODY AXIS)
19	CONING TRUNCATION (Y BODY AXIS)
20	CONING TRUNCATION (Z BODY AXIS)
21	VIBRATORY TRUNCATION (X BODY AXIS)
22	VIBRATORY TRUNCATION (Y BODY AXIS)
23	VIBRATORY TRUNCATION (Z BODY AXIS)
24	GYRO QUANTIZATION (X BODY AXIS)
25	GYRO QUANTIZATION (Y BODY AXIS)
26	GYRO QUANTIZATION (Z BODY AXIS)
27	SIZE EFFECT

TRAJECTORY DATA FOR FLIGHT SEGMENT 1

THIS IS A POWERED FLIGHT SEGMENT

FLIGHT TERMINATED WHEN TIME EXCEEDS 0.30000000E 02 SEC.

INTEGRATION INCREMENT = 0.50000000E 00 SEC.

TABULAR DATA IS IN BODY FRAME

TABULAR DATA IS SPECIFIC FORCE

TABULAR DATA FOLLOWS

TIME	AX	AY	AZ	WX	WY	WZ
0.	0.12220000E 02	0.	-0.	0.	0.	0.
0.10000000E 02	0.13110000E 02	0.	-0.	-0.	-0.	0.
0.20000000E 02	0.14750000E 02	0.	-0.	-0.	-0.	0.82000000E-0
0.34000000E 02	0.15300000E 02	0.	-0.	-0.	-0.	0.11500000E-0
0.40000000E 02	0.15890000E 02	0.	-0.	-0.	-0.	0.11500000E-0
0.44000000E 02	0.16500000E 02	0.	-0.	-0.	-0.	0.13200000E-0
0.80000000E 02	0.22300000E 02	0.	-0.	-0.	-0.	0.13200000E-0

INPUT DATA FOR ERROR MODELS FOLLOW

FIRST-ORDER INTEGRATION SCHEME
27 BIT COMPUTER WORD SIZE
FOURTH-ORDER COORDINATE CONVERSION
QUANTIZATION = 0.
COMPUTATIONAL FREQUENCY = 0.10000000E 03 CPS
SINUSOIDAL RATES
NUMBER OF SINUSOIDS = 9
AMPLITUDE

0.24000000E-01	0.24000000E-01	0.33200000E-01	0.33200000E-01	0.22700000E-01
0.22700000E-01	0.34800000E-01	0.34800000E-01	0.34800000E-01	

FREQUENCY

0.22000000E 01	0.22000000E 01	0.60000000E 01	0.60000000E 01	0.96000000E 01
0.96000000E 01	0.20000000E 01	0.20000000E 01	0.20000000E 01	

MOMENT ARM

0.91500000E 01	0.91500000E 01	0.91500000E 01	0.91500000E 01	0.91500000E 01
0.91500000E 01	0.91500000E 01	0.91500000E 01	0.	

DIRECTION COSINES OF EACH SINUSOID

0.	0.10000000E 01	0.
0.	0.	0.10000000E 01
0.	0.10000000E 01	0.
0.	0.	0.10000000E 01
0.	0.10000000E 01	0.
0.	0.	0.10000000E 01
0.	0.	0.10000000E 01
0.	0.10000000E 01	0.
0.10000000E 01	0.	0.

COSINE RATES
NUMBER OF RATES OF SINUSOIDS = 9
VIBRATORY POWER SPECTRUM
AMPLITUDE

0.30400000E-05	0.30400000E-05	0.91500000E-04	0.91500000E-04	0.30400000E-05
0.30400000E-05				

FREQUENCY

0.10000000E 02	0.40000000E 02	0.10000000E 03	0.20000000E 03	0.50000000E 03	
0.57000000E 03					

SPECIFIC FORCE AND BODY RATES IN INSTRUMENT FRAMES FOLLOW

TIME	SFX	SFY	SFZ	WX	WY	WZ
0.	0.12220000E 02	0.	-0.	-0.	-0.	0.
0.10000000E 02	0.13110000E 02	0.	-0.	-0.	-0.	0.
0.20000000E 02	0.13750000E 02	0.	-0.	-0.	-0.	0.82000000E-0
0.34000000E 02	0.15300000E 02	0.	-0.	-0.	-0.	0.11500000E-0
0.40000000E 02	0.15880000E 02	0.	-0.	-0.	-0.	0.11500000E-0
0.44000000E 02	0.16500000E 02	0.	-0.	-0.	-0.	0.13200000E-0
0.80000000E 02	0.22300000E 02	0.	-0.	-0.	-0.	0.13200000E-0

FLIGHT SEGMENT 1

TRUTH

INERTIAL POSITION AND VELOCITY FOLLOW

X = 0.56282503E 07 METERS Y = 0.40704401E 05 METERS Z = 0.30321032E 07 METERS
VX = 0.37766415E 03 METERS/SEC VY = 0.82523504E 03 METERS/SEC VZ = 0.20199566E 03 METERS/SEC

RADIUS	VELOCITY	GAMMA	TIME
0.63931610E 07 METERS	.93245090E 03 METERS/SEC	0.10872634E 01 RAD.	0.80000000E 02 SEC

TMI

0.63941785E 00	-0.61722945E 00	-0.47434000E 00
0.70112933E 00	0.71951012E 00	-0.
0.34129477E 00	-0.33257222E 00	0.88034000E 00

TRANSITION MATRIX FROM INERTIAL FRAME TO LOCAL FRAME

0.88035434E 00	0.63668652E-02	0.47427292E 00
-0.48145491E-02	0.99997933E 00	-0.44871391E-02
-0.47429122E 00	0.16668163E-02	0.88036643E 00

ERROR PRINTOUT FOR EACH ERROR SOURCE FOLLOWS

ERROR SOURCE 2

INERTIAL POSITION AND VELOCITY FOLLOW

X = 0.56282576E 07 METERS Y = 0.40704401E 05 METERS Z = 0.30321079E 07 METERS
VX = 0.37766415E 03 METERS/SEC VY = 0.62829504E 03 METERS/SEC VZ = 0.20189682E 03 METERS/SEC

TSI

0.63341795E 00	-0.61722945E 00	-0.47434000E 00
0.70112623E 00	0.71951512E 00	-0.
0.34129477E 00	-0.33257222E 00	0.88034000E 00

DELXI(M)	DELYI(M)	DELZI(M)	DELVXI(M/SEC)	DELVYI(M/SEC)	DELVZI(M/SEC)
0.44750000E 01	0.	0.47500000E 01	0.21209717E-02	0.	0.11596680E-02

TSI ERROR MATRIX

0.	-0.	-0.
0.	0.	-0.
0.	-0.	0.

ATTITUDE ERROR PARAMETER = 0.

DELRA(M)	DELER(M)	DELCR(M)	DELVEL(M/SEC)	DELGAM(RADS)	DELPSI(RADS)	DELTIME(
0.19035946E 02	-0.64043929E-01	-0.27594090E-01	0.11062622E-02	-0.23096800E-05	0.	0.

ERROR SOURCE 3

INERTIAL POSITION AND VELOCITY FOLLOW

X = 0.56282592E 07 METERS Y = 0.40724301E 05 METERS Z = 0.30321032E 07 METERS
VX = 0.37766415E 03 METERS/SEC VY = 0.62829260E 03 METERS/SEC VZ = 0.20189566E 03 METERS/SEC

TSI

0.63341795E 00	-0.61722945E 00	-0.47434000E 00
0.70112623E 00	0.71951512E 00	-0.
0.34129477E 00	-0.33257222E 00	0.88034000E 00

DELXI(M)	DELYI(M)	DELZI(M)	DELVXI(M/SEC)	DELVYI(M/SEC)	DELVZI(M/SEC)
-0.[illegible]E-01	0.19900879E 02	0.	-0.11444092E-04	-0.24414063E-02	0.38146973E-05

TSI ERROR MATRIX

0.	-0.	-0.
0.	0.	-0.
0.	-0.	0.

ATTITUDE ERROR PARAMETER = 0.

DELRA(M)	DELER(M)	DELCR(M)	DELVEL(M/SEC)	DELGAM(RADS)	DELPSI(RADS)	DELTIME(

```
0.7164 5E-01    0.19907439E 02    0.62810327E-01   -0.21743774E-02   -0.11920929E-05    0.                    0.


ERROR SOURCE  4

INERTIAL POSITION AND VELOCITY FOLLOW

 X = 0.56242409E 07 METERS          Y = 0.40704401E 05 METERS          Z = 0.30321207E 07 METERS
VX = 0.37766525E 03 METERS/SEC      VY = 0.82829504E 03 METERS/SEC     VZ = 0.20189351E 03 METERS/SEC

TBI
     0.63941785E 00     -0.61722945E 00     -0.47434000E 00
     0.70112633E 00      0.71951512E 00     -0.
     0.34129477E 00     -0.33257222E 00      0.88034000E 00

        DELXI(M)          DELYI(M)          DELZI(M)        DELVXI(M/SEC)     DELVYI(M/SEC)     DELVZI(M/SEC)
    -0.93750000E 01    0.                 0.17531250E 02    0.11177063E-02    0.                -0.21476746E-02

TBI ERROR MATRIX
     0.                -0.                -0.
     0.                 0.                -0.
    -0.                -0.                 0.

ATTITUDE ERROR PARAMETER = 0.

        DELRA(M)          DELDR(M)          DELCI(M)        DELVEL(M/SEC)     DELGAM(RADS)      DELPSI(RADS)      DELTIME(
    0.51270475E-01   -0.33527221E-01    0.19990404E 02   -0.15256769E-04    0.44703484E-07   -0.25957672E-05    0.


ERROR SOURCE  5

INERTIAL POSITION AND VELOCITY FOLLOW

 X = 0.56242503E 07 METERS          Y = 0.40704401E 05 METERS          Z = 0.30321032E 07 METERS
VX = 0.37766111E 03 METERS/SEC      VY = 0.82829545E 03 METERS/SEC     VZ = 0.20189566E 03 METERS/SEC

TBI
     0.63941785E 00     -0.61722945E 00     -0.47434000E 00
     0.70112633E 00      0.71951512E 00     -0.
     0.34129477E 00     -0.33257222E 00      0.88034000E 00

        DELXI(M)          DELYI(M)          DELZI(M)        DELVXI(M/SEC)     DELVYI(M/SEC)     DELVZI(M/SEC)
    0.                 0.                 0.               -0.15256789E-04    0.                0.57220459E-05

TBI ERROR MATRIX
     0.                -0.                -0.
     0.                 0.                -0.
     0.                -0.                 0.
```

ATTITUDE ERROR PARAMETER = 0.

DELX(M)	DELY(M)	DELZ(M)	DELVEL(M/SEC)	DELGAM(RADS)	DELPSI(RADS)	DELTIME(
0.	-0.	0.	-0.76253945E-05	0.14901161E-07	0.	0.

ERROR SOURCE 5

INERTIAL POSITION AND VELOCITY FOLLOW

X = 0.36242503E 07 METERS Y = 0.40704398E 05 METERS Z = 0.30321032E 07 METERS
VX = 0.37766411E 03 METERS/SEC VY = 0.82629439E 03 METERS/SEC VZ = 0.20189566E 03 METERS/SEC

TBI

0.63341785E 00	-0.61722945E 00	-0.47434000E 00
0.70112631E 00	0.71951512E 00	-0.
0.34129477E 00	-0.33257222E 00	0.88034003E 00

DELXI(M)	DELYI(M)	DELZI(M)	DELVXI(M/SEC)	DELVYI(M/SEC)	DELVZI(M/SEC)
0.	-0.34179698E-02	0.	-0.15258789E-04	-0.53405762E-04	0.57220459E-05

TBI ERROR MATRIX

0.	-0.	-0.
0.	0.	-0.
0.	-0.	0.

ATTITUDE ERROR PARAMETER = 0.

DELXA(M)	DELYA(M)	DELZA(M)	DELVEL(M/SEC)	DELGAM(RADS)	DELPSI(RADS)	DELTIME(
-0.21751750E-04	-0.34179698E-02	-0.56971280E-05	-0.53405762E-04	0.	0.	0.

ERROR SOURCE 7

INERTIAL POSITION AND VELOCITY FOLLOW

X = 0.36242503E 07 METERS Y = 0.40704401E 05 METERS Z = 0.30321032E 07 METERS
VX = 0.37766411E 03 METERS/SEC VY = 0.82229564E 03 METERS/SEC VZ = 0.20189566E 03 METERS/SEC

TBI

0.63341785E 00	-0.61722945E 00	-0.47434000E 00
0.70112631E 00	0.71951512E 00	-0.
0.34129477E 00	-0.33257222E 00	0.88034003E 00

DELXI(M)	DELYI(M)	DELZI(M)	DELVXI(M/SEC)	DELVYI(M/SEC)	DELVZI(M/SEC)
0.	0.	0.	-0.15258789E-04	0.	0.57220459E-05

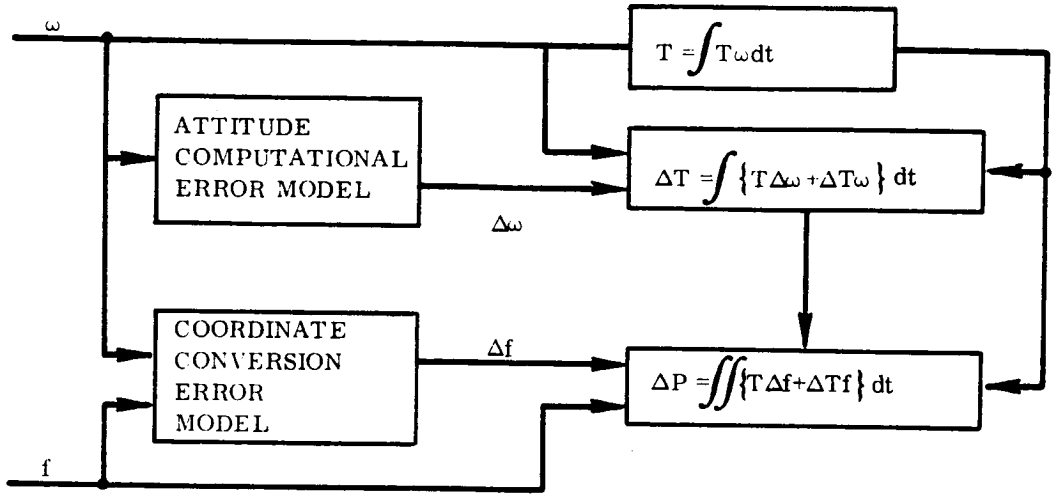

A. INTEGRATION OF ERROR EQUATION

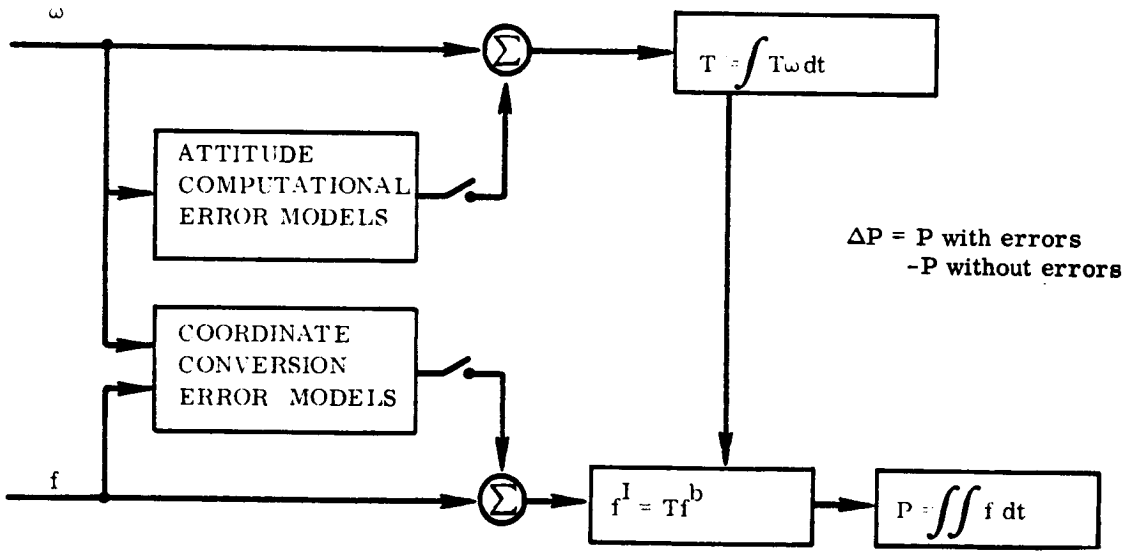

B. SIMULATION OF EQUATIONS OF MOTION

67-165

Figure 2 Alternative Open Loop Error Analysis Procedures

the computational techniques employed in the program. This is particularly important in the analysis of strapdown systems because the integration of the body angular rates to obtain the transformation matrix [T] in both approaches can result in considerable error if care is not taken in choosing the integration scheme and integration increment. The technique used in the CEACP reduces considerably the attention that must be paid to the choice of the integration increment. It also allows the user to obtain accuracy by using fairly large integration increments that considerably reduces the running time on a long trajectory.

When the specific force acting on the vehicle is non-zero, a trapezoidal integration of the equations of motion that uses tabular input data is used. The equations of motion implemented in the program are precisely those that would be employed in a strapdown navigation system as described in Volume I (Section II). An integration step size can be independently selected for each flight segment of the trajectory.

In line with reducing the running time of the program, analytic solutions of the equations of motion and the linearized error models have been employed whenever they can be obtained with sufficient generality to be useful. During those periods of flight when the specific force acting on the vehicle is zero, the position and velocity computations become uncoupled from the attitude equations and may be evaluated independently. Thus, an analytic solution of the equations of motion (using a two body assumption) as well as a linearized error propagation matrix for position and velocity can be employed. (The equations employed represent principally the results contained in References 2 and 3.) This corresponds to the first of the two error analysis approaches previously outlined with the aforementioned integration schemes errors eliminated by being able to obtain closed form solutions. Three options are therefore provided in the program for the propagation of attitude during these flight segments: (1) attitude constant in the inertial frame, (2) attitude constant in the local frame, and (3) attitude integrated by using inputted tabular rate data. In the first two options a closed form solution for the transformation matrix from body to inertial coordinates is used for both the attitude and the attitude errors. The third option employs a numerical integration of the attitude equations.

B. Assumptions and Definitions

This section presents the assumptions embodied in the CEACP and defines several key terms as well as all the coordinate frames pertinent to CEACP. The major assumptions embodied in the program are:

1. A priori knowledge of the entire trajectory can be obtained.
2. An inverse square law force field is assumed as a gravity model.
3. Mass of the vehicle is assumed to be small with respect to that of the primary body, i.e., the center of mass is at the center of the primary body.
4. For bodies other than the Earth, the north pole is defined analogously to the Earth's North Pole.
5. All error sources act independently and are normally distributed with zero mean.

In preparing this program it was convenient to define seven different coordinate frames. These consist of two inertial frames, three vehicle and sensor frames, and two local trajectory frames. Each of the coordinate frames are defined below.

1. Inertial Frame (I_x, I_y, I_z)

   A right handed Cartesian frame fixed in inertial space at the instant of trajectory initiation. This frame is centered at the center of mass of the two body system. When the initial conditions are specified as a latitude and longitude, the following further conditions apply to the definition of the I frame. The I_z axis passes through latitude +90° (collinear with the angular rate vector of the primary body in the case of a rotating primary). I_x is orthogonal to I_z and the I_x, I_z plane contains the vehicle center of mass at the instant of trajectory initiation. I_y is then located to complete the right handed triad, $I_y = I_z \times I_x$.

2. Vehicle or Body Frame (B_x, B_y, B_z)

   A right handed Cartesian frame fixed to the vehicle in an arbitrary orientation. The transformation from the B Frame to the I frame, $[T_B^I]$, at the initiation of the trajectory is specified in the input data. Thereafter, $[T_B^I]$ is maintained by integration of the body angular rates using the equation

$$\left[\dot{T}_B^I\right] = \left[T_B^I\right]\left[\Omega^B\right]$$

   where $[\Omega^B]$ is a 3 x 3 skew matrix whose elements are the components of vehicle angular rates express in the vehicle frame. The B frame is typically aligned with the roll, yaw and pitch axes of the vehicle in the order (B_x, B_y, B_z) but this need not be the case unless the wind axis input option is used.

3. Instrument Frames

Arbitrary Cartesian frames defined by a unit vector along the sensitive axis for each set of instruments, gyros and accelerometers. These frames are defined by the inputed transformation matrices $[T_g^B]$ for the gyros and $[T_a^B]$ for the accelerometers.

4. Local Frame (A_x, A_y, A_z)

A trajectory oriented Cartesian frame defined such that A_x lies along the instantaneous radius vector, A_z is perpendicular to the plane containing the radius ($\underset{\sim}{R}$) and velocity ($\underset{\sim}{V}$) vectors and directed in a positive sense as the radius vector is rotated into the velocity vector as seen in Figure 3A. A_y completes the right handed triad. The transformation from the A to the I frame is defined by the following column vectors.

$$\left[T_A^I\right] = \left[\frac{\underset{\sim}{R}}{|\underset{\sim}{R}|}, \frac{(\underset{\sim}{R} \times \underset{\sim}{V}) \times \underset{\sim}{R}}{|(\underset{\sim}{R} \times \underset{\sim}{V}) \times \underset{\sim}{R}|}, \frac{\underset{\sim}{R} \times \underset{\sim}{V}}{|\underset{\sim}{R} \times \underset{\sim}{V}|}\right]$$

The A frame is determined at the end of each flight segment and the position errors at these times are expressed in this frame.

5. The Velocity Frame (D_1, D_2, D_3)

The velocity frame is a spherical coordinate system defined to facilitate the closed form solution of the equations of motion. The velocity errors at the end of each flight segment are expressed in this frame. The coordinates are illustrated in Figure 2D and defined as follows:

$D_1 \triangleq$ The magnitude of the velocity vector, $|V|$

$D_2 \triangleq$ The angle (γ) between the projection of the velocity vector in the A_x, A_y plane and the A_x unit vector

$D_3 \triangleq$ The angle between the velocity vector and its projection in the A_x, A_y plane (ψ).

The transformation from the A frame to the D frame is given by:

$$D_1 = (\dot{A}_x^{\,2} + \dot{A}_y^{\,2} + \dot{A}_z^{\,2})^{1/2}$$

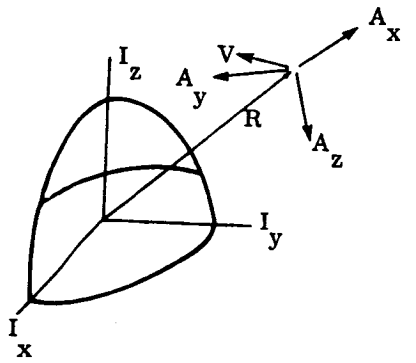

a. Definition of Local (A) Coordinate Frame

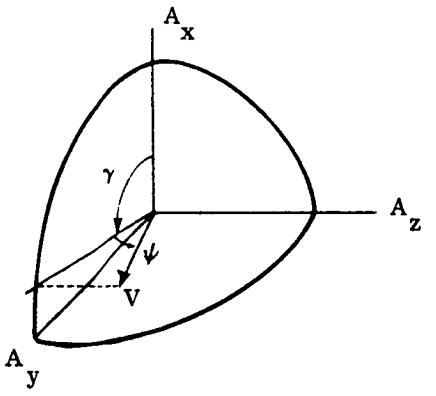

b. Definition of Velocity (D) Frame

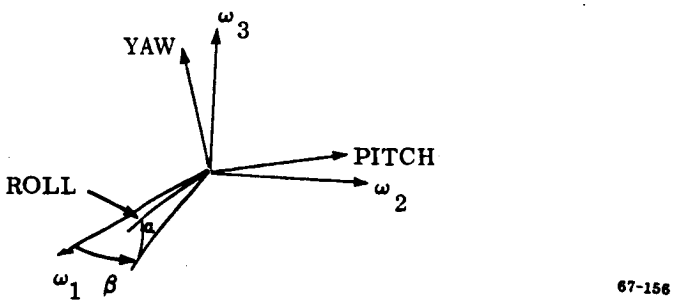

c. Definition of Wind Axis (ω) Frame

Figure 3 Coordinate Frames

$$D_2 = \tan^{-1} (\dot{A}_y/\dot{A}_x)$$

$$D_3 = \sin^{-1} (\dot{A}_z/D_1)$$

where the $\dot{A}_i$ is the ith component of the velocity vector expressed in the local (A) frame.

6. Wind Axis Frame (W_1, W_2, W_3)

A right handed Cartesian frame centered at the center of mass of the vehicle and related to the vehicle roll, yaw, pitch axes through the angle of attack α and the angle of slideslip β . The W_1 axis is aligned with the instantaneous velocity vector (Figure 3c). This frame is defined for use in inputing tabular data when aerodynamic forces are acting on the vehicle. Its use requires that the body frame be defined coincident with the vehicle roll, yaw, pitch axes in which case

$$\left[T_W^B\right] = \begin{bmatrix} \cos\alpha\cos\beta & \sin\alpha & \cos\alpha\sin\beta \\ -\sin\alpha\cos\beta & \cos\alpha & -\sin\alpha\sin\beta \\ -\sin\beta & 0 & \cos\beta \end{bmatrix}$$

7. The Auxiliary Inertial Frame (L_1, L_2, L_3)

An arbitrary inertial frame other than the I frame in which input data must be specified. The transformation $\left[T_L^I\right]$ must accompany the input data when the frame is used.

C. Organization

The CEACP consists of a main program and two levels of subroutines. The main program provides control logic and determines the calling sequence of what is termed level one subroutines. These subroutines represent major functional blocks of the computational tasks to be performed. The level two subroutines consist of frequently used computational processes such as coordinate conversion, matrix inversion and multiplication routines, etc. All the subroutines used in the program are listed in Table I of Appendix B and are described in this appendix under the heading of either level one or level two subroutines. It should be noted that level one subroutines are called only by the main program and are the only subroutines called by the main program. Level two subroutines, however, may be called by

a level one subroutine or another level two subroutine. The calling sequence of level one subroutines by the main program is illustrated by the first level flow diagram shown in Figure 4. In this diagram the blocks represent functional operations or computations. The level one subroutine in which these operations occur is indicated by parenthetical subroutine reference at the upper right hand border of each block.

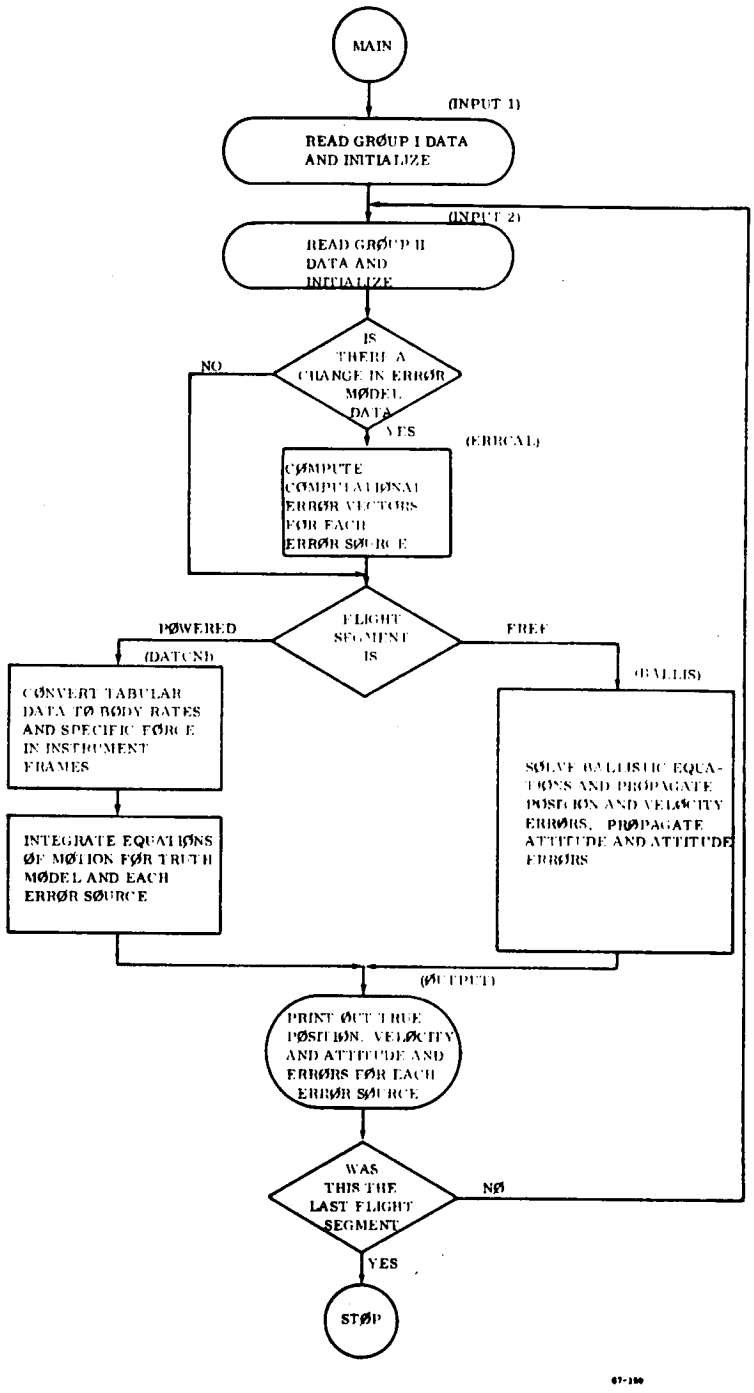

Figure 4 First Level Flow Diagram of the CEACP

V. REFERENCES

1. IBM 7090/7094 IBSYS Operating System, Version 13, Fortran IV Language Form C28-6390-2

2. "Linear Accuracy Analysis of Free-Flight Motion about a Spherical Homogeneous Body". Reynolds, W.A. and D.B. Cross. The Martin Company - Denver (M-61-28)

3. "Free Flight of a Ballistic Missile". Wheelon, Albert D. American Rocket Society Journal. Dec 1959. pp 915-926.

APPENDIX A - DICTIONARY OF VARIABLES

This appendix presents an alphabetical list of all the variables used by the CEAP. Each variable is defined, the maximum dimensions of dimensioned variables are indicated and if the variables appear in CØMMØN, this is also indicated. Where appropriate, the principal use of scratch pad variables is indicated, but, in general, their use must be established from the context in which they appear in the program.

DICTIONARY OF VARIABLES

VARIABLE NAME	DEFINITION	MAX DIMENSION	COMMON
A	Scratch pad variable		
A(I,J)	Tabular input, I^{th} component of acceleration or specific force at T(J)	(3,50)	x
A1DØT	Scratch pad		x
A2DØT	Scratch pad		x
A3DØT	Scratch pad		x
ACØNSS(I)	Amplitude of Ith coning sinusoid	(5)	x
ADØT(I,J)	Scratch pad	(3,3)	x
ALPHA (J)	Tabular data, angle of attack at T(J)	(50)	x
AMPSS(I)	Amplitude of Ith sinusoidal rate	(10)	x
ARM(I)	Moment arm associated with I^{th} sinusoid	(10)	x
ATEMP(I,J)	Scratch pad vector	(3,1)	x
ATRAN(I,J)	Scratch pad matrix	(3,3)	
AVGR	Scratch pad variable		
AXNEW	Scratch pad variable for X component of acceleration or specific force		x
AXØLD	Scratch pad variable for X component of acceleration or specific force		x
AXSAVE	Scratch pad variable for X component of acceleration or specific force		
AYNEW	Scratch pad variable for Y component of acceleration or specific force		x
AYØLD	Scratch pad variable for y component of acceleration or specific force		x
AYSAVE	Scratch pad variable for y component of acceleration or specific force		

VARIABLE NAME	DEFINITION	MAX DIMENSION	COMMON
AZ	Initial azimuth heading		
AZNEW	Scratch pad variable for z component of acceleration or specific force		x
AZØLD	Scratch pad variable for z component of acceleration or specific force		
AZSAVE	Scratch pad variable for z component of acceleration or specific force		
BETA(I)	Tabular data, angle of sideslip at T(I)	(50)	x
C	Scratch pad variable		
CARD	Stores comments on 1st input data card		
CDØT	Attitude error parameter		
CØMPFQ	Computational frequency		x
CØNST	Scratch pad variable		
CØSETA	Scratch pad variable for cos(n)		
CØSG	Scratch pad variable for cos (γ)		
CØST	Scratch pad variable for cos (θ)		
CØTT2	Scratch pad variable for Catan (θ/2)		
CRØSS(I,J)	Scratch pad matrix		
CRØSS2(I,J)	Scratch pad matrix		
D1	Scratch pad variable for magnitude of velocity vector		x
D1TRUE(I)	Magnitude of true velocity vector after I^{th} flight segment	(10)	x
D2	Scratch pad variable for flight path angle,		x
D2TRUE(I)	True value of flight path angle (γ) after I^{th} flight segment	(10)	x
D3	Scratch pad variable for the out of plane angle of the velocity vector,		x
D3TRUE(I)	True value of the out of plane angle of the velocity vector	(10)	x

VARIABLE NAME	DEFINITION	MAX DIMENSION	COMMON
D11	Scratch pad variable		
DCØS(I,J)	I^{th} direction cosines of the Jth sinusoidal rate vector	(3,10)	x
DCRØT	Initial cross range velocity error		
DCS1(I,J) DCS2(I,J)	I^{th} direction cosines of the 1st and 2nd J^{th} coning sinusoidal rate vector	(3,5)	x
DDRDØT	Initial down range velocity error		
DEL(I,J)	Scratch pad vector for inertial position errors	(3,1)	x
DELAZ	Initial azimuth alignment error		
DELRA(I,J,K)	I^{th} components of position error due to J^{th} error source after K^{th} flight segment	(3,20,10)	x
DELTS	Program integration increment for use in present flight segment		
DELVD(I,J,K)	I^{th} components of velocity error due to J^{th} error source after K^{th} flight segment	(3,20,10)	x
DELVXI(I,J)	Error in X inertial component of velocity due to I^{th} error source after J^{th} flight segment	(20,10)	x
DELVYI(I,J)	Error in Y inertial component of velocity due to I^{th} error source after J^{th} flight segment	(20,10)	x
DELVZI(I,J)	Error in Z inertial component of velocity due to I^{th} error source after J^{th} flight segment	(20,10)	x
DELXI(I,J)	Error in X inertial component of position due to I^{th} error source after J^{th} flight segment	(20,10)	x
DELYI(I,J)	Error in Y inertial component of position due to I^{th} error source after J^{th} flight segment	(20,10)	x
DELZI(I,J)	Error in Z inertial component of position due to I^{th} error source after J^{th} flight segment	(20,10)	x
DØTNEW(I,J)	Scratch pad matrix used in computing TBI	(3,3)	x

VARIABLE NAME	DEFINITION	MAX DIMENSION	COMMON
DØTØLD(I,J)	Scratch pad matrix used in computing TBI	(3,3)	x
DNEW DØLD	Scratch pad variables used in computing the vibratory drift rate		
DRADØT	Initial radial velocity error		
DT(I,J)	Flight time error due to I^{th} error source after K^{th} flight segment	(20,10)	x
DTAU	Scratch pad variable		
DTAU02	Scratch pad variable		
DTETA	Scratch pad variable		
DTØTWØ	DELTS/2		x
DTSAVE	Scratch pad variable used in open loop integration		
DUMMY(I,J)	Scratch pad matrix	(3,3)	x
E12MAT	Scratch pad vector		x
E14MAT	Scratch pad vector		x
E16MAT	Scratch pad vector		x
ECM(I,J)	Error transition matrix	(7,7)	x
ERR11 ERR12 ERR14 ERR16 ERR17	Scratch pad variables used in computing the magnitude of the error rate vector for error sources 11, 12, 14, 16, 17		
ERRDC(I,J)	The Ith direction cosine of the error vector corresponding to the Jth error source	(3,20)	x
ERRMAG(I)	Magnitude of error vector for I^{th} error source	(20)	x
ES	Error source number		x
ESMAX	Maximum value of ES		x

VARIABLE NAME	DEFINITION	MAX DIMENSION	COMMON
ETA	Argument of peri-apsis		
FCØNSS(I)	Frequency of Ith coning sinusoid		x
FIDØT(I,J)	Scratch pad matrix	(3,3)	x
FIPV	Initial inplane vertical error angle		
FH	Scratch pad variable		
FLAMDA	$= \frac{RV^2}{GM}$		
FK	Scratch pad variable		
FMAGA	Magnitude of specific force vector		
FMAGH	Scratch pad variable		
FMAGR	Scratch pad variable		
FMAGW	Magnitude of rate vector		
FN	Specifies the number of times the terminal radius is crossed before free flight phase is terminated		x
FØPV	Initial out of plane vertical error angle		
FREQ(I)	Frequency of Ith sinusoidal rate	(10)	x
G1	Vehicle latitude at launch		
G2	Vehicle longitude at launch		
GAMMA	Flight path angle		
GAMØLD	Scratch pad variable for previous value of		
GCØN	Gravitational constant, $G = 6.67 \times 10^{-11}$ (meters^3/Kg sec^2)		x
GX	X inertial component of gravitational acceleration		x
GY	Y inertial component of gravitational acceleration		x
GZ	Z inertial component of gravitational acceleration		x
HØLD	Scratch pad variable		x

VARIABLE NAME	DEFINITION	MAX DIMENSION	COMMON
HOLD1(I)	Scratch pad vector	(10)	x
I	Scratch pad indexing variable		
IAØRSF	Logical switch =1 input is acceleration =2 input is specific force		x
ICHANG	=0 no change in computational process =1 computational process changed		x
ICØN	=1 2nd order coordinate conversion =2 4th order coordinate conversion		x
IDØRR	=1 data is in degrees =2 data is in radians		x
IFRAME	=1 data in L frame =2 data in I frame =3 data in W frame =4 data in B frame		x
IFS	Index variable IFS-1 = present flight segment number		x
IFSMAX	Total number of flight segments plus one		x
IFUSE	Powered flight terminated in: =1 Truth radius - Error, time =2 Radius =3 Time =4 Theta		
IGØRLT	Acceleration data is in =1 g's =2 length/(time)^2		
IØPT	Free flight attitude propagated as: =1 constant in I frame =2 constant in A frame =3 integrated		
IPØSFR	Initial conditions specified in: =0 I frame =1 as latitude and longitude		

VARIABLE NAME	DEFINITION	MAX DIMENSION	COMMON
ISCHEME	Integration scheme for modeled computational process =1 1st order =2 2nd order =3 4th order		x
ISEGS	Total number of flight segments		
ITEMP	= flight segment number, IFS-1		
ITER	Counts iterations in matrix inversion routine		
IUNITS	Input data is in =0 metric units =1 English units		
IVAR	Free flight terminated on =1 Radius =2 Theta		x
IWDSIZ	Effective word length of modeled computational process		x
J	Scratch pad index variable		
K	Scratch pad index variable		
KF	Number of points in tabular data specifying vibratory environment		x
KFLY	Present flight segment is =1 free flight =2 powered flight		x
KØUNT	Scratch pad counter		
KSS	Number of coning sinusoids		x
L	Scratch pad index variable		
LØØP	Flight segment counter		
M	Scratch pad index variable		
N	Scratch pad index variable		
NPTS	Number of points in present tabular data		x

VARIABLE NAME	DEFINITION	MAX DIMENSION	COMMON
NSS	Number of sinusoidal rates		x
ØMEG(I,J)	Scratch pad matrix used in computing TBI	(3,3)	x
PAR(I,J)	Scratch pad matrix of partial derivatives used in computing ECM	(7,7)	x
PI	π		x
PIØTWØ	$\pi/2$		x
PSD(I)	Amplitude of Ith point on power spectral density curve	(10)	x
PSDF(I)	Frequency of Ith point or power spectral density curve	(10)	x
Q	$\lambda \sin^2 \gamma$		
QUANT	Gyro quantization error		x
R	Scratch pad variable for present radius		x
R1	Scratch pad variable		
RCUBED	R^3		
RMAX	Value of R specified to terminate flight segment		x
RN	Radius at peri or ap-apsis		
RN1	Radius at peri or ap-apsis		
RNEW	Scratch pad variable for present value of R		
RØLD	Scratch pad variable for previous value of R		
RP	Radius of primary body		x
RRATE	Rotational rate of primary body		x
RSS1(I)	Root sum square of radius error after I^{th} flight segment	(10)	x
RSS2(I)	Root sum square of down range error after I^{th} flight segment	(10)	x
RSS3(I)	Root sum square of cross range error after I^{th} flight segment	(10)	x
RSS4(I)	Root sum square of velocity errors after I^{th} flight segment	(10)	x
RSS5(I)	Root sum square of flight path angle errors after I^{th} flight segment	(10)	x

VARIABLE NAME	DEFINITION	MAX DIMENSION	COMMON
RSS6(I)	Root sum square of out of plane velocity angular error after I^{th} flight segment	(10)	x
RSS7(I)	Root sum square of time errors after I^{th} flight segment	(10)	x
SAVE	Scratch pad variable		
SINETA	Sine (η)		
SING	Sine (γ_o)		
SINGMT	Sine ($\gamma_o - \theta$)		
SINSQ	$\sin^2(\gamma)$		
SINT	Sin (θ)		
SS1 - SS7	Scratch pad variables		
SUM	Scratch pad variable		
SUM1	Scratch pad variable		
T(I)	Time at I^{th} point in tubular data	(50)	x
TAB(I,J)	Transformation matrix from the accelerometer to the body frame	(3,3)	x
TAI(I,J)	Matrix transformation from local to inertial frame	(3,3)	x
TAINEW(I,J)	Scratch pad matrix used to compute TAI	(3,3)	x
TAIØLD(I J)	Scratch pad matrix used to compute TAI		x
TAU	Scratch pad variable		
TBA(I,J)	Transformation from body to accelerometer frame	(3,3)	x
TBG(I,J)	Transformation from body to gyro frame	(3,3)	x
TBI(I,J)	Transformation from body to inertial frame	(3,3)	x
TBISAV(I,J,K,L)	Transformation from body to inertial frame for K^{th} error source after L^{th} flight segment	(3,3,20,10)	x
TDØT	Scratch pad variable		
TEM	Scratch pad variable		

VARIABLE NAME	DEFINITION	MAX DIMENSION	COMMON
TEMP	Scratch pad variable		
TEMP1 TEMP2	Scratch pad vectors	(3,50)	x
TEP	Scratch pad variable		
TGB(I,J)	Transformation from gyro to body frame	(3,3)	x
THETA	Range angle		x
THETAF	Value of θ upon which present flight segment is terminated		x
TIA(I,J)	Transformation from inertial to local frame	(3,3)	x
TIAØLD(I,J)	Previous value of TIA	(3,3)	
TIB(I,J)	Transformation from inertial to body frame	(3,3)	x
TIME	Time into present flight segment		x
TLI(I,J)	Transformation from L frame to I frame	(3,3)	x
TMAX	Value of time upon which present flight segment is terminated		x
TØLAM	$2/\lambda - 1$		
TSAVE	Scratch pad variable for T		
TTØTAL(I,J)	Time into flight for I^{th} error source after I^{th} flight segment	(20,10)	x
TTT	Scratch pad variable		
TWB(I,J)	Transformation from wind to body frame	(3,3)	
TWØPI	2π		
V	Scratch pad variable for velocity		
VØLD	Scratch pad variable for previous value of velocity		
VX	Scratch pad variable for X inertial component of velocity		x
VX1	Scratch pad variable for X inertial component of velocity		
VXNEW	Scratch pad variable for X inertial component of velocity		x

VARIABLE NAME	DEFINITION	MAX DIMENSION	COMMON
VXØLD	Scratch pad variable for X inertial component of velocity		x
VXTRUE(I)	True value of X inertial component of velocity after I^{th} flight segment	(10)	x
VY	Scratch pad variable for Y inertial component of velocity		x
VY1	Scratch pad variable for Y inertial component of velocity		
VYNEW	Scratch pad variable for Y inertial component of velocity		x
VYØLD	Scratch pad variable for Y inertial component of velocity		x
VYTRUE(I)	True value of Y inertial component of velocity after I^{th} flight segment	(10)	x
VZ	Scratch pad variable for Z inertial component of velocity		x
VZ1	Scratch pad variable for Z inertial component of velocity		x
VZNEW	Scratch pad variable for Z inertial component of velocity		x
VZØLD	Scratch pad variable for Z inertial component of velocity		x
VZTRUE(I)	True value of Z inertial component of velocity after I^{th} flight segment	(10)	x
W(I,J)	Tabular input data I^{th} component of vehicle angular rate at T(J)	(3,50)	x
WTEMP(I,J)	Scratch pad vector for vehicle angular rates	(3,1)	x
WXSAVE	Scratch pad variable for X body component of angular rate		
WYSAVE	Scratch pad variable for Y body component of angular rate		
WZSAVE	Scratch pad variable for Z body component of angular rate		
X	Scratch pad variable for X inertial component of position		x
X1-X8	Scratch pad variables		
XI(I,J)	Identity matrix	(3,3)	
XMASS	Mass of primary body		x
XMAX	Scratch pad variable		

VARIABLE NAME	DEFINITION	MAX DIMENSION	COMMON
XMIN	Scratch pad variable		
XN	Scratch pad variable		
XNEW	Scratch pad variable for present value of X		
XØLD	Scratch pad variable for previous value of X		
XTRUE(I)	True X inertial component of position after I^{th} flight segment	(10)	x
Y	Scratch pad variable for Y inertial component of position		x
Y1	Scratch pad variable for Y inertial component of position		x
YNEW	Scratch pad variable for present value of Y		
YØLD	Scratch pad variable for previous value of Y		
YTRUE(I)	True value of Y inertial component of position after I^{th} flight segment	(10)	x
Z	Scratch pad variable for Z inertial component of position		x
Z1	Scratch pad variable for Z inertial component of position		x
ZNEW	Scratch pad variable for present value of Z		
ZØLD	Scratch pad variable for previous value of Z		
ZTRUE(I)	True value of Z inertial component of position after I^{th} flight segment	(10)	x

APPENDIX B

SUBROUTINE DESCRIPTION

As previously stated (Section IV), the subroutines in the CEACP may be conveniently divided into two categories: level one and level two. The level one subroutines are called only by the main program. These subroutines perform the major functional tasks required of the program. The remaining subroutines are classified as level two subroutines and are called only by level one subroutines or by other level two subroutines. Level two subroutines perform frequently encountered mathematical tasks such as coordinate conversion, matrix multiplication, and matrix inversion.

This appendix presents a description of each of the subroutines in the CEACP. A listing of these subroutines is presented in Table B-I. The function of each subroutine is described as well as any unusual techniques or methods used to perform the required function. Flow diagrams and matrix-vector representation of the mathematical functions being performed are included for the larger subroutines to assist in the description of the function being performed by the subroutine. In the program listing present in Appendix C, the listing of each subroutine is preceded by its title corresponding to the title that precedes each subroutine description in this appendix.

In the following, the level one subroutines are presented first in the order in which they appear in the main program. These are followed by the level two subroutines which are grouped according to the type of task performed, i.e., coordinate conversion, matrix operations, etc.

A. Level One Subroutines

1. INPUT1

INPUT1 is the first subroutine called by the main program. This subroutine reads in all of the Group I input data, i.e., all of the data required by the program which remains constant for the duration of one case. This data consists of five subcategories of data as follows:

(1) Physical data pertaining to the primary body including its mass, radius and rotational rate.

(2) The constant matrices $[T_g^B]$ and $[T_a^B]$ defining the relationship between the gyro and accelerometer sensitive axes, respectively, and the body frame.

TABLE B-I LIST OF SUBROUTINES IN THE CEACP

LEVEL ONE SUBROUTINES

(1) INPUT1 - SUB1
(2) INPUT2 - SUB2
(3) ERRCAL - SUB17
(4) BALLIS - SUB4
(5) DATCN1 - SUB6
(6) NAVIG - SUB5
(7) ØUTPUT - SUB3

LEVEL TWO SUBROUTINES

(1) ERMØDS - SUB21
(2) DATCN2 - SUB7
(3) TRTWB - SUB8
(4) TRTAD - SUB15
(5) TRTDA - SUB16
(6) TRTAI - SUB14
(7) VELD2I - SUB18
(8) PØSI2A - SUB19
(9) MATMUL - SUB 9
(10) MATRAN - SUB 10
(11) INVERS - SUB 11
(12) INTPLT - SUB 12
(13) AGØNY - SUB22
(14) ERRØR - SUB20

(3) The initial position, velocity and attitude of the vehicle for the trajectory being considered in the present case. The position and velocity may be specified in either of two ways: six components comprising the initial inertial position and velocity vectors or the latitude and longitude of the vehicle. In the latter case, the initial inertial coordinates are computed by INPUT1 using the radius and rotational rate of the primary. Attitude is always specified as the nine elements of $[T_B^I]$.

(4) The errors in the initial conditions including three position errors and three alignment errors. The velocity errors are either computed if initial position and its error is specified by latitude and longitude or inputted when the six inertial components of position and velocity are used to specify initial conditions.

(5) Program control variables used in initializing MAIN, INPUT1 and other level one subroutines.

INPUT1 is called only once by MAIN during the execution of each case. The following level two subroutines are called by INPUT1.

(1) TRTAD

(2) MATMUL

(3) MATRAN

2. INPUT2

INPUT2 is called by the main program following INPUT1 and again at the beginning of each flight segment. The function of this subroutine is similar to that of INPUT1 except that it reads Group II data. Group II data represents the remainder of the data required by the program and is specified in blocks at the beginning of each flight segment. This data includes the following subcategories of data:

(1) The trajectory specification for the present flight segment. This includes the specification of the termination variable and its magnitude and for powered flight segments, the tabular acceleration (or specific force) and rates.

(2) Dynamic environment and computational process specification. Since it may not be necessary to change this data between succeeding flight segments, the name list input routine of FORTRAN IV version 13 has been used to read this data in.

(3) Program control variables specifying program options being used and units of input data, etc.

INPUT2 is called only by MAIN, once at the initiation of each flight segment. No level two subroutines are called by INPUT2.

3. ERRCAL

Subroutine ERRCAL calculates the magnitude and direction cosines of the error rate vector associated with each of the computational error models. These error vectors are then used one at a time by other subroutines to perturb the true vehicle angular rate and acceleration prior to its integration. The equations used to compute the magnitude of the error vector are presented in Table B-II.

ERRCAL is called only by MAIN and only if the variable ICHANG = 1 indicating a change in the dynamic environment or the computational process specification. ICHANG must be set equal to one for the first flight segment. MATMUL is the only subroutine called by ERRCAL.

4. BALLIS

Subroutine BALLIS provides an analytic solution of the equations of motion during periods of flight when the specific force acting on the vehicle is zero. During periods when the specific force acting on the vehicle is zero, the position and attitude equations become uncoupled. A linearized error transition matrix is computed and used to propagate the position and velocity errors. The equations mechanized in the subroutine for this purpose are principally those of Reynolds and Cross (Reference 2). Three options are provided for the propagation of attitude and attitude errors during these periods: as a constant in the inertial frame, a constant in the local (A) frame or integrated open loop using tabular data specifying the body rate vector. A flow chart of BALLIS illustrating the functions accomplished by this subroutine is presented in Figure B-1.

BALLIS is called only by MAIN when the variable KFLY specifies that the present flight segment is a free flight segment, i.e., KFLY = 1. The following level two subroutines are called by BALLIS:

TABLE B-II

COMPUTATIONAL ERROR MODELS USED IN CEACP

Error Source and Exciting Environment	Body Axis of Error Application	Integration Scheme	Error Model Used in CEACP
Truncation:			
Constant Rates	Along Axis of Exciting Environment	Rectangular	$\dot{C} = .581\ \omega^2/fc$
		2nd Order Runge-Kutta	$\dot{C} = .122\ \omega^3/fc^2$
		4th Order Runge-Kutta	$\dot{C} = .485 \times 10^{-2}\ \omega^5/fc^4$
Sinusoidal Rates	Along Axis of Exciting Environment	Rectangular	$\dot{C} = .472 \times 10^{-1}\ A^2\ (f/fc^2)\ \sin^2(\pi/2 \cdot f/fc)$
		2nd Order Runge-Kutta	$\dot{C} = .330 \times 10^{-2}\ A^4\ (f/fc^4)\ \sin^4(\pi/2 \cdot f/fc)$
		4th Order Runge-Kutta	$\dot{C} = .179 \times 10^{-2}\ A^4\ (f/fc^4)\ \sin^6(\pi/2 \cdot f/fc)$
Coning			
$f/fc > 0.8$	Axis Normal to Plane of Exciting Environment	All	$\dot{C} = .105\ A^2/f$
$f/fc < 0.8$	Axis Normal to Plane of Exciting Environment	Rectangular	$\dot{C} = .132\ A^2/fc$
		2nd Order Runge-Kutta	$\dot{C} = .164\ A^2 f/fc^2$
		4th Order Runge-Kutta	$\dot{C} = .260\ A^2\ f^3/fc^4$
Vibratory	$1/\sqrt{3}$ on Each Axis	Rectangular	$\dot{C} = .148 \int_0^{\frac{\pi fo}{2fc}} \phi(\frac{2fc\tau}{\pi})\ \frac{\sin^2\tau}{\tau^2}\ d\tau$
		2nd Order Runge-Kutta	$\dot{C} = .326 \times 10^{-1}\ (1/fc) \int_0^{\frac{\pi fo}{2fc}} \phi^2(\frac{2fc\tau}{\pi})\ \frac{\sin^4\tau}{\tau^4}\ d\tau$
		4th Order Runge-Kutta	$\dot{C} = .177 \times 10^{-1}\ (1/fc) \int_0^{\frac{\pi fo}{2fc}} \phi^2(\frac{2fc\tau}{\pi})\ \frac{\sin^6\tau}{\tau}\ d\tau$
Gyro Quantization	Same as Coning	All	$\dot{C} = .127 \times 10^{-5}\ Q^2\ A\ f/fc$
Roundoff	$1/\sqrt{3}$ on each axis	All	$\dot{C} = .102 \times 10^1\ 2^{-n}\ fc$
Size Effect	Thrust Axis	2nd Order Coordinate Conversion	$\dot{V} = 2.4\ R\ A^2\ (f/fc)^2$
		4th Order Coordinate Conversion	$\dot{V} = 12\ R\ A^2\ (f/fc)^4$

Definition of Symbols

- $C \triangleq$ attitude error drift rate (rads/sec)
- $\omega \triangleq$ magnitude of constant rate vector (rads/sec)
- $fc \triangleq$ computational frequency (Hz)
- $A \triangleq$ amplitude of sinusoidal rate vector (rads/sec)
- $f \triangleq$ frequency of sinusoidal rate vector (rads/sec)
- $\phi \triangleq$ vibratory rate power spectrum $(\text{rads/sec})^2/\text{Hz}$
- $\tau \triangleq (\pi/2 \cdot f/fc)$
- $Q \triangleq$ gyro quantization (arc sec)
- $n \triangleq$ effective data wordlength of flight computer (bits)
- $\dot{V} \triangleq$ acceleration error
- $R \triangleq$ effective moment arm at the sensor package of the sinusoidal rate (meters)

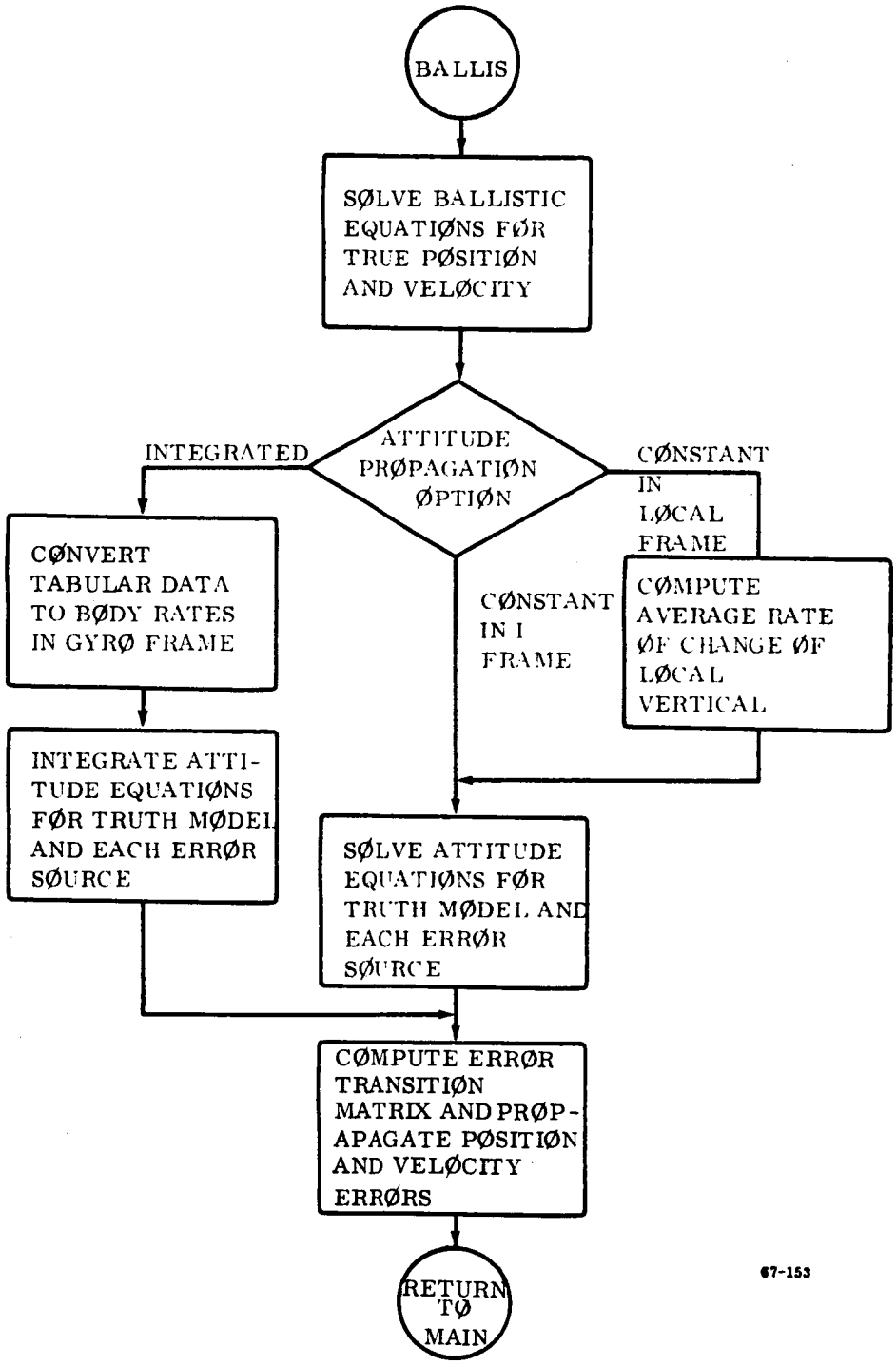

Figure B-1 Functional Flow Diagram of Subroutine BALLIS

(1) VELD2I

(2) MATMUL

(3) MATRAN

(4) INVERS

(5) INTPLT

(6) DATCN2

(7) AGØNY

(8) ERMØDS

5. DATCN1

DATCN1 prepares the inputed time history of body angular rates and acceleration (or specific force) for use by subroutine NAVIG. The program input options provide that this tabular data may be inputted in any one of four coordinate frames.

(1) the body frame (B frame),

(2) the inertial frame (I frame),

(3) any other inertial frame (L frame), and

(4) a wind axis frame (W frame).

The vehicle acceleration data for powered flight may also be inputted as either acceleration or specific force. Subroutine DATCN1 reproduces the inputted tables as tables of body angular rate and specific force expressed in the appropriate instrument frame, i.e., angular rates in the gyro frame and specific force in the accelerometer frame.

A flow diagram of DATCN1 is presented in figure B-2. Each of the functional blocks in this diagram performs a specific function as indicated on the diagram. The functional equation employed to perform each of these functions is presented below with the corresponding block number identification:

BLOCK 1 Transforms data in L frame to the I frame

$$W^I = [T_L^I] W^L$$

$$A^I = [T_L^I] A^L$$

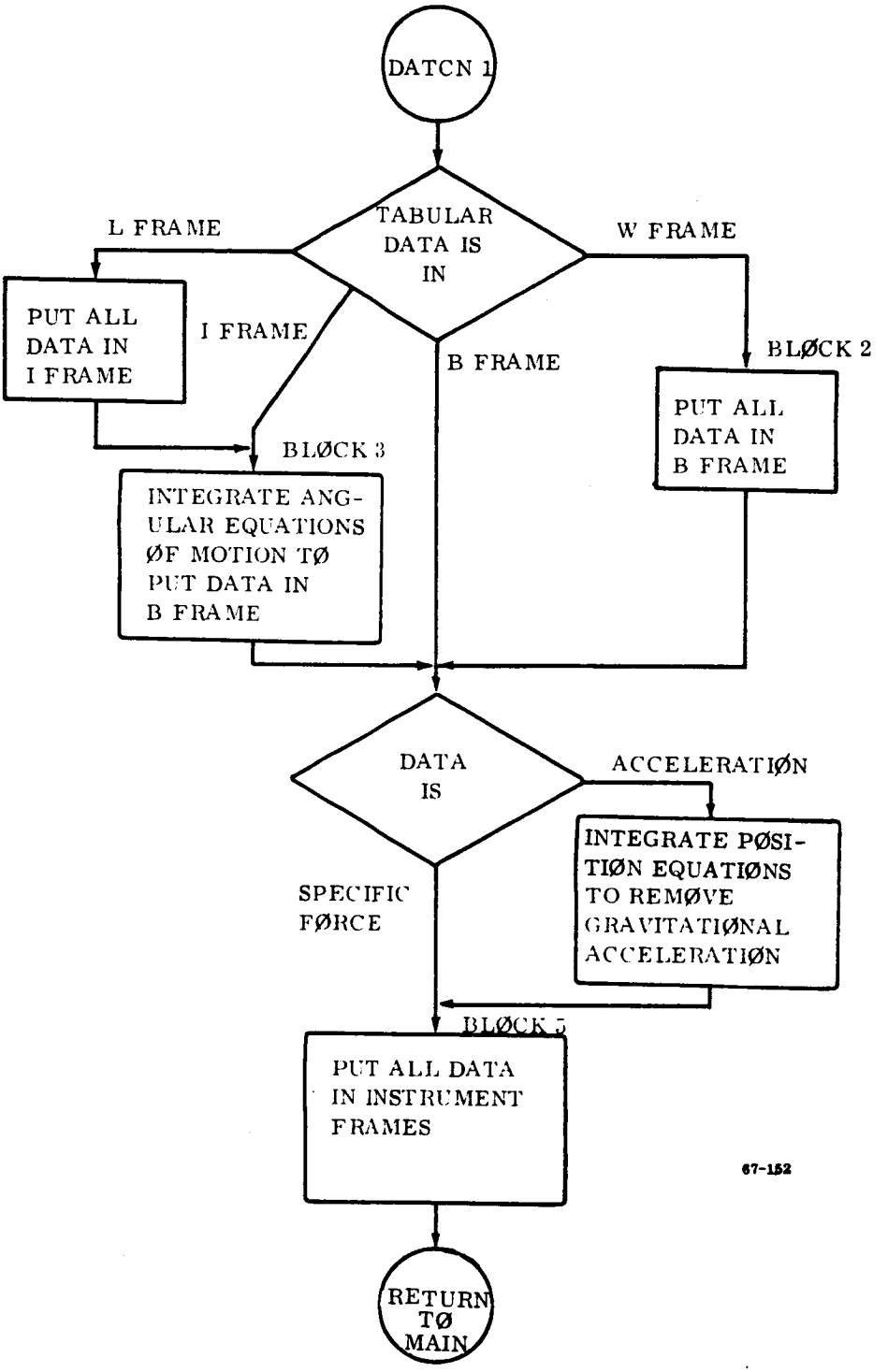

Figure B-2 Functional Flow Diagram of Subroutine DATCNI

BLOCK 2 Computes $[T_W^B]$ and transforms data in the wind axis frame to the body frame

$$W^B = [T_W^B] W^W$$

$$A^B = [T_W^B] W^W$$

BLOCK 3 Computes $[T_I^B]$ and transforms data in the inertial frame to the body frame

$$\frac{d}{dt}[T_B^I] = [\Omega^I][T_B^I]$$

where $[\Omega^I]$ is a skew symmetric matrix of body rates expressed in the inertial frame

$$[T_I^B] = [T_B^I]^{-1}$$

$$W^B = [T_I^B] W^I$$

$$A^B = [T_I^B] A^B$$

BLOCK 4 Converts acceleration in the body frame to specific force in the body frame

$$SF^B = A^B - [T_I^B]\, g^I (X, Y, Z)$$

BLOCK 5 Transforms the data expressed in the body frame to the instrument frames

$$W^g = T_B^g\, W^B$$

$$SF^a = T_B^a\, W^B$$

It is apparent from the flow diagram of DATCN1 that the different options require varying amounts of computations. Data inputted as specific force in the body frame requires only two matrix multiplications per tabular point whereas data inputted as accelerations in the I frame requires in addition the integration of all the equations of motion. Obviously, when a trajectory requiring a large amount of tabular data is being investigated, the execution time may be reduced considerably by inputing the tabular data as specific force in the body frame.

DATCN1 is used only for powered flight segments as determined by the variable KFLY (KFLY=2) and is called from MAIN. The following level two subroutines are used DATCN1:

(1) TRTWB

(2) MATMUL

(3) INVERS

(4) INTPLT

6. NAVIG

Subroutine NAVIG performs the same function as BALLIS during those portions of the flight when the specific force acting on the vehicle is non-zero. Because analytic solutions of the equations of motion for an arbitrary specific force profile are not available, NAVIG employs an open loop numerical integration procedure to propagate vehicle attitude, velocity and position during these flight segments.

The equations employed, expressed in vector matrix notation, are:

$$\frac{d}{dt}[T_B^I(t)] = [T_B^I(t)] \cdot [\Omega(t)] \qquad \text{(Attitude Computations)}$$

$$\overline{F}^I(t) = [T_B^I(t)] \cdot \overline{F}^B(t) \qquad \text{(Coordinate Transformation)}$$

$$\left.\begin{aligned} \overline{V}^I(t) &= \overline{V}_o^I + \int_o^t \{\overline{F}^I(t) - \overline{g}^I(\overline{R})\}dt \\ \overline{R}^I(t) &= \overline{R}_o^I + \int_o^t \overline{V}^I(t)dt \end{aligned}\right\} \qquad \text{(Velocity and Position Computation)}$$

A trapezoidal integration scheme is employed with a step size specified by the user at the beginning of each flight segment. (This integration scheme and interval have no connection with or bearing upon the computational functions that are being evaluated.) The equations of motion are integrated by using the tabular data for the truth model and once for each error source by using the tabular data to which has been added the corresponding error vector as calculated in ERRCAL. A functional flow diagram of NAVIG is presented in Figure B-3.

The numerical integration is continued until the value of a specified termination variable is exceeded. Four options on the termination variable are available in NAVIG depending upon value of IFUSE:

=1 Radius for truth model and truth time for errors

=2 Radius

=3 Time

=4 Range angle

The use of radius as a termination variable requires that radius be a monotomic (either increasing or decreasing) function of time during the flight segment.

NAVIG is called by MAIN immediately following DATCN1. The following level two subroutines are called by NAVIG:

(1) TRTDA

(2) PØSI2A

(3) ERMØDS

(4) MATMUL

(5) INTPLT

(6) ERRØR

7. OUTPUT

OUTPUT is called by MAIN at the end of each flight segment prior to reading in data for the next segment. This subroutine prints out the true position velocity and attitude at the end of each flight segment as well as the errors in these quantities for each error source. Although this subroutine is not a computational subroutine

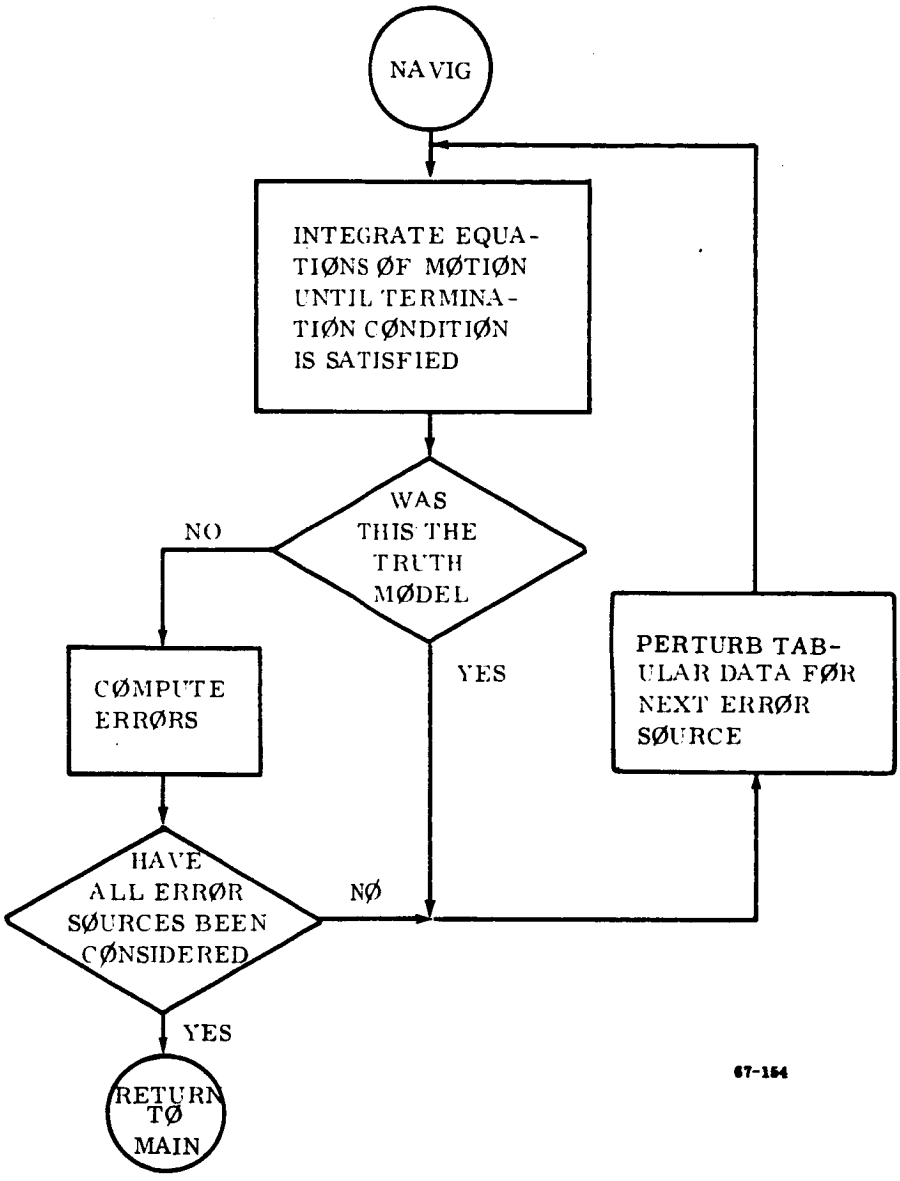

Figure B-3 Functional Flow Diagram of Subroutine NAVIG.

but is primarily concerned with printout, a few supplemental computations, such as root sum squaring, of individual errors are performed here to put the stored data in the form required for the printout.

OUTPUT is called by MAIN and calls no level two subroutine.

B. Level Two Subroutines

1. TRTWB

TRTWB constructs the transformation matrix from the wind axis (W) frame to the body (B) frame, $[T_W^B]$, using the tabular values of the angle of attack (α) and sideslip (β).

This subroutine is called by

(1) DATCN1

(2) DATCN2

and calls no other subroutine.

2. TRTAI

TRTAI constructs the transformation matrix from the local (A) frame to the inertial (I) frame, $[T_A^I]$.

This subroutine is called by

(1) POSI2A

and calls no other subroutine.

3. TRTAD

TRTAD transforms the velocity vector expressed in the local (A) frame to the velocity (D) frame. This subroutine is called by

(1) INPUT1

(2) PØSI2A

(3) ERRØR

and calls subroutine AGØNY.

4. TRTDA

TRTDA is the inverse of TRTAD. It transforms the velocity vector in the D frame to the local (A) frame. This subroutine is called by

(1) NAVIG

(2) VELD2I

and calls no other subroutine.

5. VELD2I

VELD2I transforms the velocity vector expressed in the D frame to the inertial (I) frame. This subroutine is called by

(1) BALLIS

and calls

(1) TRTDA

(2) MATMUL

6. PØSI2A

PØSI2A transforms the position vector in the initial (I) frame to the local (A) frame and the velocity vector in the inertial (I) frame to the D frame. This subroutine is called by

(1) NAVIG

and calls

(1) TRTAI

(2) TRTAD

(3) MATMUL

(4) MATRAN

7. ERRØR

ERRØR computes the position and velocity errors at the termination of each powered flight segment and expresses them in the local (A) and velocity (D) frames, respectively. This subroutine is called by

(1) NAVIG

and calls

(1) MATMUL

(2) TRTAD

8. ERMØDS

ERMØDS applies the appropriate perturbation to the tabular input data for each computational error source using the error vector computed in ERRCAL. This subroutine is called by

(1) NAVIG

(2) BALLIS

and calls no other subroutine.

9. MATMUL

MATMUL multiplies an I by J matrix by a J by K matrix. This subroutine is called by

(1) INPUT1

(2) ERRCAL

(3) DATCN1

(4) NAVIG

(5) BALLIS

(6) VELD2I

(7) POSI2A

(8) ERROR

(9) INVERS

(10) DATCN2

and calls no other subroutine.

10. MATRAN

MATRAN computes the transverse of a 3 by 3 matrix. In the CEACP the transverse of orthogonal transformation matrices is used as the matrix inverse provided the original matrix was not computed by an integration or other iterative process. This subroutine is called by

(1) INPUT1

(2) BALLIS

(3) POSI2A

(4) INVERS

and calls no other subroutine.

11. INVERS

INVERS computes the inverse, $[T]^{-1}$, of a 3 x 3 matrix. All the matrices whose inverse is required by CEACP are nominally orthogonal; therefore, rather than explicitly computing the inverse, an iterative algorithm has been employed. The algorithm is:

(1) $T_i^{-1} \simeq T^T$

(2) $[\epsilon ij] = I - TT_\ell^{-1}$

(3) $\| \epsilon \| = \sum_i \sum_j G_{ij}^2$

(4) if $\| \epsilon \| < \alpha$ then finished otherwise continue

(5) repeat starting at (2) using

$T_\ell^{-1} = T^T(2I - TT_{\ell-1}^{-1}$ as an improved estimate of T^{-1}

$\alpha = 10^{-6}$ in CEACP.

INVERS is called by

(1) DATCN1

(2) BALLIS

(3) DATCN2

and calls

(1) MATMUL

(2) MATRAN

12. INTPLT

INTPLT is a linear interpolator used to interpolate between points of tabular input data for the navigation routines. This subroutine is called by

(1) DATCN1

(2) NAVIG

(3) BALLIS

(4) DATCN2

and calls no other subroutine.

13. DATCN2

DATCN2 serves the same function as DATCN1 except that it is concerned only with the inputed tabular vehicle angular rates used for the integrated attitude option in BALLIS.

When the integrated attitude option is chosen for use in propagating the vehicle attitude through free flight, tabular body rate data must be inputed. These data may be expressed in any of the four data coordinate frames previously mentioned. DATCØN2 expresses these data as body rates in the gyro frames for use in the integration routine. DATCN2 is called by

(1) BALLIS

and calls

(1) TRTWB

(2) MATMUL

(3) INVERS

(4) INTPLT

14. AGØNY

AGONY provides the inverse tangent of (X/y) in the range from zero to two pi depending upon the signs of the two arguments. This subroutine is called by

(1) BALLIS

(2) TRTAD

and calls no other subroutine.

```
      INTEGER ES,ESMAX
      COMMON OMEG(3,3),TLI(3,3),TEMP1(3,50),TEMP2(3,50),W(3,50),A(3,50)
     1        ,WTEMP(3,1),ATEMP(3,1),T(50),TBI(3,3),TIB(3,3),TBG(3,3),
     2        TGB(3,3),ALPHA(50),BETA(50),TWB(3,3),IADRSE,RP,GCON,XMASS,
     3        X,Y,Z,DELTS,DTOTWO,IFRAME,VX,VY,VZ,NPTS,TIA(3,3),TAI(3,3)
     4        ,TAIOLD(3,3),TAINEW(3,3),TTOTAL(27,10),TIME,TMAX,XTRUE(10)
     5        ,YTRUE(10),ZTRUE(10),VXTRUE(10),VYTRUE(10),VZTRUE(10),
     6        A1DOT,A2DOT,A3DOT,DELRA(3,27,10),DELVD(3,27,10),D1,D2,D3,
     7        D1TRUE(10),D2TRUE(10),D3TRUE(10),DOTOLD(3,3),DOTNEW(3,3),
     8        AXOLD,AXNEW,AYOLD,AYNEW,AZOLD,AZNEW,VXOLD,VXNEW,VYOLD,
     9        VYNEW,VZOLD,VZNEW,GX,GY,GZ,DT(27,10),TBISAV(3,3,27,10)
      COMMON ES,ESMAX,IOPT,IVAR,IFUSE,PAR(7,7),ECM(7,7),ADOT(3,3),
     1        FIDOT(3,3),DEL(3,1),ENPI,PIOTWO,PI
     2        ,IDORR,IGORLT,IUNITS,RRATE,IFS,IFSMAX,TBA(3,3),TAB(3,3)
     3        ,RMAX,THETAF,R,THETA,KELY,EN
     4       ,RSS1(10),RSS2(10),RSS3(10),RSS4(10),RSS5(10),RSS6(10)
     5       ,RSS7(10),ERRMAG(27),ERRDC(3,27),HOLD(10),SAVE(10),
     6       F12MAT(3,1),F14MAT(3,1),F16MAT(3,1),QUANT,ARM(10),PSD(10),
     7       PSDE(10),KE,ICON
      COMMON AMPSS(10),FREQ(10),DCOS(3,10),DCS1(3,5),DCS2(3,5),
     1        KSS,ACONSS(5),FCONSS(5),DUMMY(3,3),ICHANG
     2       ,ISCHME,IWDSIZ,COMPFQ,NSS,DELXI(27,10),DELYI(27,10),
     3       DELVXI(27,10),DELVYI(27,10),DELVZI(27,10),DELZI(27,10)
     4       ,F13MAT(3,1),F15MAT(3,1)
      NAME LIST /NAM1/ AMPSS,FREQ,DCOS,DCS1,DCS2,KSS,ACONSS,FCONSS
     1       ,ISCHME,IWDSIZ,COMPFQ,NSS,QUANT,ARM,PSD,PSDE,KE,ICON
    8 FORMAT(1H1,30X,2HES,10X,16HERROR DEFINITION //
     1            31X,2H 2,10X,23HINITIAL RADIAL POSITION //
     2            31X,2H 3,10X,26HINITIAL DOWNRANGE POSITION //
     3            31X,2H 4,10X,27HINITIAL CROSSRANGE POSITION //
     4            31X,2H 5,10X,23HINITIAL RADIAL VELOCITY //
     5            31X,2H 6,10X,26HINITIAL DOWNRANGE VELOCITY //
     6            31X,2H 7,10X,27HINITIAL CROSSRANGE VELOCITY //
     7            31X,2H 8,10X,17HAZIMUTH ALIGNMENT //
     8            31X,2H 9,10X,35HINPLANE VERTICAL MISALIGNMENT ANGLE //
     9            31X,2H10,10X,40HOUT OF PLANE VERTICAL MISALIGNMENT ANGL
     1E //
     2            31X,2H11,10X,24HCONSTANT RATE TRUNCATION //
     3            31X,2H12,10X,40HSINUSOIDAL RATE TRUNCATION (X BODY AXIS
     4) //
     5            31X,2H13,10X,40HSINUSOIDAL RATE TRUNCATION (Y BODY AXIS
     6) //
     7            31X,2H14,10X,40HSINUSOIDAL RATE TRUNCATION (Z BODY AXIS
     8) // )
    9 FORMAT(     31X,2H15,10X,22HROUNDOFF (X BODY AXIS) //
     1            31X,2H16,10X,22HROUNDOFF (Y BODY AXIS) //
     2            31X,2H17,10X,22HROUNDOFF (Z BODY AXIS) //
     3            31X,2H18,10X,31HCONING TRUNCATION (X BODY AXIS) //
     4            31X,2H19,10X,31HCONING TRUNCATION (Y BODY AXIS) //
     5            31X,2H20,10X,31HCONING TRUNCATION (Z BODY AXIS) //
     6            31X,2H21,10X,34HVIBRATORY TRUNCATION (X BODY AXIS) //
     7            31X,2H22,10X,34HVIBRATORY TRUNCATION (Y BODY AXIS) //
     8            31X,2H23,10X,34HVIBRATORY TRUNCATION (Z BODY AXIS) //
     9            31X,2H24,10X,31HGYRO QUANTIZATION (X BODY AXIS) //
     1            31X,2H25,10X,31HGYRO QUANTIZATION (Y BODY AXIS) //
     2            31X,2H26,10X,31HGYRO QUANTIZATION (Z BODY AXIS) //
     3            31X,2H27,10X,11HSIZE EFFECT       )
   10 FORMAT(22H1TRUTH SUMMARY FOLLOWS)
   20 FORMAT(16H0FLIGHT SEGMENT ,I2)
   25 FORMAT(38H0INERTIAL POSITION AND VELOCITY FOLLOW)
   30 FORMAT(1H0,4H X =F15.8,4H FT.,10X,4H Y =F15.8,4H FT.,10X,4H Z =F15
```

```
     1        .8,4H FT. / 1X,4HVX =E15.8,8H FT./SEC,6X,4HVY =E15.8,8H FT./
     2SEC,6X,4HVZ =E15.8,8H FT./SEC)
   40 FORMAT(1H0,4H X =E15.8,7H METERS,10X,4H Y =E15.8,7H METERS,10X,
     1        4H Z =E15.8,7H METERS / 1X,4HVX =E15.8,11H METERS/SEC,6X,
     2        4HVY =E15.8,11H METERS/SEC,6X,4HVZ =E15.8,11H METERS/SEC)
   50 FORMAT(1H0,6X,6HRADIUS,24X,8HVELOCITY,25X,5HGAMMA,25X,4HTIME / 1X,
     1        E15.8,4H FT.,10X,E15.8,8H FT./SEC,10X,E15.8,5H RAD.,10X,
     2        E15.8,4H SEC//)
   55 FORMAT(1H0,8X,6HRADIUS,27X,8HVELOCITY,26X,5HGAMMA,25X,4HTIME / 1X,
     1        E15.8,7H METERS,10X,E15.8,11H METERS/SEC,10X,E15.8,5H RAD.,
     2        10X,E15.8,4H SEC//)
   60 FORMAT(4H0TBI / 3(5X,E15.8) / 3(5X,E15.8) / 3(5X,E15.8) ////)
   75 FORMAT(22H1ERROR SUMMARY FOLLOWS)
   80 FORMAT(3H0ES,6X,8HDELRA(M),10X,8HDELDR(M),10X,8HDELCR(M),8X,
     1       11HDELVEL(M/S),6X,12HDELGAM(URAD),6X,12HDELPSI(URAD),
     2       5X,13HDELTIME(MSEC) //)
   81 FORMAT(3H0ES,6X,8HDELRA(F),10X,8HDELDR(F),10X,8HDELCR(F),8X,
     1       11HDELVEL(F/S),6X,12HDELGAM(URAD),6X,12HDELPSI(URAD),
     2       5X,13HDELTIME(MSEC) //)
   90 FORMAT(1X,I2,1X,5X,F8.1,10X,F8.1,10X,F8.1,10X,F8.2,9X,F8.1,10X,
     1         F8.1,10X,F8.1)
   95  FORMAT(4H0RSS,5X,F8.1,10X,F8.1,10X,F8.1,10X,F8.2,9X,F8.1,10X,
     1         F8.1,10X,F8.1///)
   96 FORMAT(/// 35H0INPUT DATA FOR ERROR MODELS FOLLOW)
   97 FORMAT(6X,31H FIRST-ORDER INTEGRATION SCHEME)
   98 FORMAT(6X,32H SECOND-ORDER INTEGRATION SCHEME)
   99 FORMAT(6X,32H FOURTH-ORDER INTEGRATION SCHEME)
  100 FORMAT(6X,1H ,I2,23H BIT COMPUTER WORD SIZE)
  101 FORMAT(6X,26H COMPUTATIONAL FREQUENCY =F15.8,4H CPS)
  102 FORMAT(6X,17H SINUSOIDAL RATES)
  103 FORMAT(11X,22H NUMBER OF SINUSOIDS =I2)
  104 FORMAT(11X,11H AMPLITUDE    / 16X5(E20.8) / 16X,5(E20.8))
  105 FORMAT(11X,12H FREQUENCY    / 16X,5(E20.8) / 16X,5(E20.8))
  106 FORMAT(11X,35H DIRECTION COSINES OF EACH SINUSOID)
  107 FORMAT(16X,3(E20.8))
  108 FORMAT(6X,14H CONING MOTION)
  109 FORMAT(11X,30H NUMBER OF PAIR OF SINUSOIDS =I2)
  110 FORMAT(11X,32H DIRECTION COSINES OF SINUSOID 1)
  111 FORMAT(11X,32H DIRECTION COSINES OF SINUSOID 2)
  112 FORMAT(/// 1H0)
  113 FORMAT(6X,35H SECOND-ORDER COORDINATE CONVERSION)
  114 FORMAT(6X,35H FOURTH-ORDER COORDINATE CONVERSION)
  115 FORMAT(6X,15H QUANTIZATION =E15.8)
  116 FORMAT(6X,25H VIBRATORY POWER SPECTRUM)
  117 FORMAT(11X,12H MOMENT ARM  / 16X,5(E20.8) / 16X,5(E20.8))
C     INITIALIZATIONS
      GCON = 6.67E-11
      PI = 3.1415927
      PIOTWO = 1.5707964
      ESMAX = 27
  119 DO 125 J=2,ESMAX
      DO 120 I=1,3
      DELVD(I,J,1)=0.
      DELRA (I,J,1)=0.
  120 CONTINUE
  125 CONTINUE
      CALL INPUT1
      WRITE(6,8)
      WRITE(6,9)
      IES = 2
      DO 300 L = 1,3
```

```
      DO 200 M = 1,3
      OMEG(L,M) = 0.
  200 CONTINUE
  300 CONTINUE
      DO 400 L = 1,FSMAX
      DO 350 M = 1,IFSMAX
      TTOTAL(L,M) = 0.
  350 CONTINUE
  400 CONTINUE
      ISEGS = IFSMAX - 1
      DO 5000 LOOP = 1,ISEGS
      FS = 1
      CALL INPUT2
      IF(ICHANG .EQ. 0) GO TO 2500
      READ(5,NAM1)
      CALL ERRCAL
 2500 WRITE(6,96)
      GO TO (2510,2520,2530),ISCHME
 2510 WRITE(6,97)
      GO TO 2550
 2520 WRITE(6,98)
      GO TO 2550
 2530 WRITE(6,99)
 2550 WRITE(6,100) IWDSIZ
      GO TO (2552,2554),ICON
 2552 WRITE(6,113)
      GO TO 2556
 2554 WRITE(6,114)
 2556 WRITE(6,115) QUANT
      WRITE(6,101) COMPFQ
      WRITE(6,102)
      WRITE(6,103) NSS
      IF (NSS .EQ. 0) GO TO 2565
      WRITE(6,104) (AMPSS(I),I=1,NSS)
      WRITE(6,105) (FREQ(I),I=1,NSS)
      WRITE(6,117) (ARM(I),I=1,NSS)
      WRITE(6,106)
      DO 2560 J = 1,NSS
      WRITE(6,107) (DCOS(I,J),I=1,3)
 2560 CONTINUE
 2565 WRITE (6,108)
      WRITE(6,109) KSS
      IF (KSS .EQ. 0) GO TO 2585
      WRITE(6,104) (ACONSS(I),I=1,KSS)
      WRITE(6,105) (FCONSS(I),I=1,KSS)
      WRITE(6,110)
      DO 2570 J = 1,KSS
      WRITE(6,107) (DCS1(I,J),I=1,3)
 2570 CONTINUE
      WRITE(6,111)
      DO 2580 J = 1,KSS
      WRITE(6,107) (DCS2(I,J),I=1,3)
 2580 CONTINUE
 2585 IF (KF .EQ. 0) GO TO 2600
      WRITE(6,116)
      WRITE(6,104) (PSD(I),I=1,KF)
      WRITE(6,105) (PSDF(I),I=1,KF)
 2600 WRITE (6,112)
      GO TO (2700, 2800), KFLY
 2700 CALL BALLIS
      GO TO 4500
```

```
2800 CALL DATCN1
     DO 3000 I = 1,3
     DO 2900 J = 1,3
     TAIOLD(I,J) = TAI(I,J)
2900 CONTINUE
3000 CONTINUE
     CALL NAVIG
4500 CALL OUTPUT
     IFS = IFS + 1
5000 CONTINUE
     WRITE(6,10)
     DO 7000 IFS = 2,IFSMAX
     K = IFS - 1
     WRITE(6,20) K
     WRITE(6,25)
     R = SQRT(XTRUE(IFS) ** 2 + YTRUE(IFS) ** 2 + ZTRUE(IFS) ** 2)
     IF(IUNITS .EQ. 0) GO TO 6100
     X1 = XTRUE(IFS) * 3.281
     Y1 = YTRUE(IFS) * 3.281
     Z1 = ZTRUE(IFS) * 3.281
     VX1 = VXTRUE(IFS) * 3.281
     VY1 = VYTRUE(IFS) * 3.281
     VZ1 = VZTRUE(IFS) * 3.281
     WRITE(6,30) X1,Y1,Z1,VX1,VY1,VZ1
     R1 = R * 3.281
     D11 = D1TRUE(IFS) * 3.281
     WRITE(6,50) R1,D11,D2TRUE(IFS),TTOTAL(1,IFS)
     GO TO 6200
6100 WRITE(6,40) XTRUE(IFS),YTRUE(IFS),ZTRUE(IFS),VXTRUE(IFS),
    1     VYTRUE(IFS),VZTRUE(IFS)
     WRITE(6,55) R,D1TRUE(IFS),D2TRUE(IFS),TTOTAL(1,IFS)
6200 WRITE(6,60) ((TBISAV(I,J,1,IFS),J=1,3),I=1,3)
7000 CONTINUE
     WRITE(6,8)
     WRITE(6,9)
     WRITE(6,75)
     DO 9000 IFS = 2,IFSMAX
     K = IFS - 1
     WRITE(6,20) K
     IF(IUNITS .EQ. 0) GO TO 7500
     WRITE(6,81)
     GO TO 7600
7500 WRITE(6,80)
7600 DO 8000 FS = 2,FSMAX
     DELVD(2,FS,IFS) = 1.0E6 * DELVD(2,FS,IFS)
     DELVD(3,FS,IFS) = 1.0E6 * DELVD(3,FS,IFS)
     DT(FS,IFS) = 1.0E3 * DT(FS,IFS)
     IF(IUNITS .EQ. 0) GO TO 7700
     DO 7650 I =1,3
     DELRA(I,FS,IFS) = 3.281 * DELRA(I,FS,IFS)
7650 CONTINUE
     DELVD(1,FS,IFS) = 3.281 * DELVD(1,FS,IFS)
     WRITE(6,90) FS,(DELRA(I,FS,IFS),I=1,3),(DELVD(I,FS,IFS),I=1,3),
    1     DT(FS,IFS)
     GO TO 8000
7700 WRITE(6,90) FS,(DELRA(I,FS,IFS),I=1,3),(DELVD(I,FS,IFS),I=1,3),
    1     DT(FS,IFS)
8000 CONTINUE
     RSS5(IFS) = 1.0E6 * RSS5(IFS)
     RSS6(IFS) = 1.0E6 * RSS6(IFS)
     RSS7(IFS) = 1.0E3 * RSS7(IFS)
```

```
 8100 WRITE(6, 95) RSS1(IFS),RSS2(IFS),RSS3(IFS),RSS4(IFS),RSS5(IFS),
     1      RSS6(IFS),RSS7(IFS)
 9000 CONTINUE
      GO TO 119
      END
```

```
      SUBROUTINE INPUT1
      INTEGER FS,FSMAX
      COMMON OMEG(3,3),TLI(3,3),TEMP1(3,50),TEMP2(3,50),W(3,50),A(3,50)
     1        ,WTEMP(3,1),ATEMP(3,1),T(50),TRI(3,3),TIB(3,3),TRG(3,3),
     2        TGB(3,3),ALPHA(50),BETA(50),TWB(3,3),IADRSF,RP,GCON,XMASS,
     3        X,Y,Z,DELTS,DTOTWO,IFRAME,VX,VY,VZ,NPTS,TIA(3,3),TAI(3,3)
     4        ,TAIOLD(3,3),TAINEW(3,3),TTOTAL(27,10),TIME,TMAX,XTRUE(10)
     5        ,YTRUE(10),ZTRUE(10),VXTRUE(10),VYTRUE(10),VZTRUE(10),
     6        A1DOT,A2DOT,A3DOT,DELRA(3,27,10),DELVD(3,27,10),D1,D2,D3,
     7        D1TRUE(10),D2TRUE(10),D3TRUE(10),DOTOLD(3,3),DOTNEW(3,3),
     8        AXOLD,AXNEW,AYOLD,AYNEW,AZOLD,AZNEW,VXOLD,VXNEW,VYOLD,
     9        VYNEW,VZOLD,VZNEW,GX,GY,GZ,DT(27,10),TRISAV(3,3,27,10)
      COMMON FS,FSMAX,IOPT,IVAR,IFUSE,PAR(7,7),FCM(7,7),ADOT(3,3),
     1        FIDOT(3,3),DEL(3,1),FNPI,PIOTWO,PI
     2        ,IDORR,IGORLT,IUNITS,RRATE,IFS,IFSMAX,TRA(3,3),TAR(3,3)
     3        ,RMAX,THETAF,R,THETA,KELY,FN
     4       ,RSS1(10),RSS2(10),RSS3(10),RSS4(10),RSS5(10),RSS6(10)
     5       ,RSS7(10),ERRMAG(27),ERRDC(3,27),HOLD(10),SAVE(10),
     6       F12MAT(3,1),F14MAT(3,1),F16MAT(3,1),QUANT,ARM(10),PSD(10),
     7       PSDF(10),KF,ICON
      COMMON AMPSS(10),FREQ(10),DCOS(3,10),DCS1(3,5),DCS2(3,5),
     1        KSS,ACONSS(5),FCONSS(5),DUMMY(3,3),ICHANG
     2       ,ISCHME,IWDSI7,COMPFO,NSS,DELXI(27,10),DELYI(27,10),
     3       DELVXI(27,10),DELVYI(27,10),DELVZI(27,10),DELZI(27,10)
     4       ,F13MAT(3,1),F15MAT(3,1)
10    FORMAT(16I5)
20    FORMAT(5F15.8)
 30   FORMAT(24H0TRAJECTORY CONSISTS OF ,I2,9H SEGMENTS)
 40   FORMAT(26H0ALL DATA IN ENGLISH UNITS)
 45   FORMAT(25H0ALL DATA IN METRIC UNITS)
 80   FORMAT(52H0TRANSFORMATION MATRIX FROM GYRO FRAME TO BODY FRAME /
     1        3(5X,F15.8) / 3(5X,F15.8) / 3(5X,F15.8))
 90   FORMAT(61H0TRANSFORMATION MATRIX FROM ACCELEROMETER FRAME TO BODY
     1FRAME / 3(5X,F15.8) / 3(5X,F15.8) / 3(5X,F15.8))
100   FORMAT(12A6)
105   FORMAT(1H1,12A6)
120   FORMAT(19H0PRIMARY BODY DATA / 10X,6HMASS =F15.8,6H SLUGS,10X,
     1        8HRADIUS =F15.8,4H FT.,10X,17HROTATIONAL RATE =F15.8,8H DEG/
     2SEC)
125   FORMAT(19H0PRIMARY BODY DATA / 10X,6HMASS =F15.8,10H KILOGRAMS,
     1        10X,8HRADIUS =F15.8,7H METERS,10X,17HROTATIONAL RATE =F15.8,
     2        8H DEG/SEC)
130   FORMAT(25H0LAUNCH POINT COORDINATES / 10X,10HLATITUDE =F13.8,8H DE
     1GREES,10X,11HLONGITUDE =F13.8,8H DEGREES)
140   FORMAT(29H0INITIAL INERTIAL COORDINATES / 10X,3HX =F15.8,4H FT.,
     1        10X,3HY =E15.8,4H FT.,10X,3HZ =F15.8,4H FT. /  9X,4HVX =F15.
     2        8,8H FT./SEC, 6X,4HVY =E15.8,8H FT./SEC, 6X,4HVZ = F15.8,
     3        8H FT./SEC)
150   FORMAT(29H0INITIAL INERTIAL COORDINATES / 10X,3HX =F15.8,7H METERS
     1        ,10X,3HY =F15.8,7H METERS,10X,3HZ =F15.8,7H METERS /  9X,
     2        4HVX =F15.8,11H METERS/SEC,5X,4HVY =F15.8,11H METERS/SEC,5X,
     3        4HVZ =F15.8,11H METERS/SEC)
160   FORMAT(64H0INITIAL TRANSFORMATION MATRIX FROM BODY FRAME TO INERTI
     1AL FRAME / 3(5X,F15.8) / 3(5X,F15.8) / 3(5X,F15.8))
170   FORMAT(// 18H0AZIMUTH HEADING =F15.8)
180   FORMAT(//25H0INITIAL CONDITION ERRORS // 11X,7HDELRA =F15.8,
     1        10X,7HDELDR =F15.8,10X,7HDELCR =E15.8 // 8X,10HDELRADOT =,
     2        F15.8,7X,10HDELDRDOT =F15.8,7X,10HDELCRDOT =F15.8)
190   FORMAT(// 25H0INITIAL ALIGNMENT ERRORS // 11X,7HDELAZ =E15.8,
     1        9X,8H0PVERT =F15.8,9X,8HIPVERT =F15.8)
      DIMENSION CARD (12)
```

```
      READ(5,100) CARD
      WRITE(6,105) CARD
      READ(5,10) IESMAX,IUNITS,IPOSER
      ITEMP = IESMAX - 1
      WRITE(6,30) ITEMP
      READ(5,20) XMASS,RP,RRATE
      IF(IUNITS .EQ. 0) GO TO 1000
      WRITE(6,40)
      WRITE(6,120) XMASS,RP,RRATE
      XMASS = XMASS * 14.594126
      RP = RP * .3048
      GO TO 1050
 1000 WRITE(6,45)
      WRITE(6,125) XMASS,RP,RRATE
 1050 RRATE = RRATE * 1.745E-2
      DO 1100 I = 1,3
      READ(5,20) (TGB(I,J),J=1,3)
 1100 CONTINUE
      WRITE(6,80) ((TGB(I,J),J=1,3),I=1,3)
      CALL MATRAN(TGB,TBG)
      DO 1200 I = 1,3
      READ(5,20) (TAB(I,J),J=1,3)
 1200 CONTINUE
      CALL MATRAN(TAB,TBA)
      WRITE(6,90) ((TAB(I,J),J=1,3),I=1,3)
      IF(IPOSER .EQ. 0)  GO TO 1250
      READ(5,20) G1,G2
      WRITE(6,130) G1,G2
      G1 = G1 * 1.745E-2
      G2 = G2 * 1.745E-2
      X = RP * COS(G1)
      Y = 0.
      Z = RP * SIN(G1)
      VX = 0.
      VY = X * RRATE
      VZ = 0.
      GO TO 1400
 1250 READ(5,20) X,Y,Z
      READ(5,20) VX,VY,VZ
      IF(IUNITS .EQ. 0) GO TO 1400
      WRITE(6,140) X,Y,Z,VX,VY,VZ
      X = .3048 * X
      Y = .3048 * Y
      Z = .3048 * Z
      VX = .3048 * VX
      VY = .3048 * VY
      VZ = .3048 * VZ
      GO TO 1450
 1400 WRITE(6,150) X,Y,Z,VX,VY,VZ
 1450 DO 1500 I = 1,3
      READ(5,20) (TBI(I,J),J=1,3)
 1500 CONTINUE
      WRITE(6,160) ((TBI(I,J),J=1,3),I=1,3)
      XTRUE(1) = X
      YTRUE(1) = Y
      ZTRUE(1) = Z
      VXTRUE(1) = VX
      VYTRUE(1) = VY
      VZTRUE(1) = VZ
      DO 1600 L = 1,3
      DO 1550 M = 1,3
```

```
      DO 1525 K=1,ESMAX
      TBISAV (L,M,K,1)=TBI(L,M)
 1525 CONTINUE
 1550 CONTINUE
 1600 CONTINUE
      R = SQRT(X ** 2 + Y ** 2 + Z ** 2)
      READ(5,20) AZ,DELRA(1,2,1),DELRA(2,3,1),DELRA(3,4,1)
      WRITE(6,170) AZ
      TEMP1(1,1) = X / R
      TEMP1(2,1) = Y / R
      TEMP1(3,1) = Z / R
      TEMP = SQRT(TEMP1(2,1) ** 2 + TEMP1(1,1) ** 2)
      TEMP1(1,2) = - TEMP1(1,1) / TEMP * TEMP1(3,1)
      TEMP1(2,2) = - TEMP1(2,1) / TEMP * TEMP1(3,1)
      TEMP1(3,2) = 1. / TEMP * (TEMP1(2,1) ** 2 + TEMP1(1,1) ** 2)
      TEMP1(1,3) = TEMP1(2,1) / TEMP
      TEMP1(2,3) = - TEMP1(1,1) / TEMP
      TEMP1(3,3) = 0.
      TEMP2(1,1) = 1.
      TEMP2(2,1) = 0.
      TEMP2(3,1) = 0.
      TEMP2(1,2) = 0.
      TEMP2(2,2) = COS(AZ)
      TEMP2(3,2) = -SIN(AZ)
      TEMP2(1,3) = 0.
      TEMP2(2,3) = - TEMP2(3,2)
      TEMP2(3,3) = TEMP2(2,2)
      CALL MATMUL(TEMP1,3,3,TEMP2,3,TAI)
      CALL MATRAN ( TAI , TIA)
      FIDOT(1,1) = VX
      FIDOT(2,1) = VY
      FIDOT(3,1) = VZ
      CALL MATMUL (TIA,3,3,FIDOT,1,ADOT)
      CALL TRTAD
      D1TRUE(1)=D1
      D2TRUE(1)=D2
      D3TRUE(1)=D3
      IF(IPOSER .EQ. 0) GO TO 1800
      TEMP1(1,1) = DELRA(1,2,1)
      TEMP1(2,1) = DELRA(2,3,1)
      TEMP1(3,1) = DELRA(3,4,1)
      CALL MATMUL(TAI,3,3,TEMP1,1,TEMP2)
      TEMP2(2,1) = RRATE*(TEMP2(1,1) + XTRUE(1)) - VYTRUE(1)
      TEMP2(1,1) = 0.
      TEMP2(3,1) = 0.
      CALL MATRAN(TAI,TIA)
      CALL MATMUL(TIA,3,3,TEMP2,1,TEMP1)
      DRADOT = TEMP1(1,1)
      DDRDOT = TEMP1(2,1)
      DCRDOT = TEMP1(3,1)
      GO TO 1900
 1800 READ(5,20) DRADOT,DDRDOT,DCRDOT
 1900 WRITE(6,180) DELRA(1,2,1),DELRA(2,3,1),DELRA(3,4,1),DRADOT,DDRDOT,
     1      DCRDOT
      DUMMY(1,1) = TAI(1,1) * DRADOT
      DUMMY(1,2) = TAI(1,2) * DDRDOT
      DUMMY(1,3) = TAI(1,3) * DCRDOT
      DUMMY(2,1) = TAI(2,1) * DRADOT
      DUMMY(2,2) = TAI(2,2) * DDRDOT
      DUMMY(2,3) = TAI(2,3) * DCRDOT
      DUMMY(3,1) = TAI(3,1) * DRADOT
```

```
      DUMMY(3,2) = TAI(3,2) * DDRDOT
      DUMMY(3,3) = TAI(3,3) * DCRDOT
      ES = 5
      DO 2000 I = 1,3
      TEMP1(1,1) = VXTRUE(1) + DUMMY(1,I)
      TEMP1(2,1) = VYTRUE(1) + DUMMY(2,I)
      TEMP1(3,1) = VZTRUE(1) + DUMMY(3,I)
      CALL MATMUL(TIA,3,3,TEMP1,1,ADOT)
      CALL TRTAD
      DELVD(1,ES,1) = D1 - D1TRUE(1)
      DELVD(2,ES,1) = D2 - D2TRUE(1)
      DELVD(3,ES,1) = D3 - D3TRUE(1)
      ES = ES + 1
 2000 CONTINUE
      READ(5,20) DELAZ,FOPV,FIPV
      WRITE(6,190) DELAZ,FOPV,FIPV
      DUMMY(1,1) = TAI(1,1) * DELAZ
      DUMMY(1,2) = TAI(1,2) * FOPV
      DUMMY(1,3) = TAI(1,3) * FIPV
      DUMMY(2,1) = TAI(2,1) * DELAZ
      DUMMY(2,2) = TAI(2,2) * FOPV
      DUMMY(2,3) = TAI(2,3) * FIPV
      DUMMY(3,1) = TAI(3,1) * DELAZ
      DUMMY(3,2) = TAI(3,2) * FOPV
      DUMMY(3,3) = TAI(3,3) * FIPV
      TEMP1(1,1) = 1.
      TEMP1(2,2) = 1.
      TEMP1(3,3) = 1.
      DO 2300 K = 1,3
      DO 2200 I = 1,3
      DO 2100 J = 1,3
      TRI(I,J) = TRISAV(I,J,ES,1)
 2100 CONTINUE
 2200 CONTINUE
      TEMP1(2,1) = DUMMY(3,K)
      TEMP1(3,1) = - DUMMY(2,K)
      TEMP1(1,2) = - DUMMY(3,K)
      TEMP1(3,2) = DUMMY(1,K)
      TEMP1(1,3) = DUMMY(2,K)
      TEMP1(2,3) = - DUMMY(1,K)
      CALL MATMUL(TEMP1,3,3,TRI,3,TEMP2)
      DO 2275 L = 1,3
      DO 2250 M = 1,3
      TRISAV(L,M,ES,1) = TEMP2(L,M)
 2250 CONTINUE
 2275 CONTINUE
      ES = ES + 1
 2300 CONTINUE
      ES = 1
      RETURN
      END
```

```
      SUBROUTINE INPUT2
      INTEGER ES,ESMAX
      COMMON OMEG(3,3),TLI(3,3),TEMP1(3,50),TEMP2(3,50),W(3,50),A(3,50)
     1       ,WTEMP(3,1),ATEMP(3,1),T(50),TBI(3,3),TIB(3,3),TBG(3,3),
     2       TGB(3,3),ALPHA(50),BETA(50),TWB(3,3),IAORSF,RP,GCON,XMASS,
     3       X,Y,Z,DELTS,DTOTWO,IFRAME,VX,VY,VZ,NPTS,TIA(3,3),TAI(3,3)
     4       ,TAIOLD(3,3),TAINEW(3,3),TTOTAL(27,10),TIME,TMAX,XTRUE(10)
     5       ,YTRUE(10),ZTRUE(10),VXTRUE(10),VYTRUE(10),VZTRUE(10),
     6       A1DOT,A2DOT,A3DOT,DELRA(3,27,10),DELVD(3,27,10),D1,D2,D3,
     7       D1TRUE(10),D2TRUE(10),D3TRUE(10),DOTOLD(3,3),DOTNEW(3,3),
     8       AXOLD,AXNEW,AYOLD,AYNEW,AZOLD,AZNEW,VXOLD,VXNEW,VYOLD,
     9       VYNEW,VZOLD,VZNEW,GX,GY,GZ,DT(27,10),TBISAV(3,3,27,10)
      COMMON ES,ESMAX,IOPT,IVAR,IFUSE,PAR(7,7),ECM(7,7),ADOT(3,3),
     1       FIDOT(3,3),DEL(3,1),ENPI,PIOTWO,PI
     2       ,IDORR,IGORLT,IUNITS,RRATE,IFS,IFSMAX,TBA(3,3),TAB(3,3)
     3       ,RMAX,THETAF,R,THETA,KELY,EN
     4      ,RSS1(10),RSS2(10),RSS3(10),RSS4(10),RSS5(10),RSS6(10)
     5      ,RSS7(10),ERRMAG(27),ERRDC(3,27),HOLD(10),SAVE(10),
     6      E12MAT(3,1),E14MAT(3,1),E16MAT(3,1),QUANT,ARM(10),PSD(10),
     7      PSDE(10),KE,ICON
      COMMON AMPSS(10),FREQ(10),DCOS(3,10),DCS1(3,5),DCS2(3,5),
     1       KSS,ACONSS(5),ECONSS(5),DUMMY(3,3),ICHANG
     2      ,ISCHME,IWDSIZ,COMPEQ,NSS,DELXI(27,10),DELYI(27,10),
     3      DELVXI(27,10),DELVYI(27,10),DELVZI(27,10),DELZI(27,10)
     4      ,E13MAT(3,1),E15MAT(3,1)
   10 FORMAT(16I5)
   15 FORMAT (E15.8,I5)
   20 FORMAT(5E15.8)
   50 FORMAT(36H0ATTITUDE CONSTANT IN INERTIAL FRAME)
   54 FORMAT(33H0ATTITUDE CONSTANT IN LOCAL FRAME)
   58 FORMAT(30H0ATTITUDE INTEGRATED OPEN LOOP)
   60 FORMAT(46H0FLIGHT SEGMENT TERMINATED WHEN RADIUS EXCEEDS,E15.8,
     1       4H FT.)
   65 FORMAT(46H0FLIGHT SEGMENT TERMINATED WHEN RADIUS EXCEEDS,E15.8,
     1       7H METERS)
   70 FORMAT(45H0FLIGHT SEGMENT TERMINATED WHEN THETA EXCEEDS,E15.8,
     1       8H RADIANS)
   80 FORMAT(46H0FLIGHT SEGMENT TERMINATED WHEN RADIUS EXCEEDS,E15.8,
     1       15H FT. OR ON TIME)
   85 FORMAT(46H0FLIGHT SEGMENT TERMINATED WHEN RADIUS EXCEEDS,E15.8,
     1       18H METERS OR ON TIME)
   90 FORMAT(36H0FLIGHT TERMINATED WHEN TIME EXCEEDS,E15.8,5H SEC.)
  110 FORMAT(53H0TRANSFORMATION MATRIX FROM L FRAME TO INERTIAL FRAME /
     1       3(5X,E15.8) / 3(5X,E15.8) / 3(5X,E15.8))
  120 FORMAT(1H1,36H TRAJECTORY DATA FOR FLIGHT SEGMENT ,I2)
  130 FORMAT(33H0THIS IS A POWERED FLIGHT SEGMENT)
  135 FORMAT(30H0THIS IS A FREE FLIGHT SEGMENT)
  150 FORMAT(29H0TABULAR DATA IS ACCELERATION)
  160 FORMAT(31H0TABULAR DATA IS SPECIFIC FORCE)
  170 FORMAT(34H0TABULAR DATA IS IN INERTIAL FRAME)
  180 FORMAT(39H0TABULAR DATA IS IN AUX. INERTIAL FRAME)
  190 FORMAT(30H0TABULAR DATA IS IN BODY FRAME)
  200 FORMAT(35H0TABULAR DATA IS IN WIND-AXIS FRAME)
  210 FORMAT(24H0INTEGRATION INCREMENT =E15.8,5H SEC.)
  220 FORMAT(40H0TABULAR DATA IS IN THE FOLLOWING FORMAT // 13X,4HTIME,
     1  16X,2HWX,23X,2HWY,23X,2HWZ / 33X,2HAX,23X,2HAY,23X,2HAZ / 31X,
     2       5HALPHA,22X,4HBETA)
  223 FORMAT(// 21H0TABULAR DATA FOLLOWS //  9X,4HTIME,15X,2HAX,16X,
     1       2HAY,16X,2HAZ,16X,2HWX,16X,2HWY,16X,2HWZ)
  224 FORMAT(7(3X,E15.8))
  227 FORMAT(// 21H0TABULAR DATA FOLLOWS // 10X,4HTIME,16X,2HWX,17X,2HWY
```

```
     1        ,17X,2HWZ)
  228 FORMAT(4(4X,F15.8))
  230 FORMAT(1H0,F15.8,3(10X,F15.8) / 16X,3(10X,F15.8) / 16X,2(10X,F15.8
     1        ))
      ITEMP = IFS - 1
      WRITE(6,120) ITEMP
      READ(5,10) KFLY,ICHANG
      GO TO (1000,2000),KFLY
 1000 WRITE(6,135)
      READ(5,10) IVAR,IOPT
      GO TO (1100,1200),IVAR
 1100 READ(5,15) RMAX,N
      FN = N
      FNPI = FN * PI
      IF(IUNITS .EQ. 0) GO TO 1120
      WRITE(6,60) RMAX
      RMAX = .3048 * RMAX
      GO TO 1250
 1120 WRITE(6,65) RMAX
      GO TO 1250
 1200 READ(5,20) THETAF
      WRITE(6,70) THETAF
 1250 GO TO (1260,1270,1280), IOPT
 1260 WRITE(6,50)
      GO TO 4200
 1270 WRITE(6,54)
      GO TO 4200
 1280 WRITE(6,58)
      READ(5,15) DELTS,IFRAME
      WRITE(6,210) DELTS
      DTOTWO = .5 * DELTS
      GO TO (1300,1310,1320,1330), IFRAME
 1300 WRITE(6,180)
      DO 1305 I = 1,3
      READ(5,20) (TLI(I,J),J=1,3)
 1305 CONTINUE
      WRITE(6,110) ((TLI(I,J),J=1,3),I=1,3)
      GO TO 1400
 1310 WRITE(6,170)
      GO TO 1400
 1320 WRITE(6,200)
      GO TO 1400
 1330 WRITE(6,190)
 1400 READ(5,10) NPTS,IDORR
      WRITE(6,227)
      DO 1450 I = 1,NPTS
      READ(5,20) T(I),W(1,I),W(2,I),W(3,I)
      IF (I .GT. 1) GO TO 1420
      TTT = T(1)
 1420 T(I) = T(I) - TTT
      WRITE(6,228) T(I),W(1,I),W(2,I),W(3,I)
 1450 CONTINUE
      GO TO 4160
 2000 WRITE(6,130)
      READ(5,10) IFUSF,IFRAME,NPTS,IAORSF,IGORLT,IDORR
      GO TO (2100,2200,2300,2400), IFUSF
 2100 READ(5,20) RMAX,DELTS
      IF(IUNITS .EQ. 0) GO TO 2120
      WRITE(6,80) RMAX
      RMAX = .3048 * RMAX
      GO TO 2500
```

```
2120 WRITE(6,85) RMAX
     GO TO 2500
2200 READ(5,20) RMAX,DELTS
     IF(IUNITS .EQ. 0) GO TO 2220
     WRITE(6,60) RMAX
     RMAX = .3048 * RMAX
     GO TO 2500
2220 WRITE(6,65) RMAX
     GO TO 2500
2300 READ(5,20) TMAX,DELTS
     WRITE(6,90) TMAX
     GO TO 2500
2400 READ(5,20) THETAF,DELTS
     WRITE(6,70) THETAF
2500 WRITE(6,210) DELTS
     DTOTWO = .5 * DELTS
     GO TO (2600,2700,2800,2900),IFRAME
2600 WRITE(6,180)
     DO 2625 I = 1,3
     READ(5,20) (TLI(I,J),J=1,3)
2625 CONTINUE
     WRITE(6,110) ((TLI(I,J),J=1,3),I=1,3)
     GO TO 3000
2700 WRITE(6,170)
     GO TO 3000
2800 WRITE(6,200)
     GO TO 3000
2900 WRITE(6,190)
3000 GO TO (3100,3150),IAORSF
3100 WRITE(6,150)
     GO TO 3175
3150 WRITE(6,160)
3175 IF(IFRAME .EQ. 3) GO TO 3200
     WRITE(6,223)
     DO 3195 I = 1,NPTS
     READ(5,20) T(I),W(1,I),W(2,I),W(3,I),A(1,I),A(2,I),A(3,I)
     IF (I .GT. 1) GO TO 3185
     X2 = T(1)
3185 T(I) = T(I) - X2
     WRITE(6,224) T(I),A(1,I),A(2,I),A(3,I),W(1,I),W(2,I),W(3,I)
3195 CONTINUE
     GO TO 3400
3200 WRITE(6,220)
     DO 3300 I = 1,NPTS
     READ(5,20) T(I),W(1,I),W(2,I),W(3,I),A(1,I),A(2,I),A(3,I),ALPHA(I)
    1       ,BETA(I)
     IF (I .GT. 1) GO TO 3250
     TTT = T(1)
3250 T(I) = T(I) - TTT
     WRITE(6,230) T(I),W(1,I),W(2,I),W(3,I),A(1,I),A(2,I),A(3,I),
    1       ALPHA(I),BETA(I)
3300 CONTINUE
3400 GO TO (3500,3600), IGORLT
3500 DO 3550 J = 1,NPTS
     DO 3525 I = 1,3
     A(I,J) = 9.80665 * A(I,J)
3525 CONTINUE
3550 CONTINUE
     GO TO 4000
3600 IF(IUNITS .EQ. 0) GO TO 4000
     DO 3650 J = 1,NPTS
```

```
      DO 3625 I = 1,3
      A(I,J) = .3048 * A(I,J)
 3625 CONTINUE
 3650 CONTINUE
 4000 GO TO (4100,4200),IDORR
 4100 DO 4150 J = 1,NPTS
      ALPHA(J) = 1.745E-2 * ALPHA(J)
      BETA(J) = 1.745E-2 * BETA(J)
      DO 4125 I = 1,3
      W(I,J) = 1.745E-2 * W(I,J)
 4125 CONTINUE
 4150 CONTINUE
      GO TO 4200
 4160 GO TO (4165,4200),IDORR
 4165 DO 4175 J = 1,NPTS
      DO 4170 I = 1,3
      W(I,J) = 1.745E-2 * W(I,J)
 4170 CONTINUE
 4175 CONTINUE
 4200 RETURN
      END
```

```
      SUBROUTINE ERRCAL
      INTEGER FS,FSMAX
      COMMON OMEG(3,3),TLI(3,3),TEMP1(3,50),TEMP2(3,50),W(3,50),A(3,50)
     1       ,WTEMP(3,1),ATEMP(3,1),T(50),TBI(3,3),TIB(3,3),TBG(3,3),
     2       TGB(3,3),ALPHA(50),BETA(50),TWB(3,3),IADRSE,RP,GCON,XMASS,
     3       X,Y,Z,DELTS,DTOTWO,IFRAME,VX,VY,VZ,NPTS,TIA(3,3),TAI(3,3)
     4       ,TAIOLD(3,3),TAINEW(3,3),TTOTAL(27,10),TIME,TMAX,XTRUE(10)
     5       ,YTRUE(10),ZTRUE(10),VXTRUE(10),VYTRUE(10),VZTRUE(10),
     6       A1DOT,A2DOT,A3DOT,DELRA(3,27,10),DELVD(3,27,10),D1,D2,D3,
     7       D1TRUE(10),D2TRUE(10),D3TRUE(10),DOTOLD(3,3),DOTNEW(3,3),
     8       AXOLD,AXNEW,AYOLD,AYNEW,AZOLD,AZNEW,VXOLD,VXNEW,VYOLD,
     9       VYNEW,VZOLD,VZNEW,GX,GY,GZ,DT(27,10),TBISAV(3,3,27,10)
      COMMON FS,FSMAX,IOPT,IVAR,IFUSE,PAR(7,7),ECM(7,7),ADOT(3,3),
     1       EIDOT(3,3),DEL(3,1),ENPI,PIOTWO,PI
     2       ,IDORR,IGORLT,IUNITS,RRATE,IFS,IFSMAX,TBA(3,3),TAB(3,3)
     3       ,RMAX,THETAF,R,THETA,KFLY,FN
     4      ,RSS1(10),RSS2(10),RSS3(10),RSS4(10),RSS5(10),RSS6(10)
     5      ,RSS7(10),ERRMAG(27),ERRDC(3,27),HOLD(10),SAVE(10),
     6      E12MAT(3,1),E14MAT(3,1),E16MAT(3,1),QUANT,ARM(10),PSD(10),
     7      PSDE(10),KE,ICON
      COMMON AMPSS(10),FREQ(10),DCOS(3,10),DCS1(3,5),DCS2(3,5),
     1       KSS,ACONSS(5),FCONSS(5),DUMMY(3,3),ICHANG
     2      ,ISCHME,IWDSI7,COMPFQ,NSS,DELXI(27,10),DELYI(27,10),
     3      DELVXI(27,10),DELVYI(27,10),DELVZI(27,10),DELZI(27,10)
     4      ,E13MAT(3,1),E15MAT(3,1)
      DIMENSION HOLD1(3)
      ERRMAG(12) = 0.
      ERRMAG(18) = 0.
      ERRMAG(24) = 0.
      ERRMAG(27) = 0.
      KOUNT = 0
      DO 100 I = 1,3
      HOLD(I) = 0.
      HOLD1(I) = 0.
  100 CONTINUE
      IF(NSS .EQ. 0) GO TO 2500
      DO 1000 N = 1,NSS
      TEMP = SIN(PIOTWO * FREQ(N) / COMPFQ) ** 2
      GO TO (200,300,400), ISCHME
  200 ERR12 = 4.72E-2 * (AMPSS(N) / FREQ(N)) ** 2 * COMPFQ * TEMP
      GO TO 500
  300 ERR12 = 3.3E-3 * (AMPSS(N) / FREQ(N)) ** 4 * COMPFQ * TEMP ** 2
      GO TO 500
  400 ERR12 = 1.79E-3 * (AMPSS(N) / FREQ(N)) ** 4 * COMPFQ * TEMP ** 3
  500 DO 750 I = 1,3
      HOLD(I) = HOLD(I) + ERR12 * DCOS(I,N)
  750 CONTINUE
 1000 CONTINUE
      DO 1400 N = 1,NSS
      GO TO (1100,1200),ICON
 1100 ERR17 = 2.4  * ARM(N) * AMPSS(N) ** 2 * (FREQ(N) / COMPFQ) ** 2
      GO TO 1300
 1200 ERR17 = 12.0 * ARM(N) * AMPSS(N) ** 2 * (FREQ(N) / COMPFQ) ** 4
 1300 DO 1375 I = 1,3
      HOLD1(I) = HOLD1(I) + ERR17 * DCOS(I,N)
 1375 CONTINUE
 1400 CONTINUE
      SUM = 0.
      SUM1 = 0.
      DO 1500 I = 1,3
      SUM = SUM + HOLD(I) ** 2
```

```
      SUM1 = SUM1 + HOLD1(I) ** 2
 1500 CONTINUE
      ERRMAG(12) = SQRT(SUM)
      ERRMAG(27) = SQRT(SUM1)
      DO 2000 I = 1,3
      ERRDC(I,12) = HOLD(I) / ERRMAG(12)
 2000 CONTINUE
 2500 ERRMAG(15) = 1.015 * 2. ** (-IWDSIZ) * COMPFO
      DO 2900 I = 1,3
      HOLD1(I) = 0.
      HOLD(I) = 0.
 2900 CONTINUE
      IF(KSS .EQ. 0) GO TO 6700
      DO 5000 K = 1,KSS
      TEMP = FCONSS(K) / COMPFO
      ERR16 = .127E-5 * QUANT **2 * ACONSS(K) * TEMP
      IF(TEMP .GE. .8) GO TO 3500
      GO TO (3000,3100,3200),ISCHME
 3000 ERR14 = .132     * ACONSS(K) ** 2 / COMPFO
      GO TO 3600
 3100 ERR14 = .164 * ACONSS(K) ** 2 * FCONSS(K) / COMPFO ** 2
      GO TO 3600
 3200 ERR14 = .260 * ACONSS(K) ** 2 * FCONSS(K) ** 3 / COMPFO ** 4
      GO TO 3600
 3500 ERR14 = .105     * ACONSS(K) ** 2 / FCONSS(K)
 3600 SAVE(1) = DCS1(2,K) * DCS2(3,K) - DCS1(3,K) * DCS2(2,K)
      SAVE(2) = DCS1(3,K) * DCS2(1,K) - DCS1(1,K) * DCS2(3,K)
      SAVE(3) = DCS1(1,K) * DCS2(2,K) - DCS1(2,K) * DCS2(1,K)
      DO 4000 I = 1,3
      HOLD(I) = HOLD(I) + ERR14 * SAVE(I)
      HOLD1(I) = HOLD1(I) + ERR16 * SAVE(I)
 4000 CONTINUE
 5000 CONTINUE
      SUM = 0.
      SUM1 = 0.
      DO 6000 I = 1,3
      SUM = SUM + HOLD(I) ** 2
      SUM1 = SUM1 + HOLD1(I) ** 2
 6000 CONTINUE
      ERRMAG(18) = SQRT(SUM)
      ERRMAG(24) = SQRT(SUM1)
      DO 6500 I = 1,3
      ERRDC(I,15) = .57735
      ERRDC(I,18) = HOLD(I) / ERRMAG(18)
      ERRDC(I,21) = .57735
      IF(QUANT .EQ. 0.) GO TO 6400
      ERRDC(I,24) = HOLD1(I) / ERRMAG(24)
      GO TO 6500
 6400 ERRDC(I,24) = 0.
 6500 CONTINUE
      GO TO 6900
 6700 DO 6800 I = 1,3
      ERRDC(I,15) = .57735
      ERRDC(I,21) = .57735
      ERRDC(I,18) = 0.
      ERRDC(I,24) = 0.
 6800 CONTINUE
 6900 DO 7000 I = 1,3
      TEMP2(I,1) = ERRDC(I,18)
      DUMMY(I,1) = ERRDC(I,24)
      IF(NSS .EQ. 0) GO TO 6950
```

```
      TEMP1(I,1) = ERRDC(I,12)
      GO TO 7000
 6950 TEMP1(I,1) = 0.
 7000 CONTINUE
      CALL MATMUL(TBG,3,3,TEMP1,1,E12MAT)
      CALL MATMUL(TBG,3,3,TEMP2,1,E14MAT)
      CALL MATMUL(TBG,3,3,DUMMY,1,E16MAT)
      DO 7500 I = 1,3
      TEMP2(I,1) = ERRDC(I,15)
 7500 CONTINUE
      CALL MATMUL(TBG,3,3,TEMP2,1,E13MAT)
      DO 8000 I = 1,3
      E12MAT(I,1) = ERRMAG(12) * E12MAT(I,1)
      E13MAT(I,1) = ERRMAG(15) * E13MAT(I,1)
      E14MAT(I,1) = ERRMAG(18) * E14MAT(I,1)
      E16MAT(I,1) = ERRMAG(24) * E16MAT(I,1)
 8000 CONTINUE
      ERRMAG(21) = 0.
      IF(KE .EQ. 0) GO TO 9070
      TEMP = 2. * COMPEQ / PI
      DO 8025 K = 2,KE
      SAVE(K) = 1. / TEMP * PSDE(K)
 8025 CONTINUE
      XN = (ALOG(PSD(2)) - ALOG(PSD(1)))/(ALOG(PSDE(2))-ALOG(PSDE(1)))
      TAU = 1. / TEMP * PSDE(1)
      C = PSD(1) / (TEMP * TAU) ** XN
      GO TO (8035,8045,8055),ISCHME
 8035 DNEW = (SIN(TAU) / TAU) ** 2 * C * (TEMP * TAU) ** XN
      GO TO 8060
 8045 DNEW = (SIN(TAU) / TAU) ** 4 * (C * (TEMP * TAU) ** XN) ** 2
      GO TO 8060
 8055 DNEW = SIN(TAU) ** 6 / TAU ** 4 * (C * (TEMP * TAU) ** XN) ** 2
 8060 DO 9030 K = 2,KE
      IF(K .EQ. 2) GO TO 8070
      XN = (ALOG(PSD(K)) - ALOG(PSD(K-1)))/(ALOG(PSDE(K)) -
     1      ALOG(PSDE(K-1)))
      C = PSD(K-1) / (TEMP * TAU) ** XN
 8070 DTAU = PI * PSDE(K-1) / (40. * COMPEQ)
      DTAU02 = .5 * DTAU
 8080 TAU = TAU + DTAU
      DOLD = DNEW
      GO TO (8090,9000,9010),ISCHME
 8090 DNEW = (SIN(TAU) / TAU) ** 2 * C * (TEMP * TAU) ** XN
      GO TO 9020
 9000 DNEW = (SIN(TAU) / TAU) ** 4 * (C * (TEMP * TAU) ** XN) ** 2
      GO TO 9020
 9010 DNEW = SIN(TAU) ** 6 / TAU ** 4 * (C * (TEMP * TAU) ** XN) ** 2
 9020 ERRMAG(21) = ERRMAG(21) + DTAU02 * (DOLD + DNEW)
      IF(TAU + DTAU .LT. SAVE(K)) GO TO 8080
      IF(KOUNT .EQ. 1) GO TO 9025
      DTAU = SAVE(K) - TAU
      IF(DTAU .EQ. 0.) GO TO 9030
      KOUNT = 1
      DTAU02 = .5 * DTAU
      GO TO 8080
 9025 KOUNT = 0
 9030 CONTINUE
      GO TO (9040,9050,9060),ISCHME
 9040 ERRMAG(21) = .148     * ERRMAG(21)
      GO TO 9070
 9050 ERRMAG(21) = .0326    / COMPEQ * ERRMAG(21)
```

```
      GO TO 9070
 9060 ERRMAG(21) = .0177    / COMPFQ * ERRMAG(21)
 9070 DO 9065 I = 1,3
      DUMMY(I,1) = ERRDC(I,21)
 9065 CONTINUE
      CALL MATMUL(TBG,3,3,DUMMY,1,E15MAT)
      DO 9067 I = 1,3
      E15MAT(I,1) = ERRMAG(21) * E15MAT(I,1)
 9067 CONTINUE
      ERRMAG(13) = ERRMAG(12)
      ERRMAG(14) = ERRMAG(12)
      ERRMAG(16) = ERRMAG(15)
      ERRMAG(17) = ERRMAG(15)
      ERRMAG(19) = ERRMAG(18)
      ERRMAG(20) = ERRMAG(18)
      ERRMAG(22) = ERRMAG(21)
      ERRMAG(23) = ERRMAG(21)
      ERRMAG(25) = ERRMAG(24)
      ERRMAG(26) = ERRMAG(24)
      ERRDC(1,13) = 0.
      ERRDC(2,13) = ERRDC(2,12)
      ERRDC(3,13) = 0.
      ERRDC(1,14) = 0.
      ERRDC(2,14) = 0.
      ERRDC(3,14) = ERRDC(3,12)
      ERRDC(2,12) = 0.
      ERRDC(3,12) = 0.
      ERRDC(1,16) = 0.
      ERRDC(2,16) = ERRDC(2,15)
      ERRDC(3,16) = 0.
      ERRDC(1,17) = 0.
      ERRDC(2,17) = 0.
      ERRDC(3,17) = ERRDC(3,15)
      ERRDC(2,15) = 0.
      ERRDC(3,15) = 0.
      ERRDC(1,19) = 0.
      ERRDC(2,19) = ERRDC(2,18)
      ERRDC(3,19) = 0.
      ERRDC(1,20) = 0.
      ERRDC(2,20) = 0.
      ERRDC(3,20) = ERRDC(3,18)
      ERRDC(2,18) = 0.
      ERRDC(3,18) = 0.
      ERRDC(1,22) = 0.
      ERRDC(2,22) = ERRDC(2,21)
      ERRDC(3,22) = 0.
      ERRDC(1,23) = 0.
      ERRDC(2,23) = 0.
      ERRDC(3,23) = ERRDC(3,21)
      ERRDC(2,21) = 0.
      ERRDC(3,21) = 0.
      ERRDC(1,25) = 0.
      ERRDC(2,25) = ERRDC(2,24)
      ERRDC(3,25) = 0.
      ERRDC(1,26) = 0.
      ERRDC(2,26) = 0.
      ERRDC(3,26) = ERRDC(3,24)
      ERRDC(2,24) = 0.
      ERRDC(3,24) = 0.
      RETURN
      END
```

```
      SUBROUTINE BALLIS
      INTEGER ES,ESMAX
      COMMON OMEG(3,3),TLI(3,3),TEMP1(3,50),TEMP2(3,50),W(3,50),A(3,50)
     1       ,WTEMP(3,1),ATEMP(3,1),T(50),TBI(3,3),TIB(3,3),TBG(3,3),
     2       TGB(3,3),ALPHA(50),BETA(50),TWB(3,3),IADRSF,RP,GCON,XMASS,
     3       X,Y,Z,DELTS,DTOTWO,IFRAME,VX,VY,VZ,NPTS,TIA(3,3),TAI(3,3)
     4       ,TAIOLD(3,3),TAINEW(3,3),TTOTAL(27,10),TIME,TMAX,XTRUE(10)
     5       ,YTRUE(10),ZTRUE(10),VXTRUE(10),VYTRUE(10),VZTRUE(10),
     6       A1DOT,A2DOT,A3DOT,DELRA(3,27,10),DELVD(3,27,10),D1,D2,D3,
     7       D1TRUE(10),D2TRUE(10),D3TRUE(10),DOTOLD(3,3),DOTNEW(3,3),
     8       AXOLD,AXNEW,AYOLD,AYNEW,AZOLD,AZNEW,VXOLD,VXNEW,VYOLD,
     9       VYNEW,VZOLD,VZNEW,GX,GY,GZ,DT(27,10),TBISAV(3,3,27,10)
      COMMON ES,ESMAX,IOPT,IVAR,IFUSE,PAR(7,7),ECM(7,7),ADOT(3,3),
     1       EIDOT(3,3),DEL(3,1),ENPI,PIOTWO,PI
     2       ,IDORR,IGORLT,IUNITS,RRATE,IFS,IFSMAX,TBA(3,3),TAB(3,3)
     3       ,RMAX,THETAF,R,THETA,KFLY,EN
     4      ,RSS1(10),RSS2(10),RSS3(10),RSS4(10),RSS5(10),RSS6(10)
     5      ,RSS7(10),ERRMAG(27),ERRDC(3,27),HOLD(10),SAVE(10),
     6      E12MAT(3,1),E14MAT(3,1),E16MAT(3,1),QUANT,ARM(10),PSD(10),
     7      PSDE(10),KE,ICON
      COMMON AMPSS(10),FREQ(10),DCOS(3,10),DCS1(3,5),DCS2(3,5),
     1       KSS,ACONSS(5),FCONSS(5),DUMMY(3,3),ICHANG
     2      ,ISCHME,IWDSIZ,COMPFQ,NSS,DELXI(27,10),DELYI(27,10),
     3      DELVXI(27,10),DELVYI(27,10),DELVZI(27,10),DELZI(27,10)
     4      ,E13MAT(3,1),E15MAT(3,1)
   10 FORMAT(29HOTERMINAL RADIUS OUT OF RANGE / 10X, 6HRMAX =F15.8,10X,
     1      13HR APO-APSIS =F15.8,10X,14HR PERI-APSIS =F15.8)
   20 FORMAT(30HORADIUS EXCEEDS TERMINAL VALUE / 10X,6HRMAX =F15.8,
     1      10X,3HR =E15.8,10X,5HETA =F15.8)
   25 FORMAT(//49HOCIRCULAR ORBIT - TERMINATION ON RADIUS UNDEFINED)
   30 FORMAT(// 61HOTERMINATION CONDITION NOT SATISFIED IN RANGE OF TABU
     1LAR DATA )
      DIMENSION TIAOLD(3,3)
      DIMENSION XI(3,3),CROSS(3,3),CROSS2(3,3)
      DATA((XI(I,J),I =1,3), J = 1,3) /1.0,0.,0.,0.,1.0,0.,0.,0.,1.0/
      TWOPI = 2. * PI
      KOUNT = 0
      X=XTRUE(IFS-1)
      Y=YTRUE(IFS-1)
      Z=ZTRUE(IFS-1)
      R = SQRT(X ** 2 + Y ** 2 + Z ** 2)
      THETA = 0.
      V = D1TRUE(IFS-1)
      GAMMA = D2TRUE(IFS-1)
C     BALLISTIC TRUTH MODEL
      FLAMDA = (R * V ** 2) / (GCON * XMASS)
      IF(IVAR .EQ. 2) GO TO 1000
C     TERMINATING ON RADIUS
      IF(FLAMDA .GE. .95 .AND. FLAMDA .LE. 1.05) GO TO 2500
C     SOLVE HIT EQUATION FOR PRINCIPLE VALUE OF THETA
      ROLD = R
      Q = FLAMDA * SIN(GAMMA) ** 2
      COSETA = Q - 1.
      SINETA = Q * TAN(PIOTWO - GAMMA)
      CALL AGONY (SINETA,COSETA,ETA)
      IF(FLAMDA .GE. 1.98) GO TO 400
      TEMP =-ETA + (EN + 1.) * PI
      RN= (ROLD * FLAMDA * SIN(GAMMA) ** 2) / ((1. - COS(TEMP)) +
     1    FLAMDA * SIN(GAMMA) * SIN(GAMMA - TEMP))
      TEMP = TEMP + PI
      RN1 = (ROLD * FLAMDA * SIN(GAMMA) ** 2) / ((1. - COS(TEMP)) +
```

```
     1        FLAMDA * SIN(GAMMA) * SIN(GAMMA - TEMP))
      XMIN = AMIN1(RN,RN1)
      XMAX = AMAX1(RN,RN1)
      IF(RMAX .LT. XMIN) GO TO 200
      IF(RMAX .GT. XMAX) GO TO 200
      IF( RMAX .EQ. RN) GO TO 250
      IF(RMAX .EQ. RN1) GO TO 275
      THETA =-ETA + (FN + 1.) * PI + PI * ( ABS(RMAX - RN) / ABS(RN - R
     1         N1))
      GO TO 600
  200 WRITE(6,10) RMAX,XMAX,XMIN
      STOP
  250 THETA =-ETA + (FN + 1.) * PI
      GO TO 700
  275 THETA =-ETA + (FN + 2.) * PI
      GO TO 700
  400 IF(ETA .LT. PI) GO TO 420
      IF(RMAX .GE. R) GO TO 410
      THETA = 2. * FN *(-ETA+TWOPI)
      GO TO 600
  410 THETA = 2. *(TWOPI-ETA)
      GO TO 600
  420 IF(RMAX .GE. R) GO TO 500
      WRITE(6,20) RMAX,R,ETA
      STOP
  500 TDOT = (ROLD * FLAMDA * SIN(GAMMA) ** 2) /(R**2*(FLAMDA * SIN(GAMM
     1         A) * COS(GAMMA - THETA) - SIN(THETA)))
      THETA = THETA + TDOT * (RMAX - R)
  600 R = (ROLD * FLAMDA * SIN(GAMMA) ** 2) / ((1. - COS(THETA)) + FLAMD
     1     A * SIN(GAMMA) * SIN(GAMMA - THETA))
      IF(ABS(RMAX-R) .LE. 10.) GO TO 700
      GO TO 500
  700 VOLD = V
      GAMOLD = GAMMA
C     CALCULATE GAMMA AND V
      V = VOLD * SQRT(1. - 2. / FLAMDA * (1. - (1. - COS(THETA))/ (FLAMD
     1     A * SIN(GAMOLD) ** 2) - SIN(GAMOLD - THETA) /SIN(GAMOLD)))
      GAMMA = ATAN((ROLD / R) * FLAMDA * SIN(GAMOLD) ** 2 / (FLAMDA *
     1         SIN(GAMOLD) * COS(GAMOLD - THETA) - SIN(THETA)))
      IF(GAMMA .GT. 0.) GO TO 1100
      GAMMA = GAMMA + PI
      GO TO 1100
C     TERMINATING ON THETA
C     SOLVE HIT EQUATION FOR R
 1000 ROLD = R
      THETA=THETAF
      R = (ROLD * FLAMDA * SIN(GAMMA ) ** 2) / ((1. - COS(THETA)) +
     1     FLAMDA * SIN(GAMMA ) * SIN(GAMMA  - THETA))
      GO TO 700
 1100 IF(FLAMDA .GT. 2.02) GO TO 1500
      IF(FLAMDA .GE. 1.98) GO TO 1750
C     SOLVE ELLIPTICAL TIME EQUATION FOR TIME IN FLIGHT SEGMENT
      J = THETA /(2. * PI)
      THETA = THETA - FLOAT(J) * 2. * PI
      FK = GCON * XMASS
      FH = VOLD ** 2 - (2. * FK / ROLD)
      FMAGH = ABS (FH)
      A = FK / FMAGH
      TAU = 2. * PI * SQRT(A ** 3 / FK)
      TEM = SIN(GAMOLD) * COS(.5 * THETA) - COS(GAMOLD)*SIN(.5*THETA)
      TEP = SIN(.5 * THETA) * SQRT(2. / FLAMDA - 1.)
```

```
      CALL AGONY (TEP,TEM,TEMP)
 1175 TEMP = TEMP * (2. * SIN(GAMOLD)) /(FLAMDA * (SQRT(2. / FLAMDA - 1.
     1        ) ** 3))
      TEMP = TEMP +((COTAN(GAMOLD) * (1. - COS(THETA))+ (1. - FLAMDA) *
     1        SIN(THETA)) / (ROLD / R * (2. - FLAMDA)))
      TIME = TEMP * (ROLD / (VOLD * SIN(GAMOLD)))
      TIME = TIME + FLOAT(J) * TAU
      THETA = THETA + FLOAT(J) * 2. *PI
      GO TO 2000
C     SOLVE HYPERBOLIC TIME EQUATION FOR TIME IN FLIGHT SEGMENT
 1500 TEMP = SQRT(1. - 2. / FLAMDA) / (COS(GAMOLD) - COTAN(.5 * THETA)
     1        * SIN(GAMOLD))
      TEMP = .5 * ALOG((1. + TEMP) / (1. - TEMP))
      TEMP = TEMP * 2. * SIN(GAMOLD) / (FLAMDA * SQRT(1. - 2. / FLAMDA)
     1        ** 3)
      TEMP = TEMP + ((COTAN(GAMOLD) * (1. - COS(THETA)) + (1. - FLAMDA)
     1        * SIN(THETA)) / (ROLD / R * (2. - FLAMDA)))
      TIME = TEMP * (ROLD / (VOLD * SIN(GAMOLD)))
      GO TO 2000
C     SOLVE PARABOLIC TIME EQUATION FOR TIME IN FLIGHT SEGMENT
 1750 TEMP = TAN(GAMOLD) * (2. + 1. / COS(GAMOLD) ** 2)
      TEMP = TEMP + TAN(.5 * THETA - GAMOLD) * (2. + 1. / COS(.5 * THETA
     1        - GAMOLD) ** 2)
      TIME = TEMP * (2. * ROLD * SIN(GAMOLD) ** 3 / (3. * VOLD))
 2000 IF(IOPT .EQ. 3 .AND. TIME .GT. T(NPTS)) GO TO 2400
      TTOTAL(1,IFS) = TTOTAL(1,IFS-1) + TIME
      GO TO 2600
 2400 WRITE(6,30)
      STOP
 2500 WRITE(6,25)
      STOP
C     END OF BALLISTIC TRUTH MODEL BOX
C     CALCULATE A NEW TAI TRANSFORMATION MATRIX
 2600 TEMP1(1,1) = COS(THETA)
      TEMP1(2,2) = TEMP1(1,1)
      TEMP1(2,1) = SIN(THETA)
      TEMP1(1,2) = - TEMP1(2,1)
      TEMP1(3,3) = 1.
      TEMP1(3,1) = 0.
      TEMP1(3,2) = 0.
      TEMP1(1,3) = 0.
      TEMP1(2,3) = 0.
      DO 2650 L = 1,3
      DO 2625 M = 1,3
      TAIOLD(L,M) = TAI(L,M)
 2625 CONTINUE
 2650 CONTINUE
      CALL MATMUL(TAIOLD,3,3,TEMP1,3,TAINEW)
      XTRUE(IFS) = R * TAINEW(1,1)
      YTRUE(IFS) = R * TAINEW(2,1)
      ZTRUE(IFS) = R * TAINEW(3,1)
      DO 2700 L = 1,3
      DO 2675 M = 1,3
      TAI(L,M) = TAINEW(L,M)
 2675 CONTINUE
 2700 CONTINUE
      D1TRUE(IFS) = V
      D2TRUE(IFS) = GAMMA
      D1=V
      D2=GAMMA
      D3 = D3TRUE(IFS-1) * COS(THETA)
```

```
      IF(ABS(D3) .GT. 1.E-6) GO TO 2702
      D3=0.
 2702 D3TRUE(IFS) = D3
      CALL VELD2I
      VXTRUE(IFS) = VX
      VYTRUE(IFS) = VY
      VZTRUE(IFS) = VZ
C     PROPAGATE TBI THROUGH THE FREE FLIGHT PHASE
      TSAVE = TIME
      IF(IOPT .NE. 2) GO TO 2705
      CALL MATRAN(TAIOLD,TIAOLD)
      AVGR = THETA / TSAVE
 2705 DO 2715 L = 1,3
      DO 2710 M = 1,3
      TBI(L,M) = TBISAV(L,M,ES,IFS-1)
 2710 CONTINUE
 2715 CONTINUE
      IF(IOPT .EQ. 1 .AND. ES .LE. 11) GO TO 2975
      IF(IOPT .NE. 1) GO TO 2725
      AVGR = 0.
      GO TO 2840
 2725 IF(IOPT .EQ. 3) GO TO 2900
      IF(ES .GT. 10) GO TO 2810
      CALL MATMUL(TIAOLD,3,3,TBI,3,TEMP2)
      CALL MATMUL(TAINEW,3,3,TEMP2,3,TBI)
      GO TO 2975
 2810 CALL INVERS(TBI,TIB)
      DO 2813 I = 1,3
      TEMP1(I,1) = TAIOLD(I,3)
 2813 CONTINUE
      CALL MATMUL(TIB,3,3,TEMP1,1,DUMMY)
      K = ES - 10
      IF(K .GT. 1) GO TO 2840
      GO TO (2820,2822,2824),ISCHME
 2820 ERR = .581* (AVGR ** 2 / COMPFO)
      GO TO 2826
 2822 ERR = .122 * (AVGR ** 3 / COMPFO)
      GO TO 2826
 2824 ERR = 4.85E-3 * (AVGR ** 5 / COMPFO)
 2826 TEMP = (AVGR + ERR) * TSAVE
      COST = COS(TEMP)
      SINT = SIN(TEMP)
      TEMP = 1. - COST
      CROSS(1,1) = 0.
      CROSS(1,2) = - DUMMY(3,1)
      CROSS(1,3) = DUMMY(2,1)
      CROSS(2,1) = DUMMY(3,1)
      CROSS(2,2) = 0.
      CROSS(2,3) = - DUMMY(1,1)
      CROSS(3,1) = - DUMMY(2,1)
      CROSS(3,2) = DUMMY(1,1)
      CROSS(3,3) = 0.
      CALL MATMUL(CROSS,3,3,CROSS,3,CROSS2)
      DO 2835 I = 1,3
      DO 2834 J = 1,3
      TEMP1(I,J) = XI(I,J) + TEMP * CROSS2(I,J) + SINT * CROSS(I,J)
      TEMP2(I,J) = TBI(I,J)
 2834 CONTINUE
 2835 CONTINUE
      CALL MATMUL(TEMP2,3,3,TEMP1,3,TBI)
      GO TO 2975
```

```
2840 DO 2845 I = 1,3
     TEMP1(I,1) = ERRDC(I,ES) * ERRMAG(ES) + DUMMY(I,1) * AVGR
2845 CONTINUE
     SUM = 0.
     DO 2847 I = 1,3
     SUM = SUM + TEMP1(I,1) ** 2
2847 CONTINUE
     SUM = SQRT(SUM)
     COST = COS(SUM * TSAVE)
     SINT = SIN(SUM * TSAVE)
     TEMP = 1. - COST
     DO 2849 I = 1,3
     TEMP2(I,1) = TEMP1(I,1) / SUM
2849 CONTINUE
     CROSS(1,1) = 0.
     CROSS(1,2) = - TEMP2(3,1)
     CROSS(1,3) = TEMP2(2,1)
     CROSS(2,1) = TEMP2(3,1)
     CROSS(2,2) = 0.
     CROSS(2,3) = - TEMP2(1,1)
     CROSS(3,1) = - TEMP2(2,1)
     CROSS(3,2) = TEMP2(1,1)
     CROSS(3,3) = 0.
     CALL MATMUL(CROSS,3,3,CROSS,3,CROSS2)
     DO 2855 I = 1,3
     DO 2854 J = 1,3
     TEMP1(I,J) = XI(I,J) + TEMP * CROSS2(I,J) + SINT * CROSS(I,J)
     TEMP2(I,J) = TBI(I,J)
2854 CONTINUE
2855 CONTINUE
     CALL MATMUL(TEMP2,3,3,TEMP1,3,TBI)
     GO TO 2975
2900 IF(ES .GE. 2 .AND. ES .LE. 10) GO TO 3000
     IF(ES .GT. 10) GO TO 2905
     CALL DATCN2
     TMAX = TSAVE
     CALL MATMUL(TGB,3,3,W,1,WTEMP)
     GO TO 2920
2905 CALL MATMUL(TGB,3,3,W,1,WTEMP)
     CALL ERMODS
2920 OMEG(2,1) = WTEMP(3,1)
     OMEG(1,2) = - OMEG(2,1)
     OMEG(1,3) = WTEMP(2,1)
     OMEG(3,1) = - OMEG(1,3)
     OMEG(3,2) = WTEMP(1,1)
     OMEG(2,3) = - OMEG(3,2)
     CALL MATMUL(TBI,3,3,OMEG,3,DOTNEW)
     J = 1
     TIME = 0.
2925 TIME = TIME + DELTS
     IF(TIME .LT. T(J+1)) GO TO 2950
     J = J + 1
2950 CALL INTPLT(T(J),W(3,J),T(J+1),W(3,J+1),TIME,TEMP1(3,1))
     CALL INTPLT(T(J),W(2,J),T(J+1),W(2,J+1),TIME,TEMP1(2,1))
     CALL INTPLT(T(J),W(1,J),T(J+1),W(1,J+1),TIME,TEMP1(1,1))
     CALL MATMUL(TGB,3,3,TEMP1,1,WTEMP)
     IF(ES .NE. 1) CALL ERMODS
     OMEG(3,2) = WTEMP(1,1)
     OMEG(2,3) = - OMEG(3,2)
     OMEG(1,3) = WTEMP(2,1)
     OMEG(3,1) = - OMEG(1,3)
```

```
      OMEG(2,1) = WTEMP(3,1)
      OMEG(1,2) = - OMEG(2,1)
      DO 2960 L = 1,3
      DO 2955 M = 1,3
      DOTOLD(L,M) = DOTNEW(L,M)
 2955 CONTINUE
 2960 CONTINUE
      CALL MATMUL(TBI,3,3,OMEG,3,DOTNEW)
      DO 2970 L = 1,3
      DO 2965 M = 1,3
      TBI(L,M) = TBI(L,M) +DTDTWO* (DOTOLD(L,M) + DOTNEW(L,M))
 2965 CONTINUE
 2970 CONTINUE
      IF(TIME + DELTS .LT. TMAX) GO TO 2925
      IF(KOUNT .EQ. 1) GO TO 2973
      DTSAVE = DELTS
      DELTS = TMAX - TIME
      IF(DELTS .EQ. 0.) GO TO 2973
      KOUNT = 1
      DTDTWO = .5 * DELTS
      GO TO 2925
 2973 DELTS = DTSAVE
      DTDTWO = .5 * DELTS
      KOUNT = 0
 2975 DO 2985 L = 1,3
      DO 2980 M = 1,3
      TBISAV(L,M,ES,IES) = TBI(L,M)
 2980 CONTINUE
 2985 CONTINUE
      GO TO 3300
 3000 DO 3100 I = 1,3
      DO 3050 J = 1,3
      TEMP2(I,J) = TBISAV(I,J,1,IES-1)
 3050 CONTINUE
 3100 CONTINUE
      CALL INVERS(TEMP2,TEMP1)
      CALL MATMUL(TBI,3,3,TEMP1,3,TEMP2)
      DO 3200 I = 1,3
      DO 3150 J = 1,3
      TBISAV(I,J,ES,IES) = TEMP2(I,J)
 3150 CONTINUE
 3200 CONTINUE
 3300 IF(ES .EQ. ESMAX - 1) GO TO 3350
      ES = ES + 1
      GO TO 2705
 3350 ES = 1
      DO 3320 I= 1,3
      DO 3310 J = 1,3
      TBISAV(I,J,27,IES) = TBISAV(I,J,1,IES)
 3310 CONTINUE
 3320 CONTINUE
C     COMPUTE ERROR PROPAGATION MATRIX
C     SET UP TABLE OF PARTIAL DERIVATIVES
      TEMP = R / ROLD
      SING = SIN(GAMOLD)
      SINGSQ = SING ** 2
      SINT = SIN(THETA)
      SINGMT = SIN(GAMOLD - THETA)
      COST = COS(THETA)
      PAR(1,1) = TEMP * (2. - TEMP * SINGMT / SING)
      PAR(1,2) = R * TEMP * (COS(GAMOLD - THETA) / SING - SINT /
```

```
1            (FLAMDA * SINGSO))
 PAR(1,2) = - PAR(1,2)
 PAR(1,3) = 2. * R * TEMP / VOLD *(1. / TEMP - SINGMT / SING)
 PAR(1,4) = R * TEMP * (2. * 1. / TEMP * COTAN(GAMOLD) - SIN(2. *
1            GAMOLD - THETA) / SINGSO)
 PAR(2,2) = 1.
 TEMP = VOLD ** 2 / (FLAMDA * V)
 PAR(3,1) = TEMP / ROLD * (1. + SINGMT / SING - 2. * ROLD / R)
 PAR(3,2) = TEMP * (  SINT    / (FLAMDA * SINGSO) - COS(GAMOLD -
1            THETA) / SING)
 PAR(3,3) = TEMP / VOLD * (FLAMDA - 2. * (1. - COST) /
1           (FLAMDA * SINGSO))
 PAR(3,4) = TEMP * (SINT / SINGSO - (2. * (1. - COST) / (FLAMDA *
1            SINGSO) * COTAN(GAMOLD)))
 TEMP = R/ROLD
 PAR(4,1) = TEMP / ROLD * SIN(GAMMA) * SIN(GAMOLD - GAMMA - THETA)
1            / SING
 PAR(4,2) = - (COS(GAMMA) ** 2 + TEMP * SING * SINGMT - COST /
1           (FLAMDA * ROLD))
 PAR(4,3) = 2. * ROLD / VOLD * PAR(4,1)
 PAR(4,4) = TEMP * SIN(GAMMA) * SIN(2. * GAMOLD - GAMMA - THETA) /
1            SINGSO
 PAR(6,6) = TEMP * COST
 PAR(6,7) = R * SINT / SING
 PAR(7,6) = SIN(THETA + GAMMA - GAMOLD) / ROLD
 PAR(7,7) = SIN(THETA + GAMMA) / SING
 TOLAM = 2. / FLAMDA
 COSG = COS(GAMOLD)
 COTT2 = COTAN(.5 * THETA)
 IF(FLAMDA .GE. 1.98 .AND. FLAMDA .LE. 2.02) GO TO 3500
 IF(FLAMDA .GT. 2.02) GO TO 3600
 X1 = COTAN(GAMOLD) * (1. - COST) + (1. - FLAMDA) * SINT
 X2 = SING * COTT2 - COSG
 X3 = ATAN(SQRT(TOLAM - 1.) / X2)
 X4 = X2 ** 2 + TOLAM - 1.
 X5 = ROLD / (VOLD * SING)
 X6 = ROLD / R
 PAR(5,5) = 1.
 TEMP = X1 /(((2. - FLAMDA) * X6) ** 2)
 TEMP = TEMP * (2. * FLAMDA * X6 / VOLD + (2. * (2. - FLAMDA)) *
1        ((1. - COST) / (VOLD * FLAMDA * SINGSO)))
 TEMP = TEMP - ((2. * FLAMDA * SINT) / (VOLD * (2. - FLAMDA) * X6))
 TEMP = TEMP + ((4. * SING * (1. + .5 * TOLAM) * X3) / (FLAMDA *
1        VOLD * (TOLAM - 1.) ** 2.5))
 TEMP = TEMP - ((4. * SING * X2) / (VOLD * (FLAMDA * (TOLAM - 1.))
1        ** 2 * X4))
 TEMP = TEMP * X4
 PAR(5,3) = TEMP - TMAX / VOLD
 TEMP = - FLAMDA * SINT / (ROLD * (2. - FLAMDA) * X6)
 TEMP = TEMP + (FLAMDA * X1 / (ROLD * (2. - FLAMDA) ** 2 * X6))
 TEMP = TEMP +(((1. - COST) * X1) / ((2. - FLAMDA) * ROLD * FLAMDA
1        * SINGSO * X6 ** 2))
 TEMP = TEMP - (2. * SING * X2 / (ROLD * (FLAMDA * (TOLAM - 1.)) **
1        2 * X4))
 TEMP = TEMP - X3 * ((2. * SING) / (FLAMDA * ROLD * (TOLAM - 1.) **
1        1.5) - (6. * SING) / (FLAMDA ** 2 * ROLD * (TOLAM - 1.) **
2        2.5))
 TEMP = TEMP * X5
 PAR(5,1) = TEMP + TMAX / ROLD
 TEMP = 2. * (1. - COST) * COSG / (FLAMDA * SINGSO * SING)
 TEMP = TEMP - COS(GAMOLD - THETA) / SING
```

```
      TEMP = TEMP + SINGMT * COSG / SINGSQ
      TEMP = TEMP * (X1 / ((2. - FLAMDA) * X6 ** 2))
      TEMP = TEMP + (COST - 1.) / (SINGSQ * (2. - FLAMDA) * X6)
      TEMP = TEMP - ((COSG * COTT2 + SING) * 2. * SING / ((2. - FLAMDA)
     1        * X4))
      TEMP = TEMP + (2. * COSG * X3 / (FLAMDA * (TOLAM - 1.) ** 1.5))
      TEMP = TEMP * X5
      PAR(5,4) = TEMP - TMAX * COTAN(GAMOLD)
      TEMP = SINT / (FLAMDA * SINGSQ)
      TEMP = TEMP - COS(GAMOLD - THETA) / SING
      TEMP = TEMP * (- X1 / ((2. - FLAMDA) * X6 ** 2))
      TEMP = TEMP + ((COTAN(GAMOLD) * SINT + (1. - FLAMDA) * COST) / (
     1        (2. - FLAMDA) * X6))
      TEMP = TEMP + (SINGSQ / ((2. - FLAMDA) * X4 * SIN(.5 * THETA) ** 2
     1        ))
      PAR(5,2) = TEMP * X5
      GO TO 3800
 3500 PAR(5,1) = TMAX / ROLD
      TEMP = 1. / COS(.5 * THETA - GAMOLD) ** 4
      PAR(5,2) = ROLD * SINGSQ * SING * TEMP / VOLD
      PAR(5,3) = - TMAX / VOLD
      PAR(5,4) = 3. * TMAX * COTAN(GAMOLD) + 2. * ROLD * SINGSQ / VOLD
     1            * (1. / COSG ** 4 - TEMP)
      PAR(5,5) = 1.
      GO TO 3800
 3600 X8 = 1. - COST
      X1 = COTAN(GAMOLD) * X8 + (1. - FLAMDA) * SINT
      X2 = COSG - COTT2 * SING
      TEMP = SQRT(1. - TOLAM) / X2
      X3 = .5 * (ALOG((1. + TEMP) / (1. - TEMP)))
      X4 = TOLAM - 1. + X2 ** 2
      X5 = ROLD / (VOLD * SING)
      X6 = ROLD / R
      X7 = (1. - TOLAM) ** 1.5
      TEMP = FLAMDA * SINGMT + X8 / SING + (2. - FLAMDA) * X8 / (FLAMDA
     1        * SING)
      TEMP = TEMP * ((2. * X1) / ((2. - FLAMDA) ** 2 * X6 ** 2 * VOLD *
     1        SING))
      TEMP = TEMP - ((2. * FLAMDA * SINT) / (VOLD * (2. - FLAMDA) * X6))
      TEMP = TEMP - (((4. * SING * X3) / ((FLAMDA - 2.) * X7 * VOLD))
     1        * ((1. - TOLAM) - 3. / FLAMDA))
      TEMP = TEMP - ((4. * SING * X2) / (VOLD * FLAMDA ** 2 * (1. - TO
     1        LAM) ** 2 * X4))
      PAR(5,3) = TEMP * X5 - TMAX / VOLD
      TEMP = (2. * X3 * SING * (5. - FLAMDA)) / (X7 * FLAMDA * ROLD *
     1        (FLAMDA - 2.))
      TEMP = TEMP+(((FLAMDA / (ROLD * (2. - FLAMDA) * X6)) * (X1 / (2.
     1        - FLAMDA) - SINT)))
      TEMP = TEMP + ((X1 * X8) / (ROLD * FLAMDA * SINGSQ * (2. - FLAMDA)
     1        * X6 ** 2))
      TEMP = TEMP - ((2. * SING * X2) / (ROLD * (FLAMDA - 2.) ** 2 * X4
     1        ))
      PAR(5,1) = TEMP * X5 + TMAX / ROLD
      TEMP = (2. * X8 * COSG) / (FLAMDA * SINGSQ) - COS(GAMOLD - THETA)
      TEMP = TEMP + (SINGMT * COSG / SING)
      TEMP = TEMP * (X1 / (SING * (2. - FLAMDA) * X6 ** 2))
      TEMP = TEMP - (X8 / (SINGSQ * (2. - FLAMDA) * X6))
      TEMP = TEMP + ((2. * SING * (SING + COTT2 * COSG)) / (X4 * (FLAMDA
     1        - 2.)))
      TEMP = TEMP + ((2. * COSG * X3) / (FLAMDA * X7))
      PAR(5,4) = TEMP * X5 - TMAX * COTAN(GAMOLD)
```

```
      TEMP = SINT / (FLAMDA * SING)
      TEMP = TEMP - COS(GAMOLD - THETA)
      TEMP = TEMP * (- X1 / (SING * (2. - FLAMDA) * X6 ** 2))
      TEMP = TEMP - (SINGSQ / ((FLAMDA - 2.) * SIN(.5 * THETA) ** 2 *
     1        X4))
      TEMP = TEMP + ((COTAN(GAMOLD) * SINT + (1. - FLAMDA) * COST) /
     1        ((2. - FLAMDA) * X6))
      PAR(5,2) = TEMP * X5
      PAR(5,5) = 1.
 3800 PAR(6,6) = R * COST / ROLD
      PAR(7,7) = SIN(THETA + GAMMA) / SING
      DO 3900 K = 1,7
      DO 3850 L = 1,7
      FCM(K,L) = PAR(K,L)
 3850 CONTINUE
 3900 CONTINUE
      DO 3950 J = 1,7
      FCM(2,J) = - FCM(IVAR,J) / FCM(IVAR,2)
      FCM(IVAR,J) = 0.
 3950 CONTINUE
      DO 3960 J = 1,7
      FCM(I,2) = - FCM(I,2)
 3960 CONTINUE
      GO TO 5500
 5000 TEMP1(1,1) = DELRA(1,ES,IES-1)
      TEMP1(2,1) = DELRA(2,ES,IES-1)/ROLD
      TEMP1(3,1) = DELVD(1,ES,IES-1)
      TEMP1(4,1) = DELVD(2,ES,IES-1)
      TEMP1(5,1) = DT(ES,IES-1)
      TEMP1(6,1) = DELRA(3,ES,IES-1)
      TEMP1(7,1) = DELVD(3,ES,IES-1)
      CALL MATMUL(FCM,7,7,TEMP1,1,TEMP2)
      DELRA(1,ES,IES) = TEMP2(1,1)
      DELRA(2,ES,IES) = TEMP2(2,1)*R
      DELVD(1,ES,IES) = TEMP2(3,1)
      DELVD(2,ES,IES) = TEMP2(4,1)
      DT(ES,IES) = TEMP2(5,1)
      TTOTAL(ES,IES) = TTOTAL(1,IES) + DT(ES,IES)
      DELRA(3,ES,IES) = TEMP2(6,1)
      DELVD(3,ES,IES) = TEMP2(7,1)
      D1 = D1TRUE(IES) + DELVD(1,ES,IES)
      D2 = D2TRUE(IES) + DELVD(2,ES,IES)
      D3 = D3TRUE(IES) + DELVD(3,ES,IES)
      CALL VELD2I
      DELVXI(ES,IES) = VX - VXTRUE(IES)
      DELVYI(ES,IES) = VY - VYTRUE(IES)
      DELVZI(ES,IES) = VZ - VZTRUE(IES)
      DO 5100 I = 1,3
      TEMP1(I,1) = DELRA(I,ES,IES)
 5100 CONTINUE
      CALL MATMUL(TAI,3,3,TEMP1,1,TEMP2)
      DELXI(ES,IES) = TEMP2(1,1)
      DELYI(ES,IES) = TEMP2(2,1)
      DELZI(ES,IES) = TEMP2(3,1)
 5500 IF(ES .EQ. ESMAX) GO TO 6000
      ES = ES + 1
      GO TO 5000
 6000 ES = 1
      RETURN
      END
```

```
      SUBROUTINE DATCN1
      INTEGER ES,ESMAX
      COMMON OMEG(3,3),TLI(3,3),TEMP1(3,50),TEMP2(3,50),W(3,50),A(3,50)
     1        ,WTEMP(3,1),ATEMP(3,1),T(50),TBI(3,3),TIB(3,3),TBG(3,3),
     2        TGB(3,3),ALPHA(50),BETA(50),TWB(3,3),IADRSE,RP,GCON,XMASS,
     3        X,Y,Z,DELTS,DTOTWO,IFRAME,VX,VY,VZ,NPTS,TIA(3,3),TAI(3,3)
     4        ,TAIOLD(3,3),TAINEW(3,3),TTOTAL(27,10),TIME,TMAX,XTRUE(10)
     5        ,YTRUE(10),ZTRUE(10),VXTRUE(10),VYTRUE(10),VZTRUE(10),
     6        A1DOT,A2DOT,A3DOT,DELRA(3,27,10),DELVD(3,27,10),D1,D2,D3,
     7        D1TRUE(10),D2TRUE(10),D3TRUE(10),DOTOLD(3,3),DOTNEW(3,3),
     8        AXOLD,AXNEW,AYOLD,AYNEW,AZOLD,AZNEW,VXOLD,VXNEW,VYOLD,
     9        VYNEW,VZOLD,VZNEW,GX,GY,GZ,DT(27,10),TBISAV(3,3,27,10)
      COMMON ES,ESMAX,IOPT,IVAR,IFUSE,PAR(7,7),ECM(7,7),ADOT(3,3),
     1        EIDOT(3,3),DEL(3,1),ENPI,PIOTWO,PI
     2        ,IDOPR,IGORLT,IUNITS,RRATE,IFS,IFSMAX,TBA(3,3),TAB(3,3)
     3        ,RMAX,THETAE,R,THETA,KELY,EN
     4       ,RSS1(10),RSS2(10),RSS3(10),RSS4(10),RSS5(10),RSS6(10)
     5       ,RSS7(10),ERRMAG(27),ERRDC(3,27),HOLD(10),SAVE(10),
     6       E12MAT(3,1),E14MAT(3,1),E16MAT(3,1),QUANT,ARM(10),PSD(10),
     7       PSDE(10),KE,ICON
      COMMON AMPSS(10),FREQ(10),DCOS(3,10),DCS1(3,5),DCS2(3,5),
     1        KSS,ACONSS(5),FCONSS(5),DUMMY(3,3),ICHANG
     2       ,ISCHME,IWDSIZ,COMPFQ,NSS,DELXI(27,10),DELYI(27,10),
     3       DELVXI(27,10),DELVYI(27,10),DELVZI(27,10),DELZI(27,10)
     4       ,E13MAT(3,1),E15MAT(3,1)
  230 FORMAT(/// 58HOSPECIFIC FORCE AND BODY RATES IN INSTRUMENT FRAMES
     1FOLLOW //  9X,4HTIME,14X,3HSFX,15X,3HSFY,15X,3HSFZ,16X,2HWX,16X,
     22HWY,16X,2HWZ)
  235 FORMAT(7(3X,F15.8))
  236 FORMAT(/// 1H0)
C     INITIALIZATIONS
      KOUNT = 0
      TIME = T(1)
      J = 1
      X = XTRUE(IFS -1)
      Y = YTRUE(IFS -1)
      Z = ZTRUE(IFS -1)
      VXNEW = VXTRUE(IFS - 1)
      VYNEW = VYTRUE(IFS - 1)
      VZNEW = VZTRUE(IFS - 1)
      DO 750 L = 1,3
      DO 500 M =1,3
      TBI(L,M) = TBISAV(L,M,1,IFS-1)
  500 CONTINUE
  750 CONTINUE
      GO TO (1000,2000,2250,2320),IFRAME
 1000 CALL MATMUL(TLI,3,3,W,NPTS,TEMP1)
      CALL MATMUL(TLI,3,3,A,NPTS,TEMP2)
      DO 1200 L = 1,3
      DO 1100 M = 1,NPTS
      W(L,M) = TEMP1(L,M)
      A(L,M) = TEMP2(L,M)
 1100 CONTINUE
 1200 CONTINUE
      GO TO 2000
 1500 J = J + 1
      IF(IFRAME .GE. 3) GO TO 2380
 2000 CALL INVERS(TBI,TIB)
      DO 2100 I = 1,3
      TEMP1(I,1) = W(I,J)
 2100 CONTINUE
```

```
      CALL MATMUL(TIB,3,3,TEMP1,1,WTEMP)
      WXSAVE = W(1,J)
      WYSAVE = W(2,J)
      WZSAVE = W(3,J)
      IF(J .NE. 1) GO TO 2200
      OMEG(2,1) = W(3,1)
      OMEG(1,2) = -OMEG(2,1)
      OMEG(1,3) = W(2,1)
      OMEG(3,1) = -OMEG(1,3)
      OMEG(3,2) = W(1,1)
      OMEG(2,3) = -OMEG(3,2)
      CALL MATMUL(OMEG,3,3,TBI,3,DOTNEW)
 2200 W(1,J) = WTEMP(1,1)
      W(2,J) = WTEMP(2,1)
      W(3,J) = WTEMP(3,1)
      GO TO 2400
 2250 DO 2300 M = 1,NPTS
      DO 2270 L = 1,3
      WTEMP(L,1) = W(L,M)
      ATEMP(L,1) = A(L,M)
 2270 CONTINUE
      CALL TRTWB(ALPHA(M),BETA(M),TWB)
      CALL MATMUL(TWB,3,3,WTEMP,1,TEMP1)
      CALL MATMUL(TWB,3,3,ATEMP,1,TEMP2)
      DO 2290 L = 1,3
      W(L,M) = TEMP1(L,1)
      A(L,M) = TEMP2(L,1)
 2290 CONTINUE
 2300 CONTINUE
 2320 GO TO (2350,4000), IAORSF
 2350 DO 2370 I = 1,3
      ATEMP(I,1) = A(I,1)
 2370 CONTINUE
      AXSAVE = A(1,1)
      AYSAVE = A(2,1)
      AZSAVE = A(3,1)
      CALL MATMUL(TBI,3,3,ATEMP,1,TEMP1)
      A(1,1) = TEMP1(1,1)
      A(2,1) = TEMP1(2,1)
      A(3,1) = TEMP1(3,1)
      AXNEW = TEMP1(1,1)
      AYNEW = TEMP1(2,1)
      AZNEW = TEMP1(3,1)
      OMEG(2,1) = W(3,1)
      OMEG(1,2) = -OMEG(2,1)
      OMEG(1,3) = W(2,1)
      OMEG(3,1) = -OMEG(1,3)
      OMEG(3,2) = W(1,1)
      OMEG(2,3) = -OMEG(3,2)
      CALL MATMUL(TBI,3,3,OMEG,3,DOTNEW)
 2380 WXSAVE = W(1,J)
      WYSAVE = W(2,J)
      WZSAVE = W(3,J)
 2400 GO TO (2450,2600) , IAORSF
 2450 RCUBED = SQRT(X ** 2 + Y ** 2 + Z ** 2) ** 3
      TEMP = - GCON * XMASS / RCUBED
      GX = TEMP * X
      GY = TEMP * Y
      GZ = TEMP * Z
      IF (IFRAME .GT. 2 .OR. J .NE. 1) GO TO 2500
      AXSAVE = A(1,1)
```

```
      AYSAVE = A(2,1)
      AZSAVE = A(3,1)
      AXNEW = A(1,1)
      AYNEW = A(2,1)
      AZNEW = A(3,1)
 2500 A(1.J) = A(1,J) - GX
      A(2,J) = A(2,J) - GY
      A(3,J) = A(3,J) - GZ
 2600 DO 2650 I = 1,3
      TEMP1(I,1) = A(I,J)
 2650 CONTINUE
      CALL MATMUL(TIB,3,3,TEMP1,1,ATEMP)
      DO 2700 I = 1,3
      A(I,J) = ATEMP(I,1)
 2700 CONTINUE
      IF(J .EQ. NPTS) GO TO 4000
 2750 TIME = TIME + DELTS
      CALL INTPLT(T(J) ,WZSAVE,T(J+1),W(3,J+1),TIME,OMEG(2,1))
      OMEG(1,2) = - OMEG(2,1)
      CALL INTPLT(T(J) ,WYSAVE,T(J+1),W(2,J+1),TIME,OMEG(1,3))
      OMEG(3,1) = - OMEG(1,3)
      CALL INTPLT(T(J) ,WXSAVE,T(J+1),W(1,J+1),TIME,OMEG(3,2))
      OMEG(2,3) = - OMEG(3,2)
      DO 2900 L = 1,3
      DO 2800 M = 1,3
      DOTOLD(L,M) = DOTNEW(L,M)
 2800 CONTINUE
 2900 CONTINUE
      IF(IFRAME .GE. 3) GO TO 3000
      CALL MATMUL(OMEG,3,3,TBI,3,DOTNEW)
      GO TO 3100
 3000 CALL MATMUL(TBI,3,3,OMEG,3,DOTNEW)
 3100 DO 3300 L = 1,3
      DO 3200 M = 1,3
      TBI(L,M) = TBI(L,M) + DTOTWO * (DOTOLD(L,M) + DOTNEW(L,M))
 3200 CONTINUE
 3300 CONTINUE
      IF(IAORSE .EQ. 2) GO TO 3600
      CALL INTPLT(T(J),AXSAVE,T(J+1),A(1,J+1),TIME,TEMP1(1,1))
      CALL INTPLT(T(J),AYSAVE,T(J+1),A(2,J+1),TIME,TEMP1(2,1))
      CALL INTPLT(T(J),AZSAVE,T(J+1),A(3,J+1),TIME,TEMP1(3,1))
      IF(IFRAME .LE. 2) GO TO 3400
      CALL MATMUL(TBI,3,3,TEMP1,1,ATEMP)
      GO TO 3500
 3400 DO 3450 I = 1,3
      ATEMP(I,1) = TEMP1(I,1)
 3450 CONTINUE
 3500 AXOLD = AXNEW
      AYOLD = AYNEW
      AZOLD = AZNEW
      AXNEW = ATEMP(1,1)
      AYNEW = ATEMP(2,1)
      AZNEW = ATEMP(3,1)
      VXOLD = VXNEW
      VYOLD = VYNEW
      VZOLD = VZNEW
      VXNEW = VXOLD + DTOTWO * (AXOLD + AXNEW)
      VYNEW = VYOLD + DTOTWO * (AYOLD + AYNEW)
      VZNEW = VZOLD + DTOTWO * (AZOLD + AZNEW)
      X = X + DTOTWO * (VXNEW + VXOLD)
      Y = Y + DTOTWO * (VYNEW + VYOLD)
```

```
      Z = Z + DTOTWO * (VZNEW + VZOLD)
 3600 IF(TIME + DELTS .LT. T(J+1)) GO TO 2750
      IF(KOUNT .EQ. 1 ) GO TO 3750
      DTSAVE = DELTS
      DELTS = T(J+1) - TIME
      IF(DELTS .EQ. 0.) GO TO 3750
      KOUNT = 1
      DTOTWO = .5 * DELTS
      GO TO 2750
 3750 DELTS = DTSAVE
      DTOTWO = .5 * DELTS
      KOUNT = 0
      IF(IAORSE .EQ. 2) GO TO 1500
      AXSAVE = A(1,J+1)
      AYSAVE = A(2,J+1)
      AZSAVE = A(3,J+1)
      A(1,J+1) = AXNEW
      A(2,J+1) = AYNEW
      A(3,J+1) = AZNEW
      GO TO 1500
 4000 DO 4500 L = 1,3
      DO 4250 M = 1,NPTS
      TEMP1(L,M) = W(L,M)
      TEMP2(L,M) = A(L,M)
 4250 CONTINUE
 4500 CONTINUE
      CALL MATMUL(TBG,3,3,TEMP1,NPTS,W)
      CALL MATMUL(TBA,3,3,TEMP2,NPTS,A)
      WRITE(6,230)
      DO 6000 J = 1,NPTS
      WRITE(6,235) T(J),(A(I,J),I=1,3),(W(I,J),I=1,3)
 6000 CONTINUE
      WRITE(6,236)
      RETURN
      END
```

```
      SUBROUTINE NAVIG
C     INTEGRATES EQUATIONS OF MOTION FOR POWERED FLIGHT
      INTEGER ES,ESMAX
      COMMON OMEG(3,3),TLI(3,3),TEMP1(3,50),TEMP2(3,50),W(3,50),A(3,50)
     1       ,WTEMP(3,1),ATEMP(3,1),T(50),TBI(3,3),TIB(3,3),TBG(3,3),
     2       TGB(3,3),ALPHA(50),BETA(50),TWB(3,3),IAORSF,RP,GCON,XMASS,
     3       X,Y,Z,DELTS,DTOTWO,IFRAME,VX,VY,VZ,NPTS,TIA(3,3),TAI(3,3)
     4       ,TAIOLD(3,3),TAINEW(3,3),TTOTAL(27,10),TIME,TMAX,XTRUE(10)
     5       ,YTRUE(10),ZTRUE(10),VXTRUE(10),VYTRUE(10),VZTRUE(10),
     6       A1DOT,A2DOT,A3DOT,DELRA(3,27,10),DELVD(3,27,10),D1,D2,D3,
     7       D1TRUE(10),D2TRUE(10),D3TRUE(10),DOTOLD(3,3),DOTNEW(3,3),
     8       AXOLD,AXNEW,AYOLD,AYNEW,AZOLD,AZNEW,VXOLD,VXNEW,VYOLD,
     9       VYNEW,VZOLD,VZNEW,GX,GY,GZ,DT(27,10),TBISAV(3,3,27,10)
      COMMON ES,ESMAX,IOPT,IVAR,IFUSE,PAR(7,7),FCM(7,7),ADOT(3,3),
     1       FIDOT(3,3),DEL(3,1),FNPI,PIOTWO,PI
     2       ,IOORR,IGORLT,IUNITS,RRATE,IFS,IFSMAX,TBA(3,3),TAB(3,3)
     3       ,RMAX,THETAF,R,THETA,KELY,FN
     4      ,RSS1(10),RSS2(10),RSS3(10),RSS4(10),RSS5(10),RSS6(10)
     5      ,RSS7(10),ERRMAG(27),ERRDC(3,27),HOLD(10),SAVE(10),
     6      F12MAT(3,1),F14MAT(3,1),F16MAT(3,1),QUANT,ARM(10),PSD(10),
     7      PSDF(10),KF,ICON
      COMMON AMPSS(10),FREQ(10),DCOS(3,10),DCS1(3,5),DCS2(3,5),
     1       KSS,ACONSS(5),FCONSS(5),DUMMY(3,3),ICHANG
     2      ,ISCHME,IWDSIZ,COMPFQ,NSS,DELXI(27,10),DELYI(27,10),
     3      DELVXI(27,10),DELVYI(27,10),DELVZI(27,10),DELZI(27,10)
     4      ,F13MAT(3,1),F15MAT(3,1)
  100 FORMAT(// 61HOTERMINATION CONDITION NOT SATISFIED IN RANGE OF TABU
     1LAR DATA )
C     INITIALIZATIONS
      KOUNT = 0
      J = 1
      TIME = T(1)
      THETA = 0.
      DO 750 L = 1,3
      DO 500 M = 1,3
      TBI(L,M)=TBISAV (L,M,1,IFS-1)
  500 CONTINUE
  750 CONTINUE
      VXNEW = VXTRUE(IFS - 1)
      VYNEW = VYTRUE(IFS - 1)
      VZNEW = VZTRUE(IFS - 1)
      X = XTRUE(IFS -1)
      Y = YTRUE(IFS -1)
      Z = ZTRUE(IFS -1)
      RNEW = SQRT(X**2 + Y**2 + Z**2)
      CALL MATMUL(TGB,3,3,W,1,WTEMP)
      OMEG(2,1) = WTEMP(3,1)
      OMEG(1,2) = - OMEG(2,1)
      OMEG(1,3) = WTEMP(2,1)
      OMEG(3,1) = - OMEG(1,3)
      OMEG(3,2) = WTEMP(1,1)
      OMEG(2,3) = - OMEG(3,2)
      CALL MATMUL(TBI,3,3,OMEG,3,DOTNEW)
      CALL MATMUL(TAB,3,3,A,1,ATEMP)
      AXNEW = ATEMP(1,1)
      AYNEW = ATEMP(2,1)
      AZNEW = ATEMP(3,1)
      GO TO 8000
 4000 J=1
      TIME=T(1)
      THETA=0.
```

```
      DO 4200 L=1,3
      DO 4100 M=1,3
      TBI(L,M)=TBISAV(L,M,ES,IFS-1)
 4100 CONTINUE
 4200 CONTINUE
      DO 5000 I=1,3
      TEMP1(I,1) = DELRA(I,ES,IFS-1)
 5000 CONTINUE
      CALL MATMUL(TAIOLD,3,3,TEMP1,1,TEMP2)
      X = XTRUE(IFS - 1) + TEMP2(1,1)
      Y = YTRUE(IFS - 1) + TEMP2(2,1)
      Z = ZTRUE(IFS - 1) + TEMP2(3,1)
      RNEW = SQRT(X**2+Y**2+Z**2)
      D1 = D1TRUE(IFS - 1) + DELVD(1,ES,IFS-1)
      D2 = D2TRUE(IFS - 1) + DELVD(2,ES,IFS-1)
      D3 = D3TRUE(IFS - 1) + DELVD(3,ES,IFS-1)
      CALL TRTDA
      ADOT(1,1) = A1DOT
      ADOT(2,1) = A2DOT
      ADOT(3,1) = A3DOT
      CALL MATMUL(TAIOLD,3,3,ADOT,1,FIDOT)
      VX = FIDOT(1,1)
      VY = FIDOT(2,1)
      VZ = FIDOT(3,1)
      VXNEW = VX
      VYNEW = VY
      VZNEW = VZ
      CALL MATMUL(TGB,3,3,W,1,WTEMP)
      CALL MATMUL(TAB,3,3,A,1,ATEMP)
      IF (ES.GT.10)CALL ERMODS
      OMEG (2,1)=WTEMP(3,1)
      OMEG(1,2) = -OMEG(2,1)
      OMEG (1,3)=WTEMP(2,1)
      OMEG(3,1) = -OMEG(1,3)
      OMEG (3,2)=WTEMP(1,1)
      OMEG(2,3) = -OMEG(3,2)
      CALL MATMUL(TBI,3,3,OMEG,3,DOTNEW)
      AXNEW = ATEMP(1,1)
      AYNEW = ATEMP(2,1)
      AZNEW = ATEMP(3,1)
C     BEGIN INTEGRATION LOOP
 8000 TIME = TIME + DELTS
      IF(TIME .LE. T(J+1)) GO TO 10000
      IF(J+1 .EQ. NPTS) GO TO 9000
      J = J + 1
      GO TO 10000
 9000 WRITE(6,100)
      STOP
10000 CALL INTPLT(T(J),W(3,J),T(J+1),W(3,J+1),TIME,TEMP2(3,1))
      CALL INTPLT(T(J),W(2,J),T(J+1),W(2,J+1),TIME,TEMP2(2,1))
      CALL INTPLT(T(J),W(1,J),T(J+1),W(1,J+1),TIME,TEMP2(1,1))
      CALL INTPLT(T(J),A(1,J),T(J+1),A(1,J+1),TIME,TEMP1(1,1))
      CALL INTPLT(T(J),A(2,J),T(J+1),A(2,J+1),TIME,TEMP1(2,1))
      CALL INTPLT(T(J),A(3,J),T(J+1),A(3,J+1),TIME,TEMP1(3,1))
      CALL MATMUL(TGB,3,3,TEMP2,1,WTEMP)
      CALL MATMUL(TAB,3,3,TEMP1,1,ATEMP)
      IF(ES .GT.10) CALL ERMODS
      OMEG(2,1) = WTEMP(3,1)
      OMEG(1,2) = - OMEG(2,1)
      OMEG(1,3) = WTEMP(2,1)
      OMEG(3,1) = - OMEG(1,3)
```

```
      OMEG(3,2) = WTEMP(1,1)
      OMEG(2,3) = - OMEG(3,2)
      DO 12000 L = 1,3
      DO 11000 M = 1,3
      DOTOLD(L,M) = DOTNEW(L,M)
11000 CONTINUE
12000 CONTINUE
      CALL MATMUL(TRI,3,3,OMEG,3,DOTNEW)
      DO 14000 L = 1,3
      DO 13000 M = 1,3
      TRI(L,M) = TRI(L,M) +DTOTWO* (DOTOLD(L,M) + DOTNEW(L,M))
13000 CONTINUE
14000 CONTINUE
      CALL MATMUL(TRI,3,3,ATEMP,1,TEMP1)
      TEMP = - GCON * XMASS / (SQRT(X ** 2 + Y ** 2 + Z **2) **3)
      GX = X * TEMP
      GY = Y * TEMP
      GZ = Z * TEMP
      ATEMP(1,1) = TEMP1(1,1) + GX
      ATEMP(2,1) = TEMP1(2,1) + GY
      ATEMP(3,1) = TEMP1(3,1) + GZ
      AXOLD = AXNEW
      AYOLD = AYNEW
      AZOLD = AZNEW
      AXNEW = ATEMP(1,1)
      AYNEW = ATEMP(2,1)
      AZNEW = ATEMP(3,1)
      VXOLD = VXNEW
      VYOLD = VYNEW
      VZOLD = VZNEW
      VXNEW = VXOLD +DTOTWO* (AXOLD + AXNEW)
      VYNEW = VYOLD +DTOTWO* (AYOLD + AYNEW)
      VZNEW = VZOLD +DTOTWO* (AZOLD + AZNEW)
      X = X +DTOTWO* (VXNEW + VXOLD)
      Y = Y +DTOTWO* (VYNEW + VYOLD)
      Z = Z +DTOTWO* (VZNEW + VZOLD)
      GO TO (21000,22000,23000,24000),IFUSE
21000 IF(FS .GT. 1) GO TO 23000
      TMAX = TIME
22000 ROLD = RNEW
      RNEW = SQRT(X**2 + Y**2 + Z**2)
      IF(ROLD-RNEW) 22100,22100,22200
22100 IF(RNEW .GE. RMAX) GO TO 22500
      GO TO 8000
22200 IF(RNEW .LE. RMAX) GO TO 22500
      GO TO 8000
22500 CONST = (RNEW - RMAX) / (RNEW - ROLD)
      GO TO 30000
23000 IF(TIME + DELTS .LT. TMAX) GO TO 8000
      IF(KOUNT .EQ. 1) GO TO 23500
      DTSAVE = DELTS
      DELTS = TMAX - TIME
      IF(DELTS .EQ. 0.) GO TO 23500
      KOUNT = 1
      DTOTWO = .5 * DELTS
      GO TO 8000
23500 DELTS = DTSAVE
      DTOTWO = .5 * DELTS
      KOUNT = 0
      VX = VXNEW
      VY = VYNEW
```

```
      VZ = VZNEW
      GO TO 30575
24000 ROLD = RNEW
      XOLD = XNEW
      YOLD = YNEW
      ZOLD = ZNEW
      XNEW = X
      YNEW = Y
      ZNEW = Z
      RNEW = SQRT(X ** 2 + Y ** 2 + Z ** 2)
      DTHETA = ARCOS((XNEW * XOLD + YNEW * YOLD + ZNEW * ZOLD) / (RNEW *
     1          ROLD))
      THETA = THETA + DTHETA
      IF(THETA .GE. THETAF) GO TO 24500
      GO TO 8000
24500 CONST = (THETA - THETAF) / DTHETA
      GO TO 30000
30000 VX = VXNEW - CONST * (VXNEW - VXOLD)
      VY = VYNEW - CONST * (VYNEW - VYOLD)
      VZ = VZNEW - CONST * (VZNEW - VZOLD)
      X = X - CONST * DTOTWO * (VXNEW + VXOLD)
      Y = Y - CONST * DTOTWO * (VYNEW + VYOLD)
      Z = Z - CONST * DTOTWO * (VZNEW + VZOLD)
      TIME = TIME - CONST * DELTS
      DO 30550 L = 1,3
      DO 30500 M = 1,3
      TBI(L,M) = TBI(L,M) - CONST * DTOTWO * (DOTOLD(L,M) + DOTNEW(L,M))
30500 CONTINUE
30550 CONTINUE
30575 IF(ES .GT. 1) GO TO 31550
      XTRUE(IES) = X
      YTRUE(IES) = Y
      ZTRUE(IES) = Z
      VXTRUE(IES) = VX
      VYTRUE(IES) = VY
      VZTRUE(IES) = VZ
      DO 31500 L = 1,3
      DO 31000 M = 1,3
      TBISAV(L,M, 1,IES) = TBI(L,M)
31000 CONTINUE
31500 CONTINUE
      CALL POSI2A
      D1TRUE(IES) = D1
      D2TRUE(IES) = D2
      D3TRUE(IES) = D3
      TTOTAL(1,IES) = TTOTAL(1,IES-1) + TIME
      GO TO 31650
31550 TTOTAL(ES,IES) = TTOTAL(ES,IES-1) + TIME
      DT(ES,IES) = TTOTAL(ES,IES) - TTOTAL(1,IES)
      DELXI(ES,IES) = X - XTRUE(IES)
      DELYI(ES,IES) = Y - YTRUE(IES)
      DELZI(ES,IES) = Z - ZTRUE(IES)
      DELVXI(ES,IES) = VX - VXTRUE(IES)
      DELVYI(ES,IES) = VY - VYTRUE(IES)
      DELVZI(ES,IES) = VZ - VZTRUE(IES)
      CALL ERROR
      DO 31600 L = 1,3
      DO 31575 M = 1,3
      TBISAV(L,M,ES,IES) = TBI(L,M)
31575 CONTINUE
31600 CONTINUE
```

```
31650 IF(ES .EQ. ESMAX) GO TO 31700
      ES = ES + 1
      GO TO 4000
31700 ES = 1
      DO 31800 I = 1,3
      DO 31790 J = 1,3
      TAIOLD(I,J) = TAI(I,J)
31790 CONTINUE
31800 CONTINUE
      RETURN
      END
```

```
      SUBROUTINE OUTPUT
      INTEGER ES,ESMAX
      COMMON OMEG(3,3),TLI(3,3),TEMP1(3,50),TEMP2(3,50),W(3,50),A(3,50)
     1        ,WTEMP(3,1),ATEMP(3,1),T(50),TBI(3,3),TIB(3,3),TBG(3,3),
     2        TGB(3,3),ALPHA(50),BETA(50),TWB(3,3),IAORSE,RP,GCON,XMASS,
     3        X,Y,Z,DELTS,DTOTWO,IFRAME,VX,VY,VZ,NPTS,TIA(3,3),TAI(3,3)
     4        ,TAIOLD(3,3),TAINEW(3,3),TTOTAL(27,10),TIME,TMAX,XTRUE(10)
     5        ,YTRUE(10),ZTRUE(10),VXTRUE(10),VYTRUE(10),VZTRUE(10),
     6        A1DOT,A2DOT,A3DOT,DELRA(3,27,10),DELVD(3,27,10),D1,D2,D3,
     7        D1TRUE(10),D2TRUE(10),D3TRUE(10),DOTOLD(3,3),DOTNEW(3,3),
     8        AXOLD,AXNEW,AYOLD,AYNEW,AZOLD,AZNEW,VXOLD,VXNEW,VYOLD,
     9        VYNEW,VZOLD,VZNEW,GX,GY,GZ,DT(27,10),TBISAV(3,3,27,10)
      COMMON ES,ESMAX,IOPT,IVAR,IFUSE,PAR(7,7),ECM(7,7),ADOT(3,3),
     1        EIDOT(3,3),DEL(3,1),ENPI,PIOTWO,PI
     2        ,IDORR,IGORLT,IUNITS,RRATE,IFS,IFSMAX,TBA(3,3),TAB(3,3)
     3        ,RMAX,THETAF,R,THETA,KFLY,EN
     4       ,RSS1(10),RSS2(10),RSS3(10),RSS4(10),RSS5(10),RSS6(10)
     5       ,RSS7(10),ERRMAG(27),ERRDC(3,27),HOLD(10),SAVE(10),
     6       E12MAT(3,1),E14MAT(3,1),E16MAT(3,1),QUANT,ARM(10),PSD(10),
     7       PSDE(10),KE,ICON
      COMMON AMPSS(10),FREQ(10),DCOS(3,10),DCS1(3,5),DCS2(3,5),
     1        KSS,ACONSS(5),FCONSS(5),DUMMY(3,3),ICHANG
     2       ,ISCHME,IWDSI7,COMPFO,NSS,DELXI(27,10),DELYI(27,10),
     3       DELVXI(27,10),DELVYI(27,10),DELVZI(27,10),DELZI(27,10)
     4       ,E13MAT(3,1),E15MAT(3,1)
   10 FORMAT(6H0TRUTH)
   20 FORMAT(16H0FLIGHT SEGMENT ,I2)
   25 FORMAT(38H0INERTIAL POSITION AND VELOCITY FOLLOW)
   30 FORMAT( /// 14H0ERROR SOURCE ,I2 //)
   31 FORMAT(1H0,4H X =F15.8,4H FT.,10X,4H Y =F15.8,4H FT.,10X,4H Z =F15
     1       .8,4H FT. / 1X,4HVX =F15.8,8H FT./SEC,6X,4HVY =F15.8,8H FT./
     2SEC,6X,4HVZ =F15.8,8H FT./SEC)
   40 FORMAT(1H0,4H X =F15.8,7H METERS,10X,4H Y =F15.8,7H METERS,10X,
     1       4H Z =F15.8,7H METERS / 1X,4HVX =F15.8,11H METERS/SEC,6X,
     2       4HVY =F15.8,11H METERS/SEC,6X,4HVZ =F15.8,11H METERS/SEC)
   50 FORMAT(1H0,6X,6HRADIUS,24X,8HVELOCITY,25X,5HGAMMA,25X,4HTIME / 1X,
     1       F15.8,4H FT.,10X,F15.8,8H FT./SEC,10X,F15.8,5H RAD.,10X,
     2       F15.8,4H SEC//)
   55 FORMAT(1H0,8X,6HRADIUS,27X,8HVELOCITY,26X,5HGAMMA,25X,4HTIME / 1X,
     1       F15.8,7H METERS,10X,F15.8,11H METERS/SEC,10X,F15.8,5H RAD.,
     2       10X,F15.8,4H SEC//)
   60 FORMAT(4H0TBI / 3(5X,F15.8) / 3(5X,F15.8) / 3(5X,F15.8) //)
   65 FORMAT(53H0TRANSITION MATRIX FROM INERTIAL FRAME TO LOCAL FRAME /
     1        3(5X,F15.8) / 3(5X,F15.8) / 3(5X,F15.8) ////)
   70 FORMAT(4H0ECM / 7(4X,E15.8) / 7(4X,E15.8) / 7(4X,E15.8) / 7(4X,E15
     1       .8) / 7(4X,E15.8) / 7(4X,E15.8) / 7(4X,E15.8)/////)
   80 FORMAT(45H0ERROR PRINTOUT FOR EACH ERROR SOURCE FOLLOWS ////)
   91 FORMAT(1H0,9X,8HDELXI(M),10X,8HDELYI(M),10X,8HDELZI(M),8X,
     1       13HDELVXI(M/SEC),5X,13HDELVYI(M/SEC),5X,13HDELVZI(M/SEC)/
     2       4X,6(3X,F15.8) //)
   92 FORMAT(17H0TBI ERROR MATRIX / 3(5X,F15.8) / 3(5X,F15.8) / 3(5X,
     1       F15.8) // 27H0ATTITUDE ERROR PARAMETER =,F15.8 //)
   93 FORMAT(1H0,9X,8HDELRA(M),10X,8HDELDR(M),10X,8HDELCR(M),8X,
     1       13HDELVEL(M/SEC),   6X,12HDELGAM(RADS),6X,12HDELPSI(RADS),
     2       6X,12HDELTIME(SEC) / 4X,7(3X,E15.8) //)
   94 FORMAT(25H0ERROR SOURCE MAGNITUDE =F15.8 //)
   95 FORMAT(1H0,9X,8HDELXI(F),10X,8HDELYI(F),10X,8HDELZI(F),8X,
     1       13HDELVXI(F/SEC),5X,13HDELVYI(F/SEC),5X,13HDELVZI(F/SEC)/
     2       4X,6(3X,F15.8) //)
   96 FORMAT(1H0,9X,8HDELRA(F),10X,8HDELDR(F),10X,8HDELCR(F),8X,
     1       13HDELVEL(F/SEC),   6X,12HDELGAM(RADS),6X,12HDELPSI(RADS),
```

```
    2       6X,12HDELTIME(SEC) / 4X,7(3X,E15.8) //)
  100 FORMAT(28H0STATISTICAL SUMMARY FOLLOWS)
  110 FORMAT(1H0,11X,5HDELRA,13X,5HDELDR,13X,5HDELCR,13X,6HDELVEL,12X,
    1       6HDELGAM,12X,6HDELPSI,11X,7HDELTIME / 4H RSS,7(3X,E15.8))
      R = SQRT(XTRUE(IFS) ** 2 + YTRUE(IFS) ** 2 + ZTRUE(IFS) ** 2)
      ITEMP = IFS - 1
      WRITE(6,20) ITEMP
      DO 5000 ES = 1,ESMAX
      IF(ES .GT. 1) GO TO 2000
      WRITE(6,10)
      WRITE(6,25)
      IF(IUNITS .EQ. 0) GO TO 1100
      X1 = XTRUE(IFS) * 3.281
      Y1 = YTRUE(IFS) * 3.281
      Z1 = ZTRUE(IFS) * 3.281
      VX1 = VXTRUE(IFS) * 3.281
      VY1 = VYTRUE(IFS) * 3.281
      VZ1 = VZTRUE(IFS) * 3.281
      WRITE(6,31) X1,Y1,Z1,VX1,VY1,VZ1
      R1 = R * 3.281
      D11 = D1TRUE(IFS) * 3.281
      WRITE(6,50) R1,D11,D2TRUE(IFS),TTOTAL(1,IFS)
      GO TO 1200
 1100 WRITE(6,40) XTRUE(IFS),YTRUE(IFS),ZTRUE(IFS),VXTRUE(IFS),
    1       VYTRUE(IFS),VZTRUE(IFS)
      WRITE(6,55) R,D1TRUE(IFS),D2TRUE(IFS),TTOTAL(1,IFS)
 1200 WRITE(6,60) ((TBISAV(I,J,1,IFS),J=1,3),I=1,3)
      WRITE(6,65) ((TIA(I,J),J=1,3),I=1,3)
      GO TO (1300,5000),KFLY
 1300 WRITE(6,70) ((FCM(I,J),J=1,7),I=1,7)
      GO TO 5000
 2000 IF(ES .GT. 2) GO TO 2500
      WRITE(6,80)
 2500 SS = 0.
      DO 2700 I = 1,3
      DO 2600 J = 1,3
      TEMP1(I,J) = TBISAV(I,J,ES,IFS) - TBISAV(I,J,1,IFS)
      SS = SS + TEMP1(I,J) ** 2
 2600 CONTINUE
 2700 CONTINUE
      WRITE(6,30) ES
      COOT = SQRT(SS)
      X1 = XTRUE(IFS) + DELXI(ES,IFS)
      Y1 = YTRUE(IFS) + DELYI(ES,IFS)
      Z1 = ZTRUE(IFS) + DELZI(ES,IFS)
      VX1 = VXTRUE(IFS) + DELVXI(ES,IFS)
      VY1 = VYTRUE(IFS) + DELVYI(ES,IFS)
      VZ1 = VZTRUE(IFS) + DELVZI(ES,IFS)
      WRITE(6,25)
      IF(IUNITS .EQ. 0) GO TO 2800
      X1 = 3.281 * X1
      Y1 = 3.281 * Y1
      Z1 = 3.281 * Z1
      VX1 = 3.281 * VX1
      VY1 = 3.281 * VY1
      VZ1 = 3.281 * VZ1
      WRITE(6,31) X1,Y1,Z1,VX1,VY1,VZ1
      GO TO 2900
 2800 WRITE(6,40) X1,Y1,Z1,VX1,VY1,VZ1
 2900 WRITE (6,60) ((TBISAV(I,J,ES,IFS),J=1,3),I=1,3)
      IF(IUNITS .EQ. 1) GO TO 2910
```

```
      WRITE(6,91) DELXI(ES,IES),DELYI(ES,IES),DELZI(ES,IES),DELVXI(ES,
     1       IES),DELVYI(ES,IES),DELVZI(ES,IES)
      GO TO 2920
 2910 X1 = 3.281 * DELXI(ES,IES)
      Y1 = 3.281 * DELYI(ES,IES)
      Z1 = 3.281 * DELZI(ES,IES)
      VX1 = 3.281 * DELVXI(ES,IES)
      VY1 = 3.281 * DELVYI(ES,IES)
      VZ1 = 3.281 * DELVZI(ES,IES)
      WRITE(6,95) X1,Y1,Z1,VX1,VY1,VZ1
 2920 WRITE(6,92) ((TEMP1(I,J)        ,J=1,3),I=1,3),CDOT
      IF(IUNITS .EQ. 1) GO TO 2950
      WRITE(6,93) (DELRA(I,ES,IES),I=1,3),(DELVD(I,ES,IES),I=1,3),
     1       DT(ES,IES)
      GO TO 2970
 2950 X1 = 3.281 * DELRA(1,ES,IES)
      Y1 = 3.281 * DELRA(2,ES,IES)
      Z1 = 3.281 * DELRA(3,ES,IES)
      VX1 = 3.281 * DELVD(1,ES,IES)
      WRITE(6,96) X1,Y1,Z1,VX1,DELVD(2,ES,IES),DELVD(3,ES,IES),DT(ES,
     1        IES)
 2970 IF(ES .LT. 12) GO TO 5000
      IF(ES .EQ. 27) GO TO 4800
      SUM = 0.
      DO 4500 I = 1,3
      SUM = SUM + ERRMAG(ES) * ERRDC(I,ES)
 4500 CONTINUE
      WRITE(6,94) SUM
      GO TO 5000
 4800 WRITE(6,94) ERRMAG(27)
 5000 CONTINUE
      SS1 = 0.
      SS2 = 0.
      SS3 = 0.
      SS4 = 0.
      SS5 = 0.
      SS6 = 0.
      SS7 = 0.
      DO 6000 ES = 2,ESMAX
      SS1 = SS1 + DELRA(1,ES,IES) ** 2
      SS2 = SS2 + DELRA(2,ES,IES) ** 2
      SS3 = SS3 + DELRA(3,ES,IES) ** 2
      SS4 = SS4 + DELVD(1,ES,IES) ** 2
      SS5 = SS5 + DELVD(2,ES,IES) ** 2
      SS6 = SS6 + DELVD(3,ES,IES) ** 2
      SS7 = SS7 + DT(ES,IES) ** 2
 6000 CONTINUE
      X1 = 1.0
      IF (IUNITS .EQ. 0) GO TO 6100
      X1 = 3.281
 6100 RSS1(IES) = SQRT(SS1) * X1
      RSS2(IES) = SQRT(SS2) * X1
      RSS3(IES) = SQRT(SS3) * X1
      RSS4(IES) = SQRT(SS4) * X1
      RSS5(IES) = SQRT(SS5)
      RSS6(IES) = SQRT(SS6)
      RSS7(IES) = SQRT(SS7)
      WRITE(6,100)
      WRITE(6,110) RSS1(IES),RSS2(IES),RSS3(IES),RSS4(IES),RSS5(IES),
     1             RSS6(IES),RSS7(IES)
      RETURN
```

```
      SUBROUTINE ERMODS
      INTEGER ES,ESMAX
      COMMON OMEG(3,3),TLI(3,3),TEMP1(3,50),TEMP2(3,50),W(3,50),A(3,50)
     1        ,WTEMP(3,1),ATEMP(3,1),T(50),TBI(3,3),TIB(3,3),TBG(3,3),
     2        TGB(3,3),ALPHA(50),BETA(50),TWB(3,3),IADRSE,RP,GCON,XMASS,
     3        X,Y,Z,DELTS,DTOTWO,IFRAME,VX,VY,VZ,NPTS,TIA(3,3),TAI(3,3)
     4        ,TAIOLD(3,3),TAINEW(3,3),TTOTAL(27,10),TIME,TMAX,XTRUE(10)
     5        ,YTRUE(10),ZTRUE(10),VXTRUE(10),VYTRUE(10),VZTRUE(10),
     6        A1DOT,A2DOT,A3DOT,DELRA(3,27,10),DELVD(3,27,10),D1,D2,D3,
     7        D1TRUE(10),D2TRUE(10),D3TRUE(10),DOTOLD(3,3),DOTNEW(3,3),
     8        AXOLD,AXNEW,AYOLD,AYNEW,AZOLD,AZNEW,VXOLD,VXNEW,VYOLD,
     9        VYNEW,VZOLD,VZNEW,GX,GY,GZ,DT(27,10),TBISAV(3,3,27,10)
      COMMON ES,ESMAX,IOPT,IVAR,IFUSE,PAR(7,7),ECM(7,7),ADOT(3,3),
     1        FIDOT(3,3),DEL(3,1),FNPI,PIDTWO,PI
     2        ,IDORR,IGORLT,IUNITS,RRATE,IFS,IFSMAX,TBA(3,3),TAB(3,3)
     3        ,RMAX,THETAE,R,THETA,KELY,EN
     4       ,RSS1(10),RSS2(10),RSS3(10),RSS4(10),RSS5(10),RSS6(10)
     5       ,RSS7(10),ERRMAG(27),ERRDC(3,27),HOLD(10),SAVE(10),
     6       F12MAT(3,1),F14MAT(3,1),F16MAT(3,1),QUANT,ARM(10),PSD(10),
     7       PSDE(10),KE,ICON
      COMMON AMPSS(10),FREQ(10),DCOS(3,10),DCS1(3,5),DCS2(3,5),
     1        KSS,ACONSS(5),FCONSS(5),DUMMY(3,3),ICHANG
     2       ,ISCHME,IWDST7,COMPFQ,NSS,DELXI(27,10),DELYI(27,10),
     3       DELVXI(27,10),DELVYI(27,10),DELVZI(27,10),DELZI(27,10)
     4       ,F13MAT(3,1),F15MAT(3,1)
      K=ES-10
      GO TO (2000,3000,4000,5000,6000,7000,8000,9000,10000,11000,12000,
     1       13000,14000,15000,16000,17000,18000 ),K
 2000 EMAGW = SQRT(WTEMP(1,1) ** 2 + WTEMP(2,1) ** 2 + WTEMP(3,1) ** 2)
      IF ( EMAGW .LT. 1.0E-35) GO TO 25000
      GO TO (2100,2200,2300),ISCHME
 2100 ERR11 = .581* (EMAGW ** 2 / COMPFQ)
      GO TO 2500
 2200 ERR11 = .122 * (EMAGW ** 3 / COMPFQ)
      GO TO 2500
 2300 ERR11 = 4.85E-3 * (EMAGW ** 5 / COMPFQ ** 4)
 2500 TEMP = 1. + ERR11 / EMAGW
      WTEMP(1,1) = WTEMP(1,1) * TEMP
      WTEMP(2,1) = WTEMP(2,1) * TEMP
      WTEMP(3,1) = WTEMP(3,1) * TEMP
      GO TO 25000
 3000 WTEMP(1,1) = WTEMP(1,1) + F12MAT(1,1)
      GO TO 25000
 4000 WTEMP(2,1) = WTEMP(2,1) + F12MAT(2,1)
      GO TO 25000
 5000 WTEMP(3,1) = WTEMP(3,1) + F12MAT(3,1)
      GO TO 25000
 6000 WTEMP(1,1) = WTEMP(1,1) + F13MAT(1,1)
      GO TO 25000
 7000 WTEMP(2,1) = WTEMP(2,1) + F13MAT(2,1)
      GO TO 25000
 8000 WTEMP(3,1) = WTEMP(3,1) + F13MAT(3,1)
      GO TO 25000
 9000 WTEMP(1,1) = WTEMP(1,1) + F14MAT(1,1)
      GO TO 25000
10000 WTEMP(2,1) = WTEMP(2,1) + F14MAT(2,1)
      GO TO 25000
11000 WTEMP(3,1) = WTEMP(3,1) + F14MAT(3,1)
      GO TO 25000
12000 WTEMP(1,1) = WTEMP(1,1) + E15MAT(1,1)
      GO TO 25000
13000 WTEMP(2,1) = WTEMP(2,1) + E15MAT(2,1)
      GO TO 25000
```

```
14000 WTEMP(3,1) = WTEMP(3,1) + E15MAT(3,1)
      GO TO 25000
15000 WTEMP(1,1) = WTEMP(1,1) + E16MAT(1,1)
      GO TO 25000
16000 WTEMP(2,1) = WTEMP(2,1) + E16MAT(2,1)
      GO TO 25000
17000 WTEMP(3,1) = WTEMP(3,1) + E16MAT(3,1)
      GO TO 25000
18000 FMAGA = SQRT(ATEMP(1,1) ** 2 + ATEMP(2,1) ** 2 + ATEMP(3,1) ** 2)
      IF ( FMAGA .LT. 1.0E-35) GO TO 25000
      TEMP = 1. + ERRMAG(27) / FMAGA
      ATEMP(1,1) = ATEMP(1,1) * TEMP
      ATEMP(2,1) = ATEMP(2,1) * TEMP
      ATEMP(3,1) = ATEMP(3,1) * TEMP
25000 RETURN
      END
```

```
      SUBROUTINE DATCN2
      INTEGER ES,ESMAX
      COMMON OMEG(3,3),TLI(3,3),TEMP1(3,50),TEMP2(3,50),W(3,50),A(3,50)
     1       ,WTEMP(3,1),ATEMP(3,1),T(50),TBI(3,3),TIB(3,3),TBG(3,3),
     2       TGB(3,3),ALPHA(50),BETA(50),TWB(3,3),IADRSE,RP,GCON,XMASS,
     3       X,Y,Z,DELTS,DTOTWO,IFRAME,VX,VY,VZ,NPTS,TIA(3,3),TAI(3,3)
     4       ,TAIOLD(3,3),TAINEW(3,3),TTOTAL(27,10),TIME,TMAX,XTRUE(10)
     5       ,YTRUE(10),ZTRUE(10),VXTRUE(10),VYTRUE(10),VZTRUE(10),
     6       A1DOT,A2DOT,A3DOT,DELRA(3,27,10),DELVD(3,27,10),D1,D2,D3,
     7       D1TRUE(10),D2TRUE(10),D3TRUE(10),DOTOLD(3,3),DOTNEW(3,3),
     8       AXOLD,AXNEW,AYOLD,AYNEW,AZOLD,AZNEW,VXOLD,VXNEW,VYOLD,
     9       VYNEW,VZOLD,VZNEW,GX,GY,GZ,DT(27,10),TBISAV(3,3,27,10)
      COMMON ES,ESMAX,IOPT,IVAR,IFUSE,PAR(7,7),ECM(7,7),ADOT(3,3),
     1       EIDOT(3,3),DEL(3,1),ENPI,PIOTWO,PI
     2       ,IDORR,IGORLT,IUNITS,RRATE,IES,IESMAX,TBA(3,3),TAB(3,3)
     3       ,RMAX,THETAF,R,THETA,KELY,EN
     4      ,RSS1(10),RSS2(10),RSS3(10),RSS4(10),RSS5(10),RSS6(10)
     5      ,RSS7(10),ERRMAG(27),ERRDC(3,27),HOLD(10),SAVE(10),
     6      E12MAT(3,1),E14MAT(3,1),E16MAT(3,1),QUANT,ARM(10),PSD(10),
     7      PSDE(10),KE,ICON
      COMMON AMPSS(10),FREQ(10),DCOS(3,10),DCS1(3,5),DCS2(3,5),
     1       KSS,ACONSS(5),ECONSS(5),DUMMY(3,3),ICHANG
     2      ,ISCHME,IWDST7,COMPEO,NSS,DELXI(27,10),DELYI(27,10),
     3      DELVXI(27,10),DELVYI(27,10),DELVZI(27,10),DELZI(27,10)
     4      ,E13MAT(3,1),E15MAT(3,1)
   10 FORMAT(/// 32H0BODY RATES IN GYRO FRAME FOLLOW //  9X,4HTIME,15X,
     1       2HWX,16X,2HWY,16X,2HWZ)
   20 FORMAT(4(3X,F15.8))
   30 FORMAT(/// 1H0)
C     INITIALIZATIONS
      KOUNT = 0
      J = 1
      TIME = T(1)
      GO TO (1000,2000,2250,4000),IFRAME
 1000 CALL MATMUL(TLI,3,3,W,NPTS,TEMP1)
      DO 1200 L = 1,3
      DO 1100 M = 1,NPTS
      W(L,M) = TEMP1(L,M)
 1100 CONTINUE
 1200 CONTINUE
      GO TO 2000
 1500 J = J + 1
 2000 CALL INVERS(TBI,TIB)
      DO 2100 I = 1,3
      TEMP1(I,1) = W(I,J)
 2100 CONTINUE
      CALL MATMUL(TIB,3,3,TEMP1,1,WTEMP)
      WXSAVE = W(1,J)
      WYSAVE = W(2,J)
      WZSAVE = W(3,J)
      IF(J .NE. 1) GO TO 2200
      OMEG(2,1) = W(3,1)
      OMEG(1,2) = -OMEG(2,1)
      OMEG(1,3) = W(2,1)
      OMEG(3,1) = -OMEG(1,3)
      OMEG(3,2) = W(1,1)
      OMEG(2,3) = -OMEG(3,2)
      CALL MATMUL(TBI,3,3,OMEG,3,DOTNEW)
 2200 W(1,J) = WTEMP(1,1)
      W(2,J) = WTEMP(2,1)
      W(3,J) = WTEMP(3,1)
```

```
      GO TO 2725
 2250 DO 2300 M = 1,NPTS
      DO 2270 L = 1,3
      WTEMP(L,1) = W(L,M)
 2270 CONTINUE
      CALL TRTWB(ALPHA(M),BETA(M),TWB)
      CALL MATMUL(TWB,3,3,WTEMP,1,TEMP1)
      DO 2290 L = 1,3
      W(L,M) = TEMP1(L,1)
 2290 CONTINUE
 2300 CONTINUE
      GO TO 4000
 2725 IF(J .EQ. NPTS) GO TO 4000
 2750 TIME = TIME + DELTS
      CALL INTPLT(T(J) ,WZSAVE,T(J+1),W(3,J+1),TIME,OMEG(2,1))
      OMEG(1,2) = - OMEG(2,1)
      CALL INTPLT(T(J) ,WYSAVE,T(J+1),W(2,J+1),TIME,OMEG(1,3))
      OMEG(3,1) = - OMEG(1,3)
      CALL INTPLT(T(J) ,WXSAVE,T(J+1),W(1,J+1),TIME,OMEG(3,2))
      OMEG(2,3) = - OMEG(3,2)
      DO 2900 L = 1,3
      DO 2800 M = 1,3
      DDTOLD(L,M) = DDTNEW(L,M)
 2800 CONTINUE
 2900 CONTINUE
      CALL MATMUL(OMEG,3,3,TRI,3,DDTNEW)
      DO 3300 L = 1,3
      DO 3200 M = 1,3
      TRI(L,M) = TRI(L,M) + DTDTWO * (DDTOLD(L,M) + DDTNEW(L,M))
 3200 CONTINUE
 3300 CONTINUE
      IF(TIME + DELTS .LT. T(J+1)) GO TO 2750
      IF(KOUNT .EQ. 1) GO TO 3350
      DTSAVE = DELTS
      DELTS = T(J+1) - TIME
      IF(DELTS .EQ. 0.) GO TO 3350
      KOUNT = 1
      DTDTWO = .5 * DELTS
      GO TO 2750
 3350 DELTS = DTSAVE
      DTDTWO = .5 * DELTS
      KOUNT = 0
      GO TO 1500
 4000 DO 4500 L = 1,3
      DO 4250 M = 1,NPTS
      TEMP1(L,M) = W(L,M)
 4250 CONTINUE
 4500 CONTINUE
      CALL MATMUL(TBG,3,3,TEMP1,NPTS,W)
      WRITE(6,10)
      DO 6000 J = 1,NPTS
      WRITE(6,20) T(J),(W(I,J),I=1,3)
 6000 CONTINUE
      WRITE(6,30)
      RETURN
      END
```

```
      SUBROUTINE TRTWB(A,B,T)
C     CALCULATES WIND TO BODY AXIS TRANSFORMATION
      DIMENSION T(3,3)
      T(1,2) = SIN(A)
      T(2,2) = COS(A)
      T(3,3) = COS(B)
      T(3,1) = - T(1,2)
      T(1,1) = T(2,2) * T(3,3)
      T(2,1) = T(3,1) * T(3,3)
      TEMP = SIN(B)
      T(1,3) = T(2,2) * TEMP
      T(2,3) = T(3,1) * TEMP
      T(3,2) = 0.
      RETURN
      END
```

```
      SUBROUTINE TRTAD
      INTEGER ES,ESMAX
      COMMON OMEG(3,3),TLI(3,3),TEMP1(3,50),TEMP2(3,50),W(3,50),A(3,50)
     1        ,WTEMP(3,1),ATEMP(3,1),T(50),TBI(3,3),TIB(3,3),TBG(3,3),
     2        TGB(3,3),ALPHA(50),BETA(50),TWB(3,3),IADRSE,RP,GCON,XMASS,
     3        X,Y,Z,DELTS,DTOTWO,IFRAME,VX,VY,VZ,NPTS,TIA(3,3),TAI(3,3)
     4        ,TAIOLD(3,3),TAINEW(3,3),TTOTAL(27,10),TIME,TMAX,XTRUE(10)
     5        ,YTRUE(10),ZTRUE(10),VXTRUE(10),VYTRUE(10),VZTRUE(10),
     6        A1DOT,A2DOT,A3DOT,DELRA(3,27,10),DELVO(3,27,10),D1,D2,D3,
     7        D1TRUE(10),D2TRUE(10),D3TRUE(10),DOTOLD(3,3),DOTNEW(3,3),
     8        AXOLD,AXNEW,AYOLD,AYNEW,AZOLD,AZNEW,VXOLD,VXNEW,VYOLD,
     9        VYNEW,VZOLD,VZNEW,GX,GY,GZ,DT(27,10),TBISAV(3,3,27,10)
      COMMON ES,ESMAX,IOPT,IVAR,IFUSE,PAR(7,7),ECM(7,7),ADOT(3,3),
     1        EIDOT(3,3),DEL(3,1),ENPI,PIOTWO,PI
     2        ,IDORB,IGORLT,IUNITS,RRATE,IES,IESMAX,TBA(3,3),TAB(3,3)
     3        ,RMAX,THETAE,R,THETA,KELY,EN
     4       ,RSS1(10),RSS2(10),RSS3(10),RSS4(10),RSS5(10),RSS6(10)
     5       ,RSS7(10),ERRMAG(27),ERRDC(3,27),HOLD(10),SAVE(10),
     6       E12MAT(3,1),E14MAT(3,1),E16MAT(3,1),QUANT,ARM(10),PSD(10),
     7       PSDE(10),KE,ICON
      COMMON AMPSS(10),EREQ(10),DCOS(3,10),DCS1(3,5),DCS2(3,5),
     1        KSS,ACONSS(5),ECONSS(5),DUMMY(3,3),ICHANG
     2       ,ISCHME,IWDSIZ,COMPED,NSS,DELXI(27,10),DELYI(27,10),
     3       DELVXI(27,10),DELVYI(27,10),DELVZI(27,10),DELZI(27,10)
     4       ,E13MAT(3,1),E15MAT(3,1)
      A1DOT=ADOT(1,1)
      A2DOT=ADOT(2,1)
      A3DOT=ADOT(3,1)
      D1 = SQRT(A1DOT ** 2 + A2DOT ** 2 + A3DOT ** 2)
      CALL AGONY (A2DOT, A1DOT, D2)
      D3 = ARSIN(A3DOT / D1)
      IF(ABS(D3) .GT. 1.E-6) GO TO 1000
      D3 = 0.
 1000 RETURN
      END
```

```
      SUBROUTINE TRTDA
      INTEGER ES,ESMAX
      COMMON OMEG(3,3),TLI(3,3),TEMP1(3,50),TEMP2(3,50),W(3,50),A(3,50)
     1       ,WTEMP(3,1),ATEMP(3,1),T(50),TBI(3,3),TIB(3,3),TBG(3,3),
     2       TGB(3,3),ALPHA(50),BETA(50),TWB(3,3),IADRSF,RP,GCON,XMASS,
     3       X,Y,Z,DELTS,DTOTWO,IFRAME,VX,VY,VZ,NPTS,TIA(3,3),TAI(3,3)
     4       ,TAIOLD(3,3),TAINEW(3,3),TTOTAL(27,10),TIME,TMAX,XTRUE(10)
     5       ,YTRUE(10),ZTRUE(10),VXTRUE(10),VYTRUE(10),VZTRUE(10),
     6       A1DOT,A2DOT,A3DOT,DELRA(3,27,10),DELVD(3,27,10),D1,D2,D3,
     7       D1TRUE(10),D2TRUE(10),D3TRUE(10),DOTOLD(3,3),DOTNEW(3,3),
     8       AXOLD,AXNEW,AYOLD,AYNEW,AZOLD,AZNEW,VXOLD,VXNEW,VYOLD,
     9       VYNEW,VZOLD,VZNEW,GX,GY,GZ,DT(27,10),TBISAV(3,3,27,10)
      COMMON ES,ESMAX,IOPT,IVAR,IFUSE,PAR(7,7),ECM(7,7),ADOT(3,3),
     1       EIDOT(3,3),DEL(3,1),ENPI,PIOTWO,PI
     2       ,IDORR,IGORLT,IUNITS,RRATE,IES,IESMAX,TBA(3,3),TAB(3,3)
     3       ,RMAX,THETAF,R,THETA,KELY,EN
     4      ,RSS1(10),RSS2(10),RSS3(10),RSS4(10),RSS5(10),RSS6(10)
     5      ,RSS7(10),ERRMAG(27),ERRDC(3,27),HOLD(10),SAVE(10),
     6      E12MAT(3,1),E14MAT(3,1),E16MAT(3,1),QUANT,APM(10),PSD(10),
     7      PSDE(10),KE,ICON
      COMMON AMPSS(10),FREQ(10),DCOS(3,10),DCS1(3,5),DCS2(3,5),
     1       KSS,ACONSS(5),ECONSS(5),DUMMY(3,3),ICHANG
     2      ,ISCHME,IWDSI7,COMPFQ,NSS,DELXI(27,10),DELYI(27,10),
     3      DELVXI(27,10),DELVYI(27,10),DELVZI(27,10),DELZI(27,10)
     4      ,E13MAT(3,1),E15MAT(3,1)
      TEMP = COS(D3)
      A1DOT = D1 * COS(D2) * TEMP
      A2DOT = D1 * TEMP * SIN(D2)
      A3DOT = D1 * SIN(D3)
      RETURN
      END
```

```
      SUBROUTINE TRTAI
C     CALCULATES A FRAME TO INERTIAL FRAME TRANSFORMATION MATRIX
      INTEGER FS,FSMAX
      COMMON OMEG(3,3),TLI(3,3),TEMP1(3,50),TEMP2(3,50),W(3,50),A(3,50)
     1       ,WTEMP(3,1),ATEMP(3,1),T(50),TBI(3,3),TIB(3,3),TBG(3,3),
     2       TGB(3,3),ALPHA(50),BETA(50),TWB(3,3),IAORSE,PP,GCON,XMASS,
     3       X,Y,Z,DELTS,DTOTWO,IFRAME,VX,VY,VZ,NPTS,TIA(3,3),TAI(3,3)
     4       ,TAIOLD(3,3),TAINEW(3,3),TTOTAL(27,10),TIME,TMAX,XTRUE(10)
     5       ,YTRUE(10),ZTRUE(10),VXTRUE(10),VYTRUE(10),VZTRUE(10),
     6       A1DOT,A2DOT,A3DOT,DELRA(3,27,10),DELVD(3,27,10),D1,D2,D3,
     7       D1TRUE(10),D2TRUE(10),D3TRUE(10),DDTOLD(3,3),DDTNEW(3,3),
     8       AXOLD,AXNEW,AYOLD,AYNEW,AZOLD,AZNEW,VXOLD,VXNEW,VYOLD,
     9       VYNEW,VZOLD,VZNEW,GX,GY,GZ,DT(27,10),TBISAV(3,3,27,10)
      COMMON FS,FSMAX,IOPT,IVAR,IFUSE,PAR(7,7),ECM(7,7),ADOT(3,3),
     1       FIDOT(3,3),DEL(3,1),FNPI,PIOTWO,PI
     2       ,IDORR,IGORLT,IUNITS,RRATE,IFS,IFSMAX,TRA(3,3),TAR(3,3)
     3       ,RMAX,THETAF,R,THETA,KELY,FN
     4      ,RSS1(10),RSS2(10),RSS3(10),RSS4(10),RSS5(10),RSS6(10)
     5      ,RSS7(10),ERRMAG(27),ERRDC(3,27),HOLD(10),SAVE(10),
     6      E12MAT(3,1),E14MAT(3,1),E16MAT(3,1),QUANT,ARM(10),PSD(10),
     7      PSDF(10),KF,ICON
      COMMON AMPSS(10),FREQ(10),DCOS(3,10),DCS1(3,5),DCS2(3,5),
     1       KSS,ACONSS(5),FCONSS(5),DUMMY(3,3),ICHANG
     2      ,ISCHME,IWDSI7,COMPFO,NSS,DELXI(27,10),DELYI(27,10),
     3      DELVXI(27,10),DELVYI(27,10),DELVZI(27,10),DELZI(27,10)
     4      ,E13MAT(3,1),E15MAT(3,1)
      FMAGR = SQRT(X ** 2 + Y ** 2 + Z ** 2)
      TEMP = 1. / FMAGR
      TAI(1,1) = X * TEMP
      TAI(2,1) = Y * TEMP
      TAI(3,1) = Z * TEMP
      X1 = Y * VZ - Z * VY
      X2 = Z * VX - X * VZ
      X3 = X * VY - Y * VX
      TEMP = SQRT(X1 ** 2 + X2 ** 2 + X3 ** 2)
      TEMP = 1. / TEMP
      TAI(1,3) = TEMP * X1
      TAI(2,3) = TEMP * X2
      TAI(3,3) = TEMP * X3
      TEMP = TEMP / FMAGR
      TAI(1,2) = TEMP * (Z * (Z * VX - X * VZ) - Y * (X * VY - Y * VX))
      TAI(2,2) = TEMP * (X * (X * VY - Y * VX) - Z * (Y * VZ - Z * VY))
      TAI(3,2) = TEMP * (Y * (Y * VZ - Z * VY) - X * (Z * VX - X * VZ))
      RETURN
      END
```

```
      SUBROUTINE VELD2I
C     TRANSFORMS VELOCITY IN THE D FRAME TO VELOCITY IN THE I FRAME
      INTEGER ES,ESMAX
      COMMON OMEG(3,3),TLI(3,3),TEMP1(3,50),TEMP2(3,50),W(3,50),A(3,50)
     1       ,WTEMP(3,1),ATEMP(3,1),T(50),TBI(3,3),TIB(3,3),TBG(3,3),
     2       TGB(3,3),ALPHA(50),BETA(50),TWB(3,3),IADRSE,RP,GCON,XMASS,
     3       X,Y,Z,DELTS,DTOTWO,IFRAME,VX,VY,VZ,NPTS,TIA(3,3),TAI(3,3)
     4       ,TAIOLD(3,3),TAINEW(3,3),TTOTAL(27,10),TIME,TMAX,XTRUE(10)
     5       ,YTRUE(10),ZTRUE(10),VXTRUE(10),VYTRUE(10),VZTRUE(10),
     6       A1DOT,A2DOT,A3DOT,DELRA(3,27,10),DELVD(3,27,10),D1,D2,D3,
     7       D1TRUE(10),D2TRUE(10),D3TRUE(10),DOTOLD(3,3),DOTNEW(3,3),
     8       AXOLD,AXNEW,AYOLD,AYNEW,AZOLD,AZNEW,VXOLD,VXNEW,VYOLD,
     9       VYNEW,VZOLD,VZNEW,GX,GY,GZ,DT(27,10),TBISAV(3,3,27,10)
      COMMON ES,ESMAX,IOPT,IVAR,IFUSE,PAR(7,7),FCM(7,7),ADOT(3,3),
     1       FIDOT(3,3),DEL(3,1),FNPI,PIOTWO,PI
     2       ,IDORR,IGORLT,IUNITS,RRATE,IES,IESMAX,TBA(3,3),TAB(3,3)
     3       ,RMAX,THETAF,R,THETA,KELY,FN
     4      ,RSS1(10),RSS2(10),RSS3(10),RSS4(10),RSS5(10),RSS6(10)
     5      ,RSS7(10),ERRMAG(27),ERRDC(3,27),HOLD(10),SAVE(10),
     6      E12MAT(3,1),E14MAT(3,1),E16MAT(3,1),QUANT,APM(10),PSD(10),
     7      PSDE(10),KE,ICON
      COMMON AMPSS(10),FREQ(10),DCOS(3,10),DCS1(3,5),DCS2(3,5),
     1       KSS,ACONSS(5),FCONSS(5),DUMMY(3,3),ICHANG
     2      ,ISCHME,IWDSIZ,COMPEQ,NSS,DELXI(27,10),DELYI(27,10),
     3      DELVXI(27,10),DELVYI(27,10),DELVZI(27,10),DELZI(27,10)
     4      ,E13MAT(3,1),E15MAT(3,1)
      CALL TRTDA
      ADOT(1,1)  = A1DOT
      ADOT(2,1)  = A2DOT
      ADOT(3,1)  = A3DOT
      CALL MATMUL (TAI ,3,3,ADOT,1,FIDOT)
      VX = FIDOT(1,1)
      VY = FIDOT(2,1)
      VZ = FIDOT(3,1)
      RETURN
      END
```

```
      SUBROUTINE POSI2A
C     DETERMINES A NEW A FRAME AND EXPRESSES VELOCITY IN THE D FRAME
      INTEGER ES,ESMAX
      COMMON OMEG(3,3),TLI(3,3),TEMP1(3,50),TEMP2(3,50),W(3,50),A(3,50)
     1       ,WTEMP(3,1),ATEMP(3,1),T(50),TBI(3,3),TIB(3,3),TBG(3,3),
     2       TGB(3,3),ALPHA(50),BETA(50),TWB(3,3),IADRSE,RP,GCON,XMASS,
     3       X,Y,Z,DELTS,DTOTWO,IFRAME,VX,VY,VZ,NPTS,TIA(3,3),TAI(3,3)
     4       ,TAIOLD(3,3),TAINEW(3,3),TTOTAL(27,10),TIME,TMAX,XTRUE(10)
     5       ,YTRUE(10),ZTRUE(10),VXTRUE(10),VYTRUE(10),VZTRUE(10),
     6       A1DOT,A2DOT,A3DOT,DELRA(3,27,10),DELVD(3,27,10),D1,D2,D3,
     7       D1TRUE(10),D2TRUE(10),D3TRUE(10),DOTOLD(3,3),DOTNEW(3,3),
     8       AXOLD,AXNEW,AYOLD,AYNEW,AZOLD,AZNEW,VXOLD,VXNEW,VYOLD,
     9       VYNEW,VZOLD,VZNEW,GX,GY,GZ,DT(27,10),TBISAV(3,3,27,10)
      COMMON ES,ESMAX,IOPT,IVAR,IFUSE,PAR(7,7),ECM(7,7),ADOT(3,3),
     1       FIDOT(3,3),DEL(3,1),ENPI,PIOTWO,PI
     2       ,IDORR,IGORLT,IUNITS,RRATE,IFS,IFSMAX,TBA(3,3),TAB(3,3)
     3       ,RMAX,THETAE,R,THETA,KELY,EN
     4      ,RSS1(10),RSS2(10),RSS3(10),RSS4(10),RSS5(10),RSS6(10)
     5      ,RSS7(10),ERRMAG(27),ERRDC(3,27),HOLD(10),SAVE(10),
     6      F12MAT(3,1),F14MAT(3,1),F16MAT(3,1),QUANT,ARM(10),PSD(10),
     7      PSDE(10),KE,ICON
      COMMON AMPSS(10),FREQ(10),DCOS(3,10),DCS1(3,5),DCS2(3,5),
     1       KSS,ACONSS(5),ECONSS(5),DUMMY(3,3),ICHANG
     2      ,ISCHME,IWDSIZ,COMPEQ,NSS,DELXI(27,10),DELYI(27,10),
     3      DELVXI(27,10),DELVYI(27,10),DELVZI(27,10),DELZI(27,10)
     4      ,F13MAT(3,1),F15MAT(3,1)
      CALL TRTAI
      CALL MATRAN(TAI,TIA)
      FIDOT(1,1) = VX
      FIDOT(2,1) = VY
      FIDOT(3,1) = VZ
      CALL MATMUL(TIA,3,3,FIDOT,1,ADOT)
      CALL TRTAD
      RETURN
      END
```

LOI ERROR MATRIX

0.	-0.	-0.
0.	0.	-0.
0.	-0.	0.

ATTITUDE ERROR PARAMETER = 0.

DELRA(M)	DELDR(M)	DELCR(M)	DELVEL(M/SEC)	DELGAM(RADS)	DELPSI(RADS)	DELTIME
0.	-0.	0.	-0.76253945E-05	0.14901161E-07	0.	0.

ERROR SOURCE

INERTIAL POSITION AND VELOCITY FOLLOW

X = 0.56262500E 07 METERS Y = 0.40704401E 06 METERS Z = 0.30321037E 07 METERS
VX = 0.37764475E 03 METERS/SEC VY = 0.82879504E 03 METERS/SEC VZ = 0.20193169E 03 METERS/SEC

TBI

0.63338643E 00	-0.61726261E 00	-0.47434000E 00
0.72112032E 00	0.71951512E 00	-0.96999351E-04
0.34135465E 00	-0.33251079E 00	0.88034000E 00

DELXI(M)	DELYI(M)	DELZI(M)	DELVXI(M/SEC)	DELVYI(M/SEC)	DELVZI(M/SEC)
-0.25030060E 03	-0.48928125E-03	0.46875000E 00	-0.19374847E-01	-0.76293945E-05	0.36029816E-01

TBI ERROR MATRIX

-0.32223761E-04	-0.33162544E-04	-0.
-0.74595030E-03	0.	-0.96999351E-04
0.59660316E-04	0.61430037E-04	0.

ATTITUDE ERROR PARAMETER = 0.13750054E-03

DELRA(M)	DELDR(M)	DELCR(M)	DELVEL(M/SEC)	DELGAM(RADS)	DELPSI(RADS)	DELTIME
0.22236127E-03	-0.13873[illegible]E-02	0.53124375E 00	-0.53405762E-04	-0.59604645E-07	0.43872353E-04	0.

ERROR SOURCE

INERTIAL POSITION AND VELOCITY FOLLOW

X = 0.56262513E 07 METERS Y = 0.40704401E 06 METERS Z = 0.30321019E 07 METERS
VX = 0.37759120E 03 METERS/SEC VY = 0.82829534E 03 METERS/SEC VZ = 0.20194421E 03 METERS/SEC

TBI

0.63343439E 00	-0.61724559E 00	-0.47429730E 00

```
     0.70112[illegible]E 00      0.71951511E 00      -0.72343390E-16
     0.[illegible]1264[illegible]E 00     -0.33254230E 00      0.88036400E 00

        DELXI(M)          DELYI(M)          DELZI(M)          DELVXI(M/SEC)     DELVYI(M/SEC)     DELVZI(M/SEC)
     0.11[illegible]E 01     0.                -0.21562500E 01     0.27675629E-01    0.                -0.51452637E-01

TBI ERROR MATRIX
     0.16532438E-04      -0.16145408E-04      0.42699277E-04
    -0.74505[illegible]E-08     -0.74505806E-08     -0.72343390E-16
    -0.30729920E-04      0.29517806E-04      0.22999942E-04

ATTITUDE ERROR PARAMETER = 0.68743274E-04

        DELRA(M)          DELDR(M)          DELCR(M)          DELVEL(M/SEC)     DELGAM(RADS)      DELPSI(RADS)      DELTIME
     0.22770390E-01     0.39579078E-02    -0.24615109E 01     0.61035156E-04    0.89406967E-07    -0.62656373E-04    0.

ERROR SOURCE 10

INERTIAL POSITION AND VELOCITY FOLLOW

 X = 0.56282500E 07 METERS          Y = 0.40706609E 05 METERS          Z = 0.30321029E 07 METERS
VX = 0.37764609E 03 METERS/SEC     VY = 0.82835345E 03 METERS/SEC     VZ = 0.20188594E 03 METERS/SEC

TBI
     0.63336791E 00      -0.61726022E 00      -0.47434000E 00
     0.70116115E 00      0.71948100E 00      -0.23494522E-08
     0.34127[illegible]E 00     -0.33258678E 00      0.98034000E 00

        DELXI(M)          DELYI(M)          DELZI(M)          DELVXI(M/SEC)     DELVYI(M/SEC)     DELVZI(M/SEC)
    -0.25000000E 00     0.22075195E 01    -0.25000000E 00    -0.18035889E-01    0.58410645E-01    -0.97179413E-02

TBI ERROR MATRIX
    -0.29943[illegible]3E-04     -0.30770893E-04     -0.
     0.34[illegible]1656[illegible]E-04     -0.34034252E-04     -0.23494522E-08
    -0.16149133E-04     -0.16558915E-04     -0.74505806E-08

ATTITUDE ERROR PARAMETER = 0.6[illegible]912[illegible]E-04

        DELRA(M)          DELDR(M)          DELCR(M)          DELVEL(M/SEC)     DELGAM(RADS)      DELPSI(RADS)      DELTIME
     -0.[illegible]E 00     0.22[illegible]E 01    -0.97839271E-01     0.42480469E-01    0.48294663E-04    0.                0.

ERROR SOURCE 11

INERTIAL POSITION AND VELOCITY FOLLOW
```

```
X = 0.5[illegible] 07 METERS          Y = 0.40704852E 05 METERS          Z = 0.30321031E 07 METERS
VX = 0.3[illegible] 03 METERS/SEC     VY = 0.82831942E 03 METERS/SEC     VZ = 0.20188883E 03 METERS/SEC

TBI
     0.6[illegible]E 00     -0.61726399E 00     -0.47434000E 00
     0.70116550E 00      0.71947784E 00     -0.
     0.34127710E 00     -0.33259084E 00      0.88034000E 00

        DELXI(M)          DELYI(M)          DELZI(M)        DELVXI(M/SEC)     DELVYI(M/SEC)     DELVZI(M/SEC)
     -0.1[illegible]0000E 00   0.45117138E 00   -0.31250000E-01   -0.12699127E-01   0.24375916E-01   -0.68283081E-02

TBI ERROR MATRIX
     -0.32827258E-04     -0.34540892E-04     -0.
      0.39175153E-04     -0.37275255E-04     -0.
     -0.17676502E-04     -0.18619001E-04      0.

ATTITUDE ERROR PARAMETER = 0.76511210E-04

        DELRA(M)          DELDR(M)          DELCR(M)        DELVEL(M/SEC)     DELGAM(RADS)     DELPSI(RADS)     DELTIME
     -0.17701501E 00   0.45220506E 00   0.62170174E-01   0.15029907E-01   0.25749207E-04   0.               0.


ERROR SOURCE 12

INERTIAL POSITION AND VELOCITY FOLLOW

X = 0.56292501E 07 METERS          Y = 0.40704400E 05 METERS          Z = 0.30321034E 07 METERS
VX = 0.37765285E 03 METERS/SEC     VY = 0.82829497E 03 METERS/SEC     VZ = 0.20191656E 03 METERS/SEC

TBI
     0.63[illegible]E 00     -0.61727565E 00     -0.47431255E 00
     0.70112[illegible]E 00      0.71951501E 00     -0.1[illegible]511368E-03
     0.341[illegible]E 00     -0.33243650E 00      0.88035396E 00

        DELXI(M)          DELYI(M)          DELZI(M)        DELVXI(M/SEC)     DELVYI(M/SEC)     DELVZI(M/SEC)
     -0.1[illegible]0000E 00   -0.97656250E-03   0.25[illegible]0000E 00   -0.112[illegible]0060E-01   -0.76293945E-04   0.20902634E-01

TBI ERROR MATRIX
     -0.23[illegible]E-04     -0.46201[illegible]E-04      0.27447039E-04
     -0.14[illegible]E-06     -0.10430[illegible]E-06     -0.10511368E-03
      0.4[illegible]E-04      0.85633[illegible]E-04      0.13962388E-04

ATTITUDE [illegible] = 0.1[illegible]E-03

        DELRA(M)          DELDR(M)          DELCR(M)        DELVEL(M/SEC)     DELGAM(RADS)     DELPSI(RADS)     DELTIME
     -0.465[illegible]4519E-01   -0.11955794E-02   0.30901958E 00   -0.10681152E-03   -0.29802322E-07   0.25472885E-04   0.

ERROR SOURCE MAGNITUDE = 0.14099294E-05
```

ERROR SOURCE 13

INERTIAL POSITION AND VELOCITY FOLLOW

```
 X = 0.56242527E 07 METERS          Y = 0.40704401E 05 METERS          Z = 0.30320984E 07 METERS
VX = 0.37776 [illegible] 03 METERS/SEC     VY = 0.82129504E 03 METERS/SEC     VZ = 0.20170584E 03 METERS/SEC
```

TEI

```
    0.63354713E 00     -0.61729651E 00     -0.47408002E 00
    0.70112531E 00      0.71951512E 00      0.86456491E-04
    0.34105440E 00     -0.33244755E 00      0.88047913E 00
```

DELXI(M)	DELYI(M)	DELZI(M)	DELVXI(M/SEC)	DELVYI(M/SEC)	DELVZI(M/SEC)
-0.24375000E 01	0.	-0.47500000E 01	0.10201263E 00	0.	-0.18982506E 00

TEI ERROR MATRIX

```
    0.12933718E-03     -0.67062676E-04      0.25997633E-03
   -0.14901161E-27      0.                  0.86456491E-04
   -0.24937064E-03      0.12466684E-03      0.13912469E-03
```

ATTITUDE ERROR PARAMETER = 0.43469661E-03

DELRA(M)	DELDR(M)	DELCR(M)	DELVEL(M/SEC)	DELGAM(RADS)	DELPSI(RADS)	DELTIME
-0.19533148E 0[illegible]	0.95782032E-02	-0.53378254E 01	0.23651123E-03	0.40223135E-06	-0.23111117E-03	0.

ERROR SOURCE MAGNITUDE = 0.33559453E-03

ERROR SOURCE 14

INERTIAL POSITION AND VELOCITY FOLLOW

```
 X = 0.56224929E 07 METERS          Y = 0.40709572E 05 METERS          Z = 0.30321024E 07 METERS
VX = 0.37757582E 03 METERS/SEC     VY = 0.82849715E 03 METERS/SEC     VZ = 0.20184098E 03 METERS/SEC
```

TEI

```
    0.63322465E 00     -0.61743166E 00     -0.47434000E 00
    0.70135996E 00      0.71929528E 00     -0.
    0.34119761E 00     -0.33268119E 00      0.82034000E 00
```

DELXI(M)	DELYI(M)	DELZI(M)	DELVXI(M/SEC)	DELVYI(M/SEC)	DELVZI(M/SEC)
-0.16025020E 01	0.51713367E 01	-0.75000000E 00	-0.88066427E-01	0.20211029E 00	-0.47580719E-01

TEI ERROR MATRIX

```
   -0.14[illegible]E-02     -0.20221621E-03     -0.
    0.22[illegible]E-03     -0.21963683E-03     -0.
```

```
-0.1[illegible]E-[illegible]      -0.1[illegible]E-[illegible]      0.

ATTITUDE ERROR PARAMETER = 0.44[illegible]E-03

        DELCA(M)          DELCR(M)          DELCR(M)        DELVEL(M/SEC)      DELGAM(RADS)      DELPSI(RADS)      DELTIME
     -0.12[illegible]E 01   0.51797555E 01   -0.14772065E 00    0.13347626E 00    0.19508600E-03    0.                0.

ERROR SOURCE MAGNITUDE = 0.39559453E-05


ERROR SOURCE 15

INERTIAL POSITION AND VELOCITY FOLLOW

 X = 0.56282502E 07 METERS          Y = 0.40704401E 05 METERS          Z = 0.30321032E 07 METERS
VX = 0.37766065E 03 METERS/SEC     VY = 0.82829438E 03 METERS/SEC     VZ = 0.20190213E 03 METERS/SEC

TBI
 0.63341047E 00     -0.61724377E 00     -0.47433125E 00
 0.70112613E 00      0.71951502E 00     -0.32550466E-04
 0.34130853E 00     -0.33254570E 00      0.88034390E 00

        DELXI(M)          DELYI(M)          DELZI(M)        DELVXI(M/SEC)     DELVYI(M/SEC)     DELVZI(M/SEC)
    -0.62500000E-01   -0.48828125E-03    0.31250000E-01   -0.34750039E-02   -0.68664551E-04    0.64678192E-02

TBI ERROR MATRIX
 -0.73835254E-05     -0.14320016E-04      0.87432563E-05
 -0.14156134E-06     -0.96857543E-07     -0.32550466E-04
  0.13784772E-04      0.26520342E-04      0.34966547E-05

ATTITUDE ERROR PARAMETER = 0.47992340E-04

        DELCA(M)          DELCR(M)          DELCR(M)        DELVEL(M/SEC)     DELGAM(RADS)      DELPSI(RADS)      DELTIME
     -0.42[illegible]E-01   -0.32757820E-03    0.57153838E-01   -0.76253945E-04   -0.44703484E-07    0.78752595E-05    0.

ERROR SOURCE MAGNITUDE = 0.43661166E-06


ERROR SOURCE 16

INERTIAL POSITION AND VELOCITY FOLLOW

 X = 0.56282507E 07 METERS          Y = 0.40704431E 05 METERS          Z = 0.30321026E 07 METERS
VX = 0.37767322E 03 METERS/SEC     VY = 0.82829504E 03 METERS/SEC     VZ = 0.20187469E 03 METERS/SEC

TBI
```

```
[illegible]      -0.61723[illegible]77E 00      -0.47431105E 00
[illegible]      [illegible].71951512E 00       0.95420712E-05
[illegible]      -0.33[illegible]E 00       0.93035467E 00

      DELXI(M)          DELYI(M)          DELZI(M)        DELVXI(M/SEC)     DELVYI(M/SEC)     DELVZI(M/SEC)
   0.4[illegible]75[illegible]E 00     0.                -0.56250000E 00    0.11096954E-01    0.               -0.20973206E-01

TBI ERROR MATRIX
   0.14[illegible]E-04      -0.73239207E-05       0.28949231E-04
  -0.14[illegible]1161E-07      0.                  0.95420712E-05
  -0.26[illegible]42[illegible]3E-04      0.13757497E-04       0.14662743E-04

ATTITUDE ERROR PARAMETER = 0.47876243E-04

      DELRA(M)          DELDR(M)          DELCR(M)        DELVEL(M/SEC)     DELGAM(RADS)      DELPSI(RADS)      DELTIME
   0.11837672E 00     0.41760673E-03    -0.70270852E 00   -0.45776567E-04    0.19371510E-06   -0.25448338E-04    0.

ERROR SOURCE MAGNITUDE = 0.43661166E-06


ERROR SOURCE 17

INERTIAL POSITION AND VELOCITY FOLLOW

X = 0.56262501E 07 METERS          Y = 0.40704968E 05 METERS          Z = 0.30321031E 07 METERS
VX = 0.37765[illegible]E 03 METERS/SEC     VY = 0.82831731E 03 METERS/SEC     VZ = 0.20189033E 03 METERS/SEC

TBI
   0.63[illegible]E 00      -0.61725173E 00      -0.47434000E 00
   0.7[illegible]1151[illegible]E 00      0.71949074E 00      -0.
   0.34128[illegible]E 00      -0.33258420E 00       0.88034000E 00

      DELXI(M)          DELYI(M)          DELZI(M)        DELVXI(M/SEC)     DELVYI(M/SEC)     DELVZI(M/SEC)
  -0.1[illegible]E 00      0.56[illegible]E 00    -0.62500000E-01   -0.98686218E-02    0.22262573E-01   -0.53310394E-02

TBI ERROR MATRIX
  -0.21[illegible]617E-04      -0.22[illegible]4647E-04      -0.
   0.25[illegible]127[illegible]E-04      -0.24370849E-04      -0.
  -0.11552[illegible]E-04      -0.11954[illegible]E-04       0.

ATTITUDE ERROR PARAMETER = 0.4[illegible]7072E-04

      DELRA(M)          DELDR(M)          DELCR(M)        DELVEL(M/SEC)     DELGAM(RADS)      DELPSI(RADS)      DELTIME
  -0.1[illegible]513E 00      0.56[illegible]E 00    0.[illegible]E-01    0.14[illegible]E-01    0.21651387E-04    0.                0.

ERROR SOURCE MAGNITUDE = 0.43661166E-06
```

ERROR SOURCE 1:

INERTIAL POSITION AND VELOCITY FOLLOW

X = 0.36252603E 07 METERS Y = 0.40704401E 05 METERS Z = 0.30321032E 07 METERS
VX = 0.37765641E 03 METERS/SEC VY = 0.82829504E 03 METERS/SEC VZ = 0.20189566E 03 METERS/SEC

TBI

0.53341785E 00	-0.61722945E 00	-0.47434000E 00
0.70112633E 00	0.71951512E 00	-0.
0.34129477E 00	-0.33257222E 00	0.88034000E 00

DELXI(M)	DELYI(M)	DELZI(M)	DELVXI(M/SEC)	DELVYI(M/SEC)	DELVZI(M/SEC)
0.	0.	0.	-0.15258789E-04	0.	0.57220459E-05

TBI ERROR MATRIX

0.	-0.	-0.
0.	0.	-0.
0.	-0.	0.

ATTITUDE ERROR PARAMETER = 0.

DELRA(M)	DELCR(M)	DELCR(M)	DELVEL(M/SEC)	DELGAM(RADS)	DELPSI(RADS)	DELTIME(
0.	-0.	0.	-0.76293945E-05	0.14901161E-07	0.	0.

ERROR SOURCE MAGNITUDE = 0.

ERROR SOURCE 1:

INERTIAL POSITION AND VELOCITY FOLLOW

X = 0.36252603E 07 METERS Y = 0.40704401E 05 METERS Z = 0.30321032E 07 METERS
VX = 0.37765641E 03 METERS/SEC VY = 0.82829504E 03 METERS/SEC VZ = 0.20189566E 03 METERS/SEC

TBI

0.53341785E 00	-0.61722945E 00	-0.47434000E 00
0.70112633E 00	0.71951512E 00	-0.
0.34129477E 00	-0.33257222E 00	0.88034000E 00

DELXI(M)	DELYI(M)	DELZI(M)	DELVXI(M/SEC)	DELVYI(M/SEC)	DELVZI(M/SEC)
0.	0.	0.	-0.15258789E-04	0.	0.57220459E-05

TBI ERROR MATRIX

0.	-0.	-0.
0.	0.	-0.
0.	-0.	0.

ATTITUDE ERROR PARAMETER = 0.

DELRA(M)	DELCR(M)	DELCR(M)	DELVEL(M/SEC)	DELGAM(RADS)	DELPSI(RADS)	DELTIME(
0.	-0.	0.	-0.76293945E-05	0.14901161E-07	0.	0.

ERROR SOURCE MAGNITUDE = 0.

ERROR SOURCE 20

INERTIAL POSITION AND VELOCITY FOLLOW

X = 0.56202503E 07 METERS Y = 0.40704401E 05 METERS Z = 0.30321032E 07 METERS
VX = 0.37765411E 03 METERS/SEC VY = 0.82429504E 03 METERS/SEC VZ = 0.20189566E 03 METERS/SEC

TRI

0.63341755E 00	-0.51722945E 00	-0.47434000E 00
0.70112613E 00	0.71951512E 00	-0.
0.34129477E 00	-0.33257222E 00	0.88034000E 00

DELXI(M)	DELYI(M)	DELZI(M)	DELVXI(M/SEC)	DELVYI(M/SEC)	DELVZI(M/SEC)
0.	0.	0.	-0.15258789E-04	0.	0.57220459E-05

TRI ERROR MATRIX

0.	-0.	-0.
0.	0.	-0.
0.	-0.	0.

ATTITUDE ERROR PARAMETER = 0.

DELRA(M)	DELCR(M)	DELCR(M)	DELVEL(M/SEC)	DELGAM(RADS)	DELPSI(RADS)	DELTIME(
0.	-0.	0.	-0.76293945E-05	0.14901161E-07	0.	0.

ERROR SOURCE MAGNITUDE = 0.

ERROR SOURCE 21

INERTIAL POSITION AND VELOCITY FOLLOW

X = 0.56282499E 07 METERS Y = 0.40704400E 05 METERS Z = 0.30321038E 07 METERS
VX = 0.37763796E 03 METERS/SEC VY = 0.82629497E 03 METERS/SEC VZ = 0.20194424E 03 METERS/SEC

TRI

0.63336273E 00	-0.61733671E 00	-0.47427660E 00

```
 .7[illegible]  [illegible]  -0.24421[illegible]E-03
 [illegible]  -[illegible]  0.8[illegible]7E 00

      DELXI(M)        DELYI(M)        DELZI(M)        DELVXI(M/SEC)    DELVYI(M/SEC)    DELVZI(M/SEC)
  -0.437[illegible]E 00  -0.97656250E-03  0.62500000E 00  -0.26165009E-01  -0.76293945E-04  0.48572540E-01

TBI ERROR MATRIX
  -0.55[illegible]E-04   -0.10726601[illegible]E-03   0.63393265E-04
  -0.16[illegible]E-06   -0.12665937E-06   -0.24421[illegible]E-03
   0.10[illegible]E-03    0.19[illegible]E-03    0.33256842E-04

ATTITUDE ERROR PARAMETER = 0.36000146E-03

      DELRA(M)        DELDR(M)        DELCR(M)        DELVEL(M/SEC)    DELGAM(RADS)    DELPSI(RADS)    DELTIME(
  -0.[illegible]E-01  -0.16745[illegible]E-02  0.75772979E 00  -0.15258789E-03  -0.74505806E-07  0.59166727E-04  0.

ERROR SOURCE MAGNITUDE = 0.32756838E-05


ERROR SOURCE 2[illegible]

INERTIAL POSITION AND VELOCITY FOLLOW

 X = 0.[illegible]E 07 METERS          Y = 0.40704401E 05 METERS          Z = 0.30420990E 07 METERS
VX = 0.37774[illegible]E 03 METERS/SEC     VY = 0.82829504E 03 METERS/SEC     VZ = 0.20173[illegible]E 03 METERS/SEC

TBI
   0.63[illegible]E 00   -0.61728506E 00   -0.47412465E 00
   0.70112[illegible]E 00    0.71951512E 00    0.71589603E-04
   0.341[illegible]E 00   -0.33246599E 00    0.89045531E 00

      DELXI(M)        DELYI(M)        DELZI(M)        DELVXI(M/SEC)    DELVYI(M/SEC)    DELVZI(M/SEC)
   0.1[illegible]E 01   0.              -0.41875000E 01   0.84571[illegible]E-01   0.              -0.15721130E 00

TBI ERROR MATRIX
   0.1[illegible]E-03   -0.55611134E-04    0.21535158E-03
  -0.14[illegible]E-07   0.                0.71589603E-04
  -0.19[illegible]E-03    0.10322775E-03    0.11530519E-03

ATTITUDE [illegible] PARAMETER = 0.36[illegible]E-03

      DELRA(M)        DELDR(M)        DELCR(M)        DELVEL(M/SEC)    DELGAM(RADS)    DELPSI(RADS)    DELTIME(
  -0.33[illegible]E 00   0.97624277E-02  -0.43758304E 01   0.22[illegible]E-03   0.25331974E-06  -0.19144647E-03  0.

ERROR SOURCE MAGNITUDE = 0.32756838E-05
```

ERROR SOURCE [illegible]

INERTIAL POSITION AND VELOCITY FOLLOW

X = 0.56[illegible]E 07 METERS Y = 0.40708634E 05 METERS Z = 0.30321025E 07 METERS
VX = 0.37[illegible] METERS/SEC VY = 0.82846239E 03 METERS/SEC VZ = 0.20185626E 03 METERS/SEC

TBI

0.63325751E 00	-0.61739630E 00	-0.47434000E 00
0.70131546E 00	0.71933307E 00	-0.
0.34129644E 00	-0.33266243E 00	0.88034000E 00

DELXI(M)	DELYI(M)	DELZI(M)	DELVXI(M/SEC)	DELVYI(M/SEC)	DELVZI(M/SEC)
-0.93759000E 00	0.42927145E 01	-0.65625000E 00	-0.73169708E-01	0.16735077E 00	-0.39403915E-01

TBI ERROR MATRIX

-0.16024709E-03	-0.16745146E-03	-0.
0.19013137E-03	-0.18204749E-03	-0.
-0.86429677E-04	-0.93207905E-04	0.

ATTITUDE ERROR PARAMETER = 0.37229124E-03

DELRA(M)	DELCR(M)	DELCR(M)	DELVEL(M/SEC)	DELGAM(RADS)	DELPSI(RADS)	DELTIME(S- 4
-0.11093068E 01	0.42900[illegible]E 01	-0.12595395E 00	0.11050415E 00	0.16159819E-03	0.	0.

ERROR SOURCE MAGNITUDE = 0.32756888E-03

ERROR SOURCE 24

INERTIAL POSITION AND VELOCITY FOLLOW

X = 0.56292[illegible]E 07 METERS Y = 0.40704401E 05 METERS Z = 0.30321032E 07 METERS
VX = 0.3774[illegible] METERS/SEC VY = 0.82923504E 03 METERS/SEC VZ = 0.20189566E 03 METERS/SEC

TBI

0.63341795E 00	-0.61722945E 00	-0.47434000E 00
0.70112633E 00	0.71951512E 00	-0.
0.34129779E 00	-0.33257227E 00	0.88034000E 00

DELXI(M)	DELYI(M)	DELZI(M)	DELVXI(M/SEC)	DELVYI(M/SEC)	DELVZI(M/SEC)
0.	0.	0.	-0.19257763E-04	0.	0.57220459E-05

TBI ERROR MATRIX

0.	-0.	-0.
0.	0.	-0.
0.	-0.	0.

ATTITUDE ERROR PARAMETER = 0.

DELRA(M)	DELCR(M)	DELCR(M)	DELVEL(M/SEC)	DELGAM(RADS)	DELPSI(RADS)	DELTIME(S
0.	-0.	0.	-0.76293945E-05	0.14901161E-07	0.	0.

ERROR SOURCE MAGNITUDE = 0.

ERROR SOURCE 25

INERTIAL POSITION AND VELOCITY FOLLOW

X = 0.36282553E 07 METERS Y = 0.40704401E 05 METERS Z = 0.30321032E 07 METERS
VX = 0.37766411E 03 METERS/SEC VY = 0.42829504E 03 METERS/SEC VZ = 0.20189566E 03 METERS/SEC

TBI

0.63341785E 00	-0.61722945E 00	-0.47434000E 00
0.70112533E 00	0.71951512E 00	-0.
0.34129477E 00	-0.33257222E 00	0.88034000E 00

DELXI(M)	DELYI(M)	DELZI(M)	DELVXI(M/SEC)	DELVYI(M/SEC)	DELVZI(M/SEC)
0.	0.	0.	-0.15258789E-04	0.	0.57220459E-05

TBI ERROR MATRIX

0.	-0.	-0.
0.	0.	-0.
0.	-0.	0.

ATTITUDE ERROR PARAMETER = 0.

DELRA(M)	DELCR(M)	DELCR(M)	DELVEL(M/SEC)	DELGAM(RADS)	DELPSI(RADS)	DELTIME(S
0.	-0.	0.	-0.76293945E-05	0.14901161E-07	0.	0.

ERROR SOURCE MAGNITUDE = 0.

ERROR SOURCE 26

INERTIAL POSITION AND VELOCITY FOLLOW

X = 0.36282553E 07 METERS Y = 0.40704401E 05 METERS Z = 0.30321032E 07 METERS
VX = 0.37766411E 03 METERS/SEC VY = 0.42829504E 03 METERS/SEC VZ = 0.20189566E 03 METERS/SEC

TBI

0.63341785E 00	-0.61722945E 00	-0.47434000E 00
0.70112533E 00	0.71951512E 00	-0.
0.34129477E 00	-0.33257222E 00	0.88034000E 00

```
        DELXI(M)          DELYI(M)          DELZI(M)          DELVXI(M/SEC)     DELVYI(M/SEC)     DELVZI(M/SEC)
      0.                0.                0.                -0.15258789E-04   0.                0.57220459E-05

TBI ERROR MATRIX
     0.                -0.                -0.
     0.                 0.                -0.
     0.                -0.                 0.

ATTITUDE ERROR PARAMETER = 0.

        DELRA(M)          DELDR(M)          DELCR(M)          DELVEL(M/SEC)     DELGAM(RADS)      DELPSI(RADS)      DELTIME(SE
      0.                -0.                0.                -0.76293945E-05   0.14901161E-07    0.                0.

ERROR SOURCE MAGNITUDE = 0.


ERROR SOURCE 27

INERTIAL POSITION AND VELOCITY FOLLOW

 X = 0.56282504E 07 METERS          Y = 0.40704403E 05 METERS          Z = 0.30321032E 07 METERS
VX = 0.37766467E 03 METERS/SEC     VY = 0.82829526E 03 METERS/SEC     VZ = 0.20189599E 03 METERS/SEC

TBI
     0.63341785E 00     -0.61722945E 00     -0.47434000E 00
     0.70112633E 00      0.71951512E 00     -0.
     0.34129477E 00     -0.33257222E 00      0.88034000E 00

        DELXI(M)          DELYI(M)          DELZI(M)          DELVXI(M/SEC)     DELVYI(M/SEC)     DELVZI(M/SEC)
      0.[illegible]E-01    0.19531250E-02    0.31250000E-01    0.54168701E-03    0.21362305E-03    0.32234192E-03

TBI ERROR MATRIX
     0.                -0.                -0.
     0.                 0.                -0.
     0.                -0.                 0.

ATTITUDE ERROR PARAMETER = 0.

        DELRA(M)          DELDR(M)          DELCR(M)          DELVEL(M/SEC)     DELGAM(RADS)      DELPSI(RADS)      DELTIME(SE
      0.[illegible]E-01    0.15119440E-02   -0.21284949E-02    0.47302246E-03   -0.49173832E-06    0.                0.

ERROR SOURCE MAGNITUDE = 0.90652[illegible]

STATISTICAL SUMMARY FOLLOWS

        DELRA             DELDR             DELCR             DELVEL            DELGAM            DELPSI            DELTIME
```

SS	0.1 221243 0	0.21135 512 02	0.21255607E 02	0.17966025E 00	0.26007836E-03	0.31745972E-03	0.

TRAJECTORY DATA FOR FLIGHT SEGMENT 2

THIS IS A POWERED FLIGHT SEGMENT

FLIGHT TERMINATED WHEN TIME EXCEEDS 0.60000000E 02 SEC.

INTEGRATION INCREMENT = 0.50000000E 00 SEC.

TABULAR DATA IS IN BODY FRAME

TABULAR DATA IS SPECIFIC FORCE

TABULAR DATA FOLLOWS

TIME	AX	AY	AZ	WX	WY	WZ
0.	0.22300000E 02	0.	-0.	-0.	-0.	0.13200000E-01
0.40000000E 01	0.23800000E 02	0.	-0.	-0.	-0.	0.93000000E-02
0.10000000E 02	0.23100000E 02	0.	-0.	-0.	-0.	0.93000000E-02
0.14000000E 02	0.29300000E 02	0.	-0.	-0.	-0.	0.60000000E-02
0.40000000E 02	0.37500000E 02	0.	-0.	-0.	-0.	0.50000000E-02
0.60000000E 02	0.52500000E 02	0.	-0.	-0.	-0.	0.35000000E-02

-INPUT DATA FOR ERROR MODELS FOLLOW
FIRST-ORDER INTEGRATION SCHEME
27 BIT COMPUTER WORD SIZE
FOURTH-ORDER COORDINATE CONVERSION
QUANTIZATION = 0.
COMPUTATIONAL FREQUENCY = 0.10000000E 03 CPS
SINUSOIDAL RATES
NUMBER OF SINUSOIDS = 0
AMPLITUDE

0.43700000E-01	0.43700000E-01	0.52400000E-01	0.52400000E-01	0.28400000E-01
0.28400000E-01	0.34800000E-01	0.34800000E-01	0.34800000E-01	

FREQUENCY

0.40000000E 01	0.40000000E 01	0.96000000E 01	0.96000000E 01	0.14000000E 02
0.14000000E 02	0.20000000E 01	0.20000000E 01	0.20000000E 01	

MOMENT ARM

0.91500000E 01	0.91500000E 01	0.91500000E 01	0.91500000E 01	0.91500000E 01
0.91500000E 01	0.91500000E 01	0.91500000E 01	0.	

DIRECTION COSINES OF EACH SINUSOID

0.	0.10000000E 01	0.
0.	0.	0.10000000E 01
0.	0.10000000E 01	0.
0.	0.	0.10000000E 01
0.	0.10000000E 01	0.
0.	0.	0.10000000E 01
0.	0.	0.10000000E 01
0.	0.10000000E 01	0.
0.10000000E 01	0.	0.

CONTROL RATES
NUMBER OF RATES OF SINUSOIDS = 0
VERTICAL [illegible]
AMPLITUDE

0.30400000E-05	0.30400000E-05	0.91500000E-04	0.91500000E-04	0.30400000E-05
0.30400000E-05				

FREQUENCY

0.10000000E 02	0.40000000E 02	0.10000000E 03	0.20000000E 03	0.50000000E 03

0.67000000E 03

SPECIFIC FORCE AND BODY RATES IN INSTRUMENT FRAMES FOLLOW

TIME	SFX	SFY	SFZ	WX	WY	WZ
0.	0.22300000E 02	0.	-0.	-0.	-0.	0.13200000E-01
0.40000000E 01	0.23800000E 02	0.	-0.	-0.	-0.	0.93000000E-02
0.10000000E 02	0.23100000E 02	0.	-0.	-0.	-0.	0.93000000E-02
0.14000000E 02	0.29300000E 02	0.	-0.	-0.	-0.	0.60000000E-02
0.40000000E 02	0.37800000E 02	0.	-0.	-0.	-0.	0.50000000E-02
0.60000000E 02	0.52500000E 02	0.	-0.	-0.	-0.	0.35000000E-02

FLIGHT SEGMENT 2

TRUTH

INERTIAL POSITION AND VELOCITY FOLLOW

X = 0.56639197E 07 METERS Y = 0.13441049E 06 METERS Z = 0.30510488E 07 METERS
VX = 0.26301740E 03 METERS/SEC VY = 0.26059926E 04 METERS/SEC VZ = 0.46046276E 03 METERS/SEC

RADIUS	VELOCITY	GAMMA	TIME
0.64348234E 07 METERS	0.27835269E 04 METERS/SEC	0.11908274E 01 RAD.	0.14000000E 03 SEC

TBI

0.37631650E 00	-0.80153582E 00	-0.47434000E 00
0.91043463E 00	0.42746948E 00	-0.
0.20276587E 00	-0.43187022E 00	0.88034000E 00

TRANSITION MATRIX FROM INERTIAL FRAME TO LOCAL FRAME

0.8[illegible]019[illegible]E 00	0.20[illegible]E-01	0.47414647E 00
-0.17[illegible]E-01	0.99376[illegible]E 00	-0.11234019E-01
-0.4[illegible]E 00	[illegible]E-02	0.88037430E 00

ERROR [illegible] SOURCE [illegible]

ERROR SOURCE 2

INERTIAL POSITION AND VELOCITY FOLLOW

X = [illegible] METERS Y = 0.13441049E 06 METERS Z = 0.30510537E 07 METERS
VX = [illegible] METERS/SEC VY = 0.26059926E 04 METERS/SEC VZ = 0.46046475E 03 METERS/SEC

TBI

0.37631[illegible]50E 00	-0.[illegible]0153[illegible]2E 00	-0.47434000E 00
0.91[illegible]4[illegible]E 00	0.42746943E 00	-0.
0.20276[illegible]7E 00	-0.43187922E 00	0.88034000E 00

DELXI(M)	DELYI(M)	DELZI(M)	DELVXI(M/SEC)	DELVYI(M/SEC)	DELVZI(M/SEC)
0.[illegible]37[illegible]0E 01	-0.1[illegible]5312[illegible]E-02	0.49062500E 01	0.37155151E-02	-0.30517578E-04	0.19912720E-02

TBI ERROR MATRIX

0.	-0.	-0.
0.	0.	-0.
0.	-0.	0.

ATTITUDE ERROR PARAMETER = 0.

DELRA(M)	DELDR(M)	DELCR(M)	DELVEL(M/SEC)	DELGAM(RADS)	DELPSI(RADS)	DELTIME(SEC)
0.10193011E 02	-0.21503311E 00	0.80431589E-01	0.14648438E-02	-0.14156103E-05	0.	0.

ERROR SOURCE 3

INERTIAL POSITION AND VELOCITY FOLLOW

X = 0.56639197E 07 METERS Y = 0.13443020E 06 METERS Z = 0.30510488E 07 METERS
VX = 0.86301734E 03 METERS/SEC VY = 0.26059885E 04 METERS/SEC VZ = 0.46046277E 03 METERS/SEC

TBI

0.37631[illegible]50E 00	-0.30153582E 00	-0.47434000E 00
0.91048463E 00	0.42746948E 00	-0.
0.20276587E 00	-0.43187922E 00	0.88034000E 00

DELXI(M)	DELYI(M)	DELZI(M)	DELVXI(M/SEC)	DELVYI(M/SEC)	DELVZI(M/SEC)
-0.[illegible]0000E-01	0.1[illegible]7[illegible]1172E 02	0.	0.38146973E-04	-0.41809082E-02	0.76293945E-05

TBI ERROR MATRIX

0.	-0.	-0.
0.	0.	-0.
0.	-0.	0.

ATTITUDE ERROR PARAMETER = 0.

DELRA(M)	DELDR(M)	DELCR(M)	DELVEL(M/SEC)	DELGAM(RADS)	DELPSI(RADS)	DELTIME(SEC)
0.35650538E 00	0.19697[illegible]E 02	0.[illegible]9351398E-01	-0.38757324E-02	-0.53644180E-06	0.	0.

ERROR SOURCE 4

INERTIAL POSITION AND VELOCITY FOLLOW

X = 0.56639197E 07 METERS Y = 0.13441049E 06 METERS Z = 0.30510662E 07 METERS
VX = 0.46301726E 03 METERS/SEC VY = 0.26059926E 04 METERS/SEC VZ = 0.46045903E 03 METERS/SEC

TBI

0.37631850E 00	-0.30153582E 00	-0.47434000E 00
0.91044463E 00	-0.42746943E 00	-0.
0.20276597E 00	-0.43187922E 00	0.88034000E 00

DELXI(M)	DELYI(M)	DELZI(M)	DELVXI(M/SEC)	DELVYI(M/SEC)	DELVZI(M/SEC)
-0.72500000E 01	-0.19531250E-02	0.17375000E 02	0.19531250E-02	-0.30517578E-04	-0.37307739E-02

TBI ERROR MATRIX

0.	-0.	-0.
0.	0.	-0.
0.	-0.	0.

ATTITUDE ERROR PARAMETER = 0.

DELRA(M)	DELDR(M)	DELCR(M)	DELVEL(M/SEC)	DELGAM(RADS)	DELPSI(RADS)	DELTIME(SEC)
0.95421123E-01	-0.33657071E-01	0.19683564E 02	-0.30517578E-04	0.14901161E-07	-0.15116115E-05	0.

ERROR SOURCE 5

INERTIAL POSITION AND VELOCITY FOLLOW

X = 0.56639197E 07 METERS Y = 0.13441049E 06 METERS Z = 0.30510488E 07 METERS
VX = 0.46301726E 03 METERS/SEC VY = 0.26059926E 04 METERS/SEC VZ = 0.46046273E 03 METERS/SEC

TBI

0.37631850E 00	-0.30153582E 00	-0.47434000E 00
0.91044463E 00	-0.42746943E 00	-0.
0.20276597E 00	-0.43187922E 00	0.88034000E 00

DELXI(M)	DELYI(M)	DELZI(M)	DELVXI(M/SEC)	DELVYI(M/SEC)	DELVZI(M/SEC)
0.	-0.19531250E-02	0.	-0.45776367E-04	-0.30517578E-04	-0.22888184E-04

THE ERROR MATRIX

0.	-0.	-0.
0.	0.	-0.
0.	-0.	0.

ATTITUDE ERROR PARAMETER = 0.

DELX(M)	DELY(M)	DELCR(M)	DELVEL(M/SEC)	DELGAM(RADS)	DELPSI(RADS)	DELTIME(SEC)
-0.47[illegible]	[illegible]	-0.29452838E-05	0.	0.14901161E-07	0.	0.

ERROR SOURCE [illegible]

INERTIAL POSITION AND VELOCITY FOLLOW

X = 0.56039137E 07 METERS Y = 0.13441048E 06 METERS Z = 0.30510488E 07 METERS
VX = 0.86301726E 03 METERS/SEC VY = 0.26059926E 04 METERS/SEC VZ = 0.46046273E 03 METERS/SEC

TBI

0.37631850E 00	-0.90153582E 00	-0.47434009E 00
0.91064463E 00	0.42746948E 00	-0.
0.20276587E 00	-0.43197927E 00	0.88034000E 00

DELXI(M)	DELYI(M)	DELZI(M)	DELVXI(M/SEC)	DELVYI(M/SEC)	DELVZI(M/SEC)
0.	-0.97656295E-02	0.	-0.45776367E-04	-0.91552734E-04	-0.26702881E-04

TBI ERROR MATRIX

0.	-0.	-0.
0.	0.	-0.
0.	-0.	0.

ATTITUDE ERROR PARAMETER = 0.

DELRA(M)	DELDR(M)	DELCR(M)	DELVEL(M/SEC)	DELGAM(RADS)	DELPSI(RADS)	DELTIME(SEC)
-0.26348422E-03	-0.97634[illegible]E-02	-0.14726419E-04	-0.61035156E-04	0.14901161E-07	0.	0.

ERROR SOURCE 7

INERTIAL POSITION AND VELOCITY FOLLOW

X = 0.56039137E 07 METERS Y = 0.13441048E 06 METERS Z = 0.30510488E 07 METERS
VX = 0.86301726E 03 METERS/SEC VY = 0.26059926E 04 METERS/SEC VZ = 0.46046273E 03 METERS/SEC

TBI

0.37[illegible]	-0.90153[illegible]	-0.47434009E 00
0.91[illegible]	0.42746[illegible]	-0.
0.20[illegible]	-0.43197[illegible]	0.88034000E 00

DELXI(M)	DELYI(M)	DELZI(M)	DELVXI(M/SEC)	DELVYI(M/SEC)	DELVZI(M/SEC)
0.	-0.19531[illegible]E-02	0.	-0.45776367E-04	-0.30517578E-04	-0.22888184E-04

TBI ERROR MATRIX

```
 .                  -0.                  -0.
 .                   .                   -0.
 .                  -0.                   0.

ATTITUDE ERROR PARAMETER = 0.

      DELXA(M)          DELCR(M)          DELCR(M)        DELVEL(M/SEC)      DELGAM(RADS)      DELPSI(RADS)      DELTIME(SEC)
   -0.4079 84E-04    -0.19526966E-02   -0.29452838E-05    0.                0.14901161E-07    0.                0.


ERROR SOURCE  8

INERTIAL POSITION AND VELOCITY FOLLOW

 X = 0.56639164E 07 METERS          Y = 0.13441049E 06 METERS          Z = 0.30510552E 07 METERS
VX = 0.86291592E 03 METERS/SEC     VY = 0.26059926E 04 METERS/SEC     VZ = 0.46065099E 03 METERS/SEC

TBI
    0.37627662E 00     -0.80155559E 00     -0.47434000E 00
    0.91048463E 00      0.42746948E 00     -0.96999851E-04
    0.20254364E 00     -0.43184271E 00      0.88034000E 00

      DELXI(M)          DELYI(M)          DELZI(M)        DELVXI(M/SEC)     DELVYI(M/SEC)     DELVZI(M/SEC)
   -0.33753000E 01    -0.58593750E-02    0.65750000E 01   -0.10133702E 00   -0.61035156E-04    0.18823242E 00

TBI ERROR MATRIX
   -0.41879714E-04     -0.19773841E-04     -0.
   -0.74505806E-08      0.                 -0.96999851E-04
    0.77759160E-04      0.36504120E-04      0.

ATTITUDE ERROR PARAMETER = 0.13760261E-03

      DELXA(M)          DELCR(M)          DELCR(M)        DELVEL(M/SEC)     DELGAM(RADS)      DELPSI(RADS)      DELTIME(SEC)
    0.51892608E-01    -0.17824406E-01    0.72130626E 01   -0.33569336E-03   -0.59604645E-07    0.76809880E-04    0.


ERROR SOURCE  9

INERTIAL POSITION AND VELOCITY FOLLOW

 X = 0.56639230E 07 METERS          Y = 0.13441049E 06 METERS          Z = 0.30510422E 07 METERS
VX = 0.86307088E 03 METERS/SEC     VY = 0.26059926E 04 METERS/SEC     VZ = 0.46036456E 03 METERS/SEC

TBI
    0.37632833E 00     -0.80155600E 00     -0.47429730E 00
    0.91043663E 00      0.42746948E 00     -0.72343390E-16
    0.20274761E 00     -0.43184035E 00      0.88036300E 00
```

DELXI(M)	DELYI(M)	DELZI(M)	DELVXI(M/SEC)	DELVYI(M/SEC)	DELVZI(M/SEC)
0.[illegible]E 01	-0.[illegible]E-02	-0.66250000E 01	0.53276062E-01	-0.61035156E-04	-0.99197388E-01

TBI ERROR MATRIX

0.[illegible]E-05	-0.20998236E-04	0.42699277E-04
-0.74505[illegible]E-08	-0.74505806E-08	-0.72343390E-16
-0.16[illegible]E-04	0.38865954E-04	0.22399942E-04

ATTITUDE ERROR PARAMETER = 0.60798652E-04

DELRA(M)	DELDR(M)	DELCR(M)	DELVEL(M/SEC)	DELGAM(RADS)	DELPSI(RADS)	DELTIME(SEC)
-0.22[illegible]E 00	0.10021372E-01	-0.74033315E 01	0.91552734E-04	0.59604645E-07	-0.40450337E-04	0.

ERROR SOURCE 10

INERTIAL POSITION AND VELOCITY FOLLOW

X = 0.56639166E 07 METERS Y = 0.13441772E 06 METERS Z = 0.30510470E 07 METERS
VX = 0.86292282E 03 METERS/SEC VY = 0.26051050E 04 METERS/SEC VZ = 0.46041178E 03 METERS/SEC

TBI

0.37627961E 00	-0.80155417E 00	-0.47434000E 00
0.91050524E 00	0.42742535E 00	-0.23494522E-08
0.20274494E 00	-0.43188904E 00	0.88034000E 00

DELXI(M)	DELYI(M)	DELZI(M)	DELVXI(M/SEC)	DELVYI(M/SEC)	DELVZI(M/SEC)
-0.[illegible]E 01	0.72343750E 01	-0.18125000E 01	-0.94482422E-01	0.11233521E 00	-0.50979614E-01

TBI ERROR MATRIX

-0.38868305E-04	-0.18350786E-04	-0.
0.20600[illegible]55E-04	-0.44140965E-04	-0.23494522E-08
-0.20932406E-04	-0.98235905E-05	-0.74505806E-08

ATTITUDE ERROR PARAMETER = 0.63967674E-04

DELRA(M)	DELDR(M)	DELCR(M)	DELVEL(M/SEC)	DELGAM(RADS)	DELPSI(RADS)	DELTIME(SEC)
-0.[illegible]E 01	0.73053917E 01	-0.10265304E 00	0.67443848E-01	0.50291419E-04	0.	0.

ERROR SOURCE 11

INERTIAL POSITION AND VELOCITY FOLLOW

X = 0.56639166E 07 METERS Y = 0.13441439E 06 METERS Z = 0.3[illegible] METERS
VX = 0.86290378E 03 METERS/SEC VY = 0.26060900E 04 METERS/SEC VZ = 0.46040[illegible] METERS/SEC

```
TBI
     0.37[illegible]      -[illegible]      -0.47434000E 00
     0.91[illegible]      [illegible]      -0.
     0.2027[illegible]      -[illegible]      0.83034000E 00

        DELXI(M)          DELYI(M)          DELZI(M)          DELVXI(M/SEC)     DELVYI(M/SEC)     DELVZI(M/SEC)
     -0.31675000E 01    0.3[illegible]E 01   -0.19750000E 01   -0.11352539E 00    0.97351074E-01   -0.61218262E-01

TBI ERROR MATRIX
    -0.54169446E-04    -0.26278196E-04    -0.
     0.29712715E-04    -0.61444[illegible]E-04    -0.
    -0.29182062E-04    -0.14114[illegible]E-04     0.

ATTITUDE ERROR PARAMETER = 0.96613378E-04

        DELRA(M)          DELCR(M)          DELCR(M)          DELVEL(M/SEC)     DELGAM(RADS)      DELPSI(RADS)      DELTIME(SEC)
     -0.36131441E 01    0.39783681E 01   -0.13305879E 00    0.45837402E-01    0.55670738E-04    0.                0.


ERROR SOURCE 12

INERTIAL POSITION AND VELOCITY FOLLOW

 X = 0.56639171E 07 METERS          Y = 0.13441047E 06 METERS          Z = 0.30510537E 07 METERS
VX = [illegible] METERS/SEC      VY = 0.2[illegible]59722E 04 METERS/SEC      VZ = 0.46062840E 03 METERS/SEC

TBI
     0.37627406E 00    -0.30161[illegible]E 00    -0.47425038E 00
     0.91[illegible]E 00     0.42746943E 00    -0.15214530E-02
     0.2[illegible]E 00    -0.43174122E 00     0.88038687E 00

        DELXI(M)          DELYI(M)          DELZI(M)          DELVXI(M/SEC)     DELVYI(M/SEC)     DELVZI(M/SEC)
     -0.[illegible]E 01   -0.19531257E-01    0.49[illegible]7500E 01   -0.83249207E-01   -0.42724609E-03    0.16363907E 00

TBI ERROR MATRIX
    -0.44442713E-04    -0.7440[illegible]E-04     0.89619[illegible]E-04
    -0.1[illegible]E-[illegible]    -0.11175[illegible]E-07    -0.15214[illegible]E-04
     0.6244[illegible]E-[illegible]     0.13[illegible]E-[illegible]     0.46[illegible]71603E-04

ATTITUDE ERROR PARAMETER = 0.2[illegible]E-03

        DELRA(M)          DELCR(M)          DELCR(M)          DELVEL(M/SEC)     DELGAM(RADS)      DELPSI(RADS)      DELTIME(SEC)
     0.44[illegible]7142E-01   -0.2[illegible]511[illegible]E-01    0.56193078E 01   -0.67138672E-03   -0.59[illegible]4645E-07    0.66793234E-04    0.

ERROR SOURCE MAGNITUDE = 0.14[illegible]592[illegible]E-05
```

ERROR SOURCE 1

INERTIAL POSITION AND VELOCITY ERRORS

X = 0.56639394E 07 METERS Y = 0.13441048E 06 METERS Z = 0.30510128E 07 METERS
VX = 0.36061125E 03 METERS/SEC VY = 0.20059924E 04 METERS/SEC VZ = 0.45935871E 03 METERS/SEC

TBI

0.37663264E 00	-0.80167571E 00	-0.47385273E 00
0.91048446E 00	0.42746902E 00	0.47216835E-03
0.20218213E 00	-0.43161921E 00	0.88060032E 00

DELXI(M)	DELYI(M)	DELZI(M)	DELVXI(M/SEC)	DELVYI(M/SEC)	DELVZI(M/SEC)
0.19625000E 02	-0.97656250E-02	-0.36031250E 02	0.59394836E 00	-0.21362405E-03	-0.11040497E 01

TBI ERROR MATRIX

0.31413583E-03	-0.13989955E-03	0.48726425E-03
-0.17351493E-06	0.33527613E-07	0.47216835E-03
-0.58363966E-03	0.26000664E-03	0.26081502E-03

ATTITUDE ERROR PARAMETER = 0.10271057E-02

DELRA(M)	DELCR(M)	DELCR(M)	DELVEL(M/SEC)	DELGAM(RADS)	DELPSI(RADS)	DELTIME(SEC)
0.18959475E 00	0.40155334E-01	-0.41028689E 02	0.15479492E-02	0.46193600E-06	-0.45038870E-03	0.

ERROR SOURCE MAGNITUDE = 0.77259235E-05

ERROR SOURCE 14

INERTIAL POSITION AND VELOCITY ERRORS

X = 0.56639394E 07 METERS Y = 0.13441048E 06 METERS Z = 0.30510346E 07 METERS
VX = 0.36061177E 03 METERS/SEC VY = 0.20059924E 04 METERS/SEC VZ = 0.45991788E 03 METERS/SEC

TBI

[illegible]	[illegible]	[illegible]
[illegible]	[illegible]	[illegible]
[illegible]	[illegible]	[illegible]

DELXI(M)	DELYI(M)	DELZI(M)	DELVXI(M/SEC)	DELVYI(M/SEC)	DELVZI(M/SEC)
[illegible]	[illegible]	[illegible]	-0.10105296E 01	0.84097290E 00	-0.54487610E 00

TBI ERROR MATRIX

[illegible]	[illegible]	[illegible]
0.33531596E-03	[illegible]	[illegible]
-0.35504451E-03	[illegible]	[illegible]

ATTITUDE ERROR PARAMETER = 0.11097404E-02

DELRA(M)	DELDR(M)	DELCR(M)	DELVEL(M/SEC)	DELGAM(RADS)	DELPSI(RADS)	DELTIME(SEC)
-0.[illegible]E 02	0.[illegible]E 02	-0.16689599E 00	0.38427734E 00	0.49224496E-03	0.	0.

ERROR SOURCE MAGNITUDE = 0.77289235E-05

ERROR SOURCE 15

INERTIAL POSITION AND VELOCITY FOLLOW

X = 0.56639190E 07 METERS Y = 0.13441047E 06 METERS Z = 0.30510503E 07 METERS
VX = 0.86299007E 03 METERS/SEC VY = 0.26059922E 04 METERS/SEC VZ = 0.46061344E 03 METERS/SEC

TBI

0.37630478E 00	-0.80155888E 00	-0.47431186E 00
0.91048449E 00	0.42746950E 00	-0.47115174E-04
0.20279142E 00	-0.43183646E 00	0.88035381E 00

DELXI(M)	DELYI(M)	DELZI(M)	DELVXI(M/SEC)	DELVYI(M/SEC)	DELVZI(M/SEC)
-0.75000000E 00	-0.17578125E-01	0.14375000E 01	-0.27229309E-01	-0.42724609E-03	0.50685883E-01

TBI ERROR MATRIX

-0.13723969E-04	-0.23066998E-04	0.28140843E-04
-0.14901161E-06	0.11175871E-07	-0.47115174E-04
0.25544316E-04	0.42758892E-04	0.13805926E-04

ATTITUDE ERROR PARAMETER = 0.00022749E-04

DELRA(M)	DELDR(M)	DELCR(M)	DELVEL(M/SEC)	DELGAM(RADS)	DELPSI(RADS)	DELTIME(SEC)
0.21[illegible]E-01	-0.20467[illegible]E-01	0.16212194E 01	-0.42724609E-03	-0.89406967E-07	0.20670570E-04	0.

ERROR SOURCE MAGNITUDE = 0.43661165E-06

ERROR SOURCE 1[illegible]

INERTIAL POSITION AND VELOCITY FOLLOW

X = 0.56[illegible] Y = 0.13441049E 06 METERS Z = 0.30510454E 07 METERS
VX = 0.86[illegible] METERS/SEC VY = 0.26059926E 04 METERS/SEC VZ = 0.46036702E 03 METERS/SEC

TBI

0.37634141E 00	-0.80154[illegible]E 00	-0.47429799E 00
0.91048462E 00	0.42746946E 00	0.31331173E-04
0.20272312E 00	-0.43185368E 00	0.88036113E 00

```
      DELXI(M)          DELYI(M)          DELZI(M)          DELVXI(M/SEC)     DELVYI(M/SEC)     DELVZI(M/SEC)
    0.1[illegible]E 01   -0.5459373[illegible]E-02   -0.33750000E 01    0.51033020E-01   -0.91552734E-04   -0.95737457E-01

TBI ERROR MATRIX
     0.22910535E-04     -0.13664365E-04      0.42006373E-04
    -0.14901161E-07      0.                  0.31331173E-04
    -0.42749569E-04      0.25540590E-04      0.21129847E-04

ATTITUDE ERROR PARAMETER = 0.79900584E-04

      DELRA(M)          DELCR(M)          DELCR(M)          DELVEL(M/SEC)     DELGAM(RADS)      DELPSI(RADS)      DELTIME(SEC)
   -0.50075650E-02    0.22166374E-04   -0.33308993E 01   -0.61035156E-04    0.17881393E-06   -0.38974360E-04    0.

ERROR SOURCE MAGNITUDE = 0.43661166E-06


ERROR SOURCE 17

INERTIAL POSITION AND VELOCITY FOLLOW

 X = 0.56639172E 07 METERS          Y = 0.13441381E 06 METERS          Z = 0.30510475E 07 METERS
VX = 0.86292457E 03 METERS/SEC     VY = 0.24060702E 04 METERS/SEC     VZ = 0.46041489E 03 METERS/SEC

TBI
     0.37625968E 00     -0.80155917E 00     -0.47434000E 00
     0.91051102E 00      0.42741401E 00     -0.
     0.20273957E 00     -0.43189173E 00      0.88034000E 00

      DELXI(M)          DELYI(M)          DELZI(M)          DELVXI(M/SEC)     DELVYI(M/SEC)     DELVZI(M/SEC)
   -0.25625000E 01    0.33164063E 01   -0.13125000E 01   -0.88729658E-01    0.77514648E-01   -0.47874451E-01

TBI ERROR MATRIX
    -0.45827380E-04     -0.23330120E-04     -0.
     0.26382506E-04     -0.55473290E-04     -0.
    -0.2[illegible]E-04     -0.12509525E-04     0.

ATTITUDE ERROR PARAMETER = 0.8[illegible]E-04

      DELRA(M)          DELCR(M)          DELCR(M)          DELVEL(M/SEC)     DELGAM(RADS)      DELPSI(RADS)      DELTIME(SEC)
   -0.[illegible]E 01    0.33757137E 01    0.[illegible]E-01    0.37135[illegible]E-01    0.43690205E-04    0.                0.

ERROR SOURCE MAGNITUDE = 0.4[illegible]E-06


ERROR SOURCE 18
```

```
INERTIAL POSITION AND VELOCITY FOLLOW

 X = 0.56639197E 07 METERS          Y = 0.13441049E 06 METERS          Z = 0.30510488E 07 METERS
VX = 0.86301726E 03 METERS/SEC      VY = 0.26059926E 04 METERS/SEC      VZ = 0.46046273E 03 METERS/SEC

TBI
     0.37631250E 00     -0.60153562E 00     -0.47434000E 00
     0.91043463E 00      0.42746943E 00      -0.
     0.20276567E 00     -0.43187922E 00      0.88034000E 00

        DELXI(M)          DELYI(M)          DELZI(M)          DELVXI(M/SEC)     DELVYI(M/SEC)     DELVZI(M/SEC)
      0.                -0.19531250E-02    0.                -0.45776367E-04   -0.30517578E-04   -0.22888184E-04

TBI ERROR MATRIX
     0.                 -0.                -0.
     0.                  0.                -0.
     0.                 -0.                 0.

ATTITUDE ERROR PARAMETER = 0.

        DELRA(M)          DELDR(M)          DELCR(M)          DELVEL(M/SEC)     DELGAM(RADS)     DELPSI(RADS)     DELTIME(SEC)
     -0.40796845E-04   -0.19526966E-02   -0.29452838E-05    0.                0.14901161E-07    0.               0.

ERROR SOURCE MAGNITUDE = 0.


ERROR SOURCE 19

INERTIAL POSITION AND VELOCITY FOLLOW

 X = 0.56639197E 07 METERS          Y = 0.13441049E 06 METERS          Z = 0.30510488E 07 METERS
VX = 0.86301726E 03 METERS/SEC      VY = 0.26059926E 04 METERS/SEC      VZ = 0.46046273E 03 METERS/SEC

TBI
     0.37631250E 00     -0.60153562E 00     -0.47434000E 00
     0.91043463E 00      0.42746943E 00      -0.
     0.20276567E 00     -0.43187922E 00      0.88034000E 00

        DELXI(M)          DELYI(M)          DELZI(M)          DELVXI(M/SEC)     DELVYI(M/SEC)     DELVZI(M/SEC)
      0.                -0.19531250E-02    0.                -0.45776367E-04   -0.30517578E-04   -0.22888184E-04

TBI ERROR MATRIX
     0.                 -0.                -0.
     0.                  0.                -0.
     0.                 -0.                 0.

ATTITUDE ERROR PARAMETER = 0.

        DELRA(M)          DELDR(M)          DELCR(M)          DELVEL(M/SEC)     DELGAM(RADS)     DELPSI(RADS)     DELTIME(SEC)
```

```
-0.[illegible]  [illegible]  -[illegible].1[illegible]26[illegible]  -[illegible].29452333E-05   0.              0.14901161E-07   0.              0.

ERROR SOURCE MAGNITUDE = .


ERROR SOURCE 20

INERTIAL POSITION AND VELOCITY FOLLOW

 X = 0.56639197E 07 METERS          Y = 0.13441049E 06 METERS          Z = 0.30510483E  7 METERS
VX = 0.86301726E 03 METERS/SEC      VY = 0.26059926E 04 METERS/SEC     VZ = 0.46046273E 03 METERS/SEC

TBI
     0.37631250E 00     -0.80153582E 00     -0.47434000E 00
     0.91048463E 00      0.42746948E 00     -0.
     0.20276587E 00     -0.43187922E 00      0.88034000E 00

        DELXI(M)          DELYI(M)          DELZI(M)          DELVXI(M/SEC)     DELVYI(M/SEC)     DELVZI(M/SEC)
      0.                -0.19531250E-02    0.                -0.45776367E-04   -0.30517578E-04   -0.22888184E-04

TBI ERROR MATRIX
     0.                 -0.                 -0.
     0.                  0.                 -0.
     0.                 -0.                  0.

ATTITUDE ERROR PARAMETER = 0.

        DELRA(M)          DELLR(M)          DELCR(M)          DELVEL(M/SEC)     DELGAM(RADS)      DELPSI(RADS)      DELTIME(SEC)
     -0.40776845E-04   -0.19526964E-02   -0.29452838E-05    .                0.14901161E-07   0.                0.

ERROR SOURCE MAGNITUDE = .


ERROR SOURCE 21

INERTIAL POSITION AND VELOCITY FOLLOW

 X = 0.56639197E 07 METERS          Y = 0.13441049E 06 METERS          Z = 0.30510600E 07 METERS
VX = 0.86301726E 03 METERS/SEC      VY = 0.26059926E 04 METERS/SEC     VZ = 0.46094304E 03 METERS/SEC

TBI
     0.37621525E 00     -0.80170862E 00     -0.47413744E 00
     0.91043443E 00      0.42746939E 00     -0.35348265E-03
     0.20295746E 00     -0.43155856E 00      0.88045032E 00

        DELXI(M)          DELYI(M)          DELZI(M)          DELVXI(M/SEC)     DELVYI(M/SEC)     DELVZI(M/SEC)
     -0.60525000E 01   -0.19531250E-01    0.11250000E 02   -0.20495605E 00   -0.42724609E-03    0.38027954E 00
```

```
TBI ERROR MATRIX
    -0.10323424E-03      -0.17230877E-03      0.22755455E-03
    -0.20861626E-05      -0.10053[illegible]E-06     -0.35348265E-03
     0.19153423E-03       0.32066131E-03      0.11031330E-03

ATTITUDE ERROR PARAMETER = 0.60020567E-03

        DELRA(M)          DELCR(M)          DELCR(M)        DELVEL(M/SEC)      DELGAM(RADS)      DELPSI(RADS)      DELTIME(SEC)
     -0.24614930E-02   -0.38759607E-01    0.12779486E 02   -0.97656250E-03   -0.10430813E-06    0.15519719E-03    0.

ERROR SOURCE MAGNITUDE = 0.32756885E-05


ERROR SOURCE 22

INERTIAL POSITION AND VELOCITY FOLLOW

 X = 0.56639336E 07 METERS          Y = 0.13441049E 06 METERS          Z = 0.30510220E 07 METERS
VX = 0.36340369E 03 METERS/SEC     VY = 0.26059925E 04 METERS/SEC     VZ = 0.45974486E 03 METERS/SEC

TBI
     0.37647120E 00      -0.80163906E 00     -0.47402819E 00
     0.91043456E 00       0.42746949E 00      0.23506283E-03
     0.20244517E 00      -0.43168760E 00      0.88050663E 00

        DELXI(M)          DELYI(M)          DELZI(M)        DELVXI(M/SEC)     DELVYI(M/SEC)     DELVZI(M/SEC)
     0.14062500E 02    -0.58593750E-02    -0.26812500E 02    0.38639069E 00   -0.12207031E-03   -0.71789932E 00

TBI ERROR MATRIX
     0.17269771E-03      -0.10324270E-03      0.31180680E-03
    -0.74505806E-07       0.74505806E-08      0.23506242E-03
    -0.32269770E-03       0.19161770E-03      0.16662478E-03

ATTITUDE ERROR PARAMETER = 0.60024095E-03

        DELRA(M)          DELCR(M)          DELCR(M)        DELVEL(M/SEC)      DELGAM(RADS)      DELPSI(RADS)      DELTIME(SEC)
     -0.35538806E 00    0.46810064E-01    -0.30274566E 02    0.10661152E-02    0.25331974E-06   -0.29289208E-03    0.

ERROR SOURCE MAGNITUDE = 0.32756888E-05


ERROR SOURCE 23

INERTIAL POSITION AND VELOCITY FOLLOW
```

```
 X = 0.56630[illegible] 07 METERS          Y = 0.13443546E 06 METERS          Z = 0.30510386E 07 METERS
VX = 0.86235[illegible]E 03 METERS/SEC     VY = 0.2[illegible]55761E 04 METERS/SEC     VZ = 0.46010454E 03 METERS/SEC

TBI
     0.37595274E 00     -0.[illegible]01711139E 00     -0.47434000E 00
     0.91068371E 00      0.42705350E 00     -0.
     0.20256[illegible]37E 00     -0.43197[illegible]E 00      0.88034000E 00

        DELXI(M)          DELYI(M)          DELZI(M)          DELVXI(M/SEC)     DELVYI(M/SEC)     DELVZI(M/SEC)
     -0.13875000E 02     0.24964944E 02    -0.10187500E 02    -0.66438293E 00    0.58343506E 00    -0.35821152E 00

TBI ERROR MATRIX
    -0.36625564E-03     -0.17537177E-03     -0.
     0.19907951E-03     -0.41599199E-03     -0.
    -0.19730441E-03     -0.14462186E-04      0.

ATTITUDE ERROR PARAMETER = 0.65225193E-03

        DELRA(M)          DELCR(M)          DELCR(M)          DELVEL(M/SEC)     DELGAM(RADS)      DELPSI(RADS)      DELTIME(SEC)
     -0.20922642E 02     0.25407415E 02    0.20814300E-01     0.24115845E 00    0.32749772E-03    0.                0.

ERROR SOURCE MAGNITUDE = 0.3[illegible]

ERROR SOURCE 24

INERTIAL POSITION AND VELOCITY FOLLOW

 X = 0.56639197E 07 METERS          Y = 0.13441[illegible]49E 06 METERS          Z = 0.30510483E 07 METERS
VX = 0.86301726E 03 METERS/SEC     VY = 0.2[illegible]59[illegible]E 04 METERS/SEC     VZ = 0.46046273E 03 METERS/SEC

TBI
     0.37631[illegible]50E 00     -0.80153[illegible]E 00     -0.47434000E 00
     0.91[illegible]43[illegible]E 00      0.42746[illegible]E 00     -0.
     0.20276[illegible]37E 00     -0.43187[illegible]E 00      0.88034000E 00

        DELXI(M)          DELYI(M)          DELZI(M)          DELVXI(M/SEC)     DELVYI(M/SEC)     DELVZI(M/SEC)
     0.                -0.1[illegible]E-02     0.                -0.4[illegible]E-04    -0.30517578E-04    -0.22886184E-04

TBI ERROR MATRIX
     0.                -0.                -0.
     0.                 0.                -0.
     0.                -0.                 0.

ATTITUDE [illegible]

        DELRA(M)          DELCR(M)          DELCR(M)          DELVEL(M/SEC)     DELGAM(RADS)      DELPSI(RADS)      DELTIME(SEC)
     -0.43796345E-04    -0.19526966E-02    -0.29452338E-05     0.                0.14901161E-07    0.                0.
```

```
ERROR SOURCE MAGNITUDE = 0.


ERROR SOURCE 25

INERTIAL POSITION AND VELOCITY FOLLOW

 X = 0.56639137E 07 METERS          Y = 0.13441049E 06 METERS          Z = 0.30510488E 07 METERS
VX = 0.86301726E 03 METERS/SEC     VY = 0.26059926E 04 METERS/SEC     VZ = 0.46046273E 03 METERS/SEC

TBI
     0.37631850E 00     -0.80153582E 00     -0.47434000E 00
     0.91048463E 00      0.42746048E 00     -0.
     0.20276507E 00     -0.43187922E 00      0.88034000E 00

        DELXI(M)          DELYI(M)          DELZI(M)        DELVXI(M/SEC)     DELVYI(M/SEC)     DELVZI(M/SEC)
      0.                -0.19531250E-02    0.               -0.45776367E-04   -0.30517578E-04   -0.22888184E-04

TBI ERROR MATRIX
     0.                 -0.                -0.
     0.                 -0.                -0.
     0.                 -0.                 0.

ATTITUDE ERROR PARAMETER = 0.

        DELRA(M)          DELDR(M)          DELCR(M)        DELVEL(M/SEC)     DELGAM(RADS)      DELPSI(RADS)      DELTIME(SEC)
     -0.40796845E-04   -0.19526965E-02   -0.29452438E-05    0.               0.14901161E-07    0.                0.

ERROR SOURCE MAGNITUDE = 0.


ERROR SOURCE 35

INERTIAL POSITION AND VELOCITY FOLLOW

 X = 0.56639137E 07 METERS          Y = 0.13441049E 06 METERS          Z = 0.30510488E 07 METERS
VX = 0.86301726E 03 METERS/SEC     VY = 0.26059926E 04 METERS/SEC     VZ = 0.46046273E 03 METERS/SEC

TBI
     0.37631850E 00     -0.80153582E 00     -0.47434000E 00
     0.91048463E 00      0.42746048E 00     -0.
     0.20276507E 00     -0.43187922E 00      0.88034000E 00

        DELXI(M)          DELYI(M)          DELZI(M)        DELVXI(M/SEC)     DELVYI(M/SEC)     DELVZI(M/SEC)
      0.                -0.19531250E-02    0.               -0.45776367E-04   -0.30517578E-04   -0.22888184E-04

TBI ERROR MATRIX
```

```
     0.                  -0.                  -0.
     0.                  -0.                  -0.
     0.                  -0.                  -0.

ATTITUDE ERROR PARAMETER = 0.

        DELRA(M)          DELDR(M)          DELCR(M)          DELVEL(M/SEC)      DELGAM(RADS)      DELPSI(RADS)      DELTIME(SEC)
     -0.4[illegible]-04   -0.19526965E-02   -0.29452838E-05   0.                 0.14901161E-07    0.                0.

ERROR SOURCE MAGNITUDE = 0.


ERROR SOURCE 27

INERTIAL POSITION AND VELOCITY FOLLOW

 X = 0.56639199E 07 METERS          Y = 0.13441063E 06 METERS          Z = 0.30510488E 07 METERS
VX = 0.86302034E 03 METERS/SEC     VY = 0.26059972E 04 METERS/SEC     VZ = 0.46046438E 03 METERS/SEC

TBI
     0.37631850E 00     -0.80153582E 00     -0.47434000E 00
     0.91048463E 00      0.42746948E 00     -0.
     0.20276587E 00     -0.43187922E 00      0.88034000E 00

        DELXI(M)          DELYI(M)          DELZI(M)          DELVXI(M/SEC)      DELVYI(M/SEC)      DELVZI(M/SEC)
     0.12560000E 00    0.13476563E 00    0.62[illegible]000E-01    0.30364990E-02    0.45166016E-02    0.16174316E-02

TBI ERROR MATRIX
     0.                  -0.                  -0.
     0.                  -0.                  -0.
     0.                  -0.                  -0.

ATTITUDE ERROR PARAMETER = 0.

        DELRA(M)          DELDR(M)          DELCR(M)          DELVEL(M/SEC)      DELGAM(RADS)      DELPSI(RADS)      DELTIME(SEC)
     0.14247391E 00    0.13182435E 00   -0.40580234E-02    0.54626465E-02   -0.[illegible]11[illegible]29E-06    0.                0.

ERROR SOURCE MAGNITUDE = 0.85115659E-04

STATISTICAL SUMMARY FILE 4

        DELRA             DELDR             DELCR             DELVEL            DELGAM            DELPSI            DELTIME
RSS  0.37542614E 02    0.471[illegible]E 02    0.[illegible]1761E 02    0.48456[illegible]E 00    0.59757854E-03    0.57154859E-03    0.
```

TRAJECTORY [illegible]

THIS [illegible]

FLIGHT [illegible] WHEN TIME EXCEEDS 0.42000000E 03 SEC.

INTEGRATION INCREMENT = 0.10000000E 01 SEC.

TABULAR DATA IS IN BODY AXES

TABULAR DATA IS SPECIFIC FORCE

TABULAR DATA FOLLOWS

TIME	AX	AY	AZ	WX	WY	WZ
0.	0.97600000E 01	0.	-0.	0.	0.	0.35000000E-02
0.10000000E 02	0.11340000E 02	0.	-0.	-0.	-0.	0.
0.20000000E 02	0.11490000E 02	0.	-0.	-0.	-0.	0.
0.24000000E 02	0.11900000E 02	0.	-0.	-0.	-0.	0.15000000E-02
0.90000000E 02	0.16490000E 02	0.	-0.	-0.	-0.	0.35000000E-02
0.96000000E 02	0.17700000E 02	0.	-0.	-0.	-0.	0.15000000E-02
0.10000000E 03	0.	0.	-0.	-0.	-0.	0.
0.10800000E 03	0.79400000E 01	0.	-0.	-0.	-0.	0.15000000E-02
0.15000000E 03	0.91500000E 01	0.	-0.	-0.	-0.	0.15000000E-02
0.29000000E 03	0.12300000E 02	0.	-0.	-0.	-0.	0.25000000E-02
0.30000000E 03	0.13100000E 02	0.	-0.	-0.	-0.	0.
0.42000000E 03	0.20740000E 02	0.	-0.	-0.	-0.	0.

INPUT DATA FOR ERROR MODELS FOLLOW
FIRST-ORDER INTEGRATION SCHEME
27 BIT COMPUTER WORD SIZE
FOURTH-ORDER COORDINATE CONVERSION
QUANTIZATION = .
COMPUTATIONAL FREQUENCY = 0.10000000E 03 CPS
SINUSOIDAL RATES
NUMBER OF SINUSOIDS = 3
AMPLITUDE
0.34800000E-01 0.34800000E-01 0.34800000E-01
FREQUENCY
0.20000000E 01 0.20000000E 01 0.96000000E 01
MOMENT ARM
. 0.30500000E 01 0.30500000E 01
01 POSITIONS STEPS OF EACH SINUSOID
.10000000E 01 0. 0.
. 0. 0.10000000E 01
. 0.10000000E 01 0.
QUANTIZATION
NUMBER OF STEPS OF SINUSOIDS = 3
VELOCITY PLANE SPECTRUM
AMPLITUDE
[illegible] 0.36400000E-03 0.91500000E-04 0.91500000E-04 0.30400000E-05
[illegible]
FREQUENCY
.10000000E 02 0.40000000E 02 0.10000000E 03 0.20000000E 03 0.50000000E 03
0.67000000E 03

SPECIFIC FORCE AND BODY RATES IN INSTRUMENT FRAMES FOLLOW

TIME	SFX	SFY	SFZ	WX	WY	WZ
0.	0.97600000E 01	0.	-0.	-0.	-0.	0.35000000E-02
0.10000000E 02	0.11590000E 02	0.	-0.	-0.	-0.	0.
0.20000000E 02	0.11590000E 02	0.	-0.	-0.	-0.	0.
0.24000000E 02	0.11900000E 02	0.	-0.	-0.	-0.	0.15000000E-02
0.90000000E 02	0.16490000E 02	0.	-0.	-0.	-0.	0.35000000E-02
0.96000000E 02	0.17700000E 02	0.	-0.	-0.	-0.	0.15000000E-02
0.10000000E 03	0.	0.	-0.	-0.	-0.	0.
0.10800000E 03	0.79400000E 01	0.	-0.	-0.	-0.	0.15000000E-02
0.15000000E 03	0.91500000E 01	0.	-0.	-0.	-0.	0.15000000E-02
0.29000000E 03	0.12800000E 02	0.	-0.	-0.	-0.	0.25000000E-02
0.30000000E 03	0.13100000E 02	0.	-0.	-0.	-0.	0.
0.42000000E 03	0.20740000E 02	0.	-0.	-0.	-0.	0.

FLIGHT SEGMENT 3

TRUTH

INERTIAL POSITION AND VELOCITY FOLLOW

X = 0.54769824E 07 METERS Y = 0.21540156E 07 METERS Z = 0.29473292E 07 METERS
VX =-0.22367231E 04 METERS/SEC VY = 0.73739033E 04 METERS/SEC VZ =-0.12121351E 04 METERS/SEC

RADIUS	VELOCITY	GAMMA	TIME
0.65321789E 07 METERS	0.78009938E 04 METERS/SEC	0.15698371E 01 RAD.	0.56000000E 03 SEC

TBI

-0.11145166E 00	-0.87951359E 00	-0.47434000E 00
0.99906797E 00	-0.12660092E 00	-0.
-0.60051319E-01	-0.47389804E 00	0.88034000E 00

TRANSITION MATRIX FROM INERTIAL FRAME TO LOCAL FRAME

0.43209290E 00	0.32724975E 00	0.44780463E 00
-0.28777725E 00	0.94493755E 00	-0.15591162E 00
-0.47413673E 00	0.73175350E-03	0.88045047E 00

ERROR PRINTOUT FOR EACH ERROR SOURCE FOLLOWS

ERROR SOURCE 2

INERTIAL POSITION AND VELOCITY FOLLOW

X = 0.54769966E 07 METERS Y = 0.21540159E 07 METERS Z = 0.29475361E 07 METERS
VX =-0.22387076E 04 METERS/SEC VY = 0.73739059E 04 METERS/SEC VZ =-0.12121267E 04 METERS/SEC

TBI

-0.11145166E 00	-0.37951095E 00	-0.47434000E 00
0.99906797E 00	-0.12660082E 00	-0.
-0.60051819E-01	-0.47389804E 00	0.88034000E 00

DELXI(M)	DELYI(M)	DELZI(M)	DELVXI(M/SEC)	DELVYI(M/SEC)	DELVZI(M/SEC)
0.13379000E 02	0.21875000E 00	0.69687500E 01	0.15563965E-01	0.26855469E-02	0.84228516E-02

TBI ERROR MATRIX

-0.	-0.	-0.
0.	-0.	-0.
-0.	-0.	0.

ATTITUDE ERROR PARAMETER = 0.

DELRA(M)	DELDR(M)	DELCR(M)	DELVEL(M/SEC)	DELGAM(RADS)	DELPSI(RADS)	DELTIME(SEC)
0.14321467E 02	-0.47281278E 01	-0.20576578E 00	-0.32348633E-02	-0.22500753E-05	0.	0.

ERROR SOURCE 3

INERTIAL POSITION AND VELOCITY FOLLOW

X = 0.54769826E 07 METERS Y = 0.21540311E 07 METERS Z = 0.29475295E 07 METERS
VX =-0.22387191E 04 METERS/SEC VY = 0.73734067E 04 METERS/SEC VZ =-0.12121329E 04 METERS/SEC

TBI

-0.11145165E 00	-0.37951956E 00	-0.47434000E 00
0.99906797E 00	-0.12660082E 00	-0.
-0.60051819E-01	-0.47389804E 00	0.88034000E 00

DELXI(M)	DELYI(M)	DELZI(M)	DELVXI(M/SEC)	DELVYI(M/SEC)	DELVZI(M/SEC)
0.43750000E 00	0.15500000E 02	0.34375000E 00	0.39672852E-02	-0.14587402E-01	0.21209717E-02

TBI ERROR MATRIX

-0.	-0.	-0.
0.	-0.	-0.
-0.	-0.	0.

ATTITUDE ERROR PARAMETER = 0.

DELRA(M)	DELDR(M)	DELCR(M)	DELVEL(M/SEC)	DELGAM(RADS)	DELPSI(RADS)	DELTIME(SEC)

```
0.55703445E 01    .14467069E 02    0.10733734E 00   -0.15197754E-01    0.74505806E-07    0.                0.


ERROR SOURCE  4

INERTIAL POSITION AND VELOCITY FOLLOW

 X = 0.54769749E 07 METERS          Y = 0.21540156E 07 METERS          Z = 0.29475428E 07 METERS
VX =-0.22387162E 04 METERS/SEC     VY = 0.73739030E 04 METERS/SEC     VZ =-0.12121483E 04 METERS/SEC

TBI
    -0.11145166E 00     -0.87951958E 00     -0.47434000E 00
     0.99906797E 00     -0.12660082E 00     -0.
    -0.60051819E-01     -0.47389804E 00      0.88034000E 00

        DELXI(M)          DELYI(M)          DELZI(M)        DELVXI(M/SEC)     DELVYI(M/SEC)     DELVZI(M/SEC)
     -0.75000000E 01   -0.93750000E-01    0.13456250E 02    0.69274902E-02   -0.30517578E-03   -0.13198853E-01

TBI ERROR MATRIX
    -0.                 -0.                 -0.
     0.                 -0.                 -0.
    -0.                 -0.                  0.

ATTITUDE ERROR PARAMETER = 0.

        DELRA(M)          DELCR(M)          DELCR(M)        DELVEL(M/SEC)     DELGAM(RADS)      DELPSI(RADS)      DELTIME(SEC)
     -0.15604436E 00   -0.57060914E-01    0.15579609E 02   -0.18310547E-03    0.29802322E-07   -0.19110162E-05    0.


ERROR SOURCE  5

INERTIAL POSITION AND VELOCITY FOLLOW

 X = 0.54769724E 07 METERS          Y = 0.21540156E 07 METERS          Z = 0.29475292E 07 METERS
VX =-0.22387233E 04 METERS/SEC     VY = 0.73739030E 04 METERS/SEC     VZ =-0.12121352E 04 METERS/SEC

TBI
    -0.11145166E 00     -0.87951958E 00     -0.47434000E 00
     0.99906797E 00     -0.12660082E 00     -0.
    -0.60051819E-01     -0.47389804E 00      0.88034000E 00

        DELXI(M)          DELYI(M)          DELZI(M)        DELVXI(M/SEC)     DELVYI(M/SEC)     DELVZI(M/SEC)
     0.                -0.31250000E-01    0.                -0.15258789E-03   -0.24414063E-03   -0.91552734E-04

TBI ERROR MATRIX
    -0.                 -0.                 -0.
     0.                 -0.                 -0.
    -0.                 -0.                  0.
```

ATTITUDE ERROR PARAMETER = 0.

DELRA(M)	DELCR(M)	DELCR(M)	DELVEL(M/SEC)	DELGAM(RADS)	DELPSI(RADS)	DELTIME(SEC)
-0.17226555E-01	-0.29529291E-01	-0.24429799E-04	-0.12207031E-03	0.29802322E-07	0.	0.

ERROR SOURCE 6

INERTIAL POSITION AND VELOCITY FOLLOW

X = 0.54769824E 07 METERS Y = 0.21540156E 07 METERS Z = 0.29475291E 07 METERS
VX =-0.22387233E 04 METERS/SEC VY = 0.73739030E 04 METERS/SEC VZ =-0.12121353E 04 METERS/SEC

TBI

-0.11145166E 00	-0.87951959E 00	-0.47434000E 00
0.99306797E 00	-0.12660382E 00	-0.
-0.60051819E-01	-0.47329804E 00	0.88034000E 00

DELXI(M)	DELYI(M)	DELZI(M)	DELVXI(M/SEC)	DELVYI(M/SEC)	DELVZI(M/SEC)
0.	-0.33750000E-01	-0.31250000E-01	-0.18310547E-03	-0.30517578E-03	-0.13732910E-03

TBI ERROR MATRIX

-0.	-0.	-0.
0.	-0.	-0.
-0.	-0.	0.

ATTITUDE ERROR PARAMETER = 0.

DELRA(M)	DELCR(M)	DELCR(M)	DELVEL(M/SEC)	DELGAM(RADS)	DELPSI(RADS)	DELTIME(SEC)
-0.44673555E-01	-0.13718701E- 1	-0.27537373E-01	-0.18310547E-03	0.44703484E-07	0.	0.

ERROR SOURCE 7

INERTIAL POSITION AND VELOCITY FOLLOW

X = 0.54769824E 07 METERS Y = 0.21540156E 07 METERS Z = 0.29475292E 07 METERS
VX =-0.22387233E 04 METERS/SEC VY = 0.73739030E 04 METERS/SEC VZ =-0.12121353E 04 METERS/SEC

TBI

-0.11145166E 00	-0.87951959E 00	-0.47434000E 00
0.99306797E 00	-0.12660382E 00	-0.
-0.60051819E-01	-0.47329804E 00	0.88034000E 00

DELXI(M)	DELYI(M)	DELZI(M)	DELVXI(M/SEC)	DELVYI(M/SEC)	DELVZI(M/SEC)
0.	-0.31250000E-01	0.	-0.15258789E-03	-0.24414063E-03	-0.91552734E-04

```
TBI [illegible]
    -0.                  -0.                  -0.
     0.                  -0.                  -0.
    -0.                  -0.                   0.

ATTITUDE ERROR PARAM [illegible] = 0.

        DELRA(M)          DELCR(M)          DELCR(M)        DELVEL(M/SEC)      DELGAM(RADS)      DELPSI(RADS)      DELTIME(SEC)
    -0.10226555E-01   -0.29529293E-01   -0.24429799E-04   -0.12207031E-03    0.29802322E-07    0.                0.


ERROR SOURCE

INERTIAL POSITION AND VELOCITY FOLLOW

 X = 0.54768919E 07 METERS          Y = 0.21540155E 07 METERS          Z = 0.29476947E 07 METERS
VX =-0.22390[illegible]E 04 METERS/SEC     VY = 0.73739029E 04 METERS/SEC     VZ =-0.12115328E 04 METERS/SEC

TBI
    -0.11149769E 00     -0.87951385E 00     -0.47434000E 00
     0.99906797E 00     -0.12660381E 00     -0.96999851E-04
    -0.59966485E-01     -0.47390883E 00      0.88034000E 00

        DELXI(M)          DELYI(M)          DELZI(M)        DELVXI(M/SEC)     DELVYI(M/SEC)     DELVZI(M/SEC)
    -0.69562500E 02   -0.12500000E 00    0.16553125E 03   -0.32501221E 00   -0.36621094E-03    0.60232544E 00

TBI ERROR MATRIX
    -0.46029587E-04      0.57294955E-04     -0.
     0.                  0.37252[illegible]E-04     -0.96999851E-04
     0.83334294E-04     -0.1[illegible]792166E-04      0.

ATTITUDE ERROR PARAMETER = 0.13759146E-03

        DELRA(M)          DELCR(M)          DELCR(M)        DELVEL(M/SEC)      DELGAM(RADS)      DELPSI(RADS)      DELTIME(SEC)
    -0.42356661E 0[illegible]   -0.1[illegible]E 00    0.18820691E 03   -0.61035156E-03    0.10430313E-06    0.87736578E-04    0.


ERROR SOURCE [illegible]

INERTIAL POSITION AND VELOCITY FOLLOW

 X = 0.54770107E 07 METERS          Y = 0.21540156E 07 METERS          Z = 0.29474755E 07 METERS
VX =-0.2[illegible]E 07 METERS/SEC     VY = 0.73739028E 04 METERS/SEC     VZ =-0.12122302E 04 METERS/SEC

TBI
    -0.11145456E 00     -0.87954253E 00     -0.47429730E 00
```

0.99406967E-01	-0.17560697E-01	-0.72343162E-16
-0.55[illegible]E-01	-0.47[illegible]E-03	0.89036309E 00

DELXI(M)	DELYI(M)	DELZI(M)	DELVXI(M/SEC)	DELVYI(M/SEC)	DELVZI(M/SEC)
0.25250000E 07	-0.93700000E-01	-0.53687500E 02	0.50506592E-01	-0.48828125E-03	-0.95092773E-01

TBI ERROR MATRIX

-0.2[illegible]E-[illegible]	-0.23477[illegible]E-04	0.42699277E-04
0.	-0.37252[illegible]E-[illegible]	-0.72343390E-16
0.53602505E-05	0.42658299E-04	0.22999942E-04

ATTITUDE ERROR PARAMETER = 0.69313394E-04

DELXA(M)	DELYA(M)	DELZA(M)	DELVEL(M/SEC)	DELGAM(RADS)	DELPSI(RADS)	DELTIME(SEC)
-0.35556630E 02	0.14684093E 00	-0.60663641E 02	-0.18310547E-03	0.89406967E-07	-0.13801567E-04	0.

ERROR SOURCE 10

INERTIAL POSITION AND VELOCITY FOLLOW

X = 0.54768316E 07 METERS Y = 0.21540748E 07 METERS Z = 0.29474803E 07 METERS
VX =-0.22390785E 04 METERS/SEC VY = 0.73739965E 04 METERS/SEC VZ =-0.12173263E 04 METERS/SEC

TBI

-0.11149439E 00	-0.87951426E 00	-0.47434000E 00
0.99906176E 00	-0.12664213E 00	-0.23494523E-08
-0.60074775E-01	-0.47339513E 00	0.48934000E 00

DELXI(M)	DELYI(M)	DELZI(M)	DELVXI(M/SEC)	DELVYI(M/SEC)	DELVZI(M/SEC)
-0.09575[illegible]E 01	0.51[illegible]E 02	-0.43933752E 02	-0.35524669E 00	0.93200684E-01	-0.19119263E 00

TBI ERROR MATRIX

-0.42[illegible]E-[illegible]	0.31771456E-[illegible]	-0.
-0.60[illegible]E-[illegible]	-0.48367377E-[illegible]	-0.23434523E-03
-0.22[illegible]E-04	0.29429793E-04	-0.74505806E-08

ATTITUDE ERROR PARAMETER = 0.65012214E-04

DELXA(M)	DELYA(M)	DELZA(M)	DELVEL(M/SEC)	DELGAM(RADS)	DELPSI(RADS)	DELTIME(SEC)
-0.7[illegible]E 01	0.[illegible]E 02	0.12[illegible]E 02	0.21984[illegible]E 00	0.43061507E-04	0.	0.

ERROR SOURCE 11

INERTIAL POSITION AND VELOCITY FOLLOW

```
 X = 0.54768[illegible]E 07 METERS          Y = 0.21540701E 07 METERS          Z = 0.29474643E 07 METERS
VX =-0.223[illegible]E 04 METERS/SEC      VY = 0.73739893E 04 METERS/SEC      VZ =-0.12124049E 04 METERS/SEC

TBI
    -0.11151776E 00     -0.87951197E 00     -0.47434000E 00
     0.99905[illegible]E 00     -0.12667573E 00     -0.
    -0.6[illegible]E-01     -0.47389392E 00      0.88034000E 00

        DELXI(M)          DELYI(M)          DELZI(M)        DELVXI(M/SEC)     DELVYI(M/SEC)     DELVZI(M/SEC)
     -0.11987500E 02    0.54468750E 02   -0.54843750E 02   -0.50064087E 00    0.86059570E-01   -0.26971436E 00

TBI ERROR MATRIX
    -0.66097826E-04     0.76144934E-05     -0.
    -0.86575747E-05    -0.74917451E-04     -0.
    -0.35599340E-04     0.41201711E-05      0.

ATTITUDE ERROR PARAMETER = 0.10676502E-03

        DELRA(M)          DELDR(M)          DELCR(M)        DELVEL(M/SEC)     DELGAM(RADS)     DELPSI(RADS)     DELTIME(SEC)
     -0.11095958E 03    0.96070273E 02   -0.21201420E 00    0.26702881E 00    0.65311790E-04    0.               0.


ERROR SOURCE 12

INERTIAL POSITION AND VELOCITY FOLLOW

 X = 0.54768649E 07 METERS          Y = 0.21540153E 07 METERS          Z = 0.29477473E 07 METERS
VX =-0.22393313E 04 METERS/SEC      VY = 0.73739016E 04 METERS/SEC      VZ =-0.12110069E 04 METERS/SEC

TBI
    -0.11153572E 00     -0.37982785E 00     -0.47373633E 00
     0.99905782E 00     -0.12660085E 00     -0.20085899E-03
    -0.59[illegible]E-01     -0.47332392E 00      0.88066170E 00

        DELXI(M)          DELYI(M)          DELZI(M)        DELVXI(M/SEC)     DELVYI(M/SEC)     DELVZI(M/SEC)
     -0.11756[illegible]E 03   -0.37500[illegible]E 00    0.21812500E 03   -0.60821533E 00   -0.16479492E-02    0.11282349E 01

TBI ERROR MATRIX
    -0.1[illegible]E-03     -0.30426777E-03      0.60366467E-03
    -0.1[illegible]E-06     -0.31664968E-07     -0.20085899E-03
     [illegible]E-03      0.57411566E-03      0.32170117E-03

ATTITUDE [illegible] = 0.10[illegible]E-02

        DELRA(M)          DELDR(M)          DELCR(M)        DELVEL(M/SEC)     DELGAM(RADS)     DELPSI(RADS)     DELTIME(SEC)
     -0.26925429E 00   -0.50894785E 00    0.24778875E 03   -0.21972656E-02    0.17881393E-06    0.16430441E-03    0.

ERROR SOURCE MAGNITUDE = 0.14099294E-05
```

ERROR SOURCE 13

INERTIAL POSITION AND VELOCITY FOLLOW

X = 0.54776014E 07 METERS Y = 0.21540152E 07 METERS Z = 0.29463787E 07 METERS
VX =-0.22362102E 04 METERS/SEC VY = 0.73738996E 04 METERS/SEC VZ =-0.12168056E 04 METERS/SEC

TBI

-0.11099312E 00	-0.87986250E 00	-0.47380904E 00
0.99906663E 00	-0.12660056E 00	0.10510784E-02
-0.60903714E-01	-0.47326084E 00	0.88062167E 00

DELXI(M)	DELYI(M)	DELZI(M)	DELVXI(M/SEC)	DELVYI(M/SEC)	DELVZI(M/SEC)
0.61920000E 03	-0.40625000E 00	-0.11504688E 04	0.25128784E 01	-0.36010742E-02	-0.46698608E 01

TBI ERROR MATRIX

0.45853946E-03	-0.34292042E-03	0.53095818E-03
-0.13411045E-05	0.25890738E-06	0.10510784E-02
-0.85189619E-03	0.63719228E-03	0.28166920E-03

ATTITUDE ERROR PARAMETER = 0.17104427E-02

DELRA(M)	DELER(M)	DELCP(M)	DELVEL(M/SEC)	DELGAM(RADS)	DELPSI(RADS)	DELTIME(SEC)
-0.25267792E 00	0.73839569E 00	-0.13064221E 04	0.29296875E-02	0.17881393E-06	-0.67978757E-03	0.

ERROR SOURCE MAGNITUDE = 0.13997351E-03

ERROR SOURCE 14

INERTIAL POSITION AND VELOCITY FOLLOW

X = 0.54735973E 07 METERS Y = 0.21545258E 07 METERS Z = 0.29467821E 07 METERS
VX =-0.22454255E 04 METERS/SEC VY = 0.73745760E 04 METERS/SEC VZ =-0.12157472E 04 METERS/SEC

TBI

-0.11265098E 00	-0.87937143E 00	-0.47434000E 00
0.99589977E 00	-0.12797254E 00	-0.
-0.60732500E-01	-0.47381[illegible]	0.88034000E 00

DELXI(M)	DELYI(M)	DELZI(M)	DELVXI(M/SEC)	DELVYI(M/SEC)	DELVZI(M/SEC)
-0.1[illegible]	[illegible]	-0.74706250E 03	-0.67024231E 01	0.67272949E 00	-0.36121216E 01

TBI ERROR MATRIX

-0.12676274E-02	0.14808774E-03	-0.
-0.16620431E-03	-0.13717301E-02	-0.

```
    -0.6505815[illegible]E-02        0.79479[illegible]E-04        0.

ATTITUDE ERROR PARAMETER = 0.19544550E-02

        DELRA(M)          DELCR(M)          DELCR(M)          DELVEL(M/SEC)      DELGAM(RADS)      DELPSI(RADS)      DELTIME(SEC)
     -0.13201626E 04    0.99701521E 03   -0.61441803E 00    0.31237793E 01    0.89406967E-03    0.                0.

ERROR SOURCE MAGNITUDE = 0.14099294E-05


ERROR SOURCE 15

INERTIAL POSITION AND VELOCITY FOLLOW

 X = 0.54769468E 07 METERS          Y = 0.21540153E 07 METERS          Z = 0.29475966E 07 METERS
VX =-0.22389110E 04 METERS/SEC     VY = 0.73739018E 04 METERS/SEC     VZ =-0.12117852E 04 METERS/SEC

TBI
    -0.11149315E 00     -0.87961454E 00     -0.47415198E 00
     0.99906732E 00     -0.12660074E 00     -0.62199846E-04
    -0.59974717E-01     -0.47371998E 00      0.88043728E 00

        DELXI(M)          DELYI(M)          DELZI(M)          DELVXI(M/SEC)     DELVYI(M/SEC)     DELVZI(M/SEC)
     -0.35625000E 02   -0.34375000E 00    0.67406250E 02   -0.18783569E 00   -0.14038086E-02    0.34988403E 00

TBI ERROR MATRIX
    -0.41495077E-04     -0.94957[illegible]E-04      0.18[illegible]E-03
    -0.14901161E-06      0.61467[illegible]E-07     -0.62199846E-04
     0.77101868E-04      0.17805[illegible]E-03      0.97282231E-04

ATTITUDE ERROR PARAMETER = 0.31156377E-03

        DELRA(M)          DELCR(M)          DELCR(M)          DELVEL(M/SEC)      DELGAM(RADS)      DELPSI(RADS)      DELTIME(SEC)
     0.43[illegible]E 0    -0.57543445E 00    0.76238743E 02   -0.17700195E-02    0.14901161E-07    0.50906979E-04    0.

ERROR SOURCE MAGNITUDE = 0.43861166E-06


ERRO[illegible]

INERTIAL POSITION AND VELOCITY FOLLOW

 X = 0.54770[illegible]E 07 METERS          Y = 0.21540153E 07 METERS          Z = 0.29473982E 07 METERS
VX =-0.22383532E 04 METERS/SEC     VY = 0.73739015E 04 METERS/SEC     VZ =-0.12128233E 04 METERS/SEC

TBI
```

```
-0.11135592E 00     -0.37956094E 00     -0.47428411E 00
 0.99906499E 00     -0.12660076E 00      0.21190767E-03
-0.60229455E-01     -0.47382095E 00      0.88036673E 00

      DELXI(M)          DELYI(M)          DELZI(M)          DELVXI(M/SEC)     DELVYI(M/SEC)     DELVZI(M/SEC)
   0.71000000E 02    -0.15625000E 00   -0.13100000E 03    0.36987305E 00   -0.17089844E-02   -0.68817139E 00

TBI ERROR MATRIX
   0.95733441E-04     -0.41358173E-04      0.55983080E-04
  -0.98347664E-06      0.52154064E-07      0.21190767E-03
  -0.17763907E-03      0.77087432E-04      0.26725233E-04

ATTITUDE ERROR PARAMETER = 0.31163519E-03

      DELRA(M)          DELDR(M)          DELCR(M)          DELVEL(M/SEC)     DELGAM(RADS)      DELPSI(RADS)      DELTIME(SEC)
   0.36505604E 00    -0.16350948E 00   -0.14900289E 03   -0.79345703E-03    0.11920929E-06   -0.10014938E-03    0.

ERROR SOURCE MAGNITUDE = 0.43661156E-06


ERROR SOURCE 17

INERTIAL POSITION AND VELOCITY FOLLOW

X = 0.54768267E 07 METERS          Y = 0.21540628E 07 METERS          Z = 0.29474449E 07 METERS
VX =-0.22396298E 04 METERS/SEC     VY = 0.73739399E 04 METERS/SEC     VZ =-0.12126212E 04 METERS/SEC

TBI
  -0.11166575E 00     -0.37949269E 00     -0.47434000E 00
   0.99903774E 00     -0.12684507E 00     -0.
  -0.60167660E-01     -0.47323322E 00      0.88034000E 00

      DELXI(M)          DELYI(M)          DELZI(M)          DELVXI(M/SEC)     DELVYI(M/SEC)     DELVZI(M/SEC)
  -0.15568750E 03     0.47213750E 02   -0.84406250E 02   -0.90274049E 00    0.36682129E-01   -0.48608398E 00

TBI ERROR MATRIX
  -0.21[illegible]E-03      0.26395[illegible]E-04     -0.
  -0.3[illegible]E-04     -0.24423052E-03     -0.
  -0.115[illegible]E-03      0.14319[illegible]E-04      0.

ATTITUDE ERROR PARAMETER = 0.34[illegible]E-03

      DELRA(M)          DELDR(M)          DELCR(M)          DELVEL(M/SEC)     DELGAM(RADS)      DELPSI(RADS)      DELTIME(SEC)
  -0.15[illegible]E 04     0.10257[illegible]E 03   -0.46148014E 00    0.36944580E 00    0.12269616E-03    0.                0.

ERROR SOURCE MAGNITUDE = 0.43661156E-06
```

ERROR [illegible] 1

INERTIAL POSITION AND VELOCITY FOLLOW

X = 0.5476[illegible]24E 07 METERS Y = 0.21540156E 07 METERS Z = 0.29475292E 07 METERS
VX =-0.223[illegible]72335 04 METERS/SEC VY = 0.73739030E 04 METERS/SEC VZ =-0.12121352E 04 METERS/SEC

TBI

-0.11143166E 00	-0.87351953E 00	-0.47434000E 00
0.99936797E 00	-0.12660082E 01	-0.
-0.60051819E-01	-0.47389304E 00	0.88034000E 00

DELXI(M)	DELYI(M)	DELZI(M)	DELVXI(M/SEC)	DELVYI(M/SEC)	DELVZI(M/SEC)
0.	-0.31250005E-01	0.	-0.15258789E-03	-0.24414063E-03	-0.91552734E-04

TBI ERROR MATRIX

-0.	-0.	-0.
0.	-0.	-0.
-0.	-0.	0.

ATTITUDE ERROR PARAMETER = 0.

DELRA(M)	DELDR(M)	DELCR(M)	DELVEL(M/SEC)	DELGAM(RADS)	DELPSI(RADS)	DELTIME(SEC)
-0.19224555E-01	-0.29529298E-01	-0.24429799E-04	-0.12207031E-04	0.29802322E-07	0.	0.

ERROR SOURCE MAGNITUDE = 0.

ERROR SOURCE 19

INERTIAL POSITION AND VELOCITY FOLLOW

X = 0.5476[illegible]24E 07 METERS Y = 0.21540156E 07 METERS Z = 0.29475292E 07 METERS
VX =-0.223[illegible]72335 04 METERS/SEC VY = 0.73739030E 04 METERS/SEC VZ =-0.12121352E 04 METERS/SEC

TBI

-0.11143166E 00	-0.87351953E 00	-0.47434000E 00
0.99936797E 00	-0.12660082E 01	-0.
-0.60051819E-01	-0.47389304E 00	0.88034000E 00

DELXI(M)	DELYI(M)	DELZI(M)	DELVXI(M/SEC)	DELVYI(M/SEC)	DELVZI(M/SEC)
0.	-0.31250005E-01	0.	-0.15258789E-03	-0.24414063E-03	-0.91552734E-04

TBI ERROR MATRIX

-0.	-0.	-0.
0.	-0.	-0.
-0.	-0.	0.

```
ATTITUDE ERROR PARAMETER = 0.

        DELRA(M)          DELDR(M)          DELCR(M)          DELVEL(M/SEC)      DELGAM(RADS)      DELPSI(RADS)      DELTIME(SEC)
     -0.1[illegible]226555E-01   -0.29529[illegible]E-01   -0.24429799E-04   -0.12207031E-03   0.29802322E-07   0.                0.

ERROR SOURCE MAGNITUDE = 0.


ERROR SOURCE 20

INERTIAL POSITION AND VELOCITY FOLLOW

 X = 0.54769824E 07 METERS          Y = 0.21540156E 07 METERS          Z = 0.29475292E 07 METERS
VX =-0.22387233E 04 METERS/SEC     VY = 0.73749030E 04 METERS/SEC     VZ =-0.12121352E 04 METERS/SEC

TBI
    -0.11145156E 00     -0.97951959E 00     -0.47434000E 00
     0.99906797E 00     -0.12660082E 00     -0.
    -0.60[illegible]1819E-01     -0.47389804E 00      0.98034000E 00

        DELXI(M)          DELYI(M)          DELZI(M)          DELVXI(M/SEC)      DELVYI(M/SEC)      DELVZI(M/SEC)
     0.                -0.31250000E-01    0.                -0.15258789E-03   -0.24414063E-03   -0.91552734E-04

TBI ERROR MATRIX
    -0.                -0.                -0.
     0.                -0.                -0.
    -0.                -0.                 0.

ATTITUDE ERROR PARAMETER = 0.

        DELRA(M)          DELDR(M)          DELCR(M)          DELVEL(M/SEC)      DELGAM(RADS)      DELPSI(RADS)      DELTIME(SEC)
     -0.1[illegible]226555E-01   -0.29529[illegible]E-01   -0.24429799E-04   -0.12207031E-03   0.29802322E-07   0.                0.

ERROR SOURCE MAGNITUDE = 0.


ERROR SOURCE [illegible]

INERTIAL POSITION AND VELOCITY FOLLOW

 X = 0.54[illegible]  Y = 0.21[illegible]  Z = 0.29[illegible]
VX =-0.22[illegible]  VY = 0.73[illegible]E 04 METERS/SEC  VZ =-0.12[illegible]

TBI
    -0.11176309E 00     -0.98023[illegible]E 00     -0.47293861E 00
```

```
 0.99[illegible]E 00      -.12660125E 00      -0.46665512E-03
-0.59473494E-01      -.47256447E 00       0.88108999E 00

      DELXI(M)          DELYI(M)          DELZI(M)          DELVXI(M/SEC)     DELVYI(M/SEC)     DELVZI(M/SEC)
  -0.27325000E 03   -0.40625000E 00    0.50728125E 03   -0.14123840E 01   -0.23193359E-02    0.26218262E 01

TBI ERROR MATRIX
  -0.31143054E-03    -0.71665645E-03     0.14013872E-02
  -0.32732555E-06    -0.44703484E-06    -0.46665512E-03
   0.57832524E-03     0.13335720E-02     0.74999034E-03

ATTITUDE ERROR PARAMETER = 0.23382896E-02

      DELRA(M)          DELDR(M)          DELCP(M)          DELVEL(M/SEC)     DELGAM(RADS)      DELPSI(RADS)      DELTIME(SEC)
  -0.33943558E 00   -0.78905964E 00    0.57613376E 03   -0.36621094E-02    0.25331974E-06    0.38175354E-03    0.

ERROR SOURCE MAGNITUDE = 0.32756886E-05


ERROR SOURCE 22

INERTIAL POSITION AND VELOCITY FOLLOW

 X = 0.54775117E 07 METERS          Y = 0.21542152E 07 METERS          Z = 0.29465444E 07 METERS
VX =-0.22359448E 04 METERS/SEC     VY = 0.73738990E 04 METERS/SEC     VZ =-0.12172988E 04 METERS/SEC

TBI
  -0.11[illegible]E 00    -0.37983095E 00    -0.47392721E 00
   0.99[illegible]E 00    -0.12660057E 00     0.15898417E-02
  -0.61384[illegible]E-01    -0.47331966E 00     0.88055800E 00

      DELXI(M)          DELYI(M)          DELZI(M)          DELVXI(M/SEC)     DELVYI(M/SEC)     DELVZI(M/SEC)
   0.52931250E 03   -0.50000000E 00   -0.98475000E 03    0.27763814E 01   -0.42724609E-02   -0.51636047E 01

TBI ERROR MATRIX
   0.71749512E-03    -0.31136721E-03     0.41278452E-03
  -0.16242266E-05     0.24773130E-06     0.15899417E-02
  -0.13[illegible]E-02     0.57827740E-03     0.21799654E-03

ATTITUDE ERROR PARAMETER = 0.23[illegible]E-0[illegible]

      DELRA(M)          DELDR(M)          DELCP(M)          DELVEL(M/SEC)     DELGAM(RADS)      DELPSI(RADS)      DELTIME(SEC)
  -0.70[illegible]E 00    0.[illegible]E 00   -0.11179909E 04    0.31738281E-02    0.23841858E-06   -0.75165113E-03    0.

ERROR SOURCE MAGNITUDE = 0.32756[illegible]E-05
```

ERROR SOURCE 23

INERTIAL POSITION AND VELOCITY FOLLOW

X = 0.547[illegible]E 07 METERS Y = 0.21543700E 07 METERS Z = 0.29468966E 07 METERS
VX =-0.2[illegible]E 04 METERS/SEC VY = 0.73741871E 04 METERS/SEC VZ =-0.12157835E 04 METERS/SEC

TBI

-0.11306554E 00	-0.87931973E 00	-0.47434000E 00
0.99[illegible]E 00	-0.12843393E 00	-0.
-0.60921[illegible]E-01	-0.47379030E 00	0.88[illegible]34000E 00

DELXI(M)	DELYI(M)	DELZI(M)	DELVXI(M/SEC)	DELVYI(M/SEC)	DELVZI(M/SEC)
-0.11721875E 04	0.35643750E 03	-0.83256250E 03	-0.67709[illegible]56E 01	0.28381348E 00	-0.36484375E 01

TBI ERROR MATRIX

-0.16138842E-02	0.19[illegible]54[illegible]E-03	-0.
-0.22731781E-03	-0.1[illegible]331[illegible]E-02	-0.
-0.86[illegible]E-03	0.10773912E-03	0.

ATTITUDE ERROR PARAMETER = 0.26123232E-02

DELRA(M)	DELCR(M)	DELCR(M)	DELVEL(M/SEC)	DELGAM(RADS)	DELPSI(RADS)	DELTIME(SEC)
-0.11419892E 04	0.77270[illegible]E 03	-0.8[illegible]441467E 00	0.27816772E 01	0.91977417E-03	0.	0.

ERROR SOURCE MAGNITUDE = 0.32756[illegible]E-0

ERROR SOURCE 24

INERTIAL POSITION AND VELOCITY FOLLOW

X = 0.547[illegible]E 07 METERS Y = 0.21540156E 07 METERS Z = 0.29475292E 07 METERS
VX =-0.2[illegible]E 04 METERS/SEC VY = 0.73730[illegible]E 04 METERS/SEC VZ =-0.12121352E 04 METERS/SEC

TBI

-0.111451[illegible]	-0.[illegible]	-0.47[illegible]
0.99[illegible]	-0.12[illegible]	-0.
-0.60[illegible]	-0.473[illegible]	0.88[illegible]

DELXI(M)	DELYI(M)	DELZI(M)	DELVXI(M/SEC)	DELVYI(M/SEC)	DELVZI(M/SEC)
0.	-0.312[illegible]E-01	0.	-0.152[illegible]789E-03	-0.24414[illegible]E-03	-0.91552734E-04

TBI ERROR MATRIX

-0.	-0.	-0.
0.	-0.	-0.
-0.	-0.	0.

ATTITUDE ERROR PARAMETER = 0.

DELRA(M)	DELCR(M)	DELCK(M)	DELVEL(M/SEC)	DELGAM(RADS)	DELPSI(RADS)	DELTIME(SEC)
-0.10226555E-01	-0.29529298E-01	-0.24423799E-04	-0.12207031E-03	0.29802322E-07	0.	0.

ERROR SOURCE MAGNITUDE = 0.

ERROR SOURCE 25

INERTIAL POSITION AND VELOCITY FOLLOW

X = 0.54769824E 07 METERS Y = 0.21540156E 07 METERS Z = 0.29475292E 07 METERS
VX =-0.22367233E 04 METERS/SEC VY = 0.73739030E 04 METERS/SEC VZ =-0.12121352E 04 METERS/SEC

TBI

-0.11145166E 00	-0.87951968E 00	-0.47434000E 00
0.99906797E 00	-0.12660082E 00	-0.
-0.60051819E-01	-0.47389804E 00	0.88034000E 00

DELXI(M)	DELYI(M)	DELZI(M)	DELVXI(M/SEC)	DELVYI(M/SEC)	DELVZI(M/SEC)
0.	-0.31250000E-01	0.	-0.15258789E-03	-0.24414063E-03	-0.91552734E-04

TBI ERROR MATRIX

-0.	-0.	-0.
0.	-0.	-0.
-0.	-0.	0.

ATTITUDE ERROR PARAMETER = 0.

DELRA(M)	DELCR(M)	DELCK(M)	DELVEL(M/SEC)	DELGAM(RADS)	DELPSI(RADS)	DELTIME(SEC)
-0.10226555E-01	-0.29529298E-01	-0.24423799E-04	-0.12207031E-03	0.29802322E-07	0.	0.

ERROR SOURCE MAGNITUDE = 0.

ERROR SOURCE 26

INERTIAL POSITION AND VELOCITY FOLLOW

X = 0.54769824E 07 METERS Y = 0.21540156E 07 METERS Z = 0.29475292E 07 METERS
VX =-0.22367233E 04 METERS/SEC VY = 0.73739030E 04 METERS/SEC VZ =-0.12121352E 04 METERS/SEC

TBI

-0.11145166E 00	-0.87951968E 00	-0.47434000E 00
0.99906797E 00	-0.12660082E 00	-0.
-0.60051819E-01	-0.47389804E 00	0.88034000E 00

```
        DELXI(M)          DELYI(M)          DELZI(M)          DELVXI(M/SEC)     DELVYI(M/SEC)     DELVZI(M/SEC)
      0.                -0.31250000E-01    0.                -0.15258789E-03   -0.24414063E-03   -0.91552734E-04

TBI ERROR MATRIX
    -0.                 -0.                 -0.
     0.                 -0.                 -0.
    -0.                 -0.                  0.

ATTITUDE ERROR PARAMETER = 0.

        DELRA(M)          DELCR(M)          DELCB(M)          DELVEL(M/SEC)     DELGAM(RADS)      DELPSI(RADS)      DELTIME(SEC)
     -0.10226555E-01   -0.29529298E-01   -0.24429799E-04   -0.12207031E-03    0.29802322E-07    0.                0.

ERROR SOURCE MAGNITUDE = 0.


ERROR SOURCE 27

INERTIAL POSITION AND VELOCITY FOLLOW

 X = 0.54769537E 07 METERS          Y = 0.21540178E 07 METERS          Z = 0.29475299E 07 METERS
VX =-0.22387149E 04 METERS/SEC     VY = 0.73739033E 04 METERS/SEC     VZ =-0.12121329E 04 METERS/SEC

TBI
    -0.11145166E 00     -0.87951958E 00     -0.07434000E 00
     0.99906797E 00     -0.12660072E 00     -0.
    -0.60051819E-01     -0.47389694E 00      0.88034000E 00

        DELXI(M)          DELYI(M)          DELZI(M)          DELVXI(M/SEC)     DELVYI(M/SEC)     DELVZI(M/SEC)
     0.13125000E 01    0.21250000E 01    0.75000000E 00    0.42114258E-02    0.50659180E-02    0.22583008E-02

TBI ERROR MATRIX
    -0.                 -0.                 -0.
     0.                 -0.                 -0.
    -0.                 -0.                  0.

ATTITUDE ERROR PARAMETER = 0.

        DELRA(M)          DELCR(M)          DELCB(M)          DELVEL(M/SEC)     DELGAM(RADS)      DELPSI(RADS)      DELTIME(SEC)
     0.21238811E 01    0.15134259E 01    0.39699924E-01    0.32348633E-02   -0.74976154E-06    0.                0.

ERROR SOURCE MAGNITUDE = 0.37546957E-05

STATISTICAL SUMMARY FOLLOWS

        DELRA             DELCR             DELCR             DELVEL            DELGAM            DELPSI            DELTIME
```

RSS	0.17574634E 04	0.17724511E 04	0.18486214E 04	0.42123296E 01	0.12910059E-02	0.11046880E-02	0.

```
TRAJECTORY DATA FOR FLIGHT SEGMENT  4

THIS IS A FREE FLIGHT SEGMENT

FLIGHT SEGMENT TERMINATED WHEN THETA EXCEEDS 0.62832000E 01 RADIANS

ATTITUDE CONSTANT IN LOCAL FRAME


INPUT DATA FOR ERROR MODELS FOLLOW
      FIRST-ORDER INTEGRATION SCHEME
      27 BIT COMPUTER WORD SIZE
      FOURTH-ORDER COORDINATE CONVERSION
      QUANTIZATION = 0.
      COMPUTATIONAL FREQUENCY = 0.10000000E 02 CPS
      SINUSOIDAL RATES
           NUMBER OF SINUSOIDS = 1
           AMPLITUDE
                     0.17800000E-03
           FREQUENCY
                     0.50000000E-02
           MOMENT ARM
                     0.
           DIRECTION COSINES OF EACH SINUSOID
                     0.10000000E 01      0.                  0.
      CONING MOTION
           NUMBER OF PAIR OF SINUSOIDS = 0


FLIGHT SEGMENT  4

TRUTH

INERTIAL POSITION AND VELOCITY FOLLOW

 X = 0.54769546E 07 METERS          Y = 0.21541072E 07 METERS          Z = 0.29475141E 07 METERS
VX =-0.22388181E 04 METERS/SEC     VY = 0.73738652E 04 METERS/SEC     VZ =-0.12121863E 04 METERS/SEC

        RADIUS                          VELOCITY                          GAMMA                          TIME
 0.65821765E 07 METERS          0.78009996E 04 METERS/SEC          0.15698371E 01 RAD.          0.59014572E 04 SEC

TBI
    -0.11[illegible]E 00     -0.[illegible]E 00     -0.47433998E 00
     0.99[illegible]E 00     -0.12[illegible]E 00     -0.43146429E-08
    -0.6[illegible]E-01     -0.47389712E 00      0.88[illegible]E 00

TRANSITION MATRIX FROM INERTIAL FRAME TO LOCAL FRAME
     0.[illegible]E 00      0.32724975E 00      0.44780463E 00
    -0.2[illegible]E 00      0.94493[illegible]E 00     -0.15[illegible]1162E 00
    -0.47413673E 00      0.7317[illegible]E-03      0.[illegible]45087E 00
```

```
LCM
    0.10[illegible]E 01    -0.[illegible]E 04    [illegible].12573014E-04    -0.36878864E 02    -0.00000000E-19    -0.00000000E-19    -0.00000000E-1
    0.                     0.                    0.                          0.                 0.                 0.                 0.
    [illegible]E-10        [illegible]E 01       0.10000000E 01              0.11438938E 00     -0.00000000E-19    -0.00000000E-19    -0.00000000E-1
   -0.22270421E-11         -0.[illegible]E 00    -0.37551809E-08             0.99999998E 00     -0.00000000E-19    -0.00000000E-19    -0.00000000E-1
    0.[illegible]E-04      0.[illegible]E 03     -0.53342327E-01             -0.40265323E 00    0.10000000E 01     -0.00000000E-19    -0.00000000E-1
   -0.[illegible]E-19      -0.[illegible]E-19    -0.[illegible]E-19          -0.00000000E-19    -0.00000000E-19    0.10000000E 01     0.96879082E 0
   -0.[illegible]E-19      -0.[illegible]E-19    -0.[illegible]E-19          -0.00000000E-19    -0.00000000E-19    0.22270421E-11     0.10000000E 0


ERROR PRINTOUT FOR EACH ERROR SOURCE FOLLOWS


ERROR SOURCE  2

INERTIAL POSITION AND VELOCITY FOLLOW

 X = 0.54759666E 07 METERS          Y = 0.21541119E 07 METERS          Z = 0.29475203E 07 METERS
VX =-0.22343072E 04 METERS/SEC      VY = 0.73738660E 04 METERS/SEC     VZ =-0.12121804E 04 METERS/SEC

TBI
   -0.11144453E 00    -0.87951731E 00    -0.47433998E 00
    0.99906606E 00    -0.12661552E 00    -0.43146429E-08
   -0.60053784E-01    -0.47329712E 00    0.88033998E 00

      DELXI(M)          DELYI(M)          DELZI(M)          DELVXI(M/SEC)     DELVYI(M/SEC)     DELVZI(M/SEC)
    0.12314246E 02    0.46322[illegible]E 01    0.62341482E 01    0.10925293E-01    0.73345703E-03    0.58746338E-02

TBI ERROR MATRIX
   -0.                -0.                -0.
    0.                -0.                -0.
   -0.                -0.                0.

ATTITUDE ERROR PARAMETERS = 0.

      DELA(M)           DELB(M)           DELCR(M)          DELVEL(M/SEC)     DELGAM(RADS)      DELPSI(RADS)      DELTIME(SEC)
    0.14320220E 02      0.                -0.20576578E 00   -0.32404753E-02   -0.15317723E-05   -0.45824907E-12   0.48282001E-03


ERROR SOURCE  3

INERTIAL POSITION AND VELOCITY FOLLOW

 X = 0.54769592E 07 METERS          Y = 0.21541030E 07 METERS          Z = 0.29475167E 07 METERS
VX =-0.22337399E 04 METERS/SEC      VY = 0.73738563E 04 METERS/SEC     VZ =-0.12121765E 04 METERS/SEC
```

TBI

-0.11146459E 00	-0.37951791E 00	-0.47433998E 00
0.99906666E 00	-0.12661552E 00	-0.43146429E-08
-0.60058784E-01	-0.47389712E 00	0.88033998E 00

DELXI(M)	DELYI(M)	DELZI(M)	DELVXI(M/SEC)	DELVYI(M/SEC)	DELVZI(M/SEC)
0.45992164E 01	0.18250566E 01	0.25916570E 01	0.18168477E-01	-0.89111328E-02	0.98114014E-02

TBI ERROR MATRIX

-0.	-0.	-0.
0.	-0.	-0.
-0.	-0.	0.

ATTITUDE ERROR PARAMETER = 0.

DELRA(M)	DELDR(M)	DELCI(M)	DELVEL(M/SEC)	DELGAM(RADS)	DELPSI(RADS)	DELTIME(SEC)
0.55764595E 01	0.	0.10731734E 00	-0.15161360E-01	-0.21233648E-05	0.23904479E-12	0.30294806E-02

ERROR SOURCE 4

INERTIAL POSITION AND VELOCITY FOLLOW

X = 0.54769471E 07 METERS Y = 0.21541071E 07 METERS Z = 0.29475277E 07 METERS
VX =-0.22330112E 04 METERS/SEC VY = 0.73738618E 04 METERS/SEC VZ =-0.12121994E 04 METERS/SEC

TBI

-0.11146459E 00	-0.37951791E 00	-0.47433998E 00
0.99906666E 00	-0.12661552E 00	-0.43146429E-08
-0.60058784E-01	-0.47389712E 00	0.88033998E 00

DELXI(M)	DELYI(M)	DELZI(M)	DELVXI(M/SEC)	DELVYI(M/SEC)	DELVZI(M/SEC)
-0.75145759E 01	-0.38871093E-01	0.13647064E 02	0.69560078E-02	-0.36621094E-03	-0.13183594E-01

TBI ERROR MATRIX

-0.	-0.	-0.
0.	-0.	-0.
-0.	-0.	0.

ATTITUDE ERROR PARAMETER = 0.

DELRA(M)	DELDR(M)	DELCI(M)	DELVEL(M/SEC)	DELGAM(RADS)	DELPSI(RADS)	DELTIME(SEC)
-0.15579159E 0.	-0.	0.15574424E 02	-0.18316782E-03	0.38624285E-07	-0.19109816E-05	-0.75529229E-05

ERROR SOURCE 5

INERTIAL POSITION AND VELOCITY FOLLOW

X = 0.59759459E 07 METERS Y = 0.21541072E 07 METERS Z = 0.29475141E 07 METERS
VX =-0.22332184E 04 METERS/SEC VY = 0.73738650E 04 METERS/SEC VZ =-0.12121864E 04 METERS/SEC

TBI

-0.11146459E 00	-0.87951791E 00	-0.47433998E 00
0.99936606E 00	-0.12661552E 00	-0.43146429E-08
-0.60092764E-01	-0.47389712E 00	0.88033998E 00

DELXI(M)	DELYI(M)	DELZI(M)	DELVXI(M/SEC)	DELVYI(M/SEC)	DELVZI(M/SEC)
-0.34765515E-02	-0.33324743E-02	-0.45895937E-02	-0.15252789E-03	-0.24414063E-03	-0.76293945E-04

TBI ERROR MATRIX

-0.	-0.	-0.
0.	-0.	-0.
-0.	-0.	0.

ATTITUDE ERROR PARAMETER = 0.

DELRA(M)	DELCR(M)	DELCR(M)	DELVEL(M/SEC)	DELGAM(RADS)	DELPSI(RADS)	DELTIME(SEC)
-0.10201118E-01	0.	-0.24423800E-04	-0.12210035E-03	0.34289053E-07	-0.54406192E-16	0.21226765E-05

ERROR SOURCE 6

INERTIAL POSITION AND VELOCITY FOLLOW

X = 0.59759459E 07 METERS Y = 0.21541072E 07 METERS Z = 0.29475141E 07 METERS
VX =-0.22332184E 04 METERS/SEC VY = 0.73738649E 04 METERS/SEC VZ =-0.12121864E 04 METERS/SEC

TBI

-0.11146459E 00	-0.87951791E 00	-0.47433998E 00
0.99936606E 00	-0.12661552E 00	-0.43146429E-08
-0.60092764E-01	-0.47389712E 00	0.88033998E 00

DELXI(M)	DELYI(M)	DELZI(M)	DELVXI(M/SEC)	DELVYI(M/SEC)	DELVZI(M/SEC)
-0.24[illegible]95E-01	-0.14516[illegible]E-01	-0.44260235E-01	-0.18310547E-03	-0.30517578E-03	-0.10681152E-03

TBI ERROR MATRIX

-0.	-0.	-0.
0.	-0.	-0.
-0.	-0.	0.

ATTITUDE ERROR PARAMETER = 0.

DELRA(M)	DELCR(M)	DELCR(M)	DELVEL(M/SEC)	DELGAM(RADS)	DELPSI(RADS)	DELTIME(SEC)
-0.44527[illegible]E-01	0.	-0.27587379E-01	-0.18319518E-03	0.57423279E-07	-0.61438254E-13	-0.37415523E-05

ERROR SOURCE 7

INERTIAL POSITION AND VELOCITY FOLLOW

X = 0.54769545E 07 METERS Y = 0.21541072E 07 METERS Z = 0.29475141E 07 METERS
VX =-0.22388133E 04 METERS/SEC VY = 0.73738650E 04 METERS/SEC VZ =-0.12121864E 04 METERS/SEC

TBI

-0.11146459E 00	-0.87951791E 00	-0.47433998E 00
-0.99906606E 00	-0.12661552E 00	-0.43146429E-08
-0.60033784E-01	-0.47389712E 00	0.88033998E 00

DELXI(M)	DELYI(M)	DELZI(M)	DELVXI(M/SEC)	DELVYI(M/SEC)	DELVZI(M/SEC)
-0.34766515E-02	-0.33384743E-02	-0.45895937E-02	-0.15258789E-03	-0.24414063E-03	-0.76293945E-04

TBI ERROR MATRIX

-0.	-0.	-0.
0.	-0.	-0.
-0.	-0.	0.

ATTITUDE ERROR PARAMETER = 0.

DELRA(M)	DELDR(M)	DELCR(M)	DELVEL(M/SEC)	DELGAM(RADS)	DELPSI(RADS)	DELTIME(SEC)
-0.10201111E-01	0.	-0.24429800E-04	-0.12210035E-03	0.34289053E-07	-0.54406192E-16	0.21226765E-05

ERROR SOURCE 8

INERTIAL POSITION AND VELOCITY FOLLOW

X = 0.54768650E 07 METERS Y = 0.21541072E 07 METERS Z = 0.29476796E 07 METERS
VX =-0.22391432E 04 METERS/SEC VY = 0.73738647E 04 METERS/SEC VZ =-0.12115839E 04 METERS/SEC

TBI

-0.11151[illegible]E 00	-0.87951218E 00	-0.47433998E 00
0.99906[illegible]E 00	-0.12661552E 00	-0.97003052E-04
-0.59073449E-01	-0.47390791E 00	0.88033998E 00

DELXI(M)	DELYI(M)	DELZI(M)	DELVXI(M/SEC)	DELVYI(M/SEC)	DELVZI(M/SEC)
-0.[illegible]E 02	[illegible]E-02	0.16551763E 03	-0.32507324E 00	-0.48828125E-03	0.60231018E 00

TBI ERROR MATRIX

-0.4[illegible]	[illegible]	-0.
0.	[illegible]	-0.96998738E-04
0.85[illegible]E-04	-0.1[illegible]E-05	0.

ATTITUDE ERROR PARAMETER = 0.13769004E-03

DELX(M)	DELDR(M)	DELCR(M)	DELVEL(M/SEC)	DELGAM(RADS)	DELPSI(RADS)	DELTIME(SEC)
-0.43246516 00	0.	0.18821541E 03	-0.61049341E-03	0.12493662E-06	0.87736998E-04	-0.12630200E-04

ERROR SOURCE 9

INERTIAL POSITION AND VELOCITY FOLLOW

X = 0.54769829E 07 METERS Y = 0.21541076E 07 METERS Z = 0.29474604E 07 METERS
VX =-0.22367675E 04 METERS/SEC VY = 0.73738646E 04 METERS/SEC VZ =-0.12122812E 04 METERS/SEC

TBI

-0.11146750E 00	-0.37954085E 00	-0.47429727E 00
0.99906607E 00	-0.12661552E 00	-0.44456101E-06
-0.60053404E-01	-0.47385446E 00	0.86036298E 00

DELXI(M)	DELYI(M)	DELZI(M)	DELVXI(M/SEC)	DELVYI(M/SEC)	DELVZI(M/SEC)
0.20232769E 02	-0.23256329E 00	-0.53665862E 02	0.50720215E-01	-0.42724609E-03	-0.94970703E-01

TBI ERROR MATRIX

-0.29094517E-05	-0.22940338E-04	0.42703003E-04
0.74505806E-08	-0.55879354E-08	-0.13096724E-09
0.53797849E-05	0.42662024E-04	0.22999942E-04

ATTITUDE ERROR PARAMETER = 0.08820473E-04

DELRA(M)	DELCR(M)	DELCR(M)	DELVEL(M/SEC)	DELGAM(RADS)	DELPSI(RADS)	DELTIME(SEC)
-0.56571523E 03	0.	-0.60664979E 02	-0.18292895E-03	0.67100045E-07	-0.13801702E-04	-0.74418742E-05

ERROR SOURCE 10

INERTIAL POSITION AND VELOCITY FOLLOW

X = 0.54768948E 07 METERS Y = 0.21540816E 07 METERS Z = 0.29474792E 07 METERS
VX =-0.22370[illegible]00E 04 METERS/SEC VY = 0.73739932E 04 METERS/SEC VZ =-0.12123300E 04 METERS/SEC

TBI

-0.111[illegible]0751E 00	-0.37951[illegible] 00	-0.47433998E 00
0.99[illegible]E 00	-0.1[illegible] 00	-0.73050614E-08
-0.60091740E-01	-0.47[illegible] 00	0.86033997E 00

DELXI(M)	DELYI(M)	DELZI(M)	DELVXI(M/SEC)	DELVYI(M/SEC)	DELVZI(M/SEC)
-0.65147418E 02	-0.25598[illegible] 02	-0.34913785E 02	-0.26681519E 00	0.12799072E 00	-0.14376831E 00

TBI ERROR MATRIX

```
-0.42719756E-04      0.53271651E-05     -0.37252903E-08
-0.62137342E-05     -0.43367307E-04     -0.29904186E-08
-0.22955704E-04      0.29467046E-03     -0.74505906E-08

ATTITUDE ERROR PARAMETER = 0.69043552E-04

      DELRA(M)          DELDR(M)          DELCR(M)          DELVEL(M/SEC)     DELGAM(RADS)     DELPSI(RADS)     DELTIME(SEC)
  -0.78220394E 02     0.                0.12889910E 00     0.21995533E 00    0.31379048E-04    0.28706372E-12   -0.53471137E-02


ERROR SOURCE 11

INERTIAL POSITION AND VELOCITY FOLLOW

 X = 0.54768623E 07 METERS          Y = 0.21540708E 07 METERS          Z = 0.29474642E 07 METERS
VX =-0.22392241E 04 METERS/SEC     VY = 0.73759886E 04 METERS/SEC     VZ =-0.12124050E 04 METERS/SEC

TBI
   -0.11190836E 00     -0.87946230E 00     -0.47433969E 00
    0.99900296E 00     -0.12711935E 00     -0.10271773E-06
   -0.60297717E-01     -0.47386689E 00      0.88034016E 00

      DELXI(M)          DELYI(M)          DELZI(M)          DELVXI(M/SEC)     DELVYI(M/SEC)     DELVZI(M/SEC)
   -0.92309628E 02    -0.36345432E 02    -0.49918727E 02    -0.40591431E 00    0.12341309E 00    -0.21871948E 00

TBI ERROR MATRIX
   -0.44376495E-03      0.55417413E-04      0.29057264E-06
   -0.63106418E-04     -0.50383061E-03     -0.98403091E-07
   -0.23893267E-03      0.30234456E-04      0.17881393E-06

ATTITUDE ERROR PARAMETER = 0.71821249E-03

      DELRA(M)          DELDR(M)          DELCR(M)          DELVEL(M/SEC)     DELGAM(RADS)     DELPSI(RADS)     DELTIME(SEC)
   -0.11105806E 03     0.                -0.21201420E 00     0.26714508E 00    0.50715516E-04   -0.47216455E-12   -0.91688181E-02


ERROR SOURCE 12

INERTIAL POSITION AND VELOCITY FOLLOW

 X = 0.54763369E 07 METERS          Y = 0.21541073E 07 METERS          Z = 0.29477322E 07 METERS
VX =-0.22394268E 04 METERS/SEC     VY = 0.73738633E 04 METERS/SEC     VZ =-0.12110583E 04 METERS/SEC

TBI
   -0.11162279E 00     -0.87922316E 00     -0.47373629E 00
    0.99906249E 00     -0.12564294E 00     -0.20083992E-03
   -0.59822379E-01     -0.47332136E 00      0.88066172E 00
```

```
        DELXI(M)          DELYI(M)          DELZI(M)          DELVXI(M/SEC)     DELVYI(M/SEC)     DELVZI(M/SEC)
     -0.11771511  0      .10609640E 00     0.21805992E 03    -0.60864258E 00   -0.19920898E-02    0.11280060E 01

TBI ERROR MATRIX
    -0.15617259E-03     -0.30524284E-03      0.60367957E-03
    -0.35762757E-05     -0.27423725E-04     -0.20083560E-03
     0.23590541E-03      0.57576597E-03      0.32173842E-03

ATTITUDE ERROR PARAMETER = 0.10071744E-02

        DELRA(M)          DELDR(M)          DELCR(M)          DELVEL(M/SEC)     DELGAM(RADS)      DELPSI(RADS)      DELTIME(SEC)
     -0.26773343E 00     0.                0.24780467E 03    -0.21978216E-02    0.25614489E-06    0.16430496E-03    0.35875511E-04

ERROR SOURCE MAGNITUDE = 0.36899601E-09


ERROR SOURCE 13

INERTIAL POSITION AND VELOCITY FOLLOW

 X = 0.54775738E 07 METERS          Y = 0.21541061E 07 METERS          Z = 0.29463637E 07 METERS
VX =-0.22363045E 04 METERS/SEC     VY = 0.73738520E 04 METERS/SEC     VZ =-0.12168557E 04 METERS/SEC

TBI
    -0.11103176E 00     -0.87965761E 00     -0.47380905E 00
    -0.99906106E 00     -0.12664444E 00      0.10510947E-02
    -0.50924517E-01     -0.47325817E 00      0.88062166E 00

        DELXI(M)          DELYI(M)          DELZI(M)          DELVXI(M/SEC)     DELVYI(M/SEC)     DELVZI(M/SEC)
     0.61924310E 03    -0.11042814E 01    -0.11504120E 04     0.25136719E 01   -0.32348633E-02   -0.46694488E 01

TBI ERROR MATRIX
     0.43283775E-03     -0.33370177E-03      0.53092937E-03
    -0.50067902E-05     -0.23919429E-04      0.10510990E-02
    -0.36573279E-03      0.63895062E-03      0.28168410E-03

ATTITUDE ERROR PARAMETER = 0.17109641E-02

        DELRA(M)          DELDR(M)          DELCR(M)          DELVEL(M/SEC)     DELGAM(RADS)      DELPSI(RADS)      DELTIME(SEC)
     -0.25340350E 00     -0.                -0.13064980E 04     0.29305443E-02    0.66622420E-07   -0.67979048E-03   -0.79282239E-04

ERROR SOURCE MAGNITUDE = 0.


ERROR SOURCE 14
```

INERTIAL POSITION AND VELOCITY FOLLOW

X = 0.547[illegible] 07 METERS Y = 0.21536748E 07 METERS Z = 0.29469219E 07 METERS
VX =-0.224[illegible] 04 METERS/SEC VY = 0.73749258E 04 METERS/SEC VZ =-0.12152675E 04 METERS/SEC

TBI

-0.11263146E 00	-0.87936878E 00	-0.47433998E 00
0.99[illegible]9648E 00	-0.12799659E 00	-0.55732008E-08
-0.6[illegible]1E-01	-0.47381707E 00	0.88034001E 00

DELXI(M)	DELYI(M)	DELZI(M)	DELVXI(M/SEC)	DELVYI(M/SEC)	DELVZI(M/SEC)
-0.10990688E 04	-0.43238306E 03	-0.59217992E 03	-0.57159707E 01	0.10605469E 01	-0.30812531E 01

TBI ERROR MATRIX

-0.12153653E-02	0.14913062E-03	-0.37252903E-08
-0.16938150E-03	-0.13810750E-02	-0.12585580E-08
-0.65511698E-03	0.80049038E-04	0.29802322E-07

ATTITUDE ERROR PARAMETER = 0.19677942E-02

DELRA(M)	DELDR(M)	DELCR(M)	DELVEL(M/SEC)	DELGAM(RADS)	DELPSI(RADS)	DELTIME(SEC)
-0.13212056E 04	0.	-0.61441804E 00	0.31250107E 01	-0.74258891E-03	-0.13683348E-11	-0.12498341E 00

ERROR SOURCE MAGNITUDE = 0.

ERROR SOURCE 15

INERTIAL POSITION AND VELOCITY FOLLOW

X = 0.54769188E 07 METERS Y = 0.21541074E 07 METERS Z = 0.29475814E 07 METERS
VX =-0.22390065E 04 METERS/SEC VY = 0.73738636E 04 METERS/SEC VZ =-0.12118367E 04 METERS/SEC

TBI

-0.11153394E 00	-0.87960935E 00	-0.47415194E 00
0.99[illegible]6104E 00	-0.12664708E 00	-0.62200547E-04
-0.59[illegible]96677E-01	-0.47371716E 00	0.88043730E 00

DELXI(M)	DELYI(M)	DELZI(M)	DELVXI(M/SEC)	DELVYI(M/SEC)	DELVZI(M/SEC)
-0.[illegible]3702478E 02	0.20018963E 00	0.67321176E 02	-0.18832397E 00	-0.15669141E-02	0.34962463E 00

TBI ERROR MATRIX

-0.6[illegible]345279E-04	-0.91470773E-04	0.18803773E-03
-0.412[illegible]1711E-05	-0.31558797E-04	-0.62196233E-04
0.[illegible]2107109E-04	0.17956132E-03	0.97319484E-04

ATTITUDE ERROR PARAMETER = 0.31454879E-02

DELRA(M)	DELDR(M)	DELCR(M)	DELVEL(M/SEC)	DELGAM(RADS)	DELPSI(RADS)	DELTIME(SEC)

```
[illegible]                    0.76243675E 02   -0.17706696E-02    0.10232997E-06    0.50907149E-04    0.48907523E-04

ERROR SOURCE MAGNITUDE = 0.43661165E-07


ERROR SOURCE 16

INERTIAL POSITION AND VELOCITY FOLLOW

 X = 0.54770255E 07 METERS          Y = 0.21541072E 07 METERS          Z = 0.29473830E 07 METERS
VX =-0.22384483E 04 METERS/SEC     VY = 0.73738634E 04 METERS/SEC     VZ =-0.12128744E 04 METERS/SEC

TBI
    -0.11139335E 00     -0.87955623E 00     -0.47428409E 00
     0.99906159E 00     -0.12664328E 00      0.21190203E-03
    -0.60249513E-01     -0.47381336E 00      0.88036674E 00

        DELXI(M)          DELYI(M)          DELZI(M)        DELVXI(M/SEC)     DELVYI(M/SEC)     DELVZI(M/SEC)
      0.70956227E 02    0.30275611E-02   -0.13103473E 03    0.36984253E 00   -0.18310547E-02   -0.68820190E 00

TBI ERROR MATRIX
     0.71238726E-04     -0.38288534E-04      0.55883080E-04
    -0.44703434E-05     -0.27755275E-04      0.21190635E-03
    -0.19082546E-03      0.74760787E-04      0.26755035E-04

ATTITUDE ERROR PARAMETER = 0.31415444E-03

        DELRA(M)          DELCR(M)          DELCR(M)        DELVEL(M/SEC)     DELGAM(RADS)      DELPSI(RADS)      DELTIME(SEC)
      0.36520511E 00    -0.                -0.14901259E 03   -0.79363424E-03    0.14461233E-06   -0.10014972E-03    0.44366269E-04

ERROR SOURCE MAGNITUDE = 0.43661165E-07


ERROR SOURCE 17

INERTIAL POSITION AND VELOCITY FOLLOW

 X = 0.54768283E 07 METERS          Y = 0.21540574E 07 METERS          Z = 0.29474456E 07 METERS
VX =-0.22390197E 04 METERS/SEC     VY = 0.73749418E 04 METERS/SEC     VZ =-0.12126130E 04 METERS/SEC

TBI
    -0.11189303E 00     -0.87946[illegible]E 00     -0.47433981E 00
     0.99900458E 00     -0.12710[illegible]E 00     -0.57525476E-07
    -0.60239490E-01     -0.47386[illegible]E 00      0.88034008E 00

        DELXI(M)          DELYI(M)          DELZI(M)        DELVXI(M/SEC)     DELVYI(M/SEC)     DELVZI(M/SEC)
     -0.12626027E 03   -0.49745065E 02   -0.68473126E 02   -0.80154419E 00    0.76599121E-01   -0.43173218E 00
```

```
TBI ERROR MATRIX
    -0.42543519E-03     0.53897500E-04     0.16018749E-06
    -0.61492101E-04    -0.43654194E-03    -0.55210833E-07
    -0.23070537E-03     0.29571354E-04     0.10430813E-06

ATTITUDE ERROR PARAMETER = 0.69353951E-03

      DELRA(M)        DELDR(M)        DELCR(M)        DELVEL(M/SEC)     DELGAM(RADS)     DELPSI(RADS)     DELTIME(SEC)
   -0.15200192E 03    0.             -0.46146014E 00    0.36957601E 00    0.10711158E-03   -0.10277357E-11   -0.16484476E-01

ERROR SOURCE MAGNITUDE = 0.43661165E-07


ERROR SOURCE 18

INERTIAL POSITION AND VELOCITY FOLLOW

 X = 0.54769545E 07 METERS          Y = 0.21541072E 07 METERS          Z = 0.29475141E 07 METERS
VX =-0.22388183E 04 METERS/SEC     VY = 0.73734865E 04 METERS/SEC     VZ =-0.17121864E 04 METERS/SEC

TBI
    -0.11147267E 00    -0.97951672E 01    -0.47433958E 00
     0.99905474E 00    -0.12662469E 00    -0.55318439E-08
    -0.60763137E-01    -0.47389665E 01     0.88034001E 00

      DELXI(M)        DELYI(M)        DELZI(M)        DELVXI(M/SEC)     DELVYI(M/SEC)     DELVZI(M/SEC)
   -0.84766515E-02   -0.33384743E-02   -0.45935537E-02   -0.15258789E-03   -0.24414063E-03   -0.76293945E-04

TBI ERROR MATRIX
    -0.80338799E-05     0.99032722E-06    -0.37252903E-08
    -0.11253477E-05    -0.91698021E-05    -0.12172010E-08
    -0.43525361E-05     0.54389236E-06     0.29802322E-07

ATTITUDE ERROR PARAMETER = 0.13073765E-04

      DELRA(M)        DELDR(M)        DELCR(M)        DELVEL(M/SEC)     DELGAM(RADS)     DELPSI(RADS)     DELTIME(SEC)
   -0.10201111E-01    0.             -0.24429800E-04   -0.12210035E-03    0.34289053E-07   -0.54406192E-16    0.21226765E-05

ERROR SOURCE MAGNITUDE = 0.


ERROR SOURCE 19

INERTIAL POSITION AND VELOCITY FOLLOW
```

```
 X = [illegible]                Y = 0.21541072E 07 METERS          Z = 0.29475141E 07 METERS
VX =-0.2[illegible] METERS/SEC      VY = 0.73733650E 04 METERS/SEC      VZ =-0.12121864E 04 METERS/SEC

TBI
    -0.11147[illegible]E 00      -0.87[illegible]E 00      -0.47433998E 00
     0.99[illegible]E 00      -0.12662469E 00      -0.55318439E-08
    -0.60[illegible]E-01      -0.473[illegible]E 00       0.[illegible]34001E 00

        DELXI(M)          DELYI(M)          DELZI(M)        DELVXI(M/SEC)     DELVYI(M/SEC)     DELVZI(M/SEC)
     -0.[illegible]E-02   -0.33384743E-02   -0.45895937E-02   -0.152[illegible]E-03   -0.24414063E-03   -0.76293945E-04

TBI ERROR MATRIX
    -0.80338799E-05      0.99092722E-05      -0.37252903E-08
    -0.11250377E-05      -0.91698021E-05      -0.12172010E-08
    -0.43525361E-05      0.54389238E-06       0.29802322E-07

ATTITUDE ERROR PARAMETER = 0.13073765E-04

        DELRA(M)          DELRB(M)          DELRC(M)        DELVEL(M/SEC)     DELGAM(RADS)     DELPSI(RADS)     DELTIME(SEC)
     -0.10201118E-01     0.                -0.24429800E-04   -0.12210035E-03   0.34289053E-07   -0.54406192E-16   0.21226765E-05

ERROR SOURCE MAGNITUDE = 0.


ERROR SOURCE [illegible]

INERTIAL POSITION AND VELOCITY FOLLOW

 X = 0.547[illegible] 07 METERS          Y = 0.21[illegible]072E 07 METERS          Z = 0.29475141E 07 METERS
VX =-0.223[illegible] 04 METERS/SEC      VY = 0.73733650E 04 METERS/SEC      VZ =-0.12121864E 04 METERS/SEC

TBI
    -0.11147[illegible]E 00      -0.87951[illegible]E 00      -0.47433998E 00
     0.99[illegible]E 00      -0.12662469E 00      -0.55318439E-08
    -0.60[illegible]E-01      -0.473[illegible]E 00       0.[illegible]34001E 00

        DELXI(M)          DELYI(M)          DELZI(M)        DELVXI(M/SEC)     DELVYI(M/SEC)     DELVZI(M/SEC)
     -0.[illegible]E-02   -0.33384743E-02   -0.45895937E-02   -0.152[illegible]E-03   -0.24414063E-03   -0.76293945E-04

TBI ERROR MATRIX
    -0.80[illegible]E-05      0.99092722E-05      -0.37252903E-08
    -0.11250[illegible]E-05      -0.91698021E-05      -0.12172010E-08
    -0.43[illegible]E-05      0.54389238E-06       0.29802322E-07

ATTITUDE [illegible]

        DELRA(M)          DELRB(M)          DELRC(M)        DELVEL(M/SEC)     DELGAM(RADS)     DELPSI(RADS)     DELTIME(SEC)
     -0.10201118E-01     0.                -0.24429800E-04   -0.12210035E-03   0.34289053E-07   -0.54406192E-16   0.21226765E-05
```

ERROR SOURCE MAGNITUDE = .

ERROR SOURCE [illegible]

INERTIAL POSITION AND VELOCITY FOLLOW

X = 0.5[illegible]E 07 METERS Y = 0.21541075E 07 METERS Z = 0.29480213E 07 METERS
VX =-0.2[illegible]E 04 METERS/SEC VY = 0.73738625E 04 METERS/SEC VZ =-0.12095640E 04 METERS/SEC

TBI

-0.11180151E 00	-0.86023137E 00	-0.47293856E 00
0.99996211E 00	-0.12664471E 00	-0.46659580E-02
-0.59494134E-01	-0.47255181E 00	0.38109002E 00

DELXI(M)	DELYI(M)	DELZI(M)	DELVXI(M/SEC)	DELVYI(M/SEC)	DELVZI(M/SEC)
-0.27349399E 03	0.33962515E 00	0.50719118E 03	-0.14131775E 01	-0.26855469E-02	0.26214142E 01

TBI ERROR MATRIX

-0.33692177E-03	-0.71346015E-03	0.14014132E-02
-0.39562593E-05	-0.23869[illegible]E-04	-0.46659143E-03
0.56463127E-03	0.13353154E-02	0.75003505E-03

ATTITUDE ERROR PARAMETER = 0.23385923E-02

DELRA(M)	DELER(M)	DELCR(M)	DELVEL(M/SEC)	DELGAM(RADS)	DELPSI(RADS)	DELTIME(SEC)
-0.33[illegible]27E 00	.	0.57623074E 03	-0.36629741E-02	0.37321245E-06	0.38175482E-03	0.74266925E-04

ERROR SOURCE MAGNITUDE = .

ERROR SOURCE [illegible]

INERTIAL POSITION AND VELOCITY FOLLOW

X = 0.5[illegible]E 07 METERS Y = 0.21541[illegible]E 07 METERS Z = 0.29465294E 07 METERS
VX =-0.2[illegible]E 04 METERS/SEC VY = 0.73738611E 04 METERS/SEC VZ =-0.12173416E 04 METERS/SEC

TBI

-0.11[illegible]	-0.[illegible]	-0.47392724E 00
0.99[illegible]	-0.12664[illegible]	0.15498511E-02
-0.6[illegible]	-0.47331[illegible]	0.88055798E 00

DELXI(M)	DELYI(M)	DELZI(M)	DELVXI(M/SEC)	DELVYI(M/SEC)	DELVZI(M/SEC)
0.[illegible]	-0.11[illegible]	-0.98471481E 03	0.27750527E 01	-0.40393555E-02	-0.51632538E 01

TBI ERROR MATRIX

0.69[illegible]E-03	-0.3[illegible]E-03	0.41273609E-03
-0.47[illegible]E-03	-0.25[illegible]E-04	0.15498555E-02
-0.1[illegible]E-02	0.57[illegible]E-03	0.21799654E-03

ATTITUDE ERROR PARAMETER = 0.23388592E-02

DELA(M)	DELCR(M)	DELCR(M)	DELVEL(M/SEC)	DELGAM(RADS)	DELPSI(RADS)	DELTIME(SEC)
-0.7[illegible]E 00	-0.	-0.11[illegible]E 04	0.31745790E-02	0.14133919E-06	-0.75165362E-03	-0.13387731E-03

ERROR SOURCE MAGNITUDE = 0.

ERROR SOURCE 23

INERTIAL POSITION AND VELOCITY FOLLOW

X = 0.54760041E 07 METERS Y = 0.21537332E 07 METERS Z = 0.29470016E 07 METERS
VX =-0.2244[illegible]E 04 METERS/SEC VY = 0.73744[illegible]E 04 METERS/SEC VZ =-0.12154232E 04 METERS/SEC

TBI

-0.11308[illegible]E 00	-0.47931[illegible]E 00	-0.47433[illegible]E 00
0.99[illegible]3755E 00	-0.12[illegible]E 00	-0.55734[illegible]E-08
-0.60932758E-01	-0.47378[illegible]E 00	0.3[illegible]34001E 00

DELXI(M)	DELYI(M)	DELZI(M)	DELVXI(M/SEC)	DELVYI(M/SEC)	DELVZI(M/SEC)
-0.95[illegible]E 03	-0.374[illegible]E 03	-0.[illegible]2[illegible]E 03	-0.60C97046E 01	0.53441162E 00	-0.32368622E 01

TBI ERROR MATRIX

-0.16[illegible]E-02	0.20090[illegible]E-03	-0.37252903E-08
-0.22[illegible]E-03	-0.1[illegible]E-02	-0.12587610E-09
-0.27[illegible]E-03	0.10[illegible]E-03	0.29802322E-07

ATTITUDE ERROR PARAMETER = 0.26[illegible]E-03

DELA(M)	DELCR(M)	DELCR(M)	DELVEL(M/SEC)	DELGAM(RADS)	DELPSI(RADS)	DELTIME(SEC)
-0.11[illegible]E 00	0.	-0.[illegible]44146[illegible]E 00	0.27[illegible]E 01	0.80237338E-03	-0.19696287E-11	-0.12395979E 00

ERROR SOURCE MAGNITUDE = 0.

ERROR SOURCE 24

INERTIAL POSITION AND VELOCITY FOLLOW

X = 0.54769545E 07 METERS Y = 0.21541072E 07 METERS Z = 0.29475141E 07 METERS
VX =-0.22[illegible]E 04 METERS/SEC VY = 0.73738650E 04 METERS/SEC VZ =-0.12121864E 04 METERS/SEC

```
TBI
    -0.11147267E 00     -0.87951692E 00     -0.47433998E 00
     0.99906494E 00     -0.12662469E 00     -0.55318439E-08
    -0.60053137E-01     -0.47349658E 00      0.88034001E 00

        DELXI(M)          DELYI(M)          DELZI(M)        DELVXI(M/SEC)     DELVYI(M/SEC)     DELVZI(M/SEC)
    -0.84766515E-02   -0.33384743E-02   -0.45895937E-02   -0.15258789E-03   -0.24414063E-03   -0.76293945E-04

TBI ERROR MATRIX
    -0.80838799E-05     0.99092722E-06     -0.37252903E-08
    -0.11250377E-05    -0.91658021E-05     -0.12172010E-08
    -0.43525351E-05     0.54389238E-06      0.29802322E-07

ATTITUDE ERROR PARAMETER = 0.13073765E-04

       DELRA(M)          DELDR(M)          DELCR(M)        DELVEL(M/SEC)     DELGAM(RADS)      DELPSI(RADS)      DELTIME(SEC)
    -0.10201118E-01     0.                -0.24429800E-04   -0.12210035E-03    0.34289053E-07   -0.54406192E-16    0.21226765E-05

ERROR SOURCE MAGNITUDE = 0.


ERROR SOURCE 25

INERTIAL POSITION AND VELOCITY FOLLOW

 X = 0.54769545E 07 METERS          Y = 0.21341072E 07 METERS          Z = 0.29475141E 07 METERS
VX =-0.22380183E 04 METERS/SEC     VY = 0.73738650E 04 METERS/SEC     VZ =-0.12121864E 04 METERS/SEC

TBI
    -0.11147267E 00     -0.87951692E 00     -0.47433998E 00
     0.99906494E 00     -0.12662469E 00     -0.55318439E-08
    -0.60053137E-01     -0.47349658E 00      0.88034001E 00

        DELXI(M)          DELYI(M)          DELZI(M)        DELVXI(M/SEC)     DELVYI(M/SEC)     DELVZI(M/SEC)
    -0.84766515E-02   -0.33384743E-02   -0.45895937E-02   -0.15258789E-03   -0.24414063E-03   -0.76293945E-04

TBI ERROR MATRIX
    -0.80838799E-05     0.99092722E-06     -0.37252903E-08
    -0.11250377E-05    -0.91658021E-05     -0.12172010E-08
    -0.43525351E-05     0.54389238E-06      0.29802322E-07

ATTITUDE ERROR PARAMETER = 0.13073765E-04

       DELRA(M)          DELDR(M)          DELCR(M)        DELVEL(M/SEC)     DELGAM(RADS)      DELPSI(RADS)      DELTIME(SEC)
    -0.10201118E-01     0.                -0.24429800E-04   -0.12210035E-03    0.34289053E-07   -0.54406192E-16    0.21226765E-05

ERROR SOURCE MAGNITUDE = 0.
```

ERROR SOURCE [illegible]

INERTIAL POSITION AND VELOCITY FOLLOW

X = 0.54769545E 07 METERS Y = 0.21541072E 07 METERS Z = 0.29475141E 07 METERS
VX =-0.22388183E 04 METERS/SEC VY = 0.73738650E 04 METERS/SEC VZ =-0.12121864E 04 METERS/SEC

TBI

-0.11147267E 00	-0.87951692E 00	-0.47433998E 00
0.99906494E 00	-0.12662469E 00	-0.55318439E-08
-0.60063137E-01	-0.47389658E 00	0.88034001E 00

DELXI(M)	DELYI(M)	DELZI(M)	DELVXI(M/SEC)	DELVYI(M/SEC)	DELVZI(M/SEC)
-0.34766515E-02	-0.33384743E-02	-0.45895937E-02	-0.15258789E-03	-0.24414063E-03	-0.76293945E-04

TBI ERROR MATRIX

-0.80838799E-05	0.99092722E-06	-0.37252904E-08
-0.11250377E-05	-0.91698021E-05	-0.12172010E-08
-0.43525361E-05	0.54389239E-06	0.29802322E-07

ATTITUDE ERROR PARAMETER = 0.13073765E-04

DELRA(M)	DELDR(M)	DELCR(M)	DELVEL(M/SEC)	DELGAM(RADS)	DELPSI(RADS)	DELTIME(SEC)
-0.10201118E-01	0.	-0.24429800E-04	-0.12210035E-03	0.34289053E-07	-0.54406192E-16	0.21226765E-05

ERROR SOURCE MAGNITUDE = 0.

ERROR SOURCE 27

INERTIAL POSITION AND VELOCITY FOLLOW

X = 0.54769[illegible]E 07 METERS Y = 0.21541079E 07 METERS Z = 0.29475151E 07 METERS
VX =-0.22388124E 04 METERS/SEC VY = 0.73738709E 04 METERS/SEC VZ =-0.12121832E 04 METERS/SEC

TBI

-0.11[illegible]	-0.[illegible]	-0.47433998E 00
0.9[illegible]	-0.1[illegible]	-0.43146429E-08
-0.60[illegible]E-01	-0.47389712E 00	0.88033998E 00

DELXI(M)	DELYI(M)	DELZI(M)	DELVXI(M/SEC)	DELVYI(M/SEC)	DELVZI(M/SEC)
0.17468753E-01	0.69444[illegible]E 00	0.98518866E 00	0.57373047E-02	0.55762695E-02	0.30975342E-02

TBI ERROR MATRIX

-0.	-0.	-0.
0.	-0.	-0.

-). -. .

ATTITUDE ERROR PARAMETER =).

DELRA(M)	DELCR(M)	DELCW(M)	DELVEL(M/SEC)	DELGAM(RADS)	DELPSI(RADS)	DELTIME(SEC)
0.21229060E 01	).	0.19694929E-01	0.32364871E-02	-0.10197062E-05	0.88402275E-13	0.15563993E-03

ERROR SOURCE MAGNITUDE =).

-STATISTICAL SUMMARY FOLLOWS

	DELRA	DELCR	DELCW	DELVEL	DELGAM	DELPSI	DELTIME
RSS	0.17572121E 04	).	0.18487276E 04	0.42149141E 01	0.11001268E-02	0.11046921E-02	0.17714612E 00

TRAJECTORY DATA FOR FLIGHT SEGMENT 5

THIS IS A POWERED FLIGHT SEGMENT

FLIGHT TERMINATED WHEN TIME EXCEEDS 0.16300000E 03 SEC.

INTEGRATION INCREMENT = 0.20000000E 01 SEC.

TABULAR DATA IS IN BODY FRAME

TABULAR DATA IS SPECIFIC FORCE

TABULAR DATA FOLLOWS

TIME	AX	AY	AZ	WX	WY	WZ
0.	0.12420000E 01	0.	-0.	-0.	-0.	-0.
0.16500000E 03	0.28200000E 01	0.	-0.	-0.	-0.	-0.

INPUT DATA FOR ERROR MODELS FOLLOW

FIRST-ORDER INTEGRATION SCHEME

27 BIT COMPUTER WORD SIZE

FOURTH-ORDER COORDINATE CONVERSION

QUANTIZATION = 0.

COMPUTATIONAL FREQUENCY = 0.10000000E 03 CPS

SINUSOIDAL RATES

NUMBER OF SINUSOIDS = 3

AMPLITUDE

0.34800000E-01 0.34800000E-01 0.34800000E-01

FREQUENCY

0.20000000E 01 0.20000000E 01 0.96000000E 01

MOMENT ARM

0. 0.30500000E 01 0.30500000E 01

DIRECTION COSINES OF EACH SINUSOID

0.10000000E 01 0. 0.

0. 0. 0.10000000E 01

0. 0.10000000E 01 0.

CONING MOTION

NUMBER OF PAIR OF SINUSOIDS = 1

VIBRATORY POWER SPECTRUM

AMPLITUDE

0.30400000E-05 0.30400000E-05 0.91500000E-04 0.91500000E-04 0.30400000E-05

0.30400000E-06

FREQUENCY

0.10000000E 02 0.40000000E 02 0.10000000E 03 0.20000000E 03 0.50000000E 03

0.67500000E 03

SPECIFIC FORCE AND BODY RATES IN INSTRUMENT FRAMES FOLLOW

TIME	SFX	SFY	SFZ	WX	WY	WZ

```
0.                  .12170[illegible]      0.                  -0.                  0.                  0.                  -0.
0.16500[illegible]E 03   .27[illegible]47[illegible]E 02   0.                  -0.                  0.                  0.                  -0.


FLIGHT SE[illegible]

TRUTH

INERTIAL POSITION AND VELOCITY FOLLOW

 X = 0.4991[illegible]E 07 METERS          Y = 0.35364641E 07 METERS          Z = 0.26837805E 07 METERS
VX =-0.37640614E 04 METERS/SEC      VY = 0.99643134E 04 METERS/SEC      VZ =-0.20395626E 04 METERS/SEC

        RADIUS                          VELOCITY                          GAMMA                          TIME
 0.66793408E 07 METERS          0.1[illegible]45073E 05 METERS/SEC          0.14186722E 01 RAD.          0.60644572E 04 SEC

TBI
    -0.11146459E 00      -0.87951791E 00      -0.47433998E 00
     0.99906666E 00      -0.12661[illegible]E 00      -0.43146429E-08
    -0.60058784E-01      -0.47359712E 00       0.88033993E 00

TRANSITION MATRIX FROM INERTIAL FRAME TO LOCAL FRAME
     0.74718754E 00       0.52942[illegible]E 00      0.40177312E 00
    -0.46568105E 00      -0.84835704E 00      -0.25135604E 00
    -0.47418554E 00       0.10355636E-02       0.88042426E 00


ERROR PRINTOUT FOR EACH ERROR SOURCE FOLLOWS



ERROR SOURCE  2

INERTIAL POSITION AND VELOCITY FOLLOW

 X = 0.4991[illegible]E 07 METERS          Y = [illegible]E 07 METERS          Z = 0.26837[illegible]E 07 METERS
VX =-0.37[illegible]E 04 METERS/SEC      VY = 0.99643224E 04 METERS/SEC      VZ =-0.20395[illegible]E 04 METERS/SEC

TBI
    -0.11146459E 00      -0.87951791E 00      -0.47433998E 00
     0.99906666E 00      -0.12661[illegible]E 00      -0.43146429E-08
    -0.60[illegible]E-01      -0.47[illegible]E 00       0.88033998E 00

        DELXI(M)          DELYI(M)          DELZI(M)          DELVXI(M/SEC)      DELVYI(M/SEC)      DELVZI(M/SEC)
     0.14125[illegible]E 02      [illegible]E 01      0.71[illegible]E 01      0.16254934E-01      0.402[illegible]E-02      0.87890625E-02

TBI ERROR MATRIX
```

```
-0.                  -0.                  -0.
 0.                  -0.                  -0.
-0.                  -0.                   0.

ATTITUDE ERROR PARAMETER = 0.

      DELRA(M)          DELDR(M)          DELCR(M)          DELVEL(M/SEC)      DELGAM(RADS)      DELPSI(RADS)      DELTIME(SEC)
   0.16216429E 02   -0.41904[illegible]E 01   -0.11674029E 00   -0.36621094E-02   -0.16987324E-05   0.                0.42724609E-03


ERROR SOURCE  3

INERTIAL POSITION AND VELOCITY FOLLOW

 X = 0.49911018E 07 METERS          Y = 0.35364644E 07 METERS          Z = 0.26837847E 07 METERS
VX =-0.37640410E 04 METERS/SEC     VY = 0.99643110E 04 METERS/SEC     VZ =-0.20335516E 04 METERS/SEC

TBI
   -0.11146459E 00    -0.87951791E 00    -0.47433998E 00
    0.99906606E 00    -0.12661552E 00    -0.43146429E-08
   -0.60[illegible]58734E-01    -0.47[illegible]9712E 00     0.88033998E 00

      DELXI(M)          DELYI(M)          DELZI(M)          DELVXI(M/SEC)     DELVYI(M/SEC)     DELVZI(M/SEC)
   0.73375000E 01    0.34[illegible]750[illegible]E 00    0.41[illegible]750000E 01    0.20[illegible]5742E-01   -0.73242188E-02   0.10955811E-01

TBI ERROR MATRIX
   -0.                  -0.                  -0.
    0.                  -0.                  -0.
   -0.                  -0.                   0.

ATTITUDE ERROR PARAMETER = 0.

      DELRA(M)          DELDR(M)          DELCR(M)          DELVEL(M/SEC)      DELGAM(RADS)      DELPSI(RADS)      DELTIME(SEC)
   0.77952152E 01   -0.44593677E 01   -0.76697946E-01   -0.15991211E-01   -0.16987324E-05   0.                0.29907227E-02


ERROR SOURCE  4

INERTIAL POSITION AND VELOCITY FOLLOW

 X = 0.49[illegible]E 07 METERS          Y = 0.35364639E 07 METERS          Z = 0.26837917E 07 METERS
VX =-0.37640[illegible]E 04 METERS/SEC     VY = 0.99643186E 04 METERS/SEC     VZ =-0.20395787E 04 METERS/SEC

TBI
   -0.11146459E 00    -0.87951791E 00    -0.47433998E 00
    0.99906606E 00    -0.12661552E 00    -0.43146429E-08
   -0.60[illegible]58734E-01    -0.47[illegible]9712E 00     0.88033998E 00
```

```
      DELXI(M)          DELYI(M)          DELZI(M)          DELVXI(M/SEC)     DELVYI(M/SEC)     DELVZI(M/SEC)
    -0.637[illegible]E-01   -0.12500[illegible]E-[illegible]   0.11155250E 02    0.85754395E-02   -0.36621094E-03   -0.16067505E-01

TBI ERROR MATRIX
    -0.                 -0.                 -0.
     0.                 -0.                 -0.
    -0.                 -0.                  0.

ATTITUDE ERROR PARAMETER = 0.

      DELRA(M)          DELCR(M)          DELCR(M)          DELVEL(M/SEC)     DELGAM(RADS)      DELPSI(RADS)      DELTIME(SEC)
    -0.34721714E 00    0.52903145E-01    0.12345030E 02   -0.24414063E-03    0.29802322E-07   -0.16785259E-05   -0.61035156E-04


ERROR SOURCE  5

INERTIAL POSITION AND VELOCITY FOLLOW

 X = 0.49910938E 07 METERS          Y = 0.35364640E 07 METERS          Z = 0.26837804E 07 METERS
VX =-0.37640516E 04 METERS/SEC     VY = 0.99643181E 04 METERS/SEC     VZ =-0.20395627E 04 METERS/SEC

TBI
    -0.11146459E 00    -0.87951791E 00    -0.47433998E 00
     0.99906606E 00    -0.12661552E 00    -0.43146429E-08
    -0.60058784E-01    -0.47339712E 00     0.43033998E 00

      DELXI(M)          DELYI(M)          DELZI(M)          DELVXI(M/SEC)     DELVYI(M/SEC)     DELVZI(M/SEC)
    -0.62500000E-01   -0.93750000E-01   -0.62500000E-01   -0.18310547E-03   -0.24414063E-03   -0.13732910E-03

TBI ERROR MATRIX
    -0.                 -0.                 -0.
     0.                 -0.                 -0.
    -0.                 -0.                  0.

ATTITUDE ERROR PARAMETER = 0.

      DELRA(M)          DELCR(M)          DELCR(M)          DELVEL(M/SEC)     DELGAM(RADS)      DELPSI(RADS)      DELTIME(SEC)
    -0.12144[illegible]E 00   -0.346874[illegible]E-01   -0.25491692E-01   -0.12207031E-03    0.29802322E-07    0.                0.


ERROR SOURCE  6

INERTIAL POSITION AND VELOCITY FOLLOW

 X = 0.49910938E 07 METERS          Y = 0.35364640E 07 METERS          Z = 0.26837804E 07 METERS
VX =-0.37640616E 04 METERS/SEC     VY = 0.99643180E 04 METERS/SEC     VZ =-0.20395627E 04 METERS/SEC
```

TBI

-0.11146459E 00	-0.87951791E 00	-0.47433998E 00
0.99966065E 00	-0.12661556E 00	-0.43146429E-08
-0.60058778E-01	-0.47399712E 00	0.88033999E 00

DELXI(M)	DELYI(M)	DELZI(M)	DELVXI(M/SEC)	DELVYI(M/SEC)	DELVZI(M/SEC)
-0.62600007E-01	-0.37500003E-01	-0.37500003E-01	-0.21362305E-03	-0.36621094E-03	-0.15258789E-03

TBI ERROR MATRIX

-0.	-0.	-0.
0.	-0.	-0.
-0.	-0.	0.

ATTITUDE ERROR PARAMETER = 0.

DELPA(M)	DELEN(M)	DELCN(M)	DELVEL(M/SEC)	DELGAM(RADS)	DELPSI(RADS)	DELTIME(SEC)
-0.13399999E 00	-0.50516667E-01	-0.50524590E-01	-0.24414063E-03	0.44703484E-07	0.	-0.61035156E-04

ERROR SOURCE 7

INERTIAL POSITION AND VELOCITY FOLLOW

X = 0.49910934E 07 METERS Y = 0.35364640E 07 METERS Z = 0.26027804E 07 METERS
VX =-0.37643516E 04 METERS/SEC VY = 0.37693161E 04 METERS/SEC VZ =-0.22395627E 04 METERS/SEC

TBI

-0.11146459E 00	-0.87951791E 00	-0.47433998E 00
0.99966065E 00	-0.12661556E 00	-0.43146429E-08
-0.60058778E-01	-0.47399712E 00	0.88033999E 00

DELXI(M)	DELYI(M)	DELZI(M)	DELVXI(M/SEC)	DELVYI(M/SEC)	DELVZI(M/SEC)
-0.62600007E-01	-0.37500003E-01	-0.52500003E-01	-0.18310547E-03	-0.24414063E-03	-0.13732910E-03

TBI ERROR MATRIX

-0.	-0.	-0.
0.	-0.	-0.
-0.	-0.	0.

ATTITUDE ERROR PARAMETER = 0.

DELPA(M)	DELEN(M)	DELCN(M)	DELVEL(M/SEC)	DELGAM(RADS)	DELPSI(RADS)	DELTIME(SEC)
-0.13199999E 00	-0.36617431E-01	-0.25491797E-01	-0.12207031E-03	0.29802322E-07	0.	0.

ERROR SOURCE 8

INERTIAL POSITION AND VELOCITY FOLLOW

X = 0.499[illegible] Y = 0.35364640E 07 METERS Z = 0.26840600E 07 METERS
VX =-0.37[illegible] VY = 0.99643179E 04 METERS/SEC VZ =-0.20387345E 04 METERS/SEC

TBI

-0.11151[illegible]E 00	-0.[illegible]795121[illegible]E 00	-0.47433998E 00
0.99905606E 00	-0.12661552E 00	-0.97003052E-04
-0.59973449E-01	-0.47390791E 00	0.88033998E 00

DELXI(M)	DELYI(M)	DELZI(M)	DELVXI(M/SEC)	DELVYI(M/SEC)	DELVZI(M/SEC)
-0.15105250E 03	-0.93750000E-01	0.27943750E 03	-0.44708252E 00	-0.48828125E-03	0.82807922E 00

TBI ERROR MATRIX

-0.46026393E-04	0.57294965E-03	-0.
0.	0.55879354E-08	-0.96996738E-04
0.85335691E-04	-0.13784715E-04	0.

ATTITUDE ERROR PARAMETER = 0.13769004E-03

DELRA(M)	DELCR(M)	DELCR(M)	DELVEL(M/SEC)	DELGAM(RADS)	DELPSI(RADS)	DELTIME(SEC)
-0.65117359E 00	-0.11361192E 00	0.31765510E 03	-0.10986329E-02	0.13411045E-06	0.86772619E-04	-0.61035156E-04

ERROR SOURCE 9

INERTIAL POSITION AND VELOCITY FOLLOW

X = 0.49911294E 07 METERS Y = 0.35364637E 07 METERS Z = 0.26837136E 07 METERS
VX =-0.37640274E 04 METERS/SEC VY = 0.99643179E 04 METERS/SEC VZ =-0.20396268E 04 METERS/SEC

TBI

-0.11146759E 00	-0.87954[illegible]E 00	-0.47429727E 00
0.99906607E 00	-0.12661552E 00	-0.44456101E-08
-0.60033404E-01	-0.47385446E 00	0.88036298E 00

DELXI(M)	DELYI(M)	DELZI(M)	DELVXI(M/SEC)	DELVYI(M/SEC)	DELVZI(M/SEC)
0.55502520E 02	-0.34375000E 00	-0.55906250E 02	0.33996382E-01	-0.48828125E-03	-0.64208984E-01

TBI ERROR MATRIX

-0.2[illegible]	-0.2204[illegible]	0.42703003E-04
0.7[illegible]	-0.5587[illegible]	-0.13396734E-09
0.537[illegible]	0.42662[illegible]	0.[illegible]99942E-04

ATTITUDE ERROR PARAMETER = 0.6882[illegible]E-03

DELRA(M)	DELCR(M)	DELCR(M)	DELVEL(M/SEC)	DELGAM(RADS)	DELPSI(RADS)	DELTIME(SEC)
-0.49126554E 00	-0.16620159E-02	-0.75769482E 02	-0.24414063E-03	0.59604645E-07	-0.66986267E-05	-0.61035156E-04

ERROR SOURCE 10

INERTIAL POSITION AND VELOCITY FOLLOW

X = 0.49909720E 07 METERS Y = 0.35364567E 07 METERS Z = 0.26837157E 07 METERS
VX =-0.37644981E 04 METERS/SEC VY = 0.99644020E 04 METERS/SEC VZ =-0.20397976E 04 METERS/SEC

TBI

-0.11150731E 00	-0.87951259E 00	-0.47433993E 00
0.99905985E 00	-0.12666389E 00	-0.73050614E-06
-0.60001740E-01	-0.47389418E 00	0.88033997E 00

DELXI(M)	DELYI(M)	DELZI(M)	DELVXI(M/SEC)	DELVYI(M/SEC)	DELVZI(M/SEC)
-0.12093750E 00	-0.77187500E 01	-0.64843750E 02	-0.43673706E 00	0.83618164E-01	-0.23507690E 00

TBI ERROR MATRIX

-0.42719766E-04	0.53271651E-07	-0.37252900E-08
-0.62137642E-05	-0.43367537E-04	-0.29904166E-08
-0.22955704E-04	0.29467046E-05	-0.74505806E-08

ATTITUDE ERROR PARAMETER = 0.69045552E-04

DELRA(M)	DELDR(M)	DELCR(M)	DELVEL(M/SEC)	DELGAM(RADS)	DELPSI(RADS)	DELTIME(SEC)
-0.12050196E 03	-0.60101336E 02	0.24342358E 00	0.27270508E 00	0.38981438E-04	0.	-0.53710938E-02

ERROR SOURCE 11

INERTIAL POSITION AND VELOCITY FOLLOW

X = 0.49903305E 07 METERS Y = 0.35364308E 07 METERS Z = 0.26836382E 07 METERS
VX =-0.37650519E 04 METERS/SEC VY = 0.99641955E 04 METERS/SEC VZ =-0.20405806E 04 METERS/SEC

TBI

-0.11190026E 00	-0.87946290E 00	-0.47433969E 00
0.99900296E 00	-0.12711935E 00	-0.10271773E-06
-0.60037717E-01	-0.47786630E 00	0.88034016E 00

DELXI(M)	DELYI(M)	DELZI(M)	DELVXI(M/SEC)	DELVYI(M/SEC)	DELVZI(M/SEC)
-0.20337500E 00	-0.33281250E 02	-0.14213625E 03	-0.18905029E 01	-0.12280273E 00	-0.10180206E 01

TBI ERROR MATRIX

-0.44376496E-03	0.50417418E-04	0.29057264E-06
-0.63106418E-04	-0.50323061E-05	-0.98403091E-07
-0.23893267E-05	0.30234435E-06	0.17881393E-06

ATTITUDE ERROR PARAMETER = 0.71821249E-03

DELRA(M)	DELDR(M)	DELCR(M)	DELVEL(M/SEC)	DELGAM(RADS)	DELPSI(RADS)	DELTIME(SEC)
-0.27192495E 03	0.14021727E 03	-0.30532369E 00	0.73498535E 00	0.18636882E-03	0.	-0.92163086E-02

ERROR SOURCE 12

INERTIAL POSITION AND VELOCITY FOLLOW

X = 0.49908647E 07 METERS Y = 0.35364630E 07 METERS Z = 0.26842308E 07 METERS
VX =-0.37651410E 04 METERS/SEC VY = 0.99643044E 04 METERS/SEC VZ =-0.20377479E 04 METERS/SEC

TBI

-0.11162279E 00	-0.87993104E 00	-0.47353385E 00
0.99906249E 00	-0.12664294E 00	-0.17173490E-03
-0.59822579E-01	-0.47311885E 00	0.88077041E 00

DELXI(M)	DELYI(M)	DELZI(M)	DELVXI(M/SEC)	DELVYI(M/SEC)	DELVZI(M/SEC)
-0.25017750E 03	-0.11250000E 01	0.45023125E 03	-0.10756204E 01	-0.13916016E-01	0.18146667E 01

TBI ERROR MATRIX

-0.15819259E-03	-0.41393191E-03	0.20611929E-03
-0.35762787E-05	-0.27423725E-04	-0.17173059E-03
0.23590541E-03	0.77627647E-03	0.43042749E-03

ATTITUDE ERROR PARAMETER = 0.13126624E-02

DELRA(M)	DELDR(M)	DELCR(M)	DELVEL(M/SEC)	DELGAM(RADS)	DELPSI(RADS)	DELTIME(SEC)
-0.60216793E 03	0.21471249E 01	0.51507260E 03	0.20874023E-01	0.82254410E-05	0.19452150E-03	0.

ERROR SOURCE MAGNITUDE = 0.14[illegible]

ERROR SOURCE 13

INERTIAL POSITION AND VELOCITY FOLLOW

X = 0.49922167E 07 METERS Y = 0.35364611E 07 METERS Z = 0.26816808E 07 METERS
VX =-0.37651476E 04 METERS/SEC VY = 0.99643973E 04 METERS/SEC VZ =-0.20470328E 04 METERS/SEC

TBI

-0.11092360E 00	-0.87983751E 00	-0.47383423E 00
0.99905644E 00	-0.12664444E 00	0.12790367E-02
-0.61125432E-01	-0.47325617E 00	0.88060769E 00

DELXI(M)	DELYI(M)	DELZI(M)	DELVXI(M/SEC)	DELVYI(M/SEC)	DELVZI(M/SEC)
0.11222750E 04	-0.29687500E 01	-0.21001563E 04	0.39138489E 01	-0.20874023E-01	-0.74702148E 01

TBI ERROR MATRIX

[illegible]	-0.33370177E-[illegible]	[illegible]573051E-03
-0.55177[illegible]	-[illegible]91942[illegible]E-04	0.12790410E-02
-0.1066667[illegible]E-[illegible]	[illegible]5559[illegible]62E-03	0.26771426E-03

ATTITUDE ERROR PARAMETER = 0.1979474[illegible]E-03

DELRA(M)	DELCR(M)	DELCR(M)	DELVEL(M/SEC)	DELGAM(RADS)	DELPSI(RADS)	DELTIME(SEC)
-0.6339 556E 01	0.3516[illegible]E 01	-0.23814927E 04	0.30517578E-01	0.859797[illegible]E-05	-0.77757463E-03	-0.12207031E-03

ERROR SOURCE MAGNITUDE = 0.1[illegible]97351E-0[illegible]

ERROR SOURCE 14

INERTIAL POSITION AND VELOCITY FOLLOW

X = 0.49[illegible]7213E 07 METERS Y = 0.35351343E 07 METERS Z = 0.26825023E 07 METERS
VX =-0.37746731E 04 METERS/SEC VY = 0.99643265E 04 METERS/SEC VZ =-0.20452787E 04 METERS/SEC

TBI

-0.11298[illegible]51E 00	-0.37934267E 00	-0.47433998E 00
0.998[illegible]E 00	-0.12922512E 00	-0.55732008E-05
-0.60[illegible]22744E-01	-0.47350296E 00	[illegible]4001E 00

DELXI(M)	DELYI(M)	DELZI(M)	DELVXI(M/SEC)	DELVYI(M/SEC)	DELVZI(M/SEC)
-0.237[illegible]50E 04	-0.3247812[illegible]E 03	-0.12782500E 04	-0.10611664E 02	0.81787109E-02	-0.57161407E 01

TBI ERROR MATRIX

-0.14179191E-02	0.17524511E-03	-0.37252903E-08
-0.19913912E-03	-0.16106[illegible]E-02	-0.12585580E-08
-0.76309[illegible]E-03	0.9416043[illegible]E-04	0.29602322E-07

ATTITUDE ERROR PARAMETER = 0.2295[illegible]E-02

DELRA(M)	DELCR(M)	DELCR(M)	DELVEL(M/SEC)	DELGAM(RADS)	DELPSI(RADS)	DELTIME(SEC)
-0.26[illegible]E 04	0.1147[illegible]E 04	-0.69563130E 00	0.47711182E 01	0.10204017E-02	0.	-0.12500000E 00

ERROR SOURCE [illegible] = 0.1[illegible]

ERROR SOURCE 15

INERTIAL POSITION AND VELOCITY FOLLOW

```
 X = 0.49910[illegible]E 07 METERS          Y = [illegible]E 07 METERS          Z = 0.26839172E 07 METERS
VX =-0.37[illegible]E 04 METERS/SEC       VY = [illegible]E 04 METERS/SEC       VZ =-0.20390357E 04 METERS/SEC

TBI
    -0.11153394E 00      -0.87964278E 00      -0.47409909E 00
     0.99906194E 00      -0.12664708E 00      -0.53187345E-04
    -0.59996677E-01      -0.47365431E 00       0.88047069E 00

        DELXI(M)          DELYI(M)          DELZI(M)          DELVXI(M/SEC)     DELVYI(M/SEC)     DELVZI(M/SEC)
     -0.81562500E 02   -0.11562500E 01    0.13685625E 03   -0.39955390E 00   -0.15502930E-01    0.52693176E 00

TBI ERROR MATRIX
    -0.69345279E-04      -0.12486428E-03       0.25088713E-03
    -0.41201711E-05      -0.31558797E-04      -0.53183031E-04
     0.62107109E-04       0.24281070E-03       0.13071299E-03

ATTITUDE ERROR PARAMETER = 0.40878145E-03

        DELRA(M)          DELDR(M)          DELCR(M)          DELVEL(M/SEC)     DELGAM(RADS)      DELPSI(RADS)      DELTIME(SEC)
     -0.66498208E 01    0.25834961E 01    0.15893998E 03    0.25512695E-01    0.92536211E-05    0.60263579E-04    0.

ERROR SOURCE MAGNITUDE = 0.43661166E-05


ERROR SOURCE 14

INERTIAL POSITION AND VELOCITY FOLLOW

 X = 0.49912425E 07 METERS          Y = 0.33664625E 07 METERS          Z = 0.26834915E 07 METERS
VX =-0.37534250E 04 METERS/SEC       VY = 0.99643010E 04 METERS/SEC       VZ =-0.20409351E 04 METERS/SEC

TBI
    -0.11135957E 00      -0.87955620E 00      -0.47429199E 00
     0.99906098E 00      -0.12664328E 00       0.23300284E-03
    -0.60012232E-01      -0.47381836E 00       0.88036188E 00

        DELXI(M)          DELYI(M)          DELZI(M)          DELVXI(M/SEC)     DELVYI(M/SEC)     DELVZI(M/SEC)
     0.14868750E 03   -0.15937500E 01   -0.23300000E 03    0.63641357E 00   -0.17333984E-01   -0.13725433E 01

TBI ERROR MATRIX
     0.1[illegible]E-04      -0.3[illegible]E-04       .47989190E-04
    -0.[illegible]E-05      -0.27765[illegible]E-04      0.28300715E-03
    -0.25[illegible]E-03       0.78700[illegible]E-04      0.21897256E-04

ATTITUDE ERROR PARAMETER = 0.40917300E-03

        DELRA(M)          DELDR(M)          DELCR(M)          DELVEL(M/SEC)     DELGAM(RADS)      DELPSI(RADS)      DELTIME(SEC)
     -0.58[illegible]7542E 01    0.21933746E 01   -0.32454980E 03    0.21362305E-01    0.92403421E-05   -0.13925406E-03    0.
```

ERROR SOURCE MAGNITUDE = 0.43661166E-06

ERROR SOURCE 17

INERTIAL POSITION AND VELOCITY FOLLOW

X = 0.49907281E 07 METERS Y = 0.35364033E 07 METERS Z = 0.26835830E 07 METERS
VX =-0.37654373E 04 METERS/SEC VY = 0.99641192E 04 METERS/SEC VZ =-0.20408418E 04 METERS/SEC

TBI

-0.11195558E 00	-0.87945551E 00	-0.47433961E 00
0.99899547E 00	-0.12717310E 00	-0.59525476E-07
-0.60323190E-01	-0.47386300E 00	0.68034000E 00

DELXI(M)	DELYI(M)	DELZI(M)	DELVXI(M/SEC)	DELVYI(M/SEC)	DELVZI(M/SEC)
-0.36575000E 03	-0.55750000E 02	-0.13750000E 03	-0.23759765E 01	-0.19909668E 00	-0.12792664E 01

TBI ERROR MATRIX

-0.49098[illegible]E-04	0.62398612E-04	0.16018748E-06
-0.70594251E-04	-0.55753555E-03	-0.55210933E-07
-0.26440620E-03	0.34127384E-04	0.10430813E-06

ATTITUDE ERROR PARAMETER = 0.79493310E-03

DELRA(M)	DELCR(M)	DELCR(M)	DELVEL(M/SEC)	DELGAM(RADS)	DELPSI(RADS)	DELTIME(SEC)
-0.35214938E 03	0.17276551E 03	-0.51095009E 00	0.88256836E 00	0.23584068E-03	0.	-0.16540527E-01

ERROR SOURCE MAGNITUDE = 0.43661166E-06

ERROR SOURCE 18

INERTIAL POSITION AND VELOCITY FOLLOW

X = [illegible] Y = 0.35[illegible]4637E 07 METERS Z = 0.26937793E 07 METERS
VX =-0.37[illegible] METERS/SEC VY = 0.99543144E 04 METERS/SEC VZ =-0.20395764E 04 METERS/SEC

TBI

-0.111[illegible]	-0.87951592E 00	-0.47433998E 00
0.99[illegible]E 00	-0.12[illegible]E 00	-0.55318439E-0[illegible]
-0.60[illegible]E-01	-0.47[illegible]E 00	0.88034001E 00

DELXI(M)	DELYI(M)	DELZI(M)	DELVXI(M/SEC)	DELVYI(M/SEC)	DELVZI(M/SEC)
-0.2[illegible]E 01	-0.34375000E 00	-0.12137500E 01	-0.26489258E-01	-0.39067500E-02	-0.14205933E-01

TBI ERROR MATRIX

```
-0.80538709E-05     0.99092722E-06     -0.37252903E-08
-0.11250377E-05    -0.91698021E-05     -0.12172910E-08
-0.43525[illegible]E-[illegible]     [illegible]E-06     0.29802322E-07

ATTITUDE ERROR PARAMETER = 0.13073765E-04

     DELRA(M)          DELCR(M)          DELCR(M)          DELVEL(M/SEC)      DELGAM(RADS)      DELPSI(RADS)      DELTIME(SEC)
  -0.22127245E-01    0.97579[illegible]E-05   -0.95332549E-01    0.81787109E-02    0.26971102E-05    0.                0.

ERROR SOURCE MAGNITUDE = 0.


ERROR SOURCE 1[illegible]

INERTIAL POSITION AND VELOCITY FOLLOW

 X = 0.49910[illegible]E 07 METERS          Y = 0.35364637E 07 METERS          Z = 0.26837793E 07 METERS
VX =-0.37640[illegible]E 04 METERS/SEC      VY = 0.99643144E 04 METERS/SEC      VZ =-0.20395768E 04 METERS/SEC

TBI
  -0.11147267E 00     -0.87951692E 00     -0.47433998E 00
   0.99906434E 00     -0.12662469E 00     -0.55318439E-00
  -0.60063137E-01     -0.47329658E 00      0.80034301E 00

     DELXI(M)          DELYI(M)          DELZI(M)          DELVXI(M/SEC)     DELVYI(M/SEC)     DELVZI(M/SEC)
  -0.20625000E 01    -0.34375000E 00    -0.12187500E 01    -0.26489258E-01   -0.39062500E-02   -0.14205933E-01

TBI ERROR MATRIX
  -0.80538709E-05     0.99092722E-06     -0.37252903E-08
  -0.11250377E-05    -0.91698021E-05     -0.12172910E-08
  -0.43525[illegible]E-[illegible]     [illegible]E-06     0.29802322E-07

ATTITUDE ERROR PARAMETER = 0.13073765E-04

     DELRA(M)          DELCR(M)          DELCR(M)          DELVEL(M/SEC)      DELGAM(RADS)      DELPSI(RADS)      DELTIME(SEC)
  -0.22127245E-01    0.97579[illegible]E-05   -0.95332549E-01    0.81787109E-02    0.26971102E-05    0.                0.

ERROR SOURCE MAGNITUDE = 0.


ERROR SOURCE 2[illegible]

INERTIAL POSITION AND VELOCITY FOLLOW

 X = 0.49910[illegible]E 07 METERS          Y = 0.35364637E 07 METERS          Z = 0.26837793E 07 METERS
VX =-0.37640[illegible]E 04 METERS/SEC      VY = 0.99643144E 04 METERS/SEC      VZ =-0.20395768E 04 METERS/SEC
```

```
TBI
    -0.11147767E 00      -0.37951692E 00      -0.47433998E 00
     0.99[illegible]E 00      -0.12662459E 00      -0.55318439E-08
    -0.60[illegible]6137E-01      -0.47389658E 00       0.88034001E 00

        DELXI(M)          DELYI(M)          DELZI(M)          DELVXI(M/SEC)     DELVYI(M/SEC)     DELVZI(M/SEC)
     -0.20625000E 01   -0.34375000E 00   -0.12187500E 01   -0.26489258E-01   -0.39062500E-02   -0.14205933E-01

TBI ERROR MATRIX
    -0.80838799E-05      0.99192722E-06      -0.37252903E-08
    -0.11250377E-05     -0.91698021E-05      -0.12172010E-08
    -0.43525361E-05      0.54389238E-06       0.29802322E-07

ATTITUDE ERROR PARAMETER = 0.13073765E-04

        DELRA(M)          DELCR(M)          DELCR(M)          DELVEL(M/SEC)     DELGAM(RADS)      DELPSI(RADS)      DELTIME(SEC)
     -0.22127245E 01    0.97579[illegible]9E 00   -0.95382549E-01    0.81767109E-02    0.26971102E-05    0.                0.

ERROR SOURCE MAGNITUDE = 0.


ERROR SOURCE 01

INERTIAL POSITION AND VELOCITY FOLLOW

 X = 0.49[illegible]E 07 METERS          Y = 0.35354628E 07 METERS          Z = 0.26848513E 07 METERS
VX =-0.37664693E 04 METERS/SEC      VY = 0.99643021E 04 METERS/SEC      VZ =-0.20352923E 04 METERS/SEC

TBI
    -0.11[illegible]0151E 00      -0.89048337E 00      -0.47246827E 00
     0.99904211E 00      -0.12664506E 00      -0.39897520E-03
    -0.59[illegible]4163E-01      -0.47209121E 00       0.50134201E 00

        DELXI(M)          DELYI(M)          DELZI(M)          DELVXI(M/SEC)     DELVYI(M/SEC)     DELVZI(M/SEC)
     -0.573[illegible]7500E 03   -0.12500000E 01    0.10[illegible]0125E 04   -0.24078980E 01   -0.16235352E-01    0.42702332E 01

TBI ERROR MATRIX
    -0.3[illegible]2177E-03      -0.96545360E-05       0.16717013E-02
    -0.39562[illegible]E-05      -0.29537827E-04      -0.39897059E-03
     0.55460127E-03       0.18059127E-02       0.10020285E-02

ATTITUDE ERROR PARAMETER = 0.304[illegible]E-0[illegible]

        DELRA(M)          DELCR(M)          DELCR(M)          DELVEL(M/SEC)     DELGAM(RADS)      DELPSI(RADS)      DELTIME(SEC)
     -0.72[illegible]8081E 01    0.15287[illegible]E 01    0.11972826E 04    0.18920898E-01    0.89512897E-05    0.45194477E-03    0.61035156E-04

ERROR SOURCE MAGNITUDE = 0.32756598E-05
```

ERROR SOURCE 22

INERTIAL POSITION AND VELOCITY FOLLOW

X = 0.49922440E 07 METERS Y = 0.35364609E 07 METERS Z = 0.26816306E 07 METERS
VX =-0.37567[illegible]E 04 METERS/SEC VY = 0.99642962E 04 METERS/SEC VZ =-0.20495804E 04 METERS/SEC

TBI

-0.11[illegible]1624E 00	-0.87982650E 00	-0.47398614E 00
0.99906[illegible]E 00	-0.12664952E 00	0.21232965E-02
-0.61874002E-01	-0.47331703E 00	0.88052459E 00

DELXI(M)	DELYI(M)	DELZI(M)	DELVXI(M/SEC)	DELVYI(M/SEC)	DELVZI(M/SEC)
0.11501250E 04	-0.31250000E 01	-0.21499643E 04	0.52987671E 01	-0.22094727E-01	-0.10017822E 02

TBI ERROR MATRIX

0.94835274E-03	-0.30858815E-03	0.35383552E-03
-0.60051690E-03	-0.25000423E-04	0.21232903E-02
-0.18152175E-02	0.37989359E-03	0.18461049E-03

ATTITUDE ERROR PARAMETER = 0.30486394E-02

DELRA(M)	DELCR(M)	DELCR(M)	DELVEL(M/SEC)	DELGAM(RADS)	DELPSI(RADS)	DELTIME(SEC)
-0.6[illegible]9[illegible]394E 01	0.32400742E 01	-0.24382607E 04	.30517578E-01	0.75697899E-05	-0.10449478E-02	-0.18310547E-03

ERROR SOURCE MAGNITUDE = 0.32756[illegible]E-0[illegible]

ERROR SOURCE 23

INERTIAL POSITION AND VELOCITY FOLLOW

X = 0.49887105E 07 METERS Y = 0.35361005E 07 METERS Z = 0.26824962E 07 METERS
VX =-0.37707[illegible]E 04 METERS/SEC VY = 0.90636115E 04 METERS/SEC VZ =-0.20463825E 04 METERS/SEC

TBI

-0.11[illegible]E 00	-0.37925[illegible]E 00	-0.47433[illegible]E 00
0.99[illegible]	-0.1[illegible]99[illegible]E 00	-0.55734[illegible]E-08
-0.[illegible]	-0.47[illegible]	0.88034[illegible]E 00

DELXI(M)	DELYI(M)	DELZI(M)	DELVXI(M/SEC)	DELVYI(M/SEC)	DELVZI(M/SEC)
-0.[illegible]12[illegible]	-0.[illegible]E 03	-0.12[illegible]12[illegible]E 04	-0.12661377E 02	-0.70674711E 00	-0.68199158E 01

TBI ERROR MATRIX

-0.20915791E-02	0.25162714E-03	-0.37252903E-08
-0.29766[illegible]E-03	-0.23756921E-02	-0.12587610E-08

```
-0.11269196E-02      0.14110282E-03      0.29802322E-07

ATTITUDE ERROR PARAMETER = 0.33960784E-02

      DELRA(M)          DELRP(M)          DELCR(M)          DELVEL(M/SEC)      DELGAM(RADS)      DELPSI(RADS)      DELTIME(SEC)
   -0.24892621E 04    0.11249945E 04   -0.10022430E 01    0.50358887E 01    0.12435168E-02    0.                -0.12396240E 00

ERROR SOURCE MAGNITUDE = 0.30756884E-05


ERROR SOURCE 24

INERTIAL POSITION AND VELOCITY FOLLOW

 X = 0.49910918E 07 METERS          Y = 0.35364637E 07 METERS          Z = 0.26837793E 07 METERS
VX =-0.37640879E 04 METERS/SEC     VY = 0.99643144E 04 METERS/SEC     VZ =-0.20395769E 04 METERS/SEC

TBI
   -0.11147267E 00     -0.97951690E 00     -0.47433998E 00
    0.99905494E 00     -0.12662469E 00     -0.55318439E-08
   -0.60063137E-01     -0.47389655E 00      0.88034001E 00

      DELXI(M)          DELYI(M)          DELZI(M)          DELVXI(M/SEC)     DELVYI(M/SEC)     DELVZI(M/SEC)
   -0.20625000E 01   -0.34375000E 00   -0.12187500E 01   -0.26489258E-01   -0.39062500E-02   -0.14205933E-01

TBI ERROR MATRIX
   -0.80608799E-05     0.99092722E-06     -0.37252903E-08
   -0.11253377E-05    -0.91693021E-05     -0.12172010E-05
   -0.43525361E-05     0.54389238E-06      0.29802322E-07

ATTITUDE ERROR PARAMETER = 0.13073765E-04

      DELRA(M)          DELRP(M)          DELCR(M)          DELVEL(M/SEC)      DELGAM(RADS)      DELPSI(RADS)      DELTIME(SEC)
   -0.22107745E 01    0.97579394E 00   -0.95322549E-01    0.81787109E-02    0.26971102E-05    0.                0.

ERROR SOURCE MAGNITUDE = 0.


ERROR SOURCE 25

INERTIAL POSITION AND VELOCITY FOLLOW

 X = 0.49910918E 07 METERS          Y = 0.35364637E 07 METERS          Z = 0.26837793E 07 METERS
VX =-0.37640879E 04 METERS/SEC     VY = 0.99643144E 04 METERS/SEC     VZ =-0.20395768E 04 METERS/SEC

TBI
```

```
-0.11147267E 00     -0.87951693E 00     -0.47433998E 00
 0.99906494E 00     -0.12562469E 00     -0.55318439E-08
-0.60063137E-01     -0.47389658E 00      0.88034001E 00

      DELXI(M)          DELYI(M)          DELZI(M)        DELVXI(M/SEC)     DELVYI(M/SEC)     DELVZI(M/SEC)
  -0.20625000E 01   -0.34375000E 00   -0.12187500E 01   -0.26489258E-01   -0.39062500E-02   -0.14205933E-01

TBI ERROR MATRIX
   -0.30033799E-05     0.99052722E-05     -0.37252903E-08
   -0.11250377E-05    -0.91698021E-05     -0.12172010E-08
   -0.43525361E-05     0.54289238E-06      0.29802322E-07

ATTITUDE ERROR PARAMETER = 0.13073765E-04

      DELRA(M)          DELRB(M)          DELRC(M)        DELVEL(M/SEC)     DELGAM(RADS)     DELPSI(RADS)     DELTIME(SEC)
  -0.22127245E 01    0.97579399E 00   -0.35382549E-01    0.81767109E-02    0.26971102E-05    0.               0.

ERROR SOURCE MAGNITUDE = 0.


ERROR SOURCE 25

INERTIAL POSITION AND VELOCITY FOLLOW

 X = 0.49910918E 07 METERS          Y = 0.35354637E 07 METERS          Z = 0.26837793E 07 METERS
VX =-0.37640370E 04 METERS/SEC     VY = 0.99563144E 04 METERS/SEC     VZ =-0.20395769E 04 METERS/SEC

TBI
   -0.11147267E 00     -0.87951693E 00     -0.47433998E 00
    0.99906494E 00     -0.12562469E 00     -0.55318439E-08
   -0.60063137E-01     -0.47389658E 00      0.88034001E 00

      DELXI(M)          DELYI(M)          DELZI(M)        DELVXI(M/SEC)     DELVYI(M/SEC)     DELVZI(M/SEC)
  -0.20625000E 01   -0.34375000E 00   -0.12187500E 01   -0.26489258E-01   -0.39062500E-02   -0.14205933E-01

TBI ERROR MATRIX
   -0.30033799E-05     0.99052722E-05     -0.37252903E-08
   -0.11250377E-05    -0.91698021E-05     -0.12172010E-08
   -0.43525361E-05     0.54289238E-06      0.29802322E-07

ATTITUDE ERROR PARAMETER = 0.13073765E-04

      DELRA(M)          DELRB(M)          DELRC(M)        DELVEL(M/SEC)     DELGAM(RADS)     DELPSI(RADS)     DELTIME(SEC)
  -0.22127245E 01    0.97579399E 00   -0.35382549E-01    0.81767109E-02    0.26971102E-05    0.               0.

ERROR SOURCE MAGNITUDE = 0.
```

ERROR SOURCE 17

INERTIAL POSITION AND VELOCITY FOLLOW

X = 0.49910967E 07 METERS Y = 0.33354657E 07 METERS Z = 0.26837820E 07 METERS
VX =-0.37640347E 04 METERS/SEC VY = 0.99643253E 04 METERS/SEC VZ =-0.20395589E 04 METERS/SEC

TBI

-0.11146459E 00	-0.87951791E 00	-0.47433928E 00
0.99906406E 00	-0.12561552E 00	-0.43146429E-08
-0.60058734E-01	-0.47389712E 00	0.88033998E 00

DELXI(M)	DELYI(M)	DELZI(M)	DELVXI(M/SEC)	DELVYI(M/SEC)	DELVZI(M/SEC)
0.25125000E 01	0.15937500E 01	0.15000000E 01	0.66833496E-02	0.69580078E-02	0.36621094E-02

TBI ERROR MATRIX

-0.	-0.	-0.
0.	-0.	-0.
-0.	-0.	0.

ATTITUDE ERROR PARAMETER = 0.

DELRA(M)	DELDR(M)	DELCR(M)	DELVEL(M/SEC)	DELGAM(RADS)	DELPSI(RADS)	DELTIME(SEC)
0.35478931E 01	-0.33544[illegible]E 00	-0.11260313E-01	0.32958984E-02	-0.89406967E-06	0.	0.12207031E-03

ERROR SOURCE MAGNITUDE = 0.37646557E-03

STATISTICAL SUMMARY FOLLOWS

	DELRA	DELDR	DELCR	DELVEL	DELGAM	DELPSI	DELTIME
RSS	0.35337348E 04	0.16224577E 04	0.36314458E 04	0.70371646E 01	0.16370425E-02	0.14032931E-02	0.17716733E 00

TRUTH SUMMARY FOLLOWS

FLIGHT SEGMENT 1

INERTIAL POSITION AND VELOCITY FOLLOW

X = 0.56262505E 07 METERS Y = 0.40704401E 05 METERS Z = 0.30321032E 07 METERS
VX = 0.37766413E 03 METERS/SEC VY = 0.82829504E 03 METERS/SEC VZ = 0.20189560E 03 METERS/SEC

RADIUS	VELOCITY	GAMMA	TIME
0.63931610E 07 METERS	0.93245390E 03 METERS/SEC	0.10872634E 01 RAD.	0.80000000E 02 SEC

TBI

0.63341745E 00	-0.61722945E 00	-0.47434000E 00
0.70112533E 00	0.71951512E 00	-0.
0.34129477E 00	-0.33257222E 00	0.88034000E 00

FLIGHT SEGMENT 2

INERTIAL POSITION AND VELOCITY FOLLOW

X = 0.56639197E 07 METERS Y = 0.13441049E 06 METERS Z = 0.30510488E 07 METERS
VX = 0.86301730E 03 METERS/SEC VY = 0.26039926E 04 METERS/SEC VZ = 0.46046276E 03 METERS/SEC

RADIUS	VELOCITY	GAMMA	TIME
0.64348234E 07 METERS	0.27835269E 04 METERS/SEC	0.11908274E 01 RAD.	0.14000000E 03 SEC

TBI

0.37631450E 00	-0.80153582E 00	-0.47434000E 00
0.91040463E 00	0.42746943E 00	-0.
0.20275587E 00	-0.43187920E 00	0.88034000E 00

FLIGHT SEGMENT 3

INERTIAL POSITION AND VELOCITY FOLLOW

X = 0.54769384E 07 METERS Y = 0.21546156E 07 METERS Z = 0.29475292E 07 METERS
VX =-0.22572315E 04 METERS/SEC VY = 0.75790933E 04 METERS/SEC VZ =-0.12121351E 04 METERS/SEC

RADIUS	VELOCITY	GAMMA	TIME
0.69921700E 07 METERS	0.79099594E 04 METERS/SEC	0.15698371E 01 RAD.	0.56000000E 03 SEC

TBI

-0.11145156E 00	[illegible]	[illegible]
0.49[illegible]	[illegible]	-0.
[illegible]	[illegible]	[illegible]

FLIGHT SEGMENT 4

INERTIAL POSITION AND VELOCITY FOLLOW

```
 X = 0.54769946E 07 METERS          Y = 0.21541072E 07 METERS          Z = 0.29475141E 07 METERS
VX =-0.22388131E 04 METERS/SEC     VY = 0.73738652E 04 METERS/SEC     VZ =-0.12121863E 04 METERS/SEC

        RADIUS                          VELOCITY                          GAMMA                          TIME
 0.65821766E 07 METERS          0.78009996E 04 METERS/SEC          0.15698371E 01 RAD.          0.59014572E 04 SEC

TBI
    -0.11146459E 00     -0.87951791E 00     -0.47433998E 00
     0.99906606E 00     -0.12661552E 00     -0.43146429E-08
    -0.60058784E-01     -0.47389712E 00      0.88033998E 00


FLIGHT SEGMENT  5

INERTIAL POSITION AND VELOCITY FOLLOW

 X = 0.49910939E 07 METERS          Y = 0.35364641E 07 METERS          Z = 0.26837805E 07 METERS
VX =-0.37640514E 04 METERS/SEC     VY = 0.97643134E 04 METERS/SEC     VZ =-0.20395626E 04 METERS/SEC

        RADIUS                          VELOCITY                          GAMMA                          TIME
 0.66798403E 07 METERS          0.10845073E 05 METERS/SEC          0.14186722E 01 RAD.          0.60644572E 04 SEC

TBI
    -0.11146459E 00     -0.87951791E 00     -0.47433998E 00
     0.99906606E 00     -0.12661552E 00     -0.43146429E-08
    -0.60058784E-01     -0.47389712E 00      0.88033998E 00
```

1	ERROR DEFINITION
2	INITIAL RADIAL POSITION
3	INITIAL DOWNRANGE POSITION
4	INITIAL CROSSRANGE POSITION
5	INITIAL RADIAL VELOCITY
6	INITIAL DOWNRANGE VELOCITY
7	INITIAL CROSSRANGE VELOCITY
8	AZIMUTH ALIGNMENT
9	INPLANE VERTICAL MISALIGNMENT ANGLE
10	OUT OF PLANE VERTICAL MISALIGNMENT ANGLE
11	CONSTANT RATE TRUNCATION
12	SINUSOIDAL RATE TRUNCATION (X BODY AXIS)
13	SINUSOIDAL RATE TRUNCATION (Y BODY AXIS)
14	SINUSOIDAL RATE TRUNCATION (Z BODY AXIS)
15	ROUNDOFF (X BODY AXIS)
16	ROUNDOFF (Y BODY AXIS)
17	ROUNDOFF (Z BODY AXIS)
18	CONING TRUNCATION (X BODY AXIS)
19	CONING TRUNCATION (Y BODY AXIS)
20	CONING TRUNCATION (Z BODY AXIS)
21	VIBRATORY TRUNCATION (X BODY AXIS)
22	VIBRATORY TRUNCATION (Y BODY AXIS)
23	VIBRATORY TRUNCATION (Z BODY AXIS)
24	GYRO QUANTIZATION (X BODY AXIS)
25	GYRO QUANTIZATION (Y BODY AXIS)
26	GYRO QUANTIZATION (Z BODY AXIS)
27	SIZE EFFECT

ERROR SUMMARY FOLLOWS

FLIGHT SEGMENT 1

FS	DELPA(M)	DELOR(M)	DELCR(M)	DELV-L(M/S)	DELGAM(URAD)	DELPSI(URAD)	DELTIME(MSEC)
2	1[illegible].1	-0.1	-0.0	0.00	-2.3	0.	0.
3	0.1	19.0	0.1	-0.00	-1.2	0.	0.
4	0.1	-0.0	19.9	-0.00	0.0	-2.6	0.
5	0.	-0.	0.	-0.00	0.0	0.	0.
6	-0.0	-0.0	-0.0	-0.00	0.	0.	0.
7	0.	-0.	0.	-0.00	0.0	0.	0.
8	0.0	-0.0	0.5	-0.00	-0.1	43.9	0.
9	0.0	0.1	-2.5	0.00	0.1	-62.7	0.
10	-0.3	2.2	-0.1	0.04	48.3	0.	0.
11	-0.2	0.5	0.1	0.02	25.7	0.	0.
12	-0.0	-0.0	0.3	-0.00	-0.0	25.5	0.
13	-0.1	0.0	-0.3	0.00	0.4	-231.1	0.
14	-1.3	5.2	-0.1	0.13	195.1	0.	0.
15	-0.0	-0.0	0.1	-0.00	-0.0	7.9	0.
16	0.1	0.0	-0.7	-0.00	0.2	-25.4	0.
17	-0.2	0.5	0.0	0.01	21.7	0.	0.
18	0.	-0.	0.	-0.00	0.0	0.	0.
19	0.	-0.	0.	-0.00	0.0	0.	0.
20	0.	-0.	0.	-0.00	0.0	0.	0.
21	-0.1	-0.0	0.8	-0.00	-0.1	59.2	0.
22	-0.3	0.0	-4.6	0.00	0.3	-191.4	0.
23	-1.1	4.3	-0.1	0.11	161.6	0.	0.
24	0.	-0.	0.	-0.00	0.0	0.	0.
25	0.	-0.	0.	-0.00	0.0	0.	0.
26	0.	-0.	0.	-0.00	0.0	0.	0.
27	0.1	0.0	-0.0	0.00	-0.0	0.	0.
RSS	1[illegible].2	21.1	21.6	0.18	260.1	317.5	0.

FLIGHT SEGMENT 2

FS	DELPA(M)	DELOR(M)	DELCR(M)	DELV-L(M/S)	DELGAM(URAD)	DELPSI(URAD)	DELTIME(MSEC)
2	1[illegible].2	-0.2	0.1	0.00	-1.4	0.	0.
3	0.4	13.7	0.1	-0.00	-0.0	0.	0.
4	0.1	-0.0	19.7	-0.00	0.0	-1.5	0.
5	-0.0	-0.0	-0.0	0.	0.0	0.	0.
6	-0.0	-0.0	-0.0	-0.00	0.0	0.	0.
7	-0.0	-0.0	-0.0	0.	0.0	0.	0.
8	0.1	-0.0	7.2	-0.00	-0.1	76.9	0.
9	-0.2	0.0	-7.4	0.00	0.1	-40.5	0.
10	-0.5	7.3	-0.1	0.07	50.3	0.	0.
11	-0.0	4.	-0.1	0.0	55.7	0.	0.
12	0.0	-0.0	5.6	-0.00	-0.1	66.9	0.
13	0.0	0.7	-41.0	0.00	0.5	-450.4	0.
14	-0.0	23.5	-0.2	0.39	492.2	0.	0.
15	0.0	-0.0	1.4	-0.00	-0.1	20.7	0.
16	-0.0	0.0	-4.8	-0.00	0.2	-39.0	0.
17	-0.0	3.1	0.1	0.04	43.7	0.	0.
18	-0.0	-0.0	-0.0	0.	0.0	0.	0.
19	-0.0	-0.0	-0.0	0.	0.0	0.	0.
20	-0.0	-0.0	-0.0	0.	0.0	0.	0.
21	-0.0	-0.0	12.9	-0.00	-0.1	155.2	0.
22	-0.3	0.0	-30.3	0.00	0.3	-292.9	0.

23	-2[illegible]	25.4	0.0	0.28	327.5	0.	0.
24	-0.0	-0.1	-0.6	0.	0.0	0.	0.
25	-[illegible]	-0.0	-0.0	0.	0.0	0.	0.
26	-0.0	-0.0	-0.0	0.	0.0	0.	0.
27	0.1	0.1	-0.0	0.01	-0.6	0.	0.
RSS	37.5	47.2	57.5	0.48	597.6	571.5	0.

FLIGHT SEGMENT 3

ES	DELRA(M)	DELDR(M)	DELCR(M)	DELVEL(M/S)	DELGAM(URAD)	DELPSI(URAD)	DELTIME(MSEC)
2	14.3	-4.7	-0.2	-0.00	-2.3	0.	0.
3	5.6	14.5	0.1	-0.02	0.1	0.	0.
4	-0.2	-0.1	15.6	-0.00	0.0	-1.9	0.
5	-0.0	-0.0	-0.0	-0.00	0.0	0.	0.
6	-0.0	-0.1	-0.0	-0.00	0.0	0.	0.
7	-0.0	-0.0	-0.0	-0.00	0.0	0.	0.
8	-0.4	-0.1	138.2	-0.00	0.1	87.7	0.
9	-0.6	0.1	-[illegible].7	-0.00	0.1	-13.8	0.
10	-78.1	39.7	0.1	0.22	45.0	0.	0.
11	-111.0	96.1	-0.2	0.27	65.3	0.	0.
12	-0.3	-0.5	247.8	-0.00	0.2	164.3	0.
13	-0.3	0.7	-1386.4	0.00	0.2	-679.8	0.
14	-1320.2	997.0	-0.6	3.12	994.1	0.	0.
15	0.4	-0.6	76.2	-0.00	0.0	50.9	0.
16	0.4	-0.2	-149.0	-0.00	0.1	-100.1	0.
17	-131.9	102.6	-0.5	0.37	122.7	0.	0.
18	-0.0	-0.0	-0.0	-0.00	0.0	0.	0.
19	-0.0	-0.0	-0.0	-0.00	0.0	0.	0.
20	-0.0	-0.0	-0.0	-0.00	0.0	0.	0.
21	-0.3	-0.0	576.7	-0.00	0.3	381.0	0.
22	-[illegible].7	0.0	-1115.0	0.00	0.2	-751.7	0.
23	-1142.0	772.7	-0.9	2.78	919.8	0.	0.
24	-0.0	-0.0	-0.0	-0.00	0.0	0.	0.
25	-0.0	-0.0	-0.0	-0.00	0.0	0.	0.
26	-0.0	-0.0	-0.6	-0.00	0.0	0.	0.
27	2.1	1.5	0.0	0.00	-0.3	0.	0.
RSS	1757.5	1272.5	1245.6	4.21	1291.0	1104.7	0.

FLIGHT SEGMENT 4

ES	DELRA(M)	DELDR(M)	DELCR(M)	DELVEL(M/S)	DELGAM(URAD)	DELPSI(URAD)	DELTIME(MSEC)
2	14.3	0.	-0.2	-0.00	-1.5	-0.0	0.5
3	5.6	0.	0.1	-0.01	-2.1	0.0	3.0
4	-0.2	-0.	15.6	-0.00	0.0	-1.9	-0.0
5	-0.0	0.	-0.0	-0.00	0.0	-0.0	0.0
6	-0.0	0.	-0.6	-0.00	0.1	-0.0	-0.0
7	-0.0	0.	-0.0	-0.00	0.0	-0.0	0.0
8	-0.4	0.	138.2	-0.00	0.1	87.7	-0.0
9	-0.6	-0.	-0.7	-0.00	0.1	-13.8	-0.0
10	-78.2	0.	0.1	0.22	31.4	0.0	-5.3
11	-111.1	0.	-0.2	0.27	50.7	-0.0	-9.2
12	-0.3	0.	247.8	-0.00	0.3	164.3	0.0
13	-0.3	-0.	-1386.5	0.00	0.1	-679.9	-0.1
14	-1321.2	0.	-0.6	3.13	742.6	-0.0	-125.0

15	[illegible]	[illegible]	7[illegible].2	[illegible]	[illegible].1	50.9	0.0
16	[illegible]	[illegible]	-149.0	[illegible]	0.1	-100.1	0.0
17	[illegible]	[illegible]	[illegible]	0.37	107.1	-0.0	-16.5
18	[illegible]	0.	[illegible]	[illegible]	0.0	-0.0	0.0
19	[illegible]	0.	-0.0	[illegible]	[illegible]	-0.0	0.0
20	[illegible]	[illegible]	[illegible]	[illegible]	0.0	-0.0	0.0
21	[illegible]	[illegible]	576.2	[illegible]	0.4	381.9	0.1
22	[illegible]	-0.	-1118.1	0.00	0.1	-751.7	-0.1
23	[illegible]	0.	[illegible]	2.78	802.4	-0.0	-124.0
24	[illegible]	0.	[illegible]	[illegible]	[illegible]	-0.0	0.0
25	[illegible]	0.	[illegible]	[illegible]	[illegible]	-0.0	0.0
26	[illegible]	0.	[illegible]	[illegible]	0.0	-0.0	0.0
27	[illegible]	0.	0.0	[illegible]	-1.0	0.0	0.2
RSS	[illegible]	[illegible]	1944.7	4.21	1100.1	1104.7	177.1

FLIGHT SEGM[illegible]

ES	DELTA(M)	[illegible](M)	[illegible](M)	DELV L(M/S)	DELGAM(URAD)	DELPSI(URAD)	DELTIME(MSEC)
2	[illegible]	[illegible]	[illegible]	[illegible]	-1.7	0.	0.4
3	[illegible]	[illegible]	[illegible]	[illegible]	-1.7	0.	3.0
4	[illegible]	[illegible]	12.[illegible]	[illegible]	0.0	-1.7	-0.1
5	[illegible]	[illegible]	[illegible]	[illegible]	0.0	0.	0.
6	[illegible]	[illegible]	[illegible]	[illegible]	0.0	0.	-0.1
7	[illegible]	[illegible]	[illegible]	[illegible]	0.0	0.	0.
8	[illegible]	[illegible]	417.7	[illegible]	0.1	86.8	-0.1
9	[illegible]	[illegible]	[illegible]	[illegible]	0.1	-6.7	-0.1
10	[illegible]	[illegible]	[illegible]	[illegible]	39.0	0.	-5.4
11	-271.5	[illegible]	[illegible]	0.73	186.4	0.	-9.2
12	[illegible]	2.1	31[illegible].1	[illegible]	[illegible]	194.5	0.
13	[illegible]	[illegible]	[illegible]	[illegible]	8.6	-777.6	-0.1
14	[illegible]	1147.[illegible]	[illegible]	4.77	1020.4	0.	-125.0
15	[illegible]	[illegible]	150.0	[illegible]	9.3	60.3	0.
16	[illegible]	[illegible]	-324.7	[illegible]	[illegible]	-139.3	0.
17	[illegible]	172.[illegible]	[illegible]	[illegible]	235.8	0.	-16.5
18	[illegible]	[illegible]	[illegible]	[illegible]	2.7	0.	0.
19	-2.2	1.	[illegible]	[illegible]	2.7	0.	0.
20	-2.2	[illegible]	[illegible]	[illegible]	2.7	0.	0.
21	[illegible]	[illegible]	11[illegible]7.3	[illegible]	[illegible]	451.9	0.1
22	[illegible]	[illegible]	[illegible]	[illegible]	7.6	-1044.9	-0.2
23	[illegible]	1124.[illegible]	[illegible]	[illegible]	1243.5	0.	-124.0
24	[illegible]	[illegible]	[illegible]	[illegible]	2.7	0.	0.
25	[illegible]	1.	[illegible]	[illegible]	2.7	0.	0.
26	[illegible]	[illegible]	[illegible]	[illegible]	2.7	0.	0.
27	[illegible]	[illegible]	[illegible]	[illegible]	-0.9	0.	0.1
RSS	[illegible]	[illegible]	3631.4	7.94	1637.[illegible]	1403.3	177.2

ERROR TRAC[illegible] CALL[illegible] [illegible]

CALLING ROUTINE	[illegible]	ABSOLUTE LOCATION
FIS[illegible]	16[illegible]	42573
F[illegible]	13	44131

```
SUBL                    1          2304
MAIN                   15          04445
END OF FILE READING          UNITS
EXECUTION TERMINATED.
```

END

APPENDIX E

EXAMPLE RUN

APPENDIX A - DICTIONARY OF VARIABLES

APPENDIX B

SUBROUTINE DESCRIPTION

APPENDIX C

PROGRAM LISTING