FINAL REPORT

CONTRACT NO. NAS8-18049, MOD. 1

7740-7010 TELEPROCESSING SYSTEM WORKLOAD ANALYSIS

Submitted to
The George C. Marshall Space Flight Center
National Aeronautics and Space Administration
Huntsville, Alabama

By
The Department of Industrial Engineering
Auburn University
Auburn, Alabama

December 1967

LIST OF TABLES

Tables		Page
1.	7740-7010 Data Processing System	1
2.	Off-line with 7740 Continuing Operations	4
3.	Duration of Downtime on 7740 Continuing Operation	5
4.	Off-line with 7740 Discontinuing Operations	6
5.	Duration of Downtime on 7740 Discontinuing Operations	6
6.	Actual Delay vs Hour of the Day-average	10
7.	Simulated Delay vs Hour of the Day	10
8.	System Description	11

TABLE OF CONTENTS

	Page
LIST OF TABLES	i
INTRODUCTION	1
OBJECTIVE	2
GENERAL APPROACH	2
ASSUMPTIONS	3
SYSTEM AND SYSTEM COMPONENT DOWNTIME	4
STUDY PROCEDURES	7
THE SIMULATION MODEL	7
RESULTS AND CONCLUSIONS	9
APPENDIXES	12

1. System Component Data
2. Workload Data
3. The Simulation Flow Diagram Program and Results

INTRODUCTION

The George C Marshall Space Flight Center has recently installed a new data processing computer system. The system is generally characterized by teleprocessing of messages received from remote terminals that are strategically located throughout the space flight center. Messages are processed at a single central processing area and are then relayed to one or more of the remote terminals. Currently the messages are classified as 1) inventory (materials) coded as D350A, 2) PERT coded as D7977, 3) parts and reliability (PRINTS) coded as A4275, 4) video tape management systems (MMS) coded as D6710, and 5) library coded as A761B. Each remote terminal serves as a sender and/or receiver of one or more of the five message types. The following diagram displays the general system:

TABLE 1

7740-7010 DATA PROCESSING SYSTEM

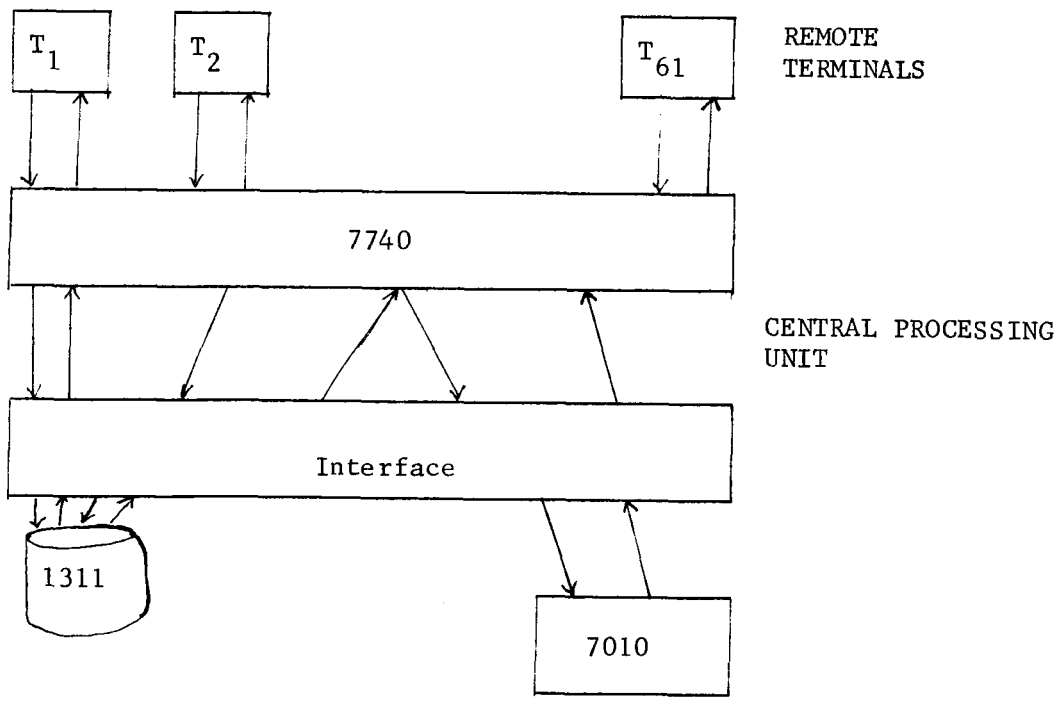

The route of a typical message sent from and returned to terminals is as follows: A message sent from a terminal is initially received by the 7740 from where it proceeds through the interface block to the 1311. From the 1311 the message then returns to the interface, the 7740, and the interface in that order. Finally, the message arrives at the 7010 for processing. Following processing, if results are to be transmitted back to one or more of the terminals, they follow the reverse path of an incoming message, viz, 7010 to interface to 7740 to interface to 1311 to interface to 7740 and then to the terminal(s).

There are many variable aspects of the computing system that give rise to potential problems such as excessive turnaround time for message processing. Some of these variable aspects are 1) number of messages from terminals, 2) size of messages from terminals, 3) types of messages from terminals, 4) delay time in the 7740 while waiting for 7010 processing, 5) 7010 processing time, 6) delay time in the 7740 while waiting for distribution to terminals, 7) distribution characteristics to receiving terminals, 8) downtime of the 7010, 9) downtime of the entire system, 10) frequency of 7010 down time, and 11) frequency of system downtime. In addition, there are possibly cyclic fluctuations in workload, and a general increase in workload overtime. This research is addressed to the problems associated with the above.

OBJECTIVE

The objective of the research was to develop a simulation model for investigating and analyzing the impact of adding to the teleprocessing system additional terminals and/or workload above the present level, and for predicting at what point in time excessive turnaround will result from overloading key components of the system.

GENERAL APPROACH

The general approach taken to the problem was to construct a computer simulation model of the system. The simulation model was constructed using GPSS III (General Purpose System Simulator), and was capable of portraying system response to a variety of loading conditions. In particular, the impact of additional and of increasing workload was of interest. Workload trends for existing terminals were analyzed from historical data supplied by the MSFC The simulation model was made as general as possible.

ASSUMPTIONS

Of necessity several assumptions had to be made for the simulation model because of the need for simplification, convenience in constructing the model, and use of the sometimes limited amount of historical data. These assumptions are:

1. The frequency and length of messages from terminals are exponentially distributed and are generated in the simulation model as such.
2. The probability that a message sender at a terminal will enter at least one entry per 20 seconds is 1.0.
3. There is no significant delay in a message going from a terminal to the 7740.
4. Some messages will go from a terminal to the 7740 and then to a terminal(s) thus bypassing the 7010--these messages will not be considered by the simulation model.
5. 7010 processing time is a function of message size.
6. When a message leaves the 7010 it enters an imaginary queue in the 7740 to await transmittal to the terminal(s).
7. A single input message may generate results that are to be transmitted to two or more receiving terminals. The simulation model performs such a message split in a manner to be described later.
8. Downtime for the 7010 and the entire system was generated from empirical data.
9. If the 7010 is down for more than four hours the entire system is considered down.
10. There is no priority on incoming or outgoing messages at any stage in the system.
11. Time required for transition through the interface is .15 seconds per message segment (.4 seconds for the average size message of 2.67 segments.)
12. Sending speed for a message from a terminal to the 7740 is .16-.20 seconds.
13. If the 7010 is available to accept an incoming message, the message goes directly from the 1311 to the interface and then to the 7010 (the interface is preempted)
14. A message returning from the 7010 to the terminals halts at the 1311 for an availability check of receiving terminals. If the receiving terminal(s) are available the interface is preempted by the returning message.

SYSTEM AND SYSTEM COMPONENT DOWNTIME

Estimates of downtime frequency and duration of downtime were required for analysis of the computer system simulation model. Two types of downtime for the system were considered, viz. off-line downtime with the 7740 continuing operations, and off-line downtime with the 7740 discontinuing operations. Historical data were analyzed to generate the probability distributions for each type of downtime, even though the data were sparse and the resulting distributions generated were only very crude approximations of the actual distributions

From the data made available by the MSFC a frequency tally of 1) interval between successive downtimes, and 2) duration of downtime was made for each type of downtime considered for the model. Histograms of each frequency tally were then drawn, and from the histograms a general form of a probability distribution could be determined The results of the frequency tallies, and the histograms are shown in Table 2.

TABLE 2

OFF-LINE WITH 7740 CONTINUING OPERATIONS

Interval Between Successive Down times (Days)	Frequency	Proportion
0	2	.0310
1	43	.6720
2	12	.1875
3	4	.0625
4	2	.0310
5	0	.0000
6	1	.0160

TABLE 3

DURATION OF DOWNTIME ON 7740 CONTINUING OPERATION

Duration of Downtime (Hours)	Frequency
.01 - .11	0
.11 - .21	2
.21 - .31	1
.31 - .41	0
.41 - .51	3
.51 - .61	1
.61 - .71	1
.71 - .81	7
.81 - .91	7
.91 - 1.01	11
1.01 - 1.11	10
1.11 - 1.21	1
1.21 - 1.31	6
1.31 - 1.41	1
1.41 - 1.51	1
1.51 - 1.61	30
1.61 - 1.71	0
1.71 - 1.81	4
1.81 - 1.91	2
1.91 - 2.01	4
2.01 - 2.11	1
2.11 - 2.21	2
2.21 - 2.31	0
.	.
2.61 - 2.71	0
2.71 - 2.81	1
2.81 - 2.91	0
2.91 - 3.01	0
3.01 - 3.11	1
.	.
3.91 - 4.01	1

TABLE 4

OFF-LINE WITH 7740 DISCONTINUING OPERATIONS

Interval Between Successive Down Times (Days)	Frequency	Proportion
0	0	.0
1	7	.7
2	2	.2
3	0	.0
4	0	.0
5	1	.1

TABLE 5

DURATION OF DOWNTIME ON 7740 DISCONTINUING OPERATIONS

Duration of Downtime (Hours)	Frequency
.01 - .65	2
.66 - 1.30	9
1.31 - 1.95	1
1.96+	1

STUDY PROCEDURES

The general approach taken to this research was the construction of a computer simulation model of the teleprocessing system. The model is capable of portraying system response to a variety of loading conditions. Workload trends for existing terminals were analyzed from historical data. Workload trends for new terminals were estimated from trends of similar existing terminals. The simulator was made as general as possible so that peak load analyses as well as average load analyses may be run.

The model was constructed such that the following factor can be specified as input parameters:

Each Terminal

(1) Probability distribution of frequency for each job type.

(2) Time trend parameters for each job type.

(3) Probability distribution of message length (no. segments) for each job type.

THE SIMULATION MODEL

The central part of the effort in this research was to create a model to simulate the Data Center Division. The steps in creating this model were (1) System description, (2) Data acquisition, (3) Data analysis, (4) Model description, (5) Model coding and (6) Model verification.

In Table 1 the system is graphically described for purposes of the simulation. The system description was limited by data and the accuracy of the size of the simulation. It is impossible to describe completely the system, hence the model is simplified but is adequate for decision making and study purposes. The precise system is shown in Table 8 for hardware components.

Data were recorded about the message processing as shown in the breakdown of each record in Appendix 1. For purposes of simulation this data is hardly adequate to produce meaningful results. Times are only recorded to the nearest .01 hours or 36 seconds and the clocks were not synchronized. Following is a list of specific data improvements needed for future studies.

1. Improved "accuracy" of data (e.g. not .01 hrs.)
2. Synchronization of clocks
3. Segments vs. messages
4. Sending and receiving rates

5. 1311 to 7010 time

6. Downtime data (frequency and duration)

7. Queue lengths at critical points (time and number)

Even though the data were of limited accuracy of the data, processing times and turn around time were estimated close enough to permit simulation of the system. The data were analyzed by terminal and job number for several representative days. A sample of the workload study is shown in Appendix 2.

The core of the research effort was the translation of the real description to a suitable flow diagram to allow coding of the system in the General Purpose System Simulator. The actual flow diagram is shown in Appendix 3 along with the program developed to simulate the system. Appendix 3 also has an explanation of the coding used in the Simulation.

The simulation includes all the components shown in Table 1. The simulation program develops randomly input rates by hour of the day. These rates were determined from actual data. The input is stored in the 7740 until the 7010 can process the data. A queue may develop in the 7740. The average length of this queue was the key parameter used to varify the results. The model is completely general, hence any input rate could be specified by hour of the day and its effect on queue length and turn around time determined. The effect of adding a terminal or increasing the processing speed could be handled with only minor changes in the program.

Following development of the model it was necessary to verify that the model described the real system with reasonable accuracy. In order to verify the model, average delay time by hour of day in the 7740 for both the real system and the simulated model was obtained. As shown in Tables 6 and 7 the model was sufficiently close to allow generalizations to be made from it.

RESULTS AND CONCLUSIONS

The simulation performed accurately described the system as it now operates as shown in Tables 6 and 7. The model is now capable of answering questions about the effect of increasing workloads, addition of terminals, and increase in computational ability.

The workload study indicated that most of the entries are a result of the inventory system. As inventory is a direct function of the activity of the center the load could be estimated by using projected center activity as an indicator. The video tape management system also contributes to the load and may be expected to increase with activity.

The primary result of this study was the creation of a simulation of the 7740-7010 data processing system. Questions can now be asked concerning the effect of adding terminals, increasing workloads, or studying downtime. The workload studies would enable one to simulate proposed systems with accuracy not possible otherwise.

A secondary result was the establishment of the fact that complex computer systems can be simulated by the General Purpose Systems Simulator. A tool is available to analyze the cost effectiveness of a computer system before a contract is given. Also the difficulties of making the transition from an old system to a new one could be explored thereby improving the transition process.

TABLE 6

ACTUAL DELAY vs HOUR OF THE DAY-AVERAGE

Time	Average	Maximum
6:30 - 7:30	20.76 Sec.	2 Min. 24.00 Sec.
7:30 - 8:30	1 Min. 15.59 Sec.	7 Min. 48.00 Sec.
8:30 - 9:30	1 Min. 12.64 Sec.	37 Min. 12.00 Sec.
9:30 - 10:30	1 Min. 1.42 Sec.	6 Min. 0.00 Sec.
10:30 - 11:30	15 Min. 26.24 Sec.	66 Min. 0.00 Sec.
11:30 - 12:30	2 Min. 21.22 Sec.	35 Min. 24.00 Sec.
12:30 - 1:30	1 Min. 43.17 Sec.	6 Min. 0.00 Sec.
1:30 - 2:30	9 Min. 36.87 Sec.	42 Min. 36.00 Sec.
2:30 - 3:30	2 Min. 8.00 Sec.	16 Min. 48.00 Sec.

TABLE 7

SIMULATED DELAY vs HOUR OF THE DAY

Time	Average
6:30 - 7:30	19.7472 Sec.
7:30 - 8:30	3 Min. 44.6335 Sec. *
8:30 - 9:30	*
9:30 - 10:30	*
10:30 - 11:30	2 Min. 26.4329 Sec.
11:30 - 12:30	19.7472 Sec.
12:30 - 1:30	*
1:30 - 2:30	2 Min. 26.4329 Sec.
2:30 - 3:30	19.7472 Sec.

* Simulation was not completed because of storage overflow.

TABLE 8

7740-7010 SYSTEM DESCRIPTION

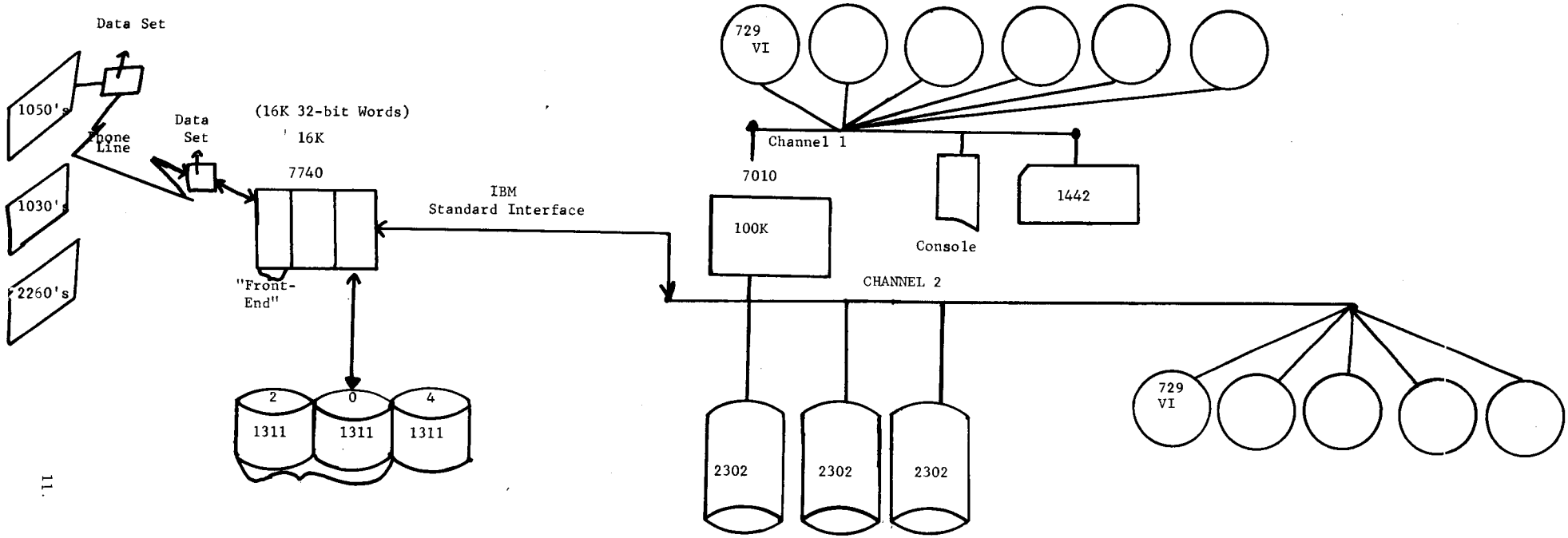

2	LSA	28	CC Lines (14.8 char/sec)
		2	Wrap
		1	Console
		1	Delay (7740)
2	HSSS	5	CC Lines
		9	600 band (1030)
		1	1200 band (2848/2260)

APPENDIX 1

SYSTEM COMPONENT DATA

File Content:

I = message from 7740 to 7010, Input

O = message from 7010 to 7740, Output

B = either or both

A	1-3	B	Station sending message.
B	4-6	B	Station receiving message.
C	7-10	B	Date message received by 7740, MMDD, ex JN16.
D	11-14	I	Time received by 7010
		O	Time input message that created this Output was received at 7010.
E	15-18	I	Time message received at 7740.
		O	Same as 11-14.
F	19-22	I	Message sequence number as received by 7010, serial by day. (Assgn by 7740)
		O	Message sequence, serial from each initialization, of 7010 Output messages.
G	23-26	I	Message sequence number, serial by day, as sent from the sending station.
		O	"0000"
H	27-31	B	Job number used for accounting and determination of application.
I	32-35	I	Time difference between receiving 1st and last of message. Includes application processing time.
		O	'0000'
J	36-39	B	Number of segments in message.
	40-80	B	Blank
	81	B	' '

NOTE: One message may have multiple destinations. Only the 7010 is shown for those multi-destined messages; i.e. terminal to terminal is not in file. One record per destination is created for multi-destined Output messages. 'HST' to 'HST' (7010 to 7010) messages are shown only as input.

MESSAGE ANALYSIS FILE FOR AUBURN

Format: 80 characters plus record mark blocked 25.

Sequence: Date, sending terminal, message number.

Background: The 7010, called 'HST' for host, is tied to the 7740. The

7740 has many remote terminals. The terminals 'send to' and 'receive from' the 7740 as does the 7010. The 7010 creates a log of information for each message it receives from or sends to the 7740. The message analysis file is extracted from these logs.

JOB CODES

D350A	Material	(Supply)	3179
D7977	PACCT	(PERT)	
A4275	PRINCE	(Parts info. & reliability)	
A751B	RSIC	(Library)	
D6710	MMS	(MSFC Management Sys.-Vidio)	

Type of terminal chart:

Name	Gear	Name	Gear	Name	Gear
HST =	7010	A17 =	1052	J34 =	1030
A00 =	1052	A28 =	1052	J35 =	1030
J00 =	1056	S28 =	1058	J40 =	1030
S00 =	1058	J28 =	1056	J41 =	1030
A01 =	1052	A29 =	1052	J42 =	1030
A02 =	1052	J29 =	1056	S30 =	1058
A03 =	1052	A51 =	1052	S22 =	1058
A04 =	1053	J51 =	1056	S12 =	1058
A05 =	1052	S51 =	1058	S25 =	1058
A06 =	1053	B51 =	1052	J23 =	1056
A07 =	1052	K51 =	1056	C51 =	1052
A08 =	1053	T51 =	1058	CSL =	1052
A09 =	1053	J18 =	1056		1056
A10 =	1052	A19 =	1052	TTT =	1052
A11 =	1052	A21 =	1052		1056
A13 =	1053	J21 =	1056		
A14 =	1053	A24 =	1052		
A15 =	1052	A26 =	1052		
J15 =	1066	J26 =	1056		
S15 =	1058	J31 =	1030		
A16 =	1052	J32 =	1030		
J16 =	1056	J33 =	1030		

1052 = keyboard
1053 = printer
1056 = card reader
1058 = card punch
1030 = card & slide reader

1. Any transmission to any type of 1050 is at 14.8 characters per second. 2260 speed is 120 characters per second.
2. Average segment length is 80 char.
3. Average pause between segments is 1 sec.
4. Average pause between messages is 6 sec.

A15	HST	DC01	1347	1341	1956	0013	D350A	0000	0004
A15	HST	DC01	1355	1350	1970	0014	D350A	0000	0004
A15	HST	DC01	1363	1358	1996	0015	D350A	0002	0003
A15	HST	DC01	1410	1403	2205	0016	D350A	0000	0004
A16	HST	DC01	0702	0701	0004	0001	D350A	0000	0006
A16	HST	DC01	0707	0707	0006	0002	D350A	0001	0031
A16	HST	DC01	0708	0707	0007	0003	D350A	0000	0002
A16	HST	DC01	0720	0719	0012	0004	D350A	0002	0041
A16	HST	DC01	0723	0723	0019	0005	D350A	0000	0021
A16	HST	DC01	0725	0724	0023	0006	D350A	0000	0005
A16	HST	DC01	0725	0725	0026	0007	D350A	0000	0004
A16	HST	DC01	0748	0748	0137	0008	D350A	0000	0004
A16	HST	DC01	0758	0757	0225	0009	D350A	0000	0004
A16	HST	DC01	0795	0794	0427	0010	D350A	0000	0009
A16	HST	DC01	0798	0797	0447	0011	D350A	0000	0015
A16	HST	DC01	0803	0802	0463	0012	D350A	0000	0027
A16	HST	DC01	0807	0806	0483	0013	D350A	0001	0025
A16	HST	DC01	0812	0811	0520	0014	D350A	0000	0025
A16	HST	DC01	0822	0820	0576	0015	D350A	0000	0052
A16	HST	DC01	0825	0823	0592	0016	D350A	0000	0020
A16	HST	DC01	0843	0842	0656	0017	D350A	0002	0025
A16	HST	DC01	0845	0843	0659	0018	D350A	0000	0003
A16	HST	DC01	0848	0846	0667	0019	D350A	0002	0021
A16	HST	DC01	0850	0848	0675	0020	D350A	0000	0010
A16	HST	DC01	0853	0851	0684	0021	D350A	0000	0017
A16	HST	DC01	0853	0851	0685	0022	D350A	0000	0002
A16	HST	DC01	0857	0855	0693	0023	D350A	0000	0020
A16	HST	DC01	0857	0855	0694	0024	D350A	0000	0002
A16	HST	DC01	0867	0865	0711	0025	D350A	0000	0003
A16	HST	DC01	0882	0879	0730	0026	D350A	0000	0003
A16	HST	DC01	0913	0911	0777	0027	D350A	0000	0005
A16	HST	DC01	0958	0956	0954	0028	D350A	0000	0003
A16	HST	DC01	0962	0959	0971	0029	D350A	0001	0018
A16	HST	DC01	0968	0966	0995	0030	D350A	0002	0027
A16	HST	DC01	0973	0970	1014	0031	D350A	0000	0021
A16	HST	DC01	0993	0990	1060	0032	D350A	0000	0013
A16	HST	DC01	0998	0995	1078	0033	D350A	0000	0025
A16	HST	DC01	1005	1002	1107	0034	D350A	0002	0043
A16	HST	DC01	1013	1010	1143	0035	D350A	0002	0044
A16	HST	DC01	1020	1016	1157	0036	D350A	0000	0035
A16	HST	DC01	1030	1027	1170	0037	D350A	0000	0005
A16	HST	DC01	1075	1071	1338	0038	D350A	0000	0005
A16	HST	DC01	1077	1074	1362	0039	D350A	0000	0003
A16	HST	DC01	1082	1077	1390	0040	D350A	0000	0004
A16	HST	DC01	1208	1129	1572	0041	D350A	0000	0003
A16	HST	DC01	1210	1131	1595	0042	D350A	0000	0007
A16	HST	DC01	1210	1136	1609	0043	D350A	0002	0026
A16	HST	DC01	1212	1140	1629	0044	D350A	0001	0027
A16	HST	DC01	1213	1144	1640	0045	D350A	0002	0019
A16	HST	DC01	1215	1149	1642	0046	D350A	0000	0028
A16	HST	DC01	1217	1152	1650	0047	D350A	0000	0018
A16	HST	DC01	1218	1157	1653	0048	D350A	0000	0031
A16	HST	DC01	1218	1162	1655	0049	D350A	0000	0030
A16	HST	DC01	1218	1167	1657	0050	D350A	0002	0027
A16	HST	DC01	1225	1178	1664	0051	D350A	0000	0005
A16	HST	DC01	1225	1184	1665	0052	D350A	0002	0023
A16	HST	DC01	1228	1187	1666	0053	D350A	0002	0017
A16	HST	DC01	1230	1190	1668	0054	D350A	0002	0015

APPENDIX 2

WORKLOAD DATA

```
ISN        SOURCE STATEMENT

  0 $IBFTC
  1        LOGICAL END
  2        END=.FALSE.
  3        COMMON/ENDREC/LAST
  4        ASSIGN 945 TO LAST
  5        INTEGER LET(9),ALPHA,TIME,SUM2,CTIME,ST,SL,A1,A2,A3,TT,SUMS2
  6        INTEGER TYPE1, TYPER(5),DATE
  7        INTEGER TOTJ
 10        INTEGER TER(9),TABLE(44,9,5),SEGTAB(44,9,5),BLANK
 11        DATA BLANK/5H     /
 12         DATA ST/2HST/,SL/2HSL/,TT/2HTT/,          A1/2HA1/,A2/2HA2/,A3/2HA
           13/,                        CTIME/650/
 13        TTIME=0.0
 14        TOTJOB=0.0
 15        WRITE(6,522)
 16    522 FORMAT(10HA$NOHEADER)
 17        READ(5,774)  TER
 21    774 FORMAT(9(A3,1X))
 22        READ(5,51)TYPER
 24     51 FORMAT(  6(A5,5X))
 25        READ(5,1)LET
 27      1  FORMAT(9A1)
    C      A=1,J=2,S=3,B=4,C=5,D=6,H=7,K=8,T=9,--=-COLUMN IN MATRIX TABLES
    C
 30         CALL ZERO(TABLE(1,1,1),TABLE(44,9,5))
 31         CALL ZERO(SEGTAB(1,1,1 ),SEGTAB(44,9,5))
 32      3  READ(4,2)ALPHA,NUM,DATE
 36      2  FORMAT(A1,A2,5X,I2)
 37        IPOS=1
 40        IF(NUM.NE.ST.AND.NUM.NE.SL.AND.NUM.NE.A1.AND.NUM.NE.A2.AND.NUM.NE.
           1A3                .AND.NUM.NE.TT) GOTO 40
 43         NUM1=44
 44        GOTO 5
 45     40 READ(10,31)ALPHA,NUMN
 50     31 FORMAT(A1,I2)
 51        IF(NUMN.NE.0) GOTO 32
 54        NUM1=44
 55        GOTO 5
 56     32 IF(NUMN.NE.51) GOTO 4
 61        NUM1=43
 62        GOTO 5
 63      4 READ(10,31)ALPHA,NUM1
 66      5 DO6I=1,9
 67        IF(ALPHA.NE.LET(I))GOTO 6
 72        II=I
 73        GOTO 7
 74      6 CONTINUE
 76        GOTO 99
    C
    C     STATEMENT 99IS AN ERROR MESSAGE
    C
 77      7 READ(10,52)TYPE1
101     52 FORMAT(26X,A5)
102        DO53JJ=1,5
103        IF(TYPE1.NE.TYPER(JJ))GOTO 53
```

```
ISN        SOURCE STATEMENT

106        J=JJ
107        GOTO 777
110     53 CONTINUE
112        GOTO 99
113    777 SEGTAB(NUM1,II,J)=SEGTAB(NUM1,II,J)+ 1
114    991 CONTINUE
115        IF(IPOS.EQ.2)GOTO 3
120        IPOS= 2
121        READ(10,20)ALPHA,NUM
124     20 FORMAT(3X,A1,A2)
125        IF(NUM.NE.ST.AND.NUM.NE.SL.AND.NUM.NE.A1.AND.NUM.NE.A2.AND.NUM.NE.
          1A3              .AND.NUM.NE.TT) GOTO 50
130        NUM1=44
131        GOTO 5
132     50 READ(10,21)ALPHA,NUMN
135     21 FORMAT(3X,A1,I2)
136        IF(NUMN.NE.0) GOTO 41
141        NUM1=44
142        GOTO 5
143     41 IF(NUMN.NE.51) GOTO 44
146        NUM1=43
147        GOTO5
150     44 READ(10,21)ALPHA,NUM1
153        GOTO 5
154     99 WRITE(6,8)
155      8 FORMAT(////1X,130(1H*)//1X,50HOOPS, I HAVE FOUND AN ERROR IN THE T
          1ERMINAL CODE.     //1X,130(1H*)////)
156        GOTO 991
157    945 END = .TRUE.
160    947 CONTINUE
161        DO54I=1,44
162        DO54J=1,9
163        DO54K=1,5
164        TOTJ=TOTJ+SEGTAB(I,J,K)
165     54 CONTINUE
171        TOTJ08=TOTJ/2
172        DO59J=1,44
173        DO59K=1,9
174        DO59I=1,5
175     60 TABLE(J,K,I)=SEGTAB(J,K,I)
176     59 CONTINUE
202        WRITE(6,775)((TYPER(I),I=1,5),J=1,3)
213    775 FORMAT(1H1,3(8HTERMINAL,1X,5(A5,1X),4X))
214        DO57J=1,42
215        WRITE(6,56)    (LET(I),J,(TABLE(J,I,K),K=1,5),I=1,3)
226     56 FORMAT(1X,2(3X,A1,I2,3X,5(I5,1X),4X),3X,A1,I2,3X,5(I5,1X))
227     57 CONTINUE
231        J=43
232        K=51
233        WRITE(6,78)  (LET(I),K,I=1,9)
240     78 FORMAT(/5X,9(A1,I2,10X))
241        WRITE(6,79)   ((TYPER(I),TABLE(J,K,I),K=1,9),I=1,5)
252     79 FORMAT(1X,5(9(A5,1X,I5,2X),/1X))
253        WRITE(6,80)   (TER(I),I=1,9)
260     80 FORMAT(/5X,9(A3,10X))
```

```
ISN        SOURCE STATEMENT

261        J=44
262        WRITE(6,79)  ((TYPER(I),TABLE(J,K,I),K=1,9),I=1,5)
273        WRITE(6,773)  TOTJOB
274    773 FORMAT( 5X,27HTHE TOTAL NUMBER OF JOBS IS ,F8.0  ,
          1  10X,        34H** MEANS THERE IS NO SUCH TERINAL          )
275        IF(END) GOTO 766
300    766 STOP
301        END
```

TERMINAL	D6710	A4275	D350A	A761B	D7977	TERMINAL	D6710	A4275	D350A	A761B	D7977	TERMINAL	D6710	A4275	D350A	A761B	D7977
A 1	0	0	187	0	0	J 1	0	0	0	0	0	S 1	0	0	0	0	0
A 2	0	0	35	0	0	J 2	0	0	0	0	0	S 2	0	0	0	0	0
A 3	0	0	196	0	0	J 3	0	0	0	0	0	S 3	0	0	0	0	0
A 4	0	0	246	0	0	J 4	0	0	0	0	0	S 4	0	0	0	0	0
A 5	0	0	98	0	0	J 5	0	0	0	0	0	S 5	0	0	0	0	0
A 6	0	0	53	0	0	J 6	0	0	0	0	0	S 6	0	0	0	0	0
A 7	0	0	135	0	0	J 7	0	0	0	0	0	S 7	0	0	0	0	0
A 8	0	0	104	0	0	J 8	0	0	0	0	0	S 8	0	0	0	0	0
A 9	0	0	421	0	0	J 9	0	0	0	0	0	S 9	0	0	0	0	0
A10	0	0	70	0	0	J10	0	0	0	0	0	S10	0	0	0	0	0
A11	0	0	68	0	0	J11	0	0	0	0	0	S11	0	0	0	0	0
A12	0	0	0	0	0	J12	0	0	0	0	0	S12	0	0	71	0	0
A13	0	0	145	0	0	J13	0	0	0	0	0	S13	0	0	0	0	0
A14	0	0	143	0	0	J14	0	0	0	0	0	S14	0	0	0	0	0
A15	0	0	350	0	0	J15	0	0	0	0	0	S15	0	0	195	0	0
A16	0	0	67	0	0	J16	0	0	0	0	0	S16	0	0	0	0	0
A17	0	0	0	0	0	J17	0	0	0	0	0	S17	0	0	0	0	0
A18	0	0	0	0	0	J18	0	0	0	0	0	S18	0	0	0	0	0
A19	0	0	102	0	0	J19	0	0	0	0	0	S19	0	0	0	0	0
A20	0	0	0	0	0	J20	0	0	0	0	0	S20	0	0	0	0	0
A21	0	18	0	0	0	J21	0	0	0	0	0	S21	0	0	0	0	0
A22	0	0	0	0	0	J22	0	0	0	0	0	S22	0	0	0	0	0
A23	0	0	63	0	0	J23	0	0	0	0	0	S23	0	0	0	0	0
A24	0	0	139	0	0	J24	0	0	0	0	0	S24	0	0	0	0	0
A25	0	0	0	0	0	J25	0	0	0	0	0	S25	0	0	0	0	0
A26	0	0	229	0	0	J26	0	0	0	0	0	S26	0	0	0	0	0
A27	0	0	0	0	0	J27	0	0	0	0	0	S27	0	0	0	0	0
A28	0	0	0	27	0	J28	0	0	0	0	0	S28	0	0	0	0	0
A29	0	0	0	0	0	J29	0	0	0	0	0	S29	0	0	0	0	0
A30	0	0	0	0	0	J30	0	0	0	0	0	S30	0	0	0	0	0
A31	0	0	0	0	0	J31	0	0	548	0	0	S31	0	0	0	0	0
A32	0	0	0	0	0	J32	0	0	94	0	0	S32	0	0	0	0	0
A33	0	0	0	0	0	J33	0	0	491	0	0	S33	0	0	0	0	0
A34	0	0	0	0	0	J34	0	0	217	0	0	S34	0	0	0	0	0
A35	0	0	0	0	0	J35	0	0	204	0	0	S35	0	0	0	0	0
A36	0	0	0	0	0	J36	0	0	0	0	0	S36	0	0	0	0	0
A37	0	0	0	0	0	J37	0	0	0	0	0	S37	0	0	0	0	0
A38	0	0	0	0	0	J38	0	0	0	0	0	S38	0	0	0	0	0
A39	0	0	0	0	0	J39	0	0	0	0	0	S39	0	0	0	0	0
A40	0	0	0	0	0	J40	0	0	0	0	0	S40	0	0	0	0	0
A41	0	0	0	0	0	J41	0	0	244	0	0	S41	0	0	0	0	0
A42	0	0	0	0	0	J42	0	0	116	0	0	S42	0	0	0	0	0

A51		J51		S51		B51		C51		D51		H51		K51		T51	
D6710	0	D6710	0	D6710	0	D6710	0	D6710	0	D6710	0	D6710	0	D6710	0	D6710	0
A4275	0	A4275	0	A4275	0	A4275	0	A4275	0	A4275	0	A4275	0	A4275	0	A4275	0
D350A	2	D350A	100	D350A	0	D350A	0	D350A	0	D350A	0	D350A	0	D350A	0	D350A	0
A761B	0	A761B	0	A761B	0	A761B	0	A761B	0	A761B	0	A761B	0	A761B	0	A761B	0
D7977	0	D7977	0	D7977	0	D7977	0	D7977	0	D7977	0	D7977	0	D7977	0	D7977	0

A00		J00		S00		B**		CSL		DA*		HST		K**		TTT	
D6710	0	D6710	0	D6710	0	D6710	0	D6710	0	D6710	420	D6710	420	D6710	0	D6710	0
A4275	0	A4275	0	A4275	0	A4275	0	A4275	0	A4275	0	A4275	18	A4275	0	A4275	0
D350A	0	D350A	0	D350A	0	D350A	0	D350A	4	D350A	0	D350A	5833	D350A	0	D350A	0
A761B	0	A761B	0	A761B	0	A761B	0	A761B	0	A761B	0	A761B	27	A761B	0	A761B	0
D7977	0	D7977	0	D7977	0	D7977	0	D7977	0	D7977	0	D7977	0	D7977	0	D7977	0

THE TOTAL NUMBER OF JOBS IS 5950. ** MEANS THERE IS NO SUCH TERINAL

APPENDIX 3

THE SIMULATION FLOW DIAGRAM PROGRAM AND RESULTS

EXPLANATION OF TABLES

Table 1 contains the total time that messages stay in the simulated 7740 - 7010 Teleprocessing System. The time for a message is entered as an argument in the table expressed in tenths of seconds. The mean argument is the average time for a message during the particular hour of simulation.

Table 2 contains the times it takes for segments to be placed on disks ready to be processed by HST 7010. This time starts with creation of segment as part of a message at a terminal and ends when segment is sent to HST 7010. The mean argument is the average time for a segment during the particular hours of simulation expressed in tenths of seconds.

Table 3 contains the times it takes for segments to reach output terminals after processing by HST 7010. This time starts when segment leaves HST 7010 and ends when segment is received at designated terminal as part of a message. The mean argument is the average time for a segment during the particular hour of simulation expressed in tenths of seconds.

Table 4 contains the times segments are in HST 7010. This time starts when segment enters HST 7010 and ends when segment leaves HST 7010. The mean argument is the average time a segment is in the HST 7010 expressed in tenths of seconds.

Observed Frequency - number of arguments within interval.

Percent of Total - number of arguments within interval divided by total number of arguments in table.

Cumulative Percentage - cumulative percentage of percent of total.

Cumulative Reminder - 100% minus cumulative percentage.

Multiple of Mean - upper limit of interval divided by mean argument

STORAGE NUMBER - Number of storage

Capacity - given by storage definition card as maximum allowed in storage.

Average Contents - cumulative amount of time that transactions are in storage divided by clock time of run.

Average Utilization - cumulative amount of time that transactions are in storage divided by clock time of run times capacity.

Entries - total number of transactions that entered storage.

Average Time/Trans - cumulative amount of time that transactions are in storage divided by number of entries.

Current Contents - contents of storage at end of run.

Maximum Contents - largest number of transactions in storage at any time during run.

QUEUE NUMBER - Number of queue

Maximum Contents - largest number of transactions in queue at any time during run.

Average Contents - cumulative amount of time that transactions are in queue divided by clock time of run.

Total Entries - total number of transactions that entered queue.

Zero Entries - total number of transactions that entered queue and left queue without delaying anytime in queue.

Percent Zeros - total entries divided by zero entries.

Average Time/Trans - cumulative amount of time that transactions are in queue divided by total number of entries.

Average Time/Trans - average time of transaction excluding zero entries.

Table Number - refers to number of table containing a breakdown of queue statistics gathered during run.

Current Contents - contents of queue at end of run.

TABLE NUMBER - Number of Table

Entries in Table - number of transactions recorded in table.

Mean Argument - sum of arguments entered in table divided by number of entries in table.

Standard Deviation - gives plus or 1 standard deviation from mean.

Sum of Argument - sum of arguments entered in table.

Upper Limit - upper limit of arguments within interval with this upper limit.

EXPLANATION OF PARAMETERS (continued)

Parameter	Contents	Purpose
6	Parameter 5	Holds segment length for use later
7	Function 12; Parameter 8	Assigns segment length for Job A761B
8	Parameter 7	Holds segment length for use later
9	Function 12; parameter 11	Assigns segment length for Job A761B
10	Variables 5,6,7,	Assigns length of time outgoing segment should stay in terminal for processing
11	Parameter 9	Holds segment length for use later

EXPLANATION OF HEADINGS IN RESULTS

BLOCK COUNTS - Records what has transpired during time period for printout.

BLOCK - Block number corresponding to program.

TRANS - Current number of transactions in block.

TOTAL - Total number of transactions that entered block.

SAVEX - Values of standard numberical attributes saved from program.

NR - Place value was saved.

VALUE - What was saved.

FACILITY NUMBER - Number of facility

Average Utilization - cumulative amount of time that transactions are in facility divided by clocktime of run.

Number Entries - total number of transactions that entered facility.

Average Time/Trans - cumulative amount of time that transactions are in facility divided by number of entries

Seizing Trans. No. - number of seizing transaction in facility at end of run.

Preempting Trans. No. - Number of preempting transactions in facility at end of run.

EXPLANATION OF QUEUES

Queue	For Facility
1	1
2	2
3	3
4	4
5	5
6	6
7	7
8	8
9	9
10	10
11	11
13	13
14	14
15	15
16	16
17	17
18	18
19	19
20	20
22	22
34	34
41	1
42	2
43	3
44	4
45	5
46	6
47	7
48	8
49	9
50	10
51	11
61	21
62	22
63	23
64	24
65	25
66	26
67	27
68	28
69	29
70	30
71	31
72	32
73	33
74	32
75	33
76	100

EXPLANATION OF VARIABLES

Variable	Contents
1	Transmit time for 1030 terminal
2	Transmit time for A21 type terminal per segment
3	Not used in final form of GPSS simulation model
4	" " " " " " " " "
5	Transmit time for outgoing terminal with both 1052 and 1058 printers per segment
6	Transmit time for most outgoing terminals
7	Transmit time for outgoing terminal with 1052 printer per segment
8	Not used in final form of GPSS simulation model
9	Transmit time for HST 7010 per outgoing segment
10	Transmit time for HST to HST message
11	Not used in final form of GPSS simulation model
12	Transmit time for HST 7010 for incoming segment

EXPLANATION OF PARAMETERS

Parameter	Contents	Purpose
1	Functions 2,3,4,5,6,7,89; constants 0 and 1	Assigns incoming & outgoing messages or segments to terminals
2	Function 12; parameter 3	Assigns segment length for Job A761B
3	Parameter 2	Holds segment length for use later
4	Parameter 1,4 + 40; constants 72 and 73	Assigns segments to outgoing terminals and in some cases 40 is added to separate incoming and outgoing queues for two-way terminals
5	Function 11; parameter 6	Assigns segment length for Job D350A

EXPLANATION OF QUEUES (continued)

Queue	For Facility
77	99
78	70
79	70
88	100
90	70
91	*
99	99
100	100

* Not related to a facility, gathers times for segments in HST 7010

EXPLANATION OF STORAGES

Storage	Type	For Output Facility	Capacity
1	Terminal Output Buffer	1	1
2	" " "	2	1
3	" " "	3	1
4	" " "	4	1
5	" " "	5	1
6	" " "	6	1
7	" " "	7	1
8	" " "	8	1
9	" " "	9	1
10	" " "	10	1
11	" " "	11	1
21	" " "	21	1
22	" " "	22	1
23	" " "	23	1
24	" " "	24	1
25	" " "	25	1
26	" " "	26	1
27	" " "	27	1
28	" " "	28	1
29	" " "	29	1
30	" " "	30	1
31	" " "	31	1
32	" " "	32	1
33	" " "	33	1
34	7010 Input Buffer		2
35	7010 Output Buffer		8

EXPLANATION OF FACILITIES

Facility	Type
1	Two-way terminal (incoming & outgoing)
2	" " "
3	" "
4	" "
5	" "
6	" "
7	" "
8	" "
9	" "
10	" "
11	" "
13	One-way Incoming Terminal
14	" " "
15	" " "
16	" " "
17	" " "
18	" " "
19	" " "
20	" " "
21	Two-way terminal (DA 1,2,+ 3; Job D6710)
22	" " " " "
23	One-way Outgoing Terminal (1058 Printer)
24	" " " "
25	One-way Outgoing Terminal (1053 Printer)
26	" " " "
27	" " " "
28	" " " "
29	One-way Outgoing Terminal (1052 Printer)
30	" " " "
31	" " " "
32	Two-way Terminal (A21)
33	" " "
34	One-way Incoming Terminal
70	HST 7010
100	Disks

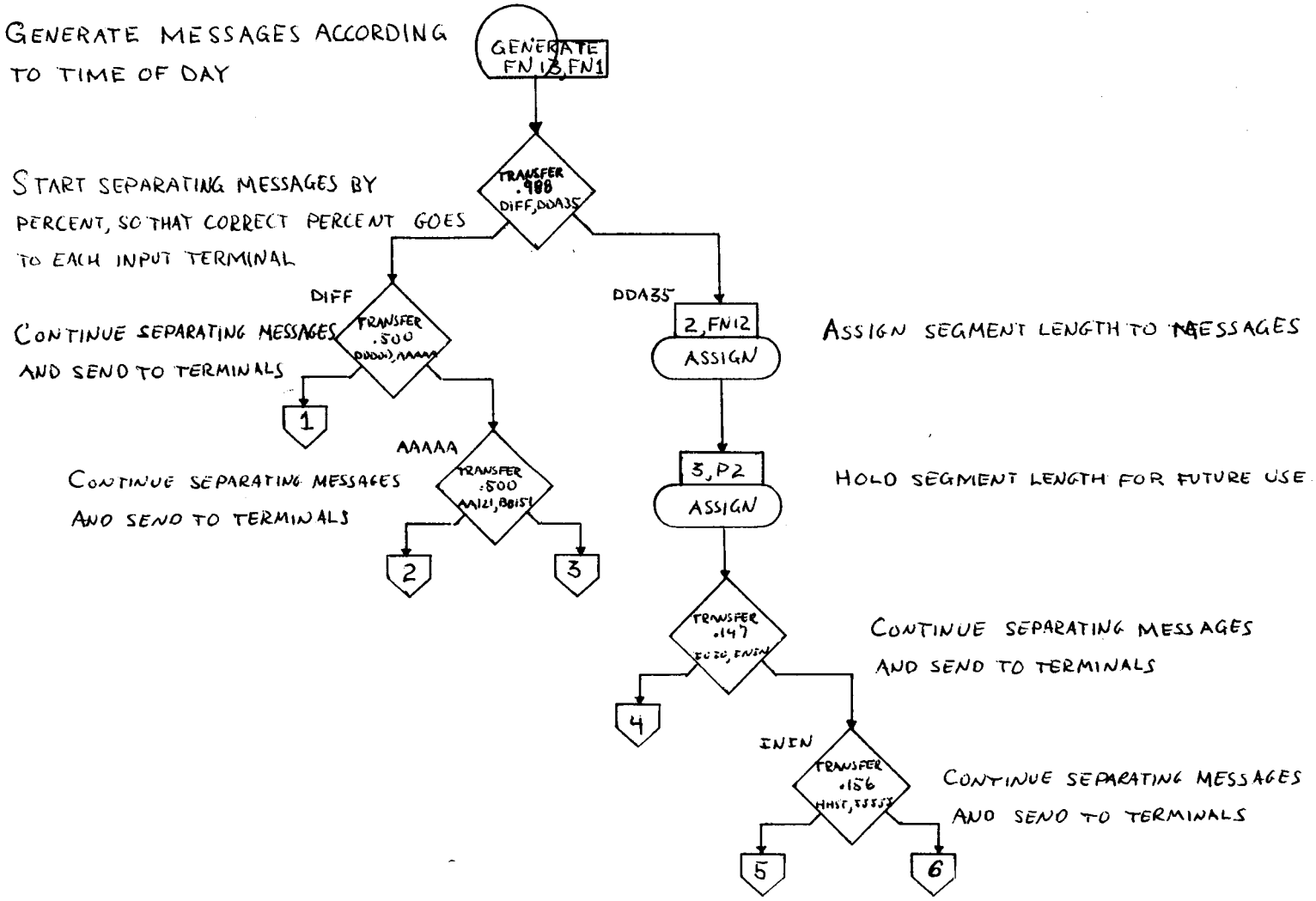
GENERATE MESSAGES ACCORDING TO TIME OF DAY
GENERATE FN13,FN1
START SEPARATING MESSAGES BY PERCENT, SO THAT CORRECT PERCENT GOES TO EACH INPUT TERMINAL
TRANSFER .900 DIFF,DDA35
DIFF
DDA35
CONTINUE SEPARATING MESSAGES AND SEND TO TERMINALS
TRANSFER .500 DDDDD,AAAAA
1
AAAAA
CONTINUE SEPARATING MESSAGES AND SEND TO TERMINALS
TRANSFER .500 AA121,BB151
2
3
2,FN12
ASSIGN
ASSIGN SEGMENT LENGTH TO MESSAGES
3,P2
ASSIGN
HOLD SEGMENT LENGTH FOR FUTURE USE
TRANSFER .147 EE20,FNEN
4
CONTINUE SEPARATING MESSAGES AND SEND TO TERMINALS
FNEN
TRANSFER .156 HHSF,SSSSS
5
6
CONTINUE SEPARATING MESSAGES AND SEND TO TERMINALS

ASSIGN SEGMENT LENGTH FOR JOBNO 0350A

HOLD SEGMENT LENGTH FOR FUTURE USE

ASSIGN MESSAGES BY PERCENT TO DA1 OR DA2 INCOMING MESSAGE TERMINAL

RESERVE LOGIC FOR OUTGOING MESSAGES, SET SWITCH ON

QUEUE FOR TERMINALS DA1 AND DA2

SEIZE TERMINAL DA1 OR DA2

LEAVE QUEUE FOR TERMINAL DA1 OR DA2

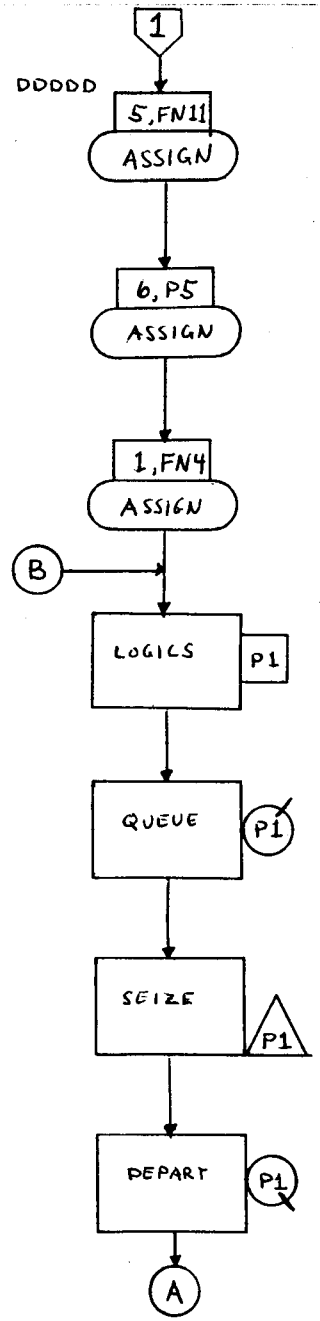

TRANSMIT TIME FOR DA1 AND DA2 TYPE TERMINAL FOR 1 SEGMENT

RELEASE TERMINAL DA1 OR DA2

LOGIC FOR OUTGOING MESSAGES, INVERT SWITCH i.e. IF IT WAS SET ON, NOW RESET OFF

MAKES A COPY OF MESSAGE AND SENDS IT TO POSITION TO BE TRANSFERED TO DISKS AS A SEGMENT

SENDS MESSAGE BACK THROUGH DA1 OR DA2 TERMINAL AS MANY TIMES AS THERE ARE SEGMENTS IN PARAMETER 5 (DECREASES BY 1 THE NUMBER IN PARAMETER 5)

REASSIGNS ORIGINAL PARAMETER TO PARAMETER 5

SENDS MESSAGE TO POSITION TO BE TRANSFERED TO DISKS

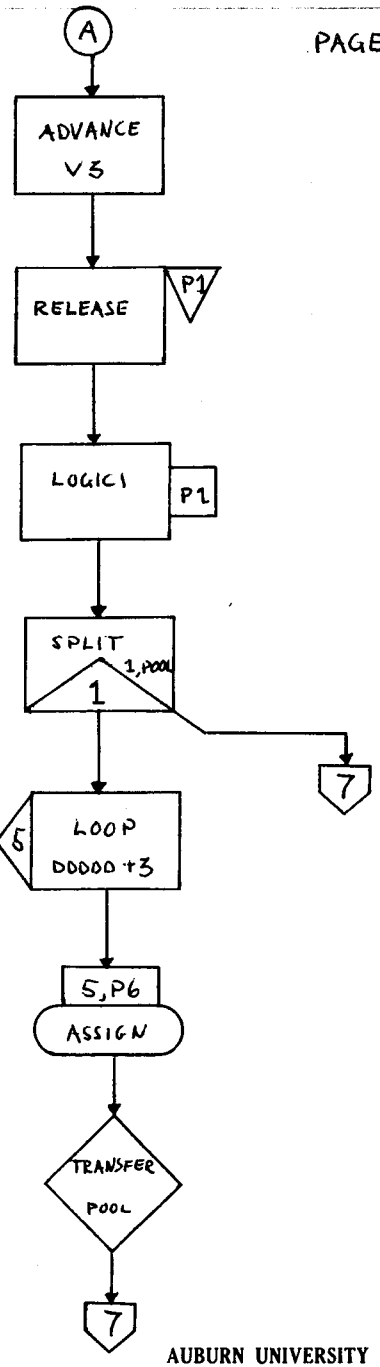

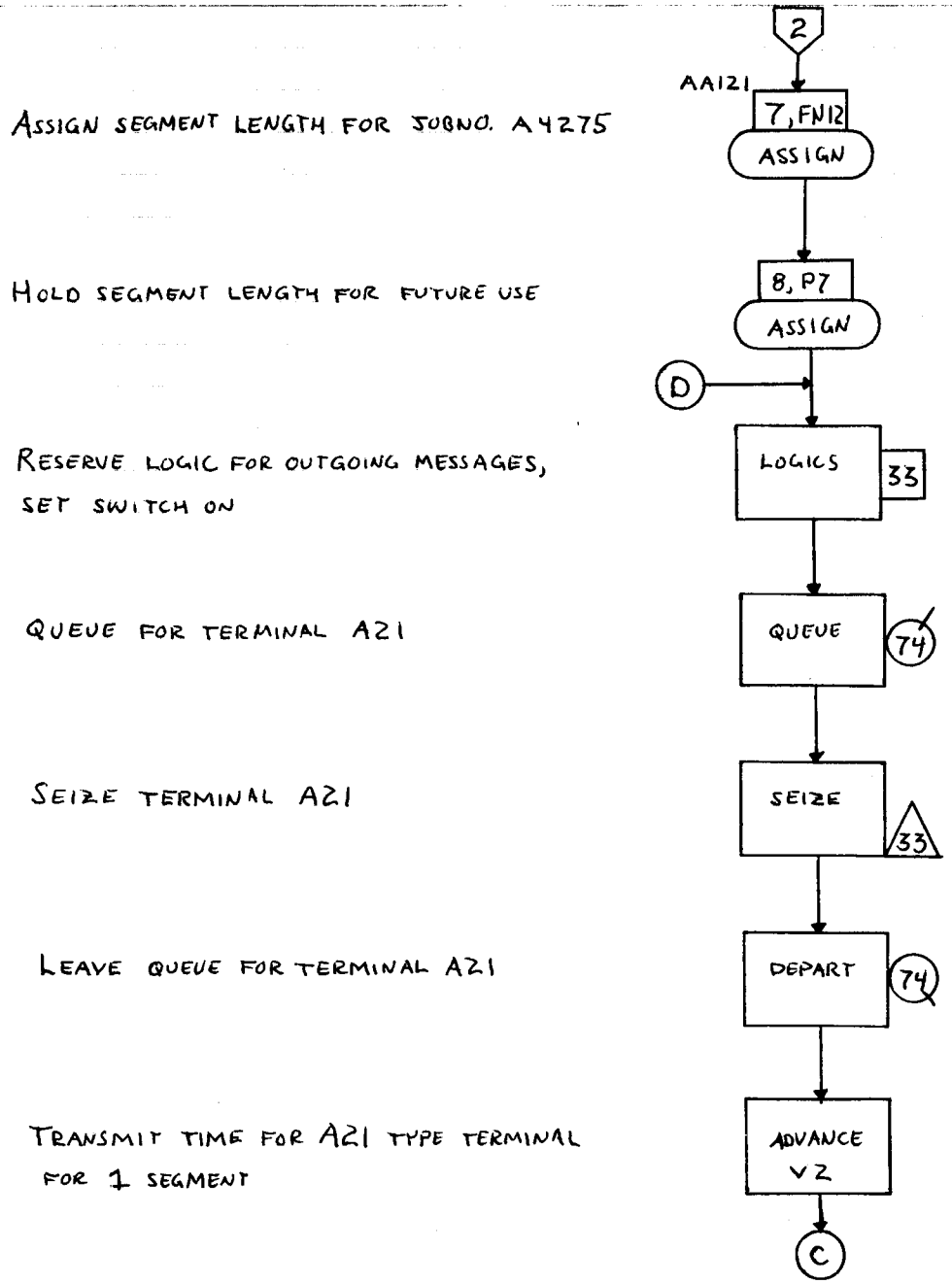
2
AA121
7, FN12
ASSIGN
ASSIGN SEGMENT LENGTH FOR JOBNO. A4275
8, P7
ASSIGN
HOLD SEGMENT LENGTH FOR FUTURE USE
D
LOGICS
33
RESERVE LOGIC FOR OUTGOING MESSAGES, SET SWITCH ON
QUEUE
74
QUEUE FOR TERMINAL A21
SEIZE
33
SEIZE TERMINAL A21
DEPART
74
LEAVE QUEUE FOR TERMINAL A21
ADVANCE
V2
TRANSMIT TIME FOR A21 TYPE TERMINAL FOR 1 SEGMENT
C

RELEASE TERMINAL A21

LOGIC FOR OUTGOING MESSAGES, INVERT SWITCH
ie. IF IT WAS SET ON, NOW RESET OFF

MAKES A COPY OF MESSAGE AND SENDS TO POSITION
TO BE TRANSFERED TO DISKS AS A SEGMENT

SENDS MESSAGE BACK THROUGH A21 TERMINAL
AS MANY TIMES AS THERE ARE SEGMENTS IN
PARAMETER 7 (DECREASE BY 1 NUMBER IN PARAMETER 7)

REASSIGNS ORIGINAL PARAMETER TO PARAMETER 7

SENDS MESSAGE TO POSITION TO BE TRANSFERED
TO DISKS

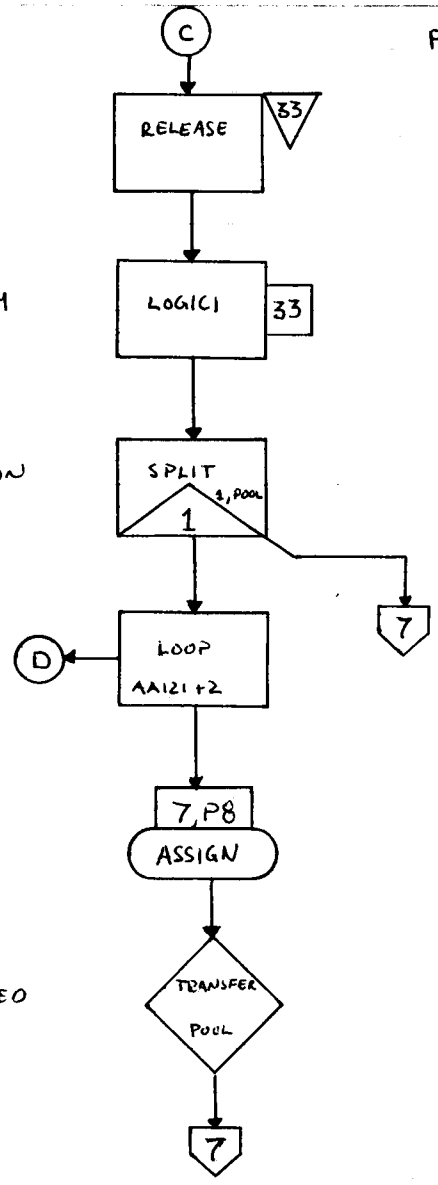

BB151

ASSIGN SEGMENT LENGTH FOR JOBNO. A761B

HOLD SEGMENT LENGTH FOR FUTURE USE

RESERVE LOGIC FOR OUTGOING MESSAGES, SET SWITCH ON

QUEUE FOR TERMINAL A21

SEIZE TERMINAL A21

LEAVE QUEUE FOR TERMINAL A21

TRANSMIT TIME FOR A21 TYPE TERMINAL FOR 1 SEGMENT

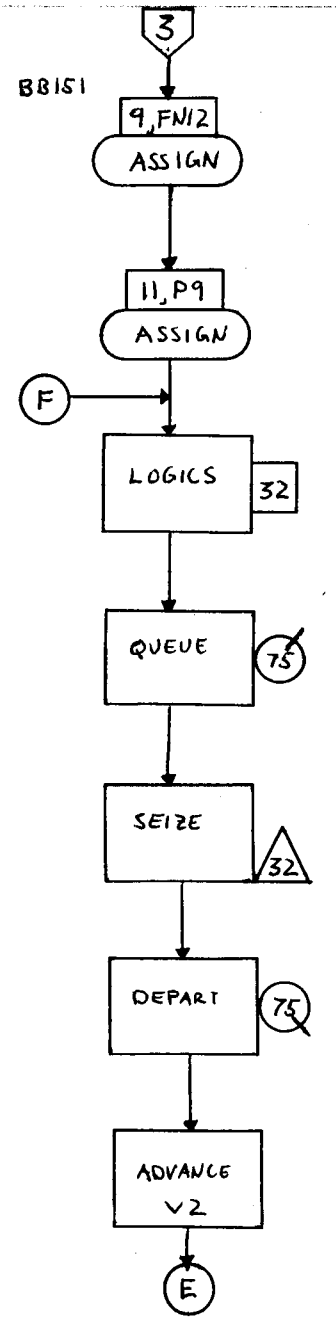

RELEASE TERMINAL A21

LOGIC FOR OUTGOING MESSAGES, INVERT SWITCH
i.e. IF IT WAS SET ON, NOW RESET OFF

MAKES A COPY OF MESSAGE AND SENDS TO POSITION
TO BE TRANSFERED TO DISKS AS A SEGMENT

SENDS MESSAGE BACK THROUGH A21 TERMINAL AS
MANY TIMES AS THERE ARE SEGMENTS IN PARAMETER 9
(DECREASES BY 1 THE NUMBER IN PARAMETER 9)

REASSIGNS ORIGINAL PARAMETER TO PARAMETER 9

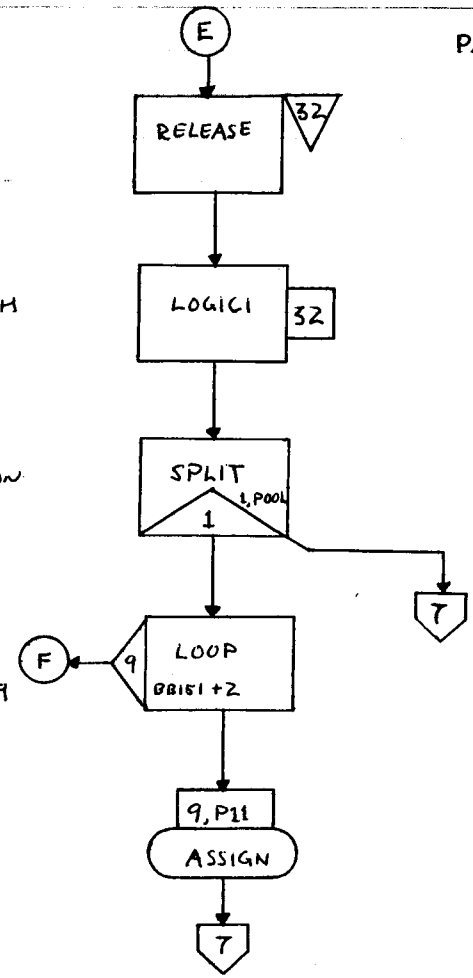

ASSIGN MESSAGES BY PERCENT TO TWO-WAY TERMINALS FOR D350A MESSAGES

RESERVE LOGIC FOR OUTGOING MESSAGES, SET SWITCH ON

QUEUE FOR TWO-WAY TERMINALS

SEIZE TWO-WAY TERMINAL

LEAVE QUEUE FOR TWO-WAY TERMINAL

TRANSMIT TIME FOR TWO-WAY TYPE TERMINAL FOR 1 SEGMENT

RELEASE TWO-WAY TERMINAL

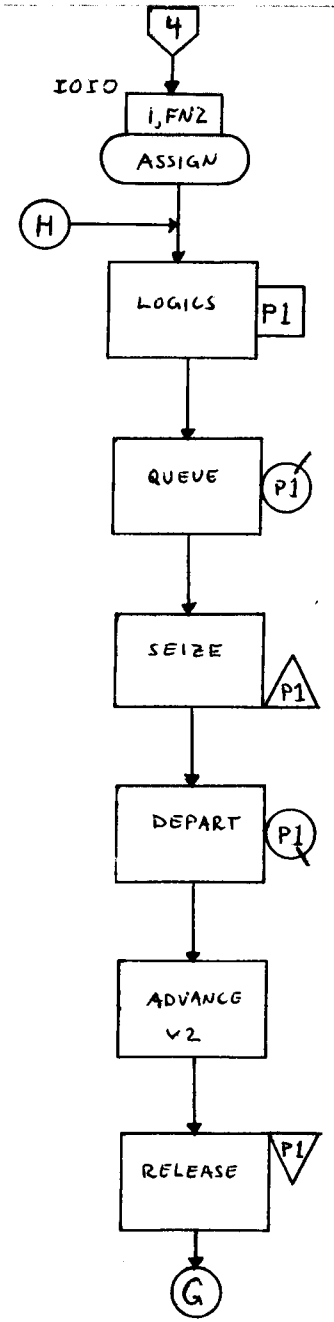

LOGIC FOR OUTGOING MESSAGES, INVERT SWITCH, ie. IF IT WAS SET ON, NOW RESET OFF

MAKES A COPY OF MESSAGE AND SENDS TO POSITION TO BE TRANSFERED TO DISKS AS A SEGMENT

SENDS MESSAGE BACK THROUGH TWO-WAY TERMINAL AS MANY TIMES AS THERE ARE SEGMENTS IN PARAMETER 2 (DECREASES BY 1 THE NUMBER IN PARAMETER 2)

REASSIGNS ORIGINAL PARAMETER TO PARAMETER 2

SENDS MESSAGE TO POSITION TO BE TRANSFERED TO DISKS

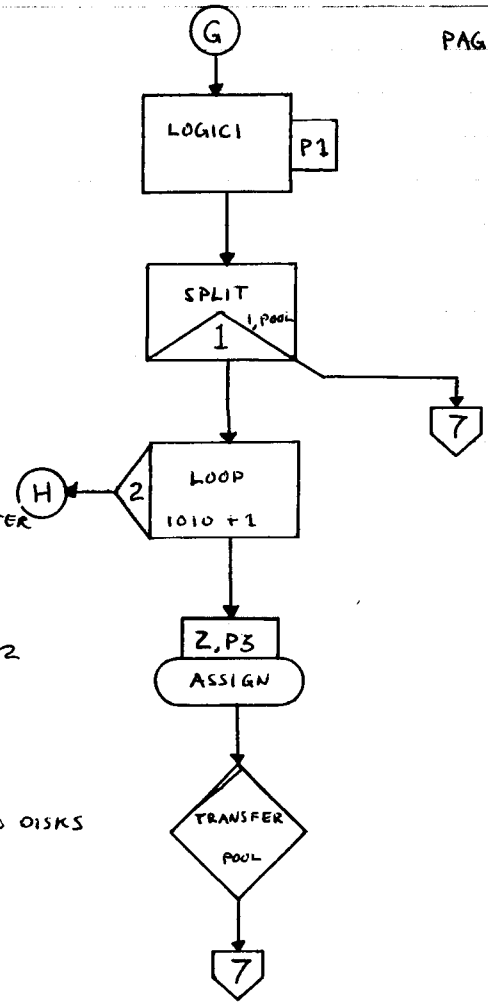

HHST

QUEUE FOR HST TO HST OPERATIONS

SEIZE 7010

TRANSMIT TIME FOR HST TO HST MESSAGE IN 7010

RELEASE 7010

LEAVE QUEUE FOR HST TO HST OPERATIONS

SENDS MESSAGE TO POSITION TO BE TABULATED

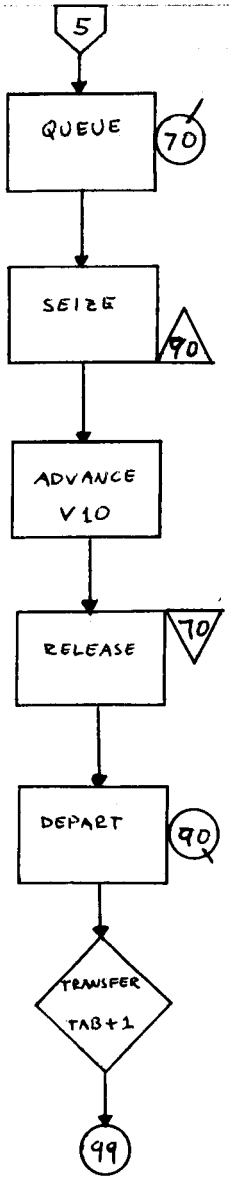

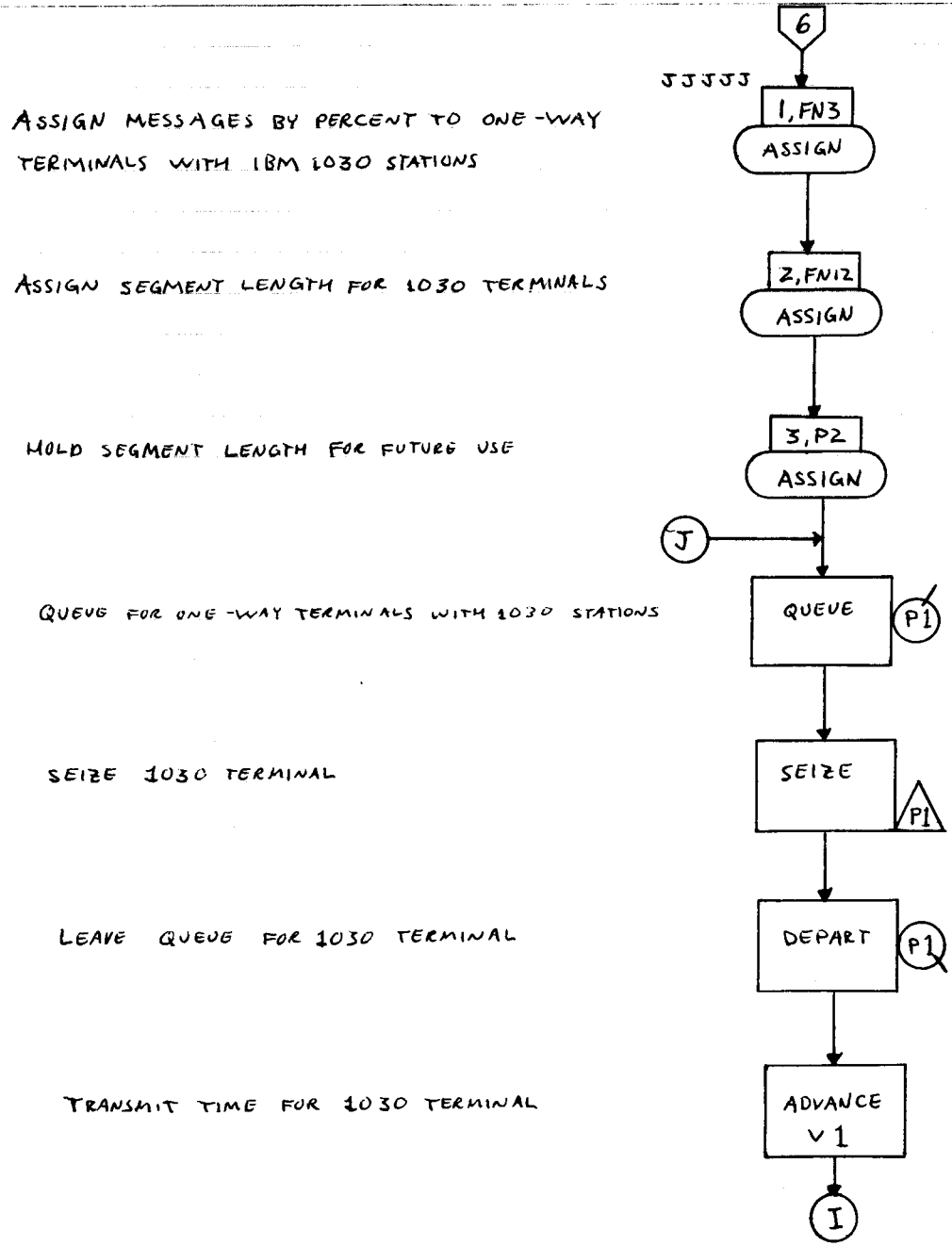
6
JJJJJ
1,FN3
ASSIGN
ASSIGN MESSAGES BY PERCENT TO ONE-WAY TERMINALS WITH IBM 1030 STATIONS
2,FN12
ASSIGN
ASSIGN SEGMENT LENGTH FOR 1030 TERMINALS
3,P2
ASSIGN
HOLD SEGMENT LENGTH FOR FUTURE USE
J
QUEUE
P1
QUEUE FOR ONE-WAY TERMINALS WITH 1030 STATIONS
SEIZE
P1
SEIZE 1030 TERMINAL
DEPART
P1
LEAVE QUEUE FOR 1030 TERMINAL
ADVANCE
V1
TRANSMIT TIME FOR 1030 TERMINAL
I

RELEASE 1030 TERMINAL

MAKE A COPY OF MESSAGE AND SENDS TO POSITION TO BE TRANSFERED TO DISKS AS A SEGMENT

SENDS MESSAGE BACK THROUGH 1030 TERMINAL AS MANY TIMES AS THERE ARE SEGMENTS IN PARAMETER 2 (DECREASES BY 1 THE NUMBER IN PARAMETER 2)

REASSIGNS ORIGINAL PARAMETER TO PARAMETER 2

SENDS MESSAGE TO POSITION TO BE TRANSFERED TO DISKS

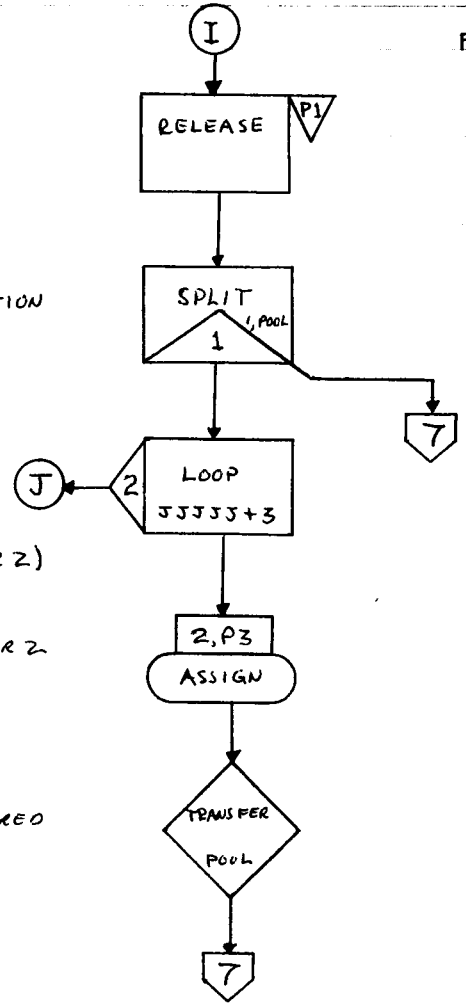

SEPARATE MESSAGES BY PERCENT SO THAT 1% OF THE MESSAGES GENERATED ARE IGNORED AND SENT OUT OF THE SYSTEM

QUEUE FOR HOLDING MESSAGE SEGMENTS THAT ARE READY TO TRANSMIT TO 1311 DISKS

CHECK TO SEE IF DISK IS FREE

CHECK TO SEE IF INTERFACE IS FREE

IF BOTH DISKS AND INTERFACE WERE FREE, TRANSACTION WILL CONTINUE TO NEXT BLOCK; IF ONE OR BOTH WERE NOT FREE, TRANSACTION RETURNS TO INPUT

QUEUE FOR INTERFACE

SEIZE INTERFACE

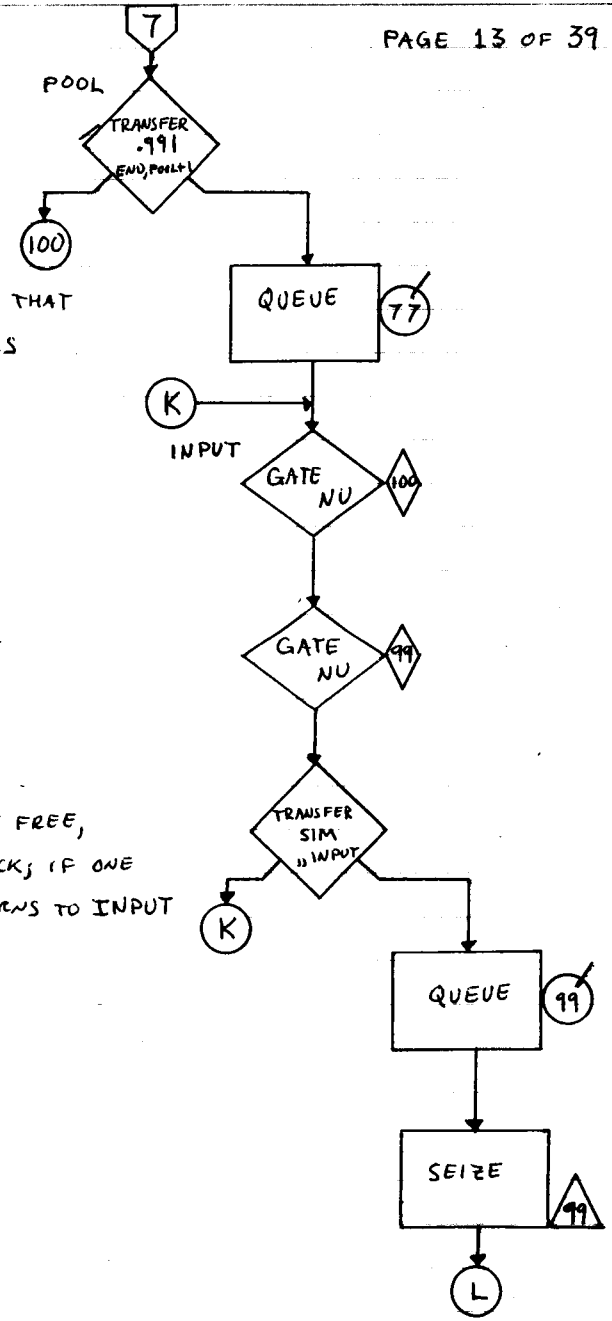

LEAVE QUEUE FOR INTERFACE

TRANSMIT TIME FOR INTERFACE, ZERO BECAUSE IT IS ONLY A MATTER OF SEIZING THE INTERFACE

QUEUE FOR 1311 DISKS

CHECKS TO SEE IF FACILITY IS FREE, IF NOT, TRANSACTION IS PLACED IN A WAITING STATUS

SEIZE DISK

LEAVE QUEUE FOR DISK

TRANSMIT TIME FOR DISK

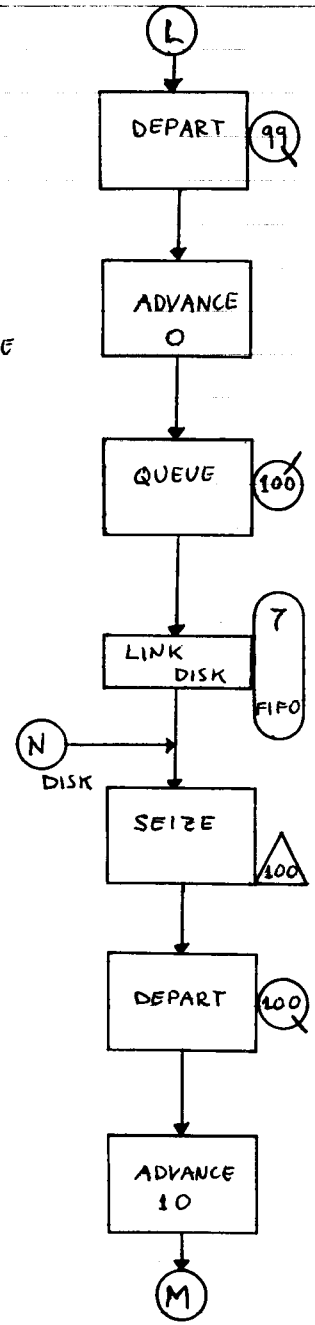

RELEASE DISK

CHECK TO SEE IF A TRANSACTION IS IN A WAITING STATUS AT DISK

RELEASE INTERFACE

LEAVE QUEUE FOR HOLDING SEGMENTS

QUEUE FOR HOLDING SEGMENTS IN DISK WHILE WAITING TO BE PROCESSED IN 7010

CHECK TO SEE IF INTERFACE IS FREE

CHECK TO SEE IF DISK IS FREE

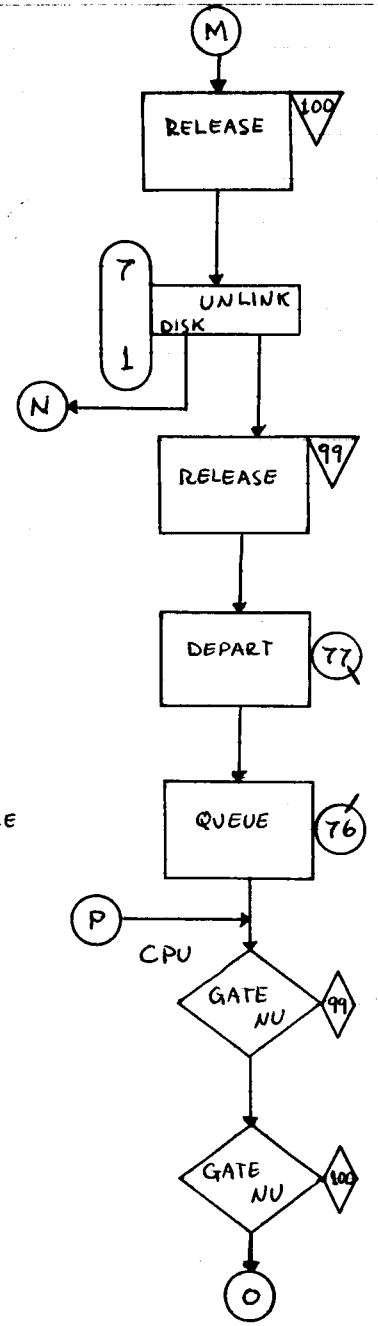

IF BOTH DISK AND INTERFACE WERE FREE, TRANSACTION WILL CONTINUE TO NEXT BLOCK; IF ONE OR BOTH WERE NOT FREE, TRANSACTION WILL RETURN TO CPU

LEAVE QUEUE FOR HOLDING SEGMENTS IN DISK

ENTER INPUT BUFFER FOR 7010

SEIZE DISK

SEIZE INTERFACE

INTERRUPT ANY OPERATION ALREADY ON 7010

TRANSMIT TIME FOR 7010 FOR INCOMING SEGMENT

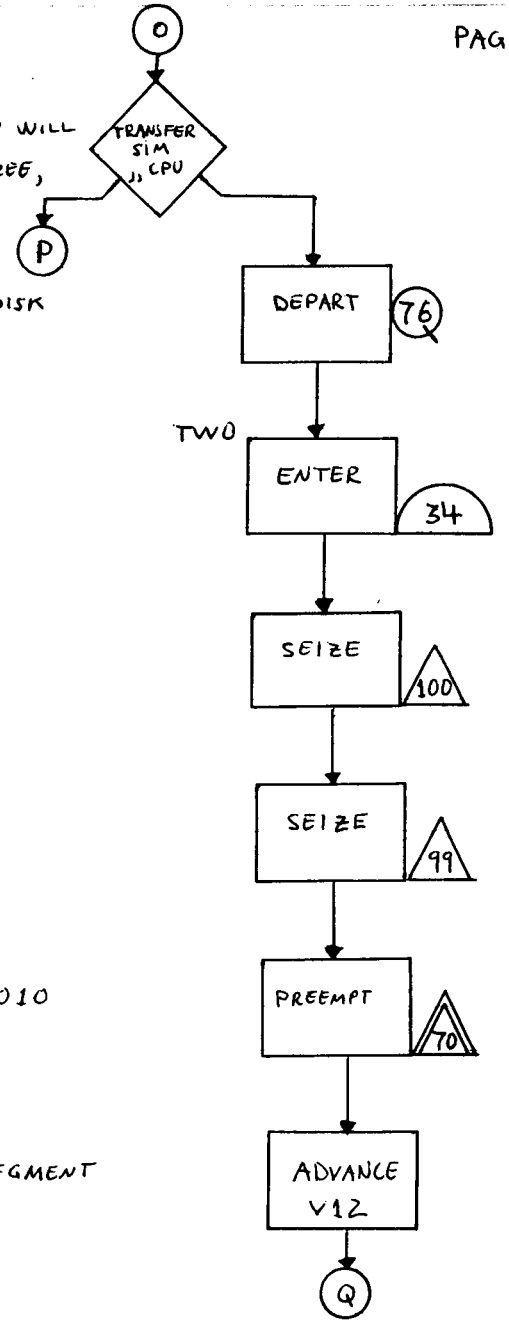

RETURN 70 10 TO INTERRUPTED OPERATION

RELEASE INTERFACE

RELEASE DISK

TABULATE TIME FOR SEGMENTS TO THIS POINT IN SIMULATION

LEAVE INPUT BUFFER FOR 7010

QUEUE FOR HST 7010

QUEUE FOR STATISTICS – GATHER TIME SEGMENTS ARE IN HST 7010

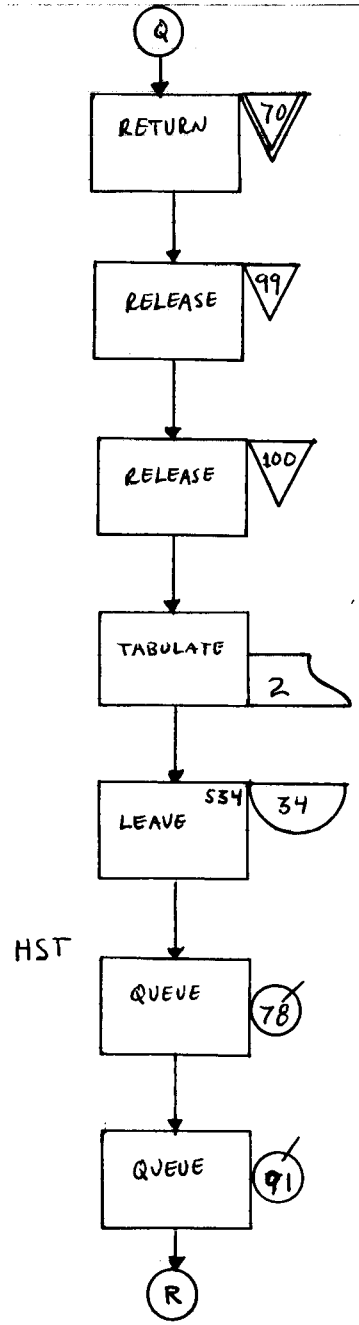

SEIZE HST 7010

LEAVE QUEUE FOR HST 7010

TRANSMIT TIME FOR HST 7010
FOR 1 SEGMENT

RELEASE HST 7010

ENTER OUTPUT BUFFER FOR 7010

QUEUE FOR HOLDING MESSAGE SEGMENTS THAT
ARE READY TO TRANSMIT BACK TO 1311 DISKS

CHECK TO SEE IF DISK IS FREE

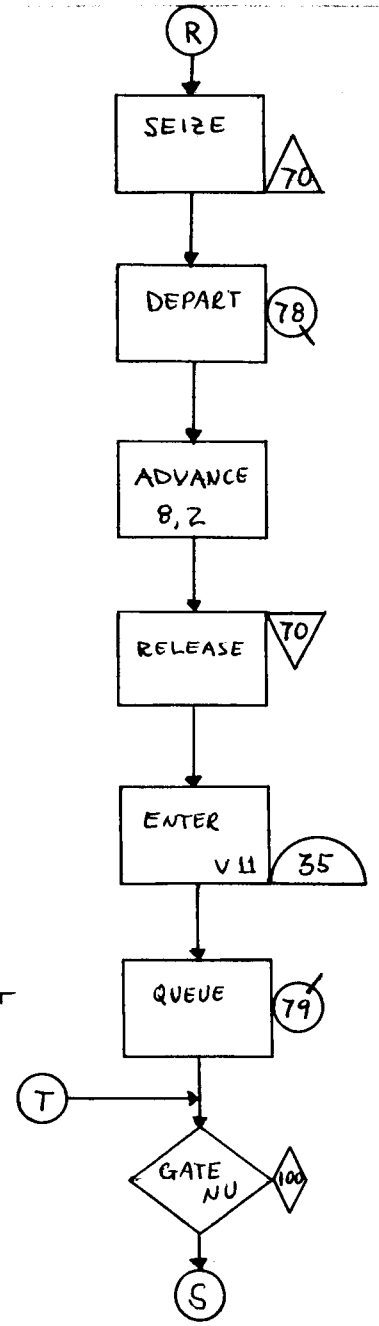

CHECK TO SEE IF INTERFACE IS FREE

IF BOTH DISK AND INTERFACE WERE FREE, TRANSACTION WILL CONTINUE TO NEXT BLOCK; IF ONE OR BOTH WERE NOT FREE, TRANSACTION WILL RETURN TO TRA

LEAVE QUEUE FOR HOLDING MESSAGE SEGMENTS

INTERRUPT ANY OPERATION ALREADY ON 7010

SEIZE INTERFACE

SEIZE DISK

TRANSMIT TIME FOR 7010 FOR OUTGOING SEGMENT

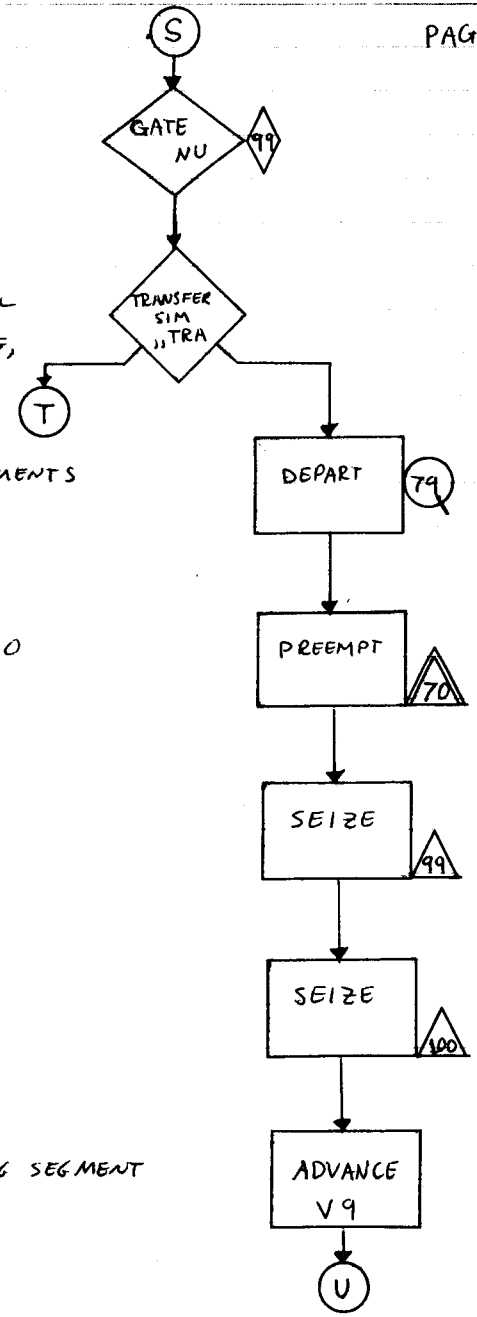

RELEASE DISK

RELEASE INTERFACE

RETURN 7010 TO INTERRUPTED OPERATION

LEAVE QUEUE FOR STATISTICS

LEAVE OUTPUT BUFFER FOR 7010

QUEUE FOR OUTGOING SEGMENTS STORED ON DISKS

TEST TO SEE IF QUEUE 88 IS EMPTY

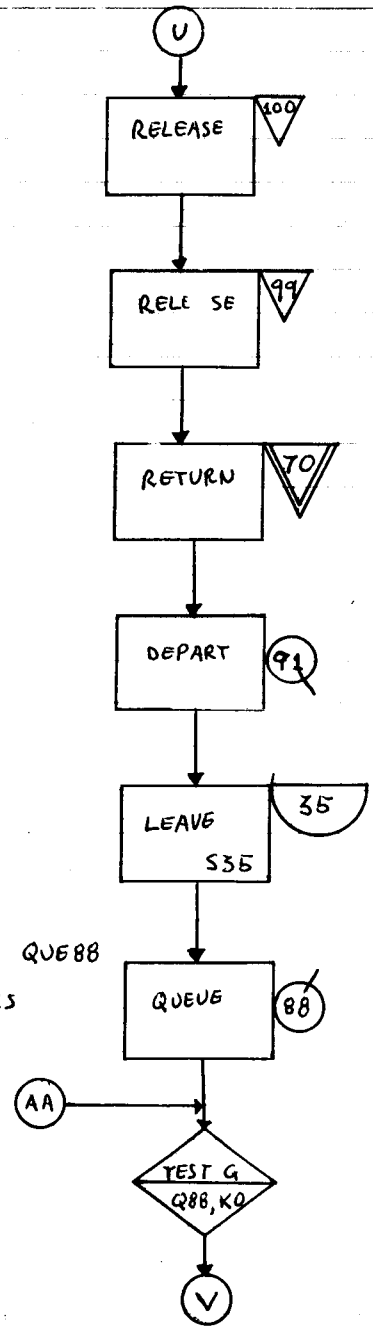

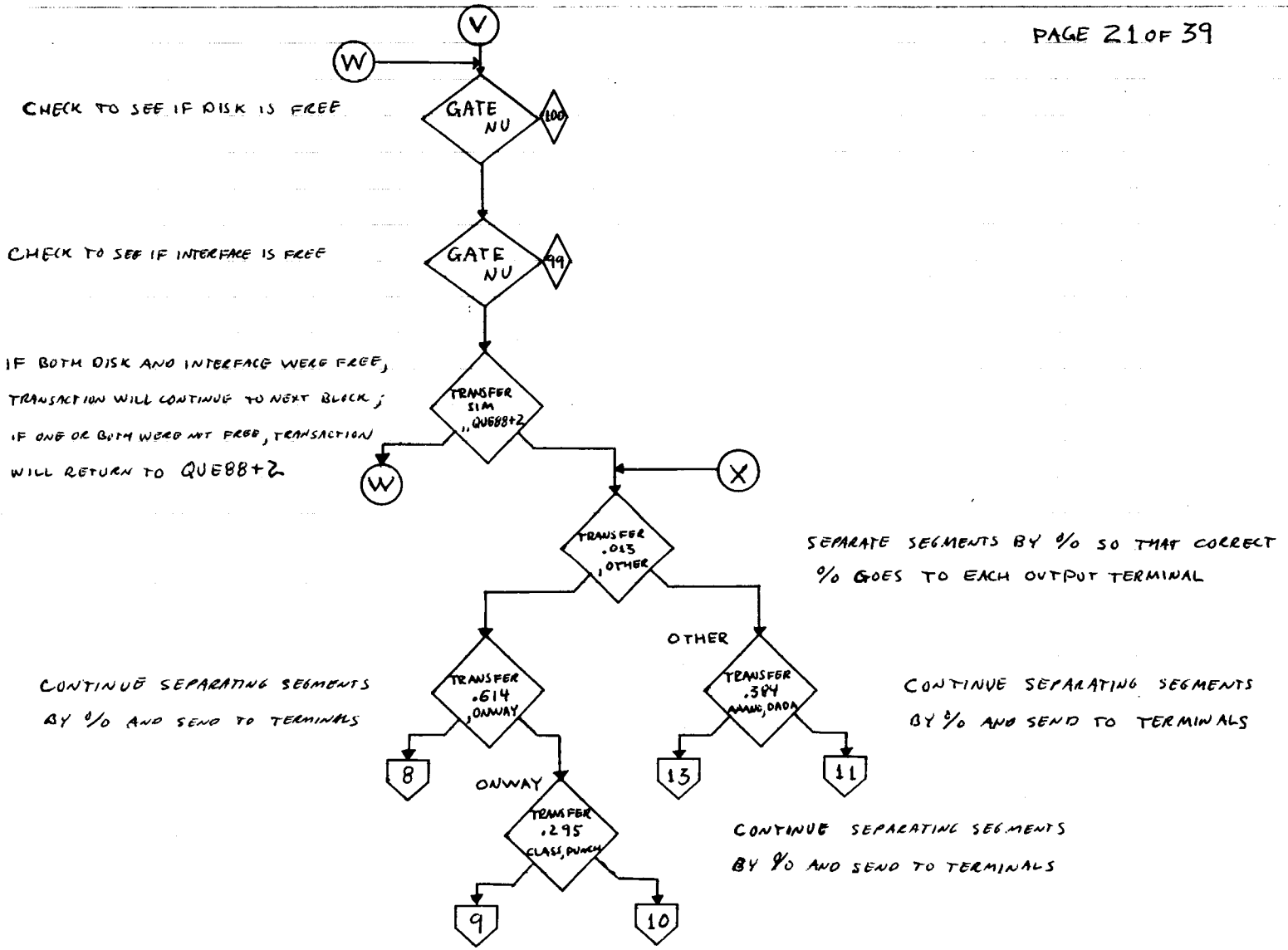
V
W
CHECK TO SEE IF DISK IS FREE
GATE NU
100
CHECK TO SEE IF INTERFACE IS FREE
GATE NU
99
IF BOTH DISK AND INTERFACE WERE FREE, TRANSACTION WILL CONTINUE TO NEXT BLOCK; IF ONE OR BOTH WERE NOT FREE, TRANSACTION WILL RETURN TO QUE88+2
TRANSFER SIM ,,QUE88+2
W
X
TRANSFER .013 ,OTHER
SEPARATE SEGMENTS BY % SO THAT CORRECT % GOES TO EACH OUTPUT TERMINAL
OTHER
CONTINUE SEPARATING SEGMENTS BY % AND SEND TO TERMINALS
TRANSFER .614 ,ONWAY
TRANSFER .384 ,DADA
CONTINUE SEPARATING SEGMENTS BY % AND SEND TO TERMINALS
8
13
11
ONWAY
TRANSFER .295 CLASS,PUNCH
CONTINUE SEPARATING SEGMENTS BY % AND SEND TO TERMINALS
9
10

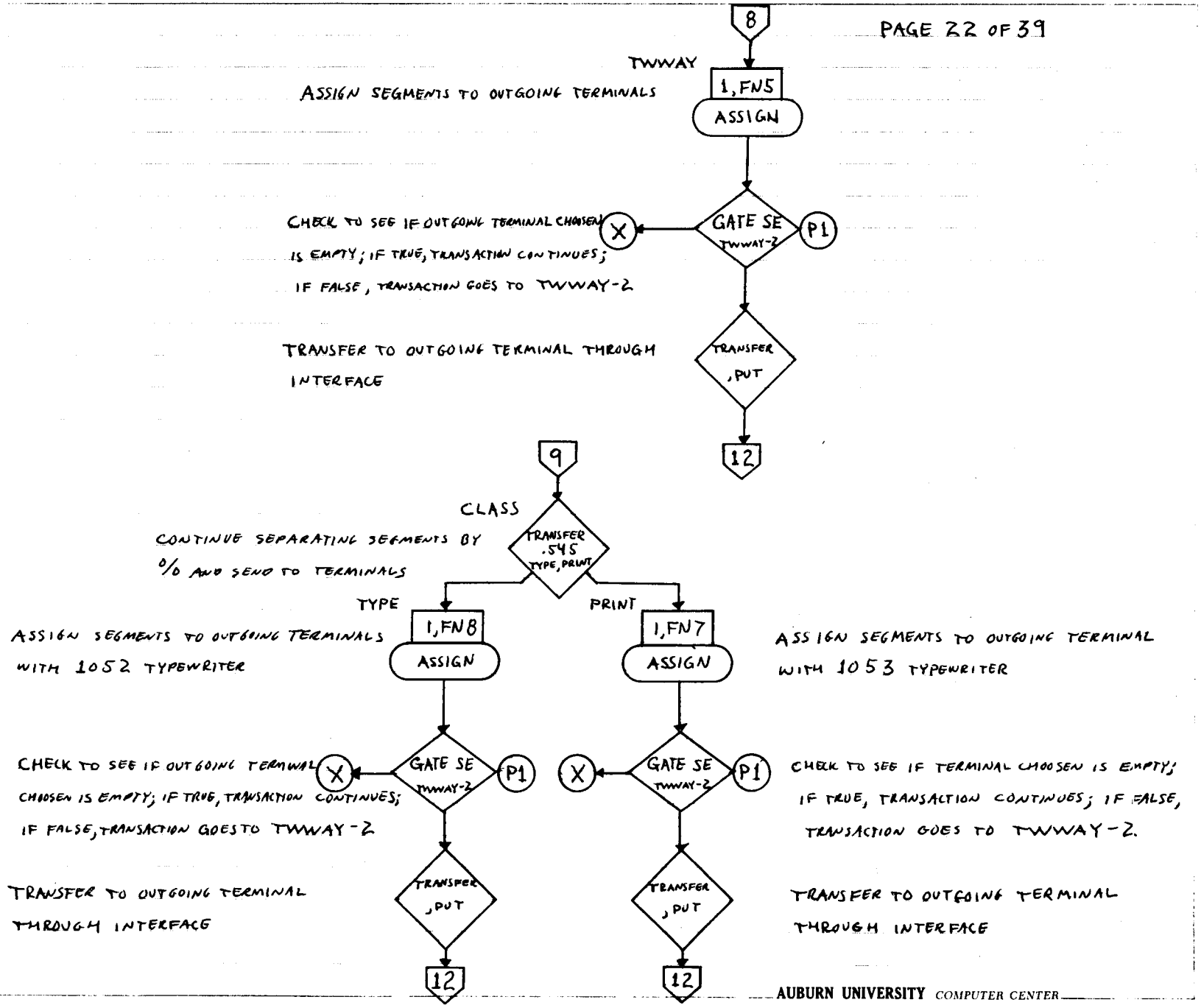
8
TWWAY
1,FN5
ASSIGN
ASSIGN SEGMENTS TO OUTGOING TERMINALS
GATE SE
TWWAY-2
P1
X
CHECK TO SEE IF OUTGOING TERMINAL CHOOSEN IS EMPTY; IF TRUE, TRANSACTION CONTINUES; IF FALSE, TRANSACTION GOES TO TWWAY-2
TRANSFER
,PUT
TRANSFER TO OUTGOING TERMINAL THROUGH INTERFACE
12
9
CLASS
TRANSFER
.545
TYPE,PRINT
CONTINUE SEPARATING SEGMENTS BY % AND SEND TO TERMINALS
TYPE
PRINT
1,FN8
ASSIGN
ASSIGN SEGMENTS TO OUTGOING TERMINALS WITH 1052 TYPEWRITER
1,FN7
ASSIGN
ASSIGN SEGMENTS TO OUTGOING TERMINAL WITH 1053 TYPEWRITER
GATE SE
TWWAY-2
P1
X
CHECK TO SEE IF OUTGOING TERMINAL CHOOSEN IS EMPTY; IF TRUE, TRANSACTION CONTINUES; IF FALSE, TRANSACTION GOES TO TWWAY-2
GATE SE
TWWAY-2
P1
X
CHECK TO SEE IF TERMINAL CHOOSEN IS EMPTY; IF TRUE, TRANSACTION CONTINUES; IF FALSE, TRANSACTION GOES TO TWWAY-2.
TRANSFER
,PUT
TRANSFER TO OUTGOING TERMINAL THROUGH INTERFACE
TRANSFER
,PUT
TRANSFER TO OUTGOING TERMINAL THROUGH INTERFACE
12
12

ASSIGN SEGMENTS TO OUTPUT TERMINAL WITH 1058 PUNCH

CHECK TO SEE IF OUTGOING TERMINAL CHOOSEN IS EMPTY; IF TRUE, TRANSACTION CONTINUES; IF FALSE, TRANSACTION GOES TO TWWAY-2

TRANSFER TO OUTGOING TERMINAL THROUGH INTERFACE

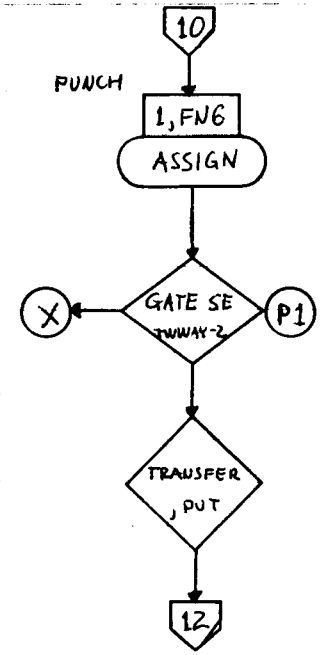

ASSIGN SEGMENTS TO OUTGOING TERMINALS DA1 AND DA2

CHECK TO SEE IF OUTGOING TERMINAL CHOOSEN IS EMPTY; IF TRUE, TRANSACTION CONTINUES, IF FALSE, TRANSACTION GOES TO TWWAY-2

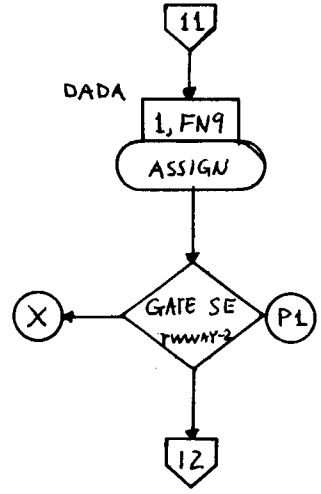

ASSIGN OUTPUT TERMINAL SAME AS IN PARAMETER 1

ADD 40 TO PARAMETER 4

SEIZE DISK

SEIZE INTERFACE

ENTER OUTPUT BUFFER FOR TERMINAL

TRANSMIT TIME FOR INTERFACE

RELEASE INTERFACE

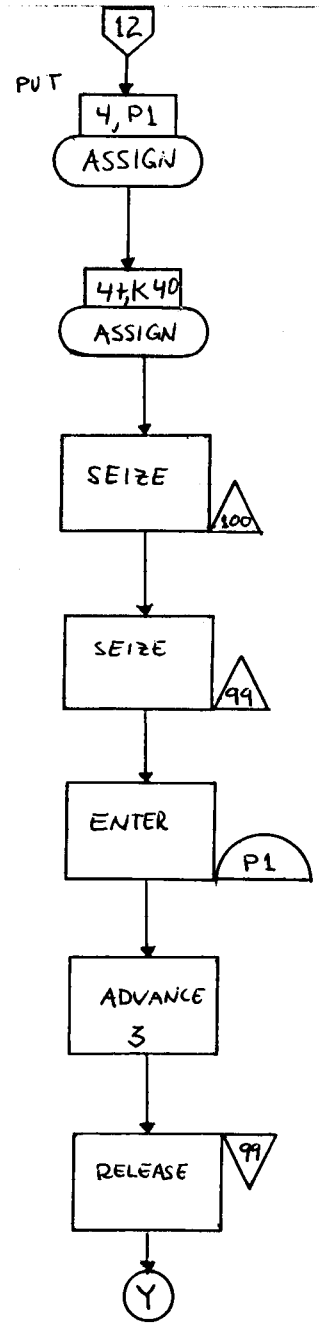

RELEASE DISK

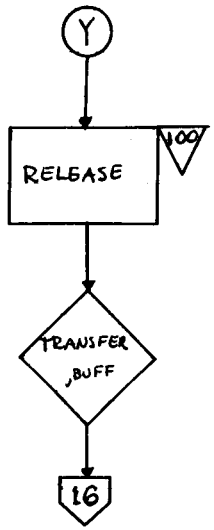

TRANSFER TO OUTGOING TERMINAL

AAANO

CONTINUE SEPARATING SEGMENTS BY %0 AND SEND TO TERMINALS

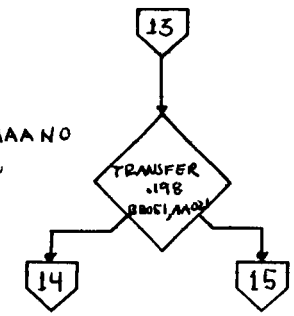

CHECK TO SEE IF OUTGOING TERMINAL CHOSEN IS EMPTY; IF TRUE, TRANSACTION CONTINUES; IF FALSE, TRANSACTION GOES TO TWWAY-2

SEIZE DISK

SEIZE INTERFACE

TRANSMIT TIME FOR INTERFACE

RELEASE INTERFACE

RELEASE DISK

ENTER OUTPUT BUFFER FOR TERMINAL

ASSIGN 72 TO PARAMETER 4

TRANSFER TO OUTGOING TERMINAL

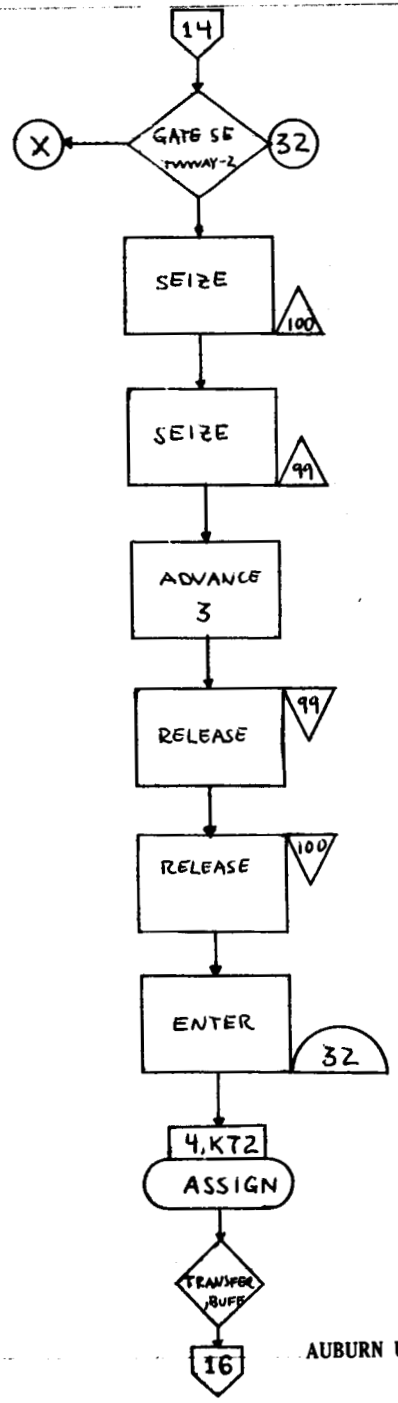

CHECK TO SEE IF OUTGOING TERMINAL CHOOSEN IS EMPTY; IF TRUE, TRANSACTION CONTINUES; IF FALSE, TRANSACTION GOES TO TWWAY-2

SEIZE DISK

SEIZE INTERFACE

TRANSMIT TIME FOR INTERFACE

RELEASE INTERFACE

RELEASE DISK

ENTER OUTPUT BUFFER FOR TERMINAL

ASSIGN 73 TO PARAMETER 4

TRANSFER TO OUTGOING TERMINAL

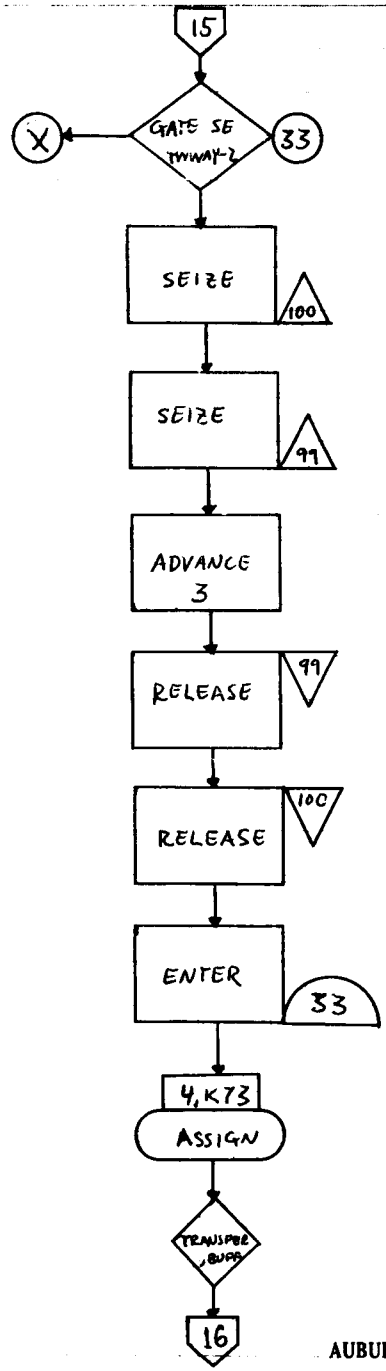

QUEUE FOR EACH OUTGOING TERMINAL

STORE THE VALUE IN PARAMETER 1

TRANSFER SEGMENT TO TEST BLOCK

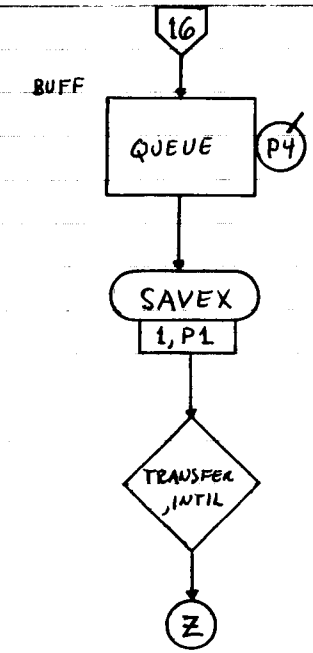

ASSIGNS ZERO TO PARAMETER 1

TEST TO SEE IF PARAMETER 1 IS NOT EQUAL TO SAVEX 1, IF TRUE, TRANSACTION CONTINUES; IF FALSE, IT GOES TO QUEBB+1

ASSIGN 1 TO PARAMETER 1

TESTS TO SEE IF PARAMETER 1 IS LESS THAN 34; IF IT IS, TRANSACTION CONTINUES; IF NOT, IT GOES TO BUFF +3

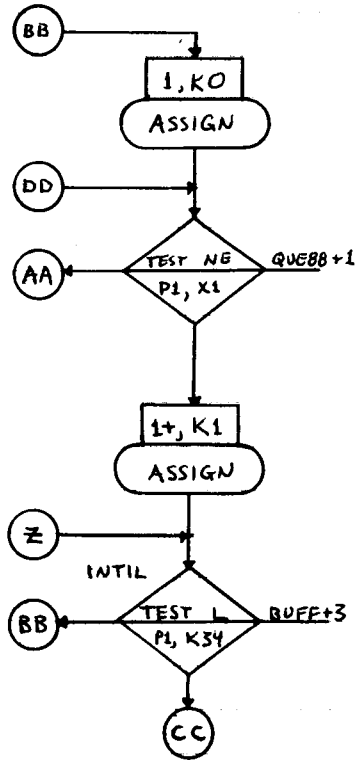

TEST TO SEE IF PARAMETER 1 IS LESS THAN 12; IF TRUE, TRANSACTION CONTINUES ON; IF FALSE, IT GOES TO CHECK

CHECK TO SEE IF OUTPUT BUFFER IS NOT EMPTY; IF TRUE, TRANSACTION CONTINUES ON; IF FALSE, IT GOES TO BUFF+4

CHECK TO SEE IF TERMINAL IS NOT BUSY FOR INCOMING SEGMENTS

ASSIGN SEGMENT LENGTH TO MESSAGES

HOLD SEGMENT LENGTH FOR FUTURE USE

ASSIGN TERMINAL NUMBER STORED IN PARAMETER 1 TO PARAMETER 4

ADD 40 TO PARAMETER 4

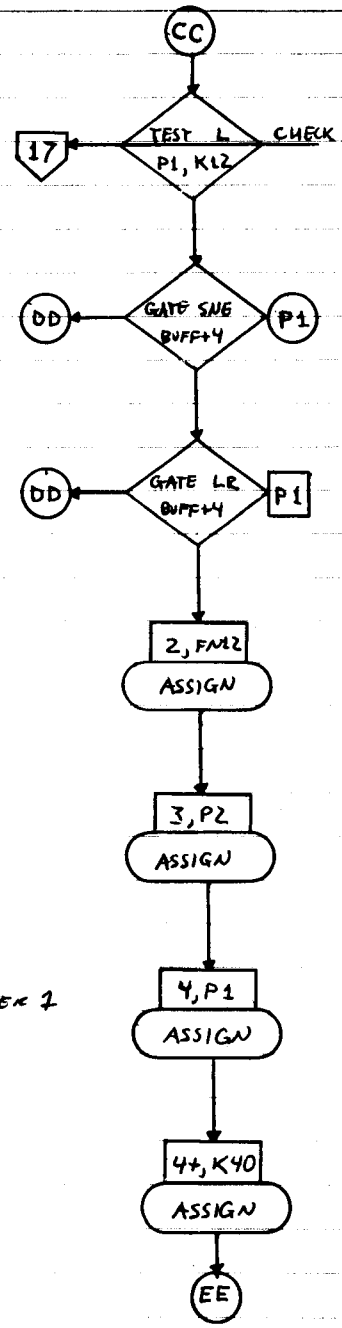

LEAVE QUEUE FOR OUT GOING TERMINAL

LEAVE OUTPUT BUFFER FOR TERMINAL

SEIZE TERMINAL

TRANSMIT TIME FOR OUTGOING TERMINAL WITH 1052 PRINTER

RELEASE TERMINAL

GATHER SEGMENTS UNTIL HAVE CORRECT NUMBER FOR MESSAGE

TRANSFER TO POSITION TO BE TABULATED

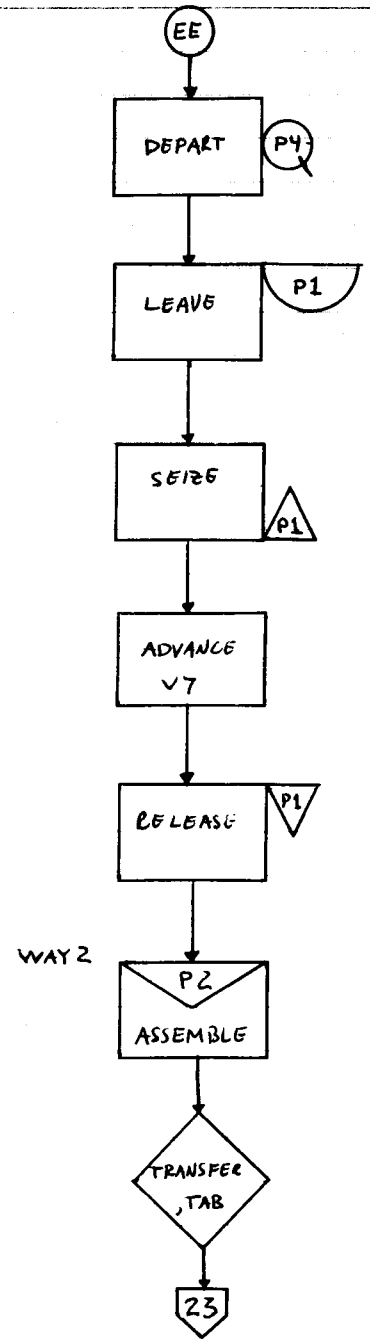

TEST TO SEE IF PARAMETER 1 IS LESS THAN 23; IF TRUE, TRANSACTION CONTINUES; IF FALSE, IT GOES TO GOGO

CHECK TO SEE IF OUT PUT BUFFER IS NOT EMPTY; IF TRUE, TRANSACTION CONTINUES; IF FALSE, IT GOES TO BUFF+4

CHECK TO SEE IF TERMINAL IS NOT BUSY FOR INCOMING SEGMENTS

ASSIGN SEGMENT LENGTH TO MESSAGES

HOLD SEGMENT LENGTH FOR FUTURE USE

ASSIGN TERMINAL NUMBER STORED IN PARAMETER 1 TO PARAMETER 4

ADD 40 TO PARAMETER 4

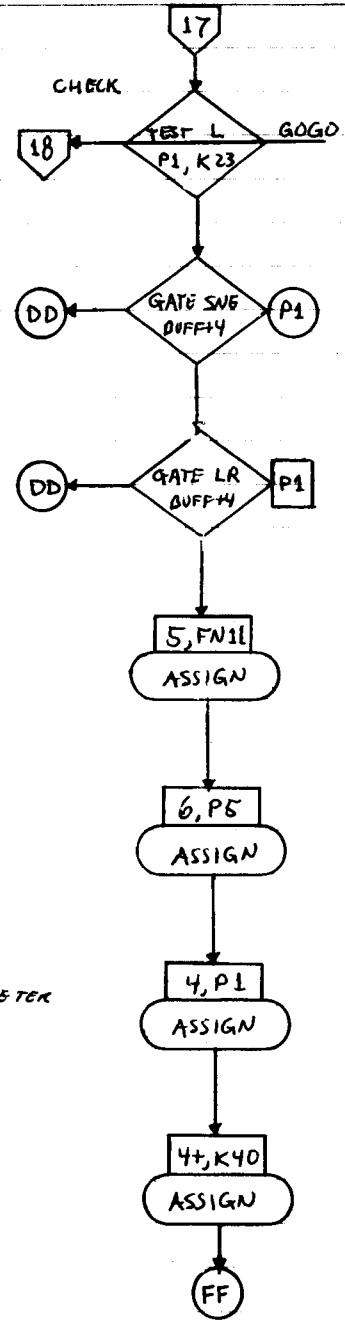

LEAVE QUEUE FOR OUTGOING TERMINAL

LEAVE OUTPUT BUFFER FOR TERMINAL

SEIZE TERMINAL

TRANSMIT TIME FOR OUTGOING TERMINAL WITH 1052 PRINTER

RELEASE TERMINAL

GATHER SEGMENTS UNTIL HAVE CORRECT NUMBER FOR MESSAGE

TRANSFER TO POSITION TO BE TABULATED

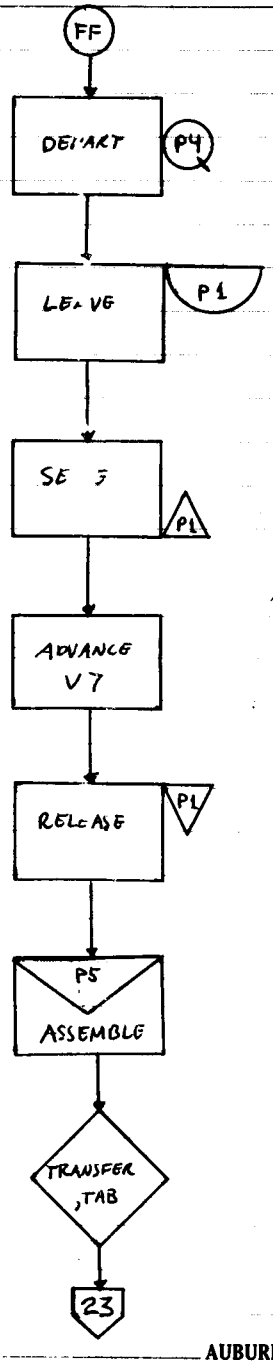

TEST TO SEE IF PARAMETER 1 IS EQUAL TO 26; IF TRUE, TRANSACTION CONTINUES; IF FALSE, IT GOES TO TEST

CHECK TO SEE IF OUTPUT BUFFER IS NOT EMPTY; IF TRUE, TRANSACTION CONTINUES; IF FALSE, TRANSACTION GOES TO BUFF+4

CHECK TO SEE IF TERMINAL 31 IS NOT IN USE, (USES SAME LINE AS TERMINAL 26)

CHECK TO SEE IF TERMINAL 26 IS NOT IN USE, (USES SAME LINE AS TERMINAL 31)

ASSIGN SEGMENT LENGTH TO MESSAGES

HOLD SEGMENT LENGTH FOR FUTURE USE

ASSIGN TERMINAL NUMBER STORED IN PARAMETER 1 TO PARAMETER 4

ADD 40 TO PARAMETER 4

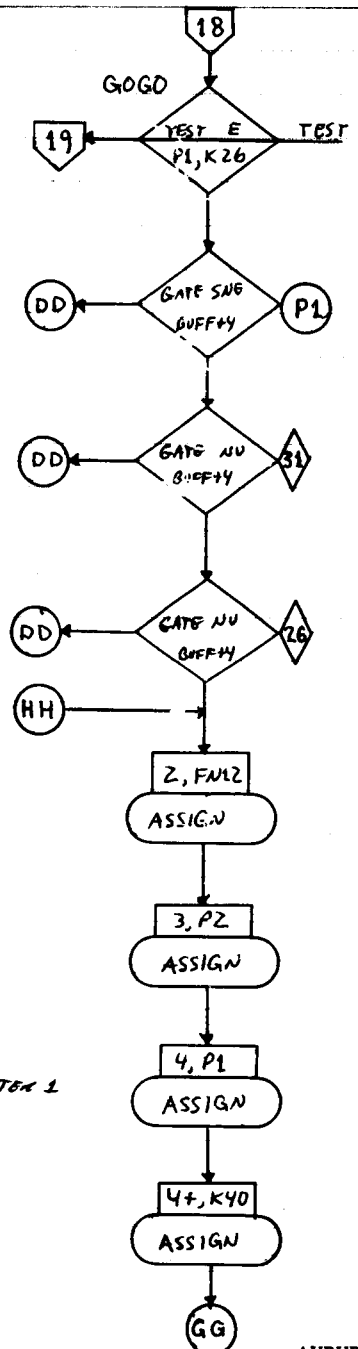

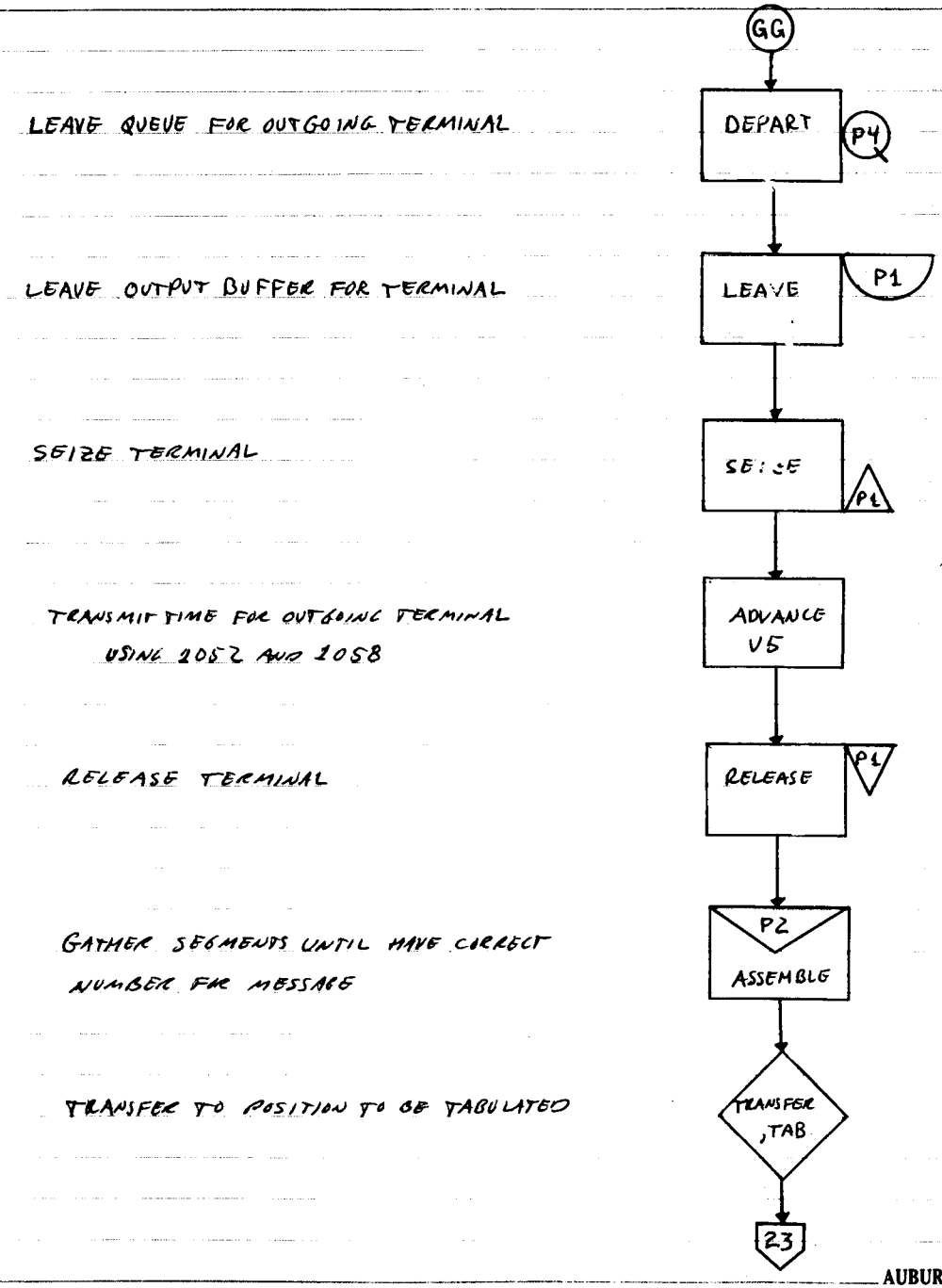
GG
LEAVE QUEUE FOR OUTGOING TERMINAL
DEPART
P4
LEAVE OUTPUT BUFFER FOR TERMINAL
LEAVE
P1
SEIZE TERMINAL
SEIZE
P1
TRANSMIT TIME FOR OUTGOING TERMINAL USING 2052 AND 2058
ADVANCE V5
RELEASE TERMINAL
RELEASE
P1
GATHER SEGMENTS UNTIL HAVE CORRECT NUMBER FOR MESSAGE
P2
ASSEMBLE
TRANSFER TO POSITION TO BE TABULATED
TRANSFER ,TAB
23

TEST TO SEE IF PARAMETER 1 IS EQUAL TO 31; IF TRUE, TRANSACTION CONTINUES; IF FALSE, IT GOES TO ASGN1

CHECK TO SEE IF OUTPUT BUFFER IS NOT EMPTY; IF TRUE, TRANSACTION CONTINUES; IF FALSE, IT GOES TO BUFF+4

CHECK TO SEE IF TERMINAL 26 IS NOT IN USE, (USES SAME LINE AS TERMINAL 31)

CHECK TO SEE IF TERMINAL 31 IS NOT IN USE, (USES SAME LINE AS TERMINAL 26)

TRANSFER TO SAME TERMINAL USED FOR 1058

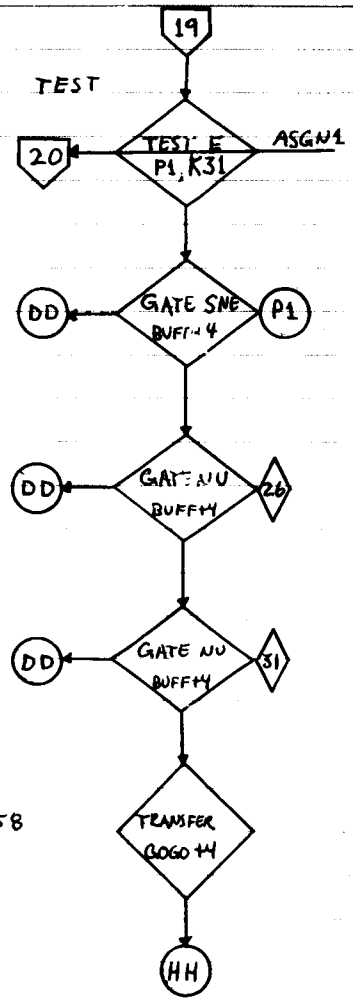

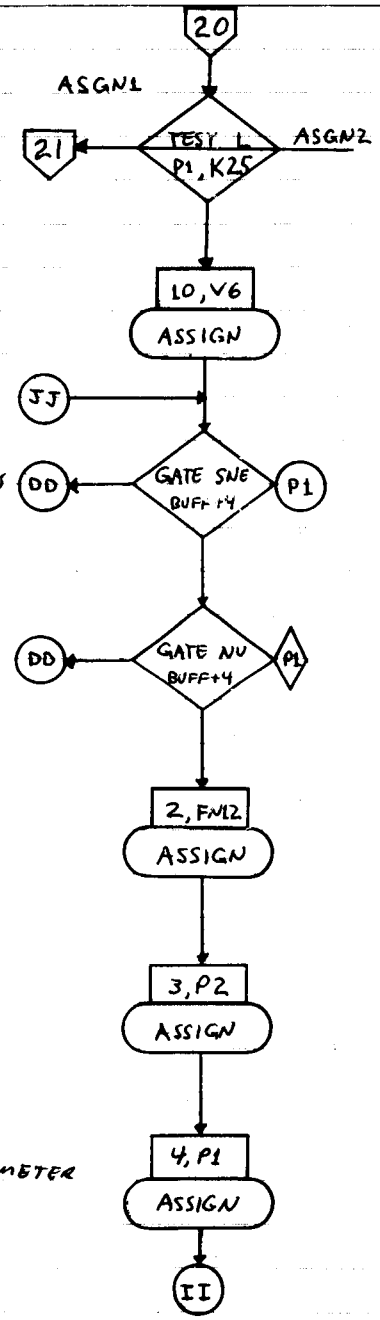

TEST TO SEE IF PARAMETER 1 IS LESS THAN 25; IF TRUE, TRANSACTION CONTINUES; IF FALSE, IT GOES TO ASGN2

ASSIGN TRANSMIT TIME FOR TERMINAL

CHECK TO SEE IF OUTPUT BUFFER IS NOT EMPTY; IF TRUE, TRANSACTION CONTINUES; IF FALSE, IT GOES TO BUFF+4

CHECK TO SEE IF TERMINAL IN PARAMETER 1 IS NOT IN USE

ASSIGN SEGMENT LENGTH TO MESSAGES

HOLD SEGMENT LENGTH FOR FUTURE USE

ASSIGN TERMINAL NUMBER STORED IN PARAMETER 1 TO PARAMETER 4

ADD 40 TO PARAMETER 4

LEAVE QUEUE FOR OUTGOING TERMINAL

LEAVE OUTPUT BUFFER FOR TERMINAL

SEIZE TERMINAL

TRANSMIT TIME FOR TERMINAL

RELEASE TERMINAL

GATHER SEGMENTS UNTIL HAVE CORRECT NUMBER FOR MESSAGE

TRANSFER TO POSITION TO BE TABULATED

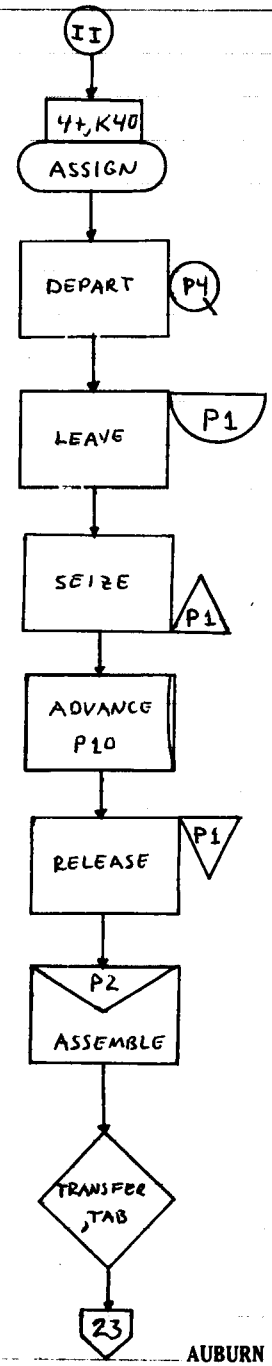

TEST TO SEE IF PARAMETER 1 IS LESS THAN 29; IF TRUE, TRANSACTION CONTINUES; IF FALSE, IT GOES TO ASGN3

ASSIGN TRANSMIT TIME FOR TERMINAL

TRANSFER SEGMENTS TO TERMINAL

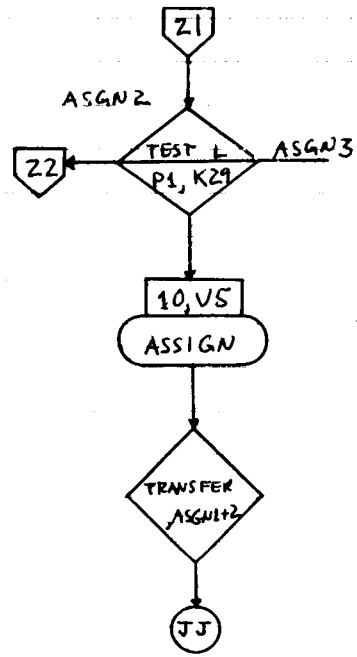

ASSIGN TRANSMIT TIME FOR TERMINAL

TRANSFER SEGMENTS TO TERMINAL

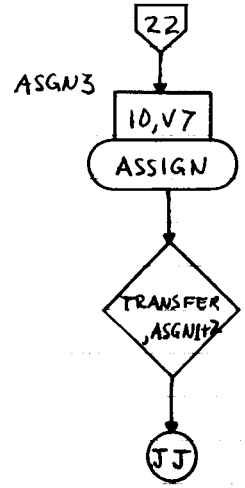

LEAVE QUEUE FOR OUTGOING SEGMENTS STORED ON DISK

TABULATE TIME MESSAGES SPENT FROM CREATION TO TERMINATION

DESTROY MESSAGES

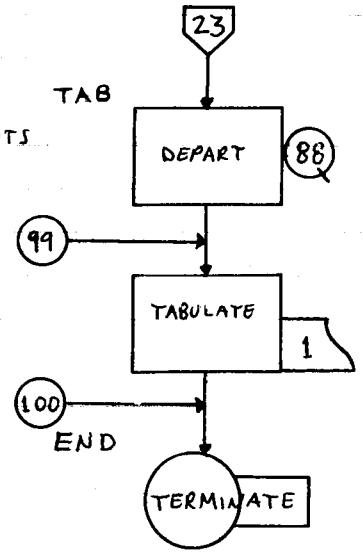

TIME CLOCK

GENERATE TRANSACTION TO REGULATE RUNNING OF SYSTEM

DESTROY TRANSACTION

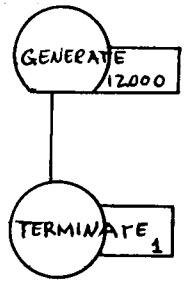

```
$JOB    IE031T  GPSSIII          /TIME=273,PAGE=400          ****  185  ****          12 26 A.M.
$IBJOB GPSS     NOSOURCE
$CHAIN GPSS
$IBLDR CONTRL   02/03/65                                CONT0001
```

OBJECT PROGRAM IS BEING ENTERED INTO STORAGE.

GPSS III ASSEMBLY INPUT PAGE 1

```
BLOCK
NUMBER     *LOC   NAME       A,B,C,D,E                    COMMENTS

           *      SIMULATE
           *
           *
           *       SIMULATION MODEL BUILT AND PROGRAMMED
           *       BY MYUNG S. CHUN AND RICHARD M. GARWOOD
           *
           *       DATE   AUGUST 21,1967
           *
                1 FUNCTION   RN1,C24        EXPONENTIAL DISTRIBUTION
           0.    0.    .1    .104  .21   .222  .3    .355  .4    .509  .5    .69
           .6    .915  .7    1.02  .75   1.38  .8    1.6   .84   1.83  .88   2.12
           .9    2.3   .92   2.52  .94   2.81  .95   2.99  .96   3.2   .97   3.5
           .98   3.9   .99   4.6   .995  5.3   .998  6.2   .999  7.    .9997 8.
           *
           *
                2 FUNCTION   RN1,D11          TWO-WAY TERMINAL DISTRIBUTION
           .0103 1.    .0460 2.    .0854 3.    .1643 4.    .2469 5.    .3296 6.
           .4263 7.    .5408 8.    .6732 9.    .8131 10.   1.000 11.
           *
                3 FUNCTION   RN1,D9           ONEWAY TERM.INCOMING 1030,+A16 1052
           .0155 13.   .0777 14.   .1459 15.   .2273 16.   .3494 17.   .4779 18.
           .6859 19.   .9461 20.   1.000 34.
           *
                4 FUNCTION   RN1,D2           TWO-WAY DA TERMINAL JOBNO D6710,INPUT
           .4545 21.   1.000 22.
           *
                5 FUNCTION   RN1,D11          TWO-WAY TERMINAL DISTRIBUTION OUTPUT
           .0152 1.    .0274 2.    .0791 3.    .2706 4.    .4043 5.    .4438 6.
           .4864 7.    .6014 8.    .7351 9.    .7777 10.   1.000 11.
           *
                6 FUNCTION   RN1,D2           ONE-WAY OUTPUT AMOUNG THE PUNCH 1058
           .0939 23.   1.000 24.
           *
           *
                7 FUNCTION   RN1,D4           ONE-WAY OUTPUT AMONG PRINTER 1053
           .1525 25    .3051 26.   .5000 27.   1.000 28.
           *
           *
                8 FUNCTION   RN1,D3           ONE-WAY OUTPUT AMONG TYPEWRITER 1052
           .1967 29.   .4959 30.   1.000 31.
           *
                9 FUNCTION   RN1,D2           TWO-WAY, DA TERMINAL OUTPUT
           .4764 21.   1.000 22.
           *
               11 FUNCTION   RN1,D3           TEMPRARY SEG LENGTH ON D350A
           .8000 3.    .9500 4.    1.000 5.
           *
               12 FUNCTION   RN1,D2           TEMPORY SEG LENGTH ON A761B
           .8000 2.    1.000 3.
           *
               13 FUNCTION   C1,D9            GEN DISTRIBUTION FOR CLOCK TIME
           36000.360.  72000.60.   10800090.   14400072.   180000120.  216000360.
           25200072.   288000120.  324000360.
```

```
 1          GEN1 GENERATE   120,FN1          HOUR 8
           *
           *                                TERMINAL WORKLOAD DISTRIBUTION
           *                                ACCORDING TO JOBNO
           *
           *
 2               TRANSFER   .988,DIFF,DDA35
           *
           *
 3          DDA35 ASSIGN     2,FN12          LATER FUNCTION ROUTINE WILL BE
 4               ASSIGN     3,P2            ADDED FOR SEGMENT LENGTHS
 5               TRANSFER   .147,IOIO,ININ
 6          IOIO  ASSIGN     1,FN2           ASSIGN PERCENTAGE OF EACH TERMINAL
           *                                TWO-WAY COMMUNICATION
 7               LOGICS     P1              SET LOGIC SWITCH ON FOR LATER
           *                                OPERATION, SENDING MESSAGE BACK
 8               QUEUE      P1
 9               SEIZE      P1              SEIZE TWO-WAY TERMINAL  INCOMING
           *                                FOR INCOMING MESSAGE FOR D350A
10               DEPART     P1
11               ADVANCE    V2              TIME FOR TRANSMIT MESSAGE BY 1052
12               RELEASE    P1
13               LOGICI     P1              INVERT LOGIC, FOR AVAILABILITY
           *                                WHEN THE MESSGS BACK TO TERMINALS
14               SPLIT      1,POOL          ONE SEGMENT TO DISK 1311, IF AVAILABL
15               LOOP       2,IOIO+1        MORE SEGMENTS, THEN GOBACK TO
16               ASSIGN     2,P3
17               TRANSFER   ,POOL           THAT'S ALL
           *
           *
18          ININ  TRANSFER   .156,JJJJJ,HHST .156 PERCENT FOR HST TO HST OPERATION
           *                                REMAINING PERCENTAGE ARE ONE-WAY
           *                                TERMINAL IBM 1030 STATIONS
19          JJJJJ ASSIGN     1,FN3           ASSIGN PERCENTAGE OF 1030 TERMINAL
20               ASSIGN     2,FN12
21               ASSIGN     3,P2
22               QUEUE      P1
23               SEIZE      P1              SEIZE 1030 TERMINALS
24               DEPART     P1
25               ADVANCE    V1              TRANSMIT TIME FOR 1030
26               RELEASE    P1              RELEASE 1030 TERMINALS
27               SPLIT      1,POOL
28               LOOP       2,JJJJJ+3
29               ASSIGN     2,P3
30               TRANSFER   ,POOL
           *
           *
31          HHST  QUEUE      90
32               SEIZE      70
33               ADVANCE    V10
34               RELEASE    70
35               DEPART     90
36               TRANSFER   ,TAB+1
           *
```

```
*
 DIFF  TRANSFER   .500,DDDDD,AAAAA
*
*
 DDDDD ASSIGN     5,FN11          FUNCTION SEGMENT WILL BE REPLACED
       ASSIGN     6,P5
       ASSIGN     1,FN4           ASSIGN PERCENTAGE BY TERMINAL DA1,DA2
*                                 FOR INCOMING MESSGS
       LOGICS     P1              RESERVE LOGIC FOR OUTGOING OPERATION
       QUEUE      P1
       SEIZE      P1              SEIZE TERMINAL DA1, DA2
       DEPART     P1
       ADVANCE    V3              TRANSMIT TIME FOR DA TYPE TERMINAL
       RELEASE    P1
       LOGICI     P1              INVERT LOGIC AGAIN SINCE IT IS FREE
       SPLIT      1,POOL
       LOOP       5,DDDDD+3
       ASSIGN     5,P6
       TRANSFER   ,POOL
 AAAAA TRANSFER   .5000,AAI21,BBI51
*
*
 AAI21 ASSIGN     7,FN12          SEG FUNC. WILL BE REPLACED
       ASSIGN     8,P7
       LOGICS     33              TERMINAL A21,1052,TWO-WAY JOBNO A4275
       QUEUE      74
       SEIZE      33
       DEPART     74
       ADVANCE    V2
       RELEASE    33
       LOGICI     33
       SPLIT      1,POOL
       LOOP       7,AAI21+2
       ASSIGN     7,P8
       TRANSFER   ,POOL
*
*
 BBI51 ASSIGN     9,FN12          TERMINAL A21,1052,TWO-WAY,JOBNO A761B
       ASSIGN     11,P9
       LOGICS     32
       QUEUE      75
       SEIZE      32
       DEPART     75
       ADVANCE    V2
       RELEASE    32
       LOGICI     32
       SPLIT      1,POOL
       LOOP       9,BBI51+2
       ASSIGN     9,P11
*
*
 POOL  TRANSFER   .991,END,POOL+1  IGNORE ONE PERCENT MESSGS GENERATED
       QUEUE      77
*                                 READY TO TRANSMIT DISK 1311
```

```
INPUT GATE NU     100          CHECK DISK AND INTERFACR
      GATE NU     99           ARE BOTH AVAILABLE SAME TIME
      TRANSFER    SIM,,INPUT
      QUEUE       99
      SEIZE       99           SEIZE INTERFACE
      DEPART      99
      ADVANCE     0            NO PROCESSING TIME, MATTER OF SEZING
      QUEUE       100          QUEUE FOR DISK 1311
      LINK        7,FIFO,DISK
DISK  SEIZE       100          SEIZE DISC
      DEPART      100
      ADVANCE     10
      RELEASE     100
      UNLINK      7,DISK,1
      RELEASE     99
      DEPART      77
      QUEUE       76
CPU   GATE NU     99           CHECK
      GATE NU     100          AVAILABILITY OF INTERFACE,DISK
      TRANSFER    SIM,,CPU
      DEPART      76
TWO   ENTER       34           INPUT BUFFER OF HST 7010
      SEIZE       100          SEIZE DISC 1311
      SEIZE       99           SEIZE INTERFACE
*
*                              7740 IS IGNORED, NO TIME
*
      PREEMPT     70           INTERRRUPT HST FOR I/O OPERATION
      ADVANCE     V12          TRANSMIT SPEED FOR SEGMENT
      RETURN      70
      RELEASE     99
      RELEASE     100
      TABULATE    2
      LEAVE       34,S34       IF 7010 INPUT BUFFER IS FULL
*                              SEND ONE MORE SEGMNET SINCE
*                              ONE I/O OPERATION IS TWO
*
*                              HST 7010 PROCESSING TIME
*
HST   QUEUE       78
      QUEUE       91
      SEIZE       70           SEIZE HST
      DEPART      78
      ADVANCE     8,2          PROCESSING TIME AT HST , PER SEGMENT
      RELEASE     70
      ENTER       35,V11       SENT TO 7010 OUTPUT BUFFER
*                              SEGMENT RATIO BETWEEN INPUT AND OUT
*                              PUT IS ONE TO 1.25
*
*
*
      QUEUE       79
TRA   GATE NU     100          CHEKC DISC 1311 AND INTERFACE IS FREE
      GATE NU     99
```

```
121              TRANSFER   SIM,,TRA          UNTIL CONDITION OKKKK
122              DEPART     79
123              PREEMPT    70                INTRUPT HST FOR I/O OPERATION
124              SEIZE      99                SEIZE INTERFACE
125              SEIZE      100               SEIZE DISC 1311
126              ADVANCE    V9
127              RELEASE    100
128              RELEASE    99
129              RETURN     70
130              DEPART     91
131              LEAVE      35,S35            LEAVE 7010 OUTPUT BUFFER
           *                                  USE MAXIMUM CAPACITY IF STORAGE
           *                                  IS MORE THAN ONE
           *                                  OUTPUT BUFFER OF 7010 IS FULL SO
           *                                  REFUSAL MODE FOR INPUT MESSGS
           *                                  AT THIS POINT , SEND EIGHT MAX SEG.
132         QUE88 QUEUE      88                BIG DUMMY STORAGE FOR SHIPPING OUT
133              TEST G     G68,KO
           *
           *
           *                                  OUTGOING MESSGS DISTRIBUTION
           *
           *
           *                                  MESSAGES
134              GATE NU    100               DISC 1311 AND INTERFACE ARE FREE
135              GATE NU    99                AT THE SAME TIME
136              TRANSFER   SIM,,QUE88+2
137              TRANSFER   .013,,OTHER
138              TRANSFER   .614,,ONWAY
139         TWWAY ASSIGN    1,FN5             DISTRIBUTION OF TWO-WAY OUTGOING
140              GATE SE    P1,TWWAY-2
141              TRANSFER   ,PUT
           *
           *
142         ONWAY TRANSFER  .295,CLASS,PUNCH
           *
           *
143         PUNCH ASSIGN    1,FN6             JOB DISTRIBUTION AMONG PUNCH TERMINAL
144              GATE SE    P1,TWWAY-2
145              TRANSFER   ,PUT
           *
           *
146         CLASS TRANSFER  .545,TYPE,PRINT
           *
           *
147         PRINT ASSIGN    1,FN7             DISTRIBUTION AMONG THE THE PRINTERS
148              GATE SE    P1,TWWAY-2
149              TRANSFER   ,PUT
           *
           *
150         TYPE  ASSIGN    1,FN8             DISTRIBUTION ON 1052,OUTPUT ONLY
151              GATE SE    P1,TWWAY-2
152              TRANSFER   ,PUT
           *
```

```
*
 OTHER TRANSFER   .384,AAANO,DADA
*
*
 DADA  ASSIGN     1,FN9            DA1,DA2,DA3 DISTRIBUTION
       GATE SE    P1,TWWAY-2
 PUT   ASSIGN     4,P1
       ASSIGN     4+,K40
       SEIZE      100
       SEIZE      99
       ENTER      P1
       ADVANCE    3
       RELEASE    99
       RELEASE    100
       TRANSFER   ,BUFF
*
*
 AAANO TRANSFER   .198,BB051,AA021
*
*
 BB051 GATE SE    32,TWWAY-2
       SEIZE      100
       SEIZE      99
       ADVANCE    3
       RELEASE    99
       RELEASE    100
       ENTER      32
       ASSIGN     4,K72
       TRANSFER   ,BUFF
*
*
 AA021 GATE SE    33,TWWAY-2
       SEIZE      100
       SEIZE      99
       ADVANCE    3
       RELEASE    99
       RELEASE    100
       ENTER      33
       ASSIGN     4,K73
       TRANSFER   ,BUFF
*
*
 BUFF  QUEUE      P4               QUEUE FOR EACH OUTPUT TERMINAL
       SAVEX      1,P1
       TRANSFER   ,INTIL
       ASSIGN     1,K0
       TEST NE    P1,X1,QUE88+1
       ASSIGN     1+,K1            ASSIGN TIME SLICE FOR EACH TERMINAL
*                                  NOT EACH EQUIPMENT
*
 INTIL TEST L     P1,K34,BUFF+3
       TEST L     P1,K12,CHECK     IF PARAMETER IS LESS THAN 12, THEN
*                                  TWO WAY TERMINAL
       GATE SNE   P1,BUFF+4        STORAGE NOT EMPTY GO TO NEXT SEQUENCE
```

```
193              GATE LR    P1,BUFF+4        TERMINAL IS NOT BUSY FOR INCOMING
                 •
194              ASSIGN     2,FN12
195              ASSIGN     3,P2
                 •
196              ASSIGN     4,P1
197              ASSIGN     4+,K40
198              DEPART     P4
199              LEAVE      P1
200              SEIZE      P1
201              ADVANCE    V7               TIME FOR 1052
202              RELEASE    P1
203        WAY2  ASSEMBLE   P2
204              TRANSFER   ,TAB
205        CHECK TEST L     P1,K23,GOGO      DA1,DA2,DA3, TWO WOY TERMINAL
206              GATE SNE   P1,BUFF+4
207              GATE LR    P1,BUFF+4
208              ASSIGN     5,FN11
209              ASSIGN     6,P5
210              ASSIGN     4,P1
211              ASSIGN     4+,K40
212              DEPART     P4
213              LEAVE      P1
214              SEIZE      P1
215              ADVANCE    V7
216              RELEASE    P1
217              ASSEMBLE   P5
218              TRANSFER   ,TAB
219        GOGO  TEST E     P1,K26,TEST
220              GATE SNE   P1,BUFF+4
221              GATE NU    31,BUFF+4        CHECK 1052 ARE NOT OPERATING SINCE
                 •                           SAME LINE WITH 1058
222              GATE NU    26,BUFF+4
223              ASSIGN     2,FN12
224              ASSIGN     3,P2
225              ASSIGN     4,P1
226              ASSIGN     4+,K40
227              DEPART     P4
228              LEAVE      P1
229              SEIZE      P1
230              ADVANCE    V5
231              RELEASE    P1
232              ASSEMBLE   P2
233              TRANSFER   ,TAB
234        TEST  TEST E     P1,K31,ASGN1
235              GATE SNE   P1,BUFF+4
236              GATE NU    26,BUFF+4        CHECK 1058 ARE NOT OPERATING SINCE
                 •                           USING SAME LINE WITH 1052
237              GATE NU    31,BUFF+4
238              TRANSFER   ,GOGO+4
239        ASGN1 TEST L     P1,K25,ASGN2
240              ASSIGN     10,V6
241              GATE SNE   P1,BUFF+4
242              GATE NU    P1,BUFF+4
```

```
243              ASSIGN     2,FN12
244              ASSIGN     3,P2
245              ASSIGN     4,P1
246              ASSIGN     4+,K40
247              DEPART     P4
248              LEAVE      P1
249              SEIZE      P1
250              ADVANCE    P10
251              RELEASE    P1
252              ASSEMBLE   P2
253              TRANSFER   ,TAB
254        ASGN2 TEST L     P1,K29,ASGN3
255              ASSIGN     10,V5
256              TRANSFER   ,ASGN1+2
257        ASGN3 ASSIGN     10,V7
258              TRANSFER   ,ASGN1+2
259        TAB   DEPART     88
260              TABULATE   1
261        END   TERMINATE
262              GENERATE   12000
263              TERMINATE  1
                1 TABLE     M0,0,10,920
                2 TABLE     M0,0,10,920
                3 QTABLE    88,0,10,920
                4 QTABLE    91,0,10,200
                1 STORAGE   1
                2 STORAGE   1
                3 STORAGE   1
                4 STORAGE   1
                5 STORAGE   1
                6 STORAGE   1
                7 STORAGE   1
                8 STORAGE   1
                9 STORAGE   1
               10 STORAGE   1
               11 STORAGE   1
               21 STORAGE   1
               22 STORAGE   1
               23 STORAGE   1
               24 STORAGE   1
               25 STORAGE   1
               26 STORAGE   1
               27 STORAGE   1
               28 STORAGE   1
               29 STORAGE   1
               30 STORAGE   1
               31 STORAGE   1
               32 STORAGE   1
               33 STORAGE   1
               34 STORAGE   2
               35 STORAGE   8
                1 VARIABLE  K20
                2 VARIABLE  K60
                3 VARIABLE  K40
```

```
 4 VARIABLE   K40
 5 VARIABLE   K10
 6 VARIABLE   K5
 7 VARIABLE   K60
 8 VARIABLE   K5
 9 VARIABLE   S35*K3
10 VARIABLE   FN11*K10
11 VARIABLE   FN12-K1
12 VARIABLE   S34*K3
   START      3
   END
```

SYMBOLS AND CORRESPONDING BLOCK NUMBERS PAG 10

*	52	AAAAA
*	165	AAAND
*	53	AAI21
*	175	AAO21
*	239	ASGN1
*	254	ASGN2
*	257	ASGN3
*	66	BBI51
*	166	BBO51
*	184	BUFF
*	205	CHECK
*	146	CLASS
*	97	CPU
*	154	DADA
*	3	DDA35
*	38	DDDDD
*	37	DIFF
*	89	DISK
*	261	END
	1	GEN1
*	219	GOGO
*	31	HHST
	111	HST
*	18	ININ
*	80	INPUT
*	190	INTIL
*	6	IOIO
*	19	JJJJJ
*	142	ONWAY
*	153	OTHER
*	78	POOL
*	147	PRINT
*	143	PUNCH
*	156	PUT
*	132	QUE88
*	259	TAB
*	234	TEST
*	119	TRA
	101	TWO
*	139	TWWAY
*	150	TYPE
	203	WAY2

```
*       SIMULATE
*
*
*        SIMULATION MODEL BUILT AND PROGRAMMED
*        BY MYUNG S. CHUN AND RICHARD M. GARWOOD
*
*        DATE   AUGUST 21,1967
*
     1 FUNCTION   RN1   C24
0.    0.    .1    .104  .21   .222  .3    .355  .4    .509  .5    .69
.6    .915  .7    1.02  .75   1.38  .8    1.6   .84   1.83  .88   2.12
.9    2.3   .92   2.52  .94   2.81  .95   2.99  .96   3.2   .97   3.5
.98   3.9   .99   4.6   .995  5.3   .998  6.2   .999  7.    .9997 8.
*
*
     2 FUNCTION   RN1   D11
.0103 1.    .0460 2.    .0854 3.    .1643 4.    .2469 5.    .3296 6.
.4263 7.    .5408 8.    .6732 9.    .8131 10.   1.000 11.
*
     3 FUNCTION   RN1   D9
.0155 13.   .0777 14.   .1459 15.   .2273 16.   .3494 17.   .4779 18.
.6859 19.   .9461 20.   1.000 34.
*
     4 FUNCTION   RN1   D2
.4545 21.   1.000 22.
*
     5 FUNCTION   RN1   D11
.0152 1.    .0274 2.    .0791 3.    .2706 4.    .4043 5.    .4438 6.
.4864 7.    .6014 8.    .7351 9.    .7777 10.   1.000 11.
*
     6 FUNCTION   RN1   D2
.0939 23.   1.000 24.
*
*
     7 FUNCTION   RN1   D4
.1525 25    .3051 26.   .5000 27.   1.000 28.
*
*
     8 FUNCTION   RN1   D3
.1967 29.   .4959 30.   1.000 31.
*
     9 FUNCTION   RN1   D2
.4764 21.   1.000 22.
*
    11 FUNCTION   RN1   D3
.8000 3.    .9500 4.    1.000 5.
*
    12 FUNCTION   RN1   D2
.8000 2.    1.000 3.
*
    13 FUNCTION   C1    D9
36000.360.  72000.60.   10800090.   14400072.   180000120.  216000360.
25200072.   288000120.  324000360.
*
 1      GENERATE   120   FN1
*
*                                TERMINAL WORKLOAD DISTRIBUTION
*                                ACCORDING TO JOBNO
```

```
*
*
 2     TRANSFER   .988  37    3
*
*
 3     ASSIGN     2     FN12
 4     ASSIGN     3     P2
 5     TRANSFER   .147  6     18
 6     ASSIGN     1     FN2
*                                  TWO-WAY COMMUNICATION
 7     LOGIC S    P1
*                                  OPERATION, SENDING MESSAGE BACK
 8     QUEUE      P1
 9     SEIZE      P1
*                                  FOR INCOMING MESSAGE FOR D350A
 10    DEPART     P1
 11    ADVANCE    V2
 12    RELEASE    P1
 13    LOGIC I    P1
*                                  WHEN THE MESSGS BACK TO TERMINALS
 14    SPLIT      1     78
 15    LOOP       2     7
 16    ASSIGN     2     P3
 17    TRANSFER         78
*
*
 18    TRANSFER   .156  19    31
*                                  REMAINING PERCENTAGE ARE ONE-WAY
*                                  TERMINAL IBM 1030 STATIONS
 19    ASSIGN     1     FN3
 20    ASSIGN     2     FN12
 21    ASSIGN     3     P2
 22    QUEUE      P1
 23    SEIZE      P1
 24    DEPART     P1
 25    ADVANCE    V1
 26    RELEASE    P1
 27    SPLIT      1     78
 28    LOOP       2     22
 29    ASSIGN     2     P3
 30    TRANSFER         78
*
*
 31    QUEUE      90
 32    SEIZE      70
 33    ADVANCE    V10
 34    RELEASE    70
 35    DEPART     90
 36    TRANSFER         260
*
*
 37    TRANSFER   .500  38    52
*
*
 38    ASSIGN     5     FN11
 39    ASSIGN     6     P5
 40    ASSIGN     1     FN4
*                                  FOR INCOMING MESSGS
```

```
 41    LOGIC S    P1
 42    QUEUE      P1
 43    SEIZE      P1
 44    DEPART     P1
 45    ADVANCE    V3
 46    RELEASE    P1
 47    LOGIC I    P1
 48    SPLIT      1      78
 49    LOOP       5      41
 50    ASSIGN     5      P6
 51    TRANSFER          78
 52    TRANSFER   .5000 53     66
*
*
 53    ASSIGN     7      FN12
 54    ASSIGN     8      P7
 55    LOGIC S    33
 56    QUEUE      74
 57    SEIZE      33
 58    DEPART     74
 59    ADVANCE    V2
 60    RELEASE    33
 61    LOGIC I    33
 62    SPLIT      1      78
 63    LOOP       7      55
 64    ASSIGN     7      P8
 65    TRANSFER          78
*
*
 66    ASSIGN     9      FN12
 67    ASSIGN     11     P9
 68    LOGIC S    32
 69    QUEUE      75
 70    SEIZE      32
 71    DEPART     75
 72    ADVANCE    V2
 73    RELEASE    32
 74    LOGIC I    32
 75    SPLIT      1      78
 76    LOOP       9      68
 77    ASSIGN     9      P11
*
*
 78    TRANSFER   .991  261    79
 79    QUEUE      77
*                                   READY TO TRANSMIT DISK 1311
 80    GATE  NU   100
 81    GATE  NU   99
 82    TRANSFER   SIM    83     80
 83    QUEUE      99
 84    SEIZE      99
 85    DEPART     99
 86    ADVANCE    0
 87    QUEUE      100
 88    LINK       7      FIFU   89
 89    SEIZE      100
 90    DEPART     100
 91    ADVANCE    10
```

```
 92    RELEASE    100
 93    UNLINK     7      89    1
 94    RELEASE    99
 95    DEPART     77
 96    QUEUE      76
 97    GATE  NU   99
 98    GATE  NU   100
 99    TRANSFER   SIM    100   97
 100   DEPART     76
 101   ENTER      34
 102   SEIZE      100
 103   SEIZE      99
*
*                                7740 IS IGNORED, NO TIME
*
 104   PREEMPT    70
 105   ADVANCE    V12
 106   RETURN     70
 107   RELEASE    99
 108   RELEASE    100
 109   TABULATE   2
 110   LEAVE      34     S34
*                                SEND ONE MORE SEGMNET SINCE
*                                ONE I/O OPERATION IS TWO
*
*                                HST 7010 PROCESSING TIME
*
 111   QUEUE      78
 112   QUEUE      91
 113   SEIZE      70
 114   DEPART     78
 115   ADVANCE    8      2
 116   RELEASE    70
 117   ENTER      35     V11
*                                SEGMENT RATIO BETWEEN INPUT AND OUT
*                                PUT IS ONE TO 1.25
*
*
*
 118   QUEUE      79
 119   GATE  NU   100
 120   GATE  NU   99
 121   TRANSFER   SIM    122   119
 122   DEPART     79
 123   PREEMPT    70
 124   SEIZE      99
 125   SEIZE      100
 126   ADVANCE    V9
 127   RELEASE    100
 128   RELEASE    99
 129   RETURN     70
 130   DEPART     91
 131   LEAVE      35     S35
*                                USE MAXIMUM CAPACITY IF STORAGE
*                                IS MORE THAN ONE
*                                OUTPUT BUFFER OF 7010 IS FULL SO
*                                REFUSAL MODE FOR INPUT MESSGS
*                                AT THIS POINT , SEND EIGHT MAX SEG.
```

```
 132   QUEUE      88
 133   TEST  G    Q88   KO
*
*
*                                  OUTGOING MESSGS DISTRIBUTION
*
*
*                                  MESSAGES
 134   GATE  NU   100
 135   GATE  NU   99
 136   TRANSFER   SIM   137   134
 137   TRANSFER   .013  138   153
 138   TRANSFER   .614  139   142
 139   ASSIGN     1     FN5
 140   GATE  SE   P1    137
 141   TRANSFER         156
*
*
 142   TRANSFER   .295  146   143
*
*
 143   ASSIGN     1     FN6
 144   GATE  SE   P1    137
 145   TRANSFER         156
*
*
 146   TRANSFER   .545  150   147
*
*
 147   ASSIGN     1     FN7
 148   GATE  SE   P1    137
 149   TRANSFER         156
*
*
 150   ASSIGN     1     FN8
 151   GATE  SE   P1    137
 152   TRANSFER         156
*
*
 153   TRANSFER   .384  165   154
*
*
 154   ASSIGN     1     FN9
 155   GATE  SE   P1    137
 156   ASSIGN     4     P1
 157   ASSIGN     4+    K40
 158   SEIZE      100
 159   SEIZE      99
 160   ENTER      P1
 161   ADVANCE    3
 162   RELEASE    99
 163   RELEASE    100
 164   TRANSFER         184
*
*
 165   TRANSFER   .198  166   175
*
*
```

```
 166   GATE  SE   32     137
 167   SEIZE      100
 168   SEIZE      99
 169   ADVANCE    3
 170   RELEASE    99
 171   RELEASE    100
 172   ENTER      32
 173   ASSIGN     4      K72
 174   TRANSFER          184
*
*
 175   GATE  SE   33     137
 176   SEIZE      100
 177   SEIZE      99
 178   ADVANCE    3
 179   RELEASE    99
 180   RELEASE    100
 181   ENTER      33
 182   ASSIGN     4      K73
 183   TRANSFER          184
*
*
 184   QUEUE      P4
 185   SAVEX      1      P1
 186   TRANSFER          190
 187   ASSIGN     1      K0
 188   TEST  NE   P1     X1     133
 189   ASSIGN     1+     K1
*                                   NOT EACH EQUIPMENT
*
 190   TEST  L    P1     K34    187
 191   TEST  L    P1     K12    205
*                                   TWO WAY TERMINAL
 192   GATE  SNE  P1     188
 193   GATE  LR   P1     188
*
 194   ASSIGN     2      FN12
 195   ASSIGN     3      P2
*
 196   ASSIGN     4      P1
 197   ASSIGN     4+     K40
 198   DEPART     P4
 199   LEAVE      P1
 200   SEIZE      P1
 201   ADVANCE    V7
 202   RELEASE    P1
 203   ASSEMBLE   P2
 204   TRANSFER          259
 205   TEST  L    P1     K23    219
 206   GATE  SNE  P1     188
 207   GATE  LR   P1     188
 208   ASSIGN     5      FN11
 209   ASSIGN     6      P5
 210   ASSIGN     4      P1
 211   ASSIGN     4+     K40
 212   DEPART     P4
 213   LEAVE      P1
 214   SEIZE      P1
```

```
 215   ADVANCE     V7
 216   RELEASE     P1
 217   ASSEMBLE    P5
 218   TRANSFER          259
 219   TEST  E     P1    K26   234
 220   GATE  SNE   P1    188
 221   GATE  NU    31    188
*                                 SAME LINE WITH 1058
 222   GATE  NU    26    188
 223   ASSIGN      2     FN12
 224   ASSIGN      3     P2
 225   ASSIGN      4     P1
 226   ASSIGN      4+    K40
 227   DEPART      P4
 228   LEAVE       P1
 229   SEIZE       P1
 230   ADVANCE     V5
 231   RELEASE     P1
 232   ASSEMBLE    P2
 233   TRANSFER          259
 234   TEST  E     P1    K31   239
 235   GATE  SNE   P1    188
 236   GATE  NU    26    188
*                                 USING SAME LINE WITH 1052
 237   GATE  NU    31    188
 238   TRANSFER          223
 239   TEST  L     P1    K25   254
 240   ASSIGN      10    V6
 241   GATE  SNE   P1    188
 242   GATE  NU    P1    188
 243   ASSIGN      2     FN12
 244   ASSIGN      3     P2
 245   ASSIGN      4     P1
 246   ASSIGN      4+    K40
 247   DEPART      P4
 248   LEAVE       P1
 249   SEIZE       P1
 250   ADVANCE     P10
 251   RELEASE     P1
 252   ASSEMBLE    P2
 253   TRANSFER          259
 254   TEST  L     P1    K29   257
 255   ASSIGN      10    V5
 256   TRANSFER          241
 257   ASSIGN      10    V7
 258   TRANSFER          241
 259   DEPART      88
 260   TABULATE    1
 261   TERMINATE
 262   GENERATE    12000
 263   TERMINATE   1
     1 TABLE       M0    0     10    920
     2 TABLE       M0    0     10    920
     3 QTABLE      88    0     10    920
     4 QTABLE      91    0     10    200
     1 STORAGE     1
     2 STORAGE     1
     3 STORAGE     1
```

```
     4 STORAGE    1
     5 STORAGE    1
     6 STORAGE    1
     7 STORAGE    1
     8 STORAGE    1
     9 STORAGE    1
    10 STORAGE    1
    11 STORAGE    1
    21 STORAGE    1
    22 STORAGE    1
    23 STORAGE    1
    24 STORAGE    1
    25 STORAGE    1
    26 STORAGE    1
    27 STORAGE    1
    28 STORAGE    1
    29 STORAGE    1
    30 STORAGE    1
    31 STORAGE    1
    32 STORAGE    1
    33 STORAGE    1
    34 STORAGE    2
    35 STORAGE    8
     1 VARIABLE   K20
     2 VARIABLE   K60
     3 VARIABLE   K40
     4 VARIABLE   K40
     5 VARIABLE   K10
     6 VARIABLE   K5
     7 VARIABLE   K60
     8 VARIABLE   K5
     9 VARIABLE   S35*K3
    10 VARIABLE   FN11*K10
    11 VARIABLE   FN12-K1
    12 VARIABLE   S34*K3
       START      3

CLOCK TIME        36000                                    36000

BLOCK COUNTS     BLOCK TRANS,TOTAL   BLOCK TRANS,TOTAL   BLOCK TRANS,TOTAL   BLOCK TRANS,TOTAL   BLOCK TRANS,TOTAL
                   1     0,  313       2     0,  313       3     0,  311       4     0,  311       5     0,  311
                   6     0,  262       7     0,  577       8     0,  577       9     0,  577      10     0,  577
                  11     0,  577      12     0,  577      13     0,  577      14     0,  577      15     0,  577
                  16     0,  262      17     0,  262      18     0,   49      19     0,   40      20     0,   40
                  21     0,   40      22     0,   89      23     0,   89      24     0,   89      25     0,   89
                  26     0,   89      27     0,   89      28     0,   89      29     0,   40      30     0,   40
                  31     0,    9      32     0,    9      33     0,    9      34     0,    9      35     0,    9
                  36     0,    9      37     0,    2      38     0,    1      39     0,    1      40     0,    1
                  41     0,    3      42     0,    3      43     0,    3      44     0,    3      45     0,    3
                  46     0,    3      47     0,    3      48     0,    3      49     0,    3      50     0,    1
                  51     0,    1      52     0,    1      53     0,    1      54     0,    1      55     0,    2
                  56     0,    2      57     0,    2      58     0,    2      59     0,    2      60     0,    2
                  61     0,    2      62     0,    2      63     0,    2      64     0,    1      65     0,    1
                  66     0,    0      67     0,    0      68     0,    0      69     0,    0      70     0,    0
                  71     0,    0      72     0,    0      73     0,    0      74     0,    0      75     0,    0
                  76     0,    0      77     0,    0      78     0,  975      79     0,  964      80     0, 1653
                  81     0, 1653      82     0, 1653      83     0,  964      84     0,  964      85     0,  964
                  86     0,  964      87     0,  964      88     0,  964      89     0,  964      90     0,  964
```

	91	1,	964	92	0,	963	93	0,	963	94	0,	963	95	0,	963
	96	0,	963	97	0,	963	98	0,	963	99	0,	963	100	0,	963
	101	0,	963	102	0,	963	103	0,	963	104	0,	963	105	0,	963
	106	0,	963	107	0,	963	108	0,	963	109	0,	963	110	0,	963
	111	0,	963	112	0,	963	113	0,	963	114	0,	963	115	1,	963
	116	0,	962	117	0,	962	118	0,	962	119	0,	1676	120	0,	1676
	121	0,	1676	122	0,	962	123	0,	962	124	0,	962	125	0,	962
	126	0,	962	127	0,	962	128	0,	962	129	0,	962	130	0,	962
	131	0,	962	132	0,	962	133	0,	985	134	0,	985	135	0,	985
	136	0,	985	137	0,	30952	138	0,	28342	139	0,	9080	140	0,	9080
	141	0,	222	142	0,	19262	143	0,	1778	144	0,	1778	145	0,	48
	146	0,	17484	147	0,	12508	148	0,	12508	149	0,	66	150	0,	4976
	151	0,	4976	152	0,	22	153	0,	2610	154	0,	1039	155	0,	1039
	156	0,	983	157	0,	983	158	0,	983	159	0,	983	160	0,	983
	161	0,	983	162	0,	983	163	0,	983	164	0,	983	165	0,	1571
	166	0,	1263	167	0,	1	168	0,	1	169	0,	1	170	0,	1
	171	0,	1	172	0,	1	173	0,	1	174	0,	1	175	0,	308
	176	0,	1	177	0,	1	178	0,	1	179	0,	1	180	0,	1
	181	0,	1	182	0,	1	183	0,	1	184	0,	985	185	0,	985
	186	0,	985	187	0,	0	188	0,	23	189	0,	0	190	0,	985
	191	0,	985	192	0,	223	193	0,	223	194	0,	211	195	0,	211
	196	0,	211	197	0,	211	198	0,	211	199	0,	211	200	0,	211
	201	0,	211	202	0,	211	203	68,	134	204	0,	66	205	0,	762
	206	0,	625	207	0,	625	208	0,	624	209	0,	624	210	0,	624
	211	0,	624	212	0,	624	213	131,	624	214	0,	493	215	1,	493
	216	0,	492	217	82,	201	218	0,	119	219	0,	137	220	0,	30
	221	0,	30	222	0,	30	223	0,	41	224	0,	41	225	0,	41
	226	0,	41	227	0,	41	228	0,	41	229	0,	41	230	0,	41
	231	0,	41	232	26,	33	233	0,	7	234	0,	107	235	0,	13
	236	0,	13	237	0,	13	238	0,	12	239	0,	94	240	0,	48
	241	0,	94	242	0,	94	243	0,	86	244	0,	86	245	0,	86
	246	0,	86	247	0,	86	248	0,	86	249	0,	86	250	0,	86
	251	0,	86	252	41,	59	253	0,	18	254	0,	46	255	0,	36
	256	0,	36	257	0,	10	258	0,	10	259	0,	210	260	0,	219
	261	0,	230	262	0,	3	263	0,	3						

	NR,	VALUE	NR,	VALUE	NR,	VALUE	NR,	VALUE	NR,	VALUE
SAVEX	1	22								

FACILITY NUMBER	AVERAGE UTILIZATION	NUMBER ENTRIES	AVERAGE TIME/TRANS	SEIZING TRANS. NO.	PREMPTING TRANS. NO.
1	.0533	32	60.00	0	0
2	.0883	53	60.00	0	0
3	.1650	99	60.00	0	0
4	.1600	96	60.00	0	0
5	.0900	54	60.00	0	0
6	.0900	54	60.00	0	0
7	.1100	66	60.00	0	0
8	.1517	91	60.00	0	0
9	.1150	69	60.00	0	0
10	.1017	61	60.00	0	0
11	.1883	113	60.00	0	0
14	.0033	6	20.00	0	0
15	.0083	15	20.00	0	0
16	.0056	10	20.00	0	0
17	.0061	11	20.00	0	0
18	.0044	8	20.00	0	0
19	.0089	16	20.00	0	0
20	.0072	13	20.00	0	0
21	.1633	99	59.39	0	0
22	.6605	397	59.89	322	0
23	.0057	41	5.00	0	0
24	.0007	5	5.00	0	0
25	.0042	15	10.00	0	0
26	.0081	29	10.00	0	0
27	.0036	13	10.00	0	0
28	.0014	5	10.00	0	0
29	.0033	2	60.00	0	0
30	.0083	5	60.00	0	0
31	.0033	12	10.00	0	0
33	.0033	2	60.00	0	0
34	.0056	10	20.00	0	0
70	.3922	2897	4.87	318	0
99	.5256	3874	4.88	184	0
100	.5256	3874	4.88	184	0

STORAGE NUMBER	CAPACITY	AVERAGE CONTENTS	AVERAGE UTILIZATION	ENTRIES	AVERAGE TIME/TRANS	CURRENT CONTENTS	MAXIMUM CONTENTS
1	1	.80	.8046	8	3620.63	1	1
2	1	.63	.6311	27	841.44	1	1
3	1	.65	.6497	90	259.88	1	1
4	1	.82	.8246	56	530.09	1	1
5	1	.93	.9328	8	4197.75	1	1
6	1	.81	.8110	3	9732.33	1	1
7	1	.77	.7716	16	1736.19	1	1
8	1	.94	.9375	6	5625.00	1	1
9	1	.95	.9520	4	8567.75	1	1
10	1	.95	.9541	2	17173.50	1	1
11	1	.99	.9866	2	17758.00	1	1
21	1	.47	.4651	97	172.62	1	1
22	1	.04	.0440	528	3.00	0	1
23	1	.73	.7319	42	627.38	1	1
24	1	.96	.9586	6	5751.83	1	1
25	1	.86	.8579	16	1930.31	1	1
26	1	.79	.7950	30	954.00	1	1
27	1	.91	.9103	14	2340.79	1	1
28	1	.97	.9679	6	5807.33	1	1
29	1	.98	.9842	3	11811.00	1	1
30	1	.93	.9347	6	5608.33	1	1
31	1	.93	.9288	13	2572.00	1	1
32	1	.93	.9341	1	33629.00	1	1
33	1	.90	.8971	1	32296.00	1	1
34	2	.08	.0401	963	3.00	0	1
35	8	.52	.0646	1146	16.23	0	8

QUEUE NUMBER	MAXIMUM CONTENTS	AVERAGE CONTENTS	TOTAL ENTRIES	ZERO ENTRIES	PERCENT ZEROS	AVERAGE TIME/TRANS	$AVERAGE TIME/TRANS	TABLE NUMBER	CURRENT CONTENTS
1	1	.00	25	23	92.0	2.76	34.50	0	0
2	2	.00	27	25	92.6	4.11	55.50	0	0
3	1	.00	10	9	90.0	3.80	38.00	0	0
4	2	.00	41	39	95.1	2.80	57.50	0	0
5	2	.00	47	46	97.9	2.21	104.00	0	0
6	1	.00	52	51	98.1	.96	50.00	0	0
7	2	.00	51	48	94.1	2.92	49.67	0	0
8	2	.01	86	78	90.7	5.36	57.63	0	0
9	2	.01	66	61	92.4	6.48	85.60	0	0
10	2	.00	60	58	96.7	1.62	48.50	0	0
11	3	.04	112	96	85.7	12.03	84.19	0	0
14	1	.00	6	6	100.0	.00	.00	0	0
15	1	.00	15	14	93.3	.93	14.00	0	0
16	1	.00	10	10	100.0	.00	.00	0	0
17	1	.00	11	11	100.0	.00	.00	0	0
18	1	.00	8	8	100.0	.00	.00	0	0
19	1	.00	16	16	100.0	.00	.00	0	0
20	1	.00	13	13	100.0	.00	.00	0	0
21	1	.01	3	2	66.7	95.67	287.00	0	0
34	1	.00	10	10	100.0	.00	.00	0	0
41	1	.80	8	7	87.5	3617.63	28941.00	0	1
42	1	.63	27	26	96.3	838.44	22638.00	0	1
43	1	.64	90	89	98.9	256.88	23119.00	0	1
44	1	.82	56	55	98.2	527.09	29517.00	0	1
45	1	.93	8	7	87.5	4194.75	33558.00	0	1
46	1	.81	3	2	66.7	9729.33	29188.00	0	1
47	1	.77	16	15	93.8	1733.19	27731.00	0	1
48	1	.94	6	5	83.3	5622.00	33732.00	0	1
49	1	.95	4	3	75.0	8564.75	34259.00	0	1
50	1	.95	2	1	50.0	17170.50	34341.00	0	1
51	1	.99	2	1	50.0	17755.00	35510.00	0	1
61	1	.46	97	96	99.0	169.62	16453.00	0	1
62	1	.00	528	528	100.0	.00	.00	0	0
63	1	.73	42	41	97.6	624.38	26224.00	0	1
64	1	.96	6	5	83.3	5748.83	34493.00	0	1
65	1	.86	16	15	93.8	1927.31	30837.00	0	1
66	1	.79	30	29	96.7	951.00	28530.00	0	1
67	1	.91	14	13	92.9	2337.79	32729.00	0	1
68	1	.97	6	5	83.3	5804.33	34826.00	0	1
69	1	.98	3	2	66.7	11808.00	35424.00	0	1
70	1	.93	6	5	83.3	5605.33	33632.00	0	1
71	1	.93	13	12	92.3	2569.00	33397.00	0	1
72	1	.93	1	0	.0	33629.00	33629.00	0	1
73	1	.90	1	0	.0	32296.00	32296.00	0	1
74	1	.00	2	2	100.0	.00	.00	0	0
76	1	.00	963	963	100.0	.00	.00	0	0
77	13	1.08	964	963	99.9	40.26	38810.00	0	1
78	1	.00	963	962	99.9	.00	3.00	0	0
79	13	.90	962	260	27.0	33.85	46.38	0	0
88	753	390.94	962	0	.0	14629.78	14629.78	3	752
90	1	.00	9	3	33.3	18.89	28.33	0	0
91	14	1.28	963	705	73.2	47.79	178.40	4	1
99	1	.00	964	964	100.0	.00	.00	0	0
100	1	.00	964	964	100.0	.00	.00	0	0

$AVERAGE TIME/TRANS = AVERAGE TIME/TRANS EXCLUDING ZERO ENTRIES

TABLE NUMBER 1

ENTRIES IN TABLE	MEAN ARGUMENT	STANDARD DEVIATION	SUM OF ARGUMENTS	
219	1464.329	1785.299	320688.000	NON-WEIGHTED

UPPER LIMIT	OBSERVED FREQUENCY	PER CENT OF TOTAL	CUMULATIVE PERCENTAGE	CUMULATIVE REMAINDER	MULTIPLE OF MEAN	DEVIATION FROM MEAN
0	0	.00	.0	100.0	.000	-.820
10	2	.91	.9	99.1	.007	-.815
20	4	1.83	2.7	97.3	.014	-.809
30	2	.91	3.7	96.3	.020	-.803
40	1	.46	4.1	95.9	.027	-.798
50	0	.00	4.1	95.9	.034	-.792
60	0	.00	4.1	95.9	.041	-.787
70	0	.00	4.1	95.9	.048	-.781
80	0	.00	4.1	95.9	.055	-.775
90	0	.00	4.1	95.9	.061	-.770
100	0	.00	4.1	95.9	.068	-.764
110	0	.00	4.1	95.9	.075	-.759
120	0	.00	4.1	95.9	.082	-.753
130	0	.00	4.1	95.9	.089	-.747
140	0	.00	4.1	95.9	.096	-.742
150	0	.00	4.1	95.9	.102	-.736
160	2	.91	5.0	95.0	.109	-.731
170	2	.91	5.9	94.1	.116	-.725
180	3	1.37	7.3	92.7	.123	-.719
190	3	1.37	8.7	91.3	.130	-.714
200	2	.91	9.6	90.4	.137	-.708
210	2	.91	10.5	89.5	.143	-.703
220	4	1.83	12.3	87.7	.150	-.697
230	2	.91	13.2	86.8	.157	-.691
240	2	.91	14.2	85.8	.164	-.686
250	4	1.83	16.0	84.0	.171	-.680
260	0	.00	16.0	84.0	.178	-.675
270	4	1.83	17.8	82.2	.184	-.669
280	5	2.28	20.1	79.9	.191	-.663
290	1	.46	20.5	79.5	.198	-.658
300	3	1.37	21.9	78.1	.205	-.652
310	4	1.83	23.7	76.3	.212	-.647
320	0	.00	23.7	76.3	.219	-.641
330	3	1.37	25.1	74.9	.225	-.635
340	1	.46	25.6	74.4	.232	-.630
350	1	.46	26.0	74.0	.239	-.624
360	3	1.37	27.4	72.6	.246	-.619
370	2	.91	28.3	71.7	.253	-.613
380	0	.00	28.3	71.7	.260	-.607
390	2	.91	29.2	70.8	.266	-.602
400	3	1.37	30.6	69.4	.273	-.596
410	2	.91	31.5	68.5	.280	-.591
420	4	1.83	33.3	66.7	.287	-.585
430	3	1.37	34.7	65.3	.294	-.579
440	3	1.37	36.1	63.9	.300	-.574
450	2	.91	37.0	63.0	.307	-.568
460	1	.46	37.4	62.6	.314	-.563
470	1	.46	37.9	62.1	.321	-.557
480	0	.00	37.9	62.1	.328	-.551
490	2	.91	38.8	61.2	.335	-.546
500	3	1.37	40.2	59.8	.341	-.540

510	1	.46	40.6	59.4	.348	-.535
520	4	1.83	42.5	57.5	.355	-.529
530	1	.46	42.9	57.1	.362	-.523
540	1	.46	43.4	56.6	.369	-.518
550	1	.46	43.8	56.2	.376	-.512
560	0	.00	43.8	56.2	.382	-.507
570	0	.00	43.8	56.2	.389	-.501
580	3	1.37	45.2	54.8	.396	-.495
590	1	.46	45.7	54.3	.403	-.490
600	0	.00	45.7	54.3	.410	-.484
610	1	.46	46.1	53.9	.417	-.479
620	1	.46	46.6	53.4	.423	-.473
630	1	.46	47.0	53.0	.430	-.467
640	0	.00	47.0	53.0	.437	-.462
650	1	.46	47.5	52.5	.444	-.456
660	0	.00	47.5	52.5	.451	-.451
670	0	.00	47.5	52.5	.458	-.445
680	2	.91	48.4	51.6	.464	-.439
690	3	1.37	49.8	50.2	.471	-.434
700	0	.00	49.8	50.2	.478	-.428
710	2	.91	50.7	49.3	.485	-.423
720	0	.00	50.7	49.3	.492	-.417
730	1	.46	51.1	48.9	.499	-.411
740	0	.00	51.1	48.9	.505	-.406
750	1	.46	51.6	48.4	.512	-.400
760	1	.46	52.1	47.9	.519	-.395
770	1	.46	52.5	47.5	.526	-.389
780	0	.00	52.5	47.5	.533	-.383
790	2	.91	53.4	46.6	.539	-.378
800	2	.91	54.3	45.7	.546	-.372
810	0	.00	54.3	45.7	.553	-.367
820	0	.00	54.3	45.7	.560	-.361
830	1	.46	54.8	45.2	.567	-.355
840	3	1.37	56.2	43.8	.574	-.350
850	1	.46	56.6	43.4	.580	-.344
860	1	.46	57.1	42.9	.587	-.339
870	0	.00	57.1	42.9	.594	-.333
880	1	.46	57.5	42.5	.601	-.327
890	0	.00	57.5	42.5	.608	-.322
900	0	.00	57.5	42.5	.615	-.316
910	1	.46	58.0	42.0	.621	-.310
920	0	.00	58.0	42.0	.628	-.305
930	0	.00	58.0	42.0	.635	-.299
940	1	.46	58.4	41.6	.642	-.294
950	0	.00	58.4	41.6	.649	-.288
360	0	.00	58.4	41.6	.656	-.282
970	4	1.83	60.3	39.7	.662	-.277
980	1	.46	60.7	39.3	.669	-.271
990	2	.91	61.6	38.4	.676	-.266
1000	0	.00	61.6	38.4	.683	-.260
1010	3	1.37	63.0	37.0	.690	-.254
1020	0	.00	63.0	37.0	.697	-.249
1030	1	.46	63.5	36.5	.703	-.243
1040	1	.46	63.9	36.1	.710	-.238
1050	1	.46	64.4	35.6	.717	-.232
1060	0	.00	64.4	35.6	.724	-.226
1070	1	.46	64.8	35.2	.731	-.221
1080	2	.91	65.8	34.2	.738	-.215

1090	1	.46	66.2	33.8	.744	-.210
1100	2	.91	67.1	32.9	.751	-.204
1110	1	.46	67.6	32.4	.758	-.198
1120	0	.00	67.6	32.4	.765	-.193
1130	1	.46	68.0	32.0	.772	-.187
1140	1	.46	68.5	31.5	.779	-.182
1150	2	.91	69.4	30.6	.785	-.176
1160	1	.46	69.9	30.1	.792	-.170
1170	1	.46	70.3	29.7	.799	-.165
1180	2	.91	71.2	28.8	.806	-.159
1190	0	.00	71.2	28.8	.813	-.154
1200	1	.46	71.7	28.3	.819	-.148
1210	1	.46	72.1	27.9	.826	-.142
1220	1	.46	72.6	27.4	.833	-.137
1230	1	.46	73.1	26.9	.840	-.131
1240	1	.46	73.5	26.5	.847	-.126
1250	1	.46	74.0	26.0	.854	-.120
1260	1	.46	74.4	25.6	.860	-.114
1270	0	.00	74.4	25.6	.867	-.109
1280	0	.00	74.4	25.6	.874	-.103
1290	0	.00	74.4	25.6	.881	-.098
1300	1	.46	74.9	25.1	.888	-.092
1310	0	.00	74.9	25.1	.895	-.086
1320	0	.00	74.9	25.1	.901	-.081
1330	0	.00	74.9	25.1	.908	-.075
1340	0	.00	74.9	25.1	.915	-.070
1350	0	.00	74.9	25.1	.922	-.064
1360	0	.00	74.9	25.1	.929	-.058
1370	0	.00	74.9	25.1	.936	-.053
1380	0	.00	74.9	25.1	.942	-.047
1390	0	.00	74.9	25.1	.949	-.042
1400	0	.00	74.9	25.1	.956	-.036
1410	0	.00	74.9	25.1	.963	-.030
1420	0	.00	74.9	25.1	.970	-.025
1430	0	.00	74.9	25.1	.977	-.019
1440	0	.00	74.9	25.1	.983	-.014
1450	0	.00	74.9	25.1	.990	-.008
1460	0	.00	74.9	25.1	.997	-.002
1470	0	.00	74.9	25.1	1.004	.003
1480	0	.00	74.9	25.1	1.011	.009
1490	0	.00	74.9	25.1	1.018	.014
1500	0	.00	74.9	25.1	1.024	.020
1510	0	.00	74.9	25.1	1.031	.026
1520	0	.00	74.9	25.1	1.038	.031
1530	0	.00	74.9	25.1	1.045	.037
1540	0	.00	74.9	25.1	1.052	.042
1550	0	.00	74.9	25.1	1.059	.048
1560	0	.00	74.9	25.1	1.065	.054
1570	0	.00	74.9	25.1	1.072	.059
1580	0	.00	74.9	25.1	1.079	.065
1590	0	.00	74.9	25.1	1.086	.070
1600	0	.00	74.9	25.1	1.093	.076
1610	0	.00	74.9	25.1	1.099	.082
1620	0	.00	74.9	25.1	1.106	.087
1630	1	.46	75.3	24.7	1.113	.093
1640	0	.00	75.3	24.7	1.120	.098
1650	0	.00	75.3	24.7	1.127	.104
1660	0	.00	75.3	24.7	1.134	.110

1670	0	.00	75.3	24.7	1.140	.115
1680	0	.00	75.3	24.7	1.147	.121
1690	0	.00	75.3	24.7	1.154	.126
1700	0	.00	75.3	24.7	1.161	.132
1710	0	.00	75.3	24.7	1.168	.138
1720	0	.00	75.3	24.7	1.175	.143
1730	0	.00	75.3	24.7	1.181	.149
1740	0	.00	75.3	24.7	1.188	.154
1750	0	.00	75.3	24.7	1.195	.160
1760	0	.00	75.3	24.7	1.202	.166
1770	0	.00	75.3	24.7	1.209	.171
1780	1	.46	75.8	24.2	1.216	.177
1790	0	.00	75.8	24.2	1.222	.182
1800	0	.00	75.8	24.2	1.229	.188
1810	0	.00	75.8	24.2	1.236	.194
1820	0	.00	75.8	24.2	1.243	.199
1830	0	.00	75.8	24.2	1.250	.205
1840	0	.00	75.8	24.2	1.257	.210
1850	0	.00	75.8	24.2	1.263	.216
1860	0	.00	75.8	24.2	1.270	.222
1870	0	.00	75.8	24.2	1.277	.227
1880	0	.00	75.8	24.2	1.284	.233
1890	0	.00	75.8	24.2	1.291	.238
1900	0	.00	75.8	24.2	1.298	.244
1910	0	.00	75.8	24.2	1.304	.250
1920	0	.00	75.8	24.2	1.311	.255
1930	0	.00	75.8	24.2	1.318	.261
1940	1	.46	76.3	23.7	1.325	.266
1950	0	.00	76.3	23.7	1.332	.272
1960	0	.00	76.3	23.7	1.338	.278
1970	0	.00	76.3	23.7	1.345	.283
1980	0	.00	76.3	23.7	1.352	.289
1990	0	.00	76.3	23.7	1.359	.294
2000	1	.46	76.7	23.3	1.366	.300
2010	2	.91	77.6	22.4	1.373	.306
2020	0	.00	77.6	22.4	1.379	.311
2030	0	.00	77.6	22.4	1.386	.317
2040	0	.00	77.6	22.4	1.393	.322
2050	0	.00	77.6	22.4	1.400	.328
2060	0	.00	77.6	22.4	1.407	.334
2070	1	.46	78.1	21.9	1.414	.339
2080	0	.00	78.1	21.9	1.420	.345
2090	0	.00	78.1	21.9	1.427	.350
2100	0	.00	78.1	21.9	1.434	.356
2110	0	.00	78.1	21.9	1.441	.362
2120	0	.00	78.1	21.9	1.448	.367
2130	0	.00	78.1	21.9	1.455	.373
2140	0	.00	78.1	21.9	1.461	.378
2150	0	.00	78.1	21.9	1.468	.384
2160	0	.00	78.1	21.9	1.475	.390
2170	0	.00	78.1	21.9	1.482	.395
2180	0	.00	78.1	21.9	1.489	.401
2190	0	.00	78.1	21.9	1.496	.406
2200	0	.00	78.1	21.9	1.502	.412
2210	0	.00	78.1	21.9	1.509	.418
2220	0	.00	78.1	21.9	1.516	.423
2230	0	.00	78.1	21.9	1.523	.429
2240	0	.00	78.1	21.9	1.530	.434

2250	0	.00	78.1	21.9	1.537	.440
2260	0	.00	78.1	21.9	1.543	.446
2270	0	.00	78.1	21.9	1.550	.451
2280	0	.00	78.1	21.9	1.557	.457
2290	0	.00	78.1	21.9	1.564	.462
2300	0	.00	78.1	21.9	1.571	.468
2310	0	.00	78.1	21.9	1.578	.474
2320	0	.00	78.1	21.9	1.584	.479
2330	1	.46	78.5	21.5	1.591	.485
2340	1	.46	79.0	21.0	1.598	.490
2350	0	.00	79.0	21.0	1.605	.496
2360	0	.00	79.0	21.0	1.612	.502
2370	0	.00	79.0	21.0	1.618	.507
2380	0	.00	79.0	21.0	1.625	.513
2390	0	.00	79.0	21.0	1.632	.518
2400	0	.00	79.0	21.0	1.639	.524
2410	0	.00	79.0	21.0	1.646	.530
2420	0	.00	79.0	21.0	1.653	.535
2430	0	.00	79.0	21.0	1.659	.541
2440	0	.00	79.0	21.0	1.666	.547
2450	0	.00	79.0	21.0	1.673	.552
2460	0	.00	79.0	21.0	1.680	.558
2470	0	.00	79.0	21.0	1.687	.563
2480	0	.00	79.0	21.0	1.694	.569
2490	0	.00	79.0	21.0	1.700	.575
2500	0	.00	79.0	21.0	1.707	.580
2510	0	.00	79.0	21.0	1.714	.586
2520	0	.00	79.0	21.0	1.721	.591
2530	0	.00	79.0	21.0	1.728	.597
2540	0	.00	79.0	21.0	1.735	.603
2550	0	.00	79.0	21.0	1.741	.608
2560	0	.00	79.0	21.0	1.748	.614
2570	0	.00	79.0	21.0	1.755	.619
2580	0	.00	79.0	21.0	1.762	.625
2590	0	.00	79.0	21.0	1.769	.631
2600	1	.46	79.5	20.5	1.776	.636
2610	0	.00	79.5	20.5	1.782	.642
2620	0	.00	79.5	20.5	1.789	.647
2630	0	.00	79.5	20.5	1.796	.653
2640	2	.91	80.4	19.6	1.803	.659
2650	0	.00	80.4	19.6	1.810	.664
2660	0	.00	80.4	19.6	1.817	.670
2670	0	.00	80.4	19.6	1.823	.675
2680	0	.00	80.4	19.6	1.830	.681
2690	1	.46	80.8	19.2	1.837	.687
2700	1	.46	81.3	18.7	1.844	.692
2710	0	.00	81.3	18.7	1.851	.698
2720	0	.00	81.3	18.7	1.858	.703
2730	0	.00	81.3	18.7	1.864	.709
2740	0	.00	81.3	18.7	1.871	.715
2750	0	.00	81.3	18.7	1.878	.720
2760	0	.00	81.3	18.7	1.885	.726
2770	0	.00	81.3	18.7	1.892	.731
2780	0	.00	81.3	18.7	1.898	.737
2790	0	.00	81.3	18.7	1.905	.743
2800	2	.91	82.2	17.8	1.912	.748
2810	0	.00	82.2	17.8	1.919	.754
2820	1	.46	82.6	17.4	1.926	.759

2830	0	.00	82.6	17.4	1.933	.765
2840	0	.00	82.6	17.4	1.939	.771
2850	0	.00	82.6	17.4	1.946	.776
2860	0	.00	82.6	17.4	1.953	.782
2870	1	.46	83.1	16.9	1.960	.787
2880	1	.46	83.6	16.4	1.967	.793
2890	1	.46	84.0	16.0	1.974	.799
2900	0	.00	84.0	16.0	1.980	.804
2910	0	.00	84.0	16.0	1.987	.810
2920	0	.00	84.0	16.0	1.994	.815
2930	1	.46	84.5	15.5	2.001	.821
2940	0	.00	84.5	15.5	2.008	.827
2950	0	.00	84.5	15.5	2.015	.832
2960	0	.00	84.5	15.5	2.021	.838
2970	0	.00	84.5	15.5	2.028	.843
2980	0	.00	84.5	15.5	2.035	.849
2990	0	.00	84.5	15.5	2.042	.855
3000	0	.00	84.5	15.5	2.049	.860
3010	0	.00	84.5	15.5	2.056	.866
3020	0	.00	84.5	15.5	2.062	.871
3030	0	.00	84.5	15.5	2.069	.877
3040	0	.00	84.5	15.5	2.076	.883
3050	0	.00	84.5	15.5	2.083	.888
3060	0	.00	84.5	15.5	2.090	.894
3070	0	.00	84.5	15.5	2.097	.899
3080	0	.00	84.5	15.5	2.103	.905
3090	0	.00	84.5	15.5	2.110	.911
3100	0	.00	84.5	15.5	2.117	.916
3110	0	.00	84.5	15.5	2.124	.922
3120	0	.00	84.5	15.5	2.131	.927
3130	1	.46	84.9	15.1	2.137	.933
3140	0	.00	84.9	15.1	2.144	.939
3150	0	.00	84.9	15.1	2.151	.944
3160	0	.00	84.9	15.1	2.158	.950
3170	0	.00	84.9	15.1	2.165	.955
3180	0	.00	84.9	15.1	2.172	.961
3190	0	.00	84.9	15.1	2.178	.967
3200	0	.00	84.9	15.1	2.185	.972
3210	0	.00	84.9	15.1	2.192	.978
3220	0	.00	84.9	15.1	2.199	.983
3230	0	.00	84.9	15.1	2.206	.989
3240	0	.00	84.9	15.1	2.213	.995
3250	0	.00	84.9	15.1	2.219	1.000
3260	0	.00	84.9	15.1	2.226	1.006
3270	0	.00	84.9	15.1	2.233	1.011
3280	0	.00	84.9	15.1	2.240	1.017
3290	0	.00	84.9	15.1	2.247	1.023
3300	0	.00	84.9	15.1	2.254	1.028
3310	0	.00	84.9	15.1	2.260	1.034
3320	0	.00	84.9	15.1	2.267	1.039
3330	0	.00	84.9	15.1	2.274	1.045
3340	0	.00	84.9	15.1	2.281	1.051
3350	0	.00	84.9	15.1	2.288	1.056
3360	0	.00	84.9	15.1	2.295	1.062
3370	0	.00	84.9	15.1	2.301	1.067
3380	0	.00	84.9	15.1	2.308	1.073
3390	0	.00	84.9	15.1	2.315	1.079
3400	0	.00	84.9	15.1	2.322	1.084

3410	0	.00	84.9	15.1	2.329	1.090
3420	0	.00	84.9	15.1	2.336	1.095
3430	0	.00	84.9	15.1	2.342	1.101
3440	0	.00	84.9	15.1	2.349	1.107
3450	0	.00	84.9	15.1	2.356	1.112
3460	1	.46	85.4	14.6	2.363	1.118
3470	0	.00	85.4	14.6	2.370	1.123
3480	0	.00	85.4	14.6	2.377	1.129
3490	0	.00	85.4	14.6	2.383	1.135
3500	0	.00	85.4	14.6	2.390	1.140
3510	0	.00	85.4	14.6	2.397	1.146
3520	0	.00	85.4	14.6	2.404	1.151
3530	0	.00	85.4	14.6	2.411	1.157
3540	0	.00	85.4	14.6	2.417	1.163
3550	0	.00	85.4	14.6	2.424	1.168
3560	0	.00	85.4	14.6	2.431	1.174
3570	0	.00	85.4	14.6	2.438	1.179
3580	0	.00	85.4	14.6	2.445	1.185
3590	0	.00	85.4	14.6	2.452	1.191
3600	0	.00	85.4	14.6	2.458	1.196
3610	0	.00	85.4	14.6	2.465	1.202
3620	0	.00	85.4	14.6	2.472	1.207
3630	0	.00	85.4	14.6	2.479	1.213
3640	1	.46	85.8	14.2	2.486	1.219
3650	0	.00	85.8	14.2	2.493	1.224
3660	0	.00	85.8	14.2	2.499	1.230
3670	0	.00	85.8	14.2	2.506	1.235
3680	0	.00	85.8	14.2	2.513	1.241
3690	0	.00	85.8	14.2	2.520	1.247
3700	0	.00	85.8	14.2	2.527	1.252
3710	0	.00	85.8	14.2	2.534	1.258
3720	0	.00	85.8	14.2	2.540	1.263
3730	0	.00	85.8	14.2	2.547	1.269
3740	0	.00	85.8	14.2	2.554	1.275
3750	0	.00	85.8	14.2	2.5[illegible]	1.280
3760	1	.46	86.3	13.7	2.5[illegible]	1.286
3770	0	.00	86.3	13.7	2.575	1.291
3780	0	.00	86.3	13.7	2.581	1.297
3790	0	.00	86.3	13.7	2.588	1.303
3800	0	.00	86.3	13.7	2.595	1.308
3810	0	.00	86.3	13.7	2.602	1.314
3820	0	.00	86.3	13.7	2.609	1.319
3830	0	.00	86.3	13.7	2.616	1.325
3840	0	.00	86.3	13.7	2.622	1.331
3850	0	.00	86.3	13.7	2.629	1.336
3860	0	.00	86.3	13.7	2.636	1.342
3870	0	.00	86.3	13.7	2.643	1.347
3880	0	.00	86.3	13.7	2.650	1.353
3890	0	.00	86.3	13.7	2.657	1.359
3900	0	.00	86.3	13.7	2.663	1.364
3910	1	.46	86.8	13.2	2.670	1.370
3920	0	.00	86.8	13.2	2.677	1.375
3930	0	.00	86.8	13.2	2.684	1.381
3940	0	.00	86.8	13.2	2.691	1.387
3950	0	.00	86.8	13.2	2.697	1.392
3960	1	.46	87.2	12.8	2.704	1.398
3970	0	.00	87.2	12.8	2.711	1.404
3980	0	.00	87.2	12.8	2.718	1.409

3990	0	.00	87.2	12.8	2.725	1.415
4000	0	.00	87.2	12.8	2.732	1.420
4010	0	.00	87.2	12.8	2.738	1.426
4020	0	.00	87.2	12.8	2.745	1.432
4030	0	.00	87.2	12.8	2.752	1.437
4040	1	.46	87.7	12.3	2.759	1.443
4050	0	.00	87.7	12.3	2.766	1.448
4060	0	.00	87.7	12.3	2.773	1.454
4070	0	.00	87.7	12.3	2.779	1.460
4080	0	.00	87.7	12.3	2.786	1.465
4090	0	.00	87.7	12.3	2.793	1.471
4100	1	.46	88.1	11.9	2.800	1.476
4110	1	.46	88.6	11.4	2.807	1.482
4120	0	.00	88.6	11.4	2.814	1.488
4130	0	.00	88.6	11.4	2.820	1.493
4140	0	.00	88.6	11.4	2.827	1.499
4150	0	.00	88.6	11.4	2.834	1.504
4160	0	.00	88.6	11.4	2.841	1.510
4170	0	.00	88.6	11.4	2.848	1.516
4180	0	.00	88.6	11.4	2.855	1.521
4190	0	.00	88.6	11.4	2.861	1.527
4200	0	.00	88.6	11.4	2.868	1.532
4210	0	.00	88.6	11.4	2.875	1.538
4220	0	.00	88.6	11.4	2.882	1.544
4230	0	.00	88.6	11.4	2.889	1.549
4240	0	.00	88.6	11.4	2.896	1.555
4250	0	.00	88.6	11.4	2.902	1.560
4260	0	.00	88.6	11.4	2.909	1.566
4270	1	.46	89.0	11.0	2.916	1.572
4280	0	.00	89.0	11.0	2.923	1.577
4290	0	.00	89.0	11.0	2.930	1.583
4300	0	.00	89.0	11.0	2.936	1.588
4310	1	.46	89.5	10.5	2.943	1.594
4320	0	.00	89.5	10.5	2.950	1.600
4330	0	.00	89.5	10.5	2.957	1.605
4340	0	.00	89.5	10.5	2.964	1.611
4350	0	.00	89.5	10.5	2.971	1.616
4360	0	.00	89.5	10.5	2.977	1.622
4370	0	.00	89.5	10.5	2.984	1.628
4380	0	.00	89.5	10.5	2.991	1.633
4390	0	.00	89.5	10.5	2.998	1.639
4400	0	.00	89.5	10.5	3.005	1.644
4410	0	.00	89.5	10.5	3.012	1.650
4420	0	.00	89.5	10.5	3.018	1.656
4430	1	.46	90.0	10.0	3.025	1.661
4440	0	.00	90.0	10.0	3.032	1.667
4450	0	.00	90.0	10.0	3.039	1.672
4460	0	.00	90.0	10.0	3.046	1.678
4470	0	.00	90.0	10.0	3.053	1.684
4480	0	.00	90.0	10.0	3.059	1.689
4490	0	.00	90.0	10.0	3.066	1.695
4500	0	.00	90.0	10.0	3.073	1.700
4510	0	.00	90.0	10.0	3.080	1.706
4520	0	.00	90.0	10.0	3.087	1.712
4530	0	.00	90.0	10.0	3.094	1.717
4540	0	.00	90.0	10.0	3.100	1.723
4550	0	.00	90.0	10.0	3.107	1.728
4560	0	.00	90.0	10.0	3.114	1.734

4570	0	.00	90.0	10.0	3.121	1.740
4580	0	.00	90.0	10.0	3.128	1.745
4590	1	.46	90.4	9.6	3.135	1.751
4600	0	.00	90.4	9.6	3.141	1.756
4610	0	.00	90.4	9.6	3.148	1.762
4620	0	.00	90.4	9.6	3.155	1.768
4630	0	.00	90.4	9.6	3.162	1.773
4640	0	.00	90.4	9.6	3.169	1.779
4650	0	.00	90.4	9.6	3.176	1.784
4660	0	.00	90.4	9.6	3.182	1.790
4670	0	.00	90.4	9.6	3.189	1.796
4680	0	.00	90.4	9.6	3.196	1.801
4690	0	.00	90.4	9.6	3.203	1.807
4700	0	.00	90.4	9.6	3.210	1.812
4710	0	.00	90.4	9.6	3.216	1.818
4720	0	.00	90.4	9.6	3.223	1.824
4730	0	.00	90.4	9.6	3.230	1.829
4740	0	.00	90.4	9.6	3.237	1.835
4750	0	.00	90.4	9.6	3.244	1.840
4760	0	.00	90.4	9.6	3.251	1.846
4770	0	.00	90.4	9.6	3.257	1.852
4780	0	.00	90.4	9.6	3.264	1.857
4790	0	.00	90.4	9.6	3.271	1.863
4800	0	.00	90.4	9.6	3.278	1.868
4810	0	.00	90.4	9.6	3.285	1.874
4820	0	.00	90.4	9.6	3.292	1.880
4830	0	.00	90.4	9.6	3.298	1.885
4840	0	.00	90.4	9.6	3.305	1.891
4850	0	.00	90.4	9.6	3.312	1.896
4860	2	.91	91.3	8.7	3.319	1.902
4870	0	.00	91.3	8.7	3.326	1.908
4880	0	.00	91.3	8.7	3.333	1.913
4890	0	.00	91.3	8.7	3.339	1.919
4900	0	.00	91.3	8.7	3.346	1.924
4910	0	.00	91.3	8.7	3.353	1.930
4920	0	.00	91.3	8.7	3.360	1.936
4930	0	.00	91.3	8.7	3.367	1.941
4940	0	.00	91.3	8.7	3.374	1.947
4950	0	.00	91.3	8.7	3.380	1.952
4960	0	.00	91.3	8.7	3.387	1.958
4970	1	.46	91.8	8.2	3.394	1.964
4980	0	.00	91.8	8.2	3.401	1.969
4990	0	.00	91.8	8.2	3.408	1.975
5000	0	.00	91.8	8.2	3.415	1.980
5010	0	.00	91.8	8.2	3.421	1.986
5020	0	.00	91.8	8.2	3.428	1.992
5030	0	.00	91.8	8.2	3.435	1.997
5040	0	.00	91.8	8.2	3.442	2.003
5050	0	.00	91.8	8.2	3.449	2.008
5060	0	.00	91.8	8.2	3.456	2.014
5070	0	.00	91.8	8.2	3.462	2.020
5080	0	.00	91.8	8.2	3.469	2.025
5090	0	.00	91.8	8.2	3.476	2.031
5100	0	.00	91.8	8.2	3.483	2.036
5110	0	.00	91.8	8.2	3.490	2.042
5120	0	.00	91.8	8.2	3.496	2.048
5130	0	.00	91.8	8.2	3.503	2.053
5140	0	.00	91.8	8.2	3.510	2.059

5150	0	.00	91.8	8.2	3.517	2.064
5160	0	.00	91.8	8.2	3.524	2.070
5170	0	.00	91.8	8.2	3.531	2.076
5180	0	.00	91.8	8.2	3.537	2.081
5190	0	.00	91.8	8.2	3.544	2.087
5200	0	.00	91.8	8.2	3.551	2.092
5210	0	.00	91.8	8.2	3.558	2.098
5220	0	.00	91.8	8.2	3.565	2.104
5230	0	.00	91.8	8.2	3.572	2.109
5240	0	.00	91.8	8.2	3.578	2.115
5250	0	.00	91.8	8.2	3.585	2.120
5260	0	.00	91.8	8.2	3.592	2.126
5270	0	.00	91.8	8.2	3.599	2.132
5280	1	.46	92.2	7.8	3.606	2.137
5290	0	.00	92.2	7.8	3.613	2.143
5300	0	.00	92.2	7.8	3.619	2.148
5310	0	.00	92.2	7.8	3.626	2.154
5320	0	.00	92.2	7.8	3.633	2.160
5330	0	.00	92.2	7.8	3.640	2.165
5340	1	.46	92.7	7.3	3.647	2.171
5350	0	.00	92.7	7.3	3.654	2.176
5360	0	.00	92.7	7.3	3.660	2.182
5370	0	.00	92.7	7.3	3.667	2.188
5380	0	.00	92.7	7.3	3.674	2.193
5390	0	.00	92.7	7.3	3.681	2.199
5400	0	.00	92.7	7.3	3.688	2.204
5410	0	.00	92.7	7.3	3.695	2.210
5420	0	.00	92.7	7.3	3.701	2.216
5430	1	.46	93.2	6.8	3.708	2.221
5440	0	.00	93.2	6.8	3.715	2.227
5450	0	.00	93.2	6.8	3.722	2.232
5460	0	.00	93.2	6.8	3.729	2.238
5470	0	.00	93.2	6.8	3.735	2.244
5480	0	.00	93.2	6.8	3.742	2.249
5490	0	.00	93.2	6.8	3.749	2.255
5500	0	.00	93.2	6.8	3.756	2.261
5510	0	.00	93.2	6.8	3.763	2.266
5520	0	.00	93.2	6.8	3.770	2.272
5530	0	.00	93.2	6.8	3.776	2.277
5540	0	.00	93.2	6.8	3.783	2.283
5550	0	.00	93.2	6.8	3.790	2.289
5560	0	.00	93.2	6.8	3.797	2.294
5570	0	.00	93.2	6.8	3.804	2.300
5580	0	.00	93.2	6.8	3.811	2.305
5590	0	.00	93.2	6.8	3.817	2.311
5600	0	.00	93.2	6.8	3.824	2.317
5610	0	.00	93.2	6.8	3.831	2.322
5620	0	.00	93.2	6.8	3.838	2.328
5630	0	.00	93.2	6.8	3.845	2.333
5640	0	.00	93.2	6.8	3.852	2.339
5650	0	.00	93.2	6.8	3.858	2.345
5660	0	.00	93.2	6.8	3.865	2.350
5670	0	.00	93.2	6.8	3.872	2.356
5680	0	.00	93.2	6.8	3.879	2.361
5690	0	.00	93.2	6.8	3.886	2.367
5700	0	.00	93.2	6.8	3.893	2.373
5710	0	.00	93.2	6.8	3.899	2.378
5720	0	.00	93.2	6.8	3.906	2.384

5730	0	.00	93.2	6.8	3.913	2.389
5740	1	.46	93.6	6.4	3.920	2.395
5750	0	.00	93.6	6.4	3.927	2.401
5760	0	.00	93.6	6.4	3.934	2.406
5770	0	.00	93.6	6.4	3.940	2.412
5780	0	.00	93.6	6.4	3.947	2.417
5790	0	.00	93.6	6.4	3.954	2.423
5800	0	.00	93.6	6.4	3.961	2.429
5810	0	.00	93.6	6.4	3.968	2.434
5820	0	.00	93.6	6.4	3.975	2.440
5830	0	.00	93.6	6.4	3.981	2.445
5840	0	.00	93.6	6.4	3.988	2.451
5850	0	.00	93.6	6.4	3.995	2.457
5860	0	.00	93.6	6.4	4.002	2.462
5870	0	.00	93.6	6.4	4.009	2.468
5880	0	.00	93.6	6.4	4.015	2.473
5890	0	.00	93.6	6.4	4.022	2.479
5900	0	.00	93.6	6.4	4.029	2.485
5910	0	.00	93.6	6.4	4.036	2.490
5920	0	.00	93.6	6.4	4.043	2.496
5930	0	.00	93.6	6.4	4.050	2.501
5940	0	.00	93.6	6.4	4.056	2.507
5950	0	.00	93.6	6.4	4.063	2.513
5960	1	.46	94.1	5.9	4.070	2.518
5970	1	.46	94.5	5.5	4.077	2.524
5980	0	.00	94.5	5.5	4.084	2.529
5990	0	.00	94.5	5.5	4.091	2.535
6000	0	.00	94.5	5.5	4.097	2.541
6010	1	.46	95.0	5.0	4.104	2.546
6020	0	.00	95.0	5.0	4.111	2.552
6030	0	.00	95.0	5.0	4.118	2.557
6040	0	.00	95.0	5.0	4.125	2.563
6050	0	.00	95.0	5.0	4.132	2.569
6060	0	.00	95.0	5.0	4.138	2.574
6070	0	.00	95.0	5.0	4.145	2.580
6080	0	.00	95.0	5.0	4.152	2.585
6090	0	.00	95.0	5.0	4.159	2.591
6100	0	.00	95.0	5.0	4.166	2.597
6110	0	.00	95.0	5.0	4.173	2.602
6120	0	.00	95.0	5.0	4.179	2.608
6130	0	.00	95.0	5.0	4.186	2.613
6140	0	.00	95.0	5.0	4.193	2.619
6150	0	.00	95.0	5.0	4.200	2.625
6160	0	.00	95.0	5.0	4.207	2.630
6170	1	.46	95.4	4.6	4.214	2.636
6180	0	.00	95.4	4.6	4.220	2.641
6190	0	.00	95.4	4.6	4.227	2.647
6200	0	.00	95.4	4.6	4.234	2.653
6210	0	.00	95.4	4.6	4.241	2.658
6220	0	.00	95.4	4.6	4.248	2.664
6230	0	.00	95.4	4.6	4.255	2.669
6240	0	.00	95.4	4.6	4.261	2.675
6250	0	.00	95.4	4.6	4.268	2.681
6260	0	.00	95.4	4.6	4.275	2.686
6270	1	.46	95.9	4.1	4.282	2.692
6280	0	.00	95.9	4.1	4.289	2.697
6290	0	.00	95.9	4.1	4.295	2.703
6300	1	.46	96.3	3.7	4.302	2.709

6310	0	.00	96.3	3.7	4.309	2.714
6320	0	.00	96.3	3.7	4.316	2.720
6330	0	.00	96.3	3.7	4.323	2.725
6340	0	.00	96.3	3.7	4.330	2.731
6350	0	.00	96.3	3.7	4.336	2.737
6360	0	.00	96.3	3.7	4.343	2.742
6370	0	.00	96.3	3.7	4.350	2.748
6380	0	.00	96.3	3.7	4.357	2.753
6390	0	.00	96.3	3.7	4.364	2.759
6400	1	.46	96.8	3.2	4.371	2.765
6410	0	.00	96.8	3.2	4.377	2.770
6420	1	.46	97.3	2.7	4.384	2.776
6430	0	.00	97.3	2.7	4.391	2.781
6440	0	.00	97.3	2.7	4.398	2.787
6450	1	.46	97.7	2.3	4.405	2.793
6460	0	.00	97.7	2.3	4.412	2.798
6470	0	.00	97.7	2.3	4.418	2.804
6480	0	.00	97.7	2.3	4.425	2.809
6490	0	.00	97.7	2.3	4.432	2.815
6500	0	.00	97.7	2.3	4.439	2.821
6510	0	.00	97.7	2.3	4.446	2.826
6520	1	.46	98.2	1.8	4.453	2.832
6530	1	.46	98.6	1.4	4.459	2.837
6540	0	.00	98.6	1.4	4.466	2.843
6550	0	.00	98.6	1.4	4.473	2.849
6560	0	.00	98.6	1.4	4.480	2.854
6570	0	.00	98.6	1.4	4.487	2.860
6580	0	.00	98.6	1.4	4.494	2.865
6590	1	.46	99.1	.9	4.500	2.871
6600	1	.46	99.5	.5	4.507	2.877
6610	0	.00	99.5	.5	4.514	2.882
6620	0	.00	99.5	.5	4.521	2.888
6630	0	.00	99.5	.5	4.528	2.893
6640	0	.00	99.5	.5	4.535	2.899
6650	0	.00	99.5	.5	4.541	2.905
6660	0	.00	99.5	.5	4.548	2.910
6670	0	.00	99.5	.5	4.555	2.916
6680	0	.00	99.5	.5	4.562	2.921
6690	0	.00	99.5	.5	4.569	2.927
6700	0	.00	99.5	.5	4.575	2.933
6710	0	.00	99.5	.5	4.582	2.938
6720	0	.00	99.5	.5	4.589	2.944
6730	0	.00	99.5	.5	4.596	2.949
6740	0	.00	99.5	.5	4.603	2.955
6750	0	.00	99.5	.5	4.610	2.961
6760	0	.00	99.5	.5	4.616	2.966
6770	0	.00	99.5	.5	4.623	2.972
6780	0	.00	99.5	.5	4.630	2.977
6790	0	.00	99.5	.5	4.637	2.983
6800	0	.00	99.5	.5	4.644	2.989
6810	1	.46	100.0	.0	4.651	2.994

·CMAINING FREQUENCIES ARE ALL ZERO

TABLE NUMBER 2

ENTRIES IN TABLE	MEAN ARGUMENT	STANDARD DEVIATION	SUM OF ARGUMENTS	
963	153.026	70.661	147364.000	NON-WEIGHTED

UPPER LIMIT	OBSERVED FREQUENCY	PER CENT OF TOTAL	CUMULATIVE PERCENTAGE	CUMULATIVE REMAINDER	MULTIPLE OF MEAN	DEVIATION FROM MEAN
0	0	.00	.0	100.0	.000	-2.166
10	0	.00	.0	100.0	.065	-2.024
20	0	.00	.0	100.0	.131	-1.883
30	0	.00	.0	100.0	.196	-1.741
40	15	1.56	1.6	98.4	.261	-1.600
50	7	.73	2.3	97.7	.327	-1.458
60	13	1.35	3.6	96.4	.392	-1.317
70	15	1.56	5.2	94.8	.457	-1.175
80	139	14.43	19.6	80.4	.523	-1.033
90	43	4.47	24.1	75.9	.588	-.892
100	25	2.60	26.7	73.3	.653	-.750
110	20	2.08	28.8	71.2	.719	-.609
120	20	2.08	30.8	69.2	.784	-.467
130	15	1.56	32.4	67.6	.850	-.326
140	124	12.88	45.3	54.7	.915	-.184
150	126	13.08	58.4	41.6	.980	-.043
160	44	4.57	62.9	37.1	1.046	.099
170	30	3.12	66.0	34.0	1.111	.240
180	28	2.91	69.0	31.0	1.176	.382
190	28	2.91	71.9	28.1	1.242	.523
200	53	5.50	77.4	22.6	1.307	.665
210	47	4.88	82.2	17.8	1.372	.806
220	28	2.91	85.2	14.8	1.438	.948
230	18	1.87	87.0	13.0	1.503	1.089
240	21	2.18	89.2	10.8	1.568	1.231
250	20	2.08	91.3	8.7	1.634	1.372
260	18	1.87	93.1	6.9	1.699	1.514
270	14	1.45	94.6	5.4	1.764	1.655
280	10	1.04	95.6	4.4	1.830	1.797
290	5	.52	96.2	3.8	1.895	1.938
300	5	.52	96.7	3.3	1.960	2.080
310	8	.83	97.5	2.5	2.026	2.222
320	4	.42	97.9	2.1	2.091	2.363
330	6	.62	98.5	1.5	2.156	2.505
340	1	.10	98.7	1.3	2.222	2.646
350	3	.31	99.0	1.0	2.287	2.788
360	0	.00	99.0	1.0	2.353	2.929
370	0	.00	99.0	1.0	2.418	3.071
380	0	.00	99.0	1.0	2.483	3.212
390	2	.21	99.2	.8	2.549	3.354
400	2	.21	99.4	.6	2.614	3.495
410	1	.10	99.5	.5	2.679	3.637
420	1	.10	99.6	.4	2.745	3.778
430	0	.00	99.6	.4	2.810	3.920
440	1	.10	99.7	.3	2.875	4.061
450	0	.00	99.7	.3	2.941	4.203
460	1	.10	99.8	.2	3.006	4.344
470	0	.00	99.8	.2	3.071	4.486
480	0	.00	99.8	.2	3.137	4.627
490	0	.00	99.8	.2	3.202	4.769
500	0	.00	99.8	.2	3.267	4.910

510	0	.00	99.8	.2	3.333	5.052
520	0	.00	99.8	.2	3.398	5.193
530	0	.00	99.8	.2	3.063	5.335
540	0	.00	99.8	.2	3.529	5.476
550	0	.00	99.8	.2	3.594	5.618
560	1	.10	99.9	.1	3.660	5.760
570	0	.00	99.9	.1	3.725	5.901
580	1	.10	100.0	.0	3.790	6.043

REMAINING FREQUENCIES ARE ALL ZERO

TABLE NUMBER 3

ENTRIES IN TABLE	MEAN ARGUMENT	STANDARD DEVIATION	SUM OF ARGUMENTS	
210	225.100	215.486	47271.000	NON-WEIGHTED

UPPER LIMIT	OBSERVED FREQUENCY	PER CENT OF TOTAL	CUMULATIVE PERCENTAGE	CUMULATIVE REMAINDER	MULTIPLE OF MEAN	DEVIATION FROM MEAN
0	0	.00	.0	100.0	.000	-1.045
10	3	1.43	1.4	98.6	.044	-.998
20	3	1.43	2.9	97.1	.089	-.952
30	7	3.33	6.2	93.8	.133	-.905
40	3	1.43	7.6	92.4	.178	-.859
50	6	2.86	10.5	89.5	.222	-.813
60	22	10.48	21.0	79.0	.267	-.766
70	6	2.86	23.8	76.2	.311	-.720
80	5	2.38	26.2	73.8	.355	-.673
90	3	1.43	27.6	72.4	.400	-.627
100	4	1.90	29.5	70.5	.444	-.581
110	2	.95	30.5	69.5	.489	-.534
120	41	19.52	50.0	50.0	.533	-.488
130	4	1.90	51.9	48.1	.578	-.441
140	0	.00	51.9	48.1	.622	-.395
150	2	.95	52.9	47.1	.666	-.349
160	1	.48	53.3	46.7	.711	-.302
170	1	.48	53.8	46.2	.755	-.256
180	19	9.05	62.9	37.1	.800	-.209
190	1	.48	63.3	36.7	.844	-.163
200	1	.48	63.8	36.2	.888	-.116
210	2	.95	64.8	35.2	.933	-.070
220	0	.00	64.8	35.2	.977	-.024
230	1	.48	65.2	34.8	1.022	.023
240	15	7.14	72.4	27.6	1.066	.069
250	0	.00	72.4	27.6	1.111	.116
260	0	.00	72.4	27.6	1.155	.162
270	0	.00	72.4	27.6	1.199	.208
280	0	.00	72.4	27.6	1.244	.255
290	1	.48	72.9	27.1	1.288	.301
300	12	5.71	78.6	21.4	1.333	.348
310	0	.00	78.6	21.4	1.377	.394
320	0	.00	78.6	21.4	1.422	.440
330	3	1.43	80.0	20.0	1.466	.487
340	0	.00	80.0	20.0	1.510	.533
350	1	.48	80.5	19.5	1.555	.580
360	4	1.90	82.4	17.6	1.599	.626
370	0	.00	82.4	17.6	1.644	.672
380	0	.00	82.4	17.6	1.688	.719
390	3	1.43	83.8	16.2	1.733	.765
400	0	.00	83.8	16.2	1.777	.812
410	0	.00	83.8	16.2	1.821	.858
420	3	1.43	85.2	14.8	1.866	.904
430	0	.00	85.2	14.8	1.910	.951
440	0	.00	85.2	14.8	1.955	.997
450	2	.95	86.2	13.8	1.999	1.044
460	0	.00	86.2	13.8	2.044	1.090
470	0	.00	86.2	13.8	2.088	1.136
480	2	.95	87.1	12.9	2.132	1.183
490	3	1.43	88.6	11.4	2.177	1.229
500	0	.00	88.6	11.4	2.221	1.276

510	2	.95	89.5	10.5	2.266	1.322
520	0	.00	89.5	10.5	2.310	1.369
530	1	.48	90.0	10.0	2.355	1.415
540	1	.48	90.5	9.5	2.399	1.461
550	0	.00	90.5	9.5	2.443	1.508
560	0	.00	90.5	9.5	2.488	1.554
570	0	.00	90.5	9.5	2.532	1.601
580	0	.00	90.5	9.5	2.577	1.647
590	0	.00	90.5	9.5	2.621	1.693
600	3	1.43	91.9	8.1	2.665	1.740
610	2	.95	92.9	7.1	2.710	1.786
620	0	.00	92.9	7.1	2.754	1.833
630	0	.00	92.9	7.1	2.799	1.879
640	0	.00	92.9	7.1	2.843	1.925
650	0	.00	92.9	7.1	2.888	1.972
660	0	.00	92.9	7.1	2.932	2.018
670	1	.48	93.3	6.7	2.976	2.065
680	0	.00	93.3	6.7	3.021	2.111
690	0	.00	93.3	6.7	3.065	2.157
700	0	.00	93.3	6.7	3.110	2.204
710	0	.00	93.3	6.7	3.154	2.250
720	1	.48	93.8	6.2	3.199	2.297
730	0	.00	93.8	6.2	3.243	2.343
740	0	.00	93.8	6.2	3.287	2.389
750	1	.48	94.3	5.7	3.332	2.436
760	0	.00	94.3	5.7	3.376	2.482
770	0	.00	94.3	5.7	3.421	2.529
780	0	.00	94.3	5.7	3.465	2.575
790	5	2.38	96.7	3.3	3.510	2.622
800	1	.48	97.1	2.9	3.554	2.668
810	0	.00	97.1	2.9	3.598	2.714
820	1	.48	97.6	2.4	3.643	2.761
830	0	.00	97.6	2.4	3.687	2.807
840	1	.48	98.1	1.9	3.732	2.854
850	1	.48	98.6	1.4	3.776	2.900
860	0	.00	98.6	1.4	3.821	2.946
870	0	.00	98.6	1.4	3.865	2.993
880	0	.00	98.6	1.4	3.909	3.039
890	0	.00	98.6	1.4	3.954	3.086
900	0	.00	98.6	1.4	3.998	3.132
910	0	.00	98.6	1.4	4.043	3.178
920	0	.00	98.6	1.4	4.087	3.225
930	0	.00	98.6	1.4	4.131	3.271
940	0	.00	98.6	1.4	4.176	3.318
950	0	.00	98.6	1.4	4.220	3.364
960	0	.00	98.6	1.4	4.265	3.410
970	0	.00	98.6	1.4	4.309	3.457
980	2	.95	99.5	.5	4.354	3.503
990	0	.00	99.5	.5	4.398	3.550
1000	1	.48	100.0	.0	4.442	3.596

REMAINING FREQUENCIES ARE ALL ZERO

TABLE NUMBER 4

ENTRIES IN TABLE	MEAN ARGUMENT	STANDARD DEVIATION	SUM OF ARGUMENTS	
962	14.432	32.566	13884.000	NON-WEIGHTED

UPPER LIMIT	OBSERVED FREQUENCY	PER CENT OF TOTAL	CUMULATIVE PERCENTAGE	CUMULATIVE REMAINDER	MULTIPLE OF MEAN	DEVIATION FROM MEAN
0	705	73.28	73.3	26.7	.000	-.443
10	9	.94	74.2	25.8	.693	-.136
20	68	7.07	81.3	18.7	1.386	.171
30	20	2.08	83.4	16.6	2.079	.478
40	31	3.22	86.6	13.4	2.772	.785
50	22	2.29	88.9	11.1	3.464	1.092
60	22	2.29	91.2	8.8	4.157	1.399
70	12	1.25	92.4	7.6	4.850	1.706
80	7	.73	93.1	6.9	5.543	2.013
90	22	2.29	95.4	4.6	6.236	2.320
100	7	.73	96.2	3.8	6.929	2.627
110	6	.62	96.8	3.2	7.622	2.935
120	5	.52	97.3	2.7	8.315	3.242
130	5	.52	97.8	2.2	9.007	3.549
140	4	.42	98.2	1.8	9.700	3.856
150	6	.62	98.9	1.1	10.393	4.163
160	7	.73	99.6	.4	11.086	4.470
170	0	.00	99.6	.4	11.779	4.777
180	1	.10	99.7	.3	12.472	5.084
190	2	.21	99.9	.1	13.165	5.391
200	0	.00	99.9	.1	13.858	5.698
210	1	.10	100.0	.0	14.551	6.005

REMAINING FREQUENCIES ARE ALL ZERO

END

```
$IBSYS


   TIME FOR ABOVE JOB
PHASE          MIN   SEC
LOADER           2    12
EXECUTION       37    11
READY            6    36
SYSTEM           0    15
TOTAL           46    14

CARDS READ .......  1135
PAGES PRINTED ....    44
```