NASA CR- 66590

RAVEN industries, inc.

PEPP REPORT
PR25-34
B/L - 4

Planetary Entry Parachute Program

Cross Parachute Engineering Design Report

Contract No. RC7-709044
NAS1-6703

N68-20320 (ACCESSION NUMBER) (THRU)
164 (PAGES) 1 (CODE)
CR-66590 (NASA CR OR TMX OR AD NUMBER) 02 (CATEGORY)
FACILITY FORM 602

Submitted to:

Martin Marietta Corporation
Denver Division
Denver, Colorado

APR 1968
RECEIVED

Raven Industries, Inc.
Report No. R-1767

Prepared by:

E. W. Boettcher
E. W. Boettcher
Project Engineer

G. P. Hanson, Manager
Decelerator Program

Approved by:

K. L. Quanbeck, Manager
Government Projects

J. G. Moldenhauer, Manager
Engineering Division

H.C. 300
M.F. .65

Distribution of this report is provided in the interest of information exchange. Responsibility for the contents resides in the author or organization that prepared it.

ABSTRACT

The Planetary Entry Parachute Program 54.45-foot diameter cross parachute design is analyzed with respect to material strengths, shock loading, and material stress analysis. This report summarizes calculations on which the design is based, material and joint test data, stress analysis procedures, and system weight and center of gravity location calculations. A materials properties section is also included and basic parachute system configuration and dimensions are defined.

RAVEN industries, inc.

TABLE OF CONTENTS

		PAGE
I.	INTRODUCTION	1
II.	CANOPY GEOMETRY	2
III.	SHOCK LOADING CALCULATIONS	9
IV.	MATERIALS PROPERTIES	26
V.	SEAM AND JOINT EFFICIENCY	29
VI.	STRESS ANALYSIS	90
VII.	WEIGHT ANALYSIS	131
VIII.	CENTER OF GRAVITY AND MASS MOMENTS OF INERTIA CALCULATIONS	138

RAVEN industries, inc.

LIST OF ILLUSTRATIONS

FIGURE		PAGE
1	Canopy Dimensions	4
2	General Dimensions	5
3	Canopy Terminology	6
4	Canopy Riser	7
5	Load Bridle Dimensions	8
6	Computer Program Input Data Sheet	11
7	Required Computer Program Input Data	12
8	Computer Program Index Definition	13
9	t_f/D_o Ratio vs. Snatch Velocity	20
10	Opening Force vs. % of Fill Time	22
11	Computer Program Input Data	23
12	Computer Program Output	25
13	Test Sample Location and Direction	30
14	Safety Margins	130
15	Parachute System Center of Gravity Location (Strung-Out Position)	141
16	Parachute System Center of Gravity Location (Packed Position)	144
17	Parachute System Center of Gravity Location (Inflated Position)	147

LIST OF TABLES

TABLE NUMBER		PAGE
1	Test Sample Description	31-32
2	Design Factors	91-98
3	Weight Summary (Calculated)	136
4	Weight Summary (Actual)	137
5	Parachute Component and System Center of Gravity Locations (Strung-out Position)	140

RAVEN®
industries, inc.

SECTION I

INTRODUCTION

I. INTRODUCTION

This report was prepared by Raven Industries, Inc. Sioux Falls, South Dakota in compliance with Contract No. RC7-709044 with Martin-Marietta Corporation, Denver Division, Denver, Colorado.

The objective of the program was the design and fabrication of a cross configuration parachute for flight testing (balloon launch mode) in the Planetary Entry Parachute Program (PEPP). The design was to be capable of operational deployment at an altitude of 130,000 ft. at a velocity of Mach 1.6 with a 600 lb. suspended payload.

In accomplishing this task, the design was analyzed with respect to material strengths, shock loading, and material stress analysis. This report summarizes calculations on which the design is based, material and joint test data, stress analysis procedures, and system weight and center of gravity location calculations. A materials properties section is also included and basic parachute system configuration and dimensions are defined.

RAVEN industries, inc.

SECTION II

CANOPY GEOMETRY

II. CANOPY GEOMETRY

The contract specifications required the cross parachute design with a panel length equal to 3.78 ± .05 times the panel width. Maximum parachute dimensions were determined based on the following design criteria.

Deployment conditions: Mach Number = 1.6
Dynamic pressure = 13 psf
Ejection velocity = 130 fps

System weight: Canopy, suspension lines and riser = 70-76 lb.
Complete parachute system = 80 lb. max.

These conditions and available materials dictated a maximum parachute layflat diameter of 71.21 ft. The layflat diameter defines the following cross parachute dimensions.

PANEL SIZE

Panel length (L) = Layflat diamter = 71.21 ft.
Panel length/width ratio = 3.78
Panel width (W) = 71.21/3.78 = 18.84 ft.

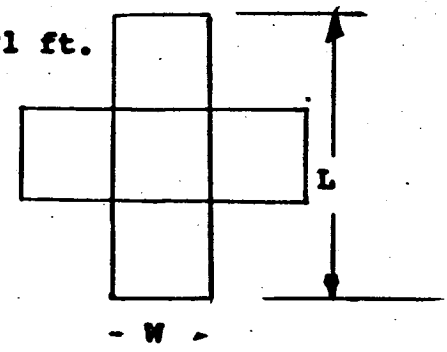

ACTUAL MATERIAL AREA (S_o)

$$So = 2LW - W^2$$

$$= (2)(71.21)(18.84) - (18.84)^2$$

$$= 2328.24 \text{ ft.}^2$$

NOMINAL DIAMETER (D_o)

$$Do = \sqrt{\frac{4\ So}{\pi}}$$

$$= \sqrt{\frac{(4)(2328.24)}{3.1416}}$$

$$= 54.45 \text{ ft.}$$

PROJECTED DIAMETER (D_p)

Projected Diameter = Flying Diameter

$$Dp = \frac{2L}{\pi}$$

$$= \frac{(2)(71.21)}{3.1416}$$

$$= 45.33 \text{ ft.}$$

Basic parachute dimensions are presented in figures 1 and 2 . Since cross parachute terminology differs somewhat from conventional parachute designs, figure 3 is included for definition. Terms as defined in this sketch will be followed throughout this report. Canopy riser and load bridle configurations and basic dimensions are presented in figures 4 and 5, respectively.

RAVEN Industries, Inc.

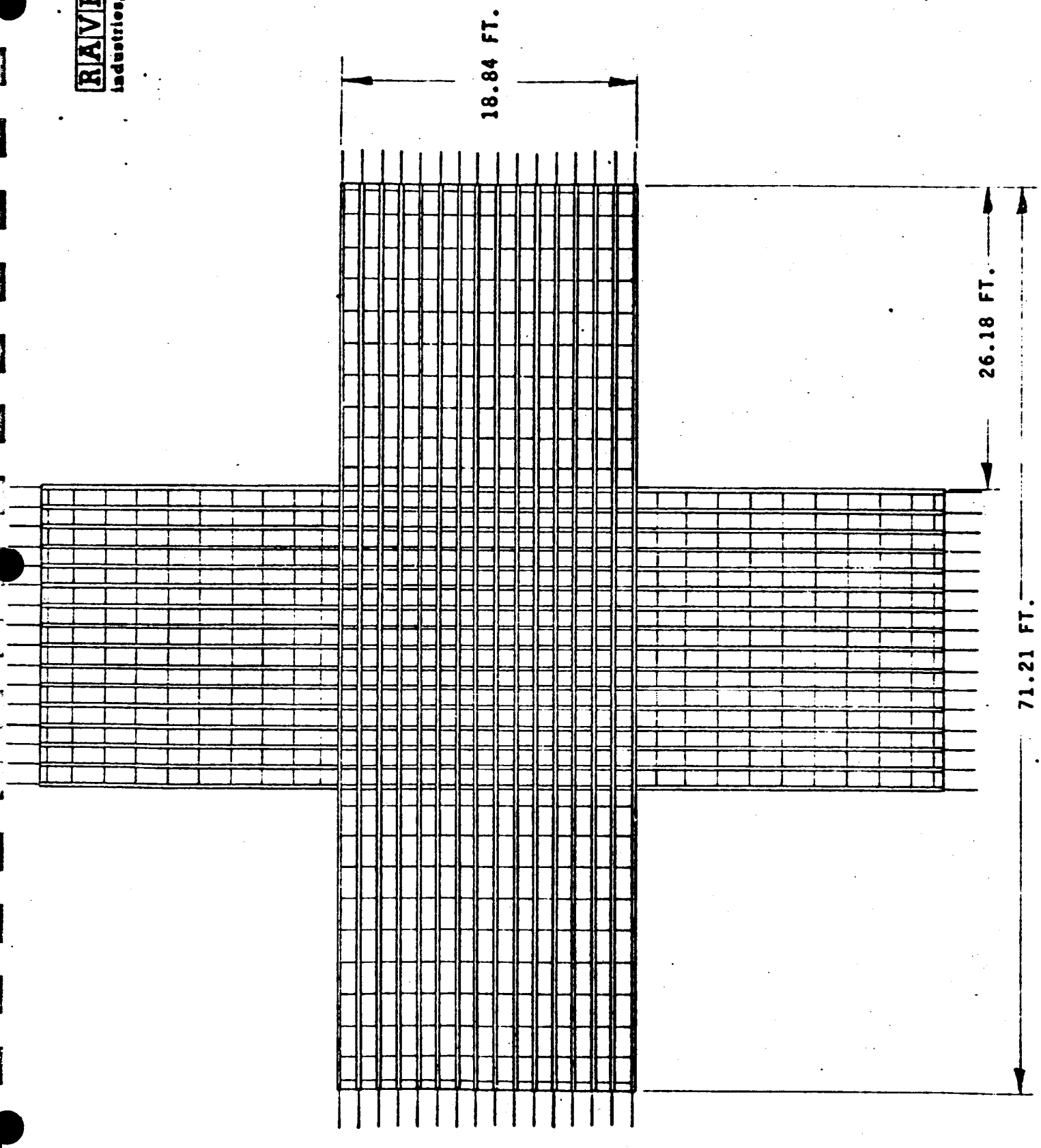

FIGURE 1. CANOPY DIMENSIONS

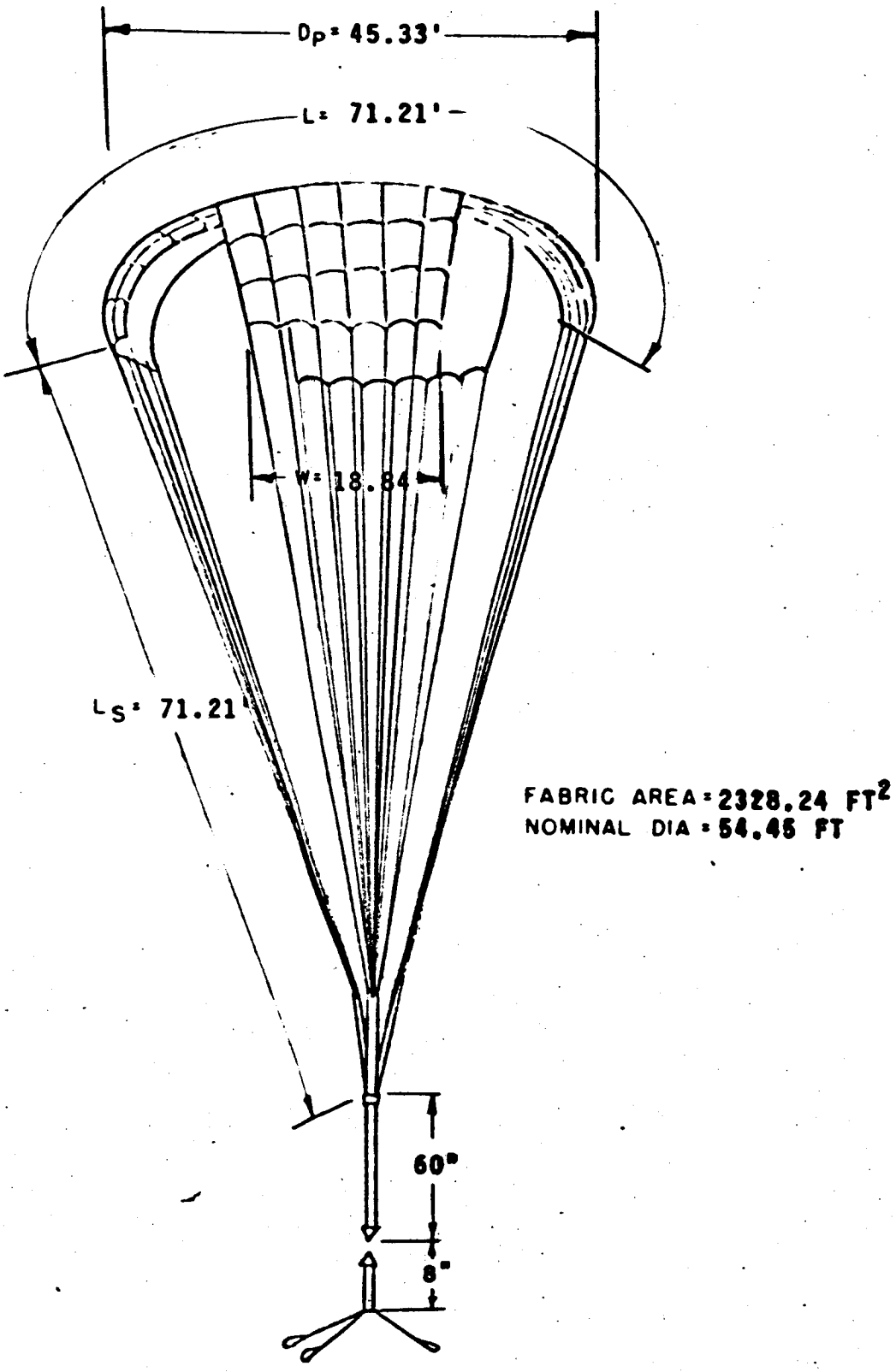

FIGURE 2 GENERAL DIMENSIONS

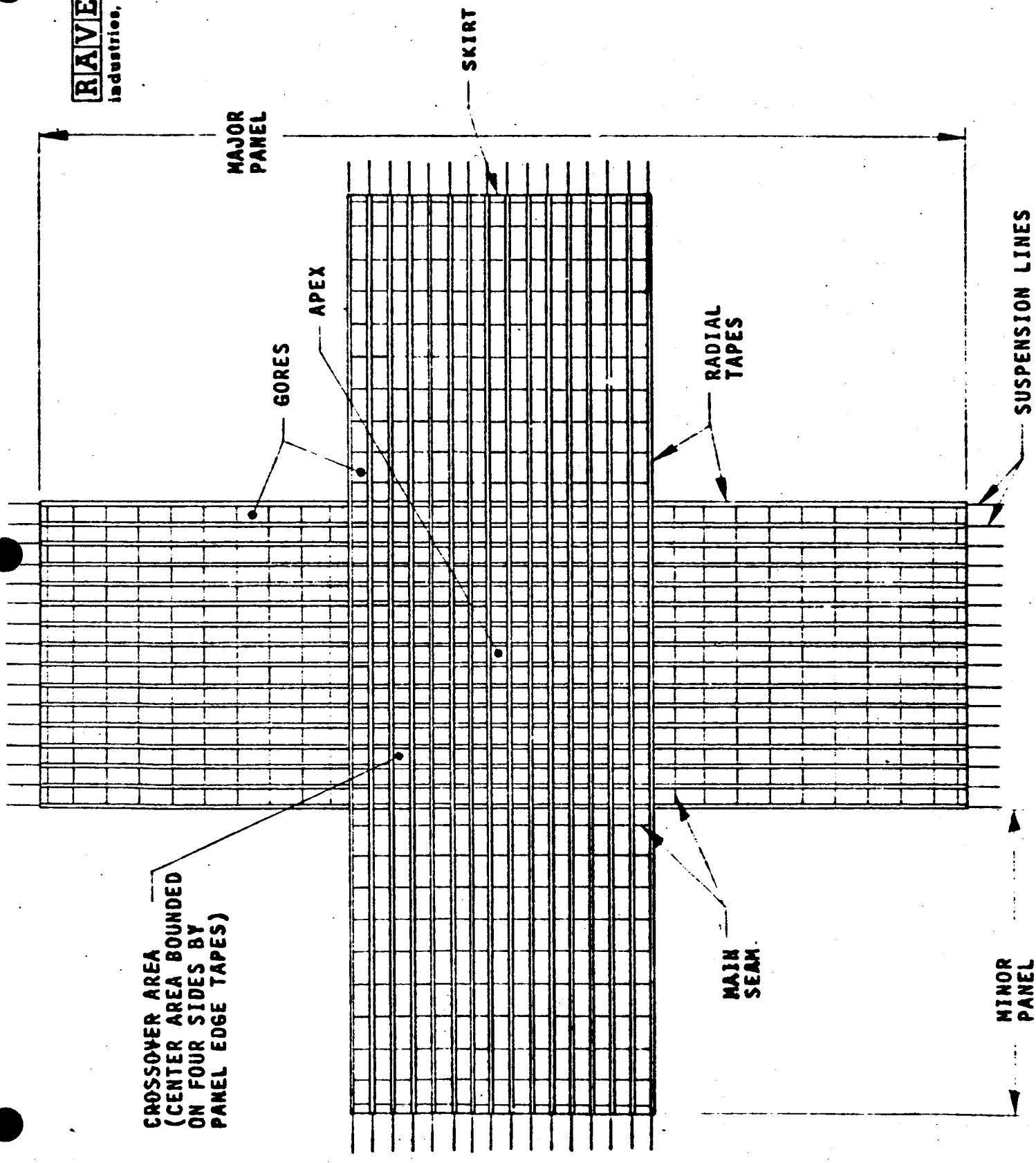

FIGURE 3. CANOPY TERMINOLOGY

RAVEN industries, inc.

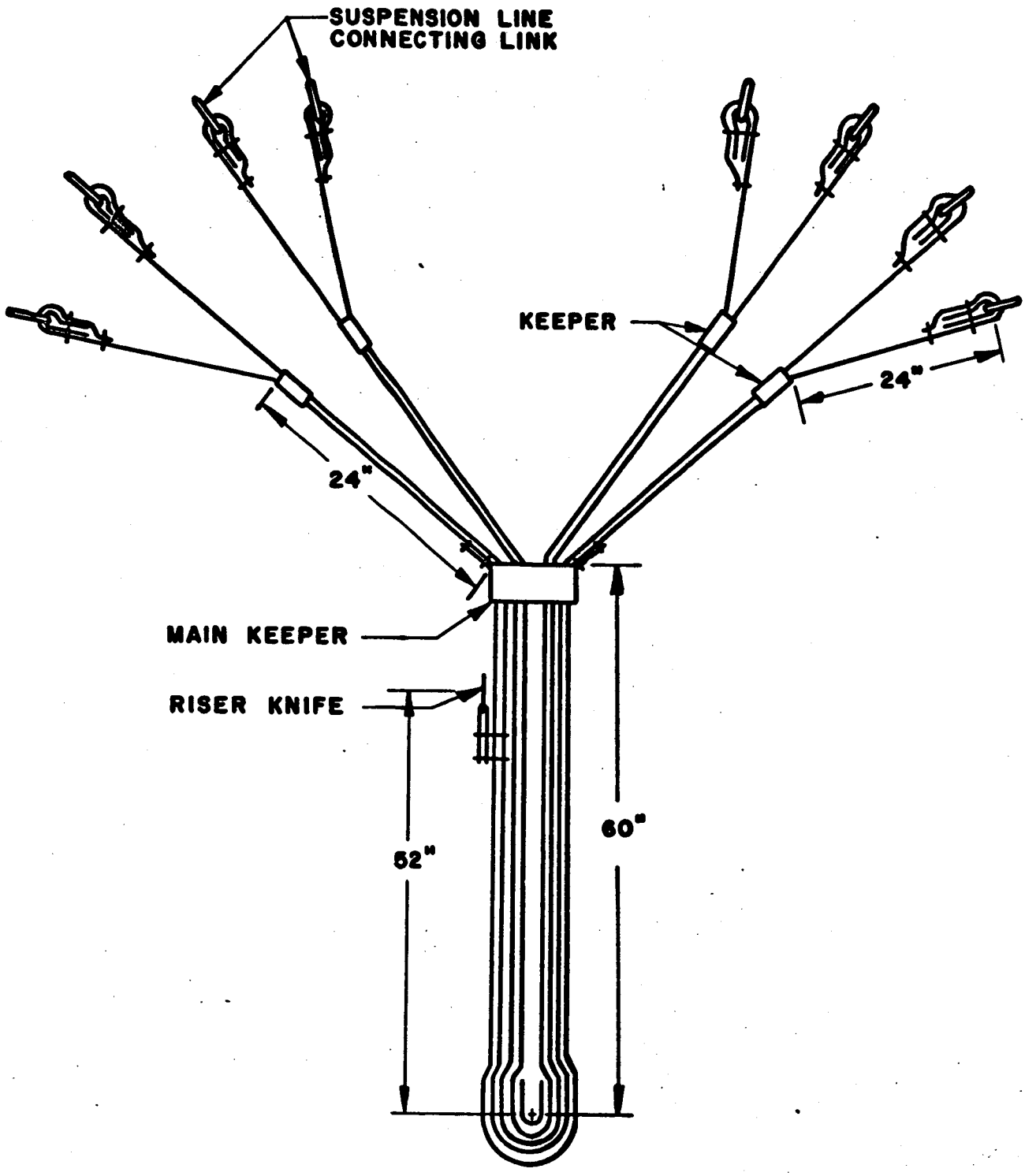

FIGURE 4 CANOPY RISER

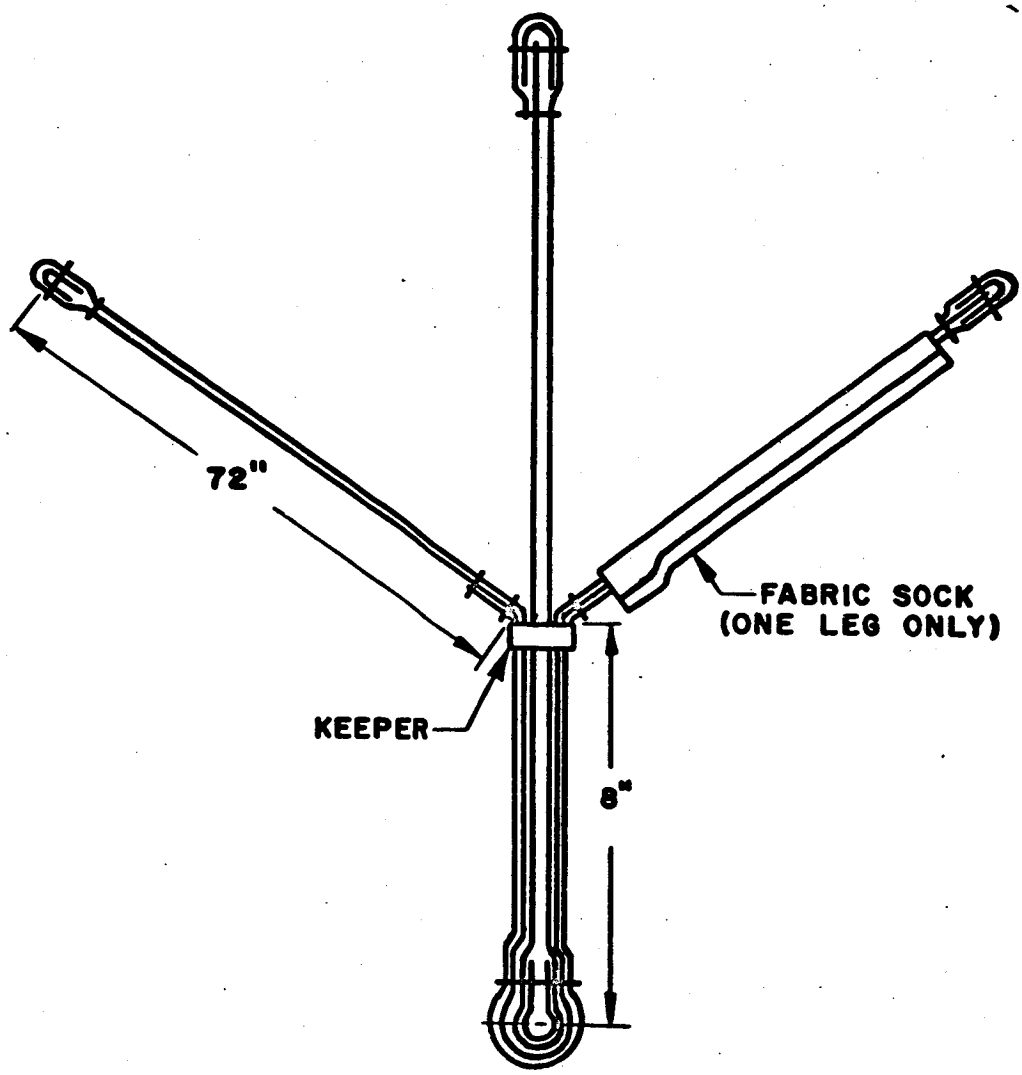

FIGURE 5 LOAD BRIDLE DIMENSIONS

RAVEN industries, inc.

SECTION III

SHOCK LOADING CALCULATIONS

III. SHOCK LOADING CALCULATIONS

COMPUTER PROGRAM

A general computer program has been written by Raven Industries, Inc. for use in parachute calculations where snatch force, time to snatch, fill time and opening shock are desired. The program is designed from equations and methods presented in ASD-TR-579, PERFORMANCE OF AND DESIGN CRITERIA FOR DEPLOYABLE AERODYNAMIC DECELERATORS, Chapter 4. Initial physical and operational parameters required for program input are tabulated in Figure 6. Most of these values are normally known or given for a particular situation. For some parameters, however, such as uninflated canopy drag coefficient or uninflated canopy effective area, "best estimate" values must be used. All of these values are required only if all four decelerator performance parameters - snatch force, time to snatch, filling time, and opening shock - are to be computed. (Time to snatch is computed only as a by-product of the snatch force calculation). For required initial conditions in the above mentioned cases see Figure 7.

The system of programs consists of a main "Executive" program and four subroutines. The subroutines are called

or omitted by the main program depending upon which calculated output is desired. Program variations are introduced by assigning values to the indeces listed at the bottom of Figure 6. Applicable index values, and the resulting computer applications are presented in Figure 8.

The main program is of no concern here because it merely serves the purpose of directing the input data to the desired subroutine. The subroutines, however, will be explained with respect to the types of equations involved, and the method of arriving at a workable solution.

Parachute Performance Calculations

Date Input:

W_b	Payload Weight - - - - - - - - - - - - - -
W_c	Parachute Weight - - - - - - - - - - - - -
C_{D_b}	Payload Drag Coefficient - - - - - - - - -
C_{D_c}	Uninflated Canopy Drag Coefficient - - - -
S_b	Payload Effective Area - - - - - - - - - -
S_c	Uninflated Canopy Effective Area - - - - -
C_{D_o}	Inflated Canopy Drag Coefficient - - - - -
D_o	Parachute Nominal Diameter - - - - - - -
Z	Number of Suspension Lines- - - - - - - -
P^1	Suspension Line Breaking Strength - - - - -
L_s	Suspension Line Length - - - - - - - - - -
ξ'	Suspension Line Elongation- - - - - - - -
C	Effective Porosity of Canopy Material - - -
V_d	Velocity at Deployment- - - - - - - - - -
σ	Density Ratio at Deployment Altitude- - - -
ρ	Density at Deployment Altitude - - - - - -

N =

M =

M1 =

M2 =

M3 =

M4 =

Figure 6. Computer Program Input Data Sheet

Outputs Desired	Indeces	Inputs Required* Parameters
Snatch Force and Time to Snatch	N, M4	W_b, W_c, C_{Db}, C_{Dc}, S_b, S_c, Z, P^1, L_s, ξ, v_d, ρ
Fill Time (Flat Circular)	N, M, M1	W_b, C_{Do}, D_o, C, σ, v_s (system velocity at snatch)
Fill Time (Cross)	N, M	t_f/D_o - ratio (filling time/diameter)
Opening Shock	N, M2, M3	W_b, C_{Do}, D_o, σ, v_s, t_f (fill time)

*For explanation of symbols see Figure 6.

Figure 7. Required Computer Program Input Data

Index	Value	Application
N	1	Calculate snatch force, fill time, opening shock
	2	Calculate snatch force
	3	Calculate filling time
	4	Calculate opening shock
	5	Calculate snatch force, filling time
	6	Calculate snatch force, opening shock
	7	Calculate filling time, opening shock
M	1	Flat Circular Chute
	2	Cross Chute
M1	1	Read in velocity at snatch (v_s) for fill time calculation. (Flat Circular Chute)
	2	Use calculated velocity at snatch (v_s) for fill time calculation.
	3	Read in time to snatch (t_2) for fill time calculation.
M2	1	Read in time to fill (t_f) for opening shock calculation.
	2	Use calculated time to fill (t_f) for opening shock calculation.
M3	1	Read in velocity at snatch (v_s) for opening shock calculations.
	2	Use calculated velocity at snatch (v_s) for opening shock calculations.
M4	1	Read in time to snatch (t_2) for snatch force calculation.
	2	Use calculated time to snatch (t_2) for snatch force calculations.

Figure 8. Computer Program Index Definition

SNATCH FORCE SUBROUTINE

The snatch force experienced in the suspension lines is equal to the sum of the force produced by the change in Kinetic Energy plus the average drag force.

The K.E. equation is given by:

$$P = \sqrt{\frac{M_c \, V^2_{rel} \, Z \, P^1}{L_s \, \xi}}$$

where: P = Force due to K.E. (lb)

M_c = Mass of canopy cloth area and suspension lines (slugs)

V_{rel} = Velocity of payload relative to chute at time t_2 (t_2 = deployment time) (ft/sec)

Z = Number of suspension lines

P^1 = Breaking strength of suspension lines (lb.)

L_s = Suspension line length (ft.)

ξ^1 = % elongation of suspension lines

In this form, the force due to K.E. is reduced to a function of the differential speed. The differential speed is dependent upon the total time for deployment (t_2) to occur. The determination of t_2 will be covered

in TIME TO SNATCH SUBROUTINE.

The average drag force calculation is given by the equation

$$F_{\bar{d}} = \frac{\rho}{2} (C_D S)_c \left[\frac{V^2 chute + V^2 payload}{2} \right]$$

where: $F_{\bar{d}}$ = Average drag force (lb)

ρ = Density at deployment altitude (slugs/ft.^{3})

$(C_D S)_c$ = Drag area of uninflated canopy (ft.^{2})

Vchute = Velocity of chute (ft./sec.)

Vpayload = Velocity of payload (ft./sec.)

Therefore, snatch force, F_s, is

$$F_s = F_{\bar{d}} + P$$

The computer handles these snatch force equations along with other applicable equations in a straightforward algebraic manipulation.

TIME TO SNATCH ROUTINE

Time to snatch (t_2) is defined as the total time for deployment to occur (that is from beginning of deployment to completion of deployment). At snatch, the suspension lines are at their full length.

By considering launch velocity and drag characteristics, of both the chute and the payload, it is possible to determine their distances traveled since launch, relative to the launch vehicle. The difference between these two distances will equal the suspension line length (L_s). The method of determining the distance traveled by both chute and payload consists of an iterative process using trial-and-error values of t_2. By comparing the differences of these distances with the suspension line length, the iterative process arrives at a suitable value of t_2 (accuracy is within ± .5% of suspension line length). Using the value t_2, the relative velocity of the payload to the chute can be calculated for use in the snatch force subroutine.

FILLING TIME SUBROUTINE
(Flat Circular Chute)

Time to fill (t_f) is defined as the total time for fill to occur; that is, the time elapsed between snatch and total fill. At total fill, the canopy has inflated to its full volume.

The time to fill for a flat circular chute is calculated in much the same manner as is time to snatch, except that in time to fill calculations, a trial-and-error method

is utilized with respect to t_f to achieve a calculated volume of the canopy at total inflation comparable to the actual volume of the canopy at total inflation.

The equations used for calculating volume of the canopy at total inflation are:

$$V = \int_0^1 \frac{\dfrac{D_o^2 \; t_f \; V_s}{\pi} \left[(1-T)\, T^{4/3} - 2\, CT\, (1-T) \right] dT}{\dfrac{B \; V_s}{2(11.25)^2} \left[(11.25T+A) \ln \left(\dfrac{11.25T+A}{A} \right) - 11.25T \right] + \dfrac{11.25+A}{A}}$$

$$B = \frac{120\, (C_D S)_{max} \; t_f}{D_o^3}$$

$$A = \frac{w \times 10^6}{20\, g\, \sigma\, D_o^3}$$

where:

V = Calculated volume of canopy at fill (ft.^{3})

D_o = Nominal diameter of chute (ft.)

V_s = System velocity at snatch (ft./sec.)

T_f = Time to fill (sec.)

T = % of fill time $\quad T = t/t_f$

C = Effective porosity of canopy material

$(C_DS)max$ = Maximum drag area of chute ($ft.^2$)

W = Weight of payload (lb.)

g = Acceleration due to gravity ($ft./sec.^2$)

σ = Density ratio at deployment altitude

The right hand expression of the volume equation cannot be integrated directly without making broad assumptions and simplifications. Therefore, a numerical integration of the expression is necessary. This is accomplished by use of the numerical integration scheme of Simpson's Rule. The integrand also contains the parameter t_f, creating the necessity of a trial-and-error method using trial values of t_f.

Accuracy in fill time calculations are ± .5% of actual canopy volume.

FILLING TIME SUBROUTINE
(Cross Chute)

In filling time calculations where a cross chute is concerned, a ratio of t_f/D_o (filling time to diameter ratio) is merely multiplied by the diameter of the chute to obtain t_f. This ratio is a function of system

velocity at snatch and can be obtained from the plot on Figure 9.

OPENING SHOCK SUBROUTINE

Opening shock is defined as the maximum force experienced by a parachute canopy during the opening process. The system of equations relating this force to the input data is

$$F = \frac{WV}{2g\ t_f}\left[\frac{22.5 + BV\ t/t_f}{A + 11.25\ t/t_f}\right]$$

$$V = \frac{V_s}{\frac{BV_s}{2(11.25)^2}\left[(11.25\ t/t_f + A)\ln\left(\frac{11.25\ t/t_f + A}{A}\right) - 11.25\ t/t_f\right] + \frac{11.25\ t/t_f + A}{A}}$$

where:

A, B, W, g, V_s, t_f, are the same parameters mentioned in FILLING TIME SUBROUTINE.

and:

F = Opening Force (lbs.)

t/t_f = % of fill time

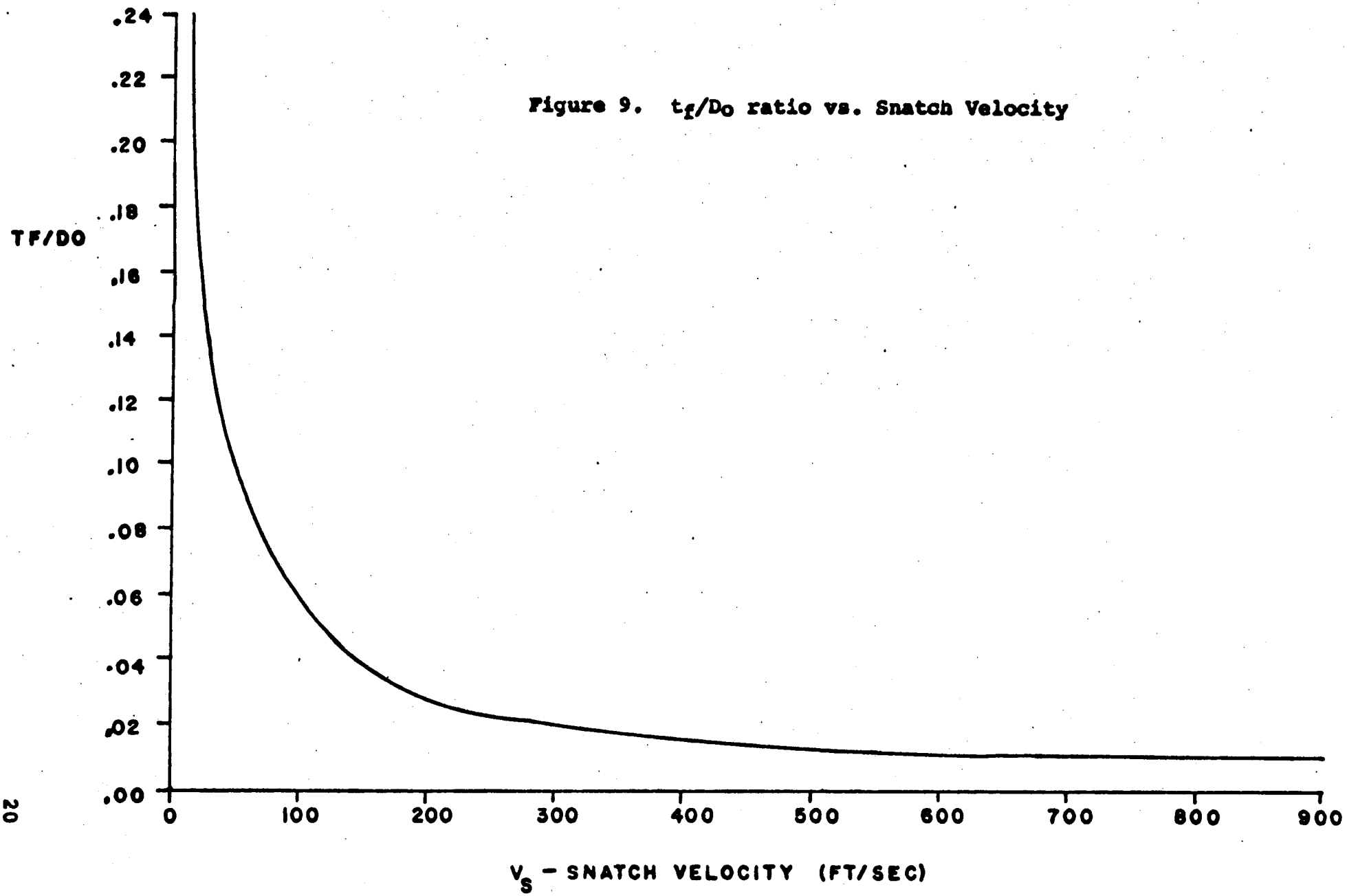

Figure 9. t_f/D_o ratio vs. Snatch Velocity

A typical plot of Opening Force (f) vs. % of fill time (t/t_f) is given in Figure 10. The computer method of calculating a maximum opening force is to begin with a t/t_f ratio of zero, and increment it by + .1 until a maximum point is reached. From this point on iteration of the t/t_f ratio is utilized until two adjacent values of opening force are within 10 lbs. of each other.

SHOCK LOADING CALCULATION

Data input values for a computer program calculation of dynamic forces experienced by the cross parachute during deployment at design conditions are presented in Figure 11. Values assigned the indexes define the program as a calculation of snatch force, fill time, and opening shock (N = 1) for a cross parachute (M = 2) using calculated time to snatch (M4 = 2) for snatch force computation, calculated velocity at snatch (M1 = 2) for fill time computation, and calculated velocity at snatch (M3 = 2) and calculated filling time (M2 = 2) for opening shock computation. Payload weight, parachute weight, number of suspension lines, and suspension line breaking strength, length, and elongation are given values. Payload drag coefficient and effective area are fictitious numbers which result in a given payload drag area of 7.0 ft^2. Uninflated canopy drag coefficient

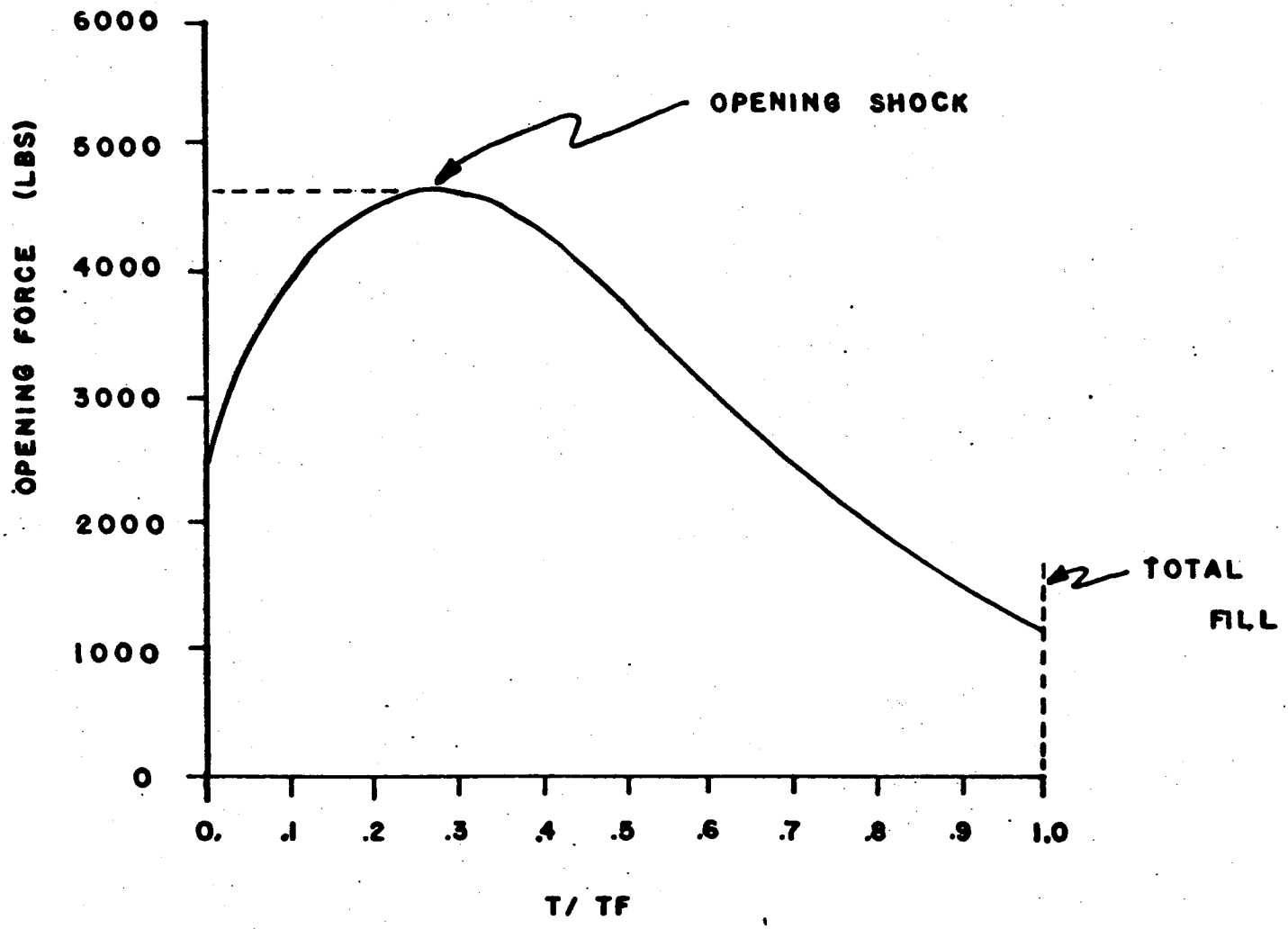

Figure 10. Opening Forces vs. % of Fill Time

Parachute Performance Calculations

Date Input:

W_b	Payload Weight - - - - - - - - - - - - - -	606 lb.
W_c	Parachute Weight - - - - - - - - - - - - -	74 lb.
C_{D_b}	Payload Drag Coefficient - - - - - - - - - -	1.0
C_{D_c}	Uninflated Canopy Drag Coefficient - - - -	1.0
S_b	Payload Effective Area - - - - - - - - - - -	7.0 ft.^{2}
S_c	Uninflated Canopy Effective Area - - - - -	3.14 ft.^{2}
C_{D_o}	Inflated Canopy Drag Coefficient - - - - -	0.8
D_o	Parachute Nominal Diameter - - - - - - - -	54.24 ft.
Z	Number of Suspension Lines- - - - - - - -	64
P^1	Suspension Line Breaking Strength- - - - -	500 lb.
L_s	Suspension Line Length - - - - - - - - - -	71.21 ft.
ξ'	Suspension Line Elongation- - - - - - - -	20%
C	Effective Porosity of Canopy Material - - -	0
V_d	Velocity at Deployment- - - - - - - - - - -	1660.8 fps
σ	Density Ratio at Deployment Altitude- - - -	0.00396
ρ	Density at Deployment Altitude - - - - - -	0.00000942 slug/ft.^{3}

N = 1

M = 2

M1 = 2

M2 = 2

M3 = 2

M4 = 2

Figure 11. Computer Program Input Data

and area are estimated values. Parachute nominal diameter is based on essential cloth area. The inflated canopy drag coefficient, in conjunction with the area definition, is a nominal value for the cross-type parachute. Effective porosity is assumed zero at the low density at 130,000 ft. Velocity at deployment = 1.6 Mach = 1660.8 fps. The density ratio was adjusted to obtain a dynamic pressure, q = 13 psf, at the test altitude and velocity.

Resultant velocity, time, and force values from program inputs are presented in computer output form, Figure 12, and are tabulated here for reference.

Time to snatch	0.54	sec
Relative velocity (at snatch)	135.5	ft/sec
System velocity (at snatch)	1658.2	ft/sec
Snatch force	9773	lb
Fill time	0.45	sec
Opening shock	17,620	lb

The highest load imposed on the cross parachute deployed at design conditions is therefore predicted at 17,620 lb. opening shock. This maximum force is used in stress analysis calculations presented in Section VI.

```
106. =I 00  606./74./1./1./7./3.14/.8/54.24/64./
107. =I 00  500./71.21/.2/0./1660.8/.00396/.00000942/
106. =I 00  2

132. =0180     T     =  0.54                    TEST LENGTH   =   71.556
121. =0 01     REL VEL=135.48561096             SNATCH FORCE  =  9773.25488          SYS. VEL. =  1658.19928

116. =I 00  2
119. =I 00  .0083
121. =0 30  FILL. TIME(R+)= 0.450
141. =I 00  2
146. =I 00  2

133. =0 04     OPENING SHOCK =    17620.57          T/TF =,1.000

154. =STOP
156. +READY ;FINISH
```

Figure 12. Computer Program Output

RAVEN industries, inc.

SECTION IV

MATERIALS PROPERTIES

IV. MATERIALS PROPERTIES

SHROUD LINE

Cord, Dacron, braided, splicable

ValRayCo, Inc. Pattern #9004

Construction:

16 carrier braider (15 carries w/white Dacron and 1 carrier black Dacron)

16 ends per carrier - 10 picks per inch

Minimum ultimate tensile strength = 550 lb.

Average Tensile Strength = 605.5 lbs.

Using 220 Denier Dacron yarn, heat set, high tenacity

CANOPY CLOTH

Cloth, Dacron, ripstop, natural

J. P. Stevens & Company, Inc. S/N-2468/1

36/37 inches width

1.25 oz sq yd

2% residual shrinkage (max.) after 91 hours @ 125°C

CANOPY RISER

Webbing, textile Dacron, low elongation

MIL-W-25361, Type III

Width	1 23/32"
Thickness	0.083"
Weight	2.29 oz/yd
Total ends face and back	256
Face and back yarn denier & ply	1100/2 Dacron
Filling picks per inch	23
Filling yarn denier & ply	15/3
Yarn turns per inch	3
Minimum ultimate tensile strength	7000 lb.

LOAD BRIDLE

Webbing, textile, woven, Nylon

MIL-W-4088D, Type XIX

Width	1 3/4"
Thickness	0.112"
Weight	2.97 oz/yd
Total ends face and back	280
Face and back yarn denier & ply	840/3
Filling picks per inch	18
Filling yarn denier & ply	840/12
Yarn turns per inch	2.8
Minimum ultimate tensile strength	10,000 lb.

TAPE, DACRON, 1" x 1000 lbs.

Width	1" plus 1/64"

Thickness	.035"
Warp Ends	441 220 den. Dacron
Filling	80 pikes 2 ends 220 den. Dacron
Tensile	1075, 1090 lbs.
Wt.	0.57 oz/yd

100% Dacron yarn 220 Denier type 52 Merge 62428

TAPE, DACRON, 3/4" x 750 lbs.

Width	3/4" plus 1/64"
Thickness	.037"
Wt.	0.41 oz/yd
Warp Ends	337/1 - 220 Den. Dacron
Picks	80 - 2 ends 220 den. Dacron
Tensile	895 lbs.

100% Dacron 220 Den. type 52 Merge 62428

RAVEN®
industries, inc.

SECTION V

SEAM AND JOINT EFFICIENCY

V. SEAM AND JOINT TESTS AND EFFICIENCY CALCULATIONS

Representative test samples of each individual seam and joint throughout the cross parachute system were fabricated and tested to determine minimum ultimate strength of the seam and/or joint. Location of each test point on the canopy and the load directions are shown in Figure 13. Table 1, in conjunction with Figure 13, lists the test numbers, load direction, and description of each sample. Material tests were accomplished per the applicable sections of Federal Specifications CCC-T-191, "Textile Test Methods".

Five samples of each material, seam, and joint were tested. Test information and data are presented on individual "Laboratory Material Tests and Test Data" sheets in this section. The seam and/or joint efficiency calculation is included on this form. A sketch of the test sample, with applicable dimensions and fabrication configuration, precedes each data sheet.

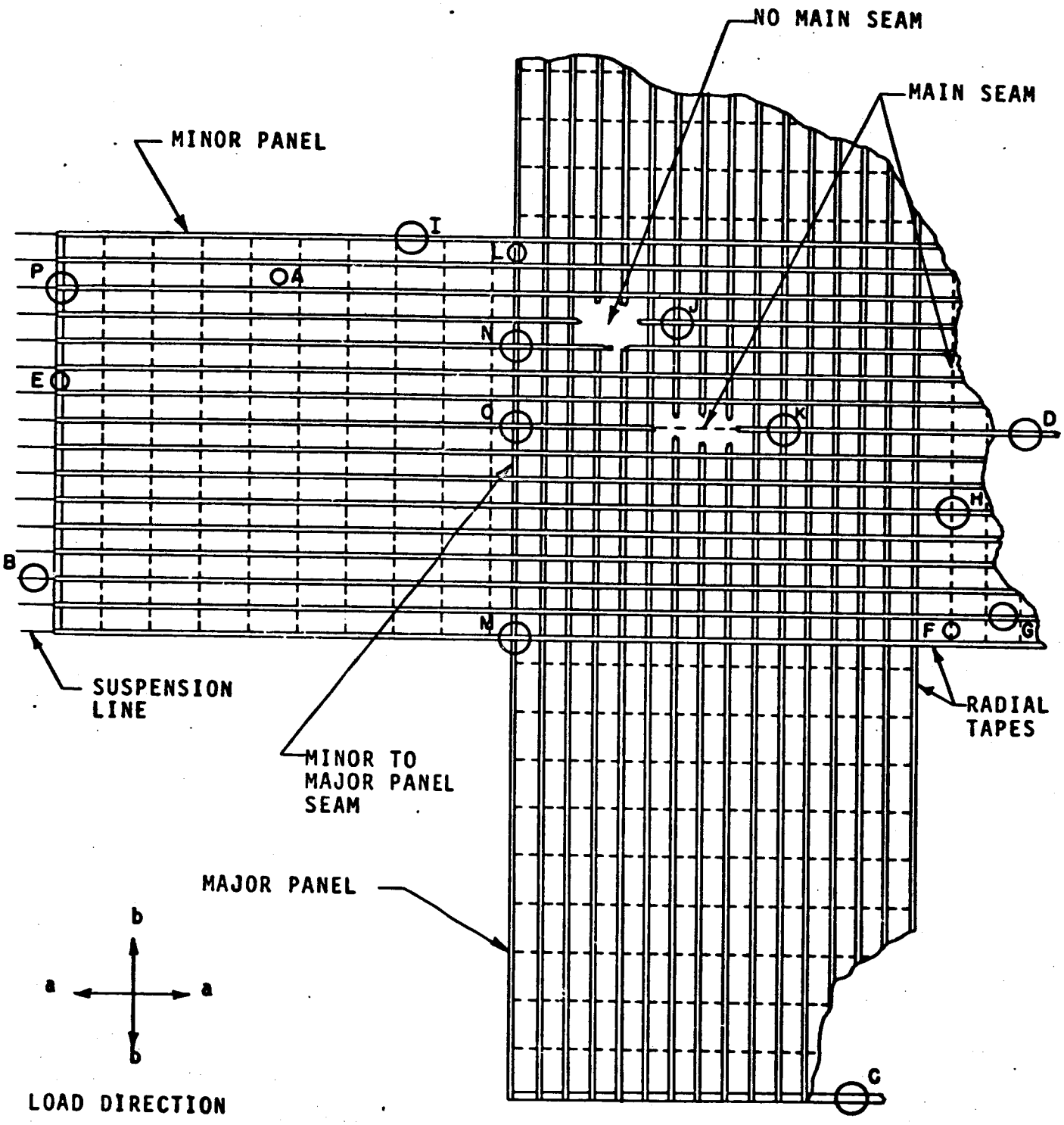

FIGURE 13. TEST SAMPLE, LOCATION & DIRECTION

TEST NO.	LO-CATION	DESCRIPTION	LOAD DIRECTION	GRAPH NO.
1	A	CANOPY CLOTH, DACRON	a-a	2412.1.b
2	A	CANOPY CLOTH, DACRON	b-b	2412.2.b
3	B	SUSPENSION LINE, DACRON, 550 LBS.	a-a	2412.3
4	C	SKIRT HEM TAPE, DACRON, 1 IN. X 1000 LBS.	a-a	2412.4
5	D	RADIAL TAPE, DACRON	a-a	2412.5
6		CANOPY RISER WEBBING, DACRON, MIL-W-25361, TYPE III		2412.6
7		LOAD BRIDLE WEBBING, NYLON, MIL-W-4088, TYPE XIX		2412.7.a
8	E	SKIRT HEM	b-b	2412.8
9	F	MAIN SEAM	a-a	2412.9
10	F	MAIN SEAM	b-b	2412.10
11	G	RADIAL TAPE ON CANOPY CLOTH	a-a	2412.11
12	G	RADIAL TAPE ON CANOPY CLOTH	b-b	2412.12
13	H	RADIAL TAPE ACROSS MAIN SEAM	a-a	2412.13
14	H	RADIAL TAPE ACROSS MAIN SEAM	b-b	2412.14
15	I	RADIAL TAPE ON SKIRT EDGE HEM	a-a	2412.15
16	J	RADIAL TAPE ON RADIAL TAPE ON CANOPY CLOTH	a-a	2412.16
17	J	RADIAL TAPE ON RADIAL TAPE ON CANOPY CLOTH	b-b	2412.17
18	K	RADIAL TAPE ON RADIAL TAPE ON MAIN SEAM	a-a	2412.18
19	K	RADIAL TAPE ON RADIAL TAPE ON MAIN SEAM	b-b	2412.19
20	L	RADIAL TAPE ON MINOR-TO-MAJOR PANEL SEAM	a-a	2412.20
21	L	RADIAL TAPE ON MINOR-TO-MAJOR PANEL SEAM	b-b	2412.21
22	M	RADIAL TAPE ON RADIAL TAPE ON MINOR-TO-MAJOR PANEL SEAM (AT CORNER CUT-OUT)	a-a	2412.22
23	M	RADIAL TAPE ON RADIAL TAPE ON MINOR-TO-MAJOR PANEL SEAM (AT CORNER CUT-OUT)	b-b	2412.23
24	N	RADIAL TAPE ON RADIAL TAPE ON MINOR-TO-MAJOR PANEL SEAM (NO MAIN SEAM)	a-a	2412.24

TABLE 1. TEST SAMPLE DESCRIPTION

TEST NO.	LO-CATION	DESCRIPTION	LOAD DIRECTION	GRAPH NO.
25	N	RADIAL TAPE ON RADIAL TAPE ON MINOR-TO-MAJOR PANEL SEAM (NO MAIN SEAM)	b-b	2412.25
26	O	RADIAL TAPE ON RADIAL TAPE ON MINOR-TO-MAJOR PANEL SEAM (ON MAIN SEAM)	a-a	2412.26
27	O	RADIAL TAPE ON RADIAL TAPE ON MINOR-TO-MAJOR PANEL SEAM (ON MAIN SEAM)	b-b	2412.27
28	P	SUSPENSION LINE/RADIAL TAPE JOINT	a-a	2412.28
31		SUSPENSION LINE/CANOPY RISER JOINT		2412.31
32		CANOPY RISER AT KEEPER		2412.32
33		CANOPY BRIDLE AT MAIN KEEPER TIE		2412.33

TABLE 1. TEST SAMPLE DESCRIPTION (CONT.)

RAVEN industries, inc.

DESCRIPTION: CANOPY CLOTH, DACRON

LOCATION REFERENCE: A

LOAD DIRECTION: a-a

TEST / GRAPH NO.: 1/2412.1.b

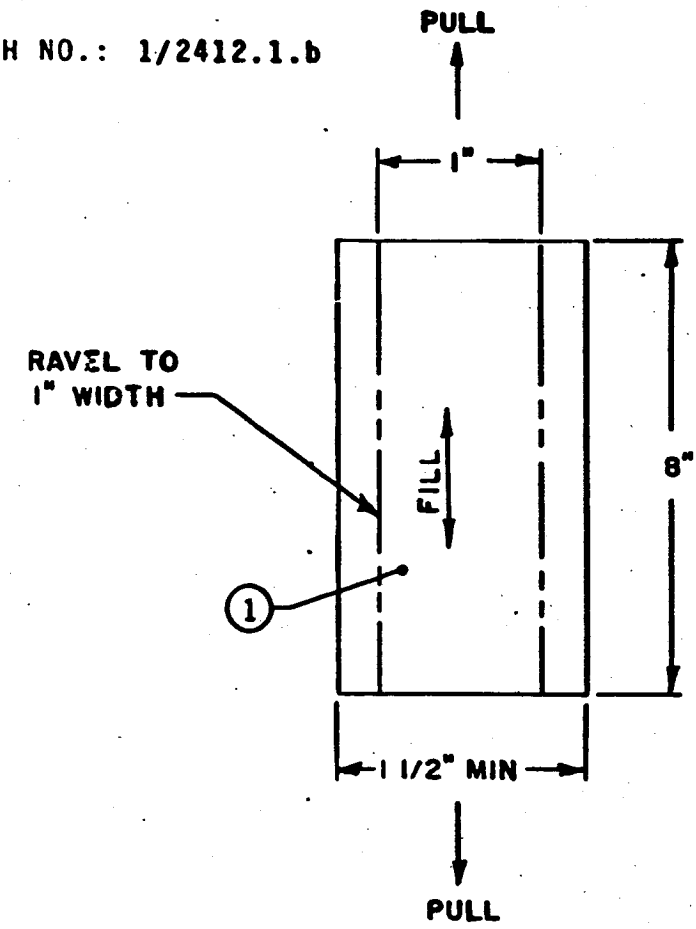

NOTES:

1. MATERIAL (ITEM 1), DACRON, 1.25 OZ/YD.^{2}

LABORATORY MATERIAL TESTS AND TEST DATA

TEST ITEM:	PROJECT NO.: 14175
Canopy Cloth, Dacron	TEST/GRAPH NO.: 1/2412.1.b
	LOCATION REFERENCE: A LOAD DIRECTION: a-a

TEST OBJECTIVE: Determine minimum ultimate strength of canopy cloth test samples (fill direction)

TEST SAMPLE CONFIGURATION:

DIMENSIONS: 1-1/2 inch raveled to 1 inch width x 8 inches

MATERIAL: Canopy cloth, dacron, 1.25 oz./yd.^{2}

STITCH: N/A

THREAD: N/A

TEST PROCEDURE:

METHOD: 5104 Per Fed. Spec. CCC-T-191

LOAD RATE: 12 inches/minute

INSTRUMENTATION: Research Inc. Materials Test System, Mod.No. LF 7445-20

TEST DATA:

SAMPLE NO.	ULTIMATE STRENGTH	TEST TERMINATION
1	44.5 lb.	Fabric Rupture
2	45.5 lb.	Fabric Rupture
3	41.0 lb.	Fabric Rupture
4	46.0 lb.	Fabric Rupture
5	44.0 lb.	Fabric Rupture

CALCULATIONS:

1. AVERAGE STRENGTH = 1/5 (44.5 + 45.5 + 41.0 + 46.0 + 44.0) = 44.2 lb./in.
2. RATED STRENGTH =
3. MINIMUM ULTIMATE STRENGTH = 41 lb./in.
4. MATERIAL/JOINT/SEAM EFFICIENCY = MIN. ULT. STRENGTH/RATED STRENGTH
   =
   = %

REMARKS/CONCLUSIONS:

RAVEN industries, inc.

RAVEN industries, inc.

DESCRIPTION: CANOPY CLOTH, DACRON

LOCATION REFERENCE: A

LOAD DIRECTION: b-b

TEST / GRAPH NO.: 2/2412.2.b

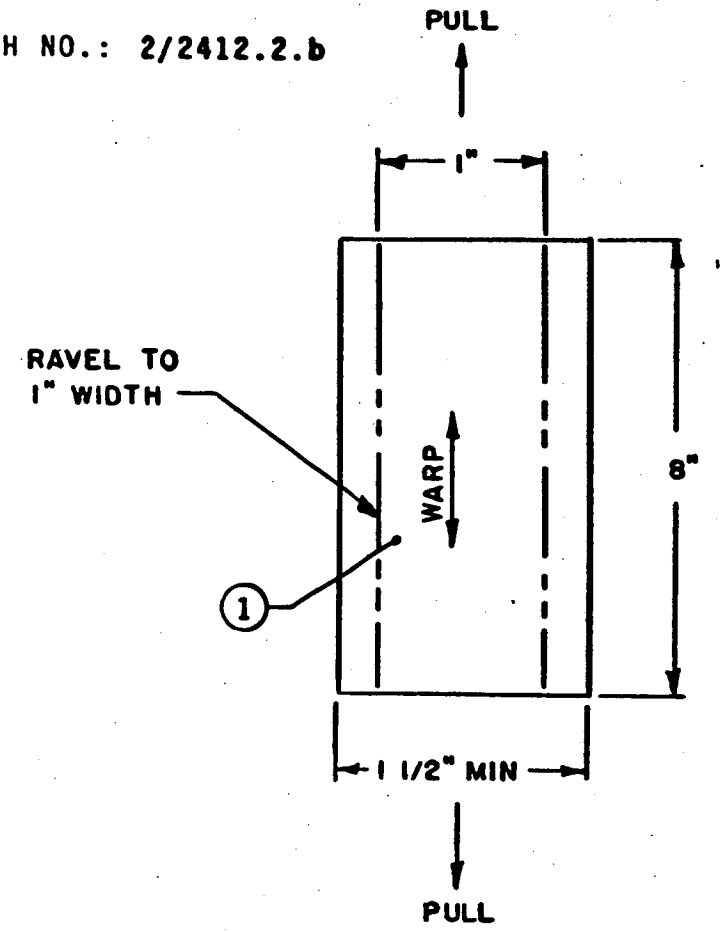

NOTES:

1. MATERIAL (ITEM 1), DACRON, 1.25 OZ/YD.^{2}

LABORATORY MATERIAL TESTS AND TEST DATA

TEST ITEM:	PROJECT NO.: 14175
Canopy Cloth, Dacron	TEST/GRAPH NO.: 2/2412.2.b
	LOCATION REFERENCE: A LOAD DIRECTION: b-b

TEST OBJECTIVE: Determine minimum ultimate strength of canopy cloth test samples (warp direction)

TEST SAMPLE CONFIGURATION:

DIMENSIONS: 1-1/2 inch raveled to 1 inch width x 8 inches

MATERIAL: Canopy cloth, dacron, 1.25 oz./yd.^{2}

STITCH: N/A

THREAD: N/A

TEST PROCEDURE:

METHOD: 5104 per Fed. Spec. CCC-T-191

LOAD RATE: 12 inches/minute

INSTRUMENTATION: Research Inc. Materials Test System, Mod.No. LF 7445-20

TEST DATA:

SAMPLE NO.	ULTIMATE STRENGTH	TEST TERMINATION
1	49.0 lb.	Fabric Rupture
2	48.0 lb.	Fabric Rupture
3	47.5 lb.	Fabric Rupture
4	49.0 lb.	Fabric Rupture
5	45.0 lb.	Fabric Rupture

CALCULATIONS:

1. AVERAGE STRENGTH = 1/5 (49.0 + 48.0 + 47.5 + 49.0 + 45.0) = 47.70 lb./in.
2. RATED STRENGTH =
3. MINIMUM ULTIMATE STRENGTH = 45.0 lb./in.
4. MATERIAL/JOINT/SEAM EFFICIENCY = MIN. ULT. STRENGTH/RATED STRENGTH
   =
   = %

REMARKS/CONCLUSIONS:

RAVEN industries, inc.

LABORATORY MATERIAL TESTS AND TEST DATA

TEST ITEM:	PROJECT NO.: 14175
Suspension Line	TEST/GRAPH NO.: 3/2412.3
	LOCATION REFERENCE: B LOAD DIRECTION: a-a

TEST OBJECTIVE: Determine minimum ultimate strength of suspension line test samples

TEST SAMPLE CONFIGURATION:

DIMENSIONS: N/A

MATERIAL: Suspension line, dacron, 550 lb. tensile strength

STITCH: N/A

THREAD: N/A

TEST PROCEDURE:

METHOD: Tensile per Fed. Spec. CCC-T-191

LOAD RATE: 12 inches/minute

INSTRUMENTATION: Research Inc. Materials Test System, Mod.No. LF 7445-20

TEST DATA:

SAMPLE NO.	ULTIMATE STRENGTH	TEST TERMINATION
1	620 lb.	Sample Failure
2	620 lb.	Sample Failure
3	620 lb.	Sample Failure
4	620 lb.	Sample Failure
5	620 lb.	Sample Failure

CALCULATIONS:

1. AVERAGE STRENGTH = 1/5 (620 + 620 + 620 + 620 + 620) = 620 lb.
2. RATED STRENGTH =
3. MINIMUM ULTIMATE STRENGTH = 620 lb.
4. MATERIAL/JOINT/SEAM EFFICIENCY = MIN. ULT. STRENGTH/RATED STRENGTH
   =
   = %

REMARKS/CONCLUSIONS:

RAVEN industries, inc.

LABORATORY MATERIAL TESTS AND TEST DATA

TEST ITEM:	PROJECT NO.: 14175
Skirt Hem Tape	TEST/GRAPH NO.: 4/2412.4
	LOCATION REFERENCE: C LOAD DIRECTION: a-a

TEST OBJECTIVE: Determine minimum ultimate strength of skirt hem tape test samples

TEST SAMPLE CONFIGURATION:

DIMENSIONS: N/A

MATERIAL: Tape, Dacron, 1 inch wide x 1000 lb tensile strength

STITCH: N/A

THREAD: N/A

TEST PROCEDURE:

METHOD: Tensile per Fed. Spec CCC-T-191

LOAD RATE: 12 inches/minute

INSTRUMENTATION: Research Inc. Materials Test System, Mod.No. LF 7445-20

TEST DATA:

SAMPLE NO.	ULTIMATE STRENGTH	TEST TERMINATION
1	1280 lb	Sample Failure
2	1210 lb	Sample Failure
3	1300 lb	Sample Failure
4	1300 lb	Sample Failure
5	1250 lb	Sample Failure

CALCULATIONS:

1. AVERAGE STRENGTH = 1/5(1280 + 1210 + 1300 + 1300 + 1250) = 1268 lb
2. RATED STRENGTH =
3. MINIMUM ULTIMATE STRENGTH = 1210 lb
4. MATERIAL/JOINT/SEAM EFFICIENCY = MIN. ULT. STRENGTH/RATED STRENGTH
   =
   = %

REMARKS/CONCLUSIONS:

RAVEN industries, inc.

LABORATORY MATERIAL TESTS AND TEST DATA

TEST ITEM:	PROJECT NO.: 14175
Radial Tape	TEST/GRAPH NO.: 5/2412.5
	LOCATION REFERENCE: D LOAD DIRECTION: a-a

TEST OBJECTIVE: Determine minimum ultimate strength of radial tape test samples

TEST SAMPLE CONFIGURATION:

DIMENSIONS: N/A

MATERIAL: Radial tape, Dacron, 3/4 inch wide x 750 lb tensile strength

STITCH: N/A

THREAD: N/A

TEST PROCEDURE:

METHOD: Tensile per Fed. Spec. CCC-T-191

LOAD RATE: 12 inches/minute

INSTRUMENTATION: Research Inc. Materials Test System, Mod.No. LF 7445-20

TEST DATA:

SAMPLE NO.	ULTIMATE STRENGTH	TEST TERMINATION
1	1200 lb	Sample Failure
2	1200 lb	Sample Failure
3	1000 lb	Sample Failure
4	990 lb	Sample Failure
5	990 lb	Sample Failure

CALCULATIONS:

1. AVERAGE STRENGTH = 1/5(1200 + 1200 + 1000 + 990 + 990) = 1076 lb
2. RATED STRENGTH =
3. MINIMUM ULTIMATE STRENGTH = 990 lb
4. MATERIAL/JOINT/SEAM EFFICIENCY = MIN. ULT. STRENGTH/RATED STRENGTH
   = N/A = %

REMARKS/CONCLUSIONS:

RAVEN industries, inc.

LABORATORY MATERIAL TESTS AND TEST DATA

TEST ITEM:	PROJECT NO.: 14175
Canopy Riser Webbing	TEST/GRAPH NO.: 6/2412.6
	LOCATION REFERENCE: LOAD DIRECTION:

TEST OBJECTIVE: Determine minimum ultimate strength of canopy bridle webbing test samples

TEST SAMPLE CONFIGURATION:

DIMENSIONS: N/A

MATERIAL: Canopy bridle webbing, Dacron, MIL-W-25361, Type III, 1 25/32" wide x 7000 lb. tensile strength

STITCH: N/A

THREAD: N/A

TEST PROCEDURE:

METHOD: Tensile per Fed. Spec CCC-T-191

LOAD RATE: 12 inches/minute

INSTRUMENTATION: Research Inc. Materials Test System, Mod.No. LF 7445-20

TEST DATA:

SAMPLE NO.	ULTIMATE STRENGTH	TEST TERMINATION
1	8200 lb.	Sample Failure
2	7300 lb.	Sample Failure
3	7800 lb.	Sample Failure
4	No Test	Jaw Slippage
5	No Test	Jaw Slippage
6	8000 lb.	Sample Failure
7	8000 lb.	Sample Failure

CALCULATIONS:

1. AVERAGE STRENGTH = 1/5(8200 + 7300 + 7800 + 8000 + 8000) = 7860 lb.
2. RATED STRENGTH =
3. MINIMUM ULTIMATE STRENGTH = 7300 lb.
4. MATERIAL/JOINT/SEAM EFFICIENCY = MIN. ULT. STRENGTH/RATED STRENGTH
   =
   = %

REMARKS/CONCLUSIONS:

RAVEN industries, inc.

LABORATORY MATERIAL TESTS AND TEST DATA

TEST ITEM:	PROJECT NO.: 14175
Load Bridle Webbing	TEST/GRAPH NO.: 7/2412.7a
	LOCATION REFERENCE: LOAD DIRECTION:

TEST OBJECTIVE: Determine minimum ultimate strength of load bridle webbing test samples

TEST SAMPLE CONFIGURATION:

DIMENSIONS: N/A

MATERIAL: Load bridle, webbing, Nylon, MIL-W-4088, Type XIX, 1 3/4" wide x 10,000 lb. tensile strength

STITCH: N/A

THREAD: N/A

TEST PROCEDURE:

METHOD: Tensile per Fed. Spec CCC-T-191

LOAD RATE: 12 inches/minute

INSTRUMENTATION: Research Inc. Materials Test System, Mod.No. LF 7445-20

TEST DATA:

SAMPLE NO.	ULTIMATE STRENGTH	TEST TERMINATION
1	10,250 lb.	Sample Failure
2	10,300 lb.	Operator Stopped Test(1)
3	10,400 lb.	Operator Stopped Test(1)

CALCULATIONS:

1. AVERAGE STRENGTH = 1/3 (10,250 + 10,300 + 10,400) = 10,317 lb.
2. RATED STRENGTH =
3. MINIMUM ULTIMATE STRENGTH = 10,250 lb.
4. MATERIAL/JOINT/SEAM EFFICIENCY = MIN. ULT. STRENGTH/RATED STRENGTH

N/A = = %

REMARKS/CONCLUSIONS:

(1) Test was terminated due to structural limitations of test equipment

RAVEN industries, inc.

RAVEN industries, inc.

DESCRIPTION: SKIRT HEM

LOCATION REFERENCE: E

LOAD DIRECTION: b-b

TEST / GRAPH NO.: 8/2412.8

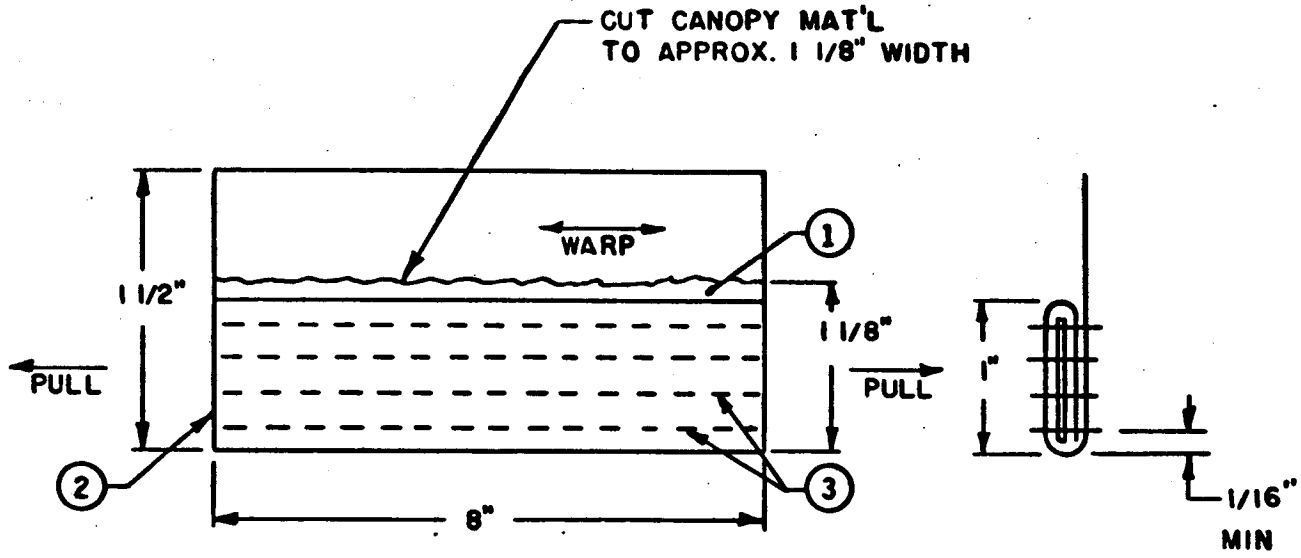

NOTES:

1. MATERIAL (ITEM 1), DACRON, 1.25 OZ/YD.^{2}
2. TAPE (ITEM 2), DACRON, 1" WIDE X 1000 LB. TENSILE
3. THREAD (ITEM 3), DACRON, V-T-285, SIZE "E", TYPE I, CLASS 3
4. STITCH, TYPE 301, 7-12 STITCHES/INCH

LABORATORY MATERIAL TESTS AND TEST DATA

TEST ITEM:	PROJECT NO.: 14175
	TEST/GRAPH NO.8/2412.8
Skirt Hem	LOCATION REFERENCE: E LOAD DIRECTION: b-b

TEST OBJECTIVE:
Determine ultimate strength of skirt hem

TEST SAMPLE CONFIGURATION:
DIMENSIONS:
MATERIAL: Canopy cloth, Dacron, 1.25 oz/yd^2
Tape, Dacron, 1 inch wide x 1000 lb tensile strength

STITCH: Type 301, 7-12 stitches/inch
THREAD: Dacron, V-T-285, Type I, Class 3

TEST PROCEDURE:
METHOD: Tensile per Fed. Spec. CCC-T-191
LOAD RATE: 12 inches/minute
INSTRUMENTATION: Research Inc. Materials Test System, Mod.No. LF 7445-20

TEST DATA:

SAMPLE NO.	ULTIMATE STRENGTH	TEST TERMINATION
1	1005 lb.	Sample Failure
2	1075 lb.	Sample Failure
3	No Test	Jaw Slippage
4	No Test	Jaw Slippage
5	No Test	Jaw Slippage
6	1255 lb.	Sample Failure
7	1335 lb.	Sample Failure
8	1410 lb.	Sample Failure

CALCULATIONS:
1. AVERAGE STRENGTH = 1/5 (1005 + 1075 + 1255 + 1335 + 1410) = 1216 lb
2. RATED STRENGTH = Min. Ultimate Strength of Tape + 3 x min. ultimate strength of canopy cloth (Ravel strip method, warp direction)
= 1215 + 3(45) = 1350 lb.
3. MINIMUM ULTIMATE STRENGTH = 1005 lb.
4. MATERIAL/JOINT/SEAM EFFICIENCY = MIN. ULT. STRENGTH/RATED STRENGTH
= 1005/1350
= 74.4 %

REMARKS/CONCLUSIONS:

RAVEN industries, inc.

RAVEN industries, inc.

DESCRIPTION: MAIN SEAM

LOCATION REFERENCE: F

LOAD DIRECTION: a-a

TEST / GRAPH NO.: 9/2412.9

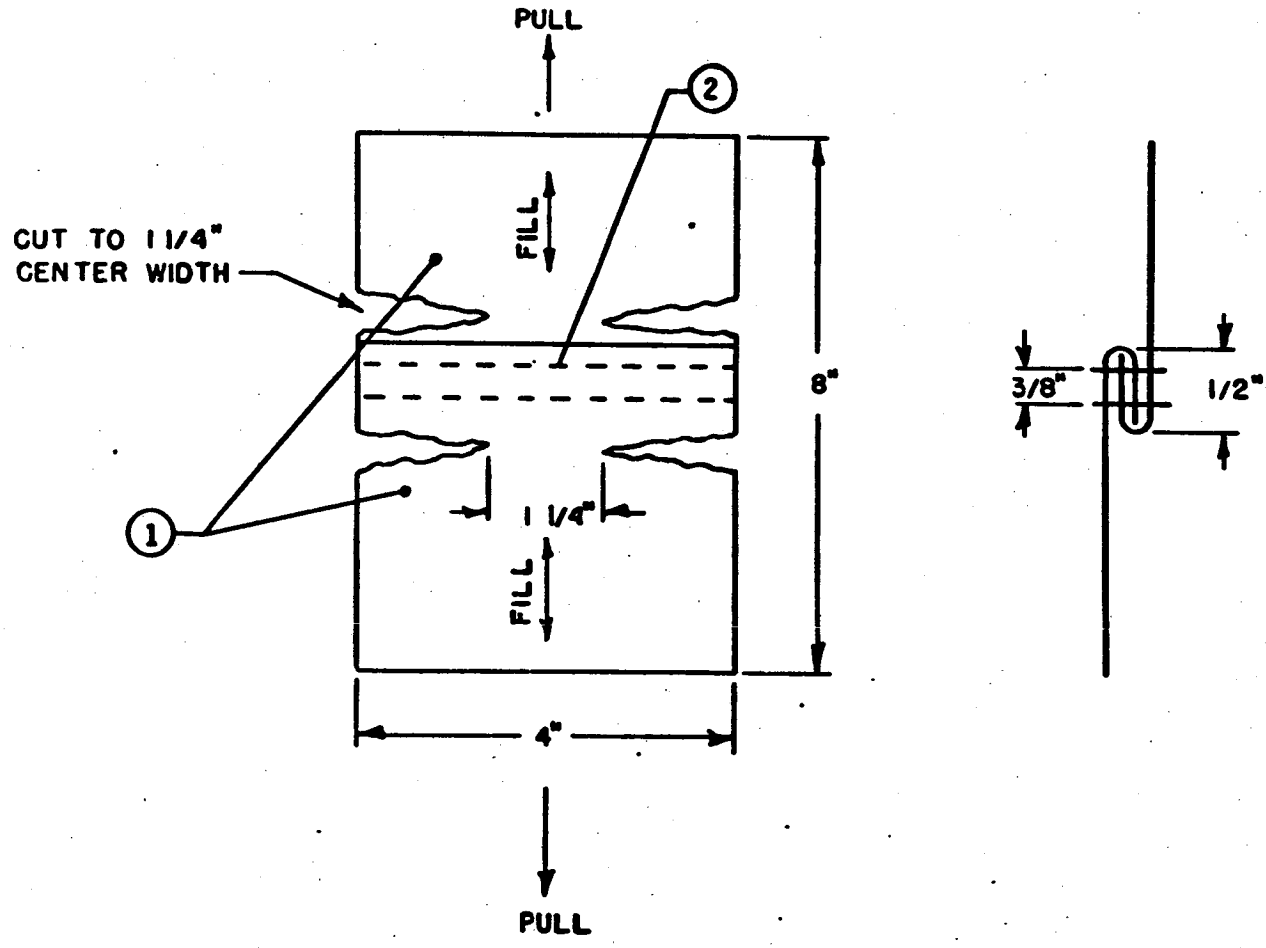

NOTES:

1. MATERIAL (ITEM 1), DACRON, 1.25 OZ/YD.^{2}
2. THREAD (ITEM 2), DACRON, V-T-285, SIZE "E", TYPE I, CLASS 3
3. SEAM, FRENCH FELL, FED. STD. 751, TYPE Lc-2
4. STITCH, TYPE 301, 7-12 STITCHES / INCH, DOUBLE NEEDLE, 3/8" GAUGE

LABORATORY MATERIAL TESTS AND TEST DATA

TEST ITEM:	PROJECT NO.: 14175
Main Seam	TEST/GRAPH NO.: 9/2412.9
	LOCATION REFERENCE: F LOAD DIRECTION: a-a

TEST OBJECTIVE: Determine ultimate strength of main seam in canopy cloth

TEST SAMPLE CONFIGURATION:

DIMENSIONS: 4 inches x 8 inches

MATERIAL: Canopy cloth, Dacron, 1.25 oz/yd^2

STITCH: Type 301, 7 -12 stitches/inch

THREAD: Dacron, V-T-285, size "E", Type I, Class 3

TEST PROCEDURE:

METHOD: 5100 per Fed. Spec. CCC-T-191

LOAD RATE: 12 inches/minute

INSTRUMENTATION: Research Inc. Materials Test System, Mod.No. LF 7445-20

TEST DATA:

SAMPLE NO.	ULTIMATE STRENGTH	TEST TERMINATION
1	51 lb.	Fabric Rupture
2	50 lb.	Fabric Rupture
3	47 lb.	Fabric Rupture
4	51 lb.	Fabric Rupture
5	51 lb.	Fabric Rupture

CALCULATIONS:

1. AVERAGE STRENGTH = 1/5 (51 + 50 + 47 + 51 + 51) = 50 lb.
2. RATED STRENGTH = Min. ultimate strength of canopy cloth (Ravel strip test results, fill direction)

   = 41 lb/in
3. MINIMUM ULTIMATE STRENGTH = $\frac{47 \text{ lb}}{1.25 \text{ in.}}$ = 37.6 lb/in
4. MATERIAL/JOINT/SEAM EFFICIENCY = MIN. ULT. STRENGTH/RATED STRENGTH

   = 37.6/41

   = 91.7 %

REMARKS/CONCLUSIONS:

RAVEN industries, inc.

RAVEN industries, inc.

DESCRIPTION: **MAIN SEAM**

LOCATION REFERENCE: **F**

LOAD DIRECTION: **b-b**

TEST / GRAPH NO.: **10/2412.10**

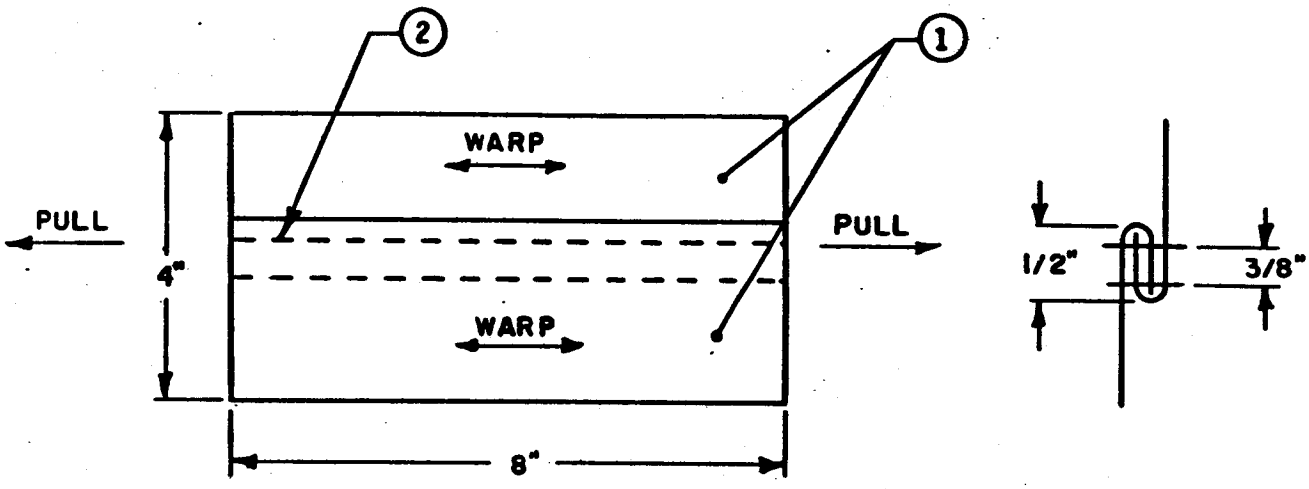

NOTES:

1. MATERIAL (ITEM 1), DACRON, 1.25 OZ/YD.^{2}
2. THREAD (ITEM 2), DACRON, V-T-285, SIZE "E", TYPE I, CLASS 3
3. SEAM, FRENCH FELL, FED. STD. 751, TYPE Lc-2
4. STITCH, TYPE 301, 7-12 STITCHES / INCH, DOUBLE NEEDLE, 3/8" GAUGE

LABORATORY MATERIAL TESTS AND TEST DATA

TEST ITEM:	PROJECT NO.: 14175
Main Seam	TEST/GRAPH NO.: 10/2412.10
	LOCATION REFERENCE: F LOAD DIRECTION: b-b

TEST OBJECTIVE: Determine ultimate strength of main seam in canopy cloth

TEST SAMPLE CONFIGURATION:

DIMENSIONS: 4 inches x 8 inches

MATERIAL: Canopy cloth, Dacron, 1.25 oz/yd^2

STITCH: Type 301, 7-12 stitches/inch

THREAD: Dacron, V-T-285, Size "E", Type I, Class 3

TEST PROCEDURE:

METHOD: 5100 per Fed. Spec CCC-T-191

LOAD RATE: 12 inches/minute

INSTRUMENTATION: Research Inc. Materials Test System, Mod.No. LF 7445-20

TEST DATA:

SAMPLE NO.	ULTIMATE STRENGTH	TEST TERMINATION
1	150 lb.	Fabric Rupture
2	146 lb.	Fabric Rupture
3	153 lb.	Fabric Rupture
4	160 lb.	Fabric Rupture
5	146 lb.	Fabric Rupture

CALCULATIONS:

1. AVERAGE STRENGTH = 1/5(150 + 146 + 153 + 160 + 146) = 151 lb.
2. RATED STRENGTH = 4 x min. ultimate strength of canopy cloth (Ravel strip test results, warp direction)
   = 4 x 45 lb.
   = 180 lb.
3. MINIMUM ULTIMATE STRENGTH = 146 lb.
4. MATERIAL/JOINT/SEAM EFFICIENCY = MIN. ULT. STRENGTH/RATED STRENGTH
   = 146/180
   = 81.1 %

REMARKS/CONCLUSIONS:

RAVEN industries, inc.

RAVEN industries, inc.

DESCRIPTION: RADIAL TAPE ON CANOPY CLOTH

LOCATION REFERENCE: G

LOAD DIRECTION: a-a

TEST / GRAPH NO.: 11/2412.11

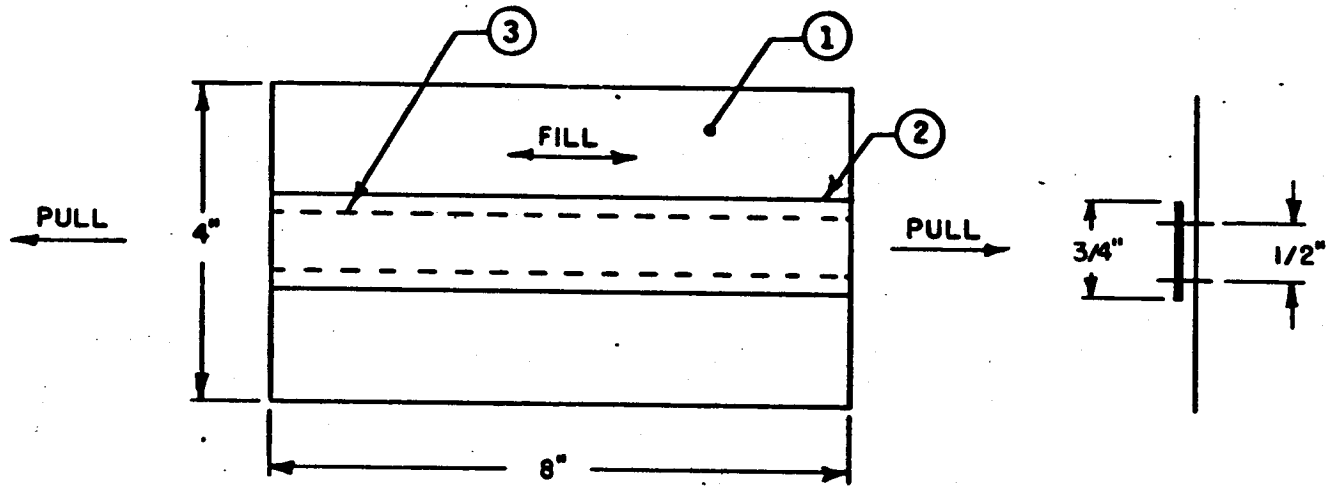

NOTES:

1. MATERIAL (ITEM 1), DACRON, 1.25 OZ/YD.^{2}
2. TAPE (ITEM 2), DACRON, 3/4" WIDE X 750 LB. TENSILE
3. THREAD (ITEM 3), DACRON, V-T-285, SIZE "E", TYPE I, CLASS 3
4. STITCH, TYPE 301, 7-12 STITCHES/INCH

LABORATORY MATERIAL TESTS AND TEST DATA

TEST ITEM:	PROJECT NO.: 14175
	TEST/GRAPH NO.: 11/2412.11
Radial Tape on Canopy Cloth	LOCATION REFERENCE: G LOAD DIRECTION: a-a

TEST OBJECTIVE: Determine ultimate strength of radial tape on canopy cloth test sample

TEST SAMPLE CONFIGURATION:

DIMENSIONS: 4 inches x 8 inches

MATERIAL: Canopy cloth, Dacron, 1.25 oz/yd^2
Radial tape, Dacron, 3/4 inch wide x 750 lb. tensile strength

STITCH: Type 301, 7-12 stitches/inch

THREAD: Dacron, V-T-285, Size "E", Type I, Class 3

TEST PROCEDURE:

METHOD: 5100 per Fed. Spec. CCC-T-191

LOAD RATE: 12 inches/minute

INSTRUMENTATION: Research Inc. Materials Test System, Mod.No. LF 7445-20

TEST DATA:

SAMPLE NO.	ULTIMATE STRENGTH	TEST TERMINATION
1	960 lb.	Sample Failure
2	950 lb.	Sample Failure
3	980 lb.	Sample Failure
4	1020 lb.	Sample Failure
5	920 lb.	Sample Failure

CALCULATIONS:

1. AVERAGE STRENGTH = 1/5 (960 + 950 + 980 + 1020 + 920) = 966 lb.
2. RATED STRENGTH = Min. ultimate strength of tape + min. ultimate strength of canopy cloth (ravel strip test results, fill direction)
   = 990 + 41 = 1031 lb.
3. MINIMUM ULTIMATE STRENGTH = 920 lb.
4. MATERIAL/JOINT/SEAM EFFICIENCY = MIN. ULT. STRENGTH/RATED STRENGTH
   = 920/1031
   = 89.2 %

REMARKS/CONCLUSIONS:

RAVEN industries, inc.

RAVEN industries, inc.

DESCRIPTION: RADIAL TAPE ON CANOPY CLOTH

LOCATION REFERENCE: G

LOAD DIRECTION: b-b

TEST / GRAPH NO.: 12/2412.12

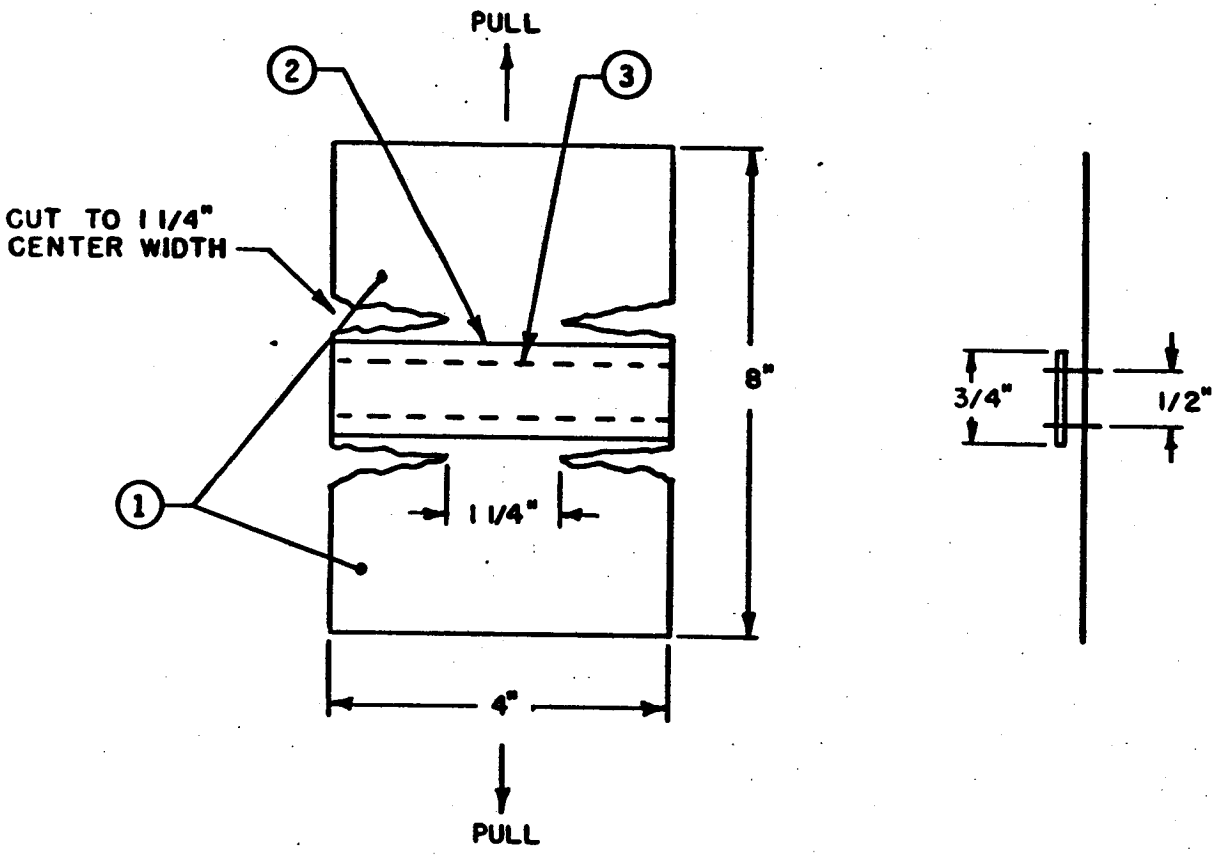

NOTES:

1. MATERIAL (ITEM 1), DACRON, 1.25 OZ/YD.^{2}
2. TAPE (ITEM 2), DACRON, 3/4" WIDE X 750 LB. TENSILE
3. THREAD (ITEM 3), DACRON, V-T-285, SIZE "E", TYPE I, CLASS 3
4. STITCH, TYPE 301, 7-12 STITCHES/INCH

LABORATORY MATERIAL TESTS AND TEST DATA

TEST ITEM:	PROJECT NO.: 14175
Radial Tape on Canopy Cloth	TEST/GRAPH NO.: 12/2412.12
	LOCATION REFERENCE: G LOAD DIRECTION: b-b

TEST OBJECTIVE: Determine ultimate strength of radial tape on canopy cloth test samples

TEST SAMPLE CONFIGURATION:

DIMENSIONS: 4 inches x 8 inches

MATERIAL: Canopy cloth, dacron, 1.25 oz./yd.^{2}
Radial tape, dacron, 3/4 in. wide x 750 lb. tensile strength

STITCH: Type 301, 7-12 stitches/inch

THREAD: Dacron, V-T-285, size "E", Type I, Class 3

TEST PROCEDURE:

METHOD: 5100 per Fed. Spec. CCC-T-191

LOAD RATE: 12 inches/minute

INSTRUMENTATION: Research Inc. Materials Test System, Mod.No. LF 7445-20

TEST DATA:

SAMPLE NO.	ULTIMATE STRENGTH	TEST TERMINATION
1	54 lb.	Sample Failure
2	47 lb.	Sample Failure
3	51 lb.	Sample Failure
4	48 lb.	Sample Failure
5	48 lb.	Sample Failure

CALCULATIONS:

1. AVERAGE STRENGTH = 1/5 (54 + 47 + 51 + 48 + 48) = 49.6 lb.
2. RATED STRENGTH =
   Min. ultimate strength of canopy cloth (ravel strip test results, warp direction) = 45 lb./in.
3. MINIMUM ULTIMATE STRENGTH = 48/1.25 = 38.4 lb./in.
4. MATERIAL/JOINT/SEAM EFFICIENCY = MIN. ULT. STRENGTH/RATED STRENGTH
   = 38.4/45
   = 85.3 %

REMARKS/CONCLUSIONS:

RAVEN industries, inc.

RAVEN industries, inc.

DESCRIPTION: RADIAL TAPE ACROSS MAIN SEAM

LOCATION REFERENCE: H

LOAD DIRECTION: a-a

TEST / GRAPH NO.: 13/2412.13

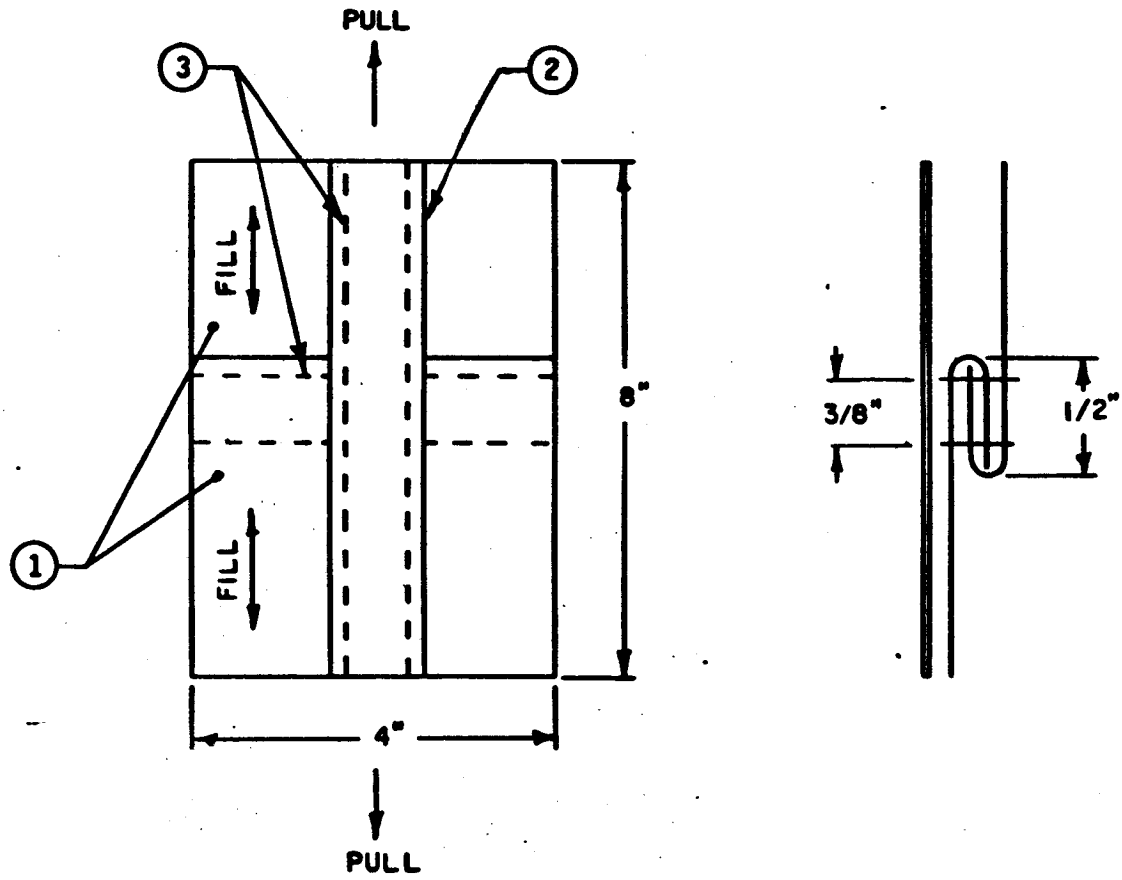

NOTES:

1. MATERIAL (ITEM 1), DACRON, 1.25 OZ/YD.^{2}
2. TAPE (ITEM 2), DACRON, 3/4" WIDE X 750 LB. TENSILE
3. THREAD (ITEM 3), DACRON, V-T-285, SIZE "E", TYPE I, CLASS 3
4. STITCH, TYPE 301, 7-12 STITCHES/INCH

LABORATORY MATERIAL TESTS AND TEST DATA

TEST ITEM:	PROJECT NO.: 14175
Radial Tape Across Main Seam	TEST/GRAPH NO.: 13/2412.13
	LOCATION REFERENCE: H LOAD DIRECTION: a-a

TEST OBJECTIVE: Determine ultimate strength of radial tape across main seam test samples.

TEST SAMPLE CONFIGURATION:

DIMENSIONS: 4 inches x 8 inches

MATERIAL: Canopy cloth, dacron, 1.25 oz./yd.^{2}
Radial tape, dacron, 3/4 inch wide x 750 lb. tensile strength

STITCH: Type 301, 7 -12 stitches/ inch

THREAD: Dacron, V-T-285, Size "E", Type I, Class 3

TEST PROCEDURE:

METHOD: 5100 per Fed. Spec. CCC-T-191

LOAD RATE: 12 inches/minute

INSTRUMENTATION: Research Inc. Materials Test System, Mod.No. LF 7445-20

TEST DATA:

SAMPLE NO.	ULTIMATE STRENGTH	TEST TERMINATION
1	970 lb.	Sample Failure
2	945 lb.	Sample Failure
3	930 lb.	Sample Failure
4	1000 lb.	Sample Failure
5	985 lb.	Sample Failure

CALCULATIONS:

1. AVERAGE STRENGTH = 1/5 (970 + 945 + 930 + 1000 + 985) = 966 lb.
2. RATED STRENGTH = Min. ultimate strength of tape + Min. ultimate strength of canopy cloth (ravel strip method, fill direction)
   = 990 + 41 = 1031 lb.
3. MINIMUM ULTIMATE STRENGTH = 930 lb.
4. MATERIAL/JOINT/SEAM EFFICIENCY = MIN. ULT. STRENGTH/RATED STRENGTH
   = 930/1031
   = 90.2 %

REMARKS/CONCLUSIONS:

RAVEN industries, inc.

RAVEN industries, inc.

DESCRIPTION: RADIAL TAPE ACROSS MAIN SEAM

LOCATION REFERENCE: H

LOAD DIRECTION: b-b

TEST / GRAPH NO.: 14/2412.14

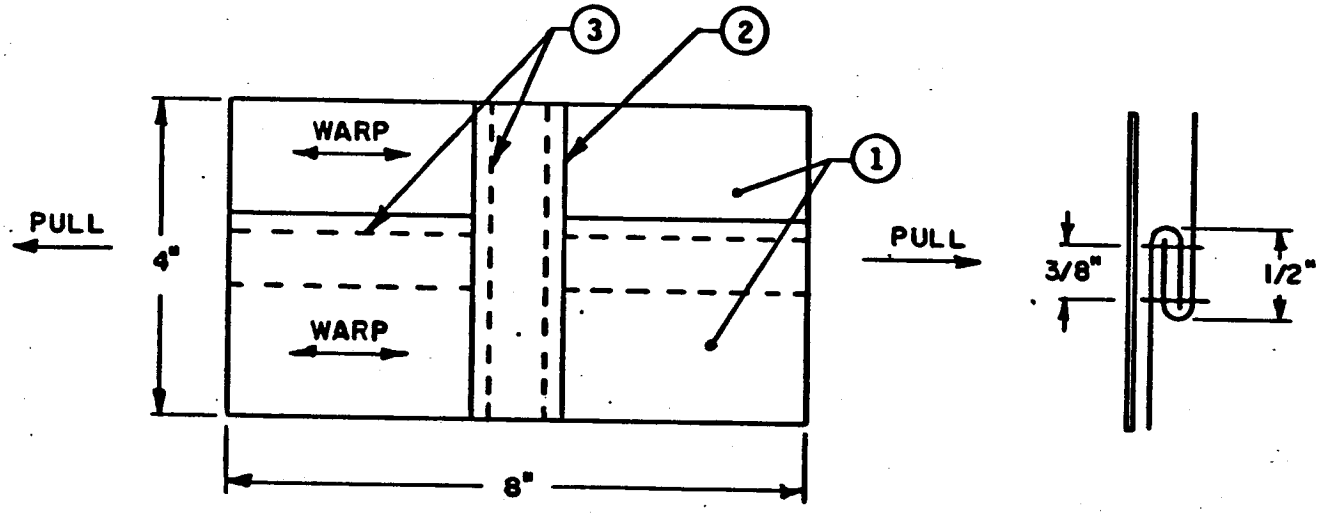

NOTES:

1. MATERIAL (ITEM 1), DACRON , 1.25 OZ/YD.^{2}
2. TAPE (ITEM 2), DACRON, 3/4" WIDE X 750 LB. TENSILE
3. THREAD (ITEM 3), DACRON, V-T-285, SIZE "E", TYPE I, CLASS 3
4. STITCH, TYPE 301, 7-12 STITCHES/INCH

LABORATORY MATERIAL TESTS AND TEST DATA

TEST ITEM:	PROJECT NO.: 14175
Radial Tape Across Main Seam	TEST/GRAPH NO.: 14/2412.14
	LOCATION REFERENCE: H LOAD DIRECTION: b-b

TEST OBJECTIVE: Determine ultimate strength of radial tape across main seam test samples

TEST SAMPLE CONFIGURATION:

DIMENSIONS: 4 inches x 8 inches

MATERIAL: Canopy cloth, dacron, 1.25 oz./yd.^{2}
Radial tape, dacron, 3/4 inch wide x 750 lb. tensile strength

STITCH: Type 301, 7-12 stitches/inch

THREAD: Dacron, V-T-285, Size "E", Type I, Class 3

TEST PROCEDURE:

METHOD: 5100 per Fed. Spec. CCC-T-191

LOAD RATE: 12 inches/minute

INSTRUMENTATION: Research Inc. Materials Test System, Mod.No. LF 7445-20

TEST DATA:

SAMPLE NO.	ULTIMATE STRENGTH	TEST TERMINATION
1	165 lb.	Sample Failure
2	163 lb.	Sample Failure
3	160 lb.	Sample Failure
4	163 lb.	Sample Failure
5	150 lb.	Sample Failure

CALCULATIONS:

1. AVERAGE STRENGTH = 1/5 (165 + 163 + 160 + 163 + 150) = 160 lb.
2. RATED STRENGTH = 4 x Min. ultimate strength of canopy cloth (ravel strip test results, warp direction) = 4 x 45 = 180 lb.
3. MINIMUM ULTIMATE STRENGTH = 150 lb.
4. MATERIAL/JOINT/SEAM EFFICIENCY = MIN. ULT. STRENGTH/RATED STRENGTH
   = 150/180
   = 83.3 %

REMARKS/CONCLUSIONS:

RAVEN industries, inc.

RAVEN industries, inc.

DESCRIPTION: RADIAL TAPE ON SKIRT EDGE HEM

LOCATION REFERENCE: I

LOAD DIRECTION: a-a

TEST / GRAPH NO.: 15/2412.15

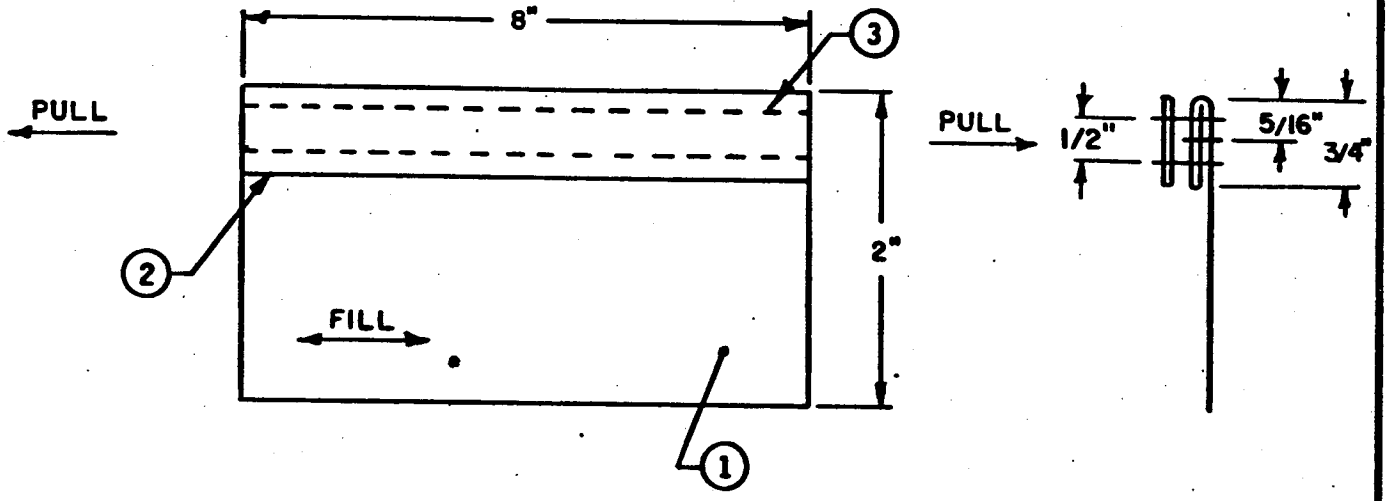

NOTES:

1. MATERIAL (ITEM 1), DACRON, 1.25 OZ/YD.^{2}
2. TAPE (ITEM 2), DACRON, 3/4" WIDE X 750 LB. TENSILE
3. THREAD (ITEM 3), DACRON, V-T-285, SIZE "E", TYPE I, CLASS 3
4. STITCH, TYPE 301, 7-12 STITCHES/INCH

LABORATORY MATERIAL TESTS AND TEST DATA

TEST ITEM:	PROJECT NO.: 14175
Radial Tape on Skirt Edge Hem	TEST/GRAPH NO.: 15/2412.15
	LOCATION REFERENCE: I LOAD DIRECTION: a-a

TEST OBJECTIVE: Determine ultimate strength of radial tape on skirt edge hem test samples

TEST SAMPLE CONFIGURATION:

DIMENSIONS: 2 inches x 8 inches

MATERIAL: Canopy cloth, Dacron, 1.25 oz/yd^2
Radial tape, Dacron, 3/4 inch wide x 750 lb tensile strength

STITCH: Type 301, 7-12 stitches/inch

THREAD: Dacron, V-T-285, Size "E", Type I, Class 3

TEST PROCEDURE:

METHOD: 5100 per Fed. Spec. CCC-T-191

LOAD RATE: 12 inches/minute

INSTRUMENTATION: Research Inc. Materials Test System, Mod.No. LF 7445-20

TEST DATA:

SAMPLE NO.	ULTIMATE STRENGTH	TEST TERMINATION
1	No Test	Jaw Slippage
2	No Test	Jaw Slippage
3	860 lb	Sample Failure
4	930 lb	Sample Failure
5	1020 lb	Sample Failure
6	1030 lb	Sample Failure
7	1020 lb	Sample Failure

CALCULATIONS:

1. AVERAGE STRENGTH = 1/5(860 + 930 + 1020 + 1020 + 1020) = 972 lb
2. RATED STRENGTH = Min. ultimate strength of tape + min. ultimate strength of canopy cloth (ravel strip test results, warp direction)

   = 990 + (45 x 3) = 1125 lb
3. MINIMUM ULTIMATE STRENGTH = 860 lb
4. MATERIAL/JOINT/SEAM EFFICIENCY = MIN. ULT. STRENGTH/RATED STRENGTH

   = 860/1125

   = 76.4 %

REMARKS/CONCLUSIONS:

RAVEN industries, inc.

RAVEN industries, inc.

DESCRIPTION: RADIAL TAPE ON RADIAL TAPE ON CANOPY CLOTH

LOCATION REFERENCE: J

LOAD DIRECTION: a-a

TEST / GRAPH NO.: 16/2412.16

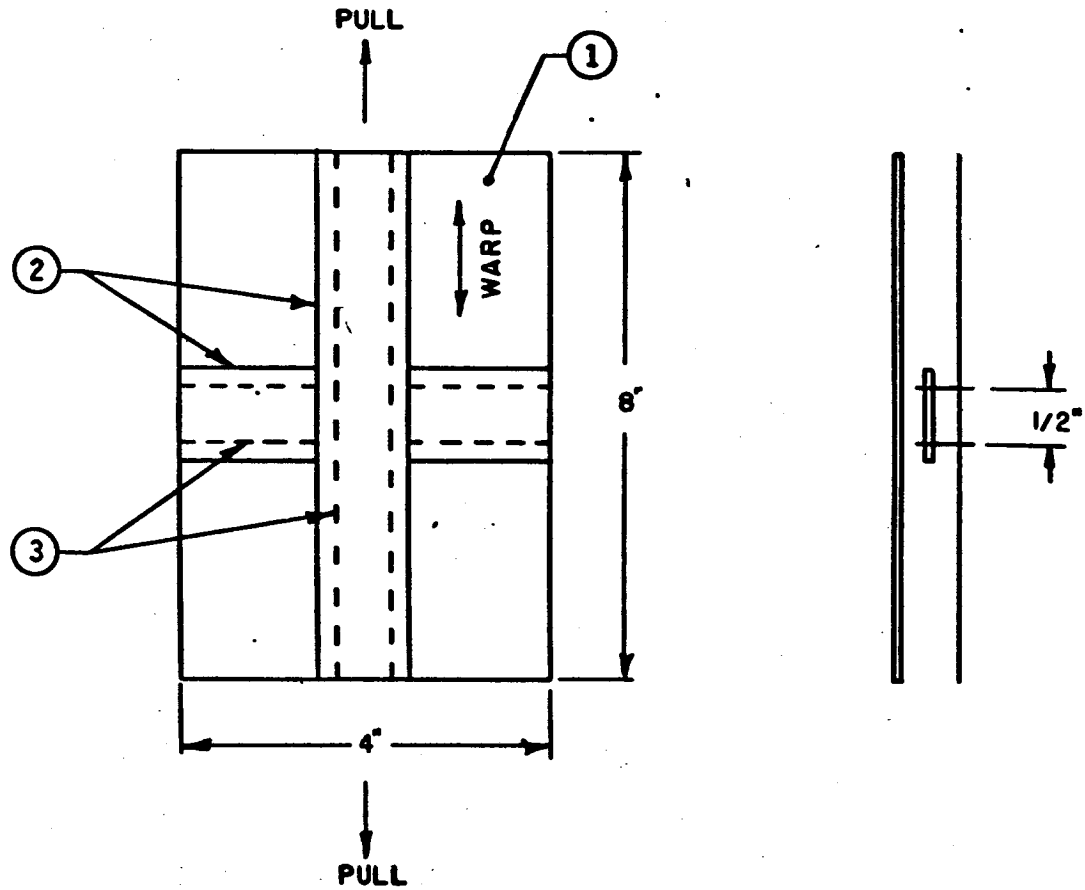

NOTES:

1. MATERIAL (ITEM 1), DACRON , 1.25 OZ/YD.^{2}
2. TAPE (ITEM 2), DACRON, 3/4" WIDE X 750 LB. TENSILE
3. THREAD (ITEM 3), DACRON, V-T-285, SIZE "E", TYPE I, CLASS 3
4. STITCH, TYPE 301, 7-12 STITCHES/INCH

LABORATORY MATERIAL TESTS AND TEST DATA

TEST ITEM:	PROJECT NO.: 14175
Radial Tape on Radial Tape on Canopy Cloth	TEST/GRAPH NO.: 16/2412.16
	LOCATION REFERENCE: J LOAD DIRECTION: a-a

TEST OBJECTIVE: Determine ultimate strength of radial tape on radial tape on canopy cloth test samples

TEST SAMPLE CONFIGURATION:

DIMENSIONS: 4 inches x 8 inches

MATERIAL: Canopy cloth, Dacron, 1.25 oz/yd^2
Radial tape, Dacron, 3/4 inch wide x 750 lb. tensile strength

STITCH: Type 301, 7-12 stitches/inch

THREAD: Dacron, V-T-285, size "E", Type I, Class 3

TEST PROCEDURE:

METHOD: 5100 per Fed. Spec. CCC-T-191

LOAD RATE: 12 inches/minute

INSTRUMENTATION: Research Inc. Materials Test System, Mod.No. LF 7445-20

TEST DATA:

SAMPLE NO.	ULTIMATE STRENGTH	TEST TERMINATION
1	875 lb.	Sample Failure
2	1000 lb.	Sample Failure
3	970 lb.	Sample Failure
4	950 lb.	Sample Failure
5	835 lb.	Sample Failure

CALCULATIONS:

1. AVERAGE STRENGTH = 1/5(875 + 1000 + 970 + 950 + 835) = 926 lb.
2. RATED STRENGTH = Min. ultimate strength of tape & min. ultimate strength of canopy cloth (ravel strip test results, warp direction)
   = 990 + 45 = 1035 lb.
3. MINIMUM ULTIMATE STRENGTH = 835 lb.
4. MATERIAL/JOINT/SEAM EFFICIENCY = MIN. ULT. STRENGTH/RATED STRENGTH
   = 835/1035
   = 80.7 %

REMARKS/CONCLUSIONS:

RAVEN industries, inc.

RAVEN industries, inc.

DESCRIPTION: RADIAL TAPE ON RADIAL TAPE ON CANOPY CLOTH

LOCATION REFERENCE: J

LOAD DIRECTION: b-b

TEST / GRAPH NO.: 17/2412.17

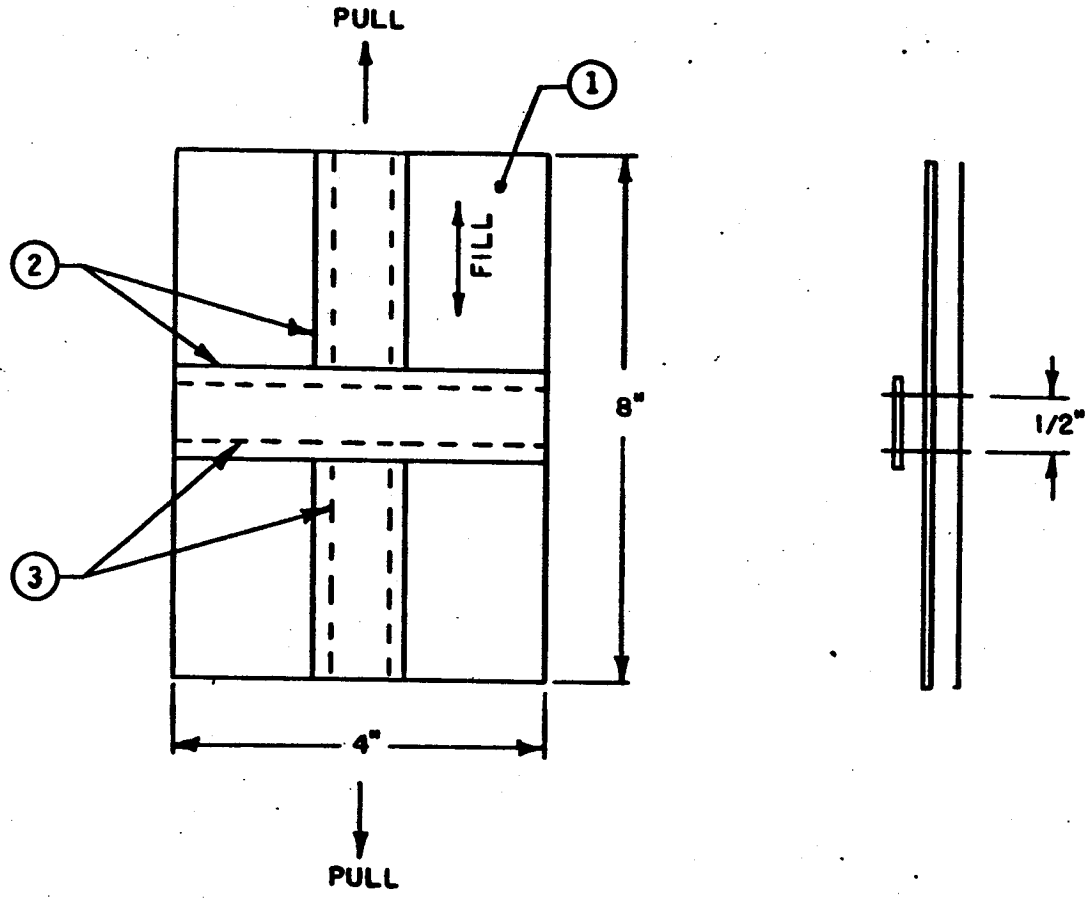

NOTES:

1. MATERIAL (ITEM 1), DACRON, 1.25 OZ/YD.^{2}
2. TAPE (ITEM 2), DACRON, 3/4" WIDE X 750 LB. TENSILE
3. THREAD (ITEM 3), DACRON, V-T-285, SIZE "E", TYPE I, CLASS 3
4. STITCH, TYPE 301, 7-12 STITCHES/INCH

LABORATORY MATERIAL TESTS AND TEST DATA

TEST ITEM:	PROJECT NO.: 14175
Radial Tape on Radial Tape on Canopy Cloth	TEST/GRAPH NO.: 17/2412.17
	LOCATION REFERENCE: J LOAD DIRECTION: b-b

TEST OBJECTIVE: Determine ultimate strength of radial tape on radial tape on canopy cloth test samples

TEST SAMPLE CONFIGURATION:

DIMENSIONS: 4 inches x 8 inches

MATERIAL: Canopy cloth, Dacron, 1.25 oz/yd^2
Radial tape, Dacron, 3/4 inch wide x 750 lb. tensile strength

STITCH: Type 301, 7-12 stitches/inch

THREAD: Dacron, V-T-285, Size "E", Type I, Class 3

TEST PROCEDURE:

METHOD: 5100 per Fed. Spec CCC-T-191

LOAD RATE: 12 inches/minute

INSTRUMENTATION: Research Inc. Materials Test System, Mod.No. LF 7445-20

TEST DATA:

SAMPLE NO.	ULTIMATE STRENGTH	TEST TERMINATION
1	950 lb.	Sample Failure
2	945 lb.	Sample Failure
3	910 lb.	Sample Failure
4	955 lb.	Sample Failure
5	910 lb.	Sample Failure

CALCULATIONS:

1. AVERAGE STRENGTH = 1/5 (950 + 945 + 910 + 955 + 910) = 934 lb.
2. RATED STRENGTH = Min. ultimate strength of tape + min. ultimate strength of canopy cloth (ravel strip test results, fill direction)
   = 990 + 41 = 1031 lb.
3. MINIMUM ULTIMATE STRENGTH = 910 lb.
4. MATERIAL/JOINT/SEAM EFFICIENCY = MIN. ULT. STRENGTH/RATED STRENGTH
   = 910/1031
   = 88.3 %

REMARKS/CONCLUSIONS:

RAVEN industries, inc.

RAVEN industries, inc.

DESCRIPTION: RADIAL TAPE ON RADIAL TAPE ON MAIN SEAM

LOCATION REFERENCE: K

LOAD DIRECTION: a-a

TEST / GRAPH NO.: 18/2412.18

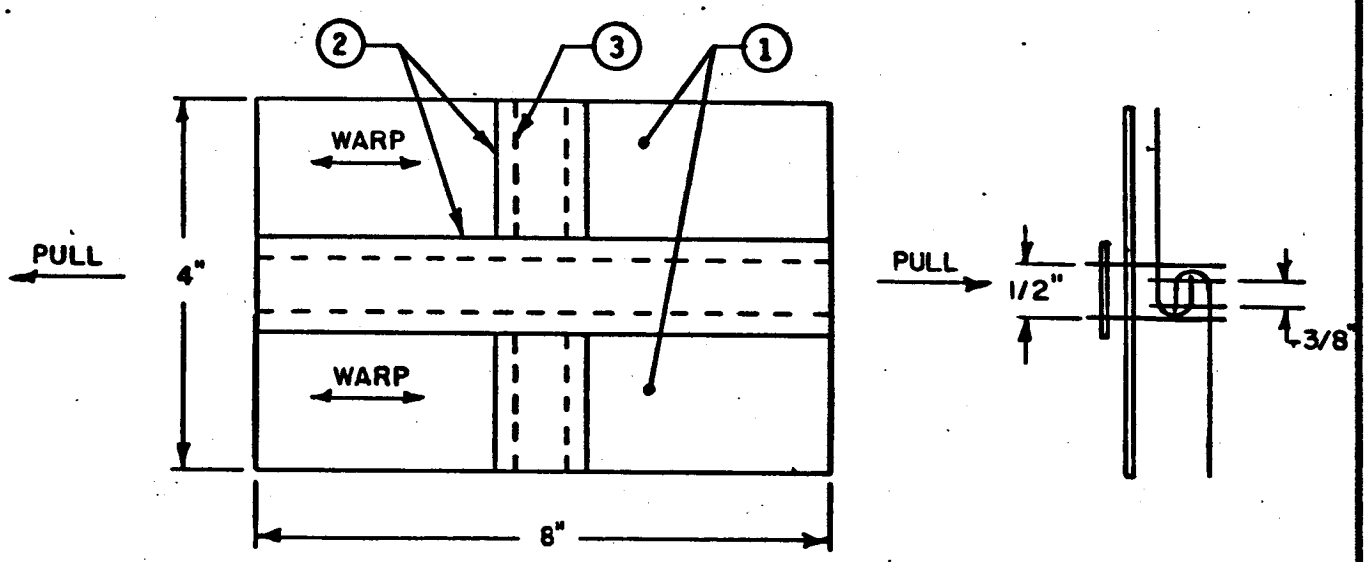

NOTES:

1. MATERIAL (ITEM 1), DACRON, 1.25 OZ/YD.^{2}
2. TAPE (ITEM 2), DACRON, 3/4" WIDE x 750 LB. TENSILE
3. THREAD (ITEM 3), DACRON, V-T-285, SIZE "E", TYPE I, CLASS 3
4. STITCH, TYPE 301, 7-12 STITCHES/INCH

LABORATORY MATERIAL TESTS AND TEST DATA

TEST ITEM:	PROJECT NO.: 14175
Radial Tape on Radial Tape on Main Seam	TEST/GRAPH NO.: 18/2412.18
	LOCATION REFERENCE: K LOAD DIRECTION: a-a

TEST OBJECTIVE: Determine ultimate strength of radial tape on radial tape on main seam test samples.

TEST SAMPLE CONFIGURATION:

DIMENSIONS: 4 inches x 8 inches

MATERIAL: Canopy cloth, Dacron, 1.25 oz/yd^2
Radial tape, Dacron, 3/4 inch wide x 750 lb tensile strength

STITCH: Type 301, 7-12 stitches/inch

THREAD: Dacron, V-T-285, Size "E", Type I, Class 3

TEST PROCEDURE:

METHOD: 5100 per Fed. Spec. CCC-T-191

LOAD RATE: 12 inches/minute

INSTRUMENTATION: Research Inc. Materials Test System, Mod.No. LF 7445-20

TEST DATA:

SAMPLE NO.	ULTIMATE STRENGTH	TEST TERMINATION
1	920 lb	Sample Failure
2	910 lb	Sample Failure
3	830 lb	Sample Failure
4	895 lb	Sample Failure
5	985 lb	Sample Failure

CALCULATIONS:

1. AVERAGE STRENGTH = 1/5(920 + 910 + 830 + 895 + 985) = 908 lb
2. RATED STRENGTH = Min. ultimate strength of tape + 4 x min. ultimate strength of canopy cloth (ravel strip test results, warp direction)
   = 990 + (4)(45) = 1170 lb
3. MINIMUM ULTIMATE STRENGTH = 830 lb
4. MATERIAL/JOINT/SEAM EFFICIENCY = MIN. ULT. STRENGTH/RATED STRENGTH
   = 830/1170
   = 70.9 %

REMARKS/CONCLUSIONS:

RAVEN industries, inc.

RAVEN industries, inc.

DESCRIPTION: RADIAL TAPE ON RADIAL TAPE ON MAIN SEAM

LOCATION REFERENCE: K

LOAD DIRECTION: b-b

TEST / GRAPH NO.: 19/2412.19

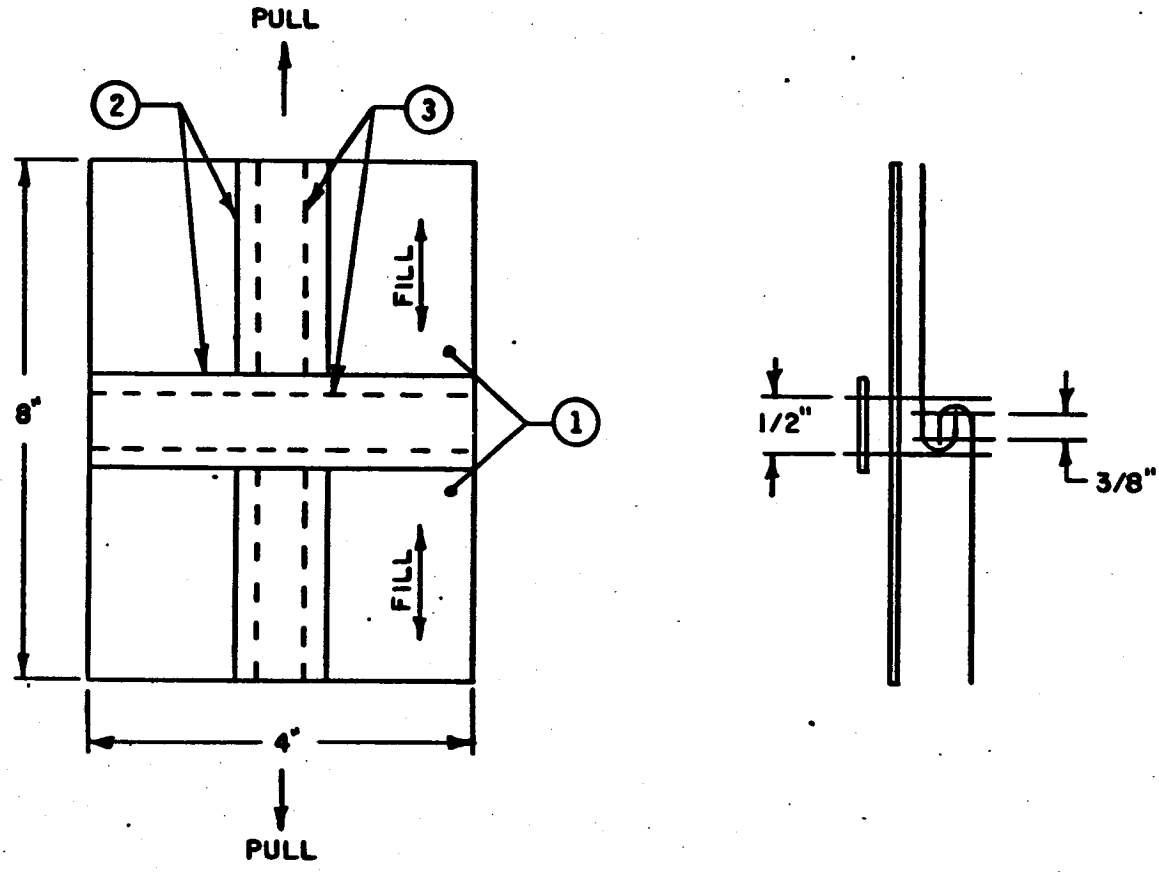

NOTES:

1. MATERIAL (ITEM 1), DACRON, 1.25 OZ/YD.^{2}
2. TAPE (ITEM 2), DACRON, 3/4" WIDE x 750 LB. TENSILE
3. THREAD (ITEM 3), DACRON, V-T-285, SIZE "E", TYPE I, CLASS 3
4. STITCH, TYPE 301, 7-12 STITCHES/INCH

LABORATORY MATERIAL TESTS AND TEST DATA

TEST ITEM:	PROJECT NO.: 14175
Radial Tape on Radial Tape on Main Seam	TEST/GRAPH NO.: 19/2412.19
	LOCATION REFERENCE: K LOAD DIRECTION: b-b

TEST OBJECTIVE: Determine minimum ultimate strength of radial tape on radial tape on main seam test sample

TEST SAMPLE CONFIGURATION:

DIMENSIONS: 4 inches x 8 inches

MATERIAL: Canopy cloth, Dacron, 1.25 oz/yd^2
Radial Tape, Dacron, 3/4 inch wide x 750 lb tensile strength

STITCH: Type 301, 7-12 stitches/inch

THREAD: Dacron, V-T-285, Size "E", Type I, Class 3

TEST PROCEDURE:

METHOD: 5100 per Fed. Spec. CCC-T-191

LOAD RATE: 12 inches/minute

INSTRUMENTATION: Research Inc. Materials Test System, Mod.No. LF 7445-20

TEST DATA:

SAMPLE NO.	ULTIMATE STRENGTH	TEST TERMINATION
1	940 lb	Sample Failure
2	910 lb	Sample Failure
3	1000 lb	Sample Failure
4	970 lb	Sample Failure
5	890 lb	Sample Failure

CALCULATIONS:

1. AVERAGE STRENGTH = 1/5(940 + 910 + 1000 + 970 + 890) =
2. RATED STRENGTH = Min. ultimate strength of radial tape + min. ultimate strength of canopy cloth (ravel strip test results, fill direction)

   = 990 + 41 = 1031 lb
3. MINIMUM ULTIMATE STRENGTH = 890 lb
4. MATERIAL/JOINT/SEAM EFFICIENCY = MIN. ULT. STRENGTH/RATED STRENGTH
   = 890/1031
   = 86.3 %

REMARKS/CONCLUSIONS:

RAVEN industries, inc.

RAVEN industries, inc.

DESCRIPTION: RADIAL TAPE ON MINOR-TO-MAJOR PANEL SEAM

LOCATION REFERENCE: L

LOAD DIRECTION: a-a

TEST / GRAPH NO.: 20/2412.20

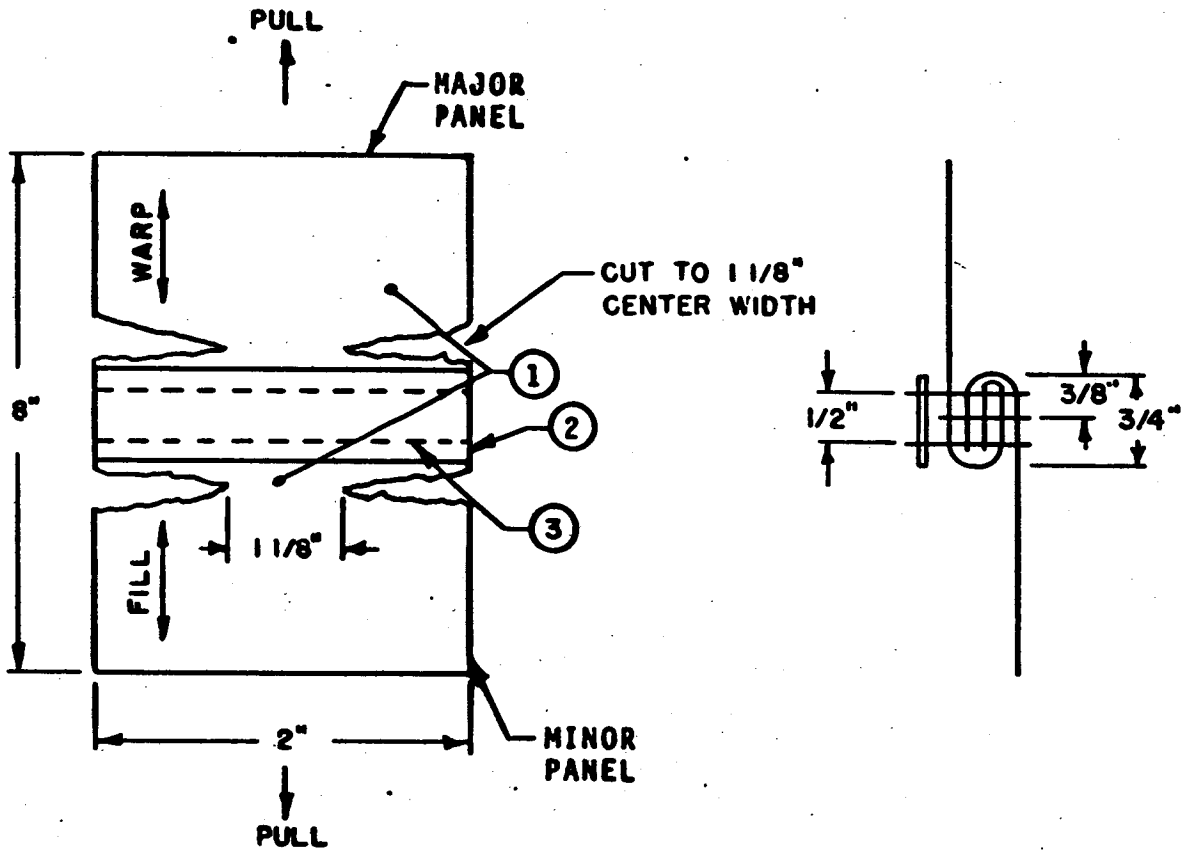

NOTES:

1. MATERIAL (ITEM 1), DACRON, 1.25 OZ/YD.^{2}
2. TAPE (ITEM 2), DACRON, 3/4" WIDE x 750 LB. TENSILE
3. THREAD (ITEM 3), DACRON, V-T-285, SIZE "E", TYPE I, CLASS 3
4. STITCH, TYPE 301, 7-12 STITCHES/INCH

LABORATORY MATERIAL TESTS AND TEST DATA

TEST ITEM:	PROJECT NO.: 14175
Radial Tape on Minor-to-Major Panel Seam	TEST/GRAPH NO.: 20/2412.20
	LOCATION REFERENCE: L LOAD DIRECTION: a-a

TEST OBJECTIVE: Determine ultimate strength of radial tape on minor-to-major panel seam test samples

TEST SAMPLE CONFIGURATION:

DIMENSIONS: 4 inches x 8 inches

MATERIAL: Canopy cloth, Dacron, 1.25 oz/yd^2
Radial tape, Dacron, 3/4 inch wide x 750 lb tensile strength

STITCH: Type 301, 7-12 stitches/inch

THREAD: Dacron, V-T-285, Size "E", Type I, Class 3

TEST PROCEDURE:

METHOD: 5100 per Fed. Spec CCC-T-191

LOAD RATE: 12 inches/minute

INSTRUMENTATION: Research Inc. Materials Test System, Mod.No. LF 7445-20

TEST DATA:

SAMPLE NO.	ULTIMATE STRENGTH	TEST TERMINATION
1	42 lb	Sample Failure
2	45 lb	Sample Failure
3	43 lb	Sample Failure
4	43 lb	Sample Failure
5	45 lb	Sample Failure

CALCULATIONS:

1. AVERAGE STRENGTH = 1/5(42 + 45 + 43 + 43 + 45) = 43.6 lb
2. RATED STRENGTH = Min. ultimate strength of canopy cloth (ravel strip test results, fill direction)
   = 41 lb/inch
3. MINIMUM ULTIMATE STRENGTH = 42/1.125 = 37.33 lb/in
4. MATERIAL/JOINT/SEAM EFFICIENCY = MIN. ULT. STRENGTH/RATED STRENGTH
   = 37.33/41
   = 91.0 %

REMARKS/CONCLUSIONS:

RAVEN industries, inc.

RAVEN industries, inc.

DESCRIPTION: RADIAL TAPE ON MINOR-TO-MAJOR PANEL SEAM

LOCATION REFERENCE: L

LOAD DIRECTION: b-b

TEST / GRAPH NO.: 21/2412.21

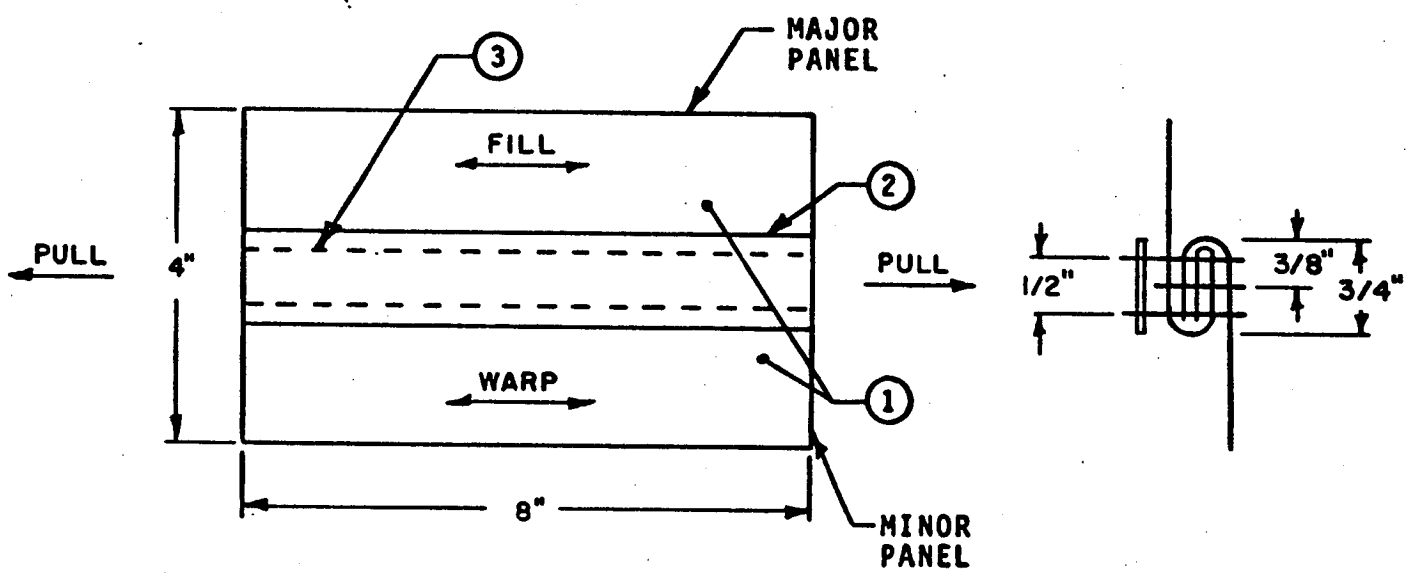

NOTES:

1. MATERIAL (ITEM 10, DACRON, 1.25 OZ/YD.^{2}
2. TAPE (ITEM 2), DACRON, 3/4" WIDE x 750 LB. TENSILE
3. THREAD (ITEM 3), DACRON, V-T-285, SIZE "E", TYPE I, CLASS 3
4. STITCH, TYPE 301, 7-12 STITCHES/INCH

LABORATORY MATERIAL TESTS AND TEST DATA

TEST ITEM:	PROJECT NO.: 14175
Radial Tape on Minor-to-Major Panel Seam	TEST/GRAPH NO.: 21/2412.21
	LOCATION REFERENCE: L LOAD DIRECTION: b-b

TEST OBJECTIVE: Determine ultimate strength of radial tape on minor-to-major panel seam test samples

TEST SAMPLE CONFIGURATION:

DIMENSIONS: 4 inches x 8 inches

MATERIAL: Canopy cloth, Dacron, 1.25 oz/yd^2
Radial tape, Dacron, 3/4 inch wide x 750 lb tensile strength

STITCH: Type 301, 7-12 stitches/inch

THREAD: Dacron, V-T-285, Size "E", Type I, Class 3

TEST PROCEDURE:

METHOD: 5100 per Fed. Spec. CCC-T-191

LOAD RATE: 12 inches/minute

INSTRUMENTATION: Research Inc. Materials Test System, Mod.No. LF 7445-20

TEST DATA:

SAMPLE NO.	ULTIMATE STRENGTH	TEST TERMINATION
1	1070 lb	Sample Failure
2	1010 lb	Sample Failure
3	1100 lb	Sample Failure
4	1020 lb	Sample Failure
5	1020 lb	Sample Failure

CALCULATIONS:

1. AVERAGE STRENGTH = 1/5(1070 + 1010 + 1100 + 1020 + 1020) = 1044 lb
2. RATED STRENGTH = Min. ultimate strength of radial tape + 5 x min. ultimate strength of canopy cloth (ravel strip test results, fill direction)

   = 990 + (5 x 41) = 1195 lb
3. MINIMUM ULTIMATE STRENGTH = 1010 lb
4. MATERIAL/JOINT/SEAM EFFICIENCY = MIN. ULT. STRENGTH/RATED STRENGTH

   = 1010/1195

   = 84.5 %

REMARKS/CONCLUSIONS:

RAVEN industries, inc.

RAVEN industries, inc.

DESCRIPTION: RADIAL TAPE ON RADIAL TAPE ON MINOR-TO-MAJOR PANEL SEAM (AT CORNER CUT-OUT)

LOCATION REFERENCE: M

LOAD DIRECTION: a-a

TEST / GRAPH NO.: 22/2412.22

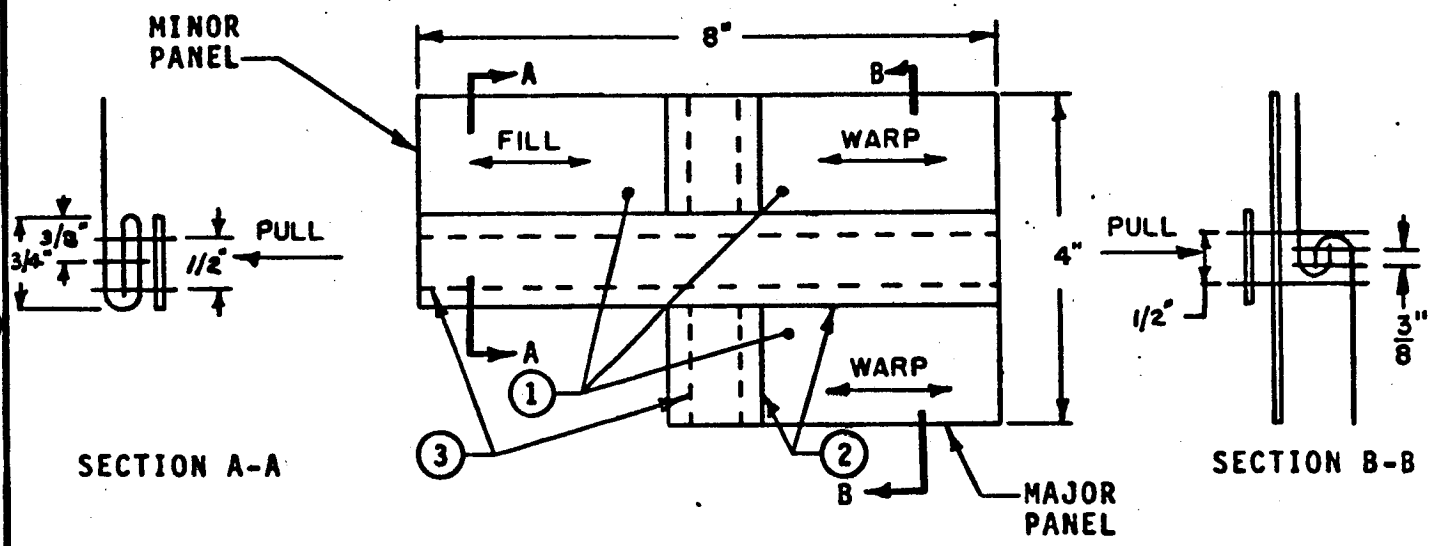

NOTES:

1. MATERIAL (ITEM 1), DACRON, 1.25 OZ/YD.^{2}
2. TAPE (ITEM 2), DACRON, 3/4" WIDE x 750 LB. TENSILE
3. THREAD (ITEM 3), DACRON, V-T-285, SIZE "E", TYPE I, CLASS 3
4. STITCH, TYPE 301, 7-12 STITCHES/INCH

LABORATORY MATERIAL TESTS AND TEST DATA

TEST ITEM:	PROJECT NO.: 14175
Radial Tape on Radial Tape On Minor-to-Major Panel Seam (at corner cut-out)	TEST/GRAPH NO.: 22/2412.22
	LOCATION REFERENCE: M LOAD DIRECTION: a-a

TEST OBJECTIVE: Determine ultimate strength of radial tape on radial tape on minor-to-major panel seam test samples

TEST SAMPLE CONFIGURATION:

DIMENSIONS: 4 inches x 8 inches

MATERIAL: Canopy cloth, Dacron, 1.25 oz/yd^2
Radial tape, Dacron, 3/4 inch wide x 750 lb tensile strength

STITCH: Type 301, 7-12 stitches/inch

THREAD: Dacron, V-T-285, Size "E", Type I, Class 3

TEST PROCEDURE:

METHOD: 5100 per Fed. Spec CCC-T-191

LOAD RATE: 12 inches/minute

INSTRUMENTATION: Research Inc. Materials Test System, Mod.No. LF 7445-20

TEST DATA:

SAMPLE NO.	ULTIMATE STRENGTH	TEST TERMINATION
1	950 lb	Sample Failure
2	940 lb	Sample Failure
3	990 lb	Sample Failure
4	960 lb	Sample Failure
5	1000 lb	Sample Failure

CALCULATIONS:

1. AVERAGE STRENGTH =1/5(950 + 940 + 990 + 960 + 1000) = 968 lb
2. RATED STRENGTH = Min. ultimate strength of radial tape + 3 x minimum ultimate strength of canopy cloth (ravel strip test results, fill direction)
   = 990 + (3 x 41) = 1113 lb.
3. MINIMUM ULTIMATE STRENGTH = 940 lb
4. MATERIAL/JOINT/SEAM EFFICIENCY = MIN. ULT. STRENGTH/RATED STRENGTH
   = 940/1113
   = 84.5 %

REMARKS/CONCLUSIONS:

RAVEN industries, inc.

RAVEN industries, inc.

DESCRIPTION: RADIAL TAPE ON RADIAL TAPE ON MINOR-TO-MAJOR PANEL SEAM (AT CORNER CUT-OUT)

LOCATION REFERENCE: M

LOAD DIRECTION: b-b

TEST / GRAPH NO.: 23/2412.23

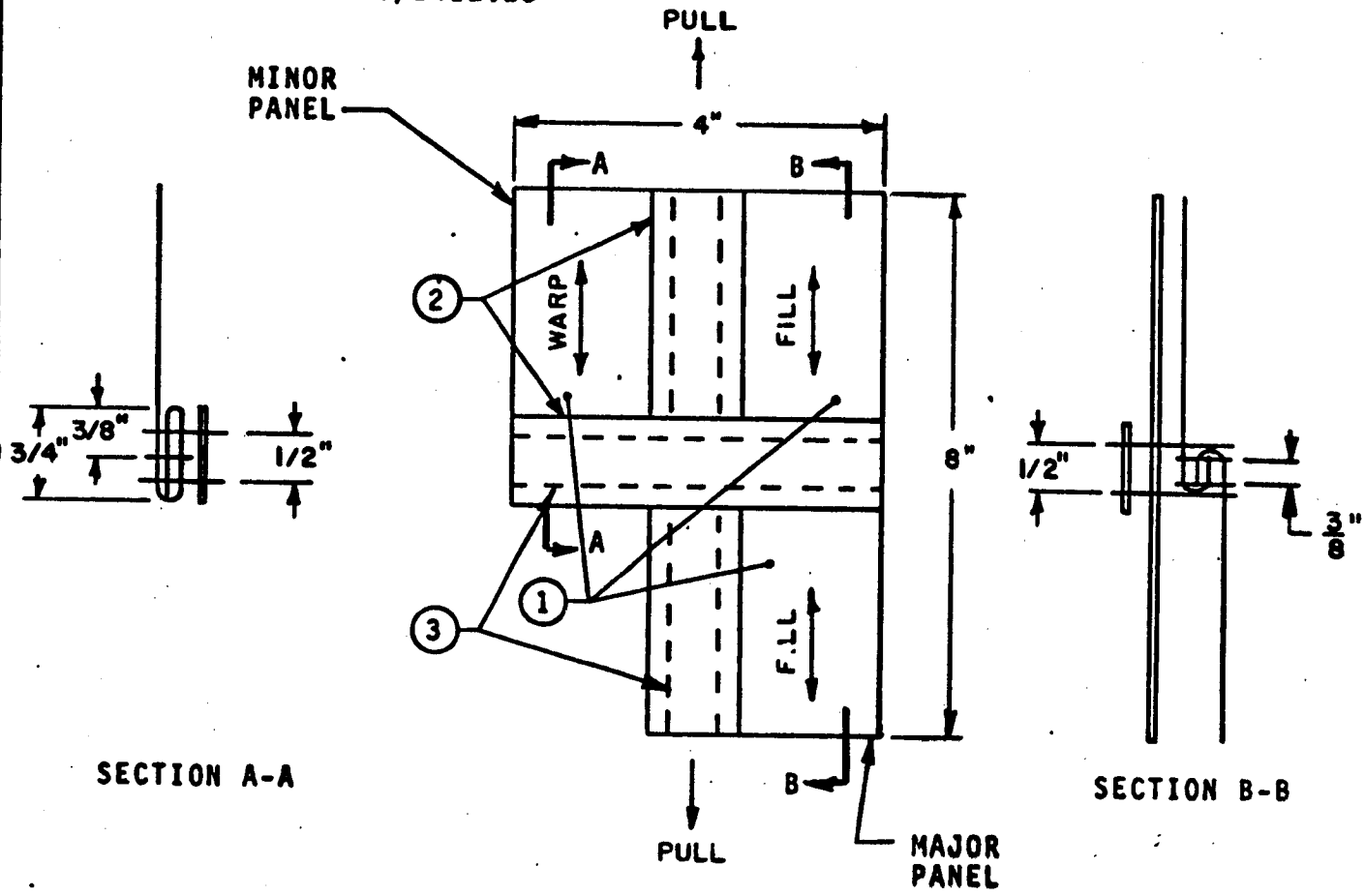

NOTES:

1. MATERIAL (ITEM 1), DACRON, 1.25 OZ/YD.^{2}
2. TAPE (ITEM 2), DACRON, 3/4 " WIDE x 750 LB. TENSILE
3. THREAD (ITEM 3), DACRON, V-T-285, SIZE "E", TYPE I, CLASS 3
4. STITCH, TYPE 301, 7-12 STITCHES/INCH

LABORATORY MATERIAL TESTS AND TEST DATA

TEST ITEM:	PROJECT NO.: 14175
Radial Tape on Radial Tape on Minor-To-Major Panel Seam (at corner cut-out)	TEST/GRAPH NO.: 23/2412.23
	LOCATION REFERENCE: M LOAD DIRECTION: b-b

TEST OBJECTIVE: Determine ultimate strength of radial tape on radial tape on minor-to-major panel seam test samples

TEST SAMPLE CONFIGURATION:

DIMENSIONS: 4 inches x 8 inches

MATERIAL: Canopy cloth, Dacron 1.25 oz/yd^2
Radial tape, Dacron, 3/4 inch wide x 750 lb tensile strength

STITCH: Type 301, 7-12 stitches/inch

THREAD: Dacron, V-T-285, Size "E", Type I, Class III

TEST PROCEDURE:

METHOD: 5100 per Fed. Spec. CCC-T-191

LOAD RATE: 12 inches/minute

INSTRUMENTATION: Research Inc. Materials Test System, Mod.No. LF 7445-20

TEST DATA:

SAMPLE NO.	ULTIMATE STRENGTH	TEST TERMINATION
1	960 lb	Sample Failure
2	1040 lb	Sample Failure
3	970 lb	Sample Failure
4	980 lb	Sample Failure
5	980 lb	Sample Failure

CALCULATIONS:

1. AVERAGE STRENGTH = 1/5(960 + 1040 + 970 + 980 + 980) = 986 lb
2. RATED STRENGTH = Min. ultimate strength of radial tape + 3 x min. ultimate strength of canopy cloth (ravel strip test results , fill direction)

   = 990 + (3 x 41) = 1113 lb
3. MINIMUM ULTIMATE STRENGTH = 960 lb
4. MATERIAL/JOINT/SEAM EFFICIENCY = MIN. ULT. STRENGTH/RATED STRENGTH

   = 960/1113

   = 86.3 %

REMARKS/CONCLUSIONS:

RAVEN industries, inc.

RAVEN industries, inc.

DESCRIPTION: RADIAL TAPE ON RADIAL TAPE ON MINOR-TO-MAJOR PANEL SEAM (NO MAIN SEAM)

LOCATION REFERENCE: N

LOAD DIRECTION: a-a

TEST / GRAPH NO.: 24/2412.24

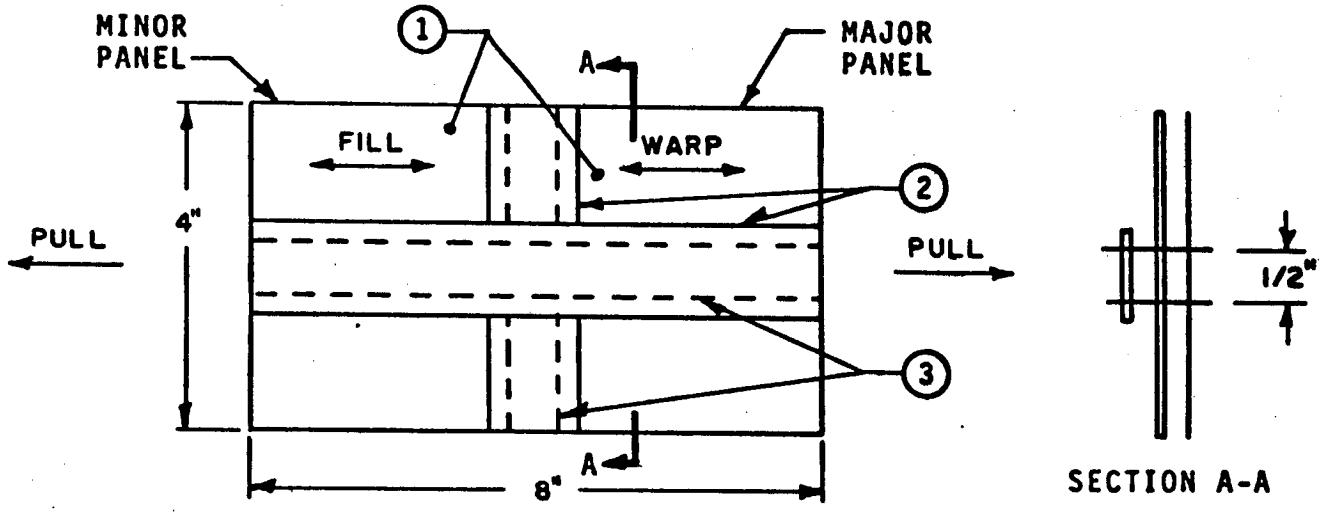

NOTES:

1. MATERIAL (ITEM 1), DACRON, 1.25 OZ/YD.^{2}
2. TAPE (ITEM 2), DACRON, 3/4" WIDE x 750 LB. TENSILE
3. THREAD (ITEM 3), DACRON, V-T-285, SIZE "E", TYPE I, CLASS 3
4. STITCH, TYPE 301, 7-12 STITCHES/INCH

LABORATORY MATERIAL TESTS AND TEST DATA

TEST ITEM:	PROJECT NO.: 14175
Radial Tape on Radial Tape on Minor-to-Major Panel Seam (No Main Seam)	TEST/GRAPH NO.: 24/2412.24
	LOCATION REFERENCE: N LOAD DIRECTION: a-a

TEST OBJECTIVE: Determine ultimate strength of radial tape on radial tape on minor-to-major panel seam test samples

TEST SAMPLE CONFIGURATION:

DIMENSIONS: 4 inches x 8 inches

MATERIAL: Canopy cloth, Dacron, 1.25 oz/yd^2
Radial tape, Dacron, 3/4 inch wide x 750 lb tensile strength

STITCH: Type 301, 7-12 stitches/inch

THREAD: Dacron, V-T-285, Size "E", Type I, Class 3

TEST PROCEDURE:

METHOD: 5100 per Fed. Spec. CCC-T-191

LOAD RATE: 12 inches/minute

INSTRUMENTATION: Research Inc. Materials Test System, Mod.No. LF 7445-20

TEST DATA:

SAMPLE NO.	ULTIMATE STRENGTH	TEST TERMINATION
1	1010 lb	Sample Failure
2	920 lb	Sample Failure
3	980 lb	Sample Failure
4	940 lb	Sample Failure
5	830 lb	Sample Failure

CALCULATIONS:

1. AVERAGE STRENGTH = 1/5(1010 + 920 + 980 + 940 + 830) = 936 lb.
2. RATED STRENGTH = Min. ultimate strength of radial tape + min. ultimate strength of canopy cloth (ravel strip test results, fill direction)

   = 990 + 41 = 1031 lb
3. MINIMUM ULTIMATE STRENGTH = 830 lb
4. MATERIAL/JOINT/SEAM EFFICIENCY = MIN. ULT. STRENGTH/RATED STRENGTH
   = 830/1031
   = 80.5 %

REMARKS/CONCLUSIONS:

RAVEN industries, inc.

RAVEN industries, inc.

DESCRIPTION: RADIAL TAPE ON RADIAL TAPE ON MINOR-TO-MAJOR PANEL SEAM (NO MAIN SEAM)

LOCATION REFERENCE: N

LOAD DIRECTION: b-b

TEST / GRAPH NO.: 25/2412.25

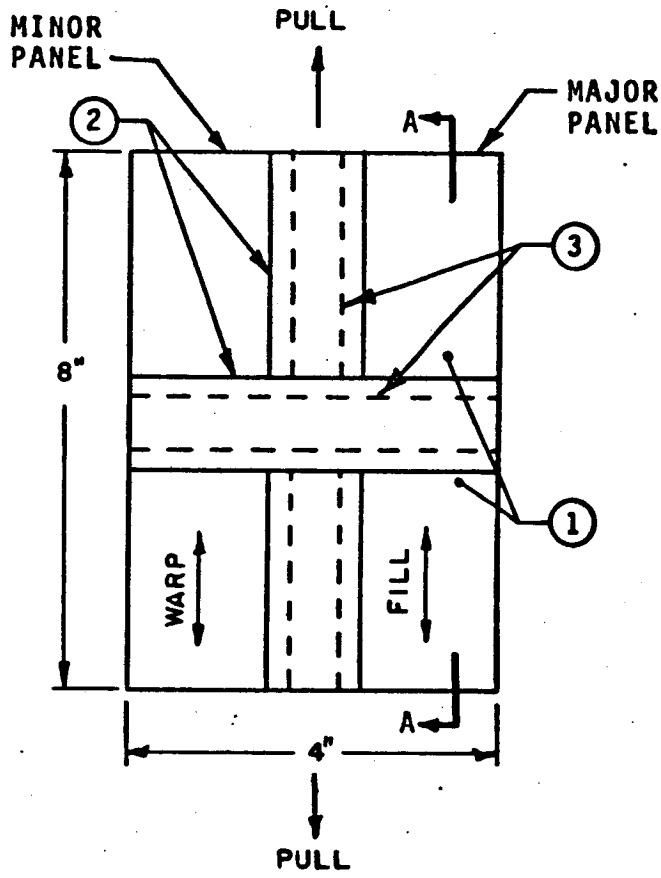

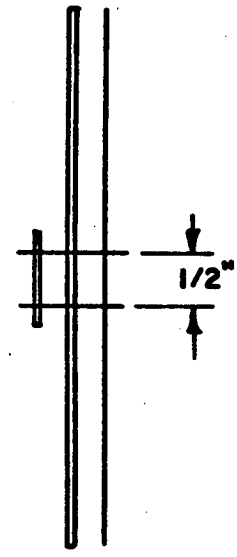

SECTION A-A

NOTES:

1. MATERIAL (ITEM 1), DACRON, 1.25 OZ/YD.^{2}
2. TAPE (ITEM 2), DACRON, 3/4" WIDE x 750 LB. TENSILE
3. THREAD (ITEM 3), DACRON, V-T-285, SIZE "E", TYPE I, CLASS 3
4. STITCH, TYPE 301, 7-12 STITCHES/INCH

LABORATORY MATERIAL TESTS AND TEST DATA

TEST ITEM:	PROJECT NO.: 14175
Radial Tape on Radial Tape on Minor-to-Major Panel Seam (No Main Seam)	TEST/GRAPH NO.: 25/2412.25
	LOCATION REFERENCE: N LOAD DIRECTION: b-b

TEST OBJECTIVE: Determine ultimate strength of radial tape on radial tape on minor-to-major panel seam test samples

TEST SAMPLE CONFIGURATION:

DIMENSIONS: 4 inches x 8 inches

MATERIAL: Canopy Cloth, Dacron, 1.25 oz/yd^2
Radial tape, Dacron, 3/4 inch wide x 750 lb tensile strength

STITCH: Type 301, 7-12 stitches/inch

THREAD: Dacron, V-T-285, Size "E", Type I, Class 3

TEST PROCEDURE:

METHOD: 5100 Per Fed. Spec. CCC-T-191

LOAD RATE: 12 inches/minute

INSTRUMENTATION: Research Inc. Materials Test System, Mod.No. LF 7445-20

TEST DATA:

SAMPLE NO.	ULTIMATE STRENGTH	TEST TERMINATION
1	1120 lb	Sample Failure
2	960 lb	Sample Failure
3	1060 lb	Sample Failure
4	1070 lb	Sample Failure
5	1070 lb	Sample Failure

CALCULATIONS:

1. AVERAGE STRENGTH = 1/5(1120 + 960 + 1060 + 1070 + 1070) = 1056 lb
2. RATED STRENGTH = Min. ultimate strength of radial tape + 5 x min. ultimate strength of canopy cloth (ravel strip test results, fill direction)

   = 990 + (5 x 41) = 1195 lb
3. MINIMUM ULTIMATE STRENGTH = 960 lb
4. MATERIAL/JOINT/SEAM EFFICIENCY = MIN. ULT. STRENGTH/RATED STRENGTH
   = 960/1195
   = 80.3 %

REMARKS/CONCLUSIONS:

RAVEN industries, inc.

RAVEN industries, inc.

DESCRIPTION: RADIAL TAPE ON RADIAL TAPE ON MINOR-TO-MAJOR PANEL SEAM (ON MAIN SEAM)

LOCATION REFERENCE: 0

LOAD DIRECTION: a-a

TEST / GRAPH NO.: 26/2412.26

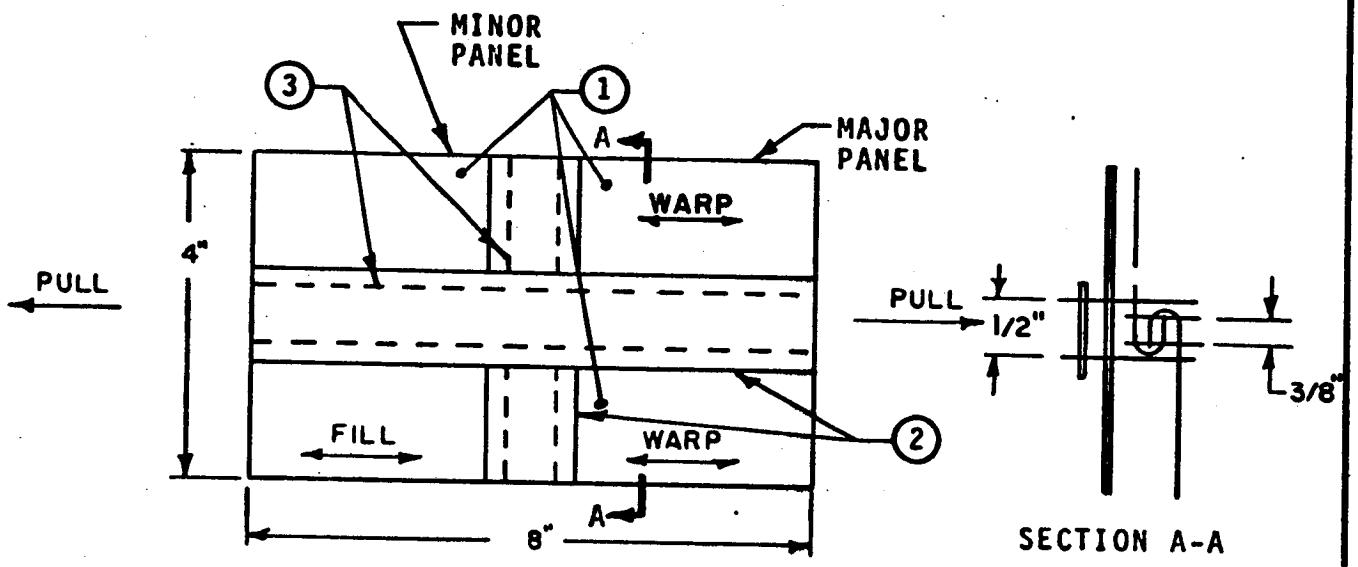

NOTES:

1. MATERIAL (ITEM 1), DACRON, 1.25 OZ/YD.^{2}
2. TAPE (ITEM 2), DACRON, 3/4" WIDE x 750 LB. TENSILE
3. THREAD (ITEM 3), DACRON, V-T-285, SIZE "E", TYPE I, CLASS 3
4. STITCH, TYPE 301, 7-12 STITCHES/INCH

LABORATORY MATERIAL TESTS AND TEST DATA

TEST ITEM:	PROJECT NO.: 14175
Radial Tape on Radial Tape On Minor-to-Major Panel Seam (On Main Seam)	TEST/GRAPH NO.: 26/2412.26
	LOCATION REFERENCE: O LOAD DIRECTION: a-a

TEST OBJECTIVE: Determine ultimate strength of radial tape on radial tape on minor-to-major panel seam test samples

TEST SAMPLE CONFIGURATION:

DIMENSIONS: 4 inches x 8 inches

MATERIAL: Canopy cloth, Dacron, 1.25 oz/yd^2
Radial Tape, Dacron, 3/4 inch wide x 750 lb. tensile strength

STITCH: Type 301, 7-12 stitches/inch

THREAD: Dacron, V-T-285, Size "E", Type I, Class 3

TEST PROCEDURE:

METHOD: 5100 Per Fed. Spec. CCC-T-191

LOAD RATE: 12 inches/minute

INSTRUMENTATION: Research Inc. Materials Test System, Mod.No. LF 7445-20

TEST DATA:

SAMPLE NO.	ULTIMATE STRENGTH	TEST TERMINATION
1	1000 lb	Sample Failure
2	920 lb	Sample Failure
3	1000 lb	Sample Failure
4	990 lb	Sample Failure
5	1030 lb	Sample Failure

CALCULATIONS:

1. AVERAGE STRENGTH = 1/5(1000 + 920 + 1000 + 990 + 1030) = 988 lb
2. RATED STRENGTH = Min. ultimate strength of radial tape + min. ultimate strength of canopy cloth (ravel strip test results, fill direction)

   = 990 + 41 = 1031 lb
3. MINIMUM ULTIMATE STRENGTH = 920 lb
4. MATERIAL/JOINT/SEAM EFFICIENCY = MIN. ULT. STRENGTH/RATED STRENGTH

   = 920/1031

   = 89.2 %

REMARKS/CONCLUSIONS:

RAVEN industries, inc.

RAVEN industries, inc.

DESCRIPTION: RADIAL TAPE ON RADIAL TAPE ON MINOR-TO-MAJOR PANEL SEAM (ON MAIN SEAM)

LOCATION REFERENCE: 0

LOAD DIRECTION: b-b

TEST / GRAPH NO.: 27/2412.27

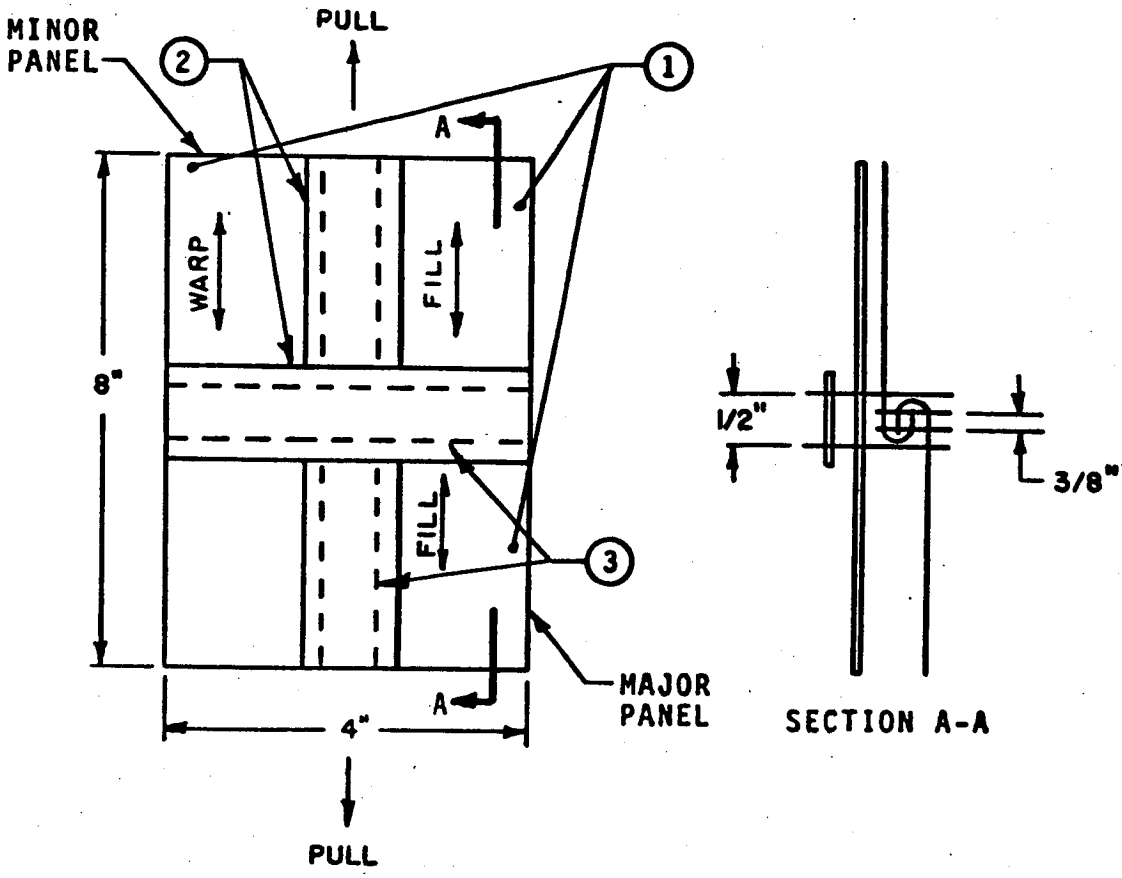

NOTES:

1. MATERIAL (ITEM 1), DACRON, 1.25 OZ/YD.^{2}
2. TAPE (ITEM 2), DACRON, 3/4" WIDE x 750 LB. TENSILE
3. THREAD (ITEM 3), DACRON, V-T-285, SIZE "E", TYPE I, CLASS 3
4. STITCH, TYPE 301, 7-12 STITCHES/INCH

LABORATORY MATERIAL TESTS AND TEST DATA

TEST ITEM:	PROJECT NO.: 14175
	TEST/GRAPH NO.: 27/2412.27
Radial Tape on Radial Tape On Minor-to-Major Panel Seam (On Main Seam)	LOCATION REFERENCE: O LOAD DIRECTION: b-b

TEST OBJECTIVE: Determine ultimate strength of radial tape on radial tape on minor-to-major panel seam test samples

TEST SAMPLE CONFIGURATION:

DIMENSIONS: 4 inches x 8 inches

MATERIAL: Canopy cloth, Dacron, 1.25 oz/yd^2
Radial Tape, Dacron, 3/4 inch wide x 750 lb tensile strength

STITCH: Type 301, 7-12 stitches/inch

THREAD: Dacron, V-T-285, Size "E", Type I, Class 3

TEST PROCEDURE:

METHOD: 5100 Per Fed. Spec. CCC-T-191

LOAD RATE: 12 inches/minute

INSTRUMENTATION: Research Inc. Materials Test System, Mod.No. LF 7445-20

TEST DATA:

SAMPLE NO.	ULTIMATE STRENGTH	TEST TERMINATION
1	1060 lb	Sample Failure
2	1080 lb	Sample Failure
3	1090 lb	Sample Failure
4	940 lb	Sample Failure
5	910 lb	Sample Failure

CALCULATIONS:

1. AVERAGE STRENGTH = 1/5(1060 + 1080 + 1090 + 940 + 910) = 1016 lb
2. RATED STRENGTH = Min. ultimate strength of radial tape + 5 x min. ultimate strength of canopy cloth (ravel strip test results, fill direction)

   = 990 + (5 x 41) = 1195 lb
3. MINIMUM ULTIMATE STRENGTH = 910 lb
4. MATERIAL/JOINT/SEAM EFFICIENCY = MIN. ULT. STRENGTH/RATED STRENGTH

   = 910/1195

   = 76.2 %

REMARKS/CONCLUSIONS:

RAVEN industries, inc.

RAVEN industries, inc.

DESCRIPTION: SUSPENSION LINE/RADIAL TAPE JOINT

LOCATION REFERENCE: P

LOAD DIRECTION: a-a

TEST / GRAPH NO.: 28/2412.28

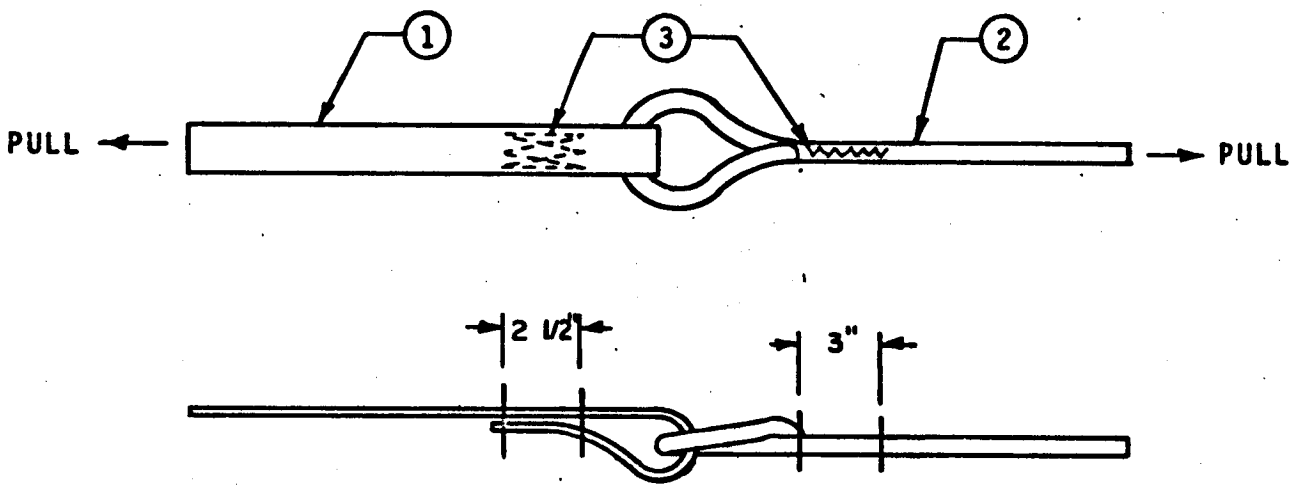

NOTES:

1. TAPE (ITEM 1), DACRON, 3/4" WIDE x 750 LB. TENSILE
2. CORD (ITEM 2), DACRON, 550 LB. TENSILE
3. THREAD (ITEM 3), DACRON, V-T-285, SIZE "FF", TYPE I, CLASS 3
4. STITCH:

   TAPE: 4-POINT W-W, TYPE 301, 7-11 STITCHES/INCH

   CORD: DOUBLE THROW ZIG-ZAG

LABORATORY MATERIAL TESTS AND TEST DATA

TEST ITEM:	PROJECT NO.: 14175
Suspension Line/Radial Tape Joint	TEST/GRAPH NO.: 28/2412.28
	LOCATION REFERENCE: P LOAD DIRECTION: a-a

TEST OBJECTIVE: Determine minimum ultimate strength of suspension line/radial tape joint test samples

TEST SAMPLE CONFIGURATION:

DIMENSIONS: N/A

MATERIAL: Radial tape, Dacron, 3/4 inch wide x 750 lb. tensile strength suspension line, Dacron, 550 lb. tensile strength

STITCH: Type 301 & Double throw zig-zag, 7-11 stitches/inch

THREAD: Dacron, V-T-285, Size "FF", Type I, Class 3

TEST PROCEDURE:

METHOD: Tensile per Fed. Spec CCC-T-191

LOAD RATE: 12 inches/minute

INSTRUMENTATION: Research Inc. Materials Test System, Mod.No. LF 7445-20

TEST DATA:

SAMPLE NO.	ULTIMATE STRENGTH	TEST TERMINATION
1	615 lb.	Sample Failure
2	630 lb.	Sample Failure
3	615 lb.	Sample Failure
4	615 lb.	Sample Failure
5	615 lb.	Sample Failure

CALCULATIONS:

1. AVERAGE STRENGTH = 1/5(615 + 630 + 615 + 615 + 615) = 618 lb.
2. RATED STRENGTH = Min. ultimate strength of weakest member
   = Min. ultimate strength of suspension line
   = 620 lb.
3. MINIMUM ULTIMATE STRENGTH = 615 lb.
4. MATERIAL/JOINT/SEAM EFFICIENCY = MIN. ULT. STRENGTH/RATED STRENGTH
   = 615/620
   = 99.2 %

REMARKS/CONCLUSIONS:

RAVEN industries, inc.

RAVEN industries, inc.

DESCRIPTION: SUSPENSION LINE/CANOPY RISER JOINT

LOCATION REFERENCE:

LOAD DIRECTION:

TEST / GRAPH NO.: 31/2412.31.b

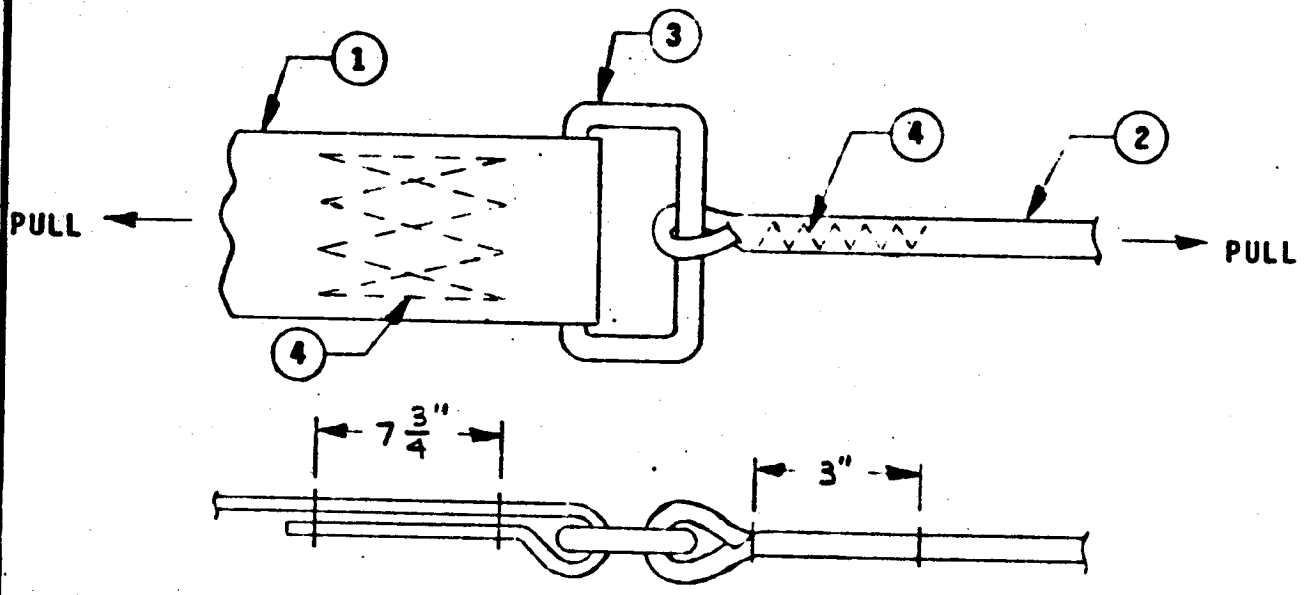

NOTES:

1. WEBBING (ITEM 1), DACRON, MIL-W-25361, TYPE III, 1 3/4" WIDE x 7000 LB. TENSILE.
2. CORD (ITEM 2), DACRON, 550 LB. TENSILE.
3. METAL LINK (ITEM 3), P/N AN6562-1, Fc65.
4. THREAD (ITEM 4), DACRON, V-T-285, SIZE "FF", TYPE I, CLASS 3.
5. STITCH: TAPE: 4-POINT W-W, TYPE 301, 7-11 STITCHES/INCH
   CORD: DOUBLE THROW ZIG-ZAG.

LABORATORY MATERIAL TESTS AND TEST DATA

TEST ITEM:	PROJECT NO.: 14175
	TEST/GRAPH NO.: 31/2412.31.b
Suspension Line/Canopy Riser Joint	LOCATION REFERENCE: LOAD DIRECTION:

TEST OBJECTIVE: Determine minimum ultimate strength of suspension line/canopy riser joint test sample

TEST SAMPLE CONFIGURATION:

DIMENSIONS: N/A

MATERIAL: Webbing, Dacron, MIL-W-25361, Type III, 7000 lb. tensile strength suspension line, Dacron, 550 lb. tensile strength

STITCH: Type 301, 4-Point, W-W & Double Throw Zig-Zag, 7-11 stitches/inch

THREAD: Dacron, V-T-285, Size "FF", Type I, Class 3

TEST PROCEDURE:

METHOD: Tensile per Fed. Spec. CCC-T-191

LOAD RATE: 12 inches/minute

INSTRUMENTATION: Research Inc. Materials Test System, Mod.No. LF 7445-20

TEST DATA:

SAMPLE NO.	ULTIMATE STRENGTH	TEST TERMINATION
1	610 lb	Sample Failure
2	610 lb	Sample Failure
3	605 lb	Sample Failure
4	590 lb	Sample Failure
5	585 lb	Sample Failure

CALCULATIONS:

1. AVERAGE STRENGTH =
2. RATED STRENGTH = Minimum ultimate strength of weakest member
   = Minimum ultimate strength of suspension lines
   = 620 lb
3. MINIMUM ULTIMATE STRENGTH = 585 lb
4. MATERIAL/JOINT/SEAM EFFICIENCY = MIN. ULT. STRENGTH/RATED STRENGTH
   = 585/620
   = 94.4 %

REMARKS/CONCLUSIONS:

RAVEN industries, inc.

RAVEN industries, inc.

DESCRIPTION: CANOPY RISER AT KEEPER

LOCATION REFERENCE:

LOAD DIRECTION:

TEST / GRAPH NO.: 32/2412.32

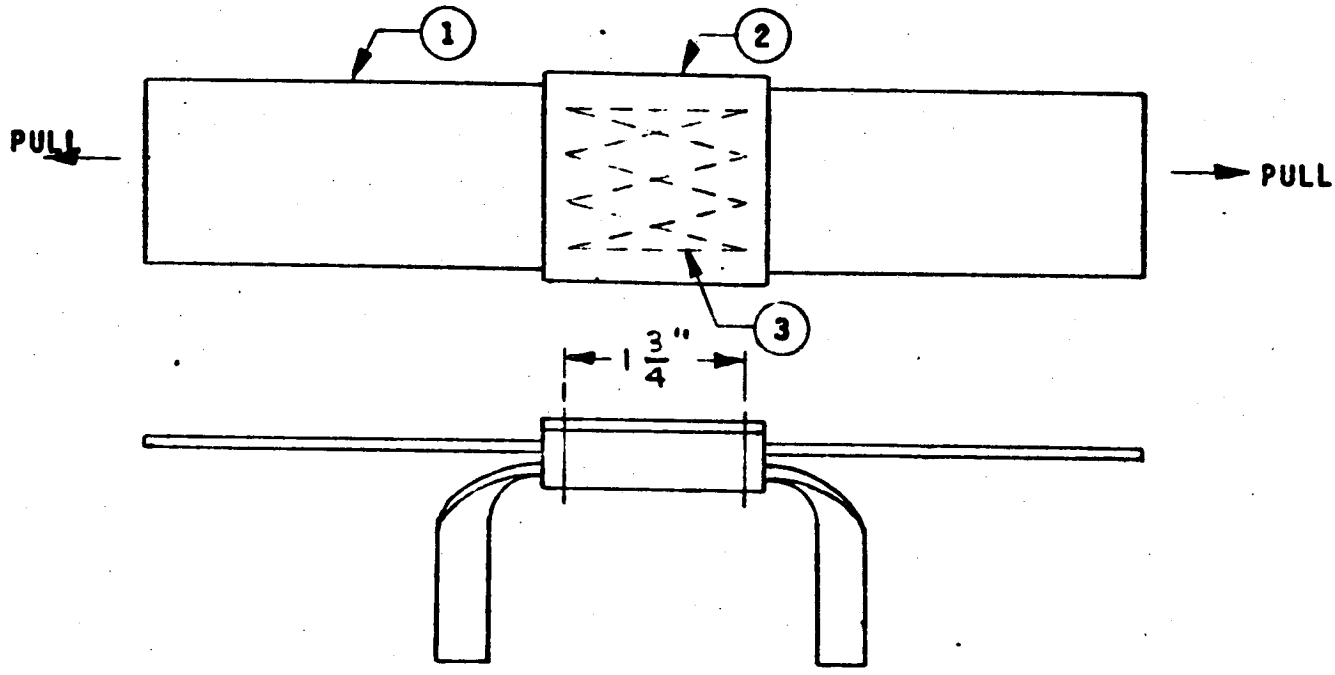

NOTES:

1. WEBBING (ITEM 1), DACRON, MIL-W-25361, TYPE III, 1 3/4" WIDE x 7000 LB. TENSILE.
2. TAPE (ITEM 2), COTTON, 2" WIDE.
3. THREAD (ITEM 3), DACRON, V-T-285, SIZE "FF", TYPE I, CLASS 3.
4. STITCH: 4 - POINT W-W, TYPE 301, 7-11 STITCHES/INCH.

LABORATORY MATERIAL TESTS AND TEST DATA

TEST ITEM:	PROJECT NO.: 14175
Canopy Riser @ Keeper	TEST/GRAPH NO.: 32/2412.32
	LOCATION REFERENCE: LOAD DIRECTION:

TEST OBJECTIVE: Determine minimum ultimate strength of canopy riser at keeper test samples

TEST SAMPLE CONFIGURATION:

DIMENSIONS: N/A

MATERIAL: Canopy Riser Webbing, Dacron, MIL-W-25361, Type III, 1 3/4" x 7000 lb tensile strength

STITCH: Type 301, 4 point W-W, 7-11 stitches/inch

THREAD: Dacron, V-T-285, Size "FF", Type I, Class 3

TEST PROCEDURE:

METHOD: Tensile per Fed. Spec. CCC-T-191

LOAD RATE: 12 inches/minute

INSTRUMENTATION: Research Inc. Materials Test System, Mod.No. LF 7445-20

TEST DATA:

SAMPLE NO.	ULTIMATE STRENGTH	TEST TERMINATION
1	No Test	Jaw Slippage
2	7800 lb	Sample Failure
3	7000 lb	Sample Failure
4	7800 lb	Sample Failure

CALCULATIONS:

1. AVERAGE STRENGTH = 1/3(7800 + 7000 + 7800) = 7533 lb
2. RATED STRENGTH = Minimum ultimate strength of bridle webbing

   = 7300 lb

3. MINIMUM ULTIMATE STRENGTH = 7000 lb
4. MATERIAL/JOINT/SEAM EFFICIENCY = MIN. ULT. STRENGTH/RATED STRENGTH

   = 7000/7300

   = 95.9 %

REMARKS/CONCLUSIONS:

RAVEN industries, inc.

RAVEN industries, inc.

DESCRIPTION: CANOPY RISER AT MAIN KEEPER TIE

LOCATION REFERENCE:

LOAD DIRECTION:

TEST / GRAPH NO.: 33/2412.33

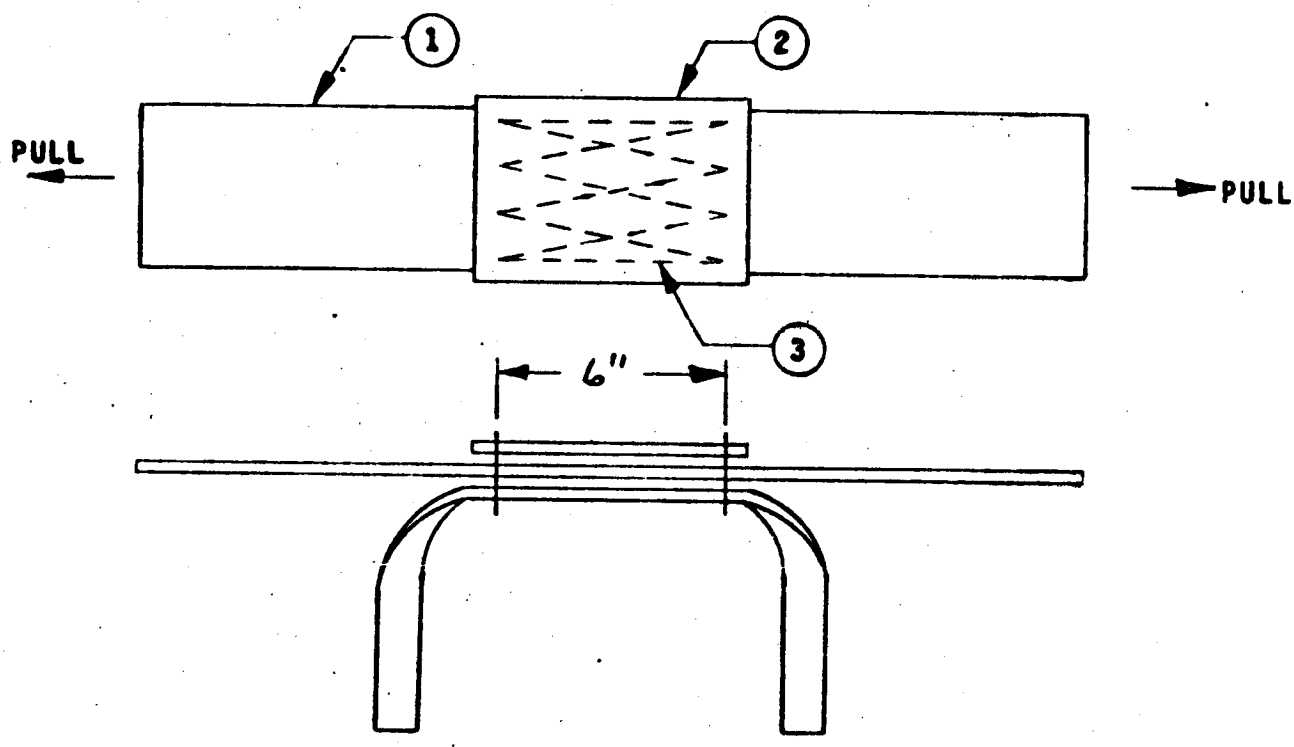

NOTES:

1. WEBBING (ITEM 1), DACRON, MIL-W-25361, TYPE III, 1 3/4" WIDE x 7000 LB. TENSILE.
2. TAPE (ITEM 2), COTTON, 2" WIDE.
3. THREAD (ITEM 3), DACRON, V-T-285, SIZE "FF", TYPE I, CLASS 3.
4. STITCH: 4 - POINT W-W, TYPE 301, 7-11 STITCHES/INCH.

LABORATORY MATERIAL TESTS AND TEST DATA

TEST ITEM:	PROJECT NO.: 14175
Canopy Riser at Main Keeper Tie	TEST/GRAPH NO.: 33/2412.33
	LOCATION REFERENCE: LOAD DIRECTION:

TEST OBJECTIVE: Determine minimum ultimate strength of canopy riser at main keeper tie test samples

TEST SAMPLE CONFIGURATION:

DIMENSIONS: N/A

MATERIAL: Riser webbing, Dacron, MIL-W-25361, Type III, 1 3/4" wide x 7000 lb tensile strength
Webbing, Cotton, 2" wide

STITCH: Type 301, 4-Point W-W, 7-11 stitches/inch

THREAD: Dacron, V-T-285, Size "FF", Type I, Class 3

TEST PROCEDURE:

METHOD: Tensile per Fed. Spec. CCC-T-191

LOAD RATE: 12 inches/minute

INSTRUMENTATION: Research Inc. Materials Test System, Mod.No. LF 7445-20

TEST DATA:

SAMPLE NO.	ULTIMATE STRENGTH	TEST TERMINATION
1	7700 lb	Sample Failure
2	7800 lb	Sample Failure
3	7500 lb	Sample Failure
4	8000 lb	Sample Failure

CALCULATIONS:

1. AVERAGE STRENGTH = 1/4(7700 + 7800 + 7500 + 8000) = 7750 lb
2. RATED STRENGTH = Minimum ultimate strength of bridle webbing
   = 7300 lb
3. MINIMUM ULTIMATE STRENGTH = 7500 lb
4. MATERIAL/JOINT/SEAM EFFICIENCY = MIN. ULT. STRENGTH/RATED STRENGTH
   = 7500/7300
   = 102.7 %

REMARKS/CONCLUSIONS:

RAVEN industries, inc.

RAVEN industries, inc.

SECTION VI

STRESS ANALYSIS

VI. STRESS ANALYSIS

The basic materials and each seam and joint throughout the cross parachute were analyzed with respect to maximum loads imposed on the system during deployment. Design factor calculations are presented in Table 2 for each sample configuration test in Section V. Material degradation due to heat loss (sterilization) and abrasion are taken into account. A minimum safety factory of 1.50 is assumed. Line convergence and assymetrical loading factors are included where applicable. Margin of safety calculations of each test sample follow Table 2. Reference is made in this section to Figure 13, for location and load direction.

Table 2

DESIGN FACTORS					
SYMBOL	DESCRIPTION	Canopy Cloth	Suspension Line	Skirt Hem Tape	Radial Tape
M	JOINT EFFICIENCY	1.00	1.00	1.00	1.00
N	HEAT LOSS	0.90	0.90	0.90	0.90
ℓ	ABRASION	0.96	0.96	0.96	0.96
$MN\ell$		0.864	0.864	0.864	0.864
J	SAFETY FACTOR	1.50	1.50	1.50	1.50
C	LINE CONVERGENCE	N/A	N/A	N/A	N/A
F	ASSYMETRICAL LOADING	1.05	1.05	1.05	1.05
JCF		1.575	1.575	1.575	1.575
DESIGN FACTOR	$\frac{JCF}{MN\ell}$	1.823	1.823	1.823	1.823

RAVEN industries, inc.

Table 2 (continued)

DESIGN FACTORS					
SYMBOL	DESCRIPTION	Canopy Riser Webbing	Load Bridle Webbing	Skirt Hem (E/b-b)	Main Seam (F/a-a)
M	JOINT EFFICIENCY	1.00	1.00	0.744	0.917
N	HEAT LOSS	0.90	1.00	0.90	0.90
ℓ	ABRASION	0.96	0.96	0.96	0.96
$MN\ell$		0.864	0.960	0.643	0.792
J	SAFETY FACTOR	1.50	1.50	1.50	1.50
C	LINE CONVERGENCE	N/A	N/A	N/A	N/A
F	ASSYMETRICAL LOADING	1.10	1.10	1.05	1.05
JCF		1.650	1.650	1.575	1.575
DESIGN FACTOR	$\frac{JCF}{MN\ell}$	1.910	1.719	2.449	1.989

RAVEN industries, inc.

Table 2 (continued)

DESIGN FACTORS					
SYMBOL	DESCRIPTION	Main Seam (F/b-b)	Radial Tape On Canopy Cloth (G/a-a)	Radial Tape On Canopy Cloth (G/b-b)	Radial Tape Across Main Seam (H/a-a)
M	JOINT EFFICIENCY	0.811	0.892	0.853	0.902
N	HEAT LOSS	0.90	0.90	0.90	0.90
ℓ	ABRASION	0.96	0.96	0.96	0.96
$MN\ell$		0.701	0.771	0.737	0.779
J	SAFETY FACTOR	1.50	1.50	1.50	1.50
C	LINE CONVERGENCE	N/A	N/A	N/A	N/A
F	ASSYMETRICAL LOADING	1.05	1.05	1.05	1.05
JCF		1.575	1.575	1.575	1.575
DESIGN FACTOR	$\frac{JCF}{MN\ell}$	2.247	2.043	2.137	2.022

RAVEN industries, inc.

Table 2 (continued)

DESIGN FACTORS					
SYMBOL	DESCRIPTION	Radial Tape Across Main Seam (H/b-b)	Radial Tape On Skirt Edge Hem (I/a-a)	Radial Tape On Radial Tape on Canopy Cloth (J/a-a)	Radial Tape On Radial Tape on Canopy Cloth (J/b-b)
M	JOINT EFFICIENCY	0.833	0.764	0.807	0.883
N	HEAT LOSS	0.90	0.90	0.90	0.90
ℓ	ABRASION	0.96	0.96	0.96	0.96
$MN\ell$		0.720	0.660	0.697	0.763
J	SAFETY FACTOR	1.50	1.50	1.50	1.50
C	LINE CONVERGENCE	N/A	N/A	N/A	N/A
F	ASSYMETRICAL LOADING	1.05	1.05	1.05	1.05
JCF		1.575	1.575	1.575	1.575
DESIGN FACTOR	$\frac{JCF}{MN\ell}$	2.188	2.386	2.260	2.064

RAVEN industries, inc.

Table 2 (continued)

DESIGN FACTORS					
SYMBOL	DESCRIPTION	Radial Tape On Radial Tape On Main Seam (K/a-a)	Radial Tape On Radial Tape On Main Seam (K/b-b)	Radial Tape On Minor-to-Major Panel Seam (L/a-a)	Radial Tape On Minor-to-Major Panel Seam (L/b-b)
M	JOINT EFFICIENCY	0.709	0.863	0.910	0.845
N	HEAT LOSS	0.90	0.90	0.90	0.90
ℓ	ABRASION	0.96	0.96	0.96	0.96
$MN\ell$		0.613	0.746	0.786	0.730
J	SAFETY FACTOR	1.50	1.50	1.50	1.50
C	LINE CONVERGENCE	N/A	N/A	N/A	N/A
F	ASSYMETRICAL LOADING	1.05	1.05	1.05	1.05
JCF		1.575	1.575	1.575	1.575
DESIGN FACTOR.	$\frac{JCF}{MN\ell}$	2.569	2.111	2.004	2.158

RAVEN industries, inc.

Table 2 (continued)

DESIGN FACTORS					
SYMBOL	DESCRIPTION	Tape on Tape On Minor-to-Major Seam (at Corner) (M/a-a)	Tape On Tape On Minor-to-Major Seam (at corner) (M/b-b)	Tape on Tape on Minor-to-Major Seam (No main seam) (N/a-a)	Tape on Tape on Minor-to-Major seam (No main seam) (N/b-b)
M	JOINT EFFICIENCY	0.845	0.863	0.805	0.803
N	HEAT LOSS	0.90	0.90	0.90	0.90
ℓ	ABRASION	0.96	0.96	0.96	0.96
$MN\ell$		0.730	0.746	0.696	0.694
J	SAFETY FACTOR	1.50	1.50	1.50	1.50
C	LINE CONVERGENCE	N/A	N/A	N/A	N/A
F	ASSYMETRICAL LOADING	1.05	1.05	1.05	1.05
JCF		1.575	1.575	1.575	1.575
DESIGN FACTOR	$\frac{JCF}{MN\ell}$	2.158	2.111	2.263	2.269

RAVEN industries, inc.

Table 2 (continued)

DESIGN FACTORS					
SYMBOL	DESCRIPTION	Tape on Tape On Minor-to-Major Seam (on main seam) (O/a-a)	Tape on Tape On Minor-to-Major Seam (on main seam) (O/b-b)	Suspension Line/Radial Tape Joint (P/a-a)	Suspension Line/Canopy Riser Joint
M	JOINT EFFICIENCY	0.892	0.762	0.992	0.944
N	HEAT LOSS	0.90	0.90	0.90	0.90
ℓ	ABRASION	0.96	0.96	0.96	0.96
$MN\ell$		0.771	0.658	0.857	0.816
J	SAFETY FACTOR	1.50	1.50	1.50	1.50
C	LINE CONVERGENCE	N/A	N/A	1.05	1.05
F	ASSYMETRICAL LOADING	1.05	1.05	1.10	1.05
JCF		1.575	1.575	1.733	1.654
DESIGN FACTOR	$\frac{JCF}{MN\ell}$	2.043	2.394	2.022	2.027

RAVEN industries, inc.

Table 2 (continued)

DESIGN FACTORS					
SYMBOL	DESCRIPTION	Canopy Riser at Keeper	Canopy Riser at Main Keeper Tie		
M	JOINT EFFICIENCY	0.959	1.000		
N	HEAT LOSS	0.90	0.90		
ℓ	ABRASION	0.96	0.96		
$MN\ell$		0.829	0.864		
J	SAFETY FACTOR	1.50	1.50		
C	LINE CONVERGENCE	1.10	1.05		
F	ASSYMETRICAL LOADING	1.05	1.05		
JCF		1.733	1.654		
DESIGN FACTOR	$\frac{JCF}{MN\ell}$	2.090	1.914		

RAVEN industries, inc.

CANOPY PROJECTED AREA

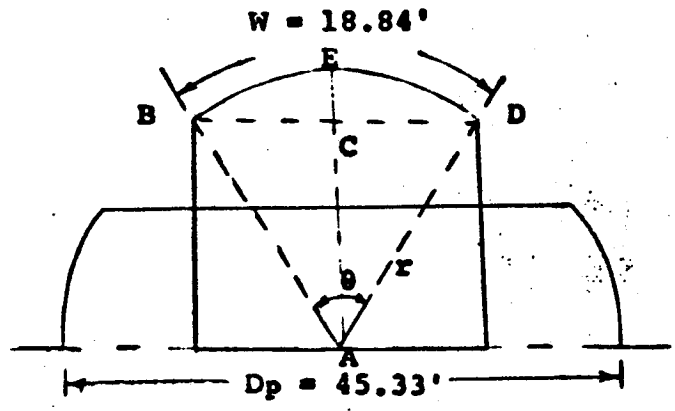

$r = Dp/2 = \frac{45.33}{2} = 22.67$ ft.

$\theta = w/r = 18.84/22.67 = 0.83105 = 47.6^{\circ}$

Length of chord $BD = 2\ r \sin \theta/2$

$BD = (2)(22.67) \sin 23.80^{\circ} = (2)(22.67)(0.40355) = 18.30$ ft.

$BC = \frac{BD}{2} = \frac{18.30}{2} = 9.15$ ft.

$AC = \sqrt{(r)^2 - (BC)^2} = \sqrt{(22.67)^2 - (9.15)^2} = 20.74$ ft.

Area of segment BCDE $= \frac{\pi\ r^2\theta}{360} - \frac{r^2 \sin \theta}{2}$

$= \frac{(3.1416)(22.67)^2(47.6)}{360} - \frac{(22.67)^2(0.73846)}{2}$

$= 23.72$ ft.^{2}

Area of cross $= 4\ (AC)(BD) - (BD)^2$

$= 4\ (20.74)(18.30) - (18.30)^2$

$= 1183.28$ ft.^{2}

Total Area = 4 (23.72) + 1183.28

= 1278.16 ft.^{2}

DEVELOPED LOAD IN CANOPY FABRIC

The projected essential cloth area = 1278.16 ft.^{2}. This projected cloth area must absorb the load imposed by the opening shock force. Therefore, the load per unit area, assuming the shock load is uniformly distributed, is:

$$P_{(\text{over actual area})} = \frac{Fo}{Ap}$$

$$= \frac{17,620}{1278.16}$$

$$= 13.79 \text{ lb/ft}^2$$

This force is essentially "pressure" inside a hemisphere. The stress in the parachute cloth may then be calculated from:

$$P_{Dev} = \sigma t = \frac{Pr}{2} = \frac{(13.79)(22.67)}{(2)(12)}$$

$$= 13.03 \text{ lb/in}$$

RAVEN industries, inc.

STRESS ANALYSIS

Description: Canopy Cloth, Dacron (Fill Direction)

Location Reference/Load Direction: A/a-a

Ultimate Strength

P_{ult} = Minimum ultimate strength of test sample (Ravel strip test results, fill direction)

= 41 lb/in

Allowable Load

$$P_{allow} = \frac{P_{ult}}{\text{Design Factor}}$$

$$= \frac{41}{1.823}$$

$$= 22.49 \text{ lb/in}$$

Margin of Safety

$$M.S. = \frac{P_{allow}}{P_{Dev}} - 1.0 \qquad P_{Dev} = 13.03 \text{ lb/in}$$

$$= \frac{22.49}{13.03} - 1.0$$

$$= 1.726 - 1.0$$

$$= + 72.6 \ \%$$

STRESS ANALYSIS

Description: Canopy Cloth, Dacron (Warp Direction)

Location Reference/Load Direction: A/b-b

Ultimate Strength

P_{ult} = Minimum ultimate strength of test sample (Ravel strip test results, warp direction)

= 45.0 lb/in

Allowable Load

$$P_{allow} = \frac{P_{ult}}{\text{Design Factor}}$$

$$= \frac{45.0}{1.823}$$

= 24.68 lb/in

Margin of Safety

$$M.S. = \frac{P_{allow}}{P_{Dev}} - 1.0 \qquad P_{Dev} = 13.03 \text{ lb/in}$$

$$= \frac{24.68}{13.03} - 1.0$$

$$= 1.894 - 1.0$$

$$= + 89.4$$

RAVEN industries, inc.

STRESS ANALYSIS

Description: Suspension Line

Location Reference/Load Direction: B/a-a

Ultimate Strength

P_{ult} = Minimum ultimate strength of test sample x no. of suspension lines

= 620 x 64

= 39,680 lb.

Allowable Load

$$P_{allow} = \frac{P_{ult}}{\text{Design Factor}}$$

$$= \frac{39,680}{1.823}$$

= 21,766 lb.

Margin of Safety

$$M.S. = \frac{P_{allow}}{P_{Dev}} - 1.0 \qquad P_{Dev} = 17,620 \text{ lb.}$$

$$= \frac{21,766}{17,620} - 1.0$$

$$= 1.235 - 1.0$$

$$= + 23.5 \%$$

STRESS ANALYSIS

Description: Radial Tape

Location Reference/Load Direction: D/a-a

Ultimate Strength

P_{ult} = Minimum ultimate strength of test sample x no. of radial tapes

= 990 x 64

= 63,360 lb.

Allowable Load

$$P_{allow} = \frac{P_{ult}}{\text{Design Factor}}$$

$$= \frac{63,360}{1.823}$$

= 34,756 lb.

Margin of Safety

$$M.S. = \frac{P_{allow}}{P_{Dev}} - 1.0 \qquad P_{Dev} = 17,620 \text{ lb.}$$

$$= \frac{34,756}{17,620} - 1.0$$

$$= 1.973 - 1.0$$

$$= + 97.3 \%$$

RAVEN industries, inc.

STRESS ANALYSIS

Description: Canopy Riser Webbing

Location Reference/Load Direction:

Ultimate Strength

P_{ult} = Minimum ultimate strength of test sample x no. of plys of webbing

= 7300 x 8

= 58,400 lb.

Allowable Load

$$P_{allow} = \frac{P_{ult}}{\text{Design Factor}}$$

$$= \frac{58,400}{1.910}$$

= 30,576

Margin of Safety

$$M.S. = \frac{P_{allow}}{P_{Dev}} - 1.0 \qquad P_{Dev} = 17,620 \text{ lb.}$$

$$= \frac{30,576}{17,620} - 1.0$$

$$= 1.735 - 1.0$$

$$= + 73.5 \%$$

STRESS ANALYSIS

Description: Load Bridle Webbing

Location Reference/Load Direction:

Ultimate Strength

P_{ult} = Minimum ultimate strength of test sample x no. of plys of webbing

= 10,250 x 6

= 61,500 lb.

Allowable Load

$$P_{allow} = \frac{P_{ult}}{\text{Design Factor}}$$

$$= \frac{61,500}{1.719}$$

= 35,777 lb.

Margin of Safety

$$M.S. = \frac{P_{allow}}{P_{Dev}} - 1.0 \qquad P_{Dev} = 17,620 \text{ lb.}$$

$$= \frac{35,777}{17,620} - 1.0$$

$$= 2.030 - 1.0$$

$$= +103.0$$

RAVEN industries, inc.

STRESS ANALYSIS

Description: Main Seam

Location Reference/Load Direction: F/a-a

Ultimate Strength

P_{ult} = Minimum ultimate strength of canopy cloth (ravel strip test results, fill direction)

= 41 lb/in

Allowable Load

$$P_{allow} = \frac{P_{ult}}{\text{Design Factor}}$$

$$= \frac{41}{1.989}$$

$$= 20.61 \text{ lb/in}$$

Margin of Safety

$$M.S. = \frac{P_{allow}}{P_{Dev}} - 1.0 \qquad P_{Dev} = 13.03 \text{ lb/in}$$

$$= \frac{20.61}{13.03} - 1.0$$

$$= 1.582 - 1.0$$

$$= + 58.2 \%$$

RAVEN industries, inc.

STRESS ANALYSIS

Description: Main Seam

Location Reference/Load Direction: F/b-b

Ultimate Strength

P_{ult} = Minimum ultimate strength of canopy cloth (ravel strip test results, warp direction) x no. of material thicknesses at seam

= 45 x 4

= 180 lb/in

Allowable Load

$$P_{allow} = \frac{P_{ult}}{\text{Design Factor}}$$

$$= \frac{180}{2.247}$$

= 80.11 lb/in

Margin of Safety

$$M.S. = \frac{P_{allow}}{P_{Dev}} - 1.0 \qquad P_{Dev} = 13.03 \text{ lb/in}$$

$$= \frac{80.11}{13.03} - 1.0$$

$$= 6.148 - 1.0$$

$$= + 514.8 \ \%$$

RAVEN industries, inc.

STRESS ANALYSIS

Description: Radial Tape on Canopy Cloth

Location Reference/Load Direction: G/a-a

Ultimate Strength

P_{ult} = Minimum ultimate strength of canopy cloth (ravel strip test results, fill direction) + Minimum ultimate strength of radia tape x no. of tapes

= (41 + 990) (64)

= 65,984 lb

Allowable Load

$$P_{allow} = \frac{P_{ult}}{\text{Design Factor}}$$

$$= \frac{65,984}{2.043}$$

= 32,298 lb

Margin of Safety

$$M.S. = \frac{P_{allow}}{P_{Dev}} - 1.0 \qquad P_{Dev} = 17,620 \text{ lb}$$

$$= \frac{32,298}{17,620} - 1.0$$

$$= 1.833 - 1.0$$

$$= + 83.3 \%$$

STRESS ANALYSIS

Description: Radial Tape on Canopy Cloth

Location Reference/Load Direction: G/b-b

Ultimate Strength

P_{ult} = Minimum ultimate strength of canopy cloth (Ravel strip test results, warp direction)

= 45 lb/in

Allowable Load

$$P_{allow} = \frac{P_{ult}}{\text{Design Factor}}$$

$$= \frac{45}{2.137}$$

= 21.06 lb/in

Margin of Safety

$$M.S. = \frac{P_{allow}}{P_{Dev}} - 1.0 \qquad P_{Dev} = 13.03 \text{ lb/in}$$

$$= \frac{21.06}{13.03} - 1.0$$

$$= 1.616 - 1.0$$

$$= + 61.6 \%$$

STRESS ANALYSIS

Description: Radial Tape Across Main Seam

Location Reference/Load Direction: H/a-a

Ultimate Strength

P_{ult} = Minimum ultimate strength of tape + minimum ultimate strength of cloth x no. of joints (assume opening shock force is absorbed by first row of tape/seam joints)

= (990 + 41) x 64

= 65,984 lb

Allowable Load

$$P_{allow} = \frac{P_{ult}}{\text{Design Factor}}$$

$$= \frac{65,984}{2.022}$$

= 32,633 lb

Margin of Safety

$$M.S. = \frac{P_{allow}}{P_{Dev}} - 1.0 \qquad P_{Dev} = 17,620 \text{ lb}$$

$$= \frac{32,633}{17,620} - 1.0$$

$$= 1.852 - 1.0$$

$$= + 85.2 \%$$

STRESS ANALYSIS

Description: Radial Tape Across Main Seam

Location Reference/Load Direction: H/b-b

Ultimate Strength

P_{ult} = Minimum ultimate strength of cloth (warp direction) x no. of thicknesses of cloth

= 45 x 4

= 180 lb/in

Allowable Load

$$P_{allow} = \frac{P_{ult}}{\text{Design Factor}}$$

$$= \frac{180}{2.188}$$

= 82.27 lb/in

Margin of Safety

$$M.S. = \frac{P_{allow}}{P_{Dev}} - 1.0 \qquad P_{Dev} = 13.03 \text{ lb/in}$$

$$= \frac{82.27}{13.03} - 1.0$$

$$= 6.314 - 1.0$$

$$= + 531.4 \%$$

RAVEN industries, inc.

STRESS ANALYSIS

Description: Radial Tape on Skirt Edge Hem

Location Reference/Load Direction: I/a-a

Ultimate Strength

P_{ult} = Minimum ultimate strength of tape + minimum ultimate strength of cloth x no. of thicknesses of cloth x no. of tapes on edge hems

$= [990 + (45 \times 3)] \times 8$

Allowable Load

$$P_{allow} = \frac{P_{ult}}{\text{Design Factor}}$$

$$= \frac{9000}{2.386}$$

$$= 3772 \text{ lb}$$

Margin of Safety

$$M.S. = \frac{P_{allow}}{P_{Dev}} - 1.0$$

$$= \frac{3772}{2203} - 1.0$$

$$= 1.712 - 1.0$$

$$= + 71.2 \%$$

$P_{Dev} = \frac{8}{64} \times 17{,}620 = 2203$ lb

(Assuming equal load distribution of each radial tape)

RAVEN industries, inc.

STRESS ANALYSIS

Description: Radial Tape on Radial Tape on Canopy Cloth

Location Reference/Load Direction: J/b-b

Ultimate Strength

P_{ult} = Minimum ultimate strength of tape + minimum ultimate strength of cloth x no. of joints (assume opening shock force is absorbed by first row of tape-on-tape joints)

= (990 + 41) x 64

= 65,984 lb

Allowable Load

$$P_{allow} = \frac{P_{ult}}{\text{Design Factor}}$$

$$= \frac{65,984}{2.064}$$

= 31,969 lb

Margin of Safety

$$M.S. = \frac{P_{allow}}{P_{Dev}} - 1.0 \qquad P_{Dev} = 17,620 \text{ lb}$$

$$= \frac{31,969}{17,620} - 1.0$$

$$= 1.814 - 1.0$$

$$= + 81.4 \%$$

STRESS ANALYSIS

Description: Radial Tape on Radial Tape on Main Seam

Location Reference/Load Direction: K/a-a

Ultimate Strength

P_{ult} = Minimum ultimate strength of tape + minimum ultimate strength of cloth x no. of thicknesses of cloth x no. of tape on tape on main seam joints

= [990 + (45 x 4)] x 28

= 32,760 lb

Allowable Load

$$P_{allow} = \frac{P_{ult}}{\text{Design Factor}}$$

$$= \frac{32,760}{2.569}$$

= 12,752 lb

Margin of Safety

$$M.S. = \frac{P_{allow}}{P_{Dev}} - 1.0$$

$$P_{Dev} = \frac{28}{84} \times 17,620 = 7709 \text{ lb}$$

(Assuming equal load distribution on each radial tape)

$$= \frac{12,752}{7709} - 1.0$$

$$= 1.654 - 1.0$$

$$= +65.4\%$$

RAVEN industries, inc.

STRESS ANALYSIS

Description: Radial Tape on Radial Tape on Main Seam

Location Reference/Load Direction: K/b-b

Ultimate Strength

P_{ult} = Minimum ultimate strength of tape + minimum ultimate strength of cloth x no. of tape on tape on main seam joints

= (990 + 41) x 28

= 28,868 lb

Allowable Load

$$P_{allow} = \frac{P_{ult}}{\text{Design Factor}}$$

$$= \frac{28,868}{2.111}$$

= 13,675 lb

Margin of Safety

$$M.S. = \frac{P_{allow}}{P_{Dev}} - 1.0 \qquad P_{Dev} = \frac{28}{64} \times 17,620 = 7709 \text{ lb}$$

$$= \frac{13,675}{7709} - 1.0$$

(Assuming equal load distribution on each radial tape)

= 1.774 - 1.0

= +77.4 %

RAVEN industries, inc.

STRESS ANALYSIS

Description: Radial Tape on Minor-to-Major Panel Seam

Location Reference/Load Direction: L/a-a

Ultimate Strength

P_{ult} = Minimum ultimate strength of canopy cloth

= 41 lb/in

Allowable Load

$$P_{allow} = \frac{P_{ult}}{\text{Design Factor}}$$

$$= \frac{41}{2.004}$$

= 20.46 lb/in

Margin of Safety

$$M.S. = \frac{P_{allow}}{P_{Dev}} - 1.0 \qquad P_{Dev} = 13.03 \text{ lb/in}$$

$$= \frac{20.46}{13.03} - 1.0$$

$$= 1.570 - 1.0$$

$$= +57.0 \%$$

STRESS ANALYSIS

Description: Radial Tape on Minor-to-Major Panel Seam

Location Reference/Load Direction: L/b-b

Ultimate Strength

P_{ult} = Minimum ultimate strength of tape + minimum ultimate strength of cloth x no. of thicknesses of cloth x no. of tapes on minor-to-major panel seam

= [990 + (41 x 5)] x 4

= 4780 lb

Allowable Load

$$P_{allow} = \frac{P_{ult}}{\text{Design Factor}}$$

$$= \frac{4780}{2.158}$$

= 2215 lb

Margin of Safety

$$M.S. = \frac{P_{allow}}{P_{Dev}} - 1.0 \qquad P_{Dev} = \frac{4}{64} \times 17{,}620 = 1101 \text{ lb}$$

$$= \frac{2215}{1101} - 1.0$$

(Assuming equal load distribution on each radial tape)

= 2.012 - 1.0

= +101.2 %

RAVEN industries, inc.

STRESS ANALYSIS

Description: Radial Tape On Radial Tape on Minor-to-Major Panel Seam (at corner cut-out)

Location Reference/Load Direction: M/a-a

Ultimate Strength

P_{ult} = Minimum ultimate strength of tape + minimum ultimate strength of cloth x no. of thicknesses of cloth x no. of tape on tape on minor-to-major panel seam joints

= $[990 + (41 \times 3)] \times 4$

= 4452 lb

Allowable Load

$$P_{allow} = \frac{P_{ult}}{\text{Design Factor}}$$

$$= \frac{4452}{2.158}$$

= 2063 lb

Margin of Safety

$$M.S. = \frac{P_{allow}}{P_{Dev}} - 1.0 \qquad P_{Dev} = \frac{4}{64} \times 17{,}620 = 1101 \text{ lb}$$

$$= \frac{2063}{1101} - 1.0$$

(Assuming equal load distribution on each radial tape)

$$= 1.874 - 1.0$$

= +87.4 %

RAVEN industries, inc.

STRESS ANALYSIS

Description: Radial Tape on Radial Tape on Minor-to-Major Panel Seam (At Corner Cut-Out)

Location Reference/Load Direction: M/b-b

Ultimate Strength

P_{ult} = Minimum ultimate strength of tape + minimum ultimate strength of cloth x no. of thicknesses of cloth x no. of tape on tape on minor-to-major panel seam joints

= $[990 + (41 \times 3)] \times 4$

= 4452 lb

Allowable Load

$$P_{allow} = \frac{P_{ult}}{\text{Design Factor}}$$

$$= \frac{4452}{2.111}$$

= 2109 lb

Margin of Safety

$$M.S. = \frac{P_{allow}}{P_{Dev}} - 1.0$$

$$P_{Dev} = \frac{4}{64} \times 17{,}620 = 1101 \text{ lb}$$

$$= \frac{2109}{1101} - 1.0$$

(Assuming equal load distribution on each radial tape)

$$= 1.916 - 1.0$$

$$= \underline{91.6}\ \%$$

STRESS ANALYSIS

Description: Radial Tape on Radial Tape on Minor-to-Major Panel Seam (No Main Seam)

Location Reference/Load Direction: N/a-a

Ultimate Strength

P_{ult} = Minimum ultimate strength of tape + minimum ultimate strength of cloth x no. of tape on tape on minor-to-major panel seam joints

= (990 + 41) x 12

= 12,372 lb

Allowable Load

$$P_{allow} = \frac{P_{ult}}{\text{Design Factor}}$$

$$= \frac{12,372}{2.263}$$

= 5467 lb

Margin of Safety

$$M.S. = \frac{P_{allow}}{P_{Dev}} - 1.0$$

$$P_{Dev} = \frac{12}{64} \times 17,620 = 3304 \text{ lb}$$

$$= \frac{5467}{3304} - 1.0$$

(Assuming equal load distribution on each radial tape)

$$= 1.655 - 1.0$$

= +65.5 %

RAVEN industries, inc.

STRESS ANALYSIS

Description: Radial Tape on Radial Tape on Minor-to-Major Panel Seam (No Main Seam)

Location Reference/Load Direction: N/b-b

Ultimate Strength

P_{ult} = Minimum ultimate strength of tape + minimum ultimate strength of cloth x no. of thicknesses of cloth x no. of tape on tape on minor-to-major panel seam joints

= [990 + (41 x 5)] x 12

= 14,340 lb

Allowable Load

$$P_{allow} = \frac{P_{ult}}{\text{Design Factor}}$$

$$= \frac{14,340}{2.269}$$

= 6320 lb

Margin of Safety

$$M.S. = \frac{P_{allow}}{P_{Dev}} - 1.0 \qquad P_{Dev} = \frac{12}{64} \times 17,620 = 3304 \text{ lb}$$

$$= \frac{6320}{3304} - 1.0$$

(Assuming equal load distribution on each radial tape)

= 1.913 - 1.0

= +91.3 %

STRESS ANALYSIS

Description: Radial Tape on Radial Tape on Minor-to-Major Panel Seam (On Main Seam)

Location Reference/Load Direction: O/a-a

Ultimate Strength

P_{ult} = Minimum ultimate strength of tape + minimum ultimate strength of cloth x no. of tape on tape on minor-to-major panel seam joints

= (990 + 41) x 16

= 16,496 lb

Allowable Load

$$P_{allow} = \frac{P_{ult}}{\text{Design Factor}}$$

$$= \frac{16,496}{2.043}$$

= 8074

Margin of Safety

$$M.S. = \frac{P_{allow}}{P_{Dev}} - 1.0 \qquad P_{Dev} = \frac{16}{64} \times 17,620 = 4405 \text{ lb}$$

$$= \frac{8074}{4405} - 1.0$$

(Assuming equal load distribution on each radial tape)

= 1.833 - 1.0

= +83.3 %

RAVEN industries, inc.

STRESS ANALYSIS

Description: Radial Tape on Radial Tape on Minor-to-Major Panel Seam (On Main Seam)

Location Reference/Load Direction: O/b-b

Ultimate Strength

P_{ult} = Minimum ultimate strength of tape + minimum ultimate strength of cloth x no. of thicknesses of cloth x no. of tape on tape on minor-to-major panel seam joints

= [990 + (41 x 5)] x 12

= 14,340 lb

Allowable Load

$$P_{allow} = \frac{P_{ult}}{\text{Design Factor}}$$

$$= \frac{14,340}{2.394}$$

= 5990 lb

Margin of Safety

$$M.S. = \frac{P_{allow}}{P_{Dev}} - 1.0 \qquad P_{Dev} = \frac{12}{64} \times 17,620 = 4405 \text{ lb}$$

$$= \frac{5990}{4405} - 1.0$$

(Assuming equal load distribution on each radial tape)

= 1.360 - 1.0

= +36.0 %

RAVEN industries, inc.

STRESS ANALYSIS

Description: Suspension Line/Radial Tape Joint

Location Reference/Load Direction: P/A-A

Ultimate Strength

P_{ult} = Minimum ultimate strength of weakest member (suspension line) x no. of lines

= 620 x 64

= 39,680 lb

Allowable Load

$$P_{allow} = \frac{P_{ult}}{\text{Design Factor}}$$

$$= \frac{39,680}{2.022}$$

= 19,624 lb

Margin of Safety

$$M.S. = \frac{P_{allow}}{P_{Dev}} - 1.0 \qquad P_{Dev} = 17,620 \text{ lb.}$$

$$= \frac{19,624}{17,620} - 1.0$$

$$= 1.114 - 1.0$$

$$= +1 1.4$$

RAVEN industries, inc.

STRESS ANALYSIS

Description: Suspension Line/Canopy Riser Joint

Location Reference/Load Direction:

Ultimate Strength

P_{ult} = Minimum ultimate strength of weakest member (Suspension line) x no. of lines

= 620 x 64

= 39,680 lb

Allowable Load

$$P_{allow} = \frac{P_{ult}}{\text{Design Factor}}$$

$$= \frac{39,680}{2.027}$$

= 19,576 lb

Margin of Safety

$$M.S. = \frac{P_{allow}}{P_{Dev}} - 1.0 \qquad P_{Dev} = 17,620 \text{ lb}$$

$$= \frac{19,576}{17,620} - 1.0$$

$$= 1.111 - 1.0$$

$$= +11.1 \%$$

STRESS ANALYSIS

Description: Canopy Riser at Keeper

Location Reference/Load Direction:

Ultimate Strength

P_{ult} = Minimum ultimate strength of webbing x no. of riser webbing plys

= 7300 x 8

= 58,400 lb

Allowable Load

$$P_{allow} = \frac{P_{ult}}{\text{Design Factor}}$$

$$= \frac{58,400}{2.090}$$

= 27,943 lb

Margin of Safety

$$M.S. = \frac{P_{allow}}{P_{Dev}} - 1.0 \qquad P_{Dev} = 17,620 \text{ lb}$$

$$= \frac{27,943}{17,620} - 1.0$$

$$= 1.586 - 1.0$$

$$= +58.6 \%$$

STRESS ANALYSIS

Description: Canopy Riser at Main Keeper Tie

Location Reference/Load Direction:

Ultimate Strength

P_{ult} = Minimum ultimate strength of webbing x no. of legs with ties x no. webbing plys per leg

= 7300 x 2 x 2

= 29,200

Allowable Load

$$P_{allow} = \frac{P_{ult}}{\text{Design Factor}}$$

$$= \frac{29,200}{1.914}$$

= 15,256 lb

Margin of Safety

$$M.S. = \frac{P_{allow}}{P_{Dev}} - 1.0$$

P_{Dev} = 2/4 x 17,620 = 8810 lb

(Assuming equal load distribution on each riser leg)

$$= \frac{15,256}{8810} - 1.0$$

$$= 1.732 - 1.0$$

= +73.2 %

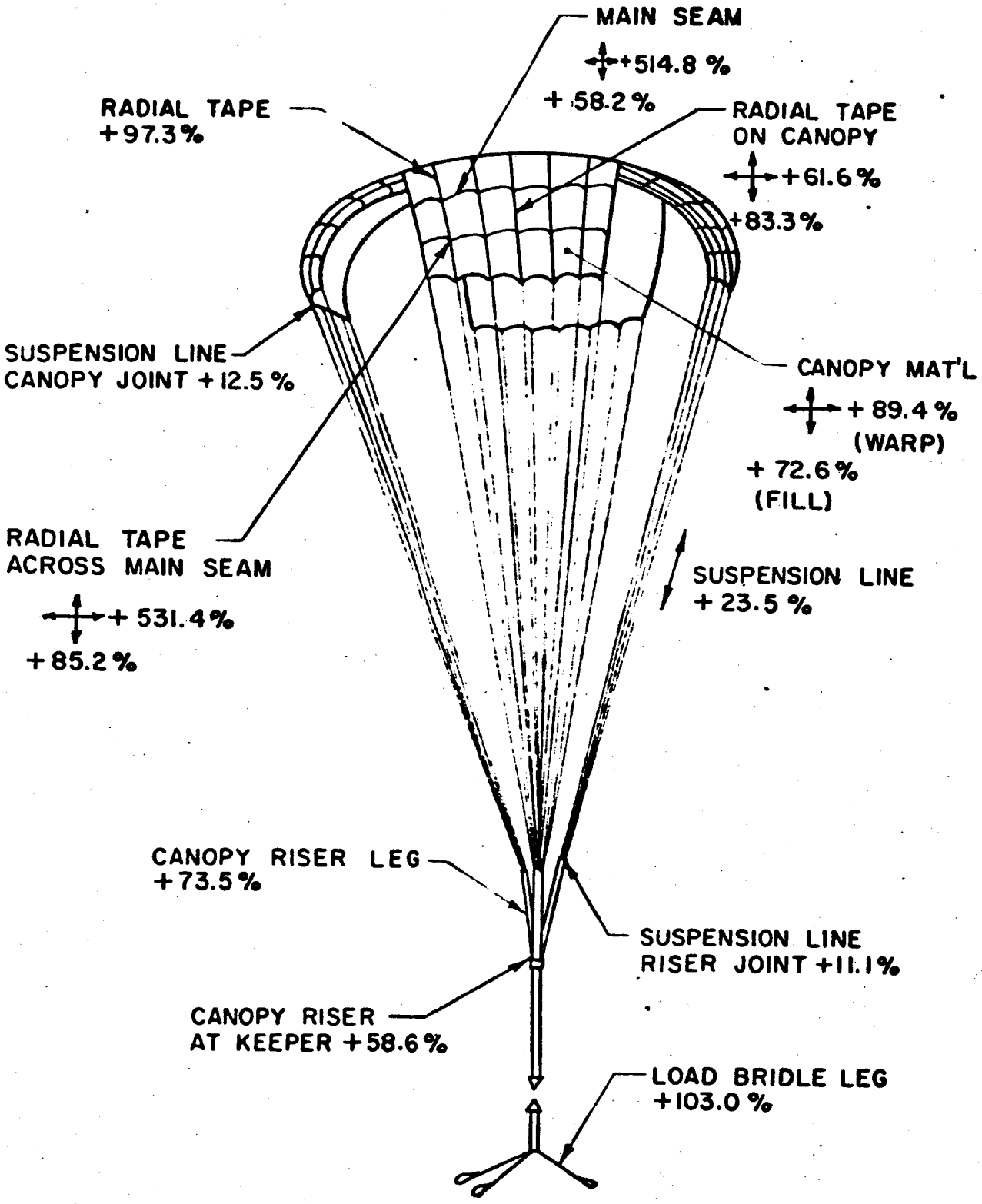

FIGURE 14 SAFETY MARGINS

RAVEN industries, inc.

SECTION VII

WEIGHT ANALYSIS

VII. WEIGHT ANALYSIS

CALCULATED CROSS-OVER AREA WEIGHT

Width = Calculated panel width + seam allowance

No. of 1/2 inch seams - 10

Additional material width per seam = 1.5 in.

$$\text{Width} = 18.8 + (10)\left(\frac{1.5}{12}\right) = 20.05 \text{ ft.}$$

Length = Calculated panel width + minor-to-major panel seam allowance

No. of 3/4 inch minor-to-major panel seams = 2

Additional material length per seam = 3.0 in.

$$\text{Length} = 18.8 + (2)\left(\frac{3}{12}\right) = 19.30 \text{ ft.}$$

No. of radial tapes on cross-over area = 32

Length per tape = panel width = 18.8 ft.

Canopy material weight = 1.25 oz/yd^2

Radial tape weight = 0.41 oz/yd

$$\text{Calculated weight} = \frac{(20.05)(19.30)(1.25)}{(9)\ (16)} + \frac{(32)(18.8)(0.41)}{(3)\ (16)}$$

$$= 8.150 \text{ lb.}$$

Add 6% for thread

Total weight = 9.01 lb.

CALCULATED MINOR PANEL WEIGHT

Width = Calculated panel width + edge hem allowance

No. of 3/4 inch hems per panel = 2

Additional material width per hem = 1.5 in.

$$\text{Width} = 18.8 + (2)\frac{(1.5)}{(12)} = 19.05 \text{ ft.}$$

Length = Calculated panel length - skirt hem + seam allowance

No. of 1/2 inch seams per panel = 9

Additional material width per seam = 1.5 in.

$$\text{Length} = 26.2 + 9\frac{(1.5)}{(12)} = 27.25 \text{ ft.}$$

No. of radial tapes on minor panel = 16

Length = Panel length + suspension line loop allowance

= 26.2 + 0.34 = 26.54 ft.

No. of minor panels = 4

$$\text{Calculated weigth} = 4\left[\frac{(19.05)(27.25)(1.25)}{(9)\ (16)} + \frac{(16)(26.54)(0.41)}{(3)\ (16)}\right]$$

$$= 32.52 \text{ lb.}$$

Add 4% for thread

Total weight = 33.82 lb.

CALCULATED SKIRT HEM WEIGHT

Hem Length = 4 x calculated panel width

Material width per hem = 3 in. = 0.25 ft.

Material weight = 1.25 oz/yd^2

Tape weight = 0.57 oz/yd

$$\text{Calculated weight} = \frac{(4)(18.8)(0.57)}{(3)\ (16)} + \frac{(4)(0.25)(18.8)(1.25)}{(9)\ (16)}$$

$$= 1.06 \text{ lb.}$$

Add 5% for thread

Total weight - 1.11 lb.

CALCULATED SUSPENSION LINE WEIGHT

Total no. of lines = 64

Cut length of lines = 67.83 ft.

Line weight = 60 yd/lb

$$\text{Calculated weight} = \frac{(64)(67.83)}{(3)\ (60)}$$

$$= 24.12 \text{ lb.}$$

Add 1% for thread

Total weight = 24.36 lb.

CALCULATED METAL LINK WEIGHT

Total No. of links = 8

Weight per link = 1.80 oz.

Total weight = $\frac{(8)\ (1.80)}{16}$ = 0.90 lb.

CALCULATED CANOPY RISER WEBBING WEIGHT

Dacron webbing length = total riser length + keeper length

= 78.67 + 0.79

= 79.46 ft.

Webbing weight = 2.29 oz/yd

Cotton webbing length = total length of 9 buffers + 4 keepers + 2 keeper ties

= (9)(6.5) + (4)(6) + (2)(10.25)

= 103 in.

Webbing weight = 0.76 oz/yd

Calculated weight = $\frac{(79.46)(2.29)}{(3)(16)} + \frac{(103)(0.76)}{(36)(16)}$

= 3.93 lb.

Add 2% for thread

Total weight = 4.01 lb.

CALCULATED LOAD BRIDLE WEIGHT

Nylon webbing length = total bridle length

= 41.7 ft.

Nylon webbing weight = 2.97 oz/yd

Dacron webbing length = keeper length

= 0.79 ft.

Dacron webbing weight = 2.29 oz/yd

Cotton webbing length = total length of 4 buffers

+ 2 keeper ties

= (4)(7.5) + 2 (10.25)

= 50.5 in.

Cotton webbing weight = 0.76 oz/yd

Dacron material required = length x width

= 63 x 2.75

= 173.25 in.^{2}

Dacron material weight = 6 oz/yd^2

$$\text{Calculated weight} = \frac{(41.7)(2.97)}{(3)\ (16)} + \frac{(0.79)(2.29)}{(3)\ (16)} + \frac{(50.5)(0.76)}{(36)(16)} + \frac{(173.25)(6)}{(1728)(16)}$$

= 2.73 lb.

Add 6% for thread

Total weight = 2.89 lb.

WEIGHT SUMMARY

CALCULATED WEIGHT

DESCRIPTION	PART WEIGHT	COMPONENT WEIGHT
CROSS-OVER AREA	9.01 LB.	
MINOR PANELS (4)	33.82 LB.	
SKIRT HEM	1.11 LB.	
SUSPENSION LINES (64)	24.36 LB.	
CROSS PARACHUTE, 54 FT. D.		68.30 LB.
CANOPY RISER WEBBING	4.01 LB.	
METAL CONNECTING LINKS (8)	0.90 LB.	
CANOPY RISER		4.91 LB.
CROSS PARACHUTE & CANOPY RISER		73.21 LB.
LOAD BRIDLE		2.89 LB.
TOTAL SYSTEM WEIGHT		76.10 LB.

TABLE 3

WEIGHT SUMMARY

ACTUAL WEIGHT

DESCRIPTION	WEIGHT
CROSS PARACHUTE (INCLUDES SUSPENSION LINES AND CANOPY RISER)	73.56 LB.
LOAD BRIDLE	3.00 LB.
DEPLOYMENT BAG	1.94 LB.
SHIPPING CONTAINER	9.13 LB.
TOTAL SYSTEM WEIGHT	78.50 LB.

TABLE 4

RAVEN industries, inc.

SECTION VIII

CENTER OF GRAVITY AND MASS MOMENTS OF INERTIA CALCULATIONS

VIII. CENTER OF GRAVITY AND MASS MOMENTS OF INERTIA CALCULATIONS

CALCULATED CENTER OF GRAVITY ("STRUNG-OUT" POSITION)

Actual weight of the fabricated parachute-canopy riser assembly was 73.56 lb. vs. the calculated weight of 73.21 lb. The actual weight will be used for C. G. calculations. Since the calculated weights of the canopy riser and suspension lines are considered to be reasonably accurate, the difference of 0.35 lb. will be assumed to be proportionally distributed between the cross over area and the four minor panels.

Total calculated weight = calculated cross-over area weight + calculated minor panel weight

$$= 9.01 + 33.82$$

$$= 42.83 \text{ lb.}$$

% Total weight for cross-over area $= \frac{9.01}{42.83} = 21\%$

% Total weight for minor panels $= \frac{33.82}{42.83} = 79\%$

Actual weight of cross-over area (used in C. G. calculation)

$$= 9.01 + (0.21)(0.35)$$

$$= 9.08 \text{ lb.}$$

Actual weight of minor panels (used in C. G. calculation)

$$= 33.82 + (0.79)(0.35)$$

$$= 34.10 \text{ lb.}$$

Summing moments about the lower end of canopy riser:

$$73.65\,x = (4.10)(4.50) + (0.90)(9.05) + (24.36)(42.69) + (1.11)(76.32) + (34.10)(89.42) + (9.08)(105.61)$$

$$x = 70.05 \text{ ft.}$$

System center of gravity location = 70.05 ft. from lower end of canopy riser.

Unit and parachute system weights and C. G. locations are tabulated in Table 5, page 140 , and are presented pictorially, Figure 15, page 141 .

STRESS ANALYSIS

Description: Radial Tape on Radial Tape on Canopy Cloth

Location Reference/Load Direction: J/a-a

Ultimate Strength

P_{ult} = Minimum ultimate strength of tape + minimum ultimate strength of cloth x no. of joints (assume opening shock force is absorbed by first row of tape-on-tape joints)

= (990 + 45) x 64

= 66,240 lb

Allowable Load

$$P_{allow} = \frac{P_{ult}}{\text{Design Factor}}$$

$$= \frac{66,240}{2.260}$$

= 29,310 lb

Margin of Safety

$$M.S. = \frac{P_{allow}}{P_{Dev}} - 1.0 \qquad P_{Dev} = 17,620 \text{ lb}$$

$$= \frac{29,310}{17,620} - 1.0$$

$$= 1.663 - 1.0$$

$$= +66.3 \%$$

DESCRIPTION	WEIGHT	UNIT C.G. LOCATION	C.G. DIST. FROM CONFLUENCE PT.
CROSS-OVER AREA	9.08 LB.	1/3 DISTANCE FROM AREA SIDE TO APEX	105.61 FT.
MINOR PANELS (4)	34.10 LB.	MID-POINT OF PANEL LENGTH	89.42 FT.
SKIRT HEM	1.11 LB.	MID-POINT OF HEM WIDTH	76.32 FT.
SUSPENSION LINES	24.36 LB.	MID-POINT OF LINE FINISHED LENGTH	42.69 FT.
METAL CONNECTING LINK	0.90 LB.	MID-POINT OF LINK	9.05 FT.
CANOPY RISER WEBBING	4.10 LB.	MID-POINT OF WEBBING LENGTH	4.50 FT.
PARACHUTE SYSTEM	73.65 LB.		70.05 FT.

TABLE 5 PARACHUTE COMPONENT AND SYSTEM CENTER OF GRAVITY LOCATIONS

(STRUNG-OUT POSITION)

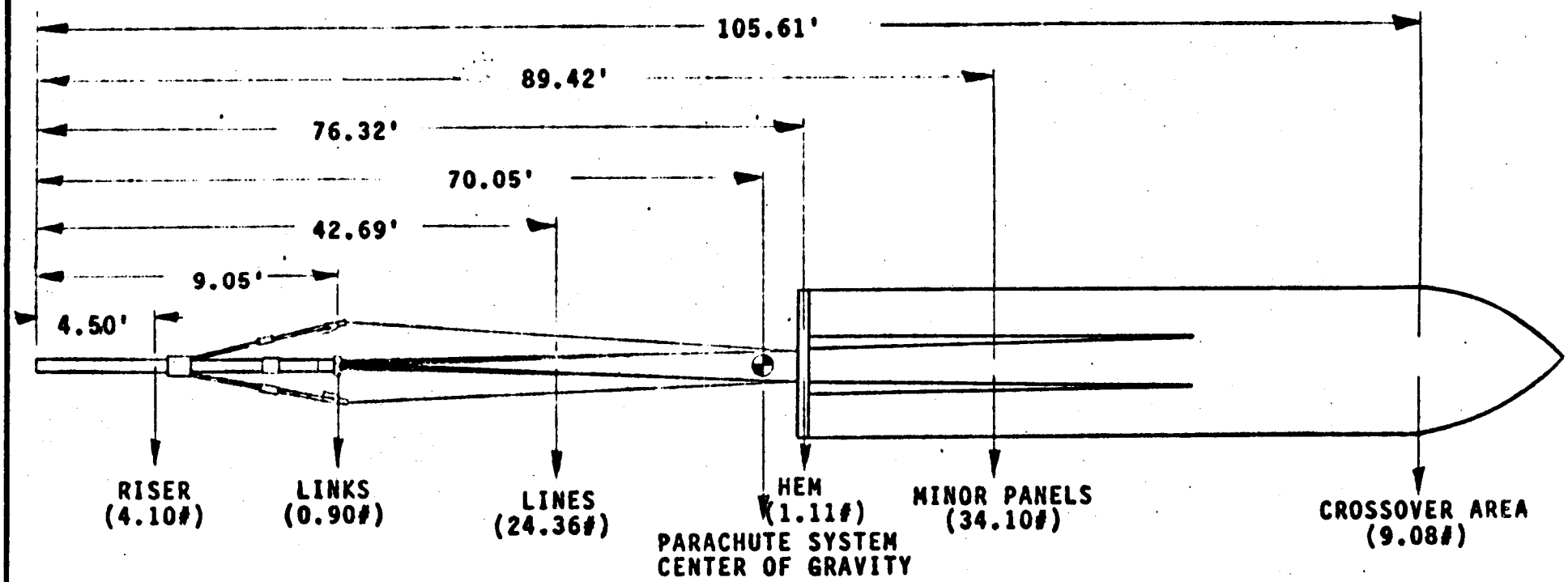

FIGURE 15. PARACHUTE SYSTEM CENTER OF GRAVITY LOCATION ("STRUNG-OUT") POSITION

RAVEN industries, inc.

CALCULATED CENTER OF GRAVITY (PACKED POSITION)

In order to determine the center of gravity location of the parachute system in the packed position, the pack density of the final configuration and packed length requirements must be calculated. Uniform pack density is assumed. The weight of 52 inches of the canopy riser is subtracted from the total system weight since this length of the riser is not packed inside the deployment bag.

Calculated Deployment Bag Volume

Bag diameter = 11.5 in.

Bag length = 29 in.

$$\text{Volume} = \frac{\pi D^2}{4} L$$

$$= (0.7854)(11.5)^2(29)$$

$$= 3012.21 \text{ in.}^3$$

$$= 1.74 \text{ ft.}^3$$

Calculated Weight of Canopy Riser Outside Deployment Bag

Total webbing length (8 plys) outside deployment bag

$$= 8\ (52+1)$$

$$= 424 \text{ in.}$$

Dacron webbing weight = 2.29 oz/yd

Total unpacked weight = $\frac{(424)(2.29)}{(36)(16)}$

= 1.69 lb.

Calculated Pack Density

Total parachute system weight = 73.65 lb.

Total packed weight = 73.65 - 1.69

= 71.96 lb.

Pack density = Packed weight/available volume

= 71.96/1.74

= 41.36 lb./ft.^{3}

Calculated Length Required for Parachute Components

Canopy weight = Cross-over area weight + minor panel weight + skirt hem weight

= 9.08 + 34.10 + 1.11

= 44.29 lb.

Required length = $\frac{4 \times \text{Weight}}{\pi D^2 \times \text{Pack Density}}$

= $\frac{(4)(44.29)(1728)}{(3.1416)(11.5)^2(41.36)}$

= 17.81 in.

Suspension line weight = 24.36 lb.

Required length = $\frac{(4)(24.36)(1728)}{(3.1416)(11.5)^2(41.36)}$

= 9.80 in.

Canopy riser weight = Total webbing weight - webbing weight outside deployment bag + connecting link weight

$$= 4.10 - 1.69 + 0.90$$

$$= 3.31 \text{ in.}$$

$$\text{Required length} = \frac{(4)(3.31)(1728)}{(3.1416)(11.5)^2(41.36)}$$

$$= 1.33 \text{ in.}$$

Summing moments about bottom of deployment bag

$$71.96\ x = (44.29)(8.91) + (24.36)(22.71) + (3.31)(28.275)$$

$$x = 14.47 \text{ in.}$$

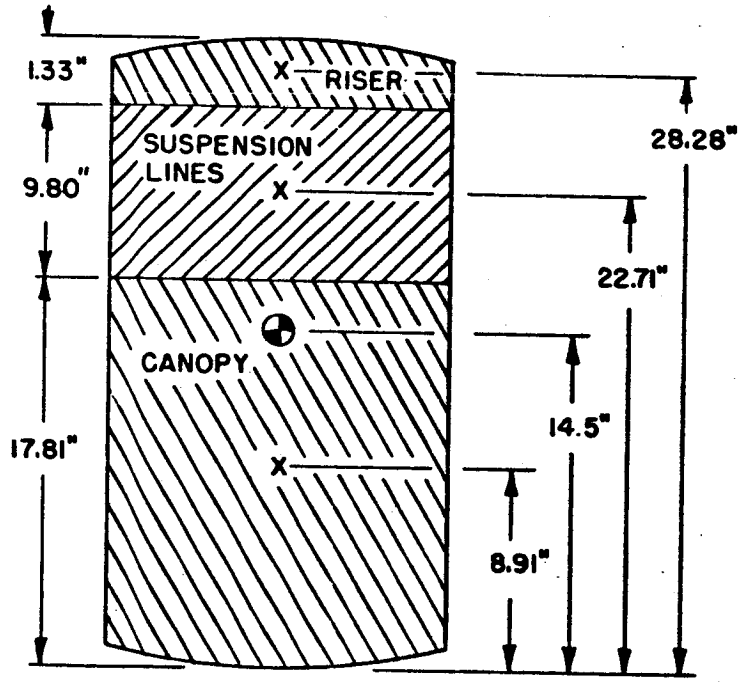

Figure 16. Parachute System Center of Gravity Location (Packed Position)

The assumption of uniform pack density defines the C. G. location as the dimensional center of the deployment bag, 14.50 inches from the bag bottom. Since the canopy requires 17.81 inches pack length, this point is within the canopy material. By making an assumption that pack length required is directly proportional to material area, a good approximation of the C. G. location on the canopy is obtained.

Actual material area = 2328.24 ft.^{2}

Canopy material below C. G. $= \frac{14.50}{17.81}(2328.24)$

$= 1895.51$ ft.^{2}

Canopy material above C. G. = 2328.24 - 1895.51

= 432.73 ft.^{2}

Canopy panel weight = 18.84 ft.

Panel length required $= \frac{432.73}{(4)(18.84)}$

= 5.74 ft.

The approximate center of gravity location of the parachute in the packed position is therefore loacted on the canopy, 5.74 ft. above the canopy skirt.

CALCULATED CENTER OF GRAVITY (INFLATED POSITION)

In calculating the center of gravity location of the fully inflated parachute, actual vertical distances must first be determined. These required lengths are obtained from a straight forward manipulation of canopy geometry. The inflated canopy is assumed to be hemispherical in shape. In the following calculations, reference is made to Figure 17, page 147.

θ = half angle at confluence point

$= \sin^{-1} \frac{22.67}{71.21}$

$= 0.31835$

$= 18.56^{\circ}$

Canopy Riser

End of riser to confluence point = 5 ft.

Vertical length of riser leg (confluence point to suspension line) $= 4 \cos 18.56^{\circ}$

$= (4)(0.9480)$

$= 3.79$ ft.

Suspension Lines

Vertical length (confluence point to canopy skirt)

$= 71.21 \cos 18.56^{\circ}$

$= (71.21)(0.9480)$

$= 67.51$ ft.

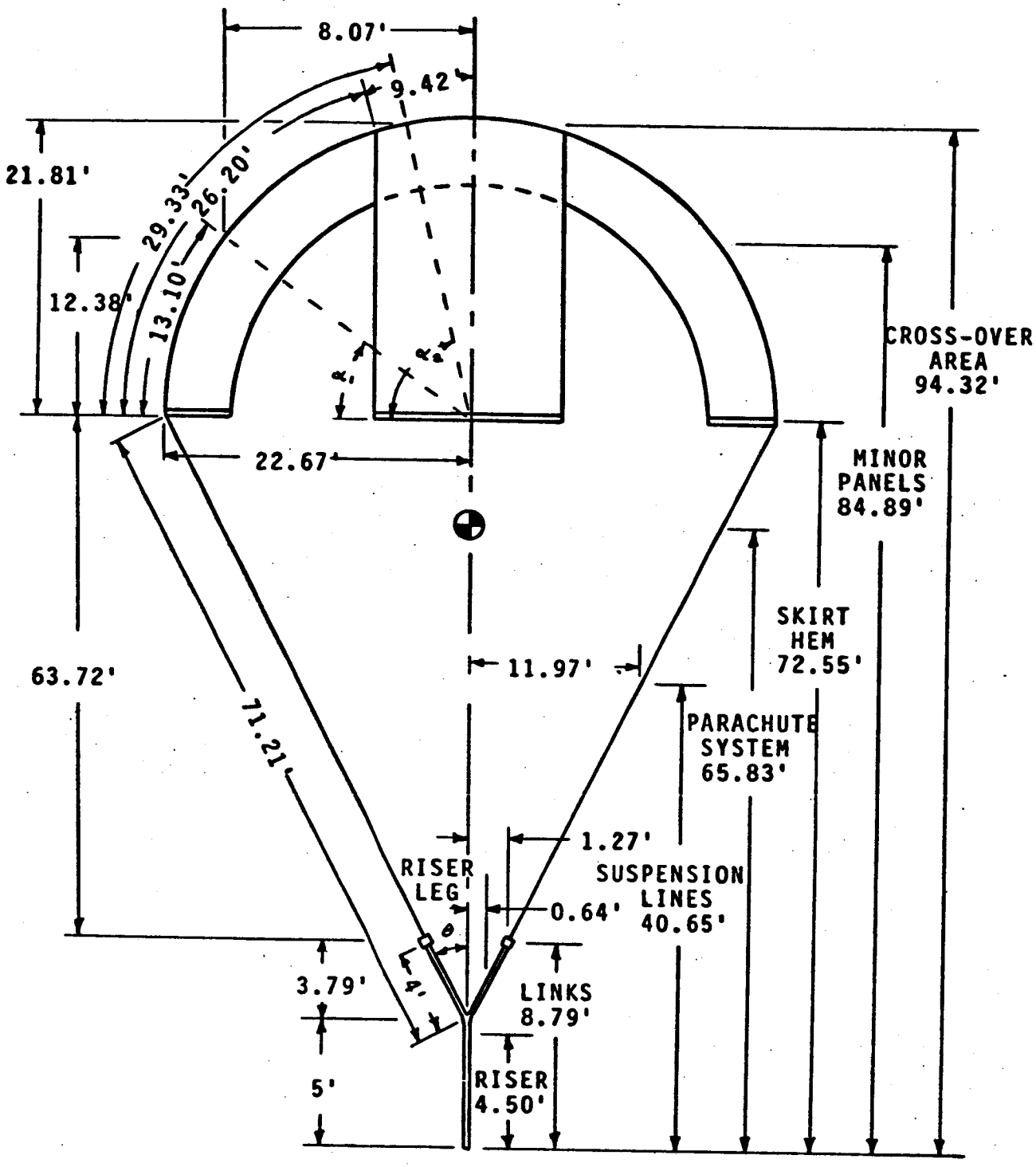

FIGURE 17 PARACHUTE SYSTEM CENTER OF GRAVITY LOCATION (INFLATED POSITION)

Vertical length of suspension lines = 67.51 - 3.79

= 63.72 ft.

Minor Panels

$$\alpha_1 = \frac{\text{Arc length}}{\text{Radius}}$$

Arc Length = 1/2 minor panel length

= 13.10 ft.

Radius = 1/2 projected diameter

= 22.67 ft.

$$\alpha_1 = \frac{13.10}{22.67}$$

= 0.5779 radians

= 33.11°

Vertical length (canopy skirt to minor panel C.G.)

= r sin α_1

= (22.67)(0.5463)

= 12.38 ft.

Cross-Over Area

$$\alpha_2 = \frac{\text{Arc Length}}{\text{Radius}}$$

Arc Length = Minor panel length + 1/3 distance from cross-over area edge to apex

$= 26.20 + 3.14$

$= 29.34$ ft.

$$\alpha_2 = \frac{29.34}{22.67}$$

$= 1.2942$

$= 74.16^{\circ}$

Vertical length (canopy skirt to cross-over area C.G.)

$= r \sin \alpha_2$

$= (22.67)(0.9620)$

$= 21.81$ ft.

Summing moments about the lower end of the canopy riser:

$$73.65\,x = (4.10)(4.50) + (0.90)(8.79) + (24.36)(40.65) + (1.11)(72.55) + (34.10)(84.89) + (9.08)(94.32)$$

$x = 65.83$ ft.

Center of gravity location of the fully inflated parachute is 65.83 ft. from lower end of riser.

MASS MOMENTS OF INERTIA

Calculations of the mass moments of inertia are based on a set of rectilinear axis with the origin at the parachute system center of gravity location. The rotational freedoms about these axis are defined as follows:

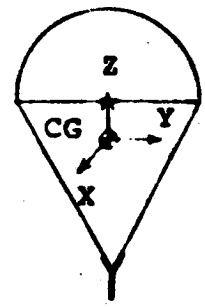

Yaw - Rotation about X-axis

Pitch - Rotation about Y-axis

Roll - Rotation about Z-axis

The following assumptions are made:

1. The canopy is fully inflated and hemispherical in shape.
2. The complete system is considered a rigid body.
3. Each individual system component is considered as a point mass.

Reference is made to Figure 17 for definition of dimensions in the following calculations.

Roll Mass Moment of Inertia

Riser Legs

Each individual leg is considered as a straight inclined rod. Assuming the weight of each leg is proportional to leg length:

$$\text{weight/leg} = \frac{(48)(4.10)}{(108)(4)}$$

$$= 0.46 \text{ lb.}$$

Moment of inertia about inclined axis through leg C.G. =

$$\frac{m\, l^2 \sin^2 \theta}{12}$$

$$= \frac{(0.46)(4)^2 \sin^2 18.56^\circ}{(32.2)(12)}$$

$$= \frac{(0.46)(4)^2 (0.31835)^2}{(32.2)(12)}$$

$$= 0.0019 \text{ slug}\cdot\text{ft}^2$$

The moment of inertia of one leg about the Z axis is obtained by use of the parallel-axis theorem

$$I_z = I_{CG} = m\, d^2$$

d = horizontal distance from leg C.G. to Z axis

vertical distance (confluence point to leg C.G.) = 1.90 ft.

$$d = 1.90 \tan \theta$$

$$= 1.90 \tan 18.56^\circ$$

$$= (1.90)(0.3357)$$

$$= 0.64 \text{ ft.}$$

$$I_z = 0.0019 + \frac{(0.46)(0.64)^2}{32.2}$$

$= 0.0078 \text{ slug}\cdot\text{ft}^2$

For four legs: $I_g = (4)(0.0078)$

$= 0.03 \text{ slug}\cdot\text{ft}^2$

Connecting Links

Vertical distance (confluence point to links) = 3.79 ft.

Horizontal distance $= 3.79 \tan \theta$

$= (3.79)(0.3357)$

$= 1.27$ ft.

$$I_g = m\, r^2$$

$$= \frac{(0.90)(1.27)^2}{32.2}$$

$$= 0.05 \text{ slug}\cdot\text{ft}^2$$

Suspension Lines

The suspension line mass moment of inertia is obtained following the same procedure used for the riser legs.

$$\text{weight/line} = \frac{24.36}{64}$$

$$= 0.38 \text{ lb.}$$

Moment of inertia about inclined axis through line C.G. =

$$\frac{m\, l^2 \sin^2 \theta}{12}$$

$$= \frac{(0.38)(67.83)^2\ (0.31835)^2}{(32.2)\ (12)}$$

$$= 0.4586 \text{ slug}\cdot\text{ft}^2$$

$I_g = I_{CG} = m\, d^2$

d = horizontal distance from line C.G. to S-axis

vertical distance (confluence point to line C.G.)

= 35.65 ft.

$d = 35.65 \tan \theta$

$= (35.65)(0.3357)$

$= 11.97$ ft.

$$I_g = 0.4586 + \frac{(0.38)(11.97)^2}{32.2}$$

$$= 2.1495 \text{ slug}\cdot\text{ft}^2$$

For 64 lines: $I_g = (64)(2.1495)$

$= 137.57 \text{ slug}\cdot\text{ft}^2$

Skirt Hem

The skirt hem is considered as a thin rod bent in a circular arc

weight/panel hem $= \frac{1.11}{4} = 0.28$ lb.

horizontal distance to hem C.G. $= \frac{r \sin \beta}{\beta}$

r = radius of inflated canopy

= 22.67 ft.

= half angle subtended by skirt hem

= 0.41553 radians

horizontal distance = $\frac{(22.67)(0.4037)}{0.41553}$

= 22.02 ft.

$$I_g = m\,r^2$$

$$= \frac{(0.28)(22.02)^2}{32.2}$$

$$= 4.2164 \text{ slug}\cdot\text{ft}^2$$

For 4 skirt hems: $I_g = (4)\ (4.2164)$

$= 16.87 \text{ slug}\cdot\text{ft}^2$

Canopy

The minor panels and cross-over area, considered as a unit, are a hemispherical surface.

Canopy weight = minor panel weight + cross-over area weight

= 34.10 + 9.08

= 43.18 lb.

$$I_g = \frac{m\,r^2}{3}$$

$$= \frac{(43.18)(22.67)^2}{(32.2)\ (3)}$$

$$= 229.72 \text{ slug}\cdot\text{ft}^2$$

The moment of inertia of the main (vertical) section of the canopy riser about the z-axis is considered negligible. The resultant roll mass moment of inertia about the system center of gravity is, therefore:

$$(I_{C.G.})_{roll} = 0.03 + 0.05 + 137.57 + 16.87 + 229.72$$

$$= 384.24 \text{ slug}\cdot\text{ft}^2$$

<u>Yaw Mass Moment of Inertia</u>

Main (vertical) Riser

Main riser weight = 4.10 - (4)(0.46) = 2.26 lb.

Vertical distance (riser C.G. to x-axis) = 65.83-2.50

= 63.33 ft.

$$I_x = m\,r^2$$

$$= \frac{(2.26)(63.33)^2}{32.2}$$

$$= 281.50 \text{ slug}\cdot\text{ft}^2$$

Riser Legs

Moment of inertia about inclined axis through by C.G. =

$$\frac{m\,l^2 \sin^2 (90-\theta)}{12}$$

$$= \frac{(0.46)(4)^2 \sin^2 71.44^\circ}{(32.2)(12)}$$

$$= \frac{(0.46)(4)^2(0.9480)^2}{(32.2)(12)}$$

$$= 0.0171 \text{ slug}\cdot\text{ft}^2$$

$$I_x = I_{C.G.} + m\,d^2$$

d = vertical distance (leg C.G. to x-axis)

= 65.83 - 6.40

= 59.43 ft.

$$I_x = 0.0171 + \frac{(0.46)(59.43)^2}{32.2}$$

$$= 50.4732 \text{ slug}\cdot\text{ft}^2$$

For four legs: $I_x = (4)(50.47)$

$= 201.88 \text{ slug}\cdot\text{ft}^2$

Connecting Links

Vertical distance (link C.G. to x-axis) = 65.83-8.79

= 57.04 ft.

$$I_x = m\,r^2$$

$$= \frac{(0.90)(57.04)^2}{32.2}$$

$$= 90.94 \text{ slug}\cdot\text{ft}^2$$

Suspension Lines

Moment of inertia about inclined axis through line C.G. =

$$\frac{m\ l^2 \sin^2 (90-\theta)}{12}$$

$$= \frac{(0.38)(67.83)^2(0.9480)^2}{(32.2)(12)}$$

$$= 4.07 \text{ slug}\cdot\text{ft}^2$$

$$I_x = I_{CG} + m\ d^2$$

d = vertical distance (leg C.G. to x-axis)

= 65.83 - 40.65

= 25.18 ft.

$$I_x = 4.07 + \frac{(0.38)(25.18)^2}{32.2}$$

$$= 11.55 \text{ slug}\cdot\text{ft}^2$$

For 64 lines: $I_x = (64)(11.55)$

$= 739.20 \text{ slug}\cdot\text{ft}^2$

Skirt Hem

The hem is again considered a thin rod bent in a circular arc. However, the four hems are not symmetrical with respect to the x-axis, two of the panels being parallel and two perpendicular to this axis. The moments of inertia must

therefore be determined by two equations.

Parallel hems:

Moment of inertia about line parallel to x-axis = $m\ r^2$

$$= \frac{(0.28)(22.02)^2}{32.2}$$

$$= 4.22 \text{ sluc}\cdot\text{ft}^2$$

$$I_x = I_{CG} + m\ d^2$$

d = vertical distance (hem C.G. to x-axis)

= 72.55 - 65.83

= 6.72 ft.

$$I_x = 4.22 + \frac{(0.28)(6.72)^2}{32.2}$$

$$= 4.61 \text{ slug}\cdot\text{ft}^2$$

For two parallel hems: $I_x = (2)(4.61)$

$$= 9.22 \text{ slug}\cdot\text{ft}^2$$

Normal hems:

Moment of inertia about line parellel to x-axis =

$$\frac{m\ r^2}{2}\left(1 - \frac{\sin\beta\cos\beta}{\beta}\right)$$

$$= \frac{(0.28)(22.02)^2}{(32.2)(2)} \left[1 - \frac{(0.4037)(0.9149)}{0.41553}\right]$$

$$= 0.23 \text{ slug}\cdot\text{ft}^2$$

$$I_x = I_{CG} + m\,d^2$$

$$= 0.23 + \frac{(0.28)(6.72)^2}{32.2}$$

$$= 0.62 \text{ slug}\cdot\text{ft}^2$$

For two normal hems: $I_x = (2)(0.62)$

$$= 1.24 \text{ slug}\cdot\text{ft}^2$$

For four hems: $I_x = 9.22 + 1.24$

$$= 10.46 \text{ slug}\cdot\text{ft}^2$$

Canopy

Considering the canopy a unit hemispherical surface, the moment about an axis at the canopy skirt is:

$$I = \frac{m\,r^2}{3}$$

$$= \frac{(43.18)(22.67)^2}{(32.2)(3)}$$

$$= 229.72 \text{ slug}\cdot\text{ft}^2$$

$$I_x = I + m\,d^2$$

d = vertical distance (canopy skirt to x-axis)

= 72.55 - 65.83

= 6.72 ft.

$$I_x = 229.72 + \frac{(43.18)(6.72)}{32.2}$$

$$= 238.72 \text{ slug}\cdot\text{ft}^2$$

Summing the component moments of inertia, the resultant yaw mass moment of inertia about the system center of gravity is found as

$$(I_{CG})_{yaw} = 281.50 + 201.88 + 90.94 + 739.20 + 10.46 + 238.73$$
$$= 1562.71 \text{ slug}\cdot\text{ft}^2$$

Pitch Mass Moment of Inertia

Since the parachute system is symmetrical about the z-axis, the pitch mass moment of inertia about the system center of gravity is equal to the yaw moment, or

$$(I_{CG})_{pitch} = (I_{CG})_{yaw}$$
$$= 1562.71 \text{ slug}\cdot\text{ft}^2$$