DAC-59860-Q3

Third Quarterly Report

for

Sealing of Silver Oxide-Zinc Storage Cells

(23 December 1967 to 23 March 1968)

Contract No.: NAS 5-10409

Prepared by

Astropower Laboratory
Missile & Space Systems Division
Douglas Aircraft Company
McDonnell Douglas Corporation
Newport Beach, California

for

Goddard Space Flight Center
Greenbelt, Maryland

GPO PRICE $ _____

CFSTI PRICE(S) $ _____

Hard copy (HC) 3.00

Microfiche (MF) .65

ff 653 July 65

MAY 1968
RECEIVED
NASA STI FACILITY
INPUT BRANCH

FACILITY FORM 602

N68-27645 (ACCESSION NUMBER) (THRU)

42 (PAGES) 1 (CODE)

[redacted] (NASA CR OR TMX OR AD NUMBER) 03 (CATEGORY)

CR-[redacted] CR-94104

Third Quarterly Report

for

Sealing of Silver Oxide-Zinc Storage Cells

(23 December 1967 to 23 March 1968)

Contract No.: NAS 5-10409

Goddard Space Flight Center

Contracting Officer: A. L. Essex
Technical Monitor: J. F. Unger, 716

Prepared by:

Astropower Laboratory
Missile & Space Systems Division
Douglas Aircraft Company
McDonnell Douglas Corporation
Newport Beach, California

Project Head: H. Frank
Study Director: M. P. Strier, Ph.D.

for

Goddard Space Flight Center

Greenbelt, Maryland

PRECEDING PAGE BLANK NOT FILMED.

SUMMARY AND CONCLUSIONS

The objective of this program is to evaluate the use of miniature hybrid fuel cells in controlling pressure and thereby permitting operation of sealed silver oxide-zinc cells. The fuel cells perform this function by electrochemically consuming evolved hydrogen and oxygen. Two types of fuel cells are being used for this purpose. The first consists of a silver oxide cathode in conjunction with a hydrogen-consuming anode. The second consists of a cadmium anode in conjunction with an oxygen-consuming cathode. These fuel cells and their use in controlling pressure and in sealing batteries, including silver-zinc batteries, are proprietary with McDonnell Douglas Corporation, and are covered in one or more pending patent application of McDonnell Douglas Corporation. The silver oxide-zinc cells under investigation are commercial 16-Ah high rate units.

The scope of this work consists of the following tasks:

Task 1 — Determine the gassing characteristics of the silver-zinc cells under four different operating regimes;

Task 2 — Design and test micro fuel cells to accommodate the gassing rates in these cells;

Task 3 — Evaluate composite micro fuel cell/silver-zinc cells in the sealed condition under the same regimes as indicated above;

Task 4 — Assemble and deliver 15 sealed silver oxide-zinc cell/micro fuel cell composites to NASA/Goddard for evaluation.

All of the experimental effort during the past report period was devoted to sealed cell tests under Task 3 above. Twenty-four sealed assemblies were used. Each of these consisted of a composite silver oxide-zinc cell and dual micro fuel cell assembly. Successful operation in the sealed condition was demonstrated for all cells operated on two different conditions of stand and for a continuous 24-hour cycle regime. Some difficulty was experienced in operating all cells in the sealed condition on a continuous 90-minute cycle regime. However, the situation was eventually improved. The most significant results and conclusions of these tests are tabulated below.

ROOM TEMPERATURE STAND TESTS

Four assemblies have been successfully operated in the sealed condition for 1320 hours for open circuit stand in the fully charged state at room temperature. Internal pressures have never been greater than atmospheric in any of the assemblies during this time. Open circuit voltages of all Ag-Zn cells have remained at 1.86 volts since the start. Steady state outputs of the AgO micro fuel cells have averaged nearly 10 microamperes. This signifies very low H_2 evolution rates and simultaneous consumption rate by the micro fuel cell at a level near 0.1 cc/day. Oxygen gassing rates as indicated by

the Cd micro fuel cell output have been even lower, with a maximum of only .005 cc/day.

0°C STAND TESTS

Four additional assemblies have been operated in a similar manner on stand at 0°C. Internal pressures in all have never been greater than atmospheric, and open circuit voltages have remained at 1.86 volts for 1344 hours. Output of the AgO and Cd micro fuel cells and the corresponding H_2 and O_2 rates were in the same range as those for the room temperature tests.

24 HOUR CYCLE REGIME

Eight composite assemblies have been successfully operated in the sealed condition for over 1584 hours or 66 cycles on a continuous 24-hour cycle regime. This consisted of a 23-hour charge with initial current of 500 mA and cutoff of 1.98 volts/cell and discharge at 5 amps for one hour (30% depth). The maximum internal pressure developed has been 2 psig for any one assembly. Internal pressure in all others has been atmospheric or below during this period. Outputs of all the AgO micro fuel cells have been relatively low and constant in the range of .02 to .13 mA. This signifies H_2 evolution and consumption rates in the range of 0.2 to 1.3 cc/day. Outputs of the Cd micro fuel cells have been found to vary within limits from cycle to cycle and could be related to the charge voltage of the assemblies in which they were installed. Those in assemblies with low end-of-charge voltages exhibited constant and low output during a complete cycle in the range of 0 to 1 mA. Those in assemblies with high end-of-charge voltages exhibited sharp increases in output during the last several hours of charge at levels to 10 mA. This signifies maximum O_2 rates to 2 cc/hour at the end of charge. Pressure rise in a sealed cell under the same conditions as above, but without micro fuel cells is estimated to be 671 psig after 1584 hours. The micro fuel cells have no apparent effect on electrical performance characteristics of the Ag-Zn cells.

90 MINUTE CYCLE REGIME

Several preliminary attempts were made to operate eight composite sealed micro fuel cell/silver-zinc cell assemblies on a continuous 90 minute cycle regime. This consisted of a one-hour charge with initial current of 3.0 amps and cutoff of 2.05 volts/cell, and discharge of 5 amps for 30 minutes (15% depth). Each of these attempts was only partially successful in that the assemblies could run for only one or two days before one or more cells developed excessive pressure and leaked gases. The major problem was found to be the parallel circuit used for recharging the Cd micro fuel cells. This micro fuel cell circuit caused intercell leakage currents between Ag-Zn cells which in turn resulted in unbalance of the Ag-Zn cells. Only when the parallel charge circuit was removed, was it possible to operate for significant periods of time in the completely sealed condition. Three assemblies which were not

damaged in the earlier tests have been on continuous operation for 909 hours or 606 cycles. Maximum internal pressures have been less than 10 psig per silver-zinc cell. Outputs of all the AgO micro fuel cells have been relatively constant at a level near 1 mA. This indicates continuous H_2 gassing rates near 0.4 cc/hour. Outputs of the Cd micro fuel cells fluctuated during the course of a cycle and reached a maximum near 20 mA at the end of charge and a minimum near 1 mA early in the charge. This signifies variation in O_2 gassing rates from 0.2 to 4.0 cc/hour. The Cd micro fuel cell electrodes were charged individually as required with auxiliary power supplies. Pressure rise in a sealed cell under the same conditions as above, but without micro fuel cells is estimated to be nearly 3000 psig after 765 hours.

A final comment may be made regarding the parallel charge circuits for the micro fuel cells. It is believed that an effective parallel circuit could ultimately be designed if it were possible to obtain a more complete set of operating data on the combined assemblies. This data could not be obtained here due to the rapid deterioration of the Ag-Zn cells.

IMPROVED METHOD FOR CHARGING Cd MICRO FUEL CELLS

An alternative method for charging the Cd micro fuel could make use of the Ag-Zn cells themselves as sources of energy. In this mode, each micro fuel cell receives its charge parasitically from its host Ag-Zn cell.

CONTENTS

INTRODUCTION 1

TECHNICAL DISCUSSION 2

Description of Composite Assemblies 2
Preliminary Treatment of Silver Zinc Cells 2
Stand Tests 5
24-Hour Cycle Tests 5
90-Minute Cycle Tests 8
Results of Stand Tests at 0°C 16
Results of Stand Tests at Room Temperature 16
Results of 24-Hour Cycle Tests 19
Results of 90-Minute Cycle Tests 25

GENERAL CONSIDERATIONS CONCERNING USE OF MICRO FUEL CELLS 32

PROGRAM FOR FOURTH QUARTER 33

REFERENCES 34

FIGURES

1	Composite Micro Fuel Cell-Silver Zinc Cell Assembly	3
2	Dimensions of Composite Assembly	4
3	Four Composite Assemblies on Room Temperature Stand Test	6
4	Eight Composite Assemblies on 24-Hour Cycle Test	7
5	Three Composite Assemblies on 90-Minute Cycle Regime	9
6	Original Circuit for Silver-Zinc Cells and Cd Micro Fuel Cells on 90 Minute Cycle Regime	11
7	Modified Circuit Incorporating Diodes in Silver-Zinc Cell Discharge Circuit (90 Minute Regime)	12
8	Modified Circuit Incorporating Power Transistors in Silver-Zinc Discharge Circuit (90 Minute Regime)	14
9	Final Circuit Employing Separate Charge Circuits for Cd Micro Fuel Cells (90 Minute Cycle Regime)	15
10	Typical Voltage and Current Profile of Cells on 24-Hour Cycle Regime	22
11	Characteristics of Cd Micro Fuel Cell During Cycle on 24-Hour Regime	23
12	Response of AgO Micro Fuel Cell on Assembly Which Becomes Severely Overcharged (90-Minute Cycle Regime)	28

TABLES

I	Operating Conditions for Cells on 90-Minute Cycle Regime	10
II	Results of Stand Tests at $0^{o}C$	17
III	Results of Stand Tests at Room Temperature	18
IV	Overall Summary of Cells on 24-Hour Cycle Regime Since Start of Test	20
V	Typical Daily Summary Report of Assemblies on 24-Hour Cycle Regime (Cycle #30)	21
VI	Overall Summary of Remaining Three Silver Zinc Cells on 90-Minute Cycle Regime	30

INTRODUCTION

The objective of this program is to evaluate the use of miniature rechargeable micro fuel cells in controlling the pressure of sealed secondary silver oxide-zinc cells. The miniature fuel cells perform this function by electrochemically consuming evolved hydrogen and oxygen.

Two types of fuel cells are employed here. One is for consuming hydrogen, and consists of a silver oxide cathode in conjunction with a hydrogen fuel cell anode. The other is for consuming oxygen, and consists of a cadmium anode in conjunction with an oxygen fuel cell cathode.

The miniature fuel cells may be operated in either the primary or secondary mode, depending upon the amount of gases evolved from the Ag-Zn cells. For low gassing rates the fuel cells are usually operated in the primary mode, without any required regeneration. Nominal capacities are 2 Ah for both types so that they have total capacities of 800 cc H_2 at STP and 400 cc O_2 at STP in this mode. This is adequate for prolonged operating times in some cells that evolve only fractions of a cc of these gases per day. For high gassing rates, the fuel cells are operated in the secondary mode. Here their solid electrodes are regenerated or recharged during operation. This is done without evolving gas by carrying out the charge against the electrodes of the silver-zinc cell. This process has been previously explained (Reference 1). In this manner, it is possible to operate silver-zinc cells with high gassing rates for extended time in the sealed condition.

The scope of this program has been divided into four tasks. The first task, which was completed and described earlier, consisted of measuring the gassing characteristics of a commercial class of 16-Ah silver-zinc cells under four different operating regimes (Reference 1). The second task, also completed and described earlier (Reference 2), involved design of miniature fuel cells to accommodate these gassing rates. The third task involved the behavior of sealed cells on composite micro fuel cell-silver-zinc cell assemblies under the same operating regimes as above. Such tests constituted the major effort during this report period and are described in detail herein. The fourth and final task will involve assembly of 15 additional composite assemblies and delivery to NASA/Goddard for evaluation.

TECHNICAL DISCUSSION

This section contains a brief description of the composite assemblies and test procedures as well as a complete tabulation and discussion of all test results obtained on these units.

DESCRIPTION OF COMPOSITE ASSEMBLIES

A complete description of the composite micro fuel cell-silver-zinc cell assemblies was given in the second quarterly report (Reference 2). Briefly, these consist of a commercial 16-Ah Ag-Zn cell incorporating a dual micro fuel cell assembly. Figure 1 is a photograph of such an experimental unit and Figure 2 is a detailed drawing. The Ag-Zn cells are commercial high rate units from a leading manufacturer. Two micro fuel cells are contained within an adapter that is installed on the top case of the cell, as shown in Figure 1. The micro fuel cells are cylindrical units fastened to and suspended from the top cover of the adapter. One of these micro fuel cells is a hydrogen-consuming cell composed of a pellet silver oxide cathode and a platinum fuel cell anode (American Cyanamid Type A. B. -40). The other is an oxygen-consuming cell and is composed of a pellet cadmium anode and a platinum fuel cell cathode (American Cyanamid Type A. B. -40 material). The micro fuel cell terminals are passed through the cover of the adapter to provide external electrical contacts. Nylon felt wicks are used to provide an electrolytic bridge between each of the fuel cells and the Ag-Zn cell. One end of the wick is immersed in the cell electrolyte and the other end of each is in contact with its solid micro fuel cell electrode (the AgO and Cd electrodes respectively). These wicks are used for charging the micro fuel cell electrodes as described previously (Reference 1).

PRELIMINARY TREATMENT OF SILVER ZINC CELLS

The silver-zinc cells were received from the manufacturer dry and unformed. In order to prepare them for test, they were first activated with electrolyte and then carried through three formation cycles in accordance with the manufacturers recommendations. These cycles consisted of charges at 0.7 amp to 2.05 volt/cell cutoff and discharges at 5.0 amp to 1.0 volt cutoff. Twenty-four cells were prepared in this manner in three groups. In addition to the recommended three formation cycles, the cells were carried through an additional four cycles in the same manner. The purpose of these additional cycles was to rid the cells of oxygen. Unusually large quantities of this gas were noted to be evolved from this cell during the early stages of prior gassing studies (Reference 1). It was therefore decided to try to eliminate this excess oxygen during formation cycles in the vented condition rather than in the cycle tests in the sealed condition where an extra burden would be placed upon the Cd micro fuel cells.

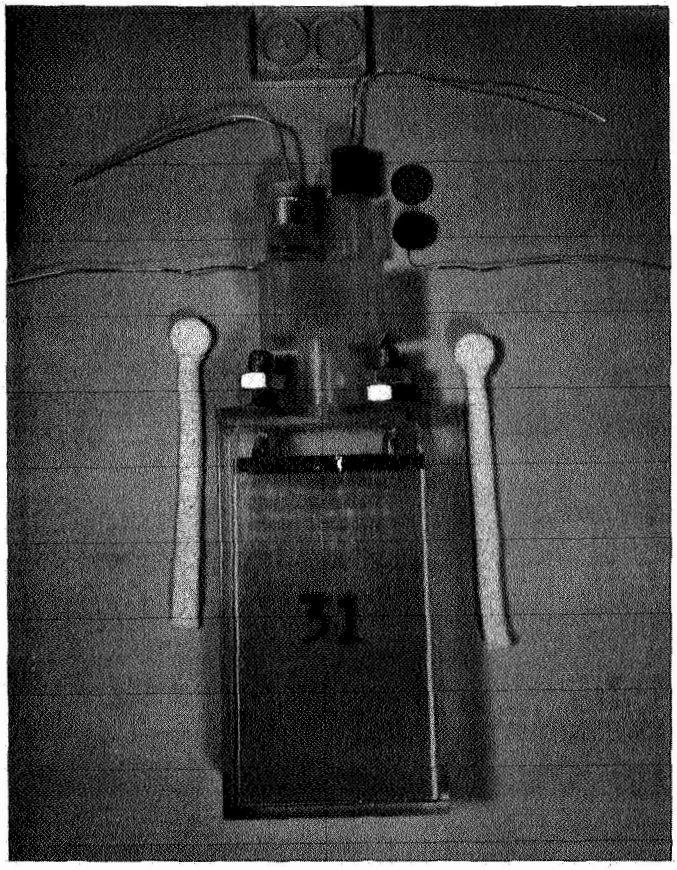

CW120

Figure 1. Composite Micro Fuel Cell-Silver Zinc Cell Assembly

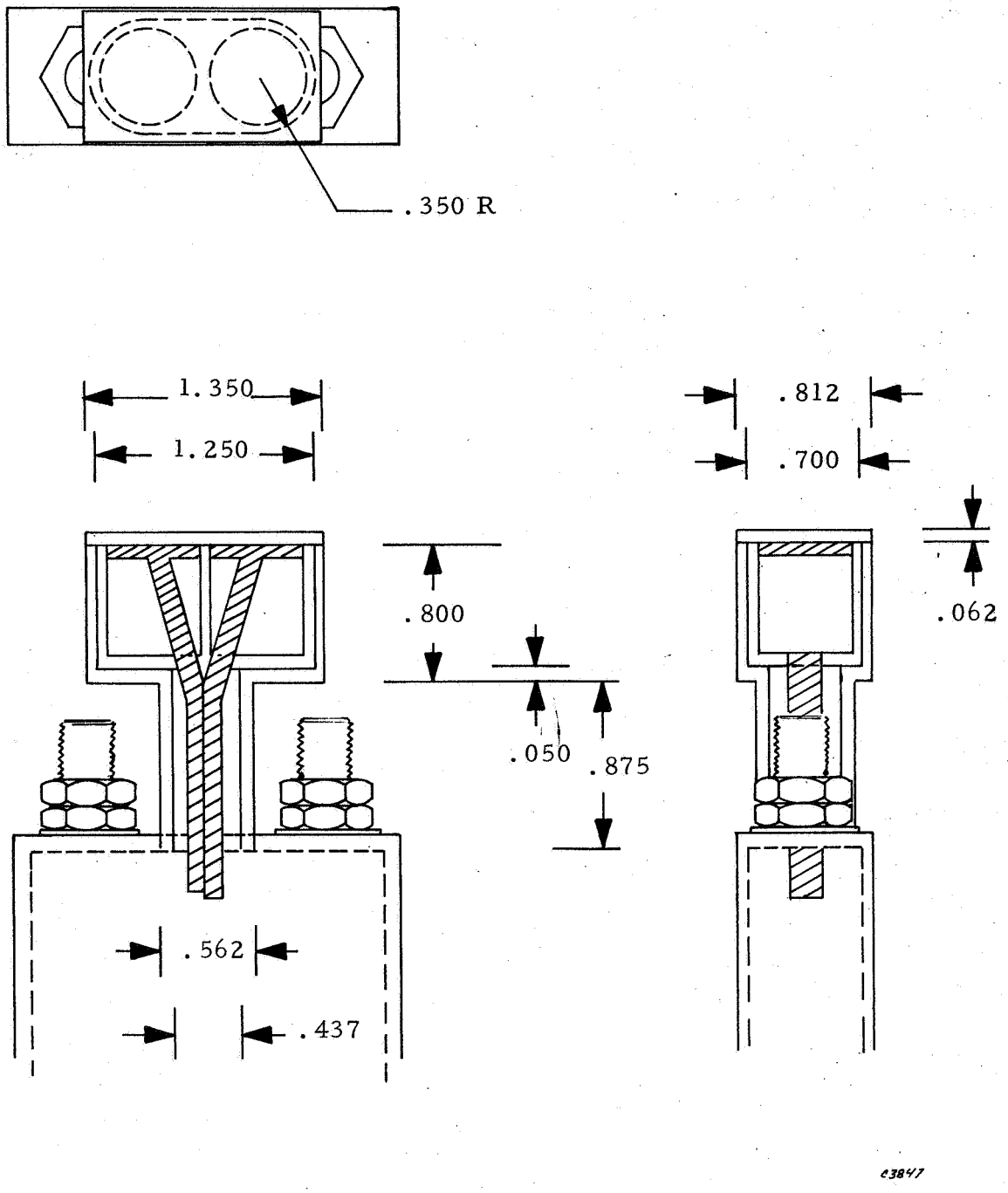

Figure 2. Dimensions of Composite Assembly

STAND TESTS

The stand tests at both room temperature and at 0°C were initiated with fully charged Ag-Zn cells. Eight cells are under test including four at room temperature and four at 0°C. Figure 3 is a photograph of the four assemblies on room temperature stand. Open circuit voltages, internal cell pressures and output of installed AgO and Cd micro fuel cells are noted and recorded once each day. Open circuit voltages are read with a VTVM and pressures are read from installed pressure gages. Output currents of the micro fuel cells are measured by opening the contacts of each and connecting them directly to a low range milliammeter. When the measurements are completed, the micro fuel cells are placed on a direct short once again. The room temperature stand tests are located in a laboratory where temperature range is 24±2°C. The low temperature tests are conducted in a freezer set for 0°C.

24-HOUR CYCLE TESTS

Eight silver-zinc cells have been operated in series in these tests on a continuous 24-hour cycle regime. This consisted of a 23-hour charge and a 1-hour discharge at 30% depth of discharge. Figure 4 is a photograph of this assembly. Charge current was controlled with a regulated power supply (Sorenson Model DCR 40-4A) with initial charge current set for 500 mA at an upper cutoff voltage of 1.98 volts/cell. For eight cells, this upper voltage cutoff was therefore 8 x 1.98 or 10.84 volts. The actual setting on the power supply was slightly above this value to compensate for "IR" drop in the charge circuit. Discharge has been carried out across a fixed load that was frequently adjusted to give an average of 5.0 amps for the one-hour discharge period.

Individual voltages of all silver-zinc cells were recorded continuously with miniature Rustrak voltage recorders. Internal cell pressures were read and recorded periodically from installed pressure gages. Charge and discharge currents of the silver-zinc cells were recorded periodically for a complete cycle by connecting a recorder across a shunt in the series line.

The silver oxide micro fuel cells have been operated in the primary mode since the start of this test. These micro fuel cells were on continuous discharge across fixed 10.0-ohm precision resistors. Current output was measured periodically by measuring the voltage drop across these resistors with a precision millivoltmeter. Variation in AgO micro fuel cell current throughout a complete cycle was measured periodically by placing a millivolt recorder across these resistors.

The cadmium micro fuel cells were also operated in the primary mode for the first 600 hours which constituted 25 cycles. Current outputs were initially measured in the same manner as the AgO cells at the start, but shortly thereafter, these Cd currents were placed on continuous recording on newly arrived Rustrack milliammeter recorders. After the first 600 hours, it became apparent that a few of the Cd micro fuel cells approached a completely discharged state. The Cd electrodes of these micro fuel cells were therefore placed on charge in the manner described previously. Each micro

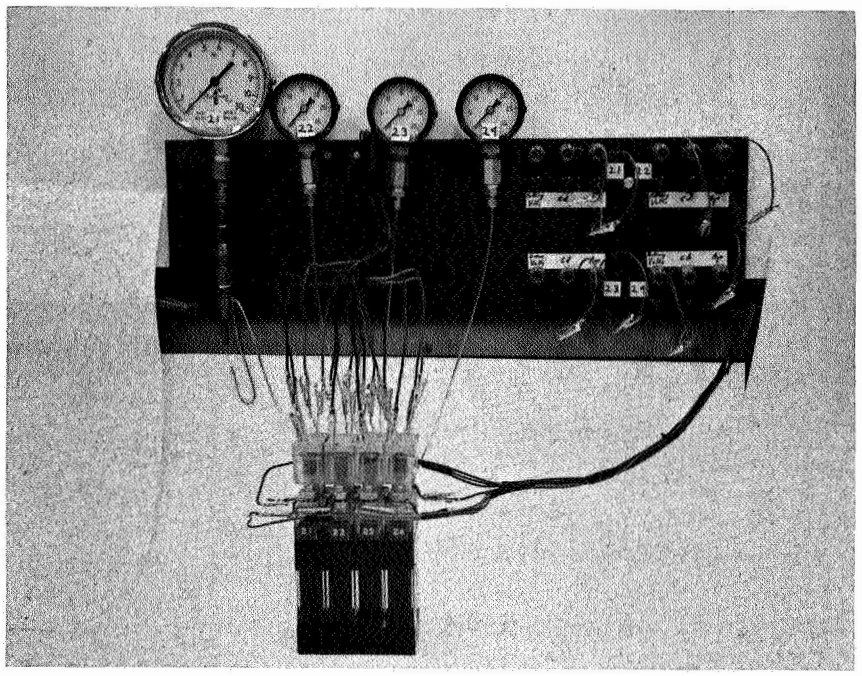

C4115

Figure 3. Four Composite Assemblies on Room Temperature Stand Test

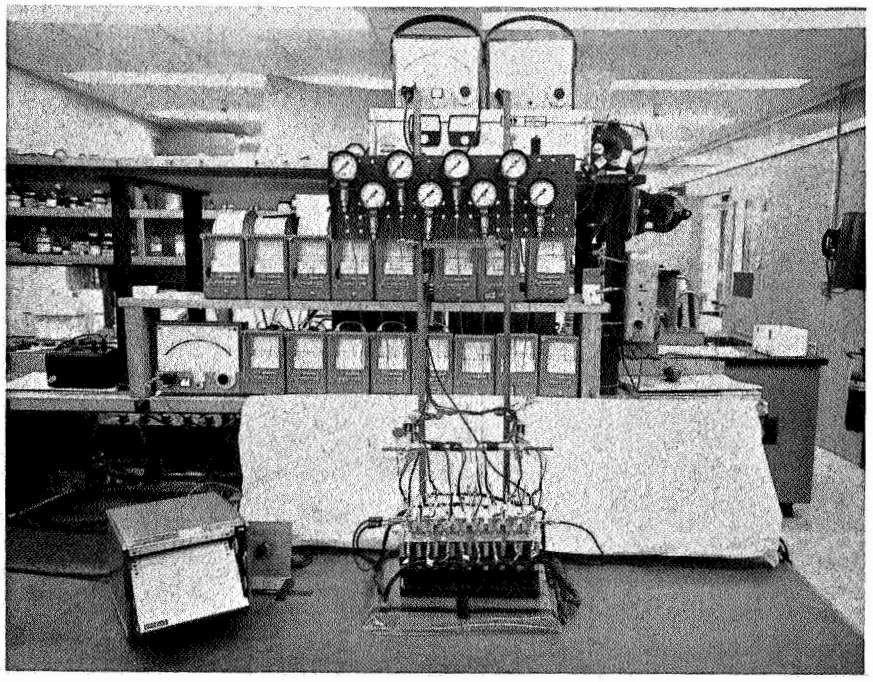

C4116

Figure 4. Eight Composite Assemblies on 24-Hour Cycle Test

fuel cell was charged separately at a current of 20 mA and for a time calculated to replace the cumulative output to that point.

90-MINUTE CYCLE TESTS

This test was originally started with eight silver-zinc cells operated in series on a 90-minute cycle regime. Five of these cells failed so the total number of operating cells was reduced to three. Figure 5 is a photograph of this assembly.

This test has been interrupted three times to modify the silver-zinc cell and micro fuel cell circuits. These modifications are summarized in Table I and will be described in detail below.

The initial phase of this test was carried out with eight composite assemblies arranged in accordance with the circuit diagram given during the last report period (Reference 2) and shown here as Figure 6. The cycle regime consisted of a one-hour charge and 30-minute discharge. Charge was carried out with a maximum initial current of 3.0 amps and an upper voltage cutoff of 2.05 volts/cell. For eight cells the final end of charge voltage cutoff was therefore 8 x 2.05, or 16.40 volts. The actual voltage setting on the power supply was adjusted to a slightly higher value to compensate for "IR" drop in the charge circuit. A regulated power supply was used (Sorenson Model DCR 40-4A). Discharge was carried out across a fixed load which was selected to give an average current of 5.0 amps for the 30 minute discharge period. Individual Ag-Zn cell voltages were recorded continuously on miniature Rustrack voltage recorders. Internal cell pressures were also recorded individually on Rustrack pressure recorders. The AgO micro fuel cells were operated in the primary mode for this phase. Each of these micro fuel cells was on continuous discharge across 10.0-ohm precision resistors. Output currents from the AgO cells were determined periodically by measuring the voltage drop across these resistors. The Cd micro fuel cells were placed on direct short across miniature Rustrack milliammeter recorders which gave a continuous record of current output. The cadmium electrodes of these micro fuel cells were simultaneously charged in parallel in accordance with the circuit diagram of Figure 6. Input current to each of these electrodes was measured periodically by installing a milliammeter in each of the parallel branches leading to the negative of the auxiliary power supply. Current measurements were also made on the positive sides of the micro fuel cell circuits, i.e., that current in each of the positive branches leading to the zinc electrodes of the Ag-Zn cells.

Operation in the above mode was terminated after 48 hours of operation for reasons described below under "90-Minute Cycle Tests." The circuit was modified at this point by installing protective diodes in the intercell connections (IRC Silicon Power Rectifiers Part No. 20HB20-C). These particular diodes were selected on the basis of their availability and usefulness for the application. It was realized that improved diodes could be obtained later if the concept was found to be worthwhile. These diodes were installed in the intercell connections in conjunction with a set of relays (see Figure 7). These

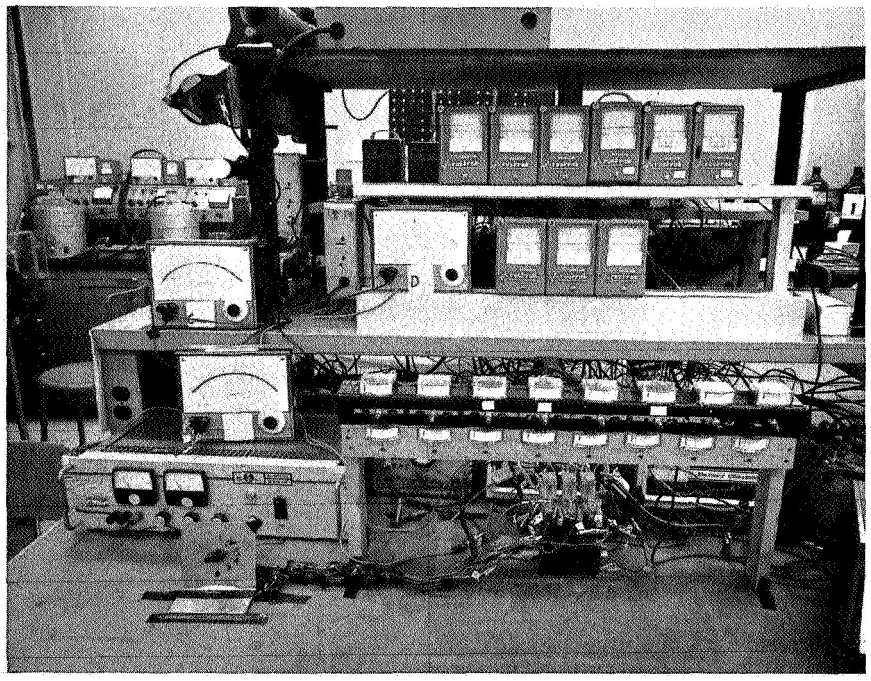

Figure 5. Three Composite Assemblies on 90-Minute Cycle Regime

TABLE I

OPERATING CONDITIONS FOR CELLS ON 90-MINUTE CYCLE REGIME

Operating Time (hours)	Number of Cycles	Conditions for Operation
48	32	Initial operating mode, Figure 6.
50	33	Second operating mode with diodes between Ag-Zn cells (see Figure 7).
115	77	Third operating mode with transistors between Ag-Zn cells (see Figure 8).
696	455	Fourth and final operating mode with separate charge circuits for Cd micro fuel cells (see Figure 9).
909	606	Total operating time for three remaining cells since start.

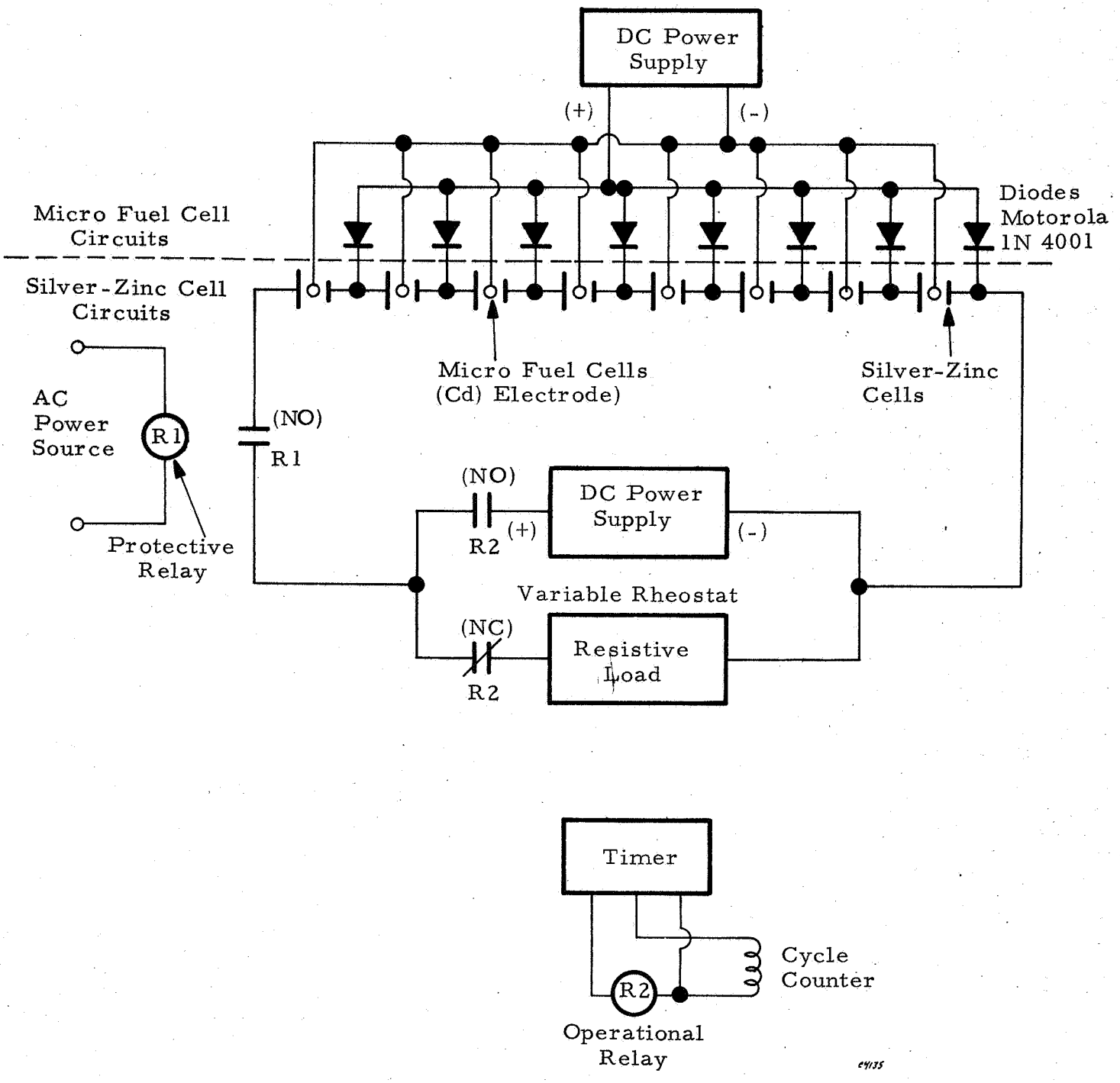

Figure 6. Original Circuit for Silver-Zinc Cells and Cd Micro Fuel Cells on 90 Minute Cycle Regime

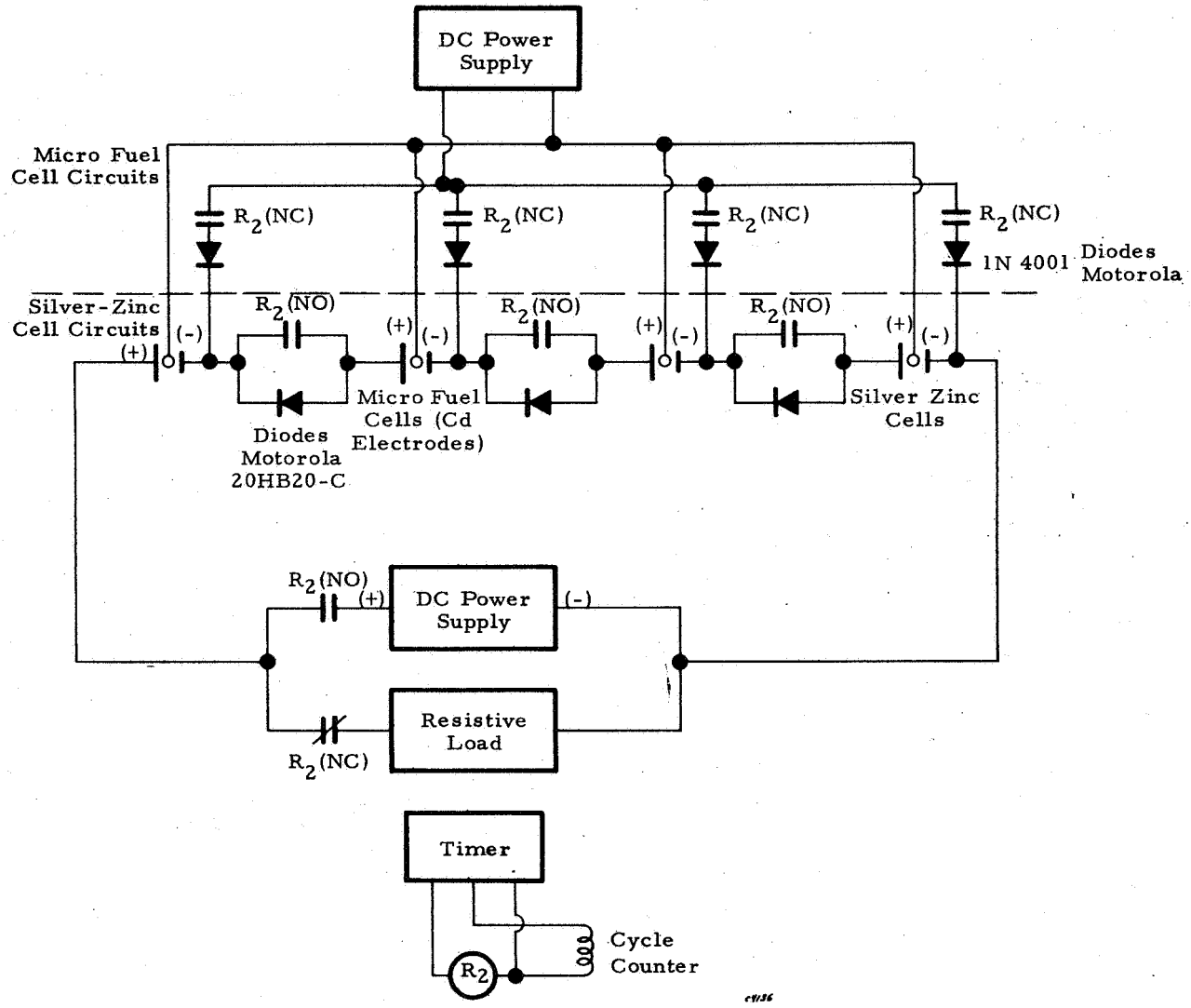

Figure 7. Modified Circuit Incorporating Diodes in Silver-Zinc Cell Discharge Circuit (90 Minute Regime)

relays opened the diode branch of the intercell contacts for charge and closed the branch for discharge. This directed the discharge current through the diodes and the charge current directly across the relay contacts. The charge circuits to the Cd micro fuel cell electrodes were also equipped with a set of relays which placed them on charge only while the silver-zinc cells were on discharge. When the silver-zinc cells were on charge, the relays opened each of the negative branches of the parallel Cd charge circuit. All of these relays were operated by the same timer that controlled the Ag-Zn cells. This arrangement avoided intercell leakage currents. All other details of operation in this phase were identical to the original phase described above with one exception. This was an adjustment of external load to maintain the required 5.0 amps discharge current. Lower currents would have been obtained without this adjustment, due to the lower overall voltage resulting from the diodes. The assembly was run for 50 hours in this manner.

At this point, the circuit was modified again by replacing the intercell diodes with power transistors. These were Motorola Type 2N2158. The purpose of this change was to reduce the voltage losses and thereby improve overall voltage and power output of the Ag-Zn cells. Figure 8 is a schematic diagram of the circuit with these transistors. A set of relays was used again to open the transistor branch of the intercell connections for charging the Ag-Zn cells and to close this branch for discharge. This directed the discharge current through the transistors and the charge current through the relay contacts. Two additional sets of relays were also required here. One was used to apply (-12) volts to the bases of the transistors to turn them on for discharge, and another was used to apply (+16) volts to the bases of the transistors to turn them off during charge (Figure 8). Another set of relays provided for charging the Cd micro fuel cell electrodes only while the Ag-Zn cells were on discharge and for discharge of the Cd micro fuel cells only while the Ag-Zn cells were on charge. This arrangement avoided the intercell leakage currents. All of these relays were operated by the same timer that controlled the Ag-Zn cells. All other conditions for this phase were identical to the prior phases except that the test was carried out with only seven assemblies instead of eight as one Ag-Zn cell was damaged in prior testing. Operation was carried out in this mode for an additional 115 hours during which three more Ag-Zn cells failed and were removed from tests.

At this point, it was decided to shut down again and modify the circuit so as to completely eliminate the parallel charge arrangement of the Cd micro fuel cells. Instead of charging these micro fuel cells in parallel, it was decided to charge them separately as required. This greatly simplified the circuit as shown in Figure 9. The parallel charge lines leading to the Cd micro fuel cells as well as the entire transistor circuits were completely removed. This left only the basic Ag-Zn circuits and separate micro fuel cell circuits.

Operation in this latter mode was initiated in February 1968 and is in progress at the present time. Cycle conditions for the Ag-Zn cells have been the same as in prior phases. The AgO micro fuel cells have continued to operate in the primary mode as previously described. The Cd micro fuel cells have been left on direct short across miniature milliammeters. Output

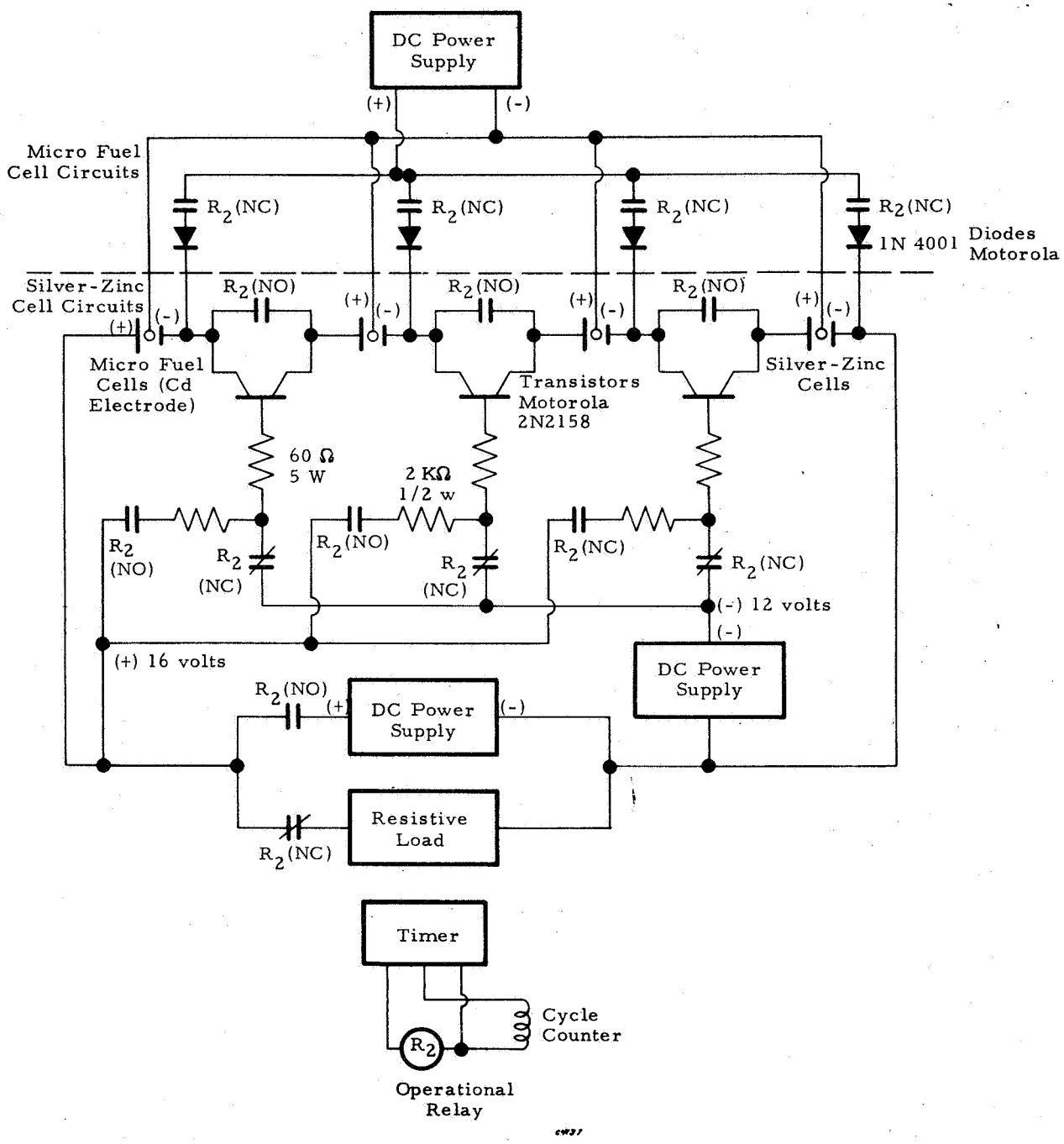

Figure 8. Modified Circuit Incorporating Power Transistors in Silver-Zinc Discharge Circuit (90 Minute Regime)

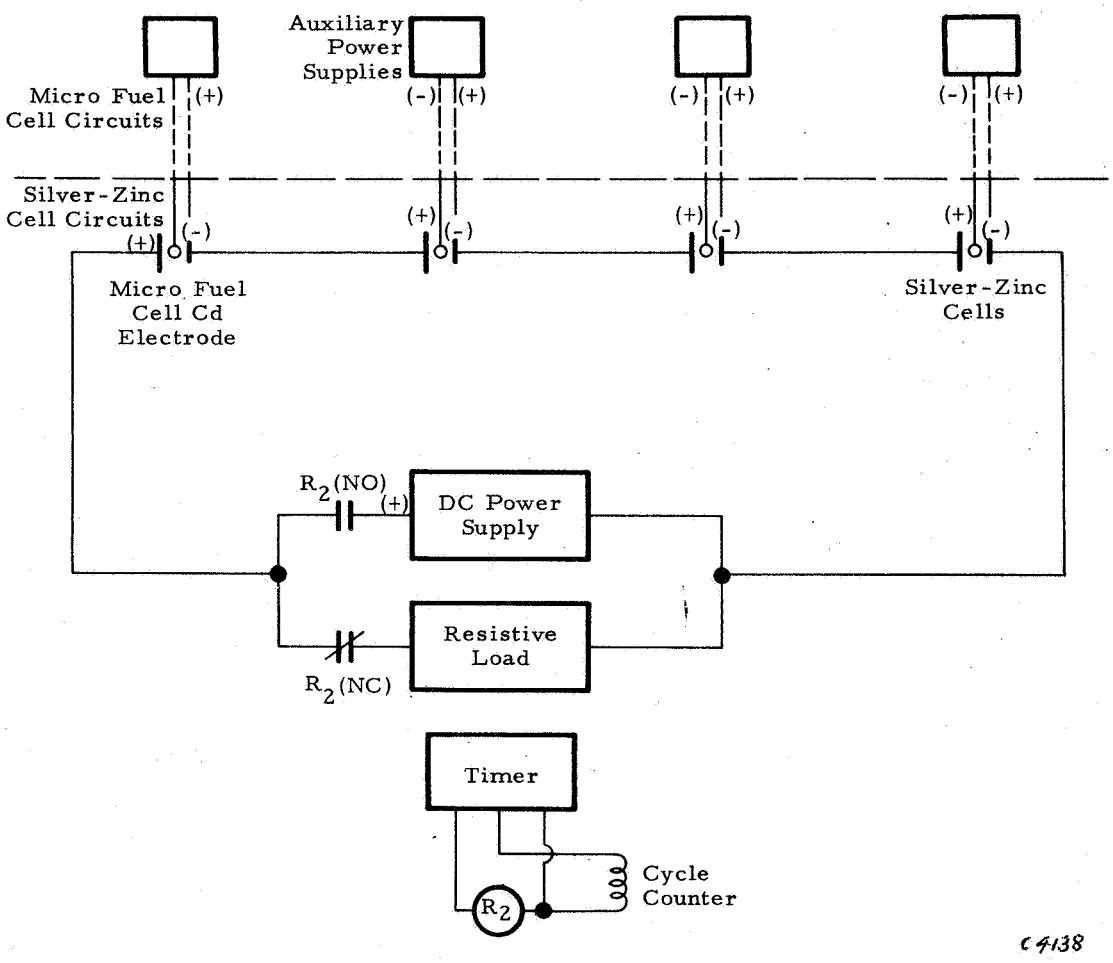

Figure 9. Final Circuit Employing Separate Charge Circuits for Cd Micro Fuel Cells (90 Minute Cycle Regime)

of these was measured quite frequently during periodic cycles. When capacity of these Cd cells became depleted, they were placed on charge individually with a power supply as shown in Figure 9.

RESULTS OF STAND TESTS AT 0°C

Performance characteristics of four composite assemblies on stand at 0°C are given in Table II. Open circuit voltages of the four Ag-Zn cells were 1.86 volts on each at the start and all have remained at this value to date. Internal pressures of all four cells have never been greater than atmospheric since the start. Output of both AgO and Cd micro fuel cells on all four assemblies has been very low except during the first day of stand. During the first day, the Cd micro fuel cells indicated appreciable outputs in the 1 to 5 mA range. This can be explained by consumption of residual oxygen from the air initially inside the assemblies. After the first day, however, the output of all micro fuel cells declined to the microampere range. Outputs of both types were noted to stabilize after about two weeks. Steady state currents from the AgO micro fuel cells ranged from a low of 5 μA in Assembly No. 20 to a high of 20 μA in Assembly No. 9. These currents corresponded to very low hydrogen evolution and consumption rates by the micro fuel cells ranging from .05 to .20 cc/day. Output of the Cd micro fuel cells were even lower with a maximum of only 1 μA in Assembly No. 2 and No. 20 and essentially zero in Assemblies No. 10 and 19. The corresponding maximum O_2 rate in the former two was only 0.005 cc/day. At the present time the cells have been on stand for 56 days or 1320 hours.

During the previous report period, it was noted that the same type of Ag-Zn cell evolved essentially no measurable quantities of gases via the water displacement technique (Reference 2). In the sealed tests, however, we did have signs of extremely low, but nevertheless finite quantities of gases being evolved. This difference could be explained on the basis that the micro fuel cells were sensing and consuming the evolved gases at a faster rate than they could recombine with the electrodes of the silver-zinc cells. Evidently, only the latter was occuring in the water displacement tests.

RESULTS OF STAND TESTS AT ROOM TEMPERATURE

Performance characteristics of the four composite assemblies on room temperature stand were quite similar to those on stand at 0°C. Open circuit voltages and internal pressures of all four have remained at 1.86 volts and 0 psig since the start (Table III). Outputs of all the micro fuel cells were relatively high for the first day and then declined to the microampere range. Output of the AgO cells in Assemblies No. 22, 23 and 24 was noted to stabilize in the range of 10 to 20 μA, whereas output of the AgO cell in Assembly No. 21 stabilized at a lower level between 0 to 1 μA. The maximum H_2 rate at the 20 μA level was 0.2 cc/day. Output of the Cd micro fuel cells on all of the assemblies gradually decreased to a negligible level of zero to 2 μA. The corresponding maximum O_2 rate was .010 cc/day. At present, the cells have been on stand for 55 days or 1344 hours.

TABLE II

RESULTS OF STAND TESTS AT 0°C

Time on Test (days)	Assembly #9		Assembly #10		Assembly #19		Assembly #20	
	Output AgO (μA)	Output Cd (μA)	Output AgO (μA)	Output Cd (μA)	Output AgO (μA)	Output Cd (μA)	Output AgO (μA)	Output Cd (μA)
0	50	5	50	2	50	4	100	1
1	1	1	2	1	1	0	1	2
3	10	0	5	0	5	0	5	0
6	10	0	10	0	5	0	0	0
8	10	0	10	0	4	0	0	0
10	5	0	3	0	2	0	0	0
13	20	2	10	2	10	2	2	0
15	20	2	10	0	10	0	5	0
17	20	0	10	0	10	0	5	5
20	20	0	10	0	10	0	5	0
22	20	1	10	1	10	0	5	0
27	20	0	10	0	10	0	5	0
30	20	1	10	0	10	0	10	1
36	10	1	10	1	5	0	5	1
41	20	1	10	0	20	0	5	1

NOTE: 1. Open circuit voltages of all four Ag-Zn cells has remained at 1.86 volts since the start.

2. Internal cell pressures have never been higher than atmospheric since the start.

TABLE III

RESULTS OF STAND TESTS AT ROOM TEMPERATURE

Time on Test (days)	Assembly #21		Assembly #22		Assembly #23		Assembly #24	
	Output AgO (μA)	Output Cd (μA)	Output AgO (μA)	Output Cd (μA)	Output AgO (μA)	Output Cd (μA)	Output AgO (μA)	Output Cd (μA)
0	3000	0	6000	8000	6000	2000	8000	8000
1	30	0	60	240	50	30	60	60
2	10	0	20	20	20	10	20	20
5	0	0	40	30	20	10	30	20
7	10	60	30	10	20	5	10	10
9	5	0	5	0	2	5	10	3
12	0	0	20	10	10	5	10	2
14	0	0	10	2	10	2	20	2
16	0	0	20	2	10	2	10	2
19	0	0	10	1	10	2	10	2
21	0	0	10	1	10	1	10	1
26	1	1	20	1	10	1	10	10
30	0	1	10	1	10	1	10	5
35	1	1	10	1	10	1	10	2
40	0	0	20	1	10	1	10	2

NOTE: 1. Open circuit voltages of all four Ag-Zn cells has remained at 1.96 volts since the start.

2. Internal cell pressures have never been higher than atmospheric since the start.

Again it may be pointed out that these results are not exactly consistent with the gassing studies performed on the same types of cells last quarter (Reference 2). There it was shown that after a brief period, the gassing rates of all cells was essentially zero. Once again, it appeared that the micro fuel cells were consuming evolved gases at a faster rate than they could react with the electrodes of the silver-zinc cells.

RESULTS OF 24-HOUR CYCLE TESTS

At this writing, the group of eight composite assemblies has completed 66 cycles on the 24-hour regime in the sealed condition, for a total operating time of 1584 hours. With the exception of a few cycles when either the cycle timer or power supply was not functioning properly, the characteristics of all components have been quite consistent and uniform from cycle to cycle. In addition, the results obtained were in good agreement with the prior gassing studies performed on a similar group of cells on the same regime. A summary of results is given in Tables IV and V and Figures 10 and 11.

Electrical characteristics of the Ag-Zn cells have been quite uniform. A typical voltage and current profile of one such cell for a complete cycle is shown in Figure 10. Charge voltage was noted to start at 1.65 volts and rise to a level of 1.98 volts after 16 hours, remaining at this point for the rest of the charge period. Discharge voltage started at 1.45 volts and declined slightly to 1.44 volts at the end of the one-hour discharge period. Charge current has been noted to taper somewhat during the first 14 hours of charge from 500 mA to 300 mA. After approximately 18 hours, the current dropped sharply to a very low level in the range of 5 to 10 mA and remained in this range for the remainder of the charge period. Discharge current was slightly above 5 amps at the start and slightly less than 5 amps at the end of discharge. The end of charge voltages of all cells have been quite uniform throughout the course of the test. Table V indicates that the end of charge voltages of all eight cells were in the range of 1.97 to 2.00 volts for this particular cycle. This has been the usual spread in the end of charge voltages. As indicated in Table IV, the highest value ever attained on any given cell has been 2.02 volts; the lowest value was 1.92 volts. End of discharge voltages of all cells were in the range of 1.50 to 1.60 during the first 15 cycles. Thereafter the end of discharge voltages of all cells declined and remained at a level of 1.44 to 1.45 volts. The electrical characteristics of these Ag-Zn cells, which contained micro fuel cells, were the same as those Ag-Zn cells which did not contain micro fuel cells in the preceding gassing studies. It may therefore be concluded that the micro fuel cells have no effect on electrical performance of the Ag-Zn cells.

Internal cell pressures in all but one assembly have never been greater than atmospheric since the start. The one exception has been Assembly No. 14. Since the start of cycling, this assembly has consistently exhibited small pressure variation. The pattern has consisted of a slow rise in pressure above atmospheric, beginning about three hours before the end of charge and a slow decline to atmospheric about three hours after the end of discharge. The maximum pressure of 1 to 2 psig occurred about one hour after the end of discharge.

TABLE IV

OVERALL SUMMARY OF CELLS ON 24-HOUR CYCLE REGIME SINCE START OF TEST

1.	Number of cells	8 cells
2.	Total number of cycles	66 cycles
3.	Total operating time	1584 hours
4.	End of charge voltage range	1.92 - 2.02 volts
5.	End of discharge voltage range	1.44 - 1.62 volts
6.	End of charge current range	3 - 150 mA
7.	Discharge current range	4.4 - 5.6 amps
8.	Maximum pressure in a cell	2 psig
9.	Output range of Cd cells	0 - 19 mA
10.	Output range of AgO cells	0 - 0.4 mA
11.	Maximum H_2 consumed in a cell	33 cc H_2
12.	Maximum H_2 pressure in a cell without AgO micro fuel cell	31 psig*
13.	Maximum O_2 consumed in a cell	660 cc O_2
14.	Maximum O_2 pressure in a cell without Cd micro fuel cell	640 psig*
15.	Maximum total pressure without AgO or Cd micro fuel cells	671 psig*

*These are estimated pressures that would be developed in Assembly #16 without micro fuel cells after 1200 hours on the assumption that there is no chemical recombination of gases.

TABLE V

TYPICAL DAILY SUMMARY REPORT OF ASSEMBLIES ON 24-HOUR CYCLE REGIME (CYCLE #30)

Assembly Number	End Charge Voltage (volts)	End Discharge Voltage (volts)	Maximum Pressure (psig)	Output AgO Cell at End of Discharge (mA)	Output Cd Cell Early Charge (mA)	Output Cd Cell at End Charge (mA)
11	2.00	1.44	0	0.03	0.3	4.0
12	1.97	1.44	0	0.04	2.2	2.7
13	2.00	1.44	0	0.03	0.1	7.0
14	2.00	1.45	1.4	0.03	0.3	1.5
15	2.00	1.45	0	0.10	0.1	8.0
16	1.98	1.45	0	0.00	0.0	0.8
17	2.00	1.45	0	0.20	0.2	3.5
18	2.00	1.44	0	1.10	1.1	2.9

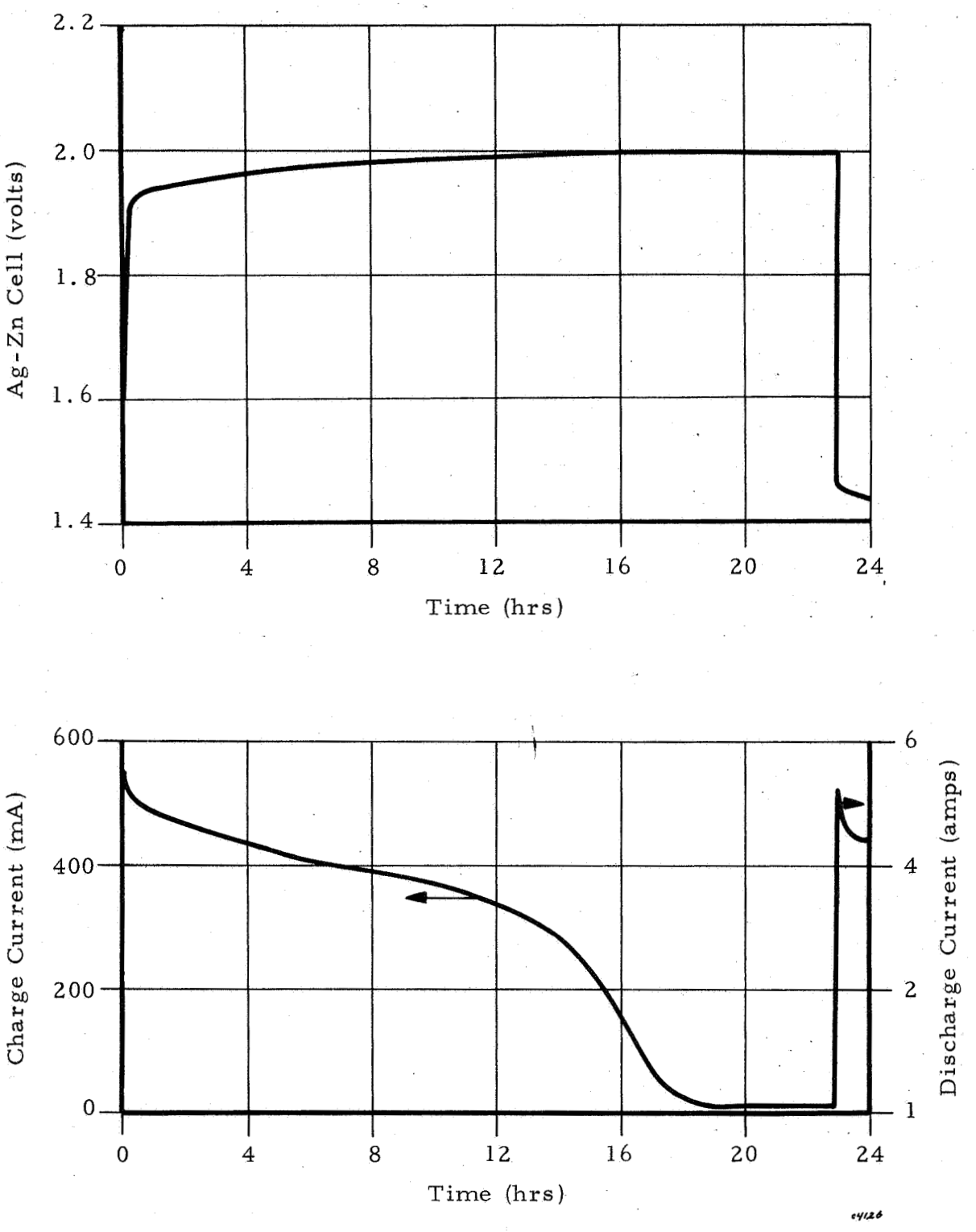

Figure 10. Typical Voltage and Current Profile of Cells on 24-Hour Cycle Regime

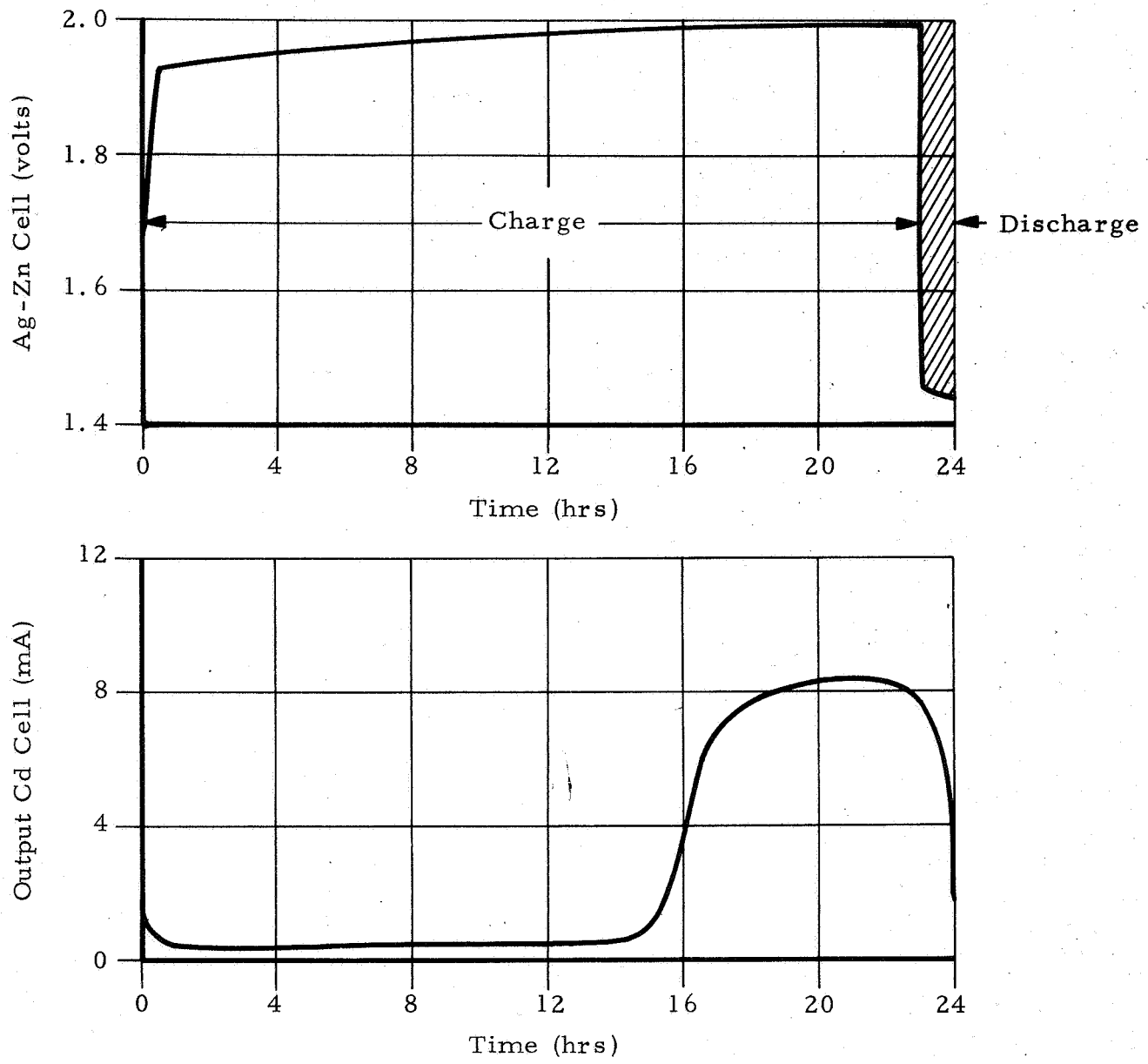

NOTE: Internal pressure in assembly was below 1 atm during entire period shown.

Figure 11. Characteristics of Cd Micro Fuel Cell During Cycle on 24-Hour Regime

Output of all of the AgO micro fuel cells has been noted to be relatively low and continuous since the start. No variation in output of these micro fuel cells has been noted throughout the course of a cycle. However, a very slow decline in output with increased number of cycles has been noted. At the start, the range in outputs of these cells was 0.05 to 0.13 mA. At the present time after 66 cycles, the output range of all eight was .02 to .04 mA. These results indicated very slow and slightly diminishing hydrogen evolution rate. During the early cycles the H_2 rates ranged from 0.5 to 1.3 cc/day. After 66 cycles, the H_2 rates ranged from 0.2 to 0.4 cc/day. The maximum output of any given AgO cell to date was 60 mAh on Assembly No. 16. This corresponded to consumption of 25 cc in this assembly to this point. Without micro fuel cells and assuming no chemical recombination, this would have caused a pressure rise of 31 psig to this point. It is also interesting to note that these results agreed quite favorably with the prior gassing studies performed on the same type of cells under the same regime. There it was found that the average H_2 rates ranged from a high of 0.33 cc/day to a low of 0.02 cc/day over a period of 1944 hours on 91 cycles (Reference 2). Comparison of two sets of data indicates fair correspondence in gassing rates between the two sets.

Characteristics of the Cd micro fuel cells has been found to be quite consistent with some minor variations. In general, it may be stated that their response characteristics were a direct function of the charge voltages of their respective assemblies. This is best represented by the curves shown in Figure 11. This gives the output of the Cd micro fuel cell and corresponding Ag-Zn cell voltage on Assembly No. 16 during Cycle No. 18. For the first 15 hours of charge, the output of this micro fuel cell was quite low and averaged near 0.2 mA. Voltage of the Ag-Zn cell during the period increased gradually from 1.92 to 1.98 volts. After 15 hours the output of the Cd cell increased quite rapidly to a level of 8 mA and remained at this point until the end of the 23-hour charge period. Voltage of the Ag-Zn cell remained at 1.98 volts during this time. Output of the Cd cell decreased quite rapidly during the subsequent discharge period and was below 1 mA again at the beginning of the next charge period. This pattern has been observed quite consistently on those assemblies with end of charge voltages of at least 1.98 volts. When the end of charge voltage of a given cell was much below this level, the output of its Cd micro fuel cell was relatively constant and at a low level of 0 to 1.0 mA.

These data may be used to give the O_2 gassing pattern during the course of a cycle in cells with the higher end of charge voltages. During the first 15 hours of charge, the O_2 rate was calculated to be near 0.04 cc/hour. During the last 8 hours of charge, the O_2 rate was calculated to be near 1.6 cc/hr. The total amount of O_2 evolved by the cell can be estimated by integrating the current time output of the micro fuel cell. This value was calculated as 60 Ah which corresponded to an equivalent of 12.6 cc for this cycle. Assuming no chemical recombination, this would have caused an internal pressure rise of 12 psi.

Finally, it is interesting to estimate the maximum pressures that would have developed without micro fuel cells. This was done by integrating the

outputs of both AgO and Cd micro fuel cells in the assembly with the highest gassing rates. Results tabulated in Table IV indicate this maximum to be 671 psig for the indicated time of 1584 hours (this was in Assembly No. 16). This value may be somewhat high in actual practice for it does not take into account the chemical recombination that may occur.

RESULTS OF 90-MINUTE CYCLE TESTS

This test has been carried out in four slightly different operating modes. Total operating time in the first three modes was relatively short, and it was therefore not possible to obtain long term reproducible data (it has been found that the Ag-Zn cells must be cycled continuously for a few days before reproducible patterns were observed in characteristics of both Ag-Zn cells and micro fuel cells). The variation was in the mode by which the cadmium micro fuel cells were recharged. Operating time in the fourth mode (now in progress) has been sufficient to obtain reproducible data. Results obtained during each of these tests are given below.

Details of the first operating mode were given above under "90-Minute Cycle Tests" and Figure 6. Briefly, this involved a parallel charge circuit for the Cd micro fuel cells with protective diodes in the charging circuit to the Cd electrode but without any protective diodes in the intercell connectors between Ag-Zn cells. Total operating time in this mode was 48 hours or 32 cycles. All components appeared to be functioning properly during the early stages of this first continuous cycle test. End of charge voltages of the Ag-Zn cells ranged from 1.96 to 2.15 volts and end of discharge voltages ranged from 1.45 to 1.66 volts. Appreciable outputs of as high as 100 mA (100 mA/cm^2) were noted from those Cd micro fuel cells in assemblies with end of charge voltages in excess of 2.05 volts. This signified consumption of oxygen at rates of as high as 21 cc/hour. The actual pressure rise in the silver-zinc cell was less than 10 psig. Some of the AgO micro fuel cells also exhibited appreciable output in the range of 30 to 40 mA for short periods (1-2 hours). This signified consumption of hydrogen at rates to 17 cc/hr. The presence of hydrogen in such amounts was unexpected in view of prior gassing studies.

After two days of operation, it became apparent that the Ag-Zn cells were rapidly approaching a state of unbalance. Those cells on the negative end of the stack tended to become overcharged while those on the positive end tended to become undercharged. It was realized that early cell failures would result from either excessive gassing of those cells on the negative end or reversal of those on the positive end. Therefore, it was decided to discontinue the test temporarily and investigate the cause for unbalance.

Two phenomena were subsequently uncovered which helped explain the origin of the unbalance. First, it was found that there were sizable leakage currents in each of the series connectors to the Ag-Zn cells. The leakage current was in the discharge direction of the silver-zinc cells and was noted to increase progressively from the negative to the positive end of the cell stack. The range in currents was from 30 mA between cells No. 7 and No. 8 on the negative end to 120 mA between cell No. 1 and No. 2 on the positive

end. These leakage currents were stopped completely upon breaking the parallel charge circuit of the Cd micro fuel cells. Apparently, the parallel charge circuit of the Cd micro fuel cells was responsible for the intercell leakage currents. The indicated variation of these leakage currents also explained in part why the cells on the negative end tended to become overcharged and those on the positive end tended to become undercharged. A second observation which helped explain the unbalance was that of uneven distribution of current in the parallel Cd charge circuits. Those Cd micro fuel cells on the positive end of the Ag-Zn cell stack were noted to have much higher inputs than those on the negative end. Since the Cd electrodes were charged at the expense of the negative zinc electrodes of the Ag-Zn cell, these results also indicated that the zinc electrodes of the Ag-Zn cells on the positive end of the stack would be discharged more rapidly than those on the negative end. This also helps to explain why the unbalance developed in the indicated manner.

It should be pointed out that some variations in input to the Cd electrodes were to be expected, but not in the observed manner. Theoretically, it was surmised that those Cd electrodes which had been completely discharged would have less negative voltages and would thereby receive more current. This condition would prevail in the assemblies which had evolved large quantities of oxygen. In these early stages however, none of the Cd cells had been completely discharged. The variation in input must therefore have been caused by superimposition of Ag-Zn voltages upon the parallel Cd circuit.

The second mode of operation was carried out with the use of protective intercell diodes and a modified charge schedule for the Cd micro fuel cells. It was anticipated that these changes would prevent further unbalance of the Ag-Zn cells and provide more uniform current distribution to the Cd micro fuel cell electrodes.

Total operating time in this mode was 50 hours or an additional 33 cycles. Leakage currents between Ag-Zn cells were stopped and current distribution to the Cd electrodes was much more uniform than above. It was noted however, that current distribution in the positive side of the Cd micro fuel cell charge circuit was very uneven (this is the current to the Zn negative electrodes). Here it was found that essentially all of this current was passing into the most positive zinc electrode and essentially no current was entering other Zn electrodes. This was not considered serious at the time for it was rationalized that an even distribution was required only on the negative side.

Throughout the course of this phase of testing, the unbalance among the Ag-Zn cells continued to increase, but at a much lower rate than in the preceding phase. The most negative Ag-Zn cells became somewhat overcharged and the most positive cells became slightly overcharged. Due to the use of diodes, the overall voltage of the stack of 8 silver-zinc cells was much less than in the prior phase. In this case, the overall voltages ranged from 6.5 to 7.5 volts at 5 amps as compared with 12 to 14 volts at the same current in the first phase without diodes. Overall charge voltages however, were essentially the same in both cases in the range of 15 to 17 volts. The Cd micro fuel cells responded quite well in consuming oxygen in those cells which

became overcharged and thereby limited the pressure rise. Until the very end of this phase, the maximum pressure developed in any one cell was only 18 psig in Assembly No. 8. This was the most negative assembly which had become severely overcharged. During the final cycle, the internal pressure in this assembly exceeded 30 psig, which resulted in failure due to the case bursting. Cell voltage at this point was 2.12 volts. The excessive pressure rise occurred at this point even though the incorporated Cd micro fuel cell was operating quite effectively with an output of 50 mA and thereby consuming oxygen in excess of 10 cc/hr. This Ag-Zn cell had apparently become so overcharged that its O_2 gassing rate was more than could be accommodated by the existing micro fuel cells. The AgO micro fuel cells exhibited relatively low outputs throughout most of the phase. For the most part, the outputs ranged from 0 to 1 mA. This signified H_2 evolution and consumption rates from zero to 0.4 cc/hour. On a few occasions, however, there were noted to be short term increases in AgO output to 50 mA. This signified H_2 rates of up to 20 cc/hour. The pattern was quite erratic however, and no correlation could be made between H_2 rates and other parameters of the system. Operation in this third mode was carried out for an additional 116 hours or 77 cycles. The new transistors were found to function quite effectively in this application. The voltage drop across each was only 0.1 volt at a discharge current of 5 amps. This was a significant improvement over the diodes which had given a voltage drop of 0.7 volts under the same conditions. For the seven assemblies, the overall discharge voltage was therefore almost 4 volts higher with the transistors than with diodes.

Aside from the improvements in discharge voltage there were no other major changes observed during this third phase of testing. The problem of unbalance of Ag-Zn cells still remained and became progressively severe during the course of cycling. Voltage of the cells on the positive end of the stack began to approach 1.0 volt at the end of the discharge and voltages of the cells on the negative end began to rise above 2.1 volts at the end of charge. It was interesting to note that the AgO micro fuel cells responded quite well in those cells with the exceptionally high end of charge voltages. Response of an AgO cell in such a case is given in Figure 12. Here it is noted that the Ag-Zn cell exhibited three distinct voltage plateaus on charge. The first was near 2.0 volts for the major portion of the charge. The second and third were near 2.1 and 2.4 volts at the end of charge. Output of the AgO micro fuel cell was noted to increase sharply as the charge voltage increased from the 2.1 to the 2.4 volt level. This upper plateau obviously represented the point where the negative zinc electrode of the Ag-Zn cell was fully charged and began to evolve hydrogen. The total amount of H_2 evolved during the cycle may be calculated by graphically integrating the current-time curve of Figure 12. The result is near 400 mA min which corresponds to approximately 3 cc H_2.

This third phase of testing was interrupted for several days during which an attempt was made to bring the cells back in balance. This was done by first discharging each completely to 1.0 volt and then carrying out repeat formation cycles on all cells. This was done in accordance with the formation procedures described earlier (Reference 1). Subsequent testing however, revealed that the problem of unbalance was still existent and continued to become more severe with increased number of cycles. Near the end of this

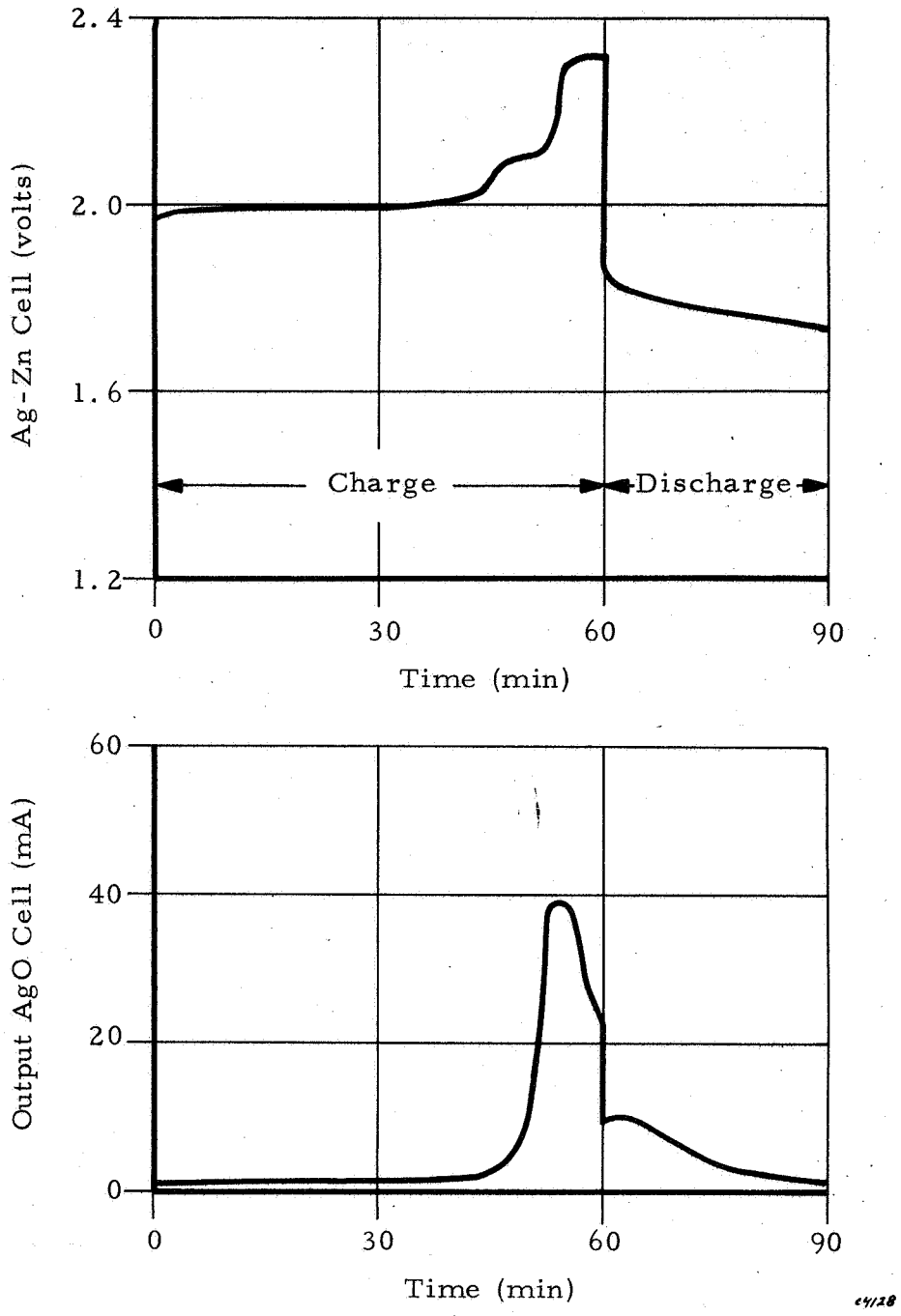

Figure 12. Response of AgO Micro Fuel Cell on Assembly Which Becomes Severely Overcharged (90-Minute Cycle Regime)

phase, it was noted that Assembly No. 1, on the most positive end, had failed by reversal during an overnight run. Inspection of the automatic recorder tracings indicated that the voltage of this assembly became negative in the middle of a discharge period and internal pressure simultaneously increased to a level above 30 psig. This caused bursting of the cell case. The AgO micro fuel cell of this assembly had been noted to be functional prior to this reversal, but it apparently could not accommodate the excessive H_2 rates encountered here. A maximum of about 1.0 liter of H_2 could have been evolved during the course of such a cycle, which included a reversal, and the AgO micro fuel cell would have had to deliver over 3.0 amps to completely consume all of this H_2. This was beyond the capability of the currently employed AgO micro fuel cells.

The five remaining cells were subsequently carried through three additional formation cycles in preparation for the fourth and final test phase. This phase was carried out with a greatly simplified circuit. The parallel charge circuit for the Cd micro fuel cells was eliminated entirely and each was charged separately as required with an auxiliary power supply. Results obtained during this final phase (currently in progress) are given below.

Total operating time in this final phase has been 20 days or 464 cycles. Some signs of cell unbalance were still persistant at the start, so it was decided to operate them initially at a lower cutoff voltage near 2.00 volts. It was hoped that continued cycling at the lower cutoff voltage would bring the cells back into balance without causing additional failures. However, two additional assemblies did fail during this period. One failure was caused by an internal short in one of the Ag-Zn cells and the other by excessive overcharge and bursting of the case. The micro fuel cells had been noted to be functional in this latter assembly, but they could obviously not accommodate the heavy gassing from this cell which was extremely out of balance with the others.

The three remaining assemblies have continued to operate quite well in this mode. An overall summary of performance of these units is shown in Table VI. Electrical balance of the Ag-Zn cells was quite well matched as evidenced by the end of charge and discharge voltages which are within .03 volts of one another. As a consequence, there were no cells that evolved exceptionally large quantities of gases. Rather, it has been found that the gassing rates were more uniform and at the more moderate levels observed in the prior gassing studies (Reference 2). All of the AgO micro fuel cells indicated continuous low outputs near 1.0 mA. This was in good agreement with the previously determined H_2 rates. Typical output characteristics of a Cd micro fuel cell during this phase are shown in Figure 13. Results indicated a rise in output from 2 mA to a maximum of 20 mA after the end of charge. This rise accompanied a voltage rise to 2.03 volts. Output again declined to 2 mA at the end of discharge. Internal pressures have remained at moderate levels less than 5 psig in this last phase. The cycle test will be continued on these cells during the fourth quarter.

Finally, it is again interesting to estimate the maximum pressure rise that would have developed here without the use of micro fuel cells. This was

TABLE VI

OVERALL SUMMARY OF REMAINING THREE SILVER ZINC CELLS ON 90-MINUTE CYCLE REGIME

1.	Number of cells	3 cells
2.	Total number of cycles	511 cycles
3.	Total operating time	765 hours
4.	End of charge voltage range	1.92 - 2.20 volts
5.	End of discharge voltage range	1.42 - 1.62 volts
6.	End of charge current range	1.00 - 2.85 amps
7.	Discharge current range	4.25 - 5.40 amps
8.	Maximum press in a cell	18 psig
9.	Output range of Cd cells	0 - 60 mA
10.	Output range of AgO cells	0 - 50 mA
11.	Maximum H_2 consumed in a cell	370 cc H_2
12.	Maximum H_2 pressure in a cell without AgO cell	360 psig*
13.	Maximum O_2 consumed in a cell	1600 cc O_2
14.	Maximum O_2 pressure in a cell without Cd cell	1560 psig*
15.	Maximum total pressure without AgO or Cd cells	2920 psig*

*These are estimated pressures that would be developed in Assembly 3 without micro fuel cells after 765 hours assuming there is no chemical recombination of gases or reaction with silver-zinc electrodes.

done by integrating the output of the AgO and Cd micro fuel cells in the assembly with the highest gassing rates. Results in Table VI indicate an exceedingly high value of 2920 psig would have been attained in Assembly No. 3 after 511 cycles. In an actual test, this value may be somewhat high for it does not take into account the chemical recombination of gases that may occur or their reaction with electrodes of the silver-zinc cells. The result, however, does again illustrate the effectiveness of the micro fuel cells in controlling pressure.

GENERAL CONSIDERATIONS CONCERNING USE OF MICRO FUEL CELLS

Results obtained to date have demonstrated the feasibility of employing micro fuel cells for controlling pressure in sealed Ag-Zn cells. In low gassing rate environments such as were found on the 24-hour cycle regime or on open circuit stand, the micro fuel cells performed their function effectively in the primary mode of operation. In high gassing rate environments such as were found in the 90-minute cycle regime, the micro fuel cells had to be recharged in order to satisfactorily perform their function. The only satisfactory method established to date for carrying out recharge has been on an individual basis with an external power supply. Each micro fuel cell was charged separately and as required in this technique.

If a more complete set of operating data could have been obtained in the initial operating modes, it might have been possible to design an effective parallel charge circuit. Due to the rapid deterioration of the Ag-Zn cells, however, it was not possible to obtain these data.

An alternative method for recharging would make use of the Ag-Zn cells themselves as sources of energy. In this mode, each micro fuel cell receives its charge parasitically from its host Ag-Zn cell. This avoids the need for any external power supply. The major problem, however, is lack of current input to the micro fuel cells. This can be resolved with the use of shorter wicks which was not possible in this case because of the design of the cover of the silver-zinc cell. An optimum design for a component micro fuel cell-silver-zinc cell would permit both micro fuel cells to be sealed either directly through the cover of the Ag-Zn cell or else, immersed inside the cell itself. This would afford lower resistance between the Ag-Zn cell and micro fuel cell and consequently higher charge currents to the micro fuel cell.

PROGRAM FOR FOURTH QUARTER

Experimental effort during the fourth quarter will be devoted to completing the sealed cell tests as well as fabricating and delivering 15 composite assemblies to NASA/Goddard. The sealed cell tests will be carried out until the end of the quarter or until failure, which ever occurs first. These tests include the assemblies on the 90-minute regime, the 24-hour regime, and those on stand at both room temperature and 0°C. The 15 composite assemblies will be essentially the same as those described here with only minor modifications.

REFERENCES

1. Sealing of Silver Oxide-Zinc Storage Cells, First Quarterly Report, Contract No. NAS 5-10409, Douglas Aircraft Company Report DAC-59860-Q1, September 1967.

2. Sealing of Silver Oxide-Zinc Storage Cells, Second Quarterly Report, Contract No. NAS 5-10409, Douglas Aircraft Company Report DAC-59860-Q2, December 1967.