TECH LIBRARY KAFB, NM
0060542

NASA CONTRACTOR REPORT

NASA CR-1257

NASA CR-1257
C. 1

NASA CR-1257

LOAN COPY: RETURN TO
AFWL (WLIL-2)
KIRTLAND AFB, N MEX

SHEAR STRAIN PROPERTIES TO 10^{-10} OF SELECTED OPTICAL MATERIALS

by William A. Eul and W. William Woods

Prepared by
THE BOEING COMPANY
Seattle, Wash.
for Langley Research Center

NATIONAL AERONAUTICS AND SPACE ADMINISTRATION • WASHINGTON, D. C. • JANUARY 1969

TECH LIBRARY KAFB, NM

0060542

NASA CR-1257

SHEAR STRAIN PROPERTIES TO 10^{-10} OF SELECTED OPTICAL MATERIALS

By William A. Eul and W. William Woods

Distribution of this report is provided in the interest of information exchange. Responsibility for the contents resides in the author or organization that prepared it.

Prepared under Contract No. NAS 1-7627 by
THE BOEING COMPANY
Seattle, Wash.

for Langley Research Center

NATIONAL AERONAUTICS AND SPACE ADMINISTRATION

For sale by the Clearinghouse for Federal Scientific and Technical Information
Springfield, Virginia 22151 – CFSTI price $3.00

ABSTRACT

The nonrecoverable (plastic) torsional strain of AISI 304L corrosion-resistant steel, Owens-Illinois CER-VIT 101, Corning fused silica 7940, and Corning ULE fused silica 7971 was experimentally determined as a function of applied torsional stress. Stress and strain ranges of 200 to 10,000 psi and 0.0005 to 2 microinches per inch, respectively, were recorded. Significant differences between as-machined and annealed specimens were observed. Information obtained from this program is to be applied in the design and manufacture of large diffraction limited optics.

TABLE OF CONTENTS

	Page
LIST OF ILLUSTRATIONS	vi
LIST OF TABLES	vii
1.0 SUMMARY	1
2.0 INTRODUCTION	2
3.0 TEST SPECIMENS	2
4.0 MICROSTRAIN TESTING EQUIPMENT	3
4.1 Extensometer	3
4.2 Loading System	4
4.3 Thermal Control	4
4.4 Signal Conditioning and Recording	5
5.0 CALIBRATION	7
6.0 OPERATING PROCEDURE	7
6.1 Specimen Installation	7
6.2 Standardization	9
6.3 Measurement	9
7.0 DATA REDUCTION	9
7.1 Drift Cancellation	10
7.2 Standardization	10
7.3 Decay Curve and Extrapolation	10
7.4 Rapid Decay Values	11
8.0 RESULTS	11
8.1 Data Presentation	11
8.2 Nonrecoverable Strain	12
8.3 Viscoelastic Decay	13
9.0 CONCLUSIONS AND RECOMMENDATIONS	14
APPENDIXES	
A-- Specimen Diameter Determination	16
B-- Procurement Specification	17
C-- Computer Program	27
D-- Rod Power Law Correction	35
REFERENCES	37

LIST OF ILLUSTRATIONS

Figure		Page
1	Dimensioned Specimen Drawing	44.
2	Microstrain Test Specimen of 304L Stainless Steel	45
3	Microstrain Test Apparatus Assembly Drawing	46
4	Extensometer and Loading Assembly	47
5	Extensometer Cups and Clamps	48
6	Extensometer Differential Transformers	49
7	Extensometer Damper and Inner Thermal Sensor	50
8	Specimen Loading Mechanism	51
9	Inner Windshield Thermal Enclosure	52
10	Middle Thermal Enclosure	53
11	Outer Thermal Enclosure and Electronics Rack	54
12	Electronics Block Diagram	55
13	Differential Transformer Circuitry	56
14	Preamplifier and Calibrator Circuitry	57
15	Thermal Sensors Circuitry	58
16	Outer Enclosure Thermal Controller	59
17	Shear Strain Decay as a Function of Time--- 14-Minute Linear Plot	60
18	Shear Strain Decay as a Function of Time--- 67-Minute Linear Plot	61
19	Shear Strain Decay as a Function of Time--- 650-Minute Linear Plot	62
20	Shear Strain Decay as a Function of Time--- Log/Log Plot	63
21	Typical Specimen Shear Strain Decay Characteristics as a Function of Applied Shear Stress and Time	64
22	Shear Strain as a Function of Applied Stress for Heat Treated Specimens	65
23	Nonrecoverable Shear Strain as a Function of Applied Stress for As-Machined Specimens	69
24	Tested Materials Comparison of Nonrecoverable Shear Strain as a Function of Applied Shear Stress	71

LIST OF TABLES

		Page
I	Specimen Physical Characteristics	38
II	Specimen Disposition Summary	39
III	Viscoelastic Decay Parameters	40

SHEAR STRAIN PROPERTIES TO 10^{-10} OF SELECTED OPTICAL MATERIALS

By William A. Eul and W. William Woods
The Boeing Company

1.0 SUMMARY

The results of a research program conducted over the period from August 1967 to March 1968 under the microstrain portion of Contract NAS 1-7627, Investigation of the Effects of Low Energy Protons on Specular Reflectance of Surfaces for Space Mirrors, are presented in this intermediate report.

The overall objective of the program was to determine the nonrecoverable deformation of candidate telescope mirror materials after application and release of short term torsional shear stresses. Viscoelastic strain recovery characteristics were measured and are presented along with the nonrecoverable strain-versus-applied-stress data.

Microstrain measurements of heat-treated specimens yielded precise, consistent curves of nonrecoverable strain versus stress. Viscoelastic decay proceeded rapidly, allowing testing to be completed in reasonable time intervals. The as-machined specimens, by comparison, were grossly inconsistent in their nonrecoverable strain characteristics and had viscoelastic decay parameters of much larger magnitude, requiring long observation time to achieve reasonable measurements. The one exception to this was CER-VIT 101, which exhibited identical, consistent behavior both before and after heat treatment.

The viscoelastic recovery characteristic is not readily represented by a first order system, wherein the motion is described by a time exponent of a constant such as the Naperian base (e). The decay is, however, closely represented by a constant negative exponent of time. The exponent differs with the material and, in some materials, with history and environment.

The relationship between stress and nonrecoverable strain appears to be a power law characteristic for the materials studied, over the range of strain from 10^{-6} to less than 10^{-9}. This implies that there is no observable threshold effect but that a permanent offset, however small, results from any applied stress.

2.0 INTRODUCTION

The purpose of this program is to study the microstrain characteristics of candidate materials for telescope mirror substrates for space application. Large diffraction-limited space optics such as a manned orbital telescope (MOT) require structural deflection stabilities of 10^{-8}. A thorough understanding of candidate mirror substrate materials is essential, otherwise an effective space mirror system will not be attainable. The object of this program is to determine the amount of permanent deformation that will occur in typical mirror substrates after they are subjected to various amounts of stress. In addition, the transient characteristic of the elastic portion of the strain return, following stress removal, is analyzed and reported. It is anticipated that the nonrecoverable strain characteristics of the materials investigated may be a key factor in the selection of large-mirror substrates for space telescope use. In this program, the short-term microstrain characteristics are measured on two types of fused silica, a devitrified glass (CER-VIT), and 304L corrosion resistant steel.

In the past, tensile yield measurements of 10^{-3} have been typical. This has been extended recently to a measurement range of 10^{-6} strain. At this point, severe thermal stability problems are encountered if a tensile measurement technique is used. To make measurements below 10^{-6}, some method for reducing the effects of temperature change is mandatory. A special apparatus based upon a torsional shear principle, capable of measuring nonrecoverable strain in the region of 10^{-10} has been fabricated. This is the principal method for alleviating thermal problems. The thermal expansion of an unstressed specimen in thermal equilibrium will not alter the shear displacement of the specimen.

Angular differences (shear) rather than linear differences (tensile strain) are measured, thus allowing the use of extremely precise mensuration techniques. The present program is designed to provide short-term loading, which is then released to determine the viscoelastic and nonrecoverable strain.

3.0 TEST SPECIMENS

The test specimens, as portrayed in figures 1 and 2, have a conventional torsion test configuration with a central, low-rigidity test region, shoulders for attaching the extensometer, and mechanically rugged end sections for support and attachment of the loading system. All specimens were made essentially identical with the exception of the test section diameter, which was adjusted for each material to achieve a given torsional rigidity. This allowed the optimum compromise between torque and maximum angular displacement limits of the test apparatus. Specimen materials, published moduli, and test section diameters are listed in Table I. Criteria for establishing test section diameters are set forth in Appendix A. The microstrain sample procurement specification, manufacturer's specifications, and/or standards are set forth in Appendix B.

4.0 MICROSTRAIN TESTING EQUIPMENT

The testing equipment is comprised of four major elements: extensometer, loading system, thermal control system, and signal conditioning and recording system.

4.1 EXTENSOMETER

The extensometer is the most critical element of this system. It must possess mechanical stability and transduction sensitivity better than the level to which measurements are to be made. It must also, in a typical industrial environment, provide discrimination against steady state seismic disturbances of large magnitude in comparison to the displacements to be measured. It must employ transduction elements which discriminate against undesired mechanical signals and whose output is capable of being filtered to further reduce seismic noise. These objectives have been satisfactorily met for this testing program by the design shown in figures 3 and 4.

Cup-shaped assemblies are attached to each shoulder of the test specimen (figure 5). Relative rotation of the specimen shoulders is transmitted via the cups to four symmetrically mounted differential transformers (figure 6). The ceramic coil forms of the transformers are mounted to the upper cup, and the magnetic cores are mounted to the lower cup. In operation, the upper end of the specimen is mounted to a rigid framework, thus essentially fixing the upper cup. The lower end of the specimen and the attached lower cup are free of restraint except for the viscous dampers (figure 7) during measurement, with no encumbering wires. Forces exerted by the transformer signal leads attached to the upper extensometer cup do not appreciably affect the measurements.

The differential transformers, which are commercially available units, have a linear range of $\pm 1.3 \times 10^{-4}$ m. Thermal and structural stability of the transformers is attained by the use of grade A lava for the bobbins. The differential transformers were selected for optimum matching of sensitivity. Residual mismatch, as observed by (simultaneous) tandem differential operation, was corrected by shunt L-R padding across the primary windings. The resistance-inductance ratios were chosen to match those of the transformer primaries. This matching procedure minimizes unwanted linear motion sensitivity in the extensometer. Transformer cores are mounted on threaded rods of AISI No. 303 corrosion resistant steel, which is nonmagnetic, and has high electrical resistivity. Other than these rods, all metal parts in the transformer vicinity that could cause unwanted eddy current coupling are eliminated. Initially, the core support rods were fabricated from boron nitride, but these were consistently destroyed upon specimen fracture. No overly adverse effects upon substitution of the steel rods were noted. Firm mounting of the core and coil form supports was found to be necessary to avoid loss of zero reference during loading, as clearances tend to be small during loading.

Materials employed in the extensometer cups are brass and grade A lava. The brass cups were selected initially for strength, lack of magnetism,

and machinability. Strength was needed because the method of fastening to the specimen shoulder required the use of two mechanical clamps. Clamping proved undesirable from a fragility standpoint with the glassy materials, and was eventually discarded in favor of cementing with dopping wax. The lava was employed initially in the unfired state, and was fired later. No essential difference in operation was noted between green and fired condition, except that the firing caused appreciable permanent dimensional change.

Damping of extensometer motion, found to be necessary to reduce mechanical amplification of seismic floor motion, is provided by two flat paddles suspended from the lower extensometer cup assembly and immersed in silicone oil of approximately 15,000 centistokes. This overdamps the system appreciably, but the resulting time constant does not exceed 2 seconds. This time constant is short enough to avoid interference with viscoelastic decay measurements.

4.2 LOADING SYSTEM

The loading shafts at the ends of the specimen are gripped in collet-type clamps (figure 5) which support and load the specimen. The upper clamp is bolted directly to the test assembly frame (figure 4). The lower clamp is engaged by a spline mounted on a universal joint coupler, which in turn is driven by a lever-type strain-gage load cell, an eccentric, a right angle reducing gear box, and a manual crank, all in series (figure 8). The large amount of backlash provided between the spline and the lower loading clamp assures complete freedom of motion of the specimen when it is not being loaded. The universal joint tends to alleviate any bending forces which might be generated during loading. The eccentric prevents the load cell from being driven against mechanical stops of the loading system. The double-worm gear box is self-locking, and holds a given load without additional braking. It also provides the required sensitivity for applying the very small angular deflections involved in the low-stress loading ranges.

4.3 THERMAL CONTROL

Thermal expansion and contraction of the specimen and extensometer caused by normal room ambient temperature changes and gradients were found to produce intolerable drift in the course of measurements. Accordingly, a thermal control system was arranged to minimize temperature fluctuation. As shown in figures 9 through 11 the specimen and extensometer are housed in a three-layer set of enclosures.

The first or inner hardboard enclosure serves as a wind screen and short-term thermal fluctuation filter. A thermistor bridge mounted within this enclosure is used to monitor temperature (figure 7). Within the middle or second enclosure, which is insulated with polystyrene foam, are a heater and circulating fan. Temperature within this enclosure is sensed by two thermistor bridges connected in a closed loop system through a carrier amplifier, an operational amplifier integrator, and a power amplifier to the heater. Although this system provides very close control of air temperature within the second enclosure, thermal leakage

through the base plate and loading support structure was found to produce serious disturbances.

The whole system was therefore housed in an outer enclosure (figure 11) with a separate thermistor bridge-carrier amplifier-integrator-heater fan control loop (figure 10). This expedient has reduced thermally induced instability to what appears to be an acceptable level. Indicated temperature stability within the inner enclosure is approximately 0.01°K after a 24-hour soak to achieve thermal equilibrium.

4.4 SIGNAL CONDITIONING AND RECORDING

4.4.1 Extensometer

An overall view of the signal conditioning and recording equipment is shown in figure 11. A block diagram of the system is shown in figure 12.

The differential transformers of the extensometer are individually adjusted to null each time a new specimen is mounted. To facilitate monitoring the output of each transformer, a switch is provided that shorts out three of the four transformer secondaries in turn. A fifth switch position allows summing of all secondaries in series. The matching pads for the primaries are mounted in the same chassis box on top of the loading frame as shown in figure 9 and schematic figure 13.

The summed signal is processed by the preamplifier-calibrator to provide stable reference and offset signals, added a.c. gain, and phase shifting to match the output phase with the excitation. A schematic diagram is shown in figure 14. Reference and offset signals are provided by a series-inserted powdered-iron toroidal core transformer which is driven by currents supplied from the carrier excitation line through a 10-turn helipot and precision dropping resistors. Phase shift of the series transformer is adjusted to match that of the differential transformers by a resistive shunt across its primary. The secondary winding is designed to have very low inductance for minimal circuit loading. Magnitude of the offset or reference signal thus provided is ascertained from the calibrator switch and potentiometer dial settings.

The series-summed signal is amplified and phase shifted by the battery-powered transistor preamplifier. Capacity of the 9 amp-hour mercury cell is adequate for 6 months continuous operation with good gain stability.

The carrier amplifier was chosen for its stability as experienced on past programs. A few modifications were, however, found necessary for stability improvement of the extensometer channel. The balance controls, which had inadequate stability, were desensitized by a factor of 10 by raising the fixed series impedance element. A noisy V-R tube in the power supply was replaced by a string of avalanche diodes. The output ring modulator was replaced by a full-wave transistor chopper. Primary power to the carrier amplifier was stabilized by a line voltage regulator. Gain variations in the extensometer channel from a faulty rheostat were eliminated by shorting the rheostat for maximum gain. With the

modifications and provisions, there is still some cross coupling between channels, which can amount to an equivalent 5×10^{-10} strain. In normal operation, however, the signals on the other channels do not vary and signal stability is adequate.

4.4.2 Load Indicator

The four-arm strain-gage lever load sensor (figures 8 and 12) is coupled directly to the second channel of the commercial carrier amplifier without additional signal conditioning.

4.4.3 Temperature Sensors

The temperature sensors comprise resistance bridges with thermistor discs in two active arms. Nominal resistance of the thermistor is 268 ohms, which is near optimum for normal carrier amplifier design. The sensor bridges utilize a 5-wire supply cable to facilitate insertion of a remote balance or set-point network, as shown schematically in figure 15. The inner enclosure temperature monitor and the outer enclosure feedback sensor are fed through this balance network to channels 3 and 4 of the commercial carrier amplifier (figure 12). The two middle enclosure feedback sensors are connected to a separate carrier amplifier employing similar features and constructed for a previous program.

4.4.4 Temperature Control

The outer-enclosure thermal controller is shown schematically in figure 16. Both proportional and integral control are provided for optimum damping and minimum error. The power amplifier and load dissipation are lumped together in one fan-circulated heat sink, thus utilizing all the power for heating. Temperature of the outer enclosure is regulated at 302°K.

The middle-enclosure thermal controller is similar to that of the outer enclosure, except that the power amplifier is a silicon controlled rectifier switch, and is rack mounted external to the enclosures. As power dissipation of this amplifier is minimal, essentially all the power appears in the load. Temperature of the middle enclosure is regulated to 305°K.

4.4.5 Recording

The recording oscillograph (figure 11), chosen for its sensitivity and multichannel capability, is normally supplied with chart speeds from .006 to 1.6 meters per second. For this program, the chart drive motor shaft was coupled to an externally mounted 10 rpm shaded pole gear motor. This expedient provided a range of chart speeds from roughly .08 to 18 meters per hour, which is adequate for the present investigation.

Life of the mercury lamp as operated from the recorder power supply is approximately 200 hours, determined by the power supply voltage limit of about 30 volts. When the lamp extinguishes for any reason, it must be restarted manually. This operation on a 24-hour per day recording

schedule causes intolerable data loss. The lamp was therefore coupled to an external automatic-restart laboratory power supply matched to the lamp characteristics over the voltage range of 16 to 45 volts. This provides lamp life in excess of 1,000 hours, limited primarily by acceptable recording trace widths as influenced by fireball growth.

Galvanometers employed include three fluid damped and two magnetically damped. The fluid damped galvanometers operated directly from the carrier amplifier to record extensometer output, load, and temperature. The magnetically damped (high sensitivity) galvanometers record extensometer output and time marks.

The extensometer output contained sufficient seismic vibration signal that the recorded trace would be essentially useless. The high sensitivity galvanometer signal, in particular, was found to sweep the full chart width with a characteristic frequency of approximately 28 Hz. Accordingly, a simple low pass filter (figure 12) was fabricated and inserted to reduce this signal to an acceptable level. An attenuator pad was also added to the high sensitivity galvanometer to yield a sensitivity ratio between the two galvanometers of 24 to 1. The maximum extensometer trace sensitivity thus afforded was about 4×10^{-9} strain per cm chart deflection.

5.0 CALIBRATION

Before the start of the program, the extensometer and load cell were calibrated and compared against fixed electrical references. These electrical references were then utilized for standardization throughout the program.

The extensometer was calibrated by mounting a mirror on the free end of the extensometer and observing its angular deflection with an optical tooling autocollimator. The measured deflection was compared with the resistance required to return the combined differential transformer signal to a null, when inserted in series with the carrier supply and the primary of the calibration transformer (described in Section 4.4.1). These resistance values and their scale extensions were then used as extensometer deflection standards.

The load cell was calibrated by dead weight loading of the lever arm. The loaded output was compared against that from fixed resistance shunting one arm of the bridge. The values of resistance employed in the internal calibrator of the amplifier were compared with the original calibration resistor and were thereafter used as load standards.

6.0 OPERATING PROCEDURE

6.1 SPECIMEN INSTALLATION

The extensometer brass cup is heated with an electric heat gun to the melting temperature of the dop cement used, and is cleaned of old cement with cotton swab. Fresh cement is melted onto the shoulder recess, and the specimen end inserted after a short preheat. Excess cement between

the brass cup and the specimen loading end shaft is removed with a sharpened swab stick, and the assembly allowed to cool. The other brass cup is similarily applied, taking care to align the second cup with the first for rotation about the specimen axis.

The lava cups are assembled to the brass cups after adequate cooling has taken place. The lava cups are aligned to each other with a fiduciary mark indicating optimum position for differential transformer placement. Loading collets are attached to the end shafts and the extensometer placed in the loading frame. Care must be taken during this procedure to minimize stresses to the specimen, which avoids introduction of stress history in the test section.

After the extensometer and specimen are mounted to the loading frame, the lower loading assembly is positioned coaxial with the lower load collet and dogged down to the base plate. A locking clamp is slid up the lower loading assembly and the lower collet, and tightened to clamp the collet to the loading assembly. This prevents application of appreciable load to the specimen in ensuing operations. The damper paddles, differential transformers, and core supports are then assembled to the extensometer. The lower loading collet is checked for centering within the backlash of the center-positioned loading spline, centered, and tightened. The loading spline is raised into position. All extensometer channel electrical zero adjustments and offset controls are set to zero. The locking clamp is lowered, and the differential transformer cores positioned for visual vertical and lateral clearance within the differential transformers. A microscope illuminator focused along the core support rod allows good visual sighting from the transformer rear. Clearance for loading operation is checked by moving the transformer holder along its track and observing any interference. If interference is noted, adjustments are made, and clearance rechecked. After all four transformers are thus adjusted, the selector switch is set to monitor the first transformer, and the transformer is mechanically adjusted for null within approximately 2 seconds of arc as indicated on the carrier amplifier meter. The extensometer is checked for freedom from interference by disturbing it with a light finger touch and observing return of meter indication to the same setting. If exact return is not noted or the meter indicates excessive jitter, clearances are again rechecked. This procedure is repeated for the other three transformers. When all four transformers are adjusted and tightened down securely, the selector switch is set to the summation position, and the remaining unbalance is removed with balance controls on the carrier amplifier. The enclosures are emplaced and the thermal controls activated. Set points are reached on the thermal controllers within approximately 45 minutes. Adequate thermal equilibration, however, takes from 12 to 24 hours. Recording of the temperature and extensometer output is conducted at minimum chart speed during equilibration. Excursions of extensometer outputs outside the recording range are recentered by the calibration-offset control. Before the start of a standardization and measurement series, the calibration-offset controls are reset to zero, and the trace recentered by the carrier amplifier zero-balance controls.

6.2 STANDARDIZATION

Load and deflection measuring instrumentation is subjected to standardization procedure at the start of every series of measurements. For each attenuation range of the carrier amplifier (1, 2, 4, 8, 16) an appropriate standardizing resistance or voltage ratio is introduced into the sensor circuit to produce a combined up-and-down scale deflection of 60% of the total chart width (approximately 9 out of 15 cm). The attenuation range and equivalent calibration value is noted on the chart. Originally this procedure was carried out for both the high and low sensitivity extensometer trace, but the low sensitivity trace was found to be seldom used in data reduction, and generally is no longer subjected to standardization. Sensitivity ratio between high and low traces has been established at 24.0.

Day-to-day variation in sensitivity has been noted as five to fifteen parts per thousand.

6.3 MEASUREMENT

At the start of every loading, the chart speed is set to 1.9 cm per minute, with 1 minute timing marks. The loading crank is operated until the desired load is indicated on the carrier amplifier meter. A timer-alarm set to 5 minutes is turned on, and the load attenuator setting noted on the chart. At the alarm signal, the crank is again operated to release the load and center the loading spline within the backlash region. If the high sensitivity trace has not appeared on the chart, the calibration-offset potentiometer and switch are operated to bring it on. Attenuator, calibrator switch, and potentiometer settings are noted on the chart. When necessary to keep the trace on the chart, the potentiometer is thereafter reset and the new setting noted. If the observation continues past 30 minutes, chart speed is then switched to 4.8 mm per minute with 5 minute time marks. After 1 hour, a chart speed of 7.7 cm per hour with 15 minute time marks is employed. Observation interval for a given load recovery depends upon the recovery rate and operator patience as tempered by past experience with data reduction requirements. Observation period per loading varies within the limits of 10 minutes to 24 hours. At the end of each observation period, the specimen is loaded in the opposite direction to a factor of roughly 1.4 of the previous load. This alternating loading increment is repeated for each successive observation until the deflection or load limit of the equipment is reached, the specimen fractures, or a load just below the fracture limit of a previous similar specimen is reached. The extensometer and specimen are then removed from the enclosures and installation of another specimen initiated.

7.0 DATA REDUCTION

Data reduction is facilitated by a computer program that performs the large amount of numerical reduction required by the measurement operation. A printout of the program deck is reproduced in Appendix C. The program language, called BLITZ, is peculiar to Boeing, but is similar enough to FORTRAN that little difficulty should be encountered in

following it for one versed in the latter language. A literal translation to FORTRAN IV is also included, but has not been checked and may contain trivial coding errors.

Aside from the titular information such as test data, specimen number, and physical information of the specimen, the inputs to the program and its operation are summarized in the following subsections.

7.1 DRIFT CANCELLATION

Strains induced into the specimen prior to the start of testing generally will decay over a long time period, resulting in an apparent zero drift of the extensometer. These strains may have been induced in the fabrication of the specimen, or from the differential expansion of the specimen shoulder and brass mounting cup during cooling from the cementing operation. The waiting interval for the exponential decay to reach an insignificant level could take weeks or months. To speed up the testing procedure and reduce errors, the exponential is determined and the resulting empirical approximation is subtracted from all ensuing data. This requires that the time and slope of the decay curve at two points, say 300 to 800 minutes after specimen installation, be determined and inserted into the computer program.

7.2 STANDARDIZATION

The sensitivity of load and extensometer channels is computed for appropriate carrier amplifier attenuation settings. Data necessary for this computation are attenuator setting, calibrator setting, and chart deflection. Extensometer ranges are identified in the computer program as 1 to 16 on the high-sensitivity trace and 101 to 116 on the low-sensitivity trace. Load ranges are identified as 201 to 216, corresponding to attenuator settings of 1, 2, 4, 8, and 16. Sensitivity of each identified channel and range is printed out in stress or strain units per chart division (2.5 mm). Loading effect of the extensometer offset potentiometer resistance on the fixed calibration network is computed and compensated for in the computer program.

7.3 DECAY CURVE EXTRAPOLATION

When load is released from the specimen, the observed deflection does not immediately decay to a fixed offset. The decay continues for an extended period of time. Determination of asymptote, or end point of the decay, is the primary objective of the measurement program. As shown in plots of identical data (figures 17, 18, and 19), the determination of this asymptote, which is the nonrecoverable strain, from a linear plot is not immediately obvious. When plotted on log/log paper, however, the data may be adjusted to produce a straight line, as demonstrated in figure 20. This straight-line approximation, which appears to hold over several orders of magnitude in time, implies that the appropriate empirical representation of the original data is

$$\text{Strain} = A_o + A_1 e^{-B \ln (t)}$$

or

$$\text{Strain} = A_o + A_1 t^{-B}$$

where A_o is the permanent or nonrecoverable strain, A_1 is the viscoelastic strain at time (t = 1), and B is a function of the material and its condition.

Previous models and representations of materials viscoelastic behavior have been based upon a linear dependence of strain upon the logarithm of time. The present representation appears to be unique in its accuracy of fit for wide-range viscoelastic data.

The computer program accepts values of appropriate time, extensometer, and load parameters. It performs the conversion to meaningful stress or strain values, as well as the adjusting of the strain data to separate the nonrecoverable strain (A_o) from the decay curve. Original and adjusted data values are printed out and compared with the fitted empirical straight-line approximation for quality of fit.

7.4 RAPID DECAY VALUES

Where the decay is rapid, as in light loading or in materials of low viscoelasticity, extrapolation is not employed. Instead, after a suitable observation period, the final values are introduced in the computer program without extrapolation to yield stress and nonrecoverable strain values directly.

8.0 RESULTS

8.1 DATA PRESENTATION

The computed values of nonrecoverable strain are plotted versus stress on log/log graph paper to produce a smooth curve (figure 21). A line is fitted by inspection through the points and the slope (N) determined. This slope is the exponent of the stress-strain relationship, as discussed in Appendix D and determines the correction factor to obtain actual outside fiber plastic strain. The plotted curve is multiplied by this factor ((N + 3)/4) to produce a new parallel curve, which is labeled the nonrecoverable strain asymptote.

The viscoelastic (or recoverable) strain values calculated from the empirical representation discussed in Section 7.3 are added to this adjusted curve to yield strain values at various time increments (one minute, one hour, etc.).

Overall results of the microstrain program are plotted in figures 22 through 24. These curves depict the nonrecoverable (plastic) strain and the viscoelastic offset for various time intervals at a temperature of 305°K.

A summary of the specimens prepared and tested is presented in Table II. Problems and quality of results are also noted. The characteristics of the various materials are discussed in the following subsections.

8.2 NONRECOVERABLE STRAIN

Nonrecoverable strain versus stress data were obtained on both heat treated (figure 22) and as-machined (figure 23) specimens. Data from as-machined 304L corrosion resistant steel proved difficult to obtain and are not plotted. Data from heat treated and as-machined CER-VIT agree closely and both are presented in figure 22b. Two specimens of heat treated 304L corrosion resistant steel were subjected to somewhat different tests, as shown in figure 22a. Specimen 3 was subjected to progressive alternate loading as discussed in Section 6.3. Specimen 2-2 was given a single load near the maximum load attempted on specimen 3, for comparison to the alternate loading tests. Subsequent loads on specimen 2-2 were all made in the opposite direction to the single large load, starting at low levels and increasing to levels greater than the initial load. The difference in slope of the two sets of data may be attributed to Bauschinger effect. The reason for the disparity in magnitude is not obvious, but may be affected by material inhomogeneities as suggested by surface imperfections made visible by heat treatment as shown in figure 2.

Of the three CER-VIT specimens (numbers 4, 5, and 11), the data from number 5 proved essentially unusable owing to interference from shoulder cracks induced by the mechanical clamps. Number 4 was fractured in testing. Number 11 was tested before and after heat treatment. As shown in figure 22b, all three sets of valid data agree closely, indicating good material uniformity and stability of characteristics. A telephone conversation with James Duncan of Owens-Illinois Development Center, Toledo, Ohio, revealed that the material is not amenable to annealing, as it is completely devitrified and will revitrify before other changes occur. The heat treatment to which the present material was subjected (810°K for 1 hour) is safely below the 1,200°K vitrification point.

Two specimens of the 7940 fused silica were tested in the heat treated condition, the results of which are plotted in figure 22c. The single-stress performance of specimen 10-3 shows good conformity with that from the alternating loads of specimens 9 and 10-2. This appears to validate the alternating load procedure.

A series of accidents and shortage of time restricted the tests of heat treated 7971 ULE silica to two runs of a single specimen. Results are plotted in figure 22d.

The performance of as-machined specimens of 7940 and 7971 silicas before heat treatment is plotted in figure 23. These data are sufficiently erratic that a single curve is not representative. Instead, approximate variation limits are indicated, showing roughly one order of magnitude variation in nonrecoverable strain measurements. The mechanism responsible for this erratic behavior is not evident. If a surface condition were responsible, comparison of specimens with different diameters should behave differently. The two tested specimens of ULE 7971 were of

differing diameters such that one had twice the torsional stiffness of the other. The plotted data do not indicate appreciable differences.

The 810°K heat treatment employed on the silicas has been categorized by the manufacturer as insufficient to cause measurable annealing of body strains. The changes produced are nonetheless quite striking.

A comparison plot of nonrecoverable microstrain characteristics of all stabilized materials tested thus far is shown in figure 24. The curve shown for beryllium is from a previous inhouse program (reference 1). Other than beryllium, all tested materials have roughly comparable nonrecoverable strain characteristics.

The linear relationship between nonrecoverable stress and strain on a log/log plot implies a power-law relationship. This in turn indicates absence of a strictly defined "proportional limit." In other words, down to the limts of measurement, a nonrecoverable strain is induced by any applied load, however small.

8.3 VISCOELASTIC DECAY

The viscoelastic decay characteristics of all materials tested appear to be similar in that they may be represented by a straight line plot on log/log graph paper. A typical plot is shown in figure 20. This implies that the decay follows the function $Y = A_o + A_1 t^{-B}$ where Y is the strain at any point in time, A_o is the permanent, or nonrecoverable strain, A_1 is the viscoelastic strain at time ($t = 1$), and B is a function of the material and its condition.

Viscoelastic parameters of the various materials were determined as a by-product of the nonrecoverable strain extrapolation procedure. These are listed in Table III as a function of load stress. The elastic strain under load is also listed for comparison. The parameter A_1, as indicated above, is the viscoelastic or recoverable strain at one minute after load release. The parameter B is the time exponent of the decay curve. The parameter A_1 for the heat treated steel specimens was consistently less than 5×10^{-10}, making a quantitative determination of viscoelastic parameters beyond the capabilities of the instrumentation. Viscoelastic parameters for the heat treated steel are therefore not listed.

The viscoelastic parameters of CER-VIT are reasonably consistent between specimens and between the as-machined and heat treated conditions. The steel, silica, and ULE specimens, however, showed marked changes after heat treatment, with over-all reduction and shortening of viscoelastic decay. From comparison of tabulated viscoelastic data of specimens 10 and 12 (Table III), it can be seen that the viscoelastic decay rate of the heat treated silicas was an order of magnitude faster than the as-machined state.

Graphical display of viscoelastic behavior of the materials is shown in figure 22. Wide differences are apparent between the various materials. Of the glassy materials, 7940 silica exhibits the most rapid viscoelastic decay.

9.0 CONCLUSIONS AND RECOMMENDATIONS

NONRECOVERABLE STRAIN CONCLUSIONS

1) All materials tested in the microstrain program exhibited similar nonrecoverable strain characteristics when subjected to appropriate heat treatment.

2) The 7940 and ULE silicas in the as-machined state provided inconsistent nonrecoverable microstrain performance.

3) Causes for the difference in 7940 and ULE nonrecoverable microstrain performance, between as-machined compared with heat treated, are not obvious. Postulated reasons include material manufacturing processes, internal strains induced by machining, and surface strains and microstrain cracks induced by grinding.

4) CER-VIT demonstrated no nonrecoverable strain improvement when subjected to a heat-treatment procedure. Influence by variations of the same or similar mechanism cannot be ruled out.

5) Within the measuring capability of the instrumentation (i.e. 10^{-10} nonrecoverable strain) no region of purely elastic stress-strain relationship was found. The elastic limit is implied as being zero stress.

RECOMMENDATION FOR CONCLUSIONS 1 THROUGH 5

The optimum procedure to be employed in the fabrication of stable mirrors will depend on establishing the cause of inconsistent nonrecoverable microstrain behavior. Several methods of attack are available to track down these sources. Heat treating specimens before machining would establish the effect of the machining process. Surface etching, polishing, or roughening would establish the role of surface conditioning. A separate program to investigate these aspects is recommended.

VISCOELASTIC STRAIN CONCLUSIONS

6) The viscoelastic recovery rate of the heat treated silicas was an order of magnitude faster than in the as-machined state.

7) Heat treated 7940 silica is superior in viscoelastic recovery rate to either the ULE silica or CER-VIT.

RECOMMENDATION FOR CONCLUSIONS 6 AND 7

If viscoelastic recovery rate is important to mirror performance, as in an active mirror system, careful consideration and understanding of mirror substrate heat treatment is called for. Selected variations of heat treatment and ambient test temperature are expected to yield significant differences in both the viscoelastic behavior and the nonrecoverable strain. A specimen temperature of 305°K was maintained for all tests in the program. This temperature was chosen as being reasonably

close to laboratory ambient, yet high enough above expected excursions of ambient to allow close control of heating. The ambient temperature of mirrors in space will range approximately between ambient and 187°K. A separate program to investigate the effects of heat treatment and test temperatures on mirror substrate viscoelastic strain rates, using the short-term loading procedure, is recommended.

VISCOELASTIC THEORY CONCLUSIONS

8) Past studies on viscoelastic creep behavior of materials (reference 2) have established a linear relationship between strain and the logarithm of time. The present program indicates a more accurate representation to be a linear relationship between the logarithm of strain and the logarithm of time. The significance of this discovery is not immediately obvious. Theoretical analyses formulated to take account of the previous representation do not appear to be readily reconciled with the present one.

RECOMMENDATION FOR CONCLUSION 8

A review of solid state viscoelastic theory in the light of Conclusion 8 is in order. It is recommended that creep tests of a number of basic glass-type materials, including those tested in this contract, using extended loading periods (1 hour to 1 week) be undertaken. Also an outstanding individual in the field of solid state viscoelastic theory in glasses should be commissioned to participate in the investigation.

APPENDIX A - SPECIMEN DIAMETER DETERMINATION

Permissible extensometer displacement is limited by the extensometer core supports to ±0.067 radians. The load torque is limited by the load cell to ±60 inch-pounds. To employ the testing equipment to optimum advantage, the specimen should have a stiffness that ensures that both limits are reached simultaneously. The torque in terms of deflection is described by:

$$T = \pi G \theta a^4/2L$$

where T = the torque,

G = torsional modulus of the specimen,

θ = extensometer angular deflection,

a = specimen test section radius,

L = specimen test section length.

For prescribed torque and deflection, the diameter (d) is determined as

$$d = \left(\frac{32LT}{\theta G \pi}\right)^{1/4}$$

Setting

T = 60 inch-pounds

L = 4 inches

θ = 0.067 radians

We have

$$d = 13.74\ G^{-\frac{1}{4}}$$

This relationship was utilized in the determination of specimen test section diameter for each material.

APPENDIX B - PROCUREMENT SPECIFICATIONS AND MATERIALS

MICROSTRAIN SAMPLE SPECIFICATION

Microstrain Application

The samples are to be used to determine the microstrain characteristics of selected optical materials intended for space application.

Sample Specification

1. Size

   All samples obtained from the material manufacturer shall be square bars of dimensions:

   $$\text{Sides} - 1.00 \text{ inch} \begin{matrix} +0.10 \text{ inch} \\ -0.00 \text{ inch} \end{matrix}$$

   $$\text{Length} - 6.00 \text{ inch} \begin{matrix} +0.10 \text{ inch} \\ -0.00 \text{ inch} \end{matrix}$$

2. Sample Material

   Fused Silica - Corning Glass Fused Silica 7940, Mirror Blank Quality

   ULE Fused Silica - Corning Glass Fused Silica 7971, Mirror Blank Quality

   CER-VIT - Owens-Illinois CER-VIT C-101 Premium Grade Mirror Blank

   Stainless Steel - 304L Vacuum Melt to be purchased to AMS5647B Aerospace Material Specification. This is the control material for the test program.

3. All samples will be ordered from a specific and identifiable batch or lot.

SELECTED PHYSICAL PROPERTIES

	Corning® 7940 Fused Silica	Corning® 7971 ULE Fused Silica
Coefficient of Thermal Expansion in/in/°C 5 - 35°C	5.0×10^{-7}	$0.2 \pm 0.3 \times 10^{-7}$
Density	2.20	2.21
Elastic Modulus 25°C	10.6×10^{6}	9.8×10^{6}
Shear Modulus 25°C	4.5×10^{6}	4.2×10^{6}
Poisson's Ratio 25°C	0.17	0.17

CORNING® FUSED SILICA CODE 7940

MECHANICAL PROPERTIES

Elastic Modulus, 25°C	10.6×10^{11} psi	Poisson's Ratio, 25°C	0.17
Shear Modulus, 25°C	4.5×10^{11} psi	Knoop Hardness, 100 gm load, kg/mm²	560.
Modulus of Rupture, Abraded, 25°C	7200 psi	Density, gm/cc	2.202

ELASTIC (YOUNG'S) MODULUS*

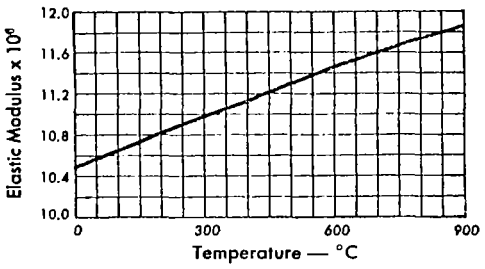

SHEAR (RIGIDITY) MODULUS*

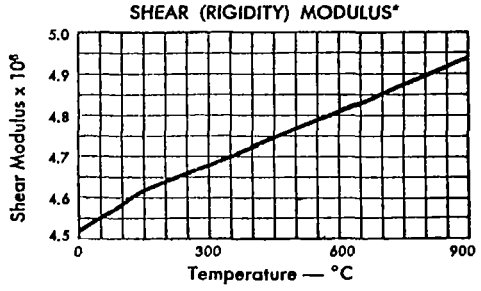

POISSON'S RATIO*

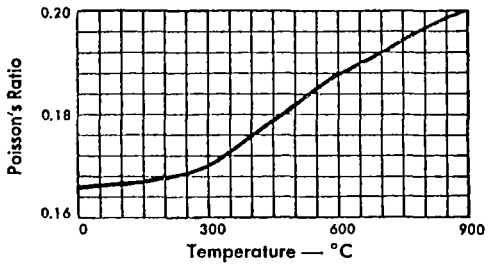

MODULUS of RUPTURE

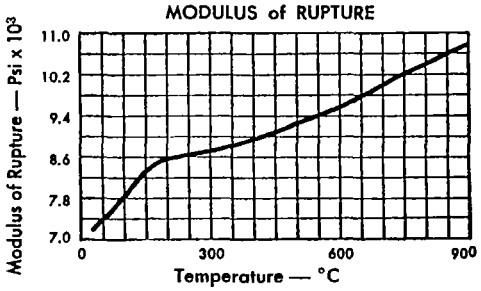

*Source: Spinner, S. "Elastic Modulus of Glasses at Elevated Temperatures by a Dynamic Method", J. American Ceramic Soc. 39, 113 (1956).

RESISTANCE TO RADIATION DARKENING

The following values are the results of tests on typical samples of CORNING Fused Silica No. 7940:

Radiation Type	Energy	Total Dose	Transmittance Test Range (Microns)	Results
Electron	800 KeV	6.3×10^{16} Rads	.24–2.6	5% decrease in visable transmittance, no change above 2.0 microns
	1.5 MeV	1.4×10^{7} Rads	.20–2.6	No change in transmittance above 0.3 microns
Gamma	1 MeV	10^{9} Rads	.20–2.6	No change in transmittance above 0.45 microns
		10^{10} Rads	.20–2.6	Slight Bluish Tint
Protron	2 MeV	10^{5} Rads	.2 –2.6	No change in transmittance above 0.45 microns
Neutron		10^{20} N/CM²	.2 –2.6	No change in transmittance above 0.35 microns 2% density increase.

CORNING® FUSED SILICA CODE 7940

AVAILABLE GRADES AND SPECIFICATIONS

STANDARD GRADES:

Maximum Dimension—Diameter or Diagonal	Striae Grade In Direction of View per Spec JAN-G-174	Max. No. of Seeds/cu. in.	Max. Avg. No. of Seeds/cu. in.	Max. Mean Dia. of Seeds	Max. % Projected Area/in. Light Path	Anneal Millimicrons/cm. Path Difference
INDUSTRIAL GRADE						
Up to 18"	D	50	10	0.080"	0.120	20
18" to 36"	D	100	18	0.250"	0.250	20
36" to 60"	D	100	18	0.500"	0.350	20
OPTICAL GRADE						
Up to 10"	A	4	0.40	0.020"	0.005	10
10" to 14"	A	4	0.40	0.030"	0.005	10
14" to 18"	A	4	0.40	0.040"	0.005	10
18" to 36"	A	25	3.00	0.080"	0.036	10
36" to 60"	A	100	10.00	0.150"	0.120	10

ULTRAVIOLET GRADE

Up to 18" × 4" Thick — Same Internal quality as Optical Grade with Guaranteed Minimum Transmission at 1850Å in 10 mm. thickness as follows:

Internal	External
70%	63%

SPECIAL GRADES:

SEED FREE QUALITY

Maximum Available Size 3" Dia. × 1" Thick — Same Internal Quality as Optical Grade with: No Seeds over 0.001" Mean Diameter (limit of visability)

SCHLIEREN QUALITY — Same Internal Quality as Optical Grade with

	Guaranteed Index Homogenity*	Index Gradient†
Up to 8" Dia. × 3" Thick	8×10^{-6}	4×10^{-6}
8" to 18" Dia. × 3" Thick	2×10^{-6}	8×10^{-6}

*Index homogeneity is the maximum difference in average refractive index measured normal to the faces as furnished.
†Index gradient is the gradient parallel to the faces (as furnished) of the average index of refraction taken on any straight line normal to the faces.

MIRROR BLANK QUALITY

Solid Mirror Blanks
Up to 200" Dia. — Solid Design Quotation on Request.
Lightweight Design
Up to 80" Dia. — Lightweight Designs ¼ to ½ weight of Solid Blank—Quotation on Request.

TOLERANCES AND FINISHES:

INDUSTRIAL GRADE — All surfaces sawcut +0.250 −0.

OPTICAL, ULTRAVIOLET & SPECIAL GRADES — Faces 60 grit ground +.010 −0, Edges ground +.080 −0.

BLANCHARD GROUND WARE

Maximum Dimension	Edges	Faces	Parallelism	Flatness
Up to 12"	+0.010" −0	+0.010" −0	within 0.004"	within 0.005"
Over 12" up to 48"	+0.080" −0	+0.010" −0	within 0.004"	within 0.005"
Over 48" up to 80"	+0.080" −0	+0.020" −0	within 0.004"	within 0.005"

COMMERCIAL POLISHED (Faces Only)

Maximum Dimension	Edges	Faces	Parallelism	Flatness
Up to 12"	+0.010" −0	+0.010" −0	within 0.010"	within 0.005"
Over 12" up to 48"	+0.080" −0	+0.020" −0	within 0.020"	within 0.005"

PRICES:

Please see FSP-5 dated January 4, 1965 for listed sizes. Write Optical Market Development Department for all other sizes and qualities.

OPTICAL MARKET DEVELOPMENT • CORNING GLASS WORKS • CORNING, N. Y.

FS-6—March 1, 1966

Copyright 1966, Corning Glass Works, Corning, N.Y.
CORNING is a Registered Trademark of Corning Glass Works

AEROSPACE
MATERIAL SPECIFICATIONS

SOCIETY OF AUTOMOTIVE ENGINEERS, Inc. 485 Lexington Ave., New York, N.Y. 10017

AMS 5647B

Issued 12-1-53
Revised 3-15-66

STEEL, CORROSION RESISTANT
18Cr - 8Ni (304L)

Technical Board rules provide that: "All technical reports, including standards, appr practices recommended, are advisory only. Their use by anyone engaged industry or trade is entirely voluntary. There is no agreement to adhere to any SAE stand recommended practice, and no commitment to conform to or be guided by any technical report. In formulating and approving technical reports, the Board and its Committees will not investigate or consider patents which may apply to the subject matter. Prospective users of the report are responsible for protecting themselves against liability for infringement of patents."

1. ACKNOWLEDGMENT: A vendor shall mention this specification number and its revision letter in all quotations and when acknowledging purchase orders.

2. FORM: Bars, forgings, flash welded rings, mechanical tubing, and stock for forgings or flash welded rings.

3. APPLICATION: Primarily for parts and assemblies requiring both corrosion and heat resistance up to 800 F (427 C), especially when such parts and assemblies are welded during fabrication. Parts and assemblies requiring oxidation resistance up to approximately 1500 F (816 C), but useful at that temperature only when stresses are low.

4. COMPOSITION:

	min	max
Carbon	--	0.030
Manganese	--	2.00
Silicon	--	1.00
Phosphorus	--	0.040
Sulfur	--	0.030
Chromium	18.00	20.00
Nickel	8.00	11.00
Molybdenum	--	0.50
Copper	--	0.50

4.1 When mechanical tubing is ordered, nickel may be as high as 13.00.

4.2 Check Analysis: Composition variations shall meet the requirements of the latest issue of AMS 2248.

5. CONDITION:

5.1 Bars, Forgings, Flash Welded Rings, and Mechanical Tubing: Solution heat treated free from continuous carbide network.

5.1.1 Unless otherwise specified, all hexagons, and other bars 2.75 in. and under in diameter or distance between parallel sides shall be cold finished.

5.1.2 Flash welded rings shall not be supplied unless specified or permitted on purchaser's part drawing. When supplied, they shall be manufactured in accordance with the latest issue of AMS 7490, unless otherwise specified.

5.2 Stock for Forgings or Flash Welded Rings: As ordered by the forging or flash welded ring manufacturer.

6. TECHNICAL REQUIREMENTS:

6.1 Hardness:

6.1.1 Bars and Mechanical Tubing: Shall have hardness as follows or equivalent when taken approximately midway between outer surface and center or inner surface as applicable.

Copyright 1966 by Society of Automotive Engineers, Inc. Printed in U.S.A.

6.1.1.1 Bars:

Ø Nominal Diameter or Distance Between Parallel Sides Inches	Hardness, Brinell min	max
Up to 2.000, incl	140	241
Over 2.000	--	241

6.1.1.2 Mechanical Tubing: Not higher than Rockwell B 90.

6.1.2 Forgings and Flash Welded Rings: Shall have hardness not higher than Brinell 187 or equivalent.

6.2 Embrittlement: Material from bars, forgings, mechanical tubing, and flash welded rings shall be capable of meeting the following test:

6.2.1 Test specimens, after being heated at 1200 F ± 10 (648.9 C ± 5.6) for 2 hr and air cooled, shall withstand immersion for 48 hr in a boiling aqueous solution containing 100 g of $CuSO_4 \cdot 5H_2O$ and 100 ml of H_2SO_4 (sp gr 1.84) per liter of solution under a reflux condenser, without evidence of intercrystalline surface attack. After such immersion, the specimens shall withstand, without cracking, bending at room temperature through an angle of 180 deg around a diameter equal to the thickness of the specimen.

7. QUALITY: Material shall be uniform in quality and condition, clean, sound, and free from foreign materials and from internal and external imperfections detrimental to fabrication or to performance of parts.

8. TOLERANCES: Unless otherwise specified, tolerances shall conform to all applicable requirements of the following:

8.1 Bars: The latest issue of AMS 2241.

8.2 Mechanical Tubing: The latest issue of AMS 2243.

9. REPORTS:

9.1 Unless otherwise specified, the vendor of the product shall furnish with each shipment three copies of a report of the results of tests for chemical composition of each heat in the shipment. This report shall include the purchase order number, heat number, material specification number, size, and quantity from each heat. If forgings are supplied, the part number and size of stock used to make the forgings shall also be included.

9.2 Unless otherwise specified, the vendor of finished or semi-finished parts shall furnish with each shipment three copies of a report showing the purchase order number, material specification number, contractor or other direct supplier of material, part number, and quantity. When material for making parts is produced or purchased by the parts vendor, that vendor shall inspect each lot of material to determine conformance to the requirements of this specification, and shall include in the report a statement that the material conforms, or shall include copies of laboratory reports showing the results of tests to determine conformance.

10. IDENTIFICATION:

10.1 Bars and Mechanical Tubing: Individual pieces or bundles shall have attached a metal or plastic tag embossed with the purchase order number, AMS 5647B, nominal size, and heat number, or shall be boxed and the box marked with the same information. In addition to the above identification, flats 2 x 1 in. and larger, other bars 1 in. and over in diameter or distance between parallel sides, and tubing when size permits, shall be stamped with the heat number within 2 in. of one end.

10.2 Forgings: Shall be identified in accordance with the latest issue of AMS 2808.

10.3 Flash Welded Rings: Shall be identified as agreed upon by purchaser and vendor.

10.4 Stock for Forgings and Flash Welded Rings: Shall be identified as agreed upon by purchaser and vendor.

11. REJECTIONS: Material not conforming to this specification or to authorized modifications will be subject to rejection.

NOTE. SIMILAR SPECIFICATIONS: Federal QQ-S-763, Class 304L, Condition A is listed for information only and shall not be construed as an acceptable alternate unless all requirements of this AMS are met.

OWENS-ILLINOIS CER-VIT MATERIAL LOW-EXPANSION MIRROR BLANKS

SPECIFICATIONS

1. GENERAL

Owens-Illinois is now marketing two grades of low-expansion CER-VIT® material solid mirror blanks in sizes up to sixty inches in diameter with a 6:1 diameter to thickness ratio. We have the capacity to make these solid mirror blanks in larger sizes and we invite your inquiries on specific requirements. Owens-Illinois has done some development work on ribbed mirror blanks and orders will be taken and quoted on individual and specific requirements.

2. PROPERTIES

2.1 Linear Coefficient of Thermal Expansion

CER-VIT mirror blanks shall have coefficients as stated below over the temperature range of 0 to 38 degrees Centigrade.

Grade	Coefficient
Premium	$0 \pm 1 \times 10^{-7}/°C$
Commercial	$0 \pm 1.5 \times 10^{-7}/°C$

A measured linear thermal expansion coefficient will be furnished with each blank. Coefficients for other temperature ranges can be furnished on request. The coefficient shall be homogeneous throughout the blank.

Density = 2.50 ± 0.01 g/cc

Young's Modulus = 13.4×10^6 psi (typical)

Rigidity Modulus = 5.5×10^6 psi (typical)

Bulk Modulus = 9.0×10^6 psi (typical)

Poisson's Ratio = 0.25 (typical)

2.2 Ability to be Figured

The material shall be capable of being finished to a mirror surface meeting the presently accepted standards of the optical industry by means of conventional polishing methods or known alterations of these methods which would be apparent to an expert in the art.

2.3 Surface Coatings

The material shall be compatible with standard evaporated coatings, including aluminum and silicon monoxide.

2.4 Other Properties

Other typical properties of this material are quoted in our CER-VIT® material C-101 property data on page 12.

3. MATERIAL QUALITY

3.1 Inclusions

Inclusions may either be gaseous (bubbles) or solid (stones). Inclusions smaller than 0.005 inch mean diameter shall be excluded from consideration in computing values listed in the following table. Solid inclusions which do not act as stress risers shall also be excluded from consideration.

Inclusion Limits for Various Grades by Diameter or Diagonal

Grade	15 INCHES AND UNDER	BETWEEN 15 AND 30 INCHES	30 INCHES AND OVER
Premium			
Max. ave. no. per cubic inch	3	7	10
Max. no. in any continuous cubic inch	7	14	20
Ave. Mean Diameter (inches)	0.02	0.04	0.06
Max. Mean Diameter (inches)	0.08	0.16	0.25
Commercial			
Max. ave. no. per cubic inch	15	20	25
Max. no. in any continuous cubic inch	30	40	50
Ave. Mean Diameter (inches)	0.125	0.125	0.125
Max. Mean Diameter (inches)	0.25	0.25	0.25

3.2 Birefringence resulting from permanent strain shall not produce a relative retardation of path difference of more than the following values per centimeter of transmitted light, except where cords exist.

Premium — 10 Millimicrons
Commercial — 15 Millimicrons

3.3 Cords will not be considered detrimental unless they produce a relative retardation of path difference in excess of 100 millimicrons per centimeter of transmitted light through the estimated thickness of the cord.

4. FINISH AND TOLERANCES

4.1 Blank faces shall be rough ground with an 80-grit diamond tool.
4.2 Blank edges shall be saw cut or better.
4.3 Diameter and thickness tolerances shall be minus 0 plus 0.25 inch.
4.4 Special finishes and tolerance can be furnished on request.

PROPERTY COMPARISON FOR CER-VIT MIRROR BLANK MATERIAL AND FUSED SILICA

PROPERTY AND UNIT	CER-VIT MATERIAL C-101	FUSED SILICA
Thermal Properties:		
Coefficient of thermal expansion α /°C x 10^7 (0-300°C)	0 ± 1.5*	5.5
Specific heat, cal/g/°C	0.217	0.18
Thermal conductivity, cal/cm/sec/°C	0.0040	0.0033
Thermal diffusivity, cm^2/sec	0.008	0.0082
Mechanical Properties:		
Density, g/cc	2.50	2.20
Hardness, Knoop (200 g loading)	540	500
Young's modulus, kg/cm^2	9.42 x 10^5	7.38 x 10^5
psi	13.4 x 10^6	10.5 x 10^6
Rigidity modulus, kg/cm^2	3.87 x 10^5	3.02 x 10^5
psi	5.5 x 10^6	4.3 x 10^6
Bulk modulus, kg/cm^2	6.33 x 10^5	3.73 x 10^5
psi	9.0 x 10^6	5.3 x 10^6
Poisson's ratio	0.25	0.14
Optical Properties:		
Index of refraction, N_D at 25°C	1.540	1.459
Stress optical coefficient, mμ/cm/kg/cm^2	3.03	3.40
Electrical Properties:		
Electrical resistivity (ohm-cm) 25°C	2.0 x 10^{12}	10^{18}
350°C	9.8 x 10^4	8 x 10^{10}
Dielectric constant, 25°C, 1 mc	8.8	4.1
Dissipation factor, 25°C, 1 mc	0.024	0.0009

* The coefficient for any given blank will be constant throughout and within these stated limits. A measured value is issued with each single mirror blank.

APPENDIX C

MICROSTRAIN DATA REDUCTION COMPUTER PROGRAM

Boeing Blitz Language

```
CASE   86Y-D1 W W WOODS 2-7821-30 5-8461                          990-2V4
*      REDUCTION OF NANOSTRAIN DATA TO YIELD NON-RECOVERABLE STRAIN
*      VS STRESS                                                        $
*      THIS PROGRAM DOES NOT INCLUDE POWER-LAW CORRECTION               $
 P1    INPUT(MONTH,DAY,YEAR)                                            $
       INPUT(SAMPLE,DIAM,LENGTH,MODLUS)                                 $
       INPUT(DY1,DY2,T1,T2,T0)                                          $
       PRINT(1,MONTH,DAY,YEAR)                                          $
       PRINT(0,SAMPLE)                                                  $
       PRINT(DIAM,LENGTH,MODLUS)                                        $
*      NOTE UNITS  DIAMETER,LENGTH(INCHES)  MODLUS(PSI)                 $
*      CALCULATION OF PHYSICAL MULTIPLIERS                              $
       EXMULT=DIAM*4.82814E-6/LENGTH                                    $
       LMULT=0.067448/(DIAM**3)                                         $
       PRINT(EXMULT,LMULT)                                              $
       OFF=0.0                                                          $
*      CALIBRATE AMPLIFIER AND RECORDER RANGES                          $
 P2    INPUT(ATT,CAL,CALDF,ZERO,POTS)                                   $
       POTS=0.001*POTS                                                  $
       BRANCH(ATT-1000.,P3,P6,P6)                                       $
 P3    AT=FIX(ATT)                                                      $
       BRANCH(AT-200,P4,P5,P5)                                          $
 P4    SENS=POTS*CAL*EXMULT/((1.+0.00606*POTS*(1.-POTS)*CAL)*CALDF)     $
       SAVE(SENS,S,AT)                                                  $
       SAVE(ZERO,Z,AT)                                                  $
       PRINT(ATT,SENS,ZERO)                                             $
       BRANCH(P2)                                                       $
 P5    SENS=CAL*LMULT/CALDF                                             $
       SAVE(SENS,S,AT)                                                  $
       SAVE(ZERO,Z,AT)                                                  $
       PRINT(ATT,SENS,ZERO)                                             $
       BRANCH(P2)                                                       $
 P6    FIND(SEX,S,1)                                                    $
       EXPO=LOGR(DY1/DY2)/LOGR(T2/T1)-1.                                $
       COEF=-SEX*DY1*T1**(EXPO+1.)/EXPO                                 $
       OFFSET=-COEF/T0**EXPO                                            $
       PRINT(OFFSET,COEF,EXPO)                                          $
       PRINT(0)                                                         $
*      COMPUTE SINGLE POINT (END POINT) VALUES                          $
 P9    INPUT(ATTEX,EXDEF,ATTL,LDEF,CAL,POTS)                            $
       POTS=0.001*POTS/(1.+6.06E-9*POTS*(1000.-POTS)*CAL)               $
       BRANCH(ATTEX-1000.,P10,P7,P11)                                   $
 P7    INPUT(ATTEX,EXDEF,CAL,POTA,POTB,OFSET)                           $
       AT=FIX(ATTEX)                                                    $
       BRANCH(EXDEF,P7B,P7B,P7A)                                        $
 P7A   POTA=0.001*POTA/(1.+6.06E-9*POTA*(1000.-POTA)*CAL)               $
       POTB=0.001*POTB/(1.+6.06E-9*POTB*(1000.-POTB)*CAL)               $
       SENS=(POTB-POTA)*CAL*EXMULT*0.5/EXDEF                            $
       SAVE(SENS,S,AT)                                                  $
 P7B   FIND(SENS,S,AT)                                                  $
       OFFSET=OFFSET+OFSET*SENS                                         $
       BRANCH(P9)                                                       $
 P10   REX=FIX(ATTEX)                                                   $
       INPUT(TIM)                                                       $
       RL=FIX(ATTL)                                                     $
```

Boeing Blitz Language

```
      FIND(SEX,S,REX)                                                   $
      FIND(ZEX,Z,REX)                                                   $
      FIND(SL,S,RL)                                                     $
      FIND(ZL,Z,RL)                                                     $
      STRESS=SL*(LDEF-ZL)                                               $
      STRAIN=STRESS/MODLUS                                              $
      OFF=COEF/TIM**EXPO                                                $
      NRS=SEX*(EXDEF-ZEX)+POTS*CAL*EXMULT*0.5-OFFSET-OFF                $
      PRINT(STRESS,STRAIN,NRS,ATTEX,EXDEF)                              $
      BRANCH(P9)                                                        $
 P11  PRINT(1)                                                          $
*     COMPUTATION OF END POINT FROM TIME DECAY CURVE                    $
 P12  INPUT(TIMO,TIMINT,ATTL,LDEF,TIMOO)                                $
      BRANCH(TIMO-1000.,P12A,P1,P1)                                     $
 P12A RL=FIX(ATTL)                                                      $
      FIND(SL,S,RL)                                                     $
      FIND(ZL,Z,RL)                                                     $
      STRESS=SL*(LDEF-ZL)                                               $
      STRAIN=STRESS/MODLUS                                              $
      PRINT(1,STRESS,STRAIN)                                            $
      PRINT(0)                                                          $
      N=0                                                               $
 P13  INPUT(ATTEX,EXDEF,TIMM,TIMP,CAL,POTS)                             $
      POTS=0.001*POTS/(1.+6.06E-9*POTS*(1000.-POTS)*CAL)                $
      BRANCH(ATTEX-1000.,P14,P13A,P15)                                  $
 P13A INPUT(ATTEX,EXDEF,CAL,POTA,POTB,OFSET)                            $
      AT=FIX(ATTEX)                                                     $
      BRANCH(EXDEF,P13C,P13C,P13B)                                      $
 P13B POTA=0.001*POTA/(1.+6.06E-9*POTA*(1000.-POTA)*CAL)                $
      POTB=0.001*POTB/(1.+6.06E-9*POTB*(1000.-POTB)*CAL)                $
      SENS=(POTB-POTA)*CAL*EXMULT*0.5/EXDEF                             $
      SAVE(SENS,S,AT)                                                   $
 P13C FIND(SEX,S,AT)                                                    $
      OFFSET=OFFSET+OFSET*SEX                                           $
      BRANCH(P13)                                                       $
 P14  TIME=TIMM+(TIMP-TIMO)/TIMINT                                      $
      REX=FIX(ATTEX)                                                    $
      FIND(SEX,S,REX)                                                   $
      FIND(ZEX,Z,REX)                                                   $
      TIM=TIMOO+TIMM+TIMP/TIMINT                                        $
      OFF=COEF/TIM**EXPO                                                $
      NRS=SEX*(EXDEF-ZEX)+POTS*CAL*EXMULT*0.5-OFFSET-OFF                $
      N=N+1                                                             $
      FN=FLOAT(N)                                                       $
      SAVE(NRS,AA,N)                                                    $
      SAVE(TIME,AB,N)                                                   $
      BRANCH(P13)                                                       $
 P15  FIND(NRS,AA,1)                                                    $
      INC=(NRS/ABS(NRS))*1.0E-8                                         $
      TNRS=-1.0E-8                                                      $
*     INTRODUCE INITIAL OFFSET                                          $
      START(J,1,1)                                                      $
      FIND(NRS,AA,J)                                                    $
      NRS=ABS(NRS+INC)                                                  $
      BRANCH(NRS,P15A,P15A,P15B)                                        $
```

Boeing Blitz Language

```
 P15A JA=FLOAT(J)                                                    $
      PRINT(JA,NRS)                                                  $
      NRS=1.0E-10                                                    $
 P15B SAVE(NRS,AAA,J)                                                $
      REPEAT(J,N)                                                    $
      PRINT(0)                                                       $
      SUMA=0.0                                                       $
      C=0.0                                                          $
      START(K,1,1)                                                   $
*     CHANGE TO LOGLOG                                               $
 P16  START(J,1,1)                                                   $
      FIND(TIME,AB,J)                                                $
      FIND(NRS,AAA,J)                                                $
      BRANCH(TIME,P16A,P16A,P16B)                                    $
 P16A JC=FLOAT(J)                                                    $
      PRINT(JC,TIME)                                                 $
      TIME=0.05                                                      $
 P16B BRANCH(NRS,P16C,P16C,P16D)                                     $
 P16C JC=FLOAT(J)                                                    $
      PRINT(JC,NRS)                                                  $
      NRS=1.0E-10                                                    $
 P16D X=LOGR(TIME)                                                   $
      Y=LOGR(1.0E10*NRS)                                             $
      SAVE(X,AC,J)                                                   $
      SAVE(Y,AD,J)                                                   $
      REPEAT(J,N)                                                    $
      S1=0.0                                                         $
      S2=0.0                                                         $
      S3=0.0                                                         $
      S4=0.0                                                         $
      T1=0.0                                                         $
      T2=0.0                                                         $
      T3=0.0                                                         $
*     LINE FIT                                                       $
      NN=N                                                           $
      START(J,1,1)                                                   $
      FIND(X,AC,J)                                                   $
      FIND(Y,AD,J)                                                   $
      S1=S1+X                                                        $
      S2=S2+X*X                                                      $
      S3=S3+X**3                                                     $
      S4=S4+X**4                                                     $
      T1=T1+Y                                                        $
      T2=T2+X*Y                                                      $
      T3=T3+X*X*Y                                                    $
      REPEAT(J,NN)                                                   $
      FNN=FLOAT(NN)                                                  $
      C1=C                                                           $
      C=((S1*T1-FNN*T2)*(S1*S2-FNN*S3)-(S2*T1-FNN*T3)*(S1*S1-FNN*S2))/
      ((S1*S2-FNN*S3)**2-(S2*S2-FNN*S4)*(S1*S1-FNN*S2))              $
      B=((S1*T1-FNN*T2)-C*(S1*S2-FNN*S3))/(S1*S1-FNN*S2)             $
      A=(T1-C*S2-B*S1)/FNN                                           $
      A1=1.0E-10*EXPON(A)                                            $
      BRANCH(C1/C,P17,P18,P18)                                       $
*     PRINT OUT DATA                                                 $
```

Boeing Blitz Language

```
P17   PRINT(0,TNRS,A1,B)                                  $
      PRINT(0)                                            $
      START(J,1,1)                                        $
      FIND(RSBAR,AF,J)                                    $
      FIND(RS,AAB,J)                                      $
      FIND(NRS,AA,J)                                      $
      FIND(TIME,AB,J)                                     $
      PRINT(TIME,NRS,RS,RSBAR)                            $
      REPEAT(J,N)                                         $
      K=40                                                $
P18   BRANCH(K-30,P18A,P17,P18A)                          $
P18A  START(J,1,1)                                        $
      FIND(X,AC,J)                                        $
      RSBAR=1.0E-10*EXPON(A+B*X)                          $
      SAVE(RSBAR,AF,J)                                    $
      REPEAT(J,N)                                         $
      SUM=0.0                                             $
      NN=N-4                                              $
*     FIND END OFFSET                                     $
      START(J,NN,1)                                       $
      FIND(NRS,AAA,J)                                     $
      FIND(X,AC,J)                                        $
      FIND(RSBAR,AF,J)                                    $
      SUM=SUM+NRS-RSBAR                                   $
      REPEAT(J,N)                                         $
      SUMB=SUM                                            $
      BRANCH(ABS(SUM)-5.E-10,P19,P20,P20)                 $
P19   SUM=5.0E-10                                         $
P20   SUM=0.4*ABS(SUM)*C/ABS(C)                           $
      TNRS=TNRS+SUMA                                      $
      PRINT(TNRS,SUMB,A,B,C)                              $
      SUMA=SUM                                            $
*     ADJUST DATA                                         $
      START(J,1,1)                                        $
      FIND(NRS,AAA,J)                                     $
      SAVE(NRS,AAB,J)                                     $
      NRS=NRS-SUM                                         $
      BRANCH(NRS,P21,P21,P22)                             $
      JB=FLOAT(J)                                         $
      PRINT(JB,NRS)                                       $
P21    NRS=1.0E-10                                        $
P22   SAVE(NRS,AAA,J)                                     $
      REPEAT(J,N)                                         $
      REPEAT(K,30)                                        $
      BRANCH(P12)                                         $
      END                                                 $
```

0211

APPENDIX C (CONT)

Fortran IV Language*

(Literal translation from Blitz)

```
$JOB          0,2,1000        NP01220 WOODS,W.WILLIAM
$EXECUTE      IBJOB
$IBJOB
$IBFTC MICROS
C REDUCTION OF MICROSTRAIN DATA FOR VISCOELASTIC AND NON-RECOVERABLE STRAIN
C VS. STRESS. THIS PROGRAM DOES NOT INCLUDE POWER LAW CORRECTION.
C
      INTEGER MONTH,DAY,YEAR,SAMPLE,AT,ATX,ATL
      REAL LENGTH,MODLUS,LMULT,INC
      DIMENSION ZERO(300),SENS(300),NR(100,4),TIME(100),X(100),Y(100)
      FUNCT(POTS,CAL)=.001*POTS/(1.+6.06E-9*POTS*(1000.-POTS)*CAL)
 1    READ(5,101)MONTH,DAY,YEAR,SAMPLE,DIAM,LENGTH,MODLUS
 101  FORMAT(4I4,3F9.0)
      READ(5,102)DY1,DY2,T1,T2,T0
 102  FORMAT(8X,8F8.0)
      WRITE(6,103)SAMPLE,MONTH,DAY,YEAR,DIAM,LENGTH,MODLUS
 103  FORMAT(17H/   SAMPLE NUMBER,I4/8H    DATE,I4,1H/,I2,1H/,I4/19H
     1SAMPLE DIAMETER,F6.3,7H INCHES/17H    ACTIVE LENGTH,F6.3,7H INCHES
     2/23H    MODULUS OF RIGIDITY,-6PF6.2,12H MILLION PSI)
C CALCULATION OF PHYSICAL MULTIPLIERS
      EXMULT=DIAM*4.82814E-6/LENGTH
      LMULT=0.067448/(DIAM**3)
      WRITE(6,104)EXMULT,LMULT
 104  FORMAT(1H0,11H   EXMULT= ,1PE12.4/11H    LMULT= ,1PE12.4/1H0)
      WRITE(6,106)
C CALIBRATE AMPLIFIER AND RECORDER RANGES
 2    READ(5,105)AT,CAL,CALDF,ZERO(AT),POTS
 105  FORMAT(I4,4X,8F8.0)
      IF(AT.GE.300)  GO TO 4
      IF(AT.GE.200) GO TO 3
      SENS(AT)=CAL*EXMULT*FUNCT(POTS,CAL)/CALDF
      WRITE(6,107)AT,SENS,ZERO
 106  FORMAT(1H ,9X,3HATT,8X,4HSENS,8X,4HZERO/1H0)
 107  FORMAT(1H ,9X,I4,6X,1PE9.4,3X,1PE9.4)
      GO TO 2
 3    SENS(AT)=CAL*LMULT/CALDF
      WRITE(6,107)AT,SENS,ZERO
      GO TO 2
 4    IF(DY1/DY2.GT.0.) GO TO 5
      EXPO=0.
      COEF=0.
      OFFSET=0.
      GO TO 6
 5    EXPO=ALOG(DY1/DY2)/ALOG(T2/T1)-1.
      COEF=-SENS(1)*DY1*T1**(EXPO+1.)/EXPO
      OFFSET=-COEF/T0**EXPO
 6    WRITE(6,108) OFFSET,COEF,EXPO
 108  FORMAT(1H0,4X,8HOFFSET= ,1PE9.3,5X,13HCOEFFICIENT= ,E9.3,5X,
     110HEXPONENT= ,0PF7.3/1H )
C COMPUTE SINGLE POINT (NOT EXTRAPOLATED) VALUES
 7    READ(5,109)ATX,ATL,EXDEF,LDEF,CAL,POTS,TIM
 109  FORMAT(2I4,8F8.0)
      POTS=FUNCT(POTS,CAL)
      IF(ATX.GT.1000) GO TO 11
```

*Program has not been checked.

```
      WRITE(6,110)
      IF(ATX.LT.500) GO TO 10
      READ(5,105)ATX,EXDEF,CAL,POTA,POTB,OFSET
      IF(EXDEF.LT.0.)GO TO 9
      POTA=FUNCT(POTA,CAL)
      POTB=FUNCT(POTB,CAL)
      SENS(ATX)=(POTB-POTA)XCAL*EXMULT*0.5/EXDEF
 9    OFFSET=OFFSET+OFSET*SENS
      GO TO 7
 10   STRESS=SENS(ATL)*(LDEF-ZERO(ATL))
      STRAIN=STRESS/MODLUS
      OFF=COEF/TIM**EXPO
      NRS=SENS(ATX)*(EXDEF-ZERO(ATX))+POTS*CAL*EXMULT*0.5-OFFSET-OFF
      WRITE(6,111)STRESS,STRAIN,NRS
 110  FORMAT(1H0,20X,36HSINGLE POINT VALUES-NO EXTRAPOLATION/1H /10X,
     16HSTRESS,8X,6HSTRAIN,8X,3HNRS/1H )
 111  FORMAT(1H ,9X,3(1PE9.3,5X))
      GO TO 7
 11   READ(5,105)(ATL,LDEF,TIMO,TIMINT,TIMOO)
      IF(ATL.GT.1000)GO TO 1
      STRESS=SENS(ATL)*(LDEF-ZERO(ATL))
      STRAIN=STRESS/MODLUS
      WRITE(6,112)STRESS,STRAIN
 112  FORMAT(1H1,5X,8HSTRESS= ,-3PF6.3,4H KSI,6X,16HELASTIC STRAIN= ,1PE
     19.3/1H /10X,4HTNRS,,10X,3HSUM,11X,1HA,13X,1HB,13X,1HC/1H )
      N=0
 12   READ(5,105)ATX,EXDEF,TIMM,TIMP,CAL,POTS
      POTS=FUNCT(POTS,CAL)
      IF(ATX-1000)15,13,16
 13   READ(5,105)ATX,EXDEF,CAL,POTA,POTB,OFSET
      IF(EXDEF.LE.0.)GO TO 14
      POTA=FUNCT(POTA,CAL)
      POTB=FUNCT(POTB,CAL)
      SENS(ATX)=(POTB-POTA)*CAL*EXMULT*0.5/EXDEF
 14   OFFSET=OFFSET+OFSET*SENS(ATX)
      GO TO 13
 15   TIME(N)=TIMM+(TIMP-TIMO)/TIMINT
      TIM=TIMOO+TIMM+TIMP/TIMINT
      OFF=COEF/TIM**EXPO
      NR(N,1)=SENS(ATX)*(EXDEF-ZERO(ATX))+POTS*CAL*EXMULT*0.5-OFFSET-OFF
      N=N+1
      GO TO 12
 16   CRIT=NRSA(N)/NRSA(1)
      INC=0.
      IF(CRIT.GT.0.) GO TO 17
      INC=-NR(N,1)
 17   INC=(NR(N,1)/ABS(NRS(1)))*1.0E-8+INC
      TNRS=-ABS(INC)
C INTRODUCE INITIAL OFFSET
      DO18 J=1,N
      NR(J,4)=ABS(NR(J,1)+INC)
      IF(NR(J,4).GT.0.) GO TO 18
      WRITE(6,113)J,NR(J,4)
 113  FORMAT(1H ,2X,3HJ= ,I3,4X,5HNRS= ,1PE9.3)
```

```
      NR(J,4)=1.0E-9/1.5**J
 18   CONTINUE
      SUMA=1.0
      SUM=0.0
      F=3.2E-9
      C=0.0
      A2=0.0
      DO28 K=1,30
C CHANGE TO LOGLOG
      DO21 J=1,N
      IF(TIME(J).GT.0.) GO TO 19
      WRITE(6,114)J,TIME(J)
 114  FORMAT(1H ,2X,3HJ= ,I3,4X,6HTIME= ,1PE9.3)
      TIME=0.05
 19   IF(NR(J,4).GT.0.) GO TO 20
      WRITE(6,113)J,NR(J,4)
      NR(J,4)=1.0E-9/1.5**J
 20   X(J)=ALOG(TIME(J))
 21   Y(J)=ALOG(1.0E10*NR(J,2))
C LEAST SQUARES POLYNOMIAL CURVE FIT TO DEGREE TWO
      S1=0.0
      S2=0.0
      S3=0.0
      S4=0.0
      T1=0.0
      T2=0.0
      T3=0.0
      DO22 J=1,N
      S1=S1+X(J)
      S2=S2+X(J)*X(J)
      S3=S3+X(J)**3
      S4=S4+X(J)**4
      T1=T1+Y(J)
      T2=T2+X(J)*Y(J)
 22   T3=T3+X(J)*X(J)*Y(J)
      C1=C
      FN=FLOAT(N)
      C=((S1*T1-FN*T2)*(S1*S2-FN*S3)-(S2*T1-FN*T3)*(S1*S1-FN*S2))/((S1*
     1S2-FN*S3)**2-(S2*S2-FN*S4)*(S1*S1-FN*S2))
      B=((S1*T1-FN*T2)-C*(S1*S2-FN*S3))/(S1*S1-FN*S2)
      A=(T1-C*S2-B*S1)/FN
      A1=1.0E-10*EXP(A2)
      IF(C1/C.GE.0.) GO TO 23
      F=0.5*F
      WRITE(6,115) F
 115  FORMAT(1H ,2X,3HF= ,1PE9.3)
 23   IF(SUMA.GE.2.0E-11) GO TO 25
C PRINT OUT DATA
 24   WRITE(6,116)TNRS,A1,BB,(TIME(J),(NR(J,K)K=1,3)J=1,N)
 116  FORMAT(1H0,5X,6HTNRS= ,1PE9.3,6X,4HA1= ,E9.3 6X,3HB= ,E9.3/1H0/10X
     1,4HTIME,15X,4HDATA,15X,2HRS,17X,5HRSBAR/1H /(10X,0PF8.2,11X,
     23(1PE9.3,6X)/)/1H )
      K=40
 25   IF(K.EQ.30) GO TO 24
```

Fortran IV Language

```
      DO26 J=1,N
 26   NR(J,3)=1.0E-10*EXP(A+B*X(J))
      SUM=F*C*EXP(A)
      SUMA=ABS(SUM)
      TNRS=TNRS+SUM
      WRITE(6,117)TNRS,SUM,A,B,C
 117  FORMAT(1H ,5X,6HTNRS= ,1PE9.3,6X,5HSUM= ,E9.3,9X,3HA= ,E9.3,12X,
     13HB= ,0PF6.3,15X,3HC= ,1PE9.3)
      A2=A
      BB=B
C ADJUST DATA
      CRIT=(NR(N,2)-SUM)/NRS
      IF(CRIT.GT.0.) GO TO 27
      SUM=0.5*NRS
      F=0.5*F
      WRITE(6,115)F
 27   DO28 J=1,N
      NR(J,2)=NR(J,4)
      NR(J,4)=NR(J,4)-SUM
      IF(NR(J,4).GT.0.) GO TO 28
      WRITE(6,113)J,NR(J,4)
      NR(J,4)=1.0E-9/1.5**J
 28   CONTINUE
      GO TO 11
      STOP
      END
```

0411

APPENDIX D - ROD POWER LAW CONNECTION

Definitions:

a = radius of solid cylindrical rod

r = radial distance from center of rod

S = torsional shear stress in rod

E = torsional shear strain

E^* = plastic torsional shear strain

G = shear modulus

K = proportionality constant

θ = torsional deflection per unit length of rod about axis

Subscript (1) denotes condition of rod under stress

Subscript (2) denotes condition of rod after stress release

Subscript (a) denotes condition at rod surface

Let us assume a relationship between elastic plastic strain such that:

$$E^* = KE_1^N = K(S_1/G)^N \tag{1}$$

Where N is a real and positive number. The range of plastic strain considered here is small enough ($K<0.001$) that the proportionality between stress and strain holds to a very close approximation.

After release, the net torque on the rod will be zero.

$$0 = \int_0^a r^2 S_2 \, dr = \int_0^a r^2 G(E_2 - E^*) \, dr \tag{2}$$

or

$$\int_0^a r^2 E_2 \, dr - \int_0^a r^2 E^* \, dr = 0 \tag{3}$$

Now, since

$$E = r\theta \tag{4}$$

$$\int_0^a r^2 E_2 \, dr = \int_0^a r^3 \theta_2 \, dr = \frac{a^4}{4} \theta_2 \tag{5}$$

And from equation (1)

$$\int_0^a r^2 E^* \, dr = \int_0^a K r^2 E_1^N \, dr = K \int_0^a r^{N+2} \theta_1^N \, dr = \frac{a^{N+3}}{N+3} K \theta_1^N \tag{6}$$

Combining (3), (5), and (6), we have

$$\frac{a^4}{4} \theta_2 = \frac{a^{N+3}}{N+3} K \theta_1^N \tag{7}$$

From equations (1) and (4), we have

$$E_2^* = K E_{1_a}^N = K(a\theta_1)^N \tag{8}$$

and

$$E_{2a} = a\theta_2 \tag{9}$$

Substituting equations (8) and (9) into (7), we have

$$E_a^* = \frac{N+3}{4} E_{2a} \tag{10}$$

which states that the true plastic strain of the outer fibers of the rod is (N+3)/4 times the nonrecoverable strain. For N = 1, this factor is unity.

REFERENCES

1. Woods, W. W., and Recker, H.: Nanostrain Materials Testing. Document D2-113501-1, The Boeing Company, Jan. 6, 1967.

2. Orowan, E.: Solid State Damping and Creep in the Mantle. Document D1-82-0545, The Boeing Company, June 1966 (ASTIA No. AD 637264)

Table I: SPECIMEN PHYSICAL CHARACTERISTICS

Specimen Number	Material	Modulus of Rigidity 10^6 psi (10^9 N/m^2)	Test Section Diameter Inches (cm)
1	7940 Silica	4.5 (31)	.299 (.760)
2	304L CRES	12.5 (86)	.232 (.590)
3	304L CRES	12.5 (86)	.232 (.590)
4	CER-VIT 101	5.5 (38)	.284 (.722)
5	CER-VIT 101	5.5 (38)	.284 (.722)
6	ULE 7971	4.2 (29)	.304 (.772)
7	ULE 7971	4.2 (29)	.304 (.772)
8	7940 Silica	4.5 (31)	.299 (.760)
9	7940 Silica	4.5 (31)	.299 (.760)
10	7940 Silica	4.5 (31)	.299 (.760)
11	CER-VIT 101	5.5 (38)	.284 (.722)
12	ULE 7971	4.2 (29)	.304 (.772)
13	ULE 7971	4.2 (29)	.362 (.920)

TABLE II: SPECIMEN DISPOSITION SUMMARY

Specimen Number	Material	Treatment (See Note 1)	Disposition
1	Silica	0	Data erratic---spread plotted, viscoelastic data tabulated
2-1	304L	0	Viscoelastic data tabulated
2-2		A	Single point plotted
3	304L	A	Data Plotted
4	CER-VIT	0	Fractured in test---data plotted
5	CER-VIT	0	Shoulder cracks---fractured in test, data discarded
6	ULE	0	Accidentally destroyed
7	ULE	0	Accidentally destroyed
8	Silica	0	Fractured in test---data plotted with Numbers 1 and 10
9	Silica	B	Fractured in test---data plotted
10-1	Silica	0	Data erratic---spread plotted, viscoelastic data tabulated
10-2		B	Data plotted
10-3		B	Single point plotted
11-1	CER-VIT	0	Data plotted
11-2		B	Data plotted
12-1	ULE	0	Data erratic---spreak plotted, viscoelastic data tabulated
12-2		B	Data plotted
12-3		B	Data plotted
13	ULE	0	Data erratic---spread plotted, viscoelastic data tabulated

Note 1: 0 No heat treatment, tested as machined.

A Treated 1170°K 2 hours, cooled in still air.

B Treated 810°K 1 hour, oven cooled.

TABLE III: VISCOELASTIC DECAY PARAMETERS

LOAD STRESS N/m^2	LOAD STRAIN	A_1	B
Specimen 2-1 304L Steel as Machined			
2.6×10^6	$.29 \times 10^{-4}$	$.84 \times 10^{-8}$	.37
3.6	.42	.83	.49
5.3	.62	1.7	.38
7.2	.84	1.9	.33
11.6	1.35	4.7	.34
17.1	2.0	6.5	.35
23.7	2.8	13.5	.28
34.6	4.0	21	.21
46.8	5.4	37	.20
69.6	8.1	94	.04
90.2	10	92	.11
140	16	62×10^{-7}	.024
Specimen #4 CER-VIT 101 As Machined			
$.95 \times 10^6$	$.25 \times 10^{-4}$	$.73 \times 10^{-8}$	.54
1.01	.27	1.0	.50
1.49	.39	1.3	.48
2.22	.56	1.9	.49
3.10	.82	2.6	.51
4.54	1.2	3.2	.58
6.6	1.8	6.6	.59
9.3	2.5	9.5	.55
13.4	3.5	14	.56
18.6	4.9	19	.57
27	7.0	31	.65
38	9.9	43	.59
54	14	65	.59
75	20	94	.57

TABLE III: VISCOELASTIC DECAY PARAMETERS (CONTINUED)

LOAD STRESS N/m^2	LOAD STRAIN	A_1	B
Specimen 11-1 CER-VIT 101 As Machined			
3.2×10^6	$.86 \times 10^{-4}$	3.5×10^{-8}	.56
4.6	1.22	5.1	.54
6.6	1.7	7.0	.56
9.1	2.4	9.4	.58
9.3	2.5	10	.56
13.1	3.5	14	.57
18.5	4.9	20	.59
27	6.9	33	.50
37	9.7	46	.47
53	14	63	.57
Specimen 11-2 CER-VIT 101 Heat Treated			
1.6×10^6	$.44 \times 10^{-4}$	1.8×10^{-8}	.51
2.4	.64	2.5	.60
3.3	.86	3.3	.55
4.7	1.24	4.9	.53
6.5	1.7	6.4	.57
9.2	2.4	9.4	.60
13.2	3.5	13.4	.61
18	4.8	19	.57
26	7.0	29	.53
35	9.5	38	.56
53	14	63	.65
Specimen #1 7940 Silica As Machined			
2.8×10^6	$.89 \times 10^{-4}$	$.73 \times 10^{-8}$	.28
3.9	1.27	.93	.39
5.6	1.8	1.4	.50
7.1	2.5	2.5	.38
11.2	3.6	3.8	.36
16	5.0	6.6	.27
23	7.4	11	.20
31	10	12	.29
46	15	26	.18

Table III: VISCOELASTIC DECAY PARAMETERS (CONTINUED)

LOAD STRESS N/m^2	LOAD STRAIN	A_1	B
Specimen #8 7940 Silica As Machined			
7.7×10^6	2.5×10^{-4}	0.8×10^{-8}	.57
9.4	3.0	1.9	.34
22	7.0	4.5	.45
43	14	9.6	.38
63	20	23	.33
Specimen #10-1 7940 Silica As Machined			
5.6×10^{-6}	2.0×10^{-4}	2.3×10^{-8}	.35
7.7	2.5	3.0	.41
11.3	3.7	5.1	.37
18	5.7	6.3	.39
23	7.3	11.4	.36
31	10	16	.36
45	15	29	.38
Specimen #10-2 7940 Silica Heat Treated			
11.3×10^{-6}	3.6×10^{-4}	0.6×10^{-8}	.47
16	5.1	1.0	.34
23	7.3	2.1	.31
31	10.1	3.4	.29
45	14	16	.11
Specimen #10-3 7940 Silica Heat Treated			
63×10^{-6}	20×10^{-4}	7.1×10^{-8}	.19
Specimen #13 7971 ULE As Machined			
1.3×10^{-6}	$.45 \times 10^{-4}$	1.2×10^{-8}	.34
2.1	.74	1.4	.42
4.3	1.5	2.9	.44
6.4	2.2	3.8	.56
8.5	2.9	5.9	.44
12.8	4.4	10.1	.55
17	6.0	14	.45
26	8.8	26	.35
35	11.9	39	.35
51	18	73	.34

TABLE III: VISCOELASTIC DECAY PARAMETERS (CONCLUDED)

LOAD STRESS N/m^2	LOAD STRAIN	A_1	B
Specimen #12-1 7971 ULE As Machined			
1.4×10^{-6}	$.48 \times 10^{-4}$	$.82 \times 10^{-8}$	.36
1.9	.65	.87	.52
2.7	.93	1.6	.38
3.8	1.30	1.9	.44
5.4	1.8	2.7	.50
8.5	2.9	3.5	.59
10.6	3.7	6.1	.46
15	5.1	8.4	.63
22	7.4	16	.35
30	10.2	20	.43
43	15	53	.26
Specimen #12-2 7971 ULE Heat Treated			
3.8×10^{-6}	1.30×10^{-4}	$.45 \times 10^{-8}$	.43
5.4	1.8	.70	.36
7.4	2.6	.81	.47
10.7	3.7	1.12	.54
15	5.1	1.6	.58
22	7.4	2.7	.49
30	10.3	4.4	.47
43	15	10.4	.31
Specimen #12-3 7971 ULE Heat Treated			
5.5×10^{-6}	1.9×10^{-4}	$.70 \times 10^{-8}$	.30
7.2	2.5	.87	.33
10.9	3.8	1.5	.29
14.4	5.0	1.6	.42
22	7.6	2.9	.33
29	10.1	4.8	.29
44	15	6.9	.32
58	20	9.6	.37

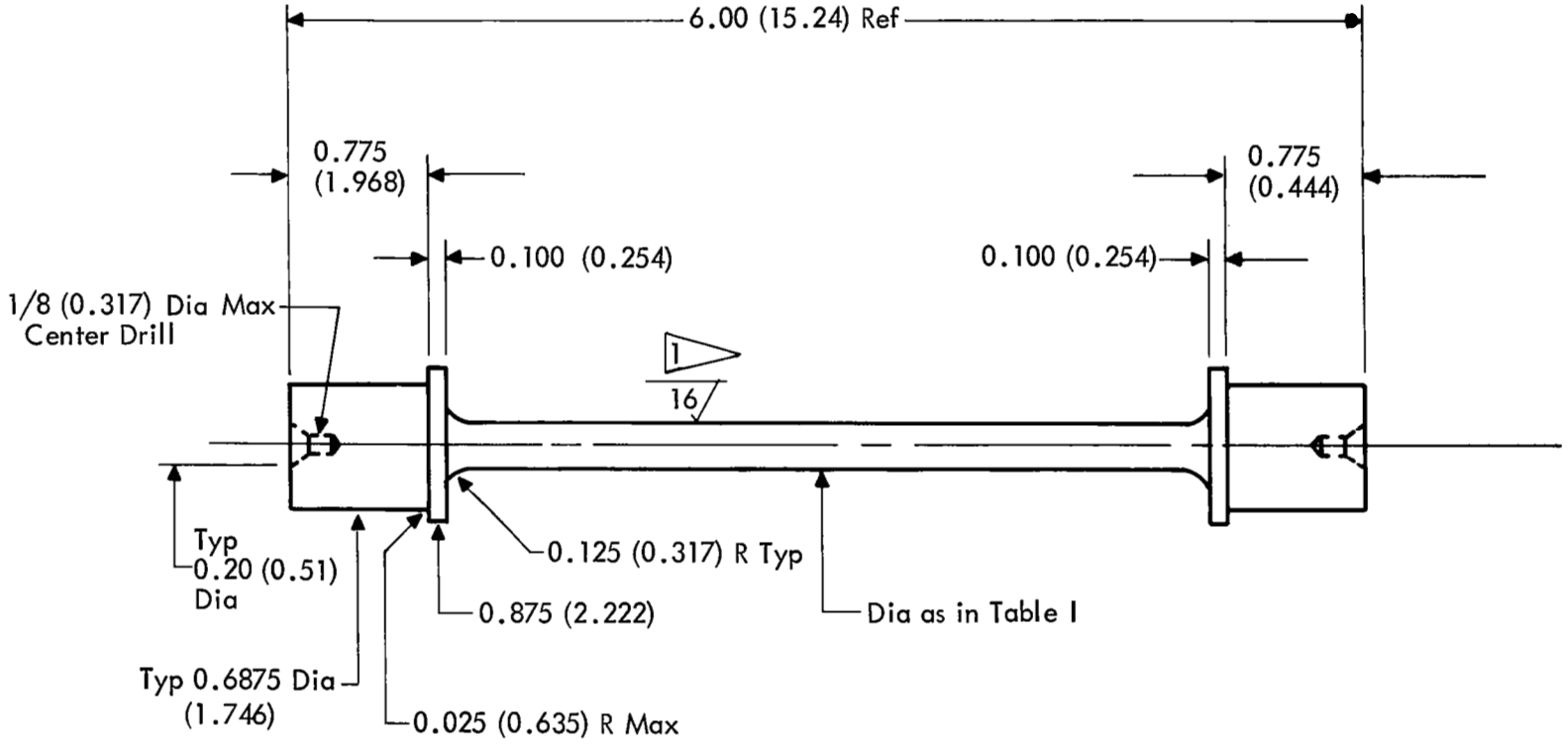

All diameters to be concentric with end centers within 0.001 TIR

32 finish except as noted

1 16 finish to extend approx 0.10 inch along fillet

Break all corners 0.005 to 0.010 R

Dimensions in inches (centimeters)

Figure 1: DIMENSIONED SPECIMEN DRAWING

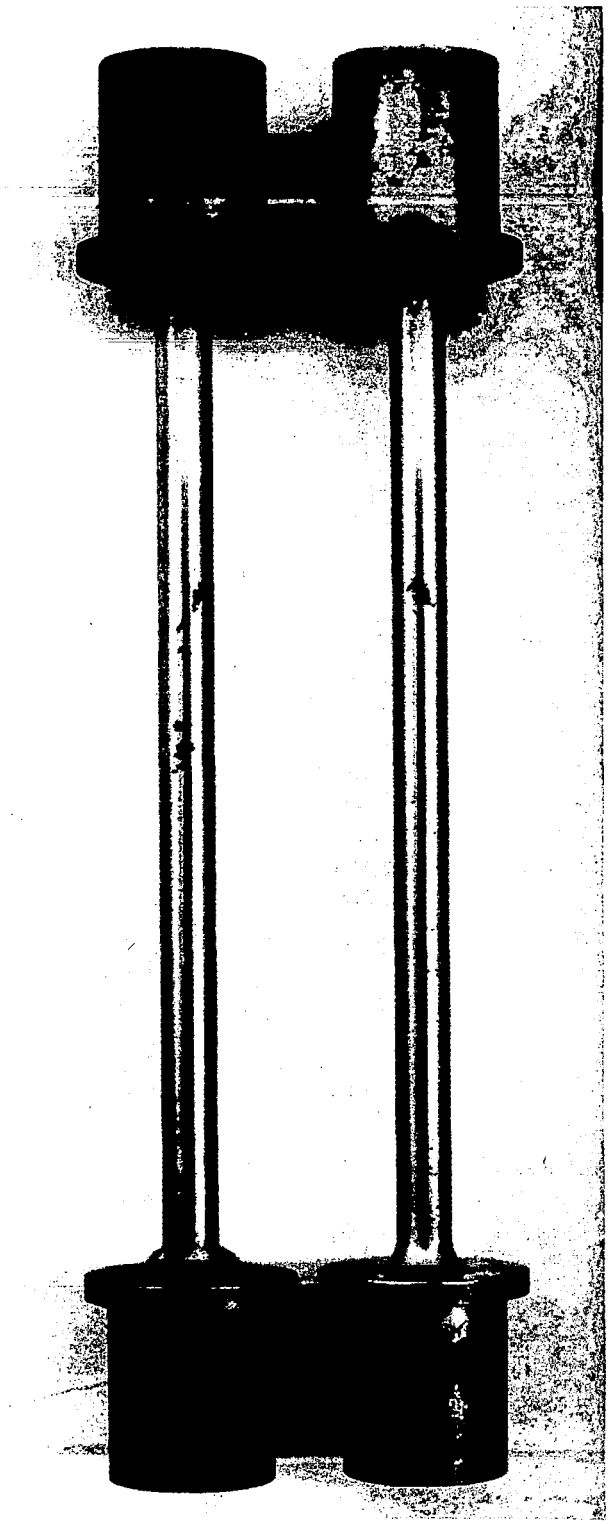

Figure 2: MICROSTRAIN TEST SPECIMEN OF 304L STAINLESS STEEL

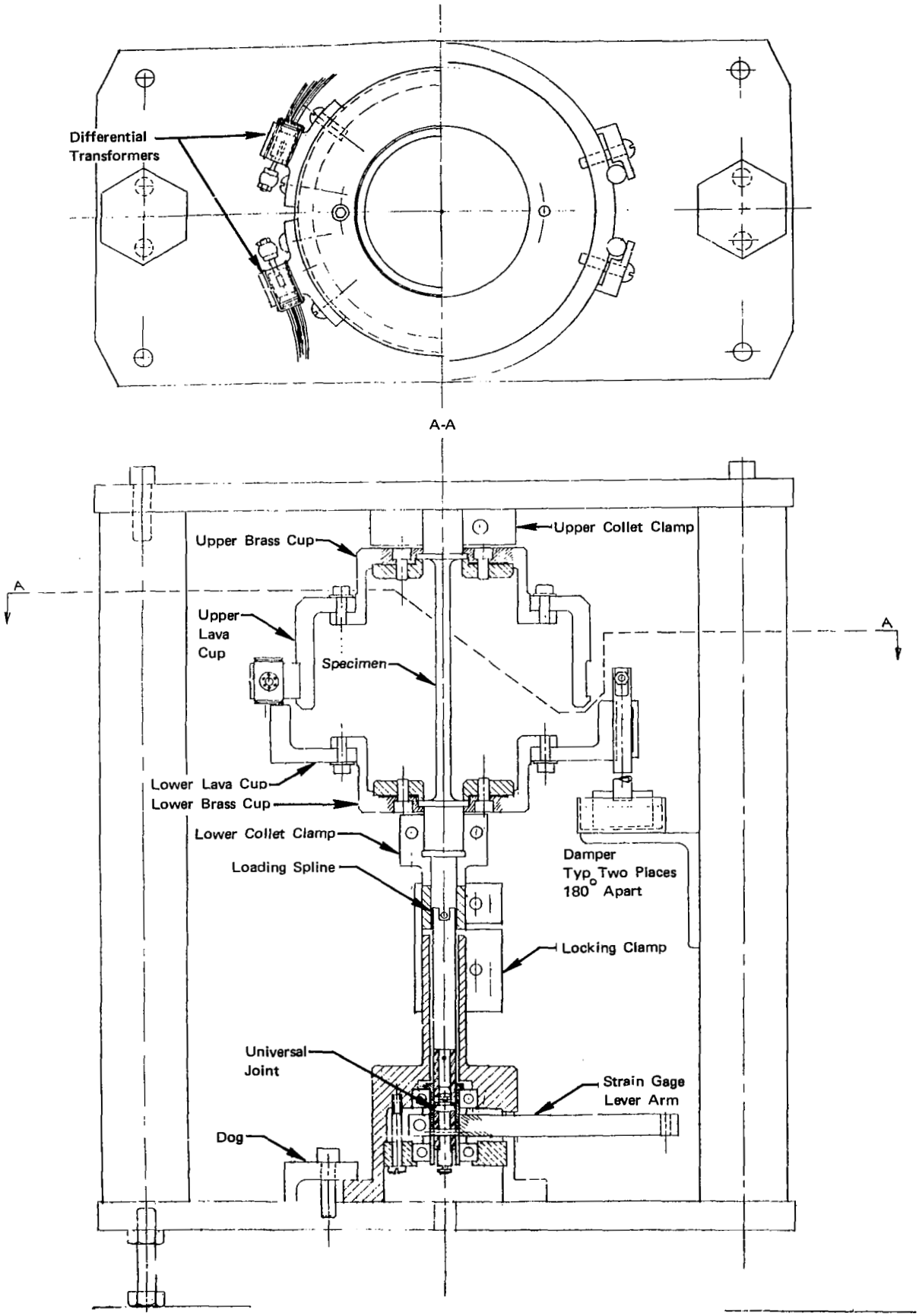

Figure 3: MICROSTRAIN TEST APPARATUS ASSEMBLY DRAWING

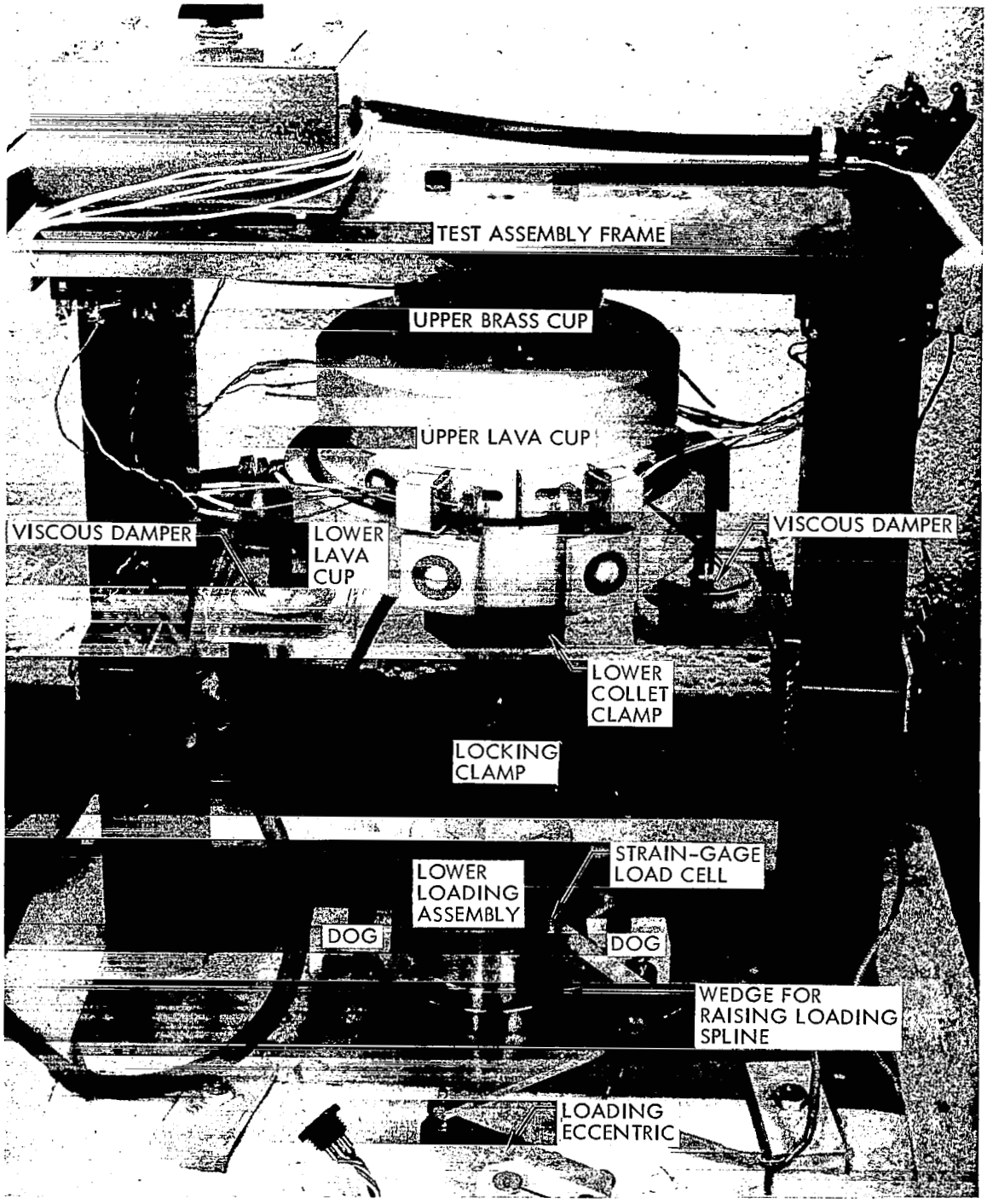

Figure 4: EXTENSOMETER AND LOADING ASSEMBLY

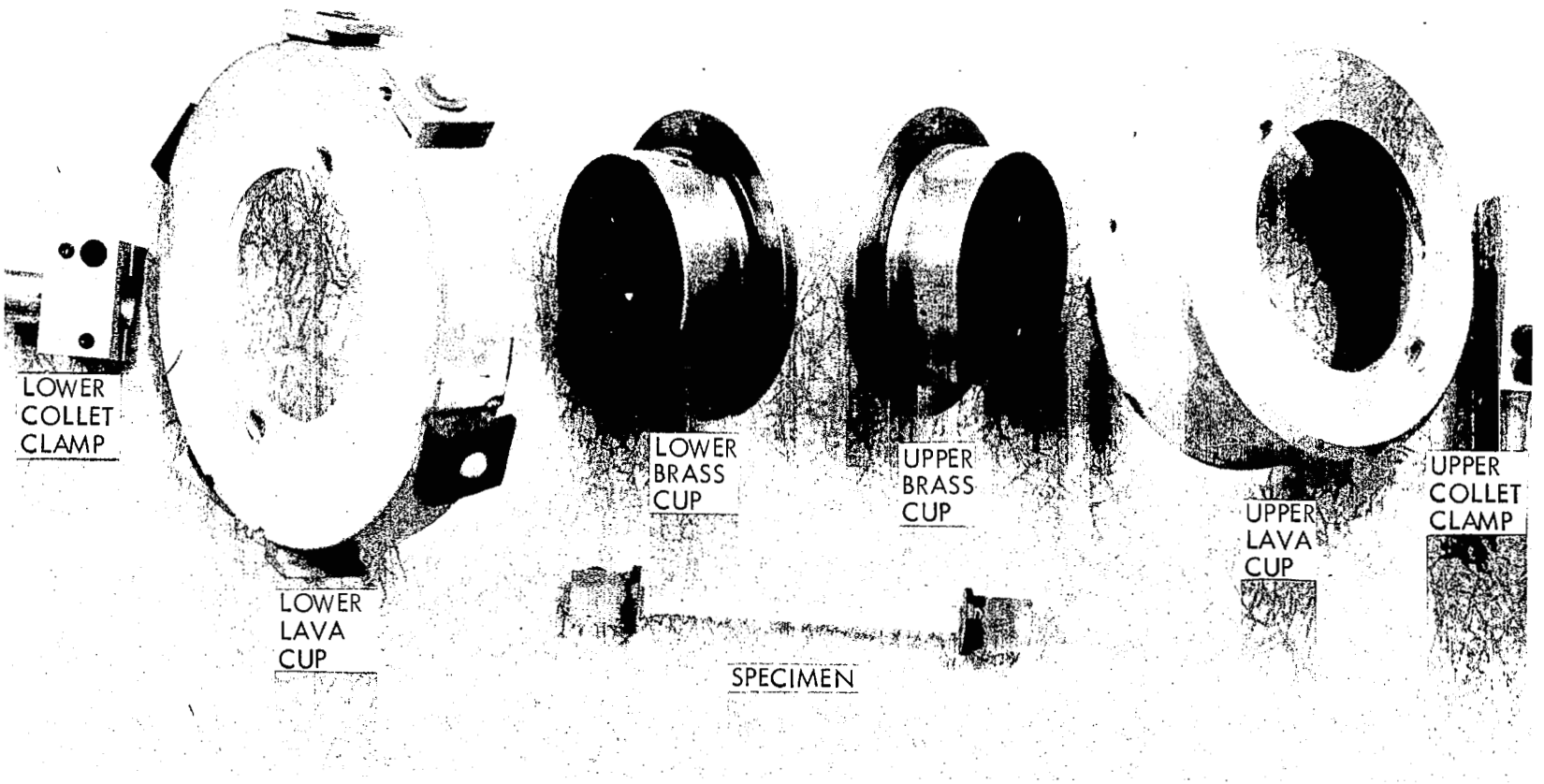

Figure 5: EXTENSOMETER CUPS AND CLAMPS

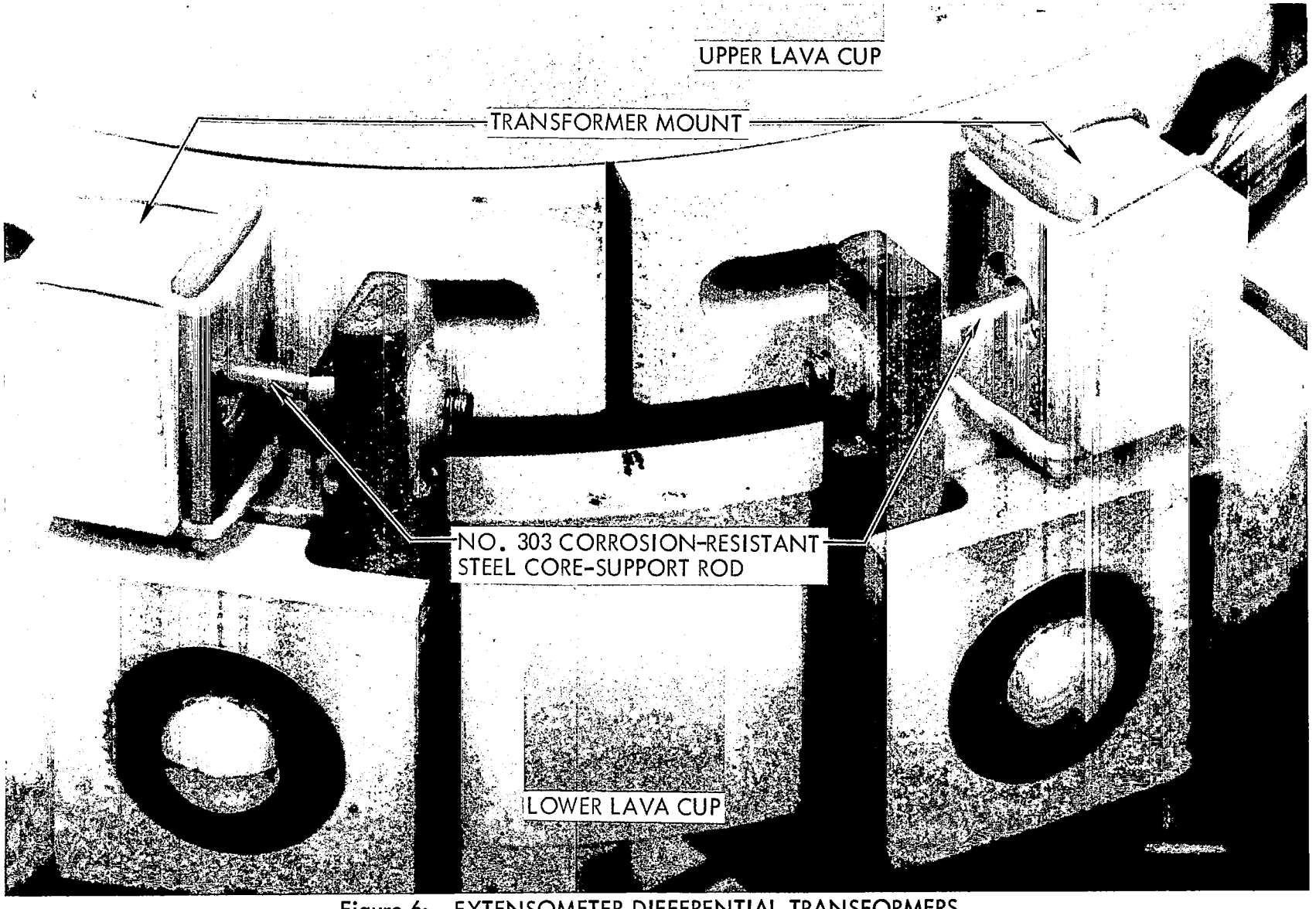

Figure 6: EXTENSOMETER DIFFERENTIAL TRANSFORMERS

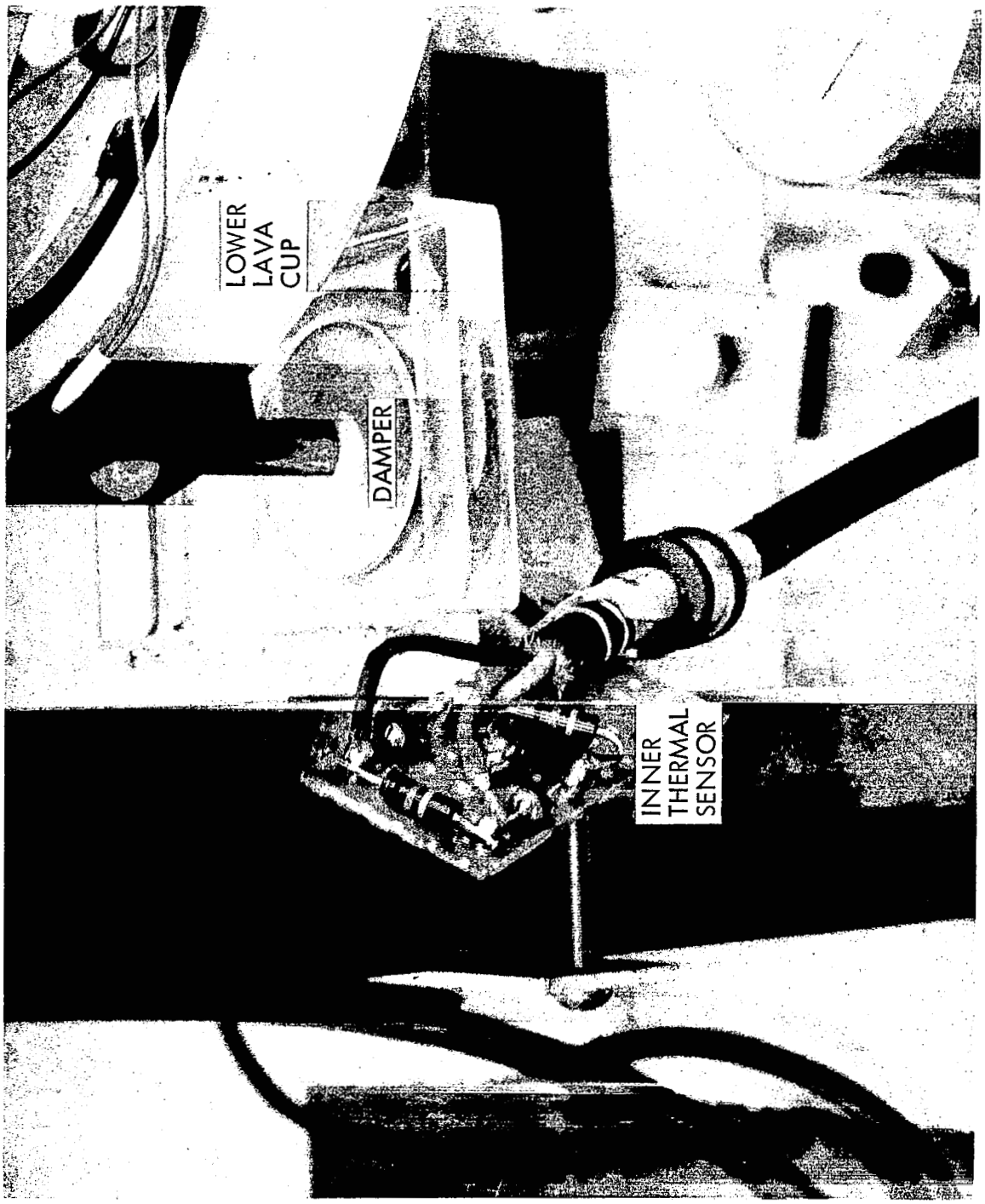

Figure 7: EXTENSOMETER DAMPER AND INNER THERMAL SENSOR

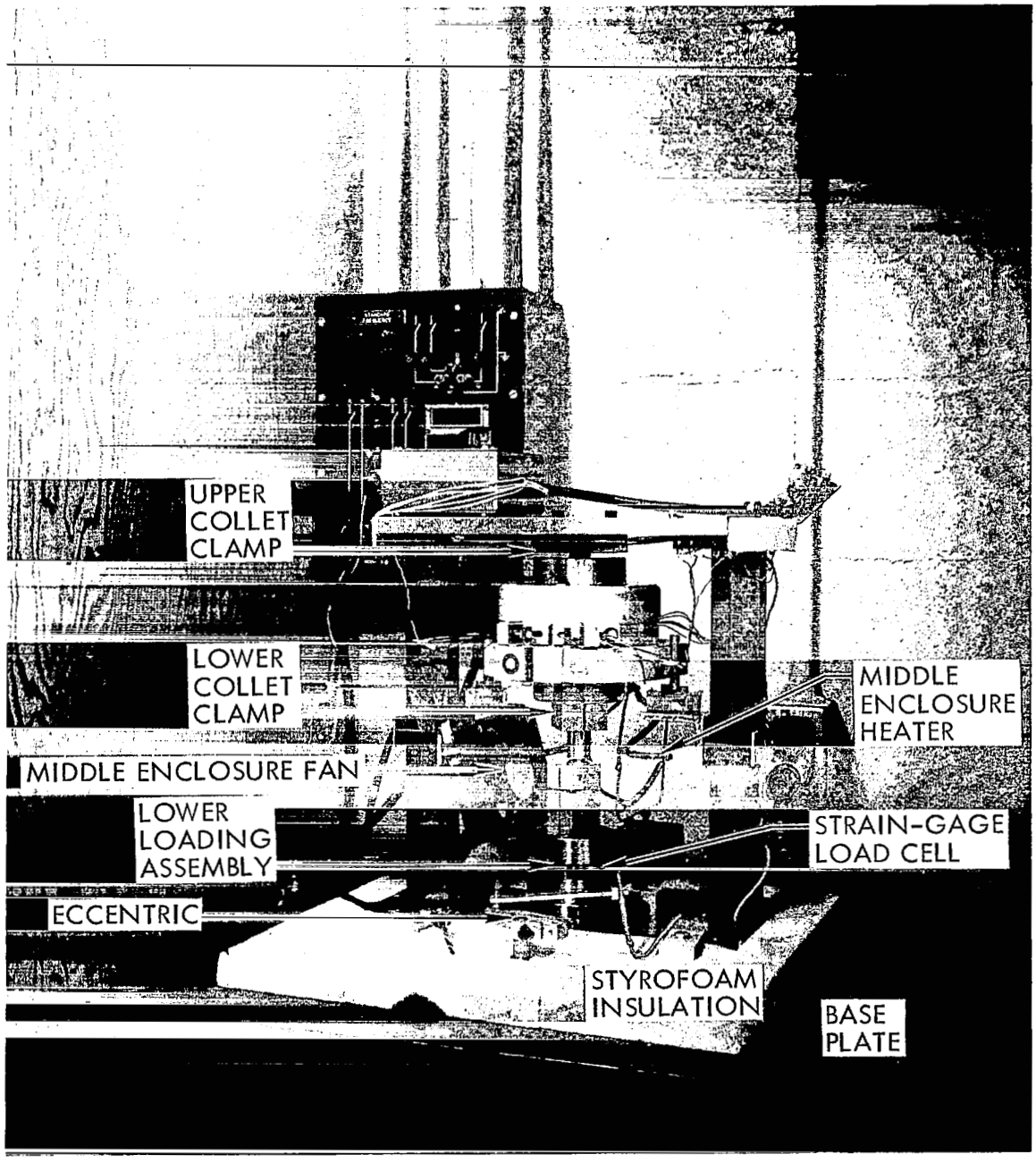

Figure 8: SPECIMEN LOADING MECHANISM

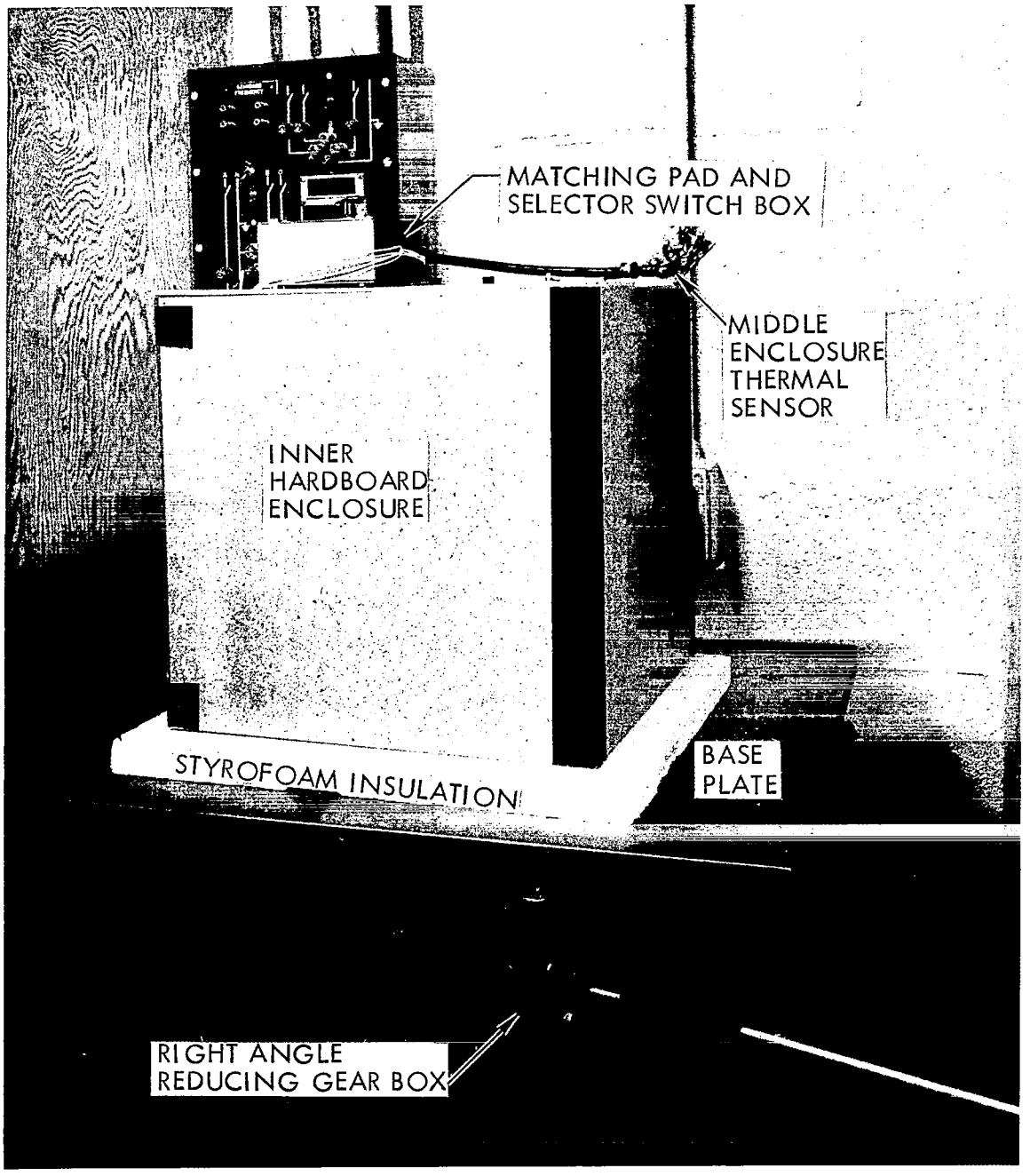

Figure 9: INNER WINDSHIELD THERMAL ENCLOSURE

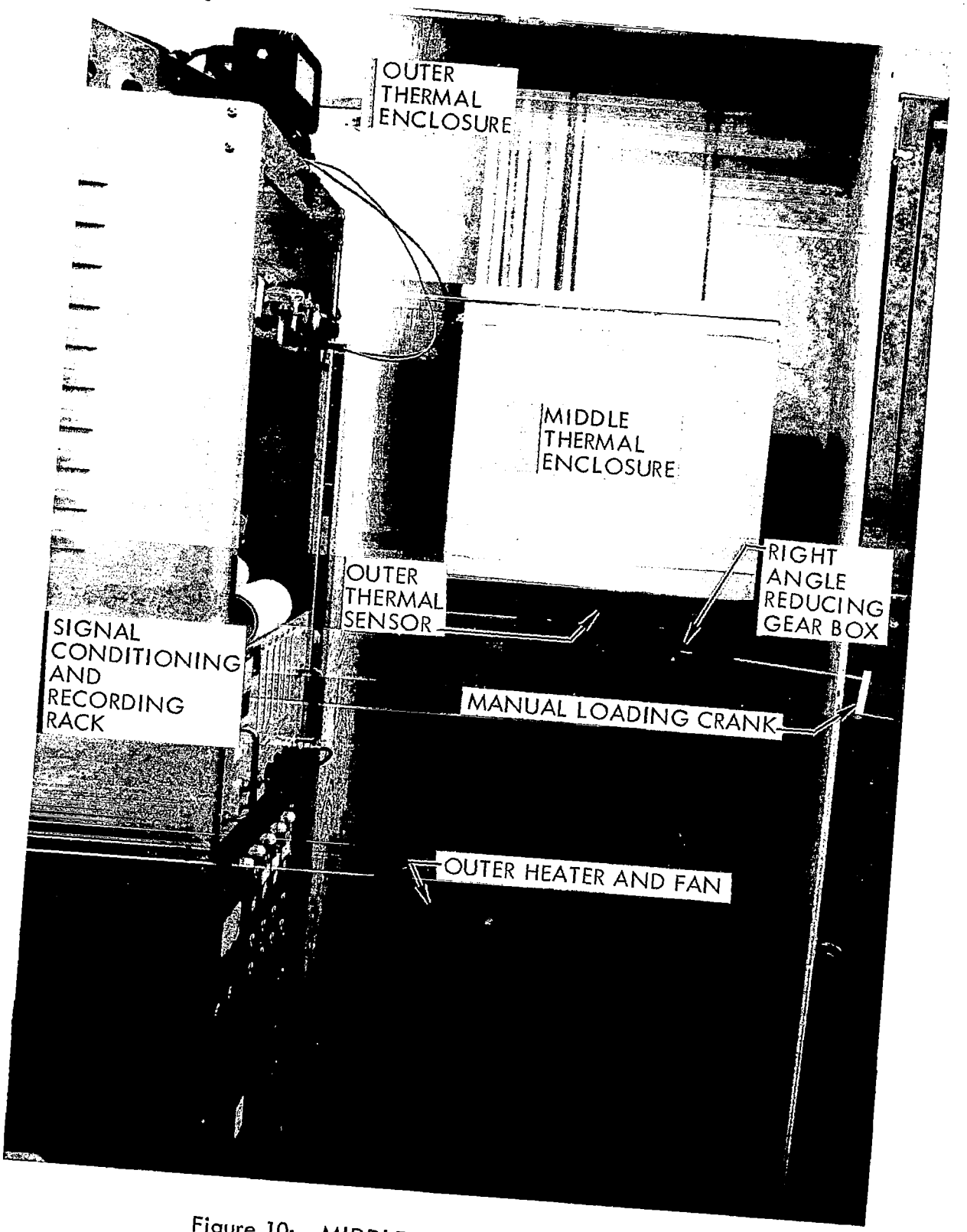

Figure 10: MIDDLE THERMAL ENCLOSURE

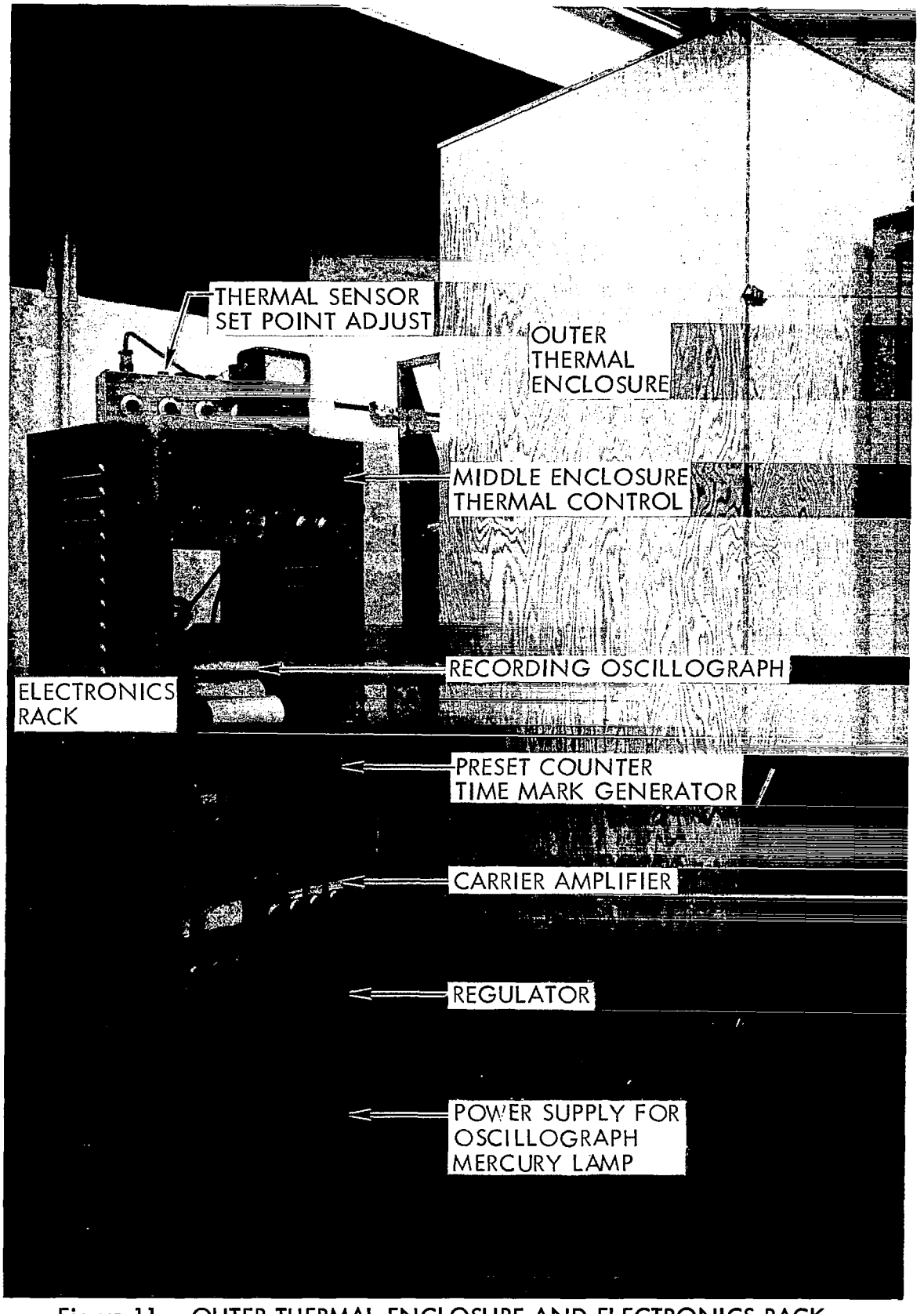

Figure 11: OUTER THERMAL ENCLOSURE AND ELECTRONICS RACK

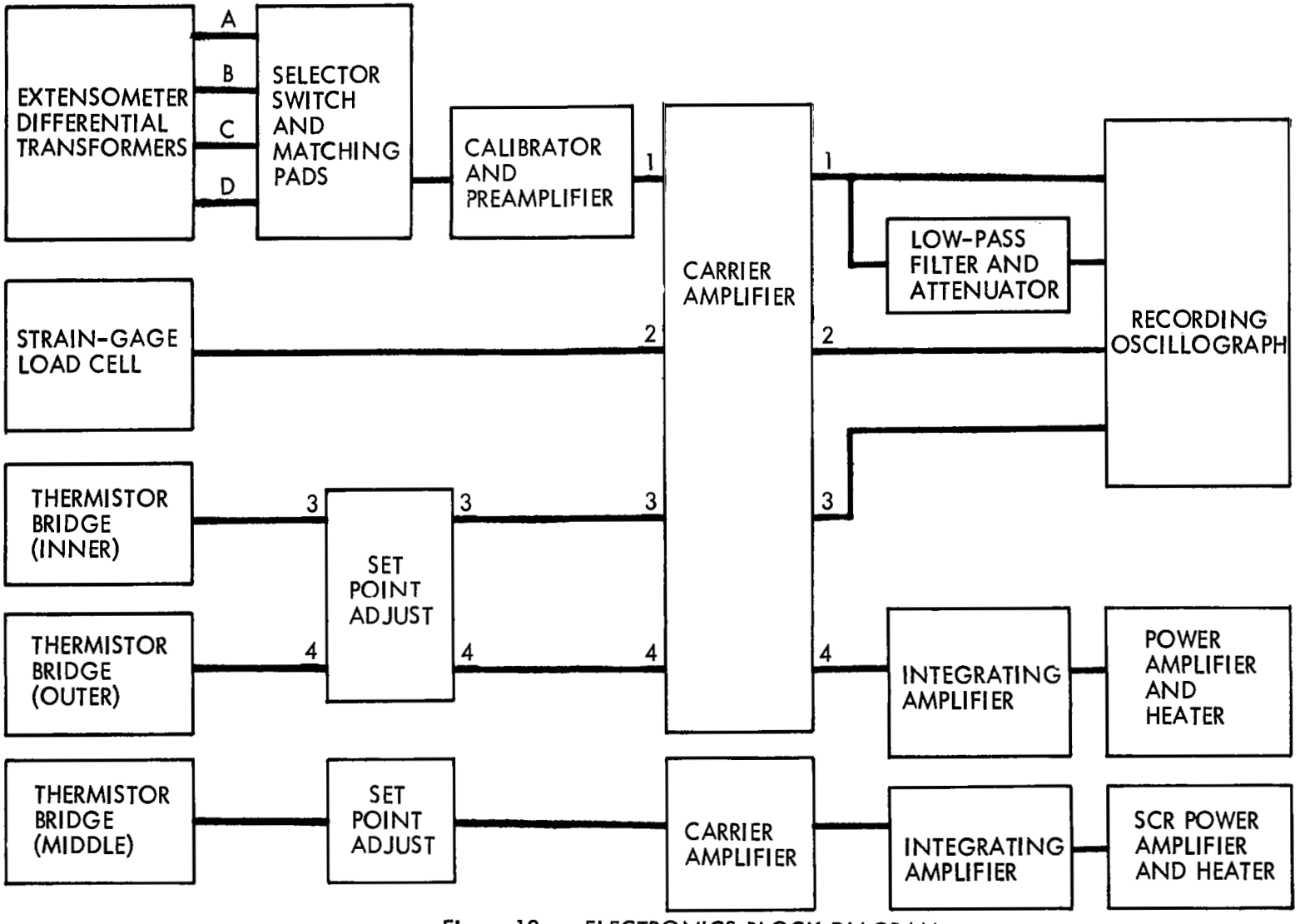

Figure 12: ELECTRONICS BLOCK DIAGRAM

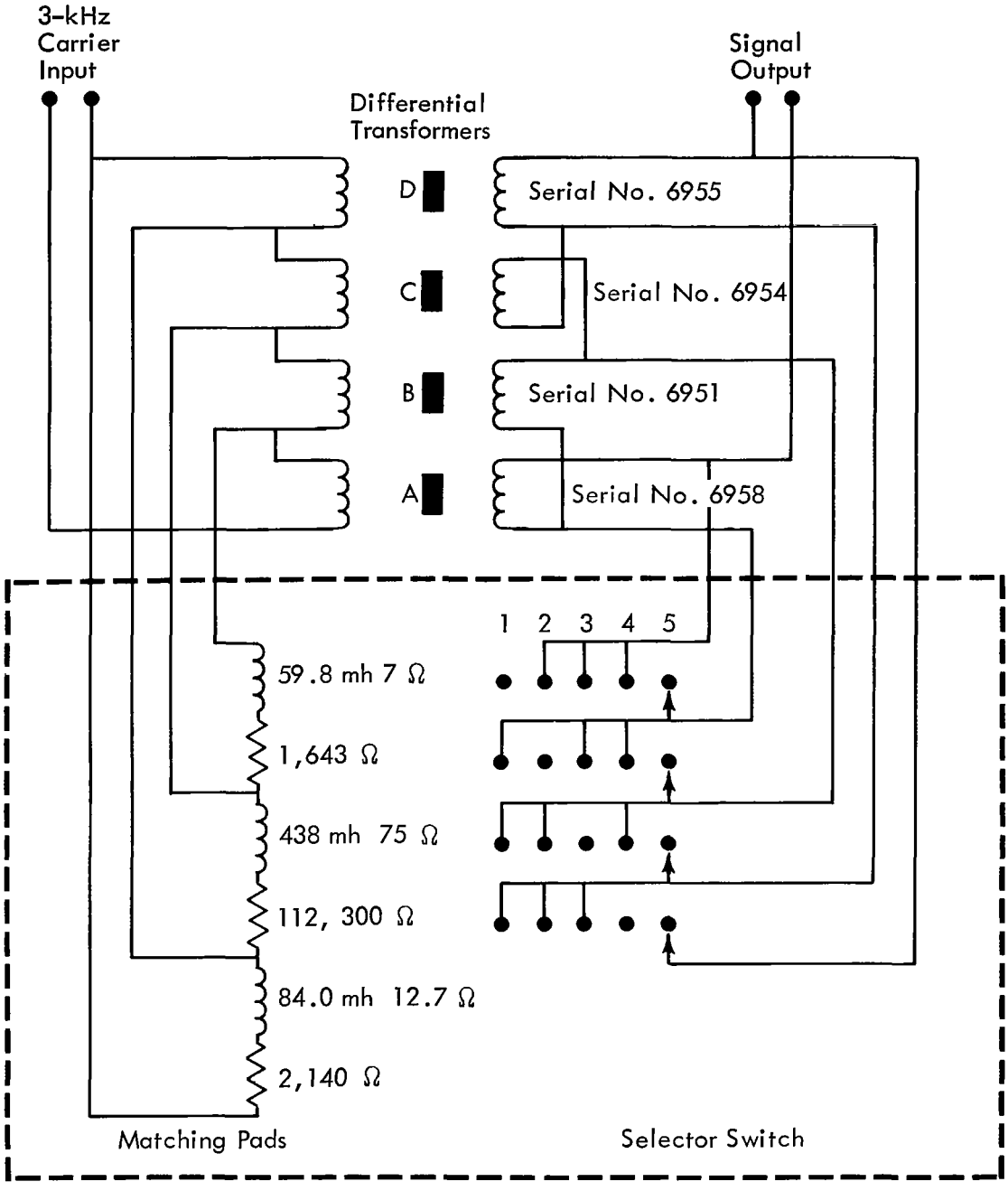

Figure 13: DIFFERENTIAL TRANSFORMER CIRCUITRY

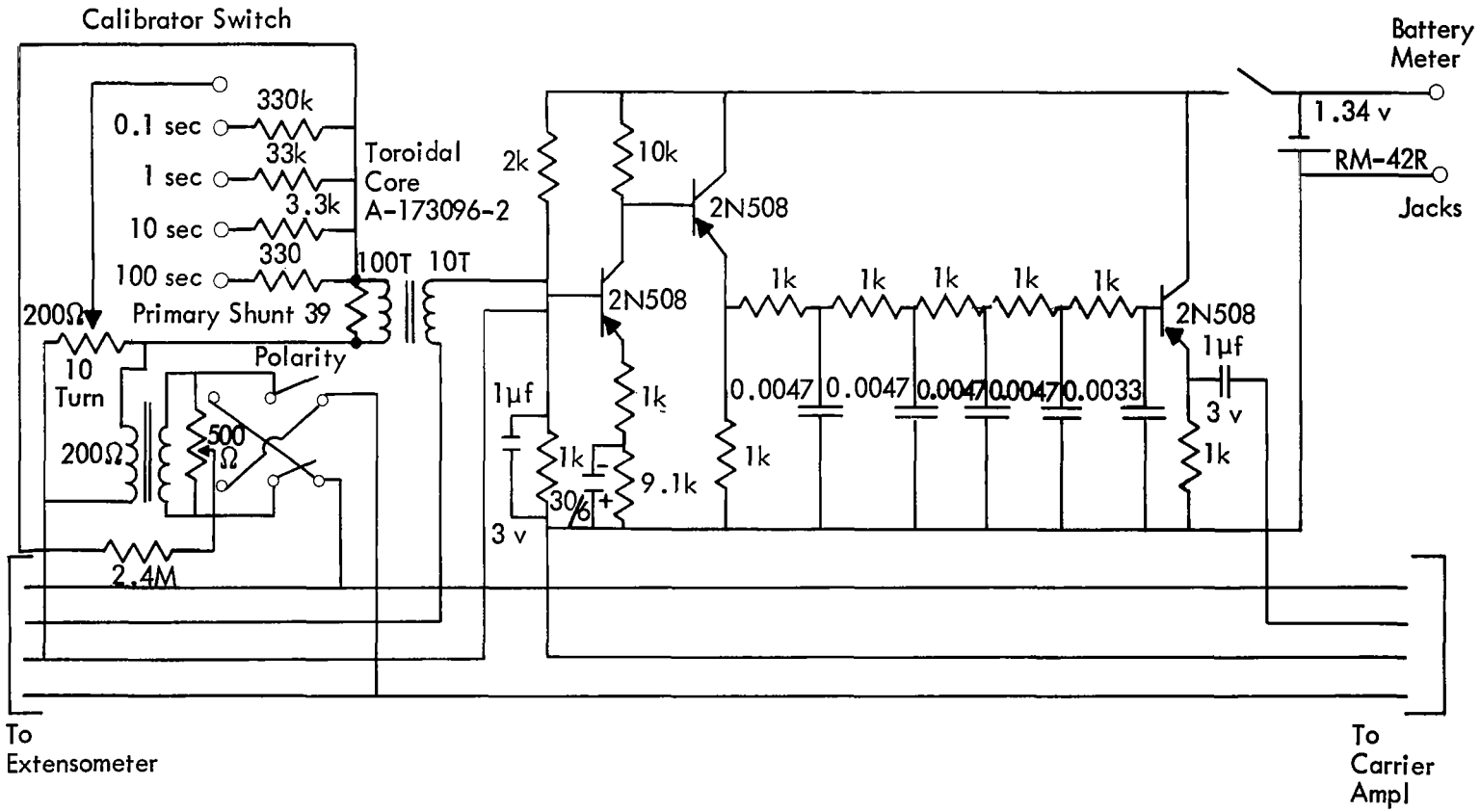

Figure 14: PREAMPLIFIER AND CALIBRATOR CIRCUITRY

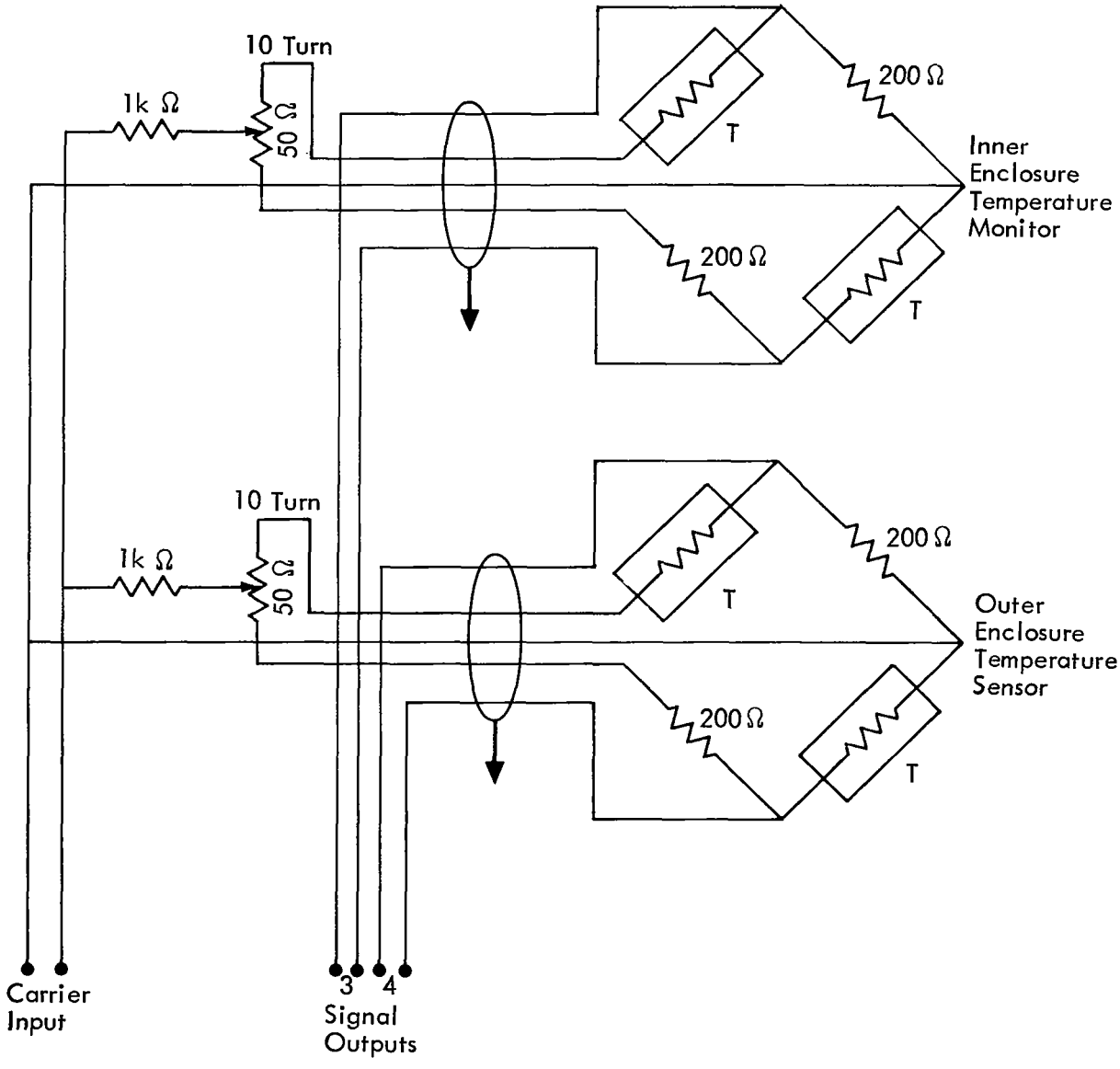

Figure 15: THERMAL SENSOR CIRCUITRY

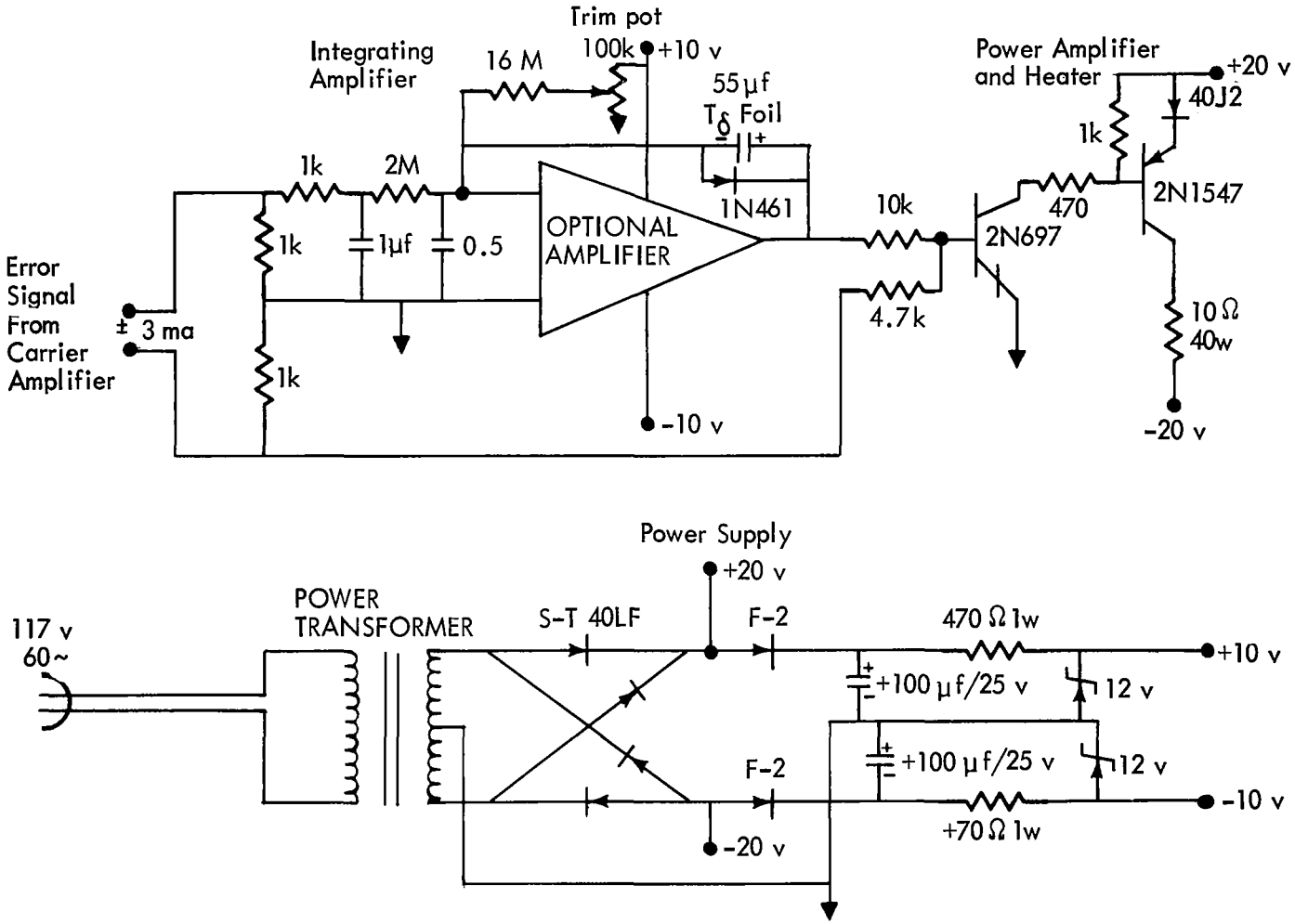

Figure 16: OUTER ENCLOSURE THERMAL CONTROLLER

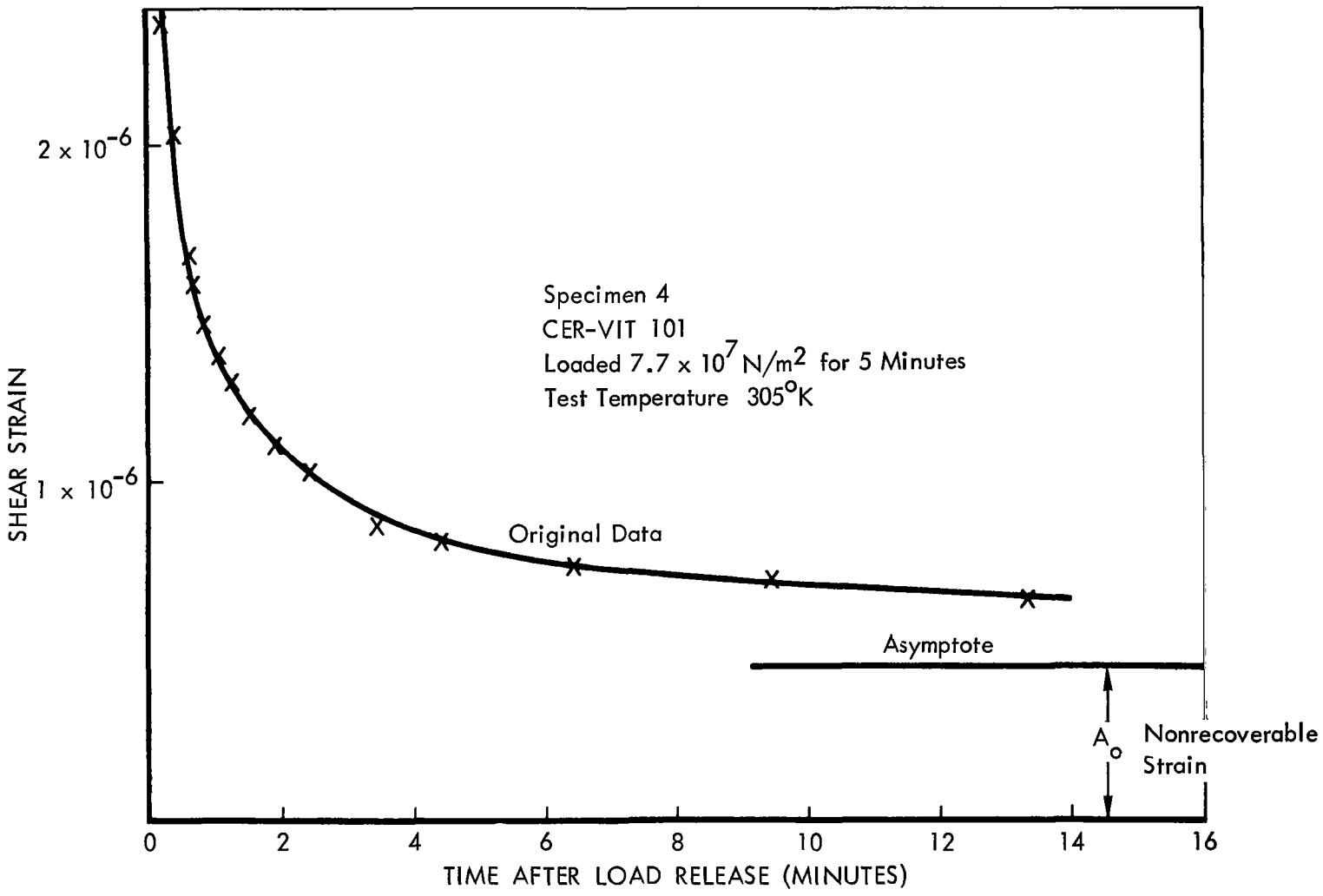

Figure 17: SHEAR STRAIN DECAY AS A FUNCTION OF TIME — 14-MINUTE LINEAR PLOT

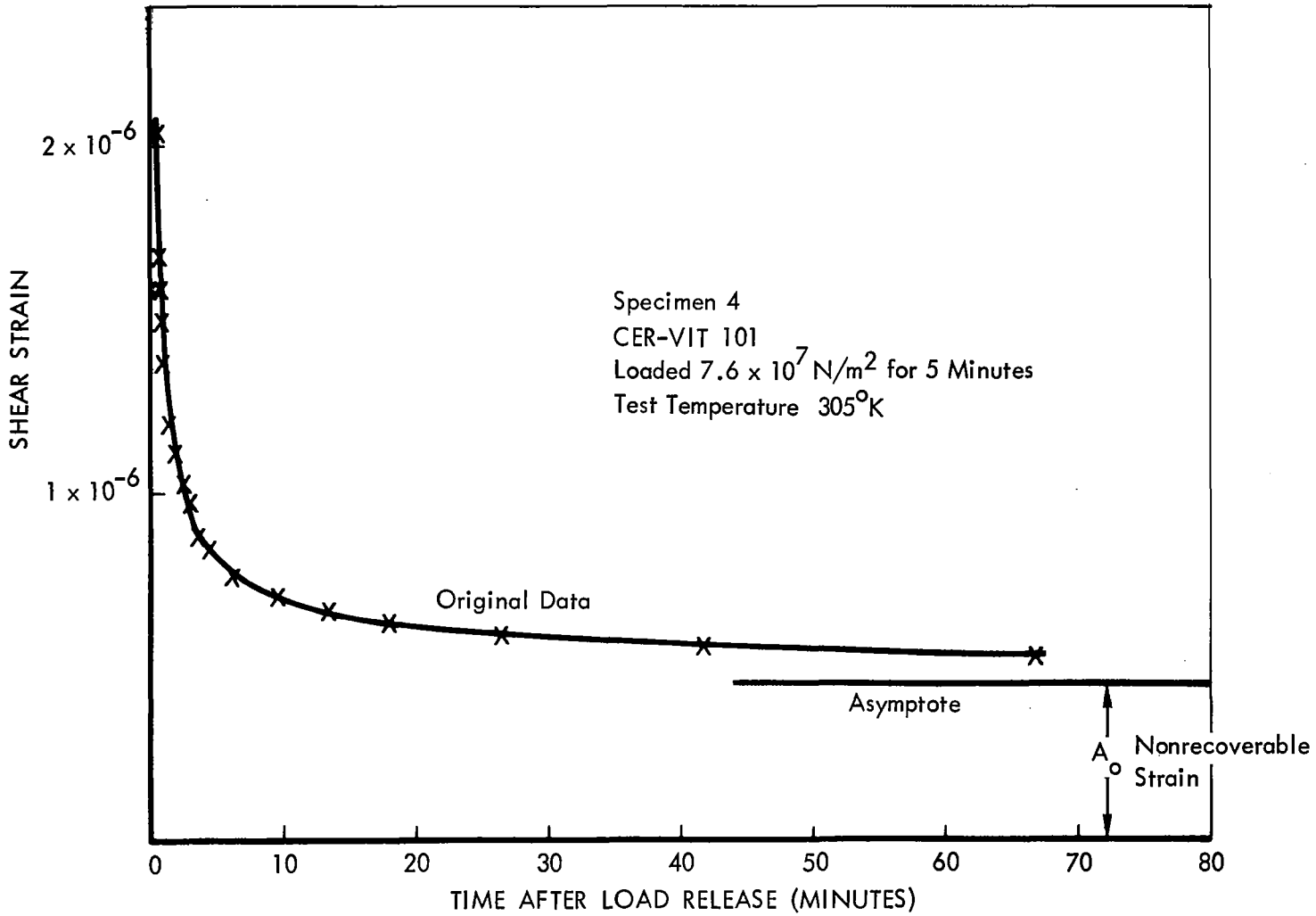

Figure 18: SHEAR STRAIN DECAY AS A FUNCTION OF TIME — 67-MINUTE LINEAR PLOT

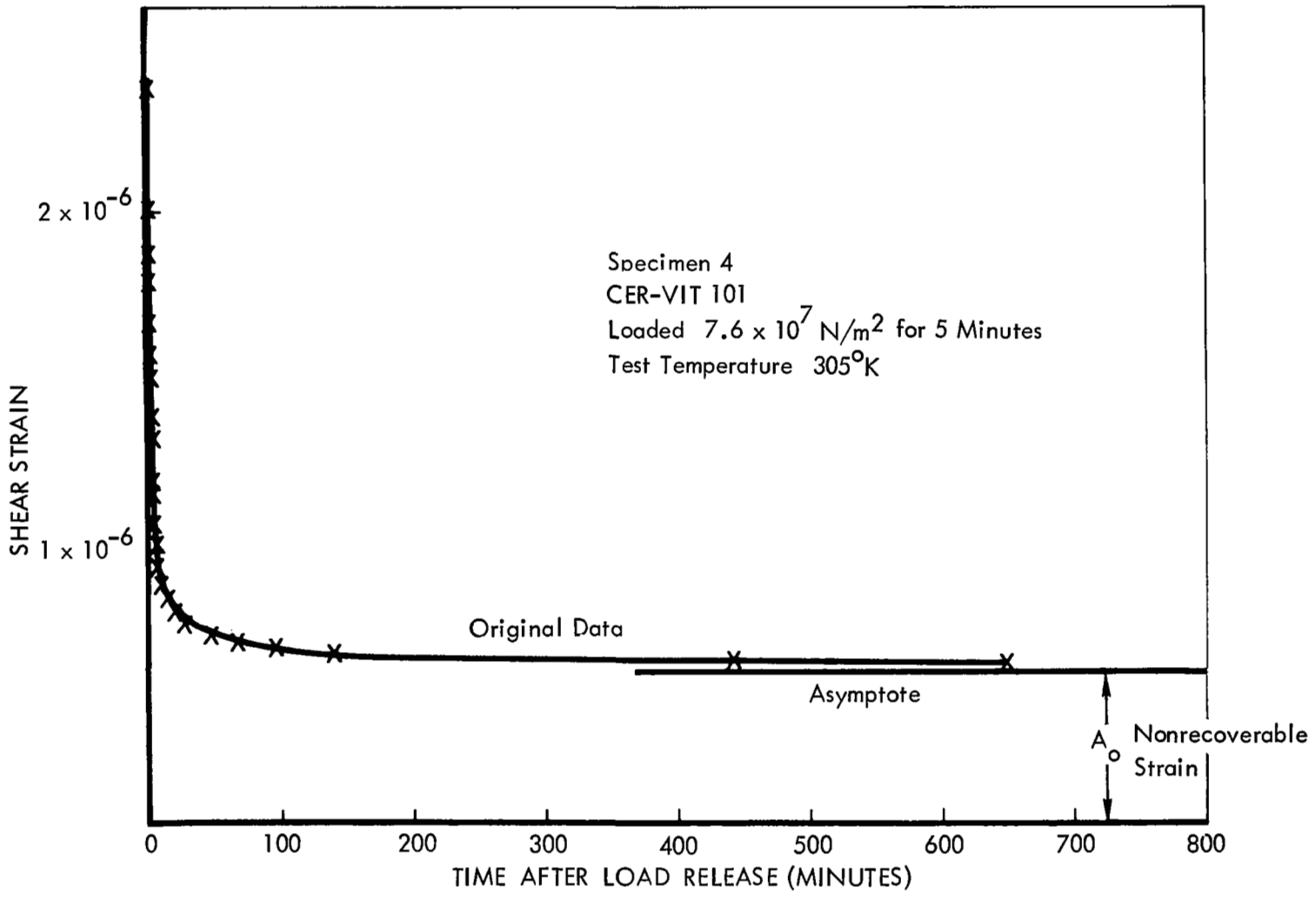

Figure 19: SHEAR STRAIN DECAY AS A FUNCTION OF TIME — 650-MINUTE LINEAR PLOT

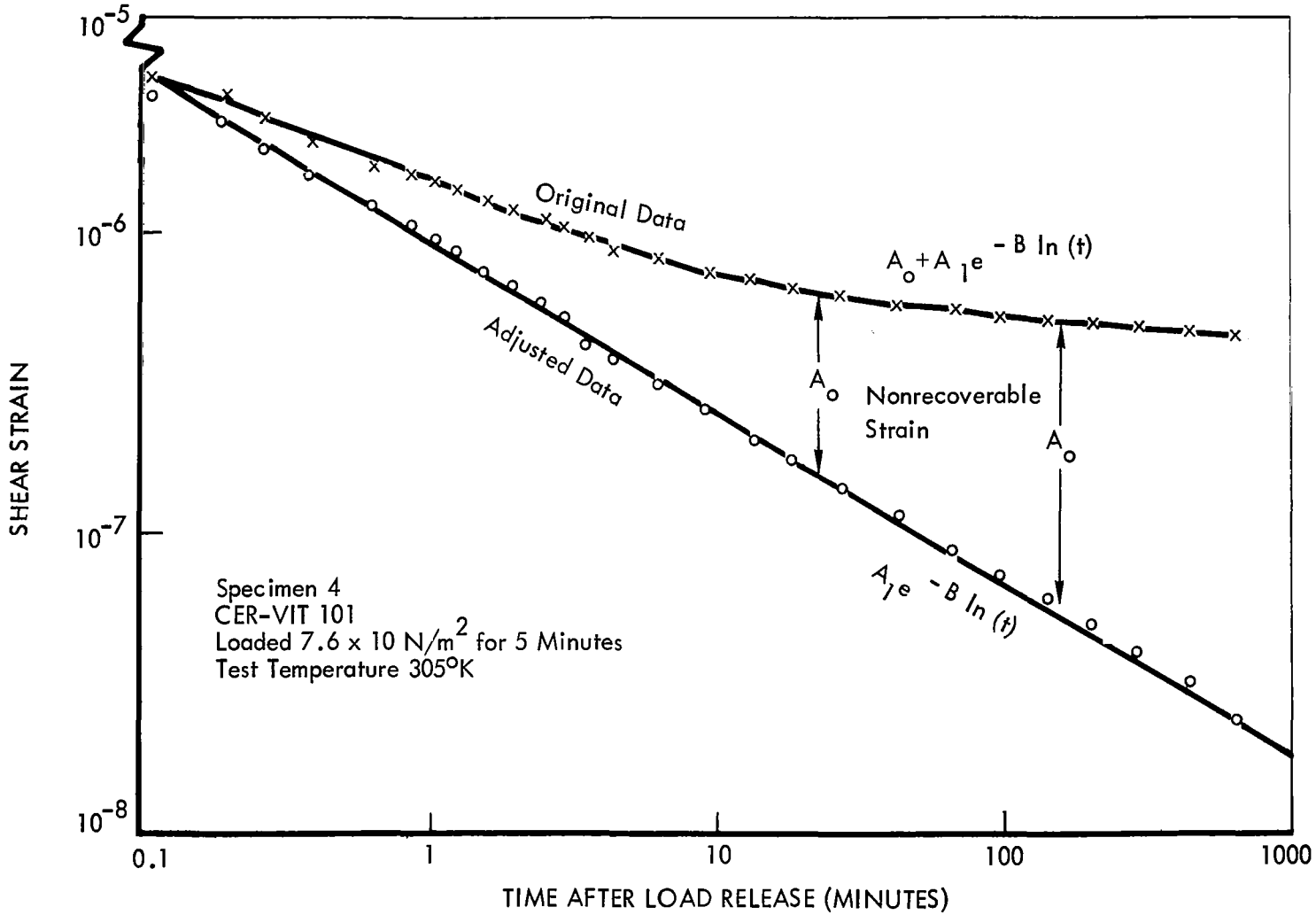

Figure 20: SHEAR STRAIN DECAY AS A FUNCTION OF TIME — LOG/LOG PLOT

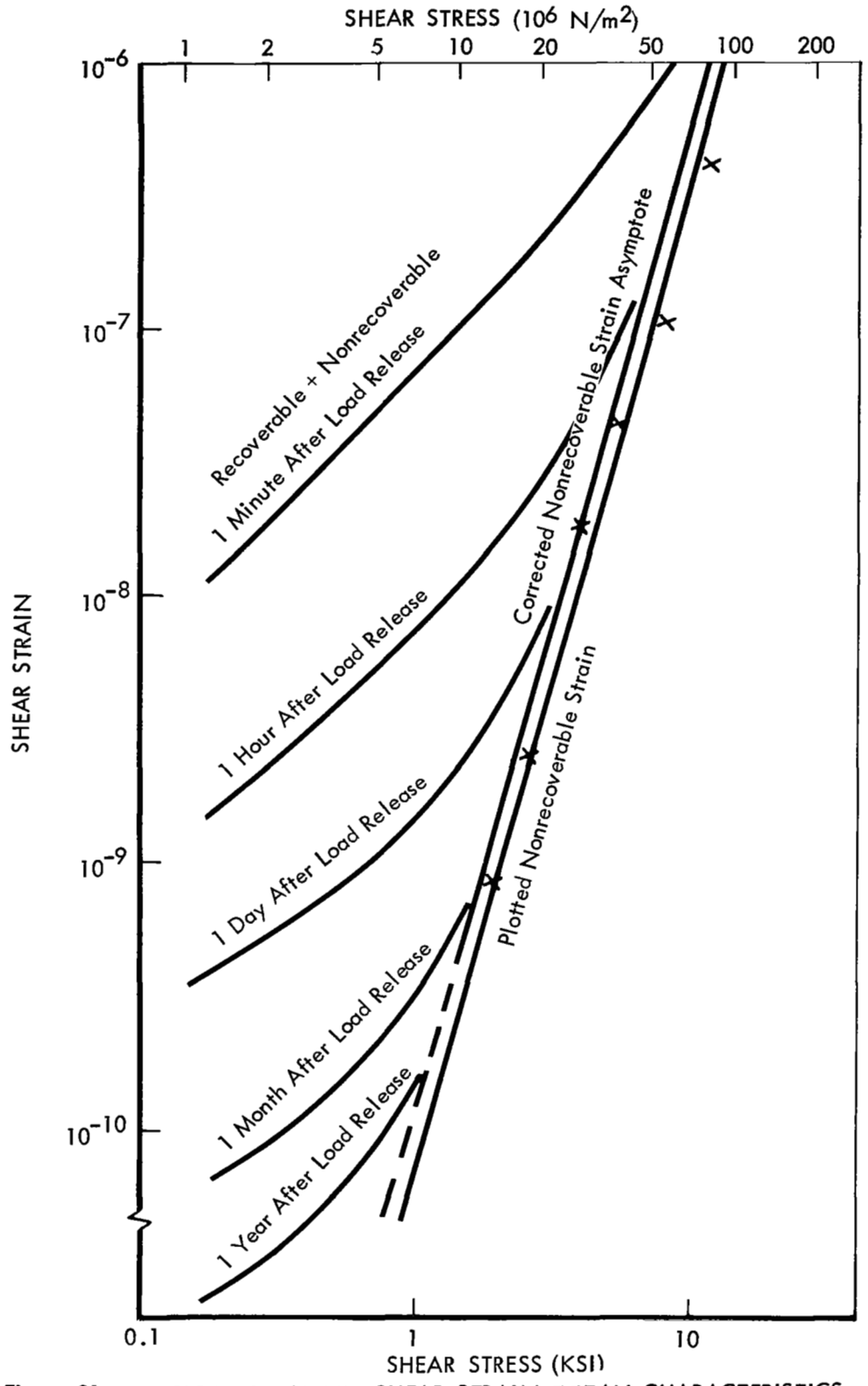

Figure 21: TYPICAL SPECIMEN SHEAR STRAIN DECAY CHARACTERISTICS AS A FUNCTION OF APPLIED SHEAR STRESS AND TIME

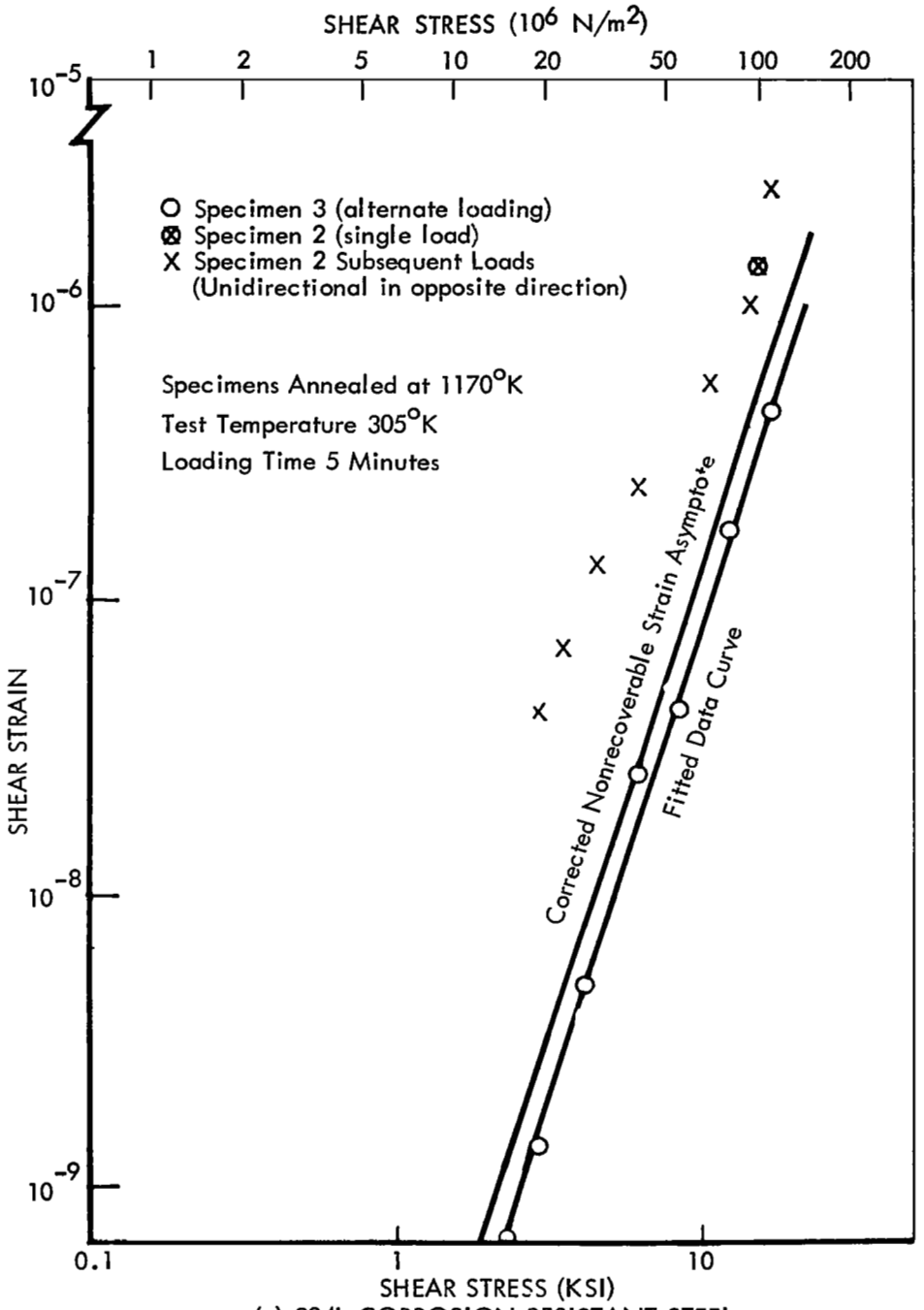

(a) 304L CORROSION RESISTANT STEEL

Figure 22: NONRECOVERABLE SHEAR STRAIN AS A FUNCTION OF APPLIED STRESS FOR HEAT-TREATED SPECIMENS

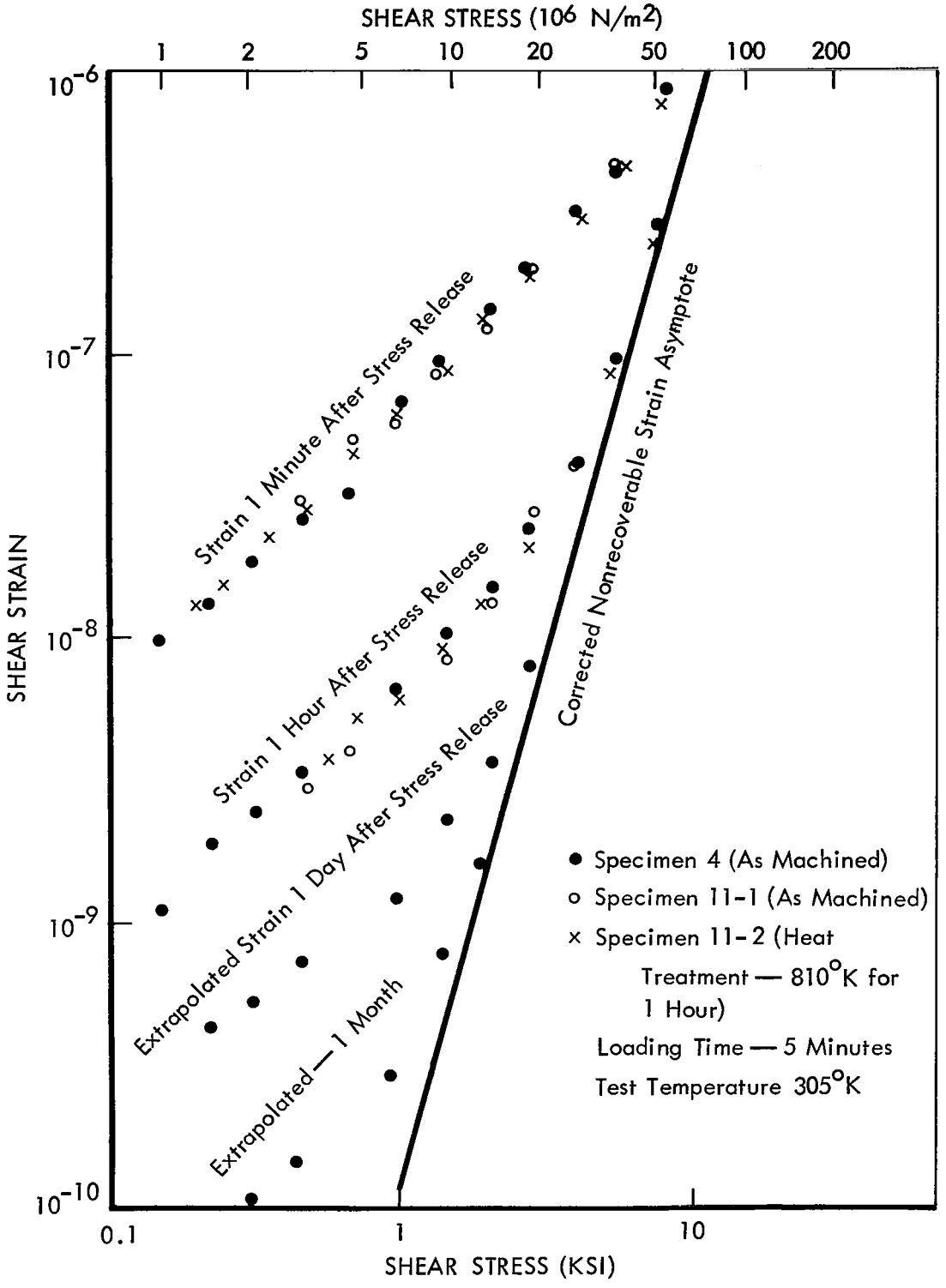

(b) CER-VIT 101

Figure 22 (Continued)

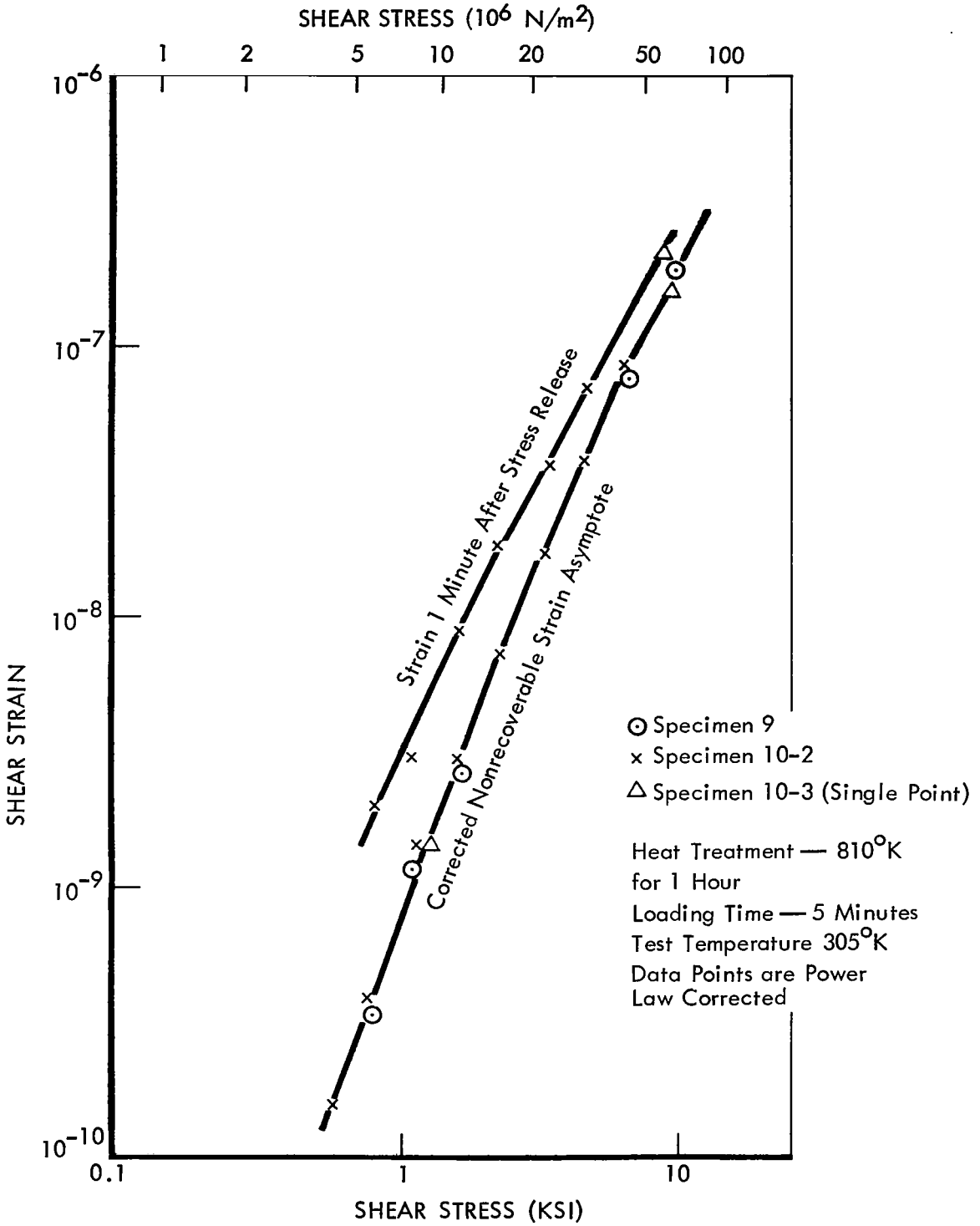

(c) 7940 SILICA

Figure 22 (Continued)

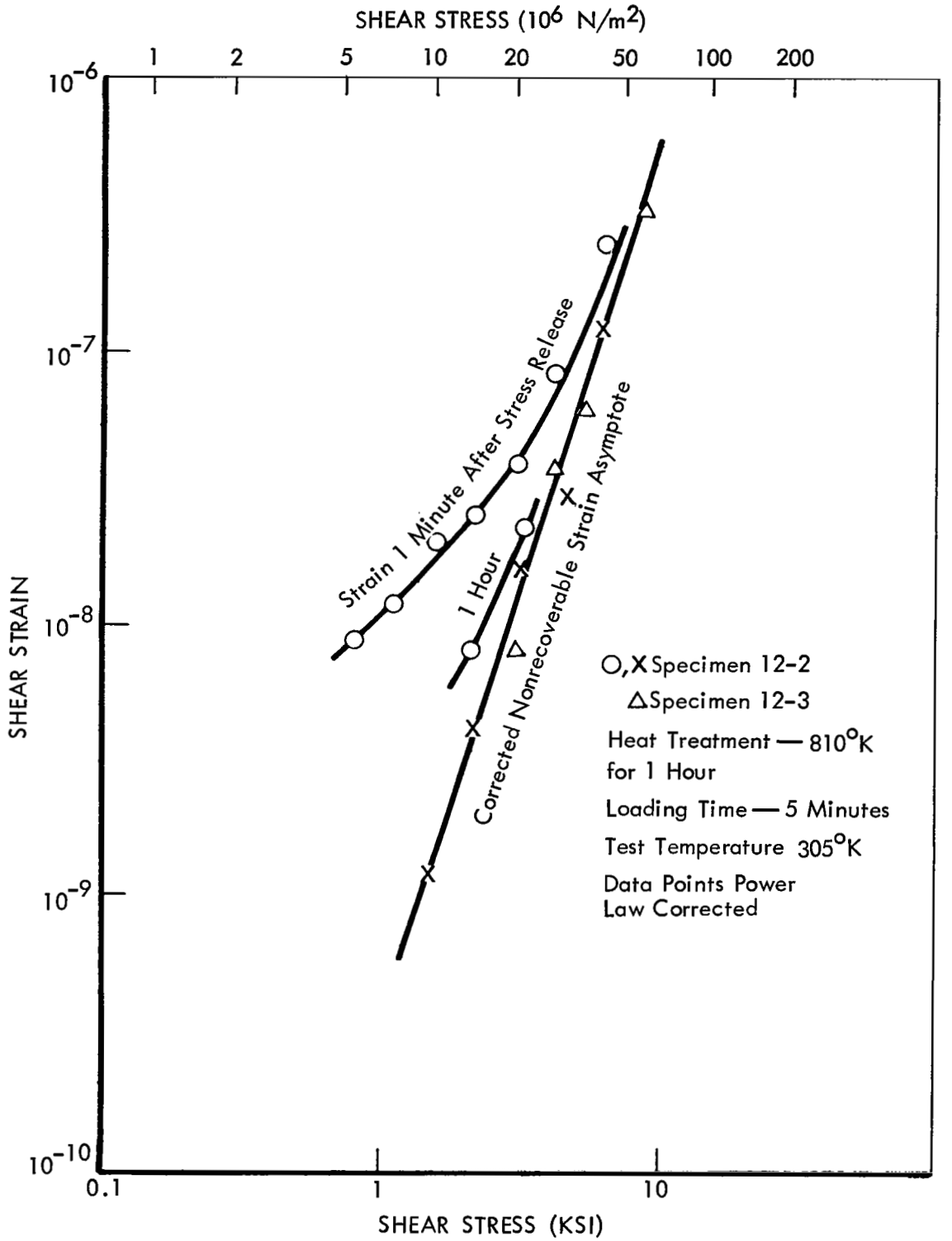

(d) ULE SILICA

Figure 22 (Concluded)

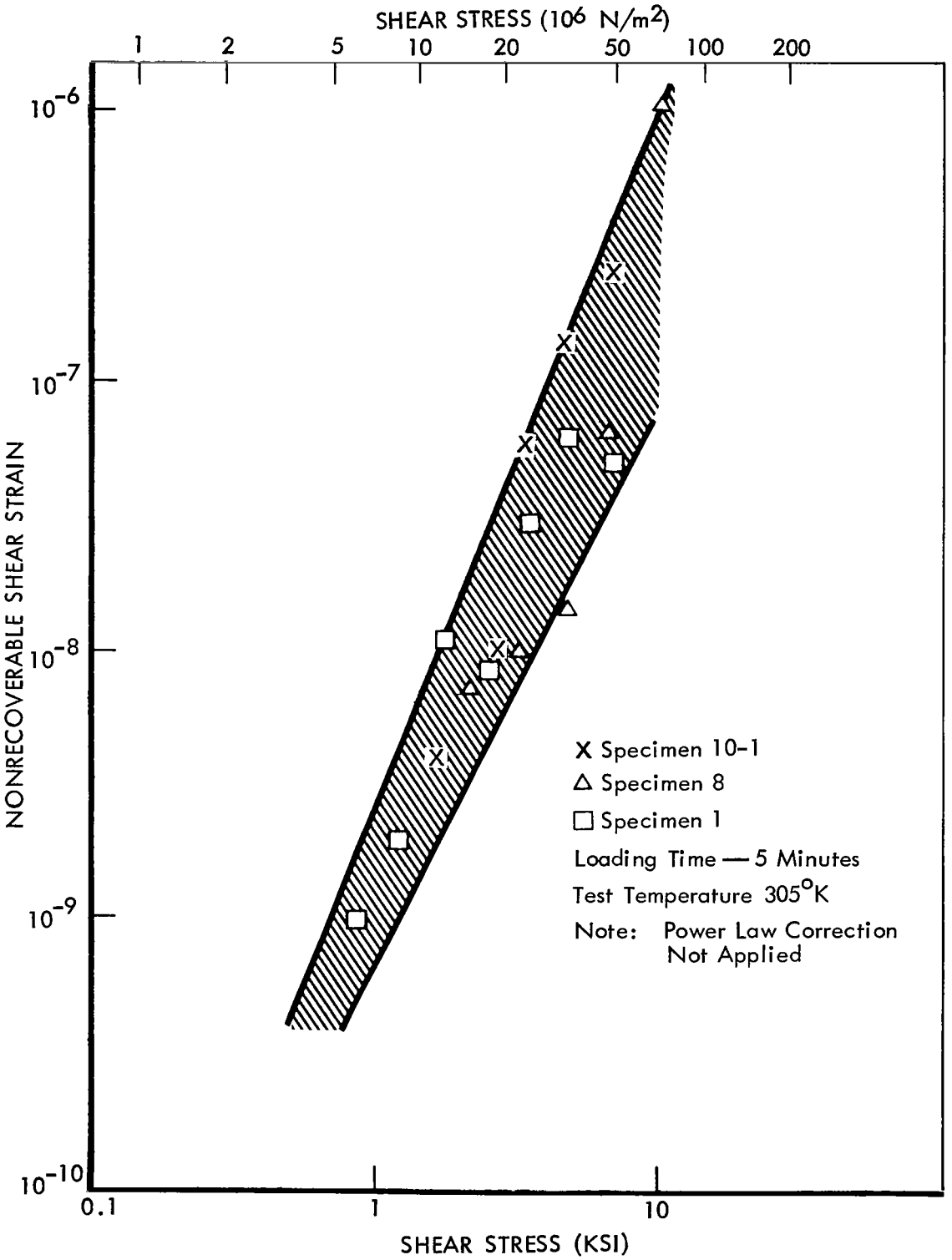

(a) 7940 SILICA

Figure 23: NONRECOVERABLE SHEAR STRAIN AS A FUNCTION OF APPLIED STRESS FOR AS-MACHINED SPECIMENS

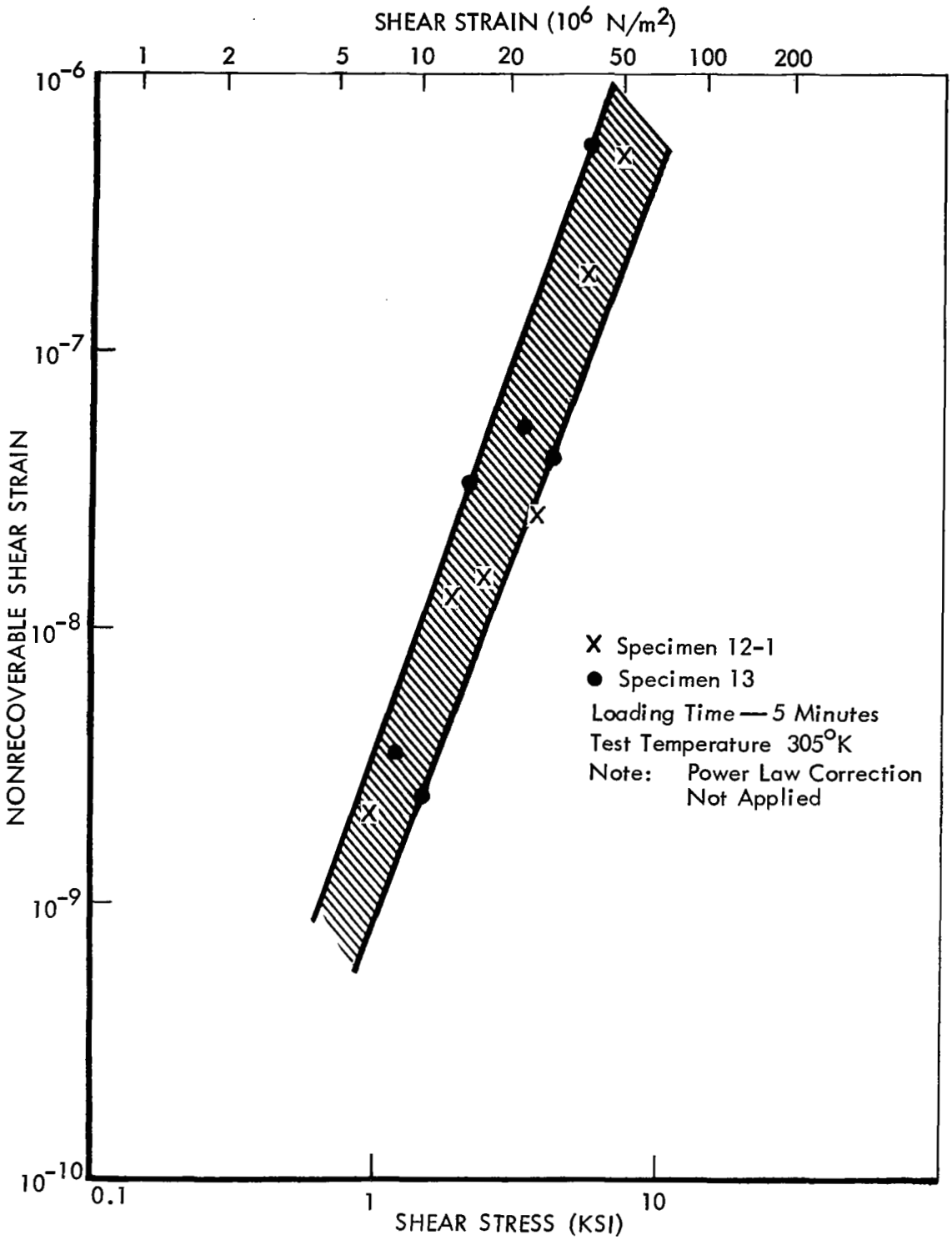

(b) ULE SILICA

Figure 23 (Concluded)

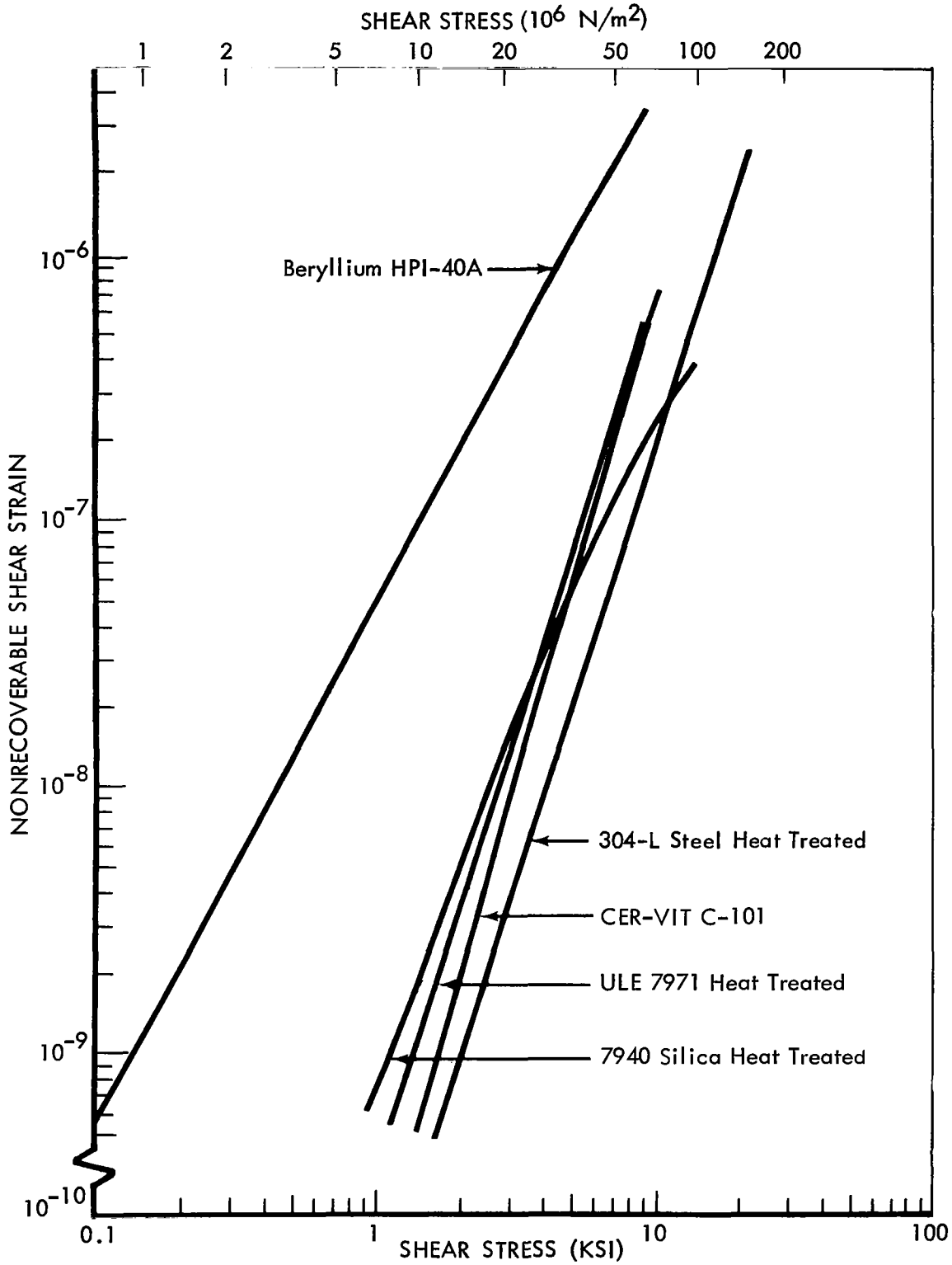

Figure 24: TESTED MATERIALS COMPARISON OF NONRECOVERABLE SHEAR STRAIN AS A FUNCTION OF APPLIED SHEAR STRESS