NASA TECHNICAL NOTE

NASA TN D-5002

C. 1

NASA TN D-5002

TECH LIBRARY KAFB, NM
0131575

LOAN COPY: RETURN TO
AFWL (WLIL-2)
KIRTLAND AFB, N MEX

ROLLING-ELEMENT BEARING LIFE FROM 400° TO 600° F

by
Erwin V. Zaretsky and William J. Anderson
Lewis Research Center
and
Eric N. Bamberger
General Electric Company

NATIONAL AERONAUTICS AND SPACE ADMINISTRATION • WASHINGTON, D. C. • JANUARY 1969

TECH LIBRARY KAFB, NM

0131575

NASA TN D-5002

ROLLING-ELEMENT BEARING LIFE FROM 400° TO 600° F

By Erwin V. Zaretsky and William J. Anderson

Lewis Research Center
Cleveland, Ohio

and

Eric N. Bamberger

General Electric Company
Cincinnati, Ohio

NATIONAL AERONAUTICS AND SPACE ADMINISTRATION

For sale by the Clearinghouse for Federal Scientific and Technical Information
Springfield, Virginia 22151 – CFSTI price $3.00

ABSTRACT

Rolling-element fatigue tests were conducted with 120-mm bore angular-contact ball bearings made of AISI M-50 steel using a synthetic paraffinic oil at temperatures of 400° to 600° F (478 to 588 K). Bearing life in this temperature range exceeded AFBMA-predicted (catalog) life by a factor greater than 13. Failure was by classical subsurface rolling-element fatigue. Under simulated conditions EHD minimum film thicknesses ranged from 10 to 5 microinches (25.4 to 12.7 μcm) for temperatures from 400° to 600° F (478 to 588 K), respectively.

ROLLING-ELEMENT BEARING LIFE FROM 400° TO 600° F

by Erwin V. Zaretsky, William J. Anderson, and Eric N. Bamberger*

Lewis Research Center

SUMMARY

Groups of 120-mm bore angular-contact ball bearings made from AISI M-50 steel were fatigue tested with a synthetic paraffinic oil at bearing temperatures of 400°, 500°, and 600° F (478, 533, and 588 K). Test conditions included a speed of 12 000 rpm, and a thrust load of 5800 pounds (25 800 N) producing a maximum Hertz stress of 323 000 psi (223 000 N/cm^2) on the bearing inner race. Elastohydrodynamic (EHD) film thickness measurements were made using an X-ray disk apparatus under similar test conditions.

In the temperature range between 400° and 600° F (478 and 588 K) bearing life exceeded AFBMA-predicted (catalog) life by a factor greater than 13. In this temperature range, while life differences can be anticipated due to increasing or decreasing temperature, these differences were found to be statistically insignificant for the number of bearings tested in this investigation. Additionally, bearing failure was by subsurface classical rolling-element fatigue.

Elastohydrodynamic measurements indicated minimum film thicknesses of 10, 6.8, and 5 microinches (25.4, 17.3, and 12.7 μcm) at 400°, 500°, and 600° F (478, 533, and 588 K), respectively. The film parameter Λ for these conditions was 3.6, 2.5, and 1.8, respectively.

INTRODUCTION

A problem which exists in high-temperature turbine engines is the high-ambient temperature to which the engine and its components will be exposed. Bearing temperatures can range between 400° and 600° F (478 and 588 K) in present and advanced engine designs.

Research reported in references 1 to 4 indicates that a synthetic paraffinic oil can give AFBMA-predicted (catalog) life at a temperature of 600° F (588 K) under a low-oxygen environment (less than 0.1 percent oxygen by volume). The question remains, however, whether significant increases in bearing life can be expected under lower temper-

*General Electric Co., Evendale, Ohio.

atures of 400° and 500° F (478 and 533 K).

The bearing operating temperature will affect both the bearing steel and the lubricant. As bearing temperature is increased, the hot hardness of the bearing steel decreases. Research reported in references 5 and 6 indicates that a one point Rockwell C hardness increase may mean a twofold increase in bearing fatigue life. Conversely, a decrease in room-temperature hardness can conceivably decrease bearing life.

When considering rolling-element fatigue, viscosity is probably the most important single property of a liquid lubricant. As temperatures are increased the viscosity of the fluid is decreased. The decrease in viscosity affects both the bearing fatigue life and the elastohydrodynamic (EHD) film thickness which separates the mating surfaces in a bearing.

Investigators have shown (refs. 7 and 8) that, as the viscosity of a mineral oil lubricant is increased, rolling-element fatigue life also increased. The accepted relation between life L and lubricant kinematic viscosity ν is $L \propto \nu^{n}$ and $n = 0.2$ or 0.3.

The objectives of the research reported herein were: (1) to determine the effect of temperature on the fatigue life of large diameter rolling-element bearings operating under conditions of load and speed approximating those experienced by a main shaft bearing in jet engines; and (2) to evaluate the experimental results in terms of elastohydrodynamic (EHD) film thickness.

In order to accomplish these objectives, tests were conducted in a high-temperature bearing tester at temperatures of 400°, 500°, and 600° F (478, 533, and 588 K) with 120-mm bore angular-contact ball bearings made of consumable-electrode vacuum-melted (CVM) AISI M-50 steel having a room-temperature Rockwell C hardness of 63. Test conditions included a speed of 12 000 rpm and a bearing thrust load of 5800 pounds (25 800 N) which produced a maximum Hertz stress on the inner race of 323 000 psi (233 000 N/cm^2) under a low-oxygen environment (less than 0.1 percent oxygen by volume). Elastohydrodynamic (EHD) film thickness measurements were made using a rolling-contact disk apparatus (ref. 9) under similar test conditions. All experimental results were obtained with a synthetic paraffinic oil from the same lubricant batch. The bearing material and lubricant combination was the most promising found in previous NASA work for this temperature range (refs. 1 to 4). Each component of the test bearing was from a single heat of material. All bearing tests were conducted at the General Electric Company, Cincinnati, Ohio under contract to NASA and were initially reported in reference 10.

APPARATUS, SPECIMENS, AND PROCEDURE

High-Temperature Fatigue Tester

The high-temperature fatigue tester used in these tests is shown in figure 1 and was initially described in reference 10. Essentially the tester comprises a test shaft to which are attached the two test bearings. Loading is supplied through a system of 10 springs which thrust load both bearings. Drive of the test rig is accomplished by a flat belt on a crowned spindle (not shown in the figure).

Lubrication is provided to the test bearing through a jet-feed lubrication system by a pump immersed in a temperature controlled oil reservoir. The reservoir has a capacity of approximately 3 gallons (11 400 cm^3). The pump is capable of circulating the oil through the system at 3 gallons per minute (190 cm^3/sec) at 600° F (588 K). Gravity drainage for the lubricant is provided by a single exit under each test bearing and also from a bellows in the bearing assembly. Nitrogen gas was provided to reduce the oxygen in the system.

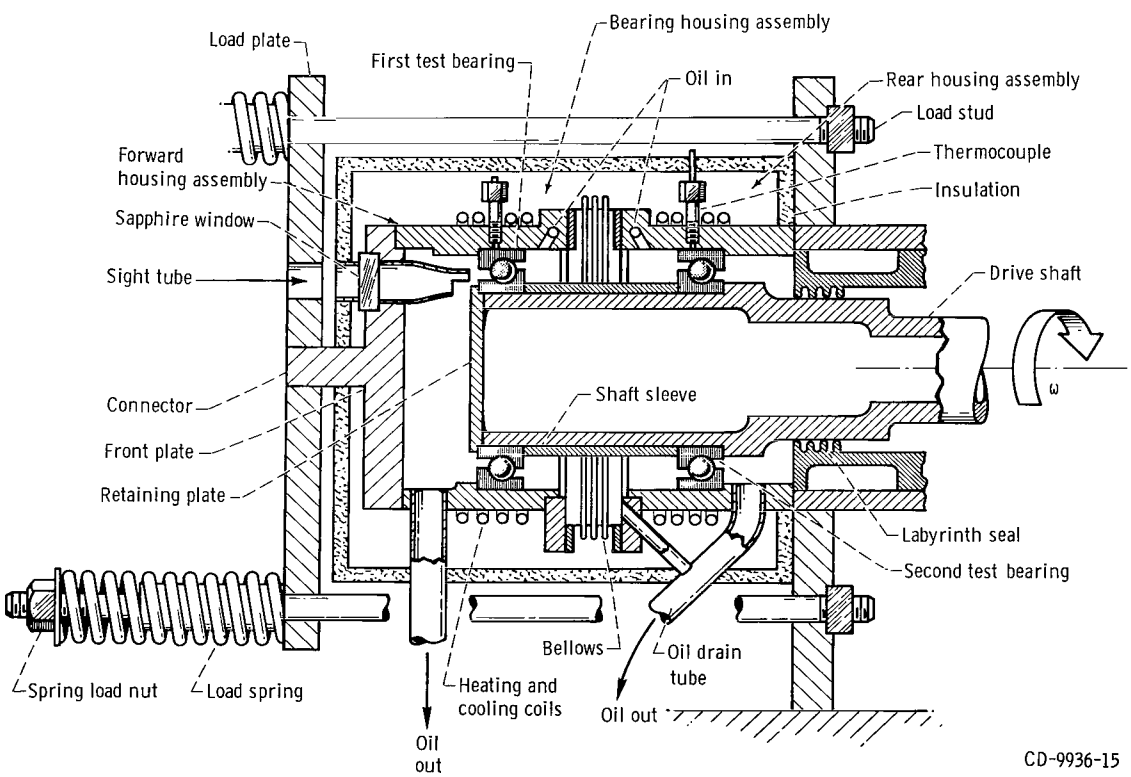

Figure 1. - High-temperature bearing fatigue test apparatus.

Instrumentation was provided for automatic shutoff by monitoring bearing temperatures, oil temperature, bearing vibration, nitrogen flow rate, and pressure. Should any of these parameters vary from those programmed for the test conditions, the test was shutdown. Oxygen content within the bearing housing assembly was monitored during operation. An infrared pyrometer was used to measure inner-race temperature through a sight tube aimed at the inner race of the first test bearing.

Test Bearings

The test bearings were ABEC-5 grade, split inner-race, 120-mm bore angular-contact ball bearings having a nominal contact angle of 20°. The inner and outer races were manufactured from one heat of consumable-electrode vacuum-melted (CVM) AISI M-50 steel and the balls from a second heat of the same steel. The nominal Rockwell C hardness of the balls and races was 63 at room temperature. Each bearing contained 15 balls 13/16 inch (2.0638 cm) in diameter. The cage was a one piece, outer-land riding type made of a nickel-base alloy (AMS-4892) having a nominal Rockwell C hardness of 33. The retained austenite contents of the ball and race materials were less than 3 percent. The inner- and outer-race curvatures were 54 and 52 percent, respectively. All components with the exception of the cage were matched for hardness within ±0.5 point Rockwell C. This matching assured a nominal differential hardness in all bearings (i.e., the ball hardness minus the race hardness, commonly called ΔH) of 0.

A chemical analysis of the AISI M-50 material is given in table I. Both heats had identical chemical analyses. The M-50 has the capability of maintaining a Rockwell C hardness of approximately 58 at a temperature of 600° F (588 K). This material is cur-

TABLE I. - COMPOSITION OF CVM AISI M-50 BEARING STEEL

Element	Percent weight
Carbon	0.802
Manganese	.24
Phosphorus	.008
Sulfur	.003
Silicon	.18
Chromium	3.95
Molybdenum	4.36
Vanadium	.93
Iron	Balance

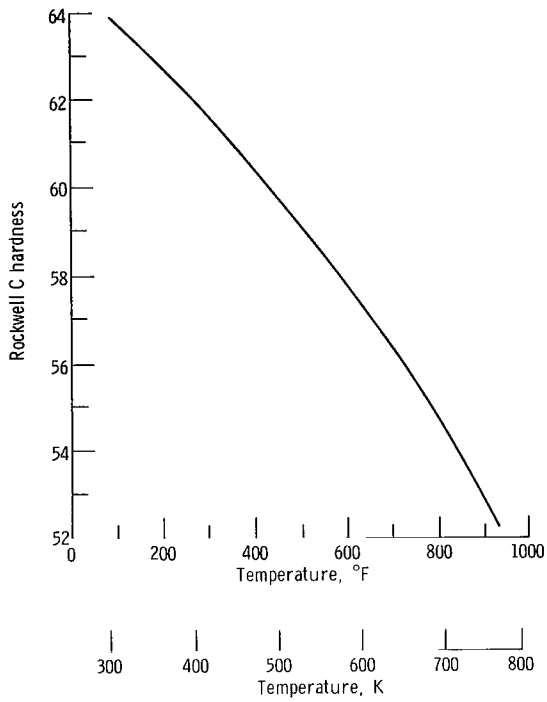

Figure 2. - Representative hardness as a function of temperature for AISI M-50 steel.

TABLE II. - PROPERTIES OF SYNTHETIC PARAFFINIC OIL

Kinematic viscosity, cs, at -	
100° F (311 K)	443.3
210° F (372 K)	39.7
400° F (478 K)	5.8
Flash point, °F (K)	515 (542)
Fire point, °F (K)	600 (588)
Autoignition temperature, °F (K)	805 (814)
Pour point, °F (K)	-35 (236)
Volatility (6.5 hr at 500° F (533 K)), weight percent	14.2
Specific heat at 500° F (533 K), Btu/(lb)(°F) (J/(kg)(K))	0.695 (2.91×10^{3})
Thermal conductivity at 500° F (533 K), Btu/(hr)(ft)(°F) (J/(m)(sec)(K))	70×10^{-3} (0.12)
Specific gravity at 500° F (533 K)	0.71
Additives	Antiwear agent Antifoam agent

rently used by most jet engine manufacturers for high-temperature bearing applications. A typical hardness-temperature curve for this material is shown in figure 2.

A synthetic paraffinic oil was used as the test lubricant. Properties of this fluid are given in table II. This is a 100-percent paraffinic fluid with the temperature-viscosity characteristics illustrated in figure 3. The fluid contained an antiwear additive and an antifoam agent.

No attempt was made to inhibit chemically the fluid from oxidation effects in the research reported herein. Therefore, in order to prevent excessive oxidation of the fluid, it was necessary to maintain the fluid in a low-oxygen environment (less than 0.1 percent oxygen by volume).

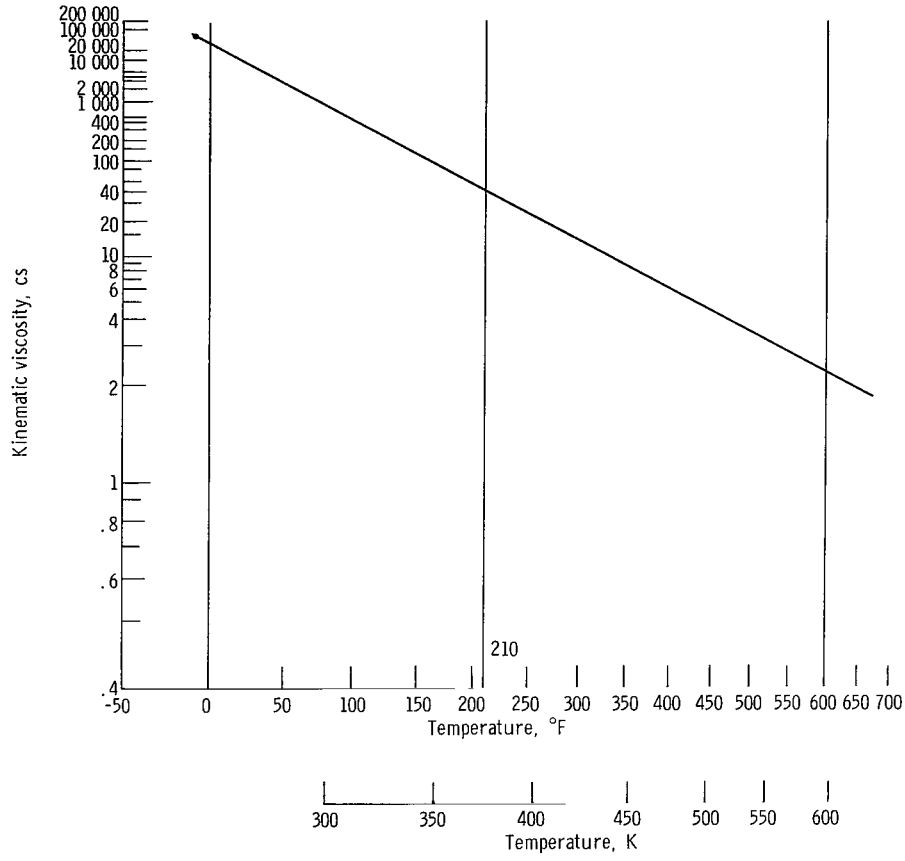

Figure 3. - ASTM chart of lubricant kinematic viscosity of synthetic paraffinic oil as a function of temperature.

Rolling-Contact Disk Machine

The rolling-contact disk machine is shown in figure 4. This machine, described in detail in reference 9, was used to measure lubricant film thickness under dynamic conditions. Essentially, this method of measuring film thickness consists of directing a monochromatic, collimated, square beam of high-energy X-rays between two rolling-disk surfaces. The amount of radiation passing between the disks parallel to the contact region is related to the thickness of the lubricant film separating the surfaces. A particular wavelength X-ray was selected that penetrated the lubricant readily but did not significantly penetrate the steel.

A recirculating lubricant system is used for the disks, with the supply pump submerged in the oil sump. Lubricant is fed to the contact zone by means of an oil jet, and is scavenged by a gravity return to the sump. The lubricant is filtered and preheated before entering the contact zone. The disks are enclosed in a can-type arrangement

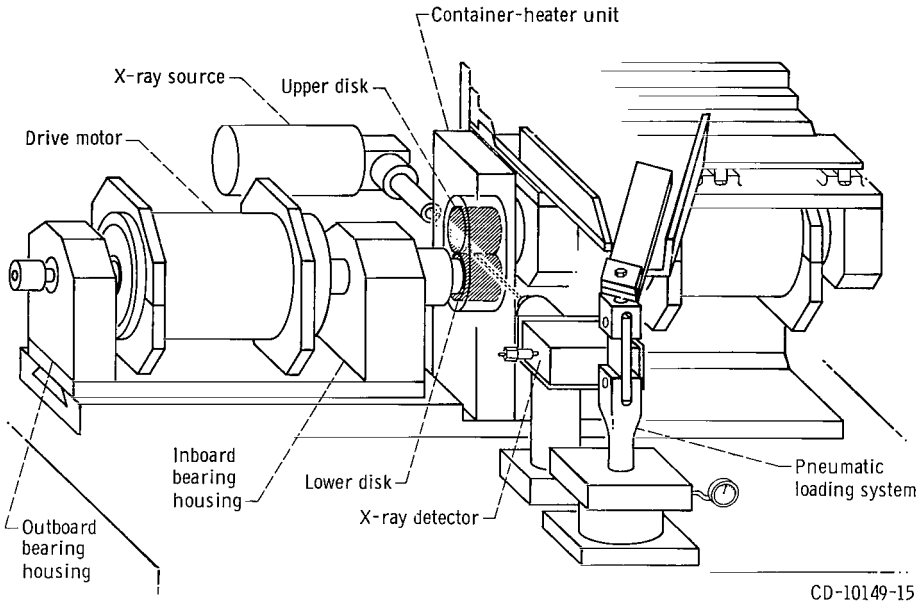

Figure 4. - Rolling-contact disk machine.

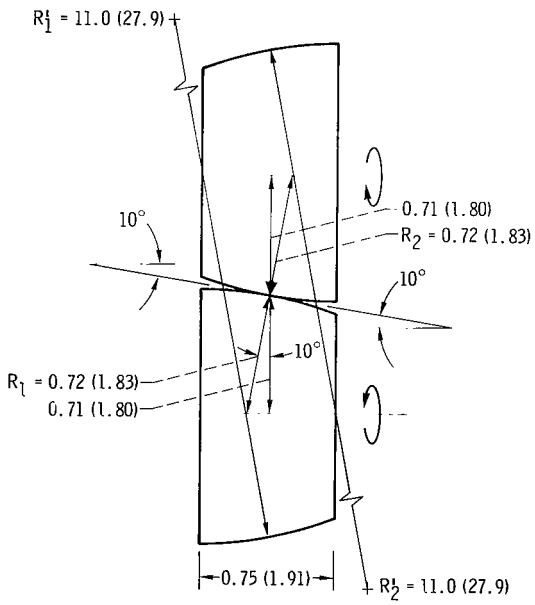

Figure 5. - Contacting disk geometry. (All units in inches (cm) unless indicated otherwise.)

which serves as a container for the lubricant and the heaters for the disks. The system is designed to operate to temperatures above 600° F (588 K).

The contacting disks were designed to simulate the ball-inner-race kinematics of the 120-mm bore angular-contact ball bearings. A schematic of the contacting disks is shown in figure 5.

Fatigue Testing

The test bearings were preassembled on the shaft of the high-temperature fatigue tester. The bearing shaft assembly was placed in the test housing and the housing assembled. The test load was applied and calibrated through a force gage attached to the load plate and the connector. This gaging system is not shown in figure 1. After the load was applied, nitrogen gas under pressure was supplied through a manifold system into the rig. The nitrogen supply source was liquid nitrogen which was vaporized and heated through a heat exchanger. The lubricant in the oil reservoir was heated to 250° F (394 K) by use of a salt bath in order to adequately pump the fluid. Heat generation from the test bearings was sufficient to bring the oil to the desired test temperatures. In order to achieve control of the operating temperature, cooling coils were provided in the salt bath of the oil reservoir. The rig was started and the test temperature was reached within 1/2 hour of the operation.

RESULTS AND DISCUSSION

Fatigue Life Results

Three groups of 120-mm bore angular-contact ball bearings made from consumable-electrode vacuum-melted (CVM) AISI M-50 steel were fatigue tested with a synthetic paraffinic oil at 400°, 500°, and 600° F (478, 533, and 588 K). Test conditions included a shaft speed of 12 000 rpm and a bearing thrust load of 5800 pounds (25 800 N) which produced a maximum Hertz stress on the bearing inner race of 323 000 psi (223 000 N/cm^2). The results of these tests are shown in figure 6 and are summarized in table III.

Figure 6 and table III show some differences in life in the temperature range of 400° to 600° F (478 to 588 K). However, the differences are insufficient to be statistically significant for the number of bearings tested. For comparison purposes the AFBMA-predicted (catalog) life of these bearings is given in table III.

The confidence that can be placed in the experimental results was determined statistically using the methods given in reference 11. Each test bearing group was compared with the results at 600° F (588 K). Confidence numbers for the 10-percent life

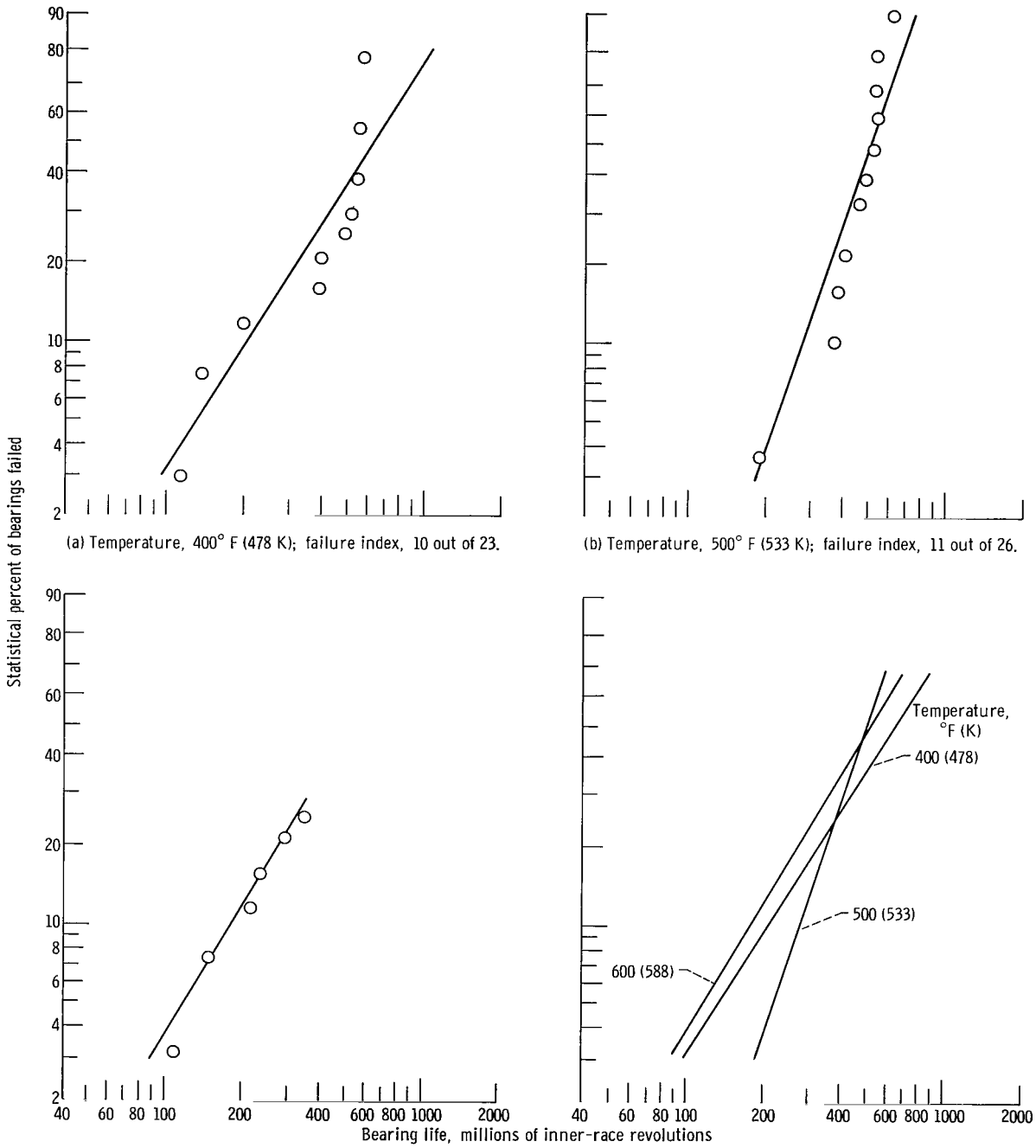

(a) Temperature, 400° F (478 K); failure index, 10 out of 23.

(b) Temperature, 500° F (533 K); failure index, 11 out of 26.

(c) Temperature, 600° F (588 K); failure index, 6 out of 26.

(d) Summary.

Figure 6. - Rolling-element fatigue life of 120-mm bore angular-contact ball bearings with synthetic paraffinic oil. Material, AISI M-50; thrust load, 5800 pounds (25 800 N); speed, 12 000 rpm.

TABLE III. - FATIGUE LIFE RESULTS FOR 120-MM ANGULAR-CONTACT BALL BEARINGS AT THREE TEMPERATURES

[Material, AISI M-50 steel; speed, 12 000 rpm; thrust load, 5800 pounds (25 800 N), AFBMA predicted 10-percent life, 13.4 million inner-race revolutions; lubricant, synthetic paraffinic oil with antiwear and antifoam additives.]

Temperature		Experimental life, millions of inner-race revolutions		Weibull slope	Failure index	Confidence number at 10-percent life level, percent
^{o}F	K	10-percent	50-percent		(a)	
400	478	213	661	1.7	10 out of 23	56
500	533	286	516	3.2	11 out of 26	73
600	588	182	513	1.8	6 out of 26	--

[a]Number of fatigue failures out of number of bearings tested.

were calculated and are presented in table III. A confidence number of 73 percent means that 73 out of 100 times additional bearings tested at a given temperature will be ranked as in table III. A 68-percent confidence is approximately equal to a one-sigma deviation, which, for statistical purposes, is considered insignificant to conclude that there is any difference in early life among the various temperatures. Between the 400° and 500° F (478 and 533 K) tests the confidence number is only 63 percent. These differences can be considered statistically insignificant in the temperature range of 400° to 600° F (478 to 588 K) even though bearing life can be affected by increasing or decreasing temperature. In this temperature range the experimental bearing life exceeds the AFBMA-predicted (catalog) life by a factor in excess of 13. As a result no derating of bearing life is required with the synthetic-paraffinic oil, AISI M-50 - material combination either as a result of elevated temperature operation or increases in temperature from 400° to 600° F (478 to 588 K).

Metallurgical examination of the bearings indicated that, in the temperature range of 400° to 600° F (478 to 588 K) with the synthetic paraffinic oil, failure was by classical subsurface fatigue. There was no apparent or measurable wear in this temperature range. At 600° F (588 K), however, there were some signs of surface glazing. This observation suggests that at 600° F (588 K) some asperity contact of the mating surfaces occurred. However, this phenomenon had no significant effect on the fatigue results. Typical ball and race failures at elevated temperature are shown in figures 7 and 8. Figure 9 shows bearings which had been run at 400° and 600° F (478 and 588 K) without failure for more than 500 hours of operation.

C-68-3764

Figure 7. - Typical fatigue spalls on bearing balls run with synthetic paraffinic oil. Material, AISI M-50; thrust load, 5800 pounds (25 800 N); speed, 12 000 rpm; temperature, 600° F (588 K); running time, 270×10^6 inner-race revolutions.

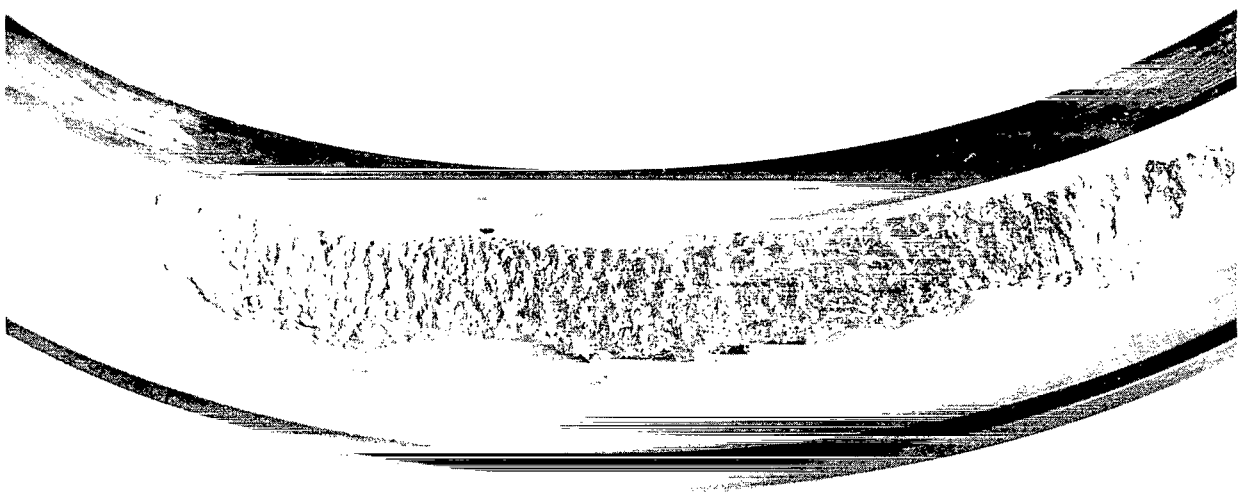

C-68-3765

Figure 8. - Fatigue failure on bearing inner race run with synthetic paraffininc oil. Material, AISI M-50; thrust load, 5800 pounds (25 800 N); speed, 12 000 rpm; temperature, 600° F (588 K); running time, 136×10^6 inner-race revolutions.

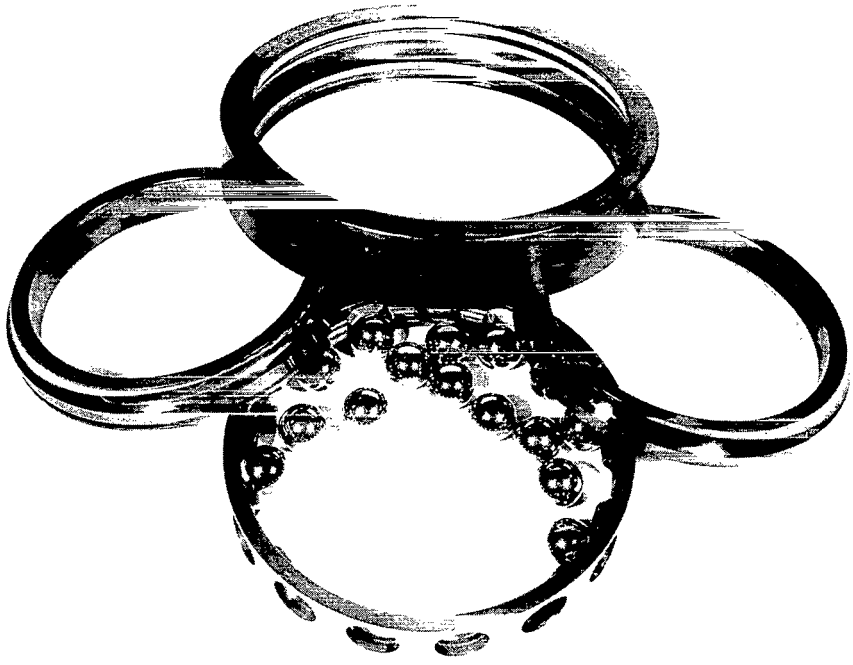

(a) Temperature, 400° F (478 K); running time, 552×10^6 inner-race revolutions.

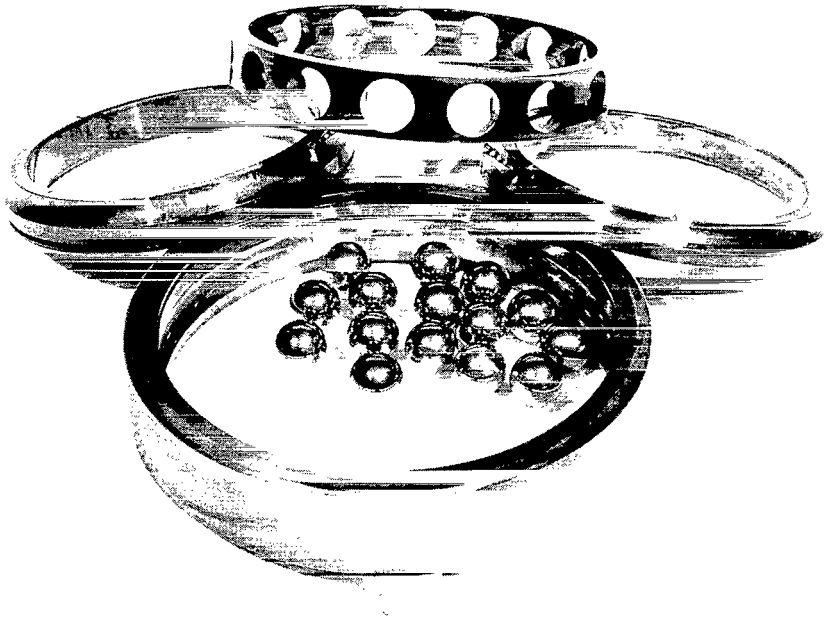

C-68-3766

(b) Temperature, 600° F (588 K); running time, 360×10^6 inner-race revolutions.

Figure 9. - Unfailed 120-mm angular-contact ball bearings run with synthetic paraffinic oil. Material, AISI M-50; thrust load, 5800 pounds (25 800 N); speed, 12 000 rpm.

Elastohydrodynamic (EHD) Effects

In order to understand the effects of temperature on bearing fatigue, the fatigue data were analyzed using elastohydrodynamic (EHD) lubrication principles. In general,

$$H \propto \frac{\mu^a U^b}{W^c}$$

where

H EHD film thickness

μ lubricant absolute viscosity at operating temperature, $\mu = \nu/\rho$

ν lubricant kinematic viscosity at operating temperature

ρ lubricant density at operating temperature

U tangential speed of contacting bodies

W bearing load per unit width

From EHD theory (ref. 12) values for the exponents can be taken as follows:

$$a = 0.70 \text{ or } 0.73$$

$$b = 0.70 \text{ or } 0.73$$

$$c = 0.13 \text{ or } 0.09$$

From the above, the previous equation for film thickness can be written as follows:

$$H \propto \frac{(\nu U)^{0.7}}{W^{0.1}}$$

Preliminary film thickness measurements were performed with a modified rolling-contact disk machine using coned-crowned disks to simulate the contact kinematics of the 120-mm bore angular-contact ball bearings used in the fatigue tests. Because of limitations of the apparatus, the exact bearing conditions could not be simulated. However, test conditions included a maximum Hertz stress of 200 000 psi (138 000 N/cm^2); disk temperatures of 200°, 400°, and 600° F (323, 478, and 588 K); and a tangential speed of 7550 fpm (3835 cm/sec) at the center of the contact. The synthetic paraffinic oil from

the same batch used in the fatigue tests was the test lubricant. The results of these tests are shown in figure 10. Based upon these data and the temperature-viscosity characteristics of the paraffinic oil, a film thickness-viscosity curve can be drawn. This plot is shown in figure 11. From this figure the exponent a was calculated to be 0.62 which is not significantly different from the theoretical exponent of 0.7.

A tangential velocity of 9760 fpm (4958 cm/sec), and a maximum Hertz stress of 323 000 psi (223 000 N/cm^2) are required to simulate bearing conditions. The plots of figures 10 and 11 can be corrected using the EHD film thickness equation to account for the differences in speed and load. However, after correction the film thicknesses were only 9 percent greater than those shown in figures 10 and 11. Therefore, these plots can be taken as representative of the EHD conditions present in the 120-mm bore angular-contact ball bearings.

Reference 13 reports an EHD criterion which is referred to as the film parameter Λ

$$\Lambda = \frac{H}{\sigma}$$

and

$$\sigma = \left(\sigma_1^2 + \sigma_2^2\right)^{1/2}$$

where

H	minimum film thickness, μin.
σ	composite surface roughness, μin., rms
σ_1 and σ_2	surface roughness of contacting bodies, μin., rms

Experimental results indicate that where $\Lambda \lesssim 1$, gross surface distress will occur and boundary lubrication prevails in the entire contact. Where $1 \lesssim \Lambda \lesssim 1.5$, surface distress in the form of glazing and superficial pitting as well as wear will occur. Under this condition, mixed lubrication exists, that is, a combination of boundary and EHD lubrication, with boundary lubrication being the predominant mode. In the range $1.5 \lesssim \Lambda \lesssim 3$, some surface glazing and wear might occur. For this Λ range, mixed lubrication also occurs; however, EHD lubrication is the predominant mode. For $3 \lesssim \Lambda \lesssim 4$, nearly full film separation or EHD lubrication occurs with no visible surface damage or measurable wear. Some insignificant surface asperity contact will occur. At $\Lambda > 4$, full EHD lubrication occurs.

The film parameter Λ was calculated for the bearings at 400°, 500°, and 600° F (478, 533, and 588 K). These values, summarized in table IV, were 3.6, 2.5, and 1.8,

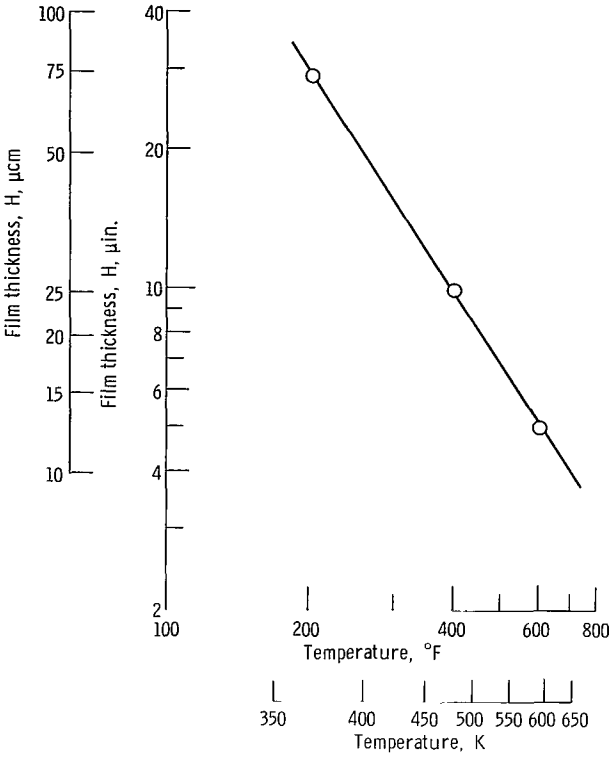

Figure 10. - EHD film thickness as a function of temperature using coned-crowned disks. Maximum Hertz stress, 200 000 psi (138 000 N/cm^2); disk tangential speed at center of contact, 7550 fpm (3835 cm/sec); lubricant, synthetic paraffinic oil.

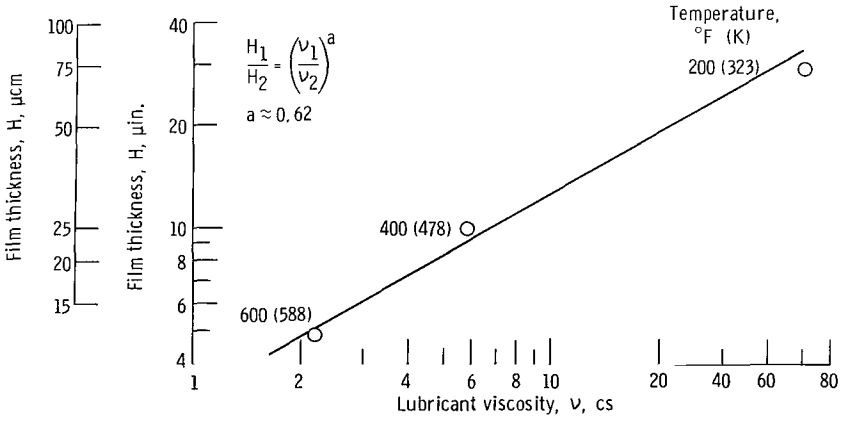

Figure 11. - Effect of lubricant viscosity at operating temperature on EHD film thickness using coned disks. Maximum Hertz stress, 200 000 psi (138 000 N/cm^2); disk tangential speed at center of contact, 7550 fpm (3835 cm/sec); lubricant, synthetic paraffinic oil.

TABLE IV. - EHD AND MATERIAL HARDNESS EFFECTS ON RELATIVE FATIGUE LIFE OF 120-MM ANGULAR-CONTACT BALL BEARINGS AT THREE TEMPERATURES

[Material, AISI M-50 steel; maximum hertz stress, 323 000 psi (233 000 N/cm^2); contact speed, 9760 fpm (4958 cm/sec); lubricant, synthetic paraffinic oil with antiwear and antifoam additives.]

Temperature		EHD film thickness, H		Film parameter, Λ	Typical Rockwell C hardness	Relative life			
^{o}F	K	μin.	μcm			Experimental 10-percent life	Predicted life from EHD film thickness	Predicted life from hardness differences	Predicted life from combined EHD and hardness effects
400	478	10	25.4	3.6	60	1.2	1.3	1.3	1.6
500	533	6.8	17.3	2.5	59	1.6	1.1	1.1	1.3
600	588	5	12.7	1.8	58	1	1	1	1

respectively. At 400° and 500° F (478 and 588 K) no surface distress or measurable wear occurred on the bearings. At 600° F (588 K), while there was no measurable wear, a slight amount of glazing was apparent on some of the race surfaces. Based on the film parameter criteria, these bearings could have been run to a temperature of approximately 680° F (633 K) ($\Lambda \approx 1.5$) without any gross surface distress.

SPECULATIVE ANALYSIS

EHD Effects on Life

Investigators have shown (refs. 7 and 8) that, as the viscosity of a mineral oil lubricant is increased, rolling-element fatigue life also increases. The accepted relation between fatigue life L and lubricant viscosity is

$$L \propto \nu^{n}$$

and n = 0.2 or 0.3. (This appears to be valid over a wide range of viscosities.) The EHD film thickness equation previously given can be modified using a value of n = 0.25. Where load and speed remain constant, $H \propto \nu^{0.7}$. Equating the two previous relations,

$$L \propto H^{0.36}$$

Using this relation, relative theoretical lives were calculated based upon measured EHD film thickness. These values are given in table IV.

Material Hardness Effects

As was previously discussed, rolling-element hardness can have a marked effect on bearing life. For the tests described herein, the difference in hardness between the balls race, ΔH, was 0. At a ΔH of 0 for SAE 52100 steel, the fatigue data of refer-

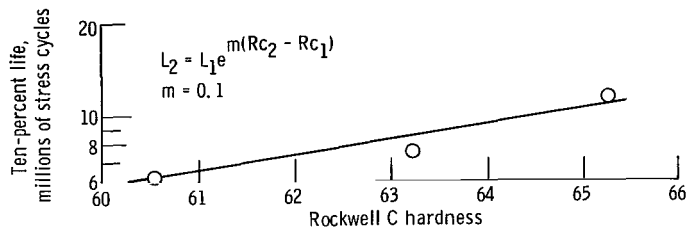

Figure 12. - Five-ball system life as a function of system hardness for $\Delta H = 0$. Maximum Hertz stress, 800 000 psi (552 000 N/cm^2); contact angle, 30°; room temperature; material, SAE 52100 steel. (Data from ref. 14.)

ence 14 are plotted in figure 12 as a function of component hardness. From this figure the following relation is obtained

$$\frac{L_2}{L_1} = e^{m(Rc_2 - Rc_1)}$$

where

$$m = 0.1$$

Rc_1 and Rc_2 are the nominal Rockwell C hardnesses of the bearings. For AISI M-50 typical Rockwell C hardnesses at 600°, 500°, 400°, and 80° F (588, 533, 478, and 300 K) would be nominally 58, 59, 60, and 63, respectively. From these values the relative lives due to differences in material hardness at temperature were calculated. These results are presented in table IV.

Combined EHD and Hardness Effects

While the EHD and material hardness effects are independent of each other, they are both directly dependent on temperature. As temperature increases both effects act toward decreasing life. The theoretical resultant life should be the product of the two effects. That is,

$$\frac{L_2}{L_1} \propto \left(\frac{H_2}{H_1}\right)^{0.36} \cdot e^{0.1(Rc_2 - Rc_1)}$$

The composite life results are presented in table IV and are compared to the relative experimental life results.

This analysis predicts small differences in fatigue life. It suggests that differences in life at 400°, 500°, and 600° F (588, 533, 478 K) are real so that if a significant number of bearing tests were run then life differences would become statistically significant.

SUMMARY OF RESULTS

Groups of 120-mm bore angular-contact ball bearings made from AISI M-50 steel were fatigue tested with a synthetic paraffinic oil at bearing temperatures of 400°, 500°, and 600° F (478, 533, and 588 K). Test conditions include a speed of 12 000 rpm and a thrust load of 5800 pounds (25 800 N) producing a maximum Hertz stress of 323 000 psi (233 000 N/cm^2) on the bearing inner race. Elastohydrodynamic (EHD) film thickness measurements were made using a rolling-contact disk apparatus under similar test conditions. The results of the tests were as follows:

1. In the temperature range between 400° and 600° F (478 and 588 K) bearing life exceeded AFBMA-predicted (catalog) life by a factor greater than 13.

2. Between 400° and 600° F (478 and 588 K) differences in bearing fatigue life were not statistically significant for the number of bearings tested even though small differences in life can be anticipated due to increasing or decreasing temperature.

3. Elastohydrodynamic measurements indicated minimum film thicknesses of 10, 6.8, and 5 microinches (25.4, 17.3, and 12.7 μcm) at 400°, 500°, and 600° F (478, 533, and 588 K), respectively. At 600° F these film thickness measurements indicated that some asperity contact would occur which was verified by post test inspection.

4. Bearing failure at temperatures of 400° to 600° F (478 to 588 K) were caused by subsurface classical rolling-element fatigue.

Lewis Research Center,
National Aeronautics and Space Administration,
Cleveland, Ohio, October 22, 1968,
126-15-02-28-22.

REFERENCES

1. Zaretsky, Erwin V.; and Anderson, William J.: Preliminary Determinations of Temperature Limitations of Ester, Ether, and Hydrocarbon Base Lubricants in 25-MM Bore Ball Bearings. NASA TN D-4146, 1967.
2. Parker, Richard J.; Bamberger, Eric N.; and Zaretsky, Erwin V.: Bearing Torque and Fatigue Life Studies with Several Lubricants for Use in the Range 500° to 700° F. NASA TN D-3948, 1967.
3. Parker, R. J.; Bamberger, E. N.; and Zaretsky, E. V.: Evaluation of Lubricants for High-Temperature Ball Bearing Applications. J. Lubr. Tech., vol. 90, no. 1, Jan. 1968, pp. 106-112.
4. Bamberger, Eric N.; Zaretsky, Erwin V.; and Anderson, William J.: Fatigue Life of 120-MM Bore Ball Bearings at 600° F with Fluorocarbon, Polyphenyl Ether, and Synthetic Base Lubricants. NASA TN D-4850, 1968.
5. Carter, Thomas L.; Zaretsky, Erwin V.; and Anderson, William J.: Effect of Hardness and Other Mechanical Properties on Rolling-Contact Fatigue Life of Four High-Temperature Bearing Steels. NASA TN D-270, 1960.
6. Zaretsky, Erwin V.; and Anderson, William J.: Rolling-Contact Fatigue Studies with Four Tool Steels and a Crystallized Glass Ceramic. J. Basic Eng., vol. 83, no. 4, Dec. 1961, pp. 603-612.
7. Carter, Thomas L.: A Study of Some Factors Affecting Rolling-Contact Fatigue Life. NASA TR R-60, 1960.
8. Scott, D.: The Effect of Lubricant Viscosity on Ball Bearing Fatigue Life. Rep. LDR 44/60, Dept. Sci. Ind. Res., National Engineering Lab., Dec. 1960.
9. Kannel, J. W.; Bell, J. C.; Riopelle, R. R.; and Allen, C. M.: Evaluation of Lubricants for High-Speed, High-Temperature Applications. Battelle Memorial Institute (NASA CR-72346), Nov. 1967.

10. Bamberger, E. N.: Bearing Fatigue Investigation. General Electric Co., Rep. R67FPD309, General Electric Co. (NASA CR 72290), Sept. 15, 1967.

11. Johnson, Leonard G.: The Statistical Treatment of Fatigue Experiments. Elsevier Publ. Co., 1964.

12. Dowson, D.; and Higginson, G. R.: Elasto-Hydrodynamic Lubrication. Pergamon Press, 1966, pp. 65-77, 96.

13. Tallian, T. E.; Chiu, Y. P.; Huttenlocher, D. F.; Kamenshine, J. A.; Sibley, L. B.; and Sindlinger, N. E.: Lubricant Films in Rolling Contact of Rough Surfaces, ASLE Trans., vol. 7, no. 2, Apr. 1964, pp. 109-126.

14. Zaretsky, Erwin V.; Parker, Richard J.; and Anderson, William J.: Effect of Component Differential Hardnesses on Rolling-Contact Fatigue and Load Capacity. NASA TN D-2640, 1965.

NASA-Langley, 1969 —— 15 E-4559

NATIONAL AERONAUTICS AND SPACE ADMINISTRATION
WASHINGTON, D. C. 20546

OFFICIAL BUSINESS

FIRST CLASS MAIL

POSTAGE AND FEES PAID
NATIONAL AERONAUTICS AND
SPACE ADMINISTRATION

070 001 40 51 3DS 68013 00903
AIR FORCE WEAPONS LABORATORY/AFWL/
KIRTLAND AIR FORCE BASE, NEW MEXICO 87117

ATTN: CHIEF TECH. LI

POSTMASTER: If Undeliverable (Section 158 Postal Manual) Do Not Return

"The aeronautical and space activities of the United States shall be conducted so as to contribute . . . to the expansion of human knowledge of phenomena in the atmosphere and space. The Administration shall provide for the widest practicable and appropriate dissemination of information concerning its activities and the results thereof."

—NATIONAL AERONAUTICS AND SPACE ACT OF 1958

NASA SCIENTIFIC AND TECHNICAL PUBLICATIONS

TECHNICAL REPORTS: Scientific and technical information considered important, complete, and a lasting contribution to existing knowledge.

TECHNICAL NOTES: Information less broad in scope but nevertheless of importance as a contribution to existing knowledge.

TECHNICAL MEMORANDUMS: Information receiving limited distribution because of preliminary data, security classification, or other reasons.

CONTRACTOR REPORTS: Scientific and technical information generated under a NASA contract or grant and considered an important contribution to existing knowledge.

TECHNICAL TRANSLATIONS: Information published in a foreign language considered to merit NASA distribution in English.

SPECIAL PUBLICATIONS: Information derived from or of value to NASA activities. Publications include conference proceedings, monographs, data compilations, handbooks, sourcebooks, and special bibliographies.

TECHNOLOGY UTILIZATION PUBLICATIONS: Information on technology used by NASA that may be of particular interest in commercial and other non-aerospace applications. Publications include Tech Briefs, Technology Utilization Reports and Notes, and Technology Surveys.

Details on the availability of these publications may be obtained from:

SCIENTIFIC AND TECHNICAL INFORMATION DIVISION

NATIONAL AERONAUTICS AND SPACE ADMINISTRATION

Washington, D.C. 20546