NASA TECHNICAL NOTE

NASA TN D-5221

c. 1

NASA TN D-5221

TECH LIBRARY KAFB, NM
0131979

LOAN COPY: RETURN TO
AFWL (WLIL-2)
KIRTLAND AFB, N MEX

THE EQUIPOTENTIAL SPACE-SUIT DESIGN CONCEPT AND ITS APPLICATION TO A SPACE-SUIT ELBOW JOINT

by Donald E. Barthlome

Langley Research Center
Langley Station, Hampton, Va.

NATIONAL AERONAUTICS AND SPACE ADMINISTRATION • WASHINGTON, D. C. • MAY 1969

TECH LIBRARY KAFB, NM

0131979

THE EQUIPOTENTIAL SPACE-SUIT DESIGN CONCEPT AND ITS APPLICATION TO A SPACE-SUIT ELBOW JOINT

By Donald E. Barthlome

Langley Research Center
Langley Station, Hampton, Va.

NATIONAL AERONAUTICS AND SPACE ADMINISTRATION

For sale by the Clearinghouse for Federal Scientific and Technical Information
Springfield, Virginia 22151 – CFSTI price $3.00

THE EQUIPOTENTIAL SPACE-SUIT DESIGN CONCEPT AND ITS APPLICATION TO A SPACE-SUIT ELBOW JOINT*

By Donald E. Barthlome
Langley Research Center

SUMMARY

Space-suit design studies indicate that a high operational feasibility exists for a concept involving a nonconstant-volume space-suit elbow joint, a joint-assist mechanism, and a space-suit pressure stabilizer. The space-suit pressure stabilizer serves to limit pressure changes within the joint to ±0.05 psi (0.035 N/cm^2). The joint-assist mechanism, or joint assist, is a modified constant-force spring mounted on a soft space-suit joint. The cross section of the spring has been altered so that most of the energy required to bend the joint is provided by the joint assist. The joint and stabilizer, both of which exhibit relatively high degrees of elasticity, store most of this energy and return it to the joint assist as the joint and stabilizer return to their initial configurations. Therefore, if friction is neglected, the joint, joint assist, and stabilizer constitute a system with a total potential energy that remains constant (regardless of the angle of bend) and equal to the initial potential energy given to the assist during installation on the joint. Test results show that the maximum bending moment required by the joint was reduced from 1.40 lbf-ft (1.90 N-m) without the assist to 0.10 lbf-ft (0.14 N-m) with the assist, a reduction of 14 to 1.

INTRODUCTION

Since the advent of high-altitude flight, many full-pressure suits and space-suit design concepts have evolved. None, however, have provided the astronaut with a supplemental energy source to aid in manipulating the joints of the space suit. The incorporation of such aids could greatly improve the efficiency of the suited astronaut.

Soft space-suit joints with restraint cables that remain fixed relative to the joint, such as those used for the elbow or knee, are characterized by an inability to remain in

*Information presented herein was included in a dissertation entitled "An Optimum Design of a Force Assisted Space Suit Elbow Joint" offered in partial fulfillment of the requirements for the degree of Master of Mechanical Engineering, University of Virginia, Charlottesville, Virginia, June 1968.

position after being deflected. This characteristic results because the potential energy of the joint increases as it is flexed. Upon release, the joint will automatically tend toward a state of minimum energy which, of course, is the initial configuration. This characteristic, however, although detrimental to the mobility of existing suits, can actually provide the means for greatly minimizing the flexural energy of space-suit joints. The method for so doing, at least for a simple elbow or knee joint, is outlined in this report and is termed the equipotential space-suit design concept (ESS).

Specifically, the report deals with what is termed the fixed-restraint ESS system. In this system, the axial length of the joint remains constant during flexure as in a conventional space-suit joint. To counter the flexural resistance offered by the joint, a device termed the joint-assist mechanism is used. Under the action of the joint-assist mechanism, the joint remains in a state of near-neutral equilibrium at all times. Therefore, the ease with which flexure is obtained is present regardless of the direction in which the joint is bent. (The phrase "near-neutral equilibrium" is used instead of "neutral equilibrium" to indicate that the system is real and, therefore, contains friction.)

Because the volume of the test joint varied during flexure, the fixed-restraint system included a device termed the space-suit pressure stabilizer. The function of the stabilizer was to maintain the air pressure at a relatively constant value whenever variations occurred in the volume of the joint.

An appendix which outlines a theoretical analysis of the joint used in the investigation is included.

Since the scope of this investigation was limited to evaluating the feasibility of a space-suit design concept, little consideration was given to the size and weight of various components used throughout the test program.

SYMBOLS

A	projected area of piston face
A_c	area produced by passing cutting plane through apex of arbitrary convolute
a	general constant for equation of parabola
a_i,d_i	semimajor and semiminor axes, respectively, of ellipse which approximates deformation mode of plane of symmetry of arbitrary convolute for region of joint in compression (see fig. 20)

a_o, d_o semimajor and semiminor axes, respectively, of ellipse which approximates deformation mode of plane of symmetry of arbitrary convolute for region of joint in tension (see fig. 20)

b half the base of convolute when θ is zero (see fig. 5)

b_i minimum value for half the base of arbitrary convolute when θ is finite for region of joint in compression

b_o maximum value for half the base of arbitrary convolute when θ is finite for region of joint in tension

$$C = \tan\theta\sqrt{1 + \tan^2\theta} + \log_e \tan\left(\theta + \sqrt{1 + \tan^2\theta}\right)$$

D movement of stabilizer piston when joint is bent to some angle θ

e distance from axial center of plane of symmetry to centroid of plane of symmetry

F force requirements of joint-assist mechanism if joint were at atmospheric pressure

F_a force of joint-assist mechanism for nonconstant-volume stabilized joint

F_a^* force of joint-assist mechanism for constant-volume joint

F_b resultant force acting normal to plane of symmetry of arbitrary convolute and representing bending stresses in material of joint (see fig. 19)

F_p resultant force acting normal to plane of symmetry of arbitrary convolute and representing pressure stresses in material of joint (see fig. 19)

F_s force of stabilizer springs

F_t resultant of all forces acting tangentially to plane of symmetry of arbitrary convolute (see fig. 19)

$$H_i = h^2 + \frac{4br\theta}{N\pi} - \frac{4r^2\theta^2}{N^2\pi^2}$$

$$H_o = h^2 - \frac{4br\theta}{N\pi} - \frac{4r^2\theta^2}{N^2\pi^2}$$

h	height of convolute when θ is zero
h_i	maximum value for height of arbitrary convolute when θ is finite for region of joint in compression
h_o	minimum value for height of arbitrary convolute when θ is finite for region of joint in tension
K	transverse spring constant
L	axial distance from assist mount to first convolute
l	length of convoluted portion of joint
M	external bending moment required to maintain joint at finite θ
M_b	net moment of bending stresses in joint material that acts normal to plane of symmetry of arbitrary convolute (see fig. 19)
M_c	moment of gas pressure that acts on plane of symmetry of arbitrary convolute (see fig. 19)
M_p	net moment of pressure stresses in joint material that acts normal to plane of symmetry of arbitrary convolute (see fig. 19)
m,n	constants (see eq. (1))
N	number of convolutes in joint
O	axial center or that point located on axis of joint and in plane of symmetry of arbitrary convolute
p	system operating pressure
Δp_f	change in pressure of system due to static friction in stabilizer

R_c moment arm of assist force as measured from axial center of plane of symmetry of arbitrary convolute

R_1 maximum moment arm of assist force when L is zero

R_2 maximum moment arm of assist force when L is finite

r radius of joint

r_s radius of stabilizer piston

T tension in restraint cable

t thickness of joint material

U_a potential energy of assist

U_j potential energy of joint

U_n potential energy of nth component of space-suit joint system

U_s potential energy of stabilizer

U_t total potential energy of space-suit joint system

V volume of joint

V' rate of change in volume with respect to θ

V_c volume of arbitrary convolute

$V_{c,i}$ volume of convolute which always lies outside core volume for region of joint in compression (see fig. 17)

$V_{c,o}$ volume of convolute which always lies outside core volume for region of joint in tension (see fig. 17)

$V_{s,i}$ volume generated by revolving segment, the maximum area of which occurs in plane of figure 17 and tends to approximately zero in plane perpendicular to plane of figure 17 for region of joint in compression

$V_{s,o}$ volume generated by revolving the segment, the maximum area of which occurs in plane of figure 17 and tends to approximately zero in plane perpendicular to plane of figure 17 for region of joint in tension

W_a work done by joint-assist mechanism

w width of control section of joint-assist spring

X,Y frame of reference positioned at axial center of median convolute

x,y displacements along X- and Y-axes, respectively

y_1 value of ordinate that locates termination point of convolutes on axis of joint

y_1' rate of change of y_1 with respect to θ

y_2 value of ordinate that locates point of attachment of joint-assist mechanism

z distance joint-assist force moves relative to XY-axis when assist performs work on system (see fig. 15)

α half-angle of bend of arbitrary convolute

$\bar{\alpha}$ mean half-angle of bend of convolute

θ half-angle of bend of joint

θ_{max} maximum angle of bend of joint

Subscripts:

i region of joint in compression

o region of joint in tension

CONCEPT ANALYSIS

The equipotential space-suit design concept (ESS), which is based upon the law of conservation of energy and the law of neutral equilibrium for a dynamic system, is an

attempt to provide a means for minimizing the flexural energy of soft space-suit joints. A system is in a state of neutral equilibrium if the forces acting on it remain balanced for any configuration of the system. If a soft space-suit joint is flexed, the joint will return, when permitted, to the undeflected configuration. Consequently, the joint possesses a high degree of elasticity and, therefore, can be placed in a state of near-neutral equilibrium for all angles of bend by simply attaching a spring-type assist device to it. The sole function of the assist is to maintain the total potential energy of the system (the joint and assist) at a constant value.

The advantage of the ESS design concept from an energy point of view can best be demonstrated by a simple analogy. It must be emphasized, however, that the analogy involves potential energy of position and not elastic potential energy as is involved in the application of the ESS design concept to a space-suit joint. Assume that the work required to flex a pressurized joint can be represented by the raising and lowering of a given weight. As the weight is elevated to a maximum height, the astronaut supplies, at a minimum, an amount of energy equal to the product of the magnitude of the weight and the vertical height to which it is raised. Upon lowering the weight, this energy is returned to the astronaut. However, since the muscles and tendons of the body are inelastic, all the energy is dissipated and unavailable for further use. The weight (or joint) taken by itself does not constitute a constant potential system, because the potential energy of the weight (joint) varies from zero at the point of reference to some maximum value. In an effort to minimize the energy required to raise and lower the weight repeatedly (flex the joint), suspend a cord from an overhead pulley and attach one end to the given weight and the other end to a counterweight (that is, install the joint assist). For this system of weights, cord, and pulley, the total potential energy is constant, independent of the position of the given weight, and equal in magnitude to the potential energy provided to the counterweight when it was attached to the chord. Consequently, the weights (joint and joint assist) are in a state of neutral equilibrium and the astronaut needs to supply only energy associated with inertia and friction. It is now apparent that any increase in the given weight (that is, optimization of the space-suit joint by an increase in the structural integrity of the joint or an increase in suit pressure) can be offset by a comparable increase in the counterweight (variation of the cross-sectional width of the assist spring). This analogy outlines, at least in principle, the advantages to be derived through the ESS design concept. The fixed-restraint form of this design concept could no doubt be applied successfully to every major joint of a soft space suit.

The generality of the ESS design concept, which, as previously described, is nothing more than a concept of constant potential energy, is demonstrated by its representation in the following equation form:

$$\sum_{n=1}^{m} U_n(\theta) = U_t = \text{Constant} \qquad (m \geqq 2) \qquad (1)$$

For this equation, $U_n(\theta)$ is the potential energy of the nth component of the system, and U_t is the total internal potential energy of the system; that is, the energy supplied when $\theta = 0^o$ to the joint assist (counterweight in the analogy) by a source external to the system. This energy suffices for cyclic operation of the frictionless system provided the joint is flexed horizontally and at an infinitesimal rate or at a constant velocity. Therefore, in an equipotential system, the astronaut must supply only that energy resulting from friction, inertia, and gravity.

For the fixed-restraint ESS system, $m = 3$ and equation (1) becomes

$$U_1(\theta) + U_2(\theta) + U_3(\theta) = U_t \qquad (2)$$

where $U_1(\theta)$, $U_2(\theta)$, and $U_3(\theta)$ represent the potential energies of the joint U_j, stabilizer U_s, and joint assist U_a, respectively, as a function of the half-angle of bend θ. It is of interest to note that if the joint and stabilizer are arbitrarily assigned a value of zero potential energy when $\theta = 0^o$, as was done with the given weight in the analogy, equation (2) becomes $U_3(\theta) = U_t$. As the joint is flexed and θ assumes finite values, the assist performs work on the other members of the system. Consequently, the potential energy of the assist is reduced at a rate equal in magnitude to the rate of increase in the potential energy of the other members of the system. Therefore, for $0^o < \theta < \theta_{max}$, all terms on the left-hand side of equation (2) possess finite values. For $\theta = \theta_{max}$, all the potential energy of the system is contained in the joint and stabilizer so that equation (2) becomes $U_1(\theta) + U_2(\theta) = U_t$.

THE SPACE-SUIT PRESSURE STABILIZER

The space-suit pressure stabilizer was initially conceived and developed as a device with the potential for eliminating the constant-volume criterion presently attached to the design of all state-of-the-art space-suit joints. In this capacity, it minimizes variations in the total volume of the space suit and thereby insures that the gas pressure remains essentially constant. The latest working model of the stabilizer possesses the capability of maintaining the pressure, 3.58 psig (2.47 N/cm^2), in a nonconstant-volume space-suit elbow joint to within 0.05 psi (0.035 N/cm^2) when the initial volume of the joint is reduced from 91.9 inches^3 (1506 cm^3) to 90.8 inches^3 (1488 cm^3).

Figure 1 shows the design concept for the latest working model of the space-suit pressure stabilizer. Sealing between the piston and cylinder is accomplished by means of a rolling diaphragm. The diaphragm, which has been subjected to a maximum test

pressure of 14 psig (9.65 N/cm^2) without failure, is approximately 0.013 inch (0.033 cm) thick. Torsional effects on the piston and diaphragm during extension and contraction of the stabilizer springs were minimized by means of a thrust bearing. Concentricity of the piston and cylinder was maintained by a shaft and instrument ball bushings.

When the stabilizer is unpressurized, the piston is at the end of the cylinder because of the action of the constant-force springs. During pressurization, gas enters the stabilizer and fills the region housing the stabilizer springs until the force of the gas pressure pA, acting on the projected area A of the piston face, is equal to the spring force and any frictional forces in the system. If the joint is now flexed, its volume decreases and the pressure on the piston increases by an amount Δp. The product ΔpA minus the forces of friction represents the magnitude of the unbalanced force that accelerates the piston. The piston will continue to move until the magnitude of the unbalanced force is zero.

The preceding paragraph states, in effect, that any reduction in volume of the joint will automatically be compensated for by an increase in volume of the stabilizer. Consequently, the change in volume of the system (joint and stabilizer) is zero. Operation of the stabilizer, however, does involve energy that is equivalent in magnitude to $p\,\Delta V$. As an explanation, the spring force that acts on the piston can be represented as

$$F_S = pA$$

where A is the projected area of the face of the piston. Therefore, if D represents the movement of the piston during bending of the joint, the energy of the stabilizer spring can be written as $F_S D$. By using the preceding expression for F_S, the following relationships can be shown to exist:

$$F_S D = pAD = p\,\Delta V$$

This unusual characteristic – the presence of an equivalence of pressure-volume energy in a system where no significant volume change occurs – provides the stabilizer with a most promising asset, the capability of acting as a remote, centralized joint assist. (As previously defined, the joint assist is that member of the space-suit joint system to which external energy U_t is supplied when $\theta = 0^{\circ}$.)

An investigation of the dynamic response characteristics of the stabilizer was carried out by attaching the device to a simulated space-suit elbow joint. (See fig. 2.) The joint, pressurized to 3.58 psig (2.47 N/cm^2), was then bent to an angle of 90° in a time interval of approximately 0.3 second. This bending rate corresponded to an average rate of change in volume of 4 in^3/sec (65.6 cm^3/sec). The maximum pressure variation, as obtained from an oscillograph recorder and transducer, was 0.05 psi (0.035 N/cm^2). (See fig. 3.)

In an effort to minimize the dynamic or inertial effects of the stabilizer, the joint was bent to an angle of 90° at an extremely slow rate of flexure. The maximum variation in pressure, as obtained from a Brown Electronik recorder, was 0.02 psi (0.014 N/cm^2). If this value is used to represent the change in pressure due to static friction Δp_f, the frictional forces in the stabilizer were found to have a magnitude of approximately 0.06 lbf (0.27 N). Since this value was equal to the static friction of the stabilizer-spring support bearings, measured under load, the contribution of the diaphragm to Δp_f was concluded to be negligible. From these results, it was also apparent that inertia and friction contribute almost equally to the maximum pressure variations in the stabilizer.

Since the space-suit pressure stabilizer can respond to pressure changes as small as 0.01 psi (0.007 N/cm^2), the device probably could not be effectively installed in space suits without the modification of existing life-support systems. Specifically, the space-suit pressure stabilizer would control the rate of flow of oxygen into the space suit. For example, if the piston of one of the stabilizers (the control stabilizer) was forced back because of excess pressure from the back pack, the stabilizer would send an electronic signal to another device that would depress the flow rate of gas entering the suit. The rate of flow would remain depressed until the control piston reversed direction and moved back to its normal operating range. On the other hand, should the piston of the control stabilizer move too far forward as a result of low pressure from the back pack, the gas flow rate would be increased. The elevated flow would continue until the control piston again moved back to its range of normal operation.

THE JOINT-ASSIST MECHANISM

As has previously been stated, satisfactory application of the ESS design concept to a space-suit joint system requires that the components of that system possess a high degree of elasticity. Early in the investigation, a pressurized test joint of rubber and fabric construction was observed to exhibit an ability to store large amounts of elastic and pressure-volume energy; that is, if the joint was bent to some angle and then released, it returned to its initial configuration.

The preceding considerations led to the conception of the joint-assist mechanism. The joint-assist mechanism, or joint assist, which is shown in figure 4, is a constant-force spring, the cross section of which has been altered in such a manner that the resultant force of the spring is sufficient to maintain the joint in static equilibrium at any angle of bend. Therefore, if friction is neglected, the joint and joint assist constitute a dynamic system with a total potential energy that remains constant for all angles of bend and equal

to the initial potential energy given to the joint assist during installation on the joint. Figure 2 shows the joint assist mounted on the joint.

The necessary variation in the cross-sectional width of the modified constant-force spring to satisfy the requirements of the joint was obtained by the following relationship:

$$w = \frac{F_a}{K} \tag{3}$$

where w represents the width of the control section of the altered spring, F_a represents the assist-force requirement for some angle of bend, and K is the transverse spring constant. Thus, a wide range of energy requirements can be readily satisfied by simply altering the cross-sectional area of the required number of constant-force springs.

APPLICATION OF THE FIXED-RESTRAINT EQUIPOTENTIAL SPACE-SUIT DESIGN CONCEPT TO A SIMULATED SPACE-SUIT ELBOW JOINT

The joint selected for the investigation (see fig. 5) contained triangular convolutes, which are believed to have a higher degree of mobility than the constant-volume U-shaped convolutes used in existing space suits. Although a pressure of only 3.58 psig (2.47 N/cm^2) was used during this phase of the test program, the 0.05-inch-thick (0.13-cm) two-ply fabric and rubber construction of the joint enabled it to withstand a maximum working pressure of 14 psig (9.65 N/cm^2). Since the joint was not of constant volume, the stabilizer was incorporated in the system. It is emphasized at this point that the presence of the stabilizer in the system had only one noticeable effect; it maintained the pressure in the nonconstant-volume joint at a near-constant value. The effect of this phenomenon on system performance was found to be negligible. Therefore, had the stabilizer not been used in studies involving the fixed-restraint system, the system data would have been identical in every respect to the data presented in this report.

Figure 6 shows the arrangement used to measure the force requirements for the joint assist as a function of assist-spring deflection and angle of bend 2θ. The protractor and pointer indicated the angle of bend, and the scale mounted on the platform measured the required spring deflection. During operation of the test stand, the force gage was moved along the platform to some position and then secured in place. This action forced the joint to assume some angle of bend 2θ. The reading on the force gage, therefore, indicated the magnitude of the force required to maintain the joint in equilibrium at this position. Readings taken in this manner from 0° to 80° of bend provided the data for curve 1 in figure 7. After reaching 80° of bend, the force gage was moved inward along

the platform so that the angle of bend decreased. Readings were again taken at various intervals with the gage secured at each position. As before, these readings indicated the magnitude of the force required to maintain the joint in equilibrium and provided the data for curve 2 in figure 7. It was evident from these curves, however, that the assist mechanism could not satisfy the equilibrium requirements at any arbitrary angle of bend for both increasing and decreasing θ. For example, an assist-spring deflection of 0.5 inch (1.27 cm), which corresponded to an angle of bend of approximately 40°, required an equilibrium force of 5.2 lbf (23.1 N) when the angle was approached from 0°. If, however, the angle was approached from 80°, the equilibrium force was only 3.82 lbf (17.0 N). Therefore, it was decided that the values for the assist force (curve 3) would lie approximately midway between the two curves.

An evaluation of the data in figure 7 based on energy considerations follows. The area under curve 1 represents the energy requirements of the system as the joint is bent from the undeflected position to an angle of 80°. The area under curve 3 represents the amount of energy actually supplied by the joint assist to accomplish this deflection. Therefore, the difference between the two areas provides a measure of the amount of energy the astronaut would have to supply to bend the joint to 80°. As the joint is returned to the undeflected position, the system provides the assist with an amount of energy represented by the area under curve 2. A comparison of the areas under curves 2 and 3 indicates that this energy is not sufficient to satisfy the requirements of the assist. Consequently, for this phase of the cycle, the astronaut would supply energy as represented by the difference between the areas under curves 2 and 3. As a result, for one complete cycle of the system as shown in figure 7, the energy requirements imposed upon the astronaut were reduced from 1.30 ft-lbf (1.76 J) without the assist (the sum of the areas under curves 1 and 2) to 0.17 ft-lbf (0.23 J) with the assist (the hatched area). These values represent an energy reduction of 87 percent.

The hatched area in figure 7 represents not only the energy requirements imposed upon the astronaut for one cycle, but also the amount of hysteresis – the primary source of energy loss – and external friction present in the system. If hysteresis is independent of pressure, the energy requirements imposed on the astronaut would be unaffected if the system pressure was increased to as much as 14.7 psig (10.1 N/cm^2). Also, if the degree of elasticity of the joint and stabilizer was increased (for example, if the joint was fabricated from a pure elastomer and friction in the stabilizer was reduced even further), curve 2 would approach curve 1. The result would be a reduction in the hatched area and, consequently, a reduction in the energy required of the astronaut. In the limit, therefore, the ideal elastic system would be void of internal and external friction so that curve 2 would coincide with curve 1. For this ideal system, the cross section of a constant-force spring would be altered to provide a force profile identical to these curves. Therefore, curves 1, 2, and 3 would all coincide, and no energy would be required to flex

the joint provided it was bent horizontally and at a constant rate. If, on the other hand, the ideal joint was flexed in a gravity field and at a varying rate of bend, the astronaut would be required to supply those energies associated with inertial and gravitational effects.

A comparison of bending moments required by the joint with and without the joint assist is shown in figure 8. An examination of figure 8 indicates that by using the joint assist, the maximum moment was reduced from 1.40 lbf-ft (1.90 N-m) without the assist to a maximum of 0.10 lbf-ft (0.14 N-m) with the assist.

OPTIMIZATION OF THE SYSTEM

Volumetric Considerations

As was previously stated, although the net volume change in the system is zero for any angle of bend, the stabilizer requires an amount of energy

$$U_S = p\,\Delta V$$

If this energy could be reduced, the result would be a reduction in the weight and size of the joint assist and stabilizer and, consequently, a reduction in the weight of the resultant space suit.

An evaluation of the volumetric characteristics of the joint revealed that during bending, the initial volume of the joint, which was 91.9 inches^3 (1506 cm^3), was reduced by approximately 1.1 inches^3 (18.03 cm^3) at 90° of bend. In addition, the theoretical analysis given in the appendix indicated that the change in volume was concentrated in the convolutes and not in the cylindrical portion of the joint. These results were to be expected, because the restraint cables prevented any significant variation in the axial length of the joint.

From a survey of the literature, it was known that if a cylinder is restrained by a rigid member pivoted at either end, the volume of the cylinder increases during bending. Each of the convolutes in the joint was, in effect, restrained in this manner (that is, the restraint cables would bend or pivot only at the points where they were attached to the joint). Therefore, in view of these considerations, the decision was made to apply this method of constraint to groups or "gangs" of convolutes rather than to each convolute. In this way, it was hoped that the resultant increase in the cylindrical volume would negate the decrease which was occurring in the convolutes. The minimum variation in volume was found to occur when the number of convolutes composing a gang was three. This configuration is shown in figure 9. Figures 10 and 11 show the effect of triple ganging on the volume and force requirements of the joint. It should be noted that the force requirements were reduced by approximately 25 percent along the entire length of the curve.

Force Considerations

The method used to obtain a relationship between assist force and assist deflection, as previously outlined and depicted in figure 6, assumed that if the joint and assist were an integral part of a space suit, any forces required by a test subject in excess of those provided by the assist would be negligible. The validity of this assumption was examined by performing tests involving a space-suit arm simulator at the Langley Research Center. Figure 12 shows the simulator and test subject.

By means of the space-suit arm simulator, it was possible to examine the configuration of the joint under conditions similar to those that would exist in an actual space suit. Therefore, if forces of significant magnitude had been overlooked, their presence would produce variations in the configuration of the joint which had not previously been observed. Figure 13 is a view of the joint, without the space-suit arm simulator attached, from a position vertically above it. Figure 14 is a view from approximately the same position and shows the joint with the space-suit arm simulator and joint-assist mechanism attached. The angle of bend for the joint is 30° in both figures. By using these figures, a satisfactory comparison was obtained of the configuration of the restraint cables, values for assist-spring deflection $2z$, and values for maximum moment arm R_2. In some instances, variations were found to exist in these items. The magnitudes, however, were such that they were considered to be negligible. The same results and conclusions were also obtained for angles of bend of 60° and 90°. Consequently, it was concluded that if weight and inertial effects by necessity were neglected, any forces required to bend the joint in excess of those provided by the joint assist were negligible. This conclusion, however, requires that the following three conditions be satisfied with regard to manned space-suit application:

(1) Relative motion between the restraint cable and restraint-cable retaining rings must be prohibited in order to limit bending of the joint to a single plane.

(2) The space-suit joint must be compatible with the joint of the astronaut to the extent that during bending, no significant interference occurs between the two members.

(3) The assist mechanism must be shielded from outer garments and objects in the vicinity of the man-suit system.

CONCLUDING REMARKS

The fixed-restraint equipotential space-suit system developed through the equipotential space-suit design concept has demonstrated an ability to minimize the flexural energy required of a space-suit elbow joint. This form of the equipotential space-suit design concept could no doubt be applied successfully to every major joint of a soft space

suit. The inherent versatility of this system stems from the fact that a wide range of energy requirements can be readily satisfied by simply altering the cross-sectional area of the required number of constant-force springs.

If the fixed-restraint concept were to be applied to a space suit, it would no doubt require that the assist mechanism be shielded from outer garments or objects in the vicinity of the man-suit system. This shielding would insure that the various joint systems could operate without interference.

At this point in the space-suit mobility research and development program, it appears that the space-suit pressure stabilizer could serve to

(1) Minimize pressure fluctuations in state-of-the-art space suits to ±0.05 psi (0.035 N/cm^2) and

(2) Permit the use of nonconstant-volume joints which possess desirable mobility characteristics.

Langley Research Center,
National Aeronautics and Space Administration,
Langley Station, Hampton, Va., March 12, 1969,
127-53-18-01-23.

APPENDIX

THEORETICAL ANALYSIS OF AN EQUIPOTENTIAL SYSTEM

A theoretical analysis was performed in an effort to develop a better understanding of the force and volumetric characteristics of a triangularly convoluted elbow joint. (See ref. 1.) This appendix represents a summary of the procedures and results of that analysis. The system, as referred to in this analysis, involves the joint-assist mechanism, space-suit pressure stabilizer, and a simulated space-suit elbow joint. This system is shown in figure 2.

When the assist spring is mounted to the undeflected joint, it is provided with a discrete amount of energy. Bending the joint permits the spring to perform work on the system. Part of this energy is stored in the joint, and the remainder is used to satisfy the requirements of the stabilizer. As is stated in the body of the report, when the joint is bent, the volumes of both the joint and stabilizer are subject to change. However, since the reduction in volume of the joint is equal to the increase in volume of the stabilizer, the net pressure-volume work on the system is zero.

Combining the preceding considerations with the principle of conservation of energy, the following expression is established for W_a, the work done by the joint assist:

$$W_a = U_j + U_s \tag{4}$$

In this equation, U_j and U_s, both functions of θ, represent the internal potential energy stored in the joint and stabilizer, respectively, as the joint is bent from $\theta = 0^{\circ}$. It is noted that although equations (4) and (2) represent energy balances for the same system, the two equations differ from one another. However, since W_a represents the work done by the assist, it may be represented by

$$W_a = U_t - U_a$$

where U_t represents the total potential energy of the assist when $\theta = 0^{\circ}$, and U_a is the potential energy that remains after θ has assumed some finite value. If this expression for W_a is substituted into equation (4) and the resultant terms properly rearranged, the relationship

$$U_j + U_s + U_a = U_t$$

is obtained which is identical to equation (2) for $J = 1$, $s = 2$, and $a = 3$.

The evaluation of terms in equation (4) is based on the assumption that the amount of energy consumed by friction is negligible and that since temperature changes are small, the internal energy of the air remains essentially constant. Let a frame of reference be attached to the joint as shown in figure 15 and figure 13. In addition, let R_1

and y_1, both functions of θ, represent the coordinates that denote the termination point for convolutes along the neutral axis of the joint. Figure 15 shows that

$$\frac{1}{2} W_a = \int F_a \, dz$$

Therefore, the total work performed by the joint assist is

$$W_a = 2 \int F_a \, dz \tag{5}$$

In addition, it is seen that

$$z = L + \frac{l}{2} - \left(y_1 + L \cos \theta\right)$$

where L is the distance from the assist mount to the first convolute, and l is the length of the convoluted portion of the joint. Differentiating this expression with respect to θ and substituting the resultant value into equation (5) results in the following expression:

$$W_a = 2L \int_0^{\theta} F_a \sin \theta \, d\theta - 2 \int_{l/2}^{y_1} F_a \, dy_1 \tag{6}$$

By using the equality

$$dy_1 = \frac{dy_1}{d\theta} d\theta = y_1' \, d\theta$$

equation (6) may be written

$$W_a = 2L \int_0^{\theta} F_a \sin \theta \, d\theta - 2 \int_0^{\theta} F_a y_1' \, d\theta \tag{7}$$

In the same manner, it can be shown that

$$U_j = 2L \int_0^{\theta} F_a^* \sin \theta \, d\theta - 2 \int_0^{\theta} F_a^* y_1' \, d\theta \tag{8}$$

where F_a^* represents the force requirements for the assist if the joint were of constant volume.

The energy requirements for the stabilizer are determined as follows:

$$U_s = F_s \int_0^{D} dD = F_s D \tag{9}$$

Let ΔV represent the change in volume that occurs in the joint when it is bent to some angle 2θ. Therefore,

$$\Delta V = \pi r_s^2 D$$

or

$$D = \frac{\Delta V}{\pi r_s^2}$$

Substituting this value into equation (9),

$$U_s = \frac{F_s \Delta V}{\pi r_s^2} = \frac{F_s}{\pi r_s^2} \int_0^\theta V' \, d\theta \tag{10}$$

where V' represents the rate of change of volume as a function of θ.

The substitution of equations (7), (8), and (10) into equation (4) produces the following expression:

$$2L \int_0^\theta F_a \sin\theta \, d\theta - 2 \int_0^\theta F_a y_1' \, d\theta = 2L \int_0^\theta F_a^* \sin\theta \, d\theta - 2 \int_0^\theta F_a^* y_1' \, d\theta + \frac{F_s}{\pi r_s^2} \int_0^\theta V' \, d\theta \tag{11}$$

Equation (11) represents an equality of energy terms. It must, however, be valid for any discrete value of θ that might be selected. Therefore, the integrands of this equation must possess the same relationship with respect to one another as the integrals do so that equation (11) may be written in the desired form

$$F_a = F_a^* + \frac{1}{2} \frac{F_s}{\pi r_s^2} \frac{V'}{L \sin\theta - y_1'} \tag{12}$$

The next step in the analysis requires that expressions, which are functions of the variable θ, be obtained for ΔV, V', y_1', and F_a^*.

Volumetric Analysis

For the volumetric portion of the analysis, which involves ΔV and V', the assumption was made that during bending, the volume of the arm contained within the joint remains essentially constant. Therefore, since the analysis was concerned only with change and rate of change of volume, the procedures ignored the presence of the arm in the joint. In addition, the assumption was made that although the restraint cables permit some elongation of the axial length of the joint during bending, the magnitude of this elongation was considered to be negligible.

The volume of the joint can be considered to be composed of two parts. One is the volume contained within the convolutes themselves, and the other is the remaining volume

or core volume. Because of the rigid, circular restraint-cable retaining rings, the core volume is forced to maintain an annular configuration during bending. In addition, the restraint cables, which closely define the neutral plane, maintain the axial length of the joint at a fixed value. Therefore, no change in volume can occur in the core volume of the joint. If a change in volume does occur, it must take place within the triangular portion of the joint. It is known, however, that the magnitude of convolute deformation varies along the length of the joint as dictated by the deformation mode of the neutral axis. Actual measurements indicate that the configuration of the neutral axis during bending can be represented with a satisfactory degree of accuracy by a parabolic curve. A comparison of the actual and the assumed deformation mode is shown in figure 16.

In view of these considerations, the initial phase of the volumetric analysis is limited in scope to a single arbitrary convolute. The configuration for the plane of maximum deformation for this convolute, before and after bending, is shown in figure 17. The subscripts o and i are used to indicate quantities for the region of the joint in tension and the region of the joint in compression, respectively.

An evaluation of the results of the theoretical analysis indicated that a good approximation could be obtained by limiting variations in volume to changes occurring in the triangular portion of the joint. The source of error in producing the approximation is evident from figure 17. The triangular volume for the region in tension should be reduced by $V_{s,o}$, whereas the triangular volume for the region in compression should be increased by $V_{s,i}$. The remaining volume would then be the core volume which was assumed to remain constant during flexure of the joint.

After obtaining an expression for the change in volume of the arbitrary convolute in terms of α (see fig. 17), the average half-angle of bend $\bar{\alpha}$ was found to be equal to the value of α that all the convolutes would have if the bending mode were circular; that is

$$\bar{\alpha} = \frac{\theta}{N}$$

where N is the number of convolutes in the joint. Therefore, the total change in volume of the joint was approximated by $N\,\Delta V_c$ where ΔV_c is the change in volume of one convolute whose half-angle of bend is $\bar{\alpha}$. This procedure produced the following expression for the total change in volume of the joint:

$$\Delta V = 2r^2\left[\left(h^2 - b^2\right)\left(\int_0^\theta \frac{d\theta}{\sqrt{H_o}} - \int_0^\theta \frac{d\theta}{\sqrt{H_i}}\right) - \frac{8br}{N\pi}\left(\int_0^\theta \frac{\theta\,d\theta}{\sqrt{H_o}} + \int_0^\theta \frac{\theta\,d\theta}{\sqrt{H_i}}\right)\right.$$

$$\left. - \frac{8r^2}{N\pi^2}\left(\int_0^\theta \frac{\theta^2 d\theta}{\sqrt{H_o}} - \int_0^\theta \frac{\theta^2 d\theta}{\sqrt{H_i}}\right) - \frac{8b}{N\pi}\int_0^\theta \theta\,d\theta\right] \tag{13}$$

From this expression, it follows that

$$\frac{dV}{d\theta} = V' = 2r^2\left[(h^2 - b^2)\left(\frac{1}{\sqrt{H_o}} - \frac{1}{\sqrt{H_i}}\right) - \frac{8br}{N\pi}\left(\frac{\theta}{\sqrt{H_o}} + \frac{\theta}{\sqrt{H_i}}\right) - \frac{8r^2}{N\pi^2}\left(\frac{\theta^2}{\sqrt{H_o}} - \frac{\theta^2}{\sqrt{H_i}}\right) - \frac{8b}{N\pi}\theta\right] \tag{14}$$

A comparison of equation (13) with the actual volume changes of the joint is shown in figure 18. From these results, the assumptions required for this analysis appear to be satisfactory.

Force Analysis

For the determination of F_a^*, the force requirements for the assist if the joint were of constant volume, the following assumptions and limitations were made:

(1) The analysis is limited to θ greater than 0° but less than 90°.

(2) In view of the difficulty associated with a theoretical analysis, F, the force required to bend the unpressurized joint, is not taken into consideration. The contribution of F to F_a^* is determined by actual measurements performed on the joint.

(3) In view of the procedures to be used in obtaining a value for F, the additional assumption that internal friction and bending stresses in the material of the joint are independent of pressure is necessary.

Figure 19 shows as a free body a portion of the joint removed by passing a cutting plane CC through the plane of symmetry of the arbitrary convolute. If A_c represents the area at the interface, the force pA_c is the resultant force necessary to contain the gas at the cutting plane. Since the point of application of the force is as yet unknown, let it act at O, the centroid of the core area or the axial center of the plane of symmetry, and let the moment of pA_c about O be represented by M_c. In addition, F_p represents the sum of the vertical forces in the joint material resulting solely from the fact that the joint is pressurized; M_p is the corresponding moment of F_p about O. The other vertical force F_b and corresponding moment M_b represent stresses in the material when the unpressurized joint is bent. As stated in the second assumption, F_b and M_b are not considered in the theoretical analysis. Their contributions to F_a^* are obtained by actual measurements. The resultant of all transverse forces is represented by F_t, T is the tension in the retaining cable, and F_a^*, of course, represents the spring force.

An examination of figure 19 shows five unknowns: T, F_a^*, F_p, M_p, and F_t. Therefore, since only three equations of statics are available, other methods must be used to reduce the number of unknown quantities. Assume for the moment that the free body shown in figure 19 was molded from a rigid material. Then, neither the restraint cable nor the assist force is required to maintain the indicated configuration. This

situation results from the fact that the rigid joint material has the ability to develop sufficient internal stress of the type necessary to offset the effect of the pressure forces. Therefore, the tension in the restraint cable and the force of the joint-assist spring are zero. Imagine that the joint material undergoes a gradual transformation from a rigid state to the flexible, rubberized state. As the transformation progresses, the tension in the cable and the force of the assist spring gradually increase until they reach maximum values in the completely rubberized state. Apparently, this transformation occurs because the rubber cannot develop internal stresses of sufficient magnitude to offset the pressure forces. The conclusion, therefore, is that since the rubberized joint material is not capable of developing the type of stress forces necessary to resist effectively the effects of the air pressure, these stresses do not contribute significantly to the force of the spring assist.

By using these assumptions and the requirements of static equilibrium, it can be shown that

$$F_a^* = \frac{pA_c e}{R_c} + \frac{M_b}{R_c}$$

where e is the distance from O to the centroid of area A_c. By representing M_b as

$$M_b = FR_c$$

the following expression is obtained for F_a^*:

$$F_a^* = \frac{pA_c e}{R_c} + F \tag{15}$$

Let figure 20 represent the area A_c at the interface of the joint and cutting plane CC. Measurements obtained from the joint during bending indicate that this area can be represented, to a satisfactory degree of accuracy, by two ellipses. (A comparison of the actual and assumed deformation mode is shown in fig. 21.) The two ellipses are arranged in figure 20 so that the semimajor and semiminor axes of one are a_o and d_o, respectively, and the semimajor and semiminor axes of the other are a_i and d_i, respectively. From figure 20,

$$\left.\begin{aligned} a_o &= d_i = r + h \\ d_o &= r + h - \Delta h_o \\ a_i &= r + h + \Delta h_i \end{aligned}\right\} \tag{16}$$

By means of figure 20 and equations (16), an expression can be developed for e in terms of α and the system parameters. If this expression is substituted into equation (15), it can be shown that

$$F_a^* = \frac{2}{3}\frac{p(r + h)}{R_c}\left(\Delta h_o + \Delta h_i\right)\left[2(r + h) + \Delta h_i - \Delta h_o\right] + F \tag{17}$$

where Δh_o and Δh_i are defined in figure 17.

It is necessary to evaluate R_c, Δh_i, and Δh_o in terms of θ so that their magnitudes are compatible with the deformation mode of one particular convolute in the joint as shown in figure 19. The convolute that lends itself readily to an evaluation of these terms is the median convolute. Consequently, $R_c = R_2$, the moment arm afforded the assist force when L is finite. By letting the general expression

$$y^2 = ax$$

represent the deformation mode of the neutral axis of the joint, expressions for R_c, Δh_i, and Δh_o can be developed in terms of θ so that equation (17) becomes

$$F_a^* = \frac{4}{3}\frac{Cp(r + h)}{l \tan^2\theta + 2CL \sin\theta}\left(\frac{2br\alpha + r^2\alpha^2}{h + \sqrt{h^2 - 2br\alpha - r^2\alpha^2}} + \frac{2br\alpha - r^2\alpha^2}{h + \sqrt{h^2 + 2br\alpha - r^2\alpha^2}}\right)\left[2(r + h)\right.$$

$$\left. + \frac{2br\alpha - r^2\alpha^2}{h + \sqrt{h^2 + 2br\alpha - r^2\alpha^2}} - \frac{2br\alpha + r^2\alpha^2}{h + \sqrt{h^2 - 2br\alpha - r^2\alpha^2}}\right] + F \tag{18}$$

The final expression for F_a is obtained by substituting equations (18) and (14) for F_a^* and V', respectively, in equation (12) and by realizing that

$$F_s = p\pi r_s^2$$

Therefore,

$$F_a = \frac{4}{3}\frac{Cp(r + h)}{l \tan^2\theta + 2CL \sin\theta}\left(\frac{2br\alpha + r^2\alpha^2}{h + \sqrt{h^2 - 2br\alpha - r^2\alpha^2}} + \frac{2br\alpha - r^2\alpha^2}{h + \sqrt{h^2 + 2br\alpha - r^2\alpha^2}}\right)\left[2(r + h)\right.$$

$$\left. + \frac{2br\alpha - r^2\alpha^2}{h + \sqrt{h^2 + 2br\alpha - r^2\alpha^2}} - \frac{2br\alpha + r^2\alpha^2}{h + \sqrt{h^2 - 2br\alpha - r^2\alpha^2}}\right] - pr^2\left[\left(h^2 - b^2\right.\right.$$

$$\left.\left. - \frac{8r^2\theta^2}{N^2\pi^2}\right)\left(\frac{1}{\sqrt{H_o}} - \frac{1}{\sqrt{H_i}}\right) - \frac{8br\theta}{N\pi}\left(\frac{1}{\sqrt{H_o}} + \frac{1}{\sqrt{H_i}}\right) - \frac{8b\theta}{N\pi}\right]\left(\frac{1}{L \sin\theta - y_1'}\right) + F \tag{19}$$

where

$$\sqrt{H_o} = \sqrt{h^2 - \frac{4br\theta}{N\pi} - \frac{4r^2\theta^2}{N^2\pi^2}}$$

$$\sqrt{H_i} = \sqrt{h^2 + \frac{4br\theta}{N\pi} - \frac{4r^2\theta^2}{N^2\pi^2}}$$

$$y_1 = \frac{l}{C} \tan \theta$$

$$\alpha = \frac{C}{2N}$$

and

$$C = \tan \theta \sqrt{1 + \tan^2\theta} + \log_e\left(\tan \theta + \sqrt{1 + \tan^2\theta}\right)$$

The analytical expression representing y_1' in equation (19) was found to be too complex for practical use. Therefore, a relationship between y_1 and θ was obtained by direct measurement of the joint itself. The slope of the resultant curve indicated that y_1' was essentially constant for $20^\circ < \theta < 45^\circ$.

Curve 1 in figure 22 represents F, the assist force requirements associated with bending the joint when it is unpressurized. Curve 2 represents the theoretical part of the expression for F_a. The addition of these two expressions (eq. (19)) is indicated by curve 3. Curve 4 is the actual force requirements for the assist spring.

It was shown in the body of this report that if the convolutes were ganged in groups of three, the energy requirements of the stabilizer were virtually eliminated, and the joint functioned as if it were of constant volume. Consequently, the assist force requirements are reduced from F_a, representing the stabilized joint, to F_a^*, which is given by equation (18). A comparison of this equation with the actual assist force requirements for a constant-volume joint is shown in figure 23. The two curves compare very favorably for angles of bend in excess of 20°. In view of these results, when the convolutes are ganged, F_a can be substituted for F_a^* in equation (18), and, thus, the assist force can be represented by the following equation:

$$F_a = \frac{4}{3} \frac{Cp(r + h)}{l \tan^2\theta + 2CL \sin \theta}\left(\frac{2br\alpha + r^2\alpha^2}{h + \sqrt{h^2 - 2br\alpha - r^2\alpha^2}} + \frac{2br\alpha - r^2\alpha^2}{h + \sqrt{h^2 + 2br\alpha - r^2\alpha^2}}\right)\left[2(r + h)\right.$$

$$\left. + \frac{2br\alpha - r^2\alpha^2}{h + \sqrt{h^2 + 2br\alpha - r^2\alpha^2}} - \frac{2br\alpha + r^2\alpha^2}{h + \sqrt{h^2 - 2br\alpha - r^2\alpha^2}}\right] + F \tag{20}$$

In conclusion, it would appear from the results of this theoretical analysis that all assumptions required to obtain the preceding equations possess a high degree of validity.

REFERENCE

1. Barthlome, Donald E.: An Optimum Design of a Force Assisted Space Suit Elbow Joint. M.M.E. Thesis, Univ. of Virginia, 1968.

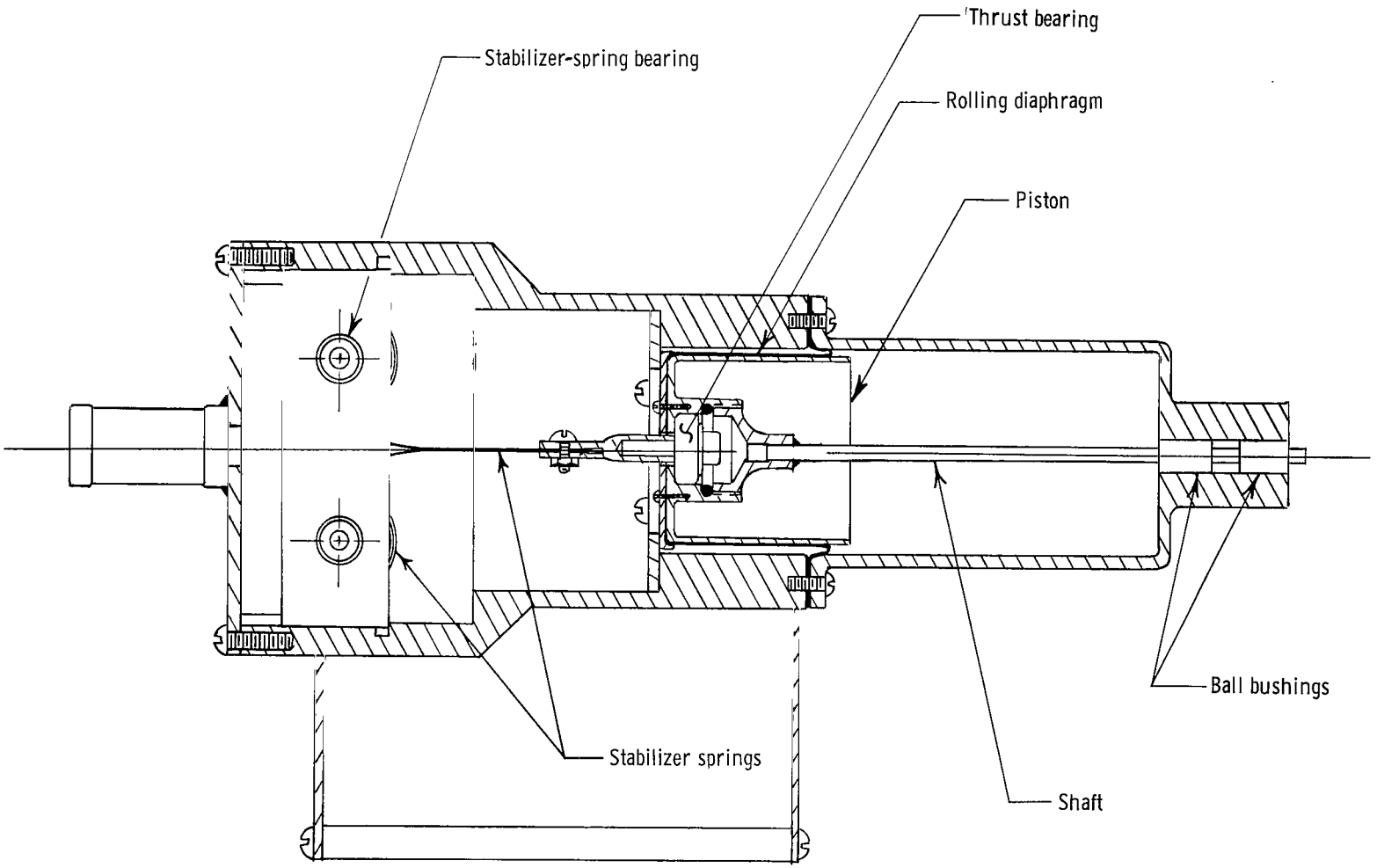

Figure 1.- Space-suit pressure stabilizer.

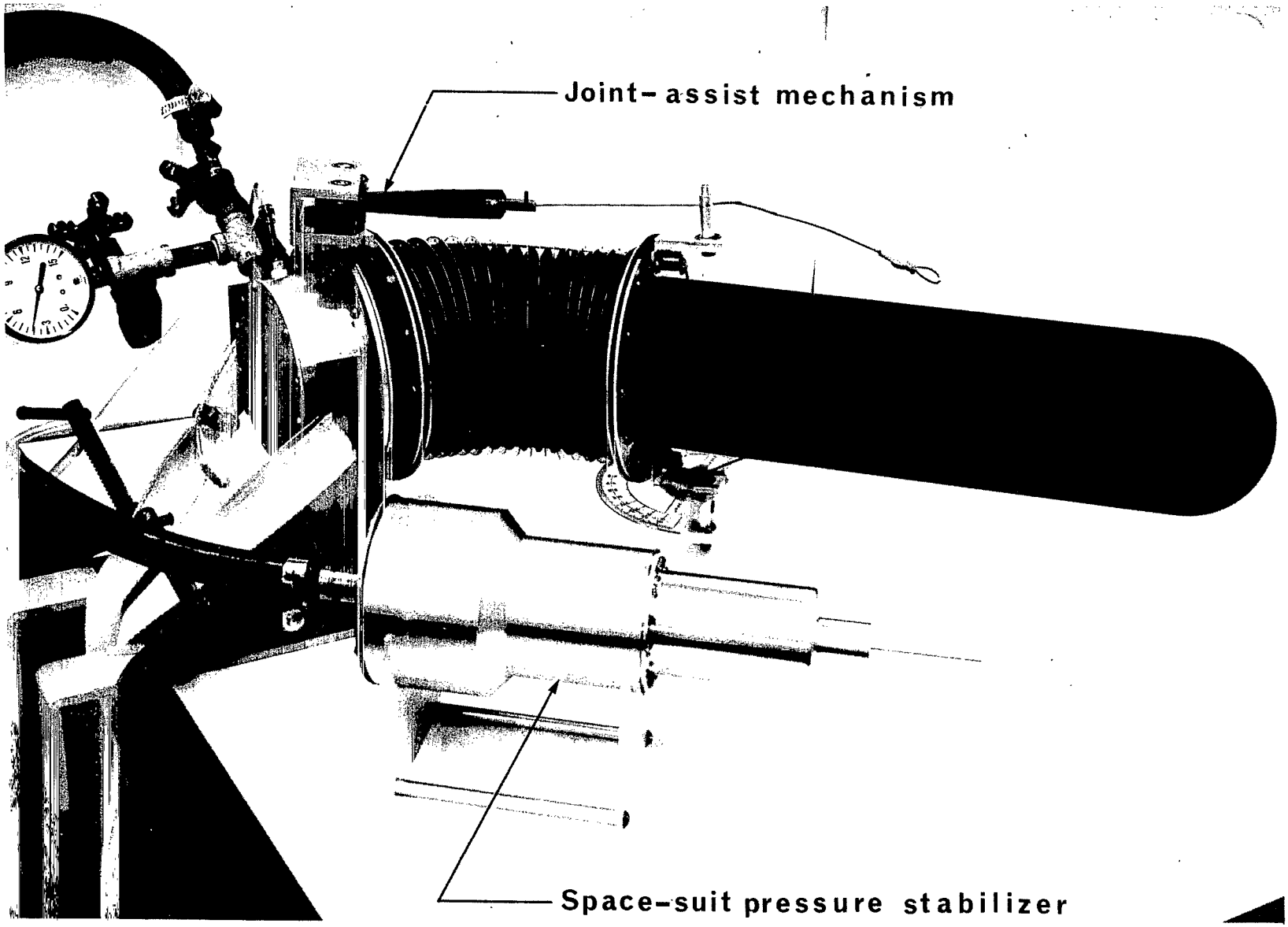

Figure 2.- Application of the fixed-restraint equipotential space-suit design concept to a simulated space-suit elbow joint. L-67-5618.1

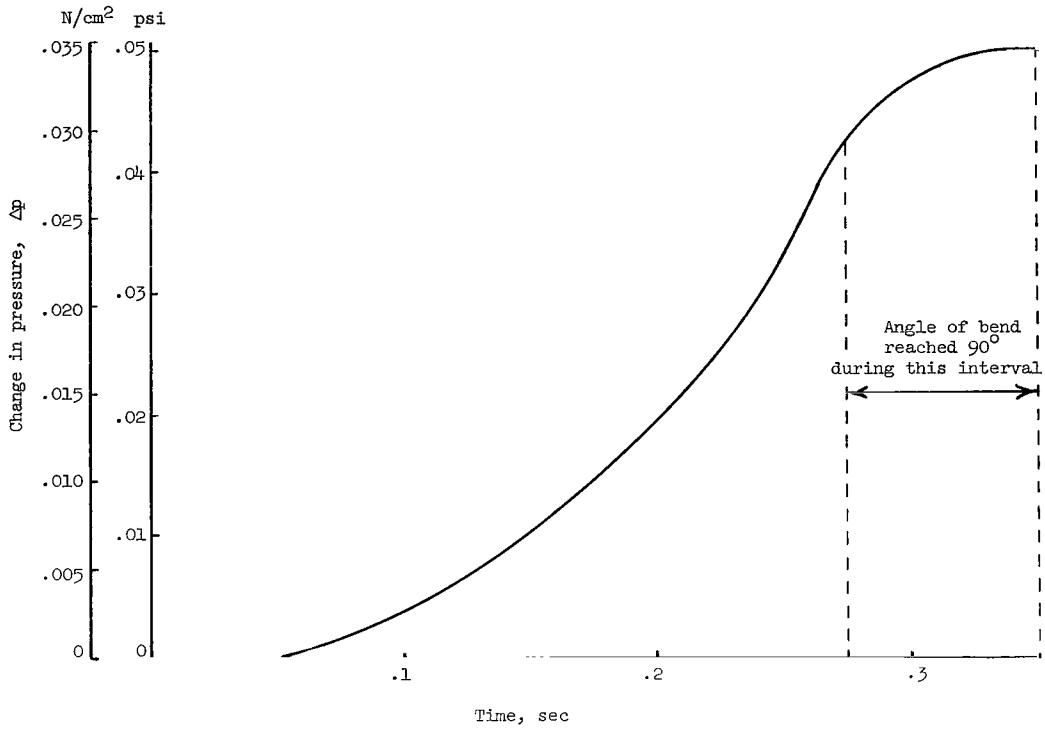

Figure 3.- Time history of dynamic response characteristics of space-suit pressure stabilizer.

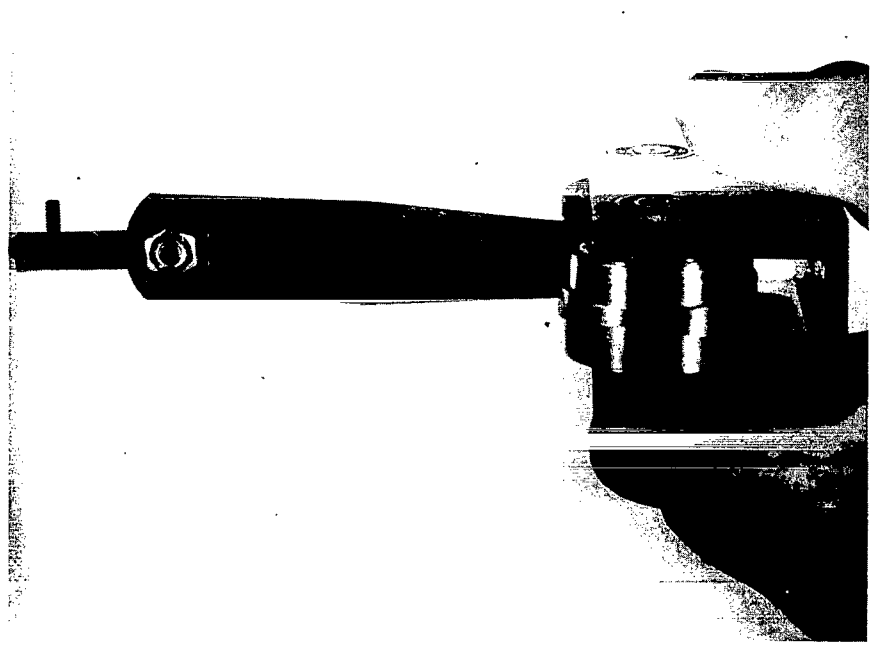

Figure 4.- Joint-assist mechanism. L-69-1306

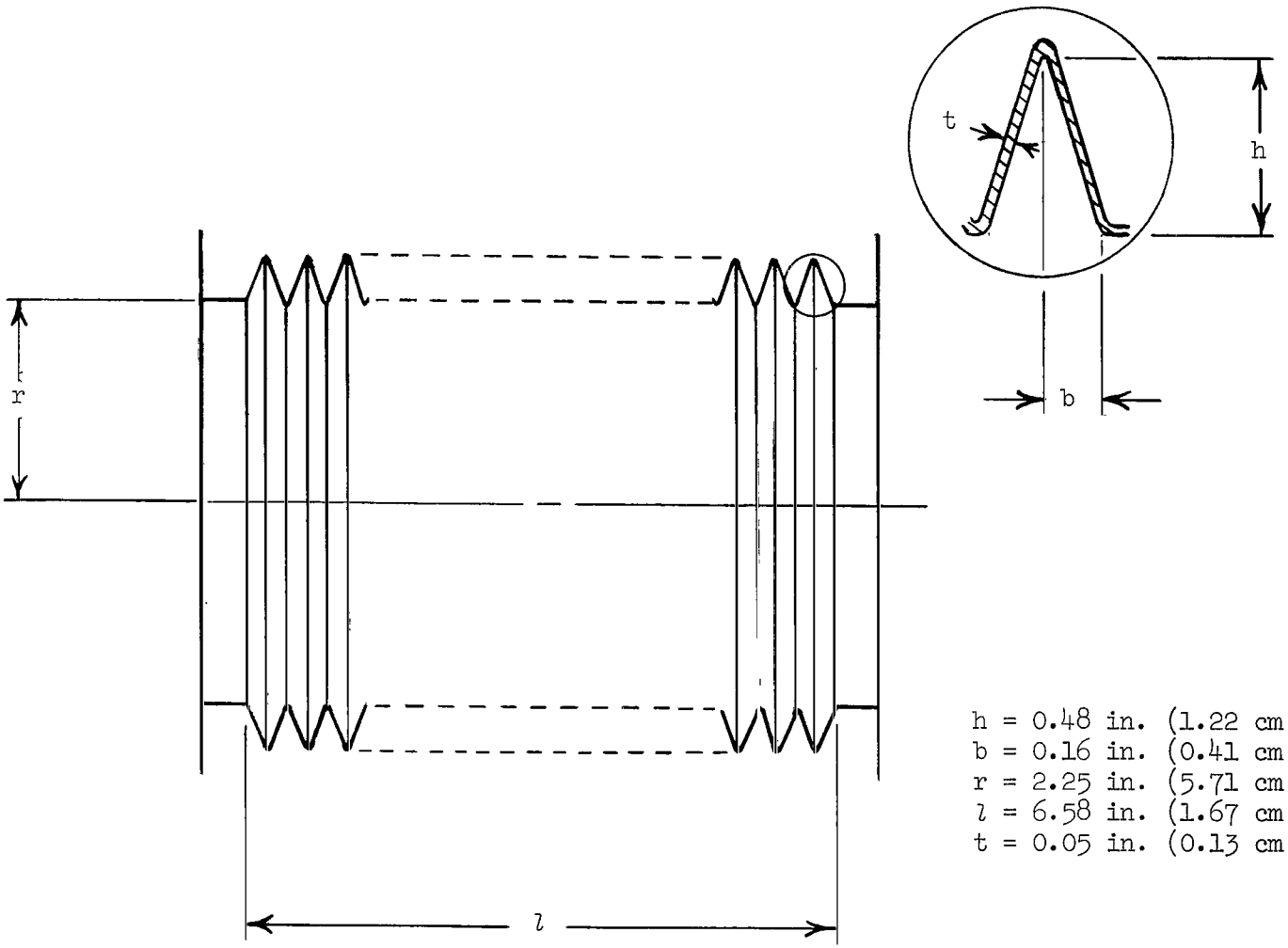

h = 0.48 in. (1.22 cm)
b = 0.16 in. (0.41 cm)
r = 2.25 in. (5.71 cm)
l = 6.58 in. (1.67 cm)
t = 0.05 in. (0.13 cm)

Figure 5.- Joint configuration.

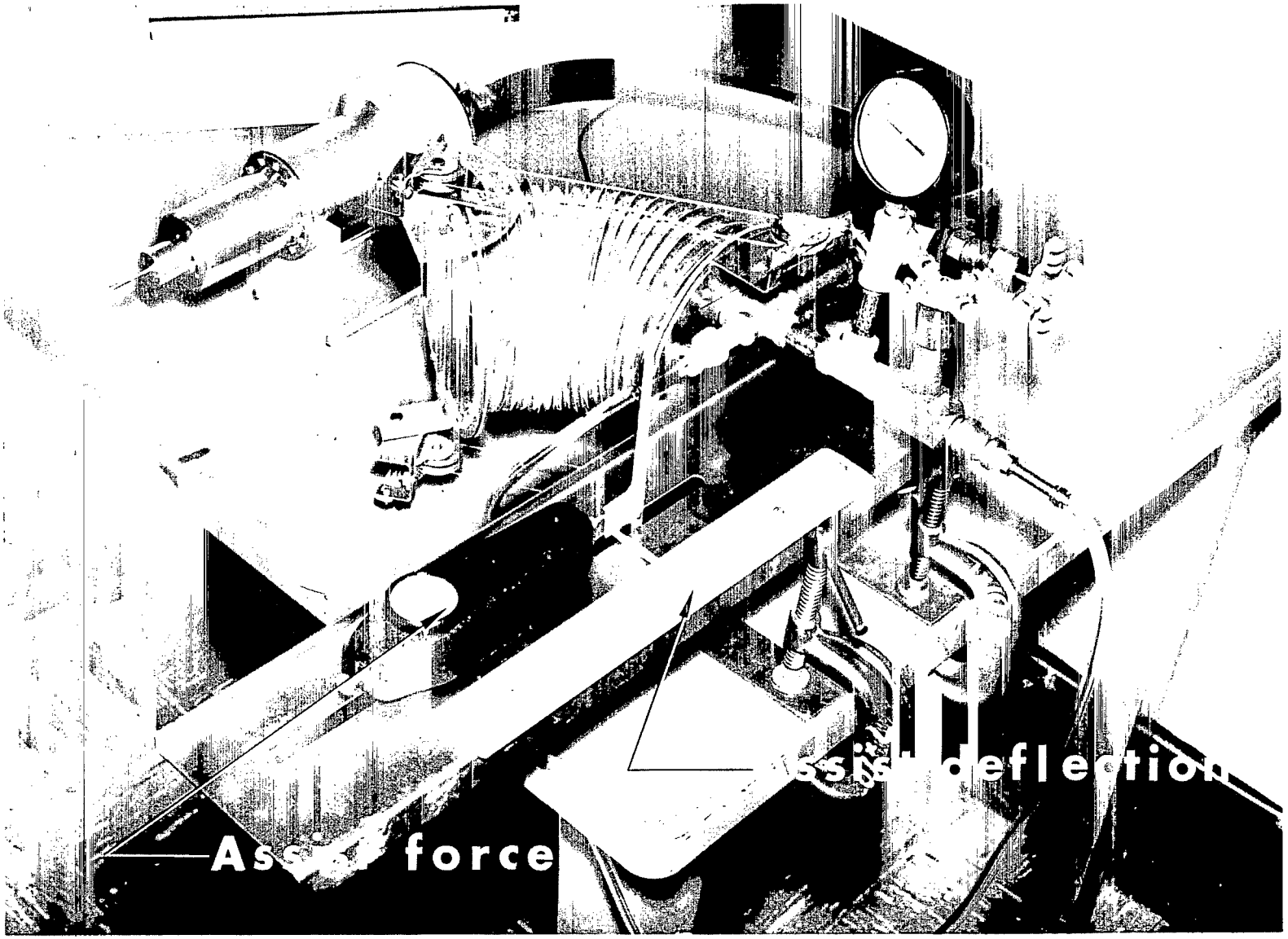

Figure 6.- Test stand used to measure the force requirements for the joint-assist mechanism. L-66-8730.1

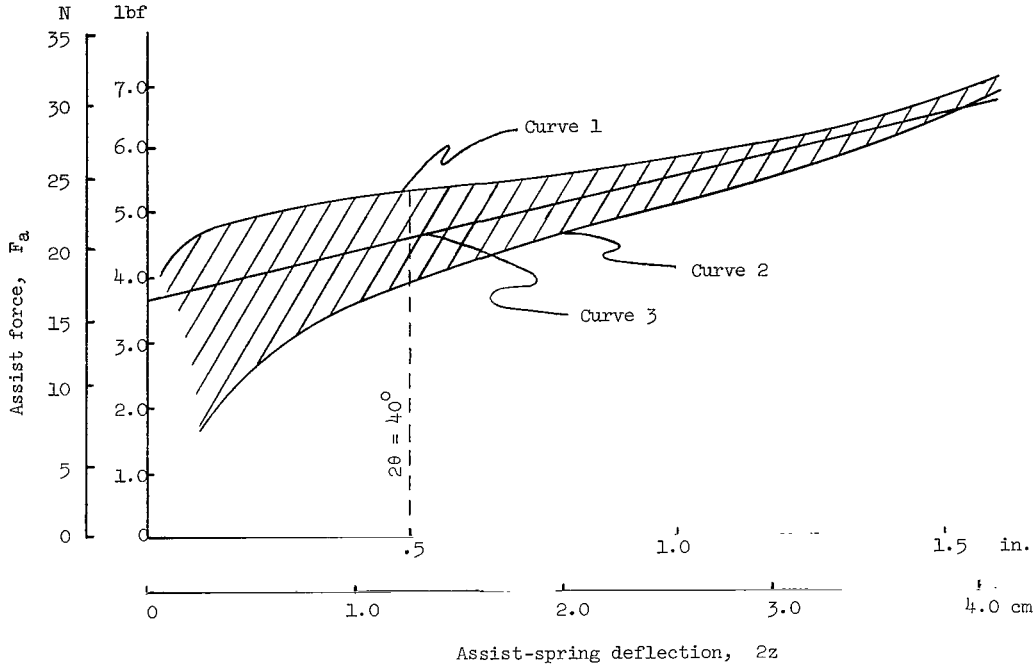

Figure 7.- Determination of force requirements for joint-assist mechanism.

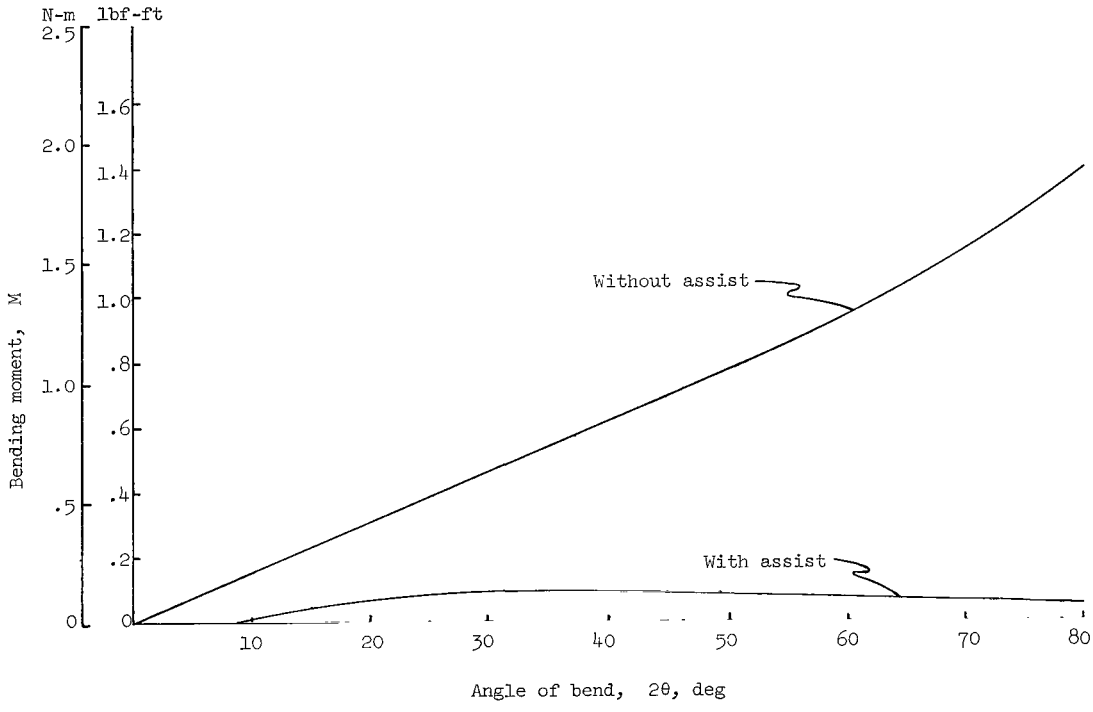

Figure 8.- Comparison of bending moments required by the joint with and without the joint assist. Increasing θ.

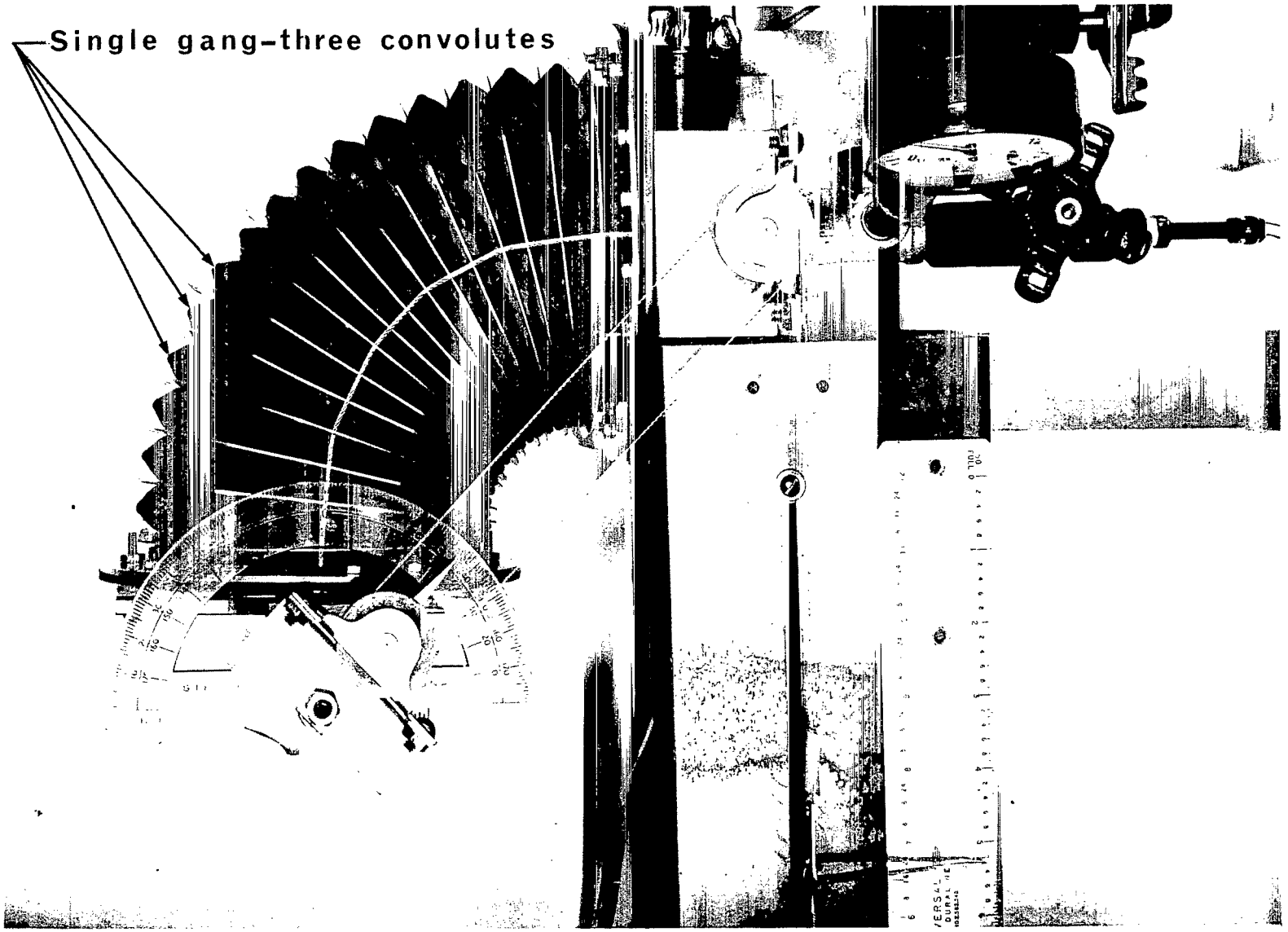

Figure 9.- Alternate restraint-cable mounting configuration.

L-67-4880.1

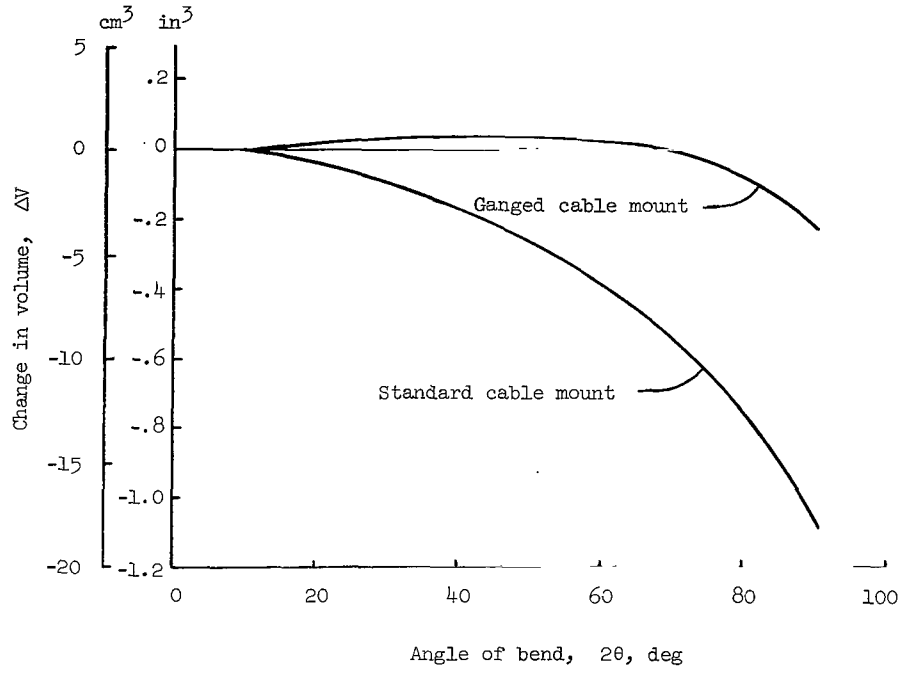

Figure 10.- Effect of alternate restraint-cable mounting on change in volume.

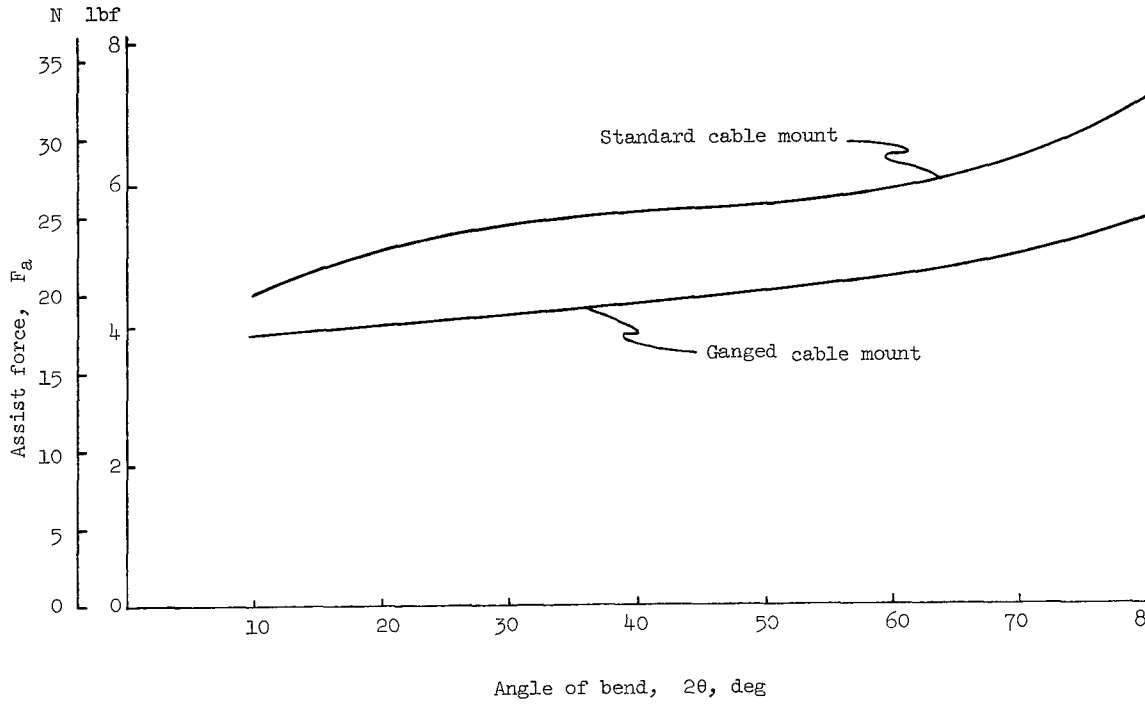

Figure 11.- Effect of alternate restraint-cable mounting on assist force.

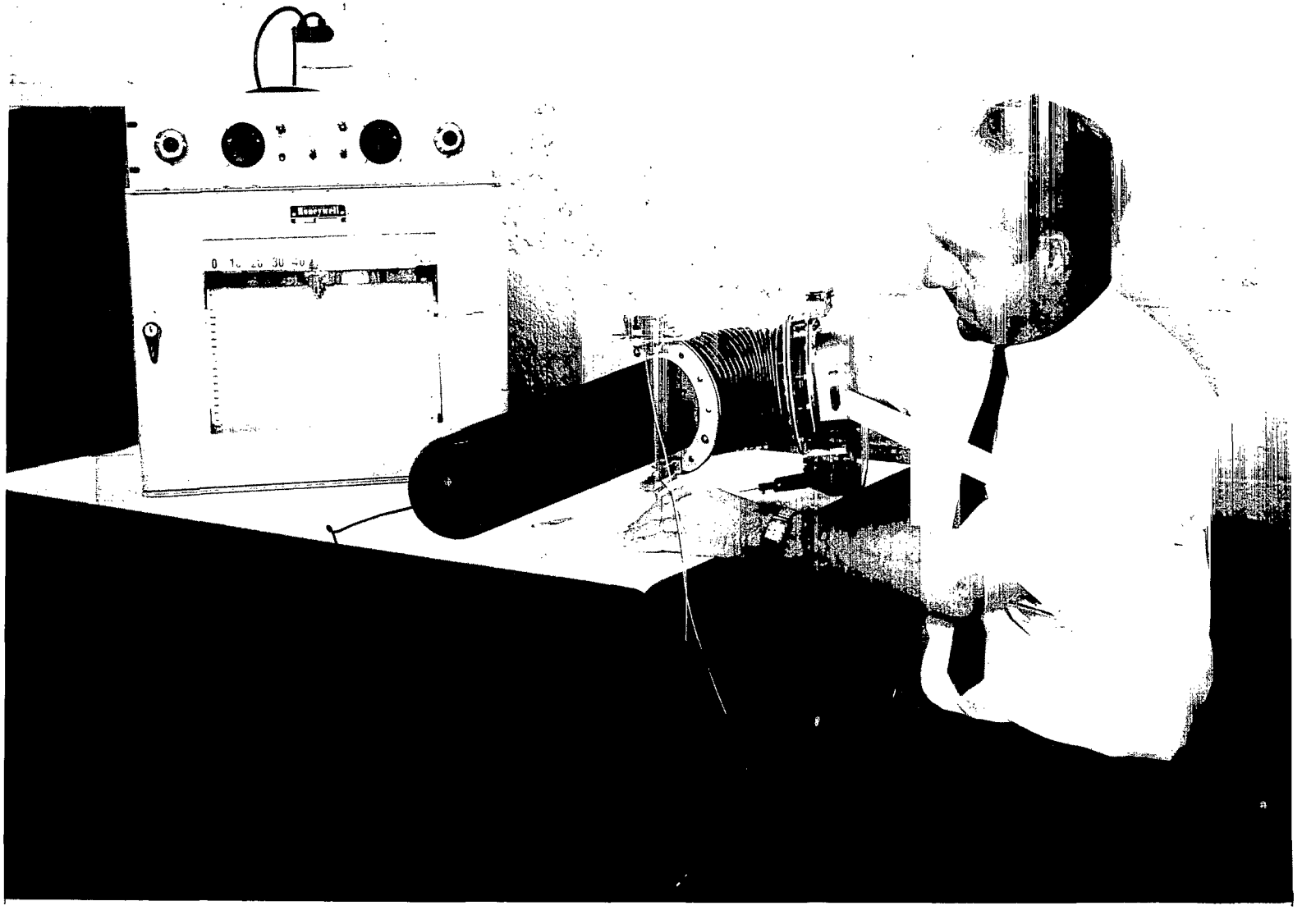

Figure 12.- Space-suit arm simulator.

L-67-5370

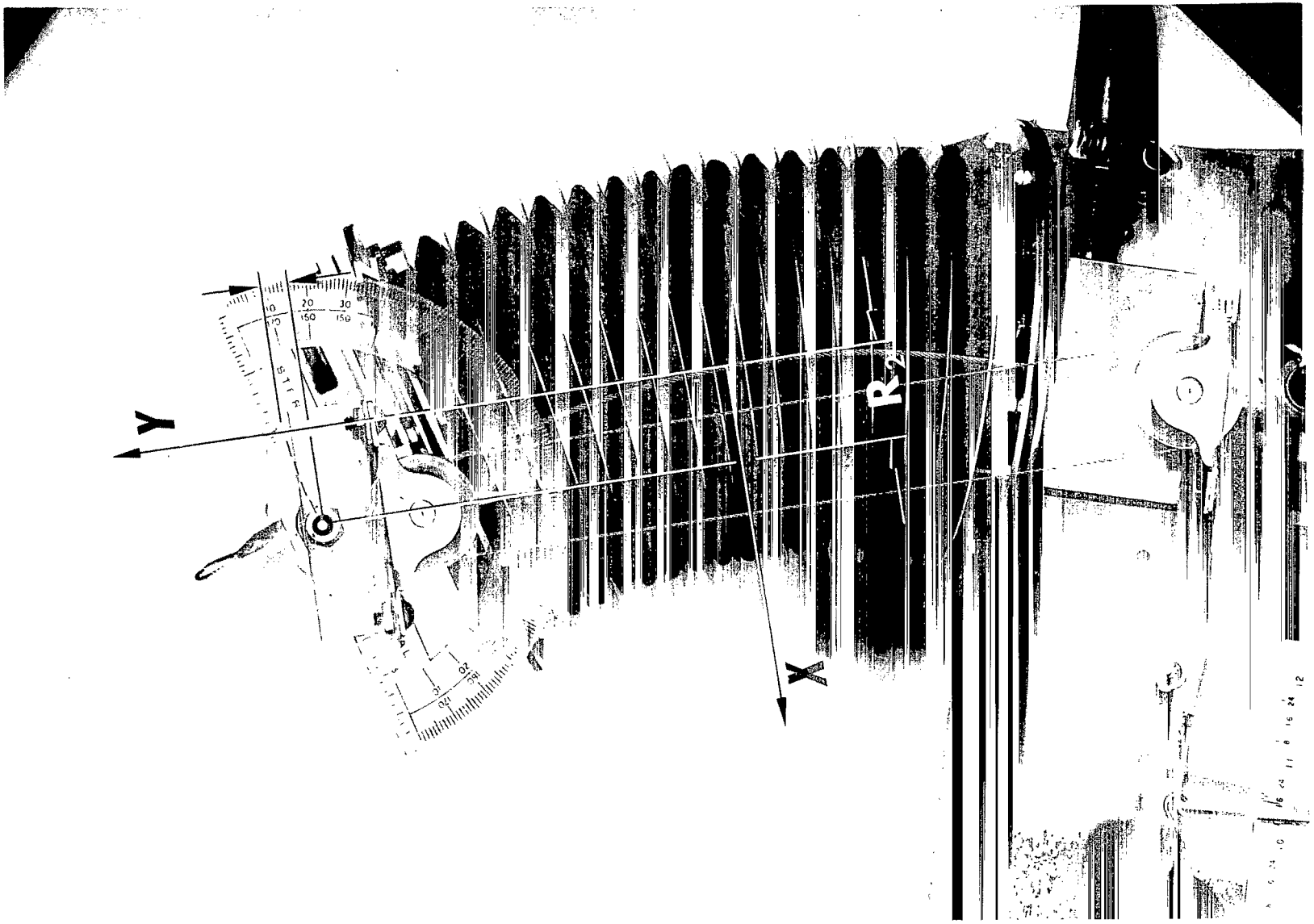

Figure 13.- Pressurized space-suit joint without space-suit arm simulator attached. $2\theta = 30^{\circ}$.

L-67-4658.1

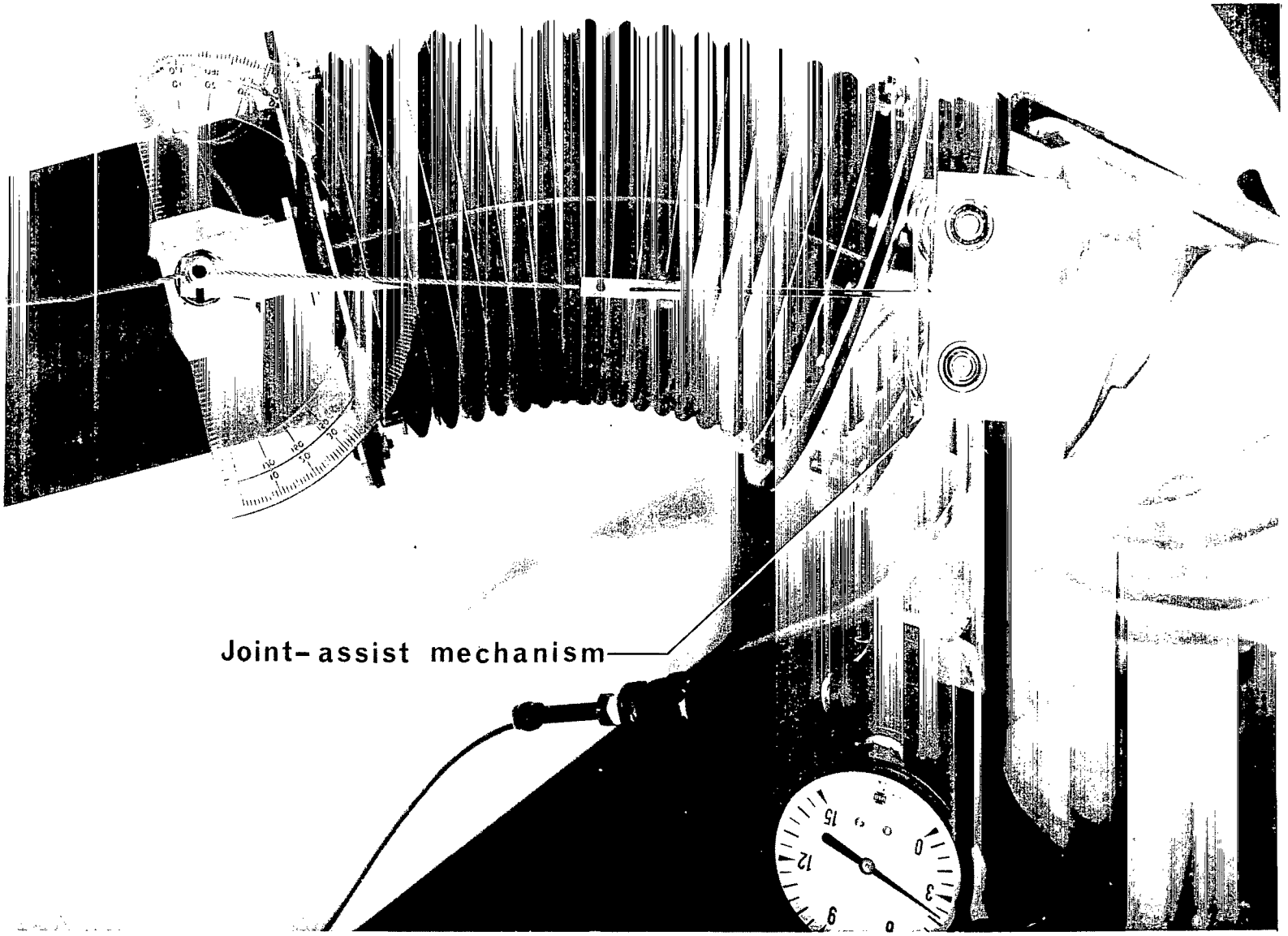

Figure 14.- Test subject with arm inserted in pressurized space-suit arm simulator. $2\theta = 30^{0}$.

L-67-5882.1

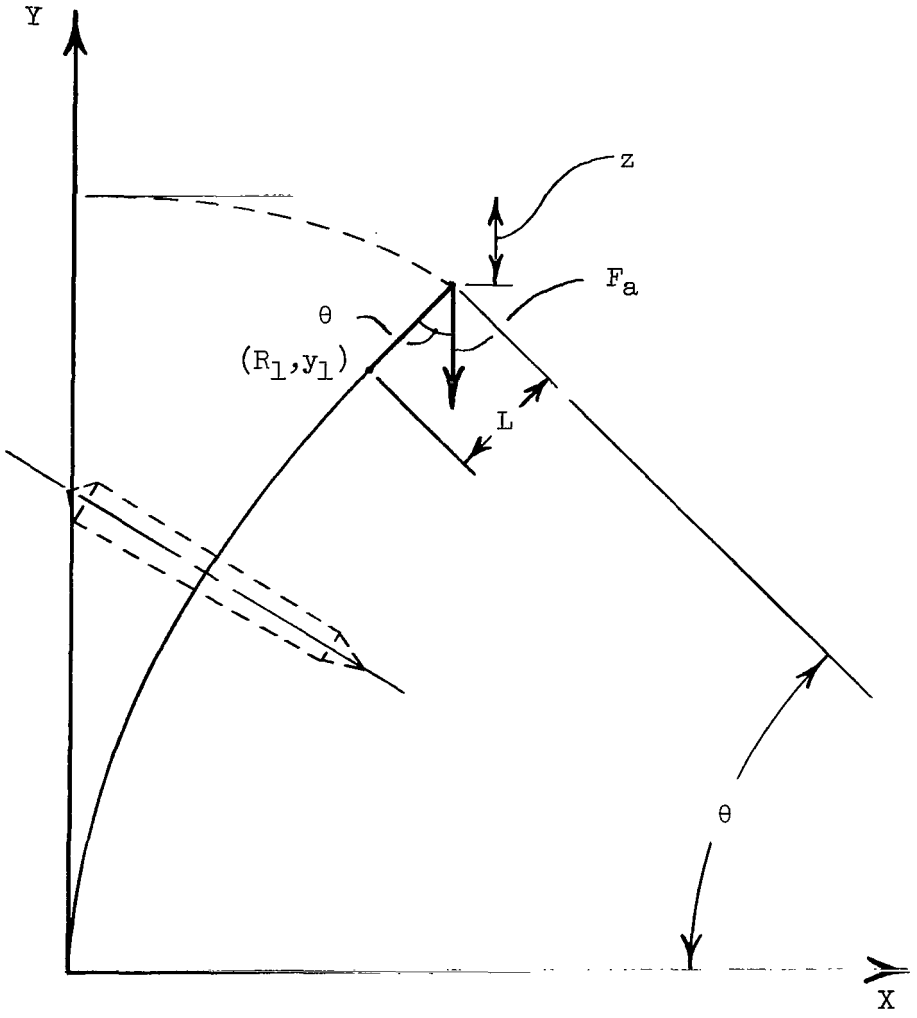

Figure 15.- Frame of reference positioned at axial center of median convolute.

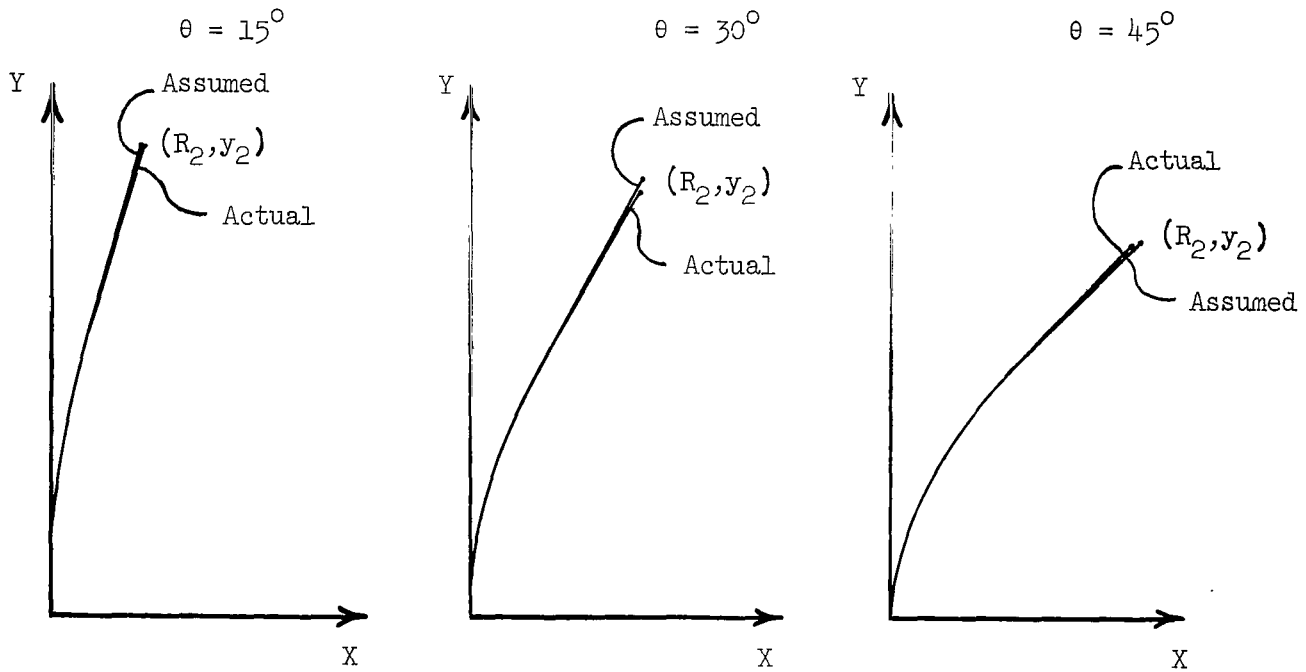

Actual

R_2 = 1.06 in. (2.69 cm) y_2 = 5.34 in. (13.6 cm)	R_2 = 1.98 in. (5.03 cm) y_2 = 4.88 in. (12.4 cm)	R_2 = 2.85 in. (7.24 cm) y_2 = 4.34 in. (11.0 cm)

Assumed

R_2 = 1.00 in. (2.54 cm) y_2 = 5.37 in. (13.6 cm)	R_2 = 1.99 in. (5.05 cm) y_2 = 5.02 in. (12.7 cm)	R_2 = 2.98 in. (7.56 cm) y_2 = 4.45 in. (11.3 cm)

Figure 16.- Comparison of actual and assumed bending mode for neutral axis of joint.

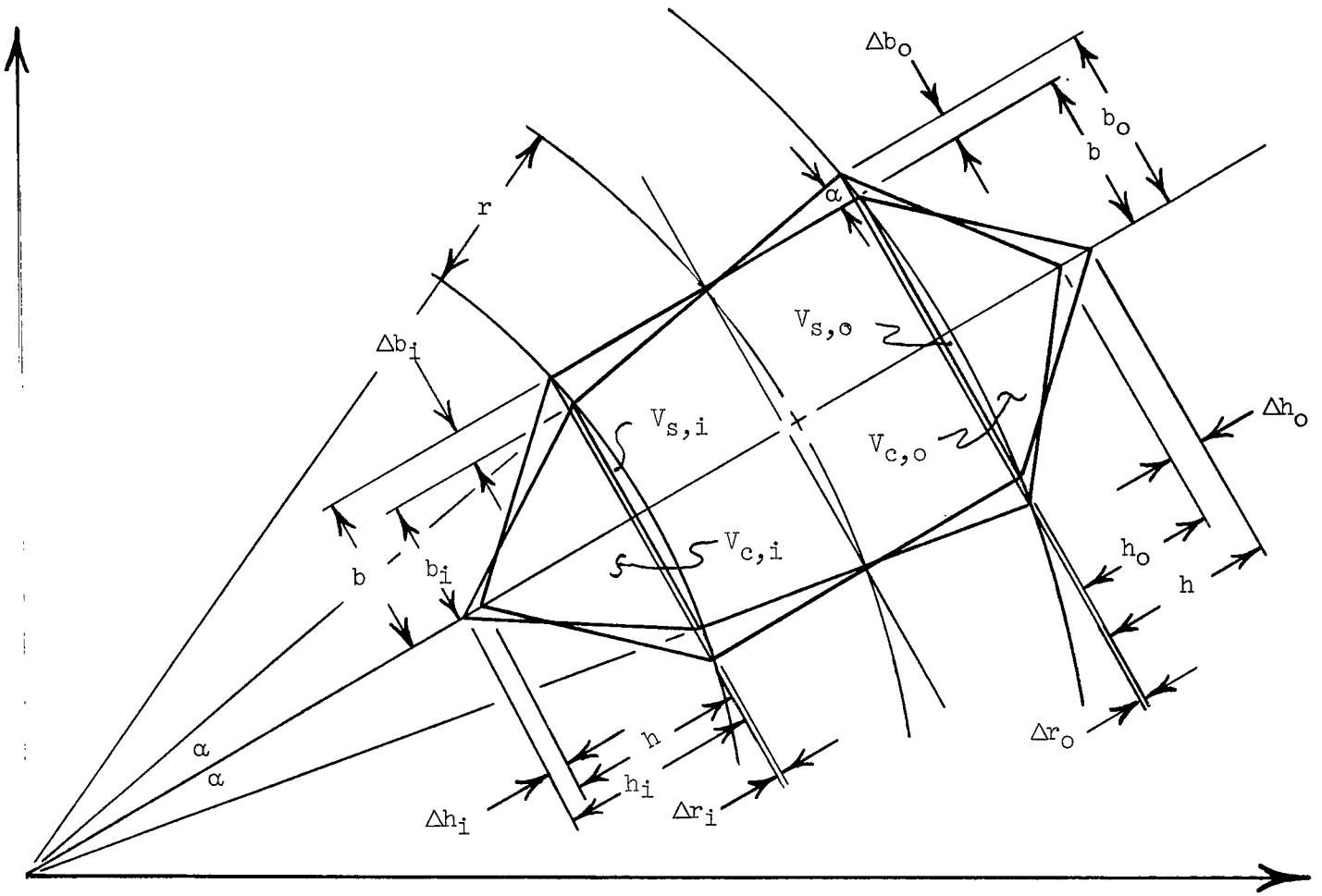

Figure 17.- Deformation characteristics of an arbitrary convolute.

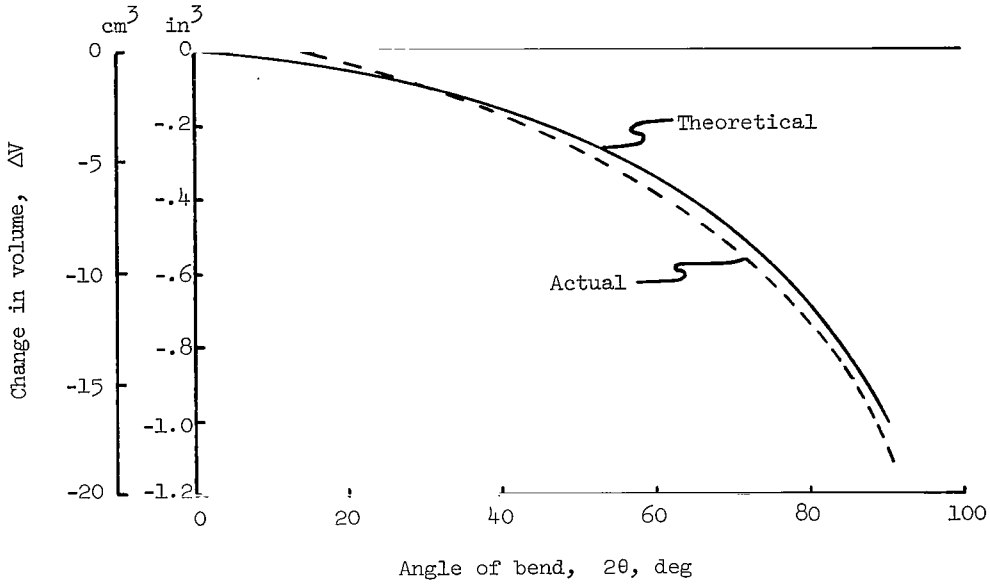

Figure 18.- Comparison of actual and theoretical changes in volume.

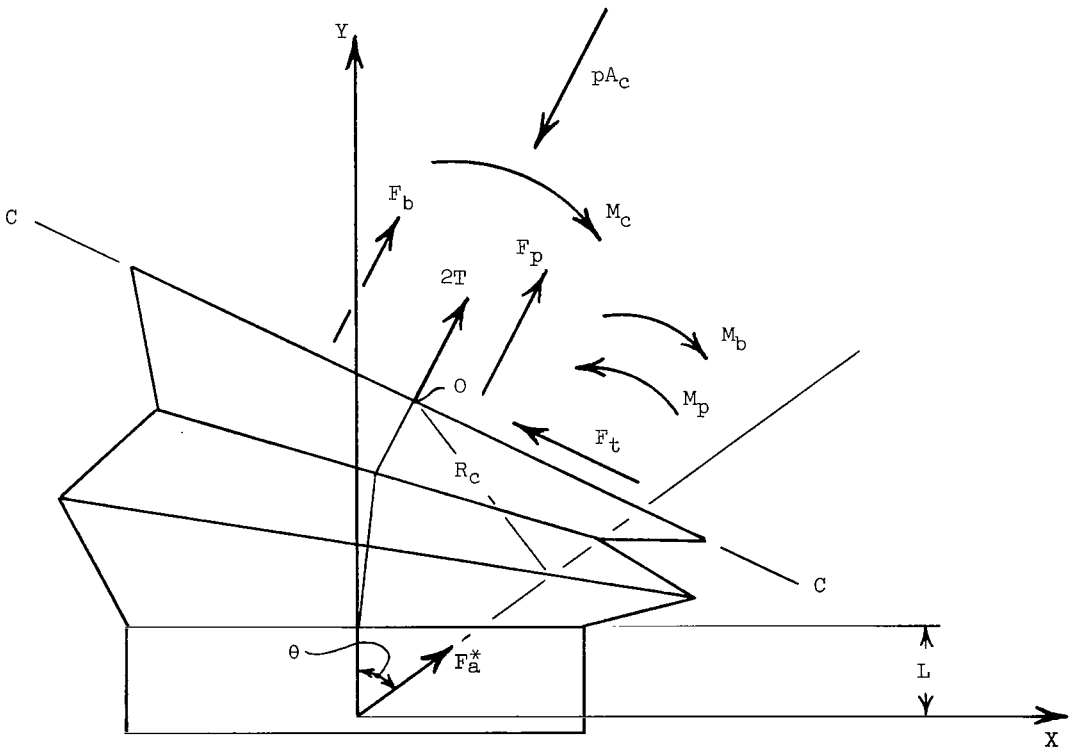

Figure 19.- Free body of a portion of the joint.

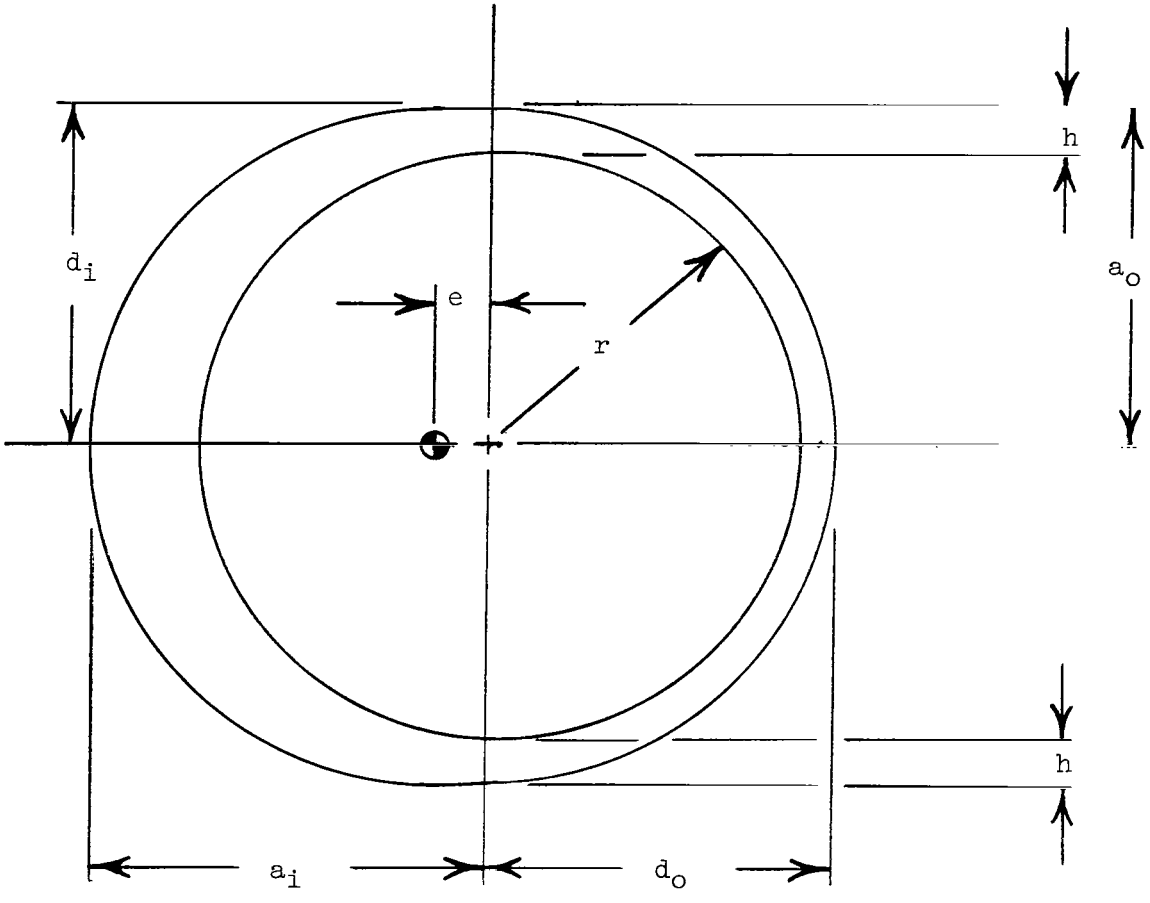

Figure 20.- Geometry of axial plane at apex of convolute.

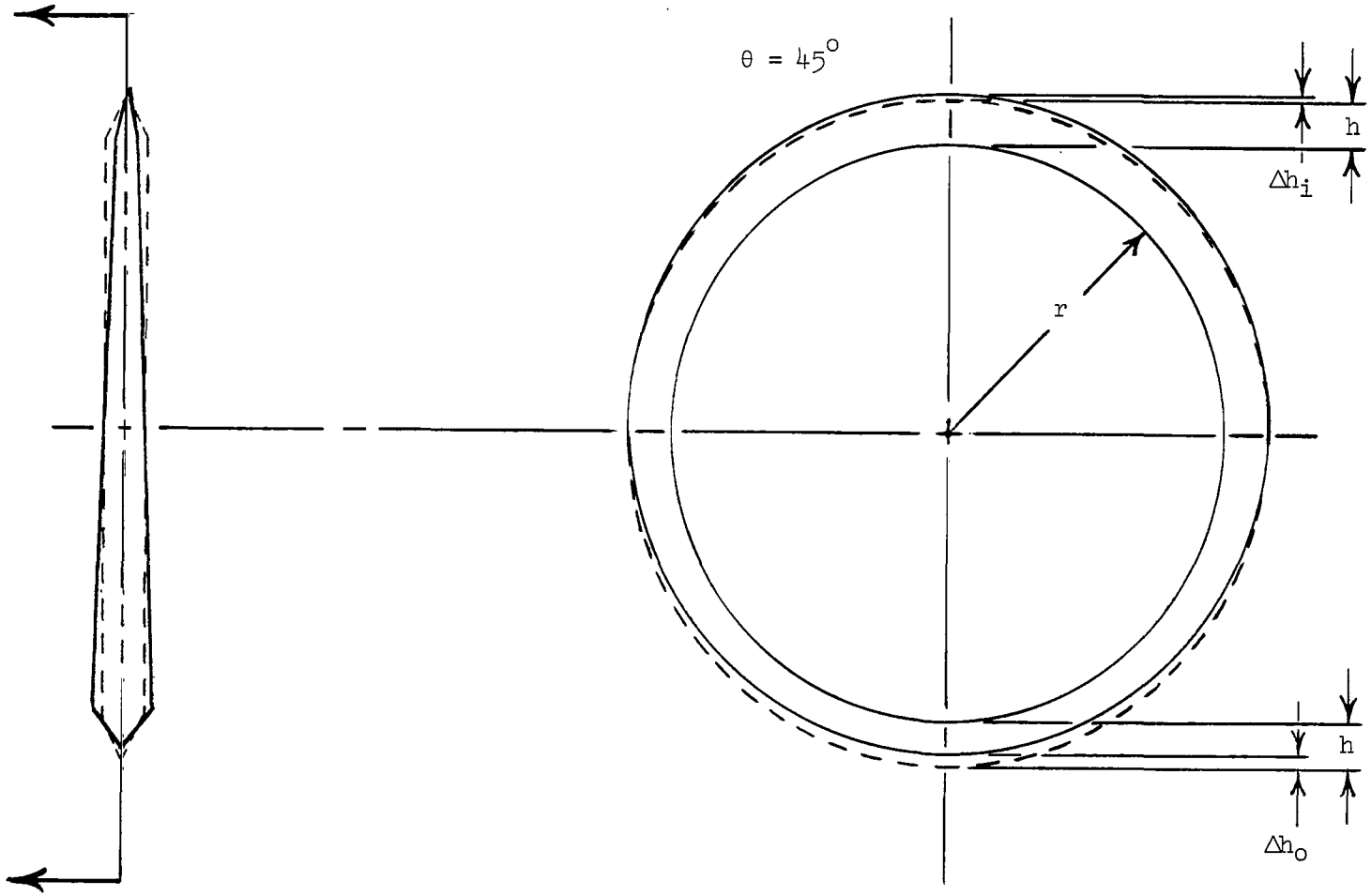

Actual Δh_o = 0.041 in. (0.104 cm)
Assumed Δh_o = 0.041 in. (0.104 cm)

Actual Δh_i = 0.017 in. (0.0432 cm)
Assumed Δh_i = 0.021 in. (0.0534 cm)

Figure 21.- Comparison of actual and assumed deformation mode for axial plane at apex of convolute.

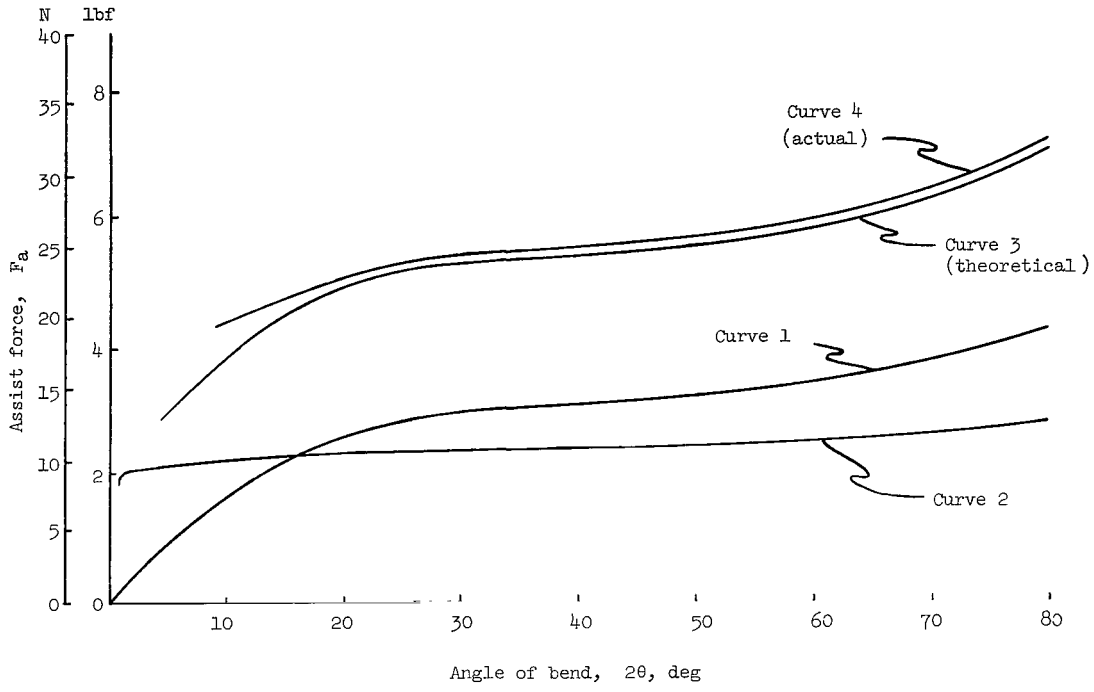

Figure 22.- Comparison of actual and theoretical values of assist force for a nonconstant-volume joint.

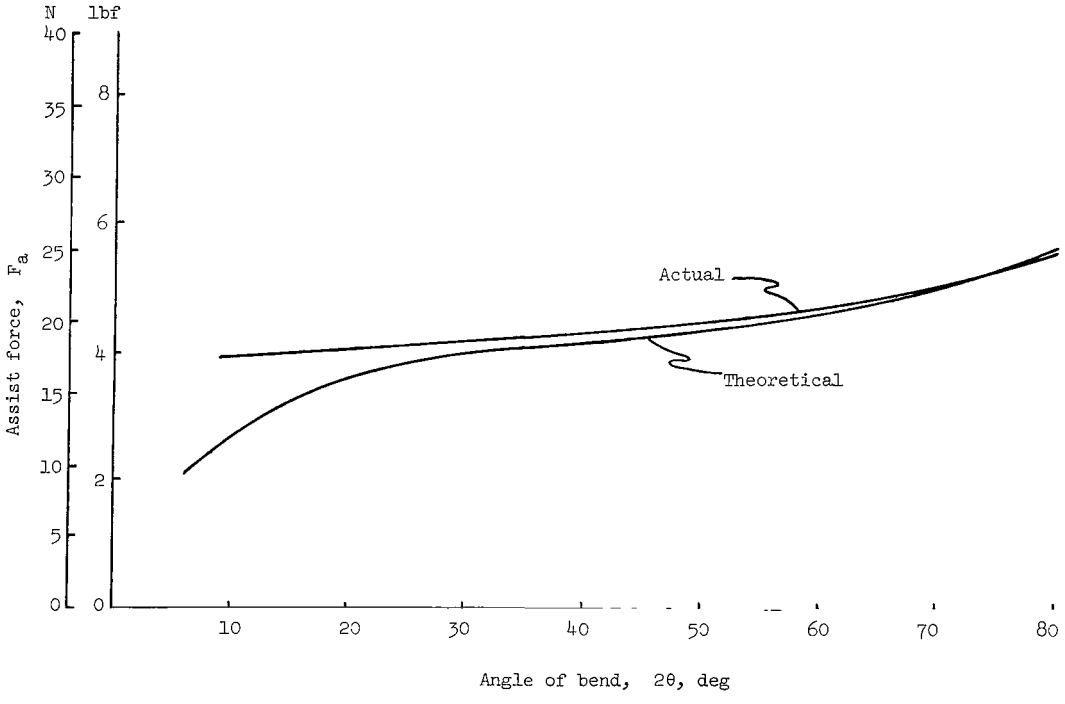

Figure 23.- Comparison of actual and theoretical values of assist force for a constant-volume joint obtained by ganging convolutes.

NASA-Langley, 1969 —— 5 L-6183

NATIONAL AERONAUTICS AND SPACE ADMINISTRATION
WASHINGTON, D. C. 20546

OFFICIAL BUSINESS

FIRST CLASS MAIL

POSTAGE AND FEES PAID
NATIONAL AERONAUTICS AND
SPACE ADMINISTRATION

POSTMASTER: If Undeliverable (Section 158 Postal Manual) Do Not Return

"The aeronautical and space activities of the United States shall be conducted so as to contribute . . . to the expansion of human knowledge of phenomena in the atmosphere and space. The Administration shall provide for the widest practicable and appropriate dissemination of information concerning its activities and the results thereof."

—NATIONAL AERONAUTICS AND SPACE ACT OF 1958

NASA SCIENTIFIC AND TECHNICAL PUBLICATIONS

TECHNICAL REPORTS: Scientific and technical information considered important, complete, and a lasting contribution to existing knowledge.

TECHNICAL NOTES: Information less broad in scope but nevertheless of importance as a contribution to existing knowledge.

TECHNICAL MEMORANDUMS: Information receiving limited distribution because of preliminary data, security classification, or other reasons.

CONTRACTOR REPORTS: Scientific and technical information generated under a NASA contract or grant and considered an important contribution to existing knowledge.

TECHNICAL TRANSLATIONS: Information published in a foreign language considered to merit NASA distribution in English.

SPECIAL PUBLICATIONS: Information derived from or of value to NASA activities. Publications include conference proceedings, monographs, data compilations, handbooks, sourcebooks, and special bibliographies.

TECHNOLOGY UTILIZATION PUBLICATIONS: Information on technology used by NASA that may be of particular interest in commercial and other non-aerospace applications. Publications include Tech Briefs, Technology Utilization Reports and Notes, and Technology Surveys.

Details on the availability of these publications may be obtained from:

SCIENTIFIC AND TECHNICAL INFORMATION DIVISION

NATIONAL AERONAUTICS AND SPACE ADMINISTRATION

Washington, D.C. 20546