N69 26355
NASA CR 101126

CASE FILE COPY

A Space Communications Study

Status Report

December 15, 1968- March 15, 1969

Prepared for

National Aeronautics and Space Administration

Electronic Research Center

under

NASA Grant NGR - 33 - 006 - 020

Principal Investigator

Donald L. Schilling
Associate Professor

Co-Principal Investigators

Kenneth K. Clarke
Professor

Raymond L. Pickholtz
Associate Professor

Department of Electrical Engineering

Polytechnic Institute of Brooklyn

Introduction

This status report summarizes three areas of research being supported under NASA Grant NGR - 33 - 066 - 020 during the period December 15, 1968-March 15, 1969. The topics covered in the letter are "Harmonic Distortion in the Frequency Demodulator Using Feedback", "Delta Modulation", "Recursive Techniques in Signal Processing" and "Multipath Fading".

I. HARMONIC DISTORTION IN AN FMFB

Harmonic distortion in an FMFB was considered in the first quarterly status report (September 15, 1968-December 15, 1968). Figure I. 2 of that report showed the variation of distortion with the various FMFB parameters. Since then, we have been able to obtain a closed form solution for the harmonic distortion and are presently determining an expression for the intermodulation distortion.

The equations governing the operation of the first-order FMFB have been given in the 1968 annual report. They are:

$$\frac{\dot{\varepsilon}}{\alpha} + \frac{G+1}{A} \sin \varepsilon = \frac{\phi_m}{\alpha} \tag{1}$$

and

$$\frac{\dot{A}}{\alpha} + A = \cos \varepsilon \tag{2}$$

where

$$\varepsilon \equiv \phi_{vco} - \phi_m(t) \tag{3}$$

Thus, the input to the vco, which is directly proportional to $\dot{\phi}_{vco}$, is equal to the sum of $\dot{\phi}_m$ the modulating signal, and $\dot{\varepsilon}$ which represents the error. The distortion is inherent in $\dot{\varepsilon}$.

It can be shown that in the region of interest where the harmonic distortion is less than -40dB that Eq. 1 can be used to calculate distortion with A set equal to unity. This result is clear from Eq. 2, since for low distortion $\varepsilon \ll 1$, $\cos \varepsilon \approx 1$ and $A \approx 1$.

Solving Eq. 1 for $\dot{\varepsilon}$ and then calculating the distortion yields

$$D = 20 \log_{10} \left\{ \frac{\left[\Delta\omega / (G+1)\alpha \right]^3}{24\beta} \right\} \tag{4}$$

where D is the harmonic distortion in dB, β is the modulation index assuming $\phi_m(t) = \beta \sin \omega_m t$, $\Delta\omega = \beta\omega_m$, G is the feedback-factor in the FMFB, and 2α is the bandwidth of the IF filter preceding the limiter-discriminator in the FMFB.

For example, if the FMFB is to be designed so that the harmonic distortion is less than or equal to -60dB and β=5,

$$\Delta\omega \simeq \frac{1}{2}[(G+1)\alpha]$$

II. DELTA MODULATION

Delta Modulation (DM) is a technique of transmitting an analog signal by first encoding the signal into binary digits (bits). The bit stream may then be transmitted using PSK, FSK, DPSK, etc. The principle advantage of delta modulation is the relative simplicity of the encoder and decoder as compared to the encoder and decoder for PCM. However, the quantization (or granular) noise in DM is much greater than that found for PCM:

$$\left(\frac{S_o}{N_o}\right)_{DM} \simeq \frac{1}{20(f_M\tau)^3} \tag{1}$$

$$\left(\frac{S_o}{N_o}\right)_{PCM} = 2^{2N} \tag{2}$$

where f_M is the bandwidth of the signal to be delta modulated, τ is the bit duration of the encoded signal, and N is the number of binary digits required to identify a signal which has been quantized into M levels. Thus $M = 2^N$.

Equations 1 and 2 can be compared by relating $f_M\tau$ and N. The duration of a bit in PCM is $T = \frac{1}{2f_M N}$ if sampling is performed at the Nyquist rate. Thus, if we require $\tau = T$ we have:

$$\left(\frac{S_o}{N_o}\right)_{DM} \simeq 0.4N^3 \tag{3}$$

For example in 7-bit PCM, $\left(\frac{S_o}{N_o}\right)_{PCM}$ = 42dB, while with $\tau = T$, $\left(\frac{S_o}{N_o}\right)_{DM} \approx$ 22dB.

Thus, the "cost" required for the simplicity achieved in DM is 20dB for this case.

In many cases the increase in quantization noise is found to be tolerable. We have listened to taped music played through our DM and have not found it unpleasant. The transmitter is shown in Fig. II. 1, and the receiver in Fig. II. 2.

TRANSMITTER

The encoding of the input signal is performed using the circuit of Fig. II. 1. The DM, as seen from this figure, is a feedback circuit. The input and feedback signal are subtracted in K_1 and the error is amplified in K_2. T_3 and T_4 provide additional amplification so that the output of T_3 is OV when the error is negative and the output of T_5 is OV when the error is positive. The error voltage is sampled in T_6 and T_7 so that a positive pulse is emitted from T_6 when the error "is not" negative when sampled, and a positive pulse is emitted from T_7 when the error " is not" positive when sampled. A pulse from T_6 "sets" F_1 while a pulse from T_7 "resets" F_1. The output of F_1 is the encoded bit stream.

The feedback signal is derived by "integrating" the output of F_1. The integration is performed by an RC (47KΩ, 0.01μF) low pass filter. T_8, an emitter follower is used for isolation.

The sampling pulses are generated by a monostable multivibrator having a pulse width of 1μ sec. The clock used to drive M_1 is the astable multivibrator A_1. The frequency of A_1 is adjustable from 50 KHz to

approximately 200KHz. If other clock frequencies are required an external clock can be inserted.

RECEIVER

The receiver, shown in Fig. II. 2 illustrates the principal advantage of DM. The receiver consists of a bistable multivibrator, a linear amplifier, and several stages of low pass filtering.

Adaptive Delta Modulation

One of the problems associated with DM is "slope overload noise". This noise results when the feedback signal fails to change as rapidly as the input signal. Slope overload noise can be drastically reduced by using adaptive techniques which varies the maximum slope of the feedback signal. We are currently investigating several different adaptive approaches.

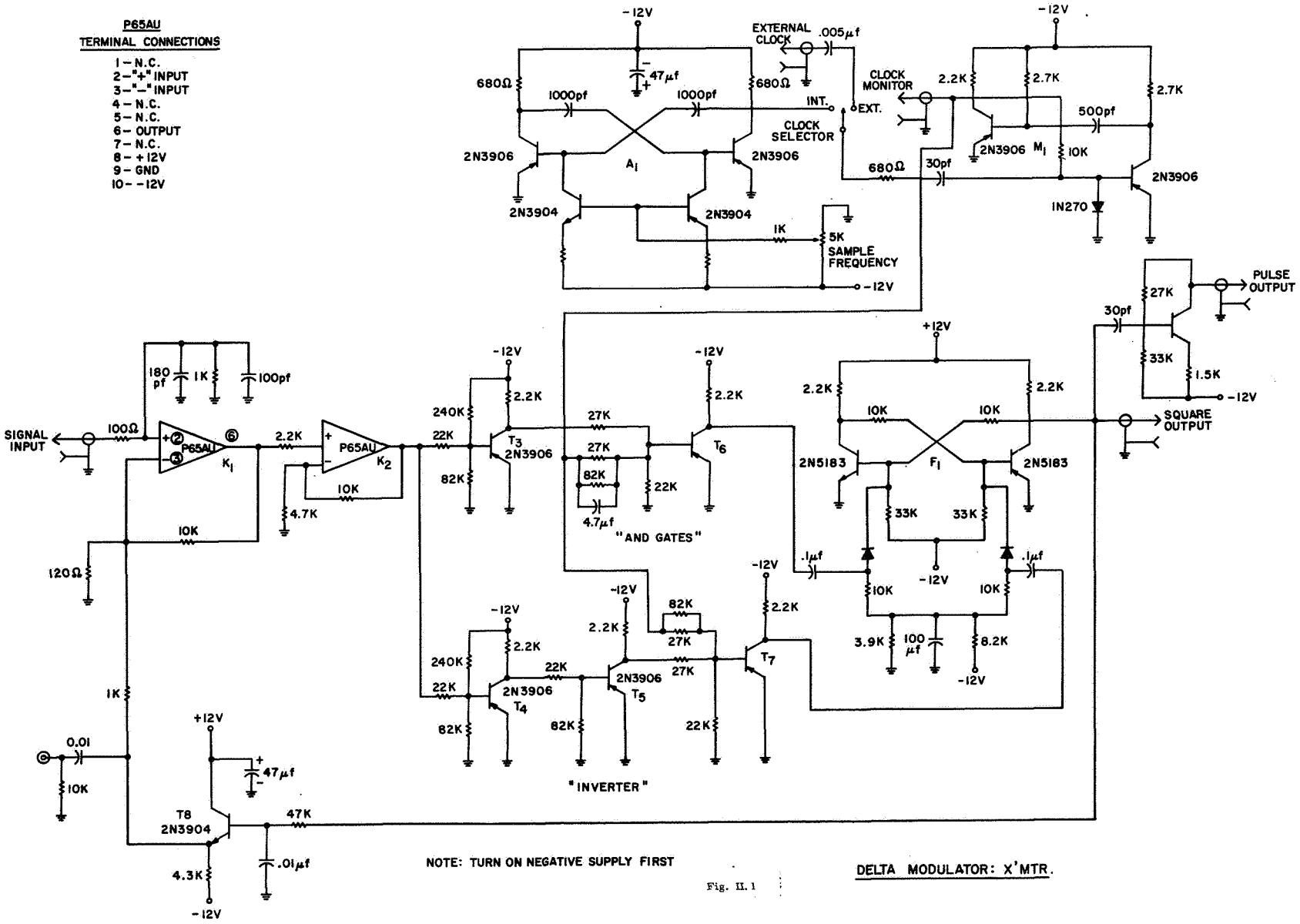

NOTE: TURN ON NEGATIVE SUPPLY FIRST

Fig. II. 1

DELTA MODULATOR: X'MTR.

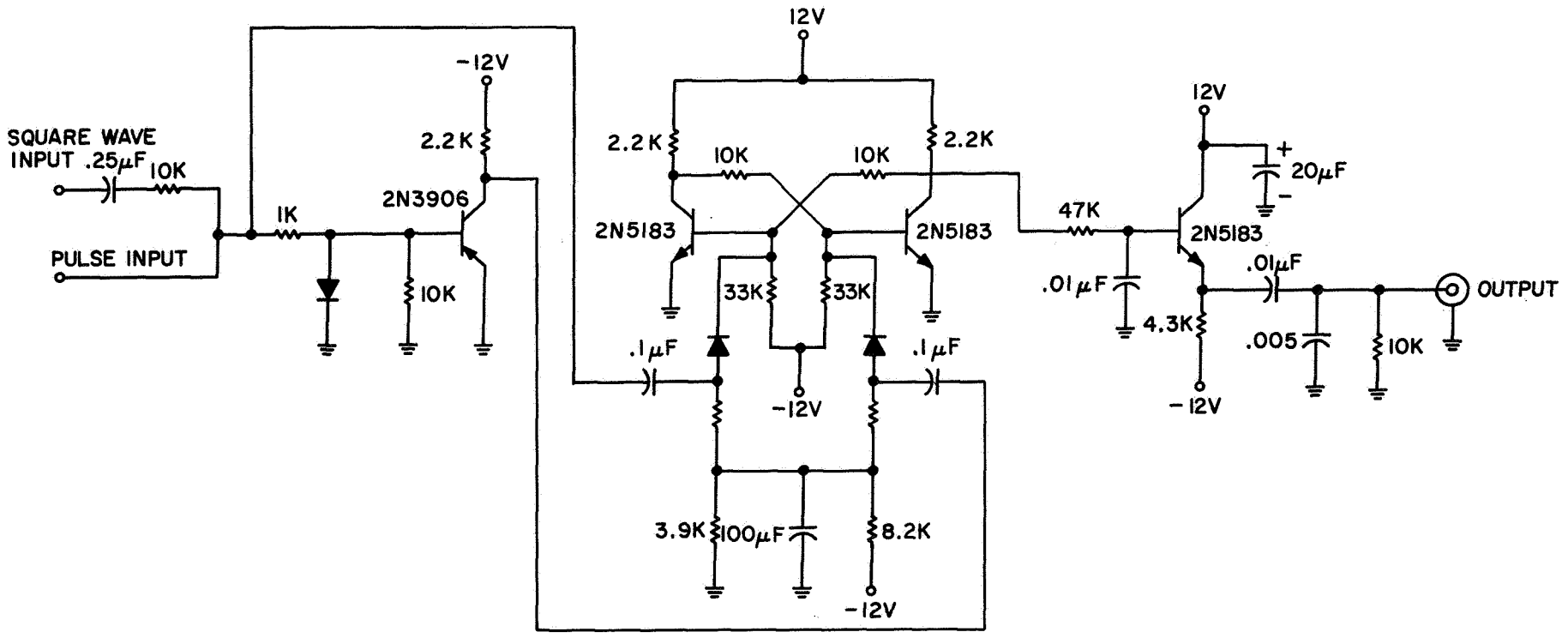

Fig. II. 2 DELTA MODULATOR RECEIVER

III. RECURSIVE TECHNIQUES IN SIGNAL PROCESSING

Various algorithms and their general application to diverse communications problems have been studied. The objectives vary from providing optimum digital processing of signals for detection and estimation to such diverse and important problems as data equalization, data compression and pattern recognition. Underlying all of the practical and useful methods is the fact that the processing of the signals is recursive in form, i.e. previous computations are used to effect subsequent outputs.

Since the last report, two significant advances have been worked out at Polytechnic Institute of Brooklyn in the area of recursive signal processing techniques. The first is an extension of previous work on the recursive detection of known signal in noise[1].

The present work[2] generalizes the recursive detector by permitting complete freedom to the dynamics of the noise. Basically, the problem is to detect one of M signals in the presence of additive, Gaussian, nonstationary noise which is described by being represented as the output of a time varying linear dynamical system driven by white noise. Specifically, the receiver observes

$$Y(t) = S_i(t) + X(t) \qquad i = 1 \ldots M \tag{1}$$

when X(t) is the first component of the state vector generated by:

$$\dot{\underline{X}}(t) = A\,\underline{X}(t) + \underline{b}(t)\,W(t) \tag{2}$$

A is the state matrix and W(t) is white noise with covariance $\eta 0(t_1)\delta(t-t_1)$. The solution to the problem of finding the optimum recursive detector is

---

1. Pickholtz, R. L. and R. Boorstyn "A Recursive Approach to Signal Detection" PGIT (IEEE) May 1968.
2. Pickholtz, R. and R. Boorstyn "Recursive Detection with Numerator Dynamics" Presented at International Symposium on Information Theory, Jan. 1969.

outlined in Fig. III. 1. (The detailed derivations are omitted and will be published in full at a later date.

The figure shows the signal processing operations which are to be performed on the observed signal Y(t). First, a vector estimate of the equivalent state is formed by using the waveform data Y(t) as the input to a recursive Kalman-Bucy filter. The dynamics of this operation are as follow:

$$\dot{\hat{\underline{Y}}}(t) = A(t)\ \dot{\hat{\underline{Y}}}(t) + Z(t)\ [\ \dot{Y}(t) - C^T A(t)\hat{\underline{Y}}(t)\ ] \tag{3}$$

when A(t) is the dynamics matrix of the noise producing system as in (2) and the gain factor is given by

$$Z(t) = [\ M(t)A^T(t)\ \underline{C} + \underline{b}\ (t)n_0(t)\underline{b}^T(t)\ \underline{C}\ ]\ [n_0(t)\ \underline{C}^T\ \underline{b}(t)\ ]^{-1} \tag{4}$$

M(t) is found from the Ricotti equation from Kalman-Bucy theory.

and,

$$\underline{C} = \begin{bmatrix} 1 \\ 0 \\ \cdot \\ \cdot \\ \cdot \\ \cdot \\ 0 \end{bmatrix}.$$

Once the state estimate is formed, we show that this estimate is Markov and thus our previously derived techniques[1] for a recursive test statistic (log of the likelihood ratio) can be used. The result is

$$\theta_n - \theta_{n-1} = 2(\underline{S}_n - B_n\underline{S}_{n-1})^T K_{n-1}\ (Y_n - B_n\underline{Y}_{n-1}) \tag{5}$$

where the B_n and K_{n-1} can be found from the statistics of the noise and the index n refers to the sample time of the processed estimates.

Equations (3) and (5) can be easily implemented in real time in either digital or analog form. The advantages are:

(i) They are the only known solutions for nonstationary noise.

(ii) They are causal, real-time operations.

(iii) Being recursive operations they require a minimum of computational effort and/or memory capacity.

Possibly of greater significance is the general insight that is obtained for general processing of signals for detection when the sample spacing used in (5) (represented by the index n) is allowed to go to zero so that the signal is essentially processed in a continuous fashion. The results of this analysis leads to the following:

$$\dot{\theta}(t) = k\,(\dot{S}(t) - \hat{S}_2(t))\,(\dot{Y}(t) - \hat{Y}_2(t)) \tag{6}$$

with corresponding initial conditions. The subscripted quantities $\hat{S}_2(t)$ and $\hat{Y}_2(t)$ are the <u>second</u> scalar components of the output of the recursive state estimator. The most interesting and important aspect of this result is that it can be shown that forming $[\dot{Y}(t) - \hat{Y}_2(t)]$ from the observation $Y(t)$ is equivalent to performing a causal, and causally invertable, prewhitening operation on the data $Y(t)$. $[\dot{Y}(t) - \hat{Y}_2(t)]$ is shown to be a white process. This operation, which was also recently obtained by Kailath and Geesey[3], has been called an innovations process since the operation of forming the white process can be viewed as one of extracting all the new and nonredundant data from the observation. Explicit examples have been worked out and some computer runs will be performed.

The second area of work in recursive detection is the development and analysis of a new iterative algorithm for optimization. The algorithm is called second order gradient (SOG) iteration. The new algorithm is shown to have more rapid convergence and smaller limiting mean square error than the standard gradient algorithm when operating with noisy data. The

---

3. Kailath, T. "The Innovations Concept in Detection and Estimation Theory", International Symposium on Information Theory, Ellenville, N. Y., Jan. 1969.

technique has been applied, at present, to adaptive equalization with excellent simulation results. The method has immediate application also to adaptive array processing, adaptive detection of FM and other analog signals and to other optimization problems. The details and results will be reported more fully in the next quarter.

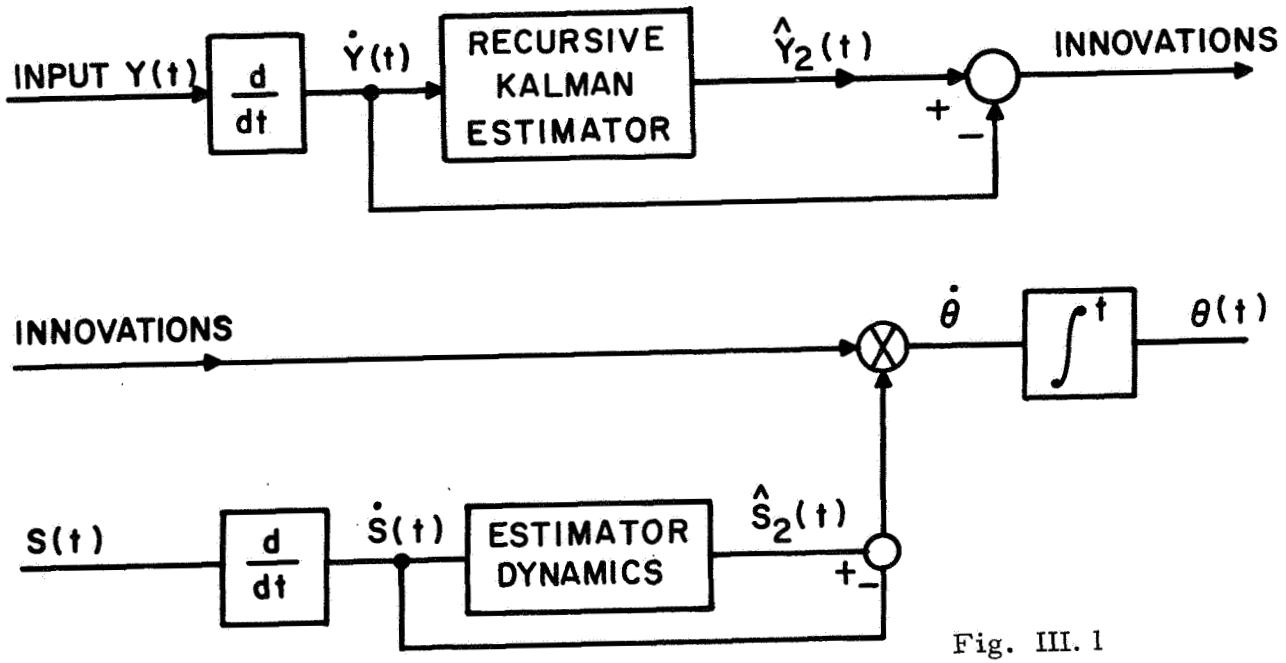

Fig. III. 1

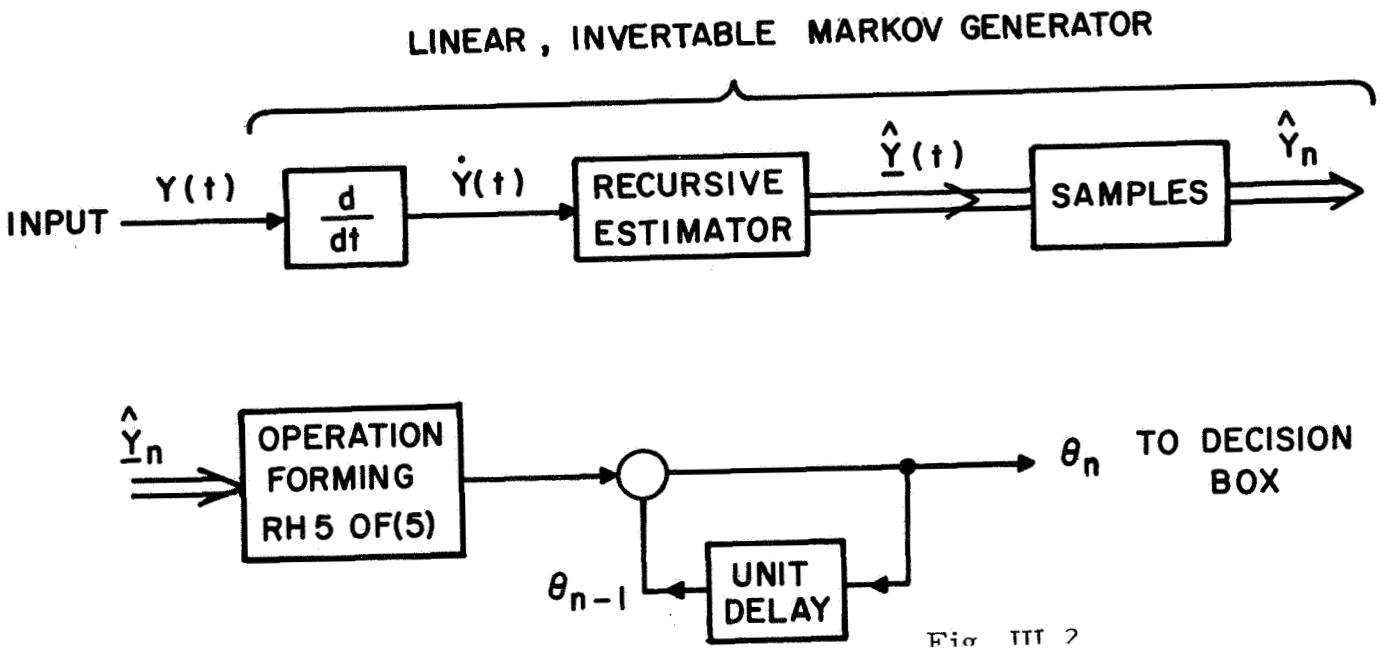

Fig. III. 2

IV. MULTIPATH FADING

A program of investigation of the effects of multipath fading upon the operation of threshold extending FM receivers is underway.

The PIB random channel simulator is being used in a "frozen channel mode" to produce results of the form illustrated in Figures 1 and 2. In these figures one sees the wideband spectral response of the channel and the detected FM response of the channel. In the last case the discriminator output via both a wideband and an "optimum" band low pass filter is shown. Figure 1 indicates a case with only two dominant paths. In this case single tone, or binary FM suffers almost no distortion. Figure 2 indicates a case with many small transmission paths. In this case single tone or binary FSK signals are almost completely wiped out [the sine wave superimposed over the actual "optimum" low pass filter output signal was received via a 80dB attenuator instead of via the simulator. It merely serves to indicate that the system is functioning correctly.]

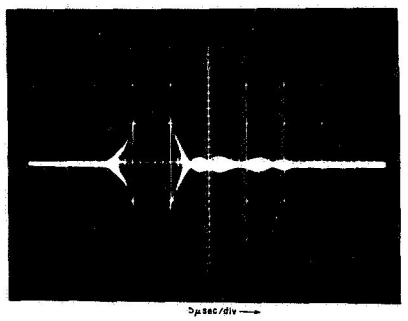

RESPONSE OF CHANNEL TO A 3.5μsec "PACKET" AT 3.75MHz. SCATTERER 3c. FIXED POSITION 700μsec FROM START OF PACKET TO LEFT EDGE OF TRACE.

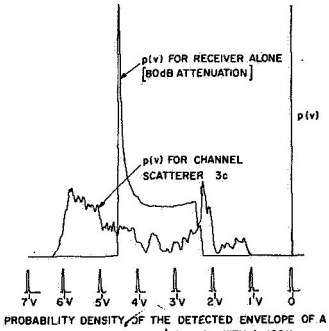

PROBABILITY DENSITY OF THE DETECTED ENVELOPE OF A FM SIGNAL. MODULATED TO ±100kHz WITH A 100Hz TRIANGULAR SIGNAL. SCATTERER 3c. FIXED POSITION.

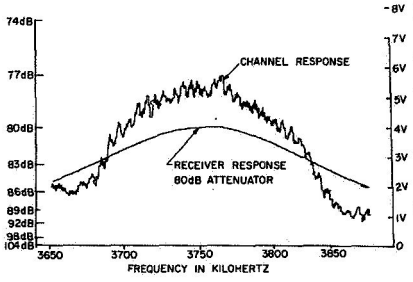

DETECTED ENVELOPE RESPONSE vs FREQUENCY

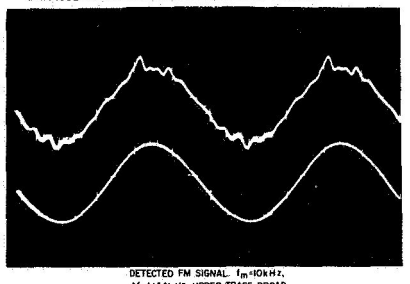

DETECTED FM SIGNAL. f_m=10kHz. Δf=±144kHz. UPPER TRACE BROAD BAND LOWER TRACE VIA A 20kHz. FOUR POLE MAXIMALLY FLAT FILTER 20μsec/div AND 0.5v/div SCATTERER 3c

Fig. 1

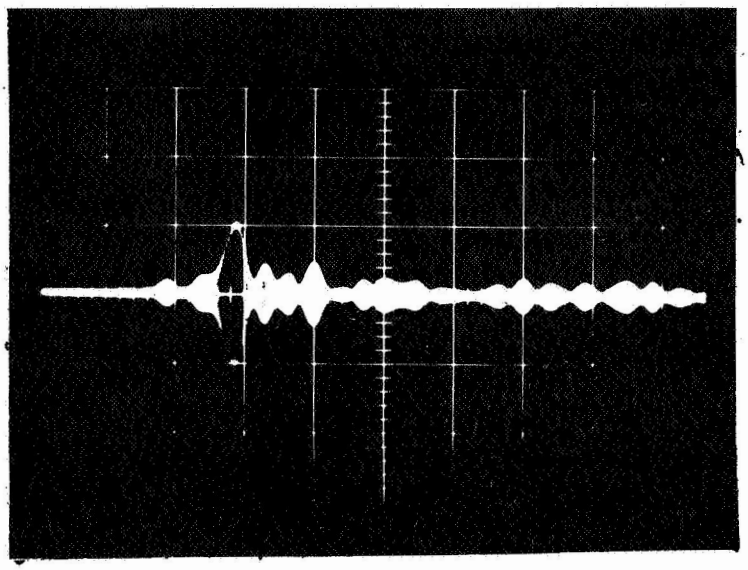

10μ sec/div →

RESPONSE OF CHANNEL TO A 3.5μsec "PACKET" AT 3.75MHz. SCATTERER 4. FIXED POSITION 680μsec FROM START OF PACKET TO LEFT EDGE OF TRACE.

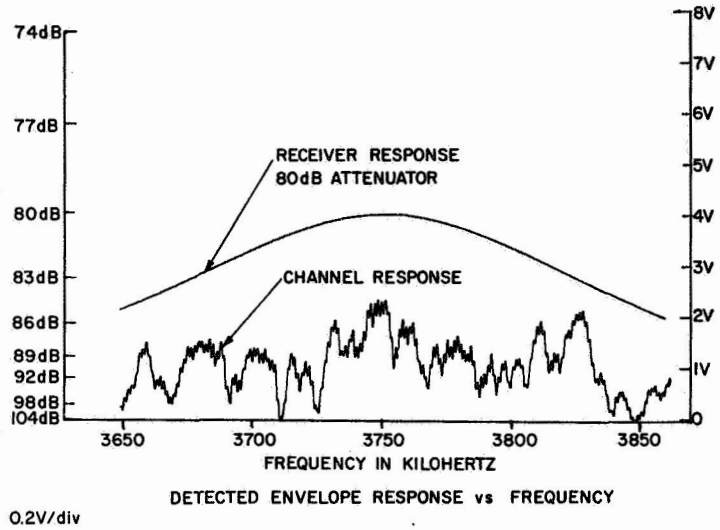

DETECTED ENVELOPE RESPONSE vs FREQUENCY

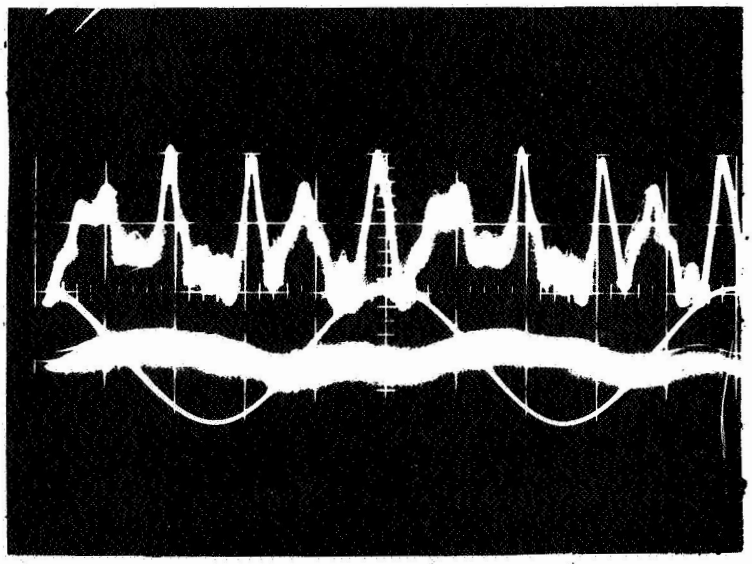

DETECTED FM SIGNAL. f_m=10kHz, Δf=±144kHz. UPPER TRACE BROAD BAND LOWER TRACE VIA A 20kHz, FOUR POLE MAXIMALLY FLAT FILTER. 20μsec/div AND 0.5v/div. SCATTERER 4.

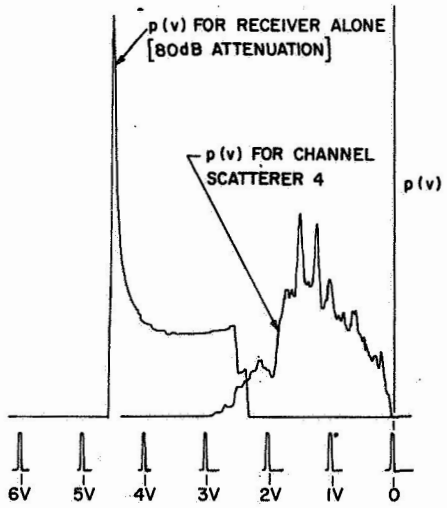

PROBABILITY DENSITY OF THE DETECTED ENVELOPE OF A FM SIGNAL MODULATED TO ±100kHz WITH A 100Hz TRIANGULAR SIGNAL. SCATTERER 4. FIXED POSITION.

Fig. 2