N69-31489
(ACCESSION NUMBER) (THRU)
54 1
(PAGES) (CODE)
NASA CR-102219 15
(NASA CR OR TMX OR AD NUMBER) (CATEGORY)
FACILITY FORM 602

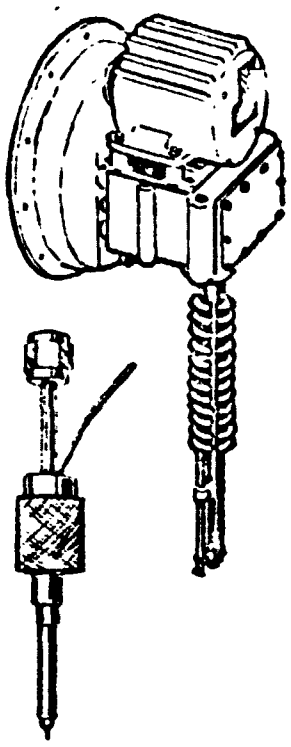

NOV 1968
RECEIVED
NASA STI FACILITY
INPUT BRANCH

CR-102219

HYDROGEN RELIQUEFIER

QUARTERLY REPORT

(September 27, 1967 to December 26, 1967)

Air Products and Chemicals, Inc.
Advanced Products Department
1919 Vultee Street
Allentown, Pennsylvania

Contract No.: NAS 8-21203 January 15, 1968
Control No. : DCN 1-7-52 20020(IF) & S-1 (IF)
Distribution: PR-SC (1)
MS-IL (2)
MS-T (1)
R-P&VE-RI (1)
R-P&VE-PTP (4)

C

JUL 1969
RECEIVED
STI FACILITY
INPUT BRANCH

ADVANCED PRODUCTS DEPARTMENT

S67-53752

ADVANCED PRODUCTS DEPARTMENT

Air Products and Chemicals INC.

Air Products and Chemicals, Inc.
Advanced Products Department
1919 Vultee Street
Allentown, Pennsylvania

Quarterly Report on Hydrogen Reliquefier
Covering Period September 27, 1967 to December 26, 1967

Prepared by: E. B. Kunkle
R. N. Meier
M. A. Benning
R. E. Luybli
J. R. Marple

Distribution:

NASA		APCI
PR-SC	(1)	R. N. Meier
MS-IL	(1)	C. McKinley
MS-T	(1)	A. Lapin
R-P&VE-RI	(1)	A. Singleton
R-P&VE-PTP	(4)	H. Villaume
		J. Cost

Technical Report Contract No. NAS 8-21203
Control No. DCN 1-7-52-20020(IF) & S-1 (IF)

1/15/68

ADVANCED PRODUCTS DEPARTMENT

Air Products and Chemicals INC.

This report was prepared by Air Products and Chemicals, Inc. under Contract NAS 8-21203 for the George C. Marshall Space Flight Center of the National Aeronautics and Space Administration. The work was administered under the technical direction of the Propulsion and Vehicle Engineering Laboratory of the George C. Marshall Space Flight Center.

TABLE OF CONTENTS

SECTION		PAGE NO.
	TABLE OF CONTENTS	i
	LIST OF ILLUSTRATIONS	ii
	LIST OF TABLES	iv
I	INTRODUCTION	1
II	ABSTRACT	2
III	DISCUSSION OF COMPUTER SIMULATION PROGRAM	3
IV	HEAT EXCHANGERS	23
V	MACHINERY	35
VI	JOULE-THOMSON VALVE	40
VII	SCHEDULE REVIEW	44
VIII	FORECASTED EFFORT FOR JANUARY, 1968	46

LIST OF ILLUSTRATIONS

FIGURE NO.		PAGE NO.
1	Hydrogen Reliquefier Cycle	4
2	Reliquefaction Fraction & Compressor Flow Fraction vs. Relative Compressor Size	7
3	J-T Valve Inlet Temperature vs. Relative Compressor Size	9
4	Reliquefaction Fraction vs. Transfer Units in Exchangers III and IV.	11
5	Expander Inlet Temperature vs. Transfer Units in Exchanger III	12
6	Reliquefaction Fraction and Compressor Flow Fraction vs. Transfer Units in Exchanger III	13
7	Reliquefaction Fraction and Compressor Flow Fraction vs. Transfer Units in Exchanger III	14
8	Reliquefier Inlet Pressure vs. Reliquefaction Fraction	15
9	Reliquefier Design Print Operating Conditions	19
10	Reliquefier Off Design Point Operating Conditions	20
11	Two Pass Countercurrent Heat Exchanger Design "B" with Ortho-Para Conversion Catalyst	24
12	Two Pass Countercurrent Heat Exchanger Design "A" with Ortho-Para Conversion Catalyst	25
13	Three Circuit Countercurrent Heat Exchanger without Ortho-Para Conversion Catalyst	26
14	Test Set-Up for Exchanger IV	31

LIST OF ILLUSTRATIONS

FIGURE NO.		PAGE NO.
15	Test Set-Up for Exchanger III	33
16	Proposed Hydrogen Compressor/Expander	38
17	Automatic Joule-Thomson Valve	41
18	Test Set-Up for J-T Valve	42
19	Hydrogen Reliquefier Schedule	45

LIST OF TABLES

TABLE NO.		PAGE NO.
I	Comparison of Reliquefier Operation at Two Feed Pressures	16
II	Comparison of System Performance With and Without O-P Conversion in the Medium Pressure Stream of Exchanger III	16
III	Comparison of Heat Exchanger Expected Operating Conditions with Heat Exchangers Test Conditions	29

I. INTRODUCTION

The following report summarizes the Hydrogen Reliquefier project progress from September 27, 1967 through December 26, 1967. For clarity, it is desirable to briefly review the work accomplished and the decisions made in the period from June 27, 1967 through September 26, 1967 and reported in the first quarterly report dated October 10, 1967.

Major efforts in the first three months of this project were expended in defining the best reliquefier cycle. Definition of the best cycle was accomplished by considering the schedule and financial framework of the contract, the state-of-the-art of equipment required for various cycles analyzed, and the maximum reliquefaction fraction that could reasonably be achieved without undue technical risk. It was decided that a two heat exchanger cycle, utilizing a single two stage compressor and a single stage expander best met this definition.

The mode of operation for the reliquefier was investigated. An intermittent mode of operation was selected over that of continuous operation; with start-stop control provided by a pressure switch sensing the hydrogen tank pressure. The selection of on-off operation permitted near optimum reliquefier operation over a reasonable variation in tank pressure.

The machinery motor was selected as a 1/4 HP, 208 VAC, 3 Ø, 60 cycle. Although variable speed drives with sensing devices to vary the speed as a function of feed pressure were considered, they were abandoned as providing increased hardware complexity not warranted at this stage of development.

Bearings and grease requirements for the machinery running gear were investigated. A standard 52100 bearing steel filled with DuPont's Krytox grease was selected as being most compatible with the hydrogen atmosphere experienced in the hydrogen reliquefier.

Preliminary sizing of the heat exchangers and machinery components were starting at the close of the first quarterly report period. The selected cycle was being computerized to complete the optimization by studying operating variables and their effect on system design.

II. ABSTRACT

The following report summarizes the Hydrogen Reliquefier project progress for the second three (3) months interval of a fourteen (14) month program. Major emphasis has been placed on investigating the operating characteristics of the reliquefier cycle previously selected. A computer program was developed to simulate the operation of a reliquefier of fixed compressor and expander geometry and fixed transfer units in each of the two heat exchangers. This program was used to predict the actual behavior of a reliquefier when exposed to variations in:

1. Reliquefier inlet conditions
2. Heat exchanger transfer units
3. Relative compressor to expander flow rates.

The results of this program have shown that the relative flow split between the compressor and expander has the greatest influence on the attainable reliquefaction fraction. Consequently the reliquefier design considers several ways of providing adjustment to these relative flow rates to ensure successful reliquefier operation.

The design uncertainties associated with the machinery volumetric and thermodynamic efficiencies and the heat exchanger transfer units have been evaluated and the physical sizing of the compressor, expander and heat exchangers have been chosen to minimize the technical risks and new development requirements for the prototype hydrogen reliquefier. A design feed rate of 4.0 lbs/hour at 29.4 psia and 41.4°R has been chosen for the reliquefier. The compressor has been sized to have a flow rate of 2.04 lbs/hour (51% of the feed) at these feed conditions. Heat exchanger III was sized to provide 5 transfer units and heat exchanger IV was sized to provide 14.5 transfer units.

Reported are the plans for component test programs which have been devised to permit early evaluation of the heat exchangers and J-T valve. The results of these tests will reduce the design uncertainties for these components.

A revised, more complete, program schedule has been developed and the program is currently proceeding according to schedule. The machinery design and fabrication remains the critical path item.

Having selected the thermodynamic cycle for the prototype reliquefier and having evaluated the major variables affecting the performance of this cycle, the major effort on the project will be to complete the manufacturing drawings and to fabricate the hardware.

III. DISCUSSION OF COMPUTER SIMULATION PROGRAM

The computer analysis of several possible hydrogen reliquefier cycles reported previously was used to select the best cycle. It gave information on the likely feed and reliquefaction rates which might be achieved, and the sizes of machinery and heat exchangers required for the selected cycle. It was not possible, however, to obtain real insight into how a reliquefier of fixed design would respond to variations in feed condition, or of how variations from the predicted design values would affect the reliquefier performance. In order to do this, a second computer program was prepared for the chosen cycle to simulate reliquefier performance with variable feed conditions, different machinery and heat exchanger sizes, and varying values of operating parameters.

A. Description of Program

The program was based on the two exchanger cycle shown in Figure 1. The reliquefier feed conditions, the sizes of the two heat exchangers, in terms of transfer units, the machinery efficiencies, and the relative capacities of the compressor and expander at a particular expander inlet temperature were specified as input data. In all cases, the compressor outlet pressure was specified as 294 psia and the compressor and expander efficiencies as 50% and 60% respectively. The calculational procedure is briefly described below:

1. Calculate the compressor outlet temperature, T3, using the specified feed conditions, outlet pressure and thermodynamic efficiency.

2. Calculate T10, the expander outlet temperature, using the expander inlet temperature T9 chosen as part of the input, and the specified expander thermodynamic efficiency.

3. For the initially assumed value of T9, the relative expander, compressor and reliquefier feed rates were specified. The fraction of the feed to the compressor was designated X design, and represents the relative flow splits at the specified feed conditions and at the initially assumed value of T9. These values completely fix the size of the engine and compressor. A value of T5, the high pressure outlet temperature from exchanger III, was assumed. A stepwise heat and mass balance was calculated for exchanger III, accumulating the transfer units for each step until the sum was equal to the transfer units specified as

HYDROGEN RELIQUEFIER CYCLE

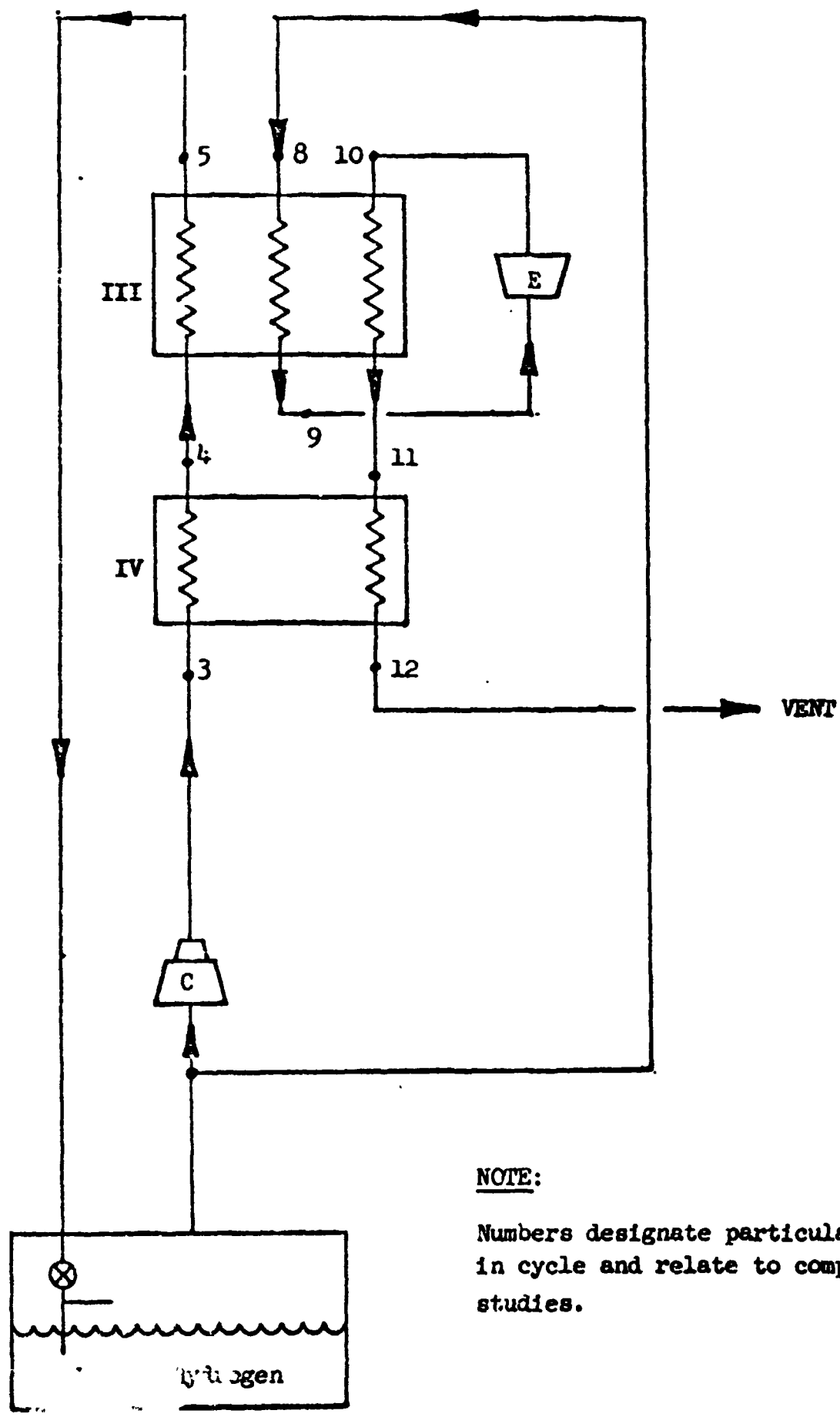

NOTE:

Numbers designate particular point in cycle and relate to computer studies.

Figure 1

input for this exchanger. This calculation gave values for T4, the high pressure outlet of exchanger IV, and T9, the inlet temperature to the expander.

4. The calculated and assumed values of T9, if not nearly equal, were arithmetically averaged to find a new T9. The flow splits were adjusted for this value of T9, and the stepwise heat and mass balance of the exchanger repeated until the assumed and calculated values of T9 were equal.

   NOTE: To simplify the calculational procedure, it was also assumed that if T8, the saturated feed temperature inlet to exchanger III, and T10, the expander exhaust temperature, were not equal, then the warmer of the two was introduced to the heat exchanger later, at a point where the temperature of the two lower pressure streams would be equal. It was then assumed that the temperature of these two streams remained equal; so that temperature T11, the low pressure outlet temperature from exchanger III, was equal to T9.

5. The calculated values of T4 and T11, from the last iteration, were then used to perform a heat and mass balance on exchanger IV. The transfer units were accumulated for each stepwise calculation until the transfer units were equal to those specified as input. This resulted in calculated values for T3, the compressor outlet temperature and T12, the low pressure outlet from exchanger IV.

6. The value of T3 calculated by the heat and mass balance was compared to the value calculated in step 1. If these were different, the initially assumed value of T5 was changed and the calculations repeated. This iterative procedure was continued until the value of T5 resulted in agreement between the two calculated values of T3.

The print-out from the program gave the temperature, pressure and enthalpy at each numbered point in the cycle, the input design value and calculated operating values of the flow split between the compressor and expander, and the fraction of the feed actually reliquefied. It also gave the compressor and expander work required, and the size and duty of each exchanger. It could also give the temperature profiles through each exchanger if required.

In making the heat balances, it was assumed that the para-hydrogen of the feed was continuously converted to ortho-para hydrogen equilibrium in the intermediate pressure stream of exchanger III and in the low pressure stream of exchanger IV. It has since been decided to eliminate the conversion in exchanger III for manufacturing simplicity. The effect of this on the results presented here are discussed in a later section of this report.

B. Discussion of Results

The following paragraphs discuss the results of the computer simulation program and explain the effect of the major variables, including the relative compressor to expander flow split and the size of the heat exchangers and the feed pressure upon the reliquefier performance.

1. Variation of Flow Split

Predicting the actual throughputs of both the compressor and expander have an uncertainty associated with them because the volumetric efficiencies are not precisely known. It was, therefore, important to determine the effect of variation in the fraction of feed to the compressor upon the reliquefier performance. (Variation in the fraction of feed to the expander is directly related since compressor flow plus expander flow equals the total feed). This was investigated for a feed pressure of 29.4 psia, a ten to one pressure ratio in the expander and the compressor, and with exchangers III and IV fixed with 4.2 and 14.5 transfer units respectively.

The upper curve of Figure 2 shows the calculated values for the fraction of feed to the compressor for various design values. The value of design flow split was varied, which is equivalent to different physical compressor and expander sizes at the assumed expander inlet temperature T9 of 63°R and the fixed feed condition. The computer then calculated the actual fraction of feed to the compressor for each design value by thermodynamically balancing temperatures and flows throughout the system.

Plotting both the fraction of feed reliquefied and fraction of feed to the compressor as a function of the design fraction on the same graph permits an insight as to the behavior of the reliquefier with further decreases in design fraction.

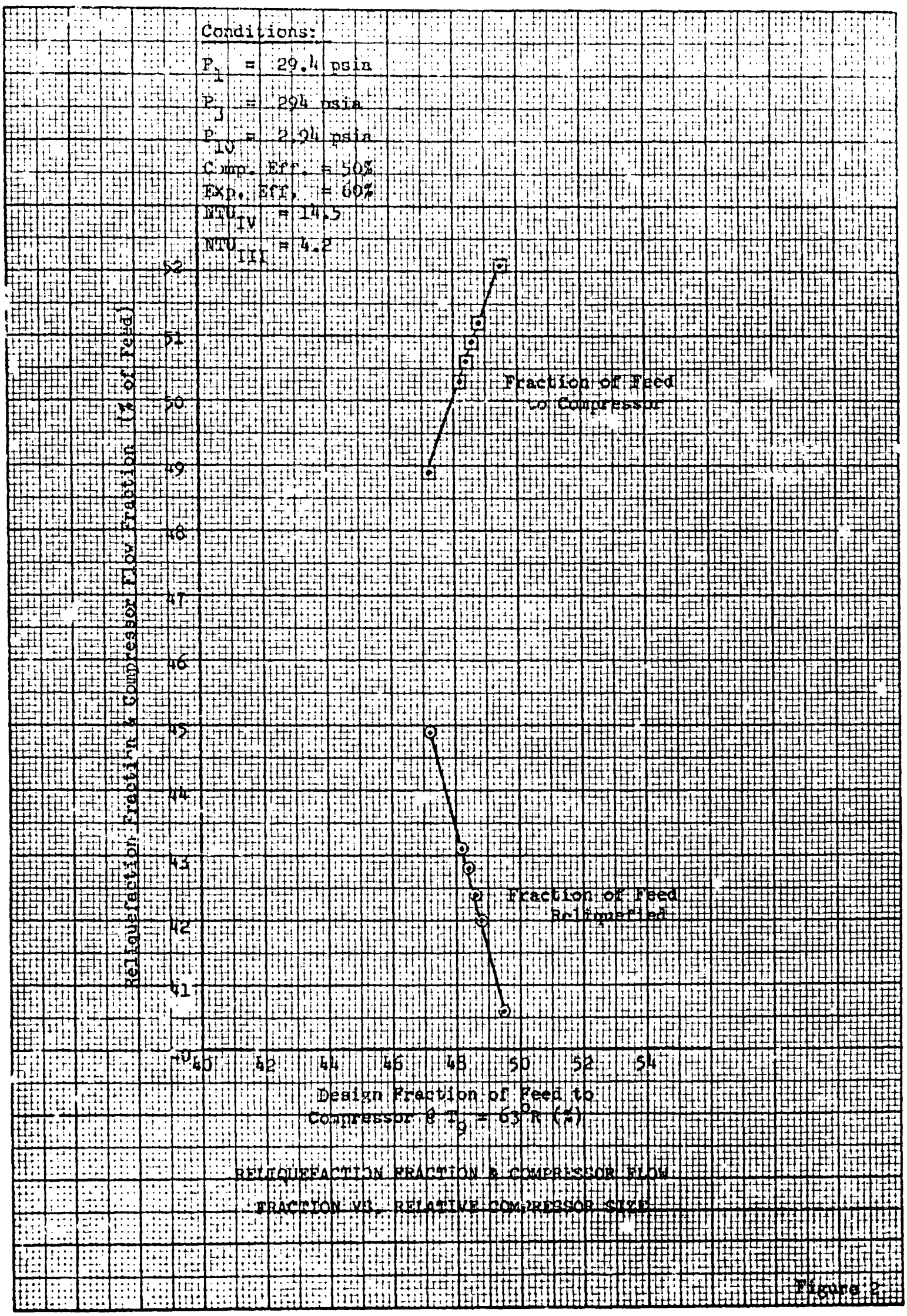

RELLIQUEFACTION FRACTION & COMPRESSOR FLOW FRACTION VS. RELATIVE COMPRESSOR SIZE

Figure 2

For example, if the compressor and expander relative sizes are chosen so that the design fraction of feed to the compressor is 48.2% at an engine inlet temperature of 63°R, the figure shows the actual compressor flow will be 50.3% of the feed for the conditions shown on the figure. The difference between the design and actual fraction of feed to the compressor is due to the difference between the assumed expander inlet temperature and the actual expander inlet temperature calculated from the heat exchanger heat and mass balance.

The lower curve on Figure 2 shows that if the relative flow through the compressor is increased by changing either the compressor or expander size, then the fraction actually reliquefied falls off. This is because temperature T5 becomes higher with increases in relative compressor flow (shown in Figure 3) so that more of the compressor stream is lost as flash vapor after the Joule-Thomson expansion. The reason for this decrease in temperature is further discussed in paragraph 2. Figure 3 shows that increasing the design fraction of the feed flowing to the compressor from 47.3% to 49.5% increased temperature T5 from 44.2°R to 52.6°R and increased the flash loss from 8.2% to 22.0%.

If the flash loss were zero at any point, the fraction of feed reliquefied would become equal to the fraction of feed to the compressor and the two curves would intersect at that point. This condition would require supercooled vapor at the inlet to the Joule Thomson valve. This is unlikely since the engine exhaust temperature would have to be significantly lower than design. Further decreases in design fraction would therefore result in a continuing and more rapid decrease in fraction of feed to the compressor with an ultimate corresponding decrease in fraction of feed reliquefied, the approach of the two curves to one another being dependent upon flash loss.

2. Variation of Heat Exchanger Size

Increasing the size of exchanger IV, while keeping exchanger III a fixed size had the effect of increasing the fraction of the feed which was reliquefied. This is to be expected since improvement in exchanger IV results in more heat being rejected from the system by the vent gas. This is shown in Figure 4 for a feed pressure of 22.0 psia, compressor outlet pressure of 294 psia and expander outlet pressure of 2.2 psia. The size of exchanger III was held at five transfer units as shown.

K+E 10 X 10 TO 1/2 INCH 4 X 23 DIVISIONS
KEUFFEL & ESSER CO. MADE IN U.S.A.

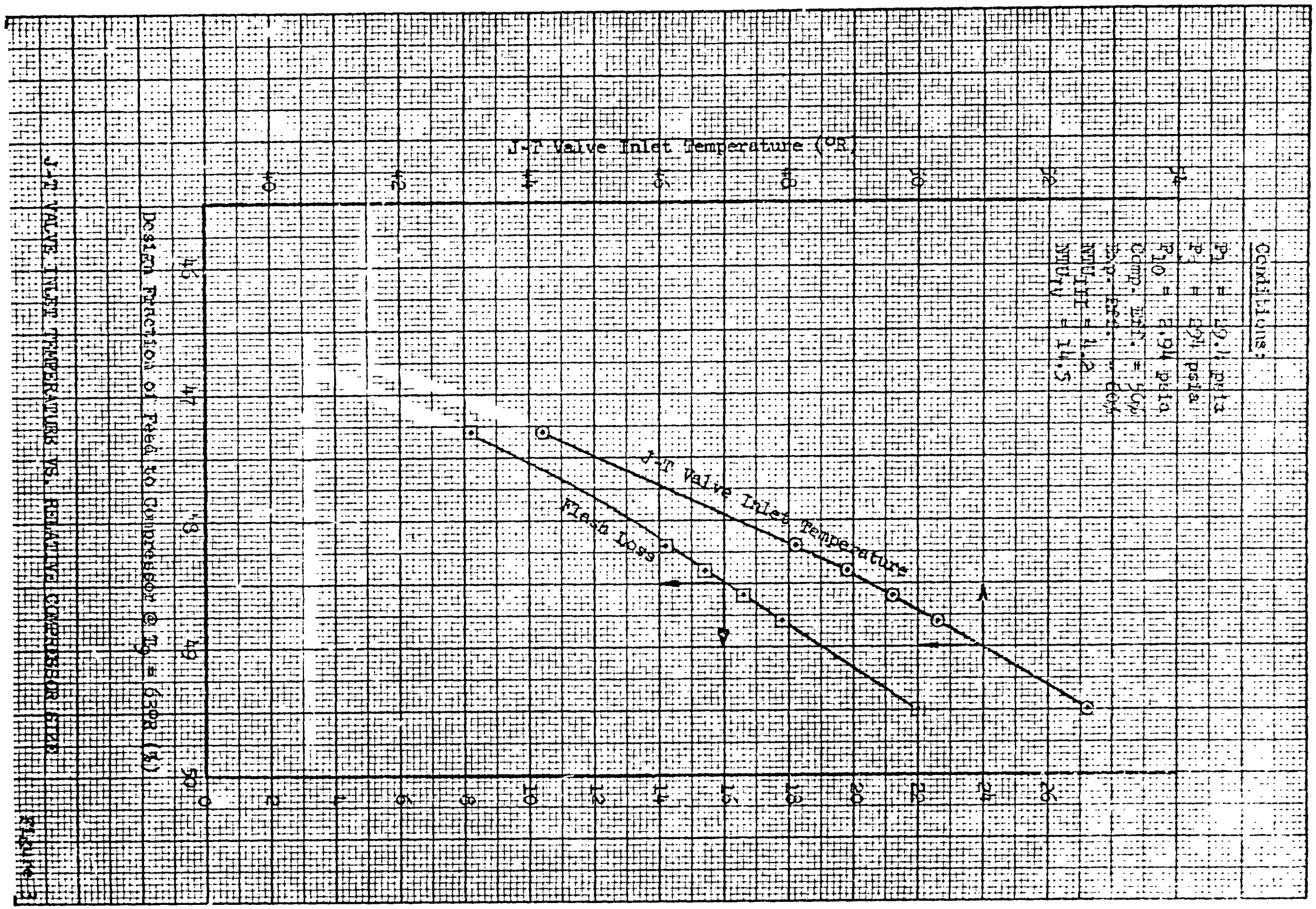

J-T VALVE INLET TEMPERATURE VS. FOUR-STAGE COMPRESSOR BYPASS

Figure 2

The effect of variation in the size of exchanger III at a fixed size of exchanger IV is shown on the lower curve of Figure 4. Decreasing the size of exchanger III increased the reliquefaction fraction. This is unexpected and requires further explanation. Figure 5 shows that a decrease in the size of the exchanger III resulted in a decrease in the expander inlet temperature. The lower expander inlet temperature increased the expander flow because of the resultant higher gas density. The added flow increased the heat capacity on the cooling side of exchanger III, so that the cold end temperature difference between T5 and T8/T10 was decreased rather than increased as would normally be expected. Thus, temperature T5 was reduced which, as has already been seen, decreased the flash loss on expansion. This saving in flash loss was greater than the loss due to decreased compressor flow, so that, the overall effect was an increase in the reliquefaction fraction as the size of the exchanger III was decreased. There is of course, a limit on how small exchanger III can be made before the improved performance is reversed.

Figure 6 shows the effect of transfer units on the fraction of feed to the compressor and on the fraction of feed reliquefied. It can be seen that the fraction of feed to the compressor starts dropping off sharply at 3.2 transfer units while the fraction of feed reliquefied rises rapidly. The former drops because of the increasing expander flow while the latter increases because of reduced flash loss. If the flash loss could be zero, the two curves would intersect. Actually, the percentage flash loss approaches zero, its value depending upon the temperature approach between the high pressure and low pressure stream at the cold end of exchanger III. Since the fraction of feed reliquefied can never exceed the fraction of feed to the compressor, further decrease in transfer units will result in rapid drop of reliquefaction fraction along with compressor fraction. Figure 7 shows a similar behavior at another set of feed conditions.

3. Effect of Reliquefier Feed Pressure

For a constant design flow split (fixed compressor and expander geometry), constant compressor outlet pressure, and fixed transfer units in exchanger IV, the reliquefier performance was evaluated for three separate feed pressures. The results are plotted in Figure 8 and show

REPRODUCIBILITY OF THE ORIGINAL PAGE IS POOR.

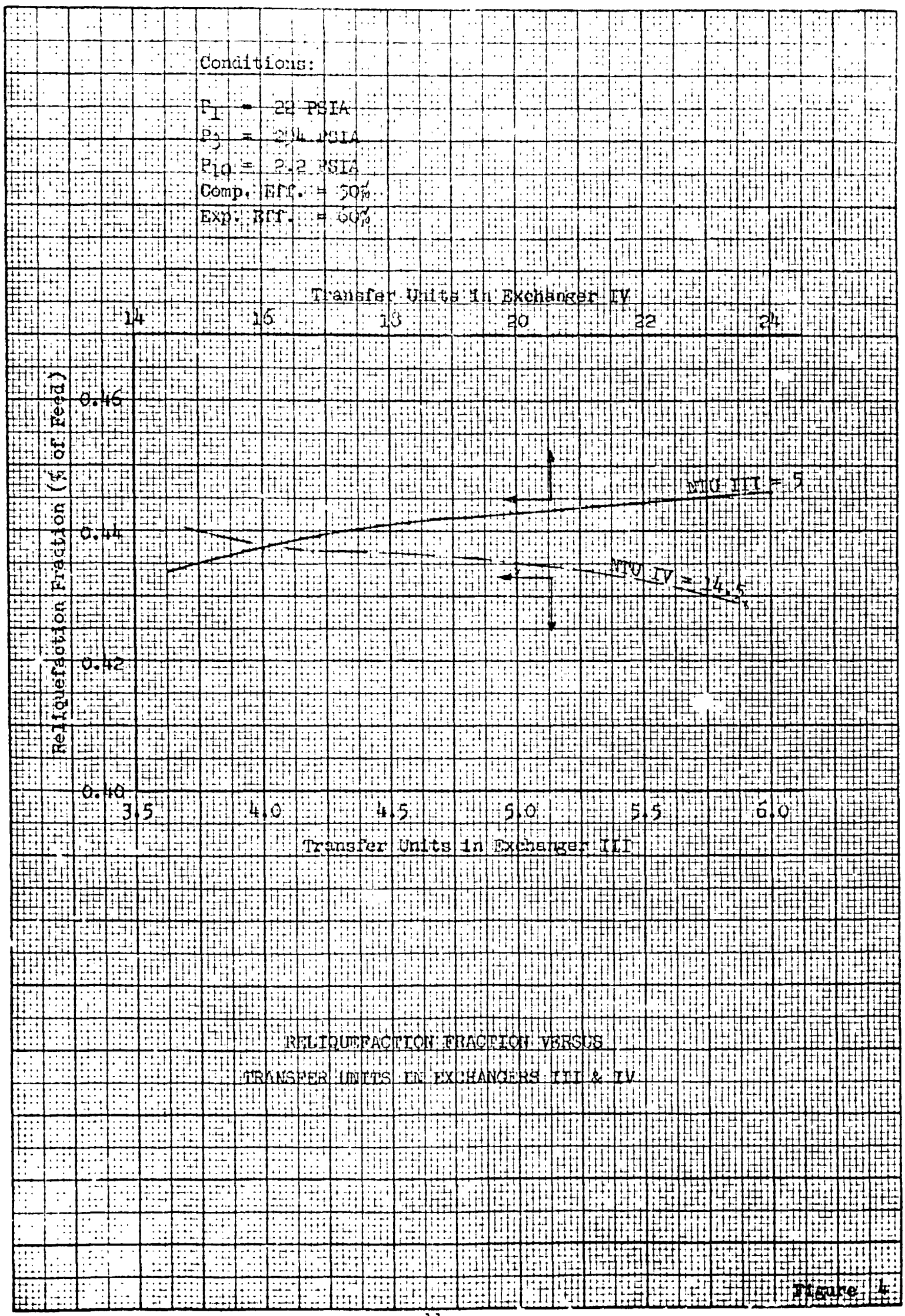

RELIQUEFACTION FRACTION VERSUS
TRANSFER UNITS IN EXCHANGERS III & IV

Figure 4

REPRODUCIBILITY OF THE ORIGINAL PAGE IS POOR.

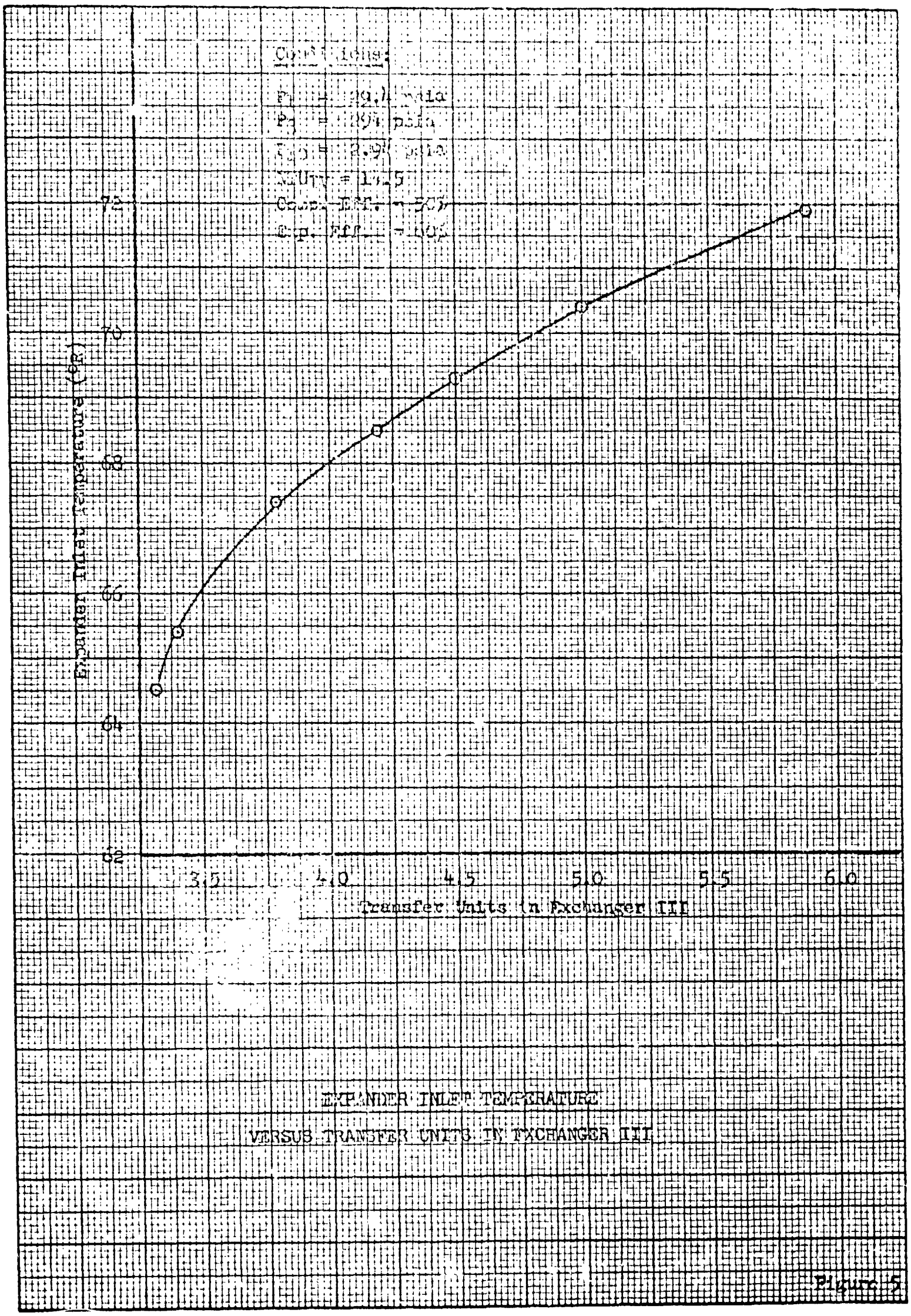

EXPANDER INLET TEMPERATURE

VERSUS TRANSFER UNITS IN EXCHANGER III

Figure 5

K+E 10 X 10 TO ½ INCH 46 1523
7 X 10 INCHES MADE IN U.S.A.
KEUFFEL & ESSER CO.

K+E 10 X 10 TO 1/2 INCH 46 1423
7 X 10 INCHES MADE IN U.S.A.
KEUFFEL & ESSER CO.

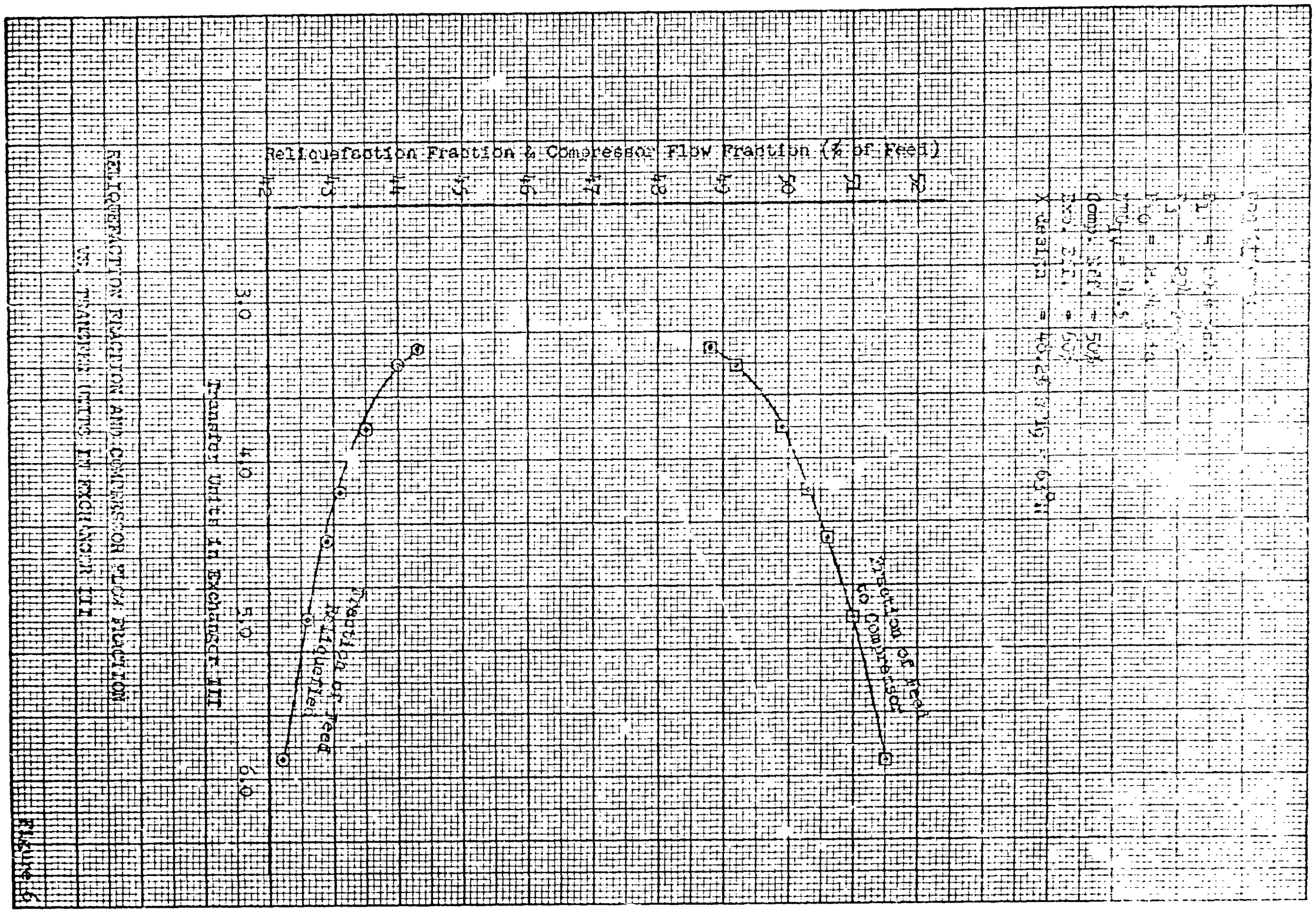

K+E 10 X 10 TO ½ INCH 46 1323
KEUFFEL & ESSER CO

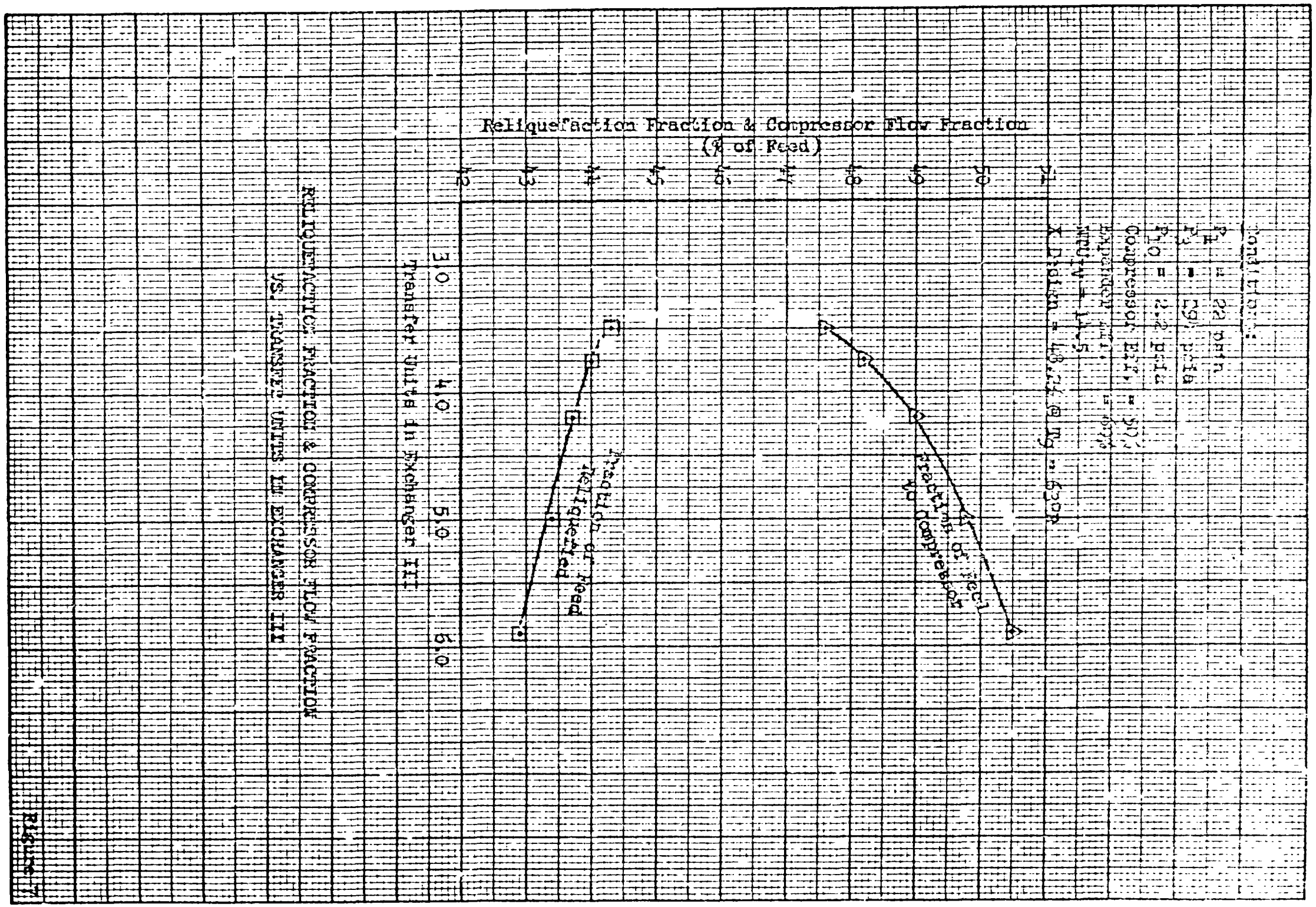

Figure 7

K•E 10 X 10 TO ½ INCH 46 1323
7 X 10 INCHES MADE IN U.S.A.
KEUFFEL & ESSER CO.

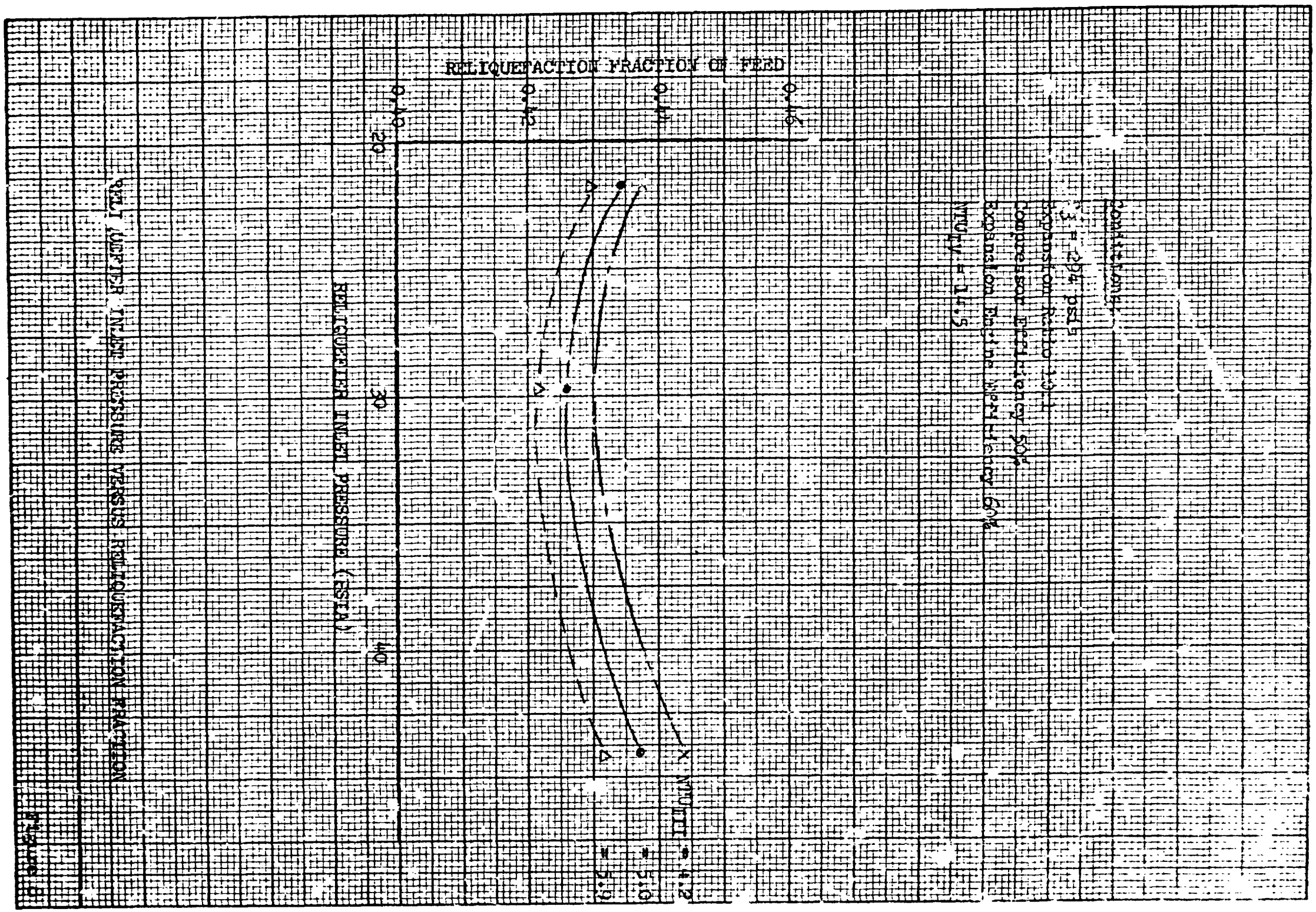

FIGURE 8

PLOT OF RELIQUEFACTION FRACTION VERSUS RELIQUEFIER INLET PRESSURE

that the reliquefaction fraction has a minimum value at about 31 psia. It appeared that this minimum was independent of the size of exchanger III for the three values of transfer units investigated.

The results shown say nothing about the actual feed rate at a particular feed pressure, but show only the fraction of the feed which is returned to the tank as liquid. Because of the lower density of the feed at 22.0 psia, the amount of feed which can be taken by the reliquefier will be lower than that at 29.4 psia. This comparison is shown in Table I for a design feed rate of 4 lb/hr at 29.4 psia and 41.4°R.

TABLE I

NTU Heat Exchanger III	4.2	4.2
Feed Pressure (psia)	29.4	22.0
Feed Density (lb/ft^3)	0.1563	0.1195
Fraction Reliquefied	0.431	0.437
Feed Rate (lb/hr)	4.00	3.14
Compressor Flow (lb/hr)	2.04	1.54
Expander Flow (lb/hr)	1.96	1.60
Reliquefaction Rate (lb/hr)	1.72	1.37
Flash Loss (lb/hr)	0.29	0.17

4. Effect of Eliminating Conversion Catalyst in Exchanger III

To evaluate the effect of conversion of the hydrogen in exchanger III the conditions shown in Table II were analyzed. The O-P conversion in exchanger IV is retained in all cases shown.

TABLE II

Comparison of System Performance With and Without O-P Conversion in the Medium Pressure Stream of Exchanger III.

Ref. Point Figure 1	Temperature °R w/O-P Conv.	Temperature °R w/o O-P Conv.	Pressure psia w/O-P Conv.	Pressure psia w/o O-P Conv.	Hydrogen State w/O-P Conv.	Hydrogen State w/o O-P Conv.
5	43.9	43.9	294.0	294.0	para	para
8	39.1	39.1	22.0	22.0	para	para
10	42.1	39.1	2.2	2.2	ortho-para	para
4	70.6	66.6	294.0	294.0	para	para
9	67.0	63.0	22.0	22.0	equil o-p	para
11	67.0	63.0	2.2	2 .2	ortho-para	para

The conditions with the conversion in exchanger III were obtained from the computer simulation program. It was programmed so that the para-hydrogen was converted to ortho-para equilibrium in the medium pressure stream of exchanger III between points 8 and 9 and in the low pressure stream of exchanger IV between points 11 and 12. The flow through the compressor, for the temperatures shown was 49% of the feed rate. Since the reliquefier being designed will not provide catalyst for O-P conversion in the medium pressure stream, it was necessary to evaluate the computer results to determine the effect upon actual reliquefier design conditions. The conditions required at the warm end of exchanger III to produce the same conditions at the cold end, but without conversion, were hand calculated for 49% of the feed through the compressor.

Table II is a comparison of the two conditions and shows that a reduction of approximately $4^{o}R$ in the warm end temperatures of exchanger III can be expected. This will increase the load on exchanger IV and will tend to give a higher flow through the expander. Sufficient flow adjustability can be provided in the machinery to negate the effect of this small temperature change. Exchanger IV has been designed with a catalyst chamber at its low pressure inlet prior to entering the first heat transfer section. This has the effect of providing gas conditions in exchanger IV identical to those which would have existed had the O-P conversion occurred in exchanger III.

C. Effect of Computer Results on Hardware Design Specifications

The major variables affecting the reliquefier operation have been discussed in Section III, paragraph B. These variables have been identified as:

1. Reliquefier feed pressure and total flow

2. Heat transfer units in each heat exchanger

3. Compressor to expander flow split.

Specific design values have been chosen for the hydrogen reliquefier based on the individual and combined effects of these major variables. In all cases the design parameters have been chosen to reduce technical risks by recognizing areas of design uncertainty and by choosing design values to ensure successful operation should these specific design values not be achieved.

The following paragraphs discuss the specific design values chosen and the rationale for their selection.

The effect of variable feed pressure to the reliquefier was evaluated. Figures 9 and 10 show the predicted operating conditions for two different feed pressures. The values shown on Figure 9 represent the chosen reliquefier design conditions. It is apparent that while the total feed rate decreased from 4.0 lb/hr to 3.14 lb/hr with decreasing feed pressure, the reliquefaction fraction increased from 43.0% to 43.6%. The increase was a result of the decreased compressor to expander flow ratio which improved the precooling of the high pressure stream to the J-T valve. This resulted in a reduction in flash loss as the high pressure gas was expanded through the J-T valve. The reliquefier will be sized to provide a total feed rate of 4.0#/hr at a 29.4 psia (41.4°R) reliquefier feed pressure. At steady state operation, assuming the heat exchanger sizes and machinery efficiencies are as shown on Figure 9, a reliquefaction rate of 1.72#/hr. is expected. Since the reliquefier operation mode, as reported previously, is intermittent and operates as a function of feed pressure, the start-stop pressure limits and equipment throughput while operating can be chosen to be compatible with the actual range of hydrogen boil-off rates expected for a given mission. A start-up pressure of 29.4 psia and a shutdown pressure of 22 psia appear to be reasonable values to consider, in that, reliquefaction fraction is essentially constant, the change in feed rate is not severe, and the available pressure drop from the tank to the reliquefier feed, to accomplish phase separation, would be reasonable. It has been concluded that the feed pressure regulator, previously considered for the reliquefier, is an unnecessary complication and can be eliminated.

The effect of heat exchanger transfer units on reliquefaction fraction at specific feed conditions has been discussed and shown on Figure 8. It appears that the size of both exchangers, III and IV, has only a small effect on the predicted reliquefaction fraction. It is apparent that increasing the size of exchanger IV results in increased reliquefaction fraction while increasing the size of exchanger III has the opposite effect.

There is a limit to the advantageous reduction of the size of exchanger III, which occurs when the high pressure gas temperature approaches the saturated vapor temperature of the feed causing a cold end temperature pinch. It has been decided to design heat exchanger III to provide 5 transfer units. Although this value

RELIQUEFIER DESIGN POINT OPERATING CONDITIONS

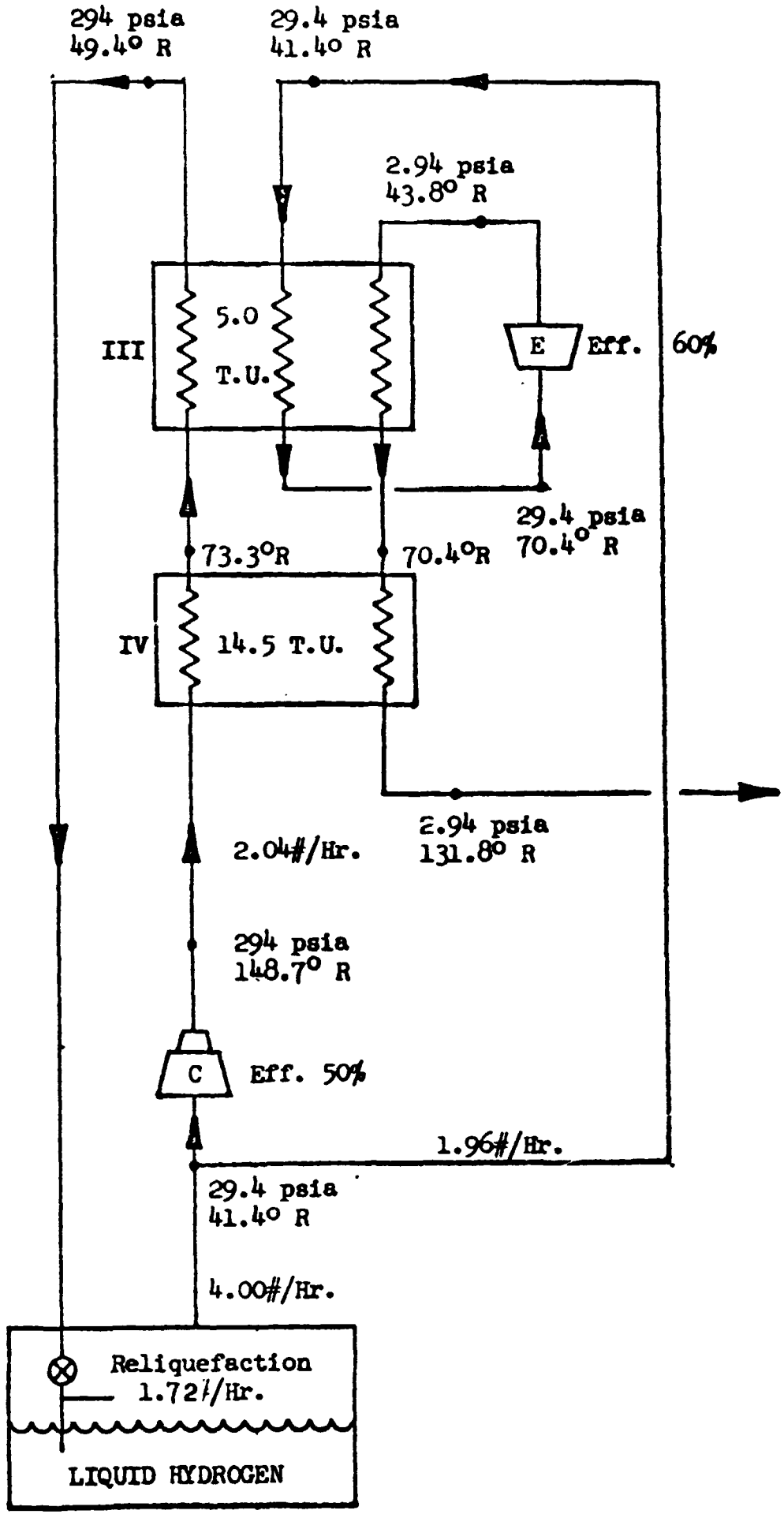

Figure 9

RELIQUEFIER OFF DESIGN POINT OPERATING CONDITIONS

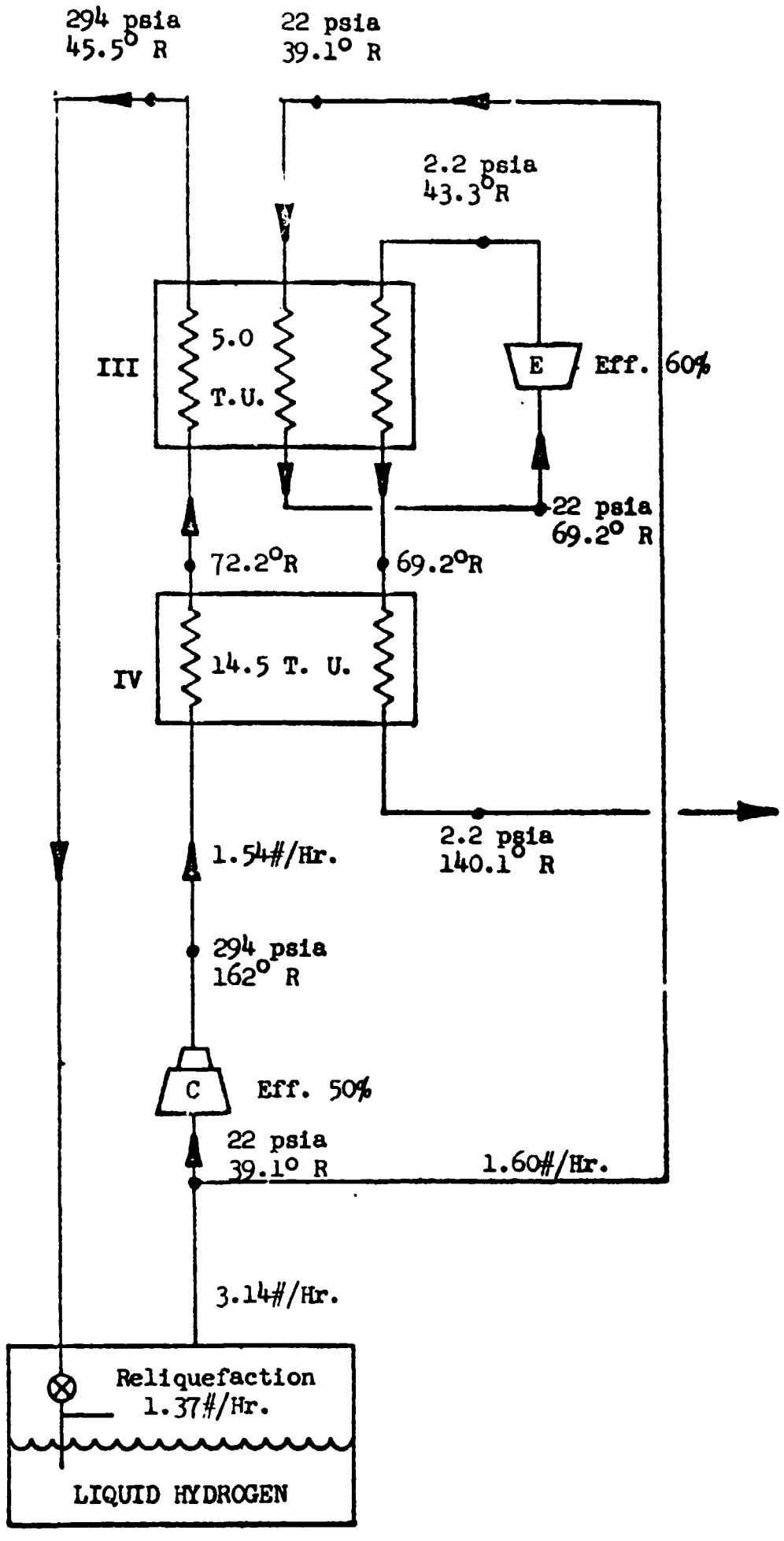

Figure 10

is not the indicated optimum size, it represents a conservative, minimum technical risk approach. The chosen value of 5 transfer units, resulted in a reasonably sized exchanger whose performance, should the actual transfer units available differ significantly from the design value, would remain in an acceptable operating region based on the computer results. This design point is such that some variation in performance (transfer units) can be tolerated in either direction without significant changes in reliquefier performance.

A design value of 14.5 transfer units was selected for exchanger IV utilizing the same basic reasoning as that explained for exchanger III.

The absolute values of all the design parameters defined by the computer simulation program are dependent upon achieving the predicted machinery efficiencies. It is expected that for efficiencies different from those used in the computer analysis, the optimum size of exchanger III would change. There is, in addition, an expected interdependence between the relative sizes of heat exchanger III and IV that will tend to vary the optimum size of exchanger III as a function of the size of exchanger IV. The design predictability of both heat exchangers represents yet another variable that was considered in the selection of the design transfer units to avoid the possibility of any significant change in reliquefier performance.

The machinery sizes have been chosen to permit 51% of the total feed to pass through the compressor at an inlet pressure of 29.4 psia. From a design viewpoint, the predictability of this split has certain uncertainties which can alter the actual throughput experienced upon startup. To overcome this, the design has incorporated several features which permit relatively easy adjustment of flow split after the hardware is operational.

1. Adjustable expander cam timing.
2. Adjustable compressor clearance volume.
3. Replaceable pistons and cylinders for both the expander and compressor.
4. Modification to compressor stroke.
5. Compressor discharge pressure variation.
6. Compressor interstage pressure variation.
7. Expander outlet pressure variation.

The first four items listed represent machinery component changes, the first two of which will have hardware manufactured and available for inclusion into the machine at the onset of the testing program. The third and fourth items are major modifications that the machinery design will permit, but which would be necessary only if the predicted flows are significantly inaccurate. It is not expected that this is likely. The remaining three items 5, 6, and 7 are available system adjustments that will permit fine tuning of the relative flows to permit optimization of the reliquefaction fraction according to the actual heat exchanger transfer units experienced and machinery efficiencies achieved.

IV. HEAT EXCHANGERS

The design drawings for heat exchangers III and IV are completed. All material required for the fabrication of exchanger IV has been received and the material required for exchanger III is on order. This material has a promised delivery of 1/12/68.

A. Design Review

As reported previously, two separate designs for heat exchanger IV will be fabricated and tested. Since this exchanger requires the inclusion of O-P catalyst in the low pressure expander exhaust stream, it was decided to evaluate two design approaches from both a manufacturing and process performance point of view. The heat exchanger configurations being evaluated are shown in Figures 11 and 12. It was found in the design phase that providing continuous O-P conversion over the entire length of heat exchanger IV posed serious design and manufacturing problems. The pressure drop through the heat exchanger, when filled with catalyst, was excessive due to the large available amount of catalyst. Since the amount of catalyst required for complete conversion of the parahydrogen to equilibrium hydrogen was significantly less than that available with a continuous conversion design approach, it was possible to reduce the overall pressure drop in exchanger IV by adopting the step-wise OP conversion technique shown in Figures 11 and 12. This design approach was not without disadvantages. The transfer units required for a given heat exchanger duty are inversely proportional to the temperature difference between the hot and cold streams. The step-wise conversion design resulted in a series of small temperature differences between the hot and cold streams which significantly increased the required transfer units in this heat exchanger. For the particular design conditions of the reliquefier, the ratio of required transfer units with step wise conversion to continuous conversion was on the order of 5:1. Although the size and weight of exchanger IV is increased with this design, the reduced manufacturing problems and, more significantly, the reduced pressure drop and greater predictability of the step wise design warranted utilization of this design.

Figure 13 shows the design of heat exchanger III. This heat exchanger is a three pass design in which the intermediate pressure stream to the expander and the low pressure stream from the expander are warmed by counter current heat exchange with the high pressure compressor discharge flow. Although catalytic conversion was originally considered for this exchanger, it was found that it could be eliminated without reduction of the reliquefaction fraction. This required that one additional stage of step wise conversion be provided at the inlet to exchanger IV. The resulting design provides for constant UA product in the intermediate and low pressure streams (U is the overall heat transfer coefficient and A is the effective heat transfer surface area). Since the flow through both these streams is the same, each

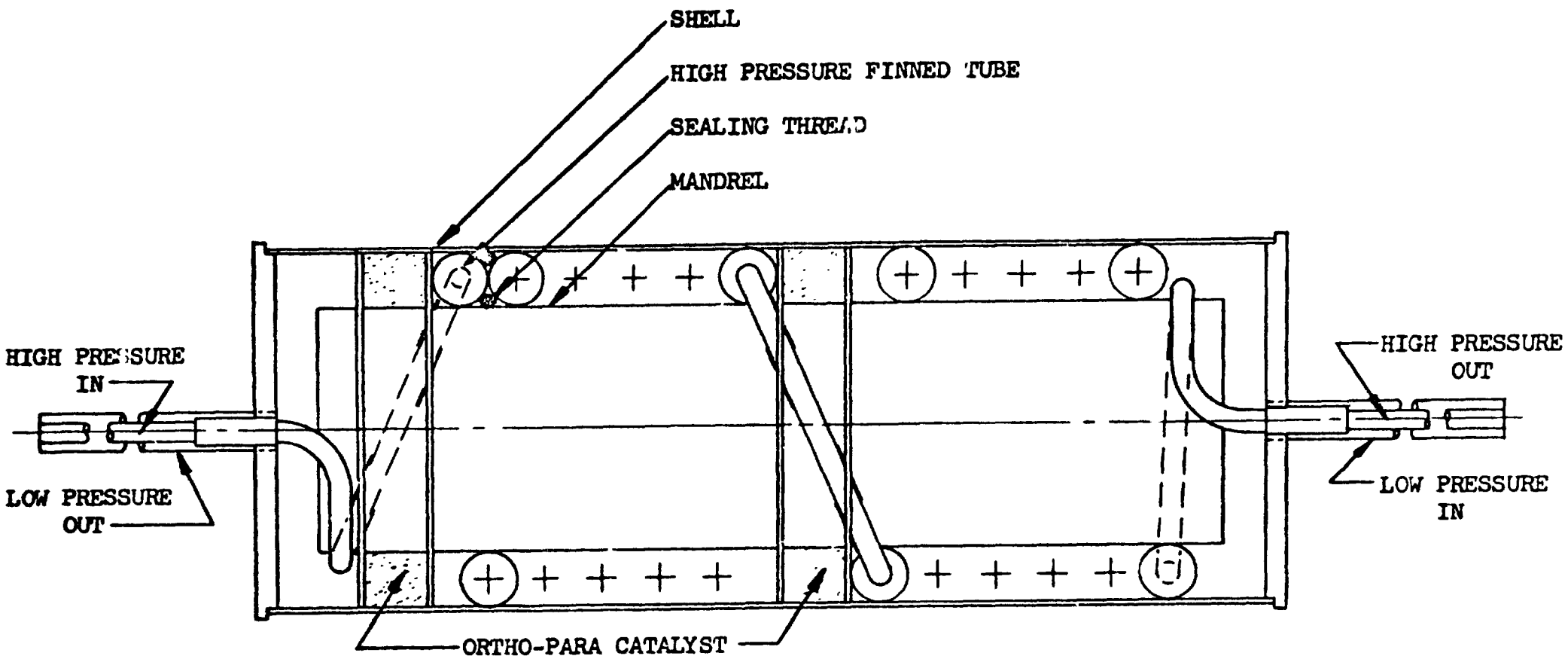

TWO PASS COUNTERCURRENT HEAT EXCHANGER

DESIGN "B" WITH ORTHO-PARA CONVERSION CATALYST

Figure 11

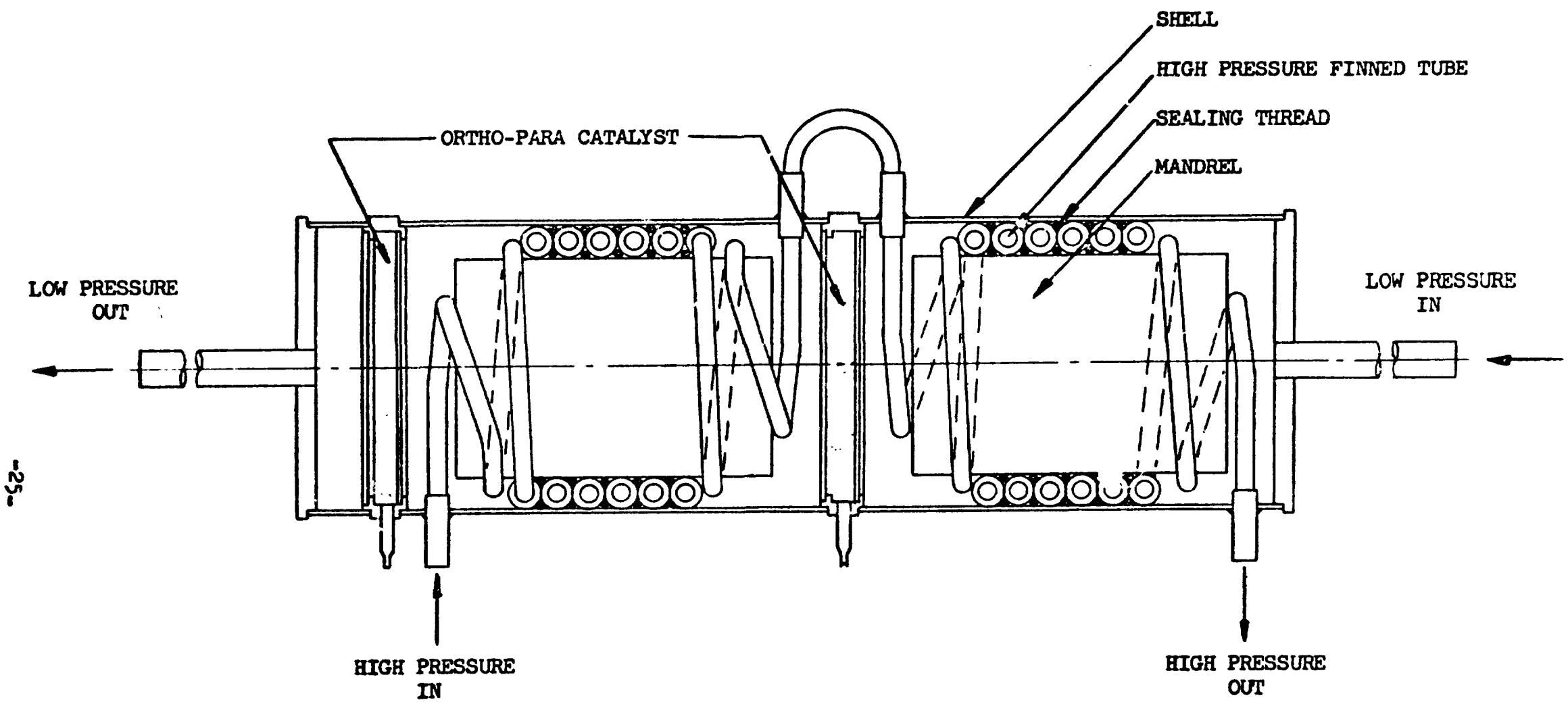

TWO PASS COUNTERCURRENT HEAT EXCHANGER

DESIGN "A" WITH ORTHO-PARA CONVERSION CATALYST

Figure 12

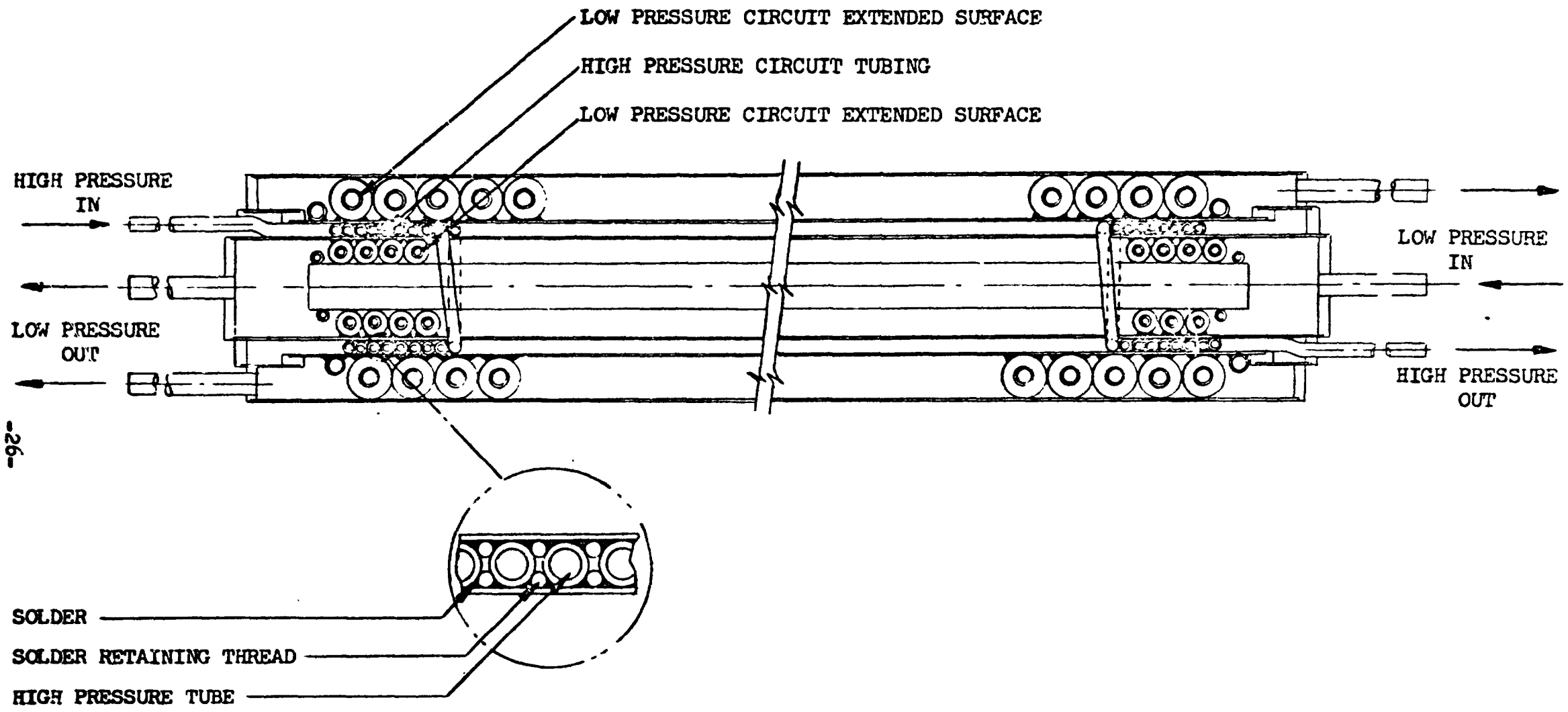

THREE CIRCUIT COUNTERCURRENT HEAT EXCHANGER

WITHOUT ORTHO-PARA CONVERSION CATALYST

Figure 13

stream provides half of the total refrigeration to the high pressure stream. On a design basis, this resulted in minimum irreversibility and, therefore, most efficient cycle design.

It is planned that, prior to final exchanger III fabrication, several test sections will be fabricated and cut open for inspection to ensure proper bonding of the high pressure tube to both walls of its annulus. It is expected that the most critical manufacturing detail is to properly achieve this bond. An alternate design concept could be considered should the three pass exchanger experience performance problems. Some planning in this area has been done. Specifically, the high pressure compressor discharge stream could be divided. Two separate two pass exchangers could be fabricated in which the shell side stream could be the intermediate pressure feed to the expander, in one case, and the low pressure stream from the expander in the other. The problem inherent in this approach is ensuring a 50-50 flow division of the high pressure stream to the two separate exchangers. The high pressure stream flow split is determined by the pressure drop through the tube sides of each of the exchangers which, in turn, is dependent on the average gas density (temperature dependent). It is believed that this approach could be made to function, but since it is inherently less reversible than the three pass exchanger, it will not be pursued in detail unless real difficulties arise with the current design.

B. Heat Exchanger For Specified Design Point

The design point for heat exchanger III was selected as 5 transfer units and for heat exchanger IV as 14.5 transfer units. The basis for the selected values was discussed earlier.

Heat exchanger III will be 2 1/2 inches in diameter, 18 inches long, and will require only one unit. Heat exchanger IV will also be approximately 2 1/2 inches in diameter and 75 inches long. This exchanger will actually be built in three 25-inch sections for fabrication and packaging ease.

C. Test Program For Heat Exchangers

A test program has been instituted to determine the performance characteristics of the exchangers which will be used in the hydrogen reliquefier. The test program will also determine the final design to which the full size version of exchanger IV will be fabricated.

Although the conditions under which the exchangers will be tested are not identical to the normal operating conditions expected in the reliquefier, the results will provide sufficient information to evaluate the design procedures. Accurate estimates of performance at operating conditions can be made from this data. The tests will be performed using hydrogen gas at liquid nitrogen temperature (140°R) and above. Pressure conditions will be used which will

permit adequate correlation of the test results to the expected reliquefier operating conditions.

Since heat exchanger performance can be fully predicted from an evaluation of pressure drop and heat transfer units and since these parameters can be correlated between pressure and temperature levels, it is possible to simplify the test procedure as described above. The savings in cost and time indicate the desirability of using this test approach. Pressure levels above atmospheric pressure will be used in all tests. Where actual operating pressures above atmospheric are expected, these pressures will be approximately simulated in the tests. Test conditions versus expected operating conditions for the exchangers are listed on Table III.

1. Discussion of Test Set-Up Equipment

The test set-up for exchanger IV is schematically represented in Figure 14. The test set-up for exchanger III is schematically represented in Figure 15. As can be seen from the two figures, the test set-up is identical for the two exchangers except for the amount and types of instrumentation used in obtaining the data necessary to evaluate the performance of the two exchangers. A single test arrangement has been designed that will permit testing of both heat exchangers, resulting in minimum expenditures in both time and money.

2. Common Test Set-Up, Equipment and Operation

Technical grade hydrogen feed gas will be supplied from high pressure (2400 psi) hydrogen gas cylinders, manifolded together for increased test run durations. The high pressure hydrogen gas will be throttled down to some intermediate pressure (500 - 1000 psi) with a high pressure regulator. A nitrogen purge connection will be provided to purge the system of air before starting a test run. The hydrogen will be further reduced in pressure to test conditions by a low pressure regulator. To conserve liquid nitrogen consumption, the gas will be precooled in a paired tube recovery exchanger by the returning cold gas from the test exchangers.

The gas then flows through a short insulated line to the first liquid nitrogen bath. The bath will be a double wall open mouth dewar filled with liquid nitrogen. Connected in the hydrogen line and located in the LIN bath is a cooling coil to reduce the hydrogen to LIN temperature (140°R). A charcoal purifier to remove any water vapor or other impurities from the hydrogen is provided after the cooling coil followed by a catalyst filled normalizer to bring the hydrogen to equilibrium ortho-para composition at LIN temperature. The cold hydrogen gas then flows through an insulated transfer line to the insulated vacuum dewar in which the test exchanger will be located. Inside the dewar the gas will go through another cooling coil immersed in liquid nitrogen.

TABLE III
Comparison of Heat Exchanger Expected Operating Conditions
with Heat Exchanger Test Conditions

EXCHANGER DESIGNATION	Expected Operation			Test		
	Pressure	Temp.	Flow	Pressure	Temp.	Flow
IV - Shellside						
Inlet	2.2 PSIA	58°R	1.9 lb/hr	25 PSIA	140°R	
Outlet	1.3 PSIA	144°R		75 PSIA	to	1 to 3
				125 PSIA	230°R	lb/hr
IV - Tubeside				25 PSIA	235°R	
Inlet	294 PSIA	162°R	2.1 lb/hr	75 PSIA	to	1 to 3
Outlet	290 PSIA	66°R		125 PSIA	300°R	lb/hr
III - Tubeside				100 PSIA	140°R	
Inlet	290 PSIA	66°R	2.1 lb/hr	200 PSIA	to	1 to 3
Outlet	289.8 PSIA	40°R		300 PSIA	260°R	lb/hr
III - Shellside (Inner)				25 PSIA	140°R	
Inlet	22 PSIA	39°R	1.9 lb/hr	50 PSIA	to	1 to 3
Outlet	21.99 PSIA	63°R		75 PSIA	260°R	lb/hr
III - Shellside (Outer)				25 PSIA	140°R	
Inlet	2.2 PSIA	39°R	1.9 lb/hr	50 PSIA	to	1 to 3
Outlet	2.19 PSIA	63°R		75 PSIA	260°R	lb/hr

NOTE: Pressures, Temperatures, and Flow Rates are approximate values.

The LIN will be contained in a reservoir exposed to atmospheric pressure and suspended from the top cover of the dewar. From this cooling coil, the hydrogen will enter the test exchanger. The dewar in which the exchangers will be tested will be insulated and evacuated. In addition, the exchangers will be surrounded by a radiation heat shield cooled to liquid nitrogen temperature. These precautions are taken to minimize the effect of heat leaks on the heat exchanger test results. After leaving the insulated vacuum dewar, the hydrogen gas will travel through an insulated transfer line to the recovery exchanger, where the gas is warmed to a temperature approaching ambient. To insure that the hydrogen is at approximately ambient temperature another coil is provided in this line. A manually operated valve is provided to permit controlling the flow rate during the test. The flowmeter will be a float-in-glass tube type meter. The gas leaving the flowmeter will be vented to an outside vent stack. Preceding the vent stack will be a valve and connection for evacuation of the air from the system, and for nitrogen purging prior to test runs.

3. Specific Test Set-Up for Exchanger IV

Figure 14 shows a schematic representation of the test set-up for exchanger IV. The equipment and operation common to all exchanger tests was described previously. The differences in the set-up required for exchanger IV occur primarily inside the vacuum dewar, in the line arrangement, equipment, and readout instrumentation required for evaluating exchanger IV performance.

Upon emerging from the LIN reservoir inside the evacuated dewar, the cold hydrogen gas will flow through a copper tube coil that has electrical heating tape wrapped around it. The heating tape will have its power supplied by a variable output A.C. transformer. This variable power supply will allow regulation of the temperature of the hydrogen gas entering the shell side of the test exchanger IV. The temperature, pressure, and ortho-para composition of the hydrogen will be measured. The temperature will be taken by a copper-constantan thermocouple, since copper-constantan gives accurate readings in this temperature region. The pressure will be indicated by a test pressure gauge, since the pressures will be high enough to insure accurate readings on a pressure gauge. The capillary line to the pressure gauge will also serve as a sample line to the ortho-para hydrogen analyzer. This analyzer was developed by the Research and Development Department of Air Products and Chemicals, Inc., for evaluating the effectiveness of

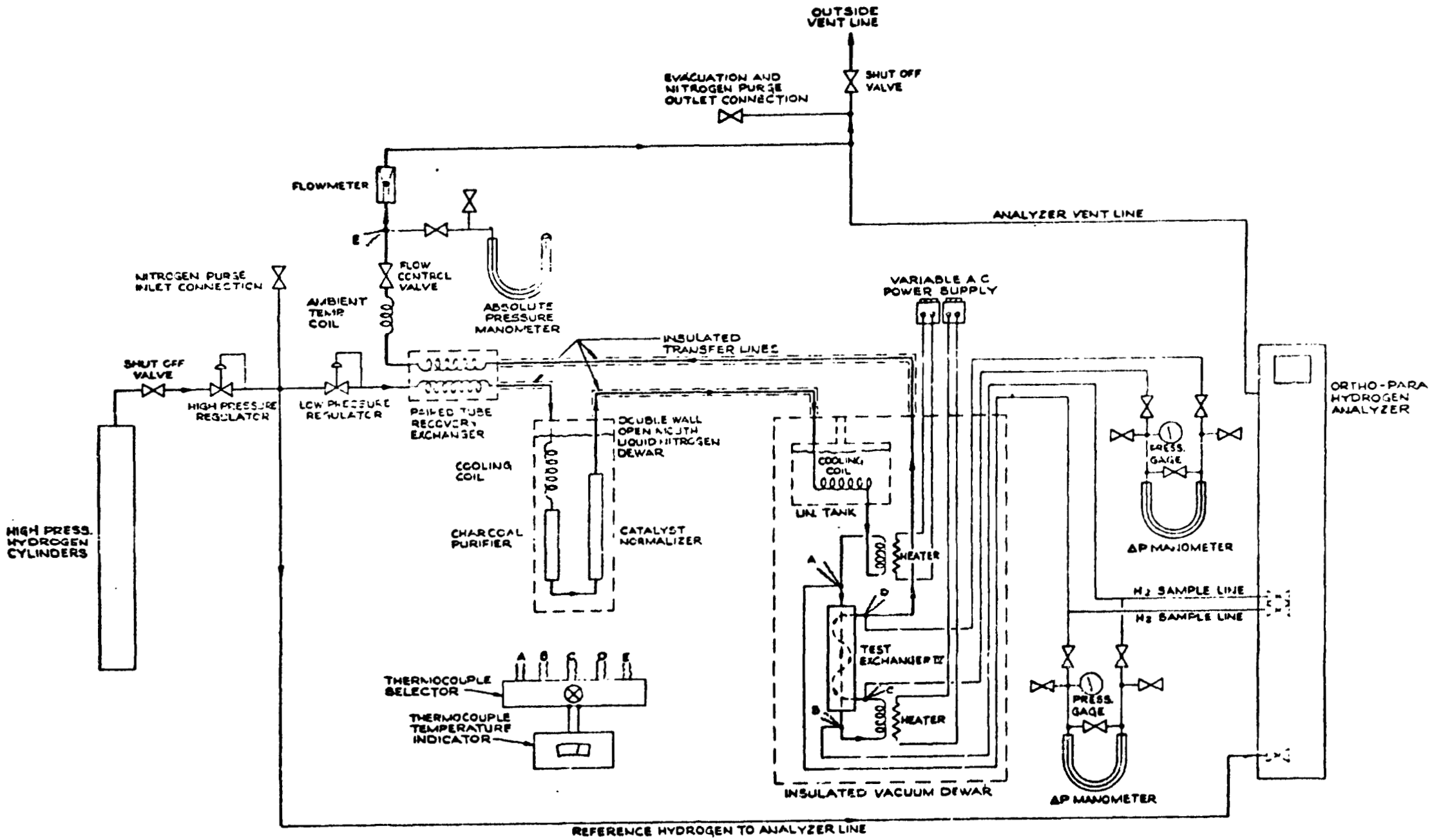

TEST SET-UP FOR EXCHANGER IV

Figure 14

ortho-para conversion catalyst. The analyzer will determine the ortho-para composition by comparing it to reference hydrogen gas taken from the hydrogen feed stream as shown on Figure 14.

After emerging from the shellside of the test exchanger, the gas temperature will be measured by a copper-constantan thermocouple. The ortho-para composition will again be sampled and determined by the analyzer using the pressure tap at the shellside outlet as a sample line as before. Venting hydrogen from the analyzer will go to the main vent stack. Comparing the two ortho-para compositions at the inlet and outlet temperatures will permit an evaluation of the catalyst performance in the heat exchanger configuration. Rather than measuring the pressure of the gas at the outlet of the shellside, the pressure tap will go to one leg of a mercury filled manometer. The other leg of the manometer will be connected to the pressure tap from the shellside inlet of the exchanger. Therefore, the manometer will give the shellside pressure drop.

After the shellside outlet, the hydrogen gas will flow through a heater identical to the one described previously. This heater will permit varying the temperatures on the exchanger. Following the heater, the pressure and temperature of the gas will be measured, using a pressure gauge and copper-constantan thermocouple, respectively. The gas then flows through the tubeside of the exchanger. Emerging from the tubeside, the temperature will be measured as before. The pressure drop across the tubeside will be measured by a differential manometer. The hydrogen gas then exits from the evacuated dewar and goes to the recovery exchanger.

4. Specific Test Set-Up for Exchanger III

Figure 15 shows a schematic representation of the test set-up for exchanger III. The equipment and operation common to all exchanger tests has been described previously. The differences in the set-up required for exchanger III occur inside the vacuum dewar in the line arrangement, and the amount of equipment and measuring instrumentation required.

Upon emerging from the coil in the LIN reservoir inside the evacuated dewar, the cold hydrogen gas will flow through a copper tube coil that has electrical heating tape wrapped around it. The heating tape will have its power furnished by a variable output A.C. transformer. This variable power supply will allow regulation of the temperature of the hydrogen entering the tubeside of the

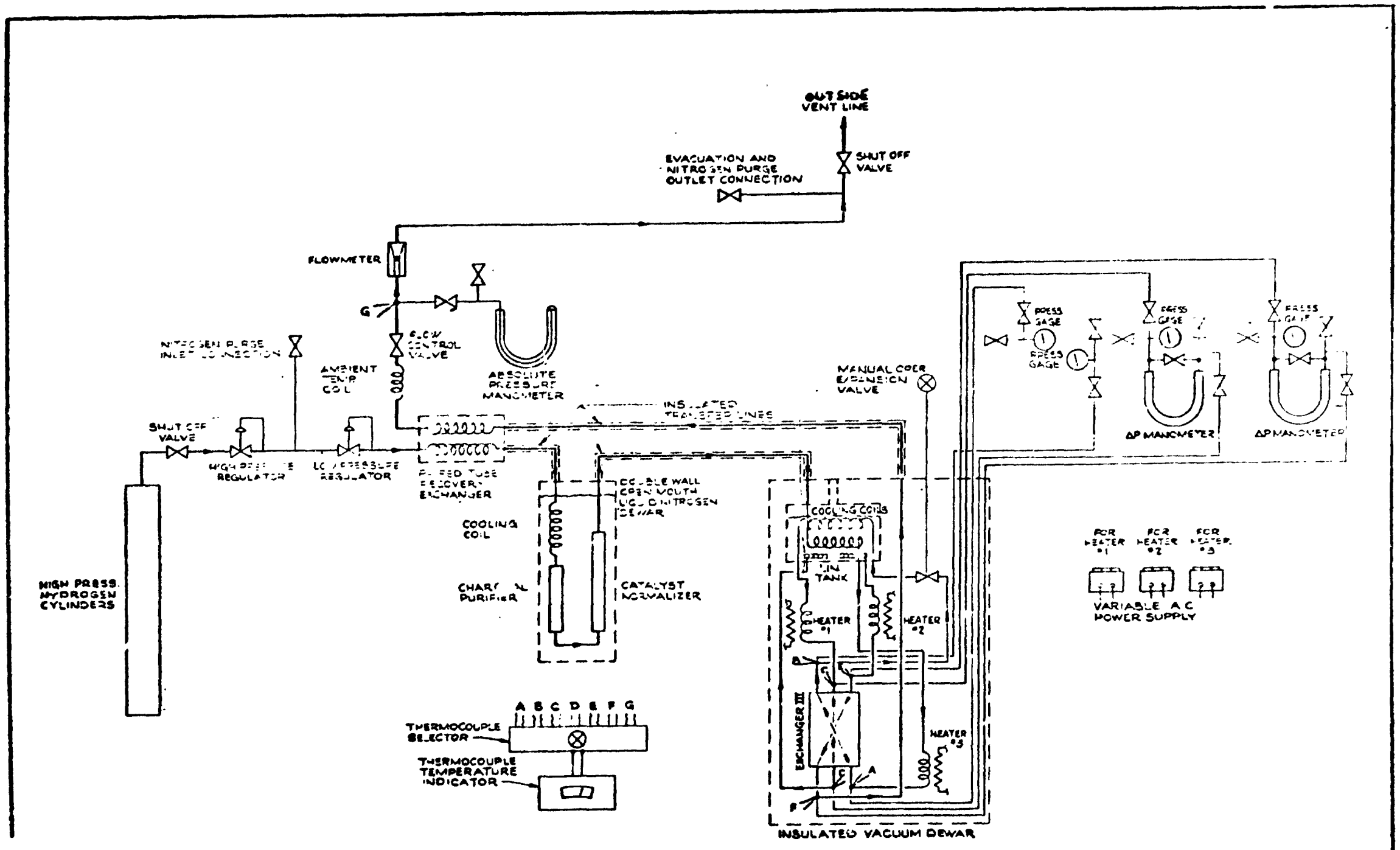

TEST SET-UP FOR EXCHANGER III

Figure 15

test exchanger from 140°R to about 260°R. Before entering the tubeside of the exchanger, the temperature and pressure of the gas will be sensed. Upon coming out of the tubeside of the exchanger, the gas temperature will be measured. The pressure drop through the tubeside circuit will be measured with a differential mercury manometer. The hydrogen will then go through a manually operated expansion valve to lower the gas pressure before it goes to the two shellside circuits. This technique closely simulates actual expected operating pressures.

The gas will then go through a second coil in the LIN reservoir to be recooled to 140°R. Once the gas has been recooled, it will go through a variable heater as it and for the tubeside flow. The various heaters will allow variable temperature differentials to be imposed on the exchanger, allowing a range of performance evaluations. The gas will then go through the inner shellside circuit. As was the case for the tubeside flow, the temperature at the inlet and outlet of the circuit will be measured. The inlet pressure, and the pressure drop across the circuit (pressure gauge for inlet pressure, differential mercury manometer for pressure drop).

The gas will then go through a third coil in the LIN reservoir to be recooled to 140°R again. It then passes through a heater and the outer shellside circuit using an identical set-up as that used for the inner shellside circuit. After leaving the outer shellside circuit the gas will go to the recovery exchanger.

V. MACHINERY

A. Machinery/System Interaction. Effects on Machinery Design

The basic design philosophy followed in sizing the machinery has been to select a specific design point from the computer system studies, and then to apply the influence of cumulative uncertainties. These uncertainties arise not only in the prediction of machinery performance, but also in the prediction of heat exchanger performance.

The design point was selected for good over-all system performance but at a point where modest alterations of pressures, temperatures, machinery efficiencies and heat exchanger effectiveness would not prevent successful reliquefier operation. The design is purposely intended to minimize technical risk and to ensure a reasonable, though not necessarily maximum, reliquefaction fraction. It was recognized that many extrapolations and estimates are, by necessity, in the system hardware design. The machinery should therefore, contain sufficient adjustability to offset the possible adverse cumulative effects of all recognizable uncertainties.

The compressor piston was sized to provide the flow required at the selected design point (see Figure 9 for a definition of the design point). However, a consideration of system behavior and directional tendencies of cumulative uncertainties, has been made and utilized to bias the compressor sizing to ensure providing design point or slightly greater flow.

The reason for this increased compressor flow directional bias includes the following considerations:

1. Compressor valve leakage, piston ring blowby, thermal conduction, and pressure losses all tend to reduce compressor flow.

2. If actual compressor and engine thermal efficiencies are higher than assumed for the computer analysis, the design point flow split for greatest reliquefaction would ask for a larger compressor flow fraction.

3. Throttle valves, which may be installed in the system for flow control, would operate in the direction of reducing the compressor flow fraction.

4. As the reliquefier operates over a range of diminishing tank pressure, compressor pressure ratio and volumetric efficiency changes cause a relative reduction of compressor flow fraction

The machinery sizing is thus biased to take advantage of possible higher efficiencies or to combat possible lower volumetric efficiency which would result in less compressor flow than expected.

As stated previously, the machinery will contain adjustment features to assure that an optimum flow split is attainable in the system test. These features are catagorized as (1) directly available - accomplished by partial machine disassembly and adjustment and (2) available with supplementary effort - requiring fabrication or modification of a limited number of component parts.

1. Directly available adjustments

   a. Compressor piston bumping clearance. Yield: ± 3 to 5% of compressor flow.

   b. Engine inlet cam timing. Yield: ± 20% of engine flow.

2. Adjustments available with extra effort

   a. Compressor stroke change: Yield: ± 15% of compressor flow. Extra effort: New crankthrow on main shaft; miscellaneous new spacers and shims.

   b. Engine piston diameter change. Yield: + 5%, -15% of engine flow. Extra effort: New piston, cylinder, and piston rings.

In addition to the machinery adjustments, the system itself has two naturally accessible points for flow adjustment. The J-T valve is an adjustable valve which can be used to control compressor discharge pressure, thereby affecting pressure ratio, volumetric efficiency, and finally compressor flow. The magnitude of the adjustment available in this fashion is small, perhaps on the order of ± 3 to 5%. This effect is minimized by the two stage compressor's relative flow stability with respect to small changes in discharge pressure. The nominal 3 psia engine exhaust pressure is also accessible for back pressure adjustment. Increasing engine back pressure will reduce engine flow: the magnitude of adjustment available is inherently small. The extent to which this variable can be utilized is limited because of possible overexpansion, and the accompanying undesirable reversed pressure differentials.

Since optimum and perhaps even successful operation of the reliquefier is dependent on the interaction of several variables, it appeared desirable to provide temporary means of adjusting the relative compressor to expander flows. It is this variable that could cause most operating flexibility. The final reliquefier configuration would not employ valves or other devices, but those items would be used only to determine the required permanent system or machinery adjustments that may be indicated during the reliquefier test phase.

Several system locations are being examined for the possible introduction of temporary flow control valves to balance the reliquefier. The relative flow effects, system upsets, and physical difficulties have not yet been fully evaluated. The machinery effects corresponding to some possible control valves locations are:

1. Throttle valve on compressor suction - large adjustable reduction of compressor flow by reduced inlet pressure and reduced volumetric efficiency corresponding to a higher overall pressure ratio.

2. Recirculating valve between compressor interstage pressure and first stage suction - warm gas bypassed to first stage suction provides moderate adjustable reduction of compressor flow.

3. Recirculating valve between compressor final discharge and interstage - pressure rise in interstage provides moderate adjustable reduction of compressor flow by first stage pressure ratio and volumetric efficiency effects.

B. Engine Cold End Design

Design layout of the engine cold end has been completed and detail manufacturing drawings are 50% complete.

A piston diameter of 2.875 inches and a stroke 1.0 inches have been chosen to give 1.96#/HR expander flow at the design condition. The cold end design is essentially as depicted in the original concept (Figure 16 is included for ready reference). The piston utilizes plastic rings with steel expander rings operating in a hard surfaced cylinder bore. Soft flat face valves operate against integral valve seats in the cylinder head. Cold valve springs in the cylinder head allow the use of small diameter, low heat leak tension rods for the valve stems. The piston rod also operates in tension. A welded "distance piece" subassembly provides the extended length required to minimize the heat conduction between the cylinder head and the warm running gear. To the lower (cold) flange of the distance piece is mounted an exhaust surge cannister, which surrounds the cylinder head region. All machine joints inside the cannister are metal to metal face joints. Any minute leakages of hydrogen from these joints will be collected in the exhaust surge cannister. The cannister to "distance piece" joint and the inlet and outlet gas piping connections are all sealed by metallic O-rings.

The distance piece subassembly contains individual shielding tubes for each valve stem and the piston rod. These tubes terminate at a thermal expansion telescoping joint in the gas packing region of the distance piece upper (warm) flange. Gas packings are similar, except for size, to seals used on other existing Air Products equipment and consist of redundant, stacked elastomer and plastic seal subunits.

C. Running Gear Design

Desing layout of the running gear is 50% completed and progressing in accordance with the schedule.

Detail drawings of long delivery castings are underway. The long delivery drive motor is on order with a promised March delivery. Long delivery special throw bearings are on hand and, together with other standard ball bearings, are scheduled for April delivery after being repacked with a special DuPont grease.

The engine end of the running gear is similar to the originally proposed concept. The piston rod of the engine is fastened to a reciprocating "yoke" type crosshead. The crosshead is guided by two dry lubricated bushings pressed into a cast aluminum housing. Valve tappet clearance adjustments are made through an end access hole provided in the casting. Valve stems are operated by a lever arm system using dry lubricated bushings. Adjustable engine cams are located within the motor housing envelope. The location allows use of larger cams and ball bearing followers with improved life expectancy as compared to the cam system shown in the confines of the original concept.

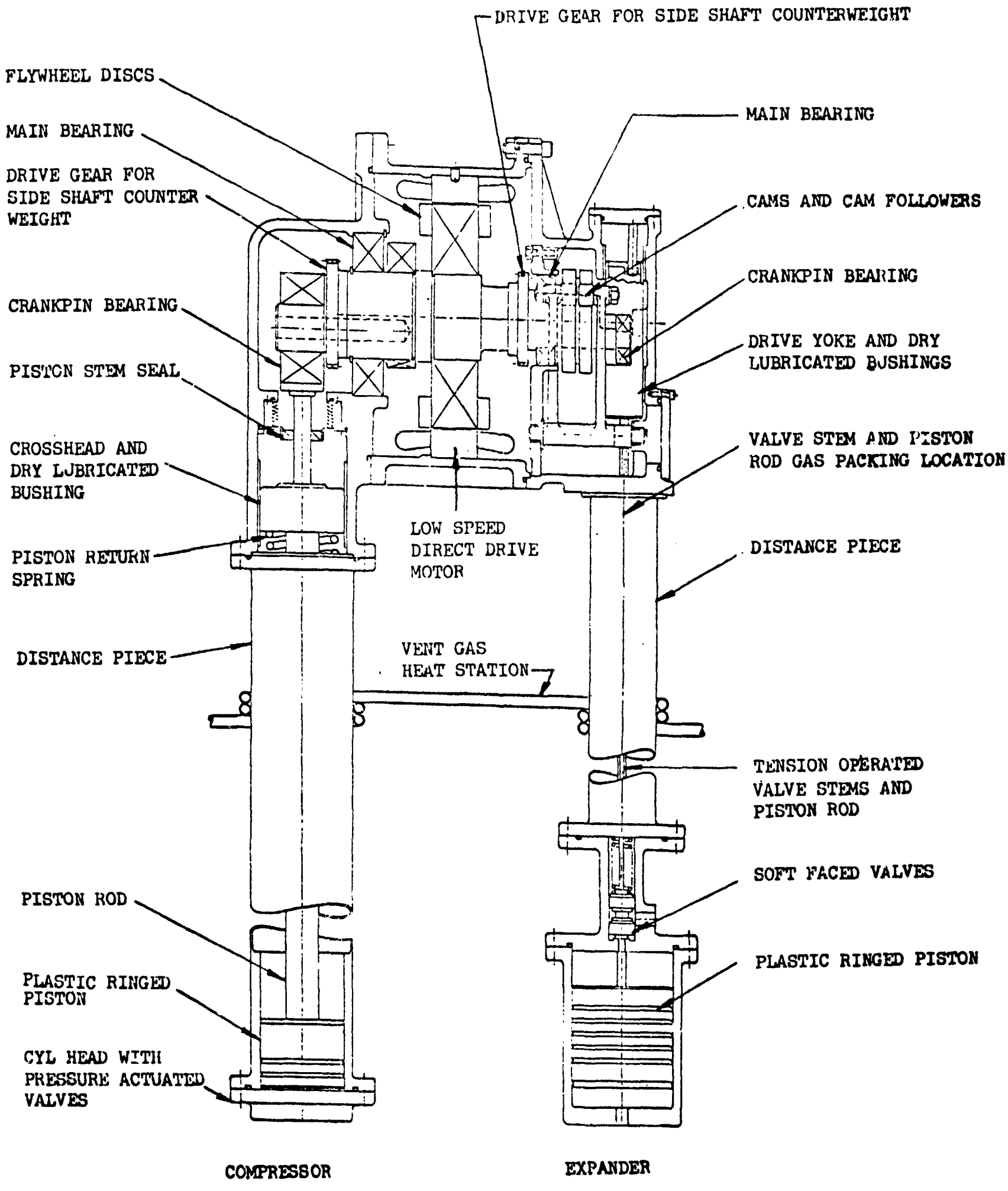

PROPOSED HYDROGEN COMPRESSOR/EXPANDER

Figure 16

The 220 volt, 3 phase, electric drive motor is mounted with stator to housing, and rotor to shaft, press fits. The motor will be capable of providing a 125 watt, 110 volt, single phase, heating effect when not running. In addition it will be capable of providing 30 seconds stall torque heating effect under 220 volt, 3 phase power, as cold startup insurance against bearing grease drag effects. Motor insulation has been selected for wide temperature range flexibility and low outgassing characteristics. Specific materials utilized are members of the teflon, nylon and silicone families.

The main shaft is mounted in two large ball bearings and provides all power transfer service between engine, motor, compressor, and sideshaft counterweight systems. The engine and compressor throw bearings are specially constructed to Air Products' order for service under high localized outer race loading conditions.

The compressor end housing is an aluminum casting and mounts the dry lubricated piston crosshead guide bushing. A small end cover plate in line with the main shaft allows access for manual rotation of the machine when setting piston bumping clearances and engine valve tappet clearances. Vent plugs on the compressor and engine castings allow inert gas purging of the running gear for safe initial operation and also provide means for gas sampling for later investigations of contaminant buildups, when operating with a closed hydrogen atmosphere in the crankcase.

All static seals on the running gear are rubber O-rings.

D. Compressor Cold End Design

Design layout of the compressor cold end has been examined in the region of the compressor warm casting interface. The final cold end layout will be started when the running gear layout is completed.

The cold end, while not in drawing form, is conceptually well defined. A long tubular piston will extend from the warm piston crosshead guide to the cold tandem pistons. The second stage piston will be 1.5 inches in diameter and will be mounted directly atop the 2.5 inch diameter first stage piston. Stroke will be .750 inches. The first stage piston will mount a guidance control plastic wearing ring in addition to compression rings initially seated with steel expander rings. The second stage piston will mount compression rings only.

The first stage will take suction from a surge volume provided within the compressor "distance piece". Surging gas communication between the surge chamber and the crankcase will be prevented by a piston stem seal located between the first stage piston and the warm running gear. The first stage will breathe through an intake valve in the piston, and discharge through an outlet valve in the cylinder head. The cold cylinder region will be surrounded by an interstage surge volume. Second stage inlet and discharge valves will be in its cylinder head. Surging and filtration of the final discharge will be accomplished in the cryostat piping system. All compressor cold joints, which are exposed to the reliquefier vacuum space, will be sealed by metallic O-rings.

VI. JOULE-THOMSON VALVE

The design of the J-T valve is completed. All required parts have been fabricated and the assembly is scheduled for completion by the end of January, 1968.

A. Design Considerations

The J-T valve used with the hydrogen reliquefier is an adaptation of a design used for several years on APCI's miniature helium refrigerators. It is an automatic valve, maintaining an essentially constant upstream pressure by balancing a spring force against a bellows assembly that communicates with the high pressure inlet side of the valve. Figure 17 shows a cross section of this J-T valve.

Since the J-T valve is subjected to two phase flow conditions during normal operation in the reliquefier, the valve pressure variation as a function of flow is difficult to predict. Sufficient analytical investigation has been performed to identify the variables affecting this relationship, and to ascertain that the standard J-T valve design is not grossly different from that which will be required for the reliquefier. Since the valve body and needle are easily varied, and since their relative geometries represent the major determinants to its characteristics, a valve of essentially standard design is being fabricated for test. The results of this test will be utilized to adjust, if required, the valve characteristics to provide the minimum variation of inlet pressure as a function of the expected flow variation of the reliquefier.

B. Test Technique

A test program has developed to determine the performance characteristics of the Joule-Thomson expansion valv

The conditions under which the expansion valve will be tested will be identical to the normal operating conditions expected in the reliquefier. This will be accomplished by precooling hydrogen gas at approximately 300 psia to approximately 140°R using luquid nitrogen. This cold hydrogen gas is below the inversion temperature, so that, upon expansion to a lower pressure the gas will cool. By using this cooled gas in heat exchange with the high pressure gas prior to expansion, the hydrogen will ultimately liquefy and thereby effectively simulate the valve operation in the reliquefier. Data for flow versus inlet pressure and pressure drop will be recorded, which permits an evaluation of the J-T valve and its effect on reliquefier performance.

C. Specific Test Set-Up

The test set-up for the Joule-Thomson expansion valve is schematically represented on Figure 18. As can be seen from the figure, the test set-up is similar to that used for the evaluation of the heat exchangers.

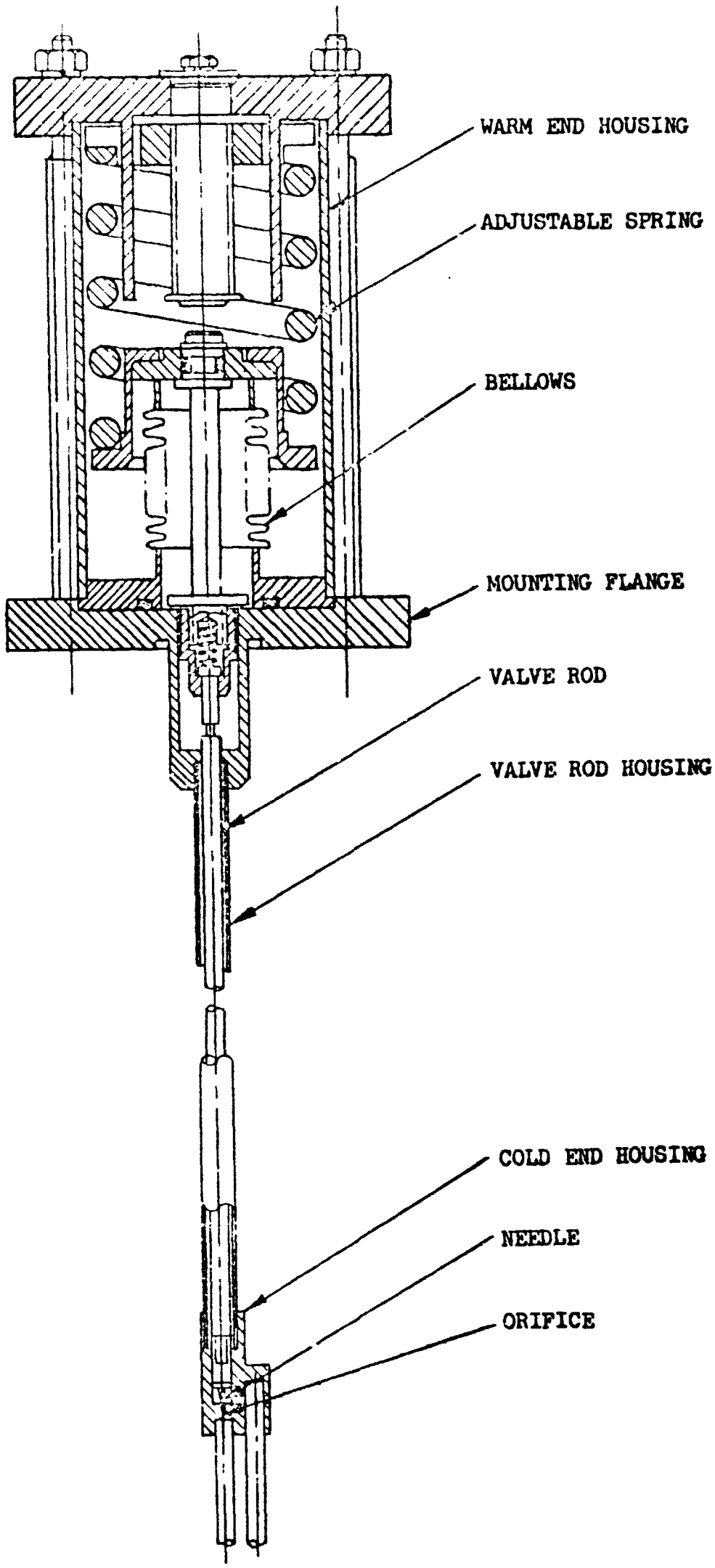

AUTOMATIC JOULE THOMSON VALVE

Figure 17

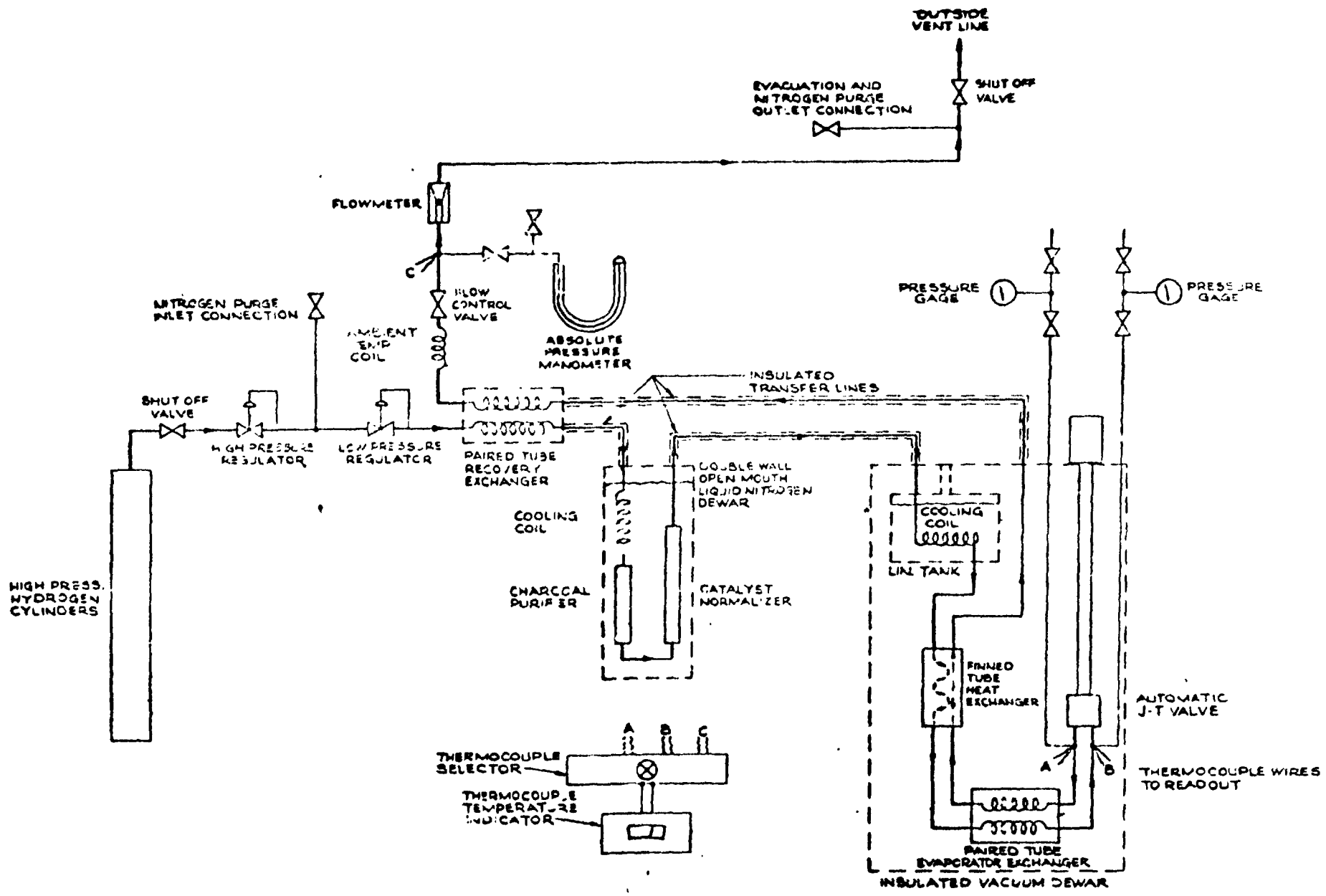

TEST SET-UP FOR J-T VALVE

Figure 18

Upon emerging from the coil in the LIN reservoir inside the evacuated dewar, the cold (140°R) hydrogen gas will flow through the tubeside circuit of a finned tube heat exchanger. In this exchanger, the gas will be cooled by cold returning vapor from the expansion valve. The hydrogen gas will then flow through a paired tube evaporator exchanger. In this exchanger the gas will be further cooled by evaporating a portion of the returning liquid which will form during the J-T expansion. The temperature and pressure of the gas will be measured at the inlet to the valve. The temperature will be sensed by a cooper-constantan thermocouple, which will give accurate readings at these temperatures. The pressure will be sensed by a test pressure gage.

After expanding through the valve, the temperature and pressure of the liquid and vapor which is formed will be measured using a copper constantan thermocouple. A test pressure gage will be used to measure the pressure. The liquid in the returning stream will be boiled off in the evaporator exchanger as described previously. The vapor will then be warmed (and the incoming gas cooled) in the finned tube exchanger, also described previously. The hydrogen gas will then leave the vacuum dewar, and flow to the recovery heat exchanger.

VII. SCHEDULE REVIEW

Figure 19 shows a recently revised program schedule including significantly more detail than those previously presented. It can be noted that the scheduled completion date remains in accordance with contractural requirements with one exception; i.e. the final report review date is after the 12th month of the contract starting date. It seems reasonable that the final report should include actual reliquefier operating date, consequently, the report due date should be extended.

A. Current Status

The revised schedule is in accordance with previously reported component completion dates. Slight slippage of the scheduled testing of the heat exchangers has occurred from that previously reported. The two weeks delay evident in this area has no overall effect on the scheduled program completion date. Based on the current schedule, the heat exchangers will be completed, including final testing of the full scale models, by May, 1968. All other previously reported component completion dates have not changed.

B. Critical Events

The machinery design and fabrication represents the critical scheduling path. The schedule shown has no contingencies in this area, and successful compliance to the machinery schedule should ensure that the project completion date will be held.

C. Efforts Underway to Hold Schedule

The machinery design phase has included a review of those items typically requiring long lead times. These items have been identified and design effort is being concentrated in these areas to ensure sufficient purchasing and fabrication lead times. Typical of components in this category are castings, cams, levers, piston ring material, and cylinders.

Whenever possible preliminary bills of material are being issued to prevent schedule delays that could arise because of lack of proper material. This is being accomplished in all areas of the project and is not limited to the machinery.

All preliminary component test arrangements are being designed to utilize existing test hardware. Fabrication of special test dewars and purchase of test instrumentation is being avoided whenever existing equipment is available that will perform the required function. This approach results in minimum time and cost to the reliquefier project.

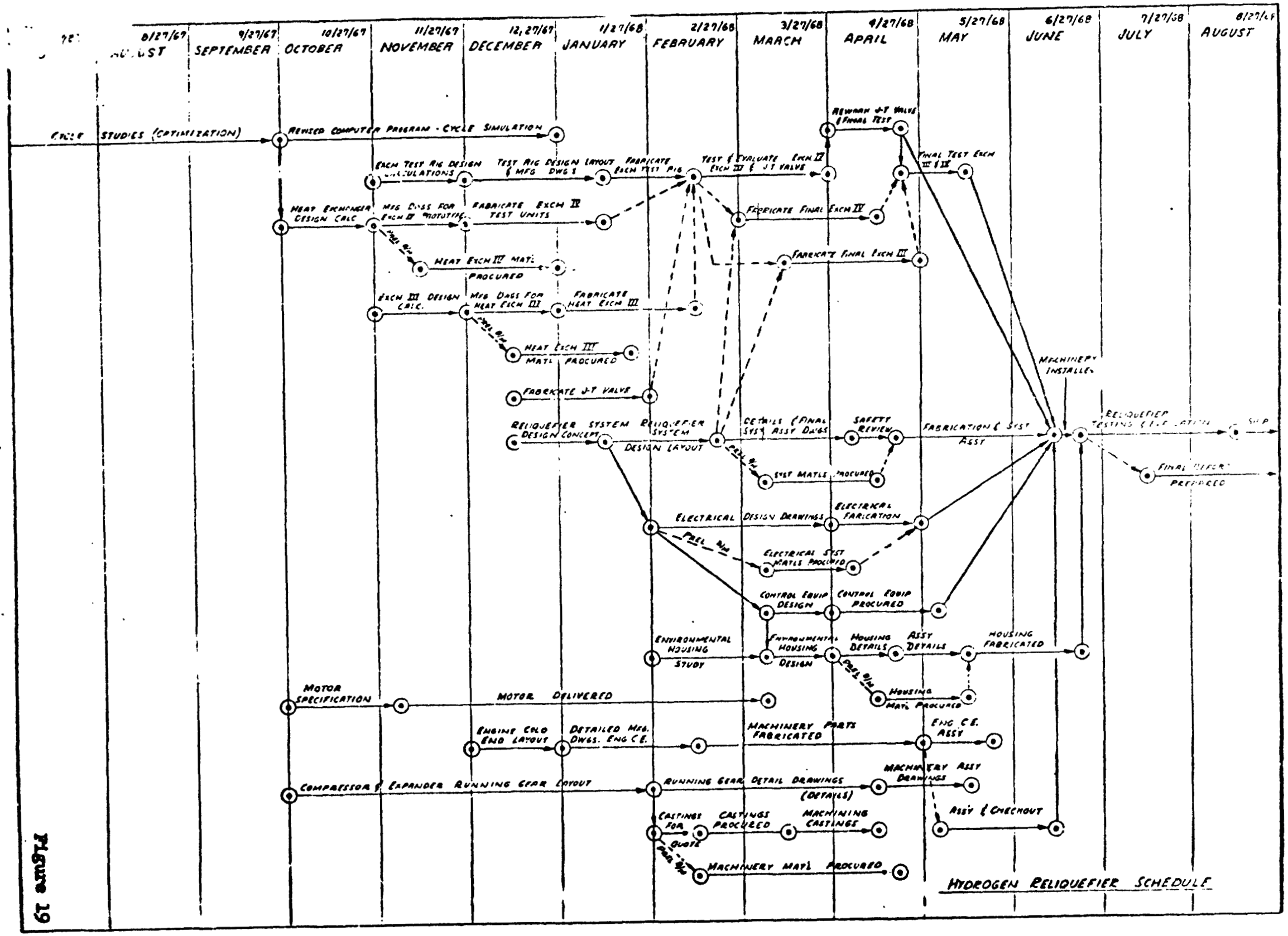
8/27/67
AUGUST
9/27/67
SEPTEMBER
10/27/67
OCTOBER
11/27/67
NOVEMBER
12/27/67
DECEMBER
1/27/68
JANUARY
2/27/68
FEBRUARY
3/27/68
MARCH
4/27/68
APRIL
5/27/68
MAY
6/27/68
JUNE
7/27/68
JULY
8/27/68
AUGUST
CYCLE STUDIES (OPTIMIZATION)
REVISED COMPUTER PROGRAM - CYCLE SIMULATION
EXCH TEST RIG DESIGN CALCULATIONS
TEST RIG DESIGN LAYOUT & MFG DWGS
FABRICATE EXCH TEST RIG
TEST & EVALUATE EXCH IV & J-T VALVE
REWORK J-T VALVE & FINAL TEST
FINAL TEST EXCH III & IV
HEAT EXCHANGER DESIGN CALC
MFG DWGS FOR EXCH IV PROTOTYPE
FABRICATE EXCH IV TEST UNITS
FABRICATE FINAL EXCH IV
HEAT EXCH IV MAT'L PROCURED
FABRICATE FINAL EXCH III
EXCH III DESIGN CALC.
MFG DWGS FOR HEAT EXCH III
FABRICATE HEAT EXCH III
HEAT EXCH III MAT'L PROCURED
MACHINERY INSTALLED
FABRICATE J-T VALVE
RELIQUEFIER SYSTEM DESIGN CONCEPT
RELIQUEFIER SYSTEM DESIGN LAYOUT
DETAILS (FINAL SYST ASSY DWGS)
SAFETY REVIEW
FABRICATION & SYST ASSY
RELIQUEFIER TESTING & EVALUATION
SHIP
SYST MATL PROCURED
FINAL RELIQUEFIER PREPARED
ELECTRICAL DESIGN DRAWINGS
ELECTRICAL FABRICATION
ELECTRICAL SYST MATL PROCURED
CONTROL EQUIP DESIGN
CONTROL EQUIP PROCURED
ENVIRONMENTAL HOUSING STUDY
ENVIRONMENTAL HOUSING DESIGN
HOUSING DETAILS
ASSY DETAILS
HOUSING FABRICATED
HOUSING MAT'L PROCURED
MOTOR SPECIFICATION
MOTOR DELIVERED
ENGINE COLD END LAYOUT
DETAILED MFG. DWGS. ENG C.E.
MACHINERY PARTS FABRICATED
ENG C.E. ASSY
COMPRESSOR & EXPANDER RUNNING GEAR LAYOUT
RUNNING GEAR DETAIL DRAWINGS (DETAILS)
MACHINERY ASSY DRAWINGS
CASTINGS FOR QUOTE
CASTINGS PROCURED
MACHINING CASTINGS
ASSY & CHECKOUT
MACHINERY MAT'L PROCURED
HYDROGEN RELIQUEFIER SCHEDULE

Figure 19

VIII. FORECASTED EFFORT FOR JANUARY, 1968

A. Reliquefier System Test Arrangement

It is anticipated that the final reliquefier system configuration will require definition of an interface that is mutually acceptable to both NASA and APCI. Depending upon NASA's test facilities and test plans for the completed reliquefier, it may be advisable to limit the use of APCI owned equipment for the system test arrangement. A meeting between NASA and APCI is required in the near future to decide on a mutually acceptable approach in this area. It is expected this meeting will be held in the forthcoming month. After which appreciable effort will be expended in defining a mutually acceptable system and interface.

B. Machinery and Heat Exchangers

Efforts will continue in both of these well defined areas. Depending on the completion of the heat exchanger test rig, preliminary test results may be presented in the next monthly report.