N69-38206
NASA CR-101921

CASE FILE
COPY

SD 69-419-4

Study of ONE-MAN LUNAR FLYING VECHICLE
FINAL REPORT

Volume IV
Configuration Design—Appendixes

Space Division
North American Rockwell

NASA CR 101921

SD 69-419-4

STUDY OF ONE-MAN LUNAR FLYING VEHICLE
FINAL REPORT

VOLUME IV
CONFIGURATION DESIGN
APPENDIXES

Contract NAS9-9045

31 August 1969

FOREWORD

This book presents the appendixes to Volume 4, Configuration Design. This work was accomplished under the One-Man Lunar Flying Vehicle Contract (NAS9-9045), conducted by the North American Rockwell Space Division for the National Aeronautics and Space Administration Manned Spacecraft Center, Houston, Texas. Other volumes to this final report are:

Volume 1. Summary
Volume 2. Mission Analysis
Volume 3. Subsystem Studies
Volume 5. Preliminary Design and Specification
Volume 6. Training and Resources Plans

TECHNICAL REPORT INDEX/ABSTRACT

ACCESSION NUMBER						DOCUMENT SECURITY CLASSIFICATION	
						UNCLASSIFIED	

TITLE OF DOCUMENT

STUDY OF ONE-MAN LUNAR FLYING VEHICLE - FINAL REPORT: VOLUME 1 - SUMMARY; VOLUME 2 - MISSION ANALYSIS; VOLUME 3 - SUBSYSTEM STUDIES; VOLUME 4 - CONFIGURATION DESIGN; VOLUME 5 - PRELIMINARY DESIGN AND SPECIFICATIONS; VOLUME 6 - TRAINING AND RESOURCES PLANS

LIBRARY USE ONLY

AUTHOR(S)

HANLEY, G. M.

CODE	ORIGINATING AGENCY AND OTHER SOURCES	DOCUMENT NUMBER
NAJ65231	NORTH AMERICAN ROCKWELL, SPACE DIVISION	SD 69-419-1,-2,-3,-4,-5,-6

PUBLICATION DATE	CONTRACT NUMBER
31AUG69	NAS9-9045

DESCRIPTIVE TERMS

*ONE-MAN LUNAR FLYING VEHICLE, *CONTROL SYSTEMS, *PROPULSION SYSTEMS, *TRAJECTORIES, *DESIGN, *TRAINING, *RESOURCES, *MISSION ANALYSIS

ABSTRACT

THE PRIMARY OBJECTIVES OF THIS STUDY WERE TO OPTIMIZE THE DESIGN AND TO DEVELOP SYSTEM SPECIFICATIONS OF THE LUNAR FLYING VEHICLE. THE SCOPE ENCOMPASSED PARAMETRIC INVESTIGATIONS, CONCEPT GENERATION, AND EVALUATION EFFORT FOR THE DEFINITION OF A RECOMMENDED CONCEPT; PRODUCTION OF A PRELIMINARY DESIGN AND DEVELOPMENT OF SYSTEMS SPECIFICATIONS OF THE RECOMMENDED CONCEPT; AND DEFINITION OF RESOURCES AND CREW TRAINING PLANS. IN ADDITION TO GENERATION OF THE LFV DESIGN, THE SCOPE OF THE STUDY INCLUDED LUNAR MODULE INTEGRATION, FLIGHT SUIT INTERFACE STUDIES, AND DEFINITION OF GROUND SUPPORT EQUIPMENT FOR EARTH AND LUNAR OPERATIONS.

AS A RESULT OF PARAMETRIC STUDIES CONDUCTED DURING THE FIRST PHASE OF THIS EFFORT, A CONCEPT WAS SELECTED WHICH HAS THE FOLLOWING CHARACTERISTICS: (1) STABILITY-AUGMENTED CONTROL, (2) FOUR GIMBALED ENGINES WHICH ARE CLUSTERED BENEATH THE VEHICLE, (3) A SEATED PILOT POSITION, AND (4) AN INTEGRAL X-FRAME LANDING GEAR WITH 6 HYDRAULIC ATTENUATORS. THIS VEHICLE IS CAPABLE OF CARRYING A 370-LB PAYLOAD IN ADDITION TO THE PILOT. THE DRY WEIGHT OF THE VEHICLE IS 304 LB. WHEN LOADED WITH 300 POUNDS OF LM DESCENT STAGE PROPELLANTS, THE VEHICLE CAN OPERATE WITHIN A 4.6 NAUTICAL MILE RADIUS WITH NO PAYLOAD.

CONTENTS

	Page
APPENDIX A: MASS PROPERTIES REPORT	A-1
Configuration Description	A-3
Mass Properties Summary - Pilot Only	A-9
Mass Properties Summary - 100-Pound Payload Case	A-17
Mass Properties Summary - 370-Pound Payload Case	A-25
Mass Properties Summary - Lunar Escape	A-33
Detail Mass Properties - Pilot Only	A-39
Detail Mass Properties - 100-Pound Payload Case	A-53
Detail Mass Properties - 370-Pound Payload Case	A-69
Detail Mass Properties - Lunar Escape	A-85
APPENDIX B: LANDING DYNAMICS PROGRAM RESULTS	B-1
APPENDIX C: BACKGROUND CONCEPTUAL DRAWINGS	C-1
APPENDIX D: RELIABILITY CALCULATION	D-1
Configuration Comparison	D-3
Control Comparison	D-7
Control Study Calculation Examples	D-9
Check-Out Location	D-10

APPENDIX A

MASS PROPERTIES REPORT

APPENDIX A

MASS PROPERTIES REPORT

CONFIGURATION DESCRIPTION

The configuration consists of a one-man crew with variable payload which is stability augmented using eight actuators for attitude control. The body structure is basically sheet-stringer with trusses to support two 20-inch spherical propellant tanks. The vehicle is designed to land on four integrally framed legs with horizontal and vertical attenuation to the body combined in eight identical shock absorbers. Main propulsion is provided by four gimbaled engines. The following is a brief description of the baseline configuration subsystems:

Code	Description
2.0	BODY STRUCTURE
2.1	Carry-through Structure - Structural box, aluminum sheet stringer
2.2	Payload Platforms - Aluminum sheet stringer, hinged
2.3	Fuel and Oxidizer Tank Supports - Aluminum support structure for mounting tanks
2.4	Engine Compartment - Aluminum structure for housing the engines and actuator system
2.5	Secondary Structure - Aluminum structure for mounting various system components
3.0	INDUCED ENVIRONMENTAL PROTECTION
3.1	Insulation - Environmental protection consists of mylar type of covering for propellant and pressure tanks and engine compartment

Code	Description (Cont)

4.0 LAUNCH, RECOVERY, AND DOCKING

4.1 Leg - Aluminum triangular tubing of 4.0-inch depth with bending material section at each corner for each of the four legs

4.2 Foot Pads - Aluminum sole, 10 inches in diameter, four required, with attachment fittings for connection to each leg

4.3 Attenuation - Eight shock absorbers providing both vertical and horizontal attenuation

Landing Gear Capability

Tip-over safety margin	20 deg
Vertical velocity	6 fps
Horizontal velocity (toppling stability)	2 fps
Horizontal velocity (stroke)	3.5 fps
Attitude rate (any axis)	±3 deg/sec
Touchdown attitude (any axis)	±10 deg
Ground slope (any direction)	±10 deg
Max z-axis deceleration	8 g
Max xy-plane deceleration	4 g
Max soil-bearing pressure	∞
Min soil-bearing pressure	8 psi
Ground clearance	12 inches
Engine cut-off height-nominal	58 inches

5.0 MAIN PROPULSION

5.1 Engine and Accessories

Engine (4 required)
- Thrust - 110 lbs
- Chamber pressure - 100 psia
- Area ratio - 40:1
- Dry weight - 4.9 lbs
- Mixture ratio - 1.5
- Inlet valve, cavitating venturi throttle, combined with start valve
- Average specific impulse - 276 sec
- Gimbal bearings - single axis, Bendix flexural pivot

Code	Description (Cont)
5.1	Engine and Accessories (Cont)
	Flex plumbing and lines
	Engine thrust structure
5.2	Propellant Tanks - Fuel 20-inch spheres Gemini - forging tools and vacuum chuck Minimum gauge - 0.025 6A1 4 Va titanium 2 mounting trunions Top boss - 1/2 inch used for load stability Bottom boss - 1 inch used for load stability Slosh and feedout internals - built-in capillary screens
5.3	Propellant Lines and Disconnects (oxygen and fuel) Lines - 1/2 inch 304L stainless steel Prevalves - 2 required, 1/2-inch manual Filter - 2 required, 25 micron, 2 lbs/sec, 10 psi drop Fill Connector - 2 required, Ref. drawing 2030-18K-K, Apollo ME273-0021, 19, Class 1 Bleed tank - 2 required, ME273-0011, 24
5.4	Pressurization System Lines Check valve - 2 required, ME284-0357 Regulator - 2 required, ME284-0022 Relief valve - 2 required, ME284-0026 Shutoff valve - 2 required, manual Connector - 2 required Filter - 1 required Relief valve - 2 required, ME284-0026 Vessel - 1 required, ME282-0051 with 1.9 pounds helium

Code	Description (Cont)

7.0 POWER SOURCE

Power requirements

Actuators - 8 required, 1A, 28V	224 watts
Rotational hand controller	3
Gyro packs - 2 required, 44 watts	88
Control unit	20
Distribution losses, etc.	22
Total power	357

Mission requirements

Assume 5 sorties of 8-min duration (40-min total)
Batteries operated in parallel
Single battery must carry total load for any single sortie

Battery design

4 sorties 6 amp-hr for 2 batteries	= 3	amp-hr
1 sortie 1.6 amp-hr for 1 battery	= 1.6	amp-hr
	4.6	amp-hr

8.0 POWER CONVERSION DISTRIBUTION

Circuit breakers, switches, bus and wiring (2-amp) for distribution of electrical power to stability augmentation, controls, and displays. Battery status (integrating ampere-hour meter) on battery case.

9.0 GUIDANCE AND NAVIGATION

Control unit

Type - Analog IC's and discrete resistances
Power - Input 25 to 31 VDC
- Watts 15 quiescent
Average 20
Weight 7.4 pounds

Actuators - 8

Electrical
Voltage 0 to 31 VDC
Current 1.0 amp nominal

Code	Description (Cont)
9.0	GUIDANCE AND NAVIGATION (Cont)

Mechanical
- General - sealed for 45 days of vacuum
- Stroke - 0.900 + 0.01 in. limited by mechanical stops
- Torques - 100 in.-lb with 3.5-in. moment arm
- Response - 5 cps min
- Weight - 2.5 lb max (each)
- Length - 5.68 in.
- Duty cycle - 2-hr total operation, no single continuous use greater than 400 sec

Rate gyros - 2
- Weight 1.25 lb (each)

14.0 PERSONNEL PROVISIONS

Baseline configuration provides provisions for a seated pilot consisting of the following:
- Seat
- Restraints
- Access provision

15.0 CREW STATION CONTROLS AND PANELS

Baseline configuration consists of the following:
- Pedestal
- Instrument panel including following displays:
  - Attitude - azimuth meter
  - Propellant quantity indicators - 2
  - Thrust-to-weight indicator
  - Landing contact lights - 2
  - Pressure gages - 2
  - Timer
- Controls - pitch, roll and yaw
- Throttle handle, engine-cutoff handle
- Cables, etc.

MASS PROPERTIES SUMMARY

PILOT ONLY

LUNAR FLYING VEHICLE - BASE CONFIGURATION - PILOT ONLY PAGE 1 DATE 6.30.69.

MASS PROPERTIES SUMMARY

CODE	DESCRIPTION	CURRENT WEIGHT (POUNDS)	CENTER OF GRAVITY (INCHES FROM REF. DATUM) X	Y	Z	MOMENT OF INERTIA (SLUG FEET SQUARED) PITCH	ROLL	YAW
2. 0. 0.	BODY STRUCTURE	(36.9)	(-0.0)	(-0.5)	(100.6)	(2.)	(2.)	(3.)
2. 1. 0.	CARRY-THRU STRUCTURE	13.0	-0.1	0.1	100.7	0.	0.	0.
2. 2. 0.	PAYLOAD PLATFORMS	10.9	-0.9	-0.9	100.0	1.	1.	1.
2. 3. 0.	FUEL & OXIDIZER TANK SUPTS.	4.9	1.8	-1.8	100.0	0.	0.	1.
2. 4. 0.	ENGINE COMPARTMENT	2.7	0.0	0.0	104.2	0.	0.	0.
2. 6. 0.	SECONDARY STRUCTURE	2.0	0.0	0.0	100.0	0.	0.	0.
2.20. 0.	GROWTH	3.4	-0.0	-0.5	100.6	0.	0.	0.
3. 0. 0.	ENVIRONMENTAL PROTECTION	(11.0)	(0.0)	(-0.0)	(96.5)	(1.)	(1.)	(2.)
3. 1. 0.	INSULATION	10.0	0.0	-0.0	96.5	1.	1.	2.
3.20. 0.	GROWTH	1.0	0.0	-0.0	96.5	0.	0.	0.
4. 0. 0.	LANDING GEAR	(62.1)	(0.0)	(0.0)	(112.6)	(5.)	(4.)	(7.)
4. 1. 0.	STRUCTURAL LEGS	22.0	0.0	0.0	115.0	1.	1.	2.
4. 2. 0.	LANDING PADS	6.0	0.0	0.0	129.0	1.	1.	3.
4. 3. 0.	ATTENUATORS (INCL. ATTACH.)	28.0	0.0	0.0	106.9	2.	2.	3.
4. 4. 0.	LANDING SENSORS	0.5	0.0	0.0	124.3	0.	0.	0.
4.20. 0.	GROWTH	5.6	0.0	0.0	112.6	0.	0.	0.
5. 0. 0.	MAIN PROPULSION SYSTEM	(98.3)	(-1.6)	(1.4)	(99.1)	(5.)	(6.)	(7.)
5. 1. 0.	ENGINES & ACCESSORIES	32.8	0.0	0.0	107.6	0.	0.	0.
5. 2. 0.	FUEL TANK	11.0	23.3	-23.3	99.7	0.	0.	0.
5. 3. 0.	FUEL & OXIDIZER SYSTEM	8.5	1.9	-1.6	93.7	0.	1.	1.
5. 4. 0.	OXIDIZER TANK	11.0	-15.3	15.3	99.7	0.	0.	0.
5. 5. 0.	PRESSURIZATION SYSTEM	26.1	-9.5	8.7	89.7	1.	1.	2.
5.20. 0.	GROWTH	8.9	-1.6	1.4	99.1	0.	0.	0.
7. 0. 0.	POWER SOURCE	(18.3)	(12.0)	(0.0)	(98.0)	(0.)	(1.)	(1.)
7. 1. 0.	POWER SOURCE - BATTERIES	16.6	12.0	0.0	98.0	0.	1.	1.
7.20. 0.	GROWTH	1.7	12.0	0.0	98.0	0.	0.	0.
8. 0. 0.	POWER CONVERSION & DISTRIBUTION	(8.8)	(12.0)	(0.0)	(93.1)	(0.)	(0.)	(0.)
8. 1. 0.	POWER EQUIPMENT	8.0	12.0	0.0	93.1	0.	0.	0.
8.20. 0.	GROWTH	0.8	12.0	0.0	93.1	0.	0.	0.
9. 0. 0.	GUIDANCE AND NAVIGATION	(32.9)	(0.0)	(0.0)	(103.3)	(0.)	(0.)	(0.)

Space Division
North American Rockwell

LUNAR FLYING VEHICLE - BASE CONFIGURATION - PILOT ONLY PAGE 2 DATE 6.30.69.

MASS PROPERTIES SUMMARY

CODE	DESCRIPTION	CURRENT WEIGHT (POUNDS)	CENTER OF GRAVITY (INCHES FROM REF. DATUM) X	Y	Z	MOMENT OF INERTIA (SLUG FEET SQUARED) PITCH	ROLL	YAW
9. 3. 0.	GUIDANCE OUTPUT	29.9	0.0	0.0	103.3	0.	0.	0.
9.20. 0.	GROWTH	3.0	0.0	0.0	103.3	0.	0.	0.
14. 0. 0.	PERSONNEL PROVISIONS	(9.3)(	16.2)(	-0.4)(	92.9)(	1.)(	0.)(	1.)
14. 1. 0.	ACCOMODATIONS FOR PERSONNEL	4.6	-0.7	0.0	86.8	0.	0.	0.
14. 2. 0.	FURNISHINGS	3.9	36.1	-0.8	100.2	0.	0.	0.
14.20. 0.	GROWTH	0.8	16.2	-0.4	92.9	0.	0.	0.
15. 0. 0.	CREW STATION CONTROLS & PANELS	(25.8)(	16.5)(	-6.6)(	78.0)(	0.)(	1.)(	1.)
15. 1. 0.	PEDESTAL	2.0	11.5	0.0	79.5	0.	0.	0.
15. 3. 0.	INSTRUMENT PANELS	12.0	19.5	-14.5	73.0	0.	0.	0.
15. 4. 0.	CREW STATION CONTROLS	9.5	13.8	1.9	83.9	0.	0.	0.
15.20. 0.	GROWTH	2.3	16.5	-6.6	78.0	0.	0.	0.
	SUB TOTALS	303.6	2.5	-0.2	100.2	21.	20.	24.
17. 0. 0.	PERSONNEL	(380.0)(	0.0)(	0.0)(	76.6)(	15.)(	9.)(	11.)
17. 1. 0.	CREW	380.0	0.0	0.0	76.6	15.	9.	11.
	SUB TOTALS	683.6	1.1	-0.1	87.1	56.	49.	35.
21. 0. 0.	RESIDUAL PROPELLANTS	(9.0)(	-0.0)(	0.0)(	108.0)(	1.)(	1.)(	1.)
21. 1. 0.	RESIDUALS-FUEL	3.6	24.0	-24.0	108.0	0.	0.	0.
21. 2. 0.	RESIDUALS-OXIDIZER	5.4	-16.0	16.0	108.0	0.	0.	0.
	SUB TOTALS	692.6	1.1	-0.1	87.4	58.	50.	37.
25. 0. 0.	FULL THRUST PROPELLANT	(300.0)(	0.0)(	0.0)(	99.7)(	25.)(	25.)(	50.)
25. 1. 0.	FUEL	120.0	24.0	-24.0	99.7	0.	0.	0.
25. 2. 0.	OXIDIZER	180.0	-16.0	16.0	99.7	0.	0.	0.
	SUB TOTALS	992.6	0.7	-0.1	91.1	90.	82.	87.
	TOTALS	992.6	0.7	-0.1	91.1	90.	82.	87.

Space Division
North American Rockwell

LUNAR FLYING VEHICLE - BASE CONFIGURATION - PILOT ONLY

GRP	WEIGHT (LBS)	X (IN)	Y (IN)	Z (IN)	ROLL(XX) (LB-IN SQ)	PITCH(YY) (LB-IN SQ)	YAW(ZZ) (LB-IN SQ)
2	0.369160E 02	-0.331644E-01	-0.522319E 00	0.100632E 03	0.698637E 04	0.695909E 04	0.118942E 05
3	0.110000E 02	0.400009E-01	-0.400009E-01	0.965139E 02	0.510095E 04	0.510095E 04	0.863276E 04
4	0.521500E 02	0.0	0.0	0.112555E 03	0.206306E 05	0.211620E 05	0.343315E 05
5	0.983398E 02	-0.160168E 01	0.141220E 01	0.991202E 02	0.256825E 05	0.242305E 05	0.345775E 05
7	0.182500E 02	0.120000E 02	0.0	0.980000E 02	0.247513E 04	0.475065E 02	0.243790E 04
8	0.880000E 01	0.120000E 02	0.0	0.931249E 02	0.469414E 02	0.469417E 02	0.244141E-03
9	0.328900E 02	0.956862E-05	0.0	0.103333E 03	0.117073E 04	0.121771E 04	0.126604E 04
14	0.935000E 01	0.161600E 02	-0.376470E 00	0.929410E 02	0.101943E 04	0.371679E 04	0.315473E 04
15	0.258500E 02	0.165000E 02	-0.663830E 01	0.779787E 02	0.303357E 04	0.108118E 04	0.260646E 04
17	0.380000E 03	0.0	0.0	0.766400E 02	0.400156E 05	0.673396E 05	0.508268E 05
21	0.900000E 01	-0.847710E-05	0.847710E-05	0.108000E 03	0.345617E 04	0.345617E 04	0.691200E 04
25	0.300000E 03	0.0	0.0	0.996999E 02	0.115205E 06	0.115205E 06	0.230400E 06

TOTAL FOR ALL GROUPS

WEIGHT (LBS)	X (IN)	Y (IN)	Z (IN)	ROLL(XX) (LB-IN SQ)	PITCH(YY) (LB-IN SQ)	YAW(ZZ) (LB-IN SQ)
0.992555E 03	0.749527E 00	-0.563865E-01	0.910949E 02	0.379301E 06	0.415768E 06	0.401454E 06

GROUP INERTIA TOTALS

	(LB IN SQ)	(SLUG FT SQ)
ROLL(XX)	0.379301E 06	0.818786E 02
PITCH(YY)	0.415768E 06	0.897507E 02
YAW(ZZ)	0.401454E 06	0.866607E 02

PRINCIPAL AXES DETERMINATION

AXIS	INCLINATION(DEGREES)	INERTIA(SLUG FT SQ)	INERTIA(SLUG FT SQ)
YY	-0.1185E 02	XX 0.8166E 02	ZZ 0.8688E 02

Space Division
North American Rockwell

XX	-0.1195E 02	YY	0.8990E 02	ZZ	0.8652E 02
ZZ	0.4935E 01	XX	0.8205E 02	YY	0.8958E 02

PRODUCTS OF INERTIA(SLUG FT SQ) XY -0.6623E 00 XZ -0.1049E 01 YZ 0.6848E 00

Space Division
North American Rockwell

LUNAR FLYING VEHICLE - BASE CONFIGURATION - PILOT ONLY - **BURNOUT CONDITION**

GRP	WEIGHT (LBS)	X (IN)	Y (IN)	Z (IN)	ROLL(XX) (LB-IN SQ)	PITCH(YY) (LB-IN SQ)	YAW(ZZ) (LB-IN SQ)
2	0.369160E 02	-0.331644E-01	-0.522319E 00	0.100632E 03	0.698637E 04	0.695909E 04	0.118942E 05
3	0.110000E 02	0.400009E-01	-0.400009E-01	0.965139E 02	0.510095E 04	0.510095E 04	0.863276E 04
4	0.621500E 02	0.0	0.0	0.112555E 03	0.206306E 05	0.211620E 05	0.343315E 05
5	0.983398E 02	-0.160168E 01	0.141220E 01	0.991202E 02	0.256825E 05	0.242305E 05	0.345775E 05
7	0.182600E 02	0.120000E 02	0.0	0.980000E 02	0.247513E 04	0.475065E 02	0.243790E 04
8	0.880000E 01	0.120000E 02	0.0	0.931249E 02	0.469414E 02	0.469417E 02	0.244141E-03
9	0.328900E 02	0.956862E-06	0.0	0.103333E 03	0.117073E 04	0.121771E 04	0.126604E 04
14	0.935000E 01	0.161600E 02	-0.376470E 00	0.929410E 02	0.101943E 04	0.371679E 04	0.315473E 04
15	0.258500E 02	0.165000E 02	-0.663830E 01	0.779787E 02	0.303357E 04	0.108118E 04	0.260646E 04
17	0.380000E 03	0.0	0.0	0.766400E 02	0.400156E 05	0.673396E 05	0.508268E 05
21	0.900000E 01	-0.847710E-05	0.847710E-05	0.108000E 03	0.345617E 04	0.345617E 04	0.691200E 04

TOTAL FOR ALL GROUPS

WEIGHT (LBS)	X (IN)	Y (IN)	Z (IN)	ROLL(XX) (LB-IN SQ)	PITCH(YY) (LB-IN SQ)	YAW(ZZ) (LB-IN SQ)
0.692555E 03	0.107435E 01	-0.808119E-01	0.873675E 02	0.232251E 06	0.268478E 06	0.170811E 06

GROUP INERTIA TOTALS

	(LB IN SQ)	(SLUG FT SQ)
ROLL(XX)	0.232251E 06	0.501354E 02
PITCH(YY)	0.268478E 06	0.579557E 02
YAW(ZZ)	0.170811E 06	0.368724E 02

PRINCIPAL AXES DETERMINATION

AXIS	INCLINATION(DEGREES)	INERTIA(SLUG FT SQ)	INERTIA(SLUG FT SQ)
YY	0.1944E 01	XX 0.5015E 02	ZZ 0.3686E 02
XX	-0.1737E 01	YY 0.5798E 02	ZZ 0.3685E 02

Space Division
North American Rockwell

ZZ 0.4646E 01 XX 0.5029E 02 YY 0.5780E 02

PRODUCTS OF INERTIA(SLUG FT SQ) XY -0.6584E 00 XZ -0.4507E 00 YZ 0.6398E 00

Space Division
North American Rockwell

MASS PROPERTIES SUMMARY

100 - POUND PAYLOAD CASE

LUNAR FLYING VEHICLE - BASE CONFIGURATION - 100 LB P/L PAGE 1 DATE 6.30.69.

MASS PROPERTIES SUMMARY

CODE	DESCRIPTION	CURRENT WEIGHT (POUNDS)	CENTER OF GRAVITY (INCHES FROM REF. DATUM) X	Y	Z	MOMENT OF INERTIA (SLUG FEET SQUARED) PITCH	ROLL	YAW
2. 0. 0.	BODY STRUCTURE	(36.9)(	-0.0)(	-0.5)(	100.6)(	2.)(	2.)(	3.)
2. 1. 0.	CARRY-THRU STRUCTURE	13.0	-0.1	0.1	100.7	0.	0.	0.
2. 2. 0.	PAYLOAD PLATFORMS	10.9	-0.9	-0.9	100.0	1.	1.	1.
2. 3. 0.	FUEL & OXIDIZER TANK SUPTS.	4.9	1.8	-1.8	100.0	0.	0.	1.
2. 4. 0.	ENGINE COMPARTMENT	2.7	0.0	0.0	104.2	0.	0.	0.
2. 6. 0.	SECONDARY STRUCTURE	2.0	0.0	0.0	100.0	0.	0.	0.
2.20. 0.	GROWTH	3.4	-0.0	-0.5	100.6	0.	0.	0.
3. 0. 0.	ENVIRONMENTAL PROTECTION	(11.0)(	0.0)(	-0.0)(	96.5)(	1.)(	1.)(	2.)
3. 1. 0.	INSULATION	10.0	0.0	-0.0	96.5	1.	1.	2.
3.20. 0.	GROWTH	1.0	0.0	-0.0	96.5	0.	0.	0.
4. 0. 0.	LANDING GEAR	(62.1)(	0.0)(	0.0)(	112.6)(	5.)(	4.)(	7.)
4. 1. 0.	STRUCTURAL LEGS	22.0	0.0	0.0	115.0	1.	1.	2.
4. 2. 0.	LANDING PADS	6.0	0.0	0.0	129.0	1.	1.	3.
4. 3. 0.	ATTENUATORS (INCL. ATTACH.)	28.0	0.0	0.0	106.9	2.	2.	3.
4. 4. 0.	LANDING SENSORS	0.5	0.0	0.0	124.3	0.	0.	0.
4.20. 0.	GROWTH	5.6	0.0	0.0	112.6	0.	0.	0.
5. 0. 0.	MAIN PROPULSION SYSTEM	(98.3)(	-1.6)(	1.4)(	99.1)(	5.)(	6.)(	7.)
5. 1. 0.	ENGINES & ACCESSORIES	32.8	0.0	0.0	107.6	0.	0.	0.
5. 2. 0.	FUEL TANK	11.0	23.3	-23.3	99.7	0.	0.	0.
5. 3. 0.	FUEL & OXIDIZER SYSTEM	8.5	1.9	-1.6	93.7	0.	1.	1.
5. 4. 0.	OXIDIZER TANK	11.0	-15.3	15.3	99.7	0.	0.	0.
5. 5. 0.	PRESSURIZATION SYSTEM	26.1	-9.5	8.7	89.7	1.	1.	2.
5.20. 0.	GROWTH	8.9	-1.6	1.4	99.1	0.	0.	0.
7. 0. 0.	POWER SOURCE	(18.3)(	12.0)(	0.0)(	98.0)(	0.)(	1.)(	1.)
7. 1. 0.	POWER SOURCE - BATTERIES	16.6	12.0	0.0	98.0	0.	1.	1.
7.20. 0.	GROWTH	1.7	12.0	0.0	98.0	0.	0.	0.
8. 0. 0.	POWER CONVERSION & DISTRIBUTION	(8.8)(	12.0)(	0.0)(	93.1)(	0.)(	0.)(	0.)
8. 1. 0.	POWER EQUIPMENT	8.0	12.0	0.0	93.1	0.	0.	0.
8.20. 0.	GROWTH	0.8	12.0	0.0	93.1	0.	0.	0.
9. 0. 0.	GUIDANCE AND NAVIGATION	(32.9)(	0.0)(	0.0)(	103.3)(	0.)(	0.)(	0.)

Space Division
North American Rockwell

LUNAR FLYING VEHICLE - BASE CONFIGURATION - 100 LB P/L PAGE 2 DATE 6.30.69.

MASS PROPERTIES SUMMARY

CODE	DESCRIPTION	CURRENT WEIGHT (POUNDS)	CENTER OF GRAVITY (INCHES FROM REF. DATUM) X	Y	Z	MOMENT OF INERTIA (SLUG FEET SQUARED) PITCH	ROLL	YAW
9. 3. 0.	GUIDANCE OUTPUT	29.9	0.0	0.0	103.3	0.	0.	0.
9.20. 0.	GROWTH	3.0	0.0	0.0	103.3	0.	0.	0.
14. 0. 0.	PERSONNEL PROVISIONS	(9.3)	(16.2)	(-0.4)	(92.9)	(1.)	(0.)	(1.)
14. 1. 0.	ACCOMODATIONS FOR PERSONNEL	4.6	-0.7	0.0	86.8	0.	0.	0.
14. 2. 0.	FURNISHINGS	3.9	36.1	-0.8	100.2	0.	0.	0.
14.20. 0.	GROWTH	0.8	16.2	-0.4	92.9	0.	0.	0.
15. 0. 0.	CREW STATION CONTROLS & PANELS	(25.8)	(16.5)	(-6.6)	(78.0)	(0.)	(1.)	(1.)
15. 1. 0.	PEDESTAL	2.0	11.5	0.0	79.5	0.	0.	0.
15. 3. 0.	INSTRUMENT PANELS	12.0	19.5	-14.5	73.0	0.	0.	0.
15. 4. 0.	CREW STATION CONTROLS	9.5	13.8	1.9	83.9	0.	0.	0.
15.20. 0.	GROWTH	2.3	16.5	-6.6	78.0	0.	0.	0.
	SUB TOTALS	303.6	2.5	-0.2	100.2	21.	20.	24.
17. 0. 0.	PERSONNEL	(380.0)	(0.0)	(0.0)	(76.6)	(15.)	(9.)	(11.)
17. 1. 0.	CREW	380.0	0.0	0.0	76.6	15.	9.	11.
	SUB TOTALS	683.6	1.1	-0.1	87.1	56.	49.	35.
18. 0. 0.	CARGO	(100.0)	(0.0)	(0.0)	(95.5)	(10.)	(10.)	(20.)
18. 3. 0.	CARGO	100.0	0.0	0.0	95.5	10.	10.	20.
	SUB TOTALS	783.6	0.9	-0.1	88.2	68.	60.	55.
21. 0. 0.	RESIDUAL PROPELLANTS	(9.0)	(-0.0)	(0.0)	(108.0)	(1.)	(1.)	(1.)
21. 1. 0.	RESIDUALS-FUEL	3.6	24.0	-24.0	108.0	0.	0.	0.
21. 2. 0.	RESIDUALS-OXIDIZER	5.4	-16.0	16.0	108.0	0.	0.	0.
	SUB TOTALS	792.6	0.9	-0.1	88.4	70.	62.	57.
25. 0. 0.	FULL THRUST PROPELLANT	(300.0)	(0.0)	(0.0)	(99.7)	(25.)	(25.)	(50.)
25. 1. 0.	FUEL	120.0	24.0	-24.0	99.7	0.	0.	0.
25. 2. 0.	OXIDIZER	180.0	-16.0	16.0	99.7	0.	0.	0.
	SUB TOTALS	1092.6	0.7	-0.1	91.5	100.	93.	106.

Space Division
North American Rockwell

TOTALS	1092.6	0.7	-0.1	91.5	100.	93.	106.

Space Division
North American Rockwell

LUNAR FLYING VEHICLE - BASE CONFIGURATION - 100 LB P/L

GRP	WEIGHT (LBS)	X (IN)	Y (IN)	Z (IN)	ROLL(XX) (LB-IN SQ)	PITCH(YY) (LB-IN SQ)	YAW(ZZ) (LB-IN SQ)
2	0.369160E 02	-0.331644E 01	-0.522319E 00	0.100632E 03	0.698637E 04	0.695909E 04	0.118942E 05
3	0.110000E 02	0.400000E 01	-0.400009E-01	0.965139E 02	0.510095E 04	0.510095E 04	0.863276E 04
3	0.621500E 03	0.0	0.0	0.112555E 03	0.206306E 05	0.211620E 05	0.343315E 05
5	[illegible]	-0.160178E 01	0.141220E 01	0.991202E 02	0.256825E 05	0.242305E 05	0.345775E 05
7	0.132[illegible]E 02	0.1[illegible]0E 02	0.0	0.980000E 02	0.247513E 04	0.475065E 02	0.243790E 04
8	0.880000E 01	[illegible]0000E 02	0.0	0.931249E 02	0.469414E 02	0.469417E 02	0.244141E-03
9	0.328900E 02	0.955862E-05	0.0	0.103333E 03	0.117073E 04	0.121771E 04	0.126604E 04
14	0.935000E 01	0.161600E 02	0.376470E 00	0.929410E 02	0.101943E 04	0.371679E 04	0.315473E 04
15	0.258500E 01	0.165000E 02	0.563830E 01	0.779787E 02	0.303357E 04	0.108118E 04	0.260646E 04
17	0.380000E 03	0.0	0.0	0.766400E 02	0.400156E 05	0.673396E 05	0.508268E 05
18	0.100000E 03	0.0	0.0	0.955000E 02	0.476333E 05	0.476333E 05	0.917333E 05
21	0.900000E 01	-0.847710E-05	0.847710E-05	0.108000E 03	0.345617E 04	0.345617E 04	0.691200E 04
25	0.300000E 03	0.0	0.0	0.996999E 02	0.115205E 06	0.115205E 06	0.230400E 06

TOTAL FOR ALL GROUPS

WEIGHT (LBS)	X (IN)	Y (IN)	Z (IN)	ROLL(XX) (LB-IN SQ)	PITCH(YY) (LB-IN SQ)	YAW(ZZ) (LB-IN SQ)
0.109256E 04	0.681015E 00	-0.512255E-01	0.914981E 02	0.428708E 06	0.465226E 06	0.493238E 06

GROUP INERTIA TOTALS

	(LB IN SQ)	(SLUG FT SQ)
ROLL(XX)	0.428708E 06	0.925441E 02
PITCH(YY)	0.465226E 06	0.100427E 03
YAW(ZZ)	0.493238E 06	0.106474E 03

PRINCIPAL AXES DETERMINATION

AXIS	INCLINATION(DEGREES)	INERTIA(SLUG FT SQ)	INERTIA(SLUG FT SQ)

Space Division
North American Rockwell

YY	-0.4544E 01	XX	0.9246E 02	ZZ	0.1066E 03
XX	0.6425E 01	YY	0.1003E 03	ZZ	0.1066E 03
ZZ	0.4963E 01	XX	0.9272E 02	YY	0.1003E 03

PRODUCTS OF INERTIA(SLUG FT SQ) XY -0.6631E 00 XZ -0.1114E 01 YZ 0.6897E 00

Space Division
North American Rockwell

LUNAR FLYING VEHICLE - BASE CONFIGURATION - 100 LB P/L - BURNOUT CONDITION

GRP	WEIGHT (LBS)	X (IN)	Y (IN)	Z (IN)	ROLL(XX) (LB-IN SQ)	PITCH(YY) (LB-IN SQ)	YAW(ZZ) (LB-IN SQ)
2	0.369160E 02	-0.331644E-01	-0.522319E 00	0.100632E 03	0.698637E 04	0.695909E 04	0.118942E 05
3	0.110000E 02	0.400009E-01	-0.400009E-01	0.965139E 02	0.510095E 04	0.510095E 04	0.863276E 04
4	0.621500E 02	0.0	0.0	0.112555E 03	0.206306E 05	0.211620E 05	0.343315E 05
5	0.983398E 02	-0.160168E 01	0.141220E 01	0.991202E 02	0.256825E 05	0.242305E 05	0.345775E 05
7	0.182600E 02	0.120000E 02	0.0	0.980000E 02	0.247513E 04	0.475065E 02	0.243790E 04
8	0.880000E 01	0.120000E 02	0.0	0.931249E 02	0.469414E 02	0.469417E 02	0.244141E-03
9	0.328900E 02	0.956862E-06	0.0	0.103333E 03	0.117073E 04	0.121771E 04	0.126604E 04
14	0.935000E 01	0.161600E 02	-0.376470E 00	0.929410E 02	0.101943E 04	0.371679E 04	0.315473E 04
15	0.258500E 02	0.165000E 02	-0.663830E 01	0.779787E 02	0.303357E 04	0.108118E 04	0.260646E 04
17	0.380000E 03	0.0	0.0	0.766400E 02	0.400156E 05	0.673396E 05	0.508268E 05
18	0.100000E 03	0.0	0.0	0.955000E 02	0.476333E 05	0.476333E 05	0.917333E 05
21	0.900000E 01	-0.847710E-05	0.847710E-05	0.108000E 03	0.345617E 04	0.345617E 04	0.691200E 04

TOTAL FOR ALL GROUPS

WEIGHT (LBS)	X (IN)	Y (IN)	Z (IN)	ROLL(XX) (LB-IN SQ)	PITCH(YY) (LB-IN SQ)	YAW(ZZ) (LB-IN SQ)
0.792555E 03	0.938795E 00	-0.706155E-01	0.883935E 02	0.285676E 06	0.322004E 06	0.262645E 06

GROUP INERTIA TOTALS

	(LB IN SQ)	(SLUG FT SQ)
ROLL(XX)	0.285676E 06	0.616681E 02
PITCH(YY)	0.322004E 06	0.695100E 02
YAW(ZZ)	0.262645E 06	0.566965E 02

PRINCIPAL AXES DETERMINATION

AXIS	INCLINATION(DEGREES)	INERTIA(SLUG FT SQ)	INERTIA(SLUG FT SQ)
YY	0.6954E 01	XX 0.6174E 02	ZZ 0.5662E 02

Space Division
North American Rockwell

XX	-0.2906E 01	YY	0.6954E 02	ZZ	0.5666E 02
ZZ	0.4722E 01	XX	0.6183E 02	YY	0.6935E 02

PRODUCTS OF INERTIA(SLUG FT SQ) XY -0.6600E 00 XZ -0.6155E 00 YZ 0.6522E 00

Space Division
North American Rockwell

MASS PROPERTIES DATA

370-POUND PAYLOAD CASE

LUNAR FLYING VEHICLE - BASE CONFIGURATION - 370 L3 P/L PAGE 1 DATE 6.30.69.

MASS PROPERTIES SUMMARY

CODE	DESCRIPTION	CURRENT WEIGHT (POUNDS)	CENTER OF GRAVITY (INCHES FROM REF. DATUM) X	Y	Z	MOMENT OF INERTIA (SLUG FEET SQUARED) PITCH	ROLL	YAW
2. 0. 0.	BODY STRUCTURE	36.9	-0.0	-0.5	100.6	2.	2.	3.
2. 1. 0.	CARRY-THRU STRUCTURE	13.0	-0.1	0.1	100.7	0.	0.	0.
2. 2. 0.	PAYLOAD PLATFORMS	10.9	-0.9	-0.9	100.0	1.	1.	1.
2. 3. 0.	FUEL & OXIDIZER TANK SUPTS.	4.9	1.8	-1.8	100.0	0.	0.	1.
2. 4. 0.	ENGINE COMPARTMENT	2.7	0.0	0.0	104.2	0.	0.	0.
2. 5. 0.	SECONDARY STRUCTURE	2.0	0.0	0.0	100.0	0.	0.	0.
2.20. 0.	GROWTH	3.4	-0.0	-0.5	100.6	0.	0.	0.
3. 0. 0.	ENVIRONMENTAL PROTECTION	11.0	0.0	-0.0	96.5	1.	1.	2.
3. 1. 0.	INSULATION	10.0	0.0	-0.0	96.5	1.	1.	2.
3.20. 0.	GROWTH	1.0	0.0	-0.0	96.5	0.	0.	0.
4. 0. 0.	LANDING GEAR	62.1	0.0	0.0	112.6	5.	4.	7.
4. 1. 0.	STRUCTURAL LEGS	22.0	0.0	0.0	115.0	1.	1.	2.
4. 2. 0.	LANDING PADS	6.0	0.0	0.0	129.0	1.	1.	3.
4. 3. 0.	ATTENUATORS (INCL. ATTACH.)	28.0	0.0	0.0	106.9	2.	2.	3.
4. 4. 0.	LANDING SENSORS	0.5	0.0	0.0	124.3	0.	0.	0.
4.20. 0.	GROWTH	5.6	0.0	0.0	112.6	0.	0.	0.
5. 0. 0.	MAIN PROPULSION SYSTEM	98.3	-1.6	1.4	99.1	5.	6.	7.
5. 1. 0.	ENGINES & ACCESSORIES	32.8	0.0	0.0	107.6	0.	0.	0.
5. 2. 0.	FUEL TANK	11.0	23.3	-23.3	99.7	0.	0.	0.
5. 3. 0.	FUEL & OXIDIZER SYSTEM	8.5	1.9	-1.6	93.7	0.	1.	1.
5. 4. 0.	OXIDIZER TANK	11.0	-15.3	15.3	99.7	0.	0.	0.
5. 5. 0.	PRESSURIZATION SYSTEM	26.1	-9.5	8.7	89.7	1.	1.	2.
5.20. 0.	GROWTH	8.9	-1.6	1.4	99.1	0.	0.	0.
7. 0. 0.	POWER SOURCE	18.3	12.0	0.0	98.0	0.	1.	1.
7. 1. 0.	POWER SOURCE - BATTERIES	16.6	12.0	0.0	98.0	0.	1.	1.
7.20. 0.	GROWTH	1.7	12.0	0.0	98.0	0.	0.	0.
8. 0. 0.	POWER CONVERSION & DISTRIBUTION	8.8	12.0	0.0	93.1	0.	0.	0.
8. 1. 0.	POWER EQUIPMENT	8.0	12.0	0.0	93.1	0.	0.	0.
8.20. 0.	GROWTH	0.8	12.0	0.0	93.1	0.	0.	0.
9. 0. 0.	GUIDANCE AND NAVIGATION	32.9	0.0	0.0	103.3	0.	0.	0.

Space Division
North American Rockwell

LUNAR FLYING VEHICLE - BASE CONFIGURATION - 370 LB P/L PAGE 2 DATE 6.30.69.

MASS PROPERTIES SUMMARY

CODE	DESCRIPTION	CURRENT WEIGHT (POUNDS)	CENTER OF GRAVITY (INCHES FROM REF. DATUM) X	Y	Z	MOMENT OF INERTIA (SLUG FEET SQUARED) PITCH	ROLL	YAW
9. 3. 0.	GUIDANCE OUTPUT	29.9	0.0	0.0	103.3	0.	0.	0.
9.20. 0.	GROWTH	3.0	0.0	0.0	103.3	0.	0.	0.
14. 0. 0.	PERSONNEL PROVISIONS	(9.3)(	16.2)(	-0.4)(	92.9)(	1.)(	0.)(	1.)
14. 1. 0.	ACCOMODATIONS FOR PERSONNEL	4.6	-0.7	0.0	86.8	0.	0.	0.
14. 2. 0.	FURNISHINGS	3.9	36.1	-0.8	100.2	0.	0.	0.
14.20. 0.	GROWTH	0.8	16.2	-0.4	92.9	0.	0.	0.
15. 0. 0.	CREW STATION CONTROLS & PANELS	(25.8)(	16.5)(	-6.6)(	78.0)(	0.)(	1.)(	1.)
15. 1. 0.	PEDESTAL	2.0	11.5	0.0	79.5	0.	0.	0.
15. 3. 0.	INSTRUMENT PANELS	12.0	19.5	-14.5	73.0	0.	0.	0.
15. 4. 0.	CREW STATION CONTROLS	9.5	13.8	1.9	83.9	0.	0.	0.
15.20. 0.	GROWTH	2.3	16.5	-6.6	78.0	0.	0.	0.
	SUB TOTALS	303.6	2.5	-0.2	100.2	21.	20.	24.
17. 0. 0.	PERSONNEL	(380.0)(	0.0)(	0.0)(	76.6)(	15.)(	9.)(	11.)
17. 1. 0.	CREW	380.0	0.0	0.0	76.6	15.	9.	11.
	SUB TOTALS	683.6	1.1	-0.1	87.1	56.	49.	35.
18. 0. 0.	CARGO	(370.0)(	0.0)(	0.0)(	95.5)(	38.)(	38.)(	73.)
18. 3. 0.	CARGO	370.0	0.0	0.0	95.5	38.	38.	73.
	SUB TOTALS	1053.6	0.7	-0.1	90.0	98.	90.	109.
21. 0. 0.	RESIDUAL PROPELLANTS	(9.0)(	-0.0)(	0.0)(	108.0)(	1.)(	1.)(	1.)
21. 1. 0.	RESIDUALS-FUEL	3.6	24.0	-24.0	108.0	0.	0.	0.
21. 2. 0.	RESIDUALS-OXIDIZER	5.4	-16.0	16.0	108.0	0.	0.	0.
	SUB TOTALS	1062.6	0.7	-0.1	90.2	100.	92.	110.
25. 0. 0.	FULL THRUST PROPELLANT	(300.0)(	0.0)(	0.0)(	99.7)(	25.)(	25.)(	50.)
25. 1. 0.	FUEL	120.0	24.0	-24.0	99.7	0.	0.	0.
25. 2. 0.	OXIDIZER	180.0	-16.0	16.0	99.7	0.	0.	0.
	SUB TOTALS	1362.6	0.5	-0.0	92.3	129.	121.	160.

Space Division
North American Rockwell

TOTALS	1352.6	0.5	-0.0	92.3	129.	121.	160.

Space Division
North American Rockwell

LUNAR FLYING VEHICLE - BASE CONFIGURATION - 370 LB P/L

GRP	WEIGHT (LBS)	X (IN)	Y (IN)	Z (IN)	ROLL(XX) (LB-IN SQ)	PITCH(YY) (LB-IN SQ)	YAW(ZZ) (LB-IN SQ)
2	0.369160E 02	-0.331644E-01	-0.522319E 00	0.100632E 03	0.698637E 04	0.695909E 04	0.118942E 05
3	0.110000E 02	0.400009E-01	-0.400009E-01	0.965139E 02	0.510095E 04	0.510095E 04	0.863276E 04
4	0.621500E 02	0.0	0.0	0.112555E 03	0.206306E 05	0.211620E 05	0.343315E 05
5	0.983398E 02	-0.160168E 01	0.141220E 01	0.991202E 02	0.256825E 05	0.242305E 05	0.345775E 05
7	0.182600E 02	0.120000E 02	0.0	0.980000E 02	0.247513E 04	0.475065E 02	0.243790E 04
8	0.880000E 01	0.120000E 02	0.0	0.931249E 02	0.469414E 02	0.469417E 02	0.244141E-03
9	0.328900E 02	0.956862E-05	0.0	0.103333E 03	0.117073E 04	0.121771E 04	0.126604E 04
14	0.935000E 01	0.161600E 02	-0.376470E 00	0.929410E 02	0.101943E 04	0.371679E 04	0.315473E 04
15	0.258500E 02	0.165000E 02	-0.663830E 01	0.779787E 02	0.303357E 04	0.108118E 04	0.260646E 04
17	0.380000E 03	0.0	0.0	0.766400E 02	0.400156E 05	0.673396E 05	0.508268E 05
18	0.370000E 03	0.0	0.0	0.955000E 02	0.176240E 06	0.176240E 06	0.339413E 06
21	0.900000E 01	-0.847710E-05	0.847710E-05	0.108000E 03	0.345617E 04	0.345617E 04	0.691200E 04
25	0.300000E 03	0.0	0.0	0.996999E 02	0.115205E 06	0.115205E 06	0.230400E 06

TOTAL FOR ALL GROUPS

WEIGHT (LBS)	X (IN)	Y (IN)	Z (IN)	ROLL(XX) (LB-IN SQ)	PITCH(YY) (LB-IN SQ)	YAW(ZZ) (LB-IN SQ)
0.136256E 04	0.546067E 00	-0.410748E-01	0.922911E 02	0.560784E 06	0.597402E 06	0.741019E 06

GROUP INERTIA TOTALS

	(LB IN SQ)	(SLUG FT SQ)
ROLL(XX)	0.560784E 06	0.121055E 03
PITCH(YY)	0.597402E 06	0.128959E 03
YAW(ZZ)	0.741019E 06	0.159962E 03

PRINCIPAL AXES DETERMINATION

AXIS	INCLINATION(DEGREES)	INERTIA(SLUG FT SQ)	INERTIA(SLUG FT SQ)

Space Division
North American Rockwell

YY	-0.1826E 01	XX	0.1210E 03	ZZ	0.1600E 03
XX	0.1291E 01	YY	0.1289E 03	ZZ	0.1600E 03
ZZ	0.5017E 01	XX	0.1212E 03	YY	0.1288E 03

PRODUCTS OF INERTIA(SLUG FT SQ) XY -0.6648E 00 XZ -0.1242E 01 YZ 0.6993E 00

Space Division
North American Rockwell

LUNAR FLYING VEHICLE - BASE CONFIGURATION - 370 LB P/L -BURNOUT CONDITION

GRP	WEIGHT (LBS)	X (IN)	Y (IN)	Z (IN)	ROLL(XX) (LB-IN SQ)	PITCH(YY) (LB-IN SQ)	YAW(ZZ) (LB-IN SQ)
2	0.369160E 02	-0.331644E-01	-0.522319E 00	0.100632E 03	0.698637E 04	0.695909E 04	0.118942E 05
3	0.110000E 02	0.400009E-01	-0.400009E-01	0.965139E 02	0.510095E 04	0.510095E 04	0.863276E 04
4	0.621500E 02	0.0	0.0	0.112555E 03	0.206306E 05	0.211620E 05	0.343315E 05
5	0.983398E 02	-0.160168E 01	0.141220E 01	0.991202E 02	0.256825E 05	0.242305E 05	0.345775E 05
7	0.182600E 02	0.120000E 02	0.0	0.980000E 02	0.247513E 04	0.475065E 02	0.243790E 04
8	0.880000E 01	0.120000E 02	0.0	0.931249E 02	0.469414E 02	0.469417E 02	0.244141E-03
9	0.328900E 02	0.956862E-06	0.0	0.103333E 03	0.117073E 04	0.121771E 04	0.126604E 04
14	0.935000E 01	0.161600E 02	-0.376470E 00	0.929410E 02	0.101943E 04	0.371679E 04	0.315473E 04
15	0.258500E 02	0.165000E 02	-0.663830E 01	0.779787E 02	0.303357E 04	0.108118E 04	0.260646E 04
17	0.380000E 03	0.0	0.0	0.766400E 02	0.400156E 05	0.673396E 05	0.508268E 05
18	0.370000E 03	0.0	0.0	0.955000E 02	0.176240E 06	0.176240E 06	0.339413E 06
21	0.900000E 01	-0.847710E-05	0.847710E-05	0.108000E 03	0.345617E 04	0.345617E 04	0.691200E 04

TOTAL FOR ALL GROUPS

WEIGHT (LBS)	X (IN)	Y (IN)	Z (IN)	ROLL(XX) (LB-IN SQ)	PITCH(YY) (LB-IN SQ)	YAW(ZZ) (LB-IN SQ)
0.106256E 04	0.700243E 00	-0.526718E-01	0.901993E 02	0.424455E 06	0.460959E 06	0.510504E 06

GROUP INERTIA TOTALS

	(LB IN SQ)	(SLUG FT SQ)
ROLL(XX)	0.424455E 06	0.916260E 02
PITCH(YY)	0.460959E 06	0.995060E 02
YAW(ZZ)	0.510504E 06	0.110201E 03

PRINCIPAL AXES DETERMINATION

AXIS	INCLINATION(DEGREES)	INERTIA(SLUG FT SQ)	INERTIA(SLUG FT SQ)
YY	-0.2784E 01	XX 0.9158E 02	ZZ 0.1102E 03

Space Division
North American Rockwell

XX	0.3592E 01	YY	0.9946E 02	ZZ	0.1102E 03
ZZ	0.4854E 01	XX	0.9179E 02	YY	0.9934E 02

PRODUCTS OF INERTIA(SLUG FT SQ) XY -0.6629E 00 XZ -0.9055E 00 YZ 0.6740E 00

Space Division
North American Rockwell

MASS PROPERTIES DATA

LUNAR ESCAPE

LUNAR FLYING VEHICLE - LUNAR ESCAPE PAGE 1 DATE 6.30.69.

MASS PROPERTIES SUMMARY

CODE	DESCRIPTION	CURRENT WEIGHT (POUNDS)	CENTER OF GRAVITY (INCHES FROM REF. DATUM) X	Y	Z	MOMENT OF INERTIA (SLUG FEET SQUARED) PITCH	ROLL	YAW
2. 0. 0.	BODY STRUCTURE	(30.4)	(1.3)	(0.6)	(99.0)	(1.)	(1.)	(2.)
2. 1. 0.	CARRY-THRU STRUCTURE	13.0	-0.1	0.1	100.7	0.	0.	0.
2. 3. 0.	FUEL & OXIDIZER TANK SUPTS.	9.9	3.8	1.5	94.9	1.	1.	1.
2. 4. 0.	ENGINE COMPARTMENT	2.7	0.0	0.0	104.2	0.	0.	0.
2. 6. 0.	SECONDARY STRUCTURE	2.0	0.0	0.0	100.0	0.	0.	0.
2.20. 0.	GROWTH	2.8	1.3	0.6	99.0	0.	0.	0.
3. 0. 0.	ENVIRONMENTAL PROTECTION	(11.0)	(0.0)	(-0.0)	(96.5)	(1.)	(1.)	(2.)
3. 1. 0.	INSULATION	10.0	0.0	-0.0	96.5	1.	1.	2.
3.20. 0.	GROWTH	1.0	0.0	-0.0	96.5	0.	0.	0.
4. 0. 0.	LANDING GEAR	(62.1)	(0.0)	(0.0)	(112.6)	(5.)	(4.)	(7.)
4. 1. 0.	STRUCTURAL LEGS	22.0	0.0	0.0	115.0	1.	1.	2.
4. 2. 0.	LANDING PADS	6.0	0.0	0.0	129.0	1.	1.	3.
4. 3. 0.	ATTENUATORS (INCL. ATTACH.)	28.0	0.0	0.0	106.9	2.	2.	3.
4. 4. 0.	LANDING SENSORS	0.5	0.0	0.0	124.3	0.	0.	0.
4.20. 0.	GROWTH	5.6	0.0	0.0	112.6	0.	0.	0.
5. 0. 0.	MAIN PROPULSION SYSTEM	(194.9)	(0.2)	(3.1)	(97.6)	(12.)	(15.)	(18.)
5. 1. 0.	ENGINES & ACCESSORIES	52.0	-0.0	-0.0	108.0	1.	1.	1.
5. 2. 0.	FUEL TANK	28.0	21.9	7.3	93.1	1.	5.	4.
5. 3. 0.	FUEL & OXIDIZER SYSTEM	17.0	1.9	-1.6	93.7	0.	1.	1.
5. 4. 0.	OXIDIZER TANK	28.0	-14.5	-5.2	93.1	1.	3.	2.
5. 5. 0.	PRESSURIZATION SYSTEM	26.1	-9.5	8.7	89.7	1.	1.	2.
5. 7. 0.	PRESSURIZATION SYSTEM	26.1	1.5	11.0	97.2	1.	1.	2.
5.20. 0.	GROWTH	17.7	0.2	3.1	97.6	0.	0.	0.
7. 0. 0.	POWER SOURCE	(18.3)	(12.0)	(0.0)	(98.0)	(0.)	(1.)	(1.)
7. 1. 0.	POWER SOURCE - BATTERIES	16.6	12.0	0.0	98.0	0.	1.	1.
7.20. 0.	GROWTH	1.7	12.0	0.0	98.0	0.	0.	0.
8. 0. 0.	POWER CONVERSION & DISTRIBUTION	(8.8)	(12.0)	(0.0)	(93.1)	(0.)	(0.)	(0.)
8. 1. 0.	POWER EQUIPMENT	8.0	12.0	0.0	93.1	0.	0.	0.
8.20. 0.	GROWTH	0.8	12.0	0.0	93.1	0.	0.	0.
9. 0. 0.	GUIDANCE AND NAVIGATION	(32.9)	(0.0)	(0.0)	(103.3)	(0.)	(0.)	(0.)

Space Division
North American Rockwell

LUNAR FLYING VEHICLE - LUNAR ESCAPE

MASS PROPERTIES SUMMARY

CODE	DESCRIPTION	CURRENT WEIGHT (POUNDS)	CENTER OF GRAVITY (INCHES FROM REF. DATUM) X	Y	Z	MOMENT OF INERTIA (SLUG FEET SQUARED) PITCH	ROLL	YAW
9. 3. 0.	GUIDANCE OUTPUT	29.9	0.0	0.0	103.3	0.	0.	0.
9.20. 0.	GROWTH	3.0	0.0	0.0	103.3	0.	0.	0.
14. 0. 0.	PERSONNEL PROVISIONS	(14.4)(	4.1)(	-5.3)(	82.9)(	2.)(	1.)(	2.)
14. 1. 0.	ACCOMODATIONS FOR PERSONNEL	9.2	-9.5	-7.2	75.6	1.	1.	0.
14. 2. 0.	FURNISHINGS	3.9	36.1	-0.8	100.2	0.	0.	0.
14.20. 0.	GROWTH	1.3	4.1	-5.3	82.9	0.	0.	0.
15. 0. 0.	CREW STATION CONTROLS & PANELS	(25.8)(	16.5)(	-6.6)(	78.0)(	0.)(	1.)(	1.)
15. 1. 0.	PEDESTAL	2.0	11.5	0.0	79.5	0.	0.	0.
15. 3. 0.	INSTRUMENT PANELS	12.0	19.5	-14.5	73.0	0.	0.	0.
15. 4. 0.	CREW STATION CONTROLS	9.5	13.8	1.9	83.9	0.	0.	0.
15.20. 0.	GROWTH	2.3	16.5	-6.6	78.0	0.	0.	0.
	SUB TOTALS	398.7	2.2	0.9	98.6	29.	31.	35.
17. 0. 0.	PERSONNEL	(760.0)(	-5.6)(	-4.0)(	68.2)(	73.)(	56.)(	63.)
17. 1. 0.	CREW	760.0	-5.6	-4.0	68.2	73.	56.	63.
	SUB TOTALS	1158.7	-2.9	-2.3	78.7	158.	140.	103.
21. 0. 0.	RESIDUAL PROPELLANTS	(30.0)(	0.0)(	0.0)(	108.0)(	2.)(	3.)(	5.)
21. 1. 0.	RESIDUALS-FUEL	12.0	22.3	12.8	108.0	0.	1.	2.
21. 2. 0.	RESIDUALS-OXIDIZER	18.0	-14.9	-8.5	108.0	0.	1.	1.
	SUB TOTALS	1188.7	-2.8	-2.2	79.4	165.	148.	109.
25. 0. 0.	FULL THRUST PROPELLANT	(1000.0)(	-0.0)(	0.0)(	91.5)(	78.)(	113.)(	179.)
25. 1. 0.	FUEL	400.0	22.3	12.7	91.5	3.	52.	50.
25. 2. 0.	OXIDIZER	600.0	-14.9	-8.5	91.5	4.	37.	33.
	SUB TOTALS	2188.7	-1.5	-1.2	84.9	261.	279.	289.
	TOTALS	2188.7	-1.5	-1.2	84.9	261.	279.	289.

Space Division
North American Rockwell

LUNAR FLYING VEHICLE - LUNAR ESCAPE

GRP	WEIGHT (LBS)	X (IN)	Y (IN)	Z (IN)	ROLL(XX) (LB-IN SQ)	PITCH(YY) (LB-IN SQ)	YAW(ZZ) (LB-IN SQ)
2	0.304040E 02	0.134616E 01	0.562300E 00	0.989581E 02	0.582528E 04	0.512566E 04	0.854847E 04
3	0.110000E 02	0.400009E-01	-0.400009E-01	0.965139E 02	0.510095E 04	0.510095E 04	0.863276E 04
4.	0.621500E 02	0.0	0.0	0.112555E 03	0.206306E 05	0.211620E 05	0.343315E 05
5	0.194920E 03	0.180472E 00	0.308064E 01	0.976119E 02	0.681091E 05	0.532936E 05	0.850029E 05
7	0.182500E 02	0.120000E 02	0.0	0.980000E 02	0.247513E 04	0.475065E 02	0.243790E 04
8	0.880000E 01	0.120000E 02	0.0	0.931249E 02	0.469414E 02	0.469417E 02	0.244141E-03
9	0.328900E 02	0.956862E-05	0.0	0.103333E 03	0.117073E 04	0.121771E 04	0.126604E 04
14	0.144100E 02	0.405344E 01	-0.530076E 01	0.829166E 02	0.443305E 04	0.100021E 05	0.748893E 04
15	0.258500E 02	0.165000E 02	-0.663830E 01	0.779787E 02	0.303357E 04	0.108118E 04	0.260646E 04
17	0.760000E 03	-0.559998E 01	-0.399999E 01	0.682419E 02	0.257530E 06	0.339416E 06	0.293295E 06
21	0.300000E 02	0.0	0.508627E-06	0.108000E 03	0.148274E 05	0.998770E 04	0.248153E 05
25	0.100000E 04	-0.390625E-05	0.0	0.915099E 02	0.523019E 06	0.361697E 06	0.827178E 06

TOTAL FOR ALL GROUPS

WEIGHT (LBS)	X (IN)	Y (IN)	Z (IN)	ROLL(XX) (LB-IN SQ)	PITCH(YY) (LB-IN SQ)	YAW(ZZ) (LB-IN SQ)
0.218868E 04	-0.153964E 01	-0.122030E 01	0.849479E 02	0.129183E 07	0.121138E 07	0.133778E 07

GROUP INERTIA TOTALS

	(LB IN SQ)	(SLUG FT SQ)
ROLL(XX)	0.129183E 07	0.278863E 03
PITCH(YY)	0.121138E 07	0.261497E 03
YAW(ZZ)	0.133778E 07	0.288783E 03

PRINCIPAL AXES DETERMINATION

AXIS	INCLINATION(DEGREES)	INERTIA(SLUG FT SQ)	INERTIA(SLUG FT SQ)
YY	0.3624E 02	XX 0.2674E 03	ZZ 0.3003E 03

Space Division
North American Rockwell

XX	0.2175E 02	YY	0.2563E 03	ZZ	0.2939E 03
ZZ	-0.2808E 02	XX	0.2768E 03	YY	0.2636E 03

PRODUCTS OF INERTIA(SLUG FT SQ) XY 0.2138E 01 XZ 0.1571E 02 YZ 0.1295E 02

Space Division
North American Rockwell

LUNAR FLYING VEHICLE - BASE CONFIGURATION - PILOT ONLY PAGE 1 DATE 6.30.69.

CODE	DESCRIPTION	DETAIL MASS PROPERTIES CLASS (E,C,A)	WEIGHT (POUNDS) CODE GENERANTION FIRST	SECOND	THIRD	CENTER OF GRAVITY (INCHES FROM REF. DATUM) X	Y	Z
2. 1. 1.	SHOCK MOUNT FORWARD				0.5	8.5	0.0	110.8
2. 1. 2.	SHOCK MOUNT AFT				0.5	-8.5	0.0	110.8
2. 1. 3.	SHOCK MOUNT RIGHT HAND				0.5	0.0	8.5	110.8
2. 1. 4.	SHOCK MOUNT LEFT HAND				0.5	0.0	-8.5	110.8
2. 1. 5.	ATTENUATOR SUPPORT FTGS-FWD UPR				0.3	14.0	2.0	98.5
2. 1. 6.	ATTENUATOR SUPPORT FTGS-AFT UPR				0.3	-14.0	-2.0	98.5
2. 1. 7.	ATTENUATOR SUPPORT FTGS-RIGHT U				0.3	2.0	14.0	98.5
2. 1. 8.	ATTENUATOR SUPPORT FTGS-LEFT UP				0.3	-2.0	-14.0	98.5
2. 1. 9.	ATTENUATOR SUPPORT FTGS-FWD LEG				0.3	28.0	0.0	114.5
2. 1.10.	ATTENUATOR SUPPORT FTGS-AFT LEG				0.3	-28.0	0.0	114.5
2. 1.11.	ATTENUATOR SUPPORT FTGS-RIGHT L				0.3	0.0	28.0	114.5
2. 1.12.	ATTENUATOR SUPPORT FTGS-LEFT LE				0.3	0.0	-28.0	114.5
2. 1.21.	FWD PANEL-STRUCTURAL BOX				0.5	14.1	1.0	98.2
2. 1.22.	AFT PANEL-STRUCTURAL BOX				0.5	-14.1	-1.0	98.2
2. 1.23.	FWD RH PANEL-STRUCTURAL BOX				0.7	9.2	9.2	98.2
2. 1.24.	AFT LH PANEL-STRUCTURAL BOX				0.7	-9.2	-9.2	98.2
2. 1.25.	FWD LH PANEL-STRUCTURAL BOX				0.8	8.8	-8.8	98.2
2. 1.26.	AFT RH PANEL-STRUCTURAL BOX				0.9	-8.8	8.8	98.2
2. 1.27.	RIGHT HAND PANEL-STRUCTURAL BOX				0.5	1.0	14.1	98.2
2. 1.28.	LEFT HAND PANEL-STRUCTURE				0.5	-1.0	-14.1	98.2
2. 1.29.	TOP PANEL-STRUCTURAL BOX				3.9	0.0	0.0	96.0
2. 1. 0.	CARRY-THRU STRUCTURE	13.0				-0.1	0.1	100.7
2. 2. 1.	FORWARD PAYLOAD PLATFORM				5.1	17.2	17.2	100.0
2. 2. 2.	AFT PAYLOAD PLATFORM				5.8	-16.5	-16.5	100.0
2. 2. 0.	PAYLOAD PLATFORMS	10.9				-0.9	-0.9	100.0
2. 3. 1.	FUEL TANK SUPPORTS				2.5	18.0	-18.0	100.0
2. 3. 2.	OXIDIZER TANK				2.4	-15.0	15.0	100.0
2. 3. 0.	FUEL & OXIDIZER TANK SUPTS.	4.9				1.8	-1.8	100.0
2. 4. 1.	TOP-ENGINE COMPARTMENT				0.8	0.0	0.0	101.4

Space Division
North American Rockwell

DETAIL MASS PROPERTIES

PILOT ONLY

LUNAR FLYING VEHICLE - BASE CONFIGURATION - PILOT ONLY PAGE 2 DATE 6.30.69.

DETAIL MASS PROPERTIES

CODE	DESCRIPTION	DETAIL CLASS (E,C,A)	WEIGHT (POUNDS) CODE GENERANTION FIRST	SECOND	THIRD	CENTER OF GRAVITY (INCHES FROM REF. DATUM) X	Y	Z
2. 4. 2.	FORWARD SIDE-ENGINE COMPARTMENT				0.1	9.7	0.5	105.3
2. 4. 3.	AFT SIDE-ENGINE COMPARTMENT				0.1	-9.7	-0.5	105.3
2. 4. 4.	FWD RIGHT HAND SIDE-ENGINE COMP				0.2	6.2	6.2	105.3
2. 4. 5.	AFT LEFT HAND SIDE-ENGINE COMPA				0.2	-6.2	-6.2	105.3
2. 4. 6.	FWD LEFT HAND SIDE-ENGINE COMPA				0.3	5.6	-5.6	105.3
2. 4. 7.	AFT RIGHT HAND SIDE ENGINE COMP				0.3	-5.6	5.6	105.3
2. 4. 8.	RIGHT HAND SIDE-ENGINE COMPARTM				0.1	0.5	9.7	105.3
2. 4. 9.	LEFT HAND SIDE-ENGINE				0.1	-0.5	-9.7	105.3
2. 4.10.	NUTS-BOLTS-ETC. -ENGINE COMPART				0.4	0.0	0.0	105.3
2. 4. 0.	ENGINE COMPARTMENT			2.7		0.0	0.0	104.2
2. 6. 1.	SECONDARY STRUCTURE				2.0	0.0	0.0	100.0
2. 6. 0.	SECONDARY STRUCTURE			2.0		0.0	0.0	100.0
2.20. 1.	GROWTH				3.4	-0.0	-0.5	100.6
2.20. 0.	GROWTH			3.4		-0.0	-0.5	100.6
2. 0. 0.	BODY STRUCTURE		36.9			-0.0	-0.5	100.6
3. 1. 1.	INSULATION-HELIUM TANK				1.8	-18.0	18.0	82.0
3. 1. 2.	INSULATION FUEL TANK				4.1	24.0	-24.0	99.7
3. 1. 3.	INSULATION OXIDIZER TANK				4.1	-16.0	16.0	99.7
3. 1. 0.	INSULATION			10.0		0.0	-0.0	96.5
3.20. 1.	GROWTH				1.0	0.0	-0.0	96.5
3.20. 0.	GROWTH			1.0		0.0	-0.0	96.5
3. 0. 0.	ENVIRONMENTAL PROTECTION		11.0			0.0	-0.0	96.5
4. 1. 1.	LEG-FORWARD				5.5	16.8	0.0	115.0
4. 1. 2.	LEG-RIGHT HAND				5.5	0.0	16.8	115.0
4. 1. 3.	LEG-AFT				5.5	-16.8	0.0	115.0
4. 1. 4.	LEG-LEFT HAND				5.5	0.0	-16.8	115.0
4. 1. 0.	STRUCTURAL LEGS			22.0		0.0	0.0	115.0
4. 2. 1.	PAD-FORWARD				1.5	44.5	0.0	129.0
4. 2. 2.	PAD RIGHT HAND				1.5	0.0	44.5	129.0

Space Division
North American Rockwell

LUNAR FLYING VEHICLE - BASE CONFIGURATION - PILOT ONLY PAGE 3 DATE 6.30.69.

CODE	DESCRIPTION	DETAIL MASS PROPERTIES CLASS (E,C,A)	WEIGHT (POUNDS) CODE GENERANTION FIRST	SECOND	THIRD	CENTER OF GRAVITY (INCHES FROM REF. DATUM) X	Y	Z
4. 2. 3.	PAD AFT				1.5	-44.5	0.0	129.0
4. 2. 4.	PAD LEFT HAND				1.5	0.0	-44.5	129.0
4. 2. 0.	LANDING PADS			6.0		0.0	0.0	129.0
4. 3. 1.	ATTENUATOR FORWARD HORIZONTAL				3.5	24.0	2.2	108.0
4. 3. 2.	ATTENUATOR FORWARD VERTICAL				3.5	20.0	-1.2	105.8
4. 3. 3.	ATTENUATOR RIGHT HAND HORIZONT				3.5	2.2	24.0	108.0
4. 3. 4.	ATTENUATOR RIGHT HAND VERTICAL				3.5	-1.2	20.0	105.8
4. 3. 5.	ATTENUATOR AFT HORIZONTAL				3.5	-24.0	-2.2	108.0
4. 3. 6.	ATTENUATOR AFT VERTICAL				3.5	-20.0	1.2	105.8
4. 3. 7.	ATTENUATOR LEFT HAND HORIZONTA				3.5	-2.2	-24.0	108.0
4. 3. 8.	ATTENUATOR LEFT HAND VERTICAL				3.5	1.2	-20.0	105.8
4. 3. 0.	ATTENUATORS (INCL. ATTACH.)			28.0		0.0	0.0	106.9
4. 4. 1.	LANDING SENSOR-FWD				0.3	32.6	0.0	124.3
4. 4. 2.	LANDING SENSOR-AFT				0.3	-32.6	0.0	124.3
4. 4. 0.	LANDING SENSORS			0.5		0.0	0.0	124.3
4.20. 1.	GROWTH				5.6	0.0	0.0	112.6
4.20. 0.	GROWTH			5.6		0.0	0.0	112.6
4. 0. 0.	LANDING GEAR		62.1			0.0	0.0	112.6
5. 1. 1.	ENGINE - NO 1				4.8	-5.3	5.3	109.5
5. 1. 2.	ENGINE - NO 2				4.8	5.3	5.3	109.5
5. 1. 3.	ENGINE - NO 3				4.8	5.3	-5.3	109.5
5. 1. 4.	ENGINE - NO 4				4.8	-5.3	-5.3	109.5
5. 1. 5.	THRUST CONE				2.3	0.0	0.0	104.3
5. 1. 6.	THROTTLE CYLINDER				0.3	0.0	0.0	102.5
5. 1. 7.	PITCH & ROLL CONTROL BRACKETS				6.6	0.0	0.0	105.7
5. 1. 8.	FLEXIBLE INLET LINES				2.6	0.0	0.0	104.5
5. 1. 9.	FUEL COUPLING MANIFOLD				0.3	-6.5	-6.5	104.5
5. 1.10.	OXIDIZER COUPLING MANIFOLD				0.3	6.5	6.5	104.5
5. 1.11.	CLIPS-NUTS-BOLTS-FTGS-ETC				1.2	0.0	0.0	104.5
5. 1. 0.	ENGINES & ACCESSORIES			32.8		0.0	0.0	107.6

Space Division
North American Rockwell

LUNAR FLYING VEHICLE - BASE CONFIGURATION - PILOT ONLY PAGE 4 DATE 6.30.69.

CODE	DESCRIPTION	DETAIL MASS PROPERTIES CLASS (E,C,A)	WEIGHT (POUNDS) CODE GENERANTION FIRST	SECOND	THIRD	CENTER OF GRAVITY (INCHES FROM REF. DATUM) X	Y	Z
5. 2. 1.	FUEL TANK				9.0	24.0	-24.0	99.7
5. 2. 2.	FUEL TANK SUPPORT RING				2.0	20.0	-20.0	99.7
5. 2. 0.	FUEL TANK			11.0		23.3	-23.3	99.7
5. 3. 1.	FUEL TANK FILL & DRAIN BOSS				0.6	9.0	-25.0	98.5
5. 3. 2.	FUEL TANK FILL VENT DICONNECT				0.3	9.0	-25.0	100.5
5. 3. 3.	FUEL SUPPORT FTGS ETC.				1.0	20.0	-20.0	100.0
5. 3. 4.	FUEL PRESSURE REGULATOR				2.6	7.0	-12.5	90.0
5. 3. 5.	OXIDIZER FILL & DRAIN BOSS				0.6	-7.0	25.0	98.5
5. 3. 6.	OXIDIZER TANK FILL VENT DICONNE				0.3	-7.0	25.0	100.5
5. 3. 7.	OXIDIZER SUPPORT FTGS ETC.				0.5	-12.0	12.0	100.0
5. 3. 8.	OXIDIZER PRESSURE REGULATOR				2.6	-7.0	12.5	90.0
5. 3. 0.	FUEL & OXIDIZER SYSTEM			8.5		1.9	-1.6	93.7
5. 4. 1.	OXIDIZER TANK				9.0	-16.0	16.0	99.7
5. 4. 2.	OXIDIZER TANK SUPPORT RING				2.0	-12.0	12.0	99.7
5. 4. 0.	OXIDIZER TANK			11.0		-15.3	15.3	99.7
5. 6. 1.	HELIUM TANK				11.0	-18.0	18.0	82.0
5. 5. 2.	HELIUM TANK MOUNTING BRACKETS				1.1	-18.0	18.0	88.0
5. 5. 3.	SHUT-OFF & DISCONNECT				1.2	-10.0	8.5	85.5
5. 6. 4.	PRESSURE SYSTEM TUBING & FTGS				0.9	-8.5	6.5	100.5
5. 6. 5.	HELIUM VENT SHUT-OFF VALVE				0.6	-5.0	8.5	95.5
5. 6. 6.	O2 PRESSURE RELIEF VALVE				2.8	20.0	-20.0	100.0
5. 5. 7.	FUEL PRESSURE RELIEF VALVE				2.8	-11.2	12.5	89.5
5. 6. 8.	O2 FILTER/CHECK VALVE				0.8	10.2	-11.0	95.8
5. 6. 9.	FUEL FILTER/CHECK VALVE				0.8	-9.8	4.5	98.6
5. 6.10.	HELIUM PRESSURE REGULATOR				2.6	-7.5	2.5	98.7
5. 6.11.	NUTS-BOLTS-SUPPORTS-FTGS-ETC.				1.5	-8.0	6.0	99.4
5. 5. 0.	PRESSURIZATION SYSTEM			26.1		-9.5	8.7	89.7
5.20. 1.	GROWTH				8.9	-1.6	1.4	99.1
5.20. 0.	GROWTH			8.9		-1.6	1.4	99.1
5. 0. 0.	MAIN PROPULSION SYSTEM		98.3			-1.6	1.4	99.1

Space Division
North American Rockwell

LUNAR FLYING VEHICLE - BASE CONFIGURATION - PILOT ONLY PAGE 5 DATE 6.30.69.

CODE	DESCRIPTION	DETAIL MASS PROPERTIES CLASS (E,C,A)	WEIGHT (POUNDS) CODE GENERANTION FIRST	SECOND	THIRD	CENTER OF GRAVITY (INCHES FROM REF. DATUM) X	Y	Z
7. 1. 1.	BATTERY - RIGHT HAND				8.3	12.0	12.0	98.0
7. 1. 2.	BATTERY - LEFT HAND				8.3	12.0	-12.0	98.0
7. 1. 0.	POWER SOURCE - BATTERIES			16.6		12.0	0.0	98.0
7.20. 1.	GROWTH				1.7	12.0	0.0	98.0
7.20. 0.	GROWTH			1.7		12.0	0.0	98.0
7. 0. 0.	POWER SOURCE		18.3			12.0	0.0	98.0
8. 1. 1.	SWITCHING CIRCUITS & BREAKERS				5.0	12.0	0.0	95.0
8. 1. 2.	BUS & WIRING				3.0	12.0	0.0	90.0
8. 1. 0.	POWER EQUIPMENT			8.0		12.0	0.0	93.1
8.20. 1.	GROWTH				0.8	12.0	0.0	93.1
8.20. 0.	GROWTH			0.8		12.0	0.0	93.1
8. 0. 0.	POWER CONVERSION & DISTRIBUTION		8.8			12.0	0.0	93.1
9. 3. 1.	RATE GYROS (2)				2.5	0.0	0.0	89.5
9. 3. 2.	CONTROL UNIT (INCL. LOGIC)				7.4	0.0	0.0	103.5
9. 3. 3.	ACTUATOR - NO 1				2.5	-2.8	-7.7	105.0
9. 3. 4.	ACTUATOR - NO 2				2.5	-7.7	-2.9	105.0
9. 3. 5.	ACTUATOR - NO 3				2.5	-7.0	0.7	105.0
9. 3. 6.	ACTUATOR - NO 4				2.5	-2.8	6.9	105.0
9. 3. 7.	ACTUATOR - NO 5				2.5	2.8	7.7	105.0
9. 3. 8.	ACTUATOR - NO 6				2.5	7.7	2.9	105.0
9. 3. 9.	ACTUATOR - NO 7				2.5	7.0	-0.7	105.0
9. 3.10.	ACTUATOR NO 8				2.5	2.8	-6.9	105.0
9. 3. 0.	GUIDANCE OUTPUT			29.9		0.0	0.0	103.3
9.20. 1.	GROWTH				3.0	0.0	0.0	103.3
9.20. 0.	GROWTH			3.0		0.0	0.0	103.3
9. 0. 0.	GUIDANCE AND NAVIGATION		32.9			0.0	0.0	103.3
14. 1. 1.	SEAT				2.5	0.0	0.0	92.5
14. 1. 2.	RESTRAINTS				1.5	-5.0	0.0	78.0
14. 1. 3.	ARM REST-RIGHT HAND				0.3	7.0	12.5	85.0

Space Division
North American Rockwell

LUNAR FLYING VEHICLE - BASE CONFIGURATION - PILOT ONLY PAGE 6 DATE 6.30.69.

DETAIL MASS PROPERTIES

CODE	DESCRIPTION	CLASS (E,C,A)	WEIGHT (POUNDS) CODE GENERANTION FIRST	SECOND	THIRD	CENTER OF GRAVITY (INCHES FROM REF. DATUM) X	Y	Z
14. 1. 4.	ARM REST-LEFT HAND				0.3	7.0	-12.5	85.0
14. 1. 0.	ACCOMODATIONS FOR PERSONNEL			4.6		-0.7	0.0	86.8
14. 2. 5.	FOOT REST				3.5	36.0	0.0	98.5
14. 2.12.	LOWER STEP				0.2	41.3	-3.5	120.5
14. 2.13.	UPPER STEP				0.2	32.0	-12.5	109.5
14. 2. 0.	FURNISHINGS			3.9		36.1	-0.8	100.2
14.20. 1.	GROWTH				0.8	16.2	-0.4	92.9
14.20. 0.	GROWTH			0.8		16.2	-0.4	92.9
14. 0. 0.	PERSONNEL PROVISIONS		9.3			16.2	-0.4	92.9
15. 1. 1.	PEDESTAL				2.0	11.5	0.0	79.5
15. 1. 0.	PEDESTAL			2.0		11.5	0.0	79.5
15. 3. 1.	DISPLAY PANEL STRUCTURE				5.0	19.5	-14.5	73.0
15. 3. 2.	DISPLAYS				7.0	19.5	-14.5	73.0
15. 3. 0.	INSTRUMENT PANELS			12.0		19.5	-14.5	73.0
15. 4. 1.	ROTATIONAL HAND CONTROL				3.5	16.5	12.0	81.0
15. 4. 2.	THROTTLE CONTROLLER				2.0	16.5	-12.0	81.0
15. 4. 3.	CABLES				4.0	10.0	0.0	88.0
15. 4. 0.	CREW STATION CONTROLS			9.5		13.8	1.9	83.9
15.20. 1.	GROWTH				2.3	16.5	-6.6	78.0
15.20. 0.	GROWTH			2.3		16.5	-6.6	78.0
15. 0. 0.	CREW STATION CONTROLS & PANELS		25.8			16.5	-6.6	78.0
17. 1. 1.	ASTRONAUT - PILOT				380.0	0.0	0.0	76.6
17. 1. 0.	CREW			380.0		0.0	0.0	76.6
17. 0. 0.	PERSONNEL		380.0			0.0	0.0	76.6
21. 1. 1.	RESIDUAL FUEL				3.6	24.0	-24.0	108.0
21. 1. 0.	RESIDUALS-FUEL			3.6		24.0	-24.0	108.0
21. 2. 1.	RESIDUAL OXIDIZER				5.4	-16.0	16.0	108.0
21. 2. 0.	RESIDUALS-OXIDIZER			5.4		-16.0	16.0	108.0
21. 0. 0.	RESIDUAL PROPELLANTS		9.0			-0.0	0.0	108.0

Space Division
North American Rockwell

LUNAR FLYING VEHICLE - BASE CONFIGURATION - PILOT ONLY PAGE 7 DATE 6.30.69.

DETAIL MASS PROPERTIES

CODE	DESCRIPTION	CLASS (E,C,A)	WEIGHT (POUNDS) CODE GENERANTION FIRST	SECOND	THIRD	CENTER OF GRAVITY (INCHES FROM REF. DATUM) X	Y	Z
25. 1. 1.	FUEL				120.0	24.0	-24.0	99.7
25. 1. 0.	FUEL			120.0		24.0	-24.0	99.7
25. 2. 1.	OXIDIZER				180.0	-16.0	16.0	99.7
25. 2. 0.	OXIDIZER			180.0		-16.0	16.0	99.7
25. 0. 0.	FULL THRUST PROPELLANT		300.0			0.0	0.0	99.7

Space Division
North American Rockwell

LUNAR FLYING VEHICLE - BASE CONFIGURATION - PILOT ONLY

DETAIL MASS PROPERTIES

CODE	DESCRIPTION	CURRENT WEIGHT (POUNDS) CODE GENERATION FIRST	SECOND	THIRD	MOMENT OF INERTIA (SLUG FEET SQUARED) PITCH	ROLL	YAW	NOTE NUMBER
2. 1. 1.	SHOCK MOUNT FORWARD			0.5	0.0	0.0	0.0	
2. 1. 2.	SHOCK MOUNT AFT			0.5	0.0	0.0	0.0	
2. 1. 3.	SHOCK MOUNT RIGHT HAND			0.5	0.0	0.0	0.0	
2. 1. 4.	SHOCK MOUNT LEFT HAND			0.5	0.0	0.0	0.0	
2. 1. 5.	ATTENUATOR SUPPORT FTGS-FWD UPR			0.3	0.0	0.0	0.0	
2. 1. 6.	ATTENUATOR SUPPORT FTGS-AFT UPR			0.3	0.0	0.0	0.0	
2. 1. 7.	ATTENUATOR SUPPORT FTGS-RIGHT U			0.3	0.0	0.0	0.0	
2. 1. 8.	ATTENUATOR SUPPORT FTGS-LEFT UP			0.3	0.0	0.0	0.0	
2. 1. 9.	ATTENUATOR SUPPORT FTGS-FWD LEG			0.3	0.0	0.0	0.0	
2. 1.10.	ATTENUATOR SUPPORT FTGS-AFT LEG			0.3	0.0	0.0	0.0	
2. 1.11.	ATTENUATOR SUPPORT FTGS-RIGHT L			0.3	0.0	0.0	0.0	
2. 1.12.	ATTENUATOR SUPPORT FTGS-LEFT LE			0.3	0.0	0.0	0.0	
2. 1.21.	FWD PANEL-STRUCTURAL BOX			0.5	0.0	0.0	0.0	
2. 1.22.	AFT PANEL-STRUCTURAL BOX			0.5	0.0	0.0	0.0	
2. 1.23.	FWD RH PANEL-STRUCTURAL BOX			0.7	0.0	0.0	0.0	
2. 1.24.	AFT LH PANEL-STRUCTURAL BOX			0.7	0.0	0.0	0.0	
2. 1.25.	FWD LH PANEL-STRUCTURAL BOX			0.8	0.0	0.0	0.0	
2. 1.26.	AFT RH PANEL-STRUCTURAL BOX			0.9	0.0	0.0	0.0	
2. 1.27.	RIGHT HAND PANEL-STRUCTURAL BOX			0.5	0.0	0.0	0.0	
2. 1.28.	LEFT HAND PANEL-STRUCTURE			0.5	0.0	0.0	0.0	
2. 1.29.	TOP PANEL-STRUCTURAL BOX			3.9	0.0	0.0	0.0	
2. 1. 0.	CARRY-THRU STRUCTURE		13.0		0.4	0.4	0.5	
2. 2. 1.	FORWARD PAYLOAD PLATFORM			5.1	0.1	0.1	0.1	
2. 2. 2.	AFT PAYLOAD PLATFORM			5.8	0.1	0.1	0.1	
2. 2. 0.	PAYLOAD PLATFORMS		10.9		0.8	0.8	1.5	
2. 3. 1.	FUEL TANK SUPPORTS			2.5	0.0	0.0	0.0	
2. 3. 2.	OXIDIZER TANK			2.4	0.0	0.0	0.0	
2. 3. 0.	FUEL & OXIDIZER TANK SUPTS.		4.9		0.3	0.3	0.6	
2. 4. 1.	TOP-ENGINE COMPARTMENT			0.8	0.0	0.0	0.0	

Space Division
North American Rockwell

LUNAR FLYING VEHICLE - BASE CONFIGURATION - PILOT ONLY

CODE	DESCRIPTION	DETAIL MASS PROPERTIES CURRENT WEIGHT (POUNDS) CODE GENERATION FIRST	SECOND	THIRD	MOMENT OF INERTIA (SLUG FEET SQUARED) PITCH	ROLL	YAW	NOTE NUMBER
2. 4. 2.	FORWARD SIDE-ENGINE COMPARTMENT			0.1	0.0	0.0	0.0	
2. 4. 3.	AFT SIDE-ENGINE COMPARTMENT			0.1	0.0	0.0	0.0	
2. 4. 4.	FWD RIGHT HAND SIDE-ENGINE COMP			0.2	0.0	0.0	0.0	
2. 4. 5.	AFT LEFT HAND SIDE-ENGINE COMPA			0.2	0.0	0.0	0.0	
2. 4. 6.	FWD LEFT HAND SIDE-ENGINE COMPA			0.3	0.0	0.0	0.0	
2. 4. 7.	AFT RIGHT HAND SIDE ENGINE COMP			0.3	0.0	0.0	0.0	
2. 4. 8.	RIGHT HAND SIDE-ENGINE COMPARTM			0.1	0.0	0.0	0.0	
2. 4. 9.	LEFT HAND SIDE-ENGINE			0.1	0.0	0.0	0.0	
2. 4.10.	NUTS-BOLTS-ETC. -ENGINE COMPART			0.4	0.0	0.0	0.0	
2. 4. 0.	ENGINE COMPARTMENT		2.7		0.0	0.0	0.0	
2. 6. 1.	SECONDARY STRUCTURE			2.0	0.0	0.0	0.0	
2. 6. 0.	SECONDARY STRUCTURE		2.0		0.0	0.0	0.0	
2.20. 1.	GROWTH			3.4	0.0	0.0	0.0	
2.20. 0.	GROWTH		3.4		0.0	0.0	0.0	
2. 0. 0.	BODY STRUCTURE	36.9			1.5	1.5	2.6	
3. 1. 1.	INSULATION-HELIUM TANK			1.8	0.0	0.0	0.0	
3. 1. 2.	INSULATION FUEL TANK			4.1	0.1	0.1	0.1	
3. 1. 3.	INSULATION OXIDIZER TANK			4.1	0.1	0.1	0.1	
3. 1. 0.	INSULATION		10.0		1.1	1.1	1.9	
3.20. 1.	GROWTH			1.0	0.0	0.0	0.0	
3.20. 0.	GROWTH		1.0		0.0	0.0	0.0	
3. 0. 0.	ENVIRONMENTAL PROTECTION	11.0			1.1	1.1	1.9	
4. 1. 1.	LEG-FORWARD			5.5	0.2	0.0	0.2	
4. 1. 2.	LEG-RIGHT HAND			5.5	0.0	0.2	0.0	
4. 1. 3.	LEG-AFT			5.5	0.2	0.0	0.2	
4. 1. 4.	LEG-LEFT HAND			5.5	0.0	0.2	0.0	
4. 1. 0.	STRUCTURAL LEGS		22.0		1.0	1.0	1.7	
4. 2. 1.	PAD-FORWARD			1.5	0.0	0.0	0.0	
4. 2. 2.	PAD RIGHT HAND			1.5	0.0	0.0	0.0	

Space Division
North American Rockwell

LUNAR FLYING VEHICLE - BASE CONFIGURATION - PILOT ONLY

DETAIL MASS PROPERTIES

CODE	DESCRIPTION	CURRENT WEIGHT (POUNDS) CODE GENERATION FIRST	SECOND	THIRD	MOMENT OF INERTIA (SLUG FEET SQUARED) PITCH	ROLL	YAW	NOTE NUMBER
4. 2. 3.	PAD AFT			1.5	0.0	0.0	0.0	
4. 2. 4.	PAD LEFT HAND			1.5	0.0	0.0	0.0	
4. 2. 0.	LANDING PADS		6.0		1.3	1.3	2.6	
4. 3. 1.	ATTENUATOR FORWARD HORIZONTAL			3.5	0.0	0.0	0.0	
4. 3. 2.	ATTENUATOR FORWARD VERTICAL			3.5	0.0	0.0	0.0	
4. 3. 3.	ATTENUATOR RIGHT HAND HORIZONT			3.5	0.0	0.0	0.0	
4. 3. 4.	ATTENUATOR RIGHT HAND VERTICAL			3.5	0.0	0.0	0.0	
4. 3. 5.	ATTENUATOR AFT HORIZONTAL			3.5	0.0	0.0	0.0	
4. 3. 6.	ATTENUATOR AFT VERTICAL			3.5	0.0	0.0	0.0	
4. 3. 7.	ATTENUATOR LEFT HAND HORIZONTA			3.5	0.0	0.0	0.0	
4. 3. 8.	ATTENUATOR LEFT HAND VERTICAL			3.5	0.0	0.0	0.0	
4. 3. 0.	ATTENUATORS (INCL. ATTACH.)		28.0		1.6	1.6	3.0	
4. 4. 1.	LANDING SENSOR-FWD			0.3	0.0	0.0	0.0	
4. 4. 2.	LANDING SENSOR-AFT			0.3	0.0	0.0	0.0	
4. 4. 0.	LANDING SENSORS		0.5		0.1	0.0	0.1	
4.20. 1.	GROWTH			5.6	0.0	0.0	0.0	
4.20. 0.	GROWTH		5.6		0.0	0.0	0.0	
4. 0. 0.	LANDING GEAR	62.1			4.6	4.5	7.4	
5. 1. 1.	ENGINE - NO 1			4.8	0.0	0.0	0.0	
5. 1. 2.	ENGINE - NO 2			4.8	0.0	0.0	0.0	
5. 1. 3.	ENGINE - NO 3			4.8	0.0	0.0	0.0	
5. 1. 4.	ENGINE - NO 4			4.8	0.0	0.0	0.0	
5. 1. 5.	THRUST CONE			2.3	0.0	0.0	0.0	
5. 1. 6.	THROTTLE CYLINDER			0.3	0.0	0.0	0.0	
5. 1. 7.	PITCH & ROLL CONTROL BRACKETS			6.6	0.0	0.0	0.0	
5. 1. 8.	FLEXIBLE INLET LINES			2.6	0.0	0.0	0.0	
5. 1. 9.	FUEL COUPLING MANIFOLD			0.3	0.0	0.0	0.0	
5. 1.10.	OXIDIZER COUPLING MANIFOLD			0.3	0.0	0.0	0.0	
5. 1.11.	CLIPS-NUTS-BOLTS-ETGS-ETC			1.2	0.0	0.0	0.0	
5. 1. 0.	ENGINES & ACCESSORIES		32.8		0.2	0.2	0.3	

Space Division
North American Rockwell

LUNAR FLYING VEHICLE - BASE CONFIGURATION - PILOT ONLY

CODE	DESCRIPTION	DETAIL MASS PROPERTIES CURRENT WEIGHT (POUNDS) CODE GENERATION FIRST	SECOND	THIRD	MOMENT OF INERTIA (SLUG FEET SQUARED) PITCH	ROLL	YAW	NOTE NUMBER
5. 2. 1.	FUEL TANK			9.0	0.1	0.1	0.1	
5. 2. 2.	FUEL TANK SUPPORT RING			2.0	0.0	0.0	0.0	
5. 2. 0.	FUEL TANK		11.0		0.1	0.1	0.1	
5. 3. 1.	FUEL TANK FILL & DRAIN BOSS			0.6	0.0	0.0	0.0	
5. 3. 2.	FUEL TANK FILL VENT DICONNECT			0.3	0.0	0.0	0.0	
5. 3. 3.	FUEL SUPPORT FTGS ETC.			1.0	0.0	0.0	0.0	
5. 3. 4.	FUEL PRESSURE REGULATOR			2.6	0.0	0.0	0.0	
5. 3. 5.	OXIDIZER FILL & DRAIN BOSS			0.6	0.0	0.0	0.0	
5. 3. 6.	OXIDIZER TANK FILL VENT DICONNE			0.3	0.0	0.0	0.0	
5. 3. 7.	OXIDIZER SUPPORT FTGS ETC.			0.5	0.0	0.0	0.0	
5. 3. 8.	OXIDIZER PRESSURE REGULATOR			2.6	0.0	0.0	0.0	
5. 3. 0.	FUEL & OXIDIZER SYSTEM		8.5		0.2	0.6	0.7	
5. 4. 1.	OXIDIZER TANK			9.0	0.1	0.1	0.1	
5. 4. 2.	OXIDIZER TANK SUPPORT RING			2.0	0.0	0.0	0.0	
5. 4. 0.	OXIDIZER TANK		11.0		0.1	0.1	0.1	
5. 6. 1.	HELIUM TANK			11.0	0.1	0.1	0.1	
5. 6. 2.	HELIUM TANK MOUNTING BRACKETS			1.1	0.0	0.0	0.0	
5. 6. 3.	SHUT-OFF & DISCONNECT			1.2	0.0	0.0	0.0	
5. 6. 4.	PRESSURE SYSTEM TUBING & FTGS			0.9	0.0	0.0	0.0	
5. 6. 5.	HELIUM VENT SHUT-OFF VALVE			0.6	0.0	0.0	0.0	
5. 6. 6.	O2 PRESSURE RELIEF VALVE			2.8	0.0	0.0	0.0	
5. 6. 7.	FUEL PRESSURE RELIEF VALVE			2.8	0.0	0.0	0.0	
5. 6. 8.	O2 FILTER/CHECK VALVE			0.8	0.0	0.0	0.0	
5. 6. 9.	FUEL FILTER/CHECK VALVE			0.8	0.0	0.0	0.0	
5. 6.10.	HELIUM PRESSURE REGULATOR			2.6	0.0	0.0	0.0	
5. 6.11.	NUTS-BOLTS-SUPPORTS-FTGS-ETC.			1.5	0.0	0.0	0.0	
5. 6. 0.	PRESSURIZATION SYSTEM		26.1		1.2	1.2	1.7	
5.20. 1.	GROWTH			8.9	0.0	0.0	0.0	
5.20. 0.	GROWTH		8.9		0.0	0.0	0.0	
5. 0. 0.	MAIN PROPULSION SYSTEM	98.3			5.2	5.5	7.5	

Space Division
North American Rockwell

LUNAR FLYING VEHICLE - BASE CONFIGURATION - PILOT ONLY

CODE	DESCRIPTION	DETAIL MASS PROPERTIES CURRENT WEIGHT (POUNDS) CODE GENERATION FIRST	SECOND	THIRD	MOMENT OF INERTIA (SLUG FEET SQUARED) PITCH	ROLL	YAW	NOTE NUMBER
7. 1. 1.	BATTERY - RIGHT HAND			8.3	0.0	0.0	0.0	
7. 1. 2.	BATTERY - LEFT HAND			8.3	0.0	0.0	0.0	
7. 1. 0.	POWER SOURCE - BATTERIES		16.6		0.0	0.5	0.5	
7.20. 1.	GROWTH			1.7	0.0	0.0	0.0	
7.20. 0.	GROWTH		1.7		0.0	0.0	0.0	
7. 0. 0.	POWER SOURCE	18.3			0.0	0.5	0.5	
8. 1. 1.	SWITCHING CIRCUITS & BREAKERS			5.0	0.0	0.0	0.0	
8. 1. 2.	BUS & WIRING			3.0	0.0	0.0	0.0	
8. 1. 0.	POWER EQUIPMENT		8.0		0.0	0.0	0.0	
8.20. 1.	GROWTH			0.8	0.0	0.0	0.0	
8.20. 0.	GROWTH		0.8		0.0	0.0	0.0	
8. 0. 0.	POWER CONVERSION & DISTRIBUTION	8.8			0.0	0.0	0.0	
9. 1. 1.	GROWTH			8.0	0.0	0.0	0.0	
9. 3. 1.	RATE GYROS (2)			2.5	0.0	0.0	0.0	
9. 3. 2.	CONTROL UNIT (INCL. LOGIC)			7.4	0.0	0.0	0.0	
9. 3. 3.	ACTUATOR - NO 1			2.5	0.0	0.0	0.0	
9. 3. 4.	ACTUATOR - NO 2			2.5	0.0	0.0	0.0	
9. 3. 5.	ACTUATOR - NO 3			2.5	0.0	0.0	0.0	
9. 3. 6.	ACTUATOR - NO 4			2.5	0.0	0.0	0.0	
9. 3. 7.	ACTUATOR - NO 5			2.5	0.0	0.0	0.0	
9. 3. 8.	ACTUATOR - NO 6			2.5	0.0	0.0	0.0	
9. 3. 9.	ACTUATOR - NO 7			2.5	0.0	0.0	0.0	
9. 3.10.	ACTUATOR NO 8			2.5	0.0	0.0	0.0	
9. 3. 0.	GUIDANCE OUTPUT		29.9		0.3	0.3	0.3	
9.20. 1.	GROWTH			3.0	0.0	0.0	0.0	
9.20. 0.	GROWTH		3.0		0.0	0.0	0.0	
9. 0. 0.	GUIDANCE AND NAVIGATION	32.9			0.3	0.3	0.3	
14. 1. 1.	SEAT			2.5	0.0	0.0	0.0	
14. 1. 2.	RESTRAINTS			1.5	0.0	0.0	0.0	

Space Division
North American Rockwell

LUNAR FLYING VEHICLE - BASE CONFIGURATION - PILOT ONLY

CODE	DESCRIPTION	DETAIL MASS PROPERTIES CURRENT WEIGHT (POUNDS) CODE GENERATION FIRST	SECOND	THIRD	MOMENT OF INERTIA (SLUG FEET SQUARED) PITCH	ROLL	YAW	NOTE NUMBER
14. 1. 3.	ARM REST-RIGHT HAND			0.3	0.0	0.0	0.0	
14. 1. 4.	ARM REST-LEFT HAND			0.3	0.0	0.0	0.0	
14. 1. 0.	ACCOMODATIONS FOR PERSONNEL		4.6		0.1	0.1	0.0	
14. 2. 5.	FOOT REST			3.5	0.0	0.0	0.0	
14. 2.12.	LOWER STEP			0.2	0.0	0.0	0.0	
14. 2.13.	UPPER STEP			0.2	0.0	0.0	0.0	
14. 2. 0.	FURNISHINGS		3.9		0.0	0.1	0.0	
14.20. 1.	GROWTH			0.8	0.0	0.0	0.0	
14.20. 0.	GROWTH		0.8		0.0	0.0	0.0	
14. 0. 0.	PERSONNEL PROVISIONS	9.3			0.8	0.2	0.7	
15. 1. 1.	PEDESTAL			2.0	0.0	0.0	0.0	
15. 1. 0.	PEDESTAL		2.0		0.0	0.0	0.0	
15. 3. 1.	DISPLAY PANEL STRUCTURE			5.0	0.0	0.0	0.0	
15. 3. 2.	DISPLAYS			7.0	0.0	0.0	0.0	
15. 3. 0.	INSTRUMENT PANELS		12.0		0.0	0.0	0.0	
15. 4. 1.	ROTATIONAL HAND CONTROL			3.5	0.0	0.0	0.0	
15. 4. 2.	THROTTLE CONTROLLER			2.0	0.0	0.0	0.0	
15. 4. 3.	CABLES			4.0	0.0	0.0	0.0	
15. 4. 0.	CREW STATION CONTROLS		9.5		0.0	0.2	0.2	
15.20. 1.	GROWTH			2.3	0.0	0.0	0.0	
15.20. 0.	GROWTH		2.3		0.0	0.0	0.0	
15. 0. 0.	CREW STATION CONTROLS & PANELS	25.8			0.2	0.7	0.6	
17. 1. 1.	ASTRONAUT - PILOT			380.0	14.5	8.6	11.0	
17. 1. 0.	CREW		380.0		14.5	8.6	11.0	
17. 0. 0.	PERSONNEL	380.0			14.5	8.6	11.0	
21. 1. 1.	RESIDUAL FUEL			3.6	0.0	0.0	0.0	
21. 1. 0.	RESIDUALS-FUEL		3.6		0.0	0.0	0.0	
21. 2. 1.	RESIDUAL OXIDIZER			5.4	0.0	0.0	0.0	
21. 2. 0.	RESIDUALS-OXIDIZER		5.4		0.0	0.0	0.0	
21. 0. 0.	RESIDUAL PROPELLANTS	9.0			0.7	0.7	1.5	

Space Division
North American Rockwell

LUNAR FLYING VEHICLE - BASE CONFIGURATION - PILOT ONLY PAGE 7 DATE 6.30.69.

DETAIL MASS PROPERTIES

CODE	DESCRIPTION	CURRENT WEIGHT (POUNDS) CODE GENERATION FIRST	SECOND	THIRD	MOMENT OF INERTIA (SLUG FEET SQUARED) PITCH	ROLL	YAW	NOTE NUMBER
25. 1. 1.	FUEL			120.0	0.0	0.0	0.0	
25. 1. 0.	FUEL		120.0		0.0	0.0	0.0	
25. 2. 1.	OXIDIZER			180.0	0.0	0.0	0.0	
25. 2. 0.	OXIDIZER		180.0		0.0	0.0	0.0	
25. 0. 0.	FULL THRUST PROPELLANT	300.0			24.9	24.9	49.7	

Space Division
North American Rockwell

DETAIL MASS PROPERTIES

100-POUND PAYLOAD CASE

LUNAR FLYING VEHICLE - BASE CONFIGURATION - 100 LB P/L PAGE 1 DATE 6.30.69.

CODE	DESCRIPTION	DETAIL MASS PROPERTIES CLASS (E,C,A)	WEIGHT (POUNDS) CODE GENERANTION FIRST	SECOND	THIRD	CENTER OF GRAVITY (INCHES FROM REF. DATUM) X	Y	Z
2. 1. 1.	SHOCK MOUNT FORWARD				0.5	8.5	0.0	110.8
2. 1. 2.	SHOCK MOUNT AFT				0.5	-8.5	0.0	110.8
2. 1. 3.	SHOCK MOUNT RIGHT HAND				0.5	0.0	8.5	110.8
2. 1. 4.	SHOCK MOUNT LEFT HAND				0.5	0.0	-8.5	110.8
2. 1. 5.	ATTENUATOR SUPPORT FTGS-FWD UPR				0.3	14.0	2.0	98.5
2. 1. 6.	ATTENUATOR SUPPORT FTGS-AFT UPR				0.3	-14.0	-2.0	98.5
2. 1. 7.	ATTENUATOR SUPPORT FTGS-RIGHT U				0.3	2.0	14.0	98.5
2. 1. 8.	ATTENUATOR SUPPORT FTGS-LEFT UP				0.3	-2.0	-14.0	98.5
2. 1. 9.	ATTENUATOR SUPPORT FTGS-FWD LEG				0.3	28.0	0.0	114.5
2. 1.10.	ATTENUATOR SUPPORT FTGS-AFT LEG				0.3	-28.0	0.0	114.5
2. 1.11.	ATTENUATOR SUPPORT FTGS-RIGHT L				0.3	0.0	28.0	114.5
2. 1.12.	ATTENUATOR SUPPORT FTGS-LEFT LE				0.3	0.0	-28.0	114.5
2. 1.21.	FWD PANEL-STRUCTURAL BOX				0.5	14.1	1.0	98.2
2. 1.22.	AFT PANEL-STRUCTURAL BOX				0.5	-14.1	-1.0	98.2
2. 1.23.	FWD RH PANEL-STRUCTURAL BOX				0.7	9.2	9.2	98.2
2. 1.24.	AFT LH PANEL-STRUCTURAL BOX				0.7	-9.2	-9.2	98.2
2. 1.25.	FWD LH PANEL-STRUCTURAL BOX				0.8	8.8	-8.8	98.2
2. 1.26.	AFT RH PANEL-STRUCTURAL BOX				0.9	-8.8	8.8	98.2
2. 1.27.	RIGHT HAND PANEL-STRUCTURAL BOX				0.5	1.0	14.1	98.2
2. 1.28.	LEFT HAND PANEL-STRUCTURE				0.5	-1.0	-14.1	98.2
2. 1.29.	TOP PANEL-STRUCTURAL BOX				3.9	0.0	0.0	96.0
2. 1. 0.	CARRY-THRU STRUCTURE	13.0				-0.1	0.1	100.7
2. 2. 1.	FORWARD PAYLOAD PLATFORM				5.1	17.2	17.2	100.0
2. 2. 2.	AFT PAYLOAD PLATFORM				5.8	-16.5	-16.5	100.0
2. 2. 0.	PAYLOAD PLATFORMS	10.9				-0.9	-0.9	100.0
2. 3. 1.	FUEL TANK SUPPORTS				2.5	18.0	-18.0	100.0
2. 3. 2.	OXIDIZER TANK				2.4	-15.0	15.0	100.0
2. 3. 0.	FUEL & OXIDIZER TANK SUPTS.	4.9				1.8	-1.8	100.0
2. 4. 1.	TOP-ENGINE COMPARTMENT				0.8	0.0	0.0	101.4

Space Division
North American Rockwell

LUNAR FLYING VEHICLE - BASE CONFIGURATION - 100 LB P/L PAGE 2 DATE 6.30.69.

DETAIL MASS PROPERTIES

CODE	DESCRIPTION	CLASS (E,C,A)	WEIGHT (POUNDS) CODE GENERANTION FIRST	SECOND	THIRD	CENTER OF GRAVITY (INCHES FROM REF. DATUM) X	Y	Z
2. 4. 2.	FORWARD SIDE-ENGINE COMPARTMENT				0.1	9.7	0.5	105.3
2. 4. 3.	AFT SIDE-ENGINE COMPARTMENT				0.1	-9.7	-0.5	105.3
2. 4. 4.	FWD RIGHT HAND SIDE-ENGINE COMP				0.2	6.2	6.2	105.3
2. 4. 5.	AFT LEFT HAND SIDE-ENGINE COMPA				0.2	-6.2	-6.2	105.3
2. 4. 6.	FWD LEFT HAND SIDE-ENGINE COMPA				0.3	5.6	-5.6	105.3
2. 4. 7.	AFT RIGHT HAND SIDE ENGINE COMP				0.3	-5.6	5.6	105.3
2. 4. 8.	RIGHT HAND SIDE-ENGINE COMPARTM				0.1	0.5	9.7	105.3
2. 4. 9.	LEFT HAND SIDE-ENGINE				0.1	-0.5	-9.7	105.3
2. 4.10.	NUTS-BOLTS-ETC. -ENGINE COMPART				0.4	0.0	0.0	105.3
2. 4. 0.	ENGINE COMPARTMENT			2.7		0.0	0.0	104.2
2. 6. 1.	SECONDARY STRUCTURE				2.0	0.0	0.0	100.0
2. 6. 0.	SECONDARY STRUCTURE			2.0		0.0	0.0	100.0
2.20. 1.	GROWTH				3.4	-0.0	-0.5	100.6
2.20. 0.	GROWTH			3.4		-0.0	-0.5	100.6
2. 0. 0.	BODY STRUCTURE		36.9			-0.0	-0.5	100.6
3. 1. 1.	INSULATION-HELIUM TANK				1.8	-18.0	18.0	82.0
3. 1. 2.	INSULATION FUEL TANK				4.1	24.0	-24.0	99.7
3. 1. 3.	INSULATION OXIDIZER TANK				4.1	-16.0	16.0	99.7
3. 1. 0.	INSULATION			10.0		0.0	-0.0	96.5
3.20. 1.	GROWTH				1.0	0.0	-0.0	96.5
3.20. 0.	GROWTH			1.0		0.0	-0.0	96.5
3. 0. 0.	ENVIRONMENTAL PROTECTION		11.0			0.0	-0.0	96.5
4. 1. 1.	LEG-FORWARD				5.5	16.8	0.0	115.0
4. 1. 2.	LEG-RIGHT HAND				5.5	0.0	16.8	115.0
4. 1. 3.	LEG-AFT				5.5	-16.8	0.0	115.0
4. 1. 4.	LEG-LEFT HAND				5.5	0.0	-16.8	115.0
4. 1. 0.	STRUCTURAL LEGS			22.0		0.0	0.0	115.0
4. 2. 1.	PAD-FORWARD				1.5	44.5	0.0	129.0
4. 2. 2.	PAD RIGHT HAND				1.5	0.0	44.5	129.0

Space Division
North American Rockwell

LUNAR FLYING VEHICLE - BASE CONFIGURATION - 100 LB P/L PAGE 3 DATE 6.30.69.

DETAIL MASS PROPERTIES

CODE	DESCRIPTION	CLASS (E,C,A)	WEIGHT (POUNDS) CODE GENERANTION FIRST	SECOND	THIRD	CENTER OF GRAVITY (INCHES FROM REF. DATUM) X	Y	Z
4. 2. 3.	PAD AFT				1.5	-44.5	0.0	129.0
4. 2. 4.	PAD LEFT HAND				1.5	0.0	-44.5	129.0
4. 2. 0.	LANDING PADS			6.0		0.0	0.0	129.0
4. 3. 1.	ATTENUATOR FORWARD HORIZONTAL				3.5	24.0	2.2	108.0
4. 3. 2.	ATTENUATOR FORWARD VERTICAL				3.5	20.0	-1.2	105.8
4. 3. 3.	ATTENUATOR RIGHT HAND HORIZONT				3.5	2.2	24.0	108.0
4. 3. 4.	ATTENUATOR RIGHT HAND VERTICAL				3.5	-1.2	20.0	105.8
4. 3. 5.	ATTENUATOR AFT HORIZONTAL				3.5	-24.0	-2.2	108.0
4. 3. 6.	ATTENUATOR AFT VERTICAL				3.5	-20.0	1.2	105.8
4. 3. 7.	ATTENUATOR LEFT HAND HORIZONTA				3.5	-2.2	-24.0	109.0
4. 3. 8.	ATTENUATOR LEFT HAND VERTICAL				3.5	1.2	-20.0	105.8
4. 3. 0.	ATTENUATORS (INCL. ATTACH.)			28.0		0.0	0.0	106.9
4. 4. 1.	LANDING SENSOR-FWD				0.3	32.6	0.0	124.3
4. 4. 2.	LANDING SENSOR-AFT				0.3	-32.6	0.0	124.3
4. 4. 0.	LANDING SENSORS			0.5		0.0	0.0	124.3
4.20. 1.	GROWTH				5.6	0.0	0.0	112.6
4.20. 0.	GROWTH			5.6		0.0	0.0	112.6
4. 0. 0.	LANDING GEAR		62.1			0.0	0.0	112.6
5. 1. 1.	ENGINE - NO 1				4.8	-5.3	5.3	109.5
5. 1. 2.	ENGINE - NO 2				4.8	5.3	5.3	109.5
5. 1. 3.	ENGINE - NO 3				4.8	5.3	-5.3	109.5
5. 1. 4.	ENGINE - NO 4				4.8	-5.3	-5.3	109.5
5. 1. 5.	THRUST CONE				2.3	0.0	0.0	104.3
5. 1. 6.	THROTTLE CYLINDER				0.3	0.0	0.0	102.5
5. 1. 7.	PITCH & ROLL CONTROL BRACKETS				6.6	0.0	0.0	105.7
5. 1. 8.	FLEXIBLE INLET LINES				2.6	0.0	0.0	104.5
5. 1. 9.	FUEL COUPLING MANIFOLD				0.3	-6.5	-6.5	104.5
5. 1.10.	OXIDIZER COUPLING MANIFOLD				0.3	6.5	6.5	104.5
5. 1.11.	CLIPS-NUTS-BOLTS-FTGS-ETC				1.2	0.0	0.0	104.5
5. 1. 0.	ENGINES & ACCESSORIES			32.8		0.0	0.0	107.6

Space Division
North American Rockwell

LUNAR FLYING VEHICLE - BASE CONFIGURATION - 100 LB P/L PAGE 4 DATE 6.30.69.

DETAIL MASS PROPERTIES

CODE	DESCRIPTION	CLASS (E,C,A)	WEIGHT (POUNDS) CODE GENERANTION FIRST	SECOND	THIRD	CENTER OF GRAVITY (INCHES FROM REF. DATUM) X	Y	Z
5. 2. 1.	FUEL TANK				9.0	24.0	-24.0	99.7
5. 2. 2.	FUEL TANK SUPPORT RING				2.0	20.0	-20.0	99.7
5. 2. 0.	FUEL TANK			11.0		23.3	-23.3	99.7
5. 3. 1.	FUEL TANK FILL & DRAIN BOSS				0.6	9.0	-25.0	98.5
5. 3. 2.	FUEL TANK FILL VENT DICONNECT				0.3	9.0	-25.0	100.5
5. 3. 3.	FUEL SUPPORT FTGS ETC.				1.0	20.0	-20.0	100.0
5. 3. 4.	FUEL PRESSURE REGULATOR				2.6	7.0	-12.5	90.0
5. 3. 5.	OXIDIZER FILL & DRAIN BOSS				0.6	-7.0	25.0	98.5
5. 3. 6.	OXIDIZER TANK FILL VENT DICONNE				0.3	-7.0	25.0	100.5
5. 3. 7.	OXIDIZER SUPPORT FTGS ETC.				0.5	-12.0	12.0	100.0
5. 3. 8.	OXIDIZER PRESSURE REGULATOR				2.6	-7.0	12.5	90.0
5. 3. 0.	FUEL & OXIDIZER SYSTEM			8.5		1.9	-1.6	93.7
5. 4. 1.	OXIDIZER TANK				9.0	-16.0	16.0	99.7
5. 4. 2.	OXIDIZER TANK SUPPORT RING				2.0	-12.0	12.0	99.7
5. 4. 0.	OXIDIZER TANK			11.0		-15.3	15.3	99.7
5. 6. 1.	HELIUM TANK				11.0	-18.0	18.0	82.0
5. 6. 2.	HELIUM TANK MOUNTING BRACKETS				1.1	-18.0	18.0	88.0
5. 6. 3.	SHUT-OFF & DISCONNECT				1.2	-10.0	8.5	85.5
5. 6. 4.	PRESSURE SYSTEM TUBING & FTGS				0.9	-8.5	6.5	100.5
5. 6. 5.	HELIUM VENT SHUT-OFF VALVE				0.6	-5.0	8.5	95.5
5. 6. 6.	O2 PRESSURE RELIEF VALVE				2.8	20.0	-20.0	100.0
5. 6. 7.	FUEL PRESSURE RELIEF VALVE				2.8	-11.2	12.5	89.5
5. 6. 8.	O2 FILTER/CHECK VALVE				0.8	10.2	-11.0	95.8
5. 6. 9.	FUEL FILTER/CHECK VALVE				0.8	-9.8	4.5	98.6
5. 6.10.	HELIUM PRESSURE REGULATOR				2.6	-7.5	2.5	98.7
5. 6.11.	NUTS-BOLTS-SUPPORTS-FTGS-ETC.				1.5	-8.0	6.0	99.4
5. 6. 0.	PRESSURIZATION SYSTEM			26.1		-9.5	8.7	89.7
5.20. 1.	GROWTH				8.9	-1.6	1.4	99.1
5.20. 0.	GROWTH			8.9		-1.6	1.4	99.1
5. 0. 0.	MAIN PROPULSION SYSTEM		98.3			-1.6	1.4	99.1

Space Division
North American Rockwell

LUNAR FLYING VEHICLE - BASE CONFIGURATION - 100 LB P/L PAGE 5 DATE 6.30.69.

DETAIL MASS PROPERTIES

CODE	DESCRIPTION	CLASS (E,C,A)	WEIGHT (POUNDS) CODE GENERANTION FIRST	SECOND	THIRD	CENTER OF GRAVITY (INCHES FROM REF. DATUM) X	Y	Z
7. 1. 1.	BATTERY - RIGHT HAND				8.3	12.0	12.0	98.0
7. 1. 2.	BATTERY - LEFT HAND				8.3	12.0	-12.0	98.0
7. 1. 0.	POWER SOURCE - BATTERIES			16.6		12.0	0.0	98.0
7.20. 1.	GROWTH				1.7	12.0	0.0	98.0
7.20. 0.	GROWTH			1.7		12.0	0.0	98.0
7. 0. 0.	POWER SOURCE		18.3			12.0	0.0	98.0
8. 1. 1.	SWITCHING CIRCUITS & BREAKERS				5.0	12.0	0.0	95.0
8. 1. 2.	BUS & WIRING				3.0	12.0	0.0	90.0
8. 1. 0.	POWER EQUIPMENT			8.0		12.0	0.0	93.1
8.20. 1.	GROWTH				0.8	12.0	0.0	93.1
8.20. 0.	GROWTH			0.8		12.0	0.0	93.1
8. 0. 0.	POWER CONVERSION & DISTRIBUTION		8.8			12.0	0.0	93.1
9. 3. 1.	RATE GYROS (2)				2.5	0.0	0.0	89.5
9. 3. 2.	CONTROL UNIT (INCL. LOGIC)				7.4	0.0	0.0	103.5
9. 3. 3.	ACTUATOR - NO 1				2.5	-2.8	-7.7	105.0
9. 3. 4.	ACTUATOR - NO 2				2.5	-7.7	-2.9	105.0
9. 3. 5.	ACTUATOR - NO 3				2.5	-7.0	0.7	105.0
9. 3. 6.	ACTUATOR - NO 4				2.5	-2.8	6.9	105.0
9. 3. 7.	ACTUATOR - NO 5				2.5	2.8	7.7	105.0
9. 3. 8.	ACTUATOR - NO 6				2.5	7.7	2.9	105.0
9. 3. 9.	ACTUATOR - NO 7				2.5	7.0	-0.7	105.0
9. 3.10.	ACTUATOR NO 8				2.5	2.8	-6.9	105.0
9. 3. 0.	GUIDANCE OUTPUT			29.9		0.0	0.0	103.3
9.20. 1.	GROWTH				3.0	0.0	0.0	103.3
9.20. 0.	GROWTH			3.0		0.0	0.0	103.3
9. 0. 0.	GUIDANCE AND NAVIGATION		32.9			0.0	0.0	103.3
14. 1. 1.	SEAT				2.5	0.0	0.0	92.5
14. 1. 2.	RESTRAINTS				1.5	-5.0	0.0	78.0
14. 1. 3.	ARM REST-RIGHT HAND				0.3	7.0	12.5	85.0

Space Division
North American Rockwell

LUNAR FLYING VEHICLE - BASE CONFIGURATION - 100 LB P/L PAGE 6 DATE 6.30.69.

CODE	DESCRIPTION	DETAIL MASS PROPERTIES CLASS (E,C,A)	WEIGHT (POUNDS) CODE GENERANTION FIRST	SECOND	THIRD	CENTER OF GRAVITY (INCHES FROM REF. DATUM) X	Y	Z
14. 1. 4.	ARM REST-LEFT HAND				0.3	7.0	-12.5	85.0
14. 1. 0.	ACCOMODATIONS FOR PERSONNEL			4.6		-0.7	0.0	86.8
14. 2. 5.	FOOT REST				3.5	36.0	0.0	98.5
14. 2.12.	LOWER STEP				0.2	41.3	-3.5	120.5
14. 2.13.	UPPER STEP				0.2	32.0	-12.5	109.5
14. 2. 0.	FURNISHINGS			3.9		36.1	-0.8	100.2
14.20. 1.	GROWTH				0.8	16.2	-0.4	92.9
14.20. 0.	GROWTH			0.8		16.2	-0.4	92.9
14. 0. 0.	PERSONNEL PROVISIONS		9.3			16.2	-0.4	92.9
15. 1. 1.	PEDESTAL				2.0	11.5	0.0	79.5
15. 1. 0.	PEDESTAL			2.0		11.5	0.0	79.5
15. 3. 1.	DISPLAY PANEL STRUCTURE				5.0	19.5	-14.5	73.0
15. 3. 2.	DISPLAYS				7.0	19.5	-14.5	73.0
15. 3. 0.	INSTRUMENT PANELS			12.0		19.5	-14.5	73.0
15. 4. 1.	ROTATIONAL HAND CONTROL				3.5	16.5	12.0	81.0
15. 4. 2.	THROTTLE CONTROLLER				2.0	16.5	-12.0	81.0
15. 4. 3.	CABLES				4.0	10.0	0.0	88.0
15. 4. 0.	CREW STATION CONTROLS			9.5		13.8	1.9	83.9
15.20. 1.	GROWTH				2.3	16.5	-6.6	78.0
15.20. 0.	GROWTH			2.3		16.5	-6.6	78.0
15. 0. 0.	CREW STATION CONTROLS & PANELS		25.8			16.5	-6.6	78.0
17. 1. 1.	ASTRONAUT - PILOT				380.0	0.0	0.0	76.6
17. 1. 0.	CREW			380.0		0.0	0.0	76.6
17. 0. 0.	PERSONNEL		380.0			0.0	0.0	76.6
18. 3. 1.	CARGO - FORWARD				50.0	21.0	21.0	95.5
18. 3. 2.	CARGO - AFT				50.0	-21.0	-21.0	95.5
18. 3. 0.	CARGO			100.0		0.0	0.0	95.5
18. 0. 0.	CARGO		100.0			0.0	0.0	95.5
21. 1. 1.	RESIDUAL FUEL				3.6	24.0	-24.0	108.0
21. 1. 0.	RESIDUALS-FUEL			3.6		24.0	-24.0	108.0

Space Division
North American Rockwell

LUNAR FLYING VEHICLE - BASE CONFIGURATION - 100 LB P/L PAGE 7 DATE 6.30.69.

DETAIL MASS PROPERTIES

CODE	DESCRIPTION	CLASS (E,C,A)	WEIGHT (POUNDS) CODE GENERANTION FIRST	SECOND	THIRD	CENTER OF GRAVITY (INCHES FROM REF. DATUM) X	Y	Z
21. 2. 1.	RESIDUAL OXIDIZER				5.4	-16.0	16.0	108.0
21. 2. 0.	RESIDUALS-OXIDIZER			5.4		-16.0	16.0	108.0
21. 0. 0.	RESIDUAL PROPELLANTS		9.0			-0.0	0.0	108.0
25. 1. 1.	FUEL				120.0	24.0	-24.0	99.7
25. 1. 0.	FUEL			120.0		24.0	-24.0	99.7
25. 2. 1.	OXIDIZER				180.0	-16.0	16.0	99.7
25. 2. 0.	OXIDIZER			180.0		-16.0	16.0	99.7
25. 0. 0.	FULL THRUST PROPELLANT		300.0			0.0	0.0	99.7

Space Division
North American Rockwell

LUNAR FLYING VEHICLE - BASE CONFIGURATION - 100 LB P/L PAGE 1 DATE 6.30.69.

CODE	DESCRIPTION	DETAIL MASS PROPERTIES CURRENT WEIGHT (POUNDS) CODE GENERATION FIRST	SECOND	THIRD	MOMENT OF INERTIA (SLUG FEET SQUARED) PITCH	ROLL	YAW	NOTE NUMBER
2. 1. 1.	SHOCK MOUNT FORWARD			0.5	0.0	0.0	0.0	
2. 1. 2.	SHOCK MOUNT AFT			0.5	0.0	0.0	0.0	
2. 1. 3.	SHOCK MOUNT RIGHT HAND			0.5	0.0	0.0	0.0	
2. 1. 4.	SHOCK MOUNT LEFT HAND			0.5	0.0	0.0	0.0	
2. 1. 5.	ATTENUATOR SUPPORT FTGS-FWD UPR			0.3	0.0	0.0	0.0	
2. 1. 6.	ATTENUATOR SUPPORT FTGS-AFT UPR			0.3	0.0	0.0	0.0	
2. 1. 7.	ATTENUATOR SUPPORT FTGS-RIGHT U			0.3	0.0	0.0	0.0	
2. 1. 8.	ATTENUATOR SUPPORT FTGS-LEFT UP			0.3	0.0	0.0	0.0	
2. 1. 9.	ATTENUATOR SUPPORT FTGS-FWD LEG			0.3	0.0	0.0	0.0	
2. 1.10.	ATTENUATOR SUPPORT FTGS-AFT LEG			0.3	0.0	0.0	0.0	
2. 1.11.	ATTENUATOR SUPPORT FTGS-RIGHT L			0.3	0.0	0.0	0.0	
2. 1.12.	ATTENUATOR SUPPORT FTGS-LEFT LE			0.3	0.0	0.0	0.0	
2. 1.21.	FWD PANEL-STRUCTURAL BOX			0.5	0.0	0.0	0.0	
2. 1.22.	AFT PANEL-STRUCTURAL BOX			0.5	0.0	0.0	0.0	
2. 1.23.	FWD RH PANEL-STRUCTURAL BOX			0.7	0.0	0.0	0.0	
2. 1.24.	AFT LH PANEL-STRUCTURAL BOX			0.7	0.0	0.0	0.0	
2. 1.25.	FWD LH PANEL-STRUCTURAL BOX			0.8	0.0	0.0	0.0	
2. 1.26.	AFT RH PANEL-STRUCTURAL BOX			0.9	0.0	0.0	0.0	
2. 1.27.	RIGHT HAND PANEL-STRUCTURAL BOX			0.5	0.0	0.0	0.0	
2. 1.28.	LEFT HAND PANEL-STRUCTURE			0.5	0.0	0.0	0.0	
2. 1.29.	TOP PANEL-STRUCTURAL BOX			3.9	0.0	0.0	0.0	
2. 1. 0.	CARRY-THRU STRUCTURE		13.0		0.4	0.4	0.5	
2. 2. 1.	FORWARD PAYLOAD PLATFORM			5.1	0.1	0.1	0.1	
2. 2. 2.	AFT PAYLOAD PLATFORM			5.8	0.1	0.1	0.1	
2. 2. 0.	PAYLOAD PLATFORMS		10.9		0.8	0.8	1.5	
2. 3. 1.	FUEL TANK SUPPORTS			2.5	0.0	0.0	0.0	
2. 3. 2.	OXIDIZER TANK			2.4	0.0	0.0	0.0	
2. 3. 0.	FUEL & OXIDIZER TANK SUPTS.		4.9		0.3	0.3	0.6	
2. 4. 1.	TOP-ENGINE COMPARTMENT			0.8	0.0	0.0	0.0	

Space Division
North American Rockwell

LUNAR FLYING VEHICLE - BASE CONFIGURATION - 100 LB P/L PAGE 2 DATE 6.30.69.

CODE	DESCRIPTION	DETAIL MASS PROPERTIES CURRENT WEIGHT (POUNDS) CODE GENERATION FIRST	SECOND	THIRD	MOMENT OF INERTIA (SLUG FEET SQUARED) PITCH	ROLL	YAW	NOTE NUMBER
2. 4. 2.	FORWARD SIDE-ENGINE COMPARTMENT			0.1	0.0	0.0	0.0	
2. 4. 3.	AFT SIDE-ENGINE COMPARTMENT			0.1	0.0	0.0	0.0	
2. 4. 4.	FWD RIGHT HAND SIDE-ENGINE COMP			0.2	0.0	0.0	0.0	
2. 4. 5.	AFT LEFT HAND SIDE-ENGINE COMPA			0.2	0.0	0.0	0.0	
2. 4. 6.	FWD LEFT HAND SIDE-ENGINE COMPA			0.3	0.0	0.0	0.0	
2. 4. 7.	AFT RIGHT HAND SIDE ENGINE COMP			0.3	0.0	0.0	0.0	
2. 4. 8.	RIGHT HAND SIDE-ENGINE COMPARTM			0.1	0.0	0.0	0.0	
2. 4. 9.	LEFT HAND SIDE-ENGINE			0.1	0.0	0.0	0.0	
2. 4.10.	NUTS-BOLTS-ETC. -ENGINE COMPART			0.4	0.0	0.0	0.0	
2. 4. 0.	ENGINE COMPARTMENT		2.7		0.0	0.0	0.0	
2. 6. 1.	SECONDARY STRUCTURE			2.0	0.0	0.0	0.0	
2. 6. 0.	SECONDARY STRUCTURE		2.0		0.0	0.0	0.0	
2.20. 1.	GROWTH			3.4	0.0	0.0	0.0	
2.20. 0.	GROWTH		3.4		0.0	0.0	0.0	
2. 0. 0.	BODY STRUCTURE	36.9			1.5	1.5	2.6	
3. 1. 1.	INSULATION-HELIUM TANK			1.8	0.0	0.0	0.0	
3. 1. 2.	INSULATION FUEL TANK			4.1	0.1	0.1	0.1	
3. 1. 3.	INSULATION OXIDIZER TANK			4.1	0.1	0.1	0.1	
3. 1. 0.	INSULATION		10.0		1.1	1.1	1.9	
3.20. 1.	GROWTH			1.0	0.0	0.0	0.0	
3.20. 0.	GROWTH		1.0		0.0	0.0	0.0	
3. 0. 0.	ENVIRONMENTAL PROTECTION	11.0			1.1	1.1	1.9	
4. 1. 1.	LEG-FORWARD			5.5	0.2	0.0	0.2	
4. 1. 2.	LEG-RIGHT HAND			5.5	0.0	0.2	0.0	
4. 1. 3.	LEG-AFT			5.5	0.2	0.0	0.2	
4. 1. 4.	LEG-LEFT HAND			5.5	0.0	0.2	0.0	
4. 1. 0.	STRUCTURAL LEGS		22.0		1.0	1.0	1.7	
4. 2. 1.	PAD-FORWARD			1.5	0.0	0.0	0.0	
4. 2. 2.	PAD RIGHT HAND			1.5	0.0	0.0	0.0	

Space Division
North American Rockwell

LUNAR FLYING VEHICLE - BASE CONFIGURATION - 100 LB P/L PAGE 3 DATE 6.30.69.

CODE	DESCRIPTION	DETAIL MASS PROPERTIES CURRENT WEIGHT (POUNDS) CODE GENERATION FIRST	SECOND	THIRD	MOMENT OF INERTIA (SLUG FEET SQUARED) PITCH	ROLL	YAW	NOTE NUMBER
4. 2. 3.	PAD AFT			1.5	0.0	0.0	0.0	
4. 2. 4.	PAD LEFT HAND			1.5	0.0	0.0	0.0	
4. 2. 0.	LANDING PADS		6.0		1.3	1.3	2.6	
4. 3. 1.	ATTENUATOR FORWARD HORIZONTAL			3.5	0.0	0.0	0.0	
4. 3. 2.	ATTENUATOR FORWARD VERTICAL			3.5	0.0	0.0	0.0	
4. 3. 3.	ATTENUATOR RIGHT HAND HORIZONT			3.5	0.0	0.0	0.0	
4. 3. 4.	ATTENUATOR RIGHT HAND VERTICAL			3.5	0.0	0.0	0.0	
4. 3. 5.	ATTENUATOR AFT HORIZONTAL			3.5	0.0	0.0	0.0	
4. 3. 6.	ATTENUATOR AFT VERTICAL			3.5	0.0	0.0	0.0	
4. 3. 7.	ATTENUATOR LEFT HAND HORIZONTA			3.5	0.0	0.0	0.0	
4. 3. 8.	ATTENUATOR LEFT HAND VERTICAL			3.5	0.0	0.0	0.0	
4. 3. 0.	ATTENUATORS (INCL. ATTACH.)		28.0		1.6	1.6	3.0	
4. 4. 1.	LANDING SENSOR-FWD			0.3	0.0	0.0	0.0	
4. 4. 2.	LANDING SENSOR-AFT			0.3	0.0	0.0	0.0	
4. 4. 0.	LANDING SENSORS		0.5		0.1	0.0	0.1	
4.20. 1.	GROWTH			5.6	0.0	0.0	0.0	
4.20. 0.	GROWTH		5.6		0.0	0.0	0.0	
4. 0. 0.	LANDING GEAR	62.1			4.6	4.5	7.4	
5. 1. 1.	ENGINE - NO 1			4.8	0.0	0.0	0.0	
5. 1. 2.	ENGINE - NO 2			4.8	0.0	0.0	0.0	
5. 1. 3.	ENGINE - NO 3			4.8	0.0	0.0	0.0	
5. 1. 4.	ENGINE - NO 4			4.8	0.0	0.0	0.0	
5. 1. 5.	THRUST CONE			2.3	0.0	0.0	0.0	
5. 1. 6.	THROTTLE CYLINDER			0.3	0.0	0.0	0.0	
5. 1. 7.	PITCH & ROLL CONTROL BRACKETS			6.6	0.0	0.0	0.0	
5. 1. 8.	FLEXIBLE INLET LINES			2.6	0.0	0.0	0.0	
5. 1. 9.	FUEL COUPLING MANIFOLD			0.3	0.0	0.0	0.0	
5. 1.10.	OXIDIZER COUPLING MANIFOLD			0.3	0.0	0.0	0.0	
5. 1.11.	CLIPS-NUTS-BOLTS-FTGS-ETC			1.2	0.0	0.0	0.0	
5. 1. 0.	ENGINES & ACCESSORIES		32.8		0.2	0.2	0.3	

Space Division
North American Rockwell

LUNAR FLYING VEHICLE - BASE CONFIGURATION - 100 LB P/L PAGE 4 DATE 6.30.69.

CODE	DESCRIPTION	DETAIL MASS PROPERTIES CURRENT WEIGHT (POUNDS) CODE GENERATION FIRST	SECOND	THIRD	MOMENT OF INERTIA (SLUG FEET SQUARED) PITCH	ROLL	YAW	NOTE NUMBER
5. 2. 1.	FUEL TANK			9.0	0.1	0.1	0.1	
5. 2. 2.	FUEL TANK SUPPORT RING			2.0	0.0	0.0	0.0	
5. 2. 0.	FUEL TANK		11.0		0.1	0.1	0.1	
5. 3. 1.	FUEL TANK FILL & DRAIN BOSS			0.6	0.0	0.0	0.0	
5. 3. 2.	FUEL TANK FILL VENT DICONNECT			0.3	0.0	0.0	0.0	
5. 3. 3.	FUEL SUPPORT FTGS ETC.			1.0	0.0	0.0	0.0	
5. 3. 4.	FUEL PRESSURE REGULATOR			2.6	0.0	0.0	0.0	
5. 3. 5.	OXIDIZER FILL & DRAIN BOSS			0.6	0.0	0.0	0.0	
5. 3. 6.	OXIDIZER TANK FILL VENT DICONNE			0.3	0.0	0.0	0.0	
5. 3. 7.	OXIDIZER SUPPORT FTGS ETC.			0.5	0.0	0.0	0.0	
5. 3. 8.	OXIDIZER PRESSURE REGULATOR			2.6	0.0	0.0	0.0	
5. 3. 0.	FUEL & OXIDIZER SYSTEM		8.5		0.2	0.6	0.7	
5. 4. 1.	OXIDIZER TANK			9.0	0.1	0.1	0.1	
5. 4. 2.	OXIDIZER TANK SUPPORT RING			2.0	0.0	0.0	0.0	
5. 4. 0.	OXIDIZER TANK		11.0		0.1	0.1	0.1	
5. 6. 1.	HELIUM TANK			11.0	0.1	0.1	0.1	
5. 5. 2.	HELIUM TANK MOUNTING BRACKETS			1.1	0.0	0.0	0.0	
5. 5. 3.	SHUT-OFF & DISCONNECT			1.2	0.0	0.0	0.0	
5. 6. 4.	PRESSURE SYSTEM TUBING & FTGS			0.9	0.0	0.0	0.0	
5. 5. 5.	HELIUM VENT SHUT-OFF VALVE			0.6	0.0	0.0	0.0	
5. 5. 6.	O2 PRESSURE RELIEF VALVE			2.8	0.0	0.0	0.0	
5. 5. 7.	FUEL PRESSURE RELIEF VALVE			2.8	0.0	0.0	0.0	
5. 6. 8.	O2 FILTER/CHECK VALVE			0.8	0.0	0.0	0.0	
5. 5. 9.	FUEL FILTER/CHECK VALVE			0.8	0.0	0.0	0.0	
5. 6.10.	HELIUM PRESSURE REGULATOR			2.6	0.0	0.0	0.0	
5. 5.11.	NUTS-BOLTS-SUPPORTS-FTGS-ETC.			1.5	0.0	0.0	0.0	
5. 6. 0.	PRESSURIZATION SYSTEM		26.1		1.2	1.2	1.7	
5.20. 1.	GROWTH			8.9	0.0	0.0	0.0	
5.20. 0.	GROWTH		8.9		0.0	0.0	0.0	
5. 0. 0.	MAIN PROPULSION SYSTEM	98.3			5.2	5.5	7.5	

Space Division
North American Rockwell

CODE	DESCRIPTION	DETAIL MASS PROPERTIES CURRENT WEIGHT (POUNDS) CODE GENERATION FIRST	SECOND	THIRD	MOMENT OF INERTIA (SLUG FEET SQUARED) PITCH	ROLL	YAW	NOTE NUMBER
7. 1. 1.	BATTERY - RIGHT HAND			8.3	0.0	0.0	0.0	
7. 1. 2.	BATTERY - LEFT HAND			8.3	0.0	0.0	0.0	
7. 1. 0.	POWER SOURCE - BATTERIES		16.6		0.0	0.5	0.5	
7.20. 1.	GROWTH			1.7	0.0	0.0	0.0	
7.20. 0.	GROWTH		1.7		0.0	0.0	0.0	
7. 0. 0.	POWER SOURCE	18.3			0.0	0.5	0.5	
8. 1. 1.	SWITCHING CIRCUITS & BREAKERS			5.0	0.0	0.0	0.0	
8. 1. 2.	BUS & WIRING			3.0	0.0	0.0	0.0	
8. 1. 0.	POWER EQUIPMENT		8.0		0.0	0.0	0.0	
8.20. 1.	GROWTH			0.8	0.0	0.0	0.0	
8.20. 0.	GROWTH		0.8		0.0	0.0	0.0	
8. 0. 0.	POWER CONVERSION & DISTRIBUTION	8.8			0.0	0.0	0.0	
9. 3. 1.	RATE GYROS (2)			2.5	0.0	0.0	0.0	
9. 3. 2.	CONTROL UNIT (INCL. LOGIC)			7.4	0.0	0.0	0.0	
9. 3. 3.	ACTUATOR - NO 1			2.5	0.0	0.0	0.0	
9. 3. 4.	ACTUATOR - NO 2			2.5	0.0	0.0	0.0	
9. 3. 5.	ACTUATOR - NO 3			2.5	0.0	0.0	0.0	
9. 3. 6.	ACTUATOR - NO 4			2.5	0.0	0.0	0.0	
9. 3. 7.	ACTUATOR - NO 5			2.5	0.0	0.0	0.0	
9. 3. 8.	ACTUATOR - NO 6			2.5	0.0	0.0	0.0	
9. 3. 9.	ACTUATOR - NO 7			2.5	0.0	0.0	0.0	
9. 3.10.	ACTUATOR NO 8			2.5	0.0	0.0	0.0	
9. 3. 0.	GUIDANCE OUTPUT		29.9		0.3	0.3	0.3	
9.20. 1.	GROWTH			3.0	0.0	0.0	0.0	
9.20. 0.	GROWTH		3.0		0.0	0.0	0.0	
9. 0. 0.	GUIDANCE AND NAVIGATION	32.9			0.3	0.3	0.3	
14. 1. 1.	SEAT			2.5	0.0	0.0	0.0	
14. 1. 2.	RESTRAINTS			1.5	0.0	0.0	0.0	
14. 1. 3.	ARM REST-RIGHT HAND			0.3	0.0	0.0	0.0	

Space Division
North American Rockwell

CODE	DESCRIPTION	DETAIL MASS PROPERTIES CURRENT WEIGHT (POUNDS) CODE GENERATION FIRST	SECOND	THIRD	MOMENT OF INERTIA (SLUG FEET SQUARED) PITCH	ROLL	YAW	NOTE NUMBER
14. 1. 4.	ARM REST-LEFT HAND			0.3	0.0	0.0	0.0	
14. 1. 0.	ACCOMODATIONS FOR PERSONNEL		4.6		0.1	0.1	0.0	
14. 2. 5.	FOOT REST			3.5	0.0	0.0	0.0	
14. 2.12.	LOWER STEP			0.2	0.0	0.0	0.0	
14. 2.13.	UPPER STEP			0.2	0.0	0.0	0.0	
14. 2. 0.	FURNISHINGS		3.9		0.0	0.1	0.0	
14.20. 1.	GROWTH			0.8	0.0	0.0	0.0	
14.20. 0.	GROWTH		0.8		0.0	0.0	0.0	
14. 0. 0.	PERSONNEL PROVISIONS	9.3			0.8	0.2	0.7	
15. 1. 1.	PEDESTAL			2.0	0.0	0.0	0.0	
15. 1. 0.	PEDESTAL		2.0		0.0	0.0	0.0	
15. 3. 1.	DISPLAY PANEL STRUCTURE			5.0	0.0	0.0	0.0	
15. 3. 2.	DISPLAYS			7.0	0.0	0.0	0.0	
15. 3. 0.	INSTRUMENT PANELS		12.0		0.0	0.0	0.0	
15. 4. 1.	ROTATIONAL HAND CONTROL			3.5	0.0	0.0	0.0	
15. 4. 2.	THROTTLE CONTROLLER			2.0	0.0	0.0	0.0	
15. 4. 3.	CABLES			4.0	0.0	0.0	0.0	
15. 4. 0.	CREW STATION CONTROLS		9.5		0.0	0.2	0.2	
15.20. 1.	GROWTH			2.3	0.0	0.0	0.0	
15.20. 0.	GROWTH		2.3		0.0	0.0	0.0	
15. 0. 0.	CREW STATION CONTROLS & PANELS	25.8			0.2	0.7	0.6	
17. 1. 1.	ASTRONAUT - PILOT			380.0	14.5	8.6	11.0	
17. 1. 0.	CREW		380.0		14.5	8.6	11.0	
17. 0. 0.	PERSONNEL	380.0			14.5	8.6	11.0	
18. 3. 1.	CARGO - FORWARD			50.0	0.4	0.4	0.4	
18. 3. 2.	CARGO - AFT			50.0	0.4	0.4	0.4	
18. 3. 0.	CARGO		100.0		10.3	10.3	19.8	
18. 0. 0.	CARGO	100.0			10.3	10.3	19.8	
21. 1. 1.	RESIDUAL FUEL			3.6	0.0	0.0	0.0	
21. 1. 0.	RESIDUALS-FUEL		3.6		0.0	0.0	0.0	

Space Division
North American Rockwell

LUNAR FLYING VEHICLE - BASE CONFIGURATION - 100 LB P/L PAGE 7 DATE 6.30.69.

DETAIL MASS PROPERTIES

CODE	DESCRIPTION	CURRENT WEIGHT (POUNDS) CODE GENERATION FIRST	SECOND	THIRD	MOMENT OF INERTIA (SLUG FEET SQUARED) PITCH	ROLL	YAW	NOTE NUMBER
21. 2. 1.	RESIDUAL OXIDIZER			5.4	0.0	0.0	0.0	
21. 2. 0.	RESIDUALS-OXIDIZER		5.4		0.0	0.0	0.0	
21. 0. 0.	RESIDUAL PROPELLANTS	9.0			0.7	0.7	1.5	
25. 1. 1.	FUEL			120.0	0.0	0.0	0.0	
25. 1. 0.	FUEL		120.0		0.0	0.0	0.0	
25. 2. 1.	OXIDIZER			180.0	0.0	0.0	0.0	
25. 2. 0.	OXIDIZER		180.0		0.0	0.0	0.0	
25. 0. 0.	FULL THRUST PROPELLANT	300.0			24.9	24.9	49.7	

Space Division
North American Rockwell

DETAIL MASS PROPERTIES

370-POUND PAYLOAD CASE

LUNAR FLYING VEHICLE - BASE CONFIGURATION - 370 LB P/L PAGE 1 DATE 6.30.69.

DETAIL MASS PROPERTIES

CODE	DESCRIPTION	CLASS (E,C,A)	WEIGHT (POUNDS) CODE GENERANTION FIRST	SECOND	THIRD	CENTER OF GRAVITY (INCHES FROM REF. DATUM) X	Y	Z
2. 1. 1.	SHOCK MOUNT FORWARD				0.5	8.5	0.0	110.8
2. 1. 2.	SHOCK MOUNT AFT				0.5	-8.5	0.0	110.8
2. 1. 3.	SHOCK MOUNT RIGHT HAND				0.5	0.0	8.5	110.8
2. 1. 4.	SHOCK MOUNT LEFT HAND				0.5	0.0	-8.5	110.8
2. 1. 5.	ATTENUATOR SUPPORT FTGS-FWD UPR				0.3	14.0	2.0	98.5
2. 1. 6.	ATTENUATOR SUPPORT FTGS-AFT UPR				0.3	-14.0	-2.0	98.5
2. 1. 7.	ATTENUATOR SUPPORT FTGS-RIGHT U				0.3	2.0	14.0	98.5
2. 1. 8.	ATTENUATOR SUPPORT FTGS-LEFT UP				0.3	-2.0	-14.0	98.5
2. 1. 9.	ATTENUATOR SUPPORT FTGS-FWD LEG				0.3	28.0	0.0	114.5
2. 1.10.	ATTENUATOR SUPPORT FTGS-AFT LEG				0.3	-28.0	0.0	114.5
2. 1.11.	ATTENUATOR SUPPORT FTGS-RIGHT L				0.3	0.0	28.0	114.5
2. 1.12.	ATTENUATOR SUPPORT FTGS-LEFT LE				0.3	0.0	-28.0	114.5
2. 1.21.	FWD PANEL-STRUCTURAL BOX				0.5	14.1	1.0	98.2
2. 1.22.	AFT PANEL-STRUCTURAL BOX				0.5	-14.1	-1.0	98.2
2. 1.23.	FWD RH PANEL-STRUCTURAL BOX				0.7	9.2	9.2	98.2
2. 1.24.	AFT LH PANEL-STRUCTURAL BOX				0.7	-9.2	-9.2	98.2
2. 1.25.	FWD LH PANEL-STRUCTURAL BOX				0.8	8.8	-8.8	98.2
2. 1.26.	AFT RH PANEL-STRUCTURAL BOX				0.9	-8.8	8.8	98.2
2. 1.27.	RIGHT HAND PANEL-STRUCTURAL BOX				0.5	1.0	14.1	98.2
2. 1.28.	LEFT HAND PANEL-STRUCTURE				0.5	-1.0	-14.1	98.2
2. 1.29.	TOP PANEL-STRUCTURAL BOX				3.9	0.0	0.0	96.0
2. 1. 0.	CARRY-THRU STRUCTURE		13.0			-0.1	0.1	100.7
2. 2. 1.	FORWARD PAYLOAD PLATFORM				5.1	17.2	17.2	100.0
2. 2. 2.	AFT PAYLOAD PLATFORM				5.8	-16.5	-16.5	100.0
2. 2. 0.	PAYLOAD PLATFORMS		10.9			-0.9	-0.9	100.0
2. 3. 1.	FUEL TANK SUPPORTS				2.5	18.0	-18.0	100.0
2. 3. 2.	OXIDIZER TANK				2.4	-15.0	15.0	100.0
2. 3. 0.	FUEL & OXIDIZER TANK SUPTS.		4.9			1.8	-1.8	100.0
2. 4. 1.	TOP-ENGINE COMPARTMENT				0.8	0.0	0.0	101.4

Space Division
North American Rockwell

LUNAR FLYING VEHICLE - BASE CONFIGURATION - 370 LB P/L PAGE 2 DATE 6.30.69.

CODE	DESCRIPTION	DETAIL MASS PROPERTIES CLASS (E,C,A)	WEIGHT (POUNDS) CODE GENERANTION FIRST	SECOND	THIRD	CENTER OF GRAVITY (INCHES FROM REF. DATUM) X	Y	Z
2. 4. 2.	FORWARD SIDE-ENGINE COMPARTMENT				0.1	9.7	0.5	105.3
2. 4. 3.	AFT SIDE-ENGINE COMPARTMENT				0.1	-9.7	-0.5	105.3
2. 4. 4.	FWD RIGHT HAND SIDE-ENGINE COMP				0.2	6.2	6.2	105.3
2. 4. 5.	AFT LEFT HAND SIDE-ENGINE COMPA				0.2	-6.2	-6.2	105.3
2. 4. 6.	FWD LEFT HAND SIDE-ENGINE COMPA				0.3	5.6	-5.6	105.3
2. 4. 7.	AFT RIGHT HAND SIDE ENGINE COMP				0.3	-5.6	5.6	105.3
2. 4. 8.	RIGHT HAND SIDE-ENGINE COMPARTM				0.1	0.5	9.7	105.3
2. 4. 9.	LEFT HAND SIDE-ENGINE				0.1	-0.5	-9.7	105.3
2. 4.10.	NUTS-BOLTS-ETC. -ENGINE COMPART				0.4	0.0	0.0	105.3
2. 4. 0.	ENGINE COMPARTMENT			2.7		0.0	0.0	104.2
2. 6. 1.	SECONDARY STRUCTURE				2.0	0.0	0.0	100.0
2. 6. 0.	SECONDARY STRUCTURE			2.0		0.0	0.0	100.0
2.20. 1.	GROWTH				3.4	-0.0	-0.5	100.6
2.20. 0.	GROWTH			3.4		-0.0	-0.5	100.6
2. 0. 0.	BODY STRUCTURE		36.9			-0.0	-0.5	100.6
3. 1. 1.	INSULATION-HELIUM TANK				1.8	-18.0	18.0	82.0
3. 1. 2.	INSULATION FUEL TANK				4.1	24.0	-24.0	99.7
3. 1. 3.	INSULATION OXIDIZER TANK				4.1	-16.0	16.0	99.7
3. 1. 0.	INSULATION			10.0		0.0	-0.0	96.5
3.20. 1.	GROWTH				1.0	0.0	-0.0	96.5
3.20. 0.	GROWTH			1.0		0.0	-0.0	96.5
3. 0. 0.	ENVIRONMENTAL PROTECTION		11.0			0.0	-0.0	96.5
4. 1. 1.	LEG-FORWARD				5.5	16.8	0.0	115.0
4. 1. 2.	LEG-RIGHT HAND				5.5	0.0	16.8	115.0
4. 1. 3.	LEG-AFT				5.5	-16.8	0.0	115.0
4. 1. 4.	LEG-LEFT HAND				5.5	0.0	-16.8	115.0
4. 1. 0.	STRUCTURAL LEGS			22.0		0.0	0.0	115.0
4. 2. 1.	PAD-FORWARD				1.5	44.5	0.0	129.0
4. 2. 2.	PAD RIGHT HAND				1.5	0.0	44.5	129.0

Space Division
North American Rockwell

LUNAR FLYING VEHICLE - BASE CONFIGURATION - 370 LB P/L PAGE 3 DATE 6.30.69.

DETAIL MASS PROPERTIES

CODE	DESCRIPTION	CLASS (E,C,A)	WEIGHT (POUNDS) CODE GENERANTION FIRST	SECOND	THIRD	CENTER OF GRAVITY (INCHES FROM REF. DATUM) X	Y	Z
4. 2. 3.	PAD AFT				1.5	-44.5	0.0	129.0
4. 2. 4.	PAD LEFT HAND				1.5	0.0	-44.5	129.0
4. 2. 0.	LANDING PADS			6.0		0.0	0.0	129.0
4. 3. 1.	ATTENUATOR FORWARD HORIZONTAL				3.5	24.0	2.2	108.0
4. 3. 2.	ATTENUATOR FORWARD VERTICAL				3.5	20.0	-1.2	105.8
4. 3. 3.	ATTENUATOR RIGHT HAND HORIZONT				3.5	2.2	24.0	108.0
4. 3. 4.	ATTENUATOR RIGHT HAND VERTICAL				3.5	-1.2	20.0	105.8
4. 3. 5.	ATTENUATOR AFT HORIZONTAL				3.5	-24.0	-2.2	108.0
4. 3. 6.	ATTENUATOR AFT VERTICAL				3.5	-20.0	1.2	105.8
4. 3. 7.	ATTENUATOR LEFT HAND HORIZONTA				3.5	-2.2	-24.0	108.0
4. 3. 8.	ATTENUATOR LEFT HAND VERTICAL				3.5	1.2	-20.0	105.8
4. 3. 0.	ATTENUATORS (INCL. ATTACH.)			28.0		0.0	0.0	106.9
4. 4. 1.	LANDING SENSOR-FWD				0.3	32.6	0.0	124.3
4. 4. 2.	LANDING SENSOR-AFT				0.3	-32.6	0.0	124.3
4. 4. 0.	LANDING SENSORS			0.5		0.0	0.0	124.3
4.20. 1.	GROWTH				5.6	0.0	0.0	112.6
4.20. 0.	GROWTH			5.6		0.0	0.0	112.6
4. 0. 0.	LANDING GEAR		62.1			0.0	0.0	112.6
5. 1. 1.	ENGINE - NO 1				4.8	-5.3	5.3	109.5
5. 1. 2.	ENGINE - NO 2				4.8	5.3	5.3	109.5
5. 1. 3.	ENGINE - NO 3				4.8	5.3	-5.3	109.5
5. 1. 4.	ENGINE - NO 4				4.8	-5.3	-5.3	109.5
5. 1. 5.	THRUST CONE				2.3	0.0	0.0	104.3
5. 1. 6.	THROTTLE CYLINDER				0.3	0.0	0.0	102.5
5. 1. 7.	PITCH & ROLL CONTROL BRACKETS				6.6	0.0	0.0	105.7
5. 1. 8.	FLEXIBLE INLET LINES				2.6	0.0	0.0	104.5
5. 1. 9.	FUEL COUPLING MANIFOLD				0.3	-6.5	-6.5	104.5
5. 1.10.	OXIDIZER COUPLING MANIFOLD				0.3	6.5	6.5	104.5
5. 1.11.	CLIPS-NUTS-BOLTS-FTGS-ETC				1.2	0.0	0.0	104.5
5. 1. 0.	ENGINES & ACCESSORIES			32.8		0.0	0.0	107.6

Space Division
North American Rockwell

LUNAR FLYING VEHICLE - BASE CONFIGURATION - 370 LB P/L PAGE 4 DATE 6.30.69.

CODE	DESCRIPTION	DETAIL MASS PROPERTIES CLASS (E,C,A)	WEIGHT (POUNDS) CODE GENERANTION FIRST	SECOND	THIRD	CENTER OF GRAVITY (INCHES FROM REF. DATUM) X	Y	Z
5. 2. 1.	FUEL TANK				9.0	24.0	-24.0	99.7
5. 2. 2.	FUEL TANK SUPPORT RING				2.0	20.0	-20.0	99.7
5. 2. 0.	FUEL TANK			11.0		23.3	-23.3	99.7
5. 3. 1.	FUEL TANK FILL & DRAIN BOSS				0.6	9.0	-25.0	98.5
5. 3. 2.	FUEL TANK FILL VENT DICONNECT				0.3	9.0	-25.0	100.5
5. 3. 3.	FUEL SUPPORT FTGS ETC.				1.0	20.0	-20.0	100.0
5. 3. 4.	FUEL PRESSURE REGULATOR				2.6	7.0	-12.5	90.0
5. 3. 5.	OXIDIZER FILL & DRAIN BOSS				0.6	-7.0	25.0	98.5
5. 3. 6.	OXIDIZER TANK FILL VENT DICONNE				0.3	-7.0	25.0	100.5
5. 3. 7.	OXIDIZER SUPPORT FTGS ETC.				0.5	-12.0	12.0	100.0
5. 3. 8.	OXIDIZER PRESSURE REGULATOR				2.6	-7.0	12.5	90.0
5. 3. 0.	FUEL & OXIDIZER SYSTEM			8.5		1.9	-1.6	93.7
5. 4. 1.	OXIDIZER TANK				9.0	-16.0	16.0	99.7
5. 4. 2.	OXIDIZER TANK SUPPORT RING				2.0	-12.0	12.0	99.7
5. 4. 0.	OXIDIZER TANK			11.0		-15.3	15.3	99.7
5. 6. 1.	HELIUM TANK				11.0	-18.0	18.0	82.0
5. 6. 2.	HELIUM TANK MOUNTING BRACKETS				1.1	-18.0	18.0	88.0
5. 6. 3.	SHUT-OFF & DISCONNECT				1.2	-10.0	8.5	85.5
5. 6. 4.	PRESSURE SYSTEM TUBING & FTGS				0.9	-8.5	6.5	100.5
5. 6. 5.	HELIUM VENT SHUT-OFF VALVE				0.6	-5.0	8.5	95.5
5. 6. 6.	O2 PRESSURE RELIEF VALVE				2.8	20.0	-20.0	100.0
5. 6. 7.	FUEL PRESSURE RELIEF VALVE				2.8	-11.2	12.5	89.5
5. 6. 8.	O2 FILTER/CHECK VALVE				0.8	10.2	-11.0	95.8
5. 6. 9.	FUEL FILTER/CHECK VALVE				0.8	-9.8	4.5	98.6
5. 6.10.	HELIUM PRESSURE REGULATOR				2.6	-7.5	2.5	98.7
5. 6.11.	NUTS-BOLTS-SUPPORTS-FTGS-ETC.				1.5	-8.0	6.0	99.4
5. 6. 0.	PRESSURIZATION SYSTEM			26.1		-9.5	8.7	89.7
5.20. 1.	GROWTH				8.9	-1.6	1.4	99.1
5.20. 0.	GROWTH			8.9		-1.6	1.4	99.1
5. 0. 0.	MAIN PROPULSION SYSTEM		98.3			-1.6	1.4	99.1

Space Division
North American Rockwell

LUNAR FLYING VEHICLE - BASE CONFIGURATION - 370 LB P/L PAGE 5 DATE 6.30.69.

CODE	DESCRIPTION	DETAIL MASS PROPERTIES CLASS (E,C,A)	WEIGHT (POUNDS) CODE GENERANTION FIRST	SECOND	THIRD	CENTER OF GRAVITY (INCHES FROM REF. DATUM) X	Y	Z
7. 1. 1.	BATTERY - RIGHT HAND				8.3	12.0	12.0	98.0
7. 1. 2.	BATTERY - LEFT HAND				8.3	12.0	-12.0	98.0
7. 1. 0.	POWER SOURCE - BATTERIES			16.6		12.0	0.0	98.0
7.20. 1.	GROWTH				1.7	12.0	0.0	98.0
7.20. 0.	GROWTH			1.7		12.0	0.0	98.0
7. 0. 0.	POWER SOURCE		18.3			12.0	0.0	98.0
8. 1. 1.	SWITCHING CIRCUITS & BREAKERS				5.0	12.0	0.0	95.0
8. 1. 2.	BUS & WIRING				3.0	12.0	0.0	90.0
8. 1. 0.	POWER EQUIPMENT			8.0		12.0	0.0	93.1
8.20. 1.	GROWTH				0.8	12.0	0.0	93.1
8.20. 0.	GROWTH			0.8		12.0	0.0	93.1
8. 0. 0.	POWER CONVERSION & DISTRIBUTION		8.8			12.0	0.0	93.1
9. 3. 1.	RATE GYROS (2)				2.5	0.0	0.0	89.5
9. 3. 2.	CONTROL UNIT (INCL. LOGIC)				7.4	0.0	0.0	103.5
9. 3. 3.	ACTUATOR - NO 1				2.5	-2.8	-7.7	105.0
9. 3. 4.	ACTUATOR - NO 2				2.5	-7.7	-2.9	105.0
9. 3. 5.	ACTUATOR - NO 3				2.5	-7.0	0.7	105.0
9. 3. 6.	ACTUATOR - NO 4				2.5	-2.8	6.9	105.0
9. 3. 7.	ACTUATOR - NO 5				2.5	2.8	7.7	105.0
9. 3. 8.	ACTUATOR - NO 6				2.5	7.7	2.9	105.0
9. 3. 9.	ACTUATOR - NO 7				2.5	7.0	-0.7	105.0
9. 3.10.	ACTUATOR NO 8				2.5	2.8	-6.9	105.0
9. 3. 0.	GUIDANCE OUTPUT			29.9		0.0	0.0	103.3
9.20. 1.	GROWTH				3.0	0.0	0.0	103.3
9.20. 0.	GROWTH			3.0		0.0	0.0	103.3
9. 0. 0.	GUIDANCE AND NAVIGATION		32.9			0.0	0.0	103.3
14. 1. 1.	SEAT				2.5	0.0	0.0	92.5
14. 1. 2.	RESTRAINTS				1.5	-5.0	0.0	78.0
14. 1. 3.	ARM REST-RIGHT HAND				0.3	7.0	12.5	85.0

Space Division
North American Rockwell

LUNAR FLYING VEHICLE - BASE CONFIGURATION - 370 LB P/L PAGE 6 DATE 6.30.69.

CODE	DESCRIPTION	DETAIL MASS PROPERTIES CLASS (E,C,A)	WEIGHT (POUNDS) CODE GENERANTION FIRST	SECOND	THIRD	CENTER OF GRAVITY (INCHES FROM REF. DATUM) X	Y	Z
14. 1. 4.	ARM REST-LEFT HAND				0.3	7.0	-12.5	85.0
14. 1. 0.	ACCOMODATIONS FOR PERSONNEL			4.6		-0.7	0.0	86.8
14. 2. 5.	FOOT REST				3.5	36.0	0.0	98.5
14. 2.12.	LOWER STEP				0.2	41.3	-3.5	120.5
14. 2.13.	UPPER STEP				0.2	32.0	-12.5	109.5
14. 2. 0.	FURNISHINGS			3.9		36.1	-0.8	100.2
14.20. 1.	GROWTH				0.8	16.2	-0.4	92.9
14.20. 0.	GROWTH			0.8		16.2	-0.4	92.9
14. 0. 0.	PERSONNEL PROVISIONS		9.3			16.2	-0.4	92.9
15. 1. 1.	PEDESTAL				2.0	11.5	0.0	79.5
15. 1. 0.	PEDESTAL			2.0		11.5	0.0	79.5
15. 3. 1.	DISPLAY PANEL STRUCTURE				5.0	19.5	-14.5	73.0
15. 3. 2.	DISPLAYS				7.0	19.5	-14.5	73.0
15. 3. 0.	INSTRUMENT PANELS			12.0		19.5	-14.5	73.0
15. 4. 1.	ROTATIONAL HAND CONTROL				3.5	16.5	12.0	81.0
15. 4. 2.	THROTTLE CONTROLLER				2.0	16.5	-12.0	81.0
15. 4. 3.	CABLES				4.0	10.0	0.0	88.0
15. 4. 0.	CREW STATION CONTROLS			9.5		13.8	1.9	83.9
15.20. 1.	GROWTH				2.3	16.5	-6.6	78.0
15.20. 0.	GROWTH			2.3		16.5	-6.6	78.0
15. 0. 0.	CREW STATION CONTROLS & PANELS		25.8			16.5	-6.6	78.0
17. 1. 1.	ASTRONAUT - PILOT				380.0	0.0	0.0	76.6
17. 1. 0.	CREW			380.0		0.0	0.0	76.6
17. 0. 0.	PERSONNEL		380.0			0.0	0.0	76.6
18. 3. 1.	CARGO - FORWARD				50.0	21.0	21.0	95.5
18. 3. 2.	CARGO - AFT				50.0	-21.0	-21.0	95.5
18. 3. 3.	CARGO - FORWARD				50.0	21.0	21.0	95.5
18. 3. 4.	CARGO - AFT				50.0	-21.0	-21.0	95.5
18. 3. 5.	CARGO - FORWARD				50.0	21.0	21.0	95.5

Space Division
North American Rockwell

LUNAR FLYING VEHICLE - BASE CONFIGURATION - 370 LB P/L PAGE 7 DATE 6.30.69.

DETAIL MASS PROPERTIES

CODE	DESCRIPTION	CLASS (E,C,A)	WEIGHT (POUNDS) CODE GENERANTION FIRST	SECOND	THIRD	CENTER OF GRAVITY (INCHES FROM REF. DATUM) X	Y	Z
18. 3. 6.	CARGO - AFT				50.0	-21.0	-21.0	95.5
18. 3. 8.	CARGO - FORWARD				35.0	21.0	21.0	95.5
18. 3.10.	CARGO - AFT				35.0	-21.0	-21.0	95.5
18. 3. 0.	CARGO			370.0		0.0	0.0	95.5
18. 0. 0.	CARGO		370.0			0.0	0.0	95.5
21. 1. 1.	RESIDUAL FUEL				3.6	24.0	-24.0	108.0
21. 1. 0.	RESIDUALS-FUEL			3.6		24.0	-24.0	108.0
21. 2. 1.	RESIDUAL OXIDIZER				5.4	-16.0	16.0	108.0
21. 2. 0.	RESIDUALS-OXIDIZER			5.4		-16.0	16.0	108.0
21. 0. 0.	RESIDUAL PROPELLANTS		9.0			-0.0	0.0	108.0
25. 1. 1.	FUEL				120.0	24.0	-24.0	99.7
25. 1. 0.	FUEL			120.0		24.0	-24.0	99.7
25. 2. 1.	OXIDIZER				180.0	-16.0	16.0	99.7
25. 2. 0.	OXIDIZER			180.0		-16.0	16.0	99.7
25. 0. 0.	FULL THRUST PROPELLANT		300.0			0.0	0.0	99.7

Space Division
North American Rockwell

LUNAR FLYING VEHICLE - BASE CONFIGURATION - 370 LB P/L PAGE 1 DATE 6.30.69.

DETAIL MASS PROPERTIES

CODE	DESCRIPTION	CURRENT WEIGHT (POUNDS) CODE GENERATION FIRST	SECOND	THIRD	MOMENT OF INERTIA (SLUG FEET SQUARED) PITCH	ROLL	YAW	NOTE NUMBER
2. 1. 1.	SHOCK MOUNT FORWARD			0.5	0.0	0.0	0.0	
2. 1. 2.	SHOCK MOUNT AFT			0.5	0.0	0.0	0.0	
2. 1. 3.	SHOCK MOUNT RIGHT HAND			0.5	0.0	0.0	0.0	
2. 1. 4.	SHOCK MOUNT LEFT HAND			0.5	0.0	0.0	0.0	
2. 1. 5.	ATTENUATOR SUPPORT FTGS-FWD UPR			0.3	0.0	0.0	0.0	
2. 1. 5.	ATTENUATOR SUPPORT FTGS-AFT UPR			0.3	0.0	0.0	0.0	
2. 1. 7.	ATTENUATOR SUPPORT FTGS-RIGHT U			0.3	0.0	0.0	0.0	
2. 1. 8.	ATTENUATOR SUPPORT FTGS-LEFT UP			0.3	0.0	0.0	0.0	
2. 1. 9.	ATTENUATOR SUPPORT FTGS-FWD LEG			0.3	0.0	0.0	0.0	
2. 1.10.	ATTENUATOR SUPPORT FTGS-AFT LEG			0.3	0.0	0.0	0.0	
2. 1.11.	ATTENUATOR SUPPORT FTGS-RIGHT L			0.3	0.0	0.0	0.0	
2. 1.12.	ATTENUATOR SUPPORT FTGS-LEFT LE			0.3	0.0	0.0	0.0	
2. 1.21.	FWD PANEL-STRUCTURAL BOX			0.5	0.0	0.0	0.0	
2. 1.22.	AFT PANEL-STRUCTURAL BOX			0.5	0.0	0.0	0.0	
2. 1.23.	FWD RH PANEL-STRUCTURAL BOX			0.7	0.0	0.0	0.0	
2. 1.24.	AFT LH PANEL-STRUCTURAL BOX			0.7	0.0	0.0	0.0	
2. 1.25.	FWD LH PANEL-STRUCTURAL BOX			0.8	0.0	0.0	0.0	
2. 1.26.	AFT RH PANEL-STRUCTURAL BOX			0.9	0.0	0.0	0.0	
2. 1.27.	RIGHT HAND PANEL-STRUCTURAL BOX			0.5	0.0	0.0	0.0	
2. 1.28.	LEFT HAND PANEL-STRUCTURE			0.5	0.0	0.0	0.0	
2. 1.29.	TOP PANEL-STRUCTURAL BOX			3.9	0.0	0.0	0.0	
2. 1. 0.	CARRY-THRU STRUCTURE		13.0		0.4	0.4	0.5	
2. 2. 1.	FORWARD PAYLOAD PLATFORM			5.1	0.1	0.1	0.1	
2. 2. 2.	AFT PAYLOAD PLATFORM			5.8	0.1	0.1	0.1	
2. 2. 0.	PAYLOAD PLATFORMS		10.9		0.8	0.8	1.5	
2. 3. 1.	FUEL TANK SUPPORTS			2.5	0.0	0.0	0.0	
2. 3. 2.	OXIDIZER TANK			2.4	0.0	0.0	0.0	
2. 3. 0.	FUEL & OXIDIZER TANK SUPTS.		4.9		0.3	0.3	0.6	
2. 4. 1.	TOP-ENGINE COMPARTMENT			0.8	0.0	0.0	0.0	

Space Division
North American Rockwell

LUNAR FLYING VEHICLE - BASE CONFIGURATION - 370 LB P/L PAGE 2 DATE 6.30.69.

CODE	DESCRIPTION	DETAIL MASS PROPERTIES CURRENT WEIGHT (POUNDS) CODE GENERATION FIRST	SECOND	THIRD	MOMENT OF INERTIA (SLUG FEET SQUARED) PITCH	ROLL	YAW	NOTE NUMBER
2. 4. 2.	FORWARD SIDE-ENGINE COMPARTMENT			0.1	0.0	0.0	0.0	
2. 4. 3.	AFT SIDE-ENGINE COMPARTMENT			0.1	0.0	0.0	0.0	
2. 4. 4.	FWD RIGHT HAND SIDE-ENGINE COMP			0.2	0.0	0.0	0.0	
2. 4. 5.	AFT LEFT HAND SIDE-ENGINE COMPA			0.2	0.0	0.0	0.0	
2. 4. 6.	FWD LEFT HAND SIDE-ENGINE COMPA			0.3	0.0	0.0	0.0	
2. 4. 7.	AFT RIGHT HAND SIDE ENGINE COMP			0.3	0.0	0.0	0.0	
2. 4. 8.	RIGHT HAND SIDE-ENGINE COMPARTM			0.1	0.0	0.0	0.0	
2. 4. 9.	LEFT HAND SIDE-ENGINE			0.1	0.0	0.0	0.0	
2. 4.10.	NUTS-BOLTS-ETC. -ENGINE COMPART			0.4	0.0	0.0	0.0	
2. 4. 0.	ENGINE COMPARTMENT		2.7		0.0	0.0	0.0	
2. 6. 1.	SECONDARY STRUCTURE			2.0	0.0	0.0	0.0	
2. 6. 0.	SECONDARY STRUCTURE		2.0		0.0	0.0	0.0	
2.20. 1.	GROWTH			3.4	0.0	0.0	0.0	
2.20. 0.	GROWTH		3.4		0.0	0.0	0.0	
2. 0. 0.	BODY STRUCTURE	36.9			1.5	1.5	2.6	
3. 1. 1.	INSULATION-HELIUM TANK			1.8	0.0	0.0	0.0	
3. 1. 2.	INSULATION FUEL TANK			4.1	0.1	0.1	0.1	
3. 1. 3.	INSULATION OXIDIZER TANK			4.1	0.1	0.1	0.1	
3. 1. 0.	INSULATION		10.0		1.1	1.1	1.9	
3.20. 1.	GROWTH			1.0	0.0	0.0	0.0	
3.20. 0.	GROWTH		1.0		0.0	0.0	0.0	
3. 0. 0.	ENVIRONMENTAL PROTECTION	11.0			1.1	1.1	1.9	
4. 1. 1.	LEG-FORWARD			5.5	0.2	0.0	0.2	
4. 1. 2.	LEG-RIGHT HAND			5.5	0.0	0.2	0.0	
4. 1. 3.	LEG-AFT			5.5	0.2	0.0	0.2	
4. 1. 4.	LEG-LEFT HAND			5.5	0.0	0.2	0.0	
4. 1. 0.	STRUCTURAL LEGS		22.0		1.0	1.0	1.7	
4. 2. 1.	PAD-FORWARD			1.5	0.0	0.0	0.0	
4. 2. 2.	PAD RIGHT HAND			1.5	0.0	0.0	0.0	

Space Division
North American Rockwell

LUNAR FLYING VEHICLE - BASE CONFIGURATION - 370 LB P/L PAGE 3 DATE 6.30.69.

CODE	DESCRIPTION	DETAIL MASS PROPERTIES CURRENT WEIGHT (POUNDS) CODE GENERATION FIRST	SECOND	THIRD	MOMENT OF INERTIA (SLUG FEET SQUARED) PITCH	ROLL	YAW	NOTE NUMBER
4. 2. 3.	PAD AFT			1.5	0.0	0.0	0.0	
4. 2. 4.	PAD LEFT HAND			1.5	0.0	0.0	0.0	
4. 2. 0.	LANDING PADS		6.0		1.3	1.3	2.6	
4. 3. 1.	ATTENUATOR FORWARD HORIZONTAL			3.5	0.0	0.0	0.0	
4. 3. 2.	ATTENUATOR FORWARD VERTICAL			3.5	0.0	0.0	0.0	
4. 3. 3.	ATTENUATOR RIGHT HAND HORIZONT			3.5	0.0	0.0	0.0	
4. 3. 4.	ATTENUATOR RIGHT HAND VERTICAL			3.5	0.0	0.0	0.0	
4. 3. 5.	ATTENUATOR AFT HORIZONTAL			3.5	0.0	0.0	0.0	
4. 3. 6.	ATTENUATOR AFT VERTICAL			3.5	0.0	0.0	0.0	
4. 3. 7.	ATTENUATOR LEFT HAND HORIZONTA			3.5	0.0	0.0	0.0	
4. 3. 8.	ATTENUATOR LEFT HAND VERTICAL			3.5	0.0	0.0	0.0	
4. 3. 0.	ATTENUATORS (INCL. ATTACH.)		28.0		1.6	1.6	3.0	
4. 4. 1.	LANDING SENSOR-FWD			0.3	0.0	0.0	0.0	
4. 4. 2.	LANDING SENSOR-AFT			0.3	0.0	0.0	0.0	
4. 4. 0.	LANDING SENSORS		0.5		0.1	0.0	0.1	
4.20. 1.	GROWTH			5.6	0.0	0.0	0.0	
4.20. 0.	GROWTH		5.6		0.0	0.0	0.0	
4. 0. 0.	LANDING GEAR	62.1			4.6	4.5	7.4	
5. 1. 1.	ENGINE - NO 1			4.8	0.0	0.0	0.0	
5. 1. 2.	ENGINE - NO 2			4.8	0.0	0.0	0.0	
5. 1. 3.	ENGINE - NO 3			4.8	0.0	0.0	0.0	
5. 1. 4.	ENGINE - NO 4			4.8	0.0	0.0	0.0	
5. 1. 5.	THRUST CONE			2.3	0.0	0.0	0.0	
5. 1. 6.	THROTTLE CYLINDER			0.3	0.0	0.0	0.0	
5. 1. 7.	PITCH & ROLL CONTROL BRACKETS			6.6	0.0	0.0	0.0	
5. 1. 8.	FLEXIBLE INLET LINES			2.6	0.0	0.0	0.0	
5. 1. 9.	FUEL COUPLING MANIFOLD			0.3	0.0	0.0	0.0	
5. 1.10.	OXIDIZER COUPLING MANIFOLD			0.3	0.0	0.0	0.0	
5. 1.11.	CLIPS-NUTS-BOLTS-FTGS-ETC			1.2	0.0	0.0	0.0	
5. 1. 0.	ENGINES & ACCESSORIES		32.8		0.2	0.2	0.3	

Space Division
North American Rockwell

LUNAR FLYING VEHICLE - BASE CONFIGURATION - 370 LB P/L PAGE 4 DATE 6.30.69.

DETAIL MASS PROPERTIES

CODE	DESCRIPTION	CURRENT WEIGHT (POUNDS) CODE GENERATION FIRST	SECOND	THIRD	MOMENT OF INERTIA (SLUG FEET SQUARED) PITCH	ROLL	YAW	NOTE NUMBER
5. 2. 1.	FUEL TANK			9.0	0.1	0.1	0.1	
5. 2. 2.	FUEL TANK SUPPORT RING			2.0	0.0	0.0	0.0	
5. 2. 0.	FUEL TANK		11.0		0.1	0.1	0.1	
5. 3. 1.	FUEL TANK FILL & DRAIN BOSS			0.6	0.0	0.0	0.0	
5. 3. 2.	FUEL TANK FILL VENT DICONNECT			0.3	0.0	0.0	0.0	
5. 3. 3.	FUEL SUPPORT FTGS ETC.			1.0	0.0	0.0	0.0	
5. 3. 4.	FUEL PRESSURE REGULATOR			2.6	0.0	0.0	0.0	
5. 3. 5.	OXIDIZER FILL & DRAIN BOSS			0.6	0.0	0.0	0.0	
5. 3. 6.	OXIDIZER TANK FILL VENT DICONNE			0.3	0.0	0.0	0.0	
5. 3. 7.	OXIDIZER SUPPORT FTGS ETC.			0.5	0.0	0.0	0.0	
5. 3. 8.	OXIDIZER PRESSURE REGULATOR			2.6	0.0	0.0	0.0	
5. 3. 0.	FUEL & OXIDIZER SYSTEM		8.5		0.2	0.6	0.7	
5. 4. 1.	OXIDIZER TANK			9.0	0.1	0.1	0.1	
5. 4. 2.	OXIDIZER TANK SUPPORT RING			2.0	0.0	0.0	0.0	
5. 4. 0.	OXIDIZER TANK		11.0		0.1	0.1	0.1	
5. 6. 1.	HELIUM TANK			11.0	0.1	0.1	0.1	
5. 5. 2.	HELIUM TANK MOUNTING BRACKETS			1.1	0.0	0.0	0.0	
5. 6. 3.	SHUT-OFF & DISCONNECT			1.2	0.0	0.0	0.0	
5. 6. 4.	PRESSURE SYSTEM TUBING & FTGS			0.9	0.0	0.0	0.0	
5. 6. 5.	HELIUM VENT SHUT-OFF VALVE			0.6	0.0	0.0	0.0	
5. 5. 6.	O2 PRESSURE RELIEF VALVE			2.8	0.0	0.0	0.0	
5. 5. 7.	FUEL PRESSURE RELIEF VALVE			2.8	0.0	0.0	0.0	
5. 6. 8.	O2 FILTER/CHECK VALVE			0.8	0.0	0.0	0.0	
5. 6. 9.	FUEL FILTER/CHECK VALVE			0.8	0.0	0.0	0.0	
5. 6.10.	HELIUM PRESSURE REGULATOR			2.6	0.0	0.0	0.0	
5. 5.11.	NUTS-BOLTS-SUPPORTS-FTGS-ETC.			1.5	0.0	0.0	0.0	
5. 6. 0.	PRESSURIZATION SYSTEM		26.1		1.2	1.2	1.7	
5.20. 1.	GROWTH			8.9	0.0	0.0	0.0	
5.20. 0.	GROWTH		8.9		0.0	0.0	0.0	
5. 0. 0.	MAIN PROPULSION SYSTEM	98.3			5.2	5.5	7.5	

Space Division
North American Rockwell

LUNAR FLYING VEHICLE - BASE CONFIGURATION - 370 LB P/L PAGE 5 DATE 6.30.69.

CODE	DESCRIPTION	DETAIL MASS PROPERTIES CURRENT WEIGHT (POUNDS) CODE GENERATION FIRST	SECOND	THIRD	MOMENT OF INERTIA (SLUG FEET SQUARED) PITCH	ROLL	YAW	NOTE NUMBER
7. 1. 1.	BATTERY - RIGHT HAND			8.3	0.0	0.0	0.0	
7. 1. 2.	BATTERY - LEFT HAND			8.3	0.0	0.0	0.0	
7. 1. 0.	POWER SOURCE - BATTERIES		16.6		0.0	0.5	0.5	
7.20. 1.	GROWTH			1.7	0.0	0.0	0.0	
7.20. 0.	GROWTH		1.7		0.0	0.0	0.0	
7. 0. 0.	POWER SOURCE	18.3			0.0	0.5	0.5	
8. 1. 1.	SWITCHING CIRCUITS & BREAKERS			5.0	0.0	0.0	0.0	
8. 1. 2.	BUS & WIRING			3.0	0.0	0.0	0.0	
8. 1. 0.	POWER EQUIPMENT		8.0		0.0	0.0	0.0	
8.20. 1.	GROWTH			0.8	0.0	0.0	0.0	
8.20. 0.	GROWTH		0.8		0.0	0.0	0.0	
8. 0. 0.	POWER CONVERSION & DISTRIBUTION	8.8			0.0	0.0	0.0	
9. 3. 1.	RATE GYROS (2)			2.5	0.0	0.0	0.0	
9. 3. 2.	CONTROL UNIT (INCL. LOGIC)			7.4	0.0	0.0	0.0	
9. 3. 3.	ACTUATOR - NO 1			2.5	0.0	0.0	0.0	
9. 3. 4.	ACTUATOR - NO 2			2.5	0.0	0.0	0.0	
9. 3. 5.	ACTUATOR - NO 3			2.5	0.0	0.0	0.0	
9. 3. 6.	ACTUATOR - NO 4			2.5	0.0	0.0	0.0	
9. 3. 7.	ACTUATOR - NO 5			2.5	0.0	0.0	0.0	
9. 3. 8.	ACTUATOR - NO 6			2.5	0.0	0.0	0.0	
9. 3. 9.	ACTUATOR - NO 7			2.5	0.0	0.0	0.0	
9. 3.10.	ACTUATOR NO 8			2.5	0.0	0.0	0.0	
9. 3. 0.	GUIDANCE OUTPUT		29.9		0.3	0.3	0.3	
9.20. 1.	GROWTH			3.0	0.0	0.0	0.0	
9.20. 0.	GROWTH		3.0		0.0	0.0	0.0	
9. 0. 0.	GUIDANCE AND NAVIGATION	32.9			0.3	0.3	0.3	
14. 1. 1.	SEAT			2.5	0.0	0.0	0.0	
14. 1. 2.	RESTRAINTS			1.5	0.0	0.0	0.0	
14. 1. 3.	ARM REST-RIGHT HAND			0.3	0.0	0.0	0.0	

Space Division
North American Rockwell

LUNAR FLYING VEHICLE - BASE CONFIGURATION - 370 LB P/L

CODE	DESCRIPTION	DETAIL MASS PROPERTIES CURRENT WEIGHT (POUNDS) CODE GENERATION FIRST	SECOND	THIRD	MOMENT OF INERTIA (SLUG FEET SQUARED) PITCH	ROLL	YAW	NOTE NUMBER
14. 1. 4.	ARM REST-LEFT HAND			0.3	0.0	0.0	0.0	
14. 1. 0.	ACCOMODATIONS FOR PERSONNEL		4.6		0.1	0.1	0.0	
14. 2. 5.	FOOT REST			3.5	0.0	0.0	0.0	
14. 2.12.	LOWER STEP			0.2	0.0	0.0	0.0	
14. 2.13.	UPPER STEP			0.2	0.0	0.0	0.0	
14. 2. 0.	FURNISHINGS		3.9		0.0	0.1	0.0	
14.20. 1.	GROWTH			0.8	0.0	0.0	0.0	
14.20. 0.	GROWTH		0.8		0.0	0.0	0.0	
14. 0. 0.	PERSONNEL PROVISIONS	9.3			0.8	0.2	0.7	
15. 1. 1.	PEDESTAL			2.0	0.0	0.0	0.0	
15. 1. 0.	PEDESTAL		2.0		0.0	0.0	0.0	
15. 3. 1.	DISPLAY PANEL STRUCTURE			5.0	0.0	0.0	0.0	
15. 3. 2.	DISPLAYS			7.0	0.0	0.0	0.0	
15. 3. 0.	INSTRUMENT PANELS		12.0		0.0	0.0	0.0	
15. 4. 1.	ROTATIONAL HAND CONTROL			3.5	0.0	0.0	0.0	
15. 4. 2.	THROTTLE CONTROLLER			2.0	0.0	0.0	0.0	
15. 4. 3.	CABLES			4.0	0.0	0.0	0.0	
15. 4. 0.	CREW STATION CONTROLS		9.5		0.0	0.2	0.2	
15.20. 1.	GROWTH			2.3	0.0	0.0	0.0	
15.20. 0.	GROWTH		2.3		0.0	0.0	0.0	
15. 0. 0.	CREW STATION CONTROLS & PANELS	25.8			0.2	0.7	0.6	
17. 1. 1.	ASTRONAUT - PILOT			380.0	14.5	8.6	11.0	
17. 1. 0.	CREW		380.0		14.5	8.6	11.0	
17. 0. 0.	PERSONNEL	380.0			14.5	8.6	11.0	
18. 3. 1.	CARGO - FORWARD			50.0	0.4	0.4	0.4	
18. 3. 2.	CARGO - AFT			50.0	0.4	0.4	0.4	
18. 3. 3.	CARGO - FORWARD			50.0	0.4	0.4	0.4	
18. 3. 4.	CARGO - AFT			50.0	0.4	0.4	0.4	
18. 3. 5.	CARGO - FORWARD			50.0	0.4	0.4	0.4	

Space Division
North American Rockwell

LUNAR FLYING VEHICLE - BASE CONFIGURATION - 370 LB P/L PAGE 7 DATE 6.30.69.

DETAIL MASS PROPERTIES

CODE	DESCRIPTION	CURRENT WEIGHT (POUNDS) CODE GENERATION FIRST	SECOND	THIRD	MOMENT OF INERTIA (SLUG FEET SQUARED) PITCH	ROLL	YAW	NOTE NUMBER
18. 3. 6.	CARGO - AFT			50.0	0.4	0.4	0.4	
18. 3. 8.	CARGO - FORWARD			35.0	0.3	0.3	0.3	
18. 3.10.	CARGO - AFT			35.0	0.3	0.3	0.3	
18. 3. 0.	CARGO		370.0		38.0	38.0	73.3	
18. 0. 0.	CARGO	370.0			38.0	38.0	73.3	
21. 1. 1.	RESIDUAL FUEL			3.6	0.0	0.0	0.0	
21. 1. 0.	RESIDUALS-FUEL		3.6		0.0	0.0	0.0	
21. 2. 1.	RESIDUAL OXIDIZER			5.4	0.0	0.0	0.0	
21. 2. 0.	RESIDUALS-OXIDIZER		5.4		0.0	0.0	0.0	
21. 0. 0.	RESIDUAL PROPELLANTS	9.0			0.7	0.7	1.5	
25. 1. 1.	FUEL			120.0	0.0	0.0	0.0	
25. 1. 0.	FUEL		120.0		0.0	0.0	0.0	
25. 2. 1.	OXIDIZER			180.0	0.0	0.0	0.0	
25. 2. 0.	OXIDIZER		180.0		0.0	0.0	0.0	
25. 0. 0.	FULL THRUST PROPELLANT	300.0			24.9	24.9	49.7	

Space Division
North American Rockwell

DETAIL MASS PROPERTIES

LUNAR ESCAPE

LUNAR FLYING VEHICLE - LUNAR ESCAPE

PAGE 1 DATE 6.30.69.

DETAIL MASS PROPERTIES

CODE	DESCRIPTION	CLASS (E,C,A)	WEIGHT (POUNDS) CODE GENERANTION FIRST	SECOND	THIRD	CENTER OF GRAVITY (INCHES FROM REF. DATUM) X	Y	Z
2. 1. 1.	SHOCK MOUNT FORWARD				0.5	8.5	0.0	110.8
2. 1. 2.	SHOCK MOUNT AFT				0.5	-8.5	0.0	110.8
2. 1. 3.	SHOCK MOUNT RIGHT HAND				0.5	0.0	8.5	110.8
2. 1. 4.	SHOCK MOUNT LEFT HAND				0.5	0.0	-8.5	110.8
2. 1. 5.	ATTENUATOR SUPPORT FTGS-FWD UPR				0.3	14.0	2.0	98.5
2. 1. 6.	ATTENUATOR SUPPORT FTGS-AFT UPR				0.3	-14.0	-2.0	98.5
2. 1. 7.	ATTENUATOR SUPPORT FTGS-RIGHT U				0.3	2.0	14.0	98.5
2. 1. 8.	ATTENUATOR SUPPORT FTGS-LEFT UP				0.3	-2.0	-14.0	98.5
2. 1. 9.	ATTENUATOR SUPPORT FTGS-FWD LEG				0.3	28.0	0.0	114.5
2. 1.10.	ATTENUATOR SUPPORT FTGS-AFT LEG				0.3	-28.0	0.0	114.5
2. 1.11.	ATTENUATOR SUPPORT FTGS-RIGHT L				0.3	0.0	28.0	114.5
2. 1.12.	ATTENUATOR SUPPORT FTGS-LEFT LF				0.3	0.0	-28.0	114.5
2. 1.21.	FWD PANEL-STRUCTURAL BOX				0.5	14.1	1.0	98.2
2. 1.22.	AFT PANEL-STRUCTURAL BOX				0.5	-14.1	-1.0	98.2
2. 1.23.	FWD RH PANEL-STRUCTURAL BOX				0.7	9.2	9.2	98.2
2. 1.24.	AFT LH PANEL-STRUCTURAL BOX				0.7	-9.2	-9.2	98.2
2. 1.25.	FWD LH PANEL-STRUCTURAL BOX				0.8	8.8	-8.8	98.2
2. 1.26.	AFT RH PANEL-STRUCTURAL BOX				0.9	-8.8	8.8	98.2
2. 1.27.	RIGHT HAND PANEL-STRUCTURAL BOX				0.5	1.0	14.1	98.2
2. 1.28.	LEFT HAND PANEL-STRUCTURE				0.5	-1.0	-14.1	98.2
2. 1.29.	TOP PANEL-STRUCTURAL BOX				3.9	0.0	0.0	96.0
2. 1. 0.	CARRY-THRU STRUCTURE		13.0			-0.1	0.1	100.7
2. 3. 1.	FUEL TANK SUPPORTS				2.5	18.0	-18.0	100.0
2. 3. 2.	OXIDIZER TANK				2.4	-15.0	15.0	100.0
2. 3. 3.	FUEL TANK SUPPORTS				2.5	21.6	24.5	90.0
2. 3. 4.	OXIDIZER TANK				2.5	-10.0	-15.0	90.0
2. 3. 0.	FUEL & OXIDIZER TANK SUPTS.		9.9			3.8	1.5	94.9
2. 4. 1.	TOP-ENGINE COMPARTMENT				0.8	0.0	0.0	101.4
2. 4. 2.	FORWARD SIDE-ENGINE COMPARTMENT				0.1	9.7	0.5	105.3

Space Division
North American Rockwell

LUNAR FLYING VEHICLE - LUNAR ESCAPE PAGE 2 DATE 6.30.69.

CODE	DESCRIPTION	DETAIL MASS PROPERTIES CLASS (E,C,A)	WEIGHT (POUNDS) CODE GENERANTION FIRST	SECOND	THIRD	CENTER OF GRAVITY (INCHES FROM REF. DATUM) X	Y	Z
2. 4. 3.	AFT SIDE-ENGINE COMPARTMENT				0.1	-9.7	-0.5	105.3
2. 4. 4.	FWD RIGHT HAND SIDE-ENGINE COMP				0.2	6.2	6.2	105.3
2. 4. 5.	AFT LEFT HAND SIDE-ENGINE COMPA				0.2	-6.2	-6.2	105.3
2. 4. 6.	FWD LEFT HAND SIDE-ENGINE COMPA				0.3	5.6	-5.6	105.3
2. 4. 7.	AFT RIGHT HAND SIDE ENGINE COMP				0.3	-5.6	5.6	105.3
2. 4. 8.	RIGHT HAND SIDE-ENGINE COMPARTM				0.1	0.5	9.7	105.3
2. 4. 9.	LEFT HAND SIDE-ENGINE				0.1	-0.5	-9.7	105.3
2. 4.10.	NUTS-BOLTS-ETC. -ENGINE COMPART				0.4	0.0	0.0	105.3
2. 4. 0.	ENGINE COMPARTMENT			2.7		0.0	0.0	104.2
2. 6. 1.	SECONDARY STRUCTURE				2.0	0.0	0.0	100.0
2. 6. 0.	SECONDARY STRUCTURE			2.0		0.0	0.0	100.0
2.20. 1.	GROWTH				2.8	1.3	0.6	99.0
2.20. 0.	GROWTH			2.8		1.3	0.6	99.0
2. 0. 0.	BODY STRUCTURE		30.4			1.3	0.6	99.0
3. 1. 1.	INSULATION-HELIUM TANK				1.8	-18.0	18.0	82.0
3. 1. 2.	INSULATION FUEL TANK				4.1	24.0	-24.0	99.7
3. 1. 3.	INSULATION OXIDIZER TANK				4.1	-16.0	16.0	99.7
3. 1. 0.	INSULATION			10.0		0.0	-0.0	96.5
3.20. 1.	GROWTH				1.0	0.0	-0.0	96.5
3.20. 0.	GROWTH			1.0		0.0	-0.0	96.5
3. 0. 0.	ENVIRONMENTAL PROTECTION		11.0			0.0	-0.0	96.5
4. 1. 1.	LEG-FORWARD				5.5	16.8	0.0	115.0
4. 1. 2.	LEG-RIGHT HAND				5.5	0.0	16.8	115.0
4. 1. 3.	LEG-AFT				5.5	-16.8	0.0	115.0
4. 1. 4.	LEG-LEFT HAND				5.5	0.0	-16.8	115.0
4. 1. 0.	STRUCTURAL LEGS			22.0		0.0	0.0	115.0
4. 2. 1.	PAD-FORWARD				1.5	44.5	0.0	129.0
4. 2. 2.	PAD RIGHT HAND				1.5	0.0	44.5	129.0
4. 2. 3.	PAD AFT				1.5	-44.5	0.0	129.0

Space Division
North American Rockwell

CODE	DESCRIPTION	DETAIL MASS PROPERTIES CLASS (E,C,A)	WEIGHT (POUNDS) CODE GENERANTION FIRST	SECOND	THIRD	CENTER OF GRAVITY (INCHES FROM REF. DATUM) X	Y	Z
4. 2. 4.	PAD LEFT HAND				1.5	0.0	-44.5	129.0
4. 2. 0.	LANDING PADS			6.0		0.0	0.0	129.0
4. 3. 1.	ATTENUATOR FORWARD HORIZONTAL				3.5	24.0	2.2	108.0
4. 3. 2.	ATTENUATOR FORWARD VERTICAL				3.5	20.0	-1.2	105.8
4. 3. 3.	ATTENUATOR RIGHT HAND HORIZONT				3.5	2.2	24.0	108.0
4. 3. 4.	ATTENUATOR RIGHT HAND VERTICAL				3.5	-1.2	20.0	105.8
4. 3. 5.	ATTENUATOR AFT HORIZONTAL				3.5	-24.0	-2.2	108.0
4. 3. 6.	ATTENUATOR AFT VERTICAL				3.5	-20.0	1.2	105.8
4. 3. 7.	ATTENUATOR LEFT HAND HORIZONTA				3.5	-2.2	-24.0	108.0
4. 3. 8.	ATTENUATOR LEFT HAND VERTICAL				3.5	1.2	-20.0	105.8
4. 3. 0.	ATTENUATORS (INCL. ATTACH.)			28.0		0.0	0.0	106.9
4. 4. 1.	LANDING SENSOR-FWD				0.3	32.6	0.0	124.3
4. 4. 2.	LANDING SENSOR-AFT				0.3	-32.6	0.0	124.3
4. 4. 0.	LANDING SENSORS			0.5		0.0	0.0	124.3
4.20. 1.	GROWTH				5.6	0.0	0.0	112.6
4.20. 0.	GROWTH			5.6		0.0	0.0	112.6
4. 0. 0.	LANDING GEAR		62.1			0.0	0.0	112.6
5. 1. 1.	ENGINE - NO 1				4.8	-5.3	5.3	109.5
5. 1. 2.	ENGINE - NO 2				4.8	5.3	5.3	109.5
5. 1. 3.	ENGINE - NO 3				4.8	5.3	-5.3	109.5
5. 1. 4.	ENGINE - NO 4				4.8	-5.3	-5.3	109.5
5. 1. 5.	THRUST CONE				2.3	0.0	0.0	104.3
5. 1. 6.	THROTTLE CYLINDER				0.3	0.0	0.0	102.5
5. 1. 7.	PITCH & ROLL CONTROL BRACKETS				6.6	0.0	0.0	105.7
5. 1. 8.	FLEXIBLE INLET LINES				2.6	0.0	0.0	104.5
5. 1. 9.	FUEL COUPLING MANIFOLD				0.3	-6.5	-6.5	104.5
5. 1.10.	OXIDIZER COUPLING MANIFOLD				5.1	13.6	8.5	108.3
5. 1.11.	CLIPS-NUTS-BOLTS-FTGS-ETC				6.0	6.9	11.2	107.7
5. 1.12.	ENGINE - NO 7				4.8	-14.0	-8.6	108.5

Space Division
North American Rockwell

LUNAR FLYING VEHICLE - LUNAR ESCAPE PAGE 4 DATE 6.30.69.

DETAIL MASS PROPERTIES

CODE	DESCRIPTION	CLASS (E,C,A)	WEIGHT (POUNDS) CODE GENERANTION FIRST	SECOND	THIRD	CENTER OF GRAVITY (INCHES FROM REF. DATUM) X	Y	Z
5. 1.13.	ENGINE - NO 8				4.8	-8.6	-14.0	108.5
5. 1. 0.	ENGINES & ACCESSORIES			52.0		-0.0	-0.0	108.0
5. 2. 1.	FUEL TANK				9.0	24.0	-24.0	99.7
5. 2. 2.	FUEL TANK SUPPORT RING				2.0	20.0	-20.0	99.7
5. 2. 3.	FUEL TANK				15.0	21.6	28.5	88.0
5. 2. 4.	FUEL TANK SUPT RING				2.0	16.8	16.8	95.0
5. 2. 0.	FUEL TANK			28.0		21.9	7.3	93.1
5. 3. 1.	FUEL TANK FILL & DRAIN BOSS				0.6	9.0	-25.0	98.5
5. 3. 2.	FUEL TANK FILL VENT DICONNECT				0.3	9.0	-25.0	100.5
5. 3. 3.	FUEL SUPPORT FTGS ETC.				1.0	20.0	-20.0	100.0
5. 3. 4.	FUEL PRESSURE REGULATOR				2.6	7.0	-12.5	90.0
5. 3. 5.	OXIDIZER FILL & DRAIN BOSS				0.6	-7.0	25.0	98.5
5. 3. 6.	OXIDIZER TANK FILL VENT DICONNE				0.3	-7.0	25.0	100.5
5. 3. 7.	OXIDIZER SUPPORT FTGS ETC.				0.5	-12.0	12.0	100.0
5. 3. 8.	OXIDIZER PRESSURE REGULATOR				2.6	-7.0	12.5	90.0
5. 3. 9.	FUEL TANK FILL & DRAIN BOSS				0.6	9.0	-25.0	98.5
5. 3.10.	FUEL TANK FILL VENT DICONNECT				0.3	9.0	-25.0	100.5
5. 3.12.	FUEL SUPPORT FTGS ETC.				1.0	20.0	-20.0	100.0
5. 3.13.	FUEL PRESSURE REGULATOR				2.6	7.0	-12.5	90.0
5. 3.14.	OXIDIZER FILL & DRAIN BOSS				0.6	-7.0	25.0	98.5
5. 3.15.	OXIDIZER TANK FILL VENT DICONNE				0.3	-7.0	25.0	100.5
5. 3.16.	OXIDIZER SUPPORT FTGS ETC.				0.5	-12.0	12.0	100.0
5. 3.17.	OXIDIZER PRESSURE REGULATOR				2.6	-7.0	12.5	90.0
5. 3. 0.	FUEL & OXIDIZER SYSTEM			17.0		1.9	-1.6	93.7
5. 4. 1.	OXIDIZER TANK				9.0	-16.0	16.0	99.7
5. 4. 2.	OXIDIZER TANK SUPPORT RING				2.0	-12.0	12.0	99.7
5. 4. 3.	OXIDIZER TANK				15.0	-14.4	-19.0	88.0
5. 4. 4.	OXIDIZER TANK SUPT RING				2.0	-10.4	-15.0	95.0
5. 4. 0.	OXIDIZER TANK			28.0		-14.5	-5.2	93.1

Space Division
North American Rockwell

LUNAR FLYING VEHICLE - LUNAR ESCAPE PAGE 5 DATE 6.30.69.

DETAIL MASS PROPERTIES

CODE	DESCRIPTION	CLASS (E,C,A)	WEIGHT (POUNDS) CODE GENERANTION FIRST	SECOND	THIRD	CENTER OF GRAVITY (INCHES FROM REF. DATUM) X	Y	Z
5. 6. 1.	HELIUM TANK				11.0	-18.0	18.0	82.0
5. 6. 2.	HELIUM TANK MOUNTING BRACKETS				1.1	-18.0	18.0	88.0
5. 6. 3.	SHUT-OFF & DISCONNECT				1.2	-10.0	8.5	85.5
5. 6. 4.	PRESSURE SYSTEM TUBING & FTGS				0.9	-8.5	6.5	100.5
5. 6. 5.	HELIUM VENT SHUT-OFF VALVE				0.6	-5.0	8.5	95.5
5. 6. 6.	O2 PRESSURE RELIEF VALVE				2.8	20.0	-20.0	100.0
5. 6. 7.	FUEL PRESSURE RELIEF VALVE				2.8	-11.2	12.5	89.5
5. 6. 8.	O2 FILTER/CHECK VALVE				0.8	10.2	-11.0	95.8
5. 6. 9.	FUEL FILTER/CHECK VALVE				0.8	-9.8	4.5	98.6
5. 6.10.	HELIUM PRESSURE REGULATOR				2.6	-7.5	2.5	98.7
5. 6.11.	NUTS-BOLTS-SUPPORTS-FTGS-ETC.				1.5	-8.0	6.0	99.4
5. 6. 0.	PRESSURIZATION SYSTEM			26.1		-9.5	8.7	89.7
5. 7. 1.	HELIUM TANK				11.0	5.6	22.9	98.1
5. 7. 2.	HELIUM TANK SUPPORT				1.1	5.6	22.9	104.1
5. 7. 3.	SHUT-OFF & DISCONNECT				1.2	-10.0	8.5	85.5
5. 7. 4.	PRESSURE SYSTEM TUBING & FTGS				0.9	-8.5	6.5	100.5
5. 7. 5.	HELIUM VENT SHUT-OFF VALVE				0.6	-5.0	8.5	95.5
5. 7. 6.	O2 PRESSURE RELIEF VALVE				2.8	20.0	-20.0	100.0
5. 7. 7.	FUEL PRESSURE RELIEF VALVE				2.8	-11.2	12.5	89.5
5. 7. 8.	O2 FILTER/CHECK VALVE				0.8	10.2	-11.0	95.8
5. 7. 9.	FUEL FILTER/CHECK VALVE				0.8	-9.8	4.5	98.6
5. 7.10.	HELIUM PRESSURE REGULATOR				2.6	-7.5	2.5	98.7
5. 7.11.	NUTS-BOLTS-SUPPORTS-FTGS-ETC.				1.5	-8.0	6.0	99.4
5. 7. 0.	PRESSURIZATION SYSTEM			26.1		1.5	11.0	97.2
5.20. 1.	GROWTH				17.7	0.2	3.1	97.6
5.20. 0.	GROWTH			17.7		0.2	3.1	97.6
5. 0. 0.	MAIN PROPULSION SYSTEM		194.9			0.2	3.1	97.6
7. 1. 1.	BATTERY - RIGHT HAND				8.3	12.0	12.0	98.0
7. 1. 2.	BATTERY - LEFT HAND				8.3	12.0	-12.0	98.0
7. 1. 0.	POWER SOURCE - BATTERIES			16.6		12.0	0.0	98.0

Space Division
North American Rockwell

DETAIL MASS PROPERTIES

CODE	DESCRIPTION	CLASS (E,C,A)	WEIGHT (POUNDS) CODE GENERANTION FIRST	SECOND	THIRD	CENTER OF GRAVITY (INCHES FROM REF. DATUM) X	Y	Z
7.20. 1.	GROWTH				1.7	12.0	0.0	98.0
7.20. 0.	GROWTH			1.7		12.0	0.0	98.0
7. 0. 0.	POWER SOURCE		18.3			12.0	0.0	98.0
8. 1. 1.	SWITCHING CIRCUITS & BREAKERS				5.0	12.0	0.0	95.0
8. 1. 2.	BUS & WIRING				3.0	12.0	0.0	90.0
8. 1. 0.	POWER EQUIPMENT			8.0		12.0	0.0	93.1
8.20. 1.	GROWTH				0.8	12.0	0.0	93.1
8.20. 0.	GROWTH			0.8		12.0	0.0	93.1
8. 0. 0.	POWER CONVERSION & DISTRIBUTION		8.8			12.0	0.0	93.1
9. 3. 1.	RATE GYROS (2)				2.5	0.0	0.0	89.5
9. 3. 2.	CONTROL UNIT (INCL. LOGIC)				7.4	0.0	0.0	103.5
9. 3. 3.	ACTUATOR - NO 1				2.5	-2.8	-7.7	105.0
9. 3. 4.	ACTUATOR - NO 2				2.5	-7.7	-2.9	105.0
9. 3. 5.	ACTUATOR - NO 3				2.5	-7.0	0.7	105.0
9. 3. 6.	ACTUATOR - NO 4				2.5	-2.8	6.9	105.0
9. 3. 7.	ACTUATOR - NO 5				2.5	2.8	7.7	105.0
9. 3. 8.	ACTUATOR - NO 6				2.5	7.7	2.9	105.0
9. 3. 9.	ACTUATOR - NO 7				2.5	7.0	-0.7	105.0
9. 3.10.	ACTUATOR NO 8				2.5	2.8	-6.9	105.0
9. 3. 0.	GUIDANCE OUTPUT			29.9		0.0	0.0	103.3
9.20. 1.	GROWTH				3.0	0.0	0.0	103.3
9.20. 0.	GROWTH			3.0		0.0	0.0	103.3
9. 0. 0.	GUIDANCE AND NAVIGATION		32.9			0.0	0.0	103.3
14. 1. 1.	SEAT				2.5	0.0	0.0	92.5
14. 1. 2.	RESTRAINTS				1.5	-5.0	0.0	78.0
14. 1. 3.	ARM REST-RIGHT HAND				0.3	7.0	12.5	85.0
14. 1. 4.	ARM REST-LEFT HAND				0.3	7.0	-12.5	85.0
14. 1. 5.	SEAT				2.5	-17.5	-14.4	70.1
14. 1. 6.	RESTRAINTS				1.5	-22.6	-14.4	55.6

Space Division
North American Rockwell

CODE	DESCRIPTION	DETAIL MASS PROPERTIES CLASS (E,C,A)	WEIGHT (POUNDS) CODE GENERANTION FIRST	SECOND	THIRD	CENTER OF GRAVITY (INCHES FROM REF. DATUM) X	Y	Z
14. 1. 7.	ARM REST-RIGHT HAND				0.3	-10.6	-1.9	62.6
14. 1. 8.	ARM REST-LEFT HAND				0.3	-10.6	-26.9	62.6
14. 1. 0.	ACCOMODATIONS FOR PERSONNEL			9.2		-9.5	-7.2	75.6
14. 2. 5.	FOOT REST				3.5	36.0	0.0	98.5
14. 2.12.	LOWER STEP				0.2	41.3	-3.5	120.5
14. 2.13.	UPPER STEP				0.2	32.0	-12.5	109.5
14. 2. 0.	FURNISHINGS			3.9		36.1	-0.8	100.2
14.20. 1.	GROWTH				1.3	4.1	-5.3	82.9
14.20. 0.	GROWTH			1.3		4.1	-5.3	82.9
14. 0. 0.	PERSONNEL PROVISIONS		14.4			4.1	-5.3	82.9
15. 1. 1.	PEDESTAL				2.0	11.5	0.0	79.5
15. 1. 0.	PEDESTAL			2.0		11.5	0.0	79.5
15. 3. 1.	DISPLAY PANEL STRUCTURE				5.0	19.5	-14.5	73.0
15. 3. 2.	DISPLAYS				7.0	19.5	-14.5	73.0
15. 3. 0.	INSTRUMENT PANELS			12.0		19.5	-14.5	73.0
15. 4. 1.	ROTATIONAL HAND CONTROL				3.5	16.5	12.0	81.0
15. 4. 2.	THROTTLE CONTROLLER				2.0	16.5	-12.0	81.0
15. 4. 3.	CABLES				4.0	10.0	0.0	88.0
15. 4. 0.	CREW STATION CONTROLS			9.5		13.8	1.9	83.9
15.20. 1.	GROWTH				2.3	16.5	-6.6	78.0
15.20. 0.	GROWTH			2.3		16.5	-6.6	78.0
15. 0. 0.	CREW STATION CONTROLS & PANELS		25.8			16.5	-6.6	78.0
17. 1. 1.	ASTRONAUT - PILOT				380.0	6.4	6.4	79.4
17. 1. 2.	ASTRONAUT - PASSENGER				380.0	-17.6	-14.4	57.0
17. 1. 0.	CREW			760.0		-5.6	-4.0	68.2
17. 0. 0.	PERSONNEL		760.0			-5.6	-4.0	68.2
21. 1. 1.	RESIDUAL FUEL				3.6	24.0	-24.0	108.0
21. 1. 3.	RESIDUAL - FUEL				8.4	21.6	28.5	108.0
21. 1. 0.	RESIDUALS-FUEL			12.0		22.3	12.8	108.0

Space Division
North American Rockwell

LUNAR FLYING VEHICLE - LUNAR ESCAPE PAGE 8 DATE 6.30.69.

CODE	DESCRIPTION	DETAIL MASS PROPERTIES CLASS (E,C,A)	WEIGHT (POUNDS) CODE GENERANTION FIRST	SECOND	THIRD	CENTER OF GRAVITY (INCHES FROM REF. DATUM) X	Y	Z
21. 2. 1.	RESIDUAL OXIDIZER				5.4	-16.0	16.0	108.0
21. 2. 4.	RESIDUAL - OXIDIZER				12.6	-14.4	-19.0	108.0
21. 2. 0.	RESIDUALS-OXIDIZER			18.0		-14.9	-8.5	108.0
21. 0. 0.	RESIDUAL PROPELLANTS		30.0			0.0	0.0	108.0
25. 1. 1.	FUEL				120.0	24.0	-24.0	99.7
25. 1. 2.	FUEL				280.0	21.5	28.5	88.0
25. 1. 0.	FUEL			400.0		22.3	12.7	91.5
25. 2. 1.	OXIDIZER				180.0	-16.0	16.0	99.7
25. 2. 2.	OXIDIZER				420.0	-14.4	-19.0	88.0
25. 2. 0.	OXIDIZER			600.0		-14.9	-8.5	91.5
25. 0. 0.	FULL THRUST PROPELLANT		1000.0			-0.0	0.0	91.5

Space Division
North American Rockwell

LUNAR FLYING VEHICLE - LUNAR ESCAPE PAGE 1 DATE 6.30.69.

DETAIL MASS PROPERTIES

CODE	DESCRIPTION	CURRENT WEIGHT (POUNDS) CODE GENERATION FIRST	SECOND	THIRD	MOMENT OF INERTIA (SLUG FEET SQUARED) PITCH	ROLL	YAW	NOTE NUMBER
2. 1. 1.	SHOCK MOUNT FORWARD			0.5	0.0	0.0	0.0	
2. 1. 2.	SHOCK MOUNT AFT			0.5	0.0	0.0	0.0	
2. 1. 3.	SHOCK MOUNT RIGHT HAND			0.5	0.0	0.0	0.0	
2. 1. 4.	SHOCK MOUNT LEFT HAND			0.5	0.0	0.0	0.0	
2. 1. 5.	ATTENUATOR SUPPORT FTGS-FWD UPR			0.3	0.0	0.0	0.0	
2. 1. 6.	ATTENUATOR SUPPORT FTGS-AFT UPR			0.3	0.0	0.0	0.0	
2. 1. 7.	ATTENUATOR SUPPORT FTGS-RIGHT U			0.3	0.0	0.0	0.0	
2. 1. 8.	ATTENUATOR SUPPORT FTGS-LEFT UP			0.3	0.0	0.0	0.0	
2. 1. 9.	ATTENUATOR SUPPORT FTGS-FWD LEG			0.3	0.0	0.0	0.0	
2. 1.10.	ATTENUATOR SUPPORT FTGS-AFT LEG			0.3	0.0	0.0	0.0	
2. 1.11.	ATTENUATOR SUPPORT FTGS-RIGHT L			0.3	0.0	0.0	0.0	
2. 1.12.	ATTENUATOR SUPPORT FTGS-LEFT LE			0.3	0.0	0.0	0.0	
2. 1.21.	FWD PANEL-STRUCTURAL BOX			0.5	0.0	0.0	0.0	
2. 1.22.	AFT PANEL-STRUCTURAL BOX			0.5	0.0	0.0	0.0	
2. 1.23.	FWD RH PANEL-STRUCTURAL BOX			0.7	0.0	0.0	0.0	
2. 1.24.	AFT LH PANEL-STRUCTURAL BOX			0.7	0.0	0.0	0.0	
2. 1.25.	FWD LH PANEL-STRUCTURAL BOX			0.8	0.0	0.0	0.0	
2. 1.26.	AFT RH PANEL-STRUCTURAL BOX			0.9	0.0	0.0	0.0	
2. 1.27.	RIGHT HAND PANEL-STRUCTURAL BOX			0.5	0.0	0.0	0.0	
2. 1.28.	LEFT HAND PANEL-STRUCTURE			0.5	0.0	0.0	0.0	
2. 1.29.	TOP PANEL-STRUCTURAL BOX			3.9	0.0	0.0	0.0	
2. 1. 0.	CARRY-THRU STRUCTURE		13.0		0.4	0.4	0.5	
2. 3. 1.	FUEL TANK SUPPORTS			2.5	0.0	0.0	0.0	
2. 3. 2.	OXIDIZER TANK			2.4	0.0	0.0	0.0	
2. 3. 3.	FUEL TANK SUPPORTS			2.5	0.0	0.0	0.0	
2. 3. 4.	OXIDIZER TANK			2.5	0.0	0.0	0.0	
2. 3. 0.	FUEL & OXIDIZER TANK SUPTS.		9.9		0.6	0.8	1.3	
2. 4. 1.	TOP-ENGINE COMPARTMENT			0.8	0.0	0.0	0.0	
2. 4. 2.	FORWARD SIDE-ENGINE COMPARTMENT			0.1	0.0	0.0	0.0	

Space Division
North American Rockwell

LUNAR FLYING VEHICLE - LUNAR ESCAPE

CODE	DESCRIPTION	DETAIL MASS PROPERTIES CURRENT WEIGHT (POUNDS) CODE GENERATION FIRST	SECOND	THIRD	MOMENT OF INERTIA (SLUG FEET SQUARED) PITCH	ROLL	YAW	NOTE NUMBER
2. 4. 3.	AFT SIDE-ENGINE COMPARTMENT			0.1	0.0	0.0	0.0	
2. 4. 4.	FWD RIGHT HAND SIDE-ENGINE COMP			0.2	0.0	0.0	0.0	
2. 4. 5.	AFT LEFT HAND SIDE-ENGINE COMPA			0.2	0.0	0.0	0.0	
2. 4. 6.	FWD LEFT HAND SIDE-ENGINE COMPA			0.3	0.0	0.0	0.0	
2. 4. 7.	AFT RIGHT HAND SIDE ENGINE COMP			0.3	0.0	0.0	0.0	
2. 4. 8.	RIGHT HAND SIDE-ENGINE COMPARTM			0.1	0.0	0.0	0.0	
2. 4. 9.	LEFT HAND SIDE-ENGINE			0.1	0.0	0.0	0.0	
2. 4.10.	NUTS-BOLTS-ETC. -ENGINE COMPART			0.4	0.0	0.0	0.0	
2. 4. 0.	ENGINE COMPARTMENT		2.7		0.0	0.0	0.0	
2. 6. 1.	SECONDARY STRUCTURE			2.0	0.0	0.0	0.0	
2. 6. 0.	SECONDARY STRUCTURE		2.0		0.0	0.0	0.0	
2.20. 1.	GROWTH			2.8	0.0	0.0	0.0	
2.20. 0.	GROWTH		2.8		0.0	0.0	0.0	
2. 0. 0.	BODY STRUCTURE	30.4			1.1	1.3	1.8	
3. 1. 1.	INSULATION-HELIUM TANK			1.8	0.0	0.0	0.0	
3. 1. 2.	INSULATION FUEL TANK			4.1	0.1	0.1	0.1	
3. 1. 3.	INSULATION OXIDIZER TANK			4.1	0.1	0.1	0.1	
3. 1. 0.	INSULATION		10.0		1.1	1.1	1.9	
3.20. 1.	GROWTH			1.0	0.0	0.0	0.0	
3.20. 0.	GROWTH		1.0		0.0	0.0	0.0	
3. 0. 0.	ENVIRONMENTAL PROTECTION	11.0			1.1	1.1	1.9	
4. 1. 1.	LEG-FORWARD			5.5	0.2	0.0	0.2	
4. 1. 2.	LEG-RIGHT HAND			5.5	0.0	0.2	0.0	
4. 1. 3.	LEG-AFT			5.5	0.2	0.0	0.2	
4. 1. 4.	LEG-LEFT HAND			5.5	0.0	0.2	0.0	
4. 1. 0.	STRUCTURAL LEGS		22.0		1.0	1.0	1.7	
4. 2. 1.	PAD-FORWARD			1.5	0.0	0.0	0.0	
4. 2. 2.	PAD RIGHT HAND			1.5	0.0	0.0	0.0	
4. 2. 3.	PAD AFT			1.5	0.0	0.0	0.0	

Space Division
North American Rockwell

LUNAR FLYING VEHICLE - LUNAR ESCAPE

PAGE 3 DATE 6.30.69.

DETAIL MASS PROPERTIES

CODE	DESCRIPTION	CURRENT WEIGHT (POUNDS) CODE GENERATION FIRST	SECOND	THIRD	MOMENT OF INERTIA (SLUG FEET SQUARED) PITCH	ROLL	YAW	NOTE NUMBER
4. 2. 4.	PAD LEFT HAND			1.5	0.0	0.0	0.0	
4. 2. 0.	LANDING PADS		6.0		1.3	1.3	2.6	
4. 3. 1.	ATTENUATOR FORWARD HORIZONTAL			3.5	0.0	0.0	0.0	
4. 3. 2.	ATTENUATOR FORWARD VERTICAL			3.5	0.0	0.0	0.0	
4. 3. 3.	ATTENUATOR RIGHT HAND HORIZONT			3.5	0.0	0.0	0.0	
4. 3. 4.	ATTENUATOR RIGHT HAND VERTICAL			3.5	0.0	0.0	0.0	
4. 3. 5.	ATTENUATOR AFT HORIZONTAL			3.5	0.0	0.0	0.0	
4. 3. 6.	ATTENUATOR AFT VERTICAL			3.5	0.0	0.0	0.0	
4. 3. 7.	ATTENUATOR LEFT HAND HORIZONTA			3.5	0.0	0.0	0.0	
4. 3. 8.	ATTENUATOR LEFT HAND VERTICAL			3.5	0.0	0.0	0.0	
4. 3. 0.	ATTENUATORS (INCL. ATTACH.)		28.0		1.6	1.6	3.0	
4. 4. 1.	LANDING SENSOR-FWD			0.3	0.0	0.0	0.0	
4. 4. 2.	LANDING SENSOR-AFT			0.3	0.0	0.0	0.0	
4. 4. 0.	LANDING SENSORS		0.5		0.1	0.0	0.1	
4.20. 1.	GROWTH			5.6	0.0	0.0	0.0	
4.20. 0.	GROWTH		5.6		0.0	0.0	0.0	
4. 0. 0.	LANDING GEAR	62.1			4.6	4.5	7.4	
5. 1. 1.	ENGINE - NO 1			4.8	0.0	0.0	0.0	
5. 1. 2.	ENGINE - NO 2			4.8	0.0	0.0	0.0	
5. 1. 3.	ENGINE - NO 3			4.8	0.0	0.0	0.0	
5. 1. 4.	ENGINE - NO 4			4.8	0.0	0.0	0.0	
5. 1. 5.	THRUST CONE			2.3	0.0	0.0	0.0	
5. 1. 6.	THROTTLE CYLINDER			0.3	0.0	0.0	0.0	
5. 1. 7.	PITCH & ROLL CONTROL BRACKETS			6.6	0.0	0.0	0.0	
5. 1. 8.	FLEXIBLE INLET LINES			2.6	0.0	0.0	0.0	
5. 1. 9.	FUEL COUPLING MANIFOLD			0.3	0.0	0.0	0.0	
5. 1.10.	OXIDIZER COUPLING MANIFOLD			5.1	0.0	0.0	0.0	
5. 1.11.	CLIPS-NUTS-BOLTS-FTGS-ETC			6.0	0.0	0.0	0.1	
5. 1.12.	ENGINE - NO 7			4.8	0.0	0.0	0.0	

Space Division
North American Rockwell

CODE	DESCRIPTION	DETAIL MASS PROPERTIES CURRENT WEIGHT (POUNDS) CODE GENERATION FIRST	SECOND	THIRD	MOMENT OF INERTIA (SLUG FEET SQUARED) PITCH	ROLL	YAW	NOTE NUMBER
5. 1.13.	ENGINE - NO 8			4.8	0.0	0.0	0.0	
5. 1. 0.	ENGINES & ACCESSORIES		52.0		0.8	0.8	1.4	
5. 2. 1.	FUEL TANK			9.0	0.1	0.1	0.1	
5. 2. 2.	FUEL TANK SUPPORT RING			2.0	0.0	0.0	0.0	
5. 2. 3.	FUEL TANK			15.0	0.6	0.6	0.3	
5. 2. 4.	FUEL TANK SUPT RING			2.0	0.0	0.0	0.0	
5. 2. 0.	FUEL TANK		28.0		1.0	4.6	4.2	
5. 3. 1.	FUEL TANK FILL & DRAIN BOSS			0.6	0.0	0.0	0.0	
5. 3. 2.	FUEL TANK FILL VENT DICONNECT			0.3	0.0	0.0	0.0	
5. 3. 3.	FUEL SUPPORT FTGS ETC.			1.0	0.0	0.0	0.0	
5. 3. 4.	FUEL PRESSURE REGULATOR			2.6	0.0	0.0	0.0	
5. 3. 5.	OXIDIZER FILL & DRAIN BOSS			0.6	0.0	0.0	0.0	
5. 3. 6.	OXIDIZER TANK FILL VENT DICONNE			0.3	0.0	0.0	0.0	
5. 3. 7.	OXIDIZER SUPPORT FTGS ETC.			0.5	0.0	0.0	0.0	
5. 3. 8.	OXIDIZER PRESSURE REGULATOR			2.6	0.0	0.0	0.0	
5. 3. 9.	FUEL TANK FILL & DRAIN BOSS			0.6	0.0	0.0	0.0	
5. 3.10.	FUEL TANK FILL VENT DICONNECT			0.3	0.0	0.0	0.0	
5. 3.12.	FUEL SUPPORT FTGS ETC.			1.0	0.0	0.0	0.0	
5. 3.13.	FUEL PRESSURE REGULATOR			2.6	0.0	0.0	0.0	
5. 3.14.	OXIDIZER FILL & DRAIN BOSS			0.6	0.0	0.0	0.0	
5. 3.15.	OXIDIZER TANK FILL VENT DICONNE			0.3	0.0	0.0	0.0	
5. 3.16.	OXIDIZER SUPPORT FTGS ETC.			0.5	0.0	0.0	0.0	
5. 3.17.	OXIDIZER PRESSURE REGULATOR			2.6	0.0	0.0	0.0	
5. 3. 0.	FUEL & OXIDIZER SYSTEM		17.0		0.4	1.1	1.4	
5. 4. 1.	OXIDIZER TANK			9.0	0.1	0.1	0.1	
5. 4. 2.	OXIDIZER TANK SUPPORT RING			2.0	0.0	0.0	0.0	
5. 4. 3.	OXIDIZER TANK			15.0	0.6	0.6	0.3	
5. 4. 4.	OXIDIZER TANK SUPT RING			2.0	0.0	0.0	0.0	
5. 4. 0.	OXIDIZER TANK		28.0		0.9	2.6	2.1	

Space Division
North American Rockwell

DETAIL MASS PROPERTIES

CODE	DESCRIPTION	CURRENT WEIGHT (POUNDS) CODE GENERATION FIRST	SECOND	THIRD	MOMENT OF INERTIA (SLUG FEET SQUARED) PITCH	ROLL	YAW	NOTE NUMBER
5. 6. 1.	HELIUM TANK			11.0	0.1	0.1	0.1	
5. 6. 2.	HELIUM TANK MOUNTING BRACKETS			1.1	0.0	0.0	0.0	
5. 6. 3.	SHUT-OFF & DISCONNECT			1.2	0.0	0.0	0.0	
5. 6. 4.	PRESSURE SYSTEM TUBING & FTGS			0.9	0.0	0.0	0.0	
5. 6. 5.	HELIUM VENT SHUT-OFF VALVE			0.6	0.0	0.0	0.0	
5. 6. 6.	O2 PRESSURE RELIEF VALVE			2.8	0.0	0.0	0.0	
5. 6. 7.	FUEL PRESSURE RELIEF VALVE			2.8	0.0	0.0	0.0	
5. 6. 8.	O2 FILTER/CHECK VALVE			0.8	0.0	0.0	0.0	
5. 6. 9.	FUEL FILTER/CHECK VALVE			0.8	0.0	0.0	0.0	
5. 6.10.	HELIUM PRESSURE REGULATOR			2.6	0.0	0.0	0.0	
5. 6.11.	NUTS-BOLTS-SUPPORTS-FTGS-ETC.			1.5	0.0	0.0	0.0	
5. 6. 0.	PRESSURIZATION SYSTEM		26.1		1.2	1.2	1.7	
5. 7. 1.	HELIUM TANK			11.0	0.1	0.1	0.1	
5. 7. 2.	HELIUM TANK SUPPORT			1.1	0.0	0.0	0.0	
5. 7. 3.	SHUT-OFF & DISCONNECT			1.2	0.0	0.0	0.0	
5. 7. 4.	PRESSURE SYSTEM TUBING & FTGS			0.9	0.0	0.0	0.0	
5. 7. 5.	HELIUM VENT SHUT-OFF VALVE			0.6	0.0	0.0	0.0	
5. 7. 6.	O2 PRESSURE RELIEF VALVE			2.8	0.0	0.0	0.0	
5. 7. 7.	FUEL PRESSURE RELIEF VALVE			2.8	0.0	0.0	0.0	
5. 7. 8.	O2 FILTER/CHECK VALVE			0.8	0.0	0.0	0.0	
5. 7. 9.	FUEL FILTER/CHECK VALVE			0.8	0.0	0.0	0.0	
5. 7.10.	HELIUM PRESSURE REGULATOR			2.6	0.0	0.0	0.0	
5. 7.11.	NUTS-BOLTS-SUPPORTS-FTGS-ETC.			1.5	0.0	0.0	0.0	
5. 7. 0.	PRESSURIZATION SYSTEM		26.1		0.7	1.3	1.7	
5.20. 1.	GROWTH			17.7	0.0	0.0	0.0	
5.20. 0.	GROWTH		17.7		0.0	0.0	0.0	
5. 0. 0.	MAIN PROPULSION SYSTEM	194.9			11.5	14.7	18.3	
7. 1. 1.	BATTERY - RIGHT HAND			8.3	0.0	0.0	0.0	
7. 1. 2.	BATTERY - LEFT HAND			8.3	0.0	0.0	0.0	
7. 1. 0.	POWER SOURCE - BATTERIES		16.6		0.0	0.5	0.5	

Space Division
North American Rockwell

DETAIL MASS PROPERTIES

CODE	DESCRIPTION	CURRENT WEIGHT (POUNDS) CODE GENERATION FIRST	SECOND	THIRD	MOMENT OF INERTIA (SLUG FEET SQUARED) PITCH	ROLL	YAW	NOTE NUMBER
7.20. 1.	GROWTH			1.7	0.0	0.0	0.0	
7.20. 0.	GROWTH		1.7		0.0	0.0	0.0	
7. 0. 0.	POWER SOURCE	18.3			0.0	0.5	0.5	
8. 1. 1.	SWITCHING CIRCUITS & BREAKERS			5.0	0.0	0.0	0.0	
8. 1. 2.	BUS & WIRING			3.0	0.0	0.0	0.0	
8. 1. 0.	POWER EQUIPMENT		8.0		0.0	0.0	0.0	
8.20. 1.	GROWTH			0.8	0.0	0.0	0.0	
8.20. 0.	GROWTH		0.8		0.0	0.0	0.0	
8. 0. 0.	POWER CONVERSION & DISTRIBUTION	8.8			0.0	0.0	0.0	
9. 3. 1.	RATE GYROS (2)			2.5	0.0	0.0	0.0	
9. 3. 2.	CONTROL UNIT (INCL. LOGIC)			7.4	0.0	0.0	0.0	
9. 3. 3.	ACTUATOR - NO 1			2.5	0.0	0.0	0.0	
9. 3. 4.	ACTUATOR - NO 2			2.5	0.0	0.0	0.0	
9. 3. 5.	ACTUATOR - NO 3			2.5	0.0	0.0	0.0	
9. 3. 6.	ACTUATOR - NO 4			2.5	0.0	0.0	0.0	
9. 3. 7.	ACTUATOR - NO 5			2.5	0.0	0.0	0.0	
9. 3. 8.	ACTUATOR - NO 6			2.5	0.0	0.0	0.0	
9. 3. 9.	ACTUATOR - NO 7			2.5	0.0	0.0	0.0	
9. 3.10.	ACTUATOR NO 8			2.5	0.0	0.0	0.0	
9. 3. 0.	GUIDANCE OUTPUT		29.9		0.3	0.3	0.3	
9.20. 1.	GROWTH			3.0	0.0	0.0	0.0	
9.20. 0.	GROWTH		3.0		0.0	0.0	0.0	
9. 0. 0.	GUIDANCE AND NAVIGATION	32.9			0.3	0.3	0.3	
14. 1. 1.	SEAT			2.5	0.0	0.0	0.0	
14. 1. 2.	RESTRAINTS			1.5	0.0	0.0	0.0	
14. 1. 3.	ARM REST-RIGHT HAND			0.3	0.0	0.0	0.0	
14. 1. 4.	ARM REST-LEFT HAND			0.3	0.0	0.0	0.0	
14. 1. 5.	SEAT			2.5	0.0	0.0	0.0	
14. 1. 6.	RESTRAINTS			1.5	0.0	0.0	0.0	

Space Division
North American Rockwell

CODE	DESCRIPTION	DETAIL MASS PROPERTIES CURRENT WEIGHT (POUNDS) CODE GENERATION FIRST	SECOND	THIRD	MOMENT OF INERTIA (SLUG FEET SQUARED) PITCH	ROLL	YAW	NOTE NUMBER
14. 1. 7.	ARM REST-RIGHT HAND			0.3	0.0	0.0	0.0	
14. 1. 8.	ARM REST-LEFT HAND			0.3	0.0	0.0	0.0	
14. 1. 0.	ACCOMODATIONS FOR PERSONNEL		9.2		0.5	0.5	0.3	
14. 2. 5.	FOOT REST			3.5	0.0	0.0	0.0	
14. 2.12.	LOWER STEP			0.2	0.0	0.0	0.0	
14. 2.13.	UPPER STEP			0.2	0.0	0.0	0.0	
14. 2. 0.	FURNISHINGS		3.9		0.0	0.1	0.0	
14.20. 1.	GROWTH			1.3	0.0	0.0	0.0	
14.20. 0.	GROWTH		1.3		0.0	0.0	0.0	
14. 0. 0.	PERSONNEL PROVISIONS	14.4			2.2	1.0	1.6	
15. 1. 1.	PEDESTAL			2.0	0.0	0.0	0.0	
15. 1. 0.	PEDESTAL		2.0		0.0	0.0	0.0	
15. 3. 1.	DISPLAY PANEL STRUCTURE			5.0	0.0	0.0	0.0	
15. 3. 2.	DISPLAYS			7.0	0.0	0.0	0.0	
15. 3. 0.	INSTRUMENT PANELS		12.0		0.0	0.0	0.0	
15. 4. 1.	ROTATIONAL HAND CONTROL			3.5	0.0	0.0	0.0	
15. 4. 2.	THROTTLE CONTROLLER			2.0	0.0	0.0	0.0	
15. 4. 3.	CABLES			4.0	0.0	0.0	0.0	
15. 4. 0.	CREW STATION CONTROLS		9.5		0.0	0.2	0.2	
15.20. 1.	GROWTH			2.3	0.0	0.0	0.0	
15.20. 0.	GROWTH		2.3		0.0	0.0	0.0	
15. 0. 0.	CREW STATION CONTROLS & PANELS	25.8			0.2	0.7	0.6	
17. 1. 1.	ASTRONAUT - PILOT			380.0	14.5	8.6	11.0	
17. 1. 2.	ASTRONAUT - PASSENGER			380.0	14.5	8.6	11.0	
17. 1. 0.	CREW		760.0		73.3	55.6	63.3	
17. 0. 0.	PERSONNEL	760.0			73.3	55.6	63.3	
21. 1. 1.	RESIDUAL FUEL			3.6	0.0	0.0	0.0	
21. 1. 3.	RESIDUAL - FUEL			8.4	0.0	0.0	0.0	
21. 1. 0.	RESIDUALS-FUEL		12.0		0.0	1.5	1.5	

Space Division
North American Rockwell

DETAIL MASS PROPERTIES

CODE	DESCRIPTION	CURRENT WEIGHT (POUNDS) CODE GENERATION FIRST	SECOND	THIRD	MOMENT OF INERTIA (SLUG FEET SQUARED) PITCH	ROLL	YAW	NOTE NUMBER
21. 2. 1.	RESIDUAL OXIDIZER			5.4	0.0	0.0	0.0	
21. 2. 4.	RESIDUAL - OXIDIZER			12.6	0.0	0.0	0.0	
21. 2. 0.	RESIDUALS-OXIDIZER		18.0		0.0	1.0	1.0	
21. 0. 0.	RESIDUAL PROPELLANTS	30.0			2.2	3.2	5.4	
25. 1. 1.	FUEL			120.0	0.0	0.0	0.0	
25. 1. 2.	FUEL			280.0	0.0	0.0	0.0	
25. 1. 0.	FUEL		400.0		2.6	52.5	50.1	
25. 2. 1.	OXIDIZER			180.0	0.0	0.0	0.0	
25. 2. 2.	OXIDIZER			420.0	0.0	0.0	0.0	
25. 2. 0.	OXIDIZER		600.0		3.8	37.0	33.4	
25. 0. 0.	FULL THRUST PROPELLANT	1000.0			78.1	112.9	178.6	

Space Division
North American Rockwell

APPENDIX B

LANDING DYNAMICS PROGRAM RESULTS

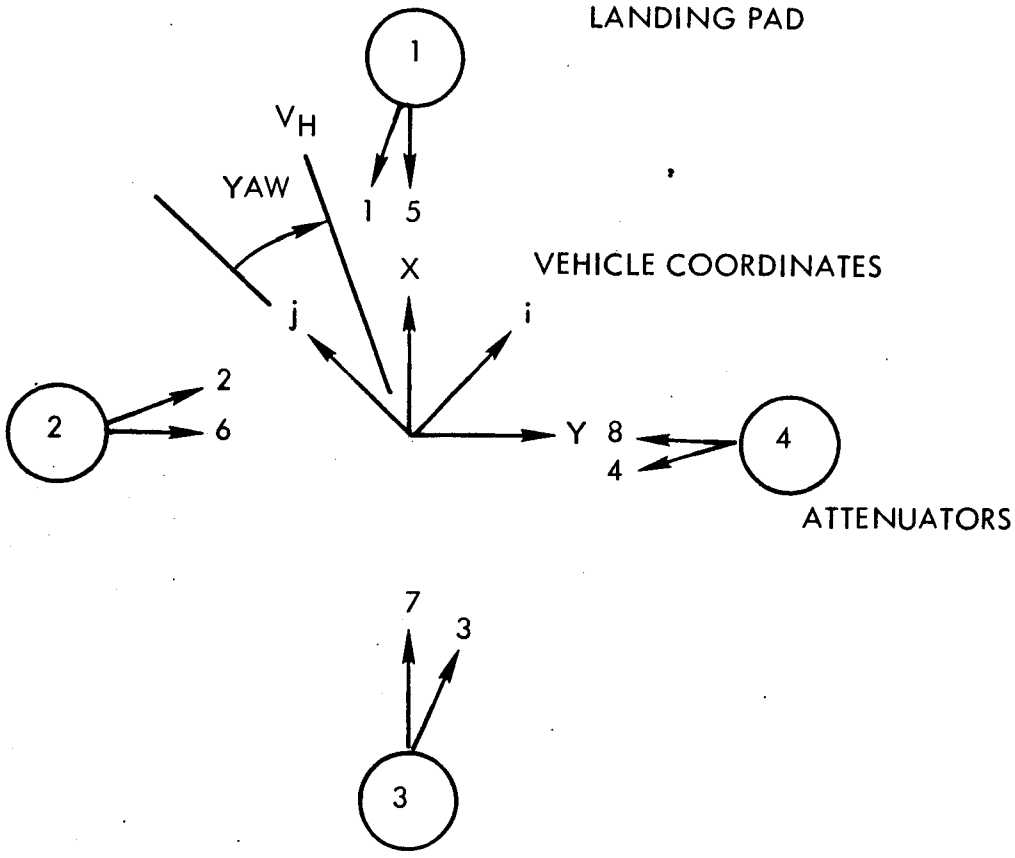

LEGEND

i = PRINTOUT Y
j = PRINTOUT Z
k = PRINTOUT X = -VEHICLE Z

Dynamics Program Coordinate System

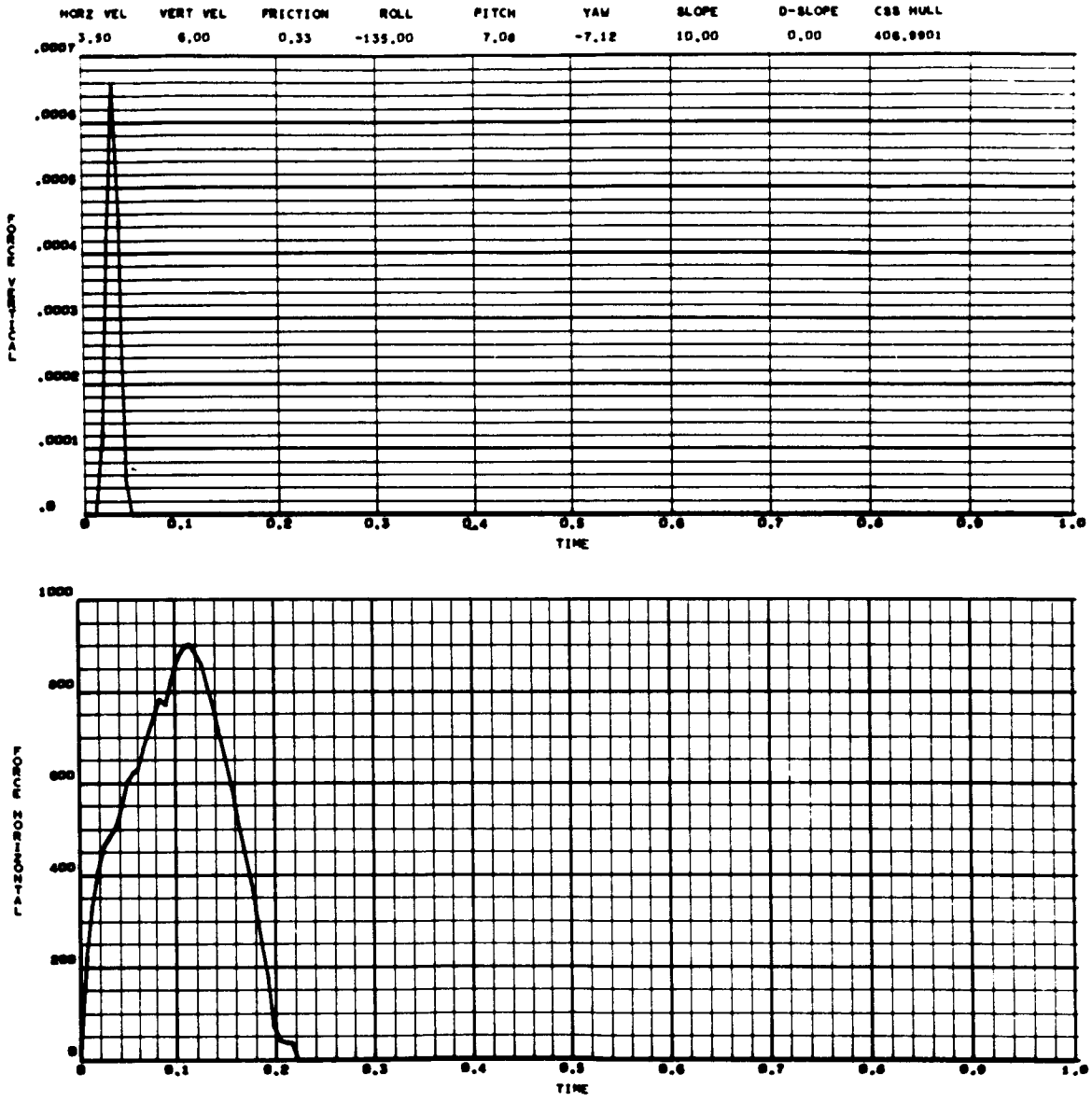

Foot Pad Forces - Case 1

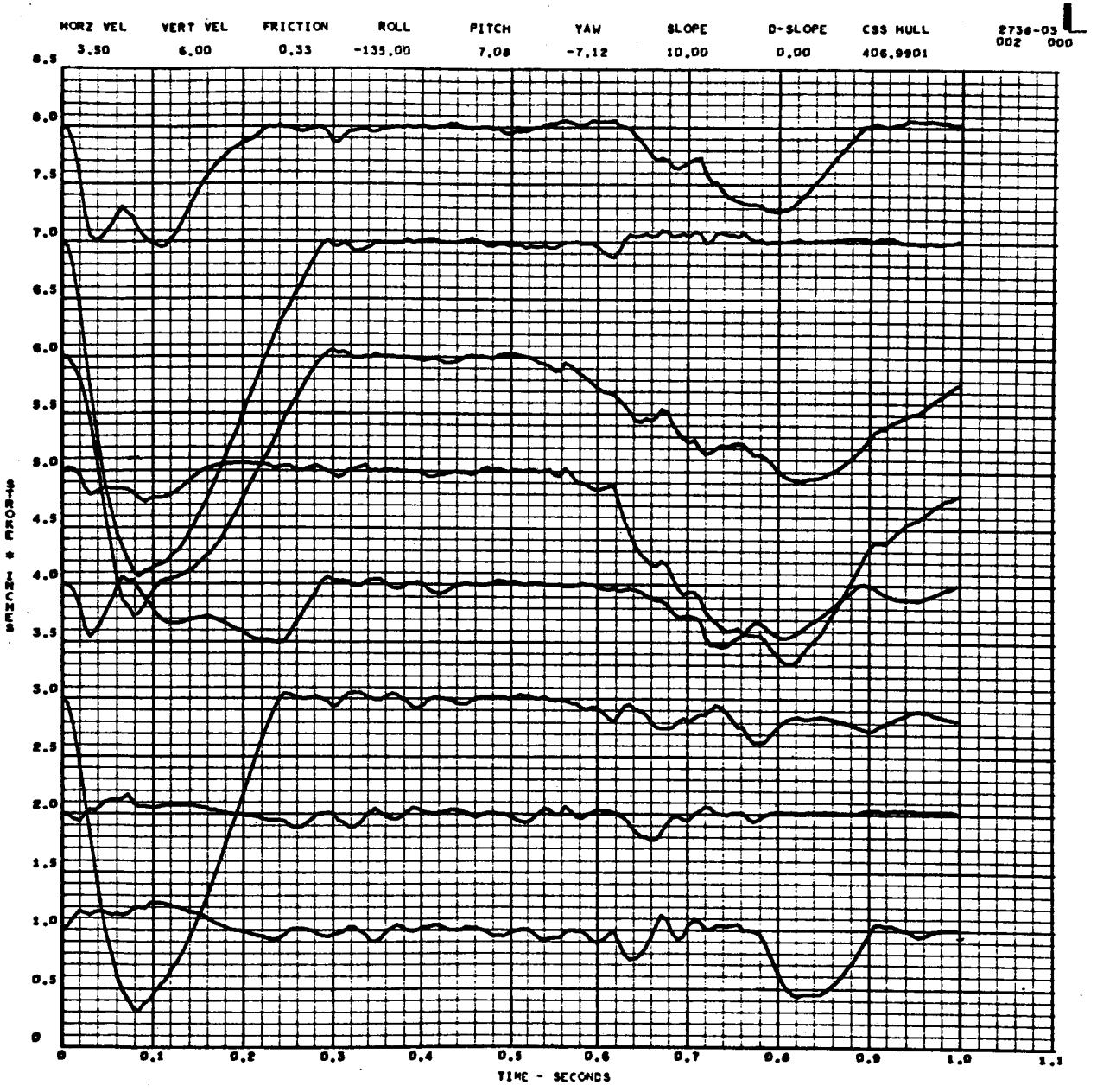

Attenuator Strokes - Case 1

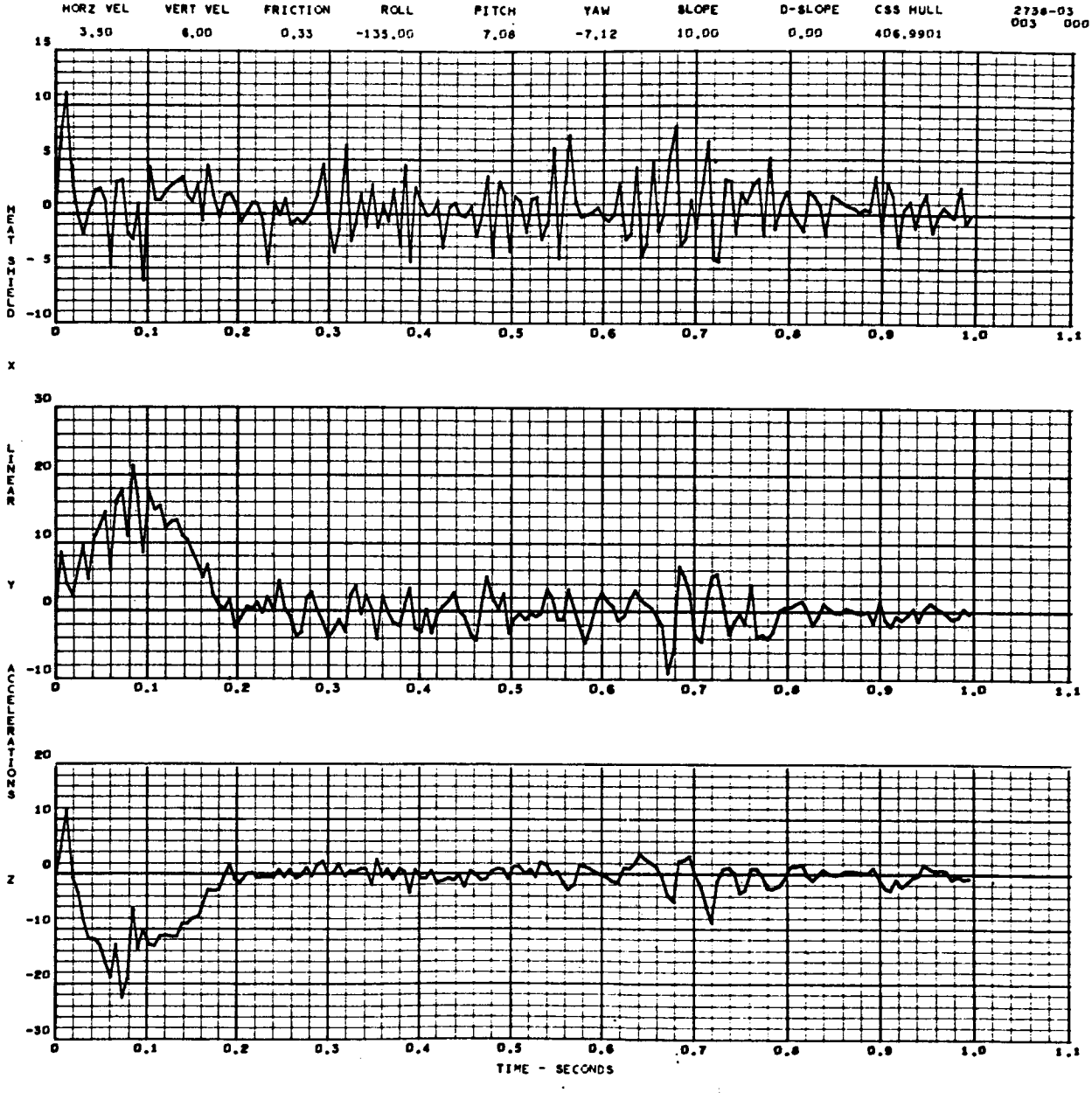

Leg Frame Linear Accelerations (g's) - Case 1

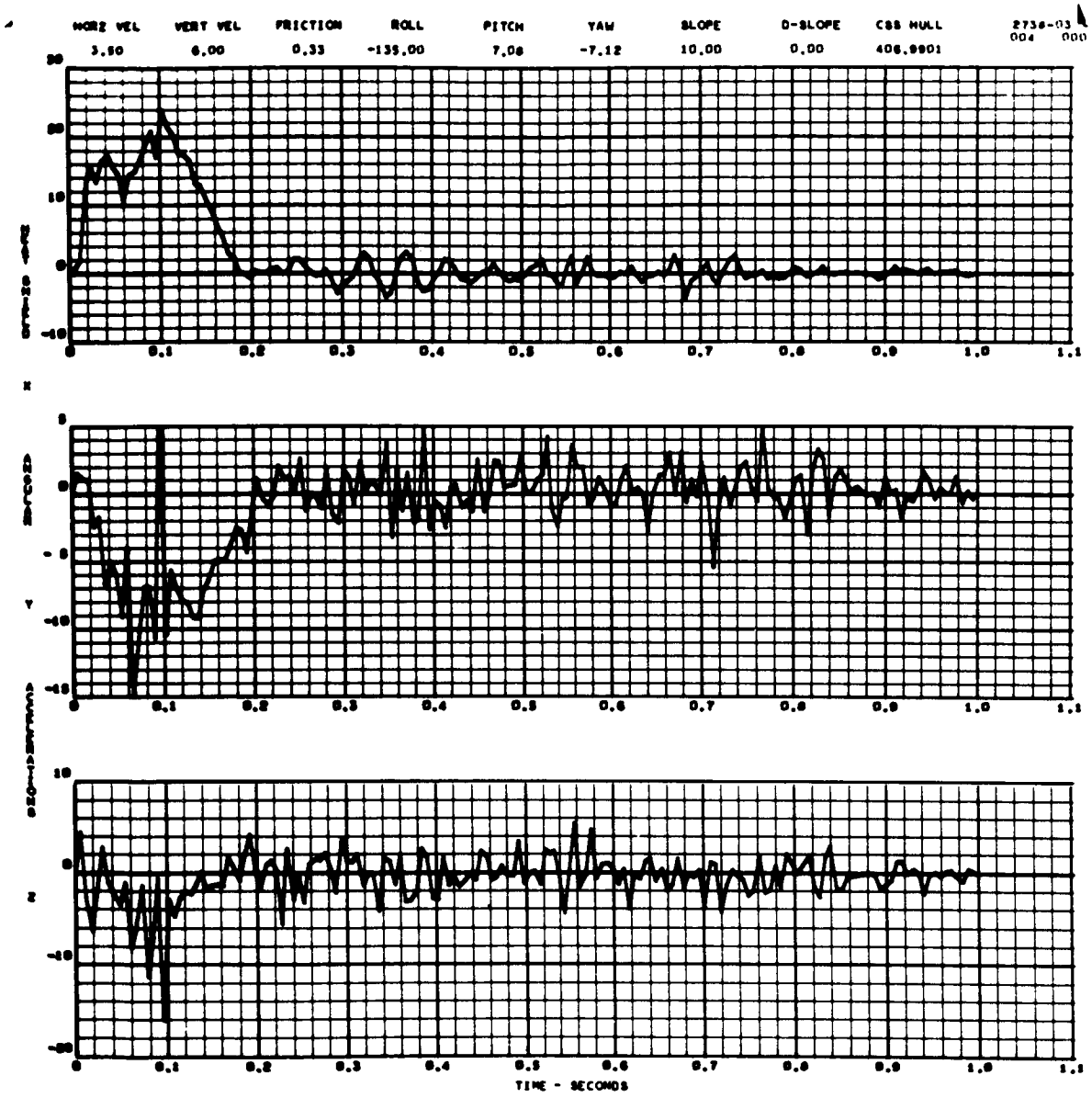

Leg Frame Angular Accelerations (g's/ft) - Case 1

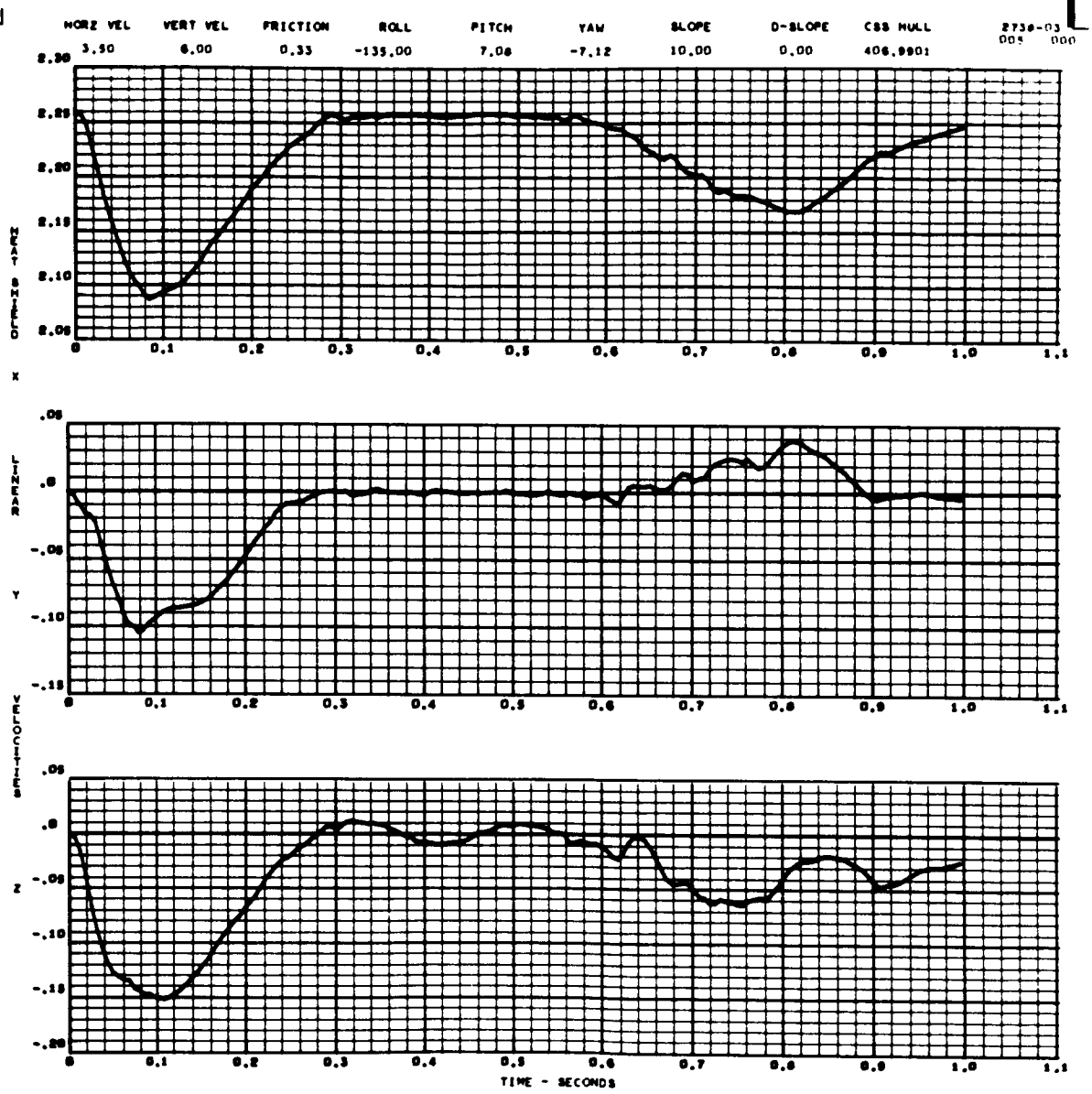

Body-Frame Relative Displacements (ft) - Case 1

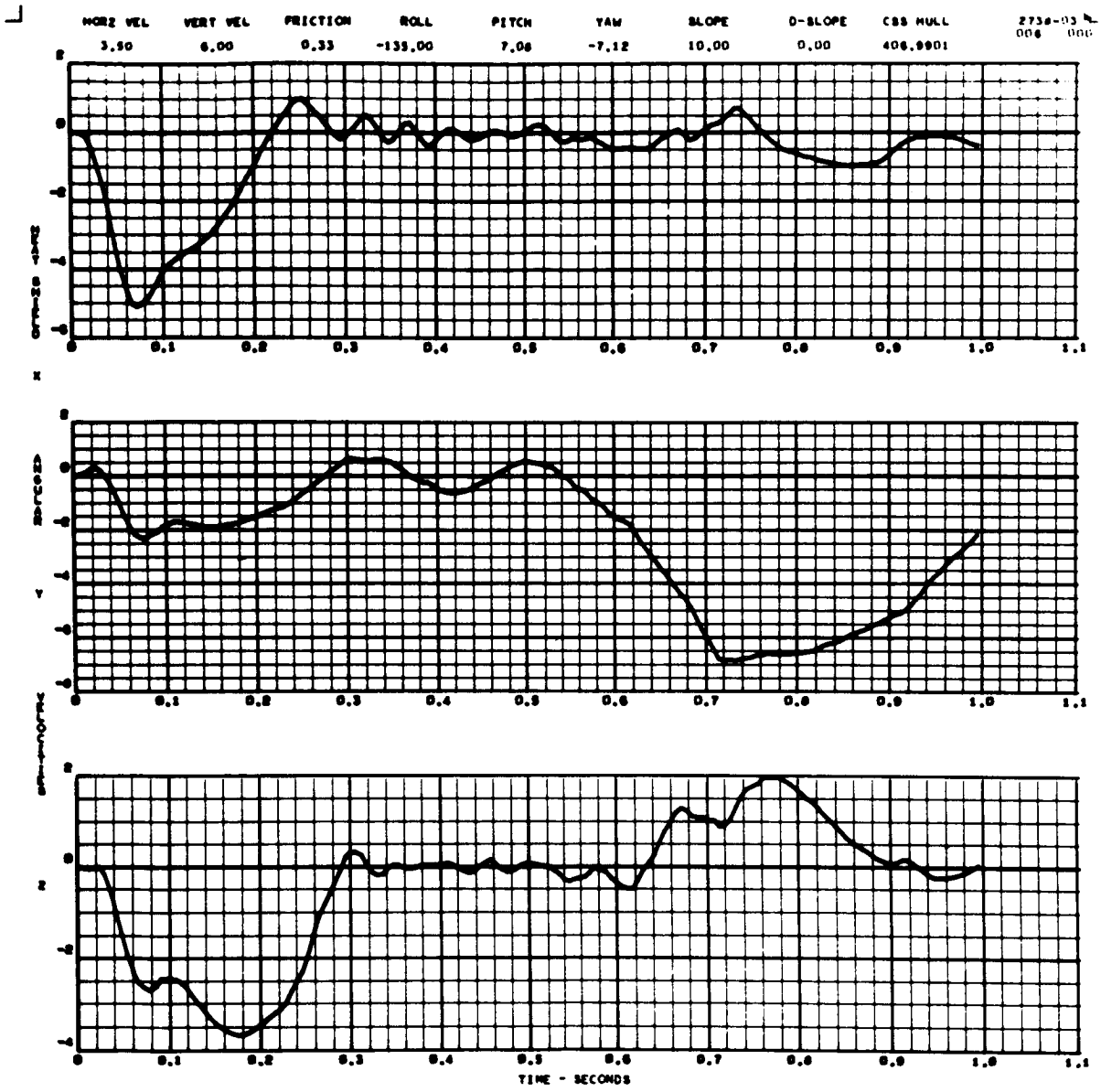

Body-Frame Relative Displacements (deg) - Case 1

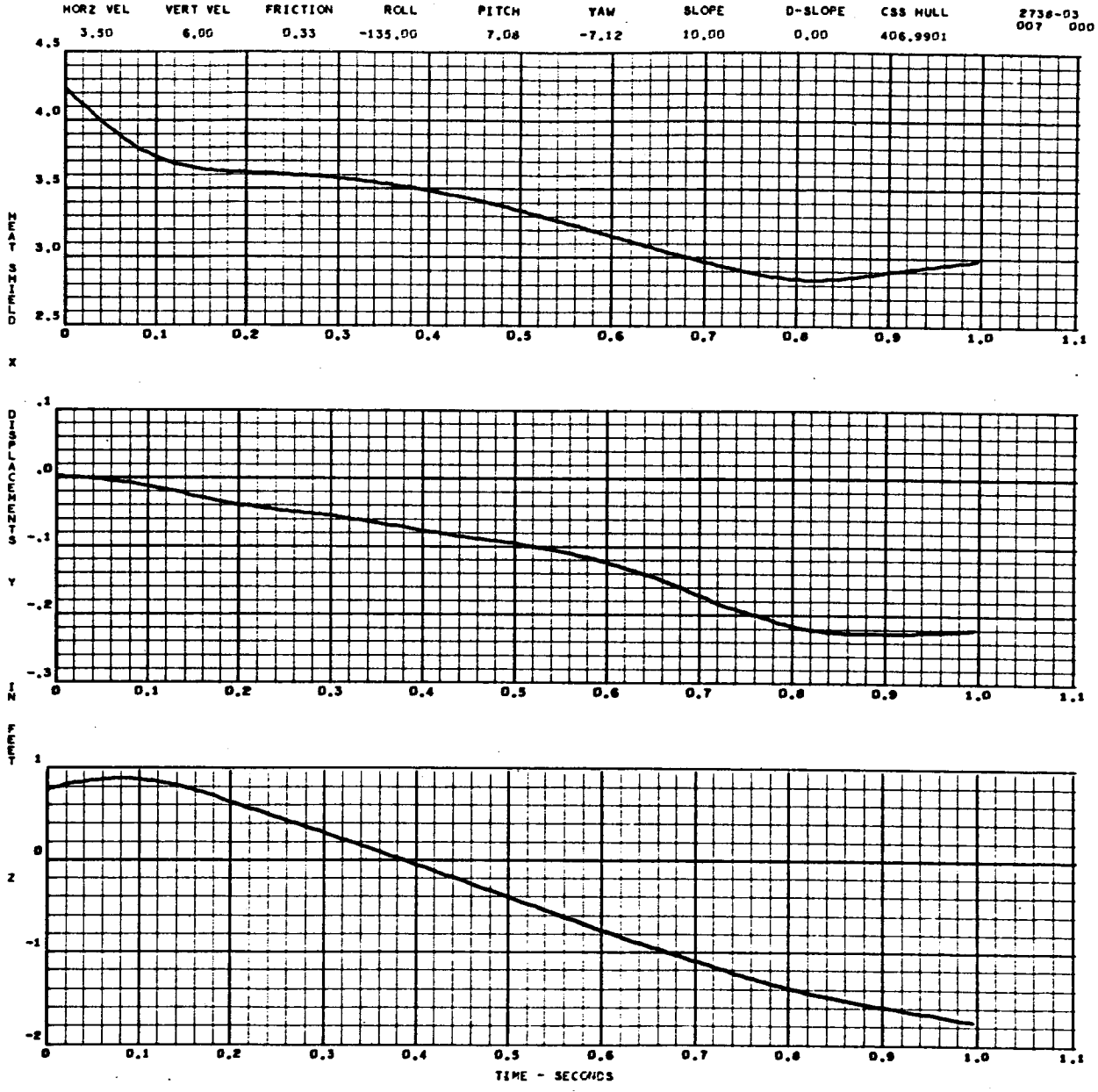

Leg Frame Displacements (ft) - Case 1

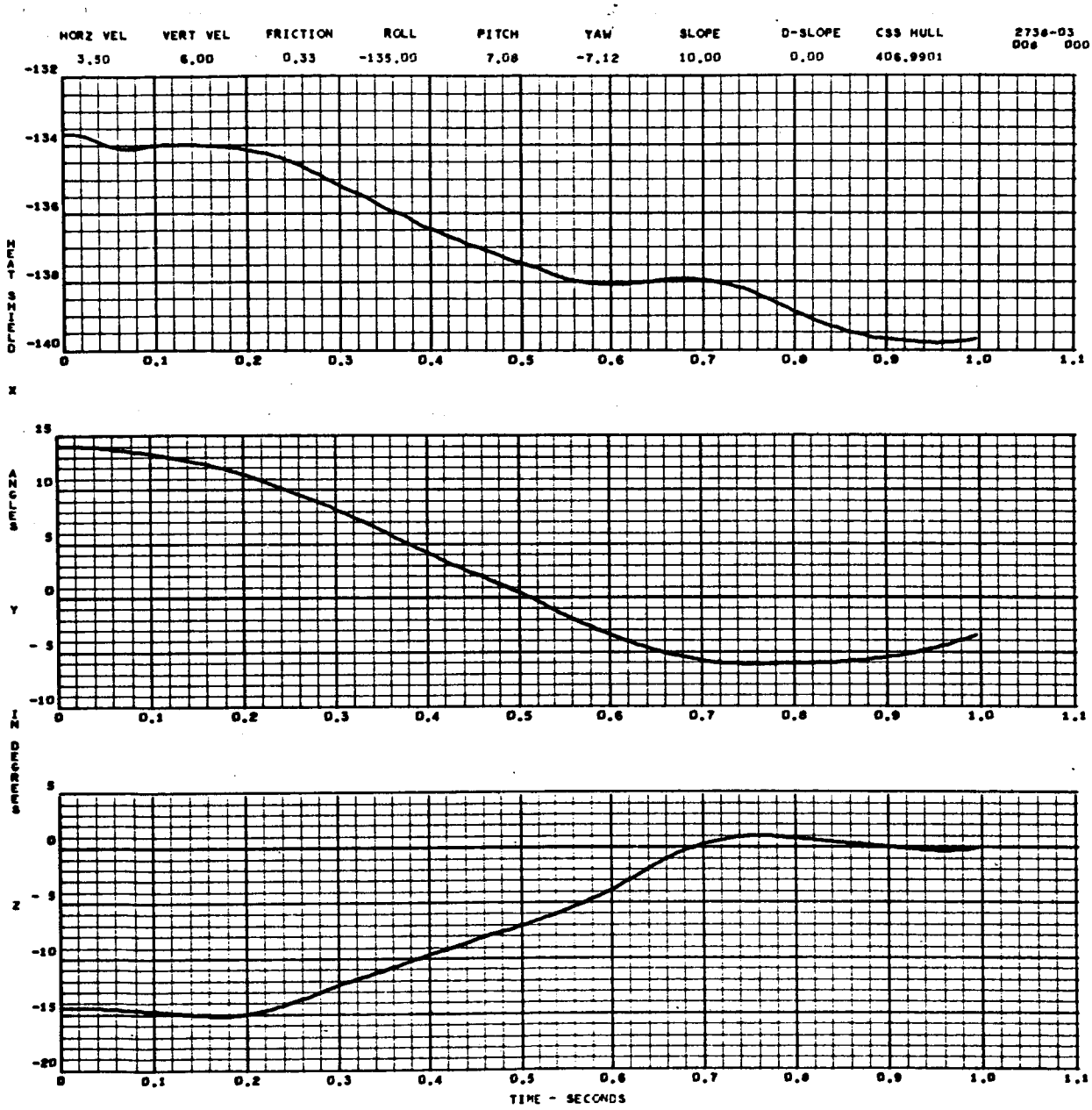

Leg Frame Displacements (deg) - Case 1

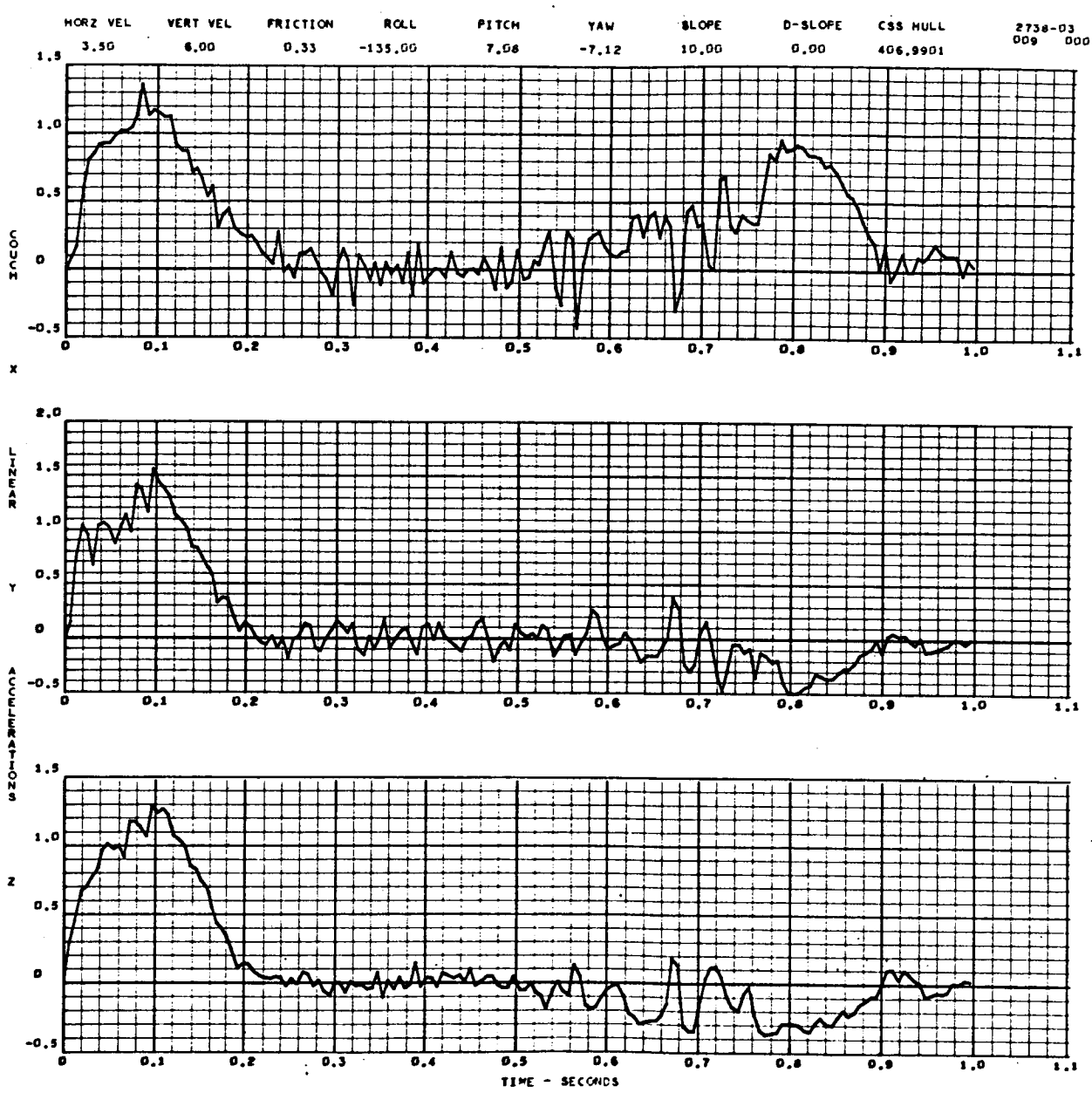

Body Accelerations (g's) - Case 1

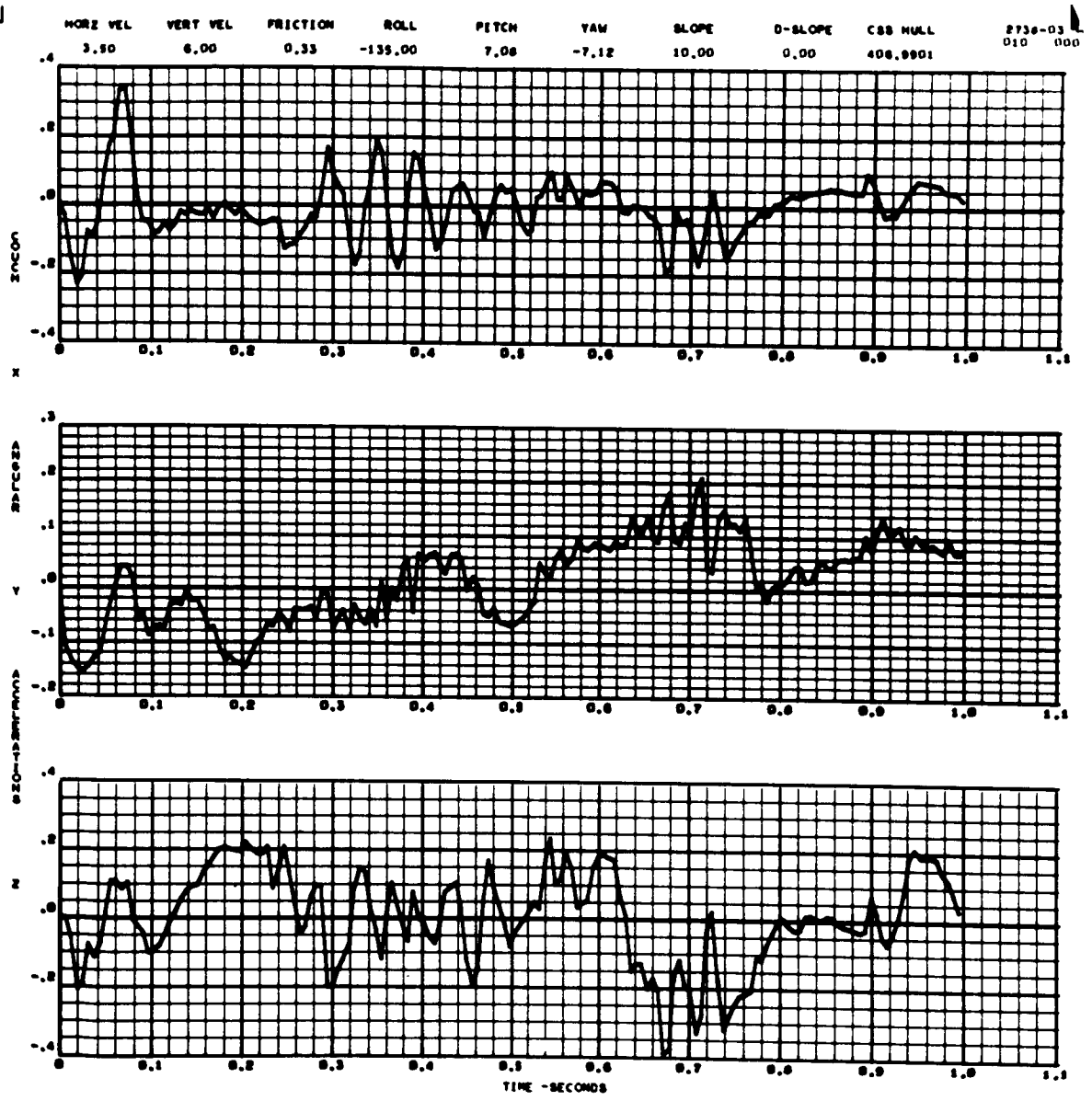

Body Angular Accelerations (g's/ft) - Case 1

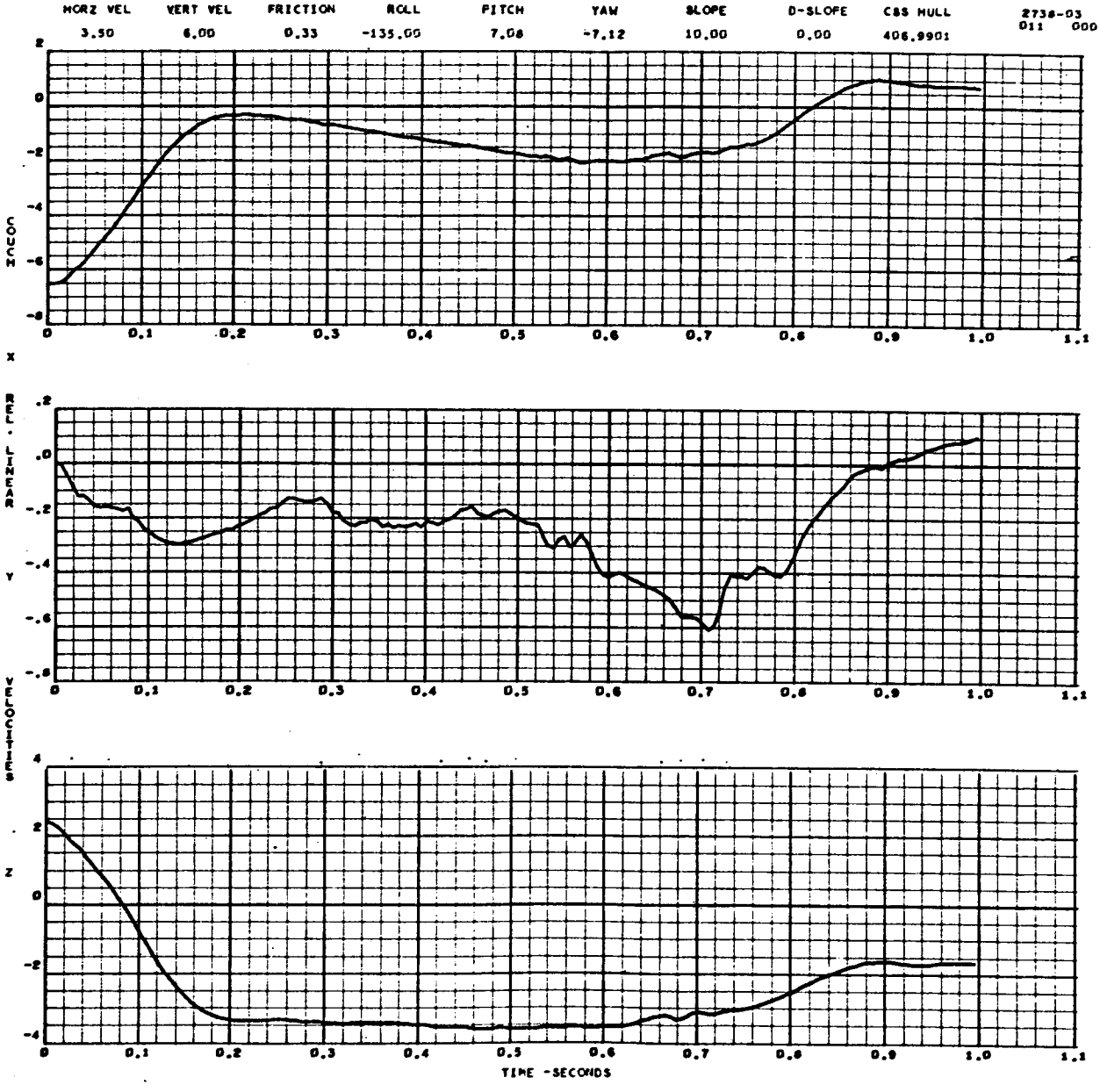

Body Velocities (fps) - Case 1

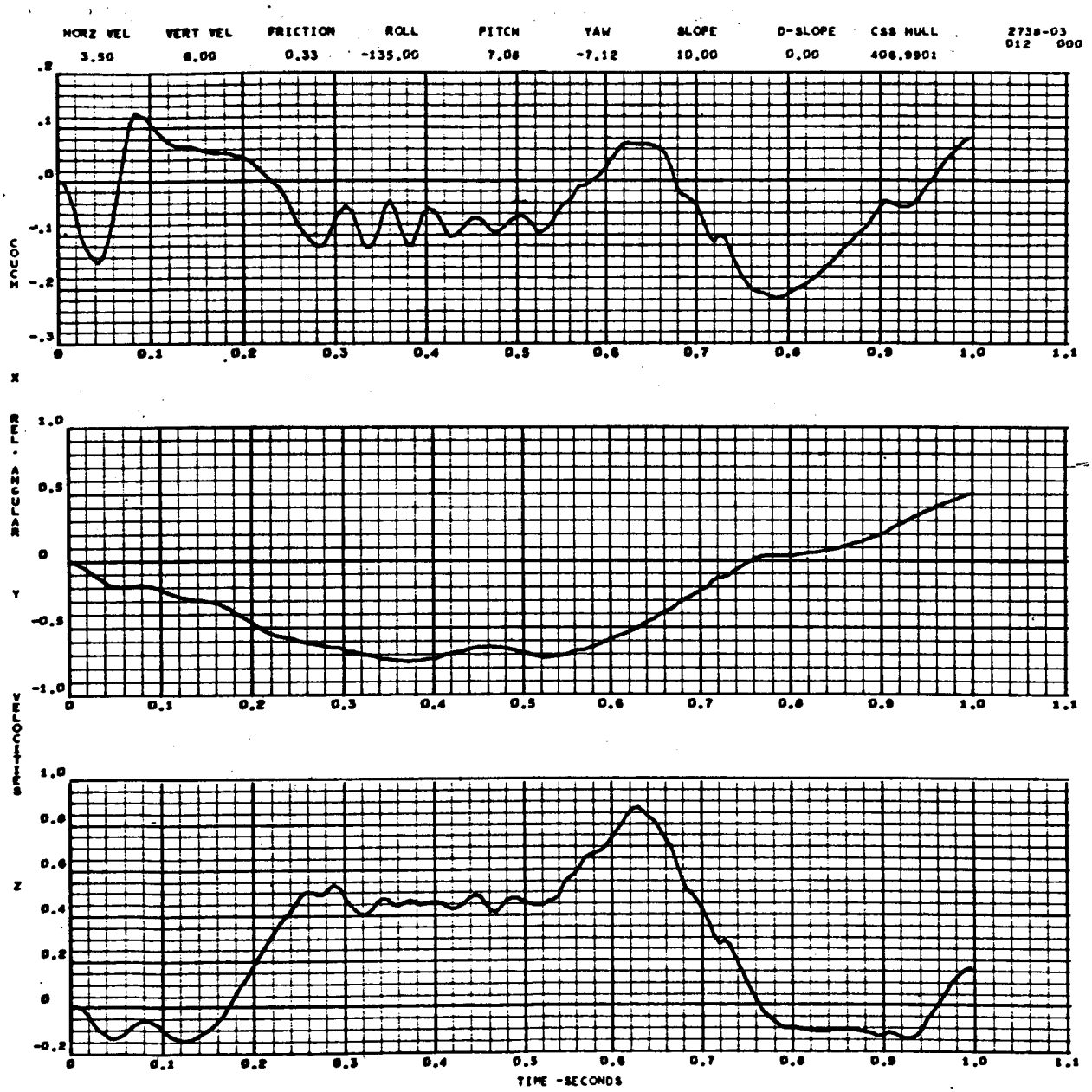

Body Angular Velocities (rad/sec) - Case 1

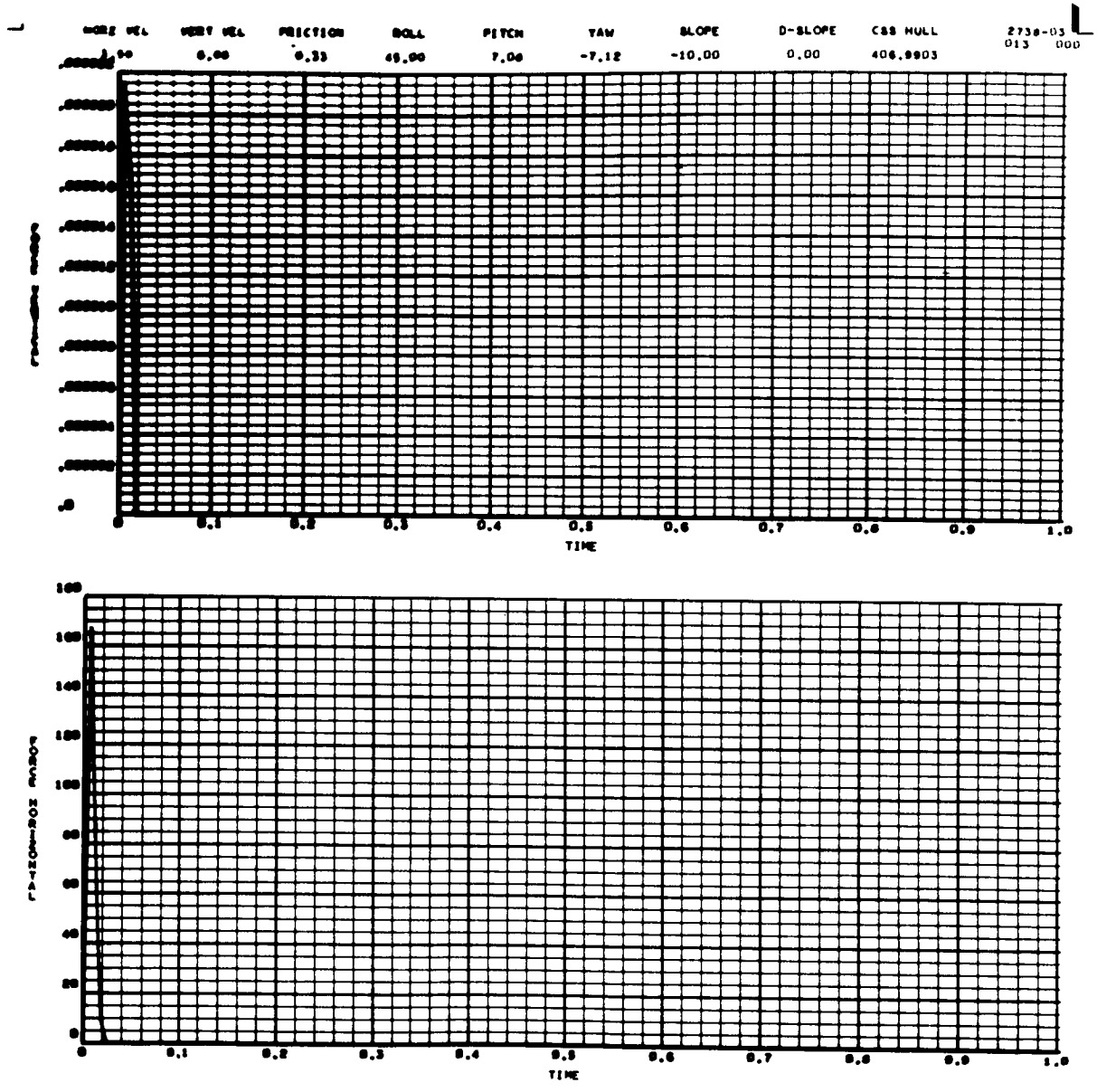

Foot Pad Forces - Case 2

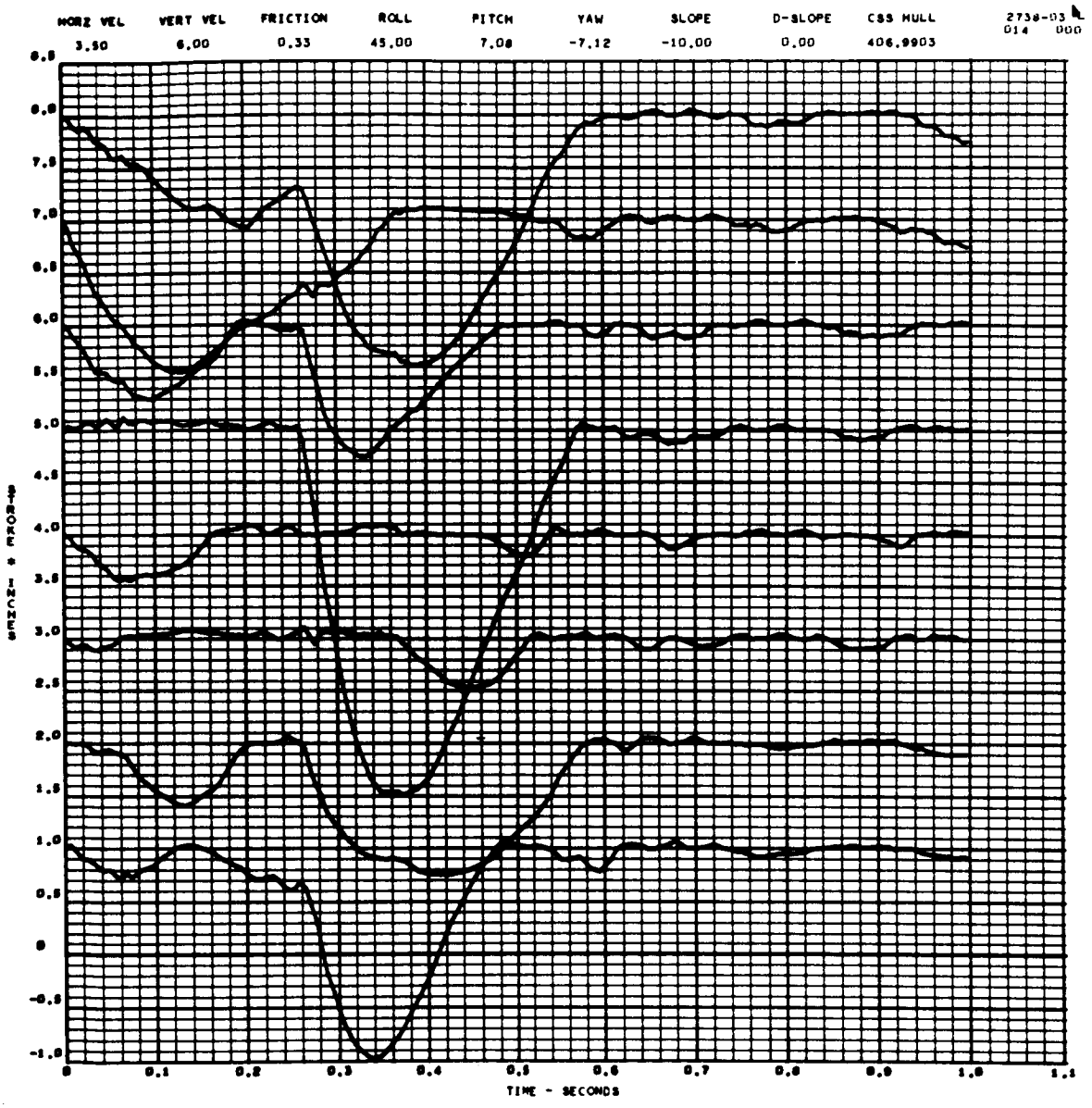

Attenuator Strokes - Case 2

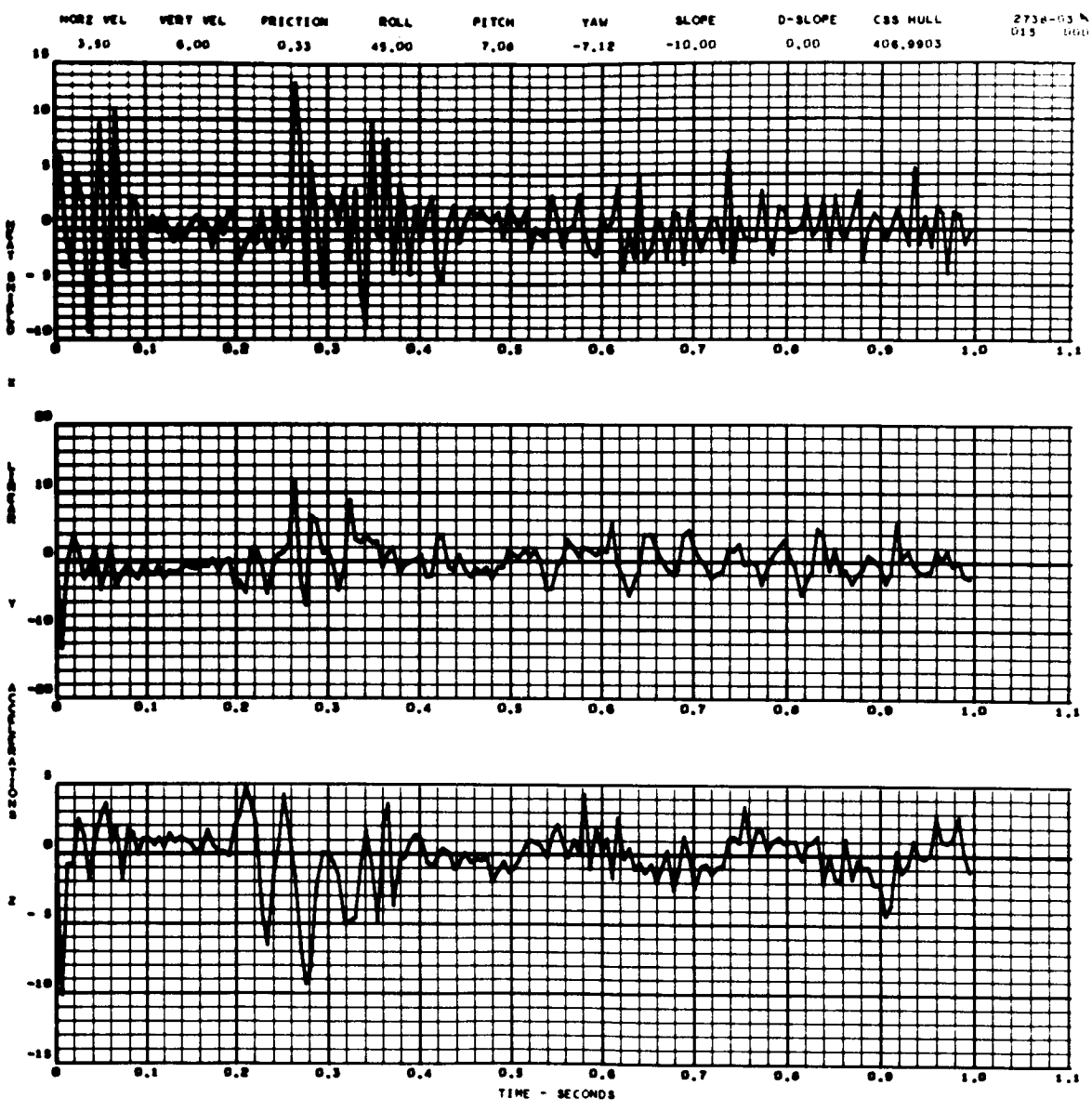

Leg Frame Linear Accelerations (g's) - Case 2

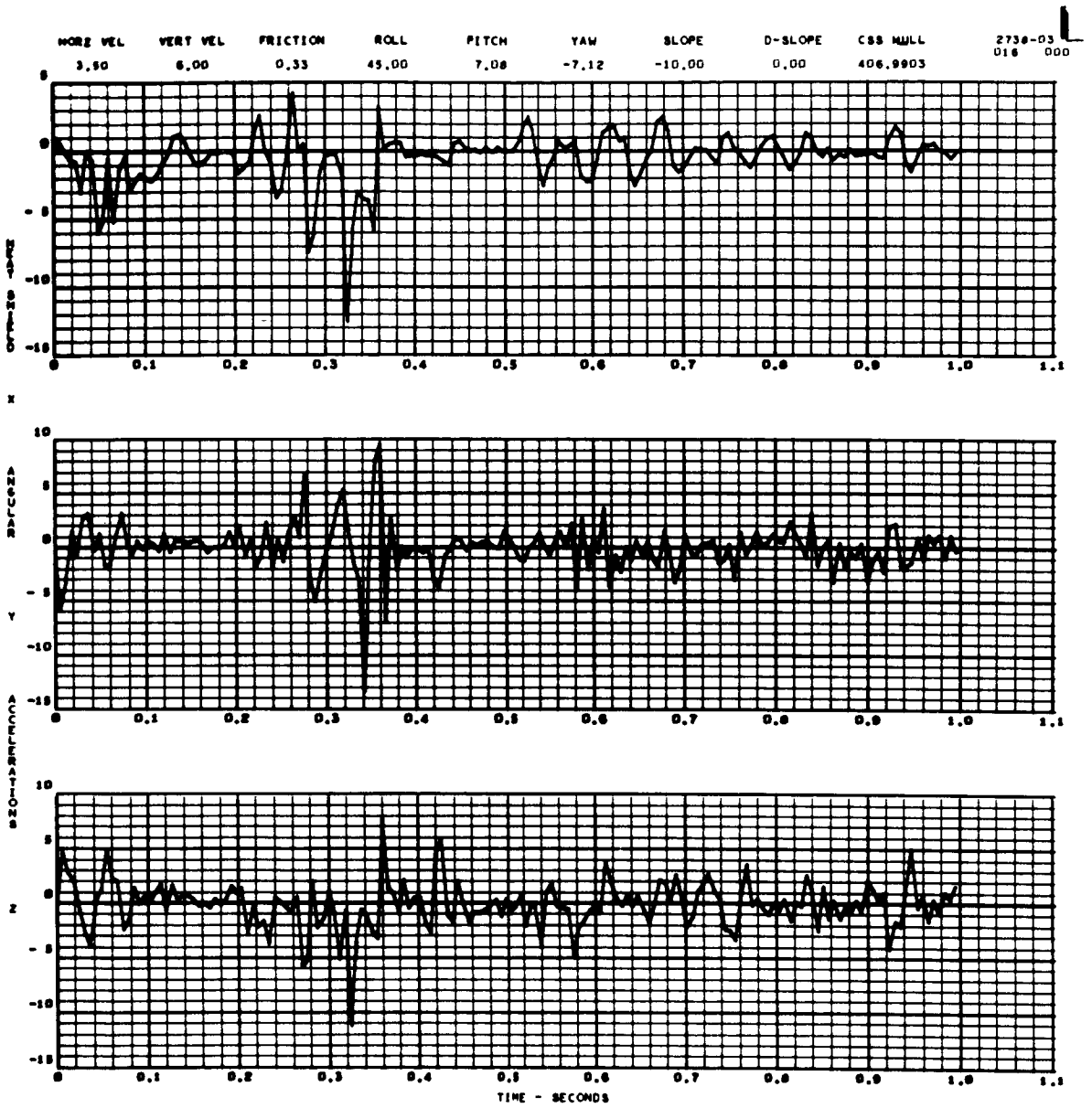

Leg Frame Angular Accelerations (g's/ft) - Case 2

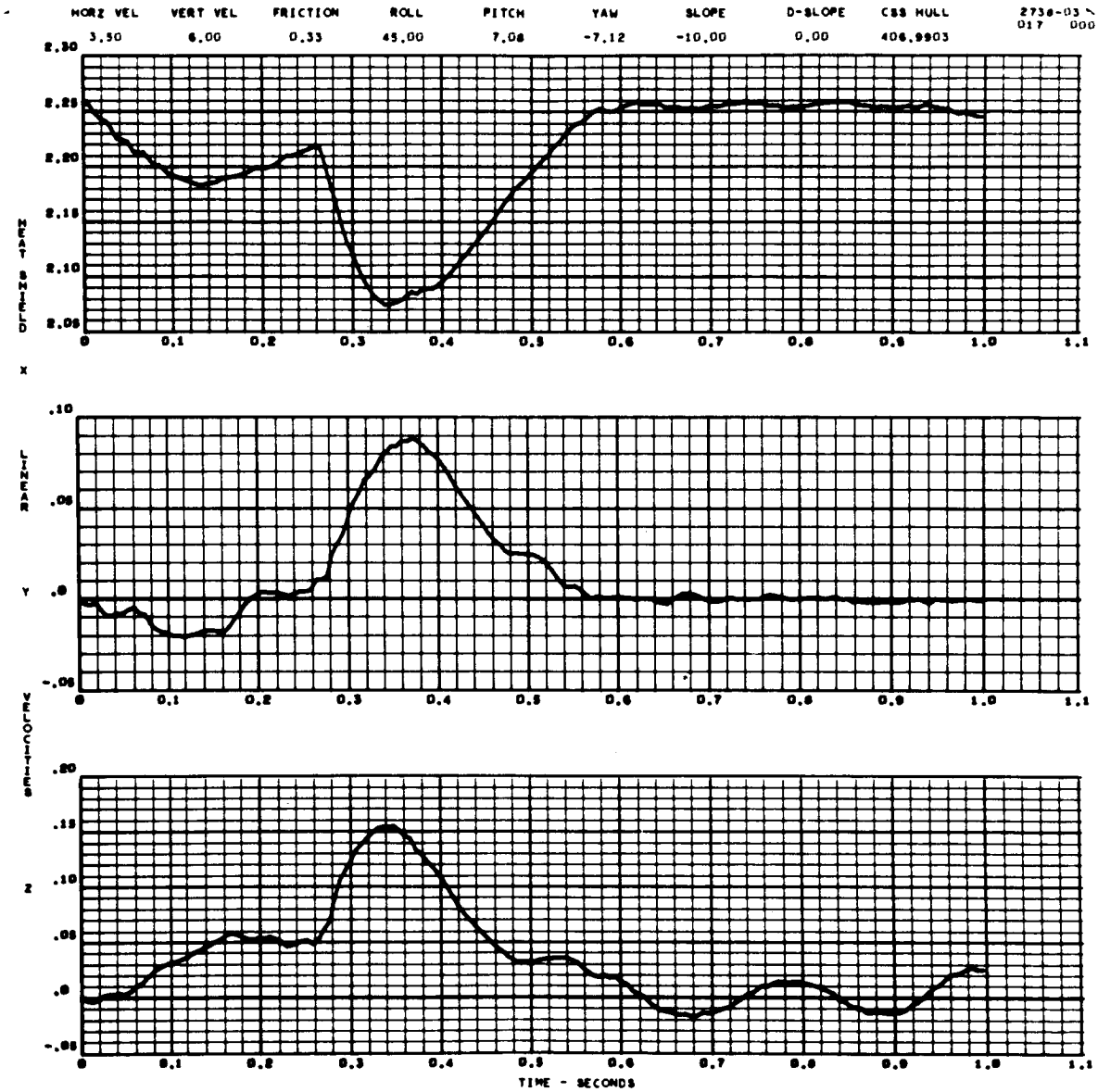

Body-Frame Relative Displacements (ft) - Case 2

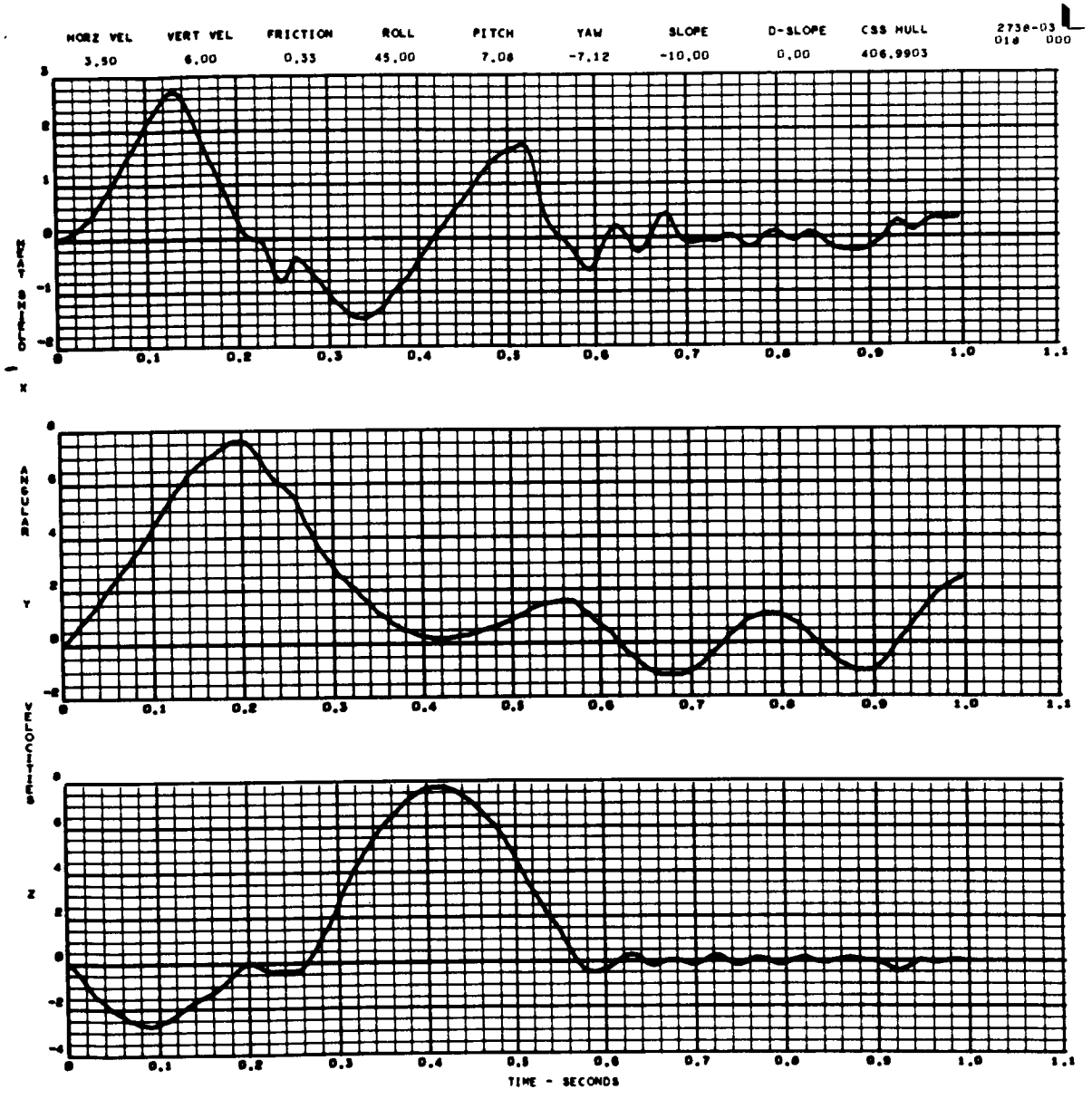

Body-Frame Relative Displacements (deg) - Case 2

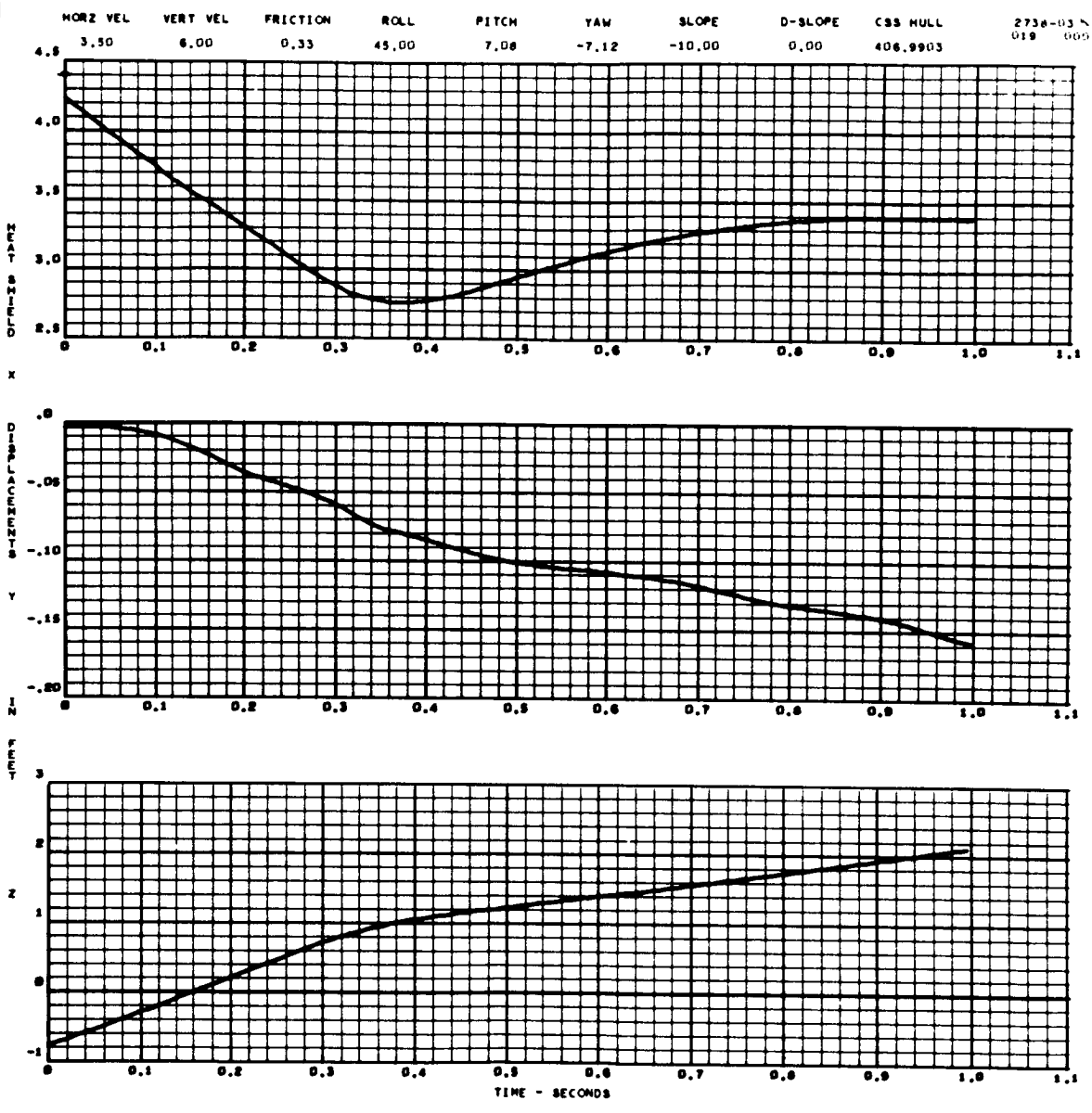

Leg Frame Displacements (ft) - Case 2

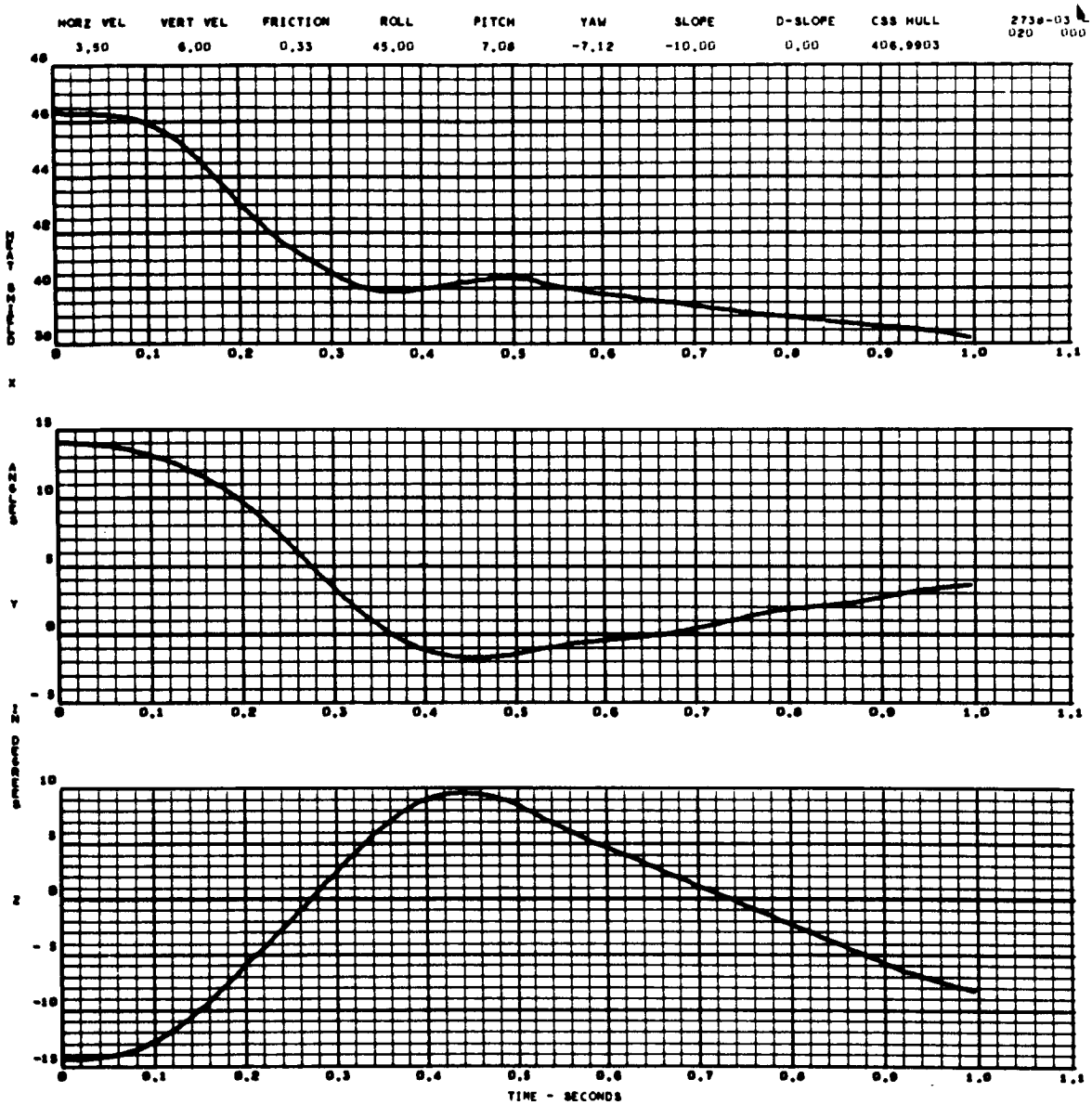

Leg Frame Displacements (deg) - Case 2

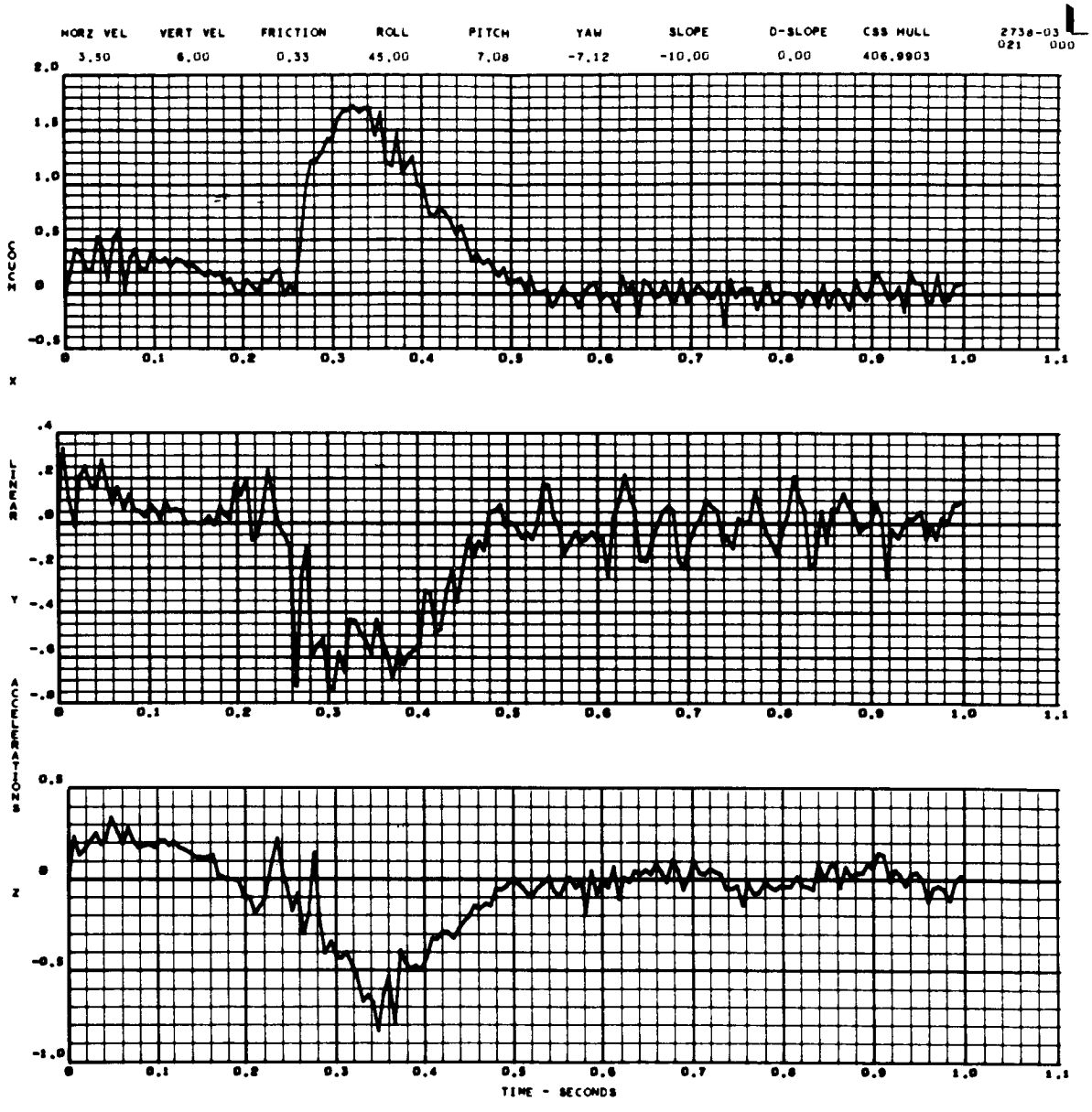

Body Accelerations (g's) - Case 2

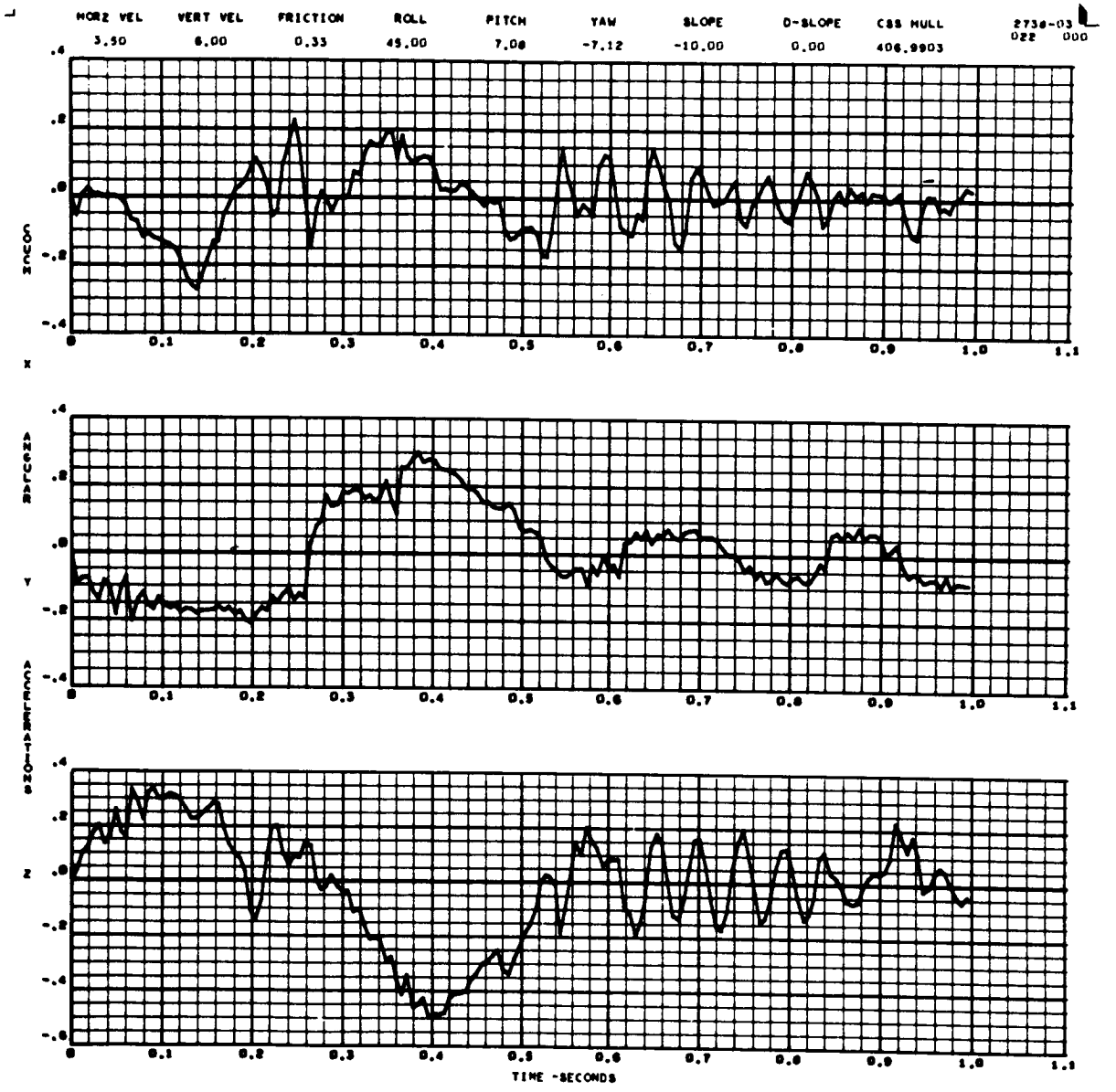

Body Angular Accelerations (g's/ft)- Case 2

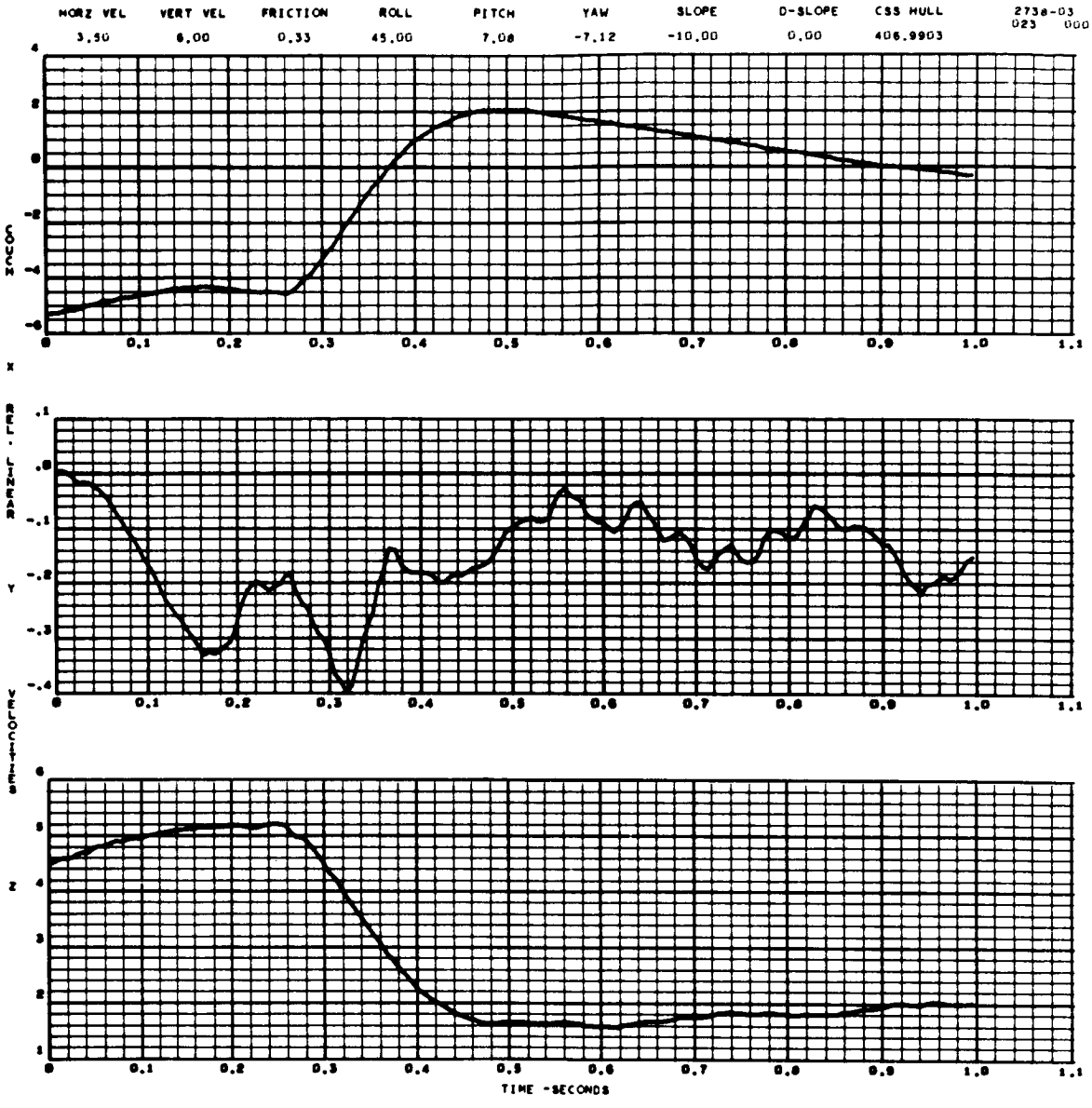

Body Velocities (fps) - Case 2

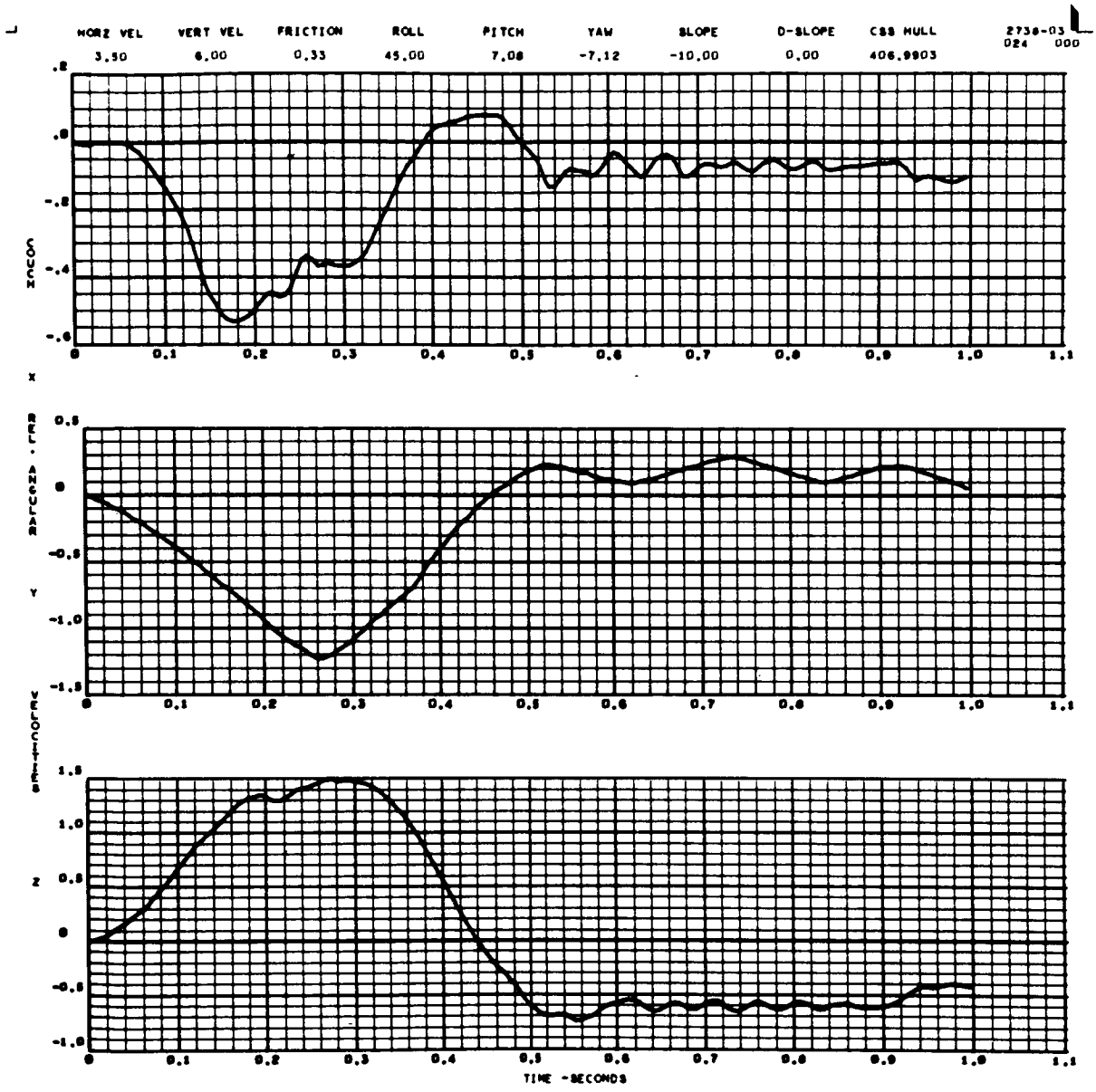

Body Angular Velocities (rad/sec) - Case 2

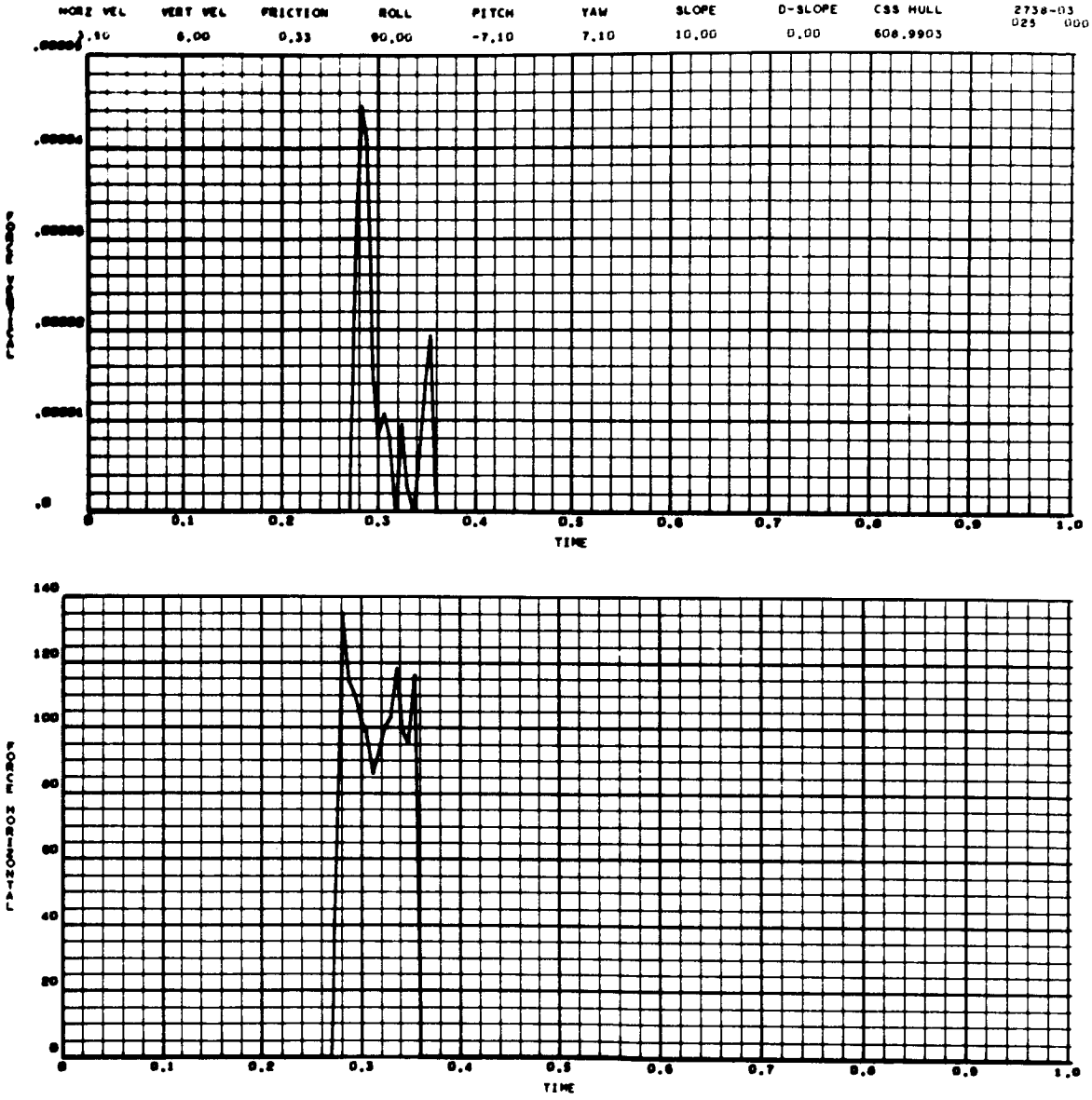

Foot Pad Forces - Case 4

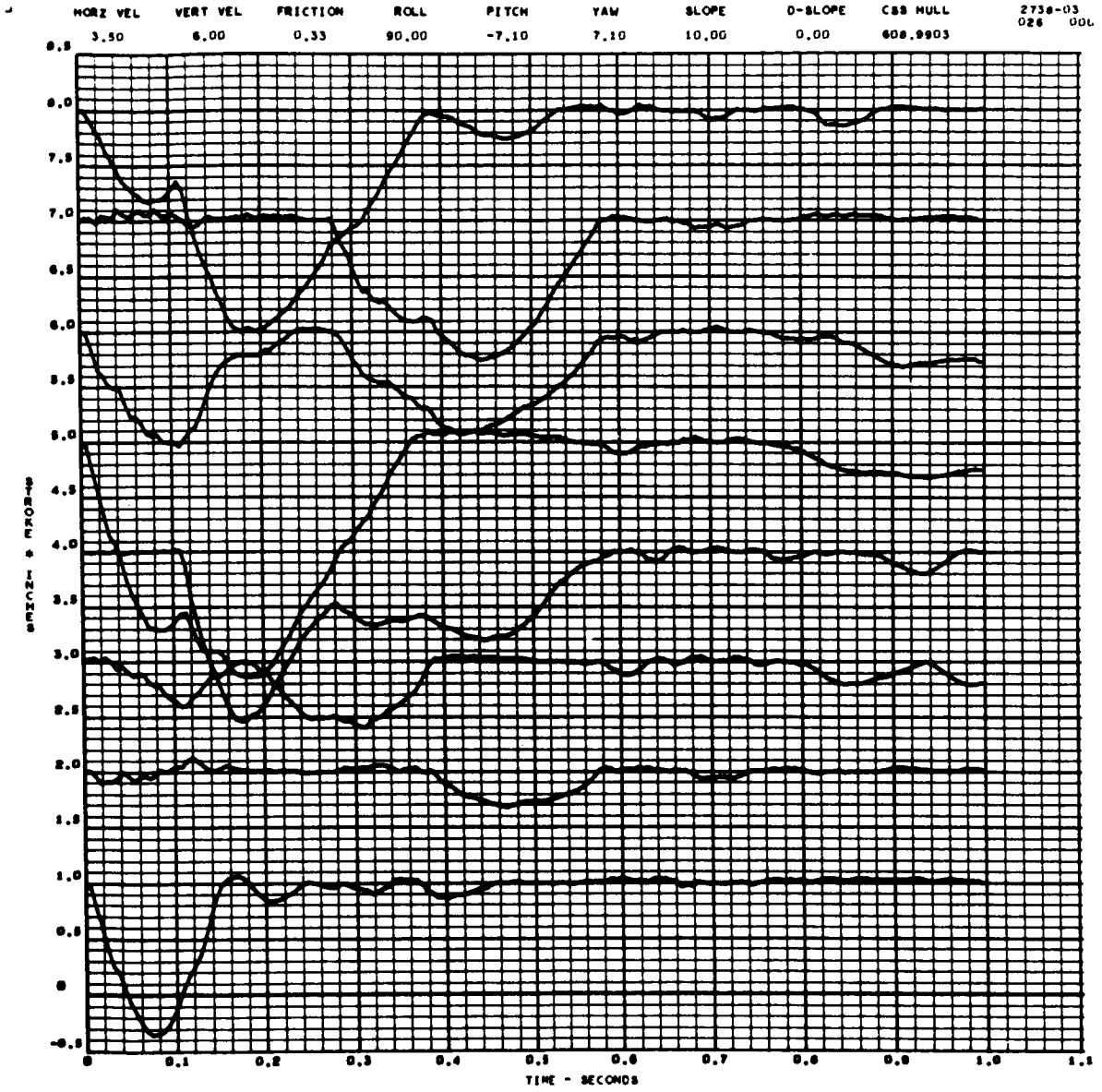

Attenuator Strokes - Case 4

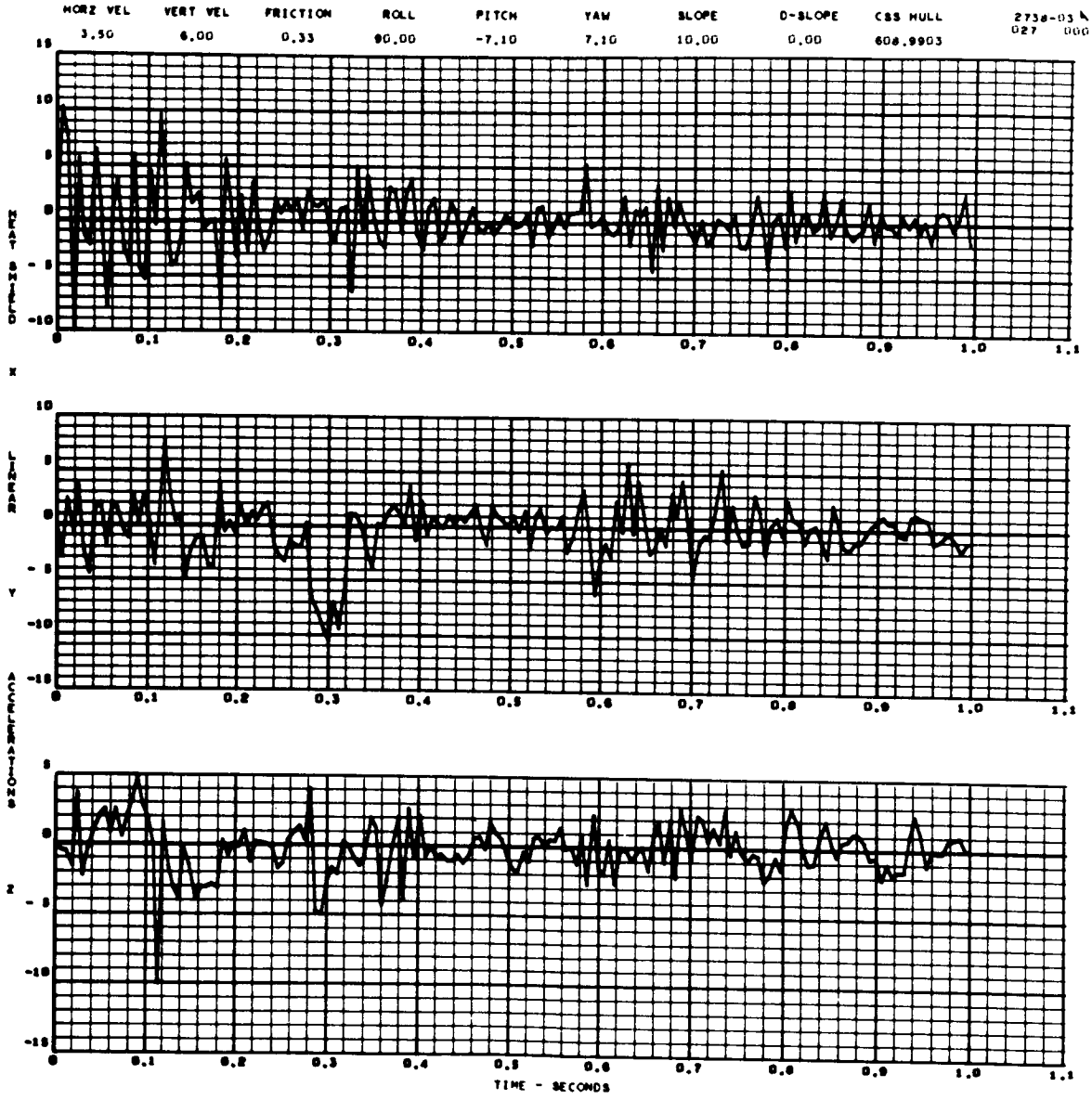

Leg Frame Linear Accelerations (g's) - Case 4

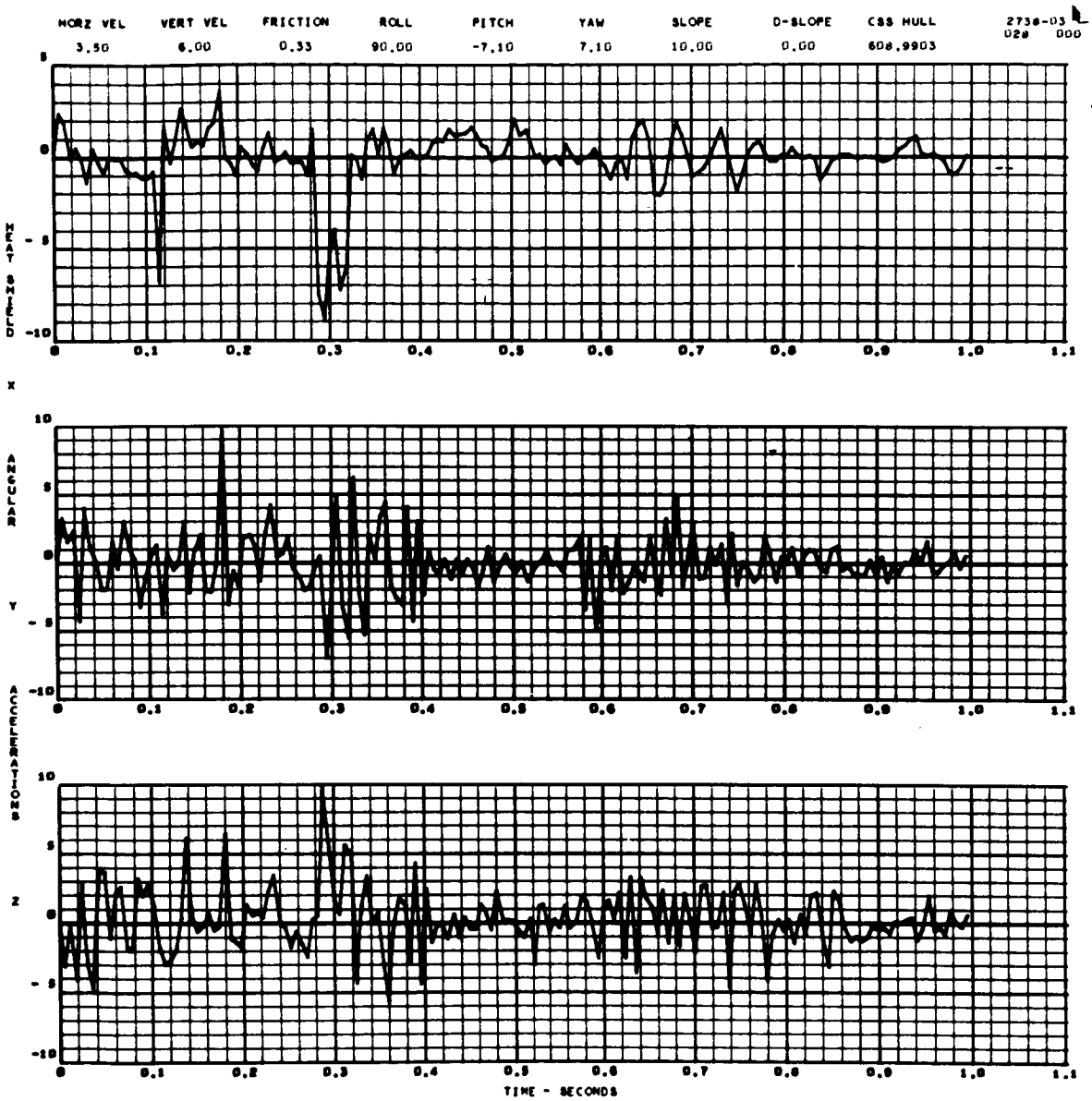

Leg Frame Angular Accelerations (g's/ft) - Case 4

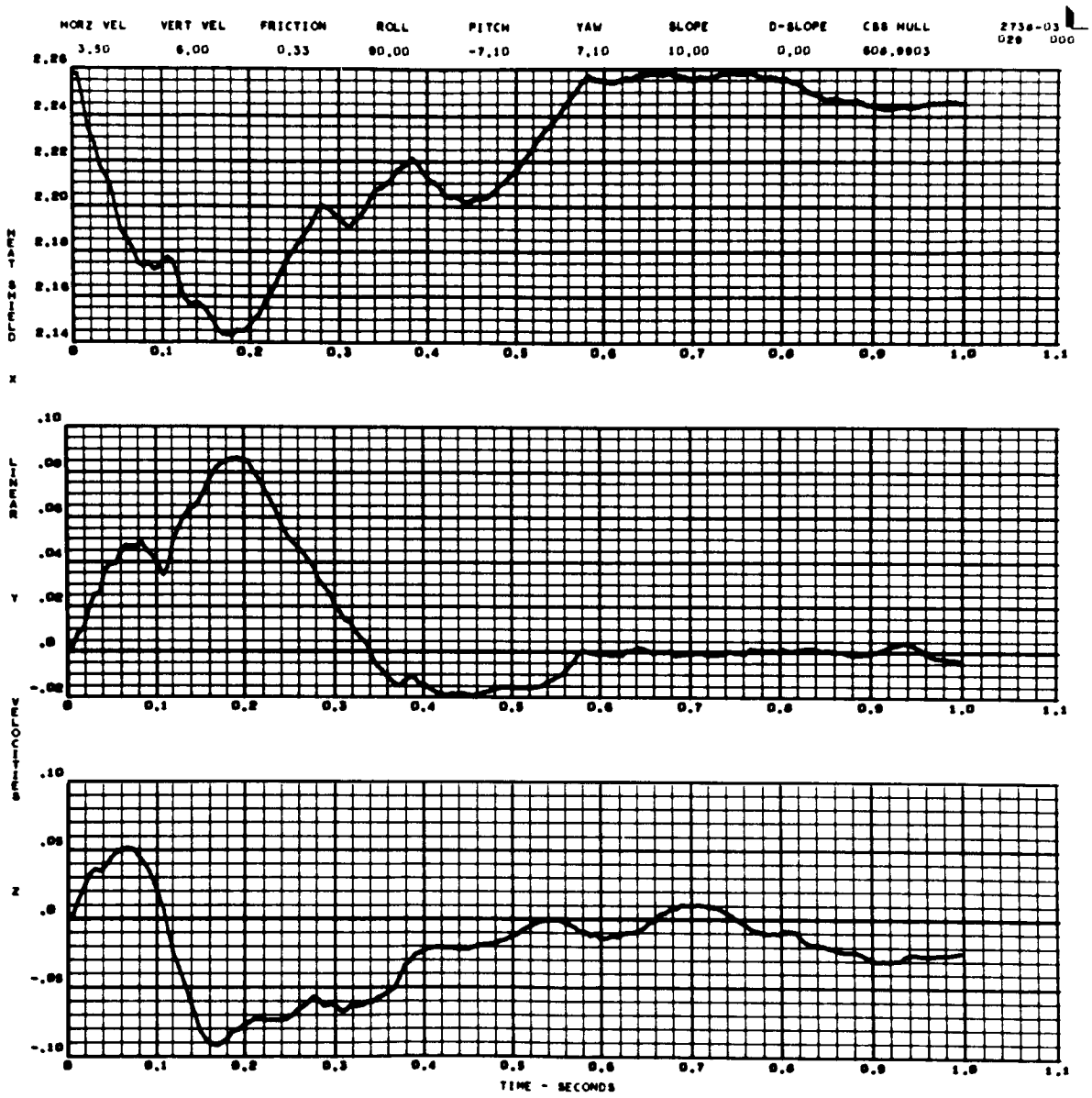

Body-Frame Relative Displacements (ft) - Case 4

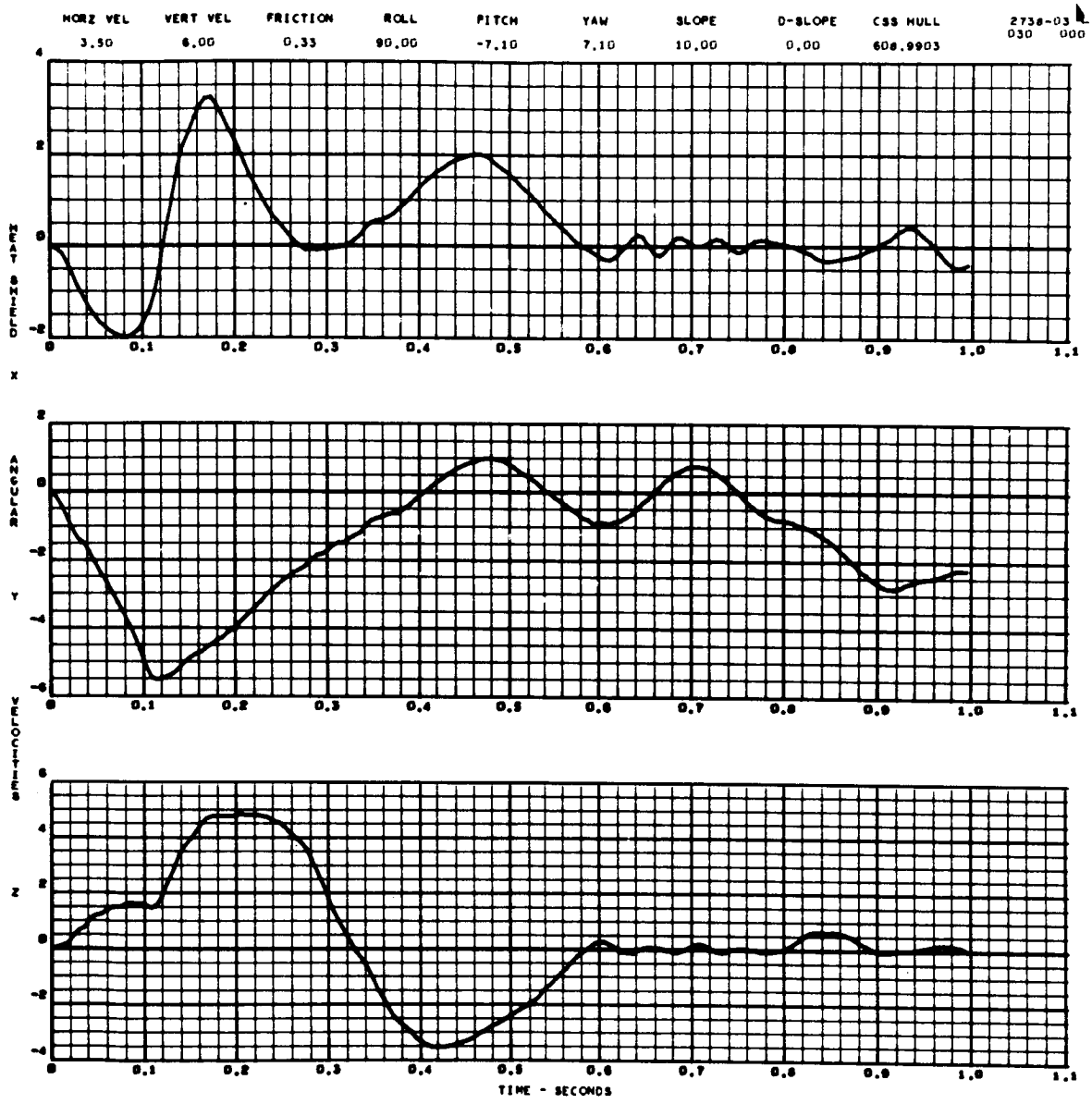

Body-Frame Relative Displacements (deg) - Case 4

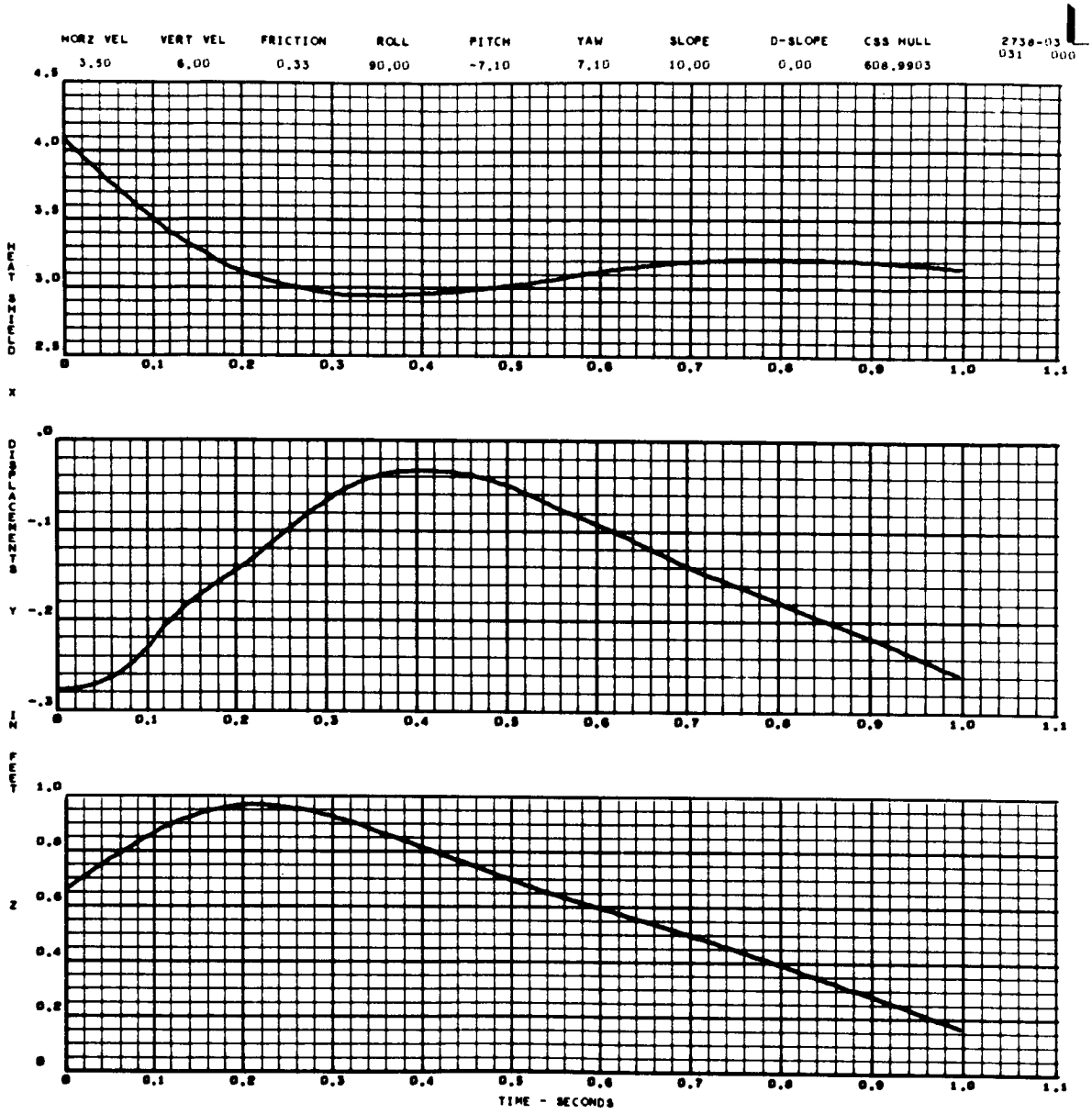

Leg Frame Displacements (ft) - Case 4

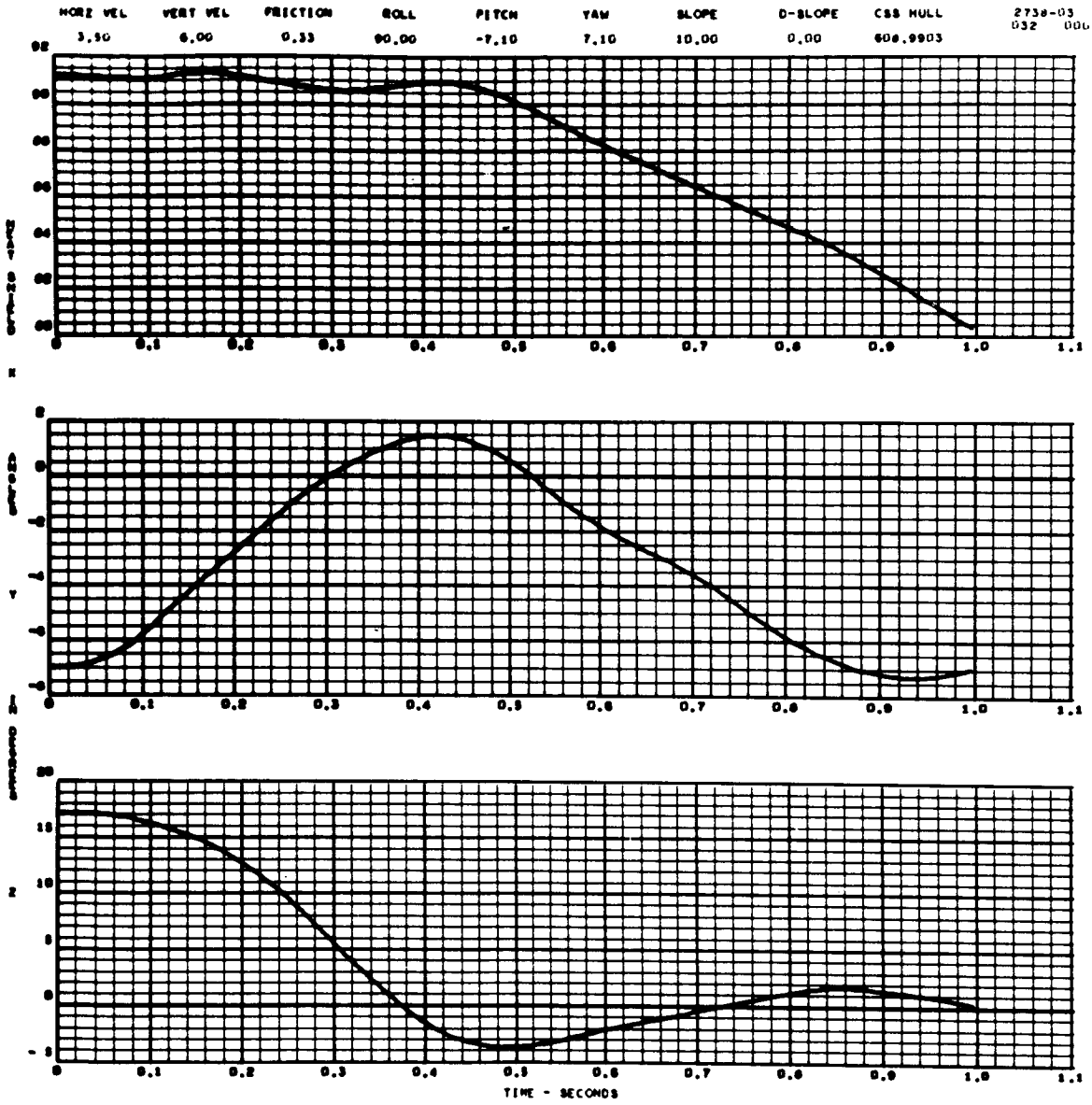

Leg Frame Displacements (deg) - Case 4

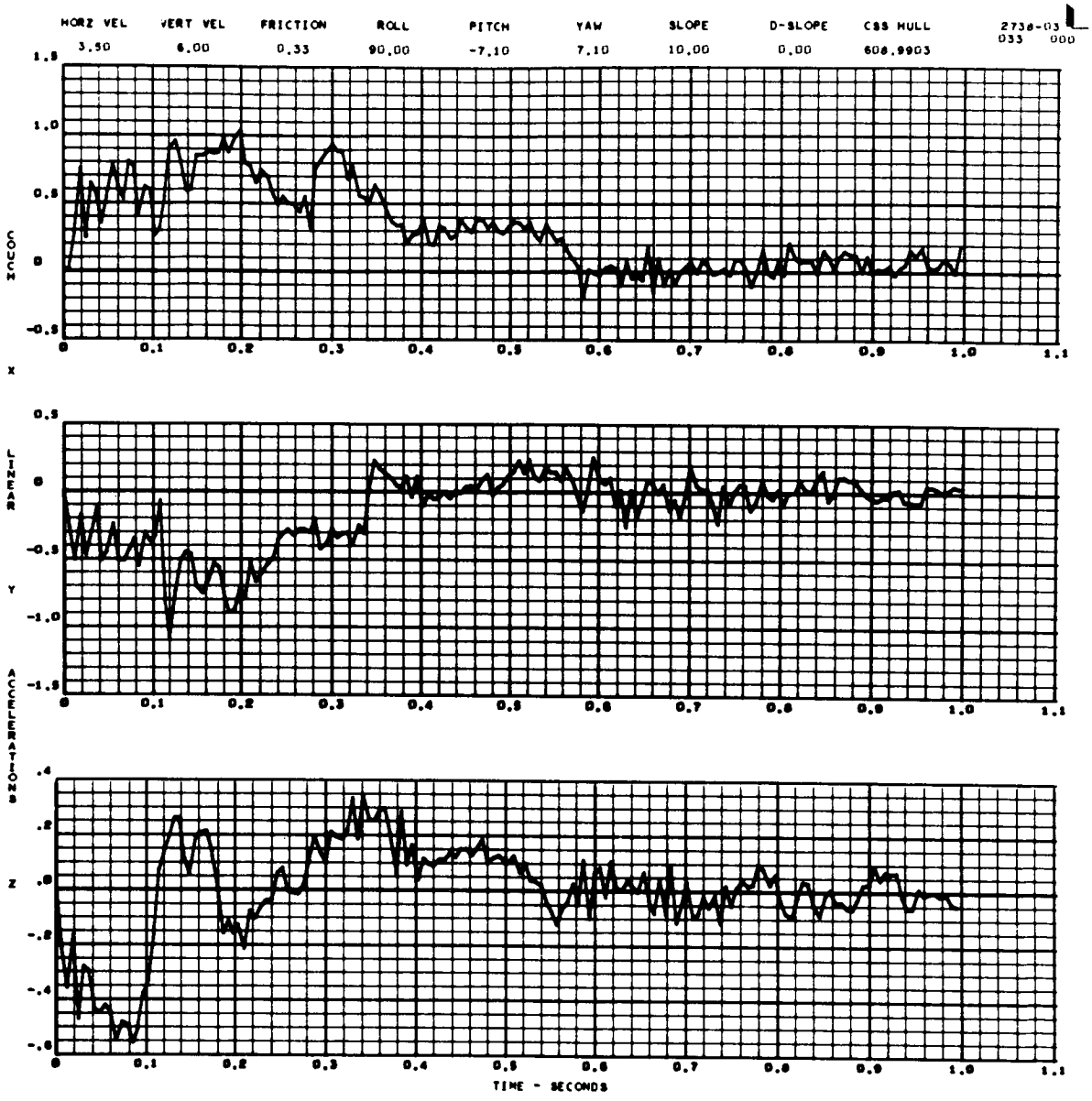

Body Accelerations (g's) - Case 4

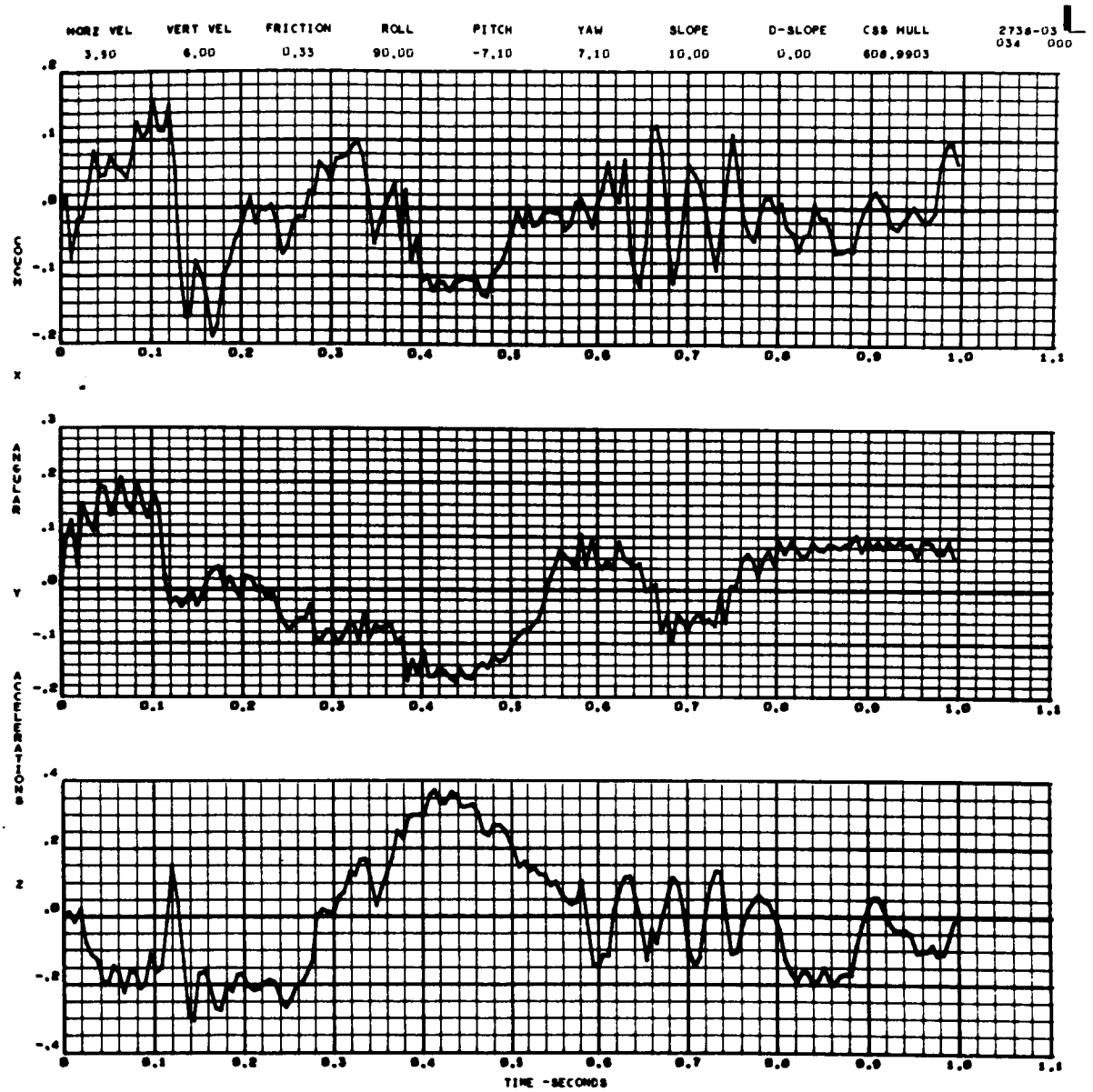

Body Angular Accelerations (g's/ft) - Case 4

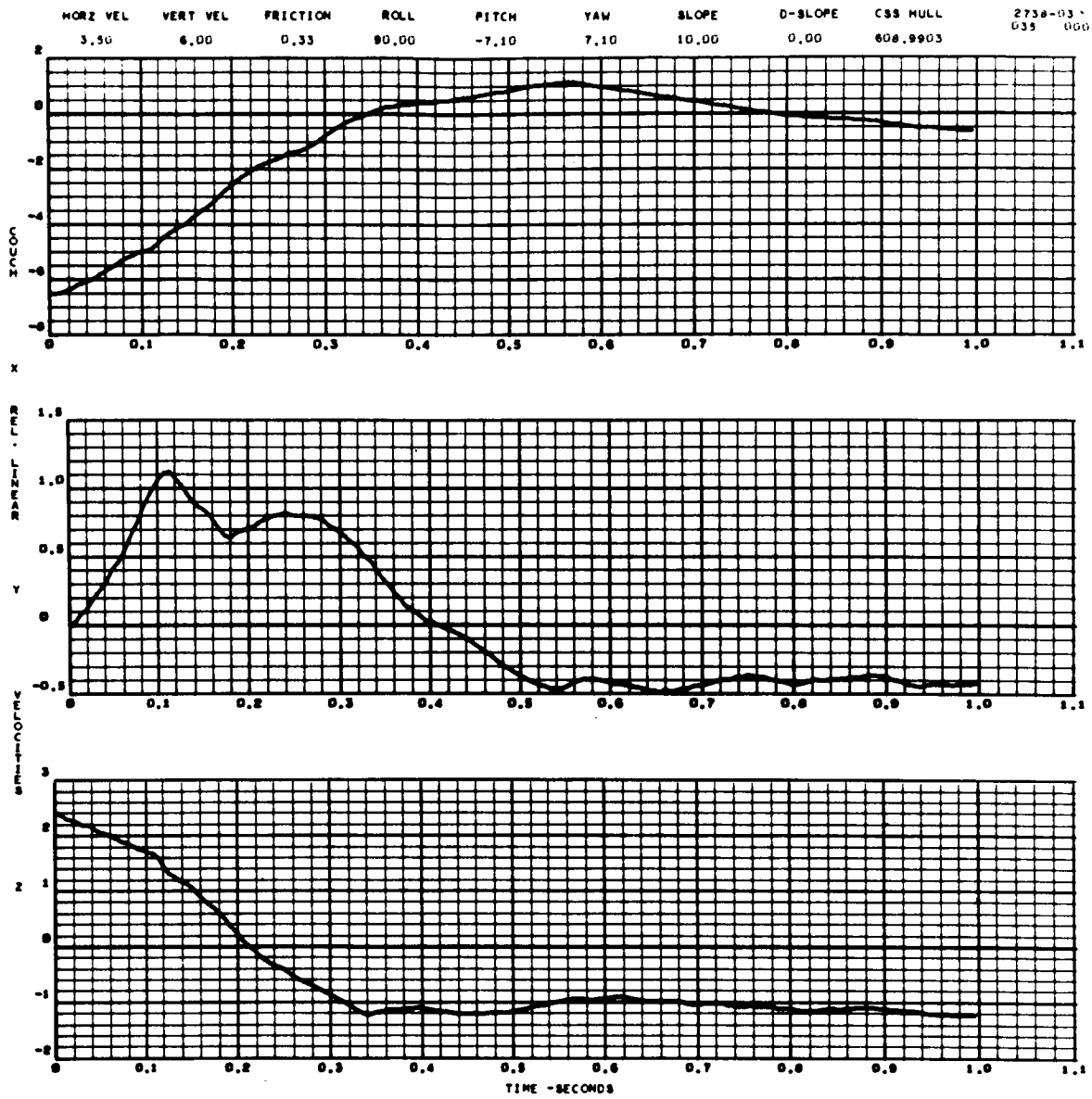

Body Velocities (fps) - Case 4

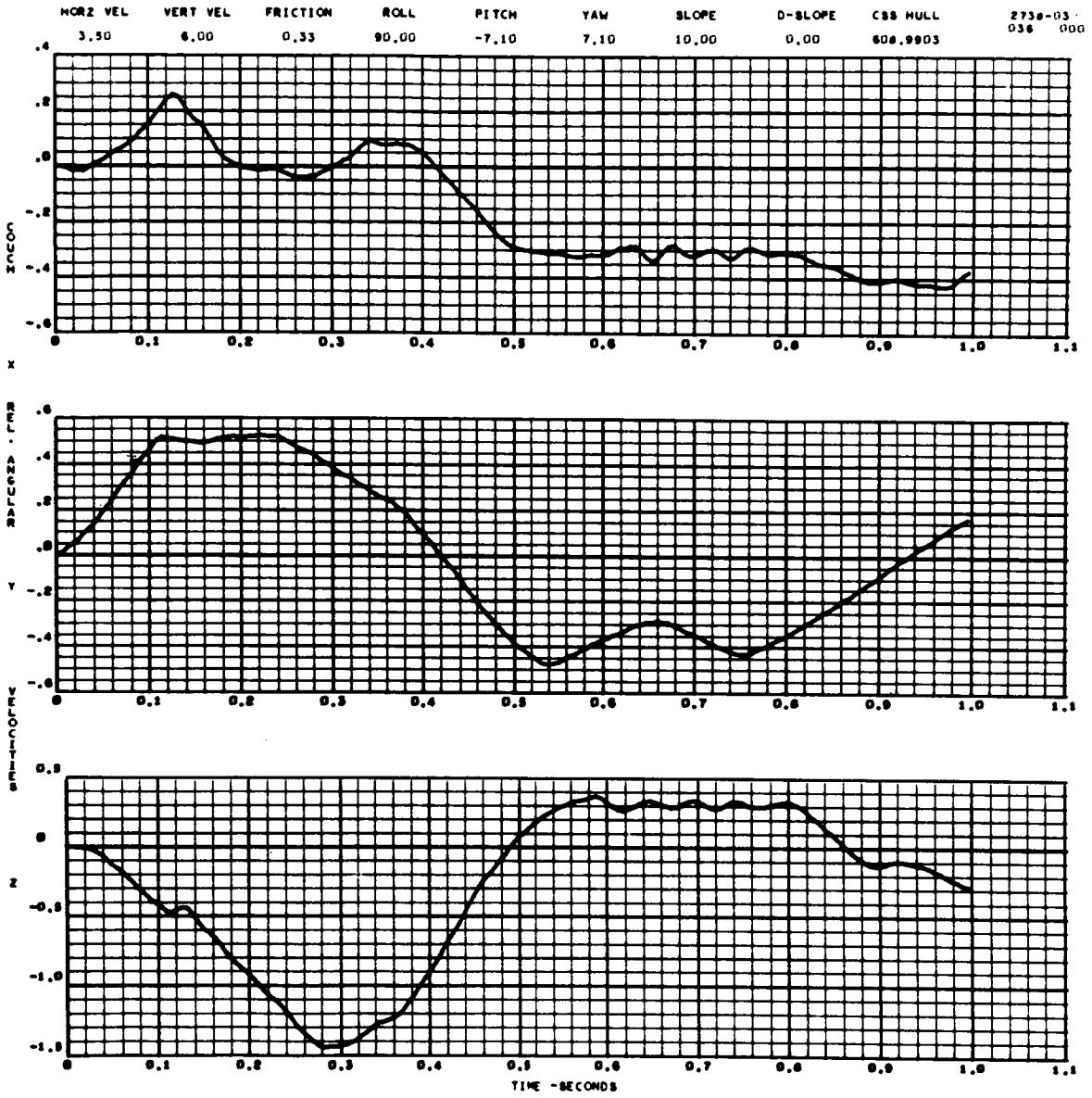

Body Angular Velocities (rad/sec) - Case 4

APPENDIX C

BACKGROUND CONCEPTUAL DRAWINGS

Drawing Number	Title
2030-5	LFV Configurations-Engine Throttling Versus Engine Gimballing-Flight Control.
2030-6	Lunar Flying Vehicle-Kinesthetic Control and Automatic Control.
2030-7	Lunar Flying Vehicle-Differential Throttle Control-Manual-Operated.
2030-8	LFV Install-LEM Descent Stage Clearance and Location.
2030-9	Lunar Flying Vehicle-Baseline Configuration-Kinesthetic Control.
2030-10	Lunar Flying Vehicle - Four Spherical Tanks, Parametric Gear and Engines.
2030-11	Lunar Flying Vehicle - Two Spherical Tanks, Parametric Gear and Engines.
2030-12	Lunar Flying Vehicle-Four Cylindrical Tanks, Tricycle Spring Leaf Gear, Single Engine.
2030-13	Lunar Flying Vehicle-Two Cylindrical IM Tanks, Four Dual-Pad Gear, Four Engines.
2030-14	Lunar Flying Vehicle-Lunar Module Stowage and Fueling Interface.
2030-15A	Lunar Flying Vehicle-Lunar Module Stowage and Removal Mechanism.
2030-16	Lunar Flying Vehicle-Four Spherical and Four Cylindrical Tanks with Parallel Feed.
2030-18	Lunar Flying Vehicle-4-Engine, 2-Tank, Manual Control.
2030-19	Lunar Flying Vehicle-Landing Gear Attenuation Configurations.
2030-23	Lunar Flying Vehicle-3-Engine, 4-Tank, Kinesthetic Control.

Drawing Number	Title
2030-24	Lunar Flying Vehicle 1-Engine, 2-Tank, Kinesthetic Control.
2030-25	Lunar Flying Vehicle Operational Sequence.
2030-26	Lunar Flying Unit 3-Engine, 2-Tank, Manual Control.
2030-28	Propellant Tank Instal-Lunar Flying Vehicle (Ref. 2030-24).
2030-29	Engine Installation-Single Lunar Flying Vehicle (2030-24).
2030-31	LFU Control Console-4-Engine-Automatic Control.
2030-34	LFU-LM Tanks-4 Engines Swinging Engine Concept.
2030-36	LFU-4-Engine Cluster Single Axis Gimbal.

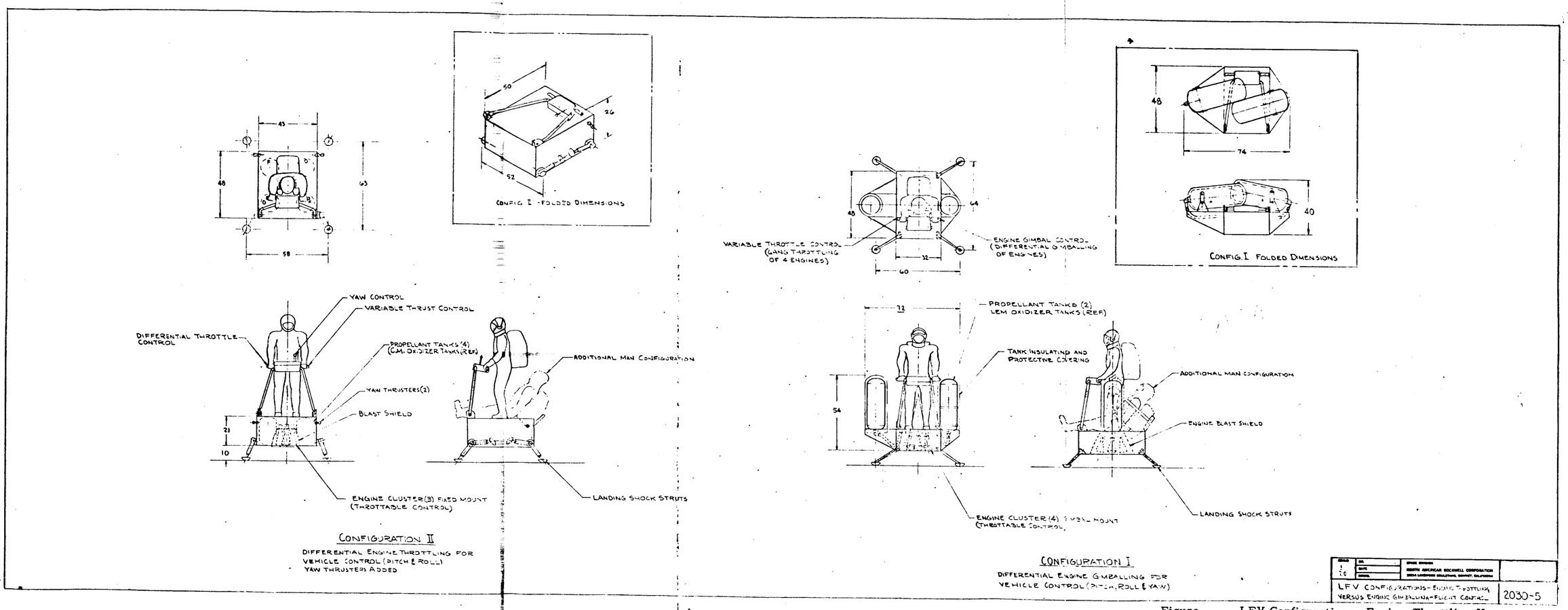

Figure . LFV Configurations, Engine-Throttling Versus Engine Gimballing Flight Control (Drawing 2030-5)

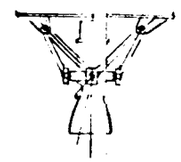

DETAIL 10
GIMBALLED ENGINE FOR
AUTOMATIC VEHICLE ONLY

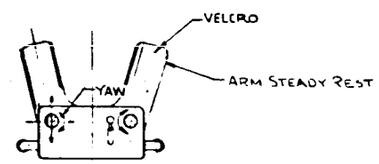

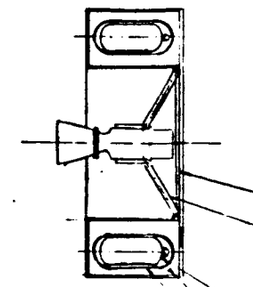

SECTION 13 13

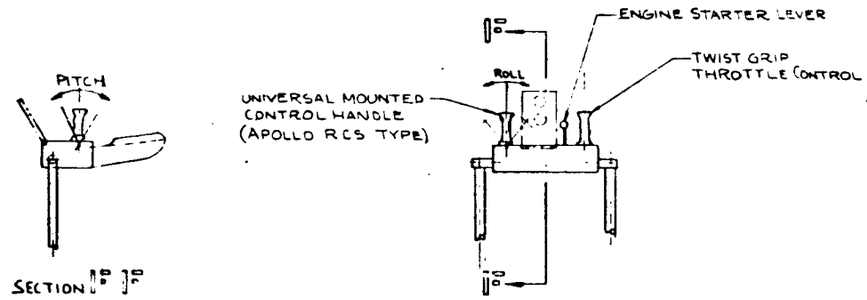

SECTION 15 15

DETAIL 15
AUTOPILOT CONTROL CONSOLE

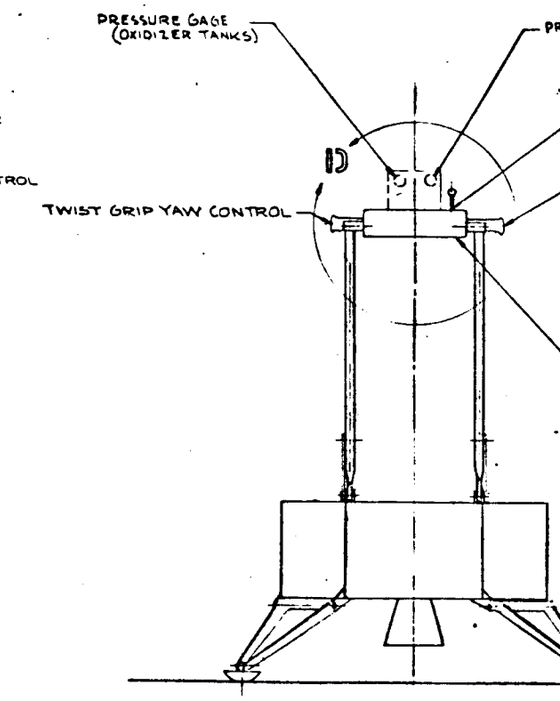

LFV - AUTOMATIC CONTROL

1

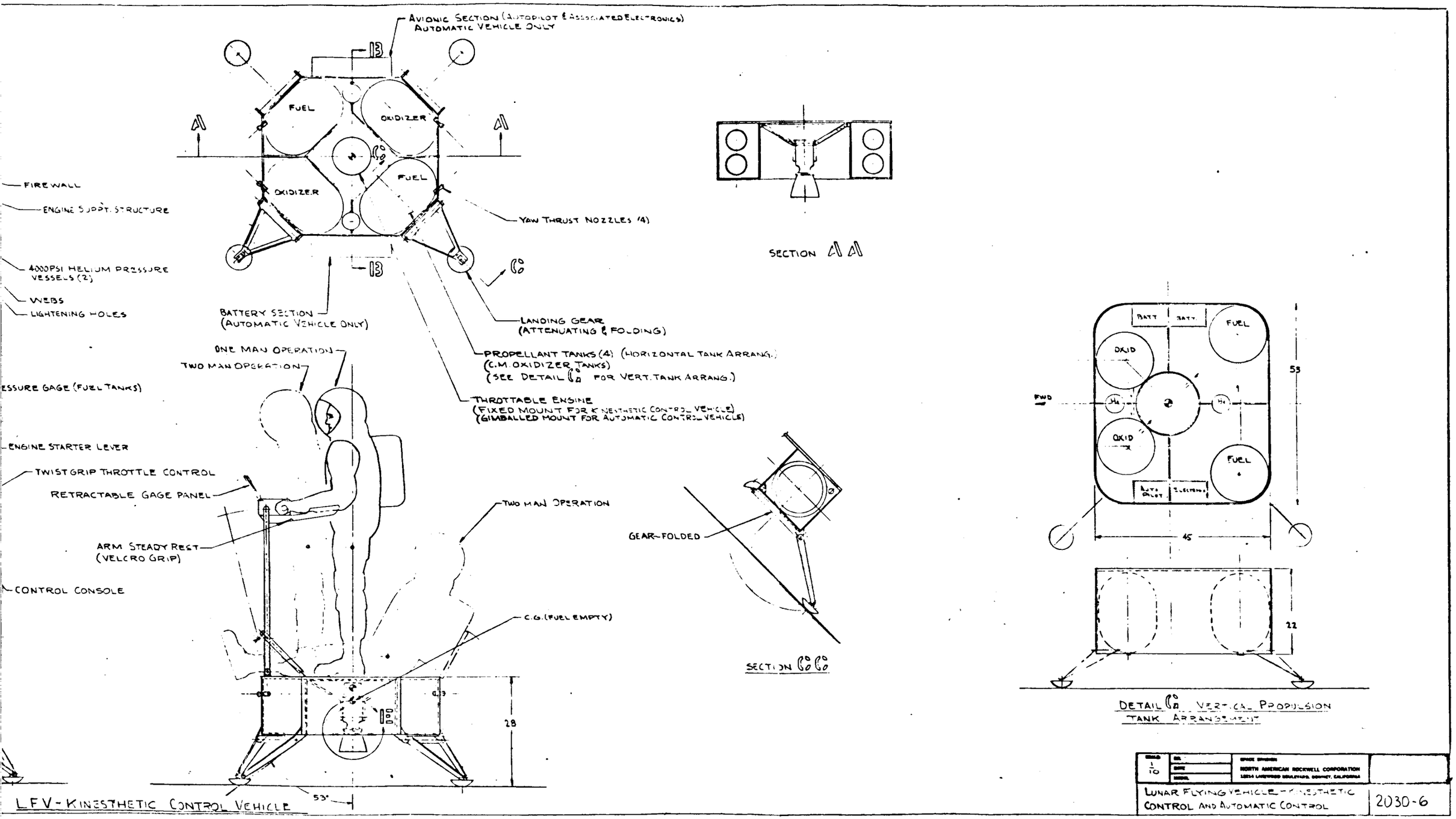

Figure . LFV Kinesthetic Control and Automatic Control (Drawing 2030-6)

2

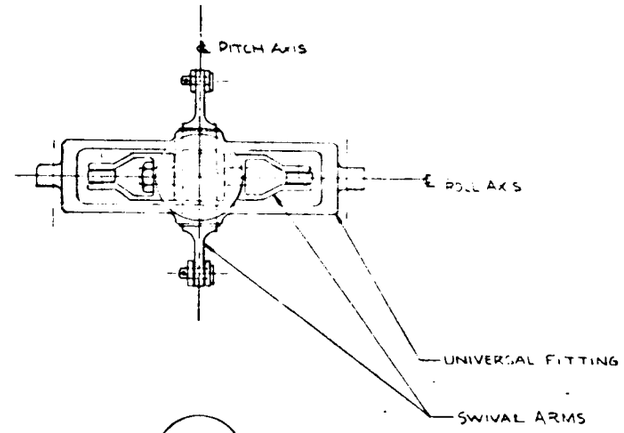

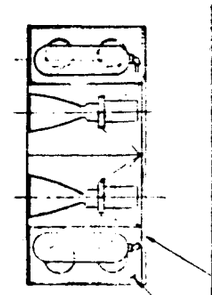

SECTION [3] [3]

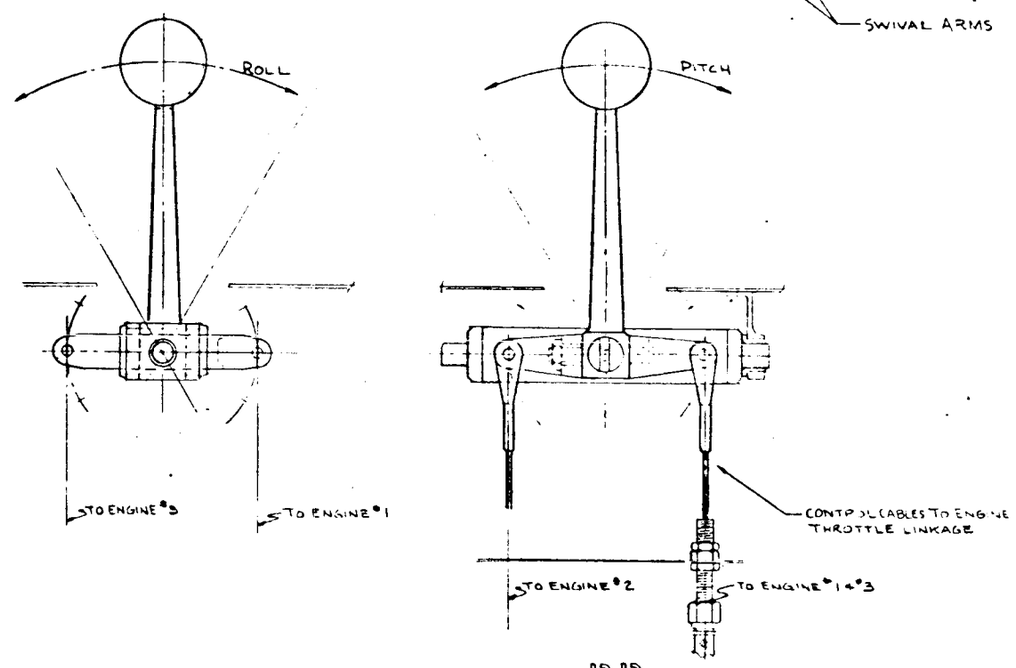

SECTION [D] [D]

PITCH AND ROLL CONTROL

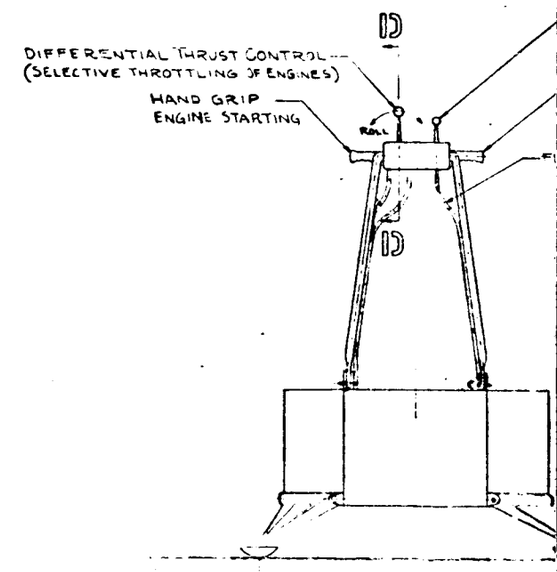

1

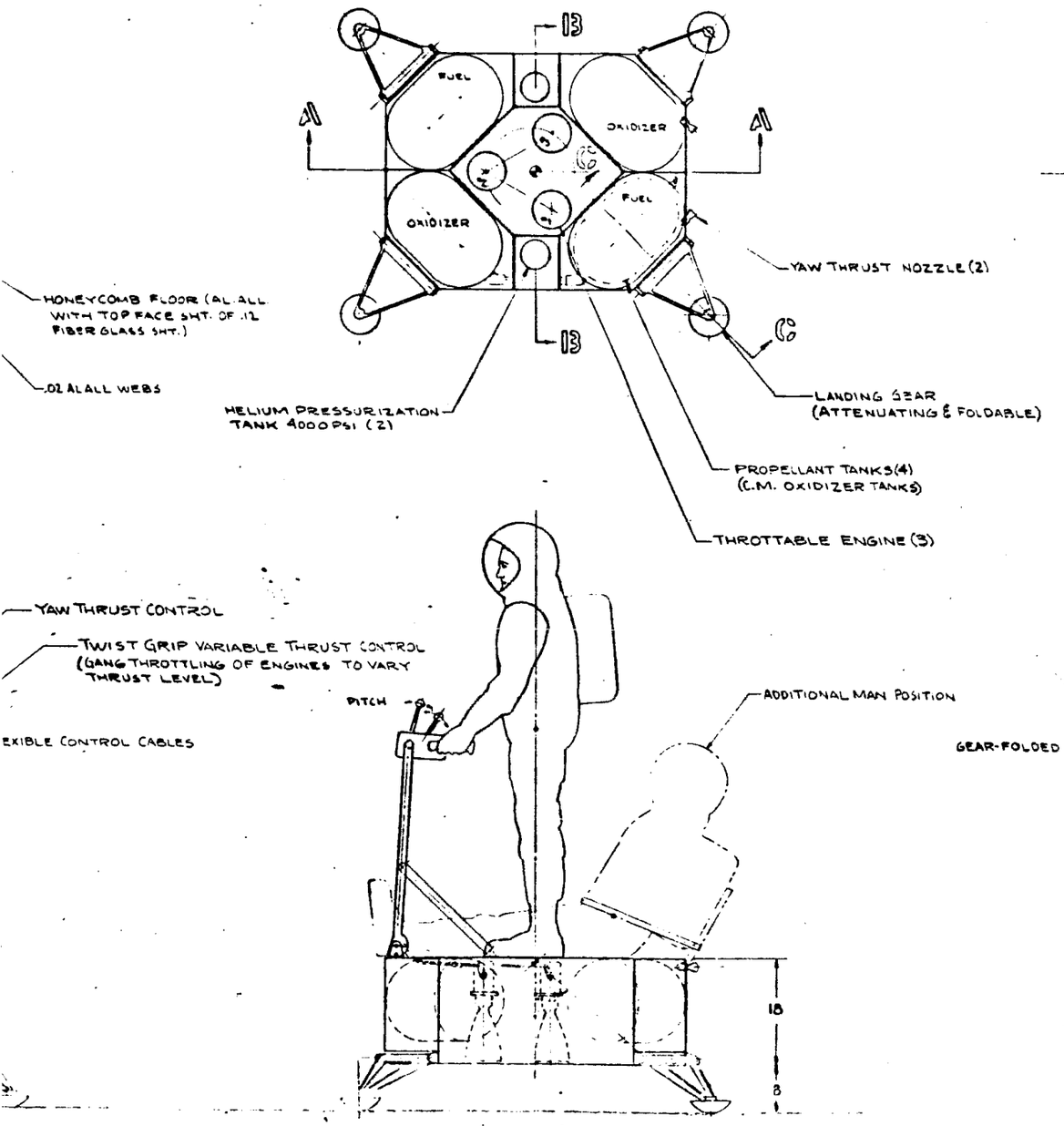

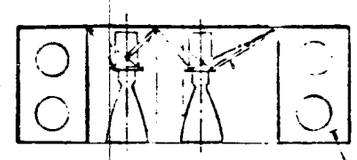

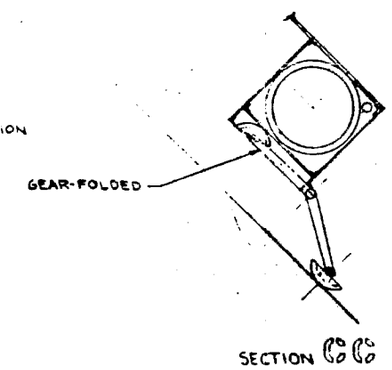

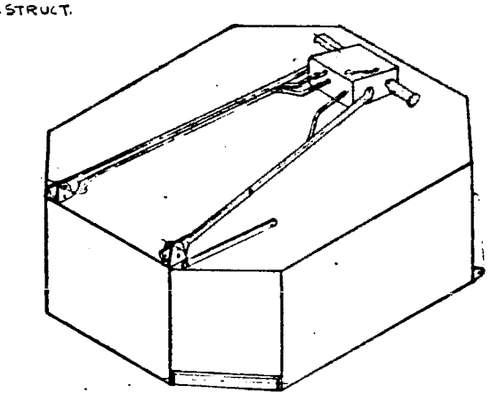

SCALE 1/4	SPACE DIVISION NORTH AMERICAN ROCKWELL	
THROTTLE CONTROL-MANUAL		2030-7

Figure . LFV Differential Throttle Control, Manually Operated (Drawing 2030-7)

(2)

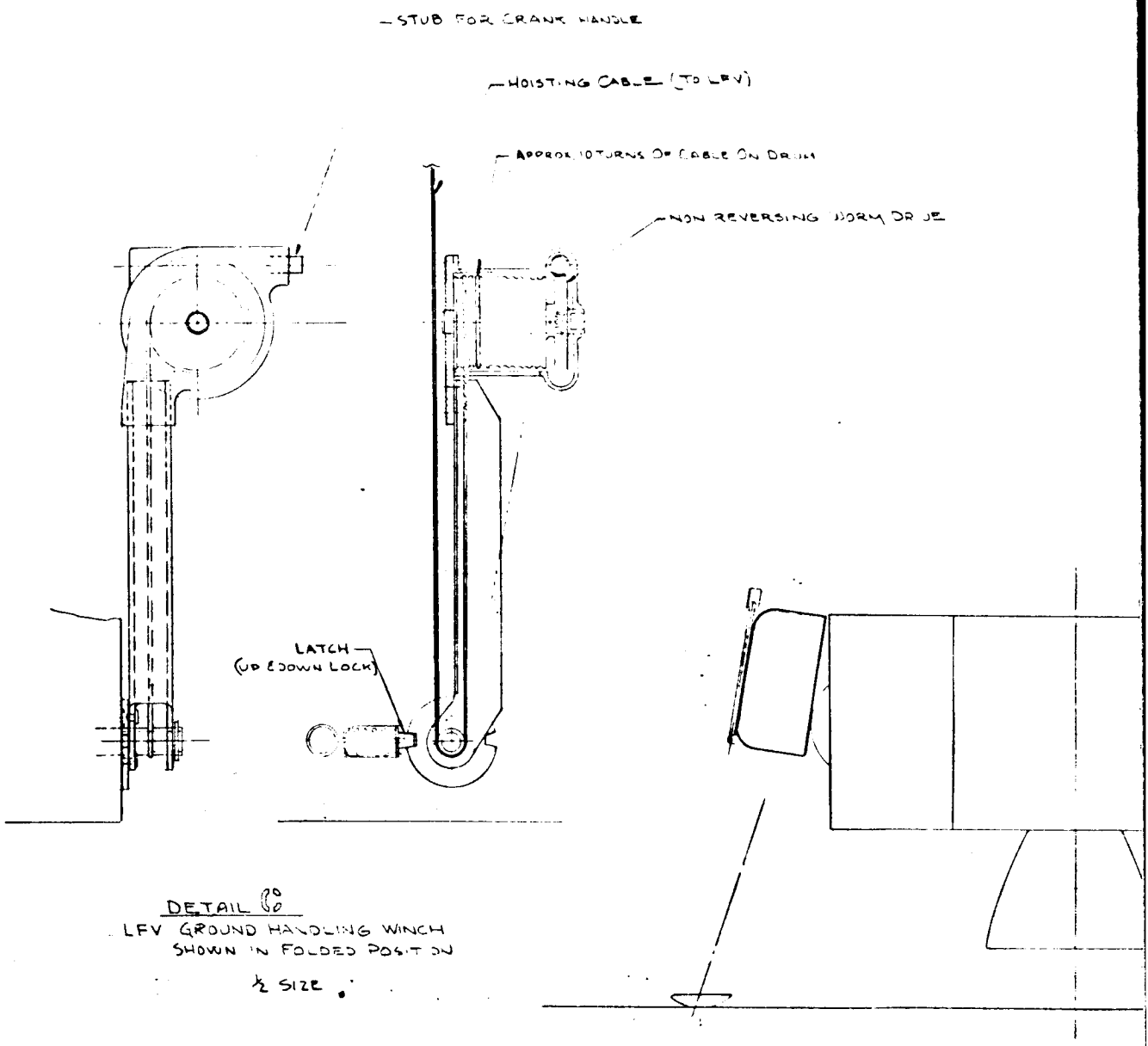

DETAIL 80
LFV GROUND HANDLING WINCH
SHOWN IN FOLDED POSITION
½ SIZE

1

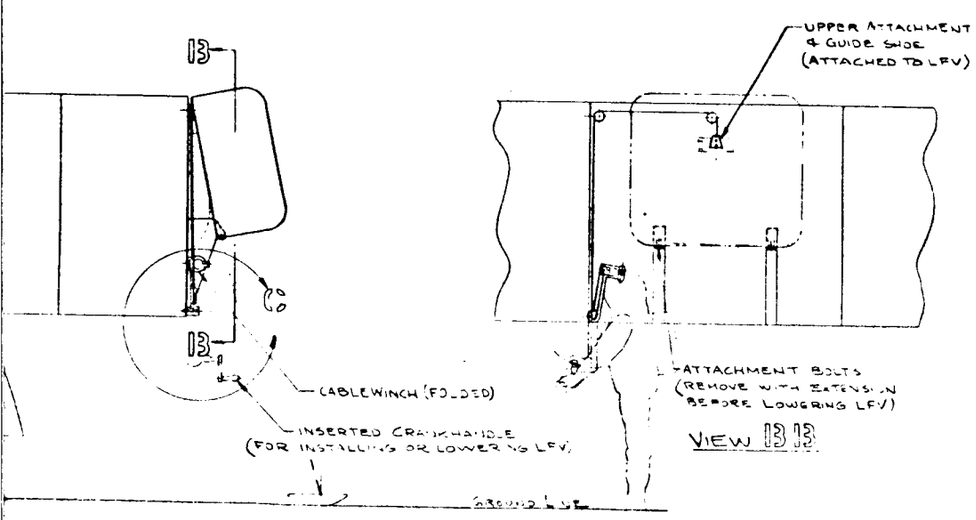

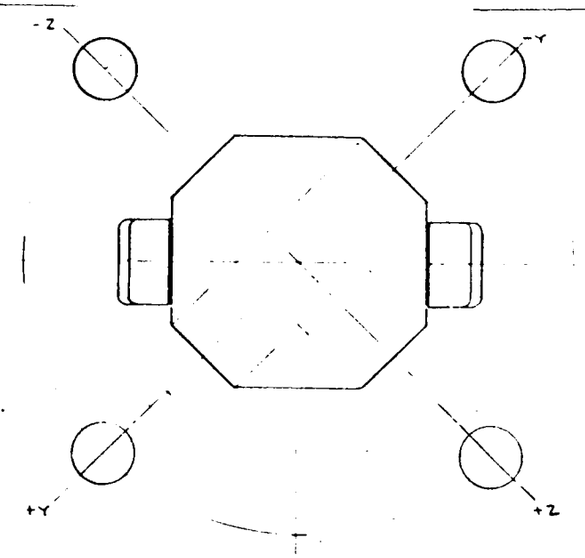

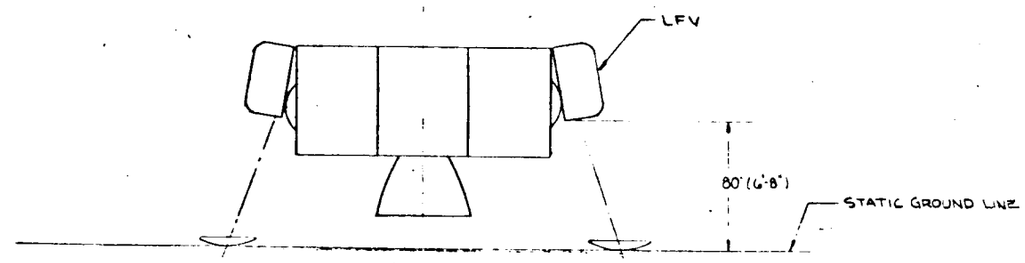

STATIC POSITION OF LEM DESCENT STAGE
AND RELATED POSITION OF LFV TO GROUND LINE

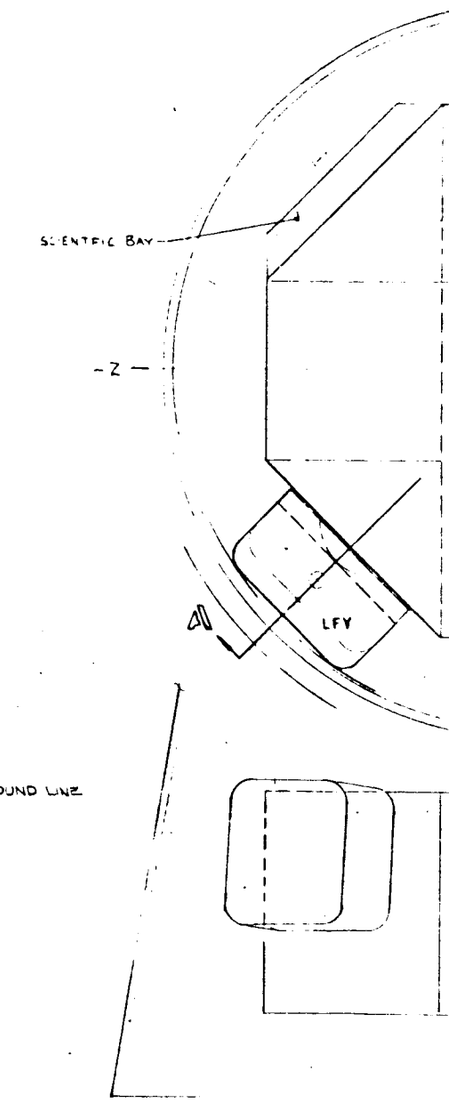

2

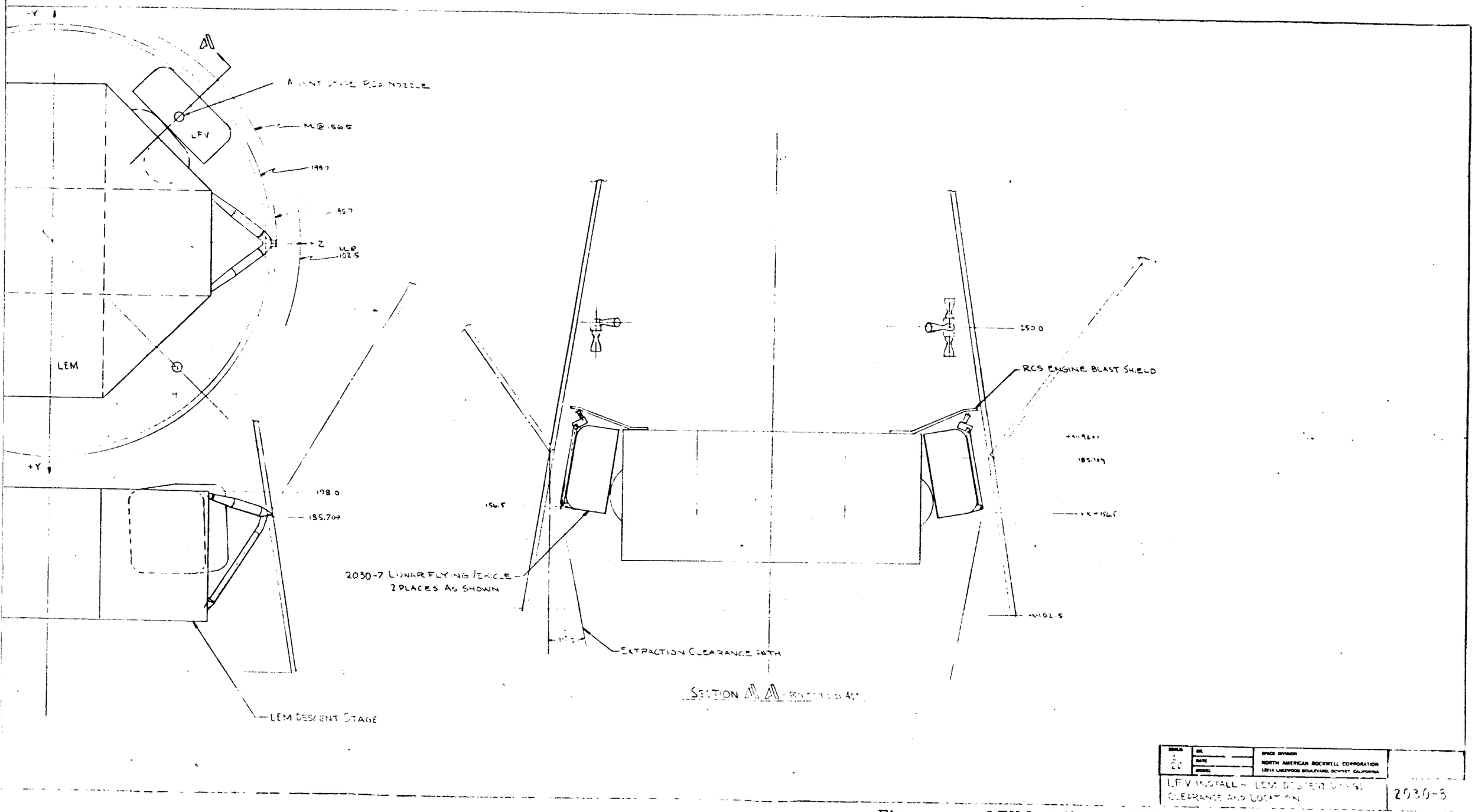

SCALE 1/20	DR.	SPACE DIVISION NORTH AMERICAN ROCKWELL CORPORATION 12214 LAKEWOOD BOULEVARD, DOWNEY, CALIFORNIA
	DATE	
	MODEL	
LFV INSTALL - LEM DESCENT STAGE CLEARANCE AND LOCATION		2030-8

Figure . LFV Installation, LM Descent Stage Clearance and Location (Drawing 2030-8)

3

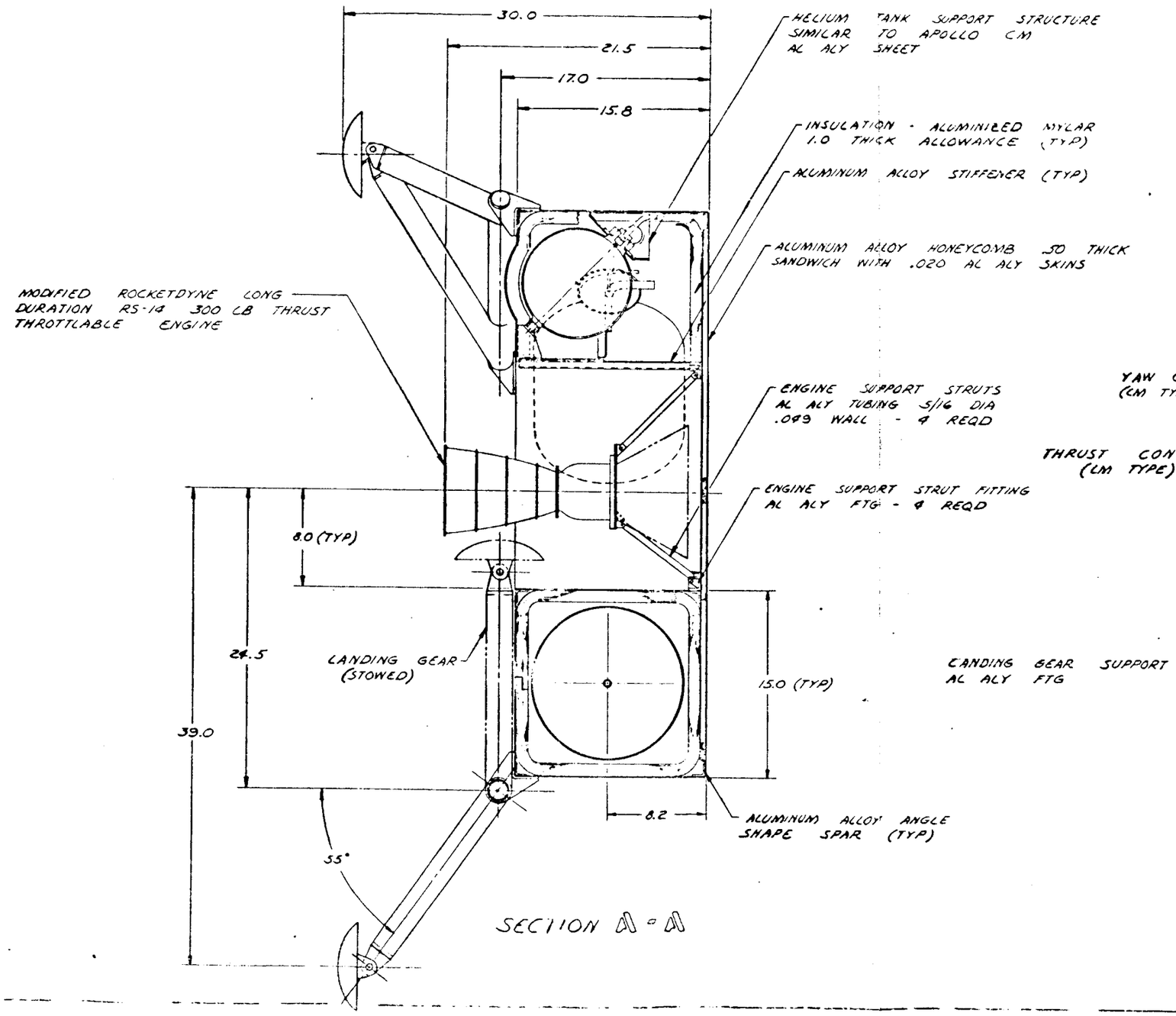
30.0
21.5
17.0
15.8
HELIUM TANK SUPPORT STRUCTURE SIMILAR TO APOLLO CM AL ALY SHEET
INSULATION - ALUMINIZED MYLAR 1.0 THICK ALLOWANCE (TYP)
ALUMINUM ALLOY STIFFENER (TYP)
ALUMINUM ALLOY HONEYCOMB .50 THICK SANDWICH WITH .020 AL ALY SKINS
MODIFIED ROCKETDYNE LONG DURATION RS-14 300 LB THRUST THROTTLABLE ENGINE
ENGINE SUPPORT STRUTS AL ALY TUBING 5/16 DIA .049 WALL - 4 REQD
ENGINE SUPPORT STRUT FITTING AL ALY FTG - 4 REQD
8.0 (TYP)
24.5
LANDING GEAR (STOWED)
15.0 (TYP)
39.0
8.2
ALUMINUM ALLOY ANGLE SHAPE SPAR (TYP)
55°
SECTION A-A

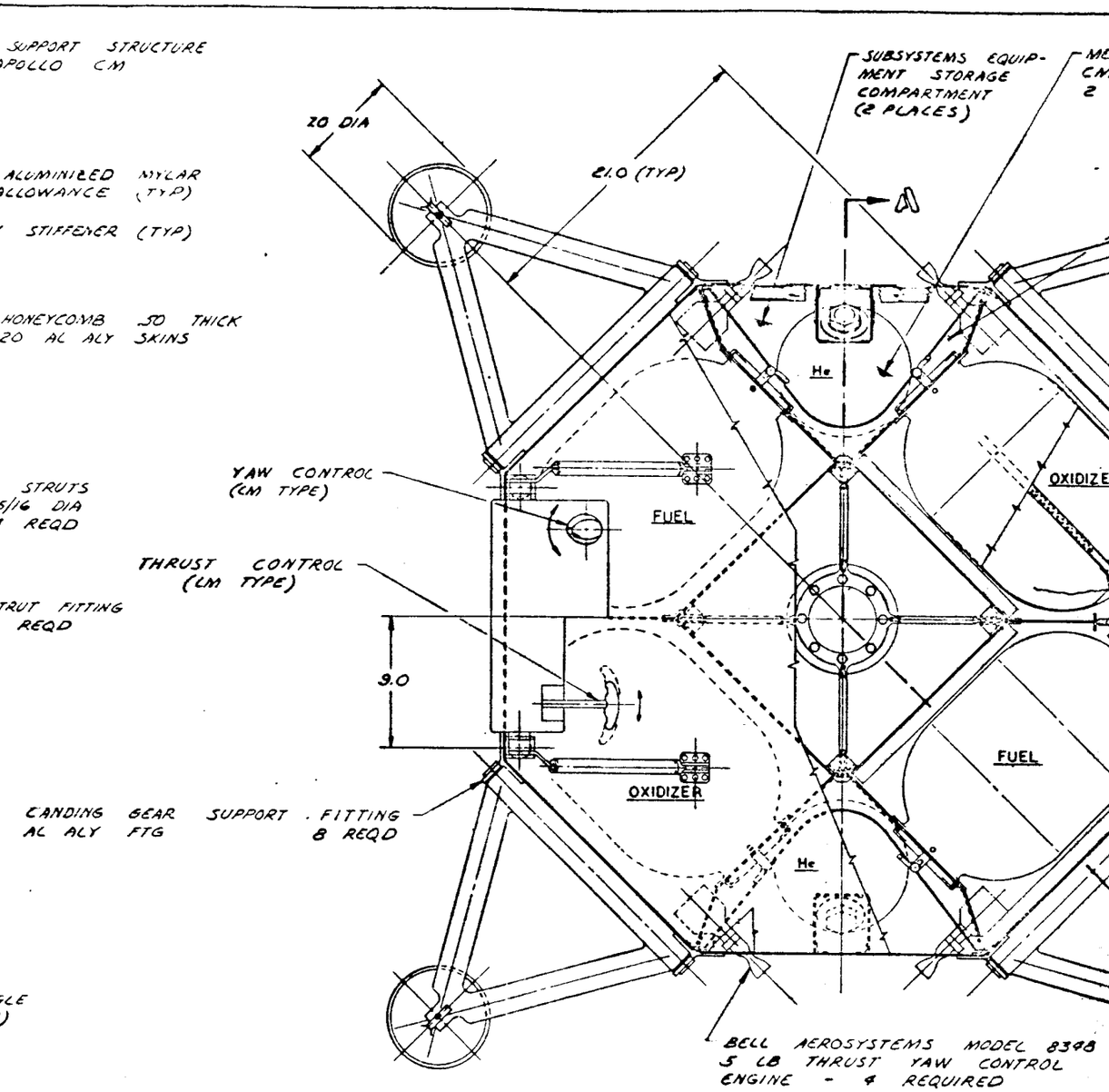
SUBSYSTEMS EQUIPMENT STORAGE COMPARTMENT (2 PLACES)
20 DIA
21.0 (TYP)
A
He
YAW CONTROL (LM TYPE)
FUEL
OXIDIZER
THRUST CONTROL (LM TYPE)
9.0
FUEL
OXIDIZER
LANDING GEAR SUPPORT FITTING AL ALY FTG 8 REQD
He
BELL AEROSYSTEMS MODEL 8348 5 LB THRUST YAW CONTROL ENGINE - 4 REQUIRED

1

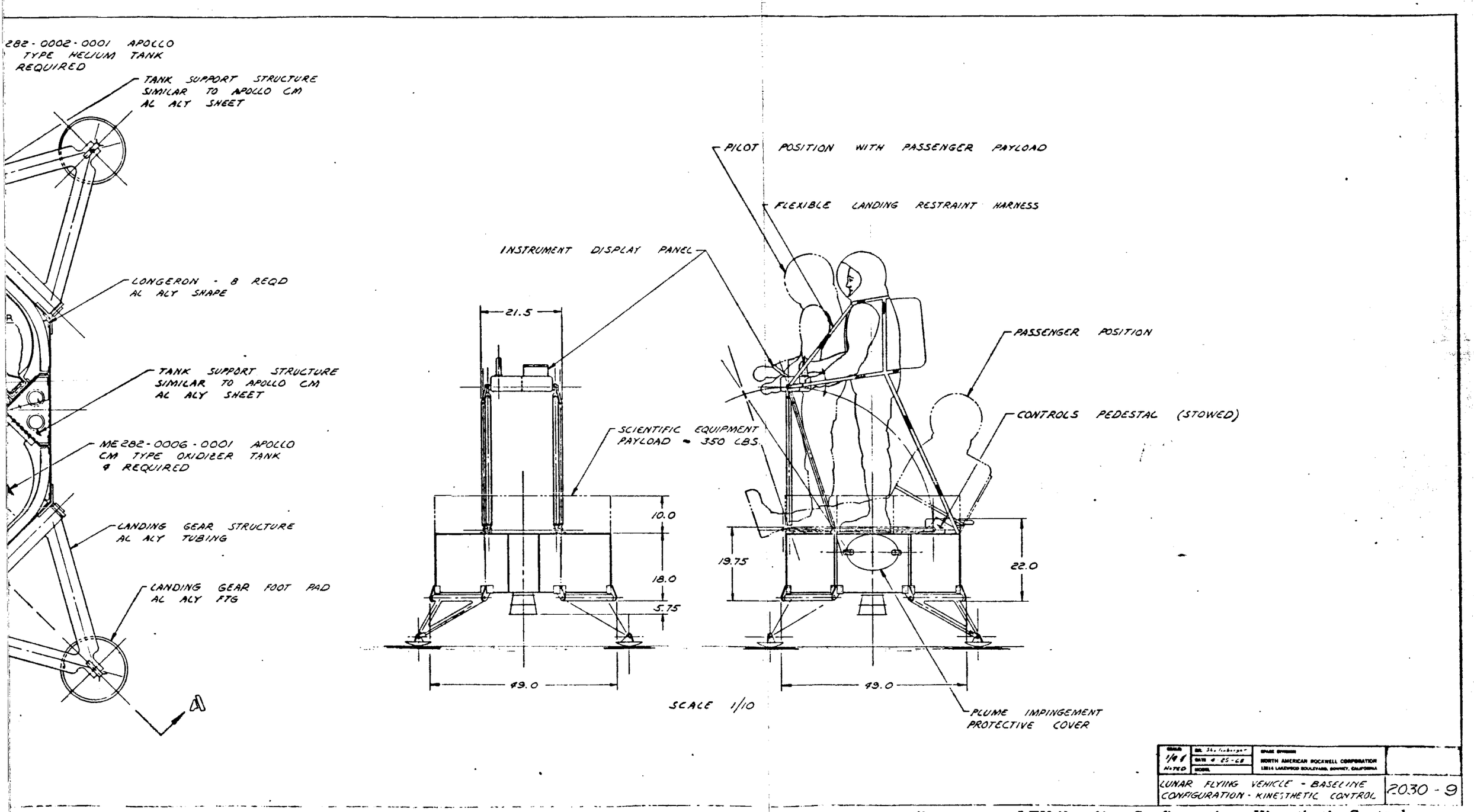

Figure . LFV Baseline Configuration, Kinesthetic Control (Drawing 2030-9)

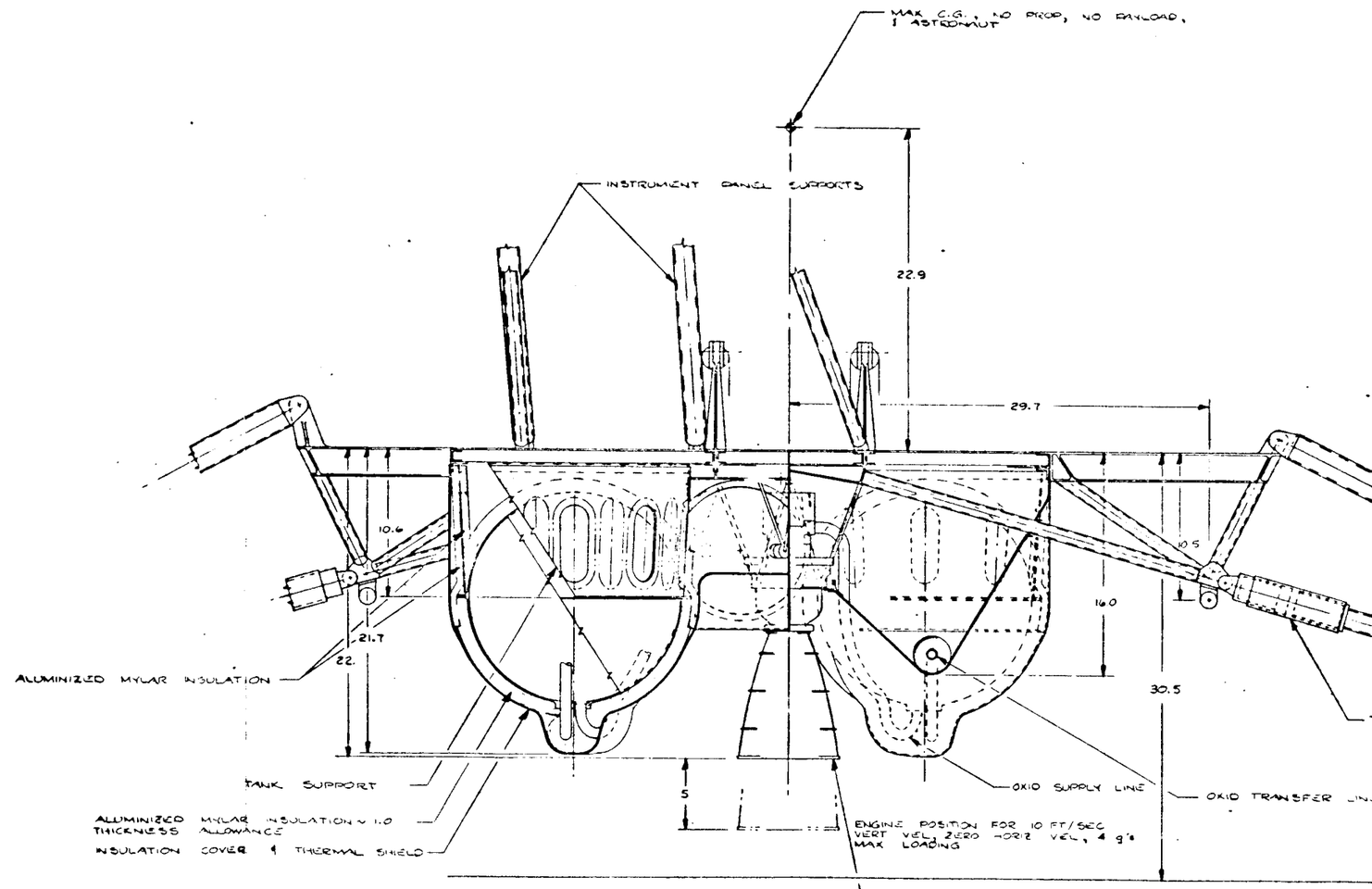
MAX C.G., NO PROP, NO PAYLOAD, 1 ASTRONAUT
INSTRUMENT PANEL SUPPORTS
22.9
29.7
10.6
10.5
16.0
21.7
22.
30.5
ALUMINIZED MYLAR INSULATION
TANK SUPPORT
ALUMINIZED MYLAR INSULATION ~ 1.0 THICKNESS ALLOWANCE
INSULATION COVER & THERMAL SHIELD
5
OXID SUPPLY LINE
OXID TRANSFER LIN
ENGINE POSITION FOR 10 FT/SEC VERT VEL, ZERO HORIZ VEL, 4 g's MAX LOADING
ROCKETDYNE RS-14 ENGINE, 300 LBS THRUST - MODIFIED TO EXTEND DURATION
& ADD THROTTLING, THRUST STRUCTURE
8 MEMBER TUBULAR TRUSS

SECTION A-A

1

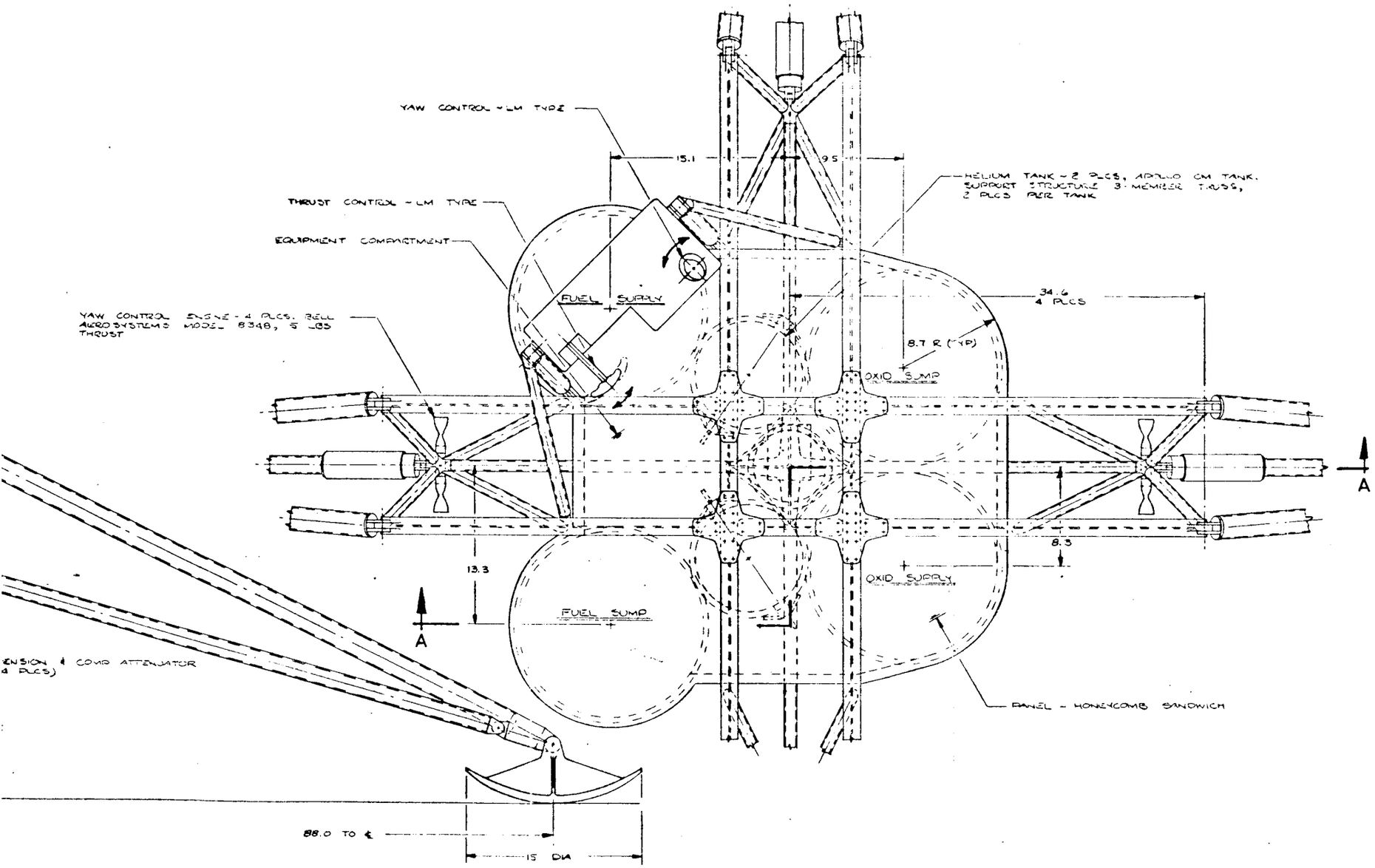
YAW CONTROL - LM TYPE
THRUST CONTROL - LM TYPE
EQUIPMENT COMPARTMENT
YAW CONTROL ENGINE - 4 PLCS. BELL AEROSYSTEMS MODEL B348, 5 LBS THRUST
15.1
9.5
HELIUM TANK - 2 PLCS, APOLLO CM TANK. SUPPORT STRUCTURE 3-MEMBER TRUSS, 2 PLCS PER TANK
FUEL SUPPLY
34.6
4 PLCS
8.7 R (TYP)
OXID SUMP
A
13.3
8.3
OXID SUPPLY
FUEL SUMP
A
ENSION & COMD ATTENUATOR
4 PLCS)
PANEL - HONEYCOMB SANDWICH
88.0 TO ℄
15 DIA

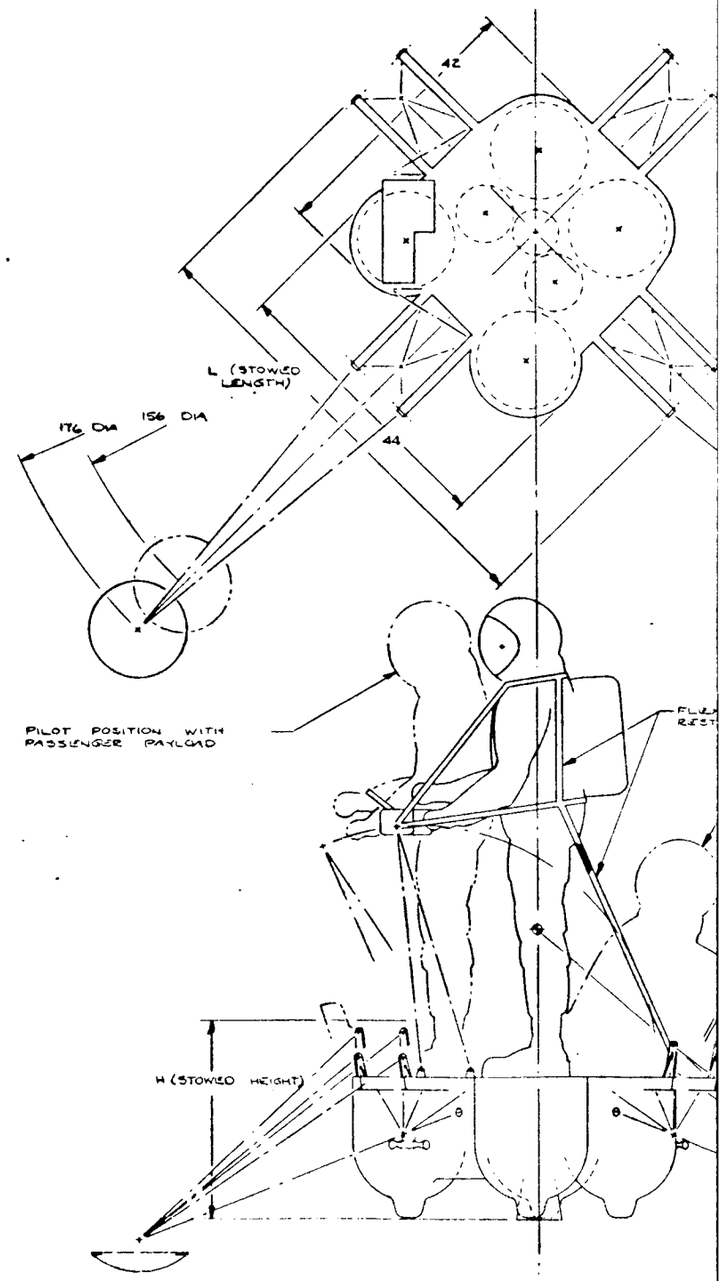
42
L (STOWED LENGTH)
176 DIA
156 DIA
44
PILOT POSITION WITH PASSENGER PAYLOAD
H (STOWED HEIGHT)

(2)

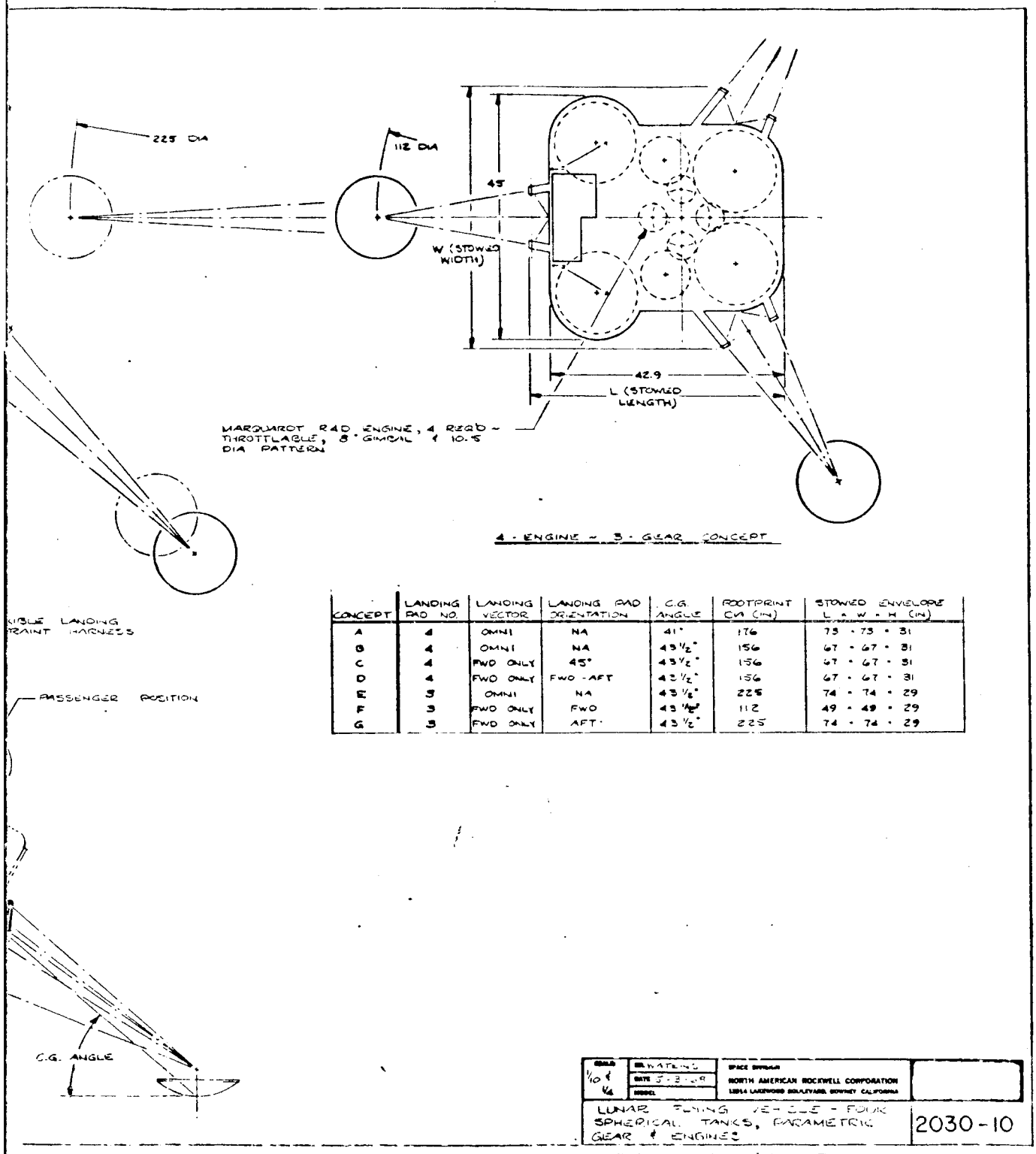

CONCEPT	LANDING PAD NO.	LANDING VECTOR	LANDING PAD ORIENTATION	C.G. ANGLE	FOOTPRINT CIR (IN)	STOWED ENVELOPE L × W × H (IN)
A	4	OMNI	NA	41°	176	73 × 73 × 31
B	4	OMNI	NA	43 1/2°	156	67 × 67 × 31
C	4	FWD ONLY	45°	43 1/2°	156	67 × 67 × 31
D	4	FWD ONLY	FWD - AFT	43 1/2°	156	67 × 67 × 31
E	3	OMNI	NA	43 1/2°	225	74 × 74 × 29
F	3	FWD ONLY	FWD	43 1/2°	112	49 × 49 × 29
G	3	FWD ONLY	AFT	43 1/2°	225	74 × 74 × 29

Figure . LFV Concepts - Four Spherical Tanks, Parametric Gear, and Engines (Drawing 2030-10)

3

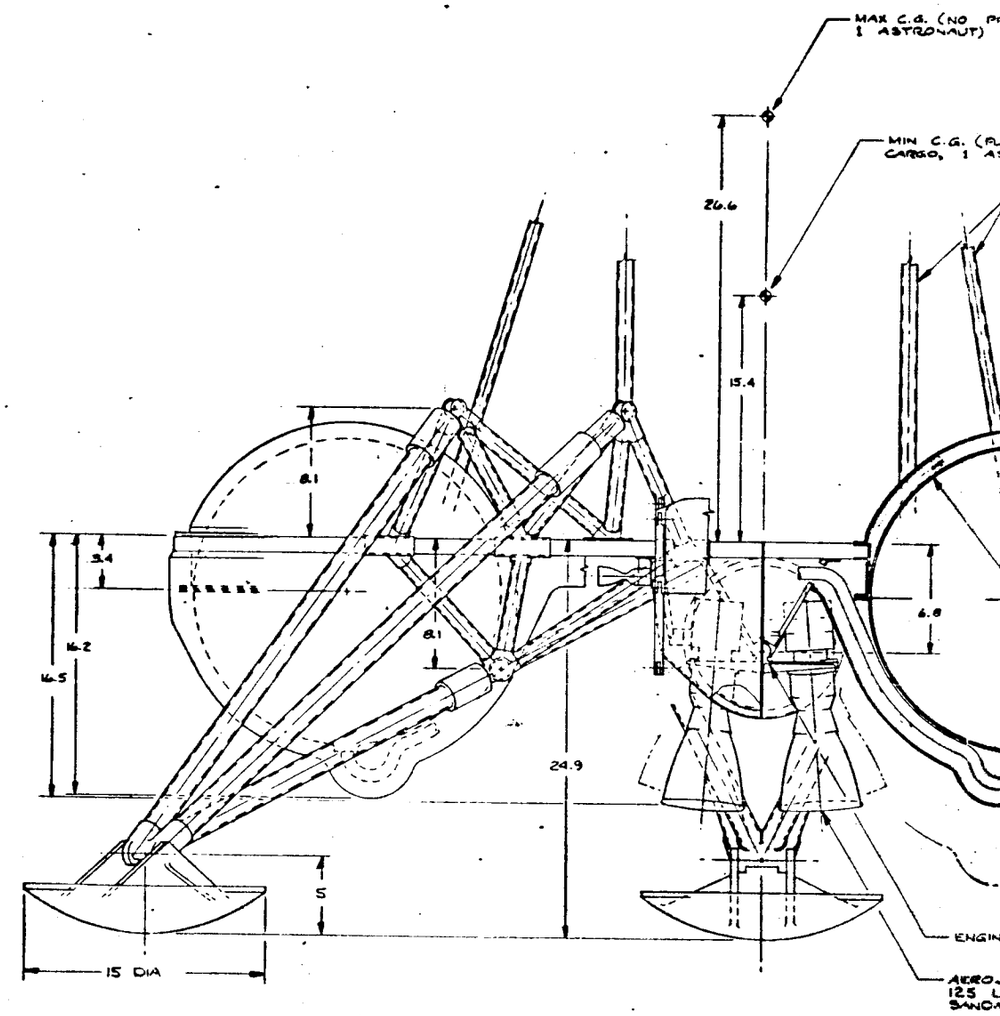
MAX C.G. (NO
1 ASTRONAUT)
MIN C.G. (PL
CARGO, 1 A
26.6
15.4
8.1
3.4
16.2
16.5
8.1
24.9
5
15 DIA
4.8
ENGIN
AERO
12.5 L
SANCA

SECTION A-A

1

OP, NO PAYLOAD,

LL PROP, 360 #
TRONAUT)

INSTRUMENT PANEL SUPPORTS

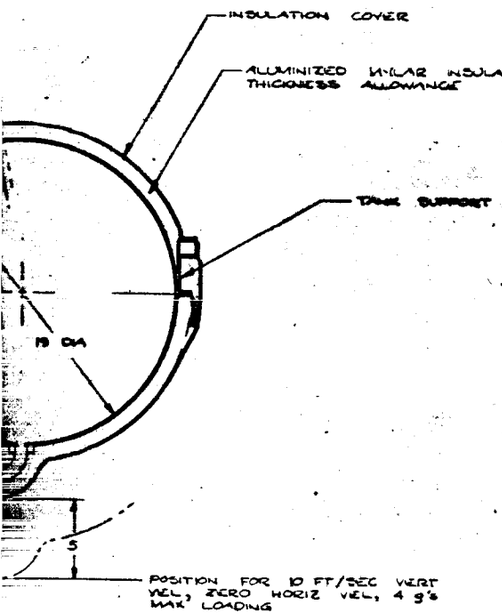

E PLATFORM GIMBAL

ET "BI-METALLIC" ENGINE, 4 REQ'D ~
85 THRUST, THROTTLABLE. HONEYCOMB
CH THRUST CONE

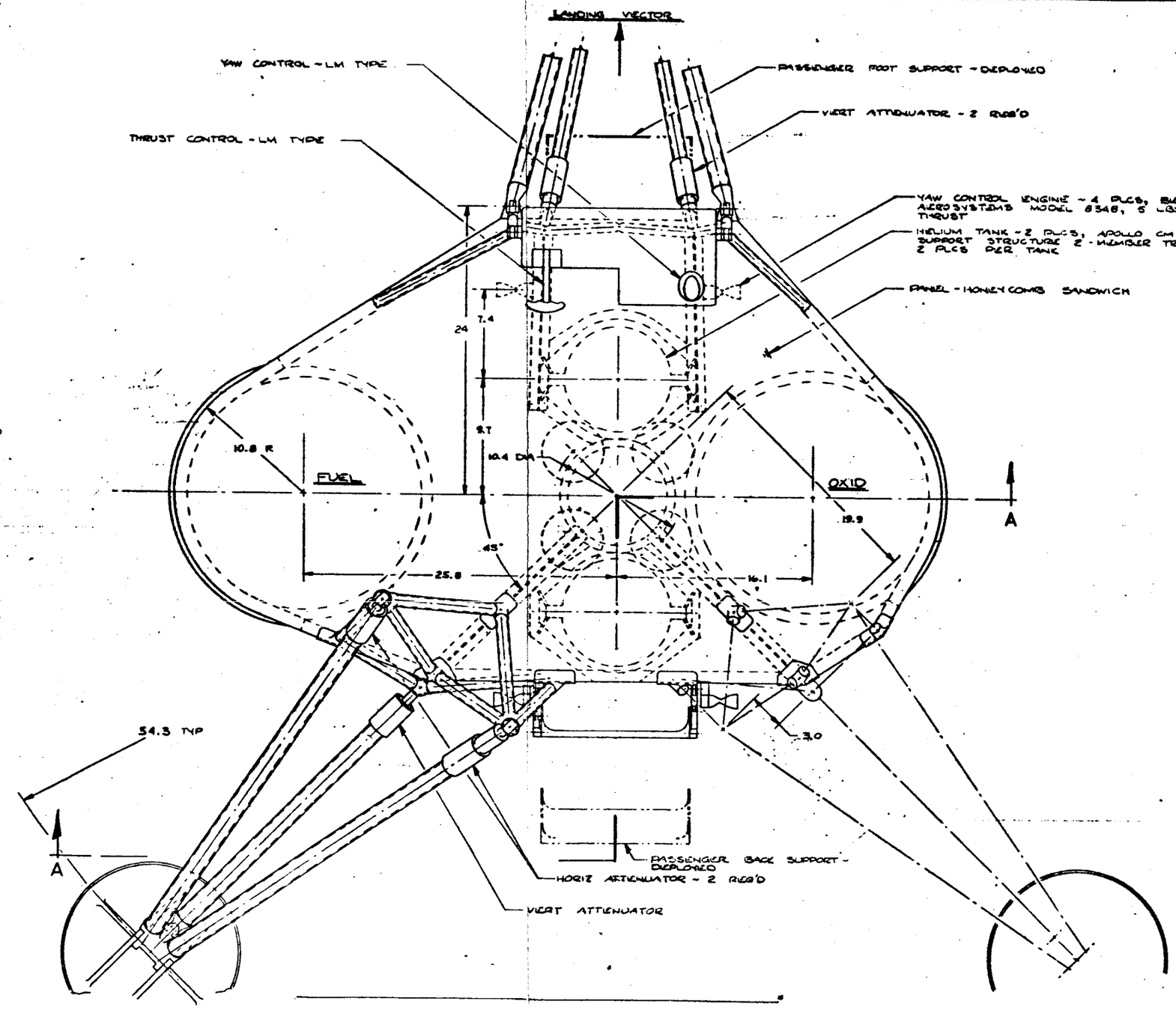

PILOT - POSITION WI
PASSENGER PAYLOA

12

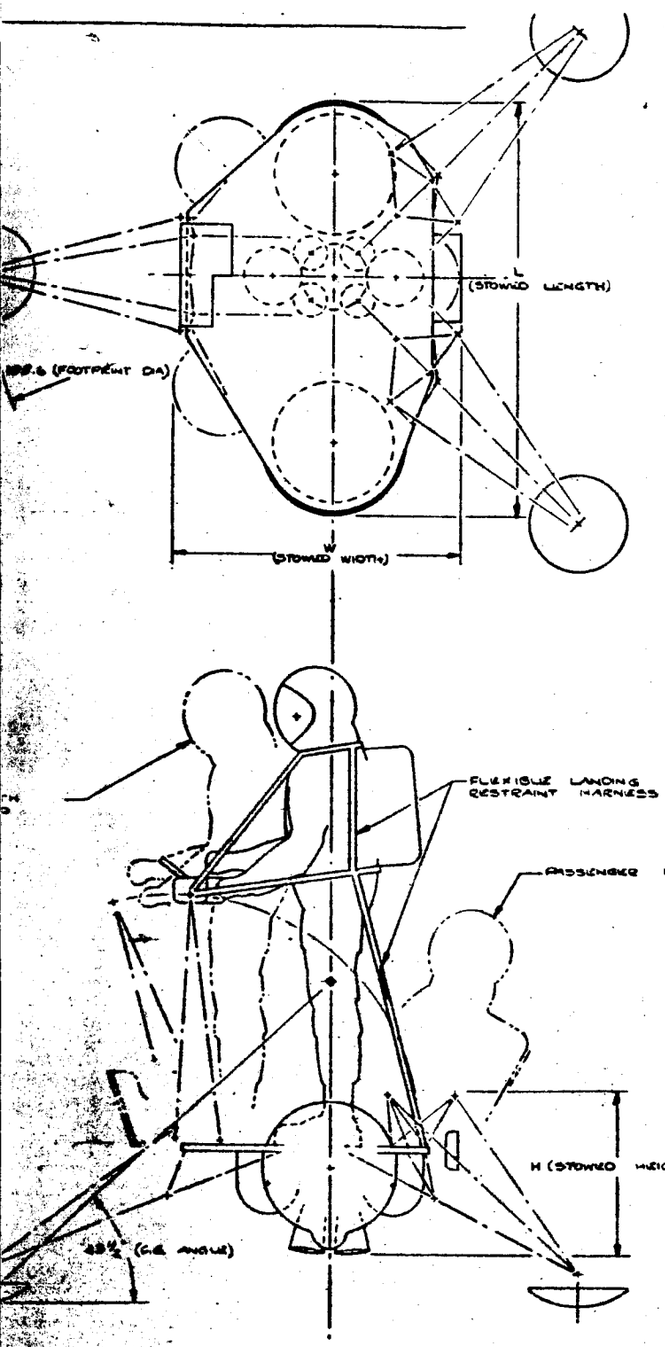

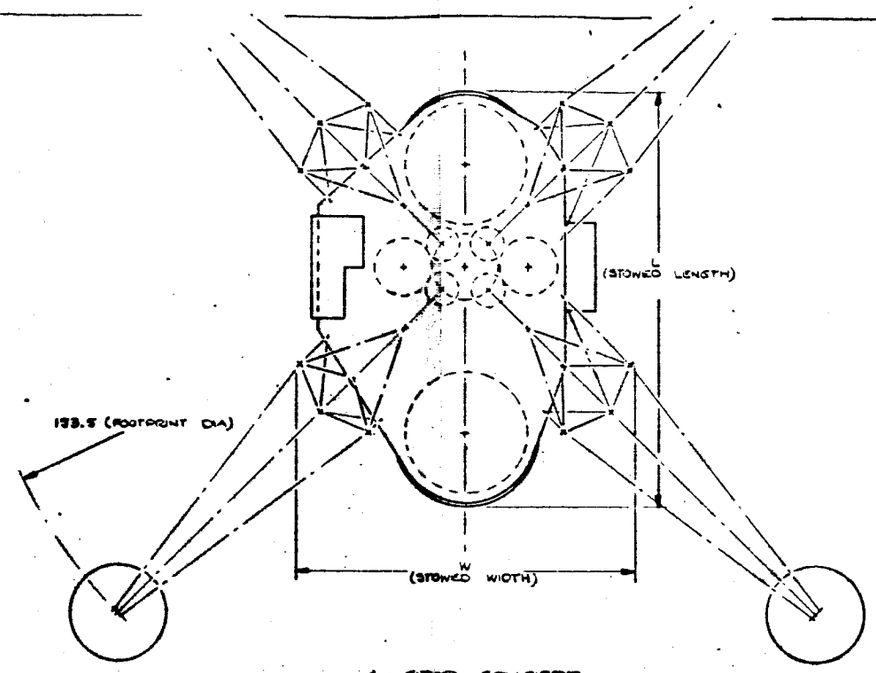

4 - GEAR CONCEPT

CONCEPT	LANDING PAD NO.	ENGINE NO.	LANDING VECTOR	LANDING PAD ORIENTATION	C.G. ANGLE	FOOTPRINT DIA' (IN)	STOWED ENVELOPE L - W - H (IN)
A	3	4	FWD ONLY	FWD	43½°	109	64 - 48 - 26
B	3	4	FWD ONLY	AFT	43½°	154	70 - 68 - 26
C	3	4	OMNI	NA	43½°	294	112 - 138 - 26
D	3	4	FWD ONLY	FWD	41°	122	64 - 52 - 26
E	3	1	FWD ONLY	FWD	43½°	115	64 - 48 - 26
F	4	4	FWD ONLY	45°	43½°	154	64 - 53 - 26
G	4	4	FWD ONLY	FWD - AFT	43½°	154	64 - 53 - 26
H	4	4	OMNI	NA	43½°	154	64 - 53 - 26
I	4	4	FWD ONLY	45°	41°	173	67 - 60 - 26
J	4	1	FWD ONLY	45°	43½°	162	65 - 56 - 26

1	ORIGINATED 5-10-68	
LUNAR FLYING VEHICLE - TWO SPHERICAL TANKS, PARAMETRIC GEAR & ENGINES		2030-11

Figure . LFV Concepts - Two Spherical Tanks, Parametric Gear, and Engines (Drawing 2030-11)

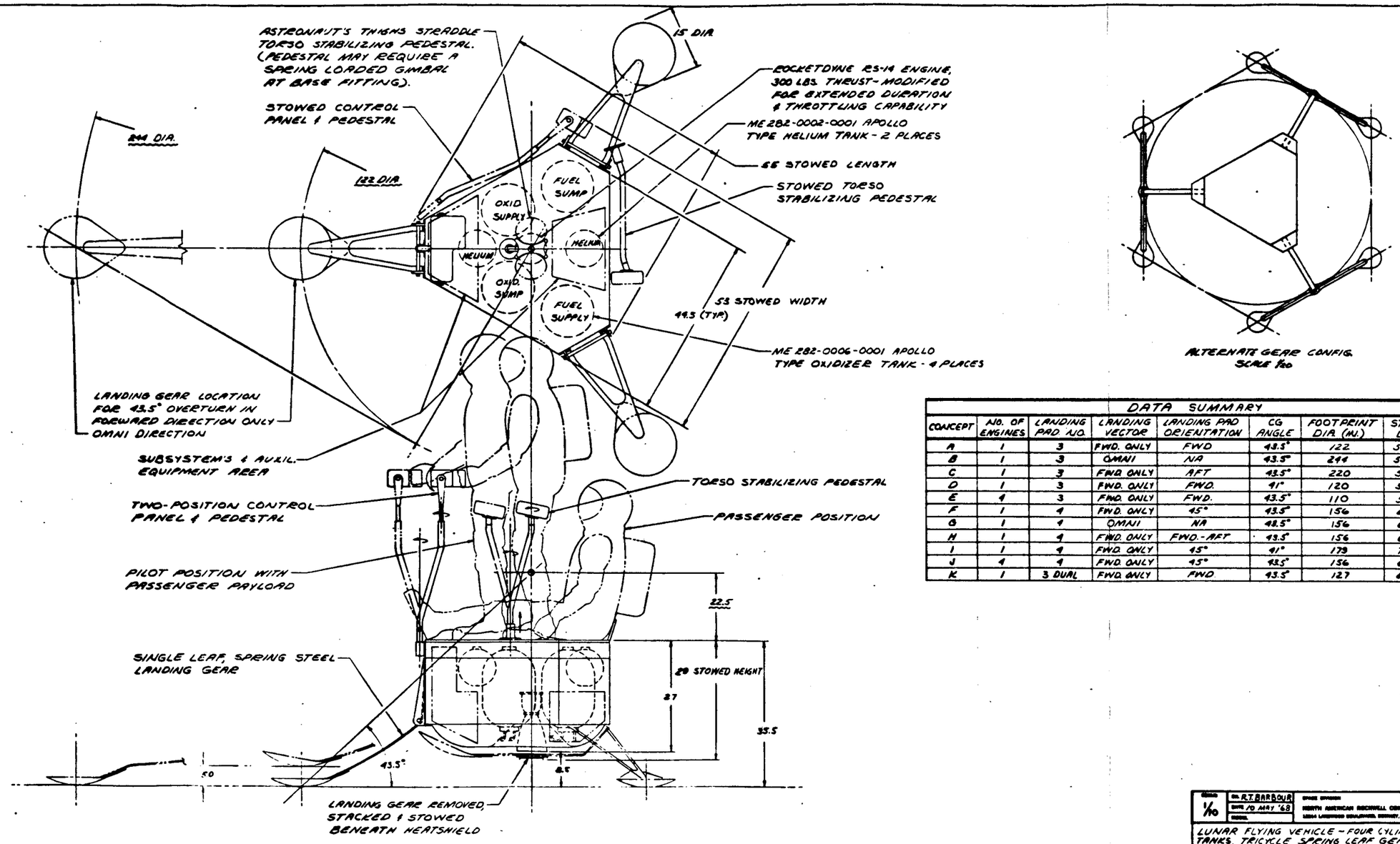

DATA SUMMARY

CONCEPT	NO. OF ENGINES	LANDING PAD NO.	LANDING VECTOR	LANDING PAD ORIENTATION	CG ANGLE	FOOTPRINT DIA. (IN.)	STOWED ENVELOPE L × W × H (IN.)
A	1	3	FWD. ONLY	FWD	43.5°	122	55 × 53 × 29
B	1	3	OMNI	NA	43.5°	244	55 × 91 × 29
C	1	3	FWD. ONLY	AFT	43.5°	220	55 × 91 × 29
D	1	3	FWD. ONLY	FWD.	41°	120	55 × 53 × 29
E	4	3	FWD. ONLY	FWD.	43.5°	110	55 × 53 × 29
F	1	4	FWD. ONLY	45°	43.5°	156	60 × 51 × 29
G	1	4	OMNI	NA	48.5°	156	60 × 51 × 29
H	1	4	FWD. ONLY	FWD.-AFT	43.5°	156	60 × 51 × 29
I	1	4	FWD. ONLY	45°	41°	179	72 × 51 × 29
J	4	4	FWD. ONLY	45°	43.5°	156	60 × 51 × 29
K	1	3 DUAL	FWD. ONLY	FWD	43.5°	127	66 × 81 × 32

1/10 | DR. R.T. BARBOUR | DATE 10 MAY '68 | SPACE DIVISION NORTH AMERICAN ROCKWELL CORPORATION 12214 LAKEWOOD BOULEVARD, DOWNEY, CALIFORNIA

LUNAR FLYING VEHICLE - FOUR CYLINDRICAL TANKS, TRICYCLE SPRING LEAF GEAR, SINGLE ENGINE | 2030-12

Figure . LFV Concept - Four Cylindrical Tanks, Tricycle Spring-Leaf Gear, Single Engine (Drawing 2030-12)

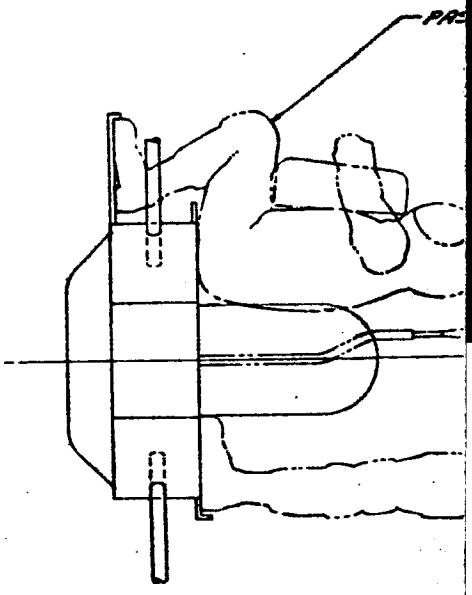

PILOT POSITION WITH
PASSENGER PAYLOAD

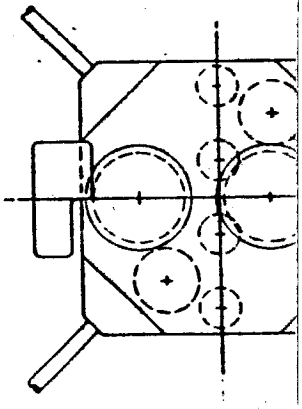

ALTERNATE
ENGINE ARRA

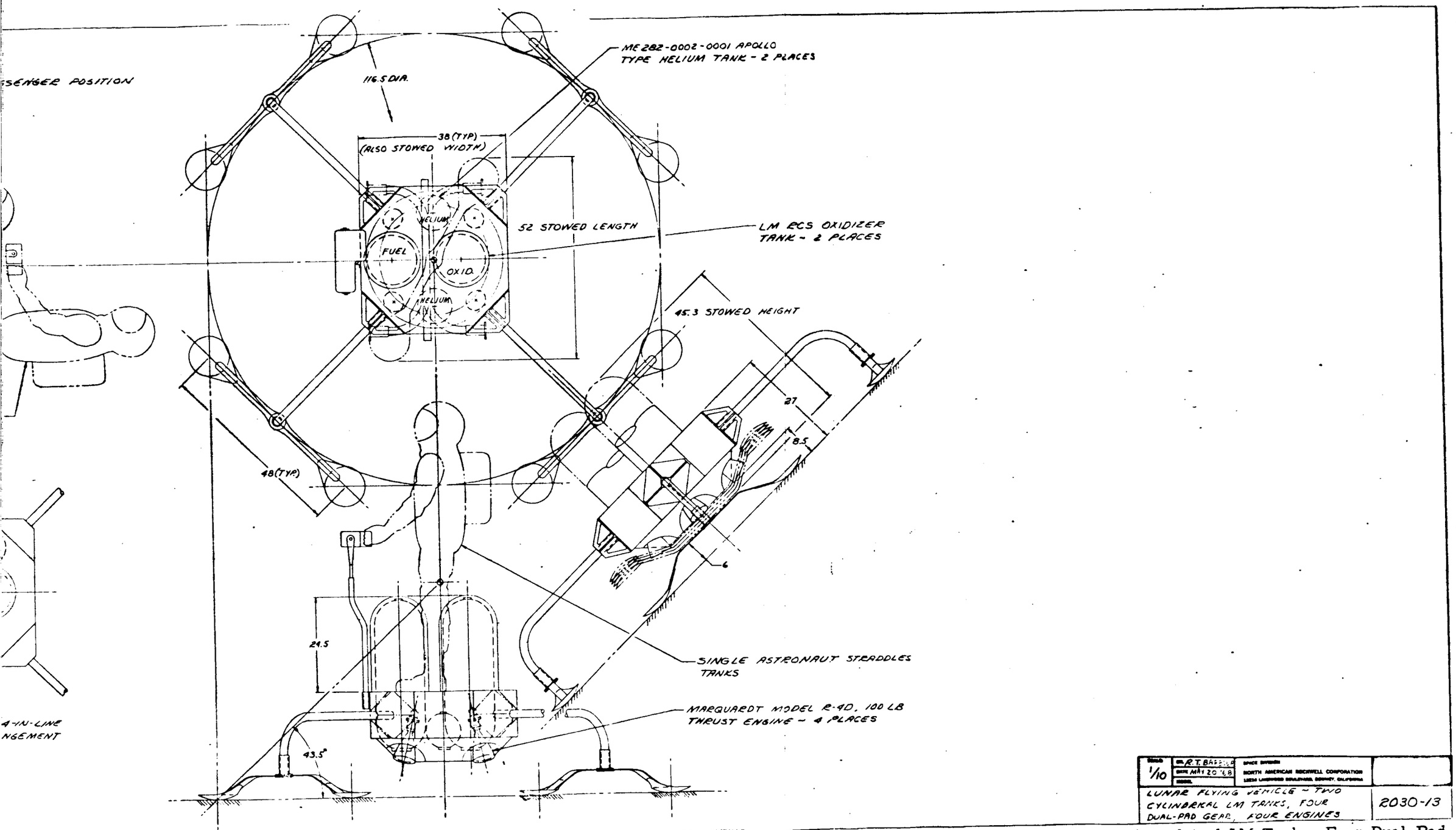

Figure .- LFV Concept - Two Cylindrical LM Tanks, Four Dual-Pad Gear, Four Engines (Drawing 2030-13)

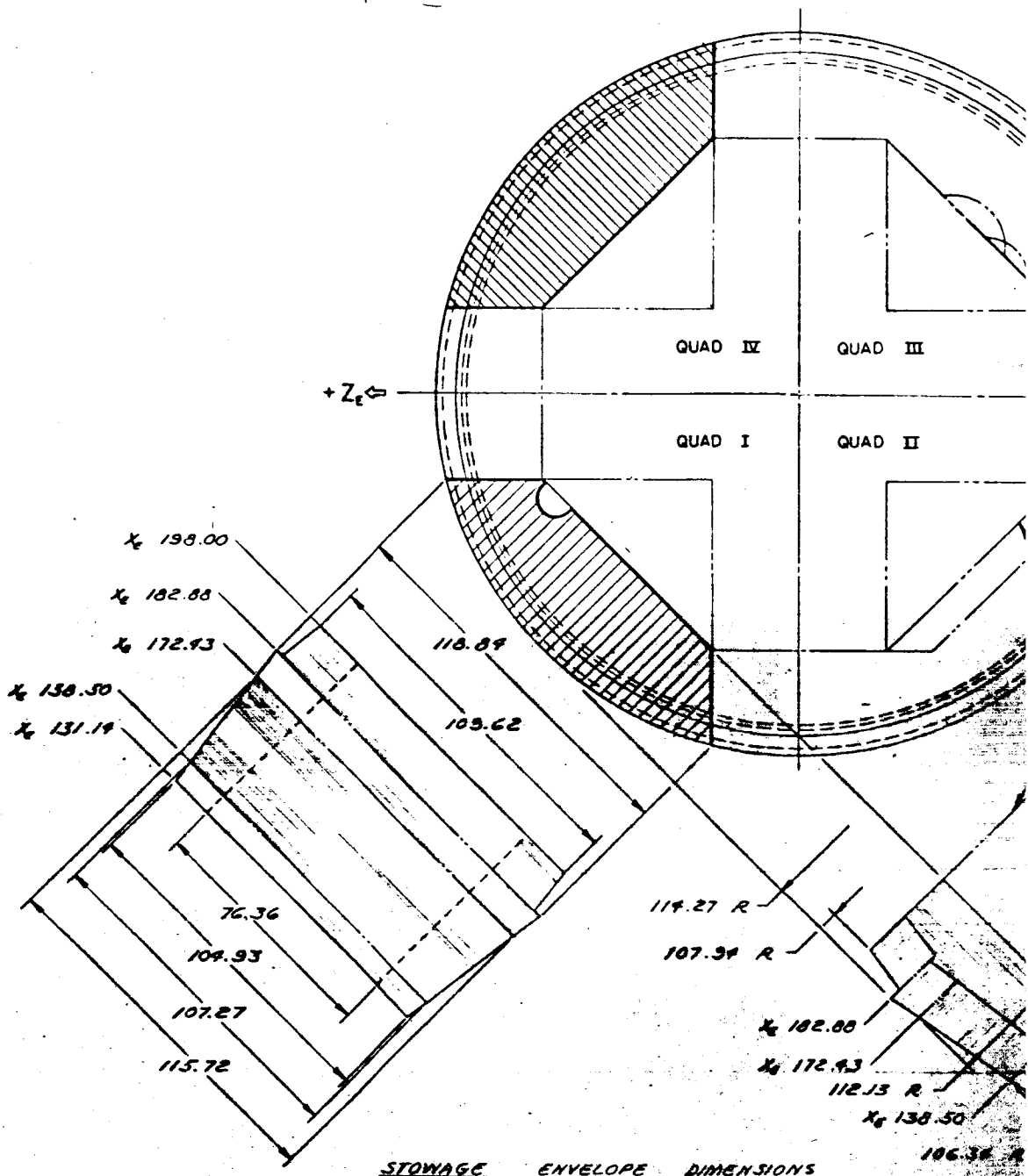

STOWAGE ENVELOPE DIMENSIONS FOR AREAS IN QUADS I & III ADJACENT TO DESCENT STAGE STRUCTURE

1

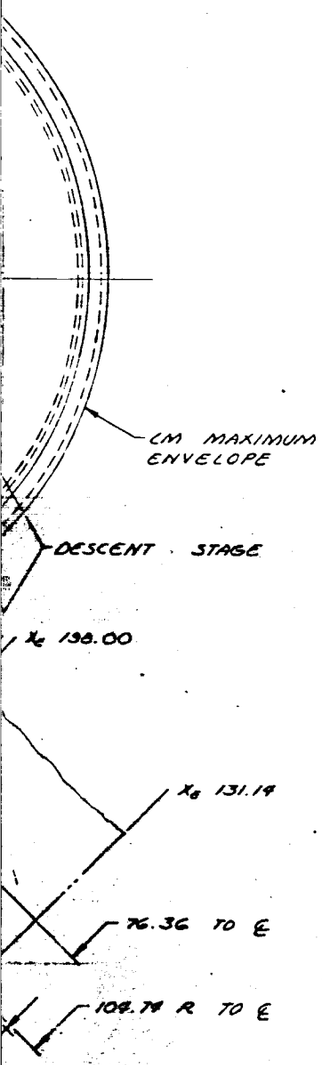

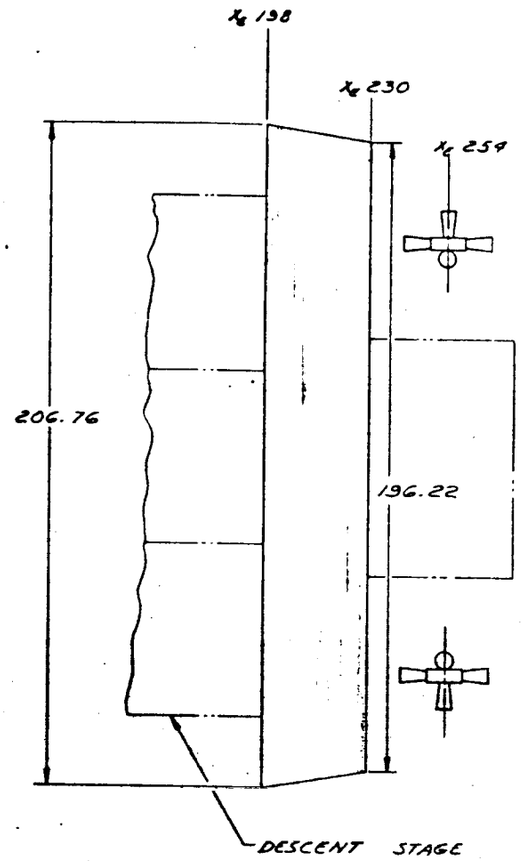

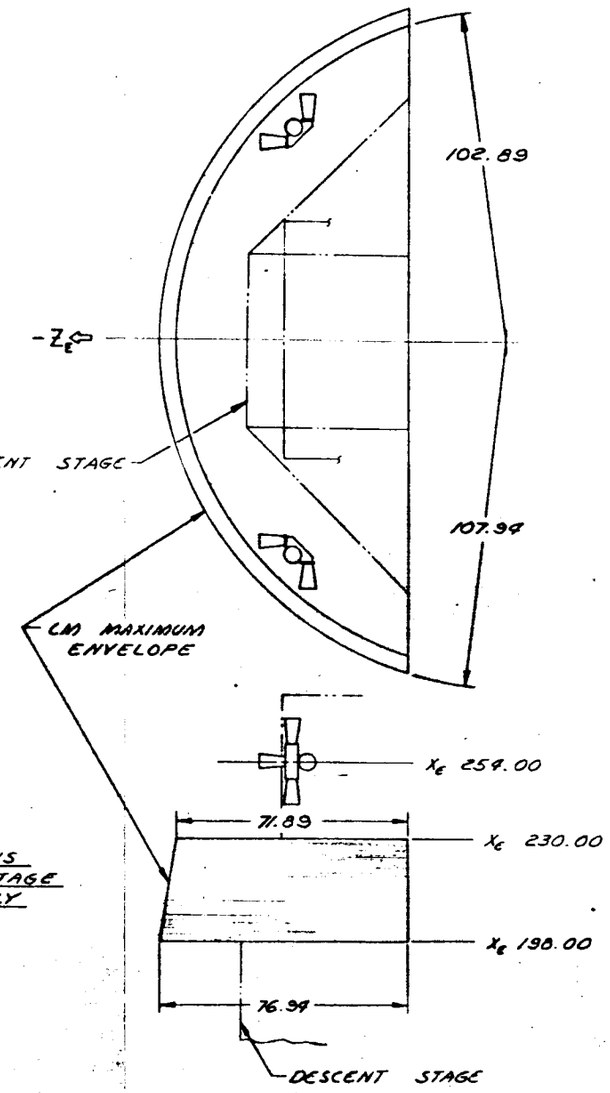

STOWAGE ENVELOPE DIMENSIONS
FOR AREA BELOW ASCENT STAGE
AFT EQUIPMENT BAY ASSEMBLY

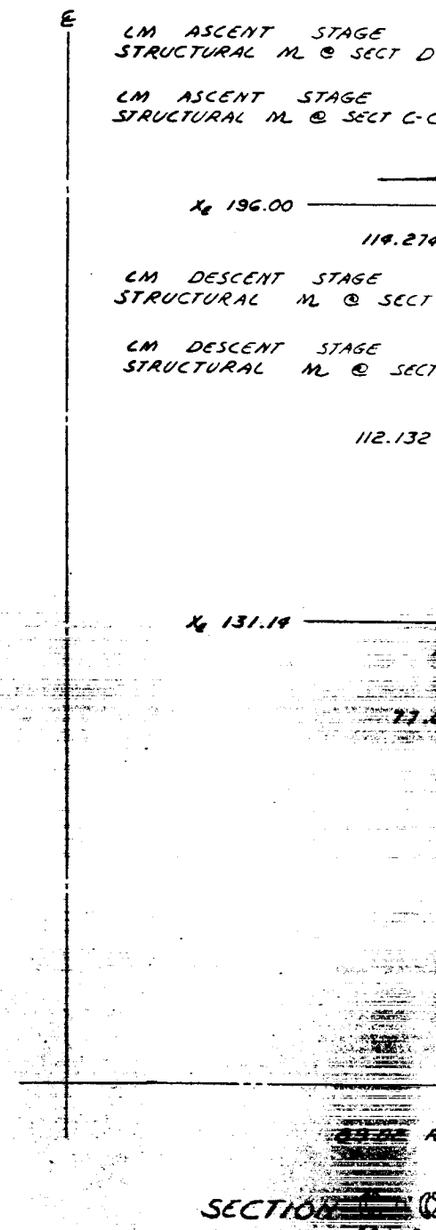

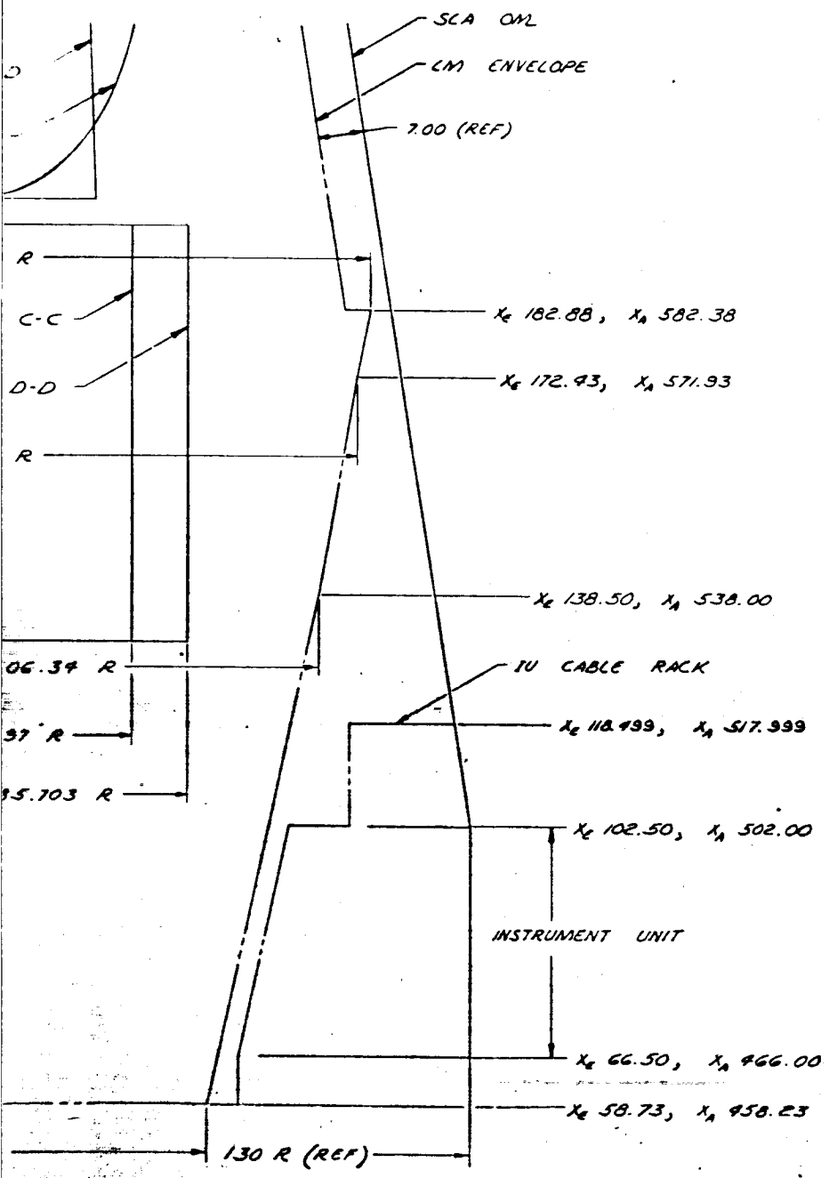

℄ SECTION D - D
1/10

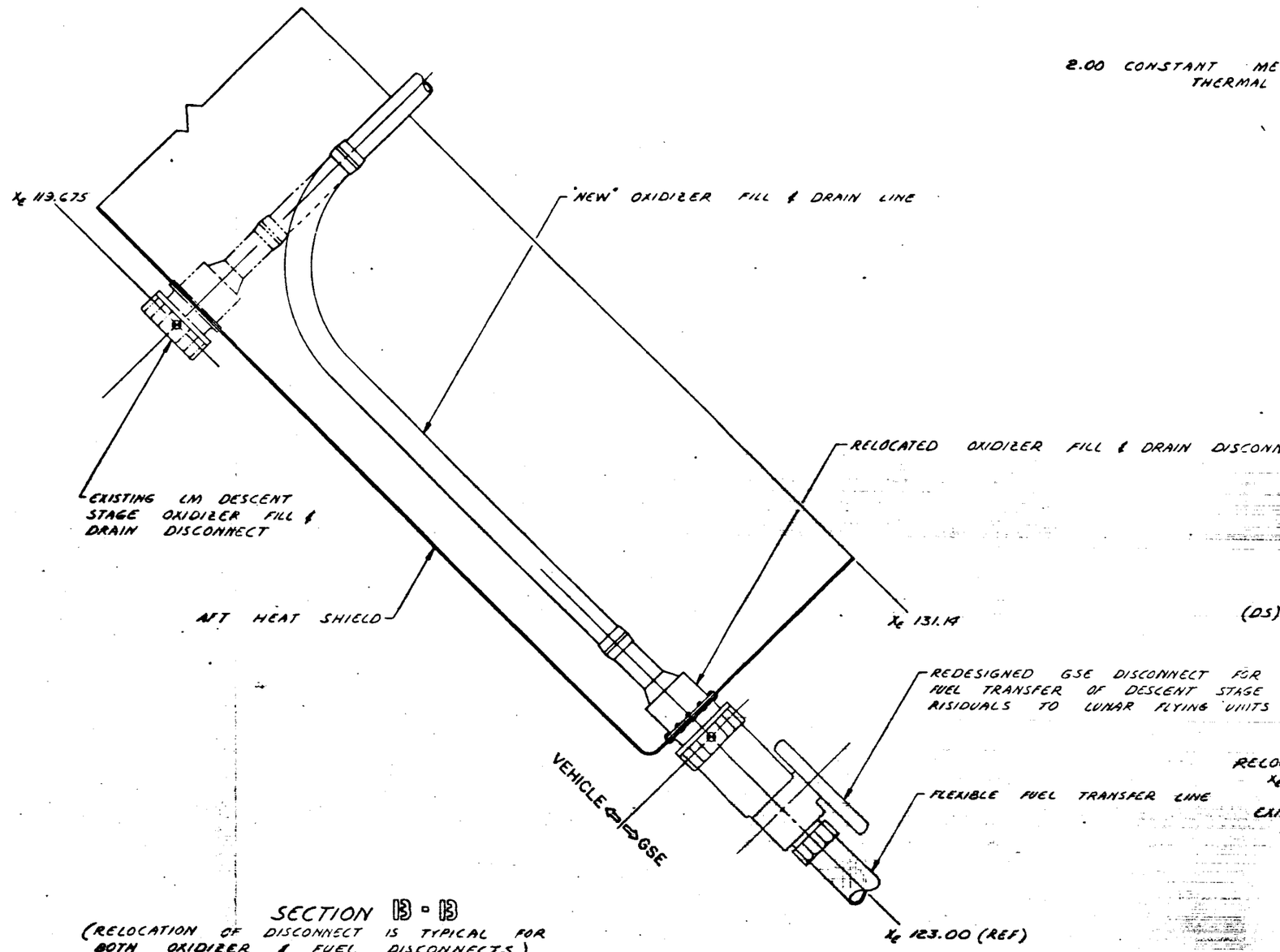

SECTION B - B
(RELOCATION OF DISCONNECT IS TYPICAL FOR BOTH OXIDIZER & FUEL DISCONNECTS)
SCALE 1/2

(3)

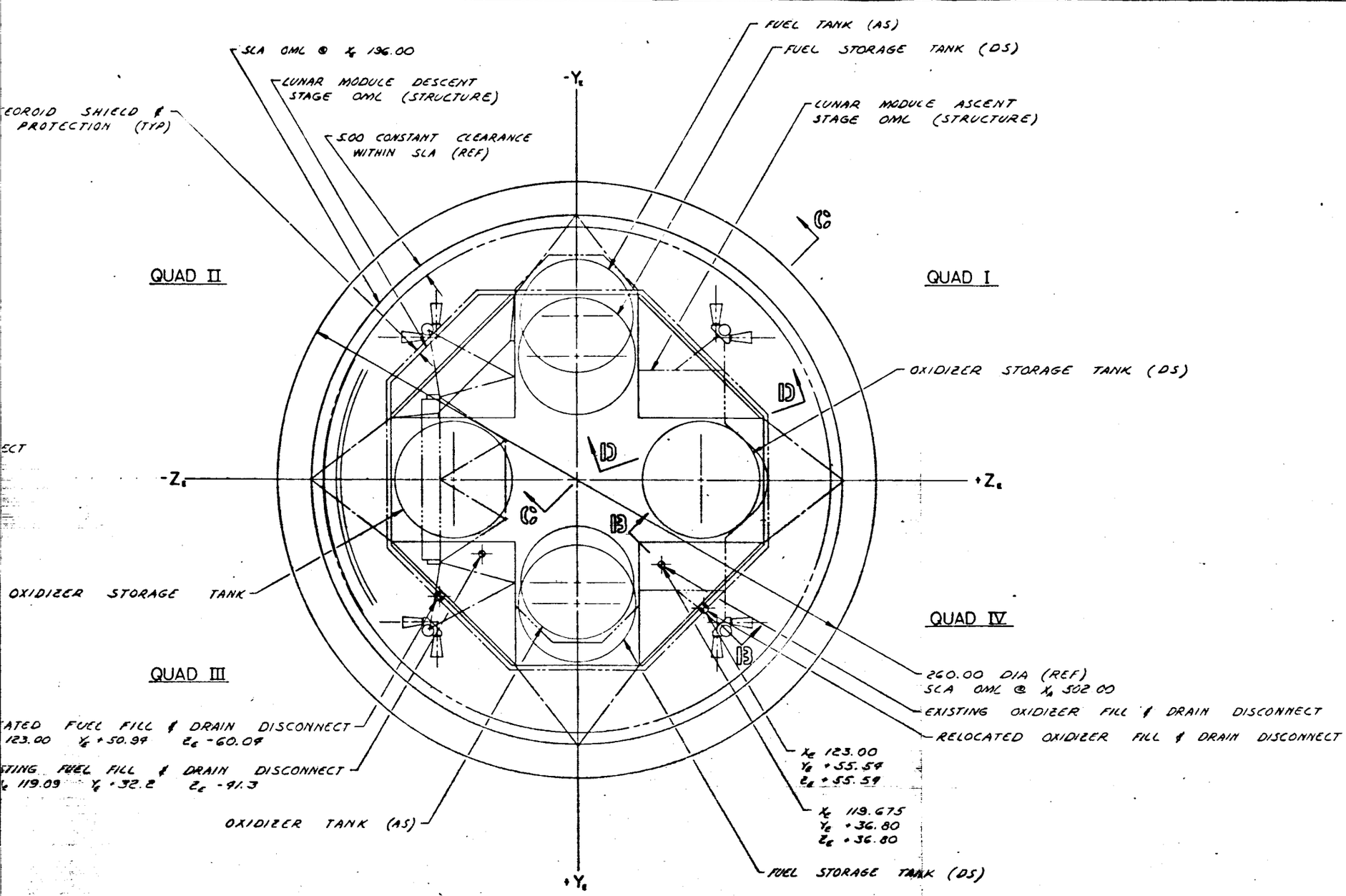

SECTION A-A

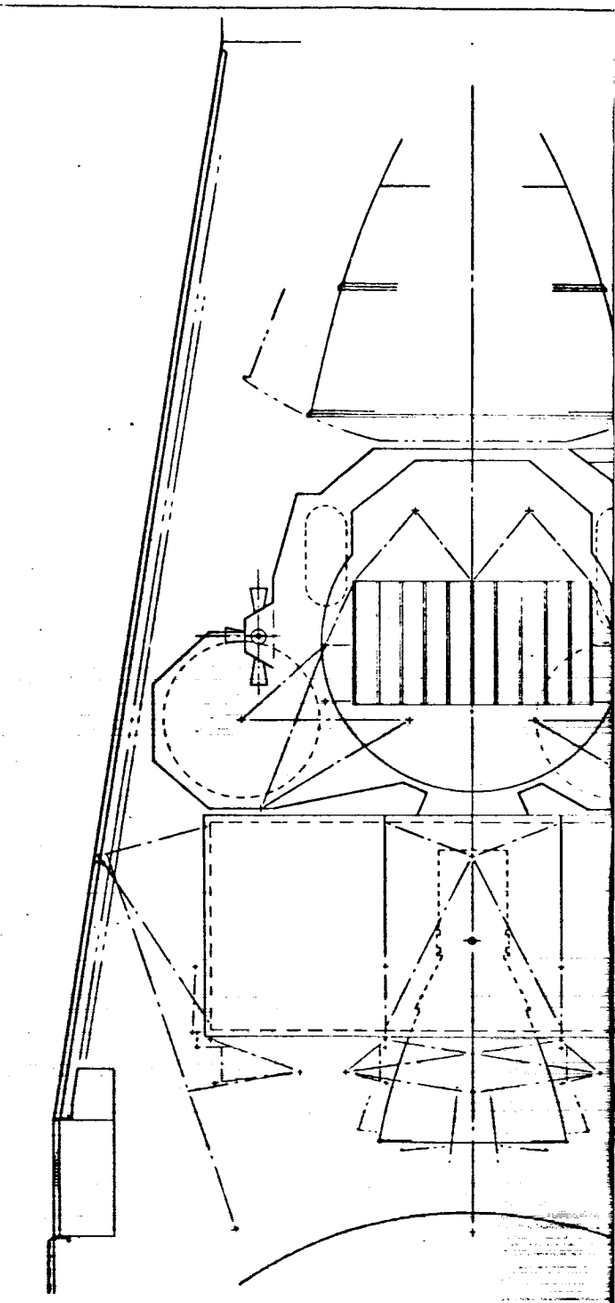

(14)

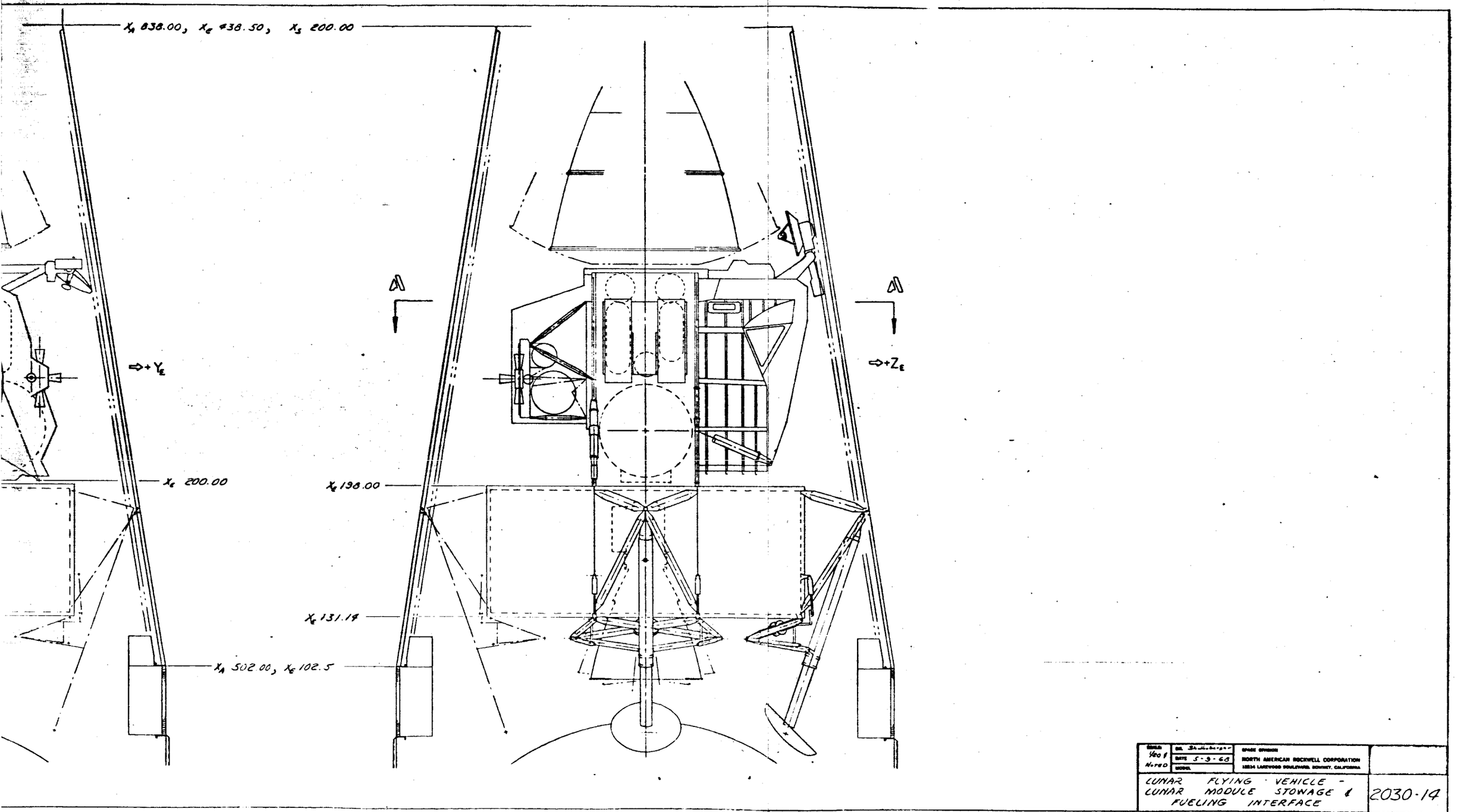

Figure . LFV Lunar Module Stowage and Fueling Interface (Drawing 2030-14)

5

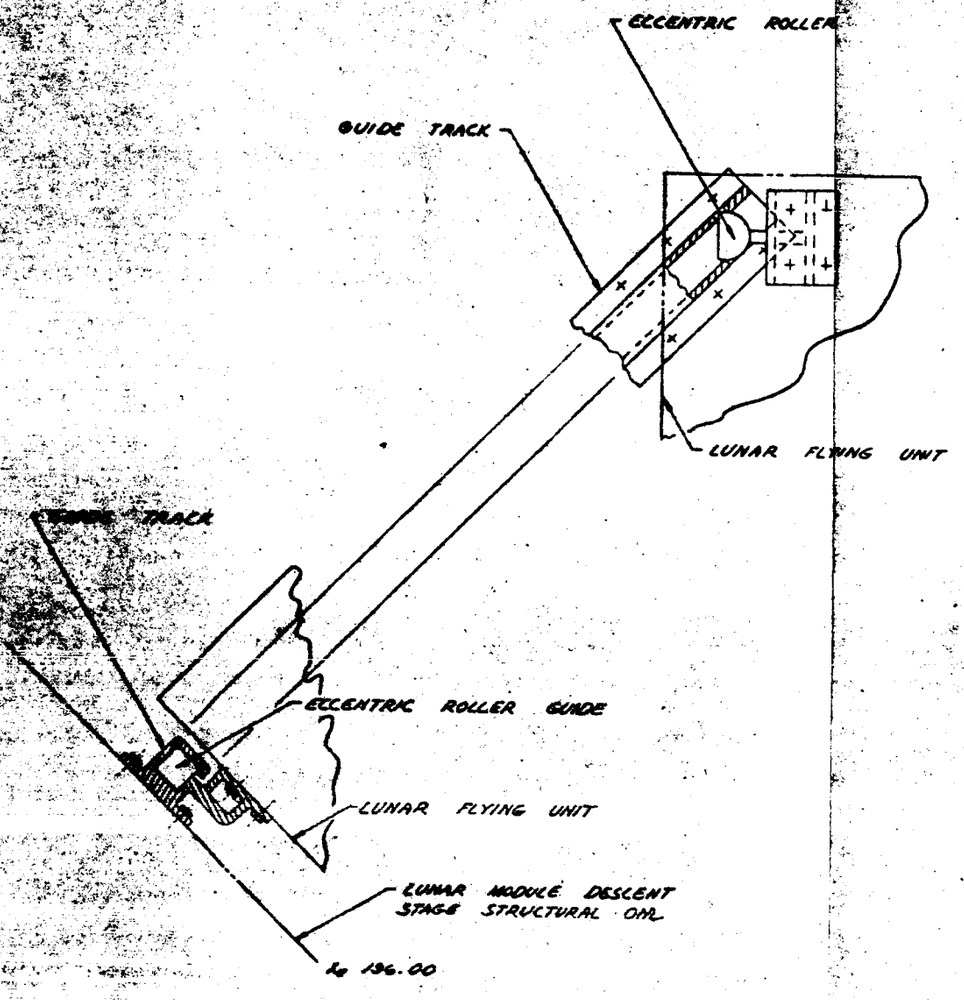

SECTION E-E
SCALE 1/2

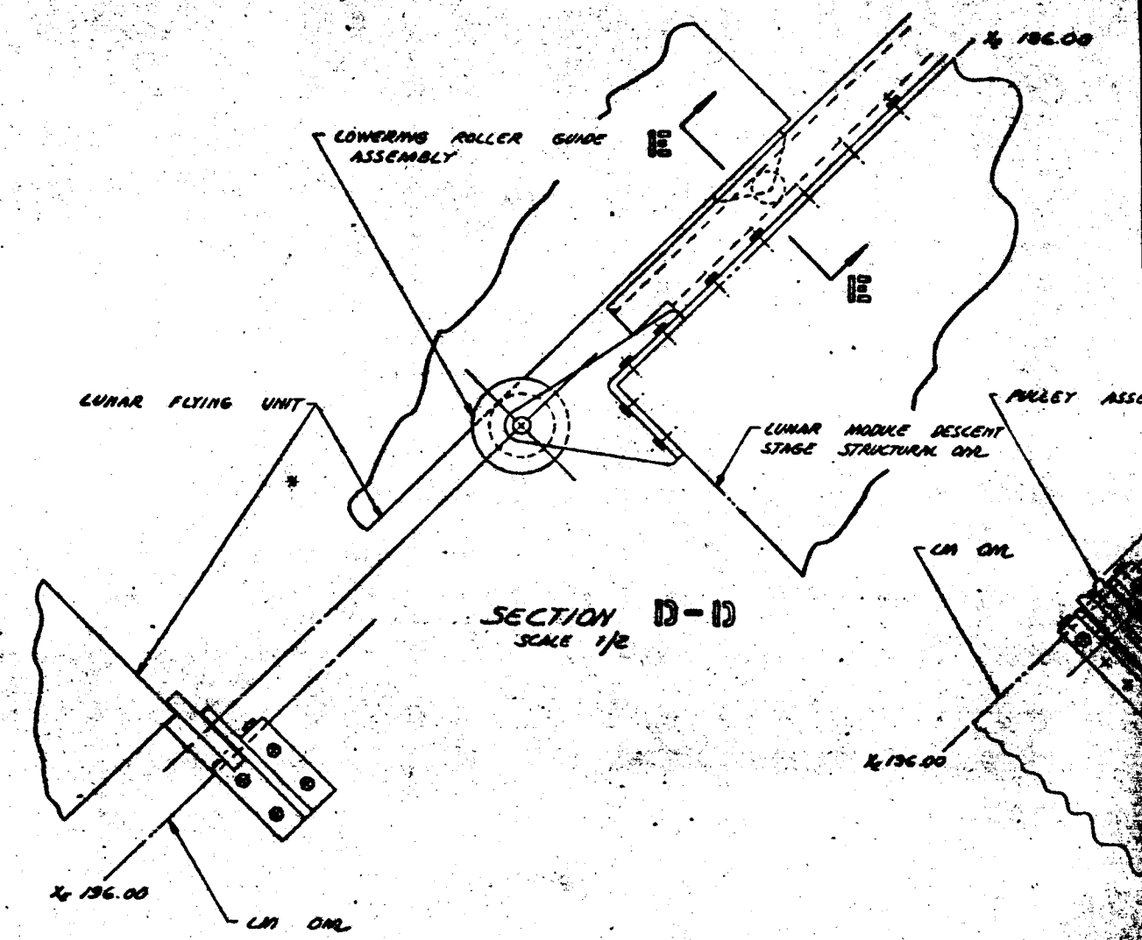

SECTION D-D
SCALE 1/2

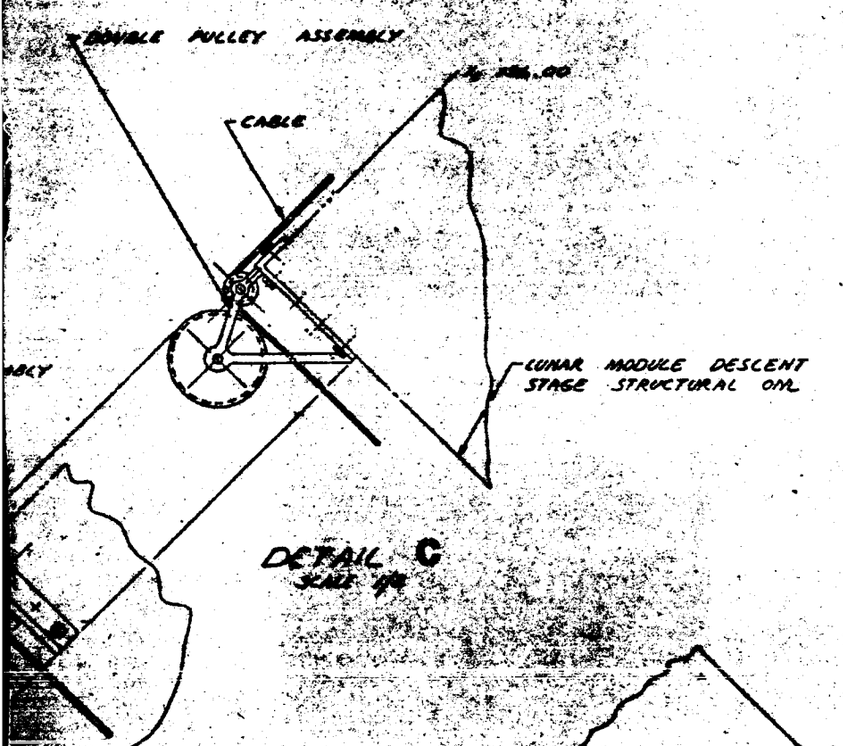

DETAIL C
SCALE 1/2

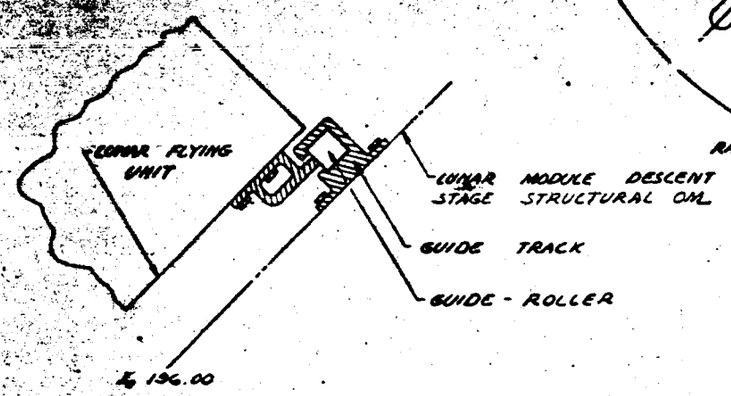

SECTION B - B
SCALE 1/2

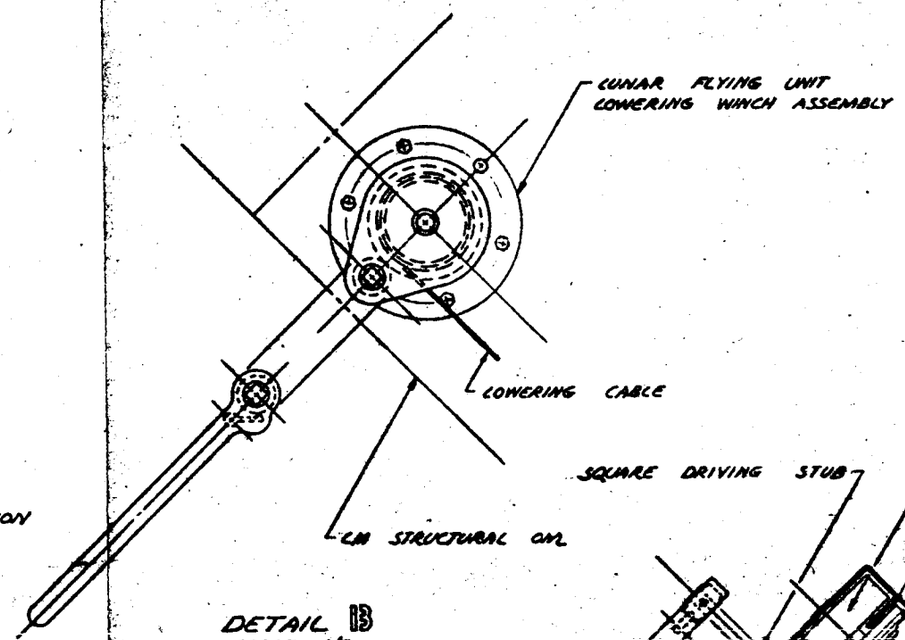

DETAIL B
SCALE 1/2

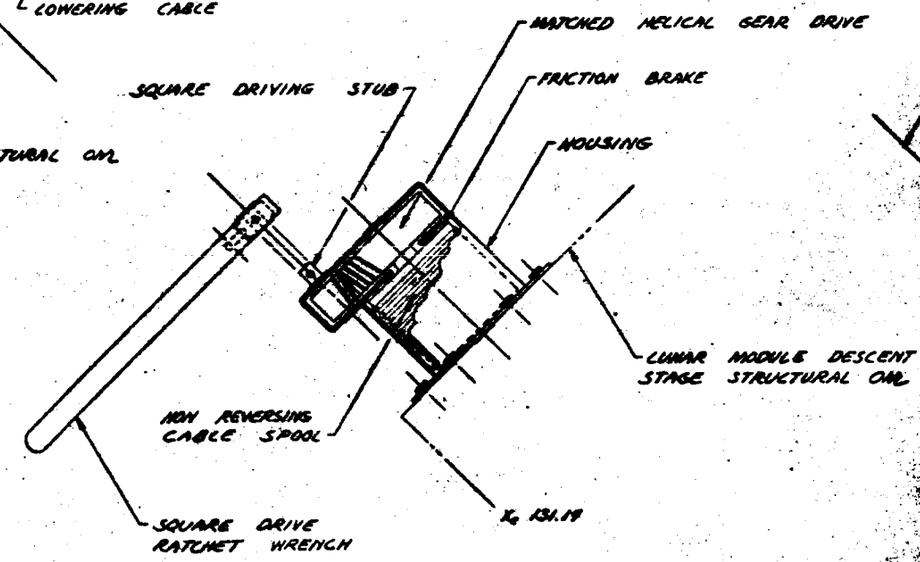

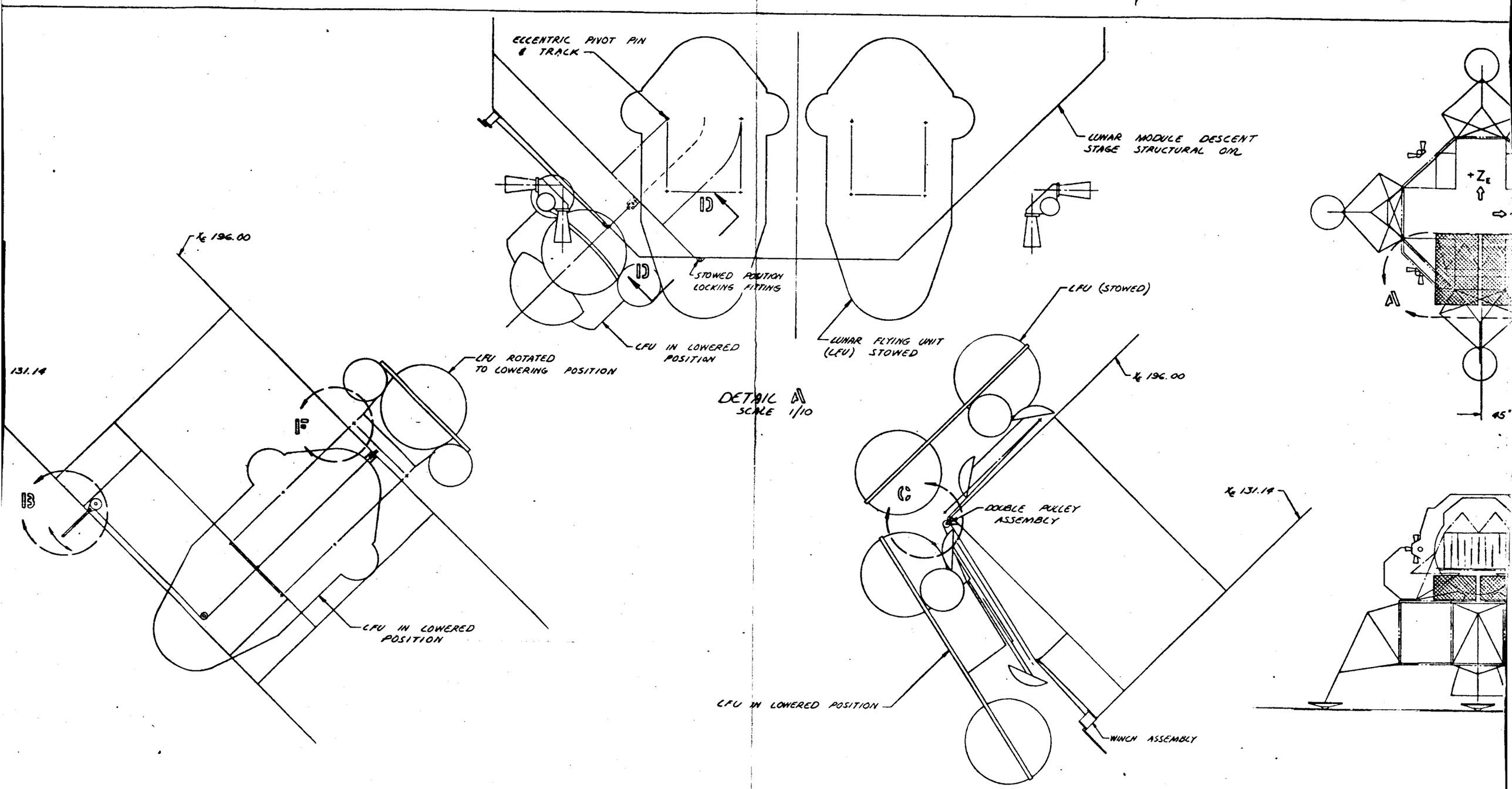
ECCENTRIC PIVOT PIN & TRACK
LUNAR MODULE DESCENT STAGE STRUCTURAL OML
STOWED POSITION LOCKING FITTING
LFU IN LOWERED POSITION
LUNAR FLYING UNIT (LFU) STOWED
LFU (STOWED)
X_E 196.00
X_E 131.14
LFU ROTATED TO LOWERING POSITION
DETAIL A
SCALE 1/10
DOUBLE PULLEY ASSEMBLY
WINCH ASSEMBLY
$+Z_E$
45°

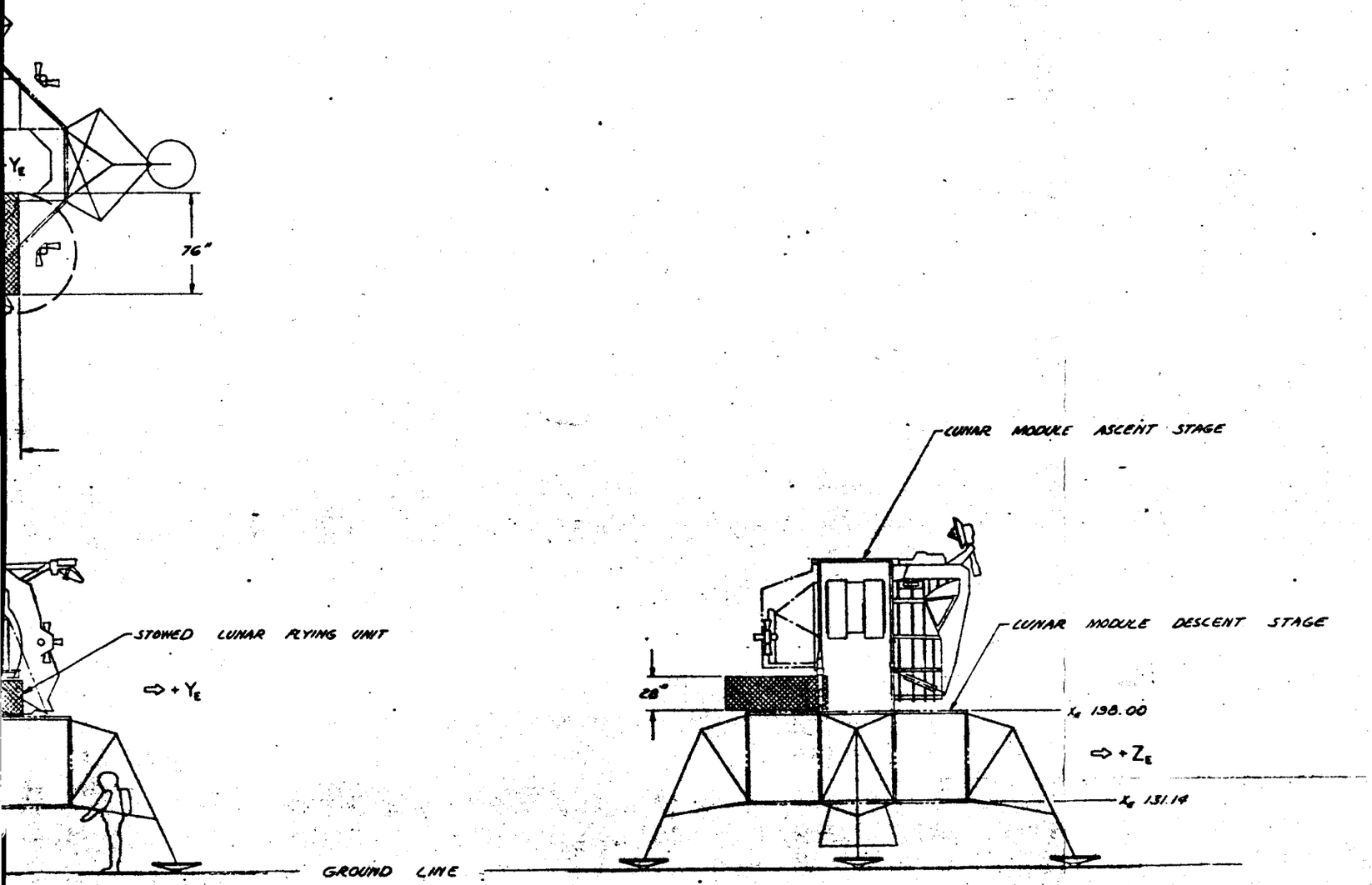

LUNAR FLYING VEHICLE
LUNAR MODULE STOWAGE & REMOVAL MECHANISM

2030-15A

Figure . LFV Lunar Module Stowage and Removal Mechanism (Drawing 2030-15A)

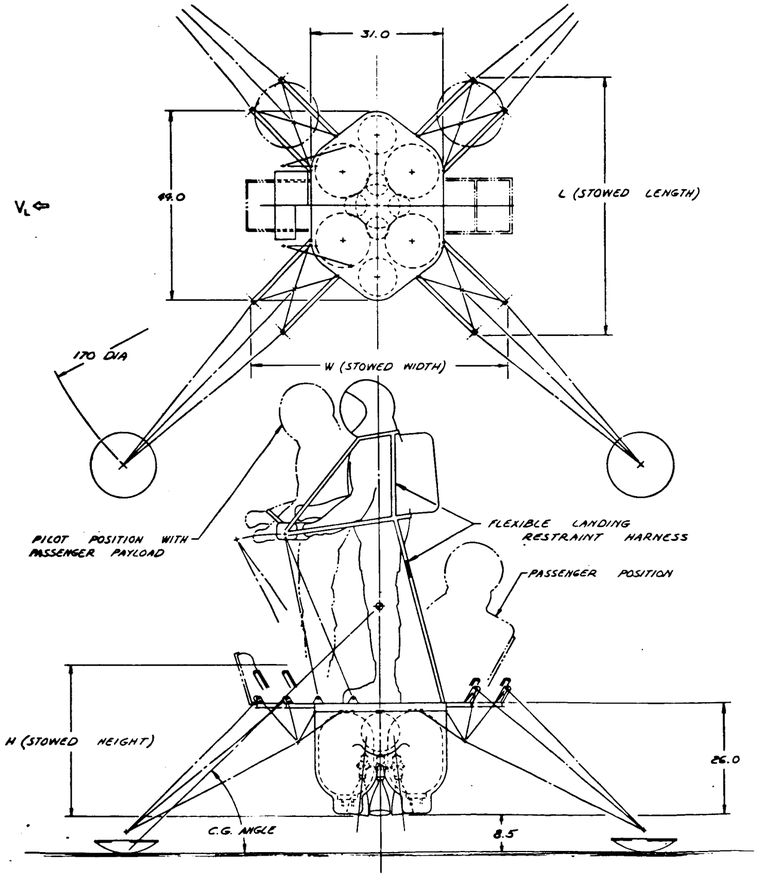

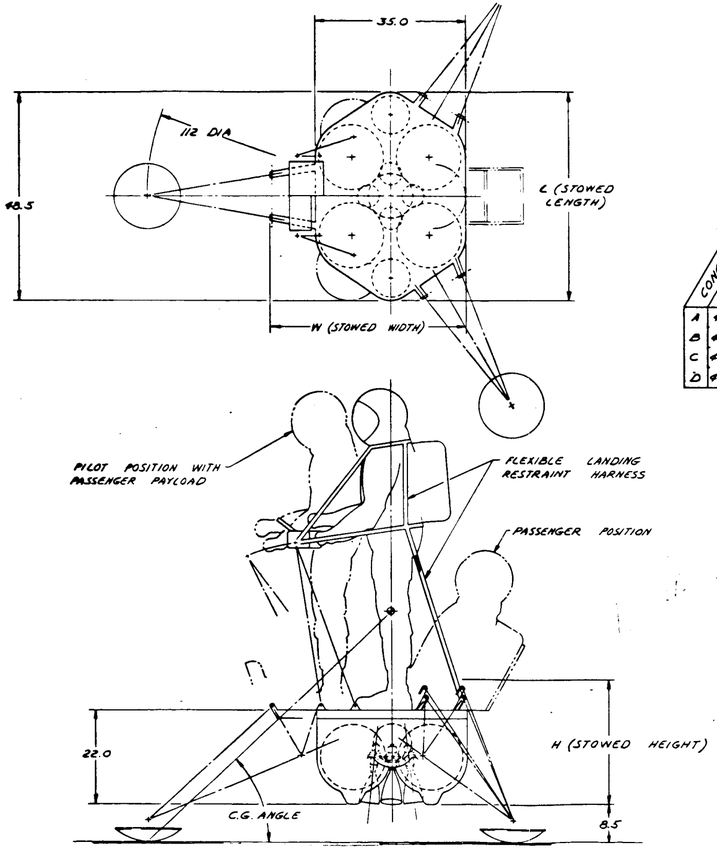

CONCEPT	TANK CONCEPT	LANDING PAD NO.	ENGINE NO.	LANDING VECTOR - V_L	LANDING PAD ORIENTATION	C.G. ANGLE	FOOTPRINT DIA (IN.)	STOWAGE ENVELOPE L × W × H (IN.)
A	4 SPHERICAL	3	4	FWD ONLY	FWD	43.5°	112	49 × 46 × 29
B	4 SPHERICAL	4	4	FWD ONLY	45°	43.5°	156	56 × 56 × 31
C	4 CYLINDRICAL	3	4	FWD ONLY	FWD	43.5°	120	50 × 50 × 33
D	4 CYLINDRICAL	4	4	FWD ONLY	45°	43.5°	170	60 × 60 × 35

1/10	SPACE DIVISION NORTH AMERICAN ROCKWELL CORPORATION SEAL BEACH OPERATIONS, SEAL BEACH, CALIFORNIA	
LUNAR FLYING VEHICLE - FOUR SPHERICAL & FOUR CYLINDRICAL TANKS WITH PARALLEL FEED		2030-16

Figure . LFV Concept - Four Spherical and Four Cylindrical Tanks With Parallel Feed (Drawing 2030-16)

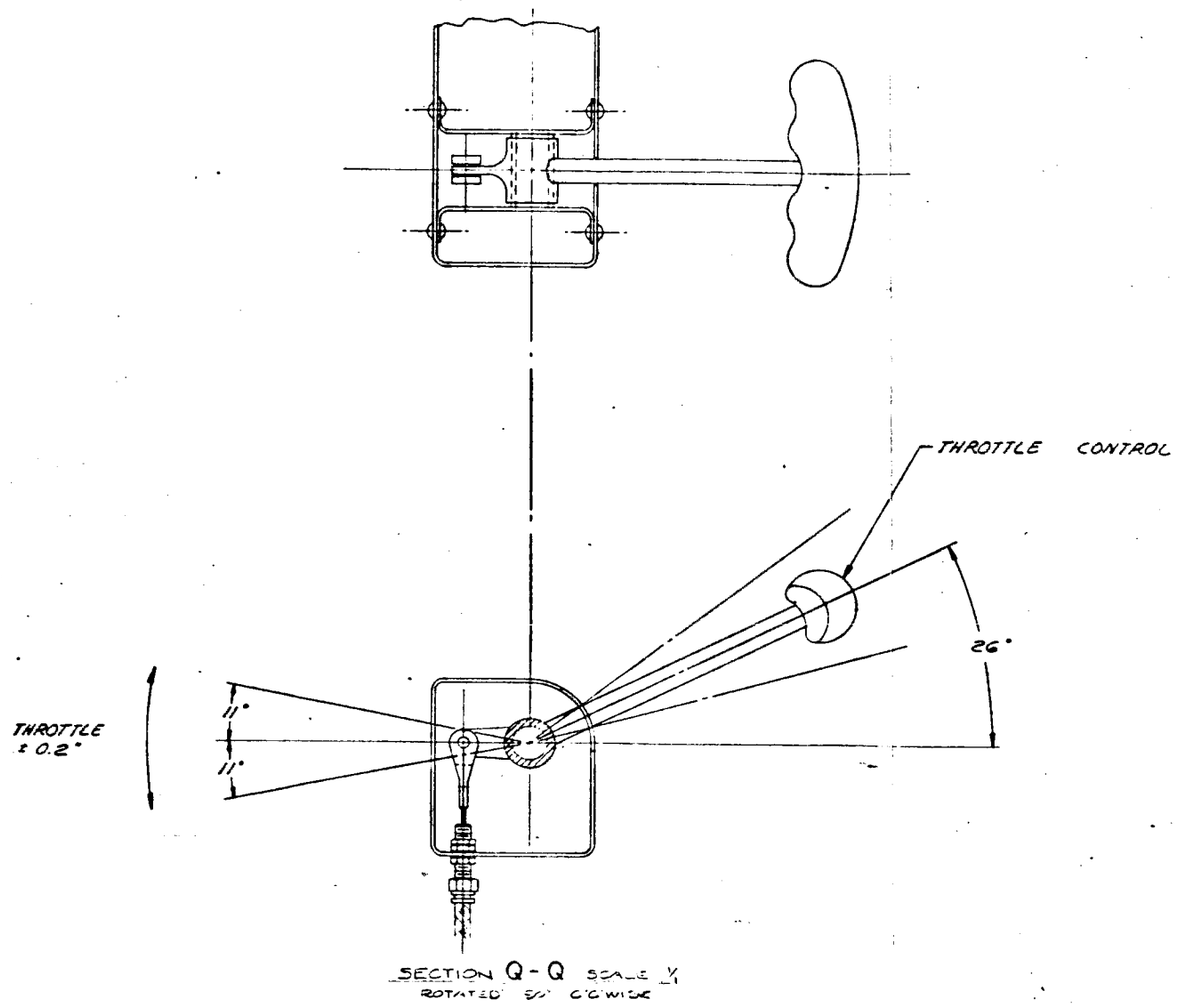
THROTTLE CONTROL
26°
THROTTLE
± 0.2°
11°
11°
SECTION Q-Q SCALE 1/1
ROTATED 90° C'C'WISE

1

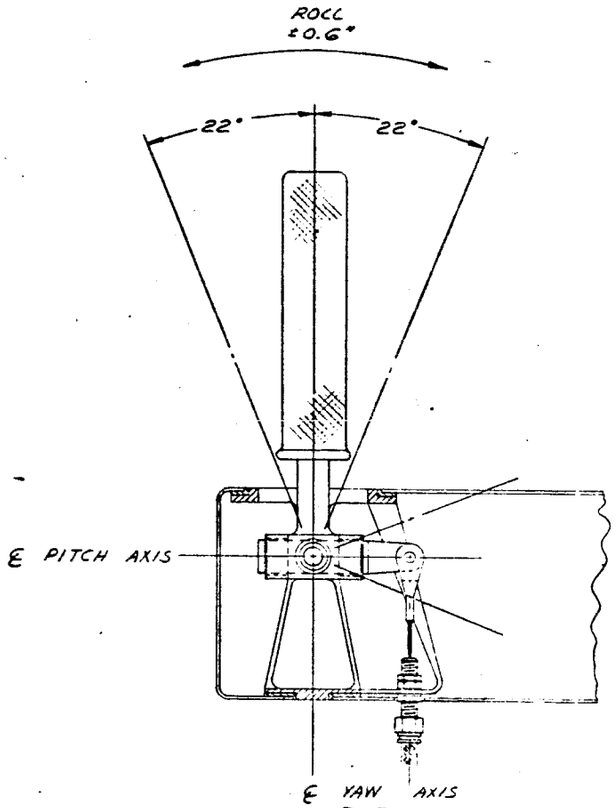

SECTION P-P SCALE 1/1

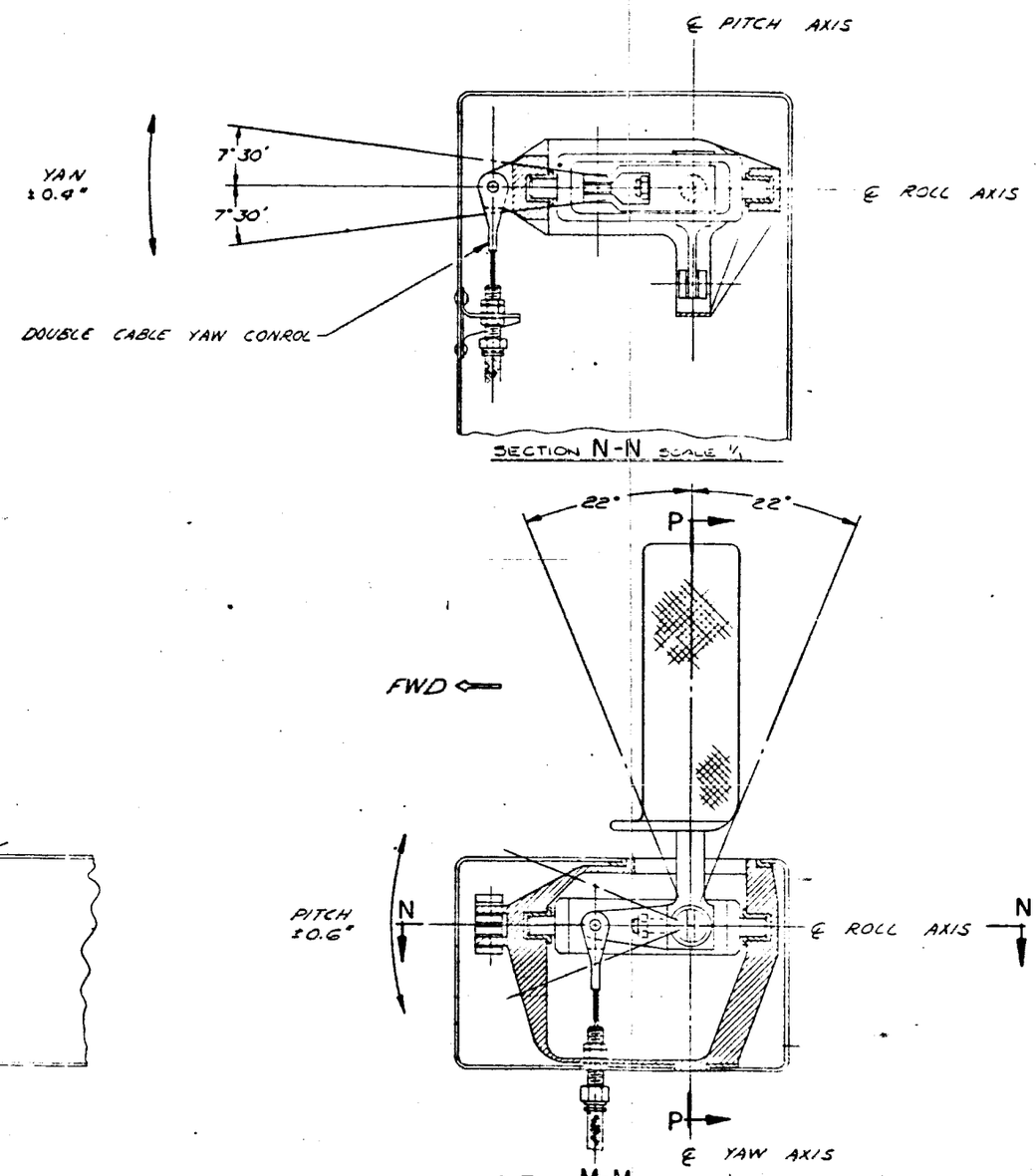

SECTION N-N SCALE 1/1

SECTION M-M SCALE 1/1
ROTATED 90° CLOCKWISE

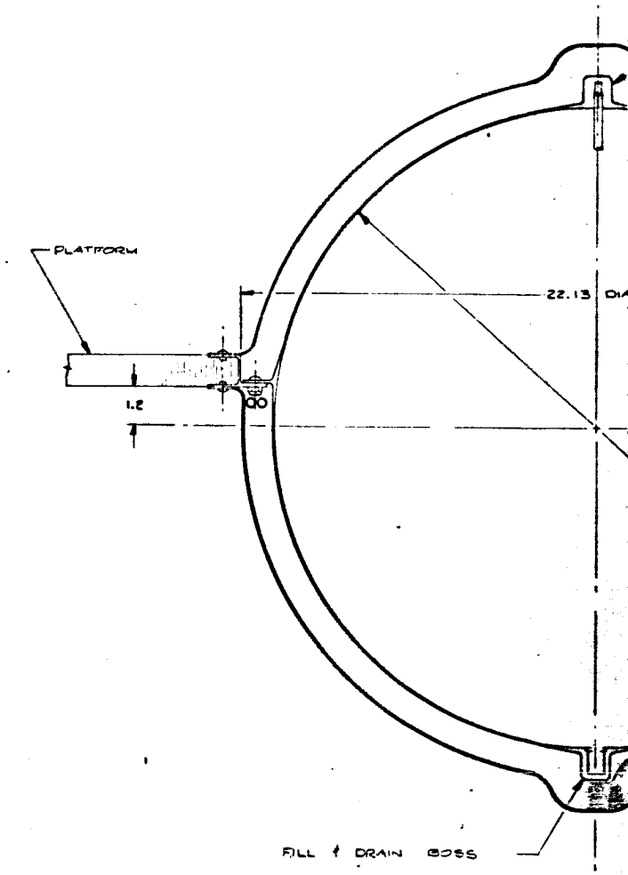

SECTION L-L
TYP FOR FUEL
ROTATED 45° C'W

2

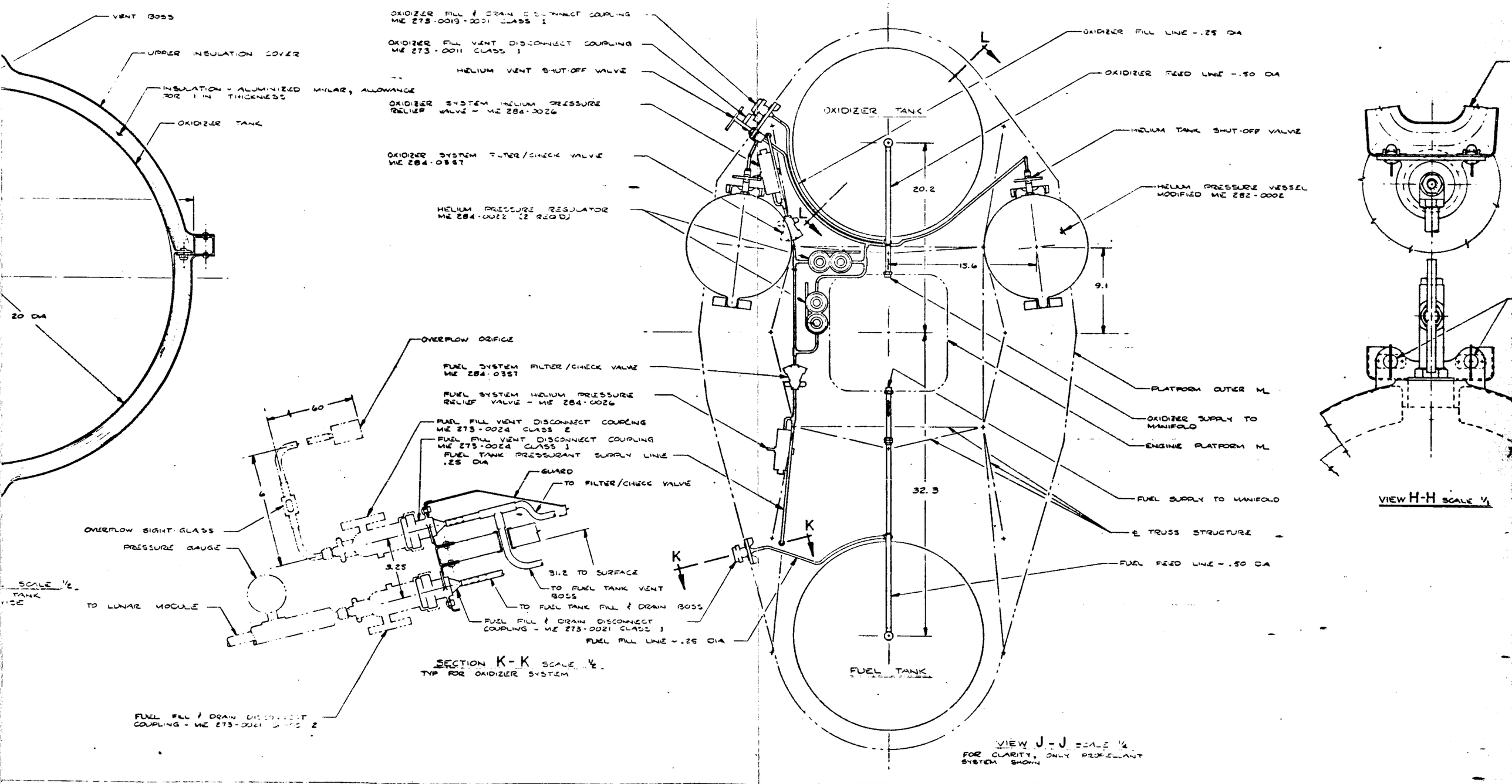
VENT BOSS
UPPER INSULATION COVER
INSULATION - ALUMINIZED MYLAR, ALLOWANCE FOR 1 IN THICKNESS
OXIDIZER TANK
20 DIA
OXIDIZER FILL & DRAIN DISCONNECT COUPLING ME 273-0019-0031 CLASS 1
OXIDIZER FILL VENT DISCONNECT COUPLING ME 273-0011 CLASS 1
HELIUM VENT SHUT-OFF VALVE
OXIDIZER SYSTEM HELIUM PRESSURE RELIEF VALVE - ME 284-0026
OXIDIZER SYSTEM FILTER/CHECK VALVE ME 284-0357
HELIUM PRESSURE REGULATOR ME 284-0022 (2 REQ'D)
OVERFLOW ORIFICE
FUEL SYSTEM FILTER/CHECK VALVE ME 284-0357
FUEL SYSTEM HELIUM PRESSURE RELIEF VALVE - ME 284-0026
FUEL FILL VENT DISCONNECT COUPLING ME 273-0024 CLASS 2
FUEL FILL VENT DISCONNECT COUPLING ME 273-0024 CLASS 1
FUEL TANK PRESSURANT SUPPLY LINE .25 DIA
GUARD
TO FILTER/CHECK VALVE
60
6
OVERFLOW SIGHT GLASS
PRESSURE GAUGE
3.25
31.2 TO SURFACE
TO FUEL TANK VENT BOSS
TO FUEL TANK FILL & DRAIN BOSS
TO LUNAR MODULE
FUEL FILL & DRAIN DISCONNECT COUPLING - ME 273-0021 CLASS 1
FUEL FILL LINE - .25 DIA
SECTION K-K SCALE 1/2
TYP FOR OXIDIZER SYSTEM
FUEL FILL & DRAIN DISCONNECT COUPLING - ME 273-0021 CLASS 2
OXIDIZER TANK
L
20.2
15.6
9.1
32.3
K
FUEL TANK
OXIDIZER FILL LINE - .25 DIA
OXIDIZER FEED LINE - .50 DIA
HELIUM TANK SHUT-OFF VALVE
HELIUM PRESSURE VESSEL MODIFIED ME 282-0002
PLATFORM OUTER ML
OXIDIZER SUPPLY TO MANIFOLD
ENGINE PLATFORM ML
FUEL SUPPLY TO MANIFOLD
℄ TRUSS STRUCTURE
FUEL FEED LINE - .50 DIA
VIEW J-J SCALE 1/4
FOR CLARITY, ONLY PROPELLANT SYSTEM SHOWN
VIEW H-H SCALE 1/1

3

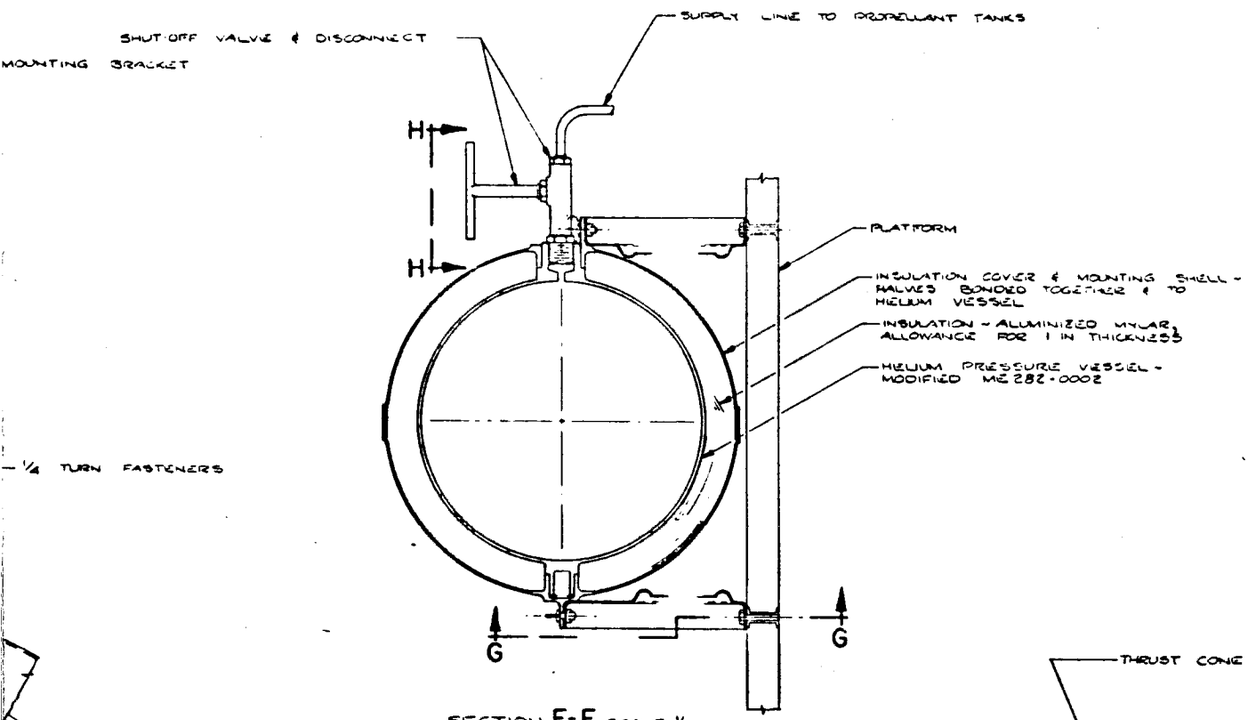

SECTION F-F SCALE 1/2
TYP BOTH TANKS

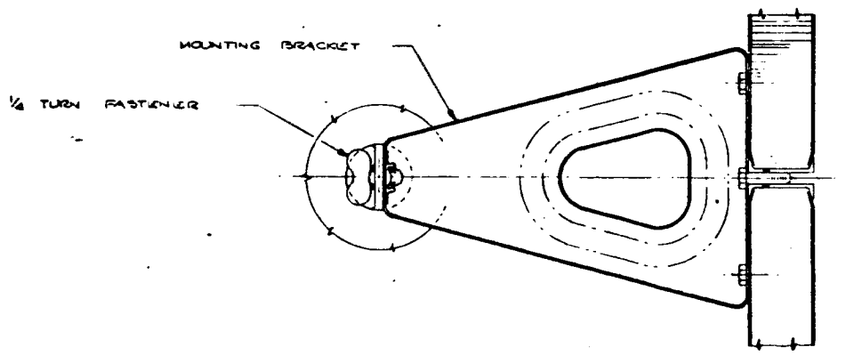

VIEW G-G SCALE 1/1

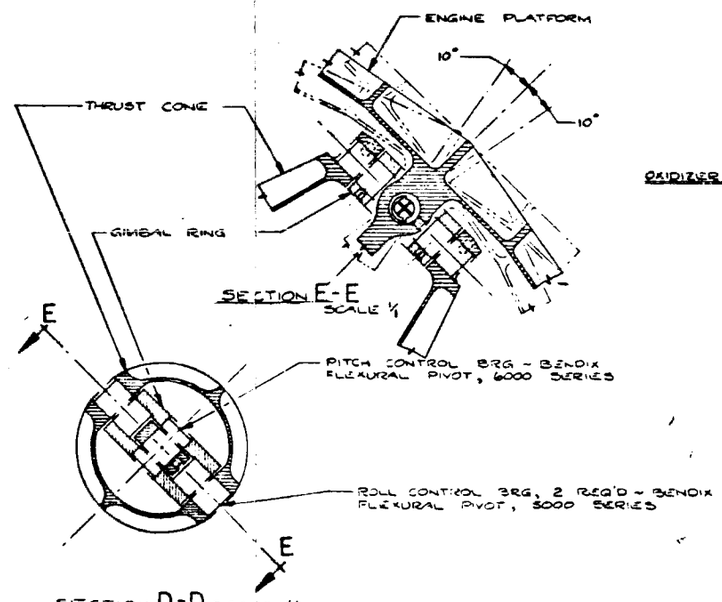

SECTION E-E SCALE 1/1

SECTION D-D SCALE 1/1

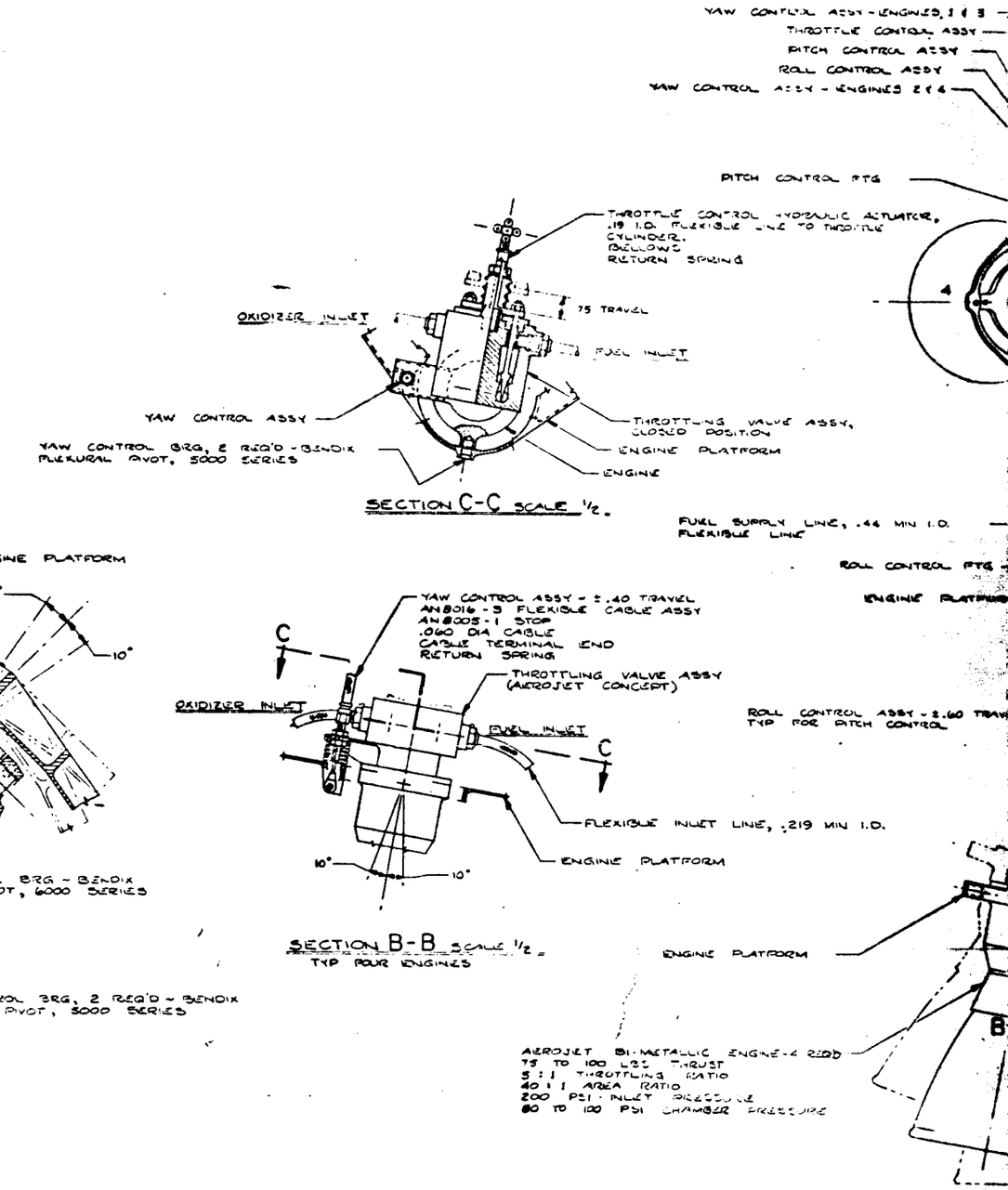

SECTION C-C SCALE 1/2

SECTION B-B SCALE 1/2
TYP FOUR ENGINES

4

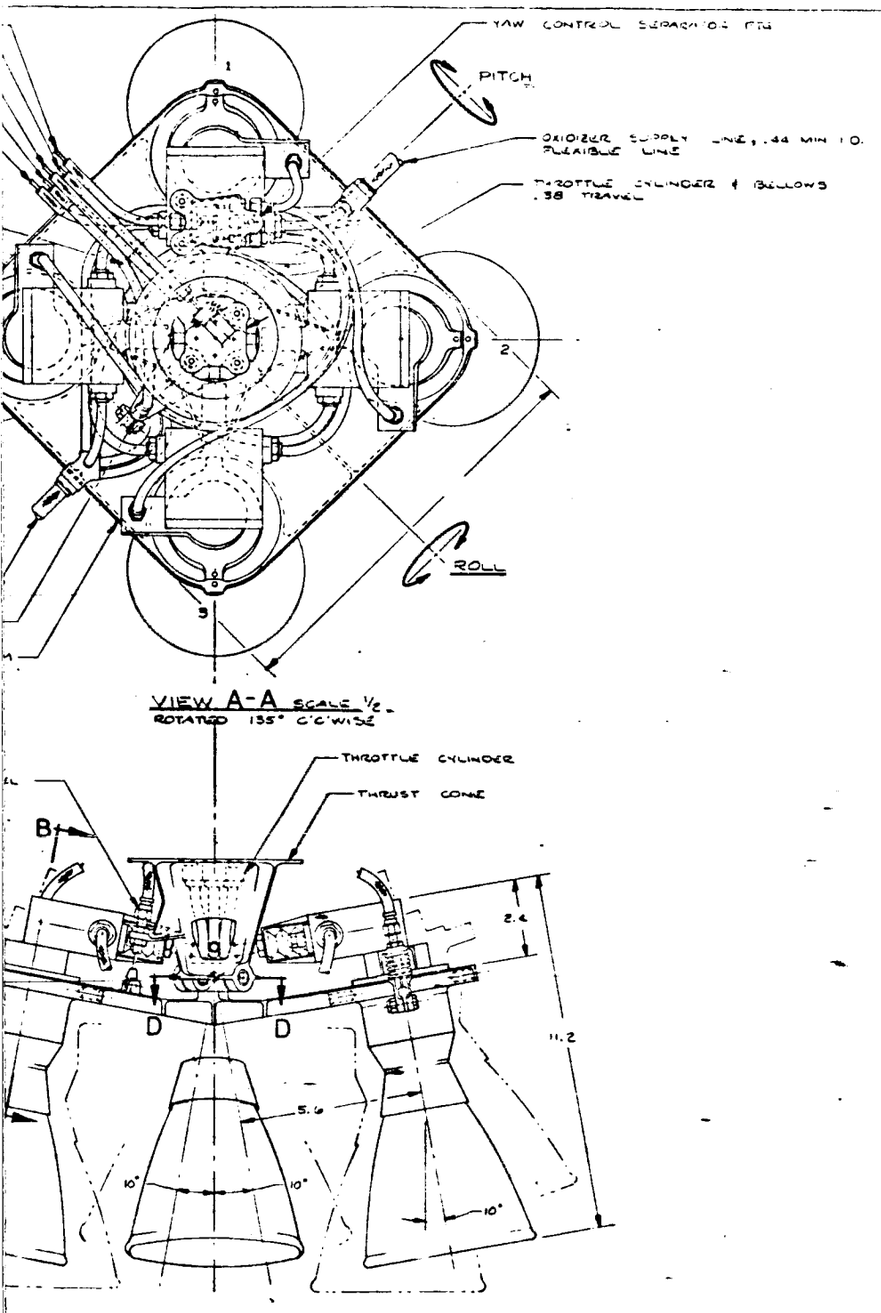
YAW CONTROL SEPARATION PTN
PITCH
OXIDIZER SUPPLY LINE, .44 MIN I.D.
FLEXIBLE LINE
THROTTLE CYLINDER & BELLOWS
.38 TRAVEL
ROLL
VIEW A-A SCALE 1/2
ROTATED 135° C'C'WISE
THROTTLE CYLINDER
THRUST CONE
B
D
D
2.4
11.2
5.6
10°
10°
10°

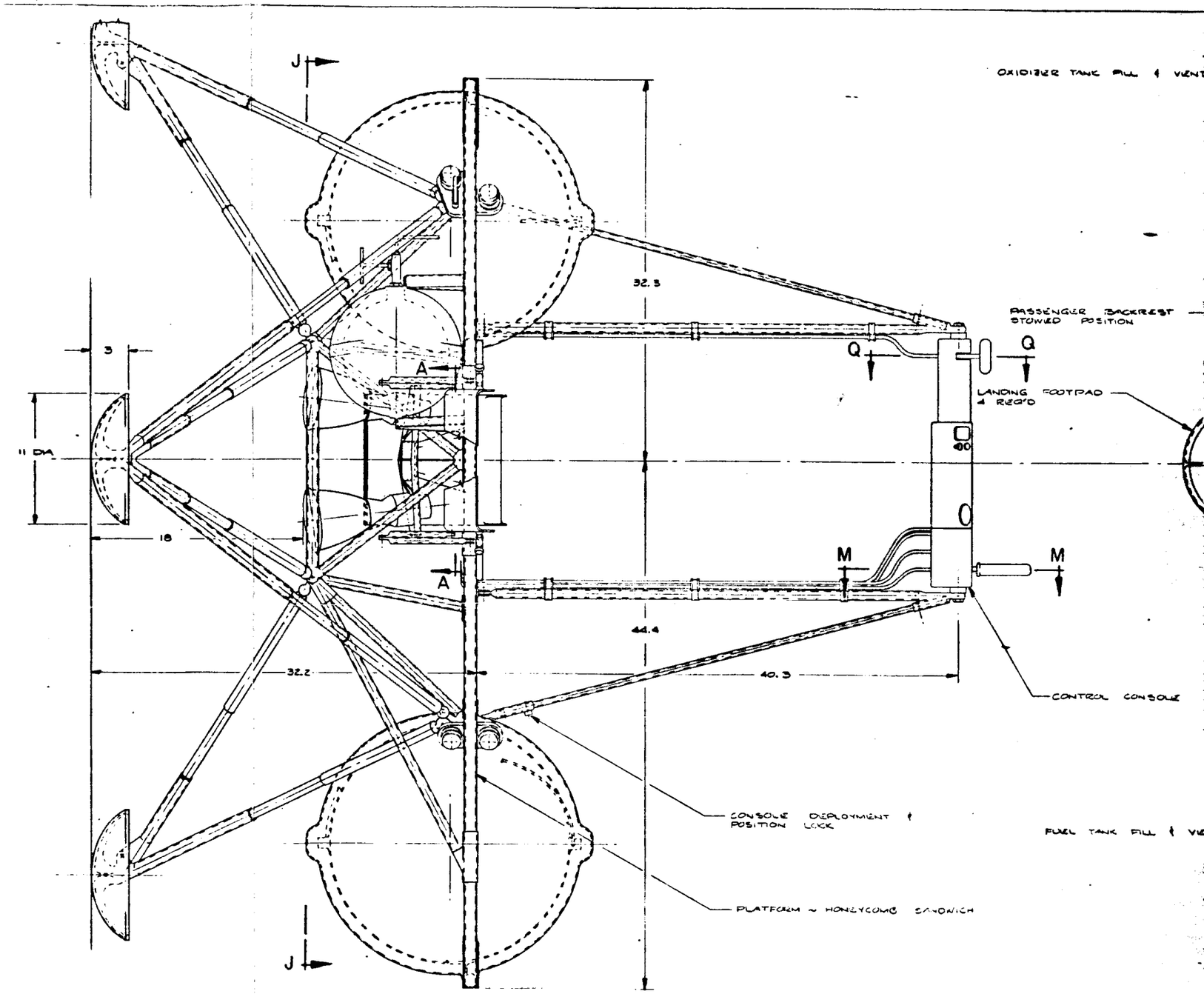
OXIDIZER TANK FILL & VENT
J
32.3
PASSENGER BACKREST
STOWED POSITION
Q
Q
A
LANDING FOOTPAD
4 REQ'D
3
11 DIA
18
M
M
A
44.4
32.2
40.3
CONTROL CONSOLE
CONSOLE DEPLOYMENT &
POSITION LOCK
FUEL TANK FILL & VE
PLATFORM ~ HONEYCOMB SANDWICH
J

5

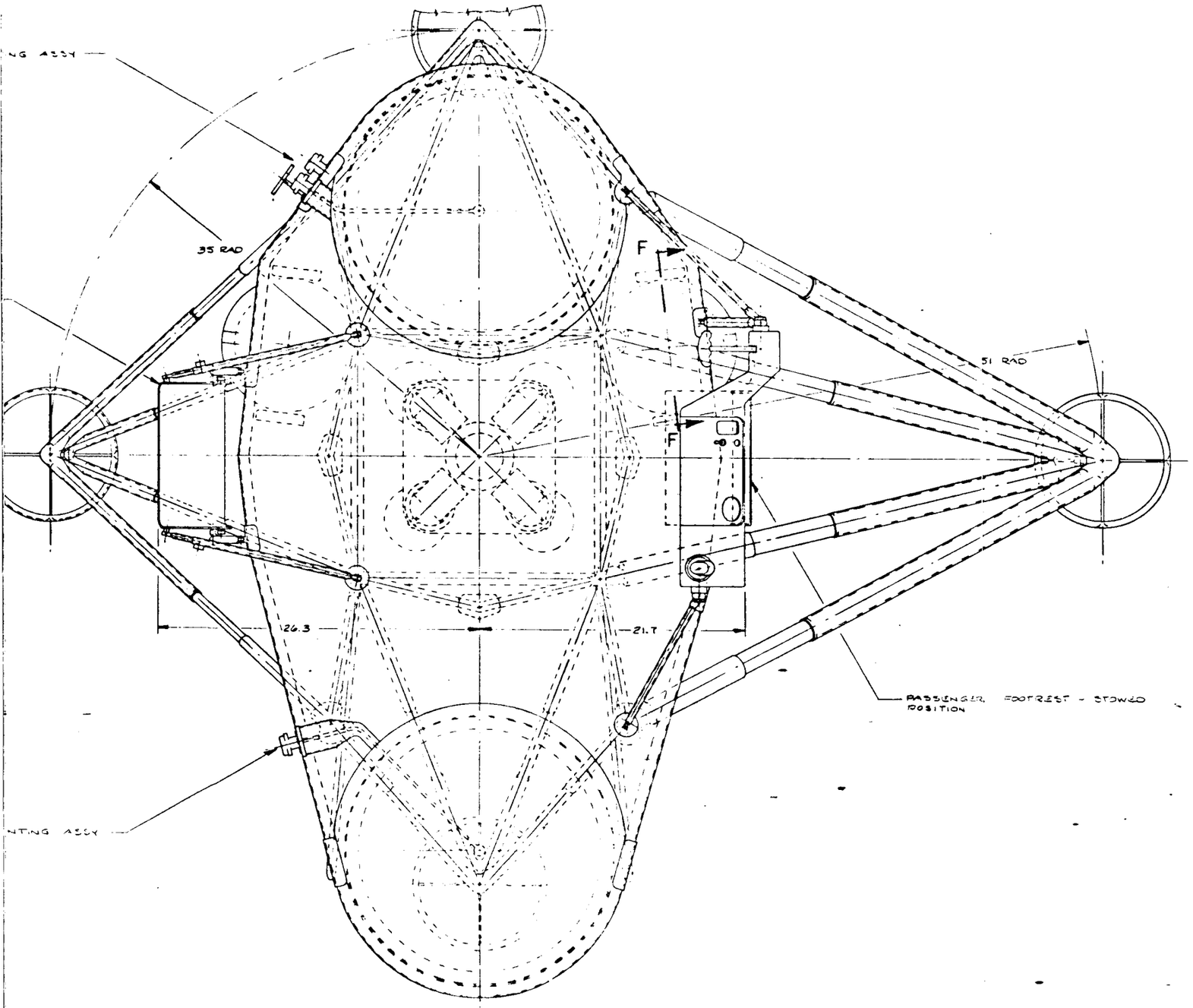
NG ASSY
35 RAD
F
F
51 RAD
126.3
21.7
PASSENGER FOOTREST - STOWED POSITION
NTING ASSY

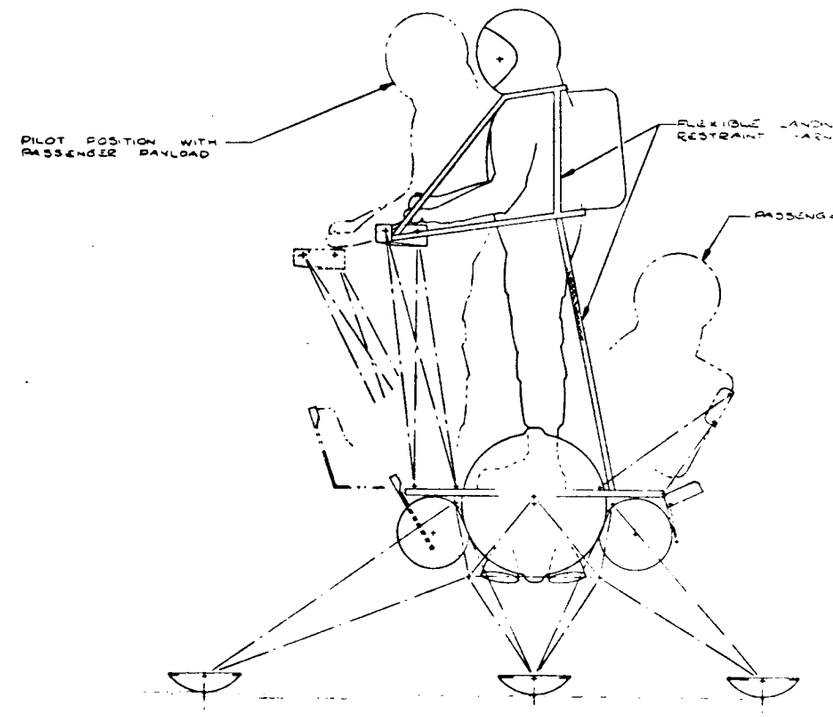
PILOT POSITION WITH PASSENGER PAYLOAD
FLEXIBLE
RESTRAINT

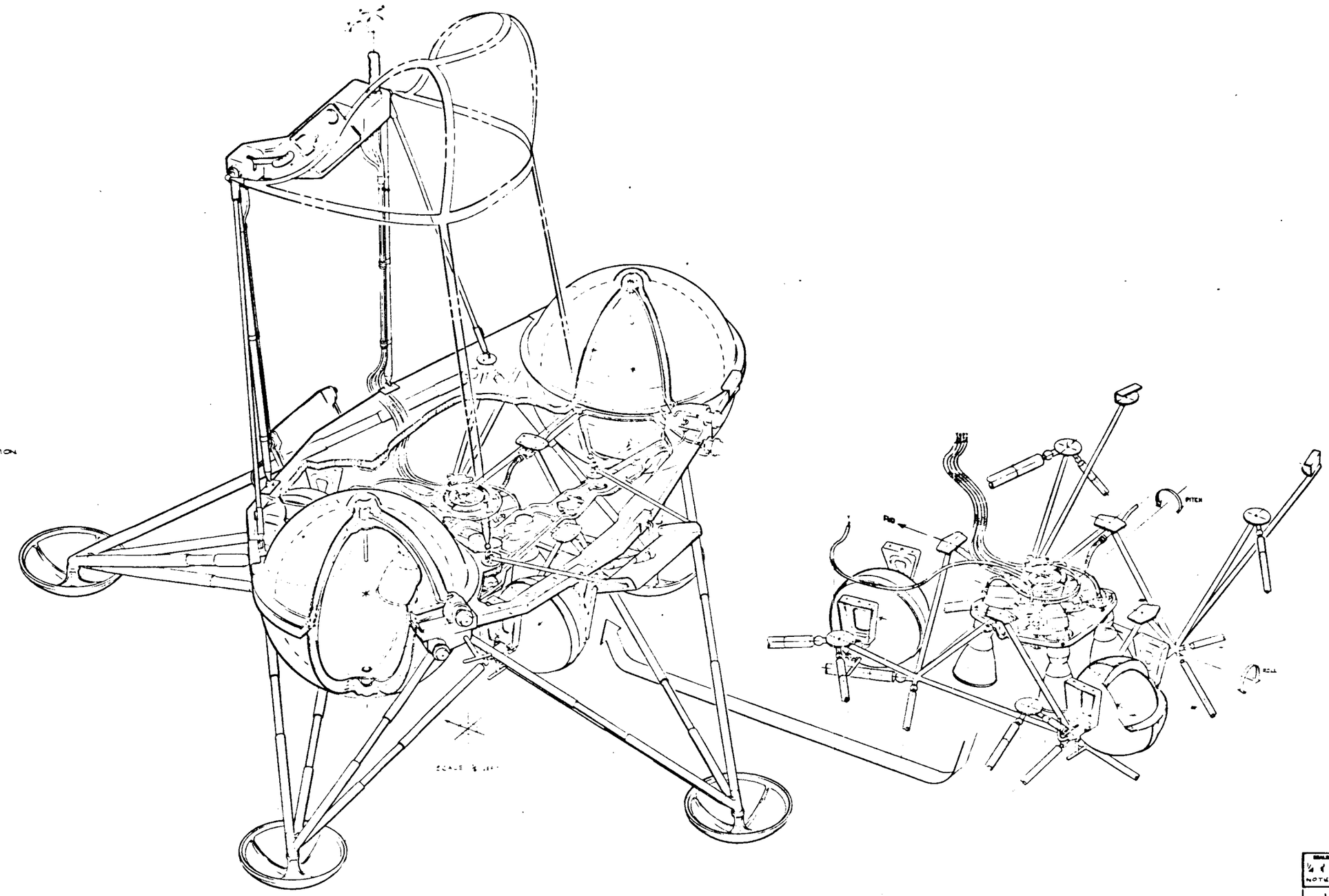

SCALE NOTED	DR.	SPACE DIVISION
	DATE	NORTH AMERICAN ROCKWELL CORPORATION
	MODEL	12214 LAKEWOOD BOULEVARD DOWNEY CALIFORNIA
LUNAR [illegible] 4-ENGINE, 2 [illegible]		2030-18

Figure . LFV Concept - Four Engines, Two Spherical Tanks, Manual Control (Drawing 2030-18)

7

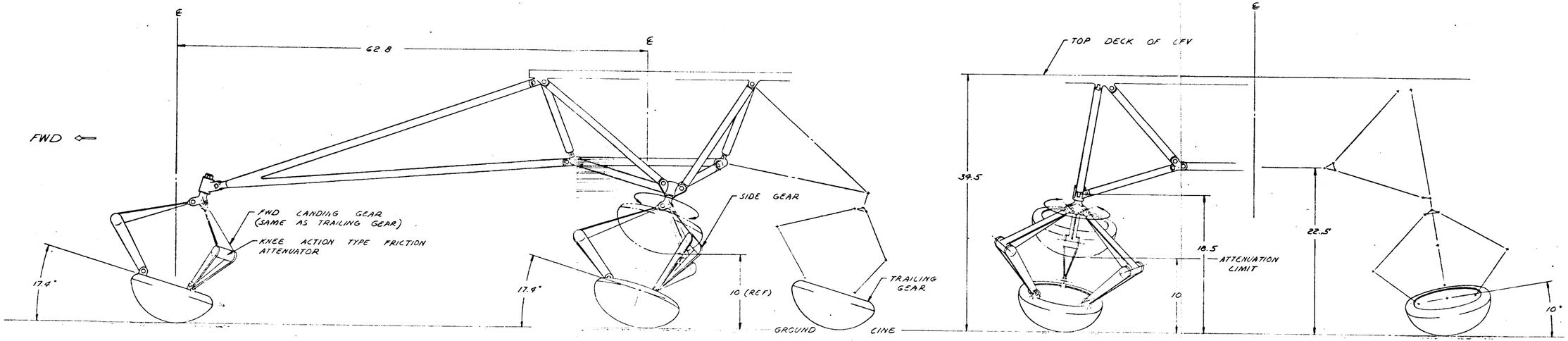

10° ATTENUATION (KNEE ACTION TYPE) SIDE, NOSE & TRAILING GEAR CONCEPT

31-32

1

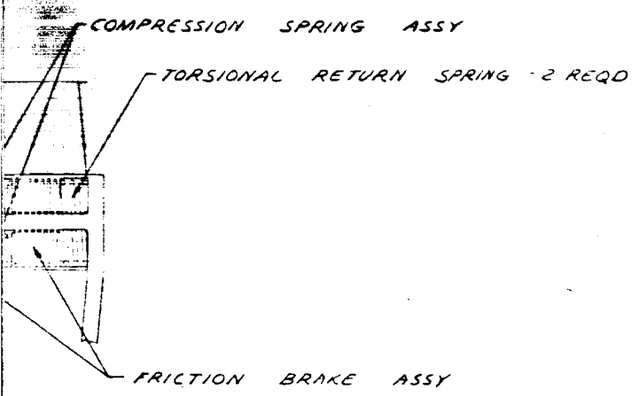

OLEE ACTION TYPE ATTENUATOR
L SCALE

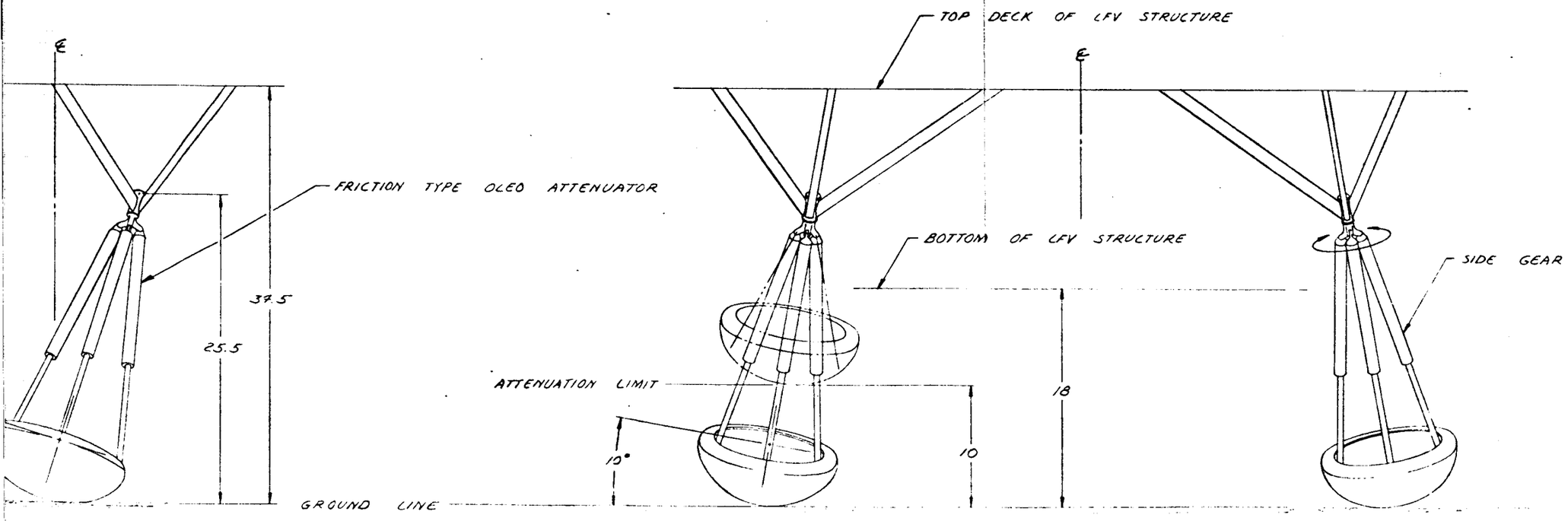

10° ATTENUATION SIDE GEAR CONCEPT

31-32

2

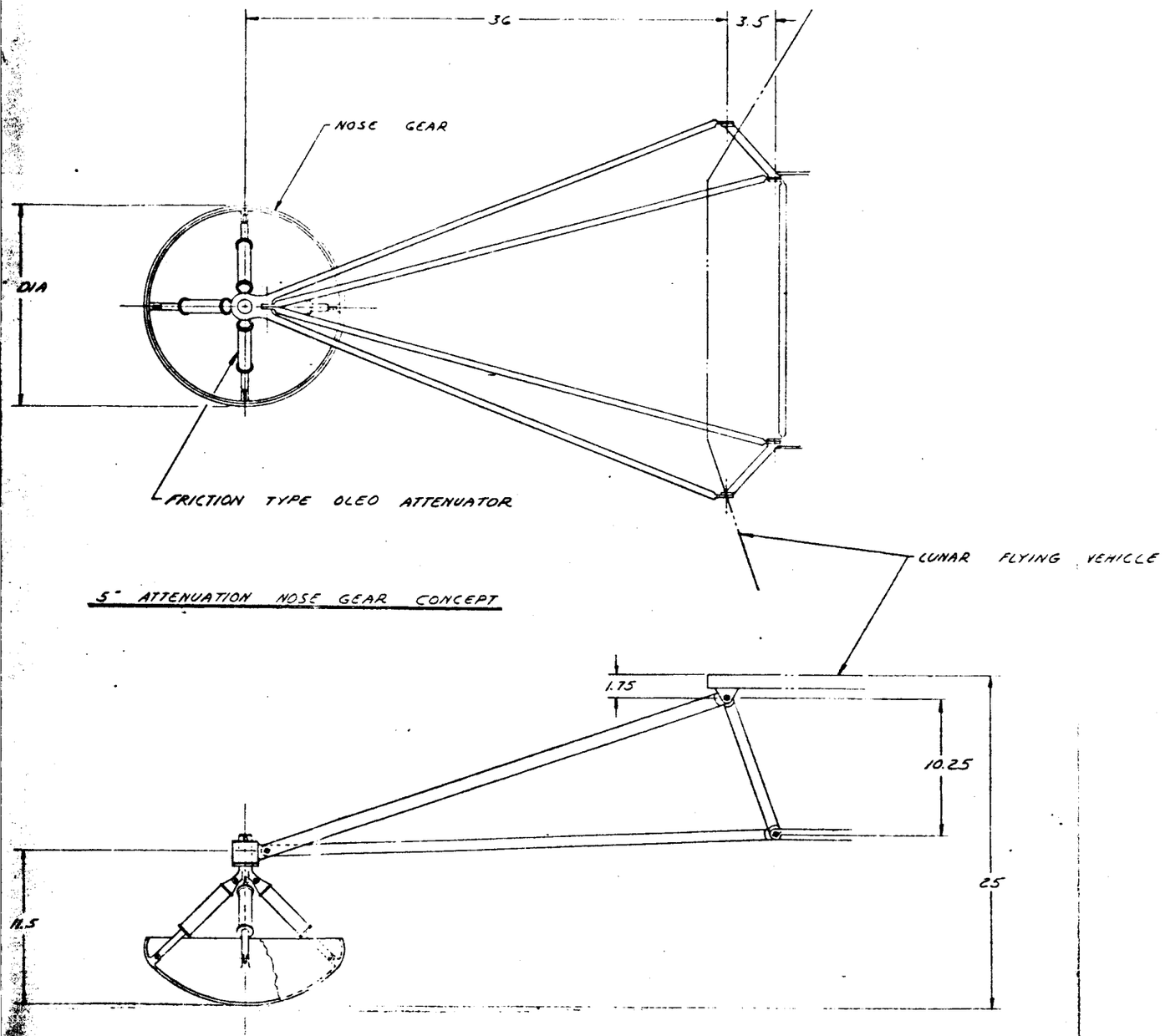

SCALE 1/4	DR. Salmasbury	SPACE DIVISION
	DATE 6-10-64	NORTH AMERICAN ROCKWELL CORPORATION
	MODEL	12214 LAKEWOOD BOULEVARD, DOWNEY, CALIFORNIA
LUNAR FLYING VEHICLE - LANDING GEAR ATTENUATION CONFIGURATIONS		2030-19

Figure . LFV Landing Gear Attenuation Configurations (Drawing 2030-19)

31-32

3

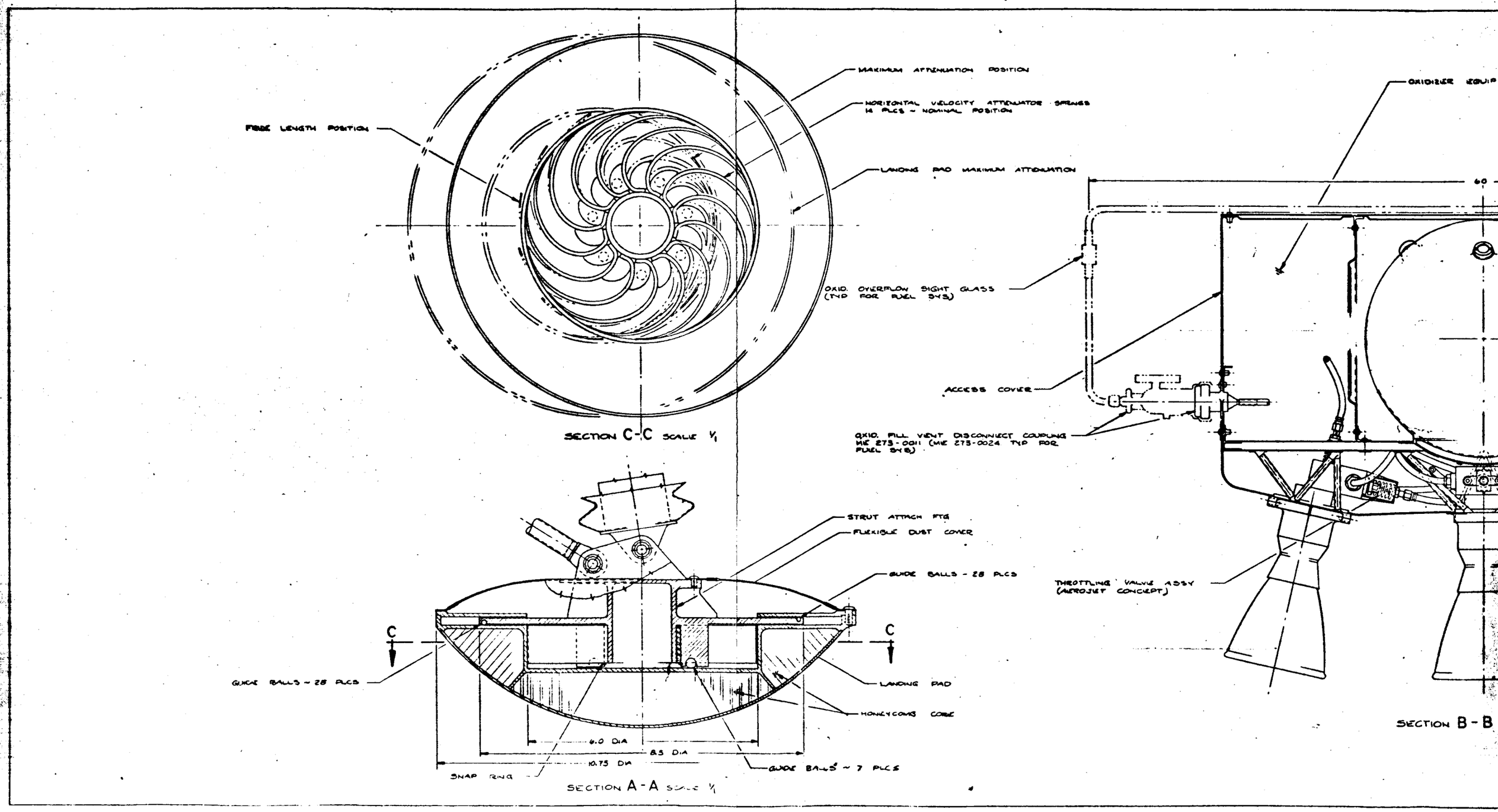
MAXIMUM ATTENUATION POSITION
HORIZONTAL VELOCITY ATTENUATOR SPRINGS 14 PLCS - NOMINAL POSITION
FREE LENGTH POSITION
LANDING PAD MAXIMUM ATTENUATION
SECTION C-C SCALE 1/1
OXIDIZER EQUIP
60
OXID. OVERFLOW SIGHT GLASS (TYP FOR FUEL SYS)
ACCESS COVER
OXID. FILL VENT DISCONNECT COUPLING MIE 273-0011 (MIE 273-0024 TYP FOR FUEL SYS)
STRUT ATTACH FTG
FLEXIBLE DUST COVER
GUIDE BALLS - 28 PLCS
THROTTLING VALVE ASSY (AEROJET CONCEPT)
C
C
GUIDE BALLS - 28 PLCS
LANDING PAD
HONEYCOMB CORE
6.0 DIA
8.5 DIA
10.75 DIA
SNAP RING
GUIDE BALLS - 7 PLCS
SECTION A-A SCALE 1/1
SECTION B-B

33-34

1

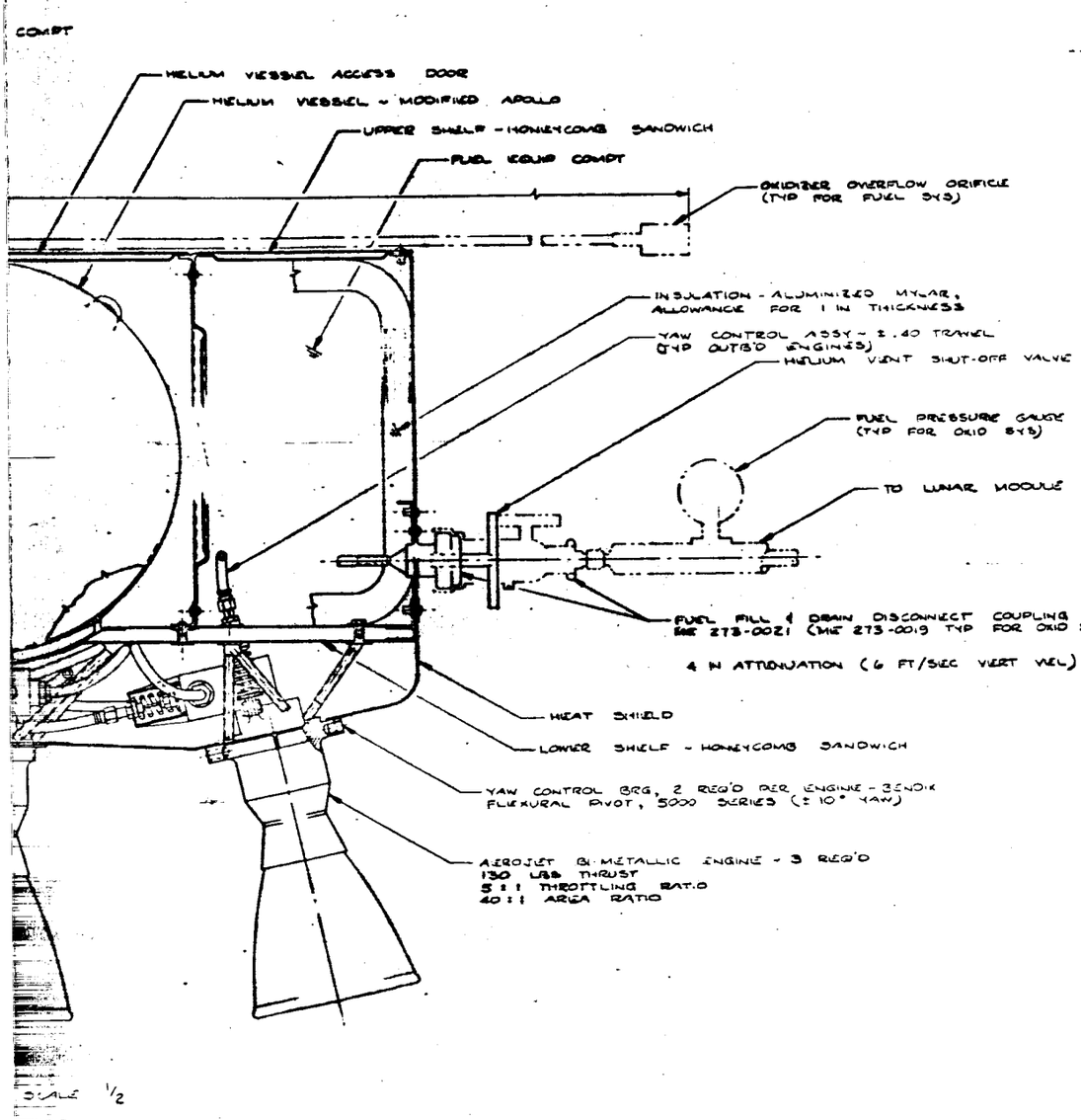
COMPT
HELIUM VESSEL ACCESS DOOR
HELIUM VESSEL - MODIFIED APOLLO
UPPER SHELF - HONEYCOMB SANDWICH
FUEL EQUIP COMPT
OXIDIZER OVERFLOW ORIFICE (TYP FOR FUEL SYS)
INSULATION - ALUMINIZED MYLAR, ALLOWANCE FOR 1 IN THICKNESS
YAW CONTROL ASSY - ± 40 TRAVEL (TYP OUTB'D ENGINES)
HELIUM VENT SHUT-OFF VALVE
FUEL PRESSURE GAUGE (TYP FOR OXID SYS)
TO LUNAR MODULE
FUEL FILL & DRAIN DISCONNECT COUPLING ME 273-0021 (ME 273-0019 TYP FOR OXID SYS)
4 IN ATTENUATION (6 FT/SEC VERT VEL)
HEAT SHIELD
LOWER SHELF - HONEYCOMB SANDWICH
YAW CONTROL BRG, 2 REQ'D PER ENGINE - BENDIX FLEXURAL PIVOT, 5000 SERIES (± 10° YAW)
AEROJET BI-METALLIC ENGINE - 3 REQ'D
130 LBS THRUST
5 : 1 THROTTLING RATIO
40 : 1 AREA RATIO
SCALE 1/2

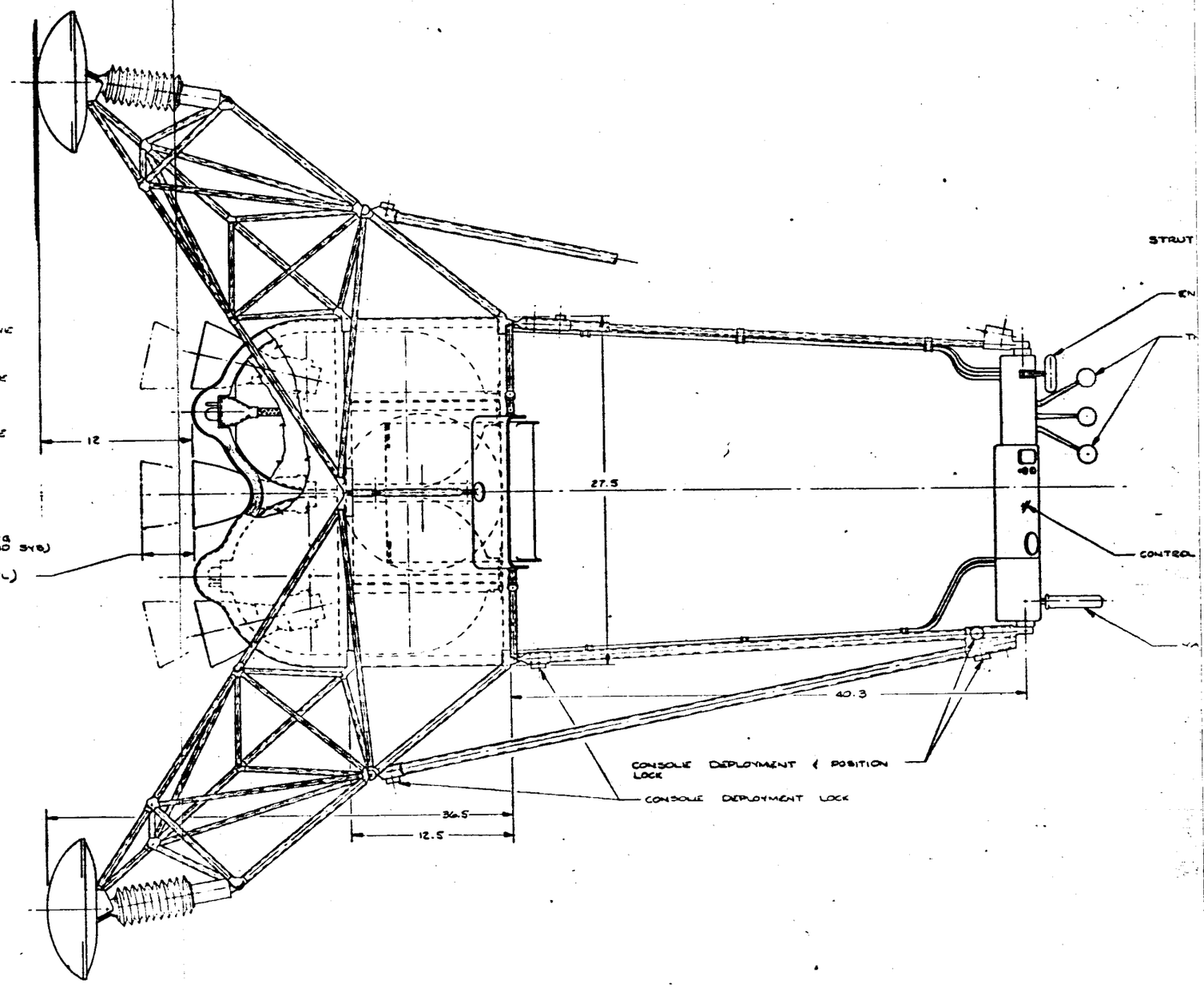
STRUT
12
27.5
40.3
36.5
12.5
CONTROL
CONSOLE DEPLOYMENT & POSITION LOCK
CONSOLE DEPLOYMENT LOCK

33-34

2

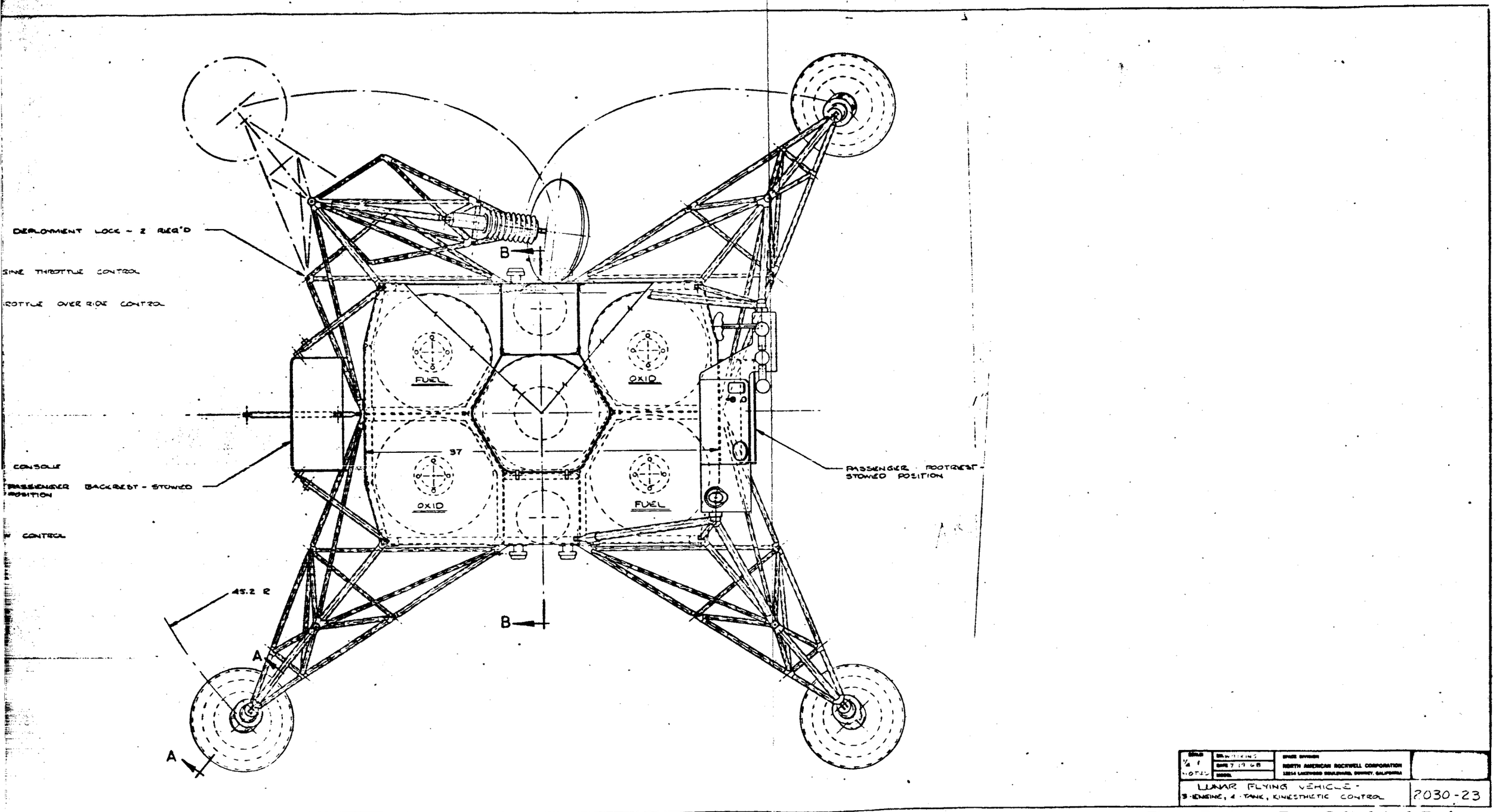

Figure . LFV Concept - Three Engines, Four Cylindrical Tanks, Kinesthetic Control (Drawing 2030-23)

33-34

3

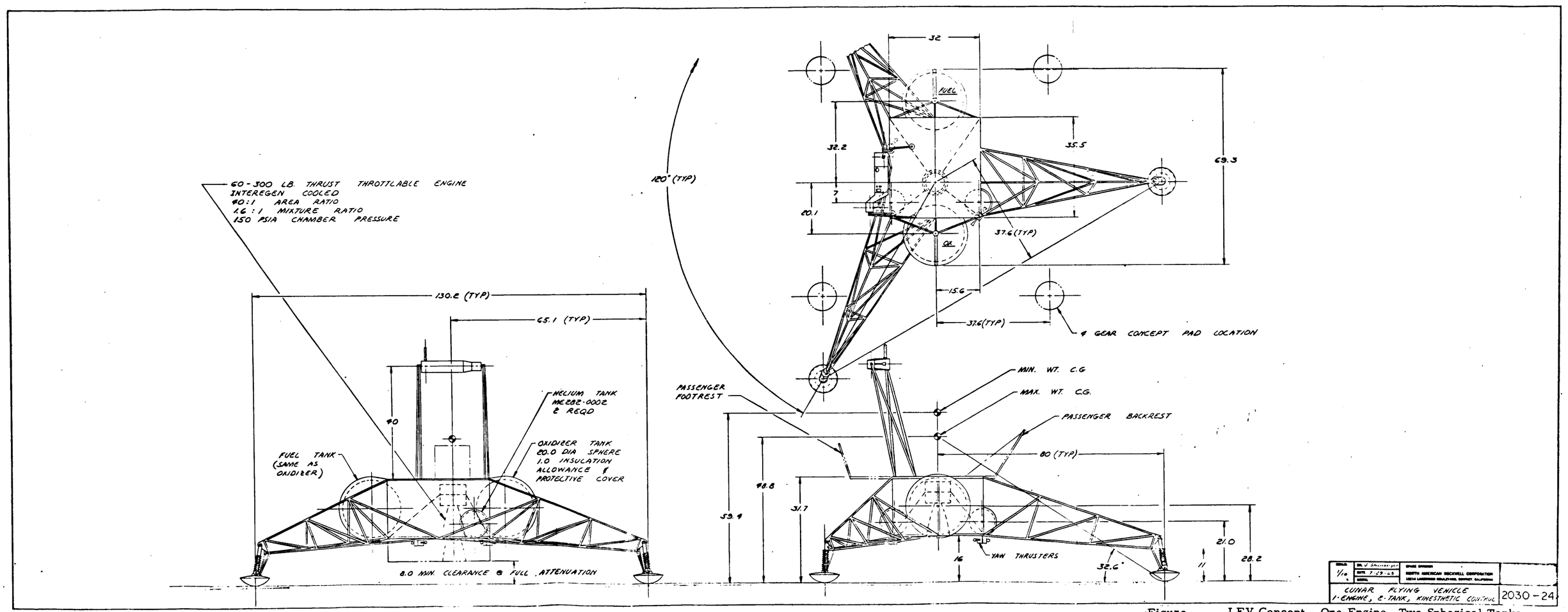

Figure . LFV Concept - One Engine, Two Spherical Tanks, Kinesthetic Control (2030-24)

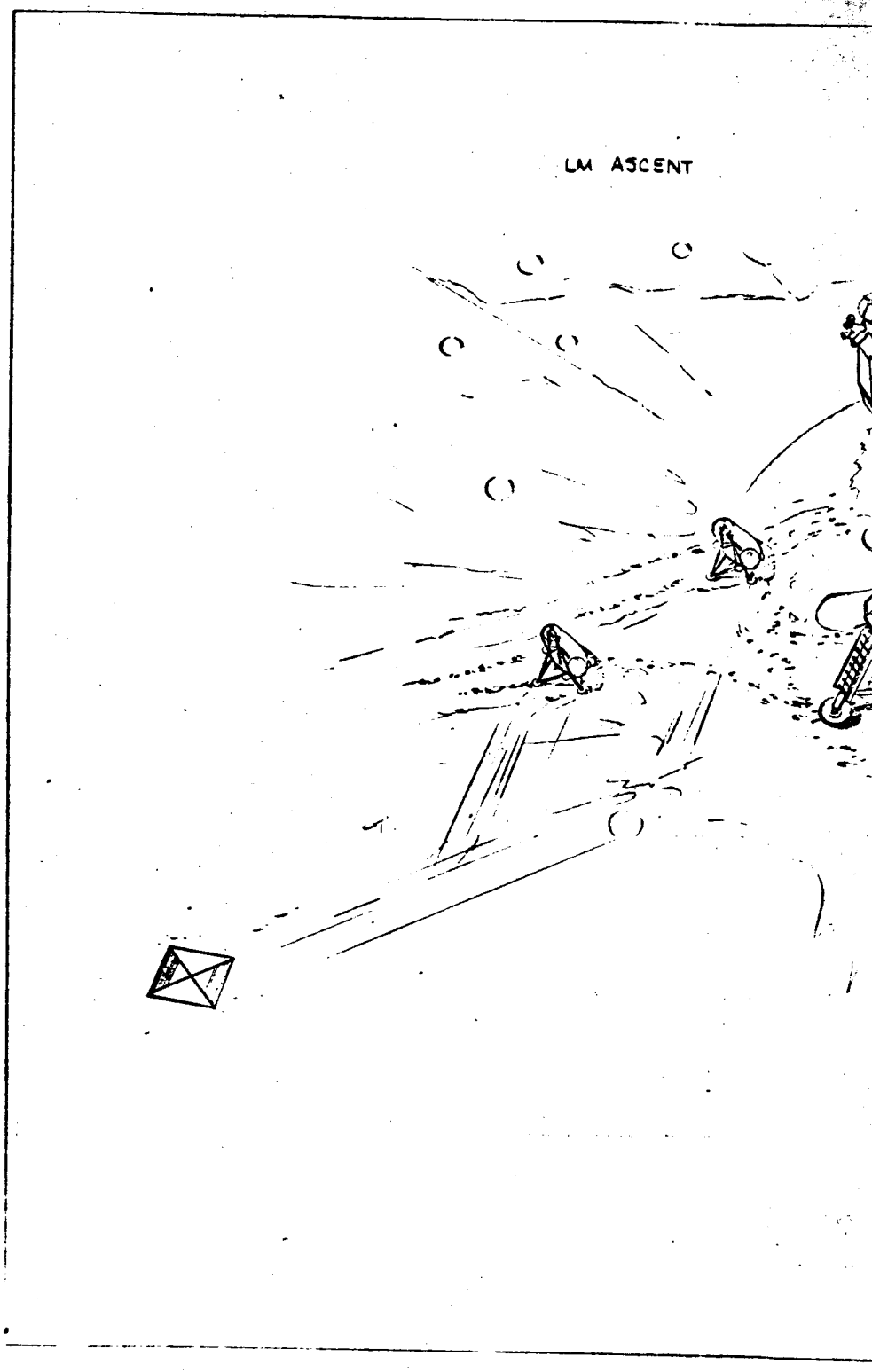

37-38
(1)

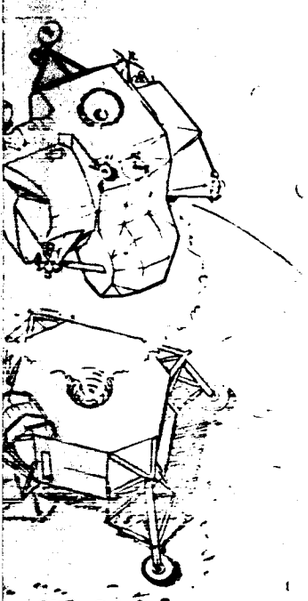

TYPICAL LFU MISSION

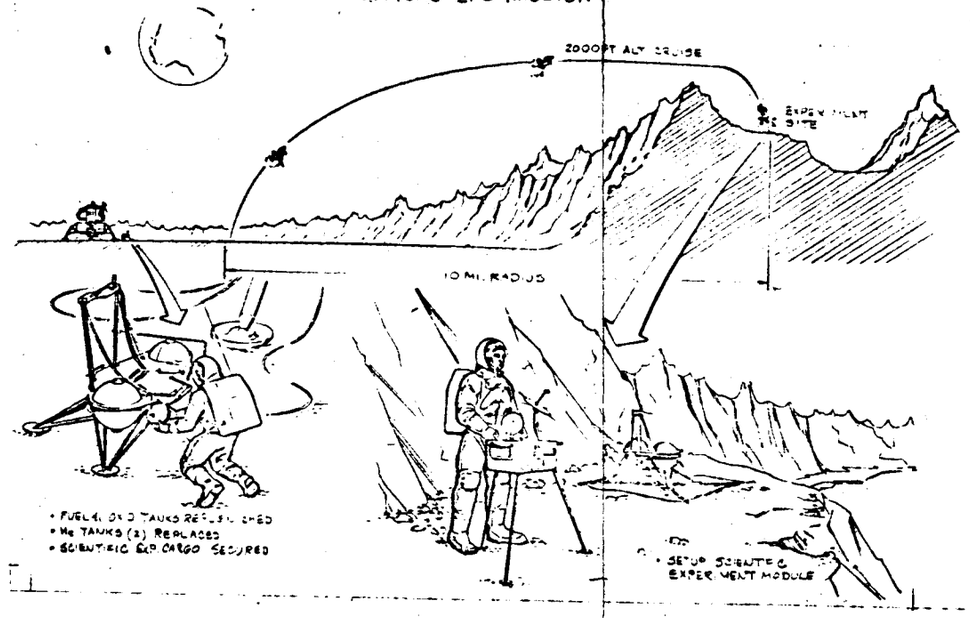

LFU TAKEOFF - CHECKOUT FLIGHT

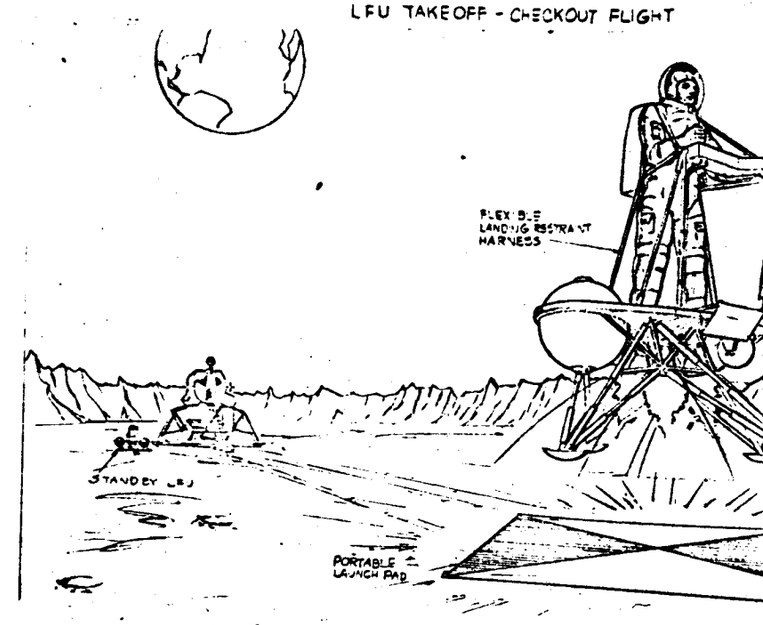

PAYLOAD CAPABILITY

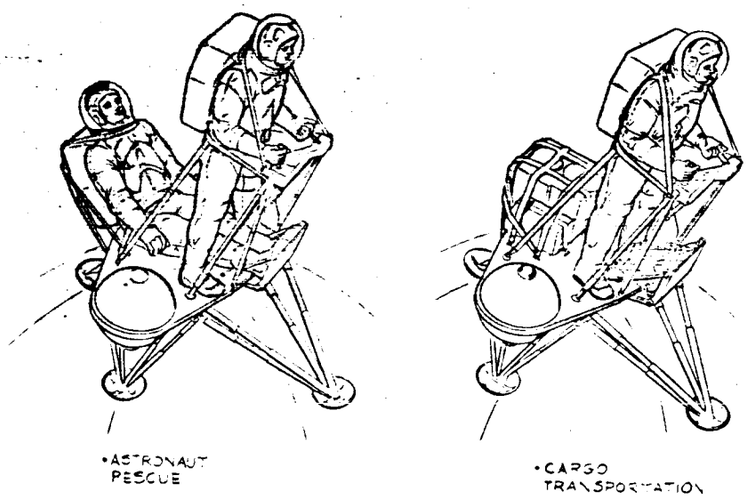

LFU CHECKOUT FLIGHT

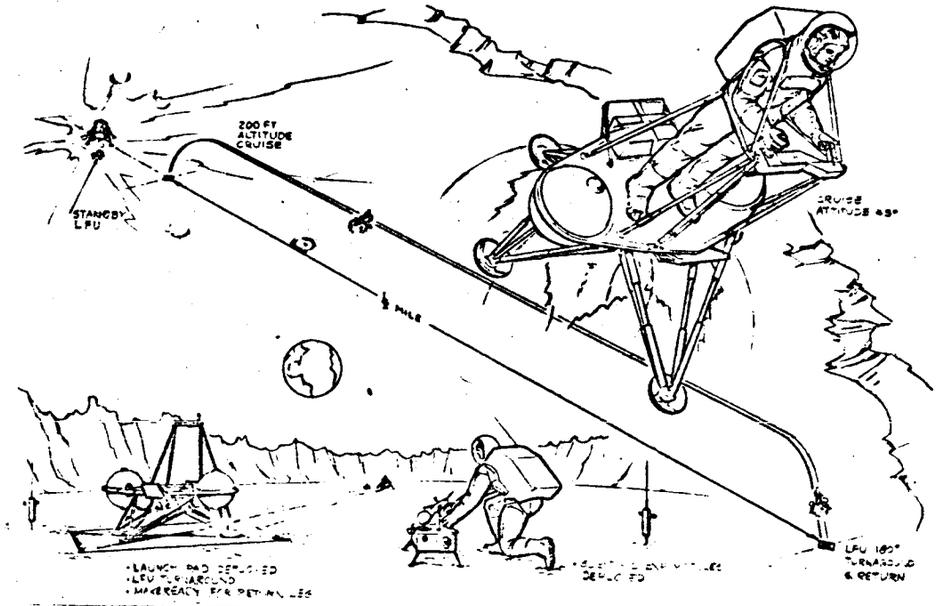

37-38

2

LFU LANDING GEAR DEPLOYMENT

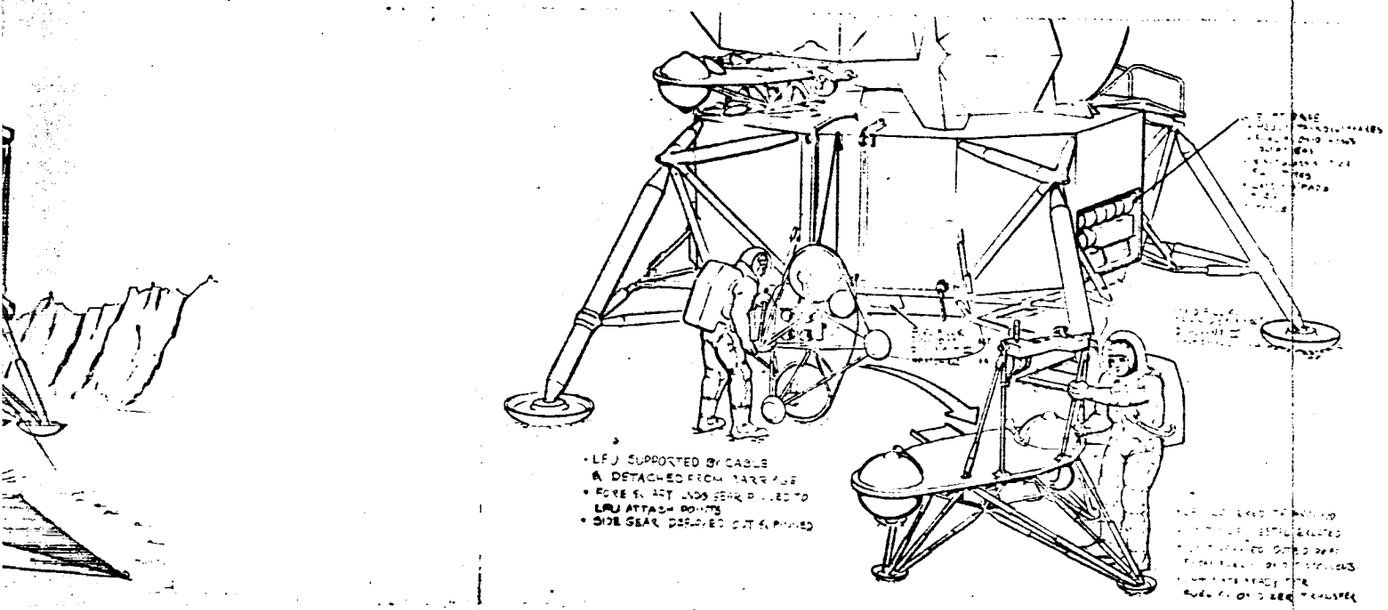

LM LANDING ON LUNAR SURFACE

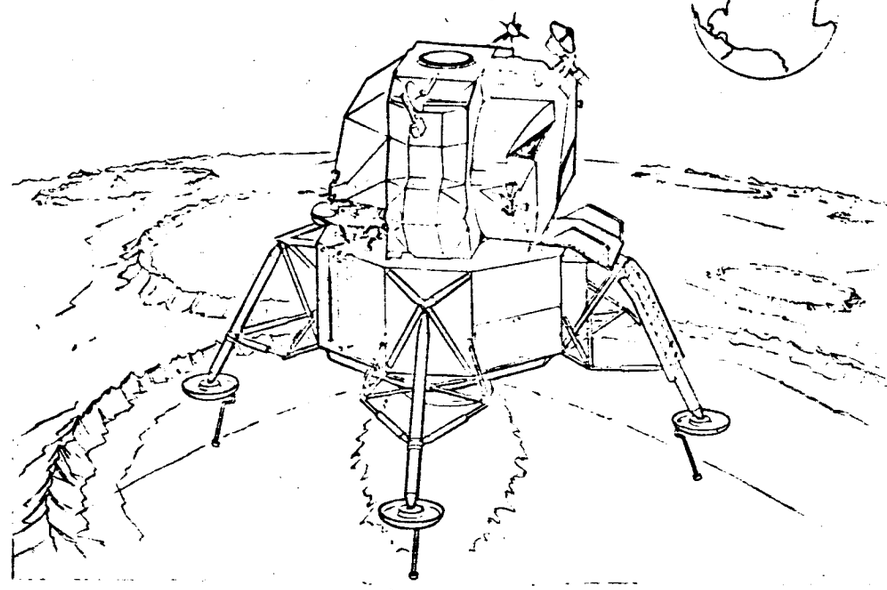

LFU FUELING, EQUIP C/O & SITE PREPARATION

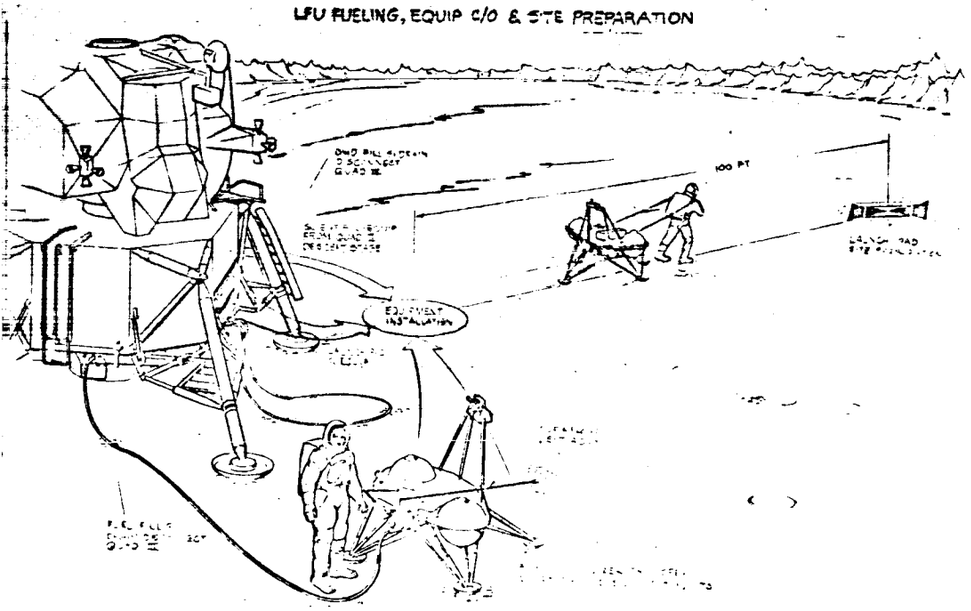

LUNAR FLYING UNIT REMOVAL

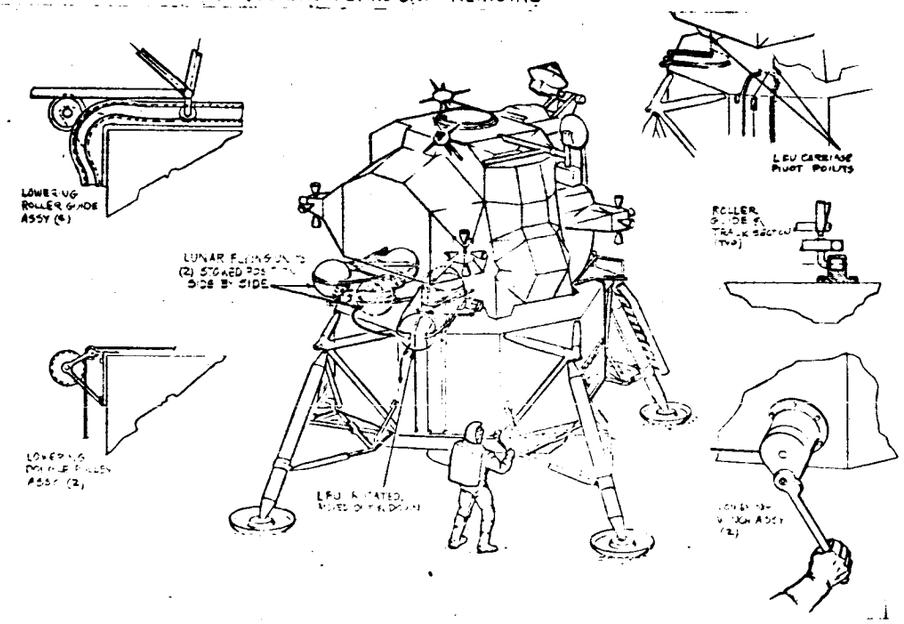

37-38

(3)

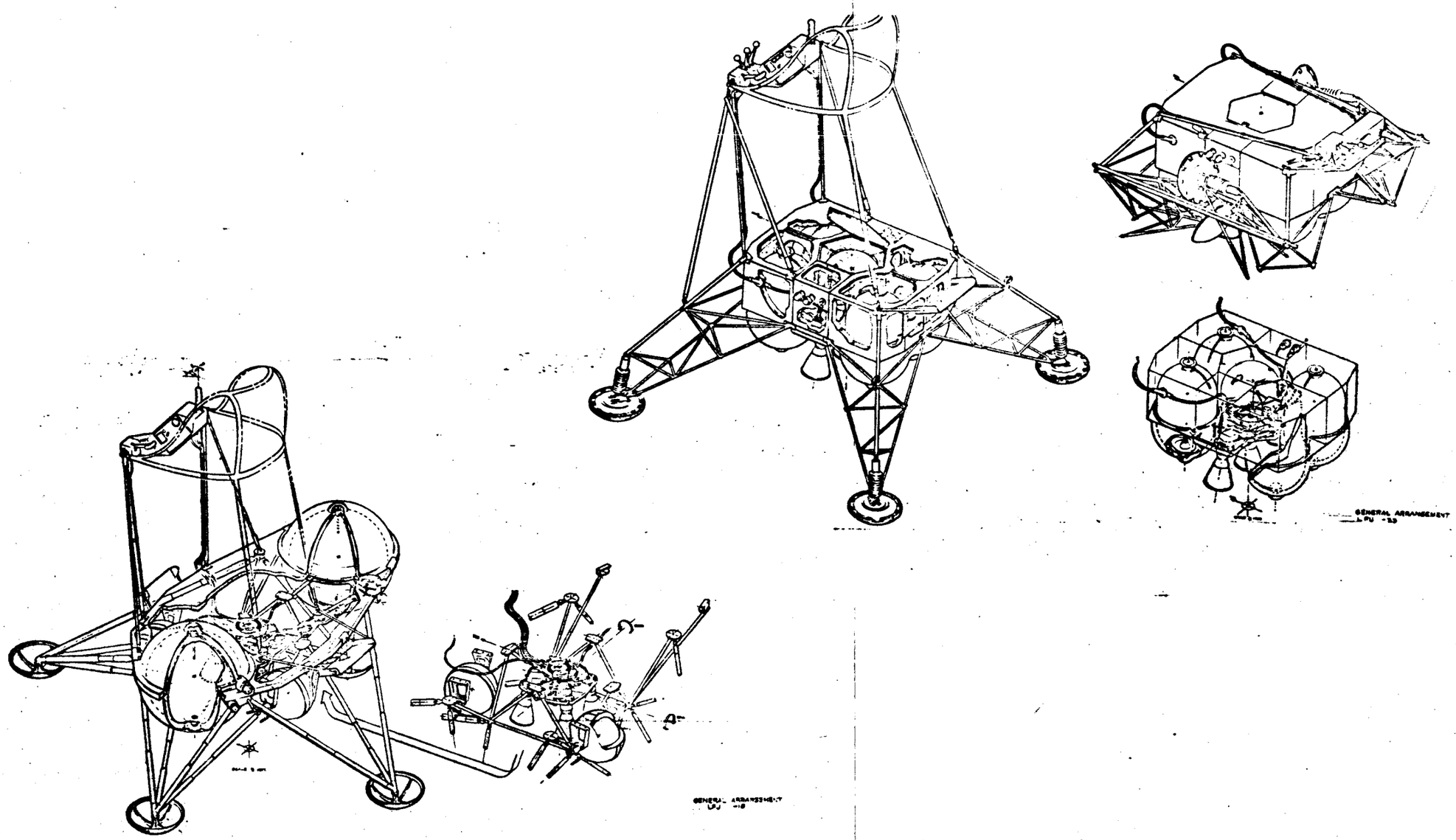

SCALE: None	DR. — DATE 7-30-68 MODEL	SPACE DIVISION NORTH AMERICAN ROCKWELL CORPORATION 12214 LAKEWOOD BOULEVARD, DOWNEY, CALIFORNIA	
LUNAR FLYING VEHICLE OPERATIONAL SEQUENCE			2030 – 25

Figure . LFV Operational Sequence (Drawing 2030-25)

37-38

14

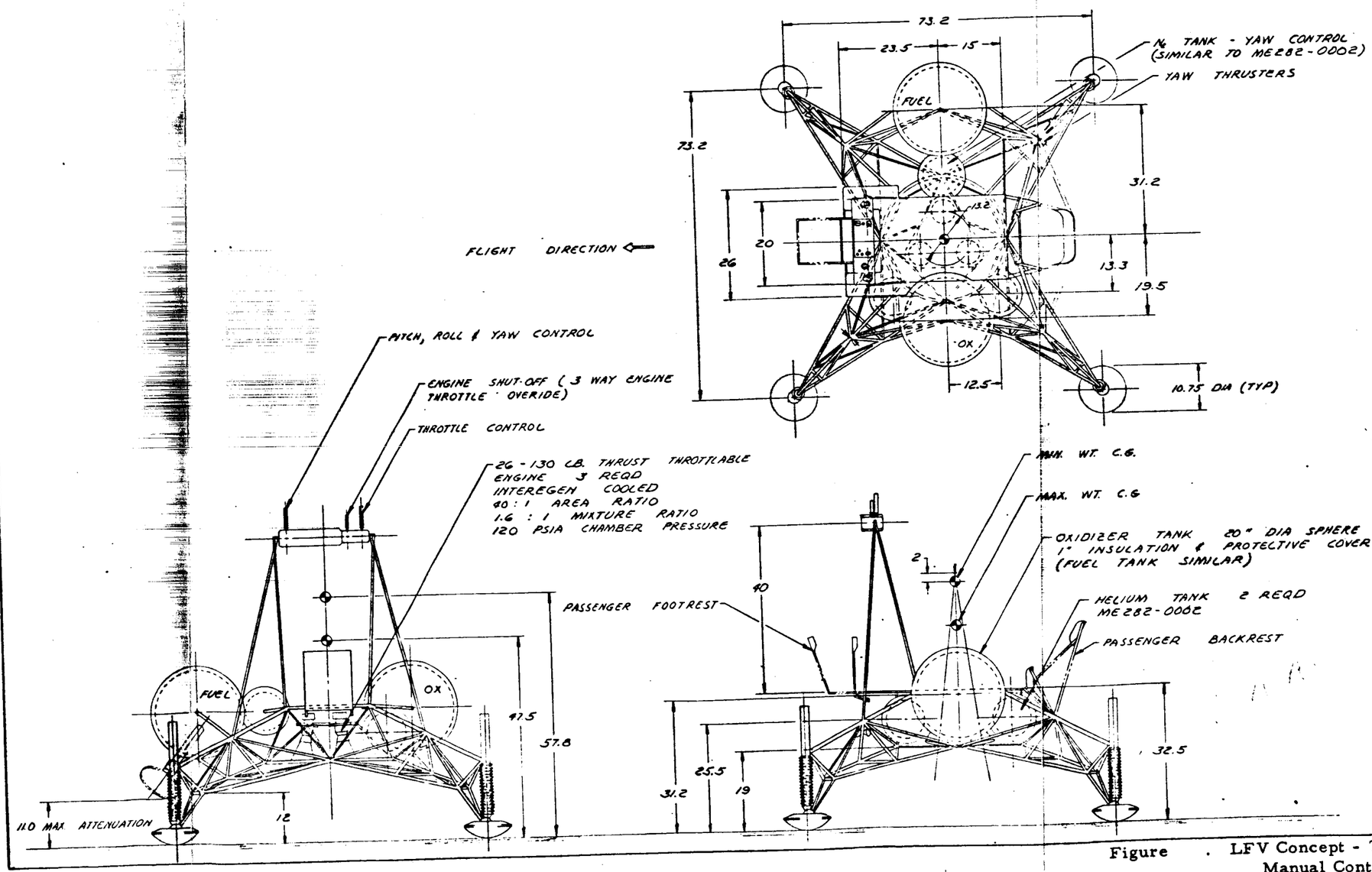

SCALE 1/10	DR. J. Shuchberger DATE 8-5-68	SPACE DIVISION NORTH AMERICAN ROCKWELL CORPORATION 12214 LAKEWOOD BOULEVARD, DOWNEY, CALIFORNIA	
LUNAR FLYING UNIT 3-ENGINE, 2-TANK, MANUAL CONTROL			2030-26

Figure . LFV Concept - Three Engines, Two Spherical Tanks, Manual Control (Drawing 2030-26)

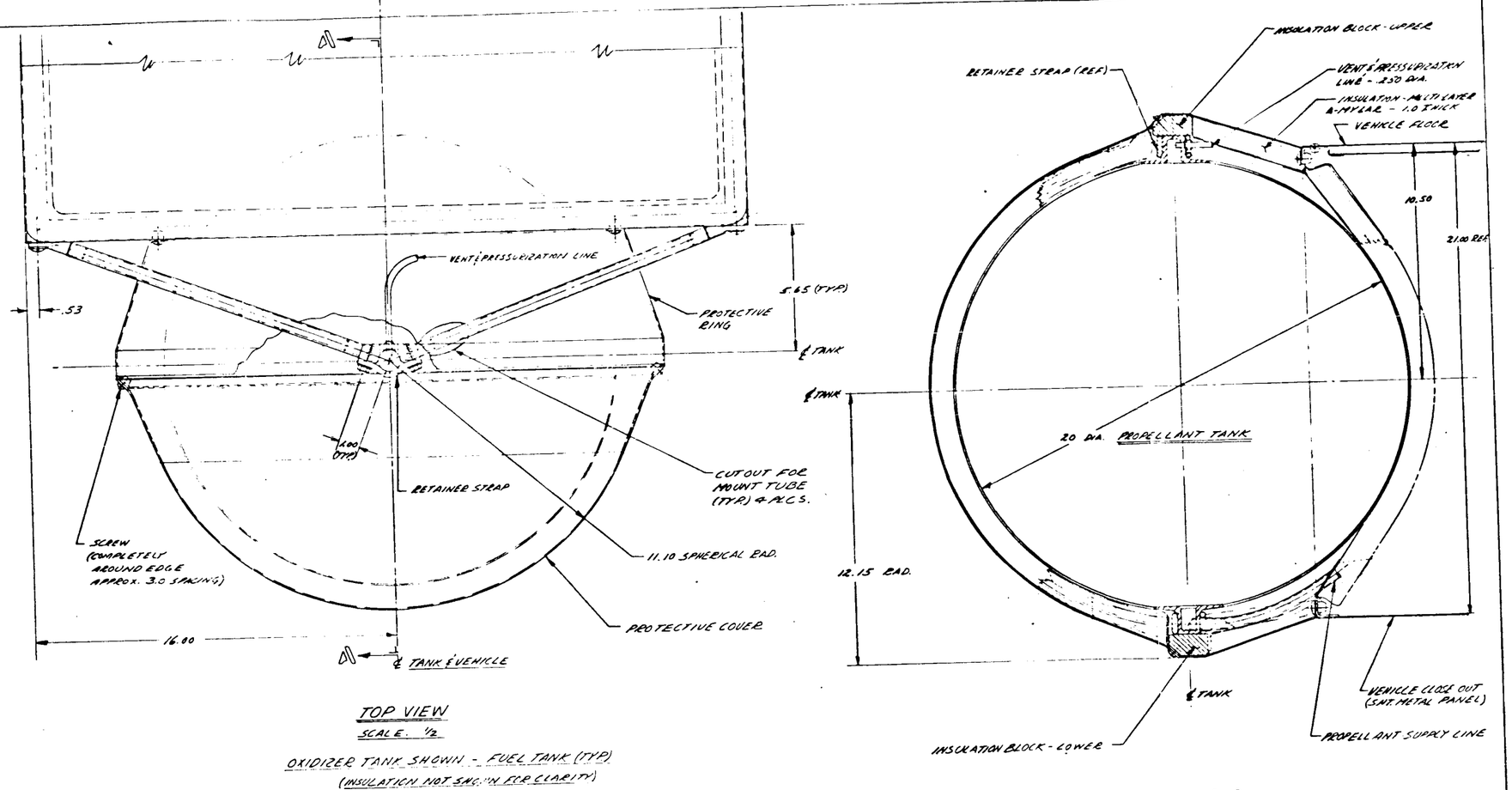

Figure . Propellant Tank Installation (Drawing 2030-28)

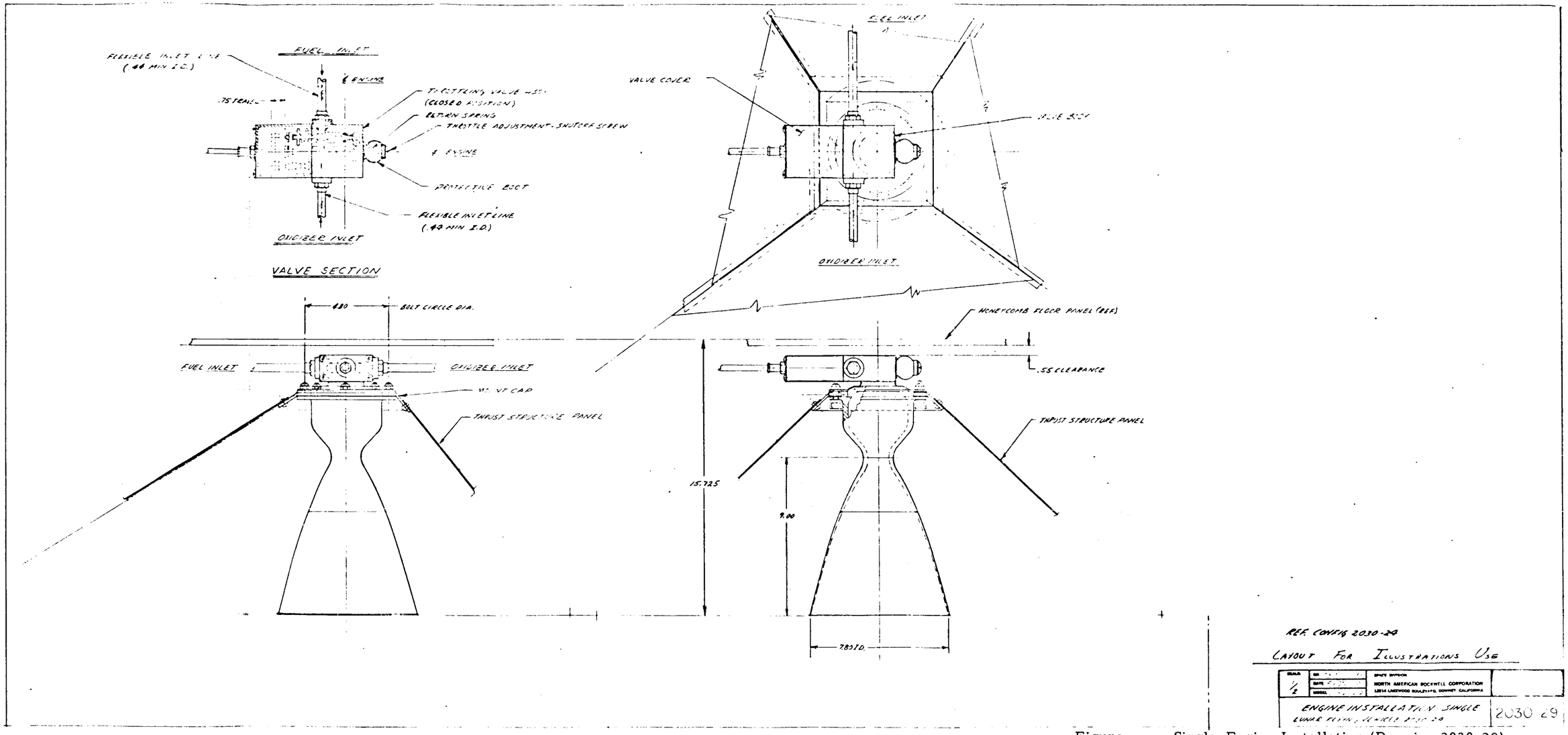

Figure . Single-Engine Installation (Drawing 2030-29)

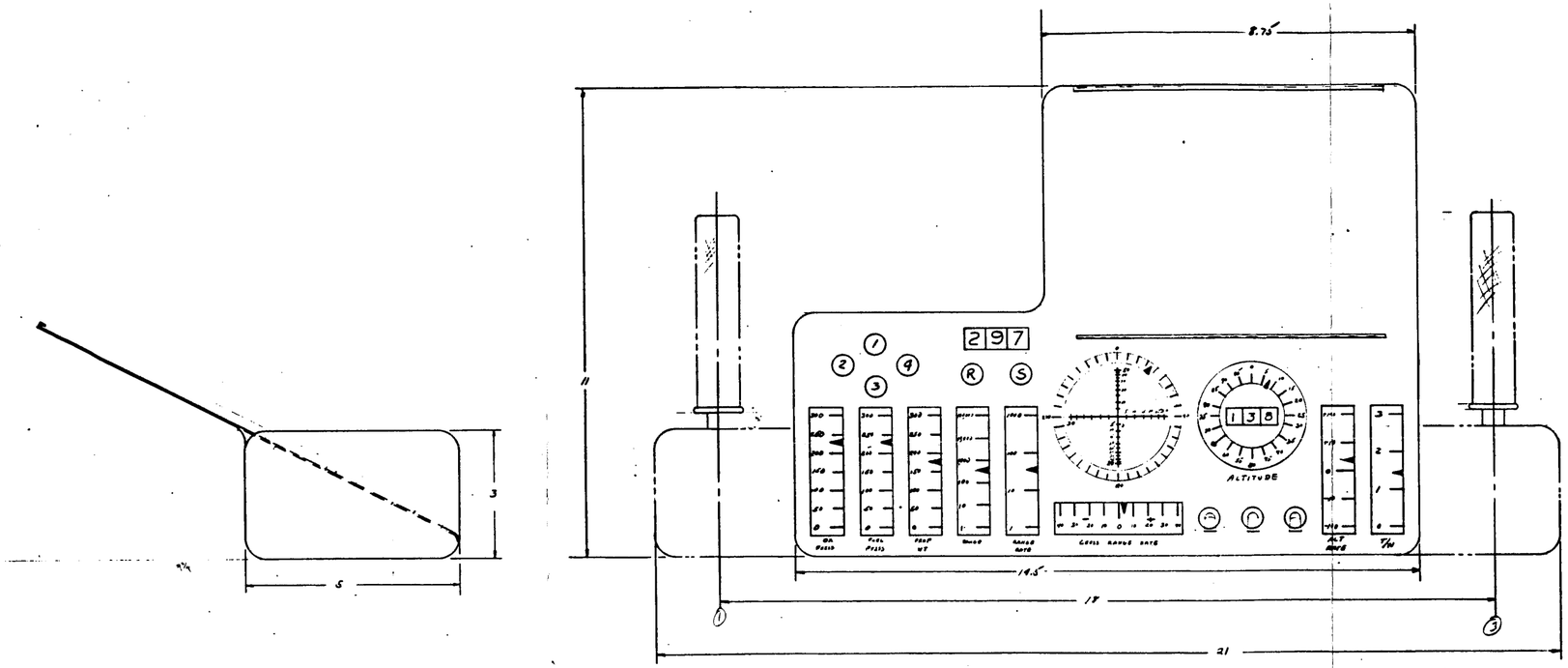

LAYOUT FOR ILLUSTRATIONS USE

11		
LFV CONTROL CONSOLE - 4 ENGINE - AUTOMATIC CONTROL		2030-31

Figure . LFV Control Console - Four Engines, Automatic Control (Drawing 2030-31)

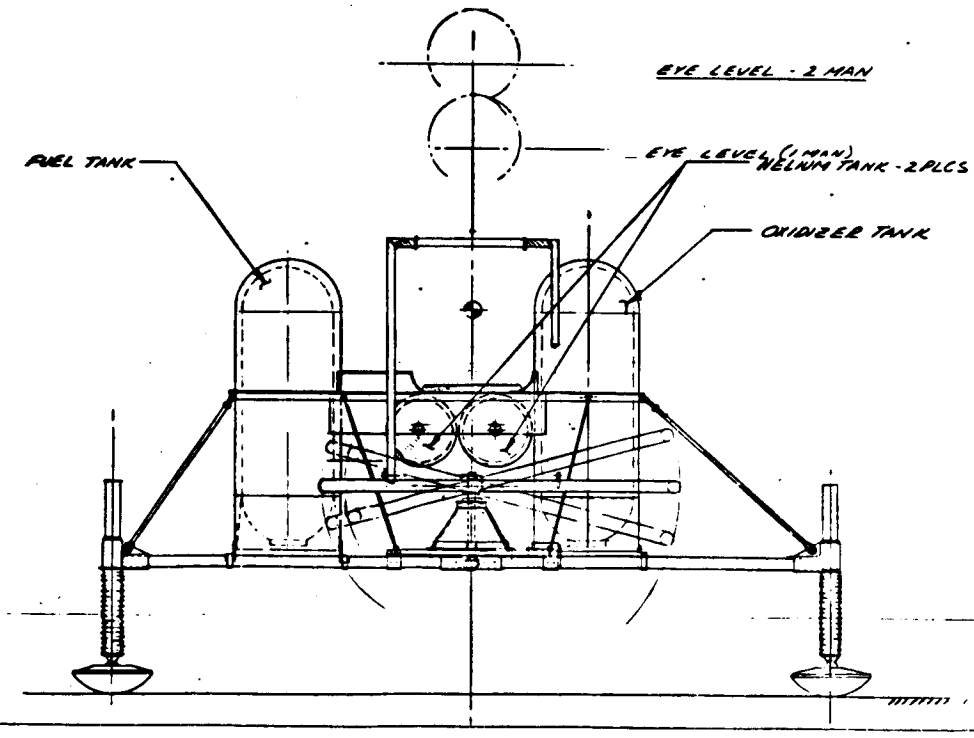
EYE LEVEL - 2 MAN
EYE LEVEL (1 MAN)
HELIUM TANK - 2 PLCS
FUEL TANK
OXIDIZER TANK

1

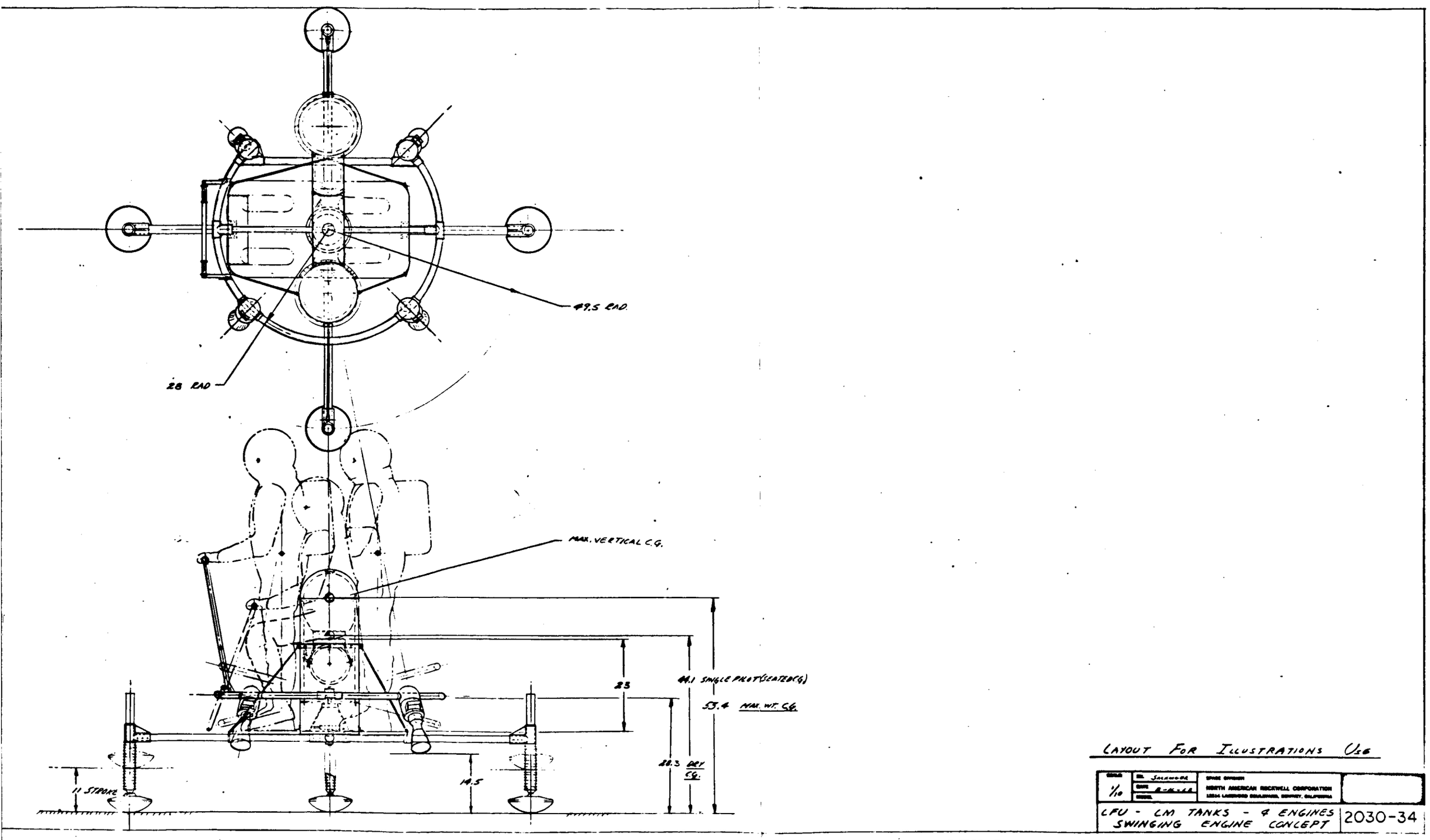

Figure . LFV Concept - LM Tanks, Four Engines, Swinging Engine Concept (Drawing 2030-34)

(2)

APPENDIX D

RELIABILITY CALCULATION

APPENDIX D
RELIABILITY CALCULATION

CONFIGURATION COMPARISON

Both mathematical modeling and calculation were performed by an IBM 7094/7090 computer program called the abort automatic reliability mathematical model (AARMM). This sequential methodology consists of an ordered procedure for directly obtaining a methematical model of all possible combinations of component success and/or failure events that give rise to system failure. The program selected those combinations which caused a system failure or flight plan deviation (mission abort). It recognized and considered, either singly or in combination, multinomial redundancy, standby redundancy, dependent components, mutually exclusive component failure modes, and various abort criteria by the application of Baye's theorem to the conditional, sequential probability of system failure. The exponential probability density function was used to model the dependence of component reliability on time. Following completion of the required calculations at the Los Angeles Division, where the program originated, successful sample calculations were made at the Space Division in preparation for evaluation of the selected LFV configuration during the second half of the contract.

Program capacity limitations required separate calculation of each type of sortie. Ten time phases are the present AARMM limit; and Sorties 1, 2, 3, and 4 have six flight phases each, and Sortie 5 has nine. The logic diagrams in Figures 53 and 54 were used for each sortie, and the logic diagram in Figure 52 was used to combine sorties into system reliability criteria.

$$\text{Mission success} = P_{MS1}\ P_{MS2}\ P_{MS3}\ P_{MS4}\ P_{MS5}$$

P_{MSi} = probability of mission success for the ith sortie,

$i = 1, 2, 3, 4, 5$

$$\text{Crew safety} = P_{CS1} - P_{MS1}\,(1-P_{CS2-5})$$

$P_{CSi} \triangleq$ probability of crew safety during the ith sortie, $i = 1, 2, 3, 4, 5$

$P_{CSj-k} \triangleq$ probability of crew safety during the combined sorties of j through k, where $j < k$ and $j, k = 1, 2, 3, 4, 5$.

$$P_{CS2-5} = P_{CS2} - P_{MS2}(1-P_{CS3-5})$$

$$P_{CS3-5} = P_{CS3} - P_{MS3}(1-P_{CS4-5})$$

$$P_{CS4-5} = P_{CS4} - P_{MS4}(1-P_{CS5})$$

The basic expression for combining two sequential phases without identifying the individual failure combinations is derived as follows:

From the successful path logic diagram,

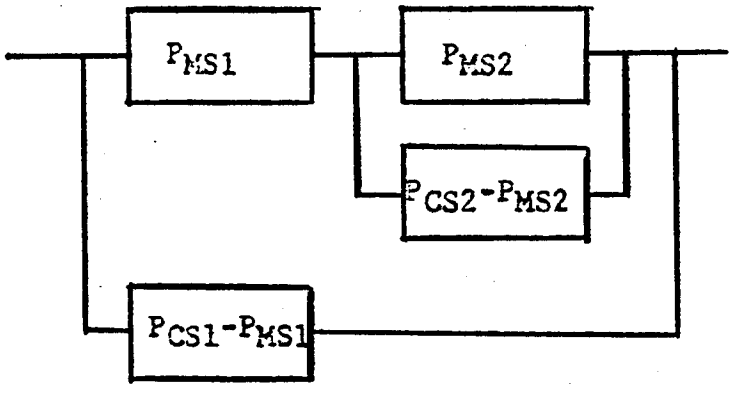

to the mathematical model,

$$P_{CS2} = P_{MS2} + P_{CS2} - P_{MS2} = P_{CS2}$$

$$P_{CS1-2} = P_{MS1} P_{MS2} + P_{MS1}(P_{CS2} - P_{MS2}) + (P_{CS1} - P_{MS1})$$

$$= P_{CS1} - P_{MS1}(1 - P_{CS2})$$

In words, the two-phase crew safety is the sum of all mutually exclusive paths to success. In this case, there are three paths: (1) all success; (2) first phase successful, second phase failure, and second phase successful abort; or (3) first phase failure and first phase successful abort. This method is not so accurate as individual consideration of each failure mode followed by sequential combination into mission crew safety, but the results are adequate for this configuration comparison. Table D-1 shows the numerical results. Reliability criteria for configurations other than the basic four-engine or one-engine configurations were calculated utilizing overall mission logic to obtain results primarily for comparison; for example,

1. 4 engines/8 actuators to 4 engines/6 actuators:

   Divide mission success by the joint probability of success of two actuators since they are no longer used.

   Multiply crew safety by the joint probability of success of two engines and two actuators since these components are now mission-critical.

2. 4 engines/8 actuators to 4 engines/4 actuators:

   Divide mission success by the joint probability of success of four actuators since they are no longer used.

   Multiply crew safety by the joint probability of success of four engines and four actuators since they are all mission-critical.

3. 1 lift engine/2 actuators/4 RCS engines to 1 engine/12 RCS engines:

   Multiply mission success by the joint probability of success of eight engines since an additional eight engines are now operating, and divide by the joint probability of success of the two removed actuators.

   Multiply crew safety by the joint probability of success of the eight additional engines in the catastrophic failure mode, and divide by the joint probability of success of the two removed actuators.

Table D-1. Combination of Sortie Crew Safety Into Mission Crew Safety

Probability of Success	4 Engines 8 Actuators	1 Lift Engine 2 Actuators 8 RCS Engines
P_{MS5}	0.995385	0.996739
P_{MS4-5}	0.992232	0.994568
P_{MS3-5}	0.989089	0.992402
P_{MS2-5}	0.986719	0.990378
P_{MS1-5}	0.984355	0.988359
P_{CS5}	0.999870	0.998870
P_{CS4}	0.999908	0.999190
P_{CS3}	0.999908	0.999190
P_{CS2}	0.999956	0.999620
P_{CS1}	0.999956	0.999620
P_{CS4-5}	0.999778	0.998062
P_{CS3-5}	0.999687	0.997256
P_{CS2-5}	0.999644	0.996882
P_{CS1-5}	0.999601	0.996508

Rocket Engine Mission Reliability = 0.998

Actuator Mission Reliability = 0.999

CONTROL COMPARISON

Mathematical models were developed for each of the three configurations (eight actuator, four actuator, and sliding plate) from Logic Diagrams 11, 12, 13, and 14 as follows:

Eight actuators:

Mission success $= P_A^8$

P_A = mission probability of actuator success

Crew safety $= P_A^8 + 4 P_A^6 q_A$

q_A = mission probability of actuator failure

$= 1 - P_A$

Four actuators (each actuator having two motor blocks):

Mission success $= P_{SI}^4 \; P_{MB}^4$

P_{SI} = mission probability of success of actuator series items

P_{MB} = mission probability of success of actuator motor block

$P_{SI} P_{MB} = P_A$

Crew safety for the operational mode of detecting and switching single failures

Crew safety (single switching) $= P_A^4 + 4 P_A^3 q_A$

Crew safety for the operational mode of detecting single failures and switching all four motor blocks

Crew safety (quadruple switching) $= P_{SI}^4 P_{MB}^4$

$+ 4 q_{SI} P_{DS} P_{MB}^3 P_{SI}^3 + q_{MB} P_{DS} \left[P_{MB}^4 P_{SI}^4 \right.$

$\left. + 4 P_{MB}^3 P_{SI}^3 (1 - P_{MB} P_{SI}) \right]$

q_{SI} = mission probability of series items failure

P_{DS} = probability of detection and switching success

q_{MB} = mission probability of motor block success

Sliding plate (pitch and roll actuators having two motor blocks and yaw actuators with one motor block each)

Mission success = $P_{MB}^3 \; P_{SI}^3$

Crew safety for the operational mode of detecting and switching single failures and for yaw loose failure being catastrophic

Crew safety (single switching and yaw loose failure) = P_A^3

$$+ 2q_{MB} P_{DS} P_{SI}^2 P_{MB} (P_{MB} + q_{MB} P_{DS} P_{MB}) \left[P_A + (q_{SIHO} + q_{MBHO}) (P_{DSPA})\right] + q_{SIHO} + q_{MBHO}) (P_{DS}) \left[P_A^2 + 2 q_{MB} P_{DS} P_{SI}^2 P_{MB} (P_{MB} + q_{MB} P_{DS} P_{MB})\right]$$

q_{SIHO} = mission probability of series items failure in the hard-over mode

q_{MBHO} = mission probability of motor block failure in the hard-over mode

Crew safety for the operational mode of detecting and switching single failures and for yaw series items loose failure being catastrophic

Crew safety (single switching and yaw series items loose failure) = $P_A^3 + 2 q_{MB} P_{DS} P_{SI}^2 P_{MB} (P_{MB}$

$$+ q_{MB} P_{DS} P_{MB}) \left[P_A + q_{SIHO} + q_{MB}) (P_{DS} P_A)\right] + (q_{SIHO} + q_{MB}) (P_{DS}) \left[P_A^2 + 2 q_{MB} P_{DS} P_{SI}^2 P_{MB} (P_{MB} + q_{MB} P_{DS} P_{MB})\right]$$

Crew safety for the operational mode of detecting single failures and switching double pitch and roll motor blocks and for yaw loose failure

$$\text{Crew safety (double switching and yaw loose failure)} = P_A^3 + 2\, q_{MB}\, P_{DS}\, P_A^2 \left[P_A + (q_{SIHO} + q_{MBHO})(P_{DS}\, P_A)\right] + (q_{SIHO} + q_{MBHO})(P_{DS}) \left[P_A^2 + 2\, q_{MB}\, P_{DS}\, P_A^2\right]$$

Crew safety for the operational mode of detecting single failures and switching double pitch and roll motor blocks and for yaw series items loose failure

$$\text{Crew safety (double switching and yaw series items loose failure)} = P_A^3 + 2\, q_{MB}\, P_{DS}\, P_A^2 \left[P_A + (q_{SIHO} + q_{MB})(P_{DS}\, P_A)\right] + (q_{SIHO} + q_{MB})(P_{DS}) \left[P_A^2 + 2\, q_{MB}\, P_{DS}\, P_A^2\right]$$

CONTROL STUDY CALCULATIONS EXAMPLES

<u>8-Actuator Crew Safety</u>

All success $(0.999)^8 = 0.992028$

Four cases of one actuator set failure and three sets successful,

$$4(0.001999)(0.999)^6 = 0.007948$$

Total $P_{CS} = 0.992028 + 0.007948 = 0.999976$

<u>4-Actuator Crew Safety (Quadruple Motor Block Switching)</u>

All success $(0.999)^4 = 0.996006$

Four cases of one series items failure, detection, and three successful,

$$4(0.000030)(0.995)(0.999)^3 = 0.000119$$

Four cases of one motor block failure, detection, and any three out of four actuators successful,

$$4(0.000970)\ (0.995)\ \left[(0.999)^4 + 4(0.001)\ (0.999)^3\right] = 0.003861$$

$$\text{Total } P_{CS} = 0.996006 + 0.000119 + 0.003861 = 0.999986$$

Sliding Plate Crew Safety (Double Motor Block Switching for Pitch and Roll)

All success $(0.999)^3 = 0.997003$

Two cases of pitch and roll motor block failure, detection, and two actuators successful as well as either one of two yaw actuators

$$2(0.000970)\ (0.995)\ (0.999)^2\ \left[0.999 + (0.000003 + 0.000097 + 0.000873)\ (0.995)\ (0.999)\right] = 0.001926$$

One case of yaw actuator failing, detection, the other yaw actuator working, and either set of pitch and roll motor blocks working

$$(0.000003 + 0.000097 + 0.000873)\ (0.995)\ (0.999)\ \left[(0.999)^2 + 2(0.000970)\ (0.995)\ (0.999)^2\right] = 0.000967$$

$$\text{Total } P_{CS} = 0.997003 + 0.001926 + 0.000967 = 0.999896$$

(This probability is lower than that of the other two configurations because of series item criticality in all four actuators.)

CHECK-OUT LOCATION

The AARMM computer results for Sortie 5 were reviewed and those failure combinations selected which were applicable to mission continuation (deletion of single — point failures). Each joint probability for each time phase was modified to increase the abort time to the remaining mission time. Then, the modified joint probabilities were added to give the worst-case probability of LFV failure for no abort. Table D-2 is a sample calculation.

The probability of crew loss due to multiple failures was used for each time phase because this included all cases of failure, failure detection, abort, and loss during abort. The single-point failures were not included, since these would cause crew loss whether or not the abort rule were

Table D-3. Sortie 5 for the Four-Engine/Eight-Actuator Configuration

1.	Launch	$0.14 \times 10^{-10} \times \frac{0.155}{0.001} = 0.217 \times 10^{-8}$
2.	Flight	$0.546 \times 10^{-6} \times \frac{0.155-0.049}{0.029} = 0.199572 \times 10^{-5}$
3.	Landing	$0.4 \times 10^{-6} \times \frac{0.155-0.052}{0.055} = 0.8 \times 10^{-6}$
4.	Launch	$0.305 \times 10^{-7} \times \frac{0.155-0.53}{0.055} = 0.56563 \times 10^{-7}$
5.	Flight	$0.995872 \times 10^{-6} \times \frac{0.155-0.1}{0.055} = 0.995872 \times 10^{-6}$
6.	Landing	$0.608 \times 10^{-7} = 0.608 \times 10^{-7}$
7.	Launch	$0.19 \times 10^{-7} = 0.19 \times 10^{-7}$
8.	Flight	$0.10309 \times 10^{-5} = 0.10309 \times 10^{-5}$
9.	Landing	$0.27 \times 10^{-10} = 0.27 \times 10^{-10}$
		0.3×10^{-5} - joint failures for abort mode

Total joint failures causing crew loss $= 0.5 \times 10^{-5}$

Increase in crew losses due to nonabort $= 0.2 \times 10^{-5}$

followed. Each joint failure probability (q_J) was considered approximately the product of the failure rates (λ_j) times the operating times (t_j).

$$q_J = (1-e^{-\lambda_1 t_1}) \ldots (1-e^{-\lambda_j t_j}),\ j = 1, 2, \ldots, n. \cong \lambda_1 t_1 \ldots \lambda_j t_j.$$

Since the computer only considered three or less failure combinations, j = 3; however, the most significant failure combinations were for j = 2.

$$\hat{q}_j \cong \lambda_1 t_1 \cdot \lambda_2 t_2, \text{ where } t_2 = \text{abort time}$$

The abort time for each phase was increased to the remainder of the mission; so t_2 was replaced with,

New abort time = total sortie time - cumulative phase time

However, the last few time phases required no additional abort time; i.e., the computed abort time was no different from the regular mission time. Addition of the modified individual phase joint probabilities neglected the conditional nature of the failures; i.e., crew loss in the first time phase should have precluded loss in succeeding time phases. The results are worst-case values and show that in-flight or remote landing site discovery of failures has a very small effect on sortie crew safety. When this is acceptable, the check-out equipment and procedures should be left and performed near the LM.