NASA TECHNICAL NOTE

NASA TN D-5436

c. 1

NASA TN D-5436

TECH LIBRARY KAFB, NM

0132072

LOAN COPY: RETURN TO
AFWL (WLOL-2)
KIRTLAND AFB, N MEX

COMBUSTION STABILITY OF SINGLE SWIRL-CAN COMBUSTOR MODULES USING ASTM-A1 LIQUID FUEL

by Richard W. Niedzwiecki and Robert E. Jones

Lewis Research Center
Cleveland, Ohio

NATIONAL AERONAUTICS AND SPACE ADMINISTRATION • WASHINGTON, D. C. • OCTOBER 1969

TECH LIBRARY KAFB, NM

0132072

1. Report No. NASA TN D-5436	2. Government Accession No.	3. Recipient's Catalog No.
4. Title and Subtitle COMBUSTION STABILITY OF SINGLE SWIRL-CAN COMBUSTOR MODULES USING ASTM-A1 LIQUID FUEL		5. Report Date October 1969
		6. Performing Organization Code
7. Author(s) Richard W. Niedzwiecki and Robert E. Jones		8. Performing Organization Report No. E-4675
9. Performing Organization Name and Address Lewis Research Center National Aeronautics and Space Administration Cleveland, Ohio 44135		10. Work Unit No. 126-15
		11. Contract or Grant No.
12. Sponsoring Agency Name and Address National Aeronautics and Space Administration Washington, D.C. 20546		13. Type of Report and Period Covered Technical Note
		14. Sponsoring Agency Code

15. Supplementary Notes

16. Abstract

Swirl-can combustor modules were evaluated in a 6-inch- (15.24-cm-) diameter duct at a pressure of 1 atmosphere, at inlet air temperatures of 100° to 700° F (311 to 644 K), and at airflow rates of 1.0 to 4.8 pounds per second (0.454 to 2.18 kg/sec). Swirl-can combustor modules consisted of a carburetor incorporating a low pressure fuel entry system, a swirler assembly, and a combustor can. Effects of combustor can diameter, module length, swirler assembly type and flow area, and inlet air temperature were determined on combustion stability, combustion efficiency, and flame length. A correlation of combustion stability with swirl-can module parameters was obtained.

17. Key Words *(Suggested by Author(s))* Low pressure carbureting Swirl-can combustor modules	18. Distribution Statement Unclassified - unlimited

19. Security Classif. (of this report)	20. Security Classif. (of this page)	21. No. of Pages	22. Price*
Unclassified	Unclassified	28	$3.00

*For sale by the Clearinghouse for Federal Scientific and Technical Information Springfield, Virginia 22151

COMBUSTION STABILITY OF SINGLE SWIRL-CAN COMBUSTOR MODULES USING ASTM-A1 LIQUID FUEL

by Richard W. Niedzwiecki and Robert E. Jones

Lewis Research Center

SUMMARY

A number of carbureting swirl-can combustor modules were tested in a 6-inch-(15.24-cm-) diameter duct. Tests were made with 100° and 700° F (311 to 644 K) inlet air temperatures at a pressure of 1 atmosphere using ASTM-A1 liquid fuel. Lean and rich combustion stability limits, combustion efficiencies, and airflow distributions in the swirl-cans were measured. Flame length and appearance were observed visually.

Swirl-can combustor module performance was dependent on several factors. First, swirl-can modules incorporating low pressure carbureting fuel systems which mixed all combustion air with fuel in a carburetor upstream of the combustor can produced short flame lengths, combustion efficiencies of 85 to 100 percent and adequate combustion stability ranges comparable to those of a pressure atomizing fuel system module design. Swirl-can modules which mixed only part of the carburetor air with fuel had wide combustion stability limits but produced longer flame lengths and lower combustion efficiencies. Reducing carburetor flow area 50 percent increased rich limit combustion stability but reduced lean limit stability and combustion efficiency. Second, increasing the combustor can diameter increased the combustion stability range and slightly improved combustion efficiency. Third, when combustor can length was reduced 20 percent, a slight improvement in lean stability limit resulted. Reducing the carburetor length 25 percent did not affect performance. Fourth, increasing inlet air temperature increased combustion stability, decreased flame length, and improved flame distribution.

A small swirl-can combustor module was developed which combined good combustion stability and efficiency with a simplicity of design that facilitates its use in combustor arrays. The stability data for several swirl-can combustor modules were correlated by plotting the swirl-can equivalence ratio at blowout against the ratio of the duct Mach number to an effective swirl-can diameter. Swirl-can combustor modules burned stably

at inlet air temperatures down to 100° R (311 K). Ignition was achieved with duct Mach numbers up to 0.22 and minimum inlet air temperatures of 200° to 250° F (366 to 394 K). No burnout or distortion problems due to heat were observed for any of the swirl-can combustor modules evaluated.

INTRODUCTION

Future turbojet combustors must be capable of reliable performance under sustained operation at extremely high temperatures. For a typical flight at Mach 3, for example, the combustor inlet temperature could be 1200° F (649 K) with an exit temperature of 2200° F (1204 K) or higher. In some advanced engines the problem of high temperature level is further aggravated by pressures of 20 atmospheres or more.

At these high temperature, high pressure operating conditions, good combustion efficiency is relatively easy to obtain. However, combustor durability becomes a major problem. Furthermore, it is essential that the outlet temperatures conform to a preferred radial profile and be uniform about the circumference. The additional requirements that the combustor be short and have a low pressure loss make it difficult to obtain this desired temperature profile.

The shift from problems of combustion efficiency to problems of durability and exit temperature profile suggests new approaches to combustor design. One such approach is a combustor consisting of an array of small combustor modules, each burning independently. There are two major advantages of this combustor design. From the standpoint of durability, combustor liners do not require air entry holes since all of the air passes uniformly through the array of modules. This feature eliminates the usual areas of liner stress concentration and failure. Second, the design allows for adjustment of the exit temperature profile by rearrangement of modules or by controlling fuel flow to the individual modules.

The modular approach to combustor design could increase combustion stability problems. Combustion stability of the array is dependent on the stability of each small diameter module. Since combustion stability decreases with decreasing module diameter, problems could arise unless the modules are properly designed. Also, a high degree of combustion stability is required for altitude relight conditions where ignition must be achieved with low inlet air pressures and temperatures. For these reasons, combustion stability was the main criterion by which the present study judged module performance.

In modular combustors, the fuel flow per module is quite small compared to standard combustor designs, which use relatively few fuel entry positions. The use of pressure atomizing nozzles, therefore, would result in prohibitively small orifices, espe-

cially for larger numbers of small size modules. This problem can be avoided by the use of a low pressure fuel entry system.

In past work, combustors made up of swirl-can combustor modules have been found to perform satisfactorily with gaseous fuels (refs. 1 and 2) and with vaporized liquid fuels (ref. 3). More recently a 12- by 30-inch (30.5- by 76.2-cm) rectangular combustor sector composed of 21 swirl-can combustor modules using ASTM-A1 fuel was successfully tested (ref. 4).

The present study evaluates single swirl-can combustor modules of different designs to determine how the stability of modules with carbureting low pressure fuel injection systems compare with a combustor design using pressure atomizing fuel injection. Following this evaluation, a determination is made of the effects of swirler assembly type and flow area, combustor can diameter and length, and inlet air temperature on the stability of carburetor type modules.

SCOPE OF INVESTIGATION

The purpose of the present study was to answer the following questions:

(1) Is the stability of a carbureting swirl-can combustor module comparable to the stability of a pressure atomizing combustor module?

(2) How is the stability of a carbureting swirl-can combustor module affected by changes in swirler type and flow area, combustor can diameter, length, and inlet air temperature?

(3) Can a simple, stable, compact carbureting swirl-can combustor module be developed?

Tests were conducted in the test facility shown schematically in figure 1. The combustor modules were located in a 6-inch- (15.24-cm-) diameter duct supplied with heated air from a vitiating preheater. Effects of vitiation on combustion performance were assumed negligible and were ignored. This was substantiated by tests described in reference 4 which showed no noticeable effect of vitiation on combustor performance.

Combustion stability data were obtained at a nominal pressure of 1 atmosphere by setting the airflow rate to establish a duct Mach number and by slowly varying fuel flow rate until a rich or lean blowout occurred. Complete envelopes of combustion stability were not obtained in all cases because of a facility airflow limitation of 4.8 pounds per second (2.18 kg/sec) and a fuel flow limitation of 0.064 pound per second (0.029 kg/sec). Combustion efficiency was estimated from temperature measurements in a plane 19 inches (48.3 cm) downstream of the combustor can trailing edge. Details of the test facility and procedures are contained in the appendix.

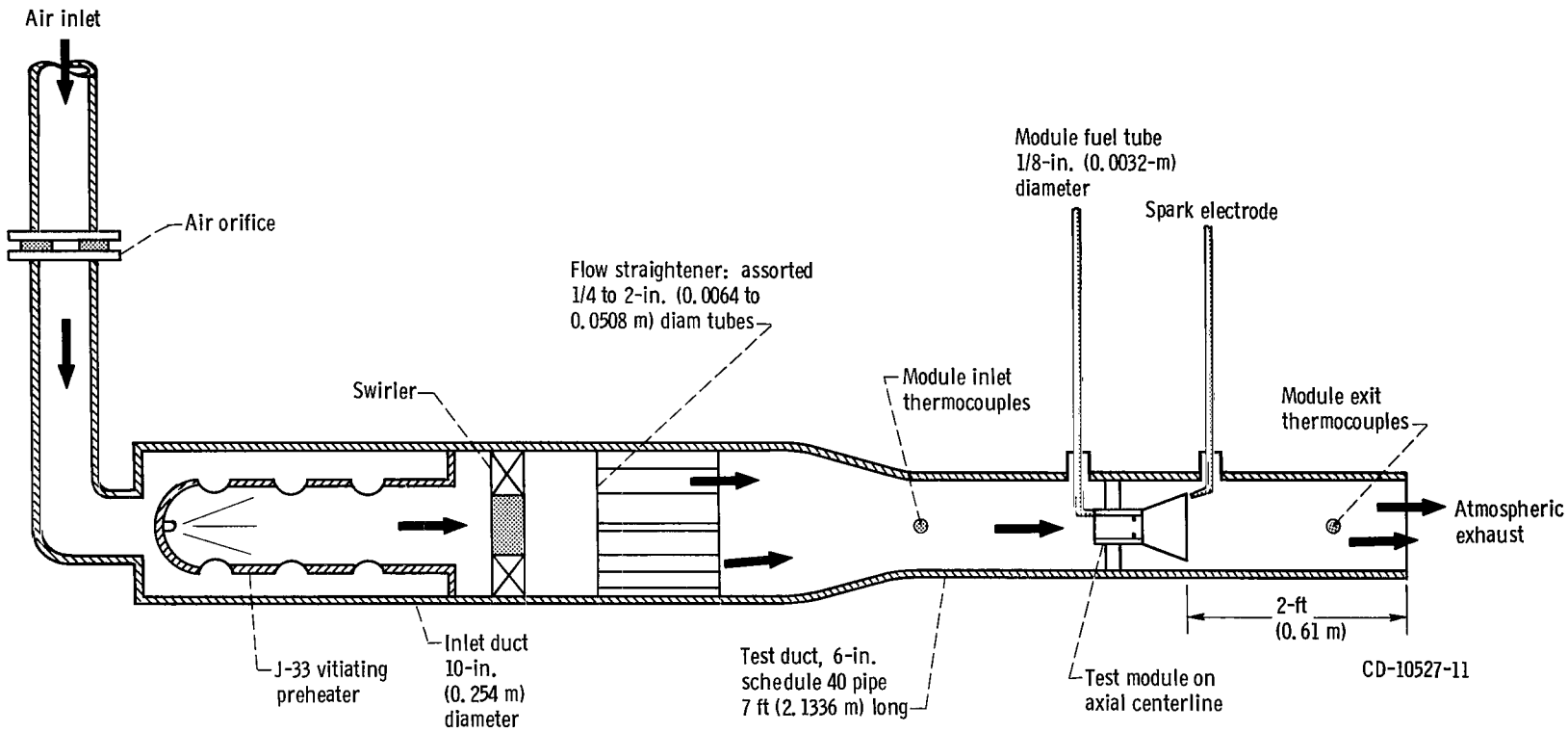

Figure 1. - Schematic of test facility.

RESULTS AND DISCUSSION

Comparison of Combustion Stability Limits of Three Swirl-Can Combustor Module Designs with a Module Containing a Pressure Atomizing Nozzle

The combustion stability limits were found for three carbureting swirl-can combustor modules and a module containing a pressure atomizing nozzle. The four modules are shown in figure 2. Common features of the swirl-can modules were the following:

(1) No fuel nozzles were used. Fuel entered the upstream end of the carburetor through a 1/8-inch- (0.32-cm-) diameter tube. Fuel metering and control orifices were located outside the combustor, and thus minimized the chances of decomposed fuel clogging the fuel system.

(2) A swirler assembly installed between the carburetor and combustor can regulated airflow through the carburetor. The swirler assembly mixed fuel with either part or all of the air passing through the carburetor.

(3) Combustion was initiated and stabilized in the combustor can.

The swirl-can module designs shown in figure 2 had identical carburetors and combustor cans but differed in swirler assembly types. The carburetor split combustion air into a central and an annulus flow stream. The central air stream flowed along the module's main axis. Air and fuel flowed through the annular passage where the fuel entrained in the air stream and was partially vaporized. Annular flows then passed through the swirler. Central airflow was regulated by a flat-plate orifice with an open area of 0.45 square inch (2.90 cm^2). Annular airflow was regulated by the area between swirler vanes. The sum of this area was also 0.45 square inch (2.90 cm^2).

A swirl-can combustor module design incorporating an axial swirler assembly is shown in figure 2(a). This design admitted two separate flow streams into the combustor can - the central air stream and a swirling fuel-air mixture. No mixing occurred upstream of the combustor can. In operation, burning appeared to initiate midway in the can.

The swirl-can combustor module shown in figure 2(b) incorporated a radial swirler assembly. This design injected swirler fuel and air from the annular passage radially inwards into the central air stream upstream of the combustor can and initiated burning at the inlet of the combustor can.

Eliminating the central air passage of the swirl-can combustor module shown in figure 2(b) produced the module shown in figure 2(c). This design had one-half the swirler assembly flow area of the previously described combustor modules. In operation, burning was initiated downstream of the combustor can trailing edge. Projected views of the previous swirl-can modules are shown in figure 2(d).

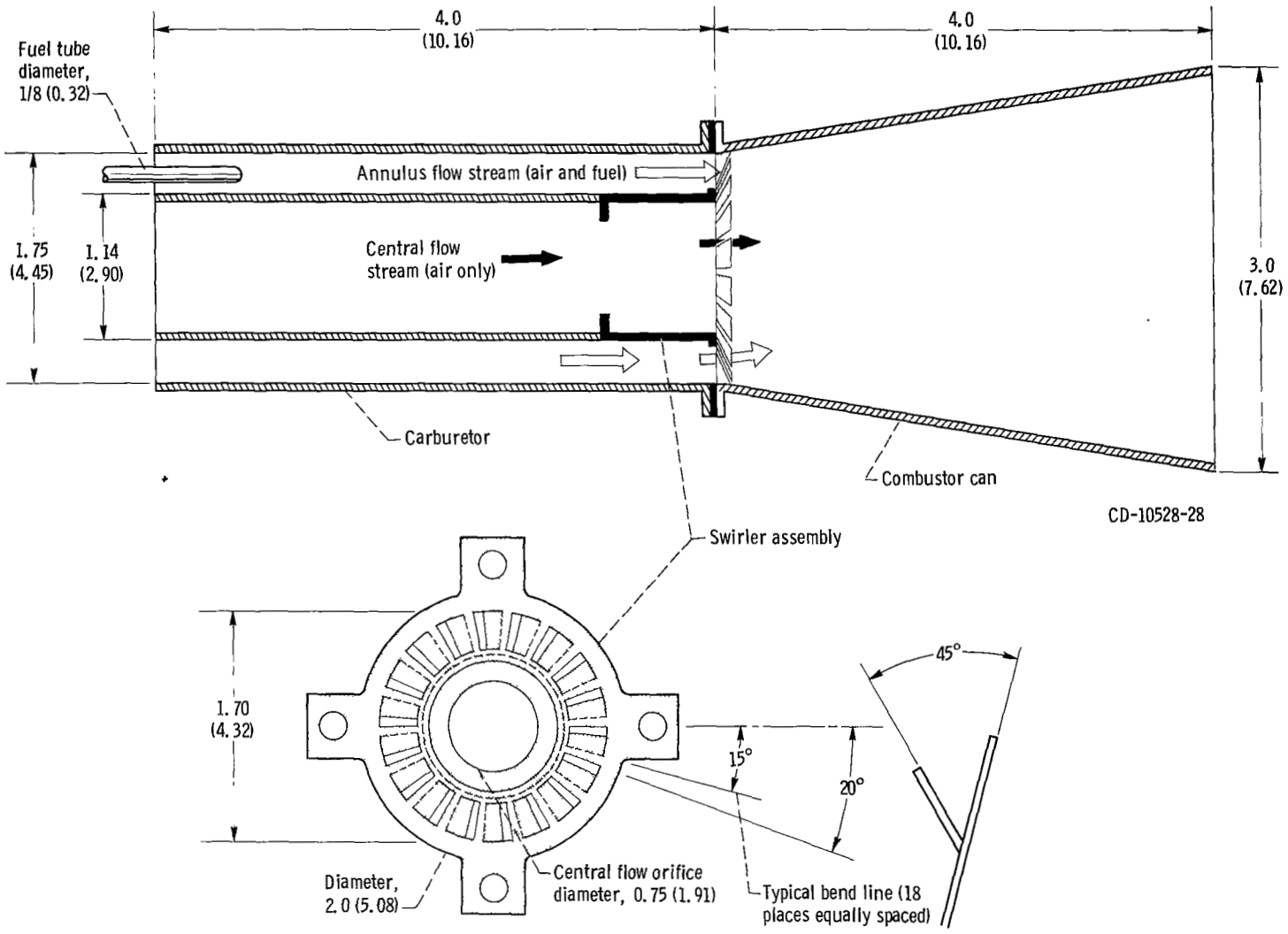

(a) Swirl-can combustor module with axial swirler assembly.

Figure 2. - Details of test modules. Dimensions are in inches (cm).

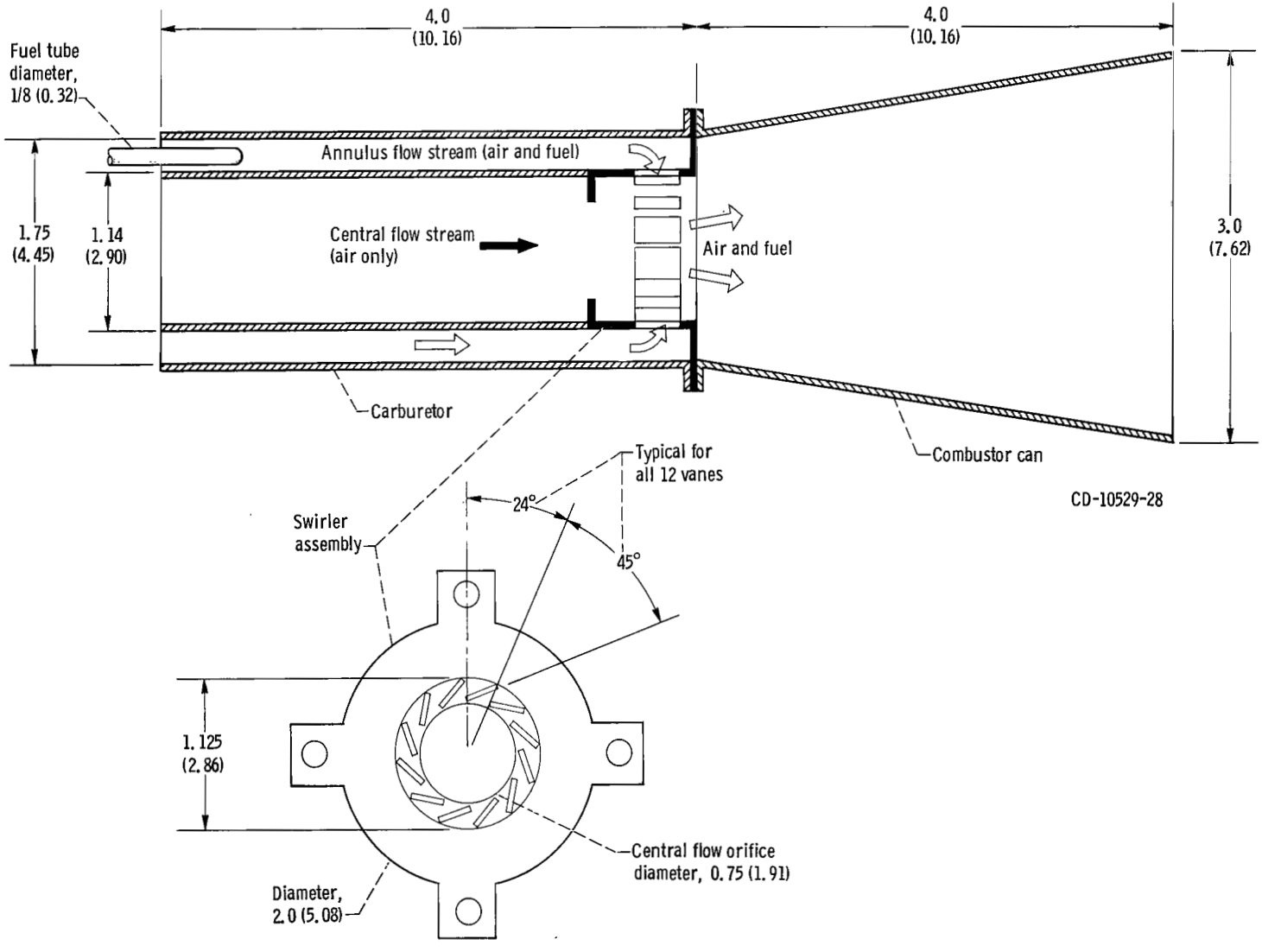

(b) Swirl-can combustor module with radial swirler assembly.

Figure 2. - Continued.

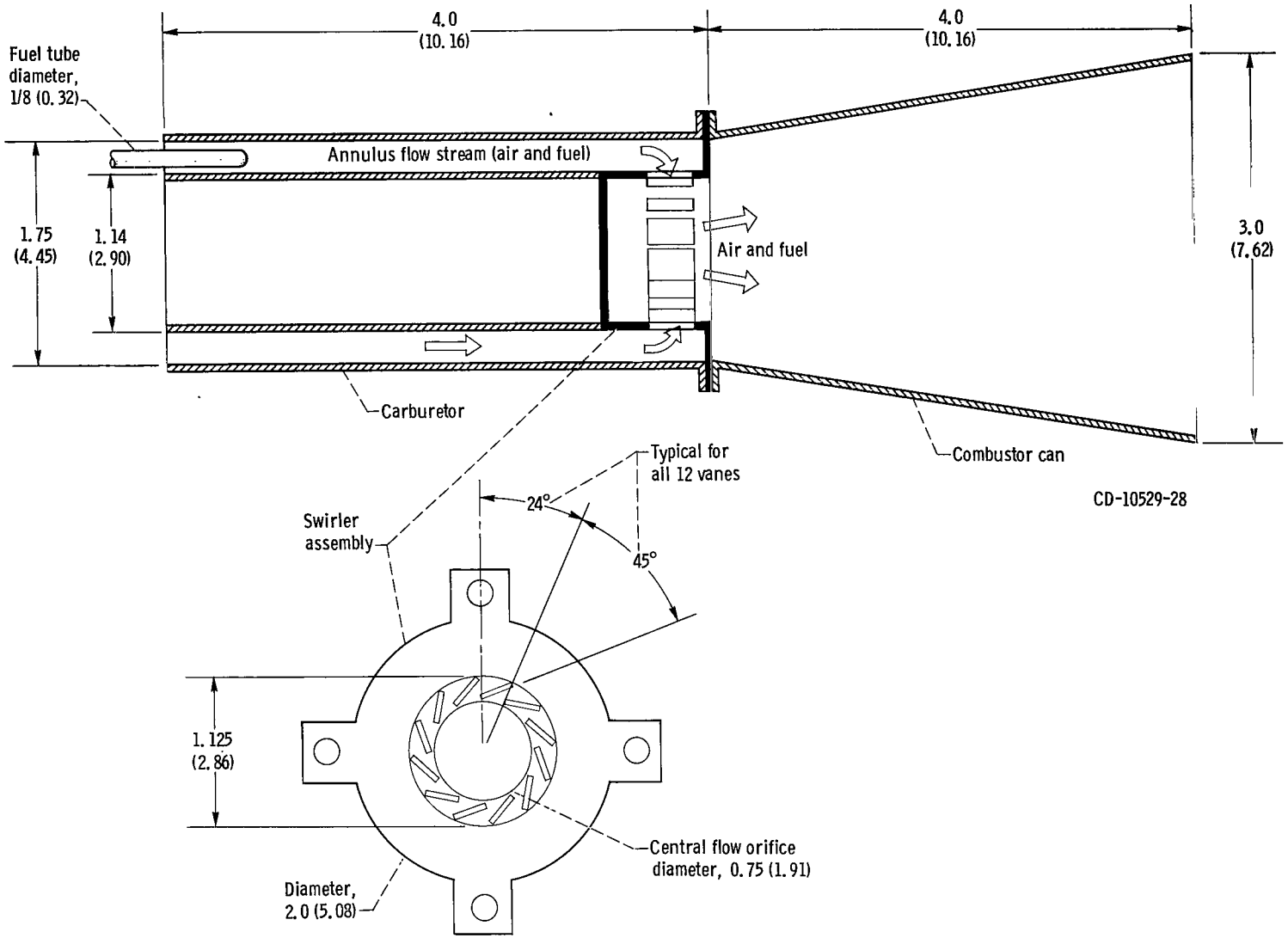

(c) Swirl-can combustor module with radial swirl assembly and with central flow orifice blocked.

Figure 2. - Continued.

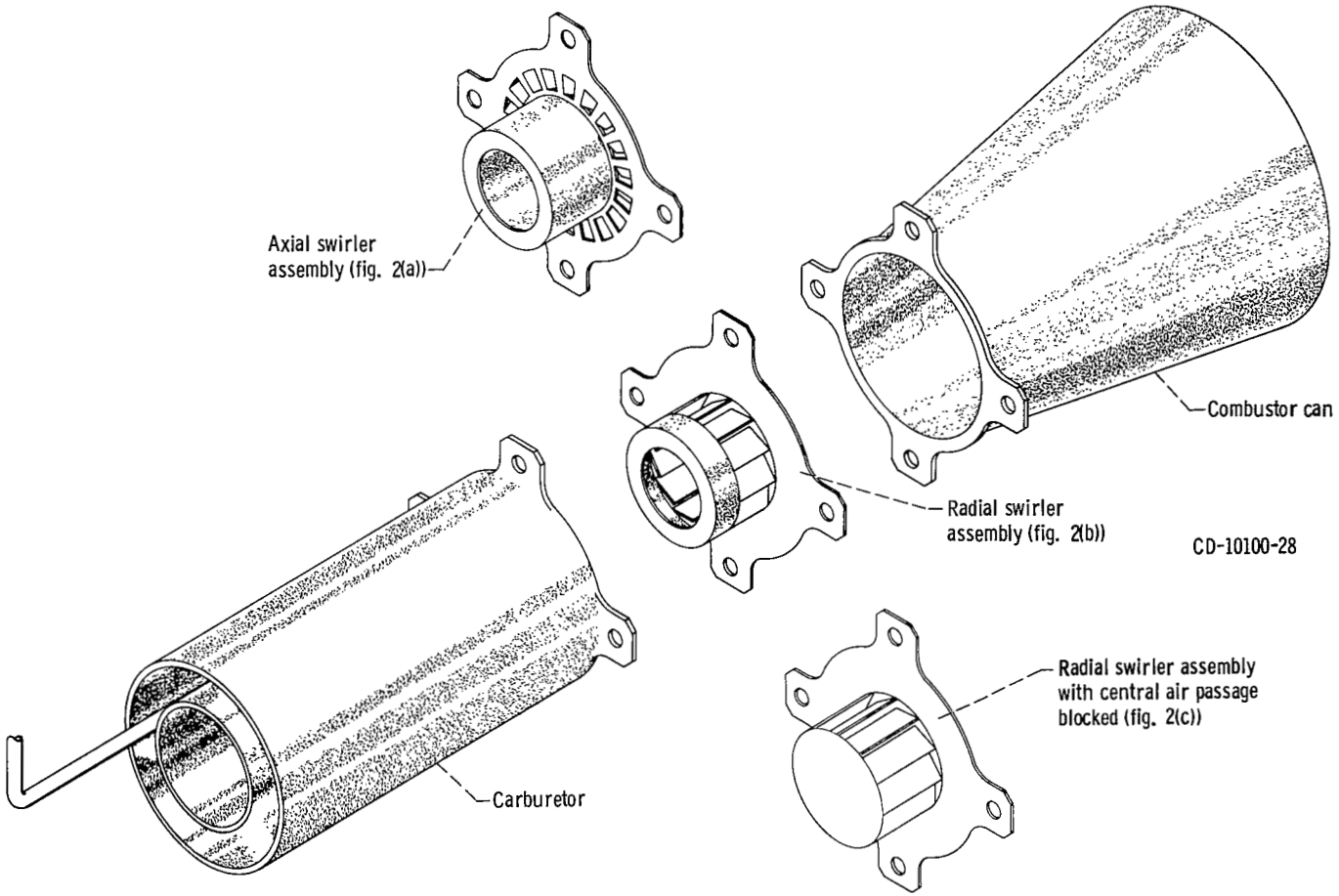

(d) Projected view of swirl-can combustor modules.

Figure 2. - Continued.

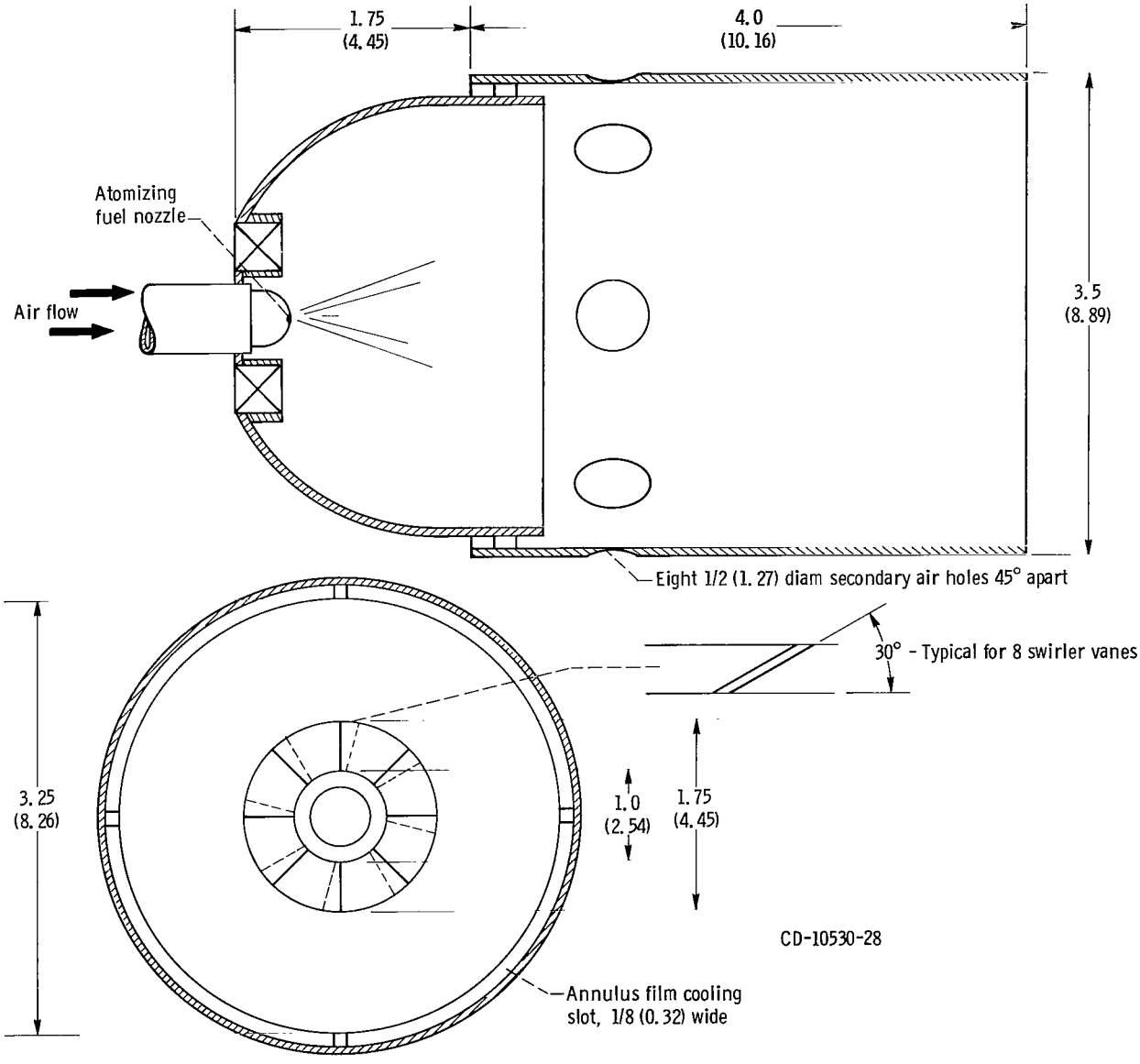

(e) Combustor module with pressure atomizing fuel nozzle.

Figure 2. - Concluded.

Figure 2(e) is a sketch of the module incorporating a pressure atomizing fuel nozzle. This design resembled the primary zone of a tubular combustor. An axial swirler surrounded the pressure atomizing nozzle and had a flow area of 0.75 square inch (4.83 cm^2). A film cooling slot and diluent air holes cooled the module's cylindrical walls.

Combustion stability results of all four module designs are shown in figure 3. The swirl-can combustor module with the central air stream blocked (fig. 2(c)) had much poorer lean stability limits than any of the others. Although the rich stability limit

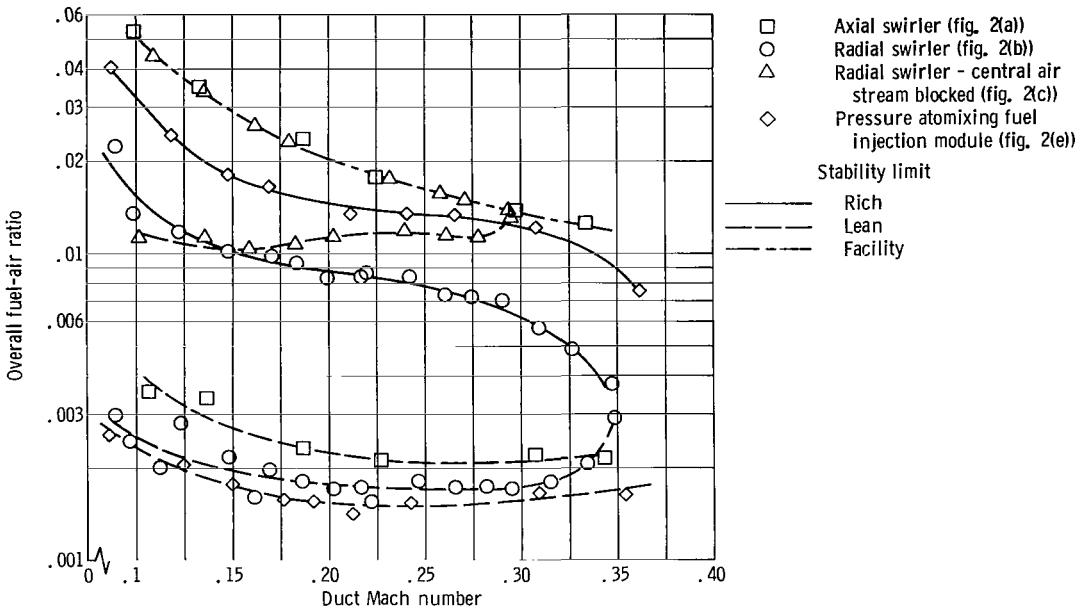

Figure 3. - Combustion stability limits of 3-inch- (7.62-cm-) diameter swirl-can combustor modules and a pressure atomizing fuel injection module at 600° F (589 K) inlet air temperature and atmospheric pressure.

could not be reached because of a facility fuel limitation, combustion efficiencies were already very poor, near 50 percent. Flames were long and yellow at all test conditions and fuel could occasionally be seen spilling from the combustor can. Evidently, this module, because of the central flow blockage, failed to permit burning in the combustor can.

The lean stability limit for the axial swirler assembly design (fig. 2(a)) was much improved over the design with the blocked central air inlet. Again, however, rich stability limits were not reached, and long yellow flames were produced. Combustion efficiencies, while high at duct Mach numbers greater than 0.24, were low at reduced duct Mach numbers. Thus, although this design improved performance slightly, results were not sufficiently promising to warrant its application to combustor arrays.

Most promising of the swirl-can combustor module designs was the radial swirler design shown in figure 2(b). This module burned with a short blue flame seated well up inside the combustor can. Combustion efficiencies ranged from 85 to 100 percent over the entire span of duct Mach numbers and fuel-air ratios investigated. Rich combustion stability limits were obtainable with this design indicating that the fuel was actually being mixed with the air and not escaping unburned from the combustor can lip. Although the rich stability limit was not as high as that obtained for the pressure atomizing nozzle design, it nevertheless encompassed a wide span of fuel-air ratios and duct Mach numbers. The combination of short flame length and adequate combustion stability and efficiency were judged to be promising for its use in combustor arrays. An application of this result to a rectangular combustor array of 21 such modules is reported in reference 4. Results of that program confirmed the data obtained with the single module.

The combustor module incorporating a pressure atomizing fuel nozzle produced flames which were blue at the outer periphery, in the wake of the film cooling slot, and had an extended yellow core. Generally flame lengths were long and combustion efficiencies were somewhat reduced, varying between 46 and 86 percent.

Effect of Swirl-Can Diameter on Combustion Stability

To determine the effect of combustor can diameter on combustion stability limits, the radial swirler design of figure 2(b) was tested in two additional diameters, 3.7 and 1.6 inches (9.40 and 4.06 cm). Results are compared with the 3-inch- (7.62-cm-) diameter data shown in figure 3. The 3.7- and 3.0-inch- (9.40- and 7.62-cm-) diameter swirl-can modules had identical carburetors and swirler assemblies, differing only in the diameter of the combustor can. The 1.6-inch- (4.06-cm-) diameter module was scaled from the 3-inch- (7.62-cm-) diameter module and had approximately the same ratio of swirler assembly flow area to maximum combustor can area (0.127). The total length of the 1.6-inch (4.06-cm) module, including carburetor, was reduced to 3 inches (7.62 cm).

As would be expected from previous flameholder work, the diameter had an appreciable effect on combustion stability limits, as shown in figure 4. Rich combustion stability limits increased significantly with increasing diameter. Lean stability limits, on the other hand, were nearly the same for the three sizes. Combustion efficiencies were 85 to 100 percent for all three modules with the larger diameters have slightly higher values. The small effect of combustor can diameter on lean stability limits may be due to poor fuel distribution at low fuel flows which caused locally rich zones to sustain combustion at lower fuel-air ratios than anticipated.

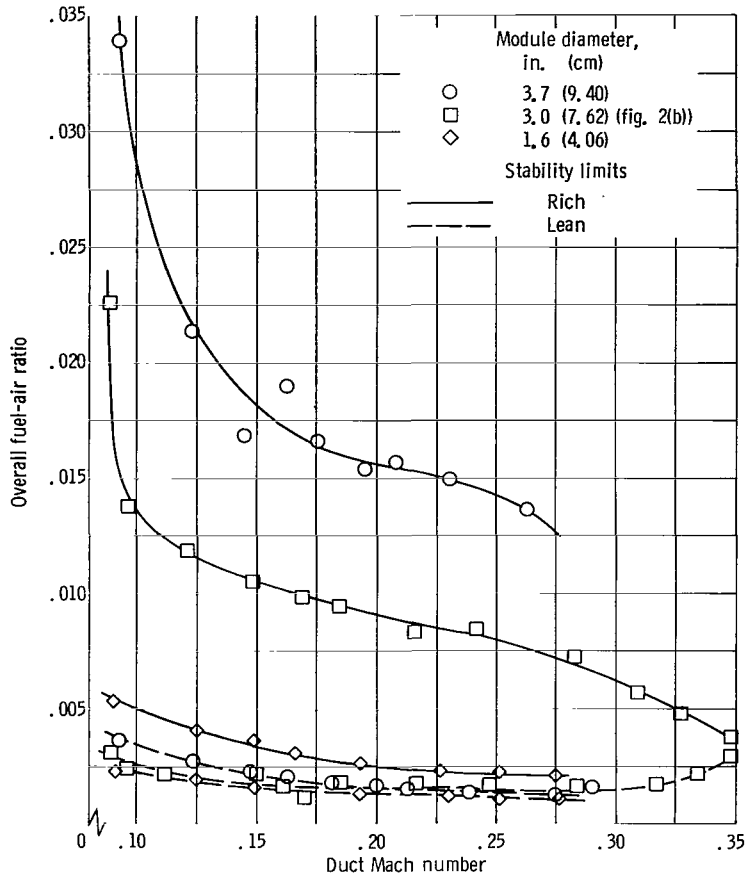

Figure 4. - Effect of swirl-can combustor module diameter on combustion stability limits at 600° F (589 K) inlet air temperature and atmospheric pressure.

Correlation of Combustion Stability Data

As described in reference 5, combustion stability data for flameholders using premixed fuel and air correlate fuel-air ratio at blowout against the quotient of a characteristic flow parameter and an effective flameholder diameter. For carburetor swirl-can combustor modules, two fuel-air ratios can be considered - an overall fuel-air ratio based on total airflow through the test duct, and a fuel-air ratio based on airflow through the carburetor. It is reasonable to expect that the more pertinent fuel-air ratio in this case is the one based on the airflow through the carburetor.

Airflows through the carburetors of the 3- and 3.7-inch- (7.62- and 9.40-cm-) diameter swirl-can combustor modules with radial swirler assemblies were measured. Measurements made with 600° F (589 K) inlet air temperature both in isothermal flow and with swirl-can burning showed excellent agreement. These measurements, besides

providing data for flow calculations, showed that the effect of combustion on carburetor airflows was negligible. Details of these measurements and the methods employed in calculating airflows are given in the appendix.

Since the accuracy of the measured airflows was in some doubt, because of the swirl components at the measurement stations, a second method of estimating these flows was devised. This was an inferential method based on the stability data of figure 4. The overall fuel-air ratio at the point of maximum combustion stability - the overall fuel-air ratio at which the combustor module produced stable combustion over the widest span of duct Mach numbers - was estimated by extrapolating the lean and rich combustion stability curves to where they intersected. This maximum stability point was assumed to concur with the stoichiometric fuel-air ratio in the combustor can. When the overall fuel-air ratio determined by extrapolation was used, the airflow rate through the carburetor was calculated at the condition of maximum combustion stability from the relation

$$\dot{\omega}_T\left(\frac{F}{A}\right)_T = \dot{\omega}_C\left(\frac{F}{A}\right)_{stoich}$$

where

$\dot{\omega}_T$ total airflow rate through the duct at condition of maximum combustion stability

$(F/A)_T$ overall fuel-air ratio at extrapolated point of maximum combustion stability (For the 3.0-in.- (7.62-cm-) diameter combustor module of fig. 2(c) an extrapolated value of 0.0034 was obtained; for the 1.6-in.- (4.06-cm-) diameter module a value of 0.0018 was obtained.)

$(F/A)_{stoich}$ stoichiometric fuel-air ratio for ASTM-A1 liquid fuel, 0.0676

$\dot{\omega}_C$ airflow rate through the carburetor at condition of maximum combustion stability

Airflow rates through the carburetor were then calculated at other values of total duct airflows using the same relation by substituting other airflow values for $\dot{\omega}_T$ and using the same values of $(F/A)_T$ and $(F/A)_{stoich}$.

Figure 5 presents measured carburetor airflows for the 3.7- and 3.0-inch- (9.40- and 7.62-cm-) diameter swirl-can combustor modules and compares measured values for the 3.0-inch- (7.62-cm-) diameter swirl-can with values calculated by the inferential method. As can be observed, the agreement between calculated and measured values was good. Thus, succeeding airflow calculations for the 3.0- and 1.6-inch- (7.62- and 4.06-cm-) diameter swirl-can combustor modules, as well as subsequent swirl-can designs, employed the inferential calculation method. Since the combustion stability limits

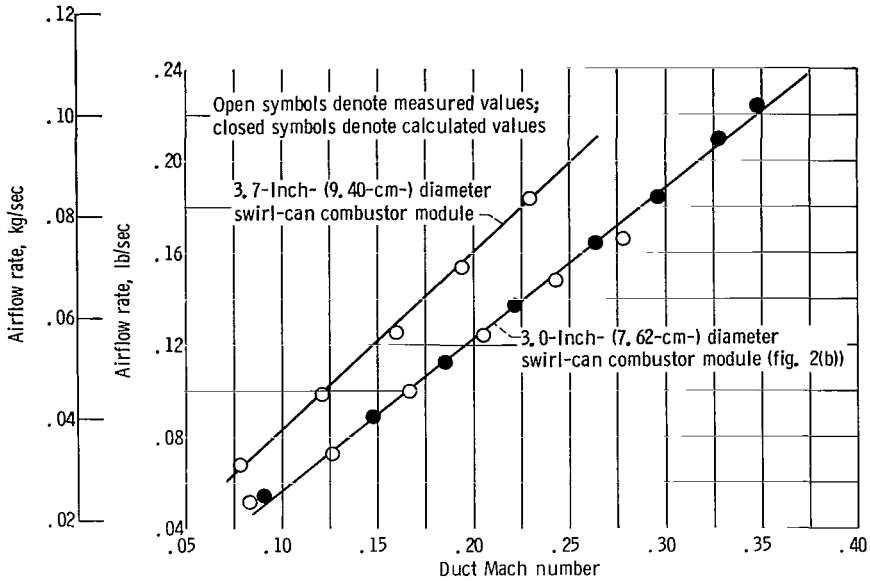

Figure 5. - Measured and calculated airflow rates through carburetor swirl-can combustor modules with 600° F (589 K) inlet air temperature and atmospheric pressure.

of the 3.7-inch- (9.40-cm-) diameter swirl-can module were too far apart to determine their intersection point, succeeding calculations used measured values of airflow.

The diameter used in the stability correlation was the blockage area of the module divided by the perimeter of the blockage area. This is called the effective diameter and has been used previously for flameholders without internal airflow. Its advantage for the present study is that it takes into account the opening in the combustor module. For swirl-can combustor modules, the effective diameter is given by

$$D_{eff} = \frac{\text{Blockage area}}{\text{Perimeter}} = \frac{\frac{\pi}{4}\left(D_c^2 - D_i^2\right)}{\pi(D_c + D_i)} = \frac{D_c - D_i}{4}$$

where D_c is the largest diameter of the combustor can and D_i is an equivalent diameter calculated from the known open area of the swirler assembly.

Figure 6 correlates combustion stability limits for the 3.7- and 1.6-inch- (9.40- and 4.06-cm-) diameter swirl-can combustor modules as well as the 3.0-inch- (7.62-cm-) diameter swirl-can shown in figure 2(b). The rich and lean blowout fuel-air ratios are expressed as values of equivalence ratio (the quotient of actual fuel-air ratio and stoichiometric fuel-air ratio) based on carburetor airflow and plotted against the duct Mach number divided by the effective diameter. The correlation is good at the rich limit. At

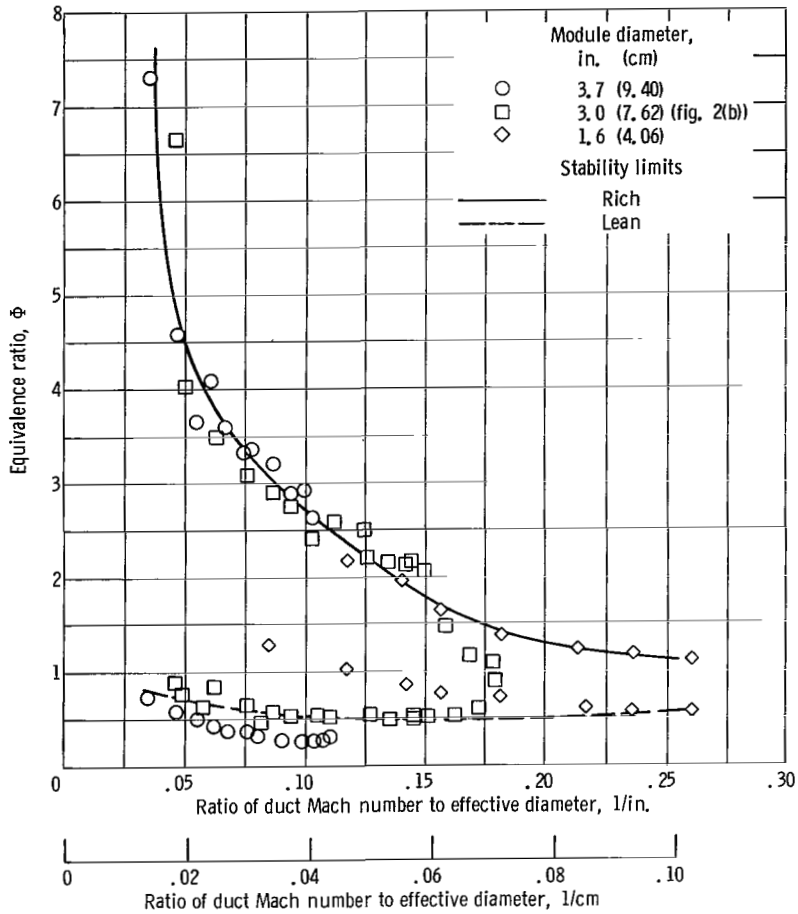

Figure 6. - Correlation of combustion stability data of swirl-can combustor modules at 600° F (589 K) inlet air temperature and atmospheric pressure.

the lean limit there is much more scatter, which may indicate that lean combustion stability limits are more dependent on locally rich zones than on module diameter.

2-Inch- (5.08-cm-) Diameter Swirl-Can Module

One goal of this investigation was to develop a simple compact combustor module with combustion stability limits comparable to those attained with a pressure atomizing module. The stability limits of the 3.0- and 3.7-inch- (7.62- and 9.40-cm-) diameter swirl-can modules were comparable to those of the pressure atomizing module, but these swirl-can modules were larger than desirable for use in a combustor array. The 1.6-inch- (4.06-cm-) diameter swirl-can module was small enough but was complicated in construction and had a limited range of combustion stability.

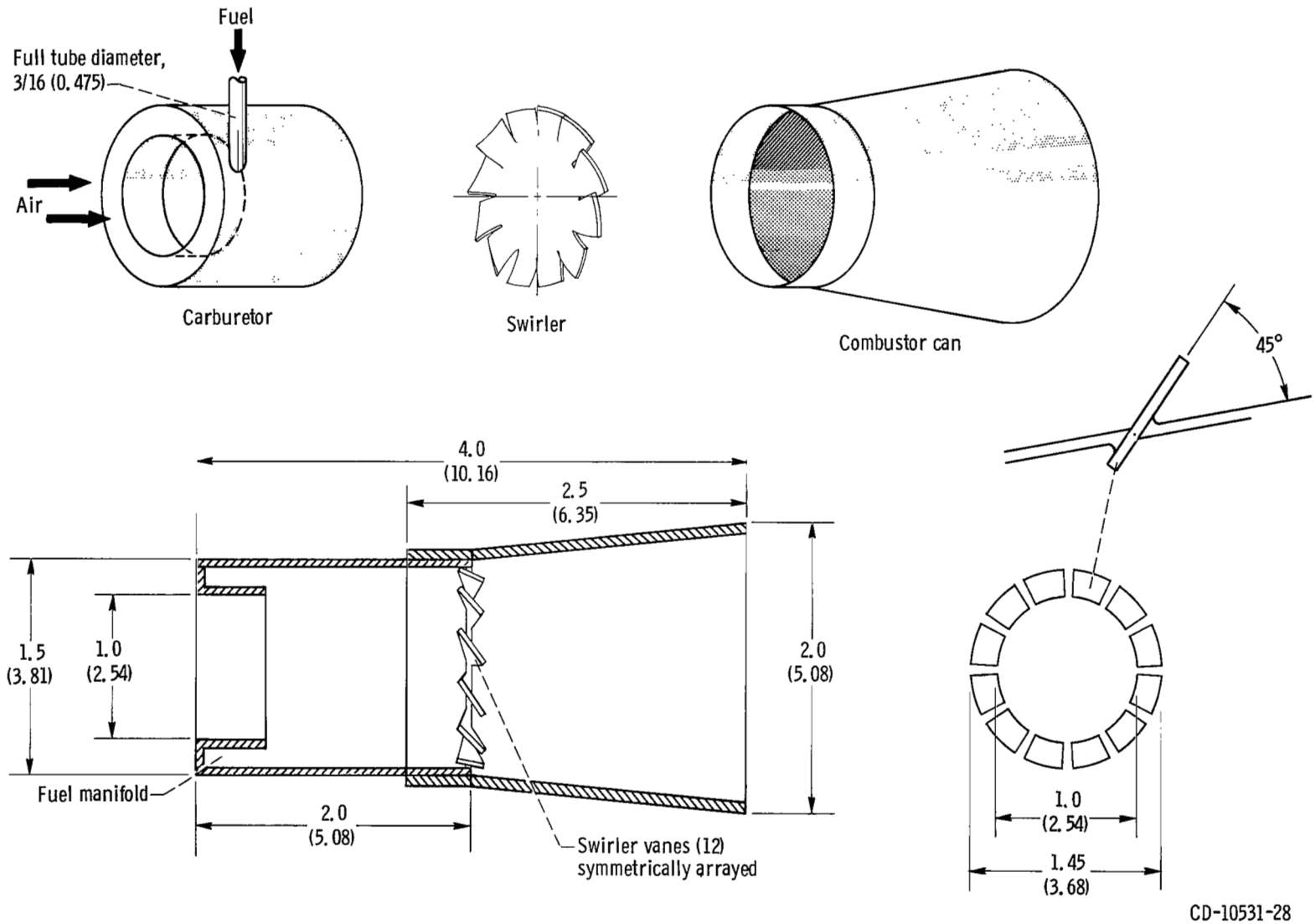

Figure 7. - Details of 2.0-inch (5.08-cm) diameter swirl-can combustor module. Dimensions are in inches (cm).

The 2.0-inch- (5.08-cm-) diameter swirl-can combustor module shown in figure 7 was an attempt to include the best features of the previous modules into a simple and compact design. These features included incorporation of a low pressure fuel entry system which mixed fuel with all of the carburetor airflow, incorporation of annular and central carburetor flow passages into a single passage, a swirler assembly flow area to combustor can blockage area ratio of 0.127, and shortening the carburetor and combustor can length.

In this design, fuel entered through a 3/16-inch- (0.475-cm-) diameter tube positioned at the upstream end of the carburetor which injected fuel tangentially into the carburetor. All carburetor airflow mixed with fuel prior to its passage through an axial swirler and into the combustor can. The swirler had no central orifice so a recirculation zone formed on its downstream face. This zone stabilized combustion near the combustor can inlet.

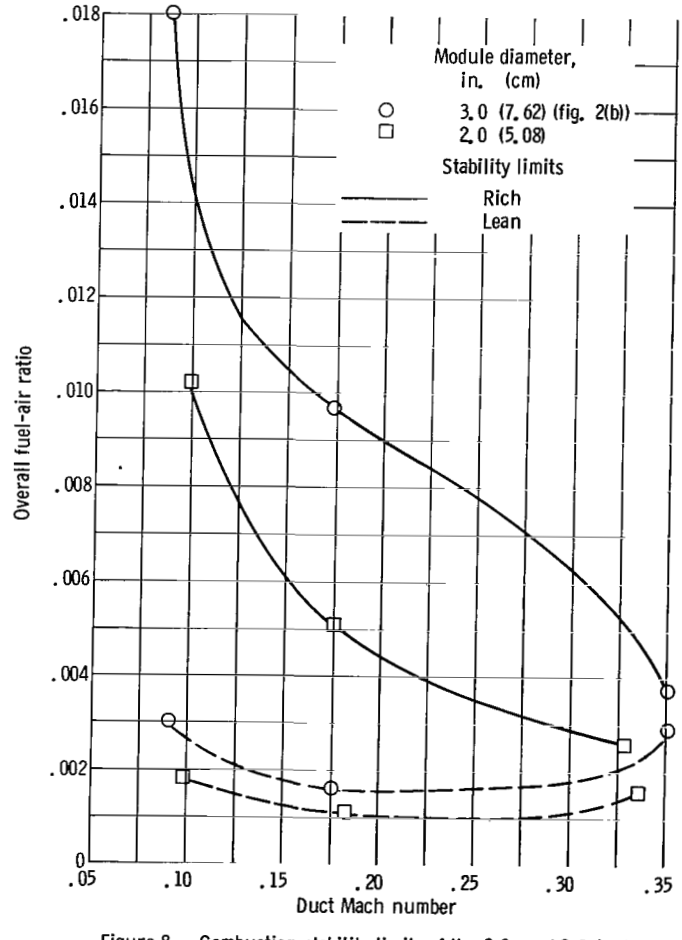

Figure 8. - Combustion stability limits of the 2.0- and 3.0-inch- (5.08- and 7.62-cm-) diameter swirl-can combustor modules at 600° F (589 K) inlet air temperature and atmospheric pressure.

Figure 8 compares the combustion stability limits of the 2-inch (5.08-cm) swirl-can module with the stability limits of the 3-inch- (7.62-cm-) swirl-can module shown in figure 2(b). Although the stability limits for the smaller module are somewhat narrower, stable combustion could be maintained to the same duct Mach number. Combustion efficiency was high, varying between 95 and 100 percent, and flame lengths were short. The good performance of this module is probably due to the mixing of all carburetor airflow with fuel and recirculation of hot combustion gases in the wake of the swirler. The combustion stability data for this module are shown in figure 9 plotted on the correlation curves of figure 6.

Some attempts were made to optimize the performance of the 2-inch- (5.08-cm-) diameter combustor module. The effects of carburetor length, combustor can length, and swirler flow area on performance were investigated. The length of the carburetor was reduced from 2 to 1.5 inches (5.08 to 3.81 cm) with no measurable effect on either combustion stability or efficiency. The combustor can length was reduced from 2.5 to 2 inches (6.35 to 5.08 cm) causing slight improvement in the lean stability limit. The most significant changes in combustion stability were caused by changes in the swirler

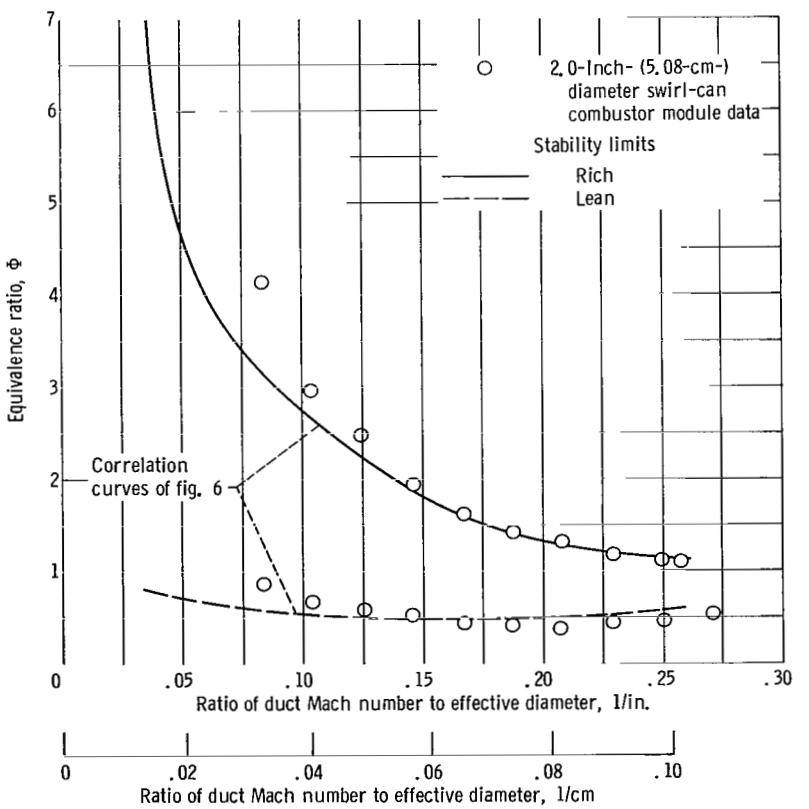

Figure 9. - Combustion stability correlation at 600° F inlet air temperature and atmospheric pressure.

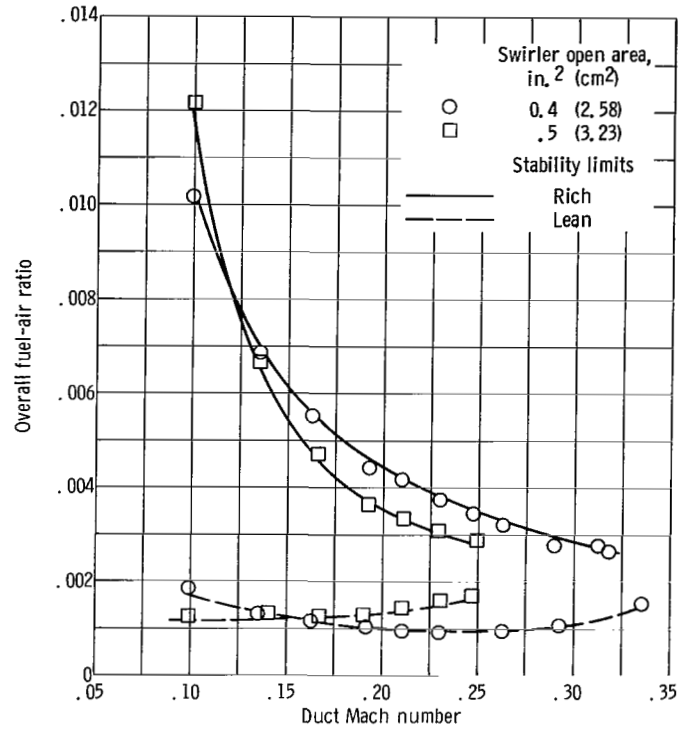

Figure 10. - Effect of swirler open area on combustion stability limits for 2.0-inch- (5.08-cm-) diameter swirl-can combustor modules at 600° F (689 K) inlet air temperature and atmospheric pressure.

open area. Figure 10 compares the combustion stability limits for modules having swirlers with 0.4 and 0.5 square inch (2.58 and 3.23 cm^2) open areas. Increasing the swirler open area decreased the combustion stability limits at duct Mach numbers above 0.15 and reduced the combustion efficiency from 5 to 15 percent below that attained with the smaller swirler open area.

In a further attempt to optimize performance of the 2.0-inch- (5.08-cm-) diameter swirl-can module, a 0.25 inch (0.635 cm) wide ring was mounted on the inside wall of the combustor can 1 inch (2.54 cm) downstream of the swirler. This ring was to better distribute fuel and provide additional flameholding area within the swirl-can module. The ring caused only a slight change in the combustion stability limits and did not affect the combustion efficiency. The flame distribution was affected by the ring, however. The flame appeared to be more symmetrical and was confined to a region approximately the size of the inner diameter of the ring rather than expanding to fill the combustor can. The ring appeared to enhance mixing and distribution of fuel in the combustor can. Combustion intensity was also increased as evidenced by further decreases in flame length and overheating of the swirler. The swirler was redesigned to compensate for durability

problems caused by this increased heating. In the redesign, the same swirler open flow area was maintained (0.4 in.^{2}; 2.58 cm^2) while the length of the vanes was increased and the vane angle decreased. This modification prevented burning on the swirler face by reducing the recirculation zone in the wake of the swirler and did not affect combustion performance. Figure 11 shows the two swirlers as well as the location of the fuel distribution ring.

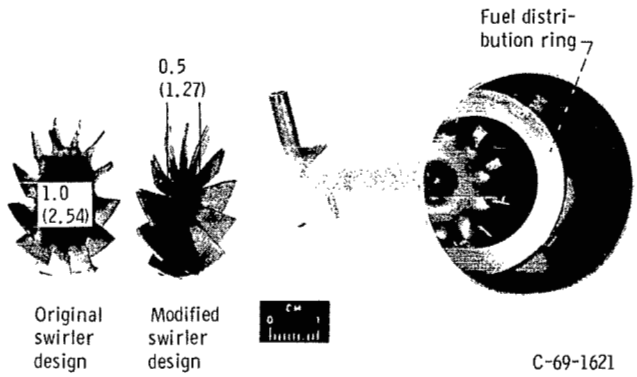

Figure 11. - 2.0-Inch- (5.08-cm) carbureting swirl-can combustor module showing position of fuel distribution ring and two swirler types. All dimensions are in inches (cm).

Effect of Inlet Air Temperature

Combustion performance of all of the swirl-can combustor modules was determined at 600° F (589 K) inlet air temperature. Additional combustion stability tests were conducted with the 3.0-inch- (7.62-cm-) diameter module shown in figure 2(b) at inlet air temperatures of 100° to 700° F (311 to 644 K). These stability data are shown in figure 12. As the inlet air temperature increased, combustion stability increased, especially at duct Mach numbers greater than 0.14. At lower duct Mach numbers, rich stability limits were not achieved with 100° and 300° F (311 and 422 K) inlet air temperatures since fuel spilled from the combustor can without burning at high fuel-air ratios. Increasing inlet air temperature decreased flame length and improved flame appearance and distribution. Similar dependence of combustion stability on inlet air temperature would be expected for all swirl-can combustor modules.

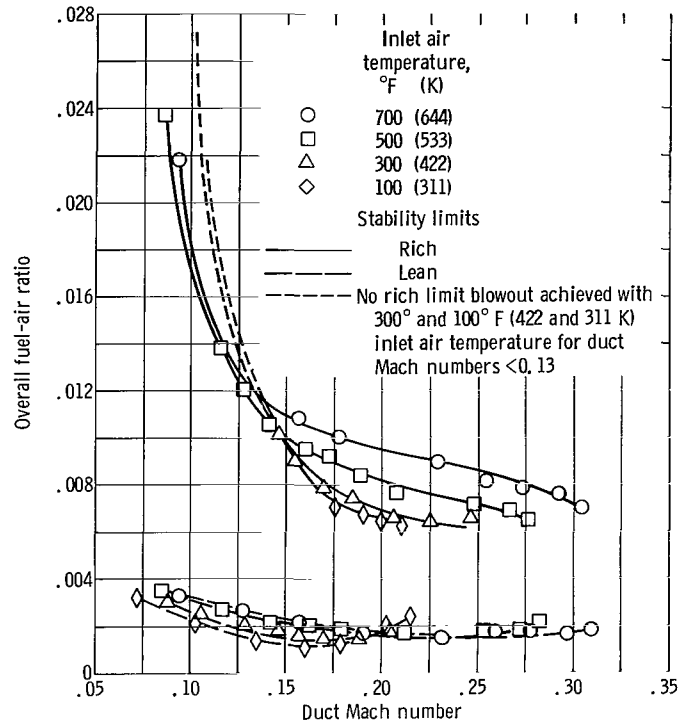

Figure 12. - Effect of inlet air temperature on combustion stability limits of a 3.0-inch- (7.62-cm-) diameter swirl-can combustor module at 1 atmosphere pressure.

Ignition

Although stable combustion was maintained with inlet air temperatures down to ambient conditions, all of the modules required a minimum inlet air temperature of 200° to 250° F (366 to 394 K) for ignition. Ignition was achieved with duct Mach numbers up to 0.22, and occurred most easily at rich fuel-air ratios. Ignition would probably have been improved if the single spark wire at the module's trailing edge had been replaced with a torch ignitor or a high energy spark-discharge system.

Durability

No burnout or distortion problems due to heat were observed for any of the swirl-can combustor modules evaluated. Several modules were tested intermittently for over 50 hours. Swirler overheating caused by the fuel distribution rings was easily eliminated by redesigning the swirler.

Durability problems may occur at Mach 3 cruise conditions which require inlet air temperatures of 1150° F (895 K). Facility limitations did not permit testing at inlet air temperatures greater than 700° F (644 K).

CONCLUDING REMARKS

Results of this investigation were sufficiently encouraging to suggest that the concept of combustors made up of simple carbureting swirl-can combustor modules could be extended to full-scale combustor applications. Although any size swirl-can module could be used for these applications, 2-inch- (5.08-cm-) diameter modules appear preferable. The choice of diameter includes a trade-off of greater combustion stability and simplicity of the larger modules against the increased interfacial mixing area of smaller modules. The 2-inch- (5.08-cm-) diameter swirl-can module appears to be a satisfactory compromise that exhibits good combustion stability without excess complexity.

Lewis Research Center,
National Aeronautics and Space Administration,
Cleveland, Ohio, July 1, 1969,
126-15.

APPENDIX - APPARATUS AND TEST PROCEDURES

Installation

A schematic drawing of the test facility installation is shown in figure 1. Airflow from the laboratory supply was heated directly by a J-33 combustor. The preheater exhausted hot air and combustion products into an axial swirler. After mixing, swirl components were removed by passing the flow through a straightening section consisting of an array of assorted size tubes. The hot air then entered the test section, which was a 6-inch- (15.24-cm-) diameter duct. The initial section of this duct further alined the flow which then passed through and around the test module and exhausted to atmosphere. Test modules were centered in the duct and held in place by a support clamp attached to the duct inner wall. Ignition was achieved with a spark plug with an extended center electrode which arced to the downstream lip of the combustor can. Airflows were metered by a sharp-edged, flange-tap orifice installed according to ASME specifications. Fuel flows to the preheater and test module were individually metered with turbine-type meters and/or rotometers. Both fuel and air flows were regulated by remote controlled valves.

The measured airflow rate, the maximum cross-sectional area of the test duct (0.2005 sq ft (182.3 cm^2)), and the pressure and temperature in the test duct were used to calculate the duct Mach numbers. Since the fuel-air ratio of the preheated air did not exceed 0.007 and the combustion efficiencies varied between 90 and 100 percent for the range of conditions investigated, effects of vitiation on test results were assumed negligible.

Combustion Stability Data

Combustion stability data were obtained for all of the swirl-can modules. The combustion stability data were obtained by setting the airflow rate and slowly varying module fuel flow rate until a lean or rich blowout occurred. Test points were taken at 0.5 pound per second (0.227 kg/sec) airflow intervals. Complete envelopes of combustion stability were not obtained because of airflow limitations of 4.8 pounds per second (2.18 kg/sec) or less, and fuel flow limitations of 0.064 pound per second (0.029 kg/sec) or less.

Combustion Efficiency

Combustion efficiencies were obtained by setting fuel flow and airflow rates and measuring exit average temperatures at a plane 19 inches (45.7 cm) from the swirl-can

module trailing edge. Thirteen thermocouples were positioned at the duct center and at 1- and 2-inch (2.54- and 5.08-cm) radii. Combustion efficiencies were calculated as the percentage ratio of actual to theoretical increase in temperature for measured equivalence ratios. An average radial exit temperature profile was determined from the exit temperature readings. Since the thermocouples were not at the centers of equal areas, this profile was integrated to yield an average exit temperature. Also, since these readings were not mass weighted and a minimum number of thermocouples were used, the calculated values were approximations rather than true combustion efficiencies. However, they were useful in evaluating relative merits of the swirl-can combustor modules investigated.

Swirl-Can Combustor Module Airflow Measurement

The airflow through the swirl-can combustor modules was measured in the 3- and 3.7-inch- (7.62- and 9.40-cm-) diameter modules using a stream static and total pressure probe positioned on the main axis at the inlet of the combustor can. Pressures were measured with water manometers. Pressure measurements were also made with traversing pitot tubes and static and total pressure probes upstream of the module, inside the combustor can, and downstream of the combustor can. These measurements were confined to isothermal test conditions.

Experimental errors were possible in measuring these flows because of the presence of swirl components on the flow at the combustor can inlet and reverse flow zones and swirl components in the combustor can. The magnitude of these errors is not known. However, reproducible pressure readings were obtained and a comparison of flows at several measuring stations showed reasonable agreement.

Tests were also conducted with swirl-can combustion. The pitot-tube traverses could not be made during these tests so the airflow rates through the can were based on the measurements obtained with the fixed probes. A comparison of airflows measured at the combustor can inlet with no combustion and with combustion at various fuel-air ratios are presented in figure 13. As can be seen, the effect of combustion on swirl-can airflow was negligible.

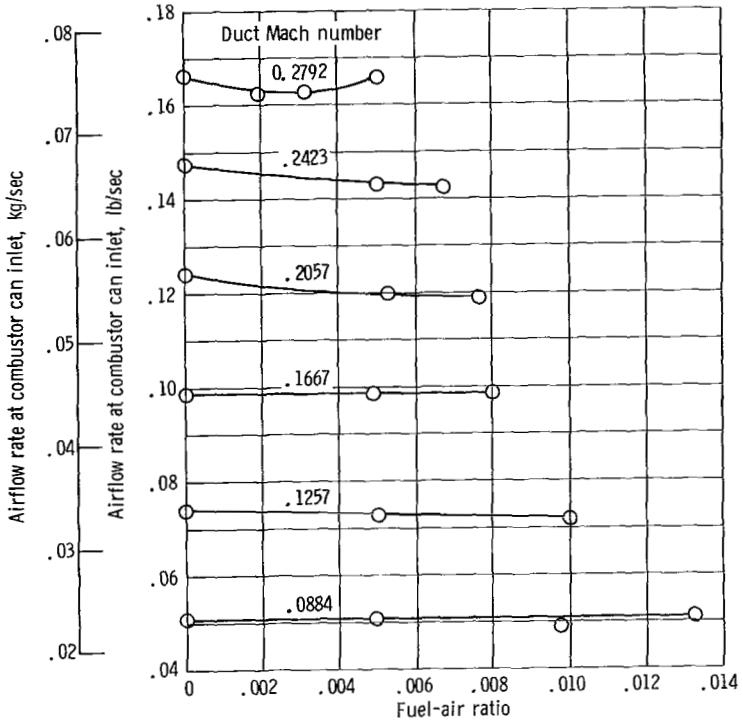

Figure 13. - Effect of combustion on airflow through 3-inch-(7.62-cm-) diameter combustor module with 600° F (589 K) inlet air temperature and atmospheric pressure at various values of duct Mach number.

REFERENCES

1. Pawlik, Eugene V.; and Jones, Robert E.: Experimental Evaluation of Swirl-Can Elements for Propane-Fuel Combustor. NASA Memo 5-15-59E, 1959.
2. Jones, Robert E.; and Rayle, Warren D.: Performance of Five Short Multielement Turbojet Combustors for Hydrogen Fuel in a Quarter-Annulus Duct. NACA RM E58D15, 1958.
3. Jones, Robert E.; and Pawlik, Eugene V.: A Preliminary Investigation of the Performance of a Short-Length Turbojet Combustor Using Vaporized Hydrocarbon Fuels. NACA RM E57J03, 1958.
4. Butze, Helmut F.; Trout, Arthur M.; and Moyer, Harry M.: Performance of Swirl-Can Turbojet Combustors at Simulated Supersonic Combustor-Inlet Conditions. NASA TN D-4996, 1969.
5. Longwell, J. P.; Chenevey, J. E.; Clark, W. W.; and Frost, E. E.: Flame Stabilization by Baffles in a High-Velocity Gas Stream. Third Symposium on Combustion and Flame and Explosion Phenomena. Williams & Wilkins Co., 1949, pp. 40-44.

NASA-Langley, 1969 —— 28 E-4675

NATIONAL AERONAUTICS AND SPACE ADMINISTRATION
WASHINGTON, D. C. 20546

OFFICIAL BUSINESS

FIRST CLASS MAIL

POSTAGE AND FEES PAID
NATIONAL AERONAUTICS AND
SPACE ADMINISTRATION

POSTMASTER: If Undeliverable (Section 158 Postal Manual) Do Not Return

"The aeronautical and space activities of the United States shall be conducted so as to contribute . . . to the expansion of human knowledge of phenomena in the atmosphere and space. The Administration shall provide for the widest practicable and appropriate dissemination of information concerning its activities and the results thereof."

— NATIONAL AERONAUTICS AND SPACE ACT OF 1958

NASA SCIENTIFIC AND TECHNICAL PUBLICATIONS

TECHNICAL REPORTS: Scientific and technical information considered important, complete, and a lasting contribution to existing knowledge.

TECHNICAL NOTES: Information less broad in scope but nevertheless of importance as a contribution to existing knowledge.

TECHNICAL MEMORANDUMS: Information receiving limited distribution because of preliminary data, security classification, or other reasons.

CONTRACTOR REPORTS: Scientific and technical information generated under a NASA contract or grant and considered an important contribution to existing knowledge.

TECHNICAL TRANSLATIONS: Information published in a foreign language considered to merit NASA distribution in English.

SPECIAL PUBLICATIONS: Information derived from or of value to NASA activities. Publications include conference proceedings, monographs, data compilations, handbooks, sourcebooks, and special bibliographies.

TECHNOLOGY UTILIZATION PUBLICATIONS: Information on technology used by NASA that may be of particular interest in commercial and other non-aerospace applications. Publications include Tech Briefs, Technology Utilization Reports and Notes, and Technology Surveys.

Details on the availability of these publications may be obtained from:

SCIENTIFIC AND TECHNICAL INFORMATION DIVISION

NATIONAL AERONAUTICS AND SPACE ADMINISTRATION

Washington, D.C. 20546