TM046-A25-36

MAT
M. SAVAGE

THE BOEING COMPANY
AERO-SPACE DIVISION
SATURN BOOSTER BRANCH

DOCUMENT NO. D5-12561

UNCLASSIFIED TITLE Boeing Manufacturing Plan for S-1C Stage

MODEL NO. S-1C CONTRACT NO. NAS8-5608

ISSUE NO. ISSUED TO

CLASSIFIED TITLE
(STATE CLASSIFICATION)

FACILITY FORM 602

N69-80421 (ACCESSION NUMBER) (THRU)
523 (PAGES) 1 (CODE)
CR-102317 (NASA CR OR TMX OR AD NUMBER) (CATEGORY)

WORK ORDER NO. UNIT ITEM NO.

JUN 1969
RECEIVED
NASA STI FACILITY
INPUT BRANCH

SPECIAL LIMITATION IN ASTIA DISTRIBUTION

ASTIA may distribute this report to requesting agencies subject to the [illegible] fields of interest, and the following:

[X] UNLIMITED: [illegible]

[ ] LIMITED: To U.S. Military organizations only.

This report may be distributed to [illegible] agencies not approved above subject to BOEING approval of each request.

NOTE: The LIMITED [illegible] may be [illegible] only because of actual or potential patent, proprietary, ethical, or similar implication.

RECEIVED
SEP 27 1966
MSA
DOCUMENT
CENTER

PREPARED BY N. E. Johansen R. L. Olson

SUPERVISED BY W. B. Edmiston W. C. Bogart R. A. Trigg J. R. Barnard

APPROVED BY F. L. Coenen

CLASS & DISTR APPROVED BY F. L. Coenen 7/1/63 (DATE)

NO. OF PAGES 523 (EXCLUDING TITLE AND REVISION AND ADDITION PAGES)

DOCUMENT TITLE PAGE

N O T I C E

This document has been prepared and will be maintained for the Boeing-built stage based on and compatible with the "Marshall Space Flight Center Manufacturing Plan" for the Saturn V/S-1C Stage, dated June 11, 1962, as changed January 15, 1963, and subsequent revisions. This is in accordance with Exhibit "A", Part III, paragraph A of Contract NAS 8-5608. All changes or modifications to this document must be accomplished by coordination through the Boeing Manufacturing organization in New Orleans, for approval prior to incorporation.

MODEL S-1C DOCUMENT NO D5-12561

TITLE BOEING MANUFACTURING PLAN FOR THE S-1C STAGE

REVISIONS				ADDITIONS			
PAGE	DATE	PAGE	DATE	PAGE	DATE	PAGE	DATE
Complete Revision 12/11/63							

THE BOEING COMPANY
SATURN BOOSTER BRANCH

ORIG 1 63

CONTENT

	NOTICE	ii
1.0	INTRODUCTION	1-1
1.1	Manufacturing Organization	1-5
1.1.1	Organization Structure	1-5
1.1.2	Vendor Policy and Interface	1-5
2.0	FABRICATION AND ASSEMBLY PROCEDURE	2-1
2.1	Stage Description	2-1
2.2	Thrust Structure Assembly	2-5
2.3	Fuel Tank Assembly	2-67
2.4	Intertank Structure Assembly	2-101
2.5	Oxidizer (LOX) Tank Assembly	2-135
2.6	Forward Skirt Assembly	2-153
2.7	Fin and Fairing	2-157
2.8	Vertical Final Assembly	2-219
2.9	Horizontal Installation	2-265
2.10	Engine Buildup	2-277
2.11	Refurbishment	2-286
3.0	SUPPORT REQUIREMENTS - MISCELLANEOUS MANUFACTURING AND SPARES	3-1
3.1	Program Schedules	3-1
3.2	Manufacturing Full Scale Mock-Up	3-4
3.2.1	Manufacturing Engineering Responsibility	3-5
3.2.2	Final Assembly Sequence	3-5
3.2.3	Wiring and Tubing Development	3-6
3.2.4	Configuration Control	3-7
3.3	Manufacturing Development and Process Control	3-9
3.3.1	Manufacturing and Process Documentation	3-9
3.3.2	Specialized Manufacturing Development and Production Equipment	3-26
3.4	Integrated Support Parts Requirements - Spares	3-28
4.0	AUTHORIZED TOOLING	4-1
4.1	Concepts	4-1
4.2	Tooling Policy	4-1
4.3	Scope	4-3
4.4	Types	4-4
4.5	Master Gage Plan	4-5
4.6	List of Authorized Tools	4-10
4.6.1	Thrust Structure	4-19
4.6.2	Fuel Tank	4-14
4.6.3	Intertank	4-22
4.6.4	LOX Tank	4-25
4.6.5	Forward Skirt Assembly	4-31
4.6.6	Fin and Fairing	4-32
4.6.7	Tunnels	4-34
4.6.8	Engine Buildup	4-35
4.6.9	Vertical Final Assembly	4-36
4.6.10	Horizontal Installation	4-38
4.6.11	Handling Equipment	4-39

5.0	DESCRIPTION, FUNCTION AND CAPACITY OF TOOLS	5-1
5.1	Description by Tool Types	5-1
5.2	Function of Specific Tools	5-17
5.3	Function of Authorized Tools	5-22
5.4	Capacity of Tools	5-50
6.0	DESCRIPTION, FUNCTION AND CAPACITY OF FACILITIES	6-1
6.1	Final Assembly Facility	6-1
6.1.1	Vertical Assembly	6-1
6.1.2	Horizontal Installation Position	6-3
6.1.3	Refurbishment Position	6-3
6.2	Major Sub-Assembly Facility	6-3
6.2.1	Fuel and Oxidizer Tank Assembly Build-Up	6-3
6.2.2	Hydrostatic Test and Cleaning	6-9
6.2.3	Engine Build-Up Facility	6-9
6.3	Minor Sub-Assembly Area	6-9
6.3.1	Sub-Assembly Area	6-11
6.3.2	Major Structures Assembly Area	6-11
6.4	Electrical and Electronic Facility	6-11
6.4.1	Electrical Fabrication and Assembly Area	6-11
6.4.2	Electronic Fabrication and Assembly Area	6-13
6.5	Manufacturing Full Scale Mock-Up	6-13
6.6	Rework Modification and Tool Maintenance Facility	6-14
6.6.1	The Rework and Modification Area	6-14
6.6.2	Tool Maintenance Area	6-15
6.7	Component Cleaning and Chemical Cleaning and Finish Process Area	6-17
6.7.1	Valve Clinic	6-17
6.7.2	Tube and Valve Cleaning Facility	6-19
6.7.3	Major Component Cleaning Facility	6-20
7.0	DESCRIPTION, FUNCTION AND CAPACITY OF TEST STATION	7-1
7.1	Introduction	7-1
7.2	Summary	7-1
7.3	Area Layout Charts	7-3
7.4	Sub-System Test	7-6
7.4.1	Test Complex	7-6
7.4.2	Test Equipment Installations, Checkout, Calibration and Maintenance	7-32
7.4.3	Sub-System Test Operation	7-33
7.5	Stage Checkout	7-38
7.5.1	Stage Test Complex	7-38
7.5.2	Installation, Checkout and Calibration	7-40
7.5.3	Stage Transportation and Handling	7-47
7.5.4	Test Operations	7-47
7.6	Test Planning	7-50
7.6.1	Test Equipment Procurement	7-50
7.6.2	Test Equipment and GSE/MSE Checkout and Calibration	7-51
7.6.3	Stage and Ground Support Equipment Functional Test, Calibration and Checkout	7-51
7.6.4	Configuration and Accountability	7-52

8.0	OBJECTIVES AND DOCUMENTATION CONTROLLING OPERATIONS	8-1
8.1	General Description	8-1
8.2	Contractual Requirements	8-2
8.2.1	Item II Monthly Progress Report	8-2
8.2.2	Monthly Technical Progress Report	8-2
8.2.3	Quarterly Technical Progress Report	8-3
8.2.4	Annual Report	8-3
8.2.5	Bi-Weekly PERT Analysis Report	8-3
8.3	Boeing Internal Documentation	8-4
8.3.1	Documents	8-4
8.3.2	Directives	8-4
8.3.3	Operating Procedures	8-4
8.4	Specifications - NASA Engineering Standards	8-5
8.5	The Boeing Saturn Record System	8-7

211 4000

J3 4211 4000

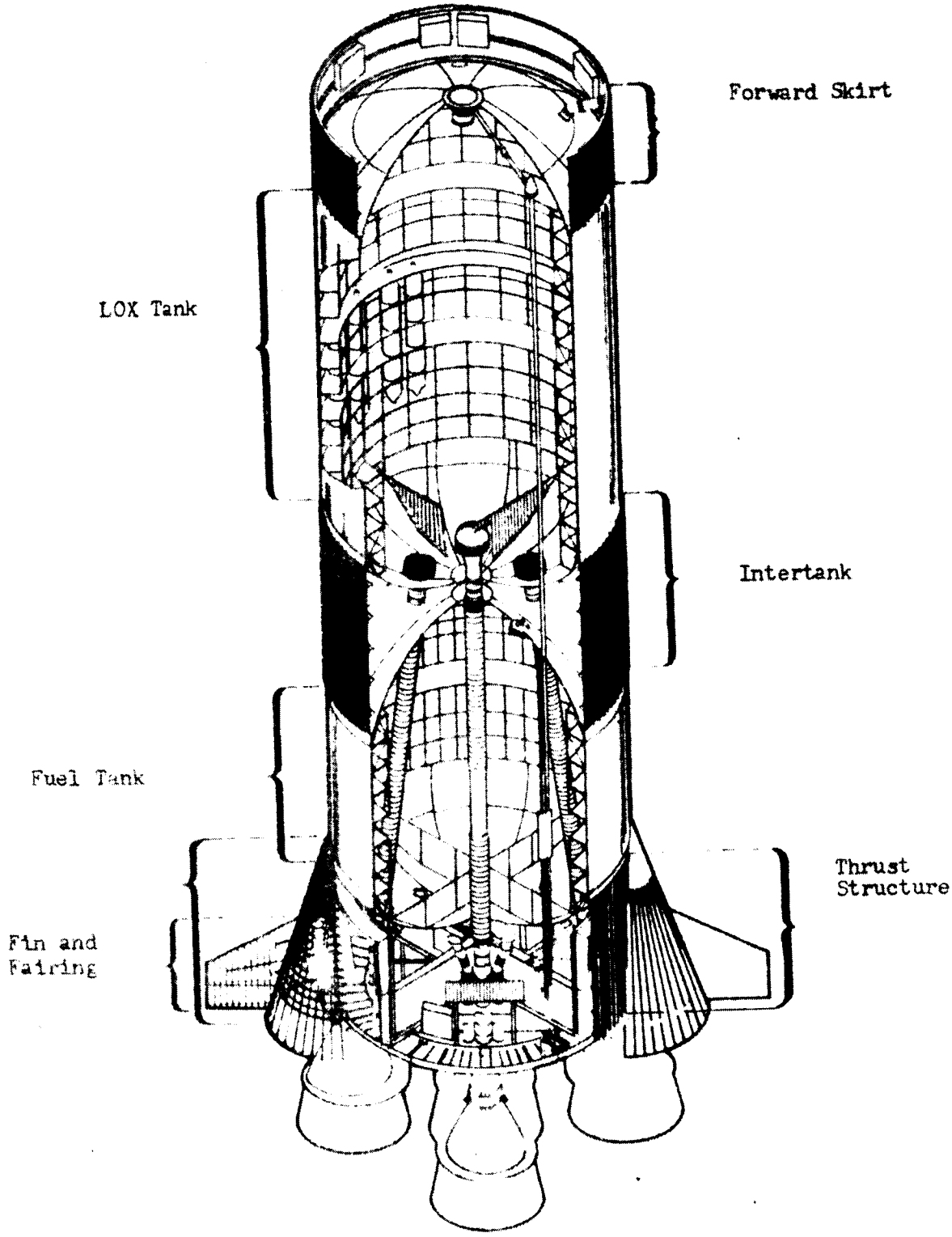
Forward Skirt
LOX Tank
Intertank
Fuel Tank
Thrust Structure
Fin and Fairing

4211 4000

1.0 INTRODUCTION

This document, D5-12561, "The Boeing Manufacturing Plan for the S-1C Stage" is submitted to the George C. Marshall Space Flight Center in accordance with the requirements of Paragraph A, Part III of Exhibit "A", Technical Work Statement of Contract NAS8-5603, dated January 1, 1963.

This Manufacturing Plan presents procurement, manufacturing and assembly methods for the fabrication of the S-1C Stage by the Boeing Company at the Michoud Facility. The concepts and methods outlined are consistent with the stage of design at this time. The processes and techniques outlined in this Manufacturing Plan are within the present stage of the art and consistent with reliability requirements for manned space flight.

The document describes the organizational structures and areas of responsibility in the Boeing Saturn Booster Branch. It details information relative to fabrication and assembly procedures, sequences of manufacturing operations, and the tooling to be utilized. The plan also includes the description, function, and estimated capacity of all tools and facilities, inspection and test stations, specifications, and drawing numbers of documentation required for operations control.

This Manufacturing Plan is based upon procurement by the Saturn Booster Branch of detailed parts, such as structural, electrical and mechanical and propulsion components, primarily from the Boeing and Wichita Facility and Seattle Facility, in addition to other industry. Fabricated parts will arrive at the Michoud Facility completely finished except for welding, trim stock, and mechanical fastening holes. Michoud manufacture will be restricted to hardware of size and configuration which precludes out-plant fabrication.

Reliability will be derived from proper design, manufacture, and inspection operations. Reliability in manufacturing is a prime consideration of this Manufacturing Plan, and this facet will be implemented during all stages of design and fabrication of components and at all levels of assembly and testing.

Industry provides various components for the Stage, and the Boeing Company facilities and organizations at Seattle and Wichita are fully utilized for assistance as required. The Boeing capability will be utilized in the manufacture, test and checkout of tooling, Stage hardware and ground support equipment. The Michoud Facility will be primarily used for tank welding, assembly, installation, and checkout activity.

In the Manufacturing Plan, the Saturn S-1C assembly is illustrated in Figure 1-1. The final assembly plan details how the Stage is assembled vertically from the five major assemblies. Each of the

U3 4211 4000

1.0 (Continued)

five major assemblies, Thrust Structure, Fuel Tank, Intertank Structure, Forward Skirt and Fin and Fairing assemblies are described from detail to final assembly.

Sub-assembly, assembly, installation and testing are performed at the Michoud Facility. The Thrust Structure, Fuel Tanks, Intertank Structures, LOX Tank and Forward Skirt Structure are assembled at this facility. These sections are assembled in a vertical position, working up from the Thrust Structure, which is located on four pylons in the vertical assembly tower. The Fuel Tank is oriented above the Thrust Structure, followed by the Intertank Structure, the LOX Tank, and finally, the Forward Skirt. The assembled Stage is removed from the vertical position and lowered to a horizontal position. Numerous items of airborne equipment are installed during the major assembly operations and in the vertical position. After lay-down, the remaining items of equipment are installed, and the wiring and plumbing completed.

The engine buildup required to prepare the engines for installation is accomplished concurrently with Stage assembly. The engines are installed while the Stage is in the horizontal position. Fins and Fairings are also assembled concurrently and are shipped with the Stage rather than installed at Michoud. GSE is also manufactured during this period and made available for both Michoud testing and the programs at the Mississippi Test Operations and Atlantic Missile Range. A full scale mock-up is utilized to develop wiring and plumbing runs which ensures minimum difficulty and reduces flow time during installation.

Following completion of horizontal installation, the Stage is moved to the test position for final Stage checkout and a complete, simulated prestatic test firing. Upon completion of the simulated static firing, the Stage is transported to the static firing site. After static firing, the Stage is returned to the Michoud Plant where it is refurbished and the physical mating with the upper stage gage is completed. The weight determination is then accomplished and the center of gravity located; the final stage checkout is completed with a complete simulated launch sequence. The Stage is now ready for preparation for shipment to the launch site where the shrouds, fins and engine skirts are installed.

The Tooling Plan defines the tooling policy and tool design techniques to be followed in the manufacture and assembly of the Saturn S-IC Stage. Interchangeability and replaceability requirements are defined, listing the known parts and assemblies which require this classification to ensure assembly coordination. Each major assembly, in parallel with the manufacturing plan, is covered with illustrations

4211 4000

1.0 (Continued)

of the tooling required from detail parts through final assembly. Optical alignment methods are used in many of the tools and some tool illustrations show the concept of this approach.

The inplant test and checkout plan covers the complete range of Inplant test from prestatic test (which includes ground power and booster network check), telemetry calibration tests, the mechanical system pressure and functional tests, and proceeds to the final stage of level one checkout. This checkout includes a complete simulated static firing and launch of the Stage. During this period of testing, complete telemetry measuring calibration is performed. The test plan also includes a low level test of all components necessary to control the quantity of both Stage hardware and ground support equipment. During the refurbishment cycle after static firing, a post-static series of tests will be performed which includes final weight and center of gravity determination, physical mating with upper stage range, and a simulated launch and flight.

U3 4211 4000

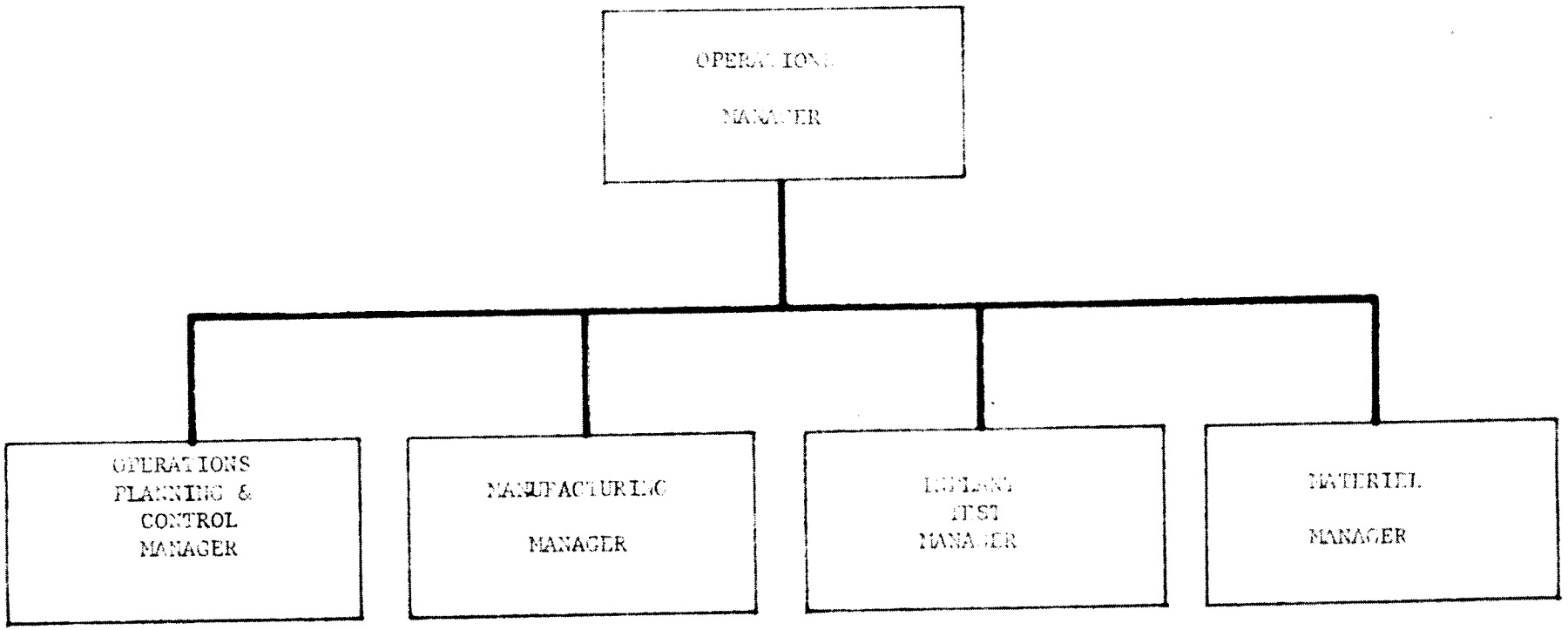

FIGURE 1-2 OPERATIONS DEPARTMENT

B 4211 4000

1.1 MANUFACTURING ORGANIZATION

1.1.1 Organization Structure and Charts

The Operations Department is composed of four basic organizations: Manufacturing, Inplant Test, Materiel, and Operations Planning and Control. Manufacturing and Inplant Test are the major functional organizations of the Operations Department. Materiel and Operations Planning and Control, composed of indirect manpower, are support organizations. (See Figures 1-2 through 1-6 depicting organizational charts.)

1.1.2 Vendor Policy and Interface

Raw materials, standard components and certain special parts and sub-assemblies are obtained from commercial sources by purchase orders and subcontracts. Authority to purchase such materials or items is transmitted to the Materiel organization by means of a Production Release Authorization, prepared by the Manufacturing Organization.

The source awarded the purchase order or subcontract is selected on an objective basis by Materiel accomplishes this accordance with detailed Branch and Division written procedures, a summary of which is contained in Document D5-11001-1, "Procurement Systems". Full consideration on each procurement is given to the ability of prospective suppliers to meet specifications and delivery schedules, assure quality control and provide necessary data to support Engineering and Reliability requirements.

Interfaces between Boeing and its suppliers and potential suppliers are the responsibility of the Materiel organization. Materiel establishes supplier reporting requirements and follows up as necessary with inquiries and visits to the plants of suppliers, calling upon the other departments for technical support. Surveys and technical reviews are conducted to help assure satisfactory subcontract program progress.

U3 4211 4006

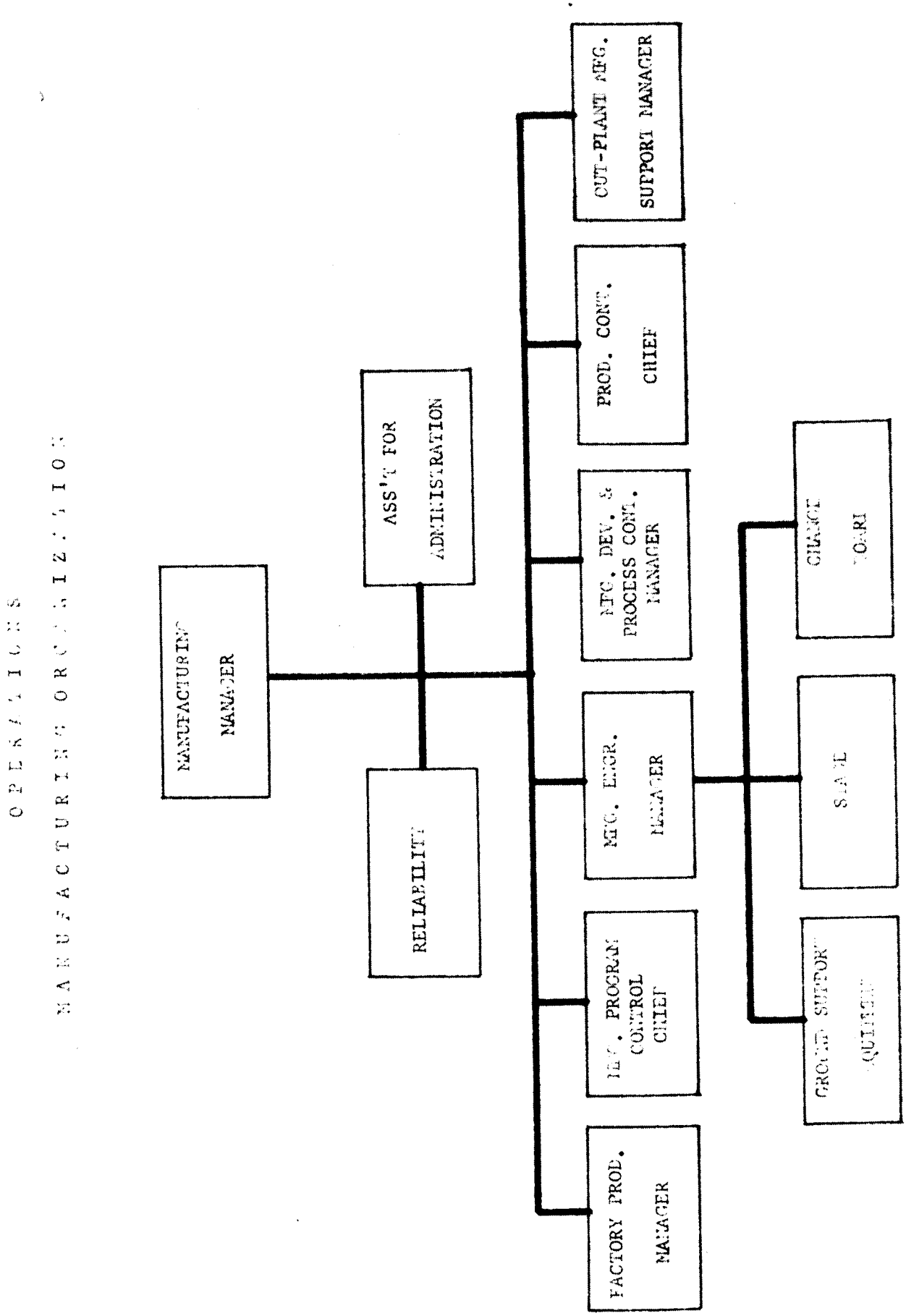

FIGURE 1-3 OPERATIONS MANUFACTURING ORGANIZATION

U3 4211 4000

OPERATIONS

INPLANT TEST ORGANIZATION

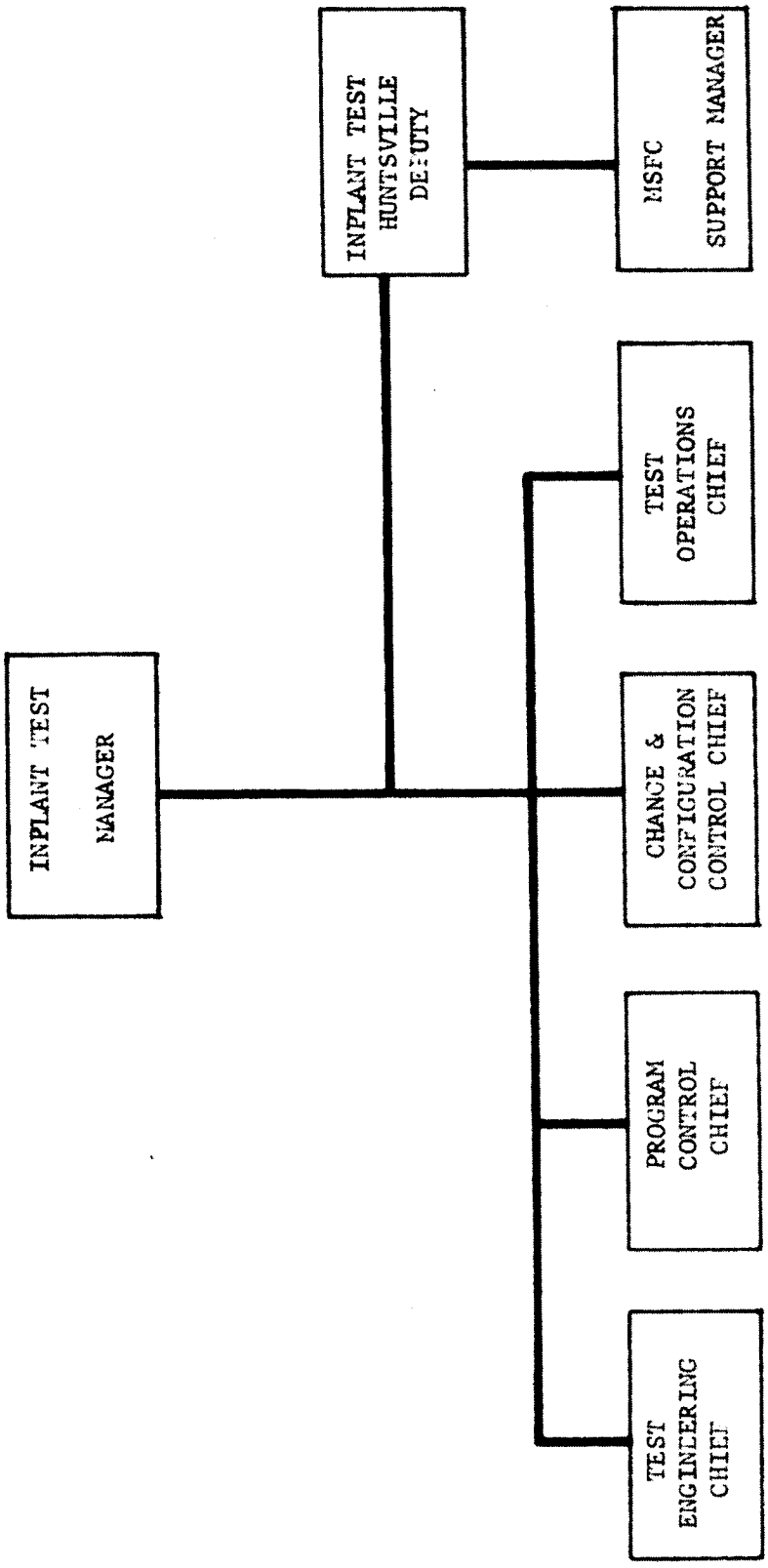

FIGURE 1-4 OPERATIONS INPLANT TEST ORGANIZATION

U3 4211 4000

OPERATIONS

MATERIAL ORGANIZATION

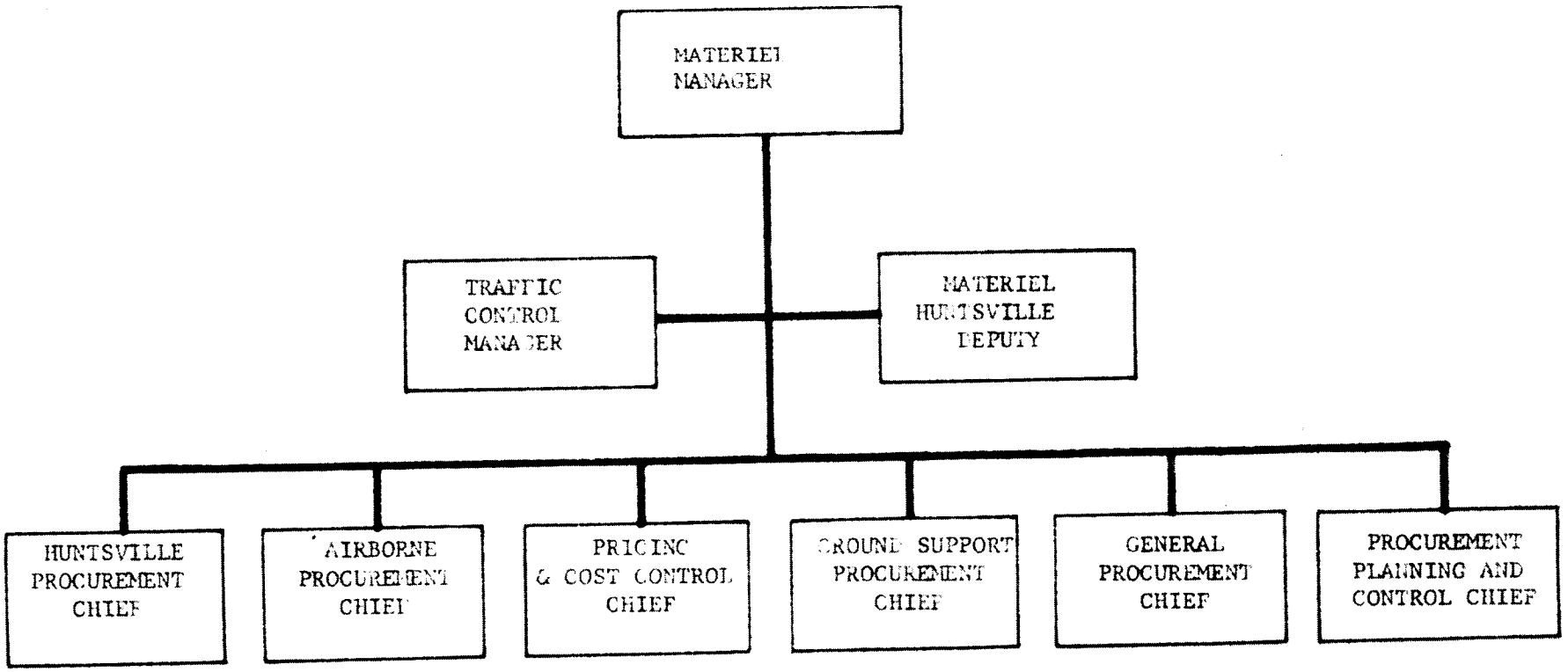

FIGURE 1-5 OPERATIONS MATERIAL ORGANIZATION

3 4211 4000

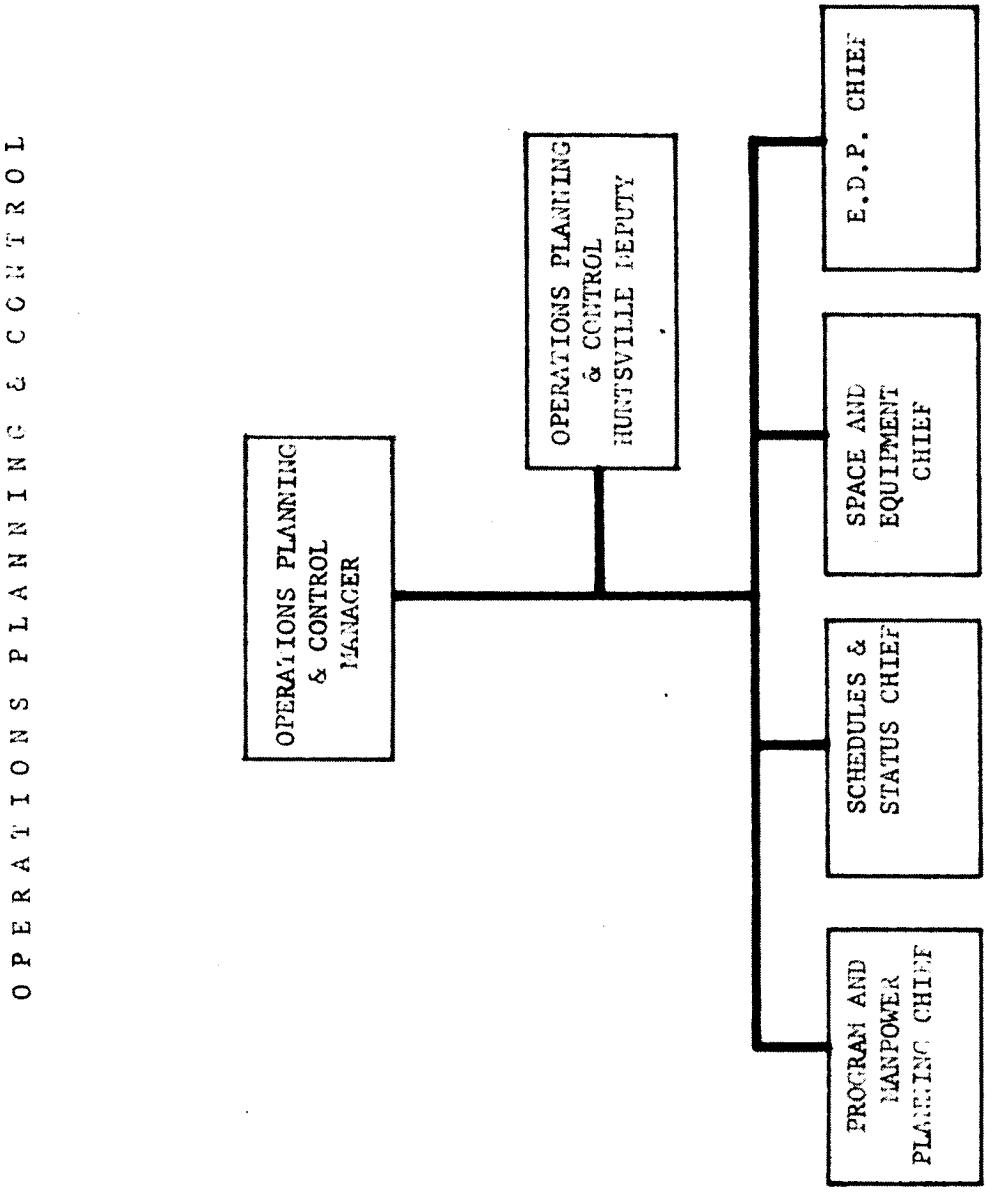

FIGURE 1-6 OPERATIONS PLANNING & CONTROL

U3 4211 4000

2.0 FABRICATION AND ASSEMBLY PROCEDURES

2.1 STAGE DESCRIPTION

The Saturn C-5 Booster Stage S-1C is of a cylindrical tandem tank configuration and is capable of producing 7.5 million pounds of thrust at sea level. The Saturn C-5 Booster Stage S-1C is shown in Figure 1-1. The Booster Stage S-1C is based on Propulsion and Vehicle Engineering Division, MSFC, drawing number SK1C-3486E, "Assembly Layout, Saturn C-5, S-1C Stage", dated October 24, 1962. The Booster Stage S-1C is equipped with individual propellant tanks, the Oxidizer Tank Assembly being located above the Fuel Tank Assembly, and is powered by a cluster of five F-1 engines.

The Booster Stage S-1C is approximately 138 feet long, 33 feet in diameter (excluding fins), and weight approximately five million pounds at liftoff. The Booster Stage S-1C is composed of the following major components:

a) Forward Skirt Assembly
b) Intertank Structure Assembly
c) Thrust Structure Assembly
d) Base Heat Shield
e) Engine Fairings
f) Fin Assemblies
g) Fuel Tank Assembly
h) Oxidizer Tank Assembly
i) Propulsion System and Accessories
j) Instrumentation and Electrical Network
k) Retro-rockets
l) Additional Requirements

The Booster Stage S-1C structure is of semi-monocoque structure design and generally utilizes aluminum alloy 2219-T87 and 7075-T6. The propellant containers are of cylindrical fusion welded construction with the LOX Tank Assembly located above the Fuel Tank Assembly. Material for the Tank Assemblies is 2219-T87 aluminum alloy plate. The cylindrical sections of the Tank Assemblies are numerically milled into a semi-monocoque structure to reduce weight and provide structural integrity. Circumferential internal rings, manufactured from aluminum alloy 7178-T6, are added to provide a rigidity where required. The Tank assemblies use elliptical cross section bulkheads at both ends. Anti-slosh baffles are installed in both tank assemblies. The Forward Skirt Assembly cylindrical skin sections are of 7075-T6, internally with channel rings. The Thrust structure Assembly consists of 7075-T6 aluminum alloy cylindrical skin assemblies with internal ring assemblies and support structure. The Intertank Structure Assembly is composed of corrugated aluminum alloy 7075-T6 skin panels with five ring assemblies added internally for stiffness. Mechanical attachments are used in securing the Thrust Structure Assembly, Intertank Structure Assembly, and Forward Skirt Assembly to the LOX and Fuel Tank Assemblies.

U3 4211 4000

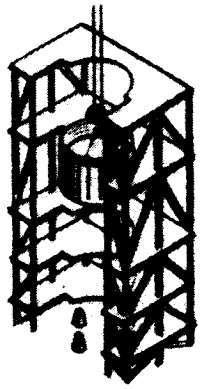

THRUST STRUCTURE
Section 2.2

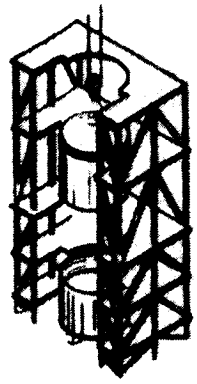

FUEL TANK
Section 2.3

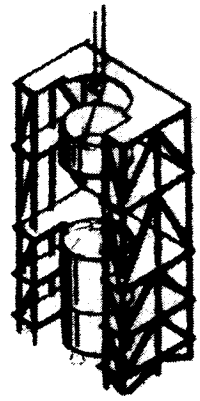

INTER TANK
Section 2.4

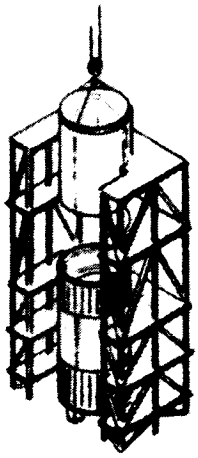

LOX TANK
Section 2.5

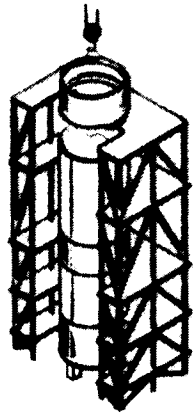

FORWARD SKIRT
Section 2.6

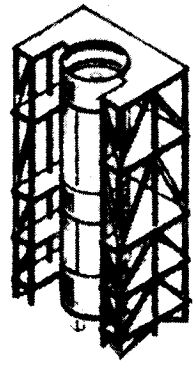

COMPLETE ASSEMBLY
Section 2.8

Figure 2-1 S-1C STAGE FINAL ASSEMBLY

3 4211 4000

2.1 (Continued)

The four outer F-1 Engines are mounted circumferentially on a diameter of 365 inches. Each of the five engines is fed by a separate LOX duct, which runs through a tunnel in the Fuel Tank Assembly. Each engine also requires two fuel inlets which are fed by two fuel suction lines connected to the bottom of the Fuel Tank Assembly. The Fuel Tank Assembly is pressurized with helium. The LOX Tank Assembly is pressurized with GOX.

The Booster Stage S-1C is controlled by gimballing the four outboard engines a maximum of plus or minus five degrees in both the pitch and yaw planes. Aerodynamic fins are installed to provide stability and assure positive control of the vehicle.

Manufacturing operations for the Booster Stage S-1C begin at MSFC with the fabrication of ground test stages and the first flight vehicle. Included in the effort are fabrication and assembly of the Fuel Tank Assembly bulkhead structural test, static firing stage S-1C-T, structural test component, dynamic test stage S-1C-D, and flight vehicle S-1C-1. Manufacturing operations at Michoud include the systems checkout stage S-1C-F and flight vehicles S-1C-2 and subsequent. Manufacturing operations start at MSFC with the fabrication and assembly of the Fuel Tank Assembly bulkhead structural test unit and static firing stage S-1C-T. The S-1C-F vehicle is the first scheduled to be fabricated at Michoud.

U3 4211 4000

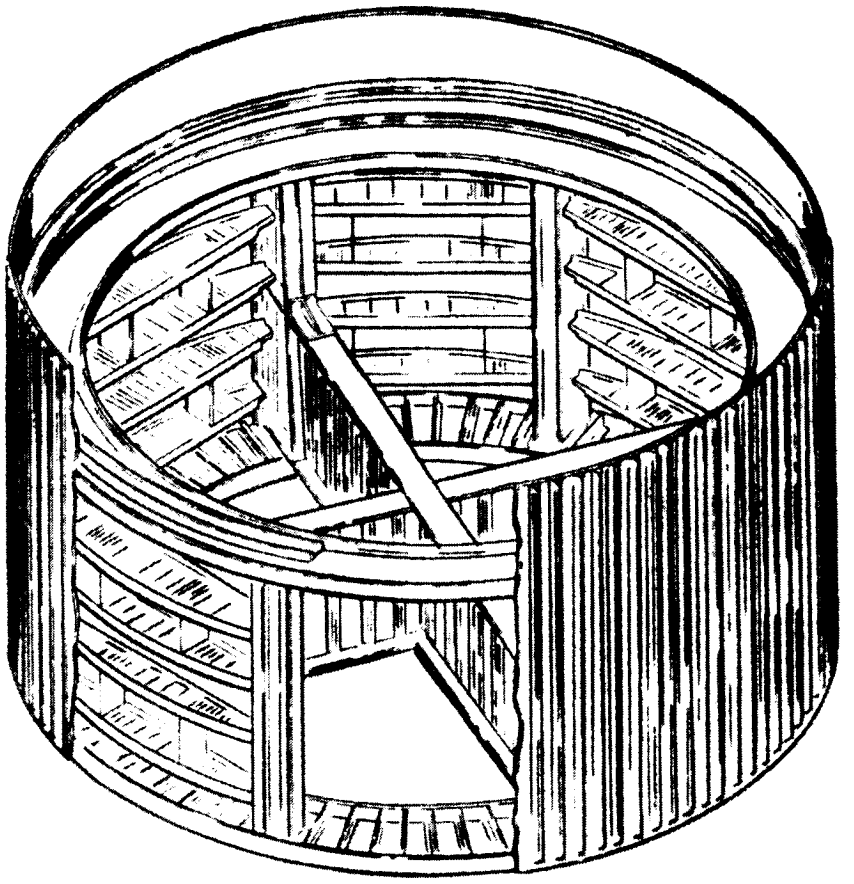

Figure 2-2 PARTIAL THRUST STRUCTURE ASSEMBLY

3 4211 4000

2.2 THRUST STRUCTURE ASSEMBLY

The Thrust Structure assembly is 33-feet in diameter, exclusive of fins and engine fairing, and approximately 20 feet tall. The Thrust Structure is a mechanically fastened assembly designed to absorb the thrust of the five rocket engines and to distribute the loads throughout the entire Thrust Structure and into the Fuel Tank structure. The thrust section is constructed basically of 7000 series aluminum alloy plate, forgings, extrusions and rolled shapes. The major components are Lower Thrust Ring Assembly, Center Engine Support Assembly, Hold-down Posts, Engine Thrust Posts, Upper Thrust Ring Assembly, Intermediate Rings, and Skin Panel Assemblies. (See Figure 2-2)

2.2.1 Skin Panel Assemblies - Aft Adapter

The skin panel assemblies for the aft adapter consist of the forward 65.7 inches of a cylindrical skin panel, reinforced by hat shaped stiffeners. The aft adapter, when assembled, represents the forward end of the Thrust Structure to which the Test Fuel Tank will be joined on the S-1C-C unit. The skin panel assemblies are assembled in a wooden holding fixture, using mylar overlays to locate the hat sections. There are (8) eight right hand and (8) left hand skin panel assemblies for the aft adapter.

2.2.1.1 Sequence of Assembly

a) Load the skin panel, forward edge down.
b) Apply mylar overlay to the outside of the panel; position in relation to outside profile of panel.
c) Load stringers, locate per mylar overlay and clamp in place.
d) Drill and ream stiffeners and panels from pilots in stiffeners.
e) Temporarily identify stringers and remove.
f) Deburr all holes and reposition stiffeners.
g) Install fasteners.
h) Drill locating holes for alignment blocks.
i) Bolt alignment block and position using gage.
j) Drill remaining holes through alignment block.
k) Install remaining bolts.
l) Identify part number of assembly.

2.2.2 Lower Thrust Ring Assembly

The lower thrust ring assembly is a 33-foot diameter by 40-inch cross-section ring consisting of two tees, a web plate, radial stiffeners, miscellaneous doublers, and splice hardware. The tees, inner and outer caps, are 10 by 1-1/8 by 7 by 5/8 inches (cross section). The web plate

U3 4211 4000

2.2.2 (Continued)

is nominally 3/8-inch thick and is stiffened by zee-cross-section radial stiffeners. The inner and outer caps are stretched-formed and machined extrusions; four segments are required to manufacture each complete inner and outer lower ring cap. The web plate is fabricated in eight (8) segments. The complete lower thrust ring assembly weighs approximately 6700 pounds.

2.2.2.1 Assembly Sequence

(See figure 2-3) The lower thrust ring is assembled in the upper and lower thrust ring assembly fixture.

a) Load lower tee cap splice angles.
b) Load inboard and outboard thrust ring tee caps using tee cap handling fixture. (See figure 2-4)
c) Load lower thrust ring web assemblies.
d) Load web splice plate, upper tee cap splice angles and tee cap splice plates.
e) Drill all fastener holes full size except holes common to outer tee cap splice. Drill holes common to splice 3/8-inch diameter.
f) Install fasteners.
g) Drill heat shield attach clip locations full size.
h) Drill (4) .500 diameter tooling holes.
i) Remove lower thrust ring assembly from assembly fixture using thrust ring assembly handling fixture. (See figure 2-5)

2.2.2.2 Web Assembly Lower Ring Fin Position

The lower fin position assembly consists of a web, doubler and stiffeners.

2.2.2.2.1 Assembly Sequence

(See figure 2-6) The web assembly is assembled in web assembly lower ring fin position assembly fixture.

a) Use the web assembly handling tool to load web into tool. (See figure 2-7)
b) Drill (2) $\frac{1}{4}$-inch diameter tooling holes.
c) Load the doubler and stiffeners and locate.
d) Drill all fastener holes common to web, stiffeners and doubler. Omit all fastener locations common to inboard and outboard thrust ring tee caps.
e) Install fasteners.
f) Remove assembly from tool using web assembly handling tool. (See figure 2-7)

4211 4000

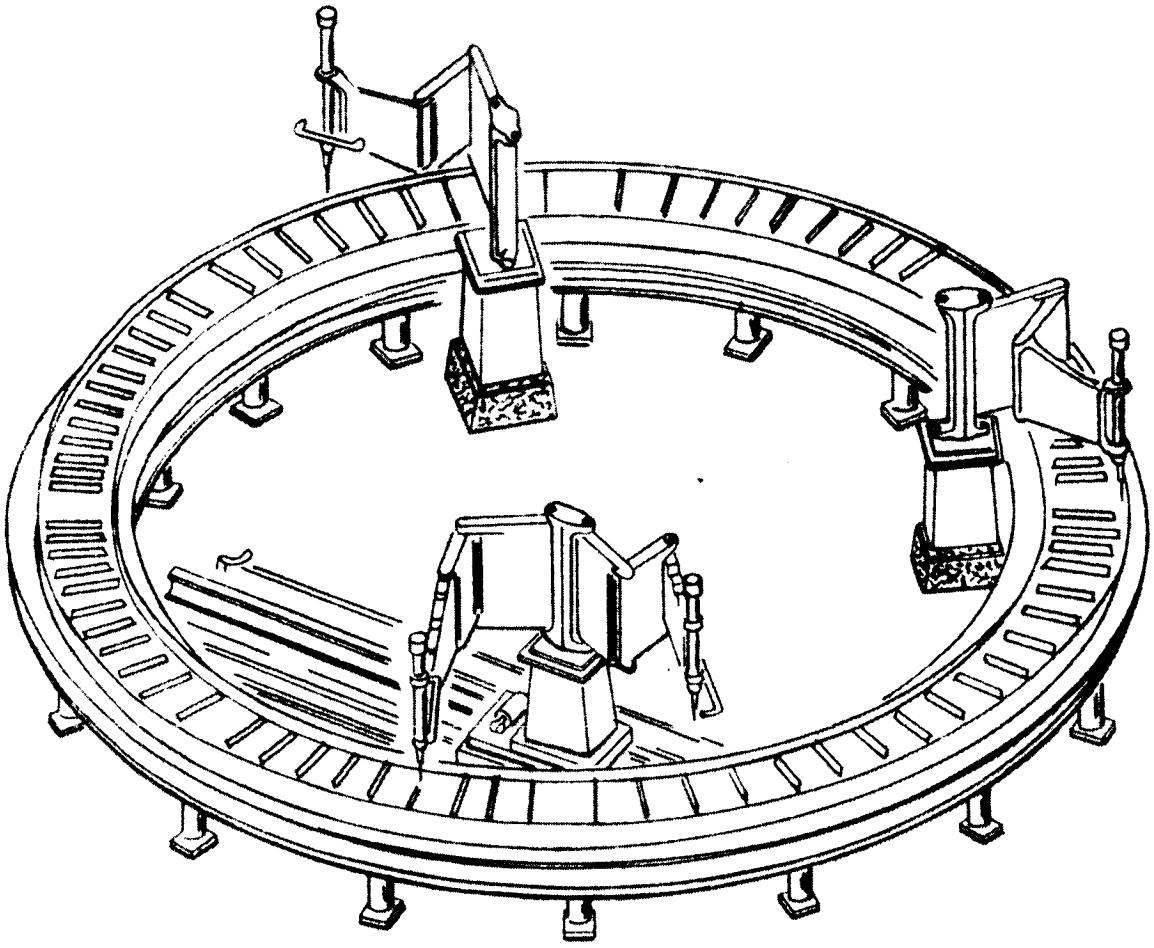

Figure 2-3 UPPER AND LOWER THRUST RING ASSEMBLY FIXTURE

U3 4211 4000

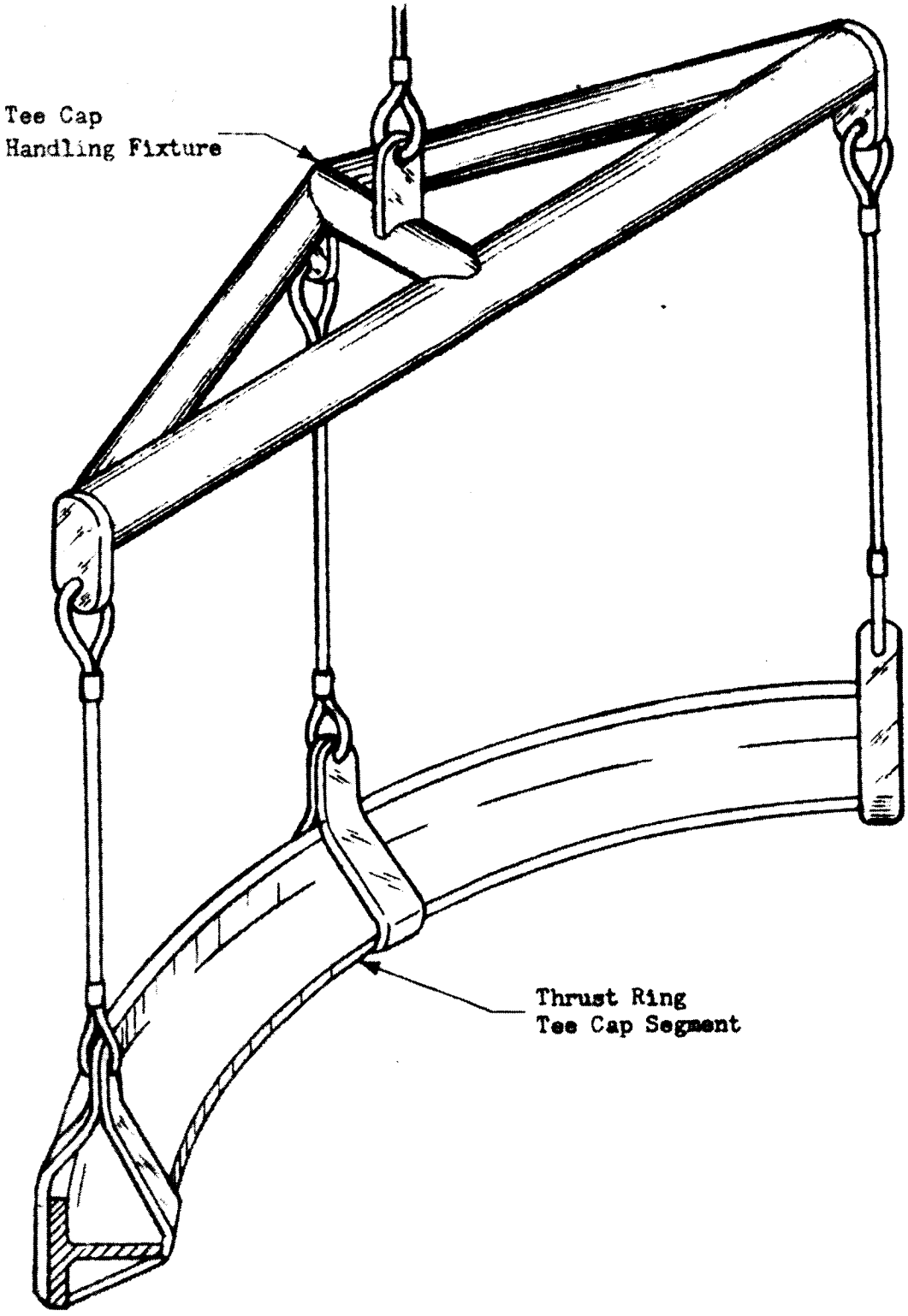

Figure 2-4 INBOARD AND OUTBOARD TEE CAP HANDLING FIXTURE

1 4211 4000

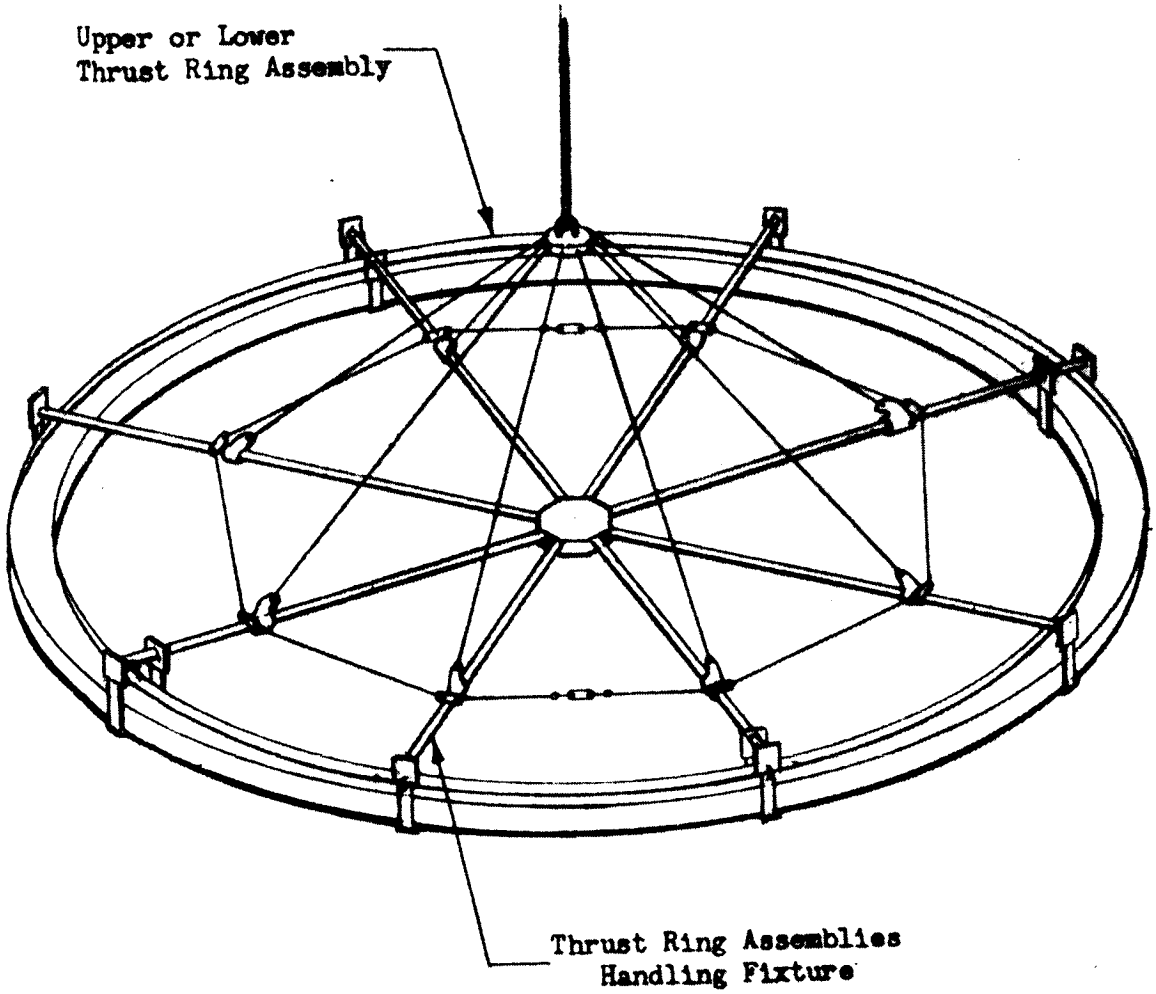

Figure 2-5 UPPER AND LOWER THRUST RING HANDLING FIXTURE

U3 4211 4000

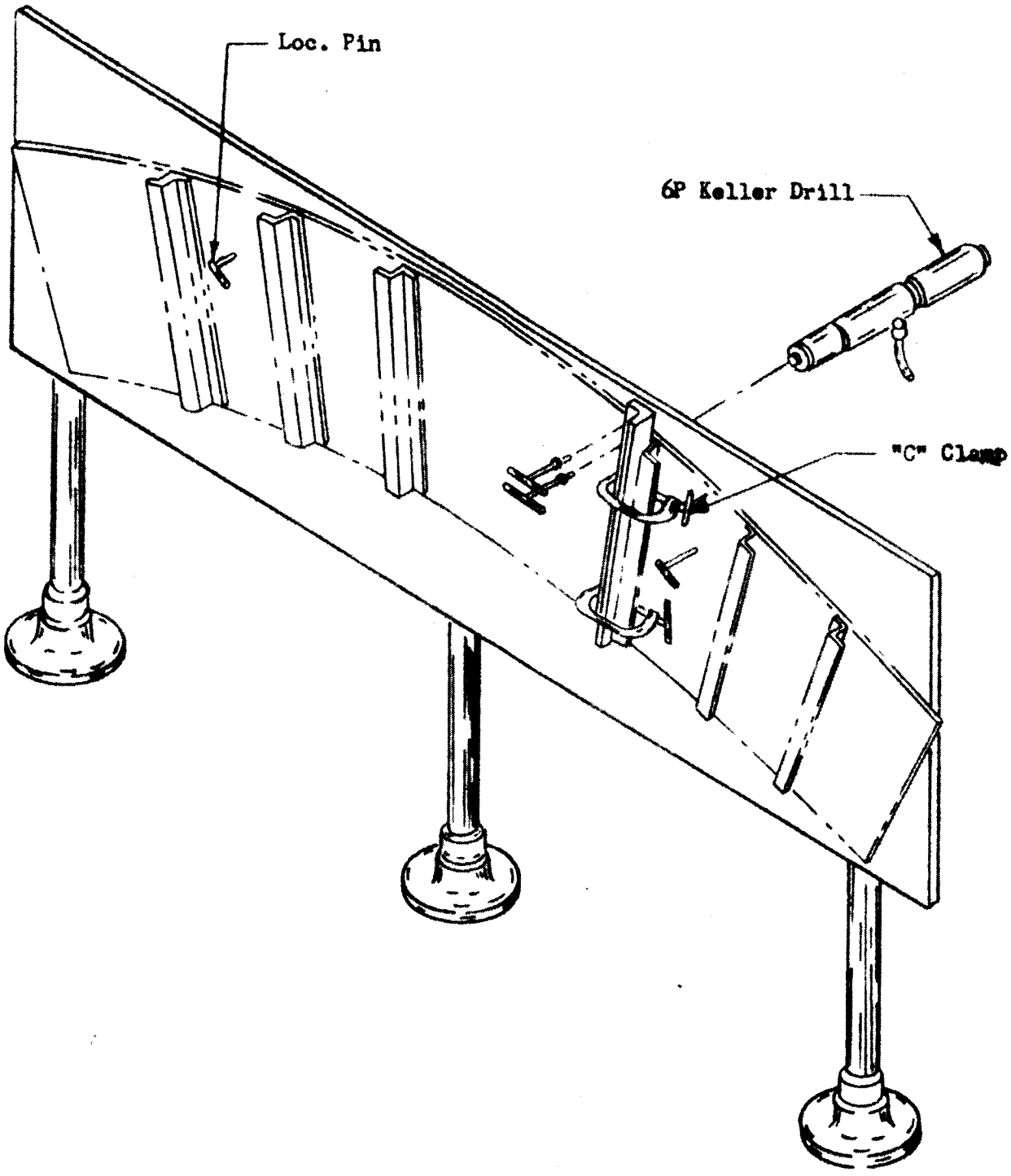

Figure 2-6 THRUST RING WEB ASSEMBLY FIXTURE

3 4211 4000

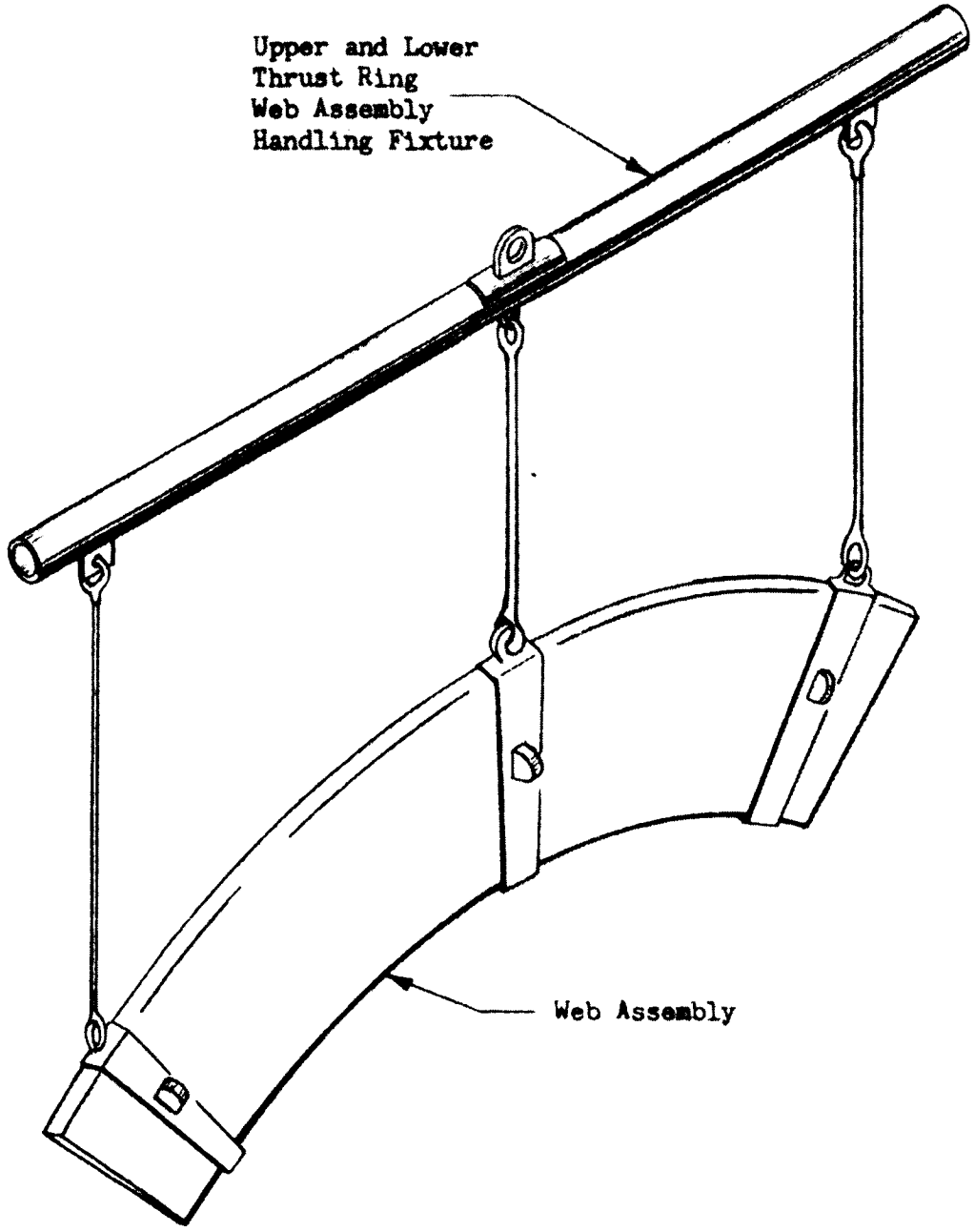

Figure 2-7 UPPER AND LOWER THRUST RING WEB ASSEMBLY HANDLING FIXTURE

U3 4211 4000

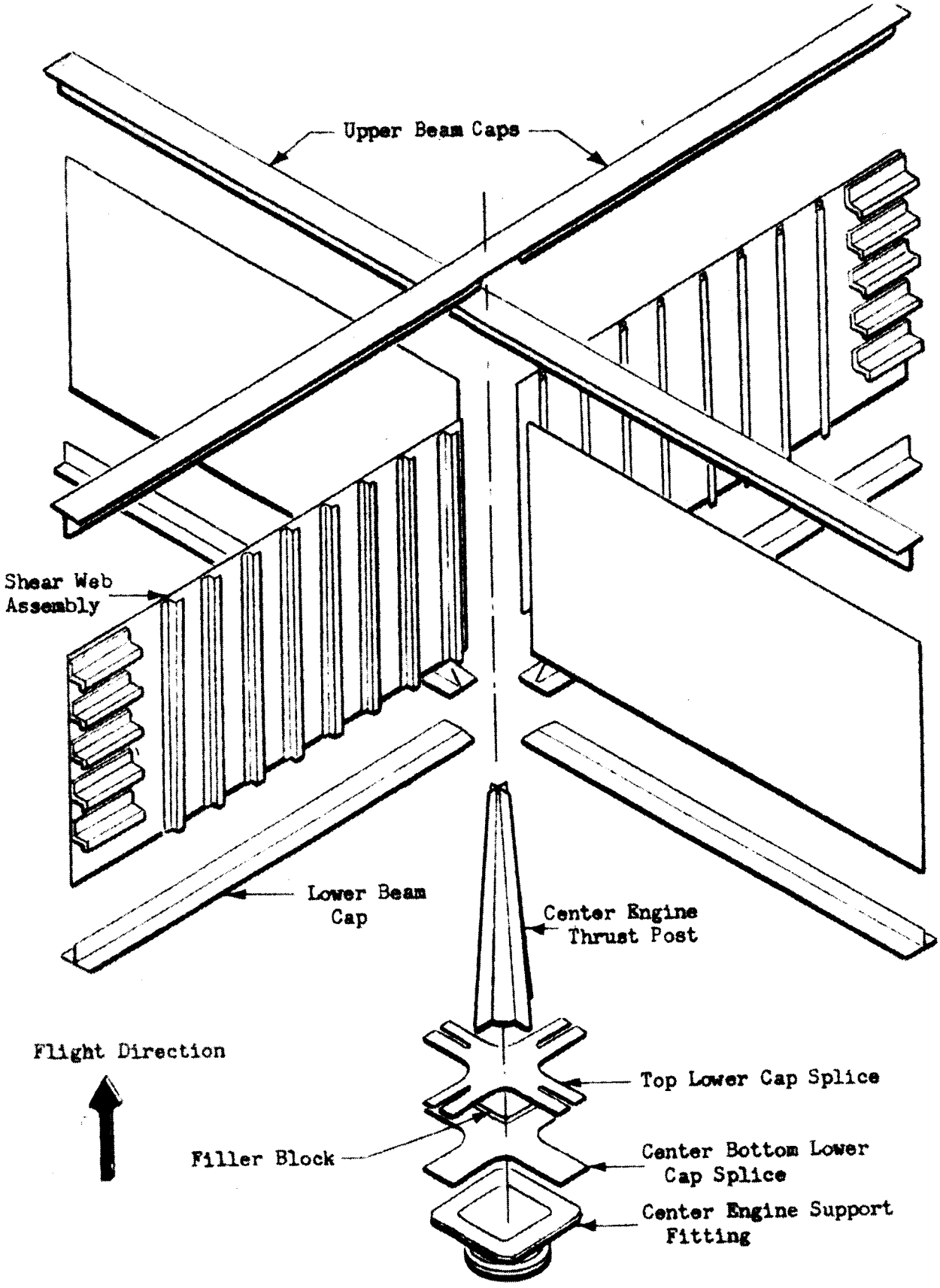

Figure 2-8 CENTER ENGINE SUPPORT ASSEMBLY - EXPLODED VIEW

J3 4211 4000

2.2.3 Web Assembly Lower Thrust Ring Holddown Position

The lower holddown position assembly consists of a web, doubler and stiffener.

2.2.3.1 Assembly Sequence

(See Figure 2-6) The web assembly is assembled in the web assembly lower ring holddown position assembly fixture.

a) Use web assembly handling tool to load web into the assembly fixture. (See Figure 2-7)
b) Drill (2) $\frac{1}{4}$-inch diameter tooling holes.
c) Load the doubler and stiffeners.
d) Drill all fastener holes common to web, stiffeners and doubler. Omit all fastener locations common to the inboard and outboard thrust ring tee caps.
e) Install fasteners.
f) Remove assembly from tool using web assembly handling tool. (See Figure 2-7)

2.2.4 Center Engine Support Assembly

(See Figure 2-8) The center engine support assembly consists of four stiffened web assemblies at positions I, II, III and IV. The four assemblies are attached, at their intersection, to the center engine thrust post. The structure is then capped with the upper and lower caps. The completed center engine support assembly attaches to the holddown post and to the lower thrust ring assembly at final assembly of the Thrust Structure Assembly.

2.2.4.1 Center Engine Support Assembly Sequence

(See Figure 2-8) Assemble center engine support assembly in center engine support structure assembly fixture as follows: (See Figure 2-9)

a) Position and clamp center engine support fitting in center engine support structure assembly fixture. Use hoist tool (See Figure 2-11) to handle fittings.
b) Position and clamp bottom lower chord splice in assembly fixture. (See Figure 2-10)
c) Position and clamp lower chords and filler in assembly fixture. Use hoist tool (See Figure 2-12) to handle chords.
d) Position and clamp top lower chord splice in assembly fixture. Apply drill plate, drill, ream parts and install fasteners.

U3 4211 4000

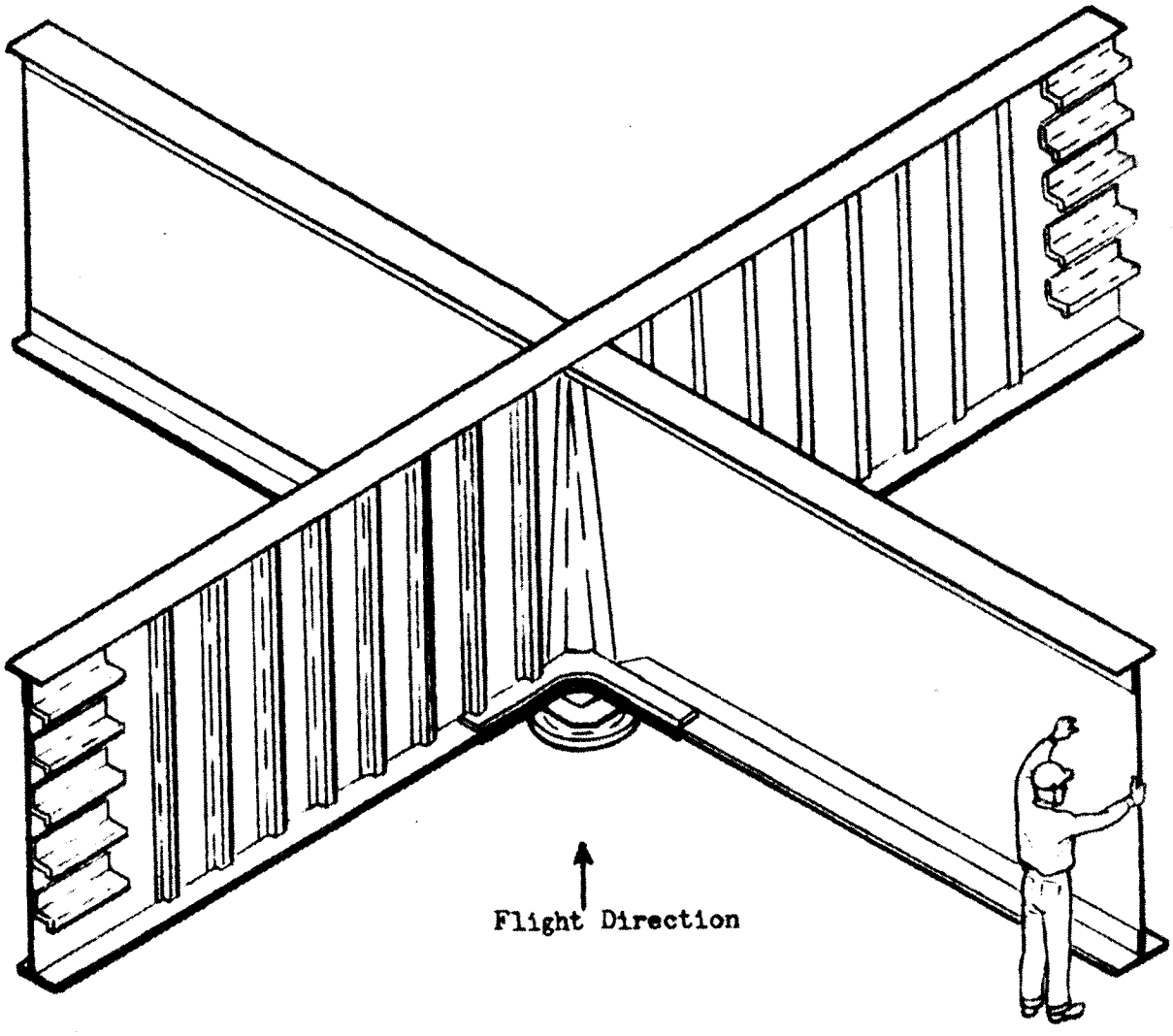

Figure 2-9 CENTER ENGINE SUPPORT ASSEMBLY

J3 4211 4000

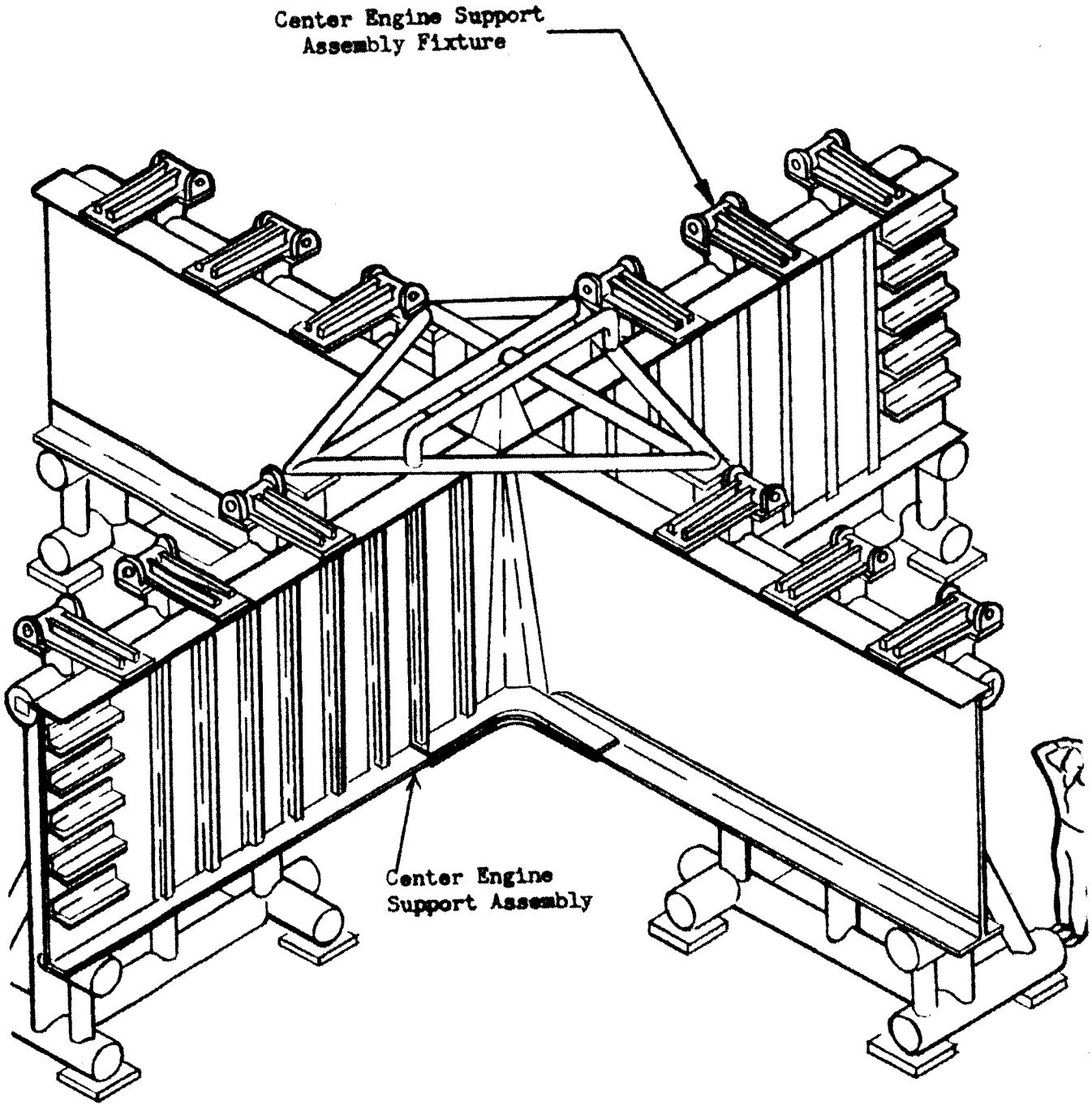

Figure 2-10 CENTER ENGINE SUPPORT ASSEMBLY FIXTURE

U3 4211 4000

INFORMATION NOT AVAILABLE

Figure 2-11 HOISTING TOOL - CENTER ENGINE FITTING

1 4211 4000

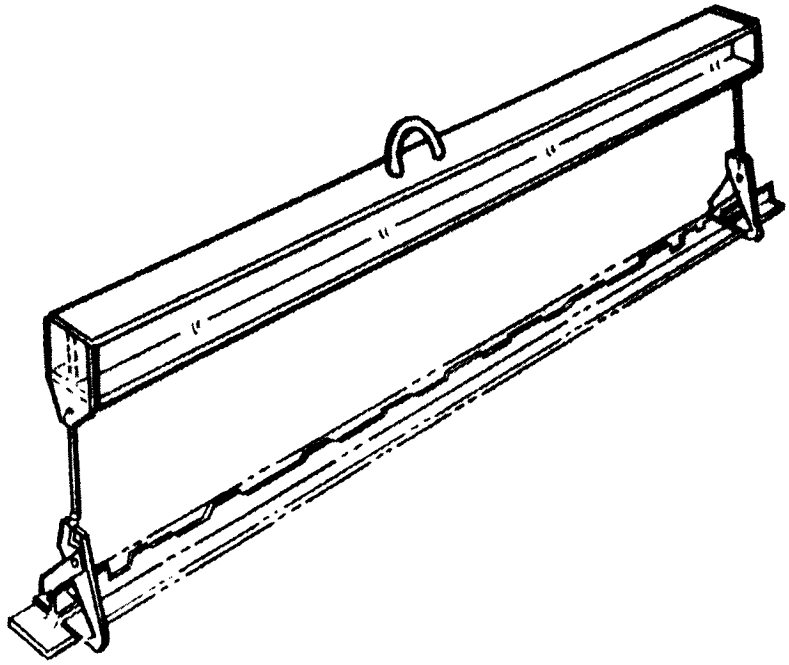

Figure 2-12 HOISTING TOOL - UPPER AND LOWER CAPS CENTER ENGINE SUPPORT

U3 4211 4000

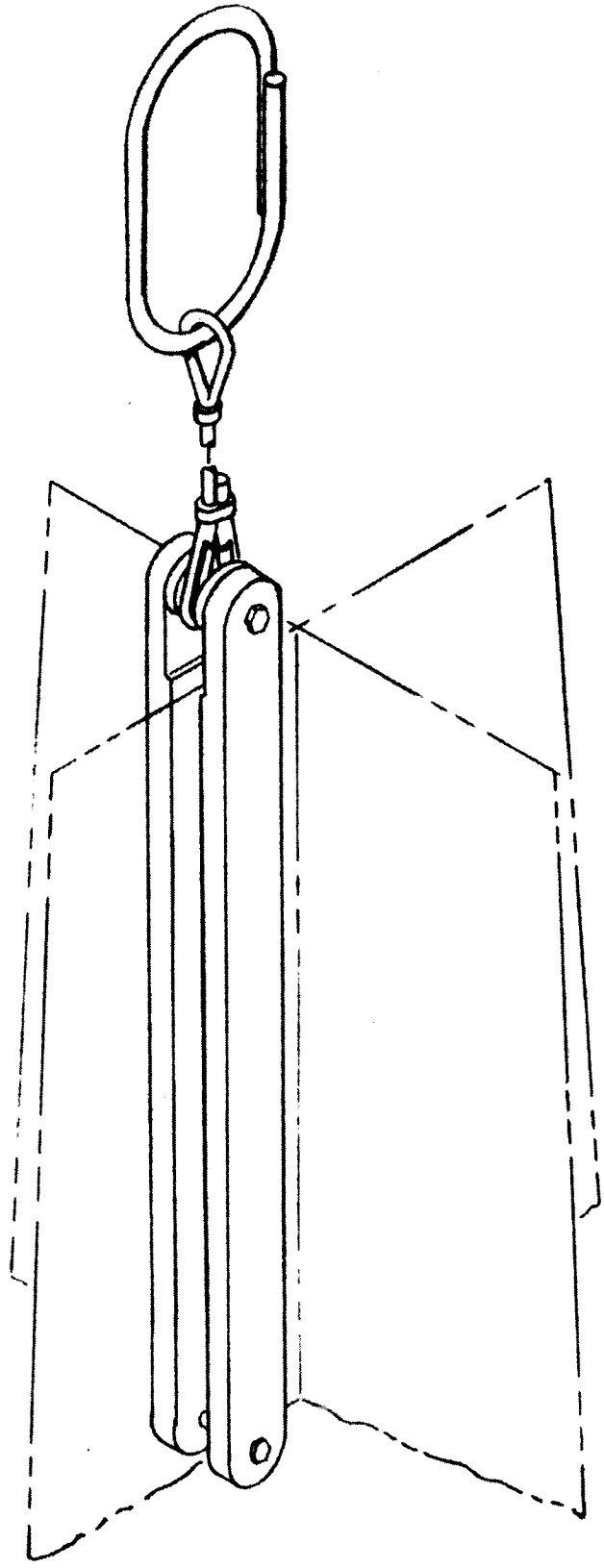

Figure 2-13 HOISTING TOOL - CENTER ENGINE THRUST POST

3 4211 4000

2.2.4.1 (Continued)

e) Position and clamp center engine thrust post in assembly fixture. Use hoist tool. (See Figure 2-13)

f) Position personnel platforms. (See Figure 2-14)
g) Position and clamp shear web assemblies in assembly fixture. Use hoist tool. (See Figure 2-12)
h) Position and clamp upper beam chords in assembly fixture. Use hoist tool. (See Figure 2-16)
i) Drill, ream, and install hardware to fasten center engine support fitting bottom lower chord splice, lower chord, filler, and top lower splice.
j) Position and clamp shear web splice plates, gussets, and fillers; drill, ream, and install hardware to attach shear web assemblies to upper and lower beam chords and center engine thrust post.
k) Position and clamp miscellaneous fittings at upper chords and center engine thrust post; drill, ream, and install hardware.
l) Use hoisting tool (See Figure 2-16) to unload center engine assembly fixture.

2.2.4.2 Center Engine Shear Web Assemblies Position I, II, III and IV.

(See Figure 2-17) The center engine shear web assembly consists of a web approximately 3/8-inch thick by 78-inches high by 175-inches long with eleven vertical stiffeners and five short horizontal stiffeners at the outboard end. Four web assemblies are required to build center engine shear web assembly.

2.2.4.2.1 Assembly Sequence

Position I and II are assembled in the same assembly fixture. (See Figure 2-18) Personnel platforms (See Figure 2-19) and hoisting tool (See Figure 2-15) are required to support this assembly.

Load stiffeners, web, and doublers in assembly fixture and clamp in place. Drill holes and install fasteners.

Locate and index five horizontal stiffeners into locating drill jig. (See Figure 2-20) Index the LDJ to the web assembly, clamp, drill holes and install fasteners.

Assembly procedures for position III and IV are the same as above. Position III and IV are assembled in the same assembly fixture. (See Figure 2-18)

U3 4211 4000

INFORMATION NOT AVAILABLE

Figure 2-14 PERSONNEL PLATFORM CENTER ENGINE SUPPORT ASSEMBLY

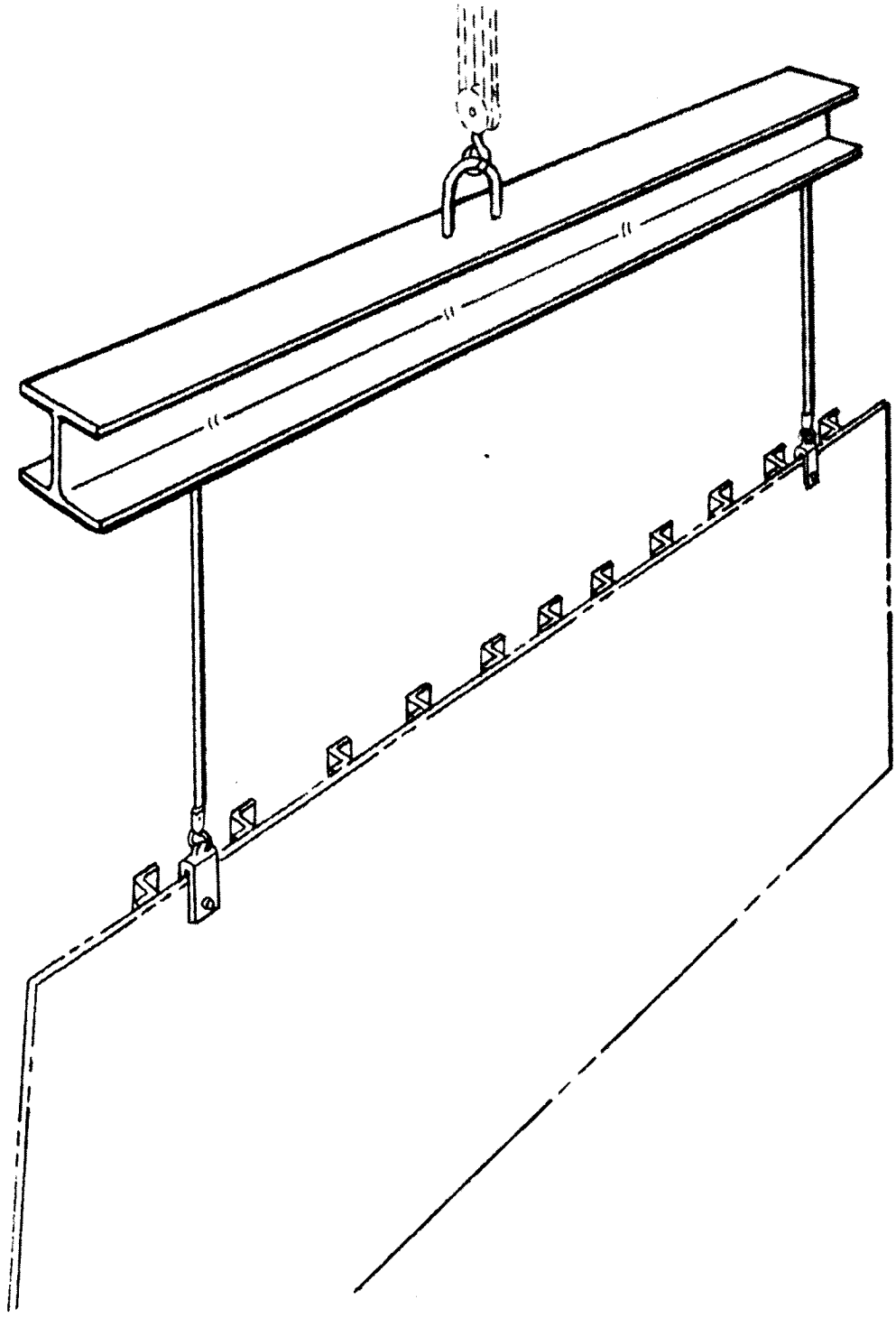

Figure 2-15 HOISTING TOOL SHEAR WEB PANELS AND SHEAR WEB ASSEMBLIES

U3 4211 4000

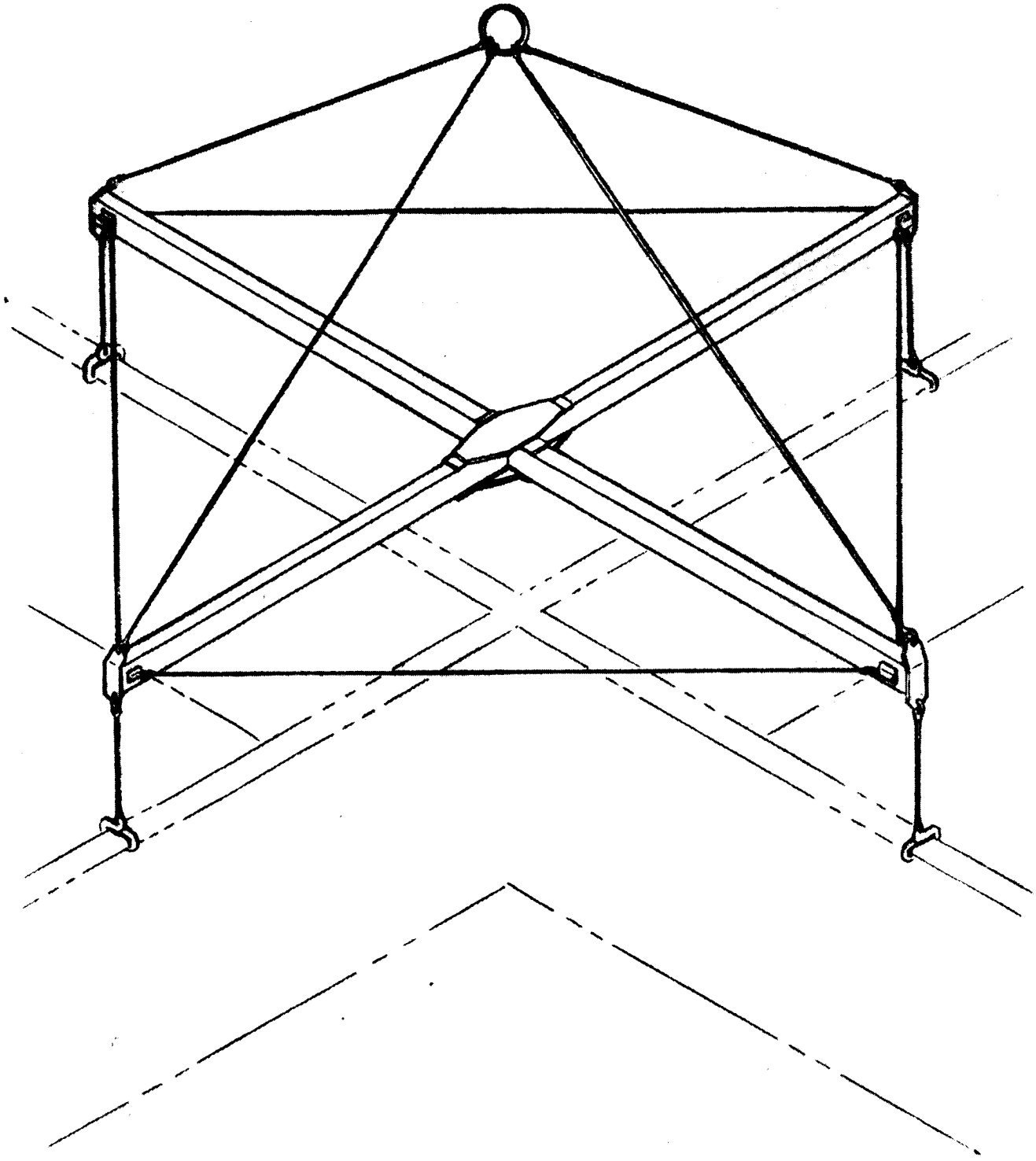

Figure 2-16 HOISTING TOOL CENTER ENGINE SUPPORT - FINAL ASSEMBLY

U3 4211 4000

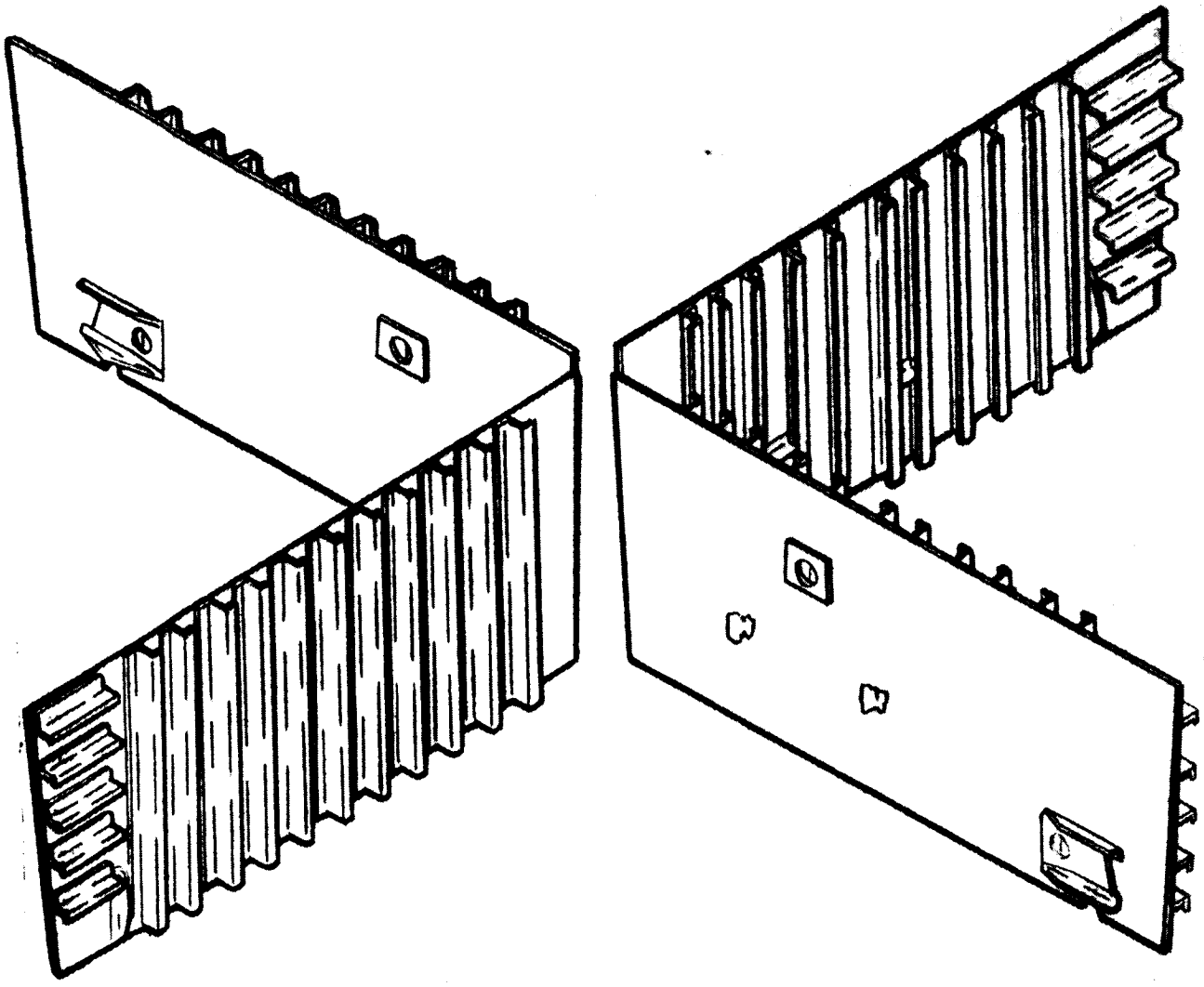

Figure 2-17 SHEAR WEB PANEL ASSEMBLIES

U3 4211 4000

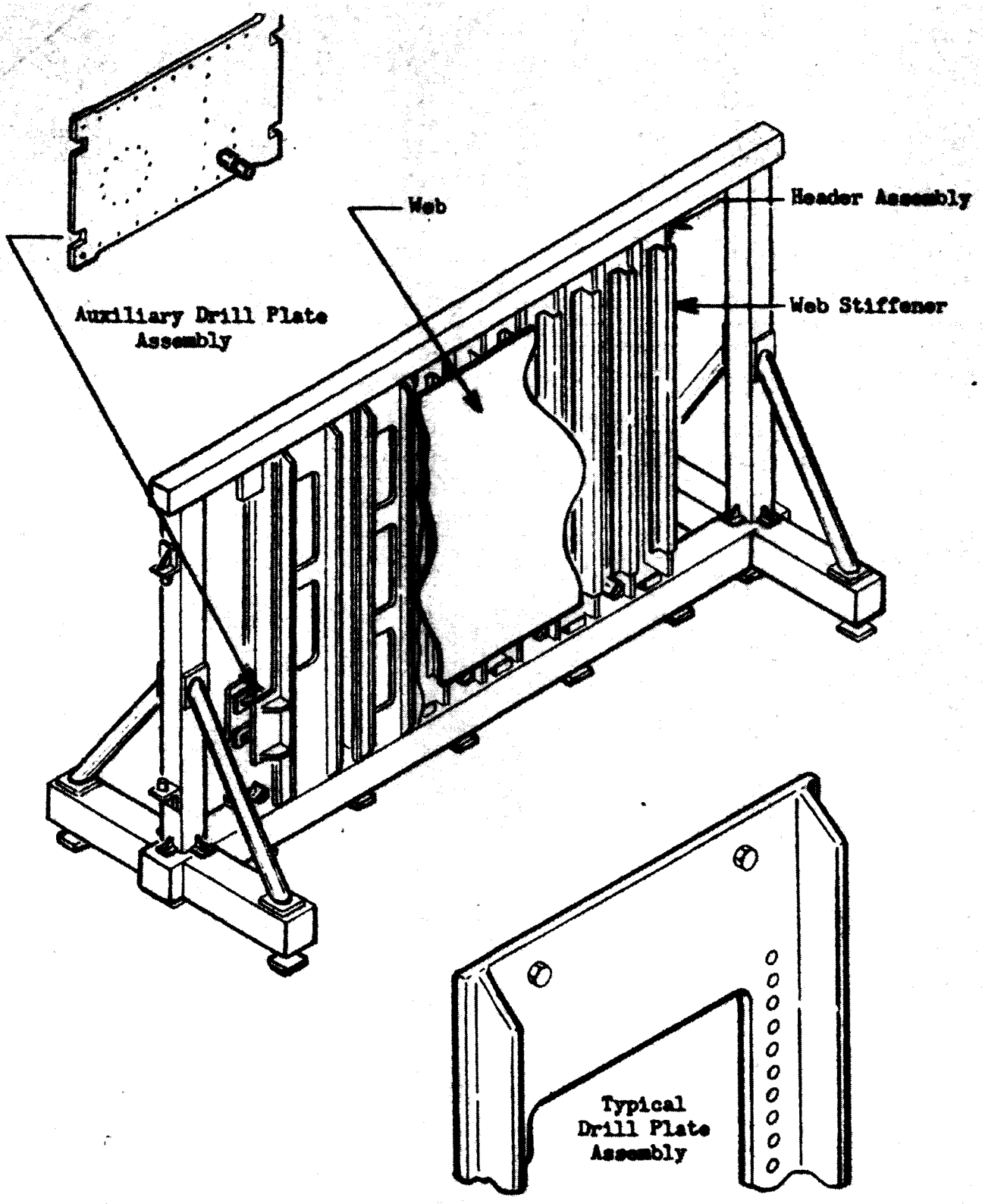

Figure 2-16 ASSEMBLY FIXTURE SHEAR WEB ASSEMBLY

13 4211 4000

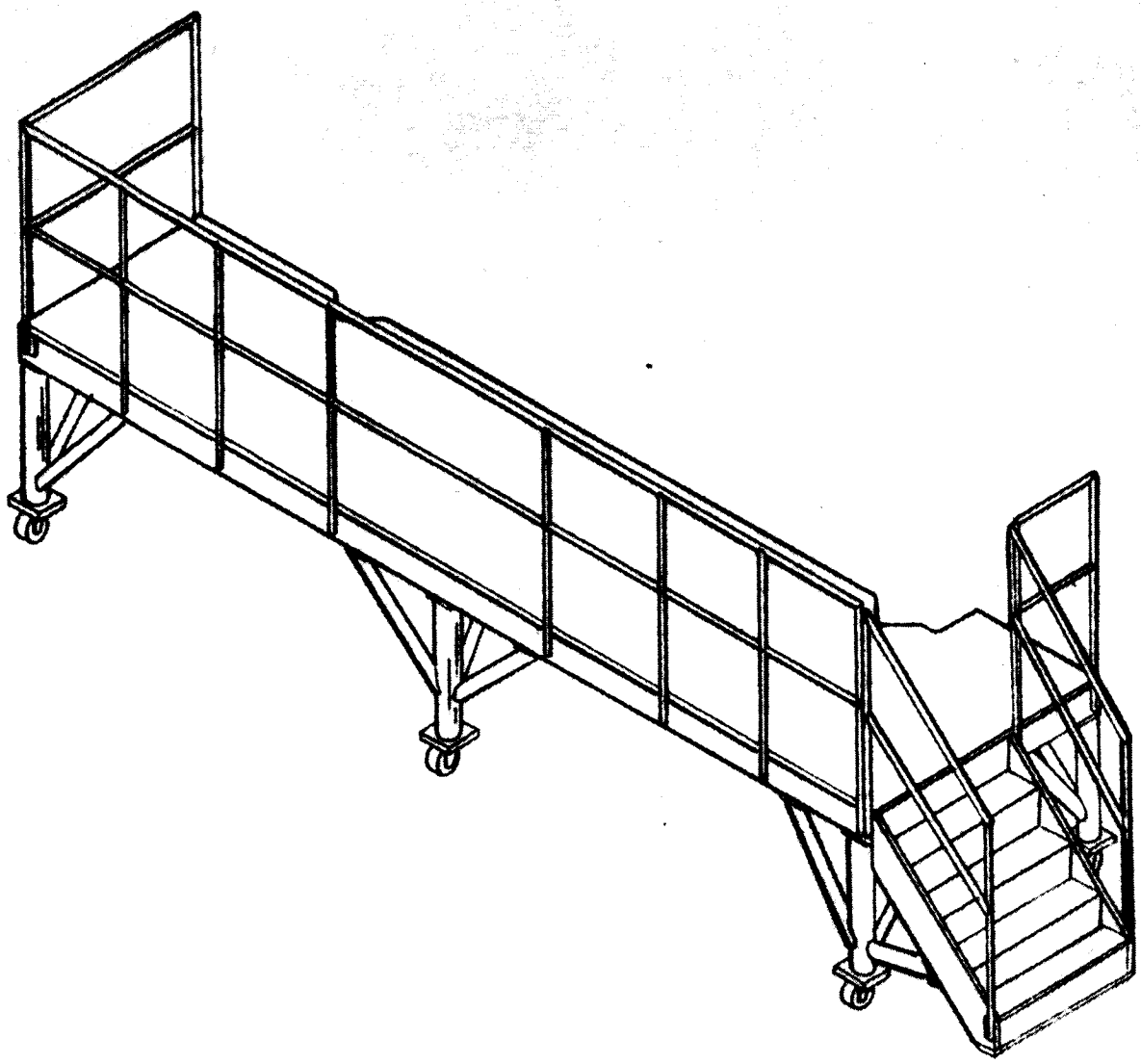

Figure 2-19 PERSONNEL PLATFORM CENTER ENGINE SHEAR WEB ASSEMBLIES

U3 4211 4000

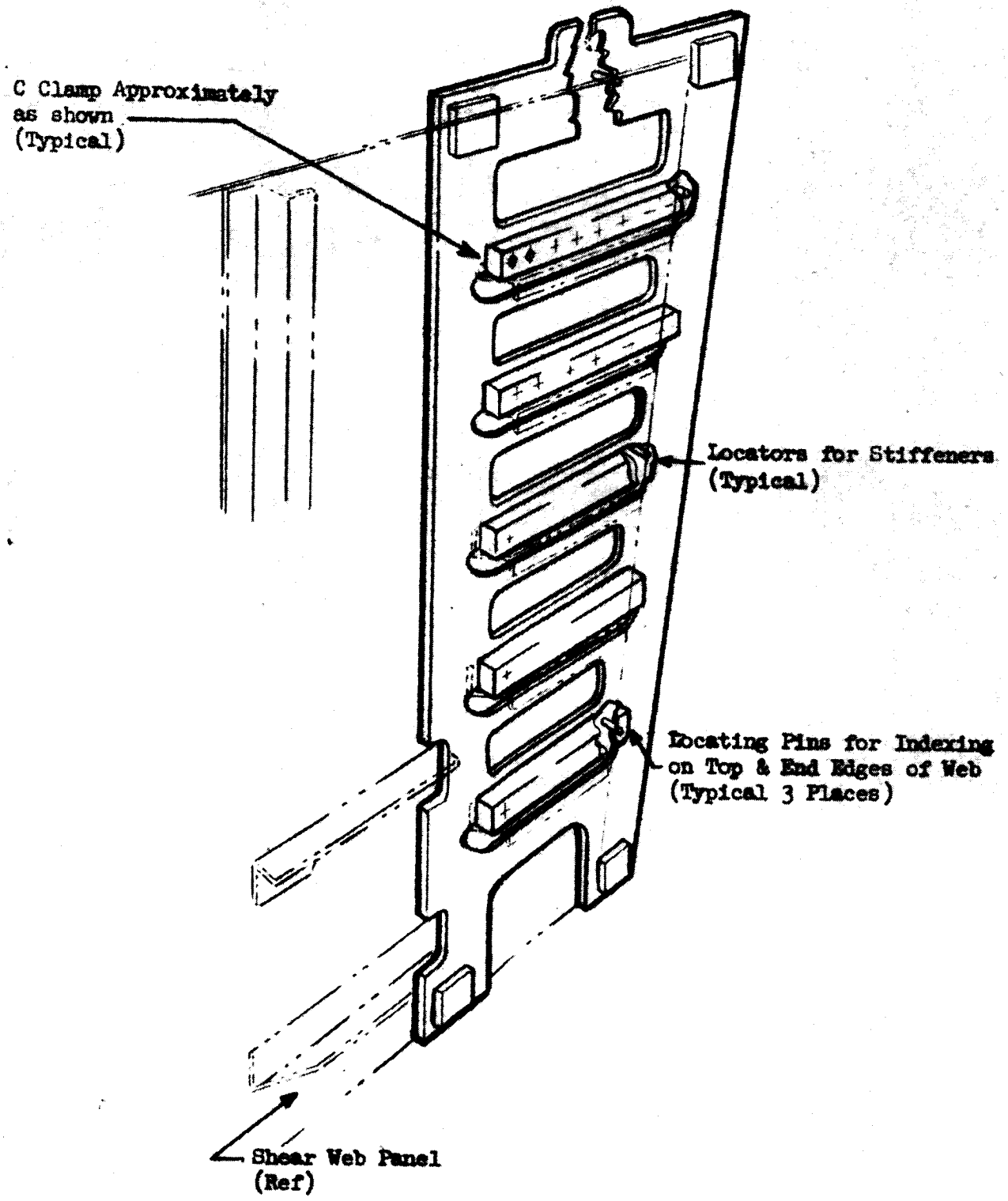

Figure 2-20 LOCATING DRILL JIG

U3 4211 4000

2.2.5 Holddown Posts

(See Figure 2-21) The holddown post is a one-piece forging 14 feet tall and approximately 11 inches square at the base, not including the flange at the faying surface, and tapering down to a much smaller section at the upper thrust ring assembly. There are four holddown posts, one located on each position line between the upper and lower thrust rings.

The holddown post is numerically machined to its final configuration from a closed diameter forging. After machining, the holddown post is ready for installation, using hoisting tool (See Figure 2-21) in final assembly fixture for thrust structure.

2.2.6 Auxiliary Shear Webs

(See Figure 2-22) The web assemblies consist of a web with "Z" stiffeners and two caps. The web is approximately 27 inches wide and 80 inches long and the two caps are 13 feet long. Four auxiliary shear panels are required, one for each position I, II, III, and IV, which are attached to each holddown post bridging the span between the upper ring and the center engine support assembly.

2.2.6.1 Assembly Sequence

Auxiliary shear panels position I and II are assembled in bench type assembly fixture. (See Figure 2-23)

a) Position and clamp all stiffeners.
b) Position and clamp lower cap.
c) Position and align web in proper position.
d) Position and clamp upper cap.
e) Locate and clamp drill plate.
f) Drill all holes.
g) Remove drill plate.
h) Install all fasteners required.

Auxiliary Shear Panels position II and IV are assembled in another bench type assembly fixture. (See Figure 2-23)

(Note: Assembly Sequence same as above.)

2.2.7 Outboard Thrust Post Assembly

(See Figure 2-24) The outboard thrust post is a built up, tapered, box-type structure, 14 feet tall and approximately 14-inches by 22-inches at the forward end and 36-inches by 39-inches at the aft end common with the lower thrust ring attach surface. The outboard thrust post consists of two

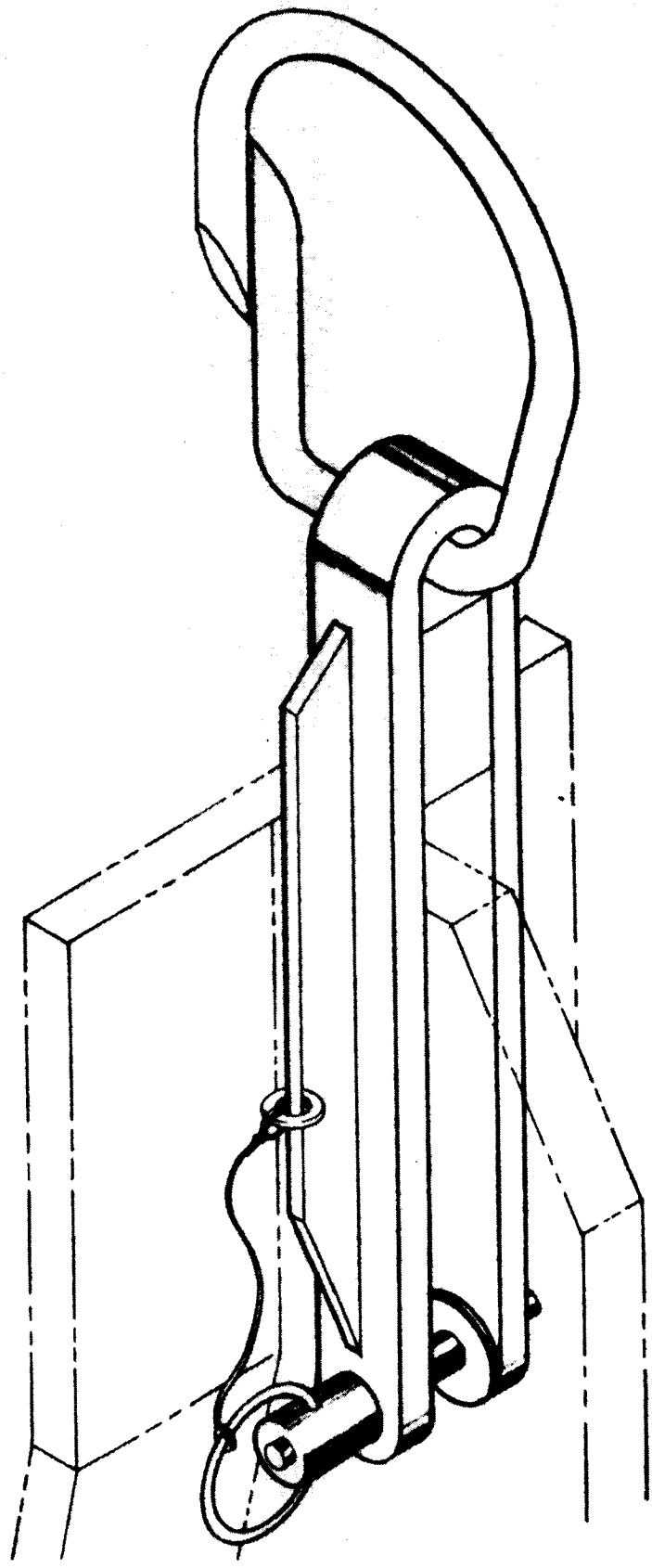

Figure 2-21 HOISTING TOOL-HOLD DOWN POST OUTBOARD

U3 4211 4000

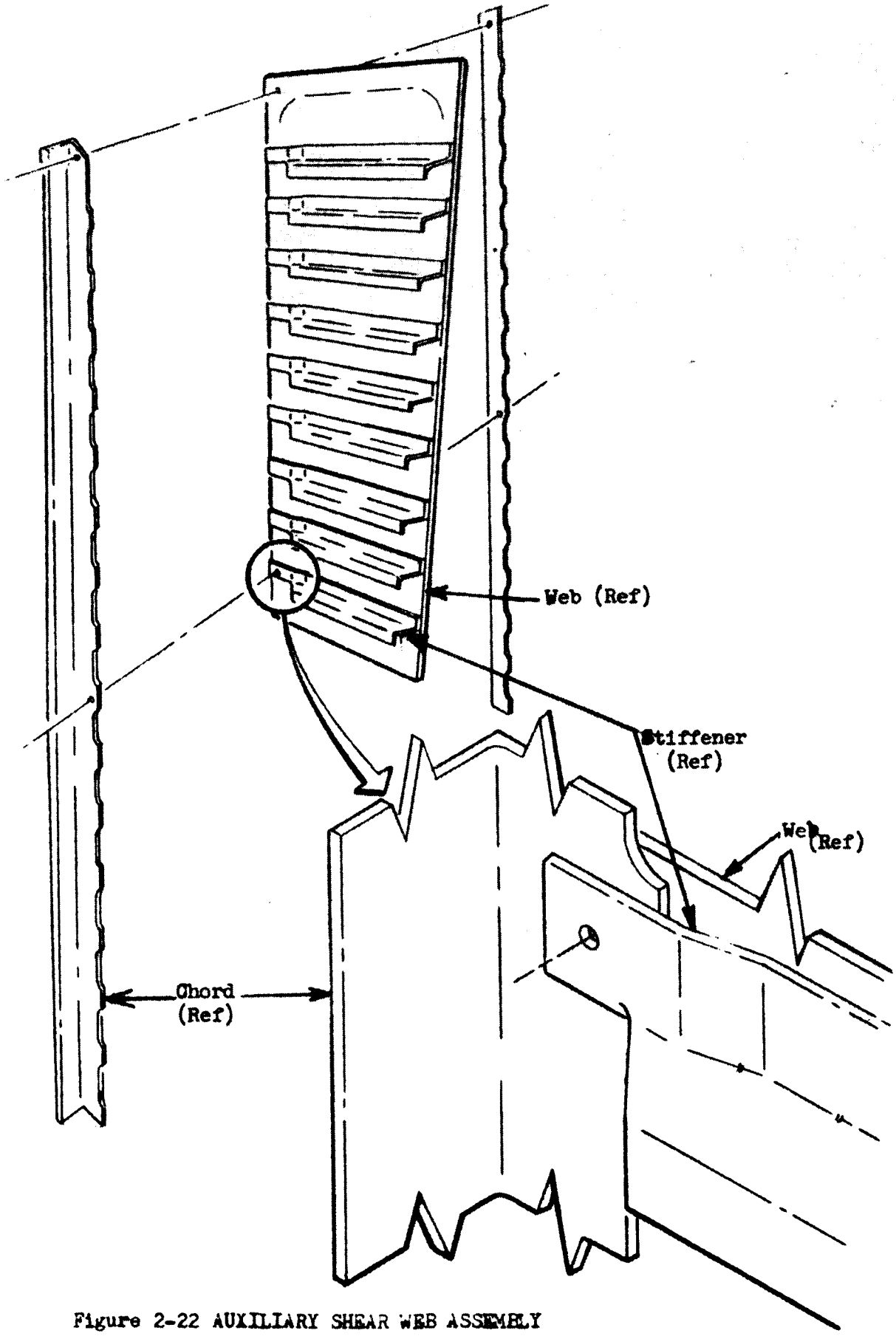

Figure 2-22 AUXILIARY SHEAR WEB ASSEMBLY

U3 4211 4000

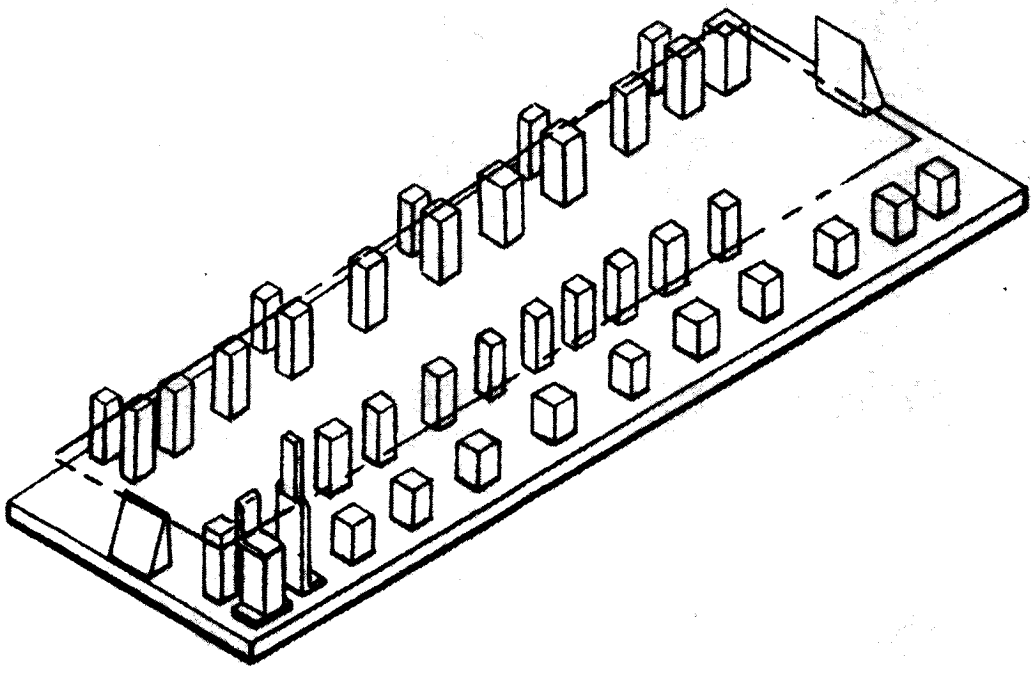

Figure 2-23 ASSEMBLY FIXTURE AUXILIARY WEB CENTER ENGINE SUPPORT

3 4211 4000

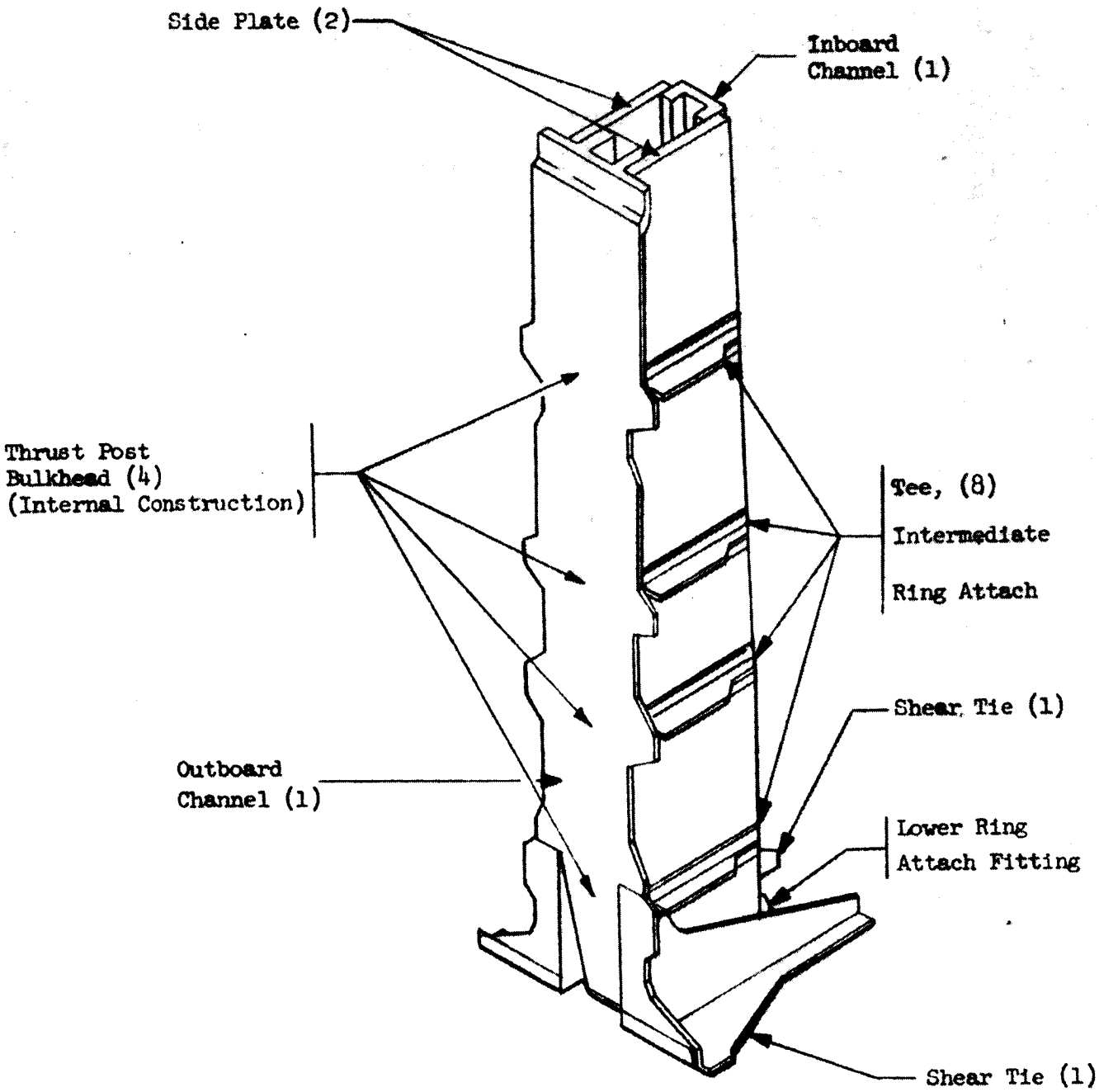

Figure 2-23 THRUST POST ASSEMBLY

U3 4211 4000

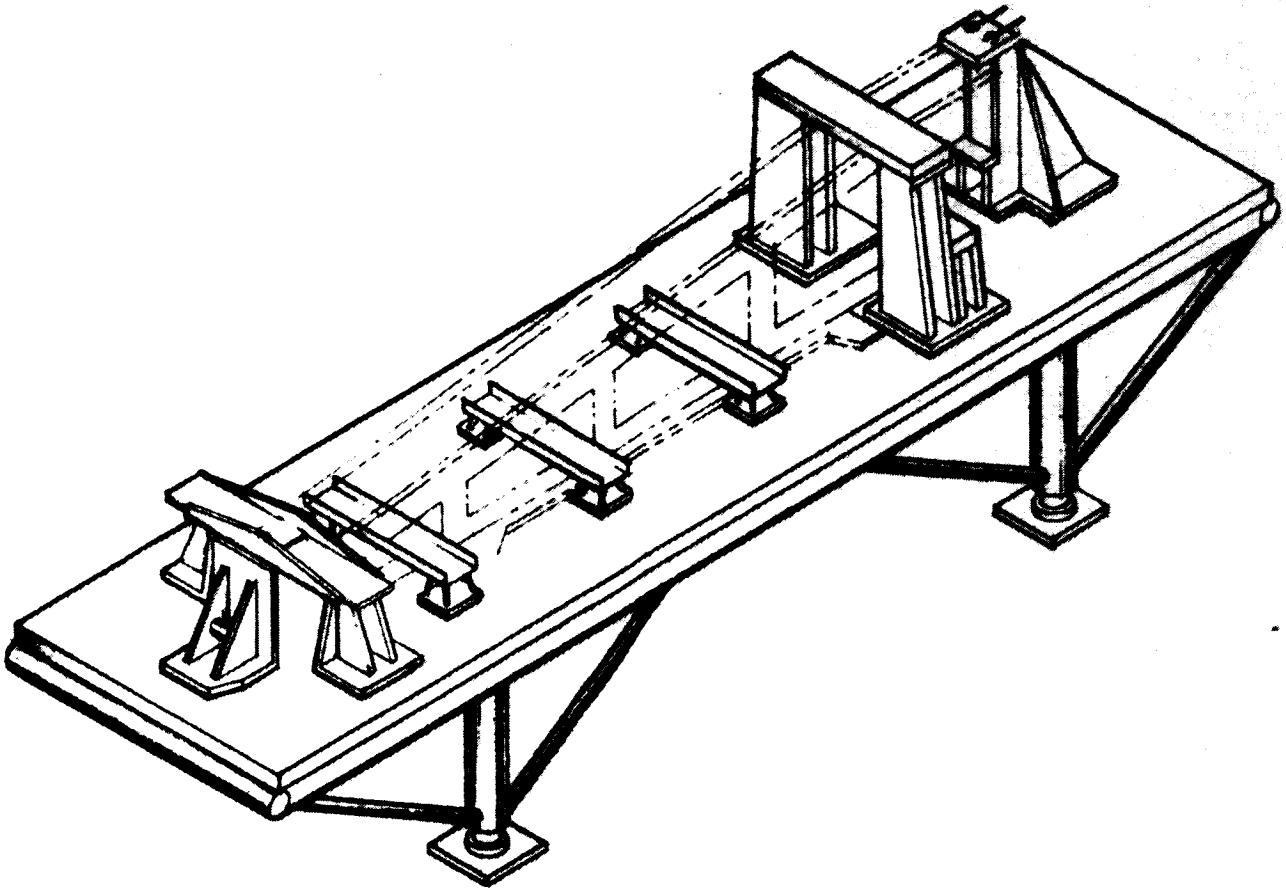

Figure 2-25 THRUST POST ASSEMBLY FIXTURE

'13 4211 4000

2.2.7 (Continued)

channels, four bulkheads, two side plates, two shear ties, one lower ring attach fitting, and eight intermediate ring attach tees, all joined with common fasteners. Details are machined from AL 7075-T6. There are four thrust posts per thrust structure assembly, one located at each of the fin positions.

2.2.7.1 Outboard Thrust Post Assembly Sequence

The outboard thrust post is assembled in an outboard thrust post assembly fixture. (See Figure 2-25) The assembled thrust post assembly is located in a milling fixture, (See Figure 2-26) to mill the aft end of the completed thrust post to ensure a smooth mating surface with the lower ring. An engineering tolerance of 0.005 TIR has been given for this surface after milling. Use hoisting tools for loading details and for final assembly. (See Figure 2-27)

a) Load outboard channel, four bulkheads and inboard channel in assembly fixture and using drill plates provided with tool, drill all holes common to these detail parts full size and install fasteners.
b) Load two side plates and drill plates in assembly fixture. Drill all holes common to both side plates and channels full size and install fasteners.
c) Load two shear ties and drill plates in assembly fixture and drill all holes common to both shear ties and channels full size. Install fasteners.
d) Load eight intermediate ring attach tees and drill plates in assembly fixture. Drill all holes common to these details full size and install fasteners.
e) Remove outboard thrust post assembly from assembly fixture.
f) Load outboard thrust post assembly into milling fixture and mill aft surface common to the lower thrust ring.
g) Remove outboard thrust post assembly from milling fixture.
h) Repeat operations outlined in paragraphs (a through g) for the three remaining outboard thrust post assemblies.
i) Use hoist tool to load thrust post into thrust structure final assembly fixture. (See Figure 2-28)

2.2.8 Upper Thrust Ring Assembly

The upper thrust ring assembly is a 33-foot diameter, 30-inch wide ring consisting of two tees, a web plate, radial stiffeners, miscellaneous doublers, and splice hardware.

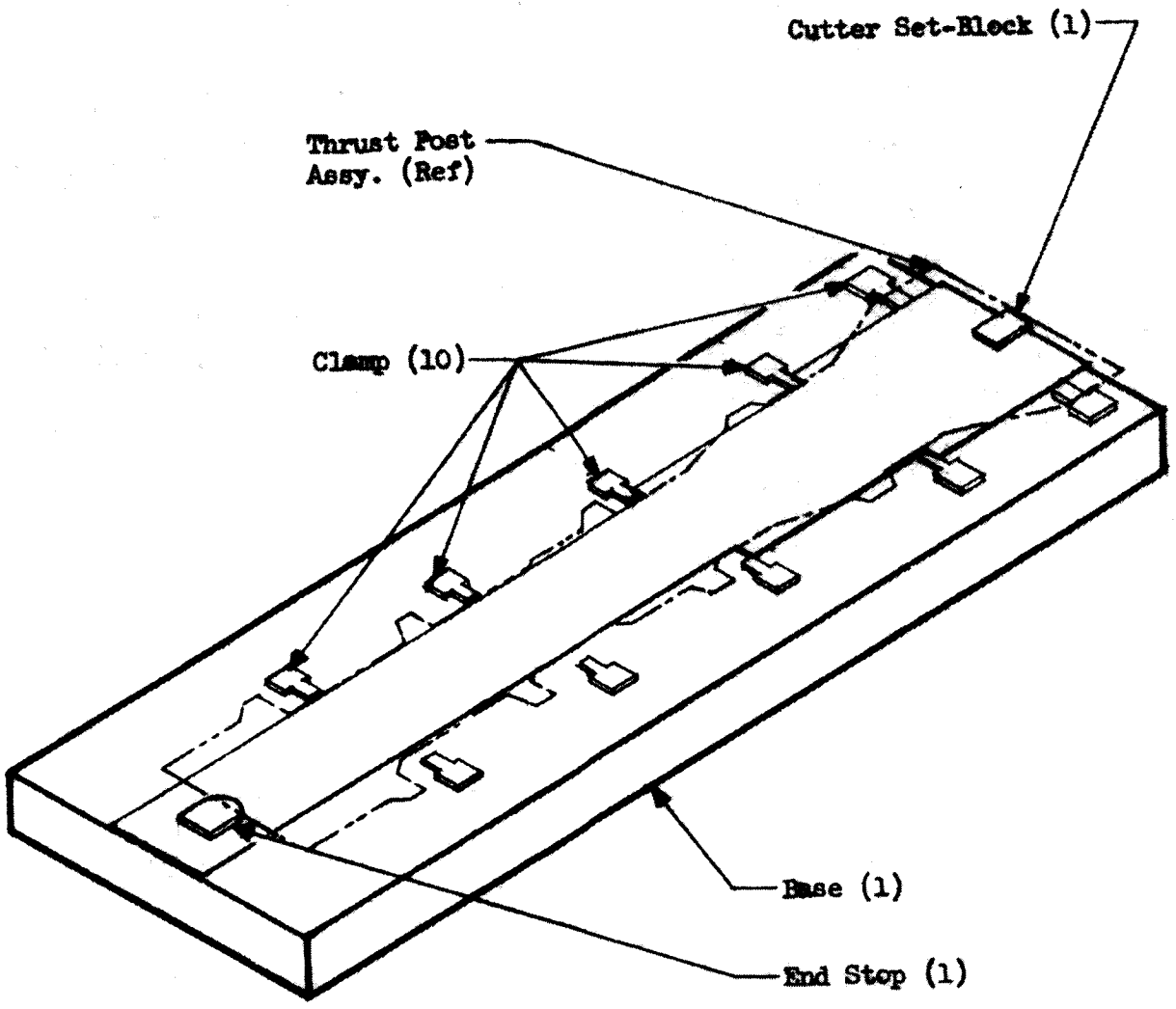

Figure 2-26 THRUST POST ASSEMBLY FIXTURE

3 4211 4000

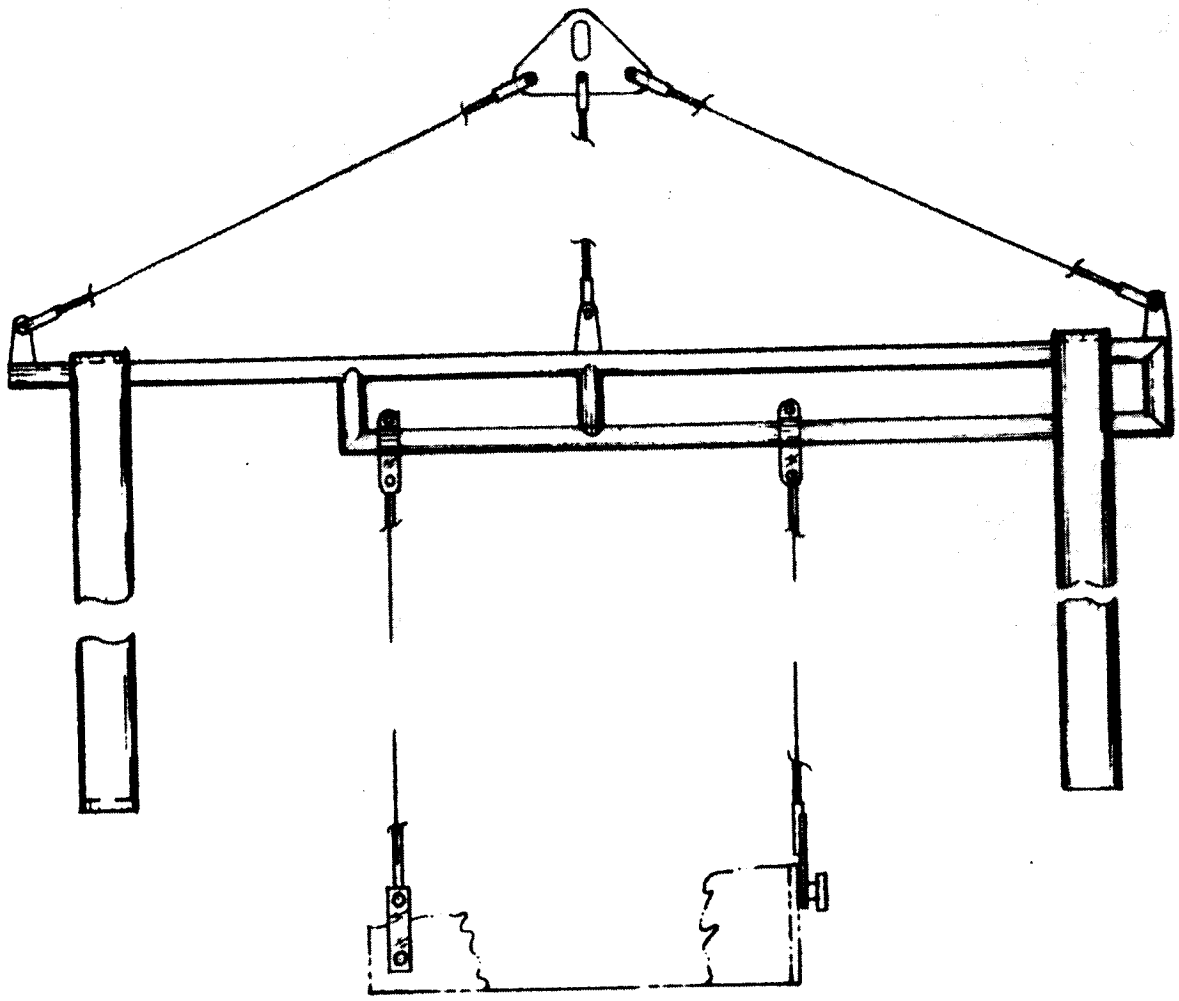

Figure 2-27 HOISTING TOOL OUTBOARD THRUST POST ASSEMBLY

U3 4211 4000

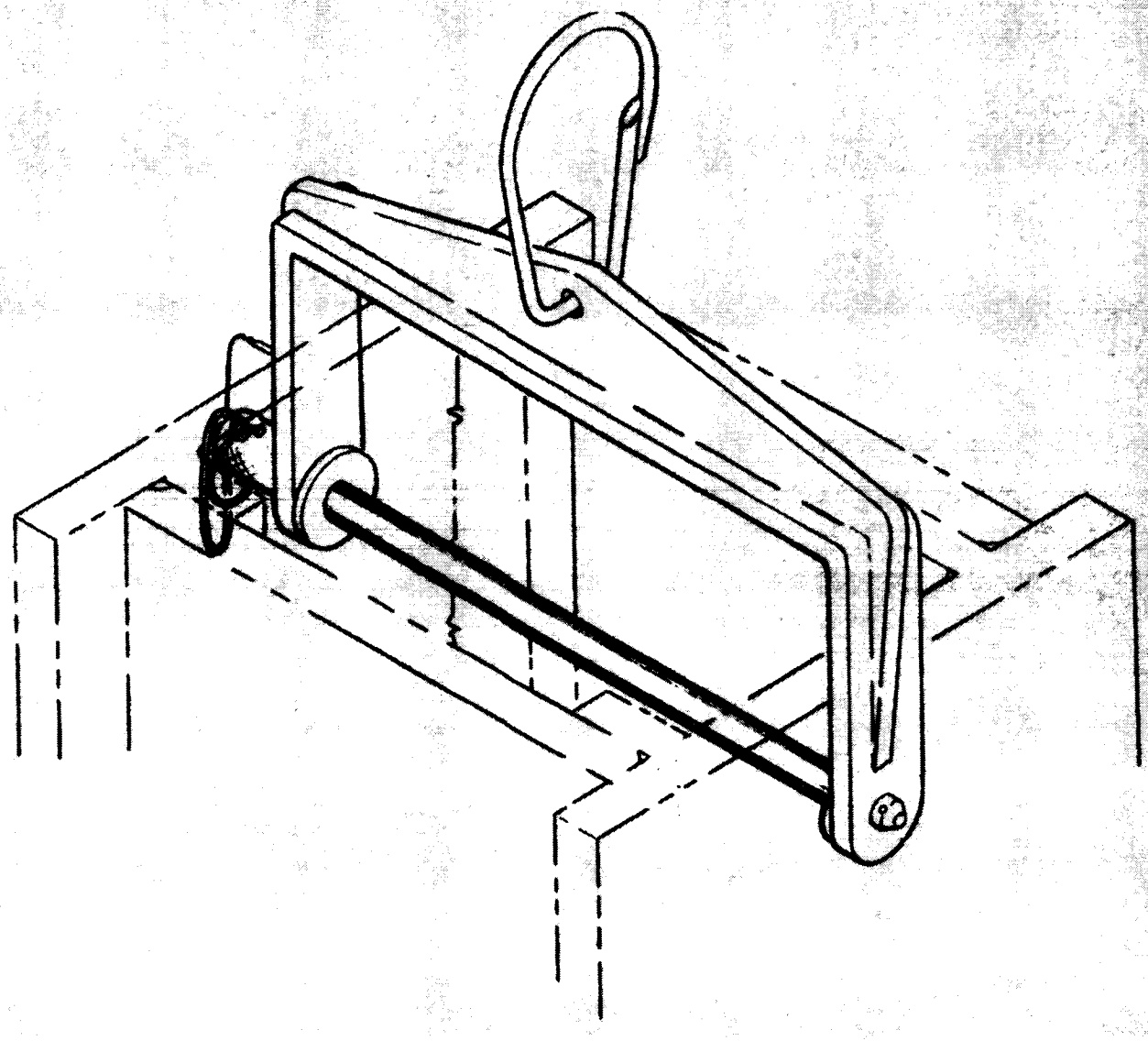

Figure 2-28 HOISTING TOOL THRUST POST

U3 4211 4000

2.2.8 (Continued)

A short section of the web plate will be removable for access to the space above the upper thrust ring assembly. The inner and outer caps are 7-inches by 3/4-inch by 4-1/4-inch by 1/2-inch. The web plate is nominally 3/16-inch thick and is stiffened by angular-cross-section radial stiffeners. The inner and outer caps are stretched-formed and machined extrusions; four segments are required to manufacture each complete inner and outer upper ring cap. The web plate is fabricated from 12 segments, including four access panels. The complete upper thrust ring assembly weighs approximately 2,700 pounds.

2.2.8.1 Assembly Sequence

(See Figure 2-3) The upper thrust ring assembly is assembled in upper and lower thrust ring assembly fixture.

a) Load lower tee cap splice angles.
b) Load upper thrust ring web assemblies and access panel assemblies.
c) Load inboard and outboard thrust ring tee caps using tee cap handling fixture. (See Figure 2-4)
d) Load web splice plates, upper tee cap splices, tee cap splice plates.
e) Apply drill plates and drill all fastener holes full size except holes common to outer tee cap splice. Drill holes common to splice 1/4-inch diameter.
f) Install fasteners.
g) Drill (4) .500 diameter tooling holes using locator bushings provided.
h) Remove upper thrust ring assembly from assembly fixture using thrust ring assemblies handling fixture. (See Figure 2-5)

2.2.8.2 Web Assembly Upper Ring Fin Position

The upper fin position assembly consists of a web and (13) stiffeners. This assembly is used four places on each ring assembly.

2.2.8.2.1 Assembly Sequence

The web assembly is assembled in web assembly upper ring fin position assembly fixture. (See Figure 2-6)

a) Use web assembly handling tool to load web into tool. (See Figure 2-7)
b) Drill (2) 1/4-inch diameter tooling holes.

U3 4211 4000

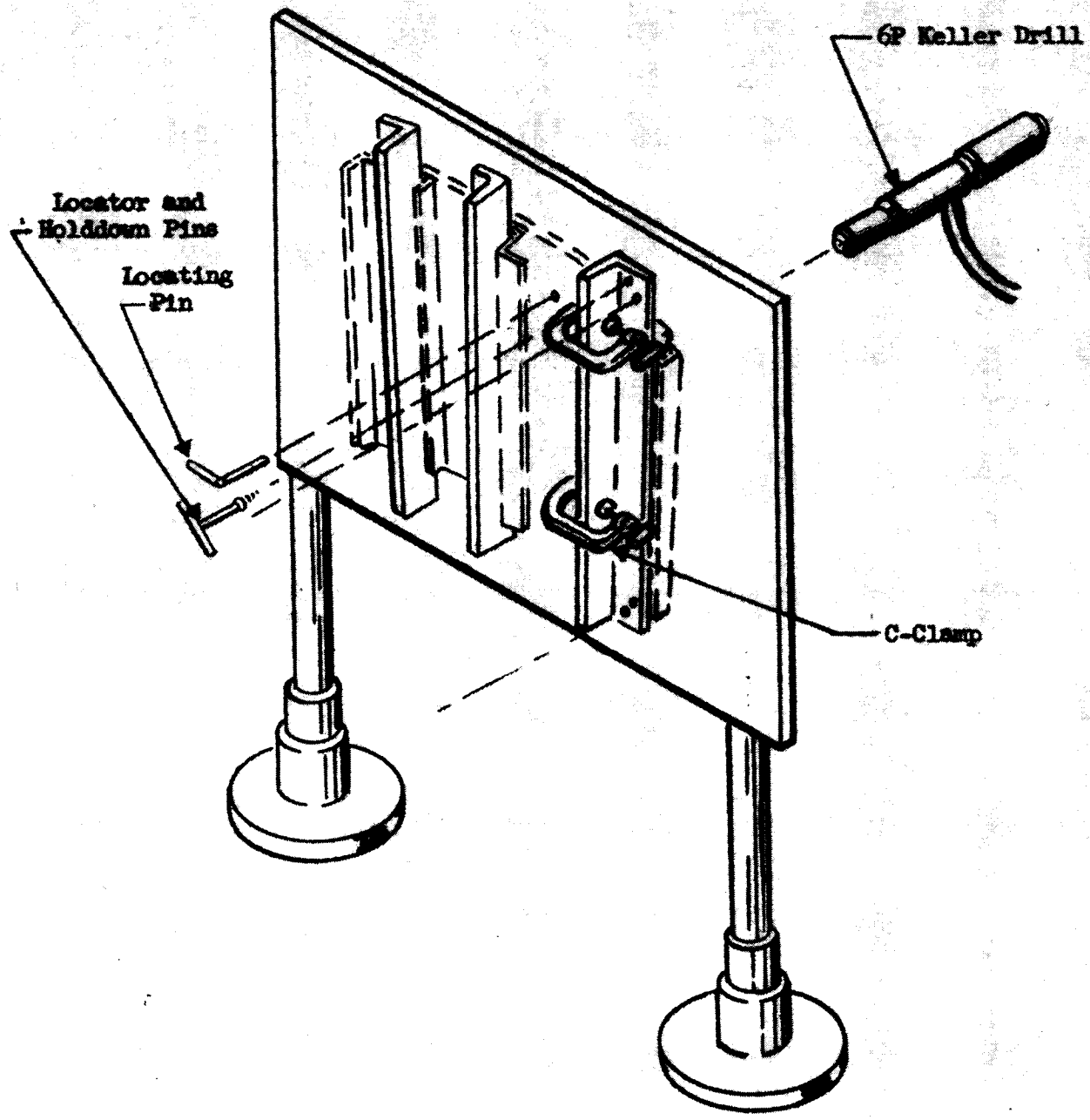

Figure 2-29 ASSEMBLY FIXTURE UPPER THRUST RING ACCESS PANEL ASSEMBLY

U3 4211 4000

2.2.8.2.1 (Continued)

c) Install stiffeners and locate.
d) Drill all fastener holes common to web and stiffeners.
e) Omit all fastener locations common to inboard and outboard thrust ring tee caps.
f) Install fasteners.
g) Remove assembly from tool using web assembly handling tool. (See Figure 2-7)

2.2.8.3 Web Assembly Upper Ring, Hold Down Position

The upper holddown position assembly consists of a web and (13) stiffeners. The assembly is used four places on each ring assembly.

2.2.8.3.1 Assembly Sequence

The web assembly is assembled in web assembly upper ring holddown position assembly fixture. (See Figure 2-6)

a) Use web assembly handling tool to load web into tool. (See Figure 2-7)
b) Drill (2) 1/4-inch diameter tooling holes.
c) Install stiffeners. Omit all fastener locations common to inboard and outboard thrust ring tee caps.
d) Install fasteners.
e) Remove assembly from tool using web assembly handling tool.

2.2.8.4 Access Panel Assembly Upper Ring Position

The access panel assembly upper ring assembly consists of a panel, a stiffener and (2) splice webs.

2.2.8.4.1 Assembly Sequence

(See Figure 2-29) The access panel assembly is assembled in assembly fixture panel assembly access, upper ring.

a) Load panel into tool.
b) Drill (2) 1/4-inch diameter tool holes.
c) Install stiffener and splice webs.
d) Drill all fastener holes common to panel, stiffener and splice webs. Omit all fastener locations common to inboard and outboard thrust ring tee caps.
e) Install fasteners.
f) Remove assembly from tool.

2.2.9 Intermediate Rings

(See Figure 2-30) There are (4) intermediate ring assemblies located at the following Stations: 152.5, 184.0, 216.0 and 248.0.

U3 4211 4000

2.2.9 (Continued)

Each of these four assemblies contains (8) segments which are manufactured individually.

The ends of the ring segments tie into the holddown post and thrust post. The intermediate ring segments are made up of the following: an outer cap, an inner cap, a web, doublers and stiffeners.

2.2.9.1 Assembly Sequence for Intermediate Ring Segments

The following assembly sequence applies to the (4) four assembly fixtures. (See Figure 2-31)

a) Check location of stiffener locating angles at centerline of assembly fixture and end stop fittings for caps for proper location for assembly.
b) Load, position and clamp all stiffeners.
c) Load and position doublers.
d) Load and align web in proper position.
e) Load, position and clamp inner cap.
f) Load, position and clamp outer cap.
g) Locate and clamp drill plate assembly.
h) Drill all holes full size using Winslow Spacematic.
i) Remove drill plate assembly.
j) Re-align and clamp web.
k) Install all bolts in proper locations.
l) Remove assembly from assembly fixture and place on bench using hoisting tool. (See Figure 2-32)
m) Install all rivets at proper locations, complete per engineering drawing.

2.2.10 Intercostal Assembly

(See Figure 2-33) The intercostal assemblies are web-type assemblies approximately 19-inches by 32-inches, consisting of a web, cap, chord, and (3) stiffeners. There are a total of (32) intercostals in the thrust structure, of which (16) are installed between the intermediate rings at Station 152.5 and Station 184 and (16) between the intermediate rings at Station 216 and Station 248. Two each of the above intercostal assemblies, Station 152.5, Station 184, and Station 216, Station 248 are spaced between each holddown post and each thrust post.

2.2.10.1 Intercostal Assembly Sequence

(See Figure 2-34) Assemble intercostal assembly in proper assembly fixture (loading sequence same for each fixture).

3 4211 4000

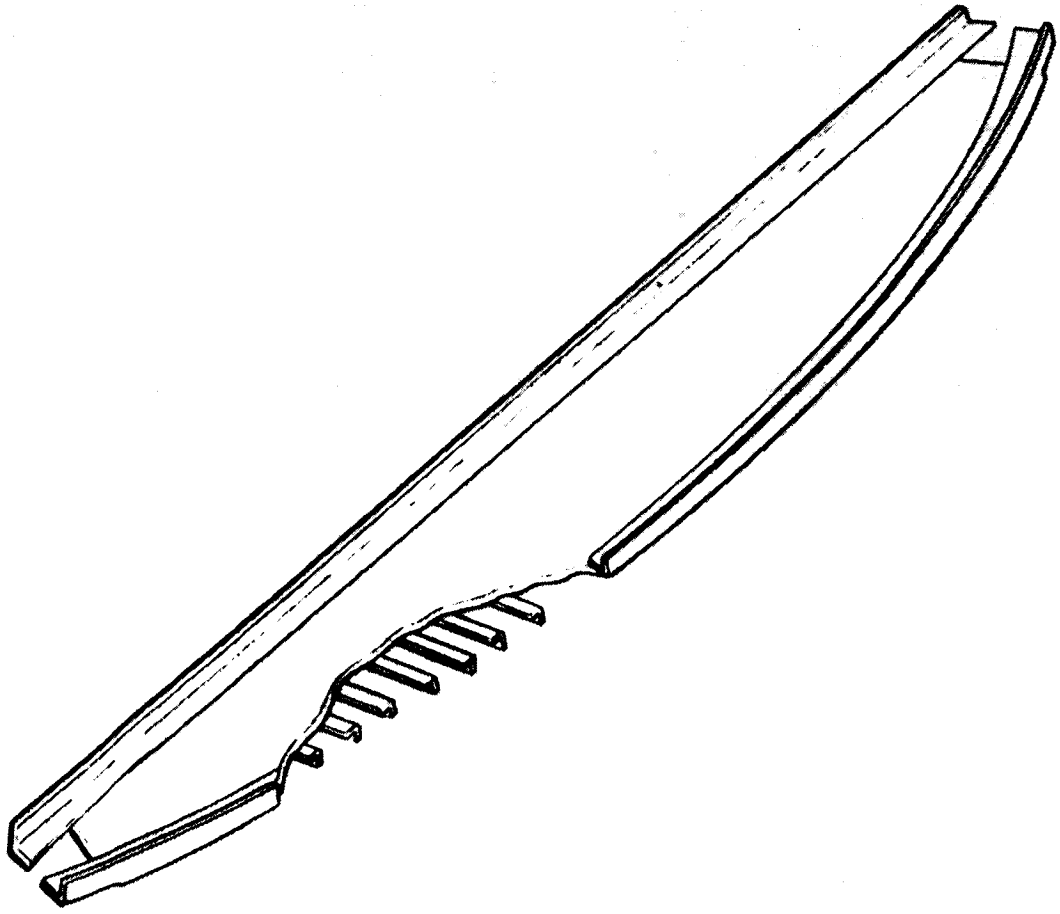

Figure 2-30 INTERMEDIATE RING ASSEMBLY

U3 4211 4000

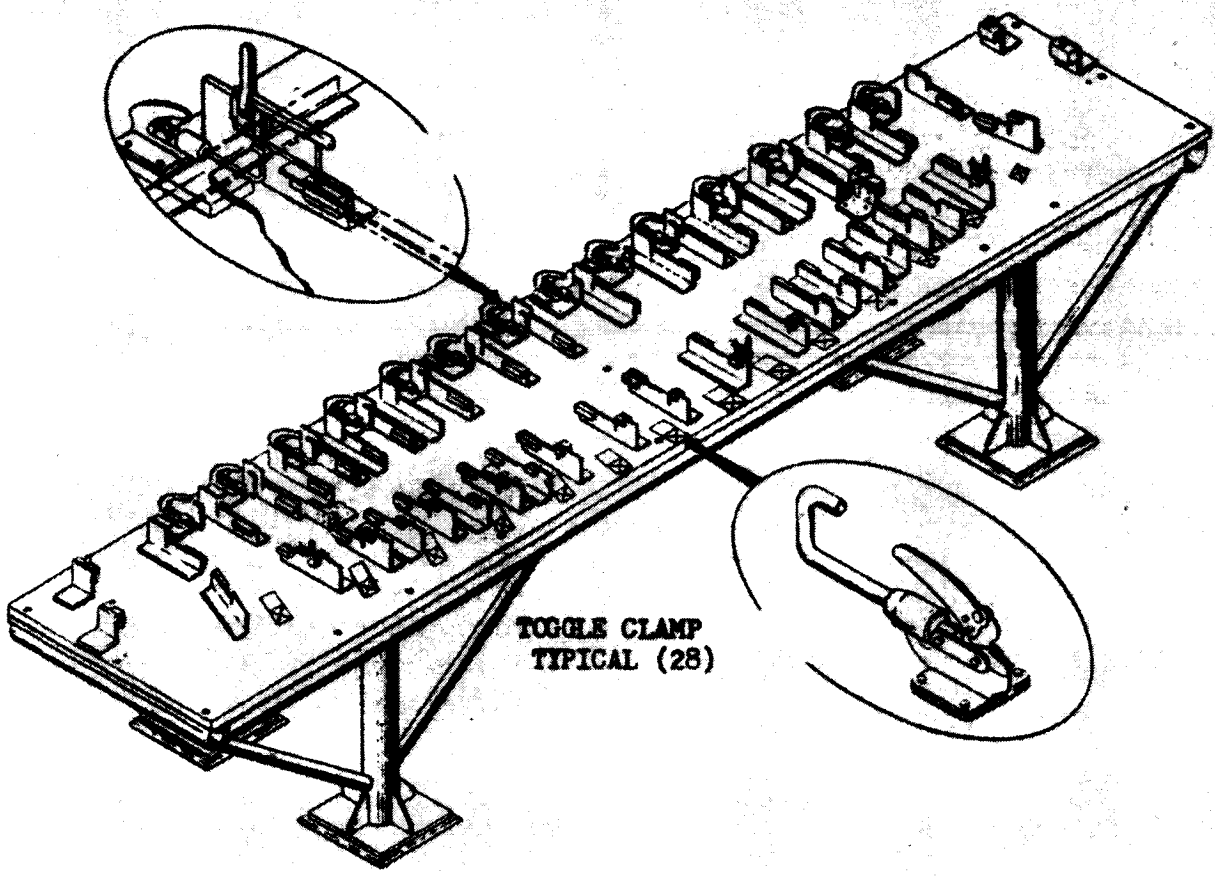

Figure 2-31 INTERMEDIATE RING ASSEMBLY FIXTURE

U3 4211 4000

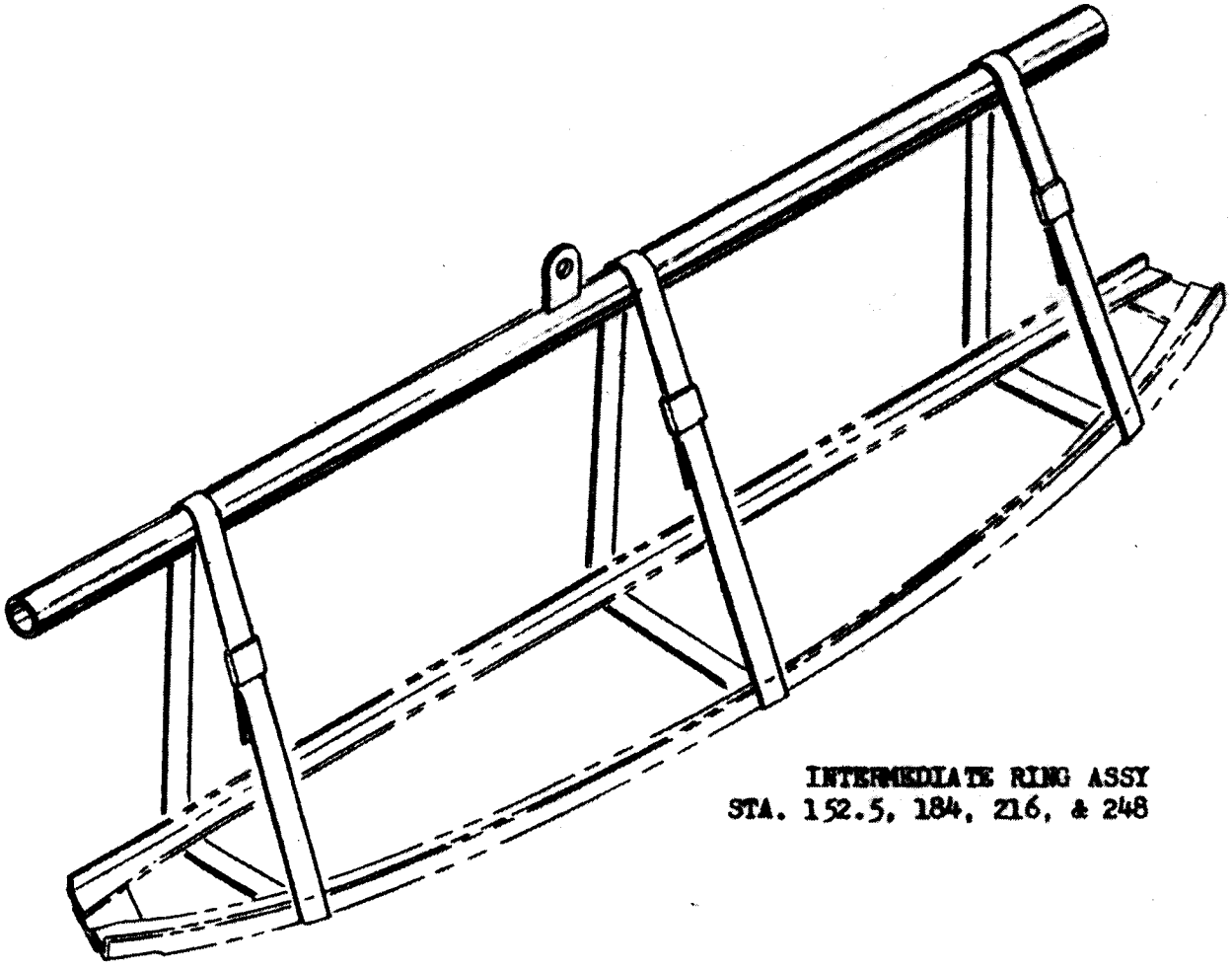

Figure 2-32 HOISTING TOOL INTERMEDIATE RING ASSEMBLY

U 6211 4000

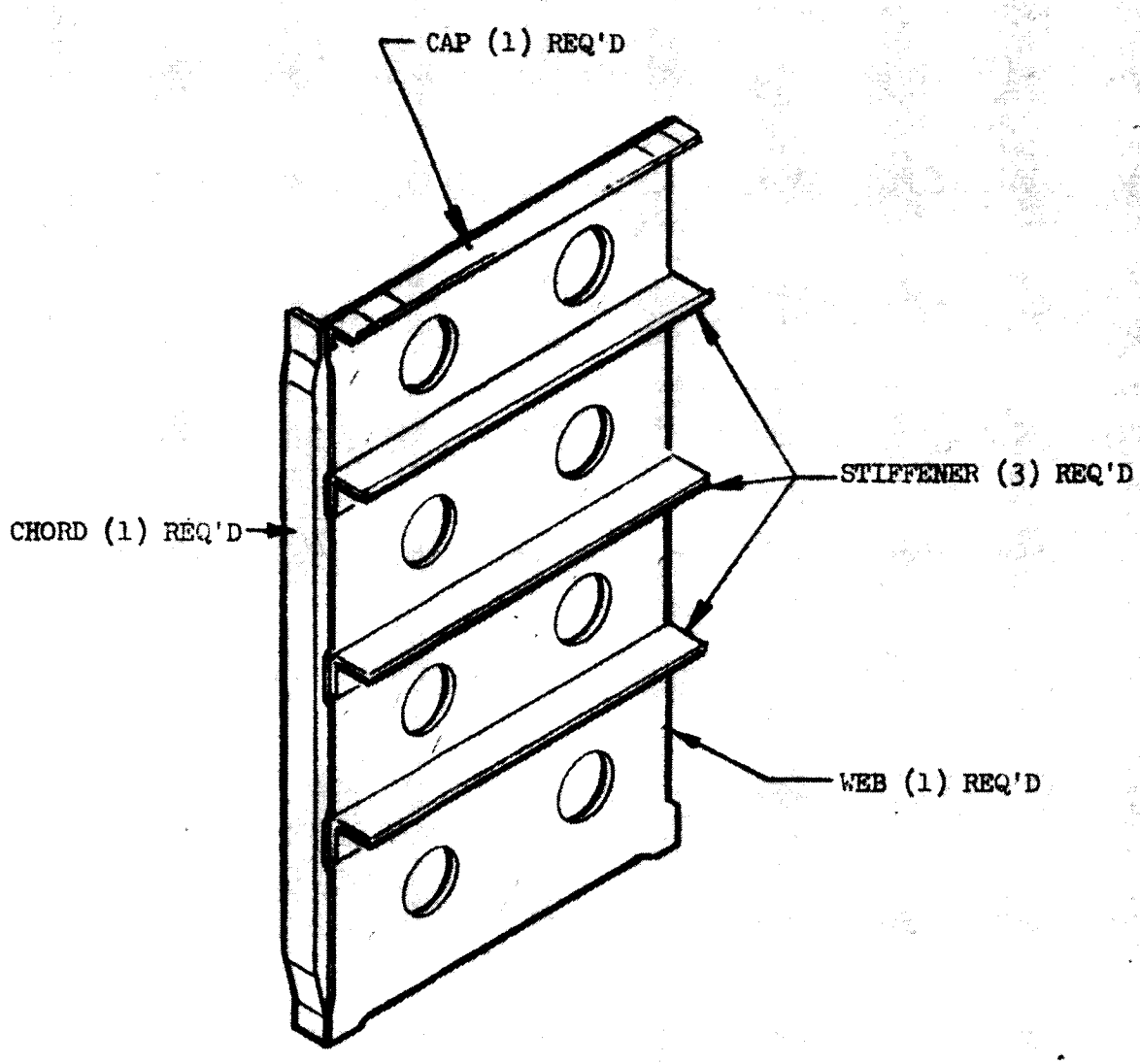

Figure 2-33 INTERCOSTAL ASSEMBLY INTERMEDIATE RING

U3 4211 4000

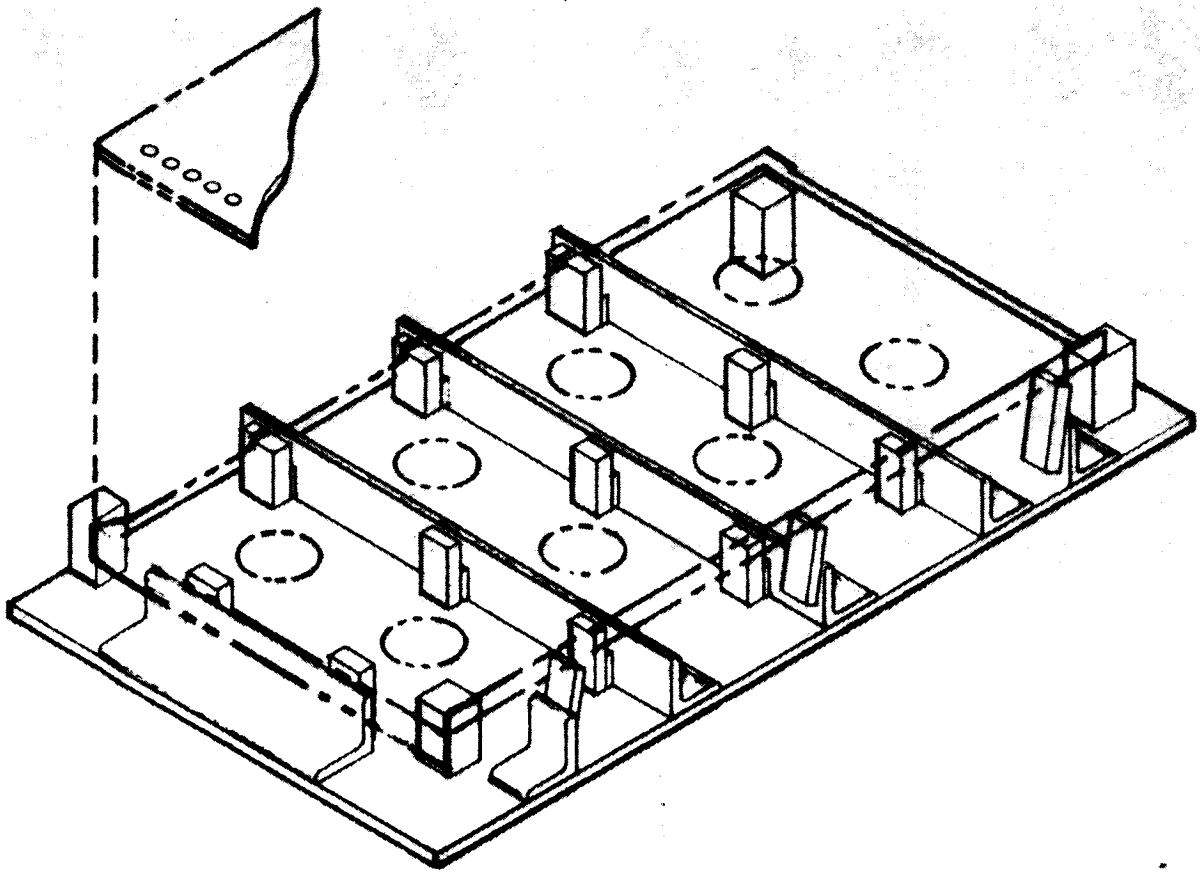

Figure 2-34 ASSEMBLY FIXTURE INTERCOSTAL INTERMEDIATE RING

3 4211 4000

2.2.10.1 (Continued)

a) Load assembly fixture with stiffeners and cap.
b) Load web and chord and apply drill plate and drill all holes.
c) Install fasteners.
d) Remove completed assembly.

2.2.11 Skin Panel Assemblies

The skin panel assemblies are segments of the Thrust Structure skin; sixteen skin panel assemblies vertically spliced together form the complete skin. A skin panel assembly is comprised of a cylindrical skin panel reinforced by vertical double "T" and/or hat-shaped stiffeners. Major openings or cutouts are reinforced by doublers. The cylindrical skin panels are machined plates, varying in thickness from .210-inch at the forward end up to .680-inch at the aft end. Each skin panel assembly weighs approximately 1,000 pounds. (See Figures 2-35 and 2-36)

2.2.11.1 Sequence of Assembly

Assemble holddown position skin panel assemblies, which do not contain umbilical openings, as follows:

a) Load the hat-section stringers in the assembly fixture.
b) Using the hoisting tool, load the skin panel (with doubler temporarily attached where applicable) in the assembly fixture.
c) Install the removable contour headers of the tool, locate parts and clamp in place. (See Figure 2-36)
d) Load tapered fillers in joggled areas, where applicable.
e) Drill fastener holes and install fasteners.
f) Drill holes for indexing the Y-ring plates.
g) Install alignment fixtures and seal.
h) Drill "K" holes for trim fixture router guides.
i) Attach hoisting tool and strongbacks. (See Figures 2-37 and 2-38)
j) Remove assembly from the assembly fixture.
k) Load assembly onto the trim fixture table. (See Figure 2-39)
l) Apply router guides and bolt to skin panel assembly.
m) Net trim aft end and sides of panel.
n) Remove router guides.
o) Install holding fixture special bolts in tool holes in the skin panel. (See Figure 2-40)
p) Remove assembly from the trim fixture.
q) Load assembly into the holding fixture.

U3 4211 4000

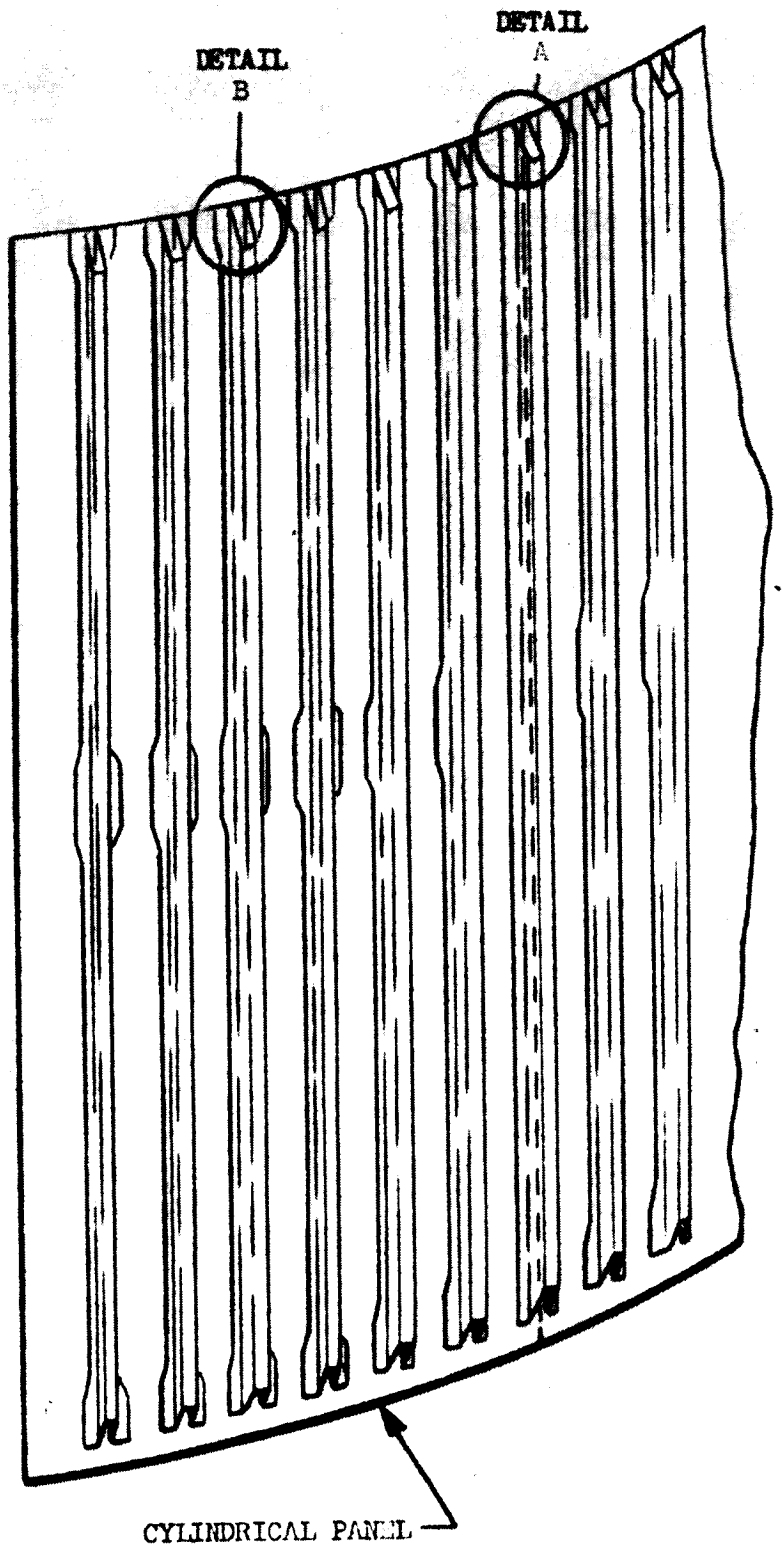

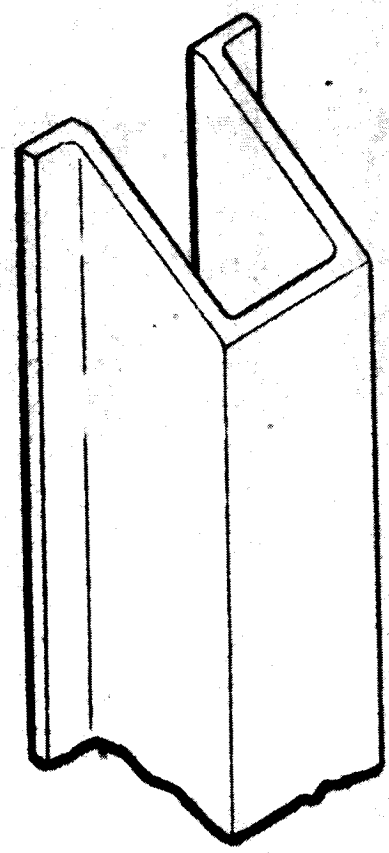

DETAIL "A" SKIN SPLICE

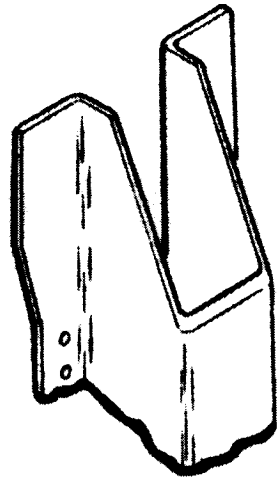

DETAIL "B" HAT SHAPED STIFFENER

Figure 2-35 SKIN PANEL ASSEMBLIES

3 4211 4000

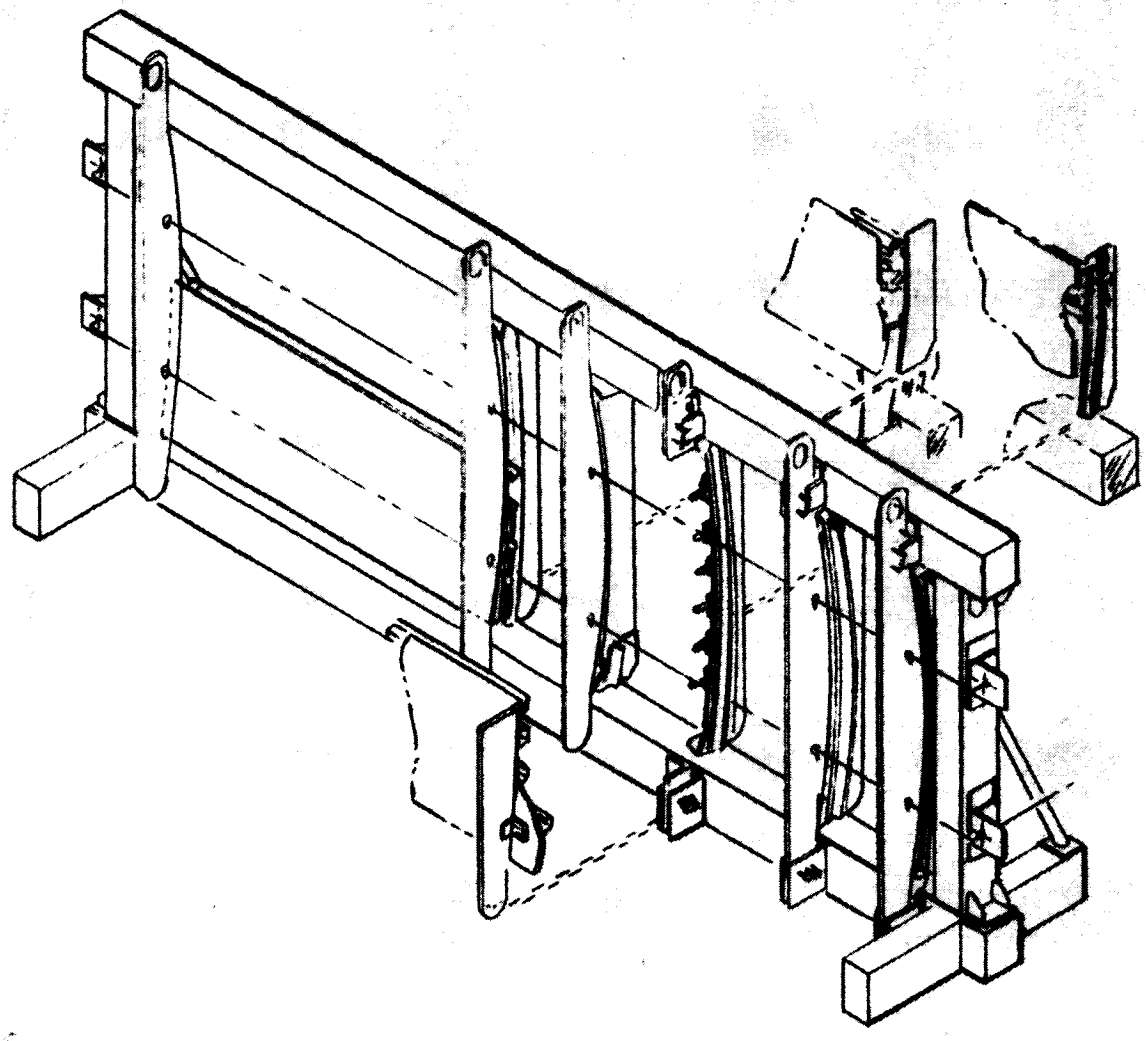

Figure 2-36 ASSEMBLY FIXTURE - SKIN PANEL ASSEMBLY

U3 4211 4000

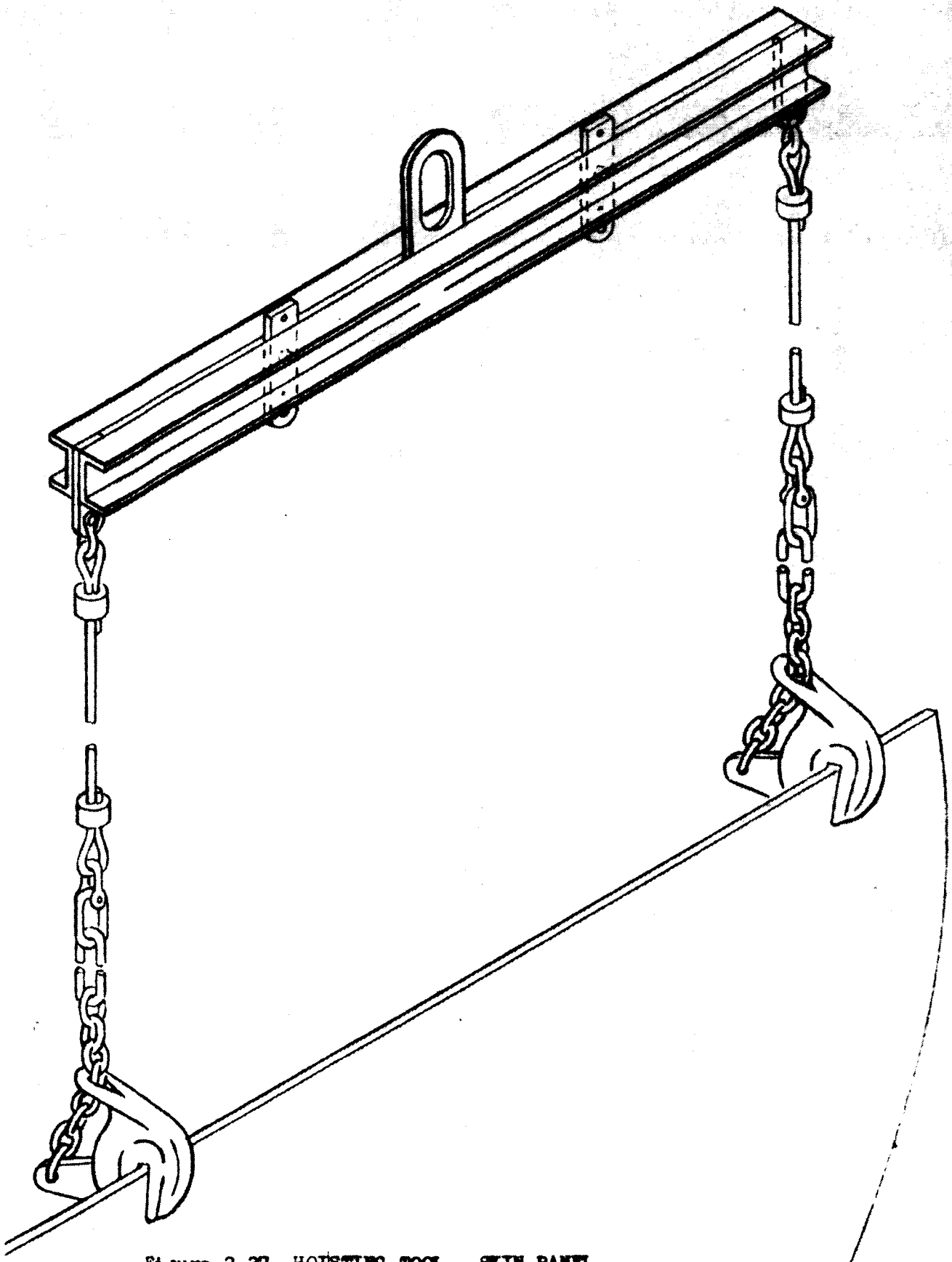

Figure 2-37 HOISTING TOOL - SKIN PANEL

3 4211 4000

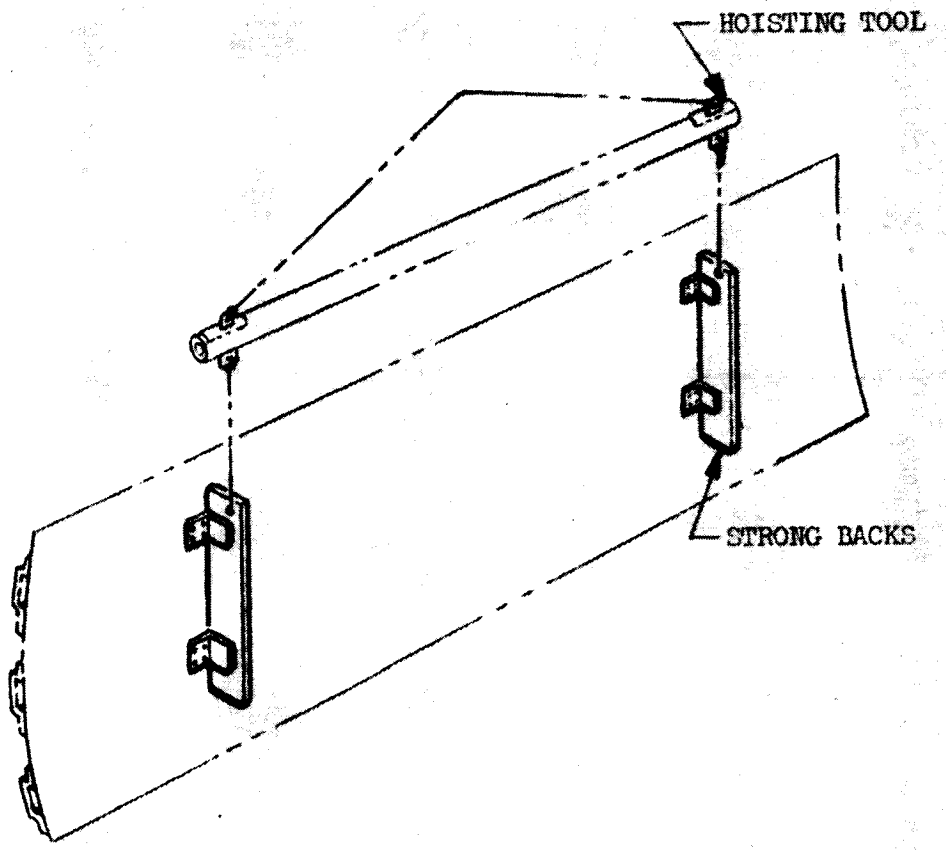

Figure 2-38 MISCELLANEOUS TOOL - STRONGBACKS FOR HOISTING TOOL

U3 4211 4000

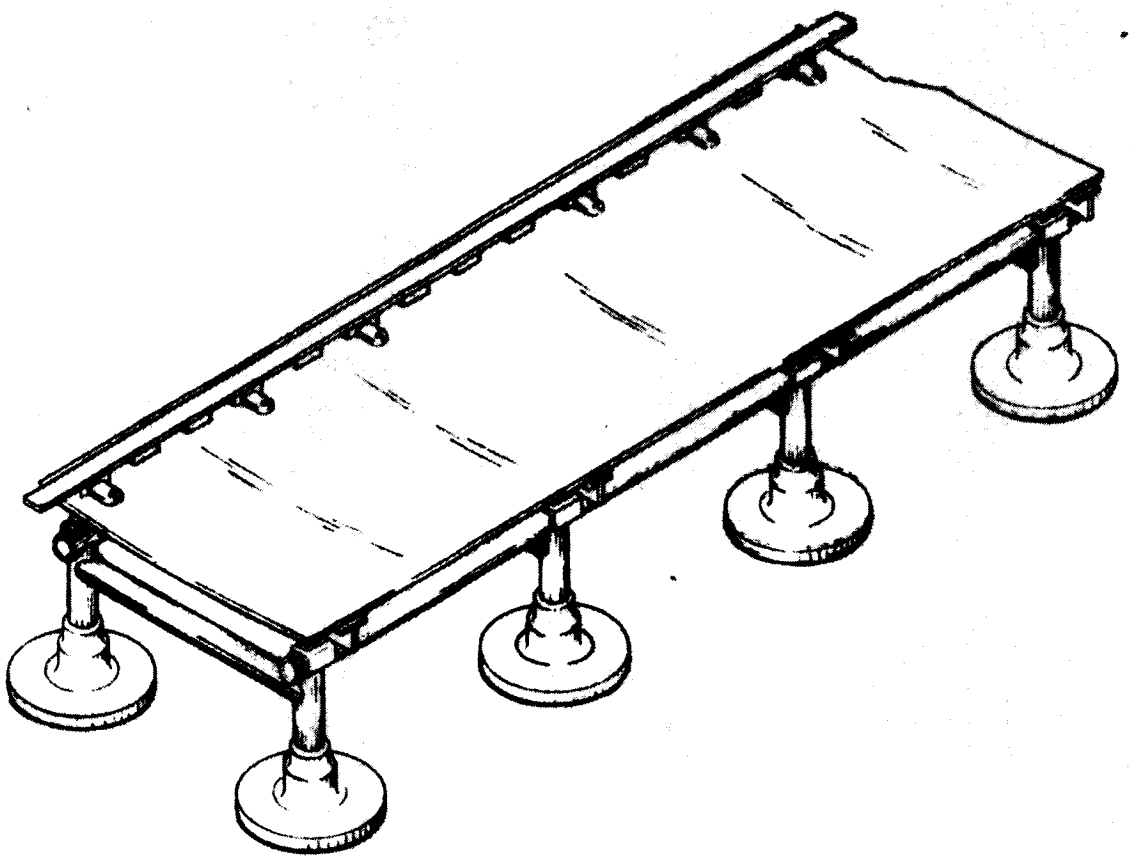

Figure 2-39 TRIM FIXTURE - SKIN PANEL ASSEMBLIES

U3 4211 4000

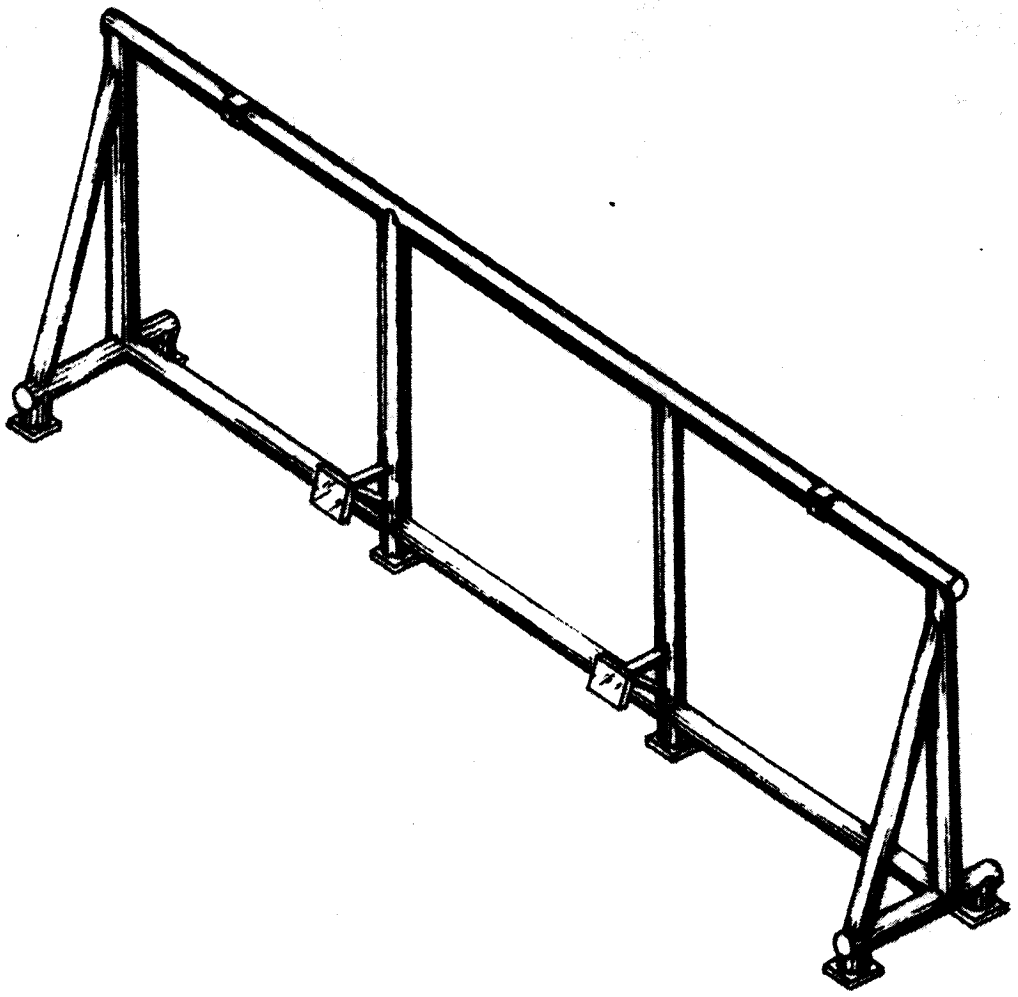

Figure 2-40 CYLINDRICAL PANEL HOLDING FIXTURE

U3 4211 4000

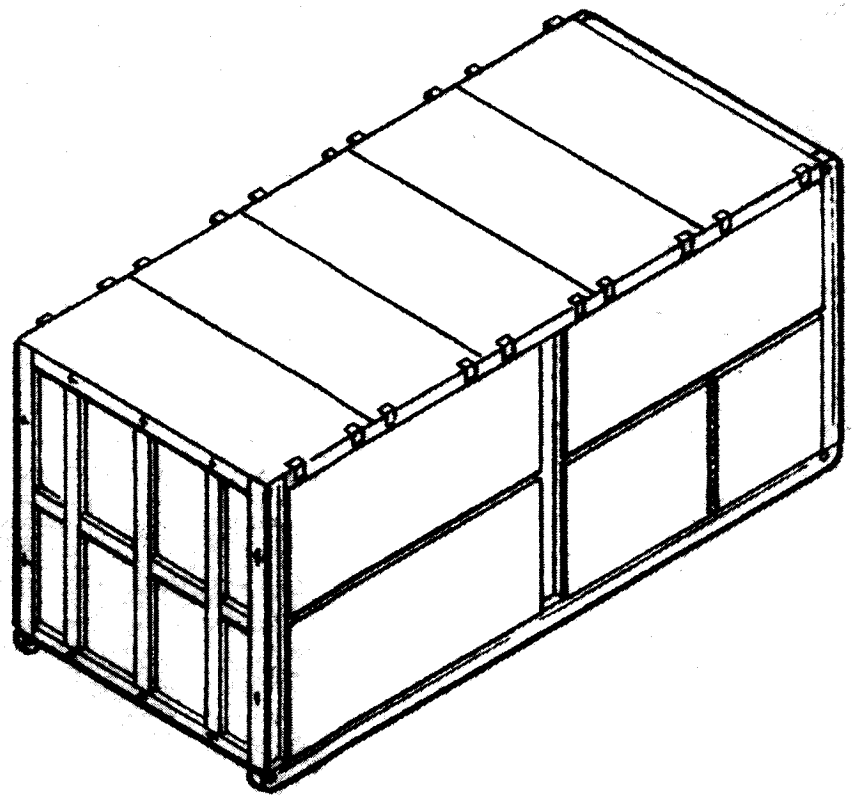

Figure 2-41 SHIPPING AND STORAGE RACK - CYLINDRICAL SKIN PANEL

2.2.11.1 (Continued)

r) Drill "K" holes for trim fixture router guides out to full size and install fasteners.
s) Remove strongbacks. Drill attach holes to full size and install fasteners.
t) Using hoisting tool, transfer skin panel assembly from holding fixture to storage and shipping rack. (See Figure 2-41)
u) Remove special bolts from tool holes in skin panel.

2.2.11.2 <u>Holddown Position Skin Panel Assemblies Which Have Umbilical Openings are Assembled as Follows</u>:

a) Load the hat section and double tee stringers in the assembly fixture.
b) Using the hoisting tool, load the skin panel with the doubler temporarily attached in the assembly fixture.
c) Install the removable contour headers of the tool, locate the parts and clamp in place. (See Figure 2-36)
d) Load tapered fillers in joggled areas.
e) Drill fastener holes and install fasteners.
f) Drill holes for indexing the Y-ring drill plate.
g) Install alignment fixtures and seal.
h) Drill "K" holes for trim fixture router guides.
i) Hand locate fillers at upper and lower edge of umbilical opening. Drill and tack rivet in place.
j) Attach hoisting tool and strongbacks. (See Figures 2-37 and 2-38)
k) Remove assembly from the assembly fixture.
l) Load assembly onto the trim fixture table. (See Figure 2-39)
m) Apply router guides and bolt to skin panel assembly.
n) Net trim aft end and sides of panel.
o) Remove router guides.
p) Install holding fixture special bolts in tool holes in the skin panel. (See Figure 2-40)
q) Remove assembly from the trim fixture.
r) Load assembly into the holding fixture.
s) Drill "K" holes for trim fixture router guides to full size and install fasteners.
t) Apply drill plate and drill attach hole pattern for umbilical plate.
u) Install fasteners around umbilical opening.
v) Remove strongbacks. Drill attach holes to full size and install fasteners.

U3 4211 4000

2.2.11.2 (Continued)

w) Using hoisting tool, transfer skin panel assembly from holding fixture to storage and shipping rack.

x) Remove special bolts from tool holes in skin panel.

2.2.11.3 Assemble Fin Position Skin Panel Assemblies as Follows:

a) Load the hat-section stringers in the assembly fixture.
b) Using the hoisting tool, load the skin panel with the doubler temporarily attached in the assembly fixture.
c) Install the removable contour headers of the tool, locate parts and clamp in place. (See Figure 2-36)
d) Load tapered fillers in joggled areas.
e) Drill fastener holes and install fasteners.
f) Drill holes for indexing the Y-ring plates.
g) Install alignment fixtures and seal.
h) Drill "K" holes for trim fixture router guides.
i) Attach hoisting tool and strongbacks. (See Figures 2-37 and 2-38)
j) Remove assembly from the assembly fixture.
k) Load assembly onto the trim fixture table. (See Figure 2-39)
l) Apply router guides and bolt to skin panel assembly.
m) Net trim aft end and sides of panel.
n) Remove router guides.
o) Install holding fixture special bolts in tool holes in the skin panel. (See Figure 2-40)
p) Remove assembly from the trim fixture.
q) Load assembly into the holding fixture.
r) Drill "K" holes for trim fixture router guides to full size and install fasteners.
s) Remove strongbacks. Drill attach holes to full size and install fasteners.
t) Using hoisting tool, transfer skin panel assembly from holding fixture to storage and shipping rack. (See Figure 2-41)
u) Remove special bolts from tool holes in skin panel.

2.2.12 Intermediate Ring at Station 315.0

(See Figure 2-42) At station 315.0 there is a stiffener ring of "J" cross section fabricated in eight segments which is spliced together in the thrust structure final assembly tool. The ring segments are handled by a hoisting tool. (See Figure 2-43)

The final installation sequence is not defined at this time.

U3 4211 4000

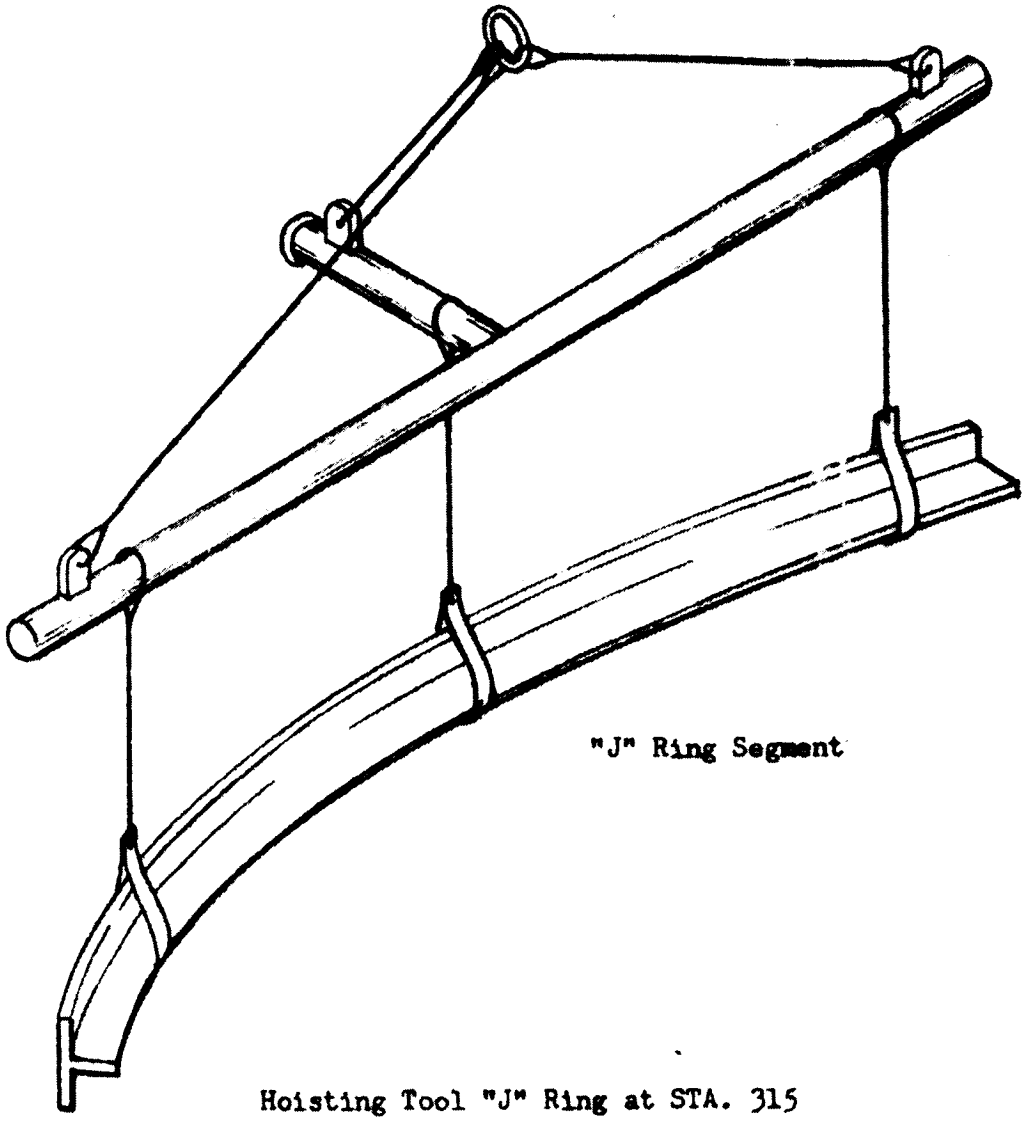

Hoisting Tool "J" Ring at STA. 315

Figure 2-42 HOISTING TOOL "J" RING - STATION 315.00

U3 4211 4000

2.2.13 Actuator Support Assembly

The actuator support structure consists of two (2) welded assemblies as follows:

The actuator support structure assembly consists of a 2.50-inch diameter tube, an apex fitting and an end fitting.

Actuator support assembly, F-1 engine, consisting of a 5.0-inch diameter tube with an end fitting and a 7.0-inch diameter tube with a terminal fitting joined to a common apex fitting. Bushings will be installed in apex fitting.

2.2.13.1 Assembly Sequence

The actuator support structure assembly is welded in a precision weld lathe using head and tail stock mounted weld fixtures as shown in Figure 2-43.

Load 2.50-inch diameter tube apex fitting and a 2.50-inch diameter tube in weld fixture and weld.

Load 2.50-inch diameter tube end fitting in weld fixture and weld.

2.2.13.2 Assembly Sequence

Actuator support F-1 Engine is welded in a precision weld lathe using head and tail stock mounted weld fixtures as shown in Figure 2-43.

Load 7.0-inch diameter tube end fitting and 7.0-inch diameter tube in weld fixture and weld.

Load apex fitting and 5.0-inch diameter tube in weld fixture and weld.

Load 5.0-inch diameter tube end fitting in weld fixture and weld. (See Figure 2-43)

Reposition welded 5.0-inch diameter tube and reposition apex fitting in clamp-locater.

Load 7.0-inch diameter tube in weld fixture and weld.

1 4211 4000

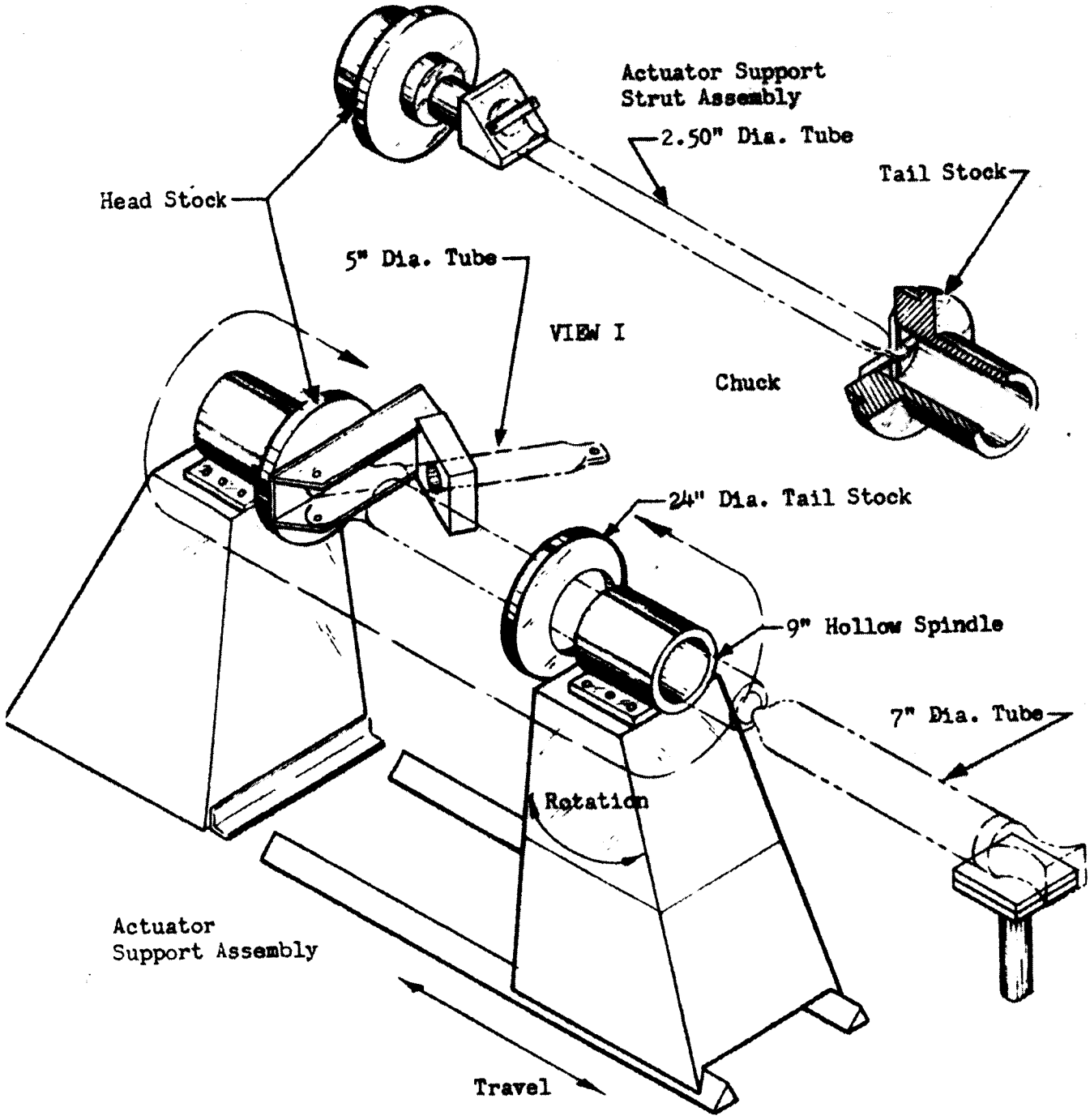

Figure 2-43 ACTUATOR SUPPORT ASSEMBLY - WELD FIXTURES

U3 4211 4000

2.2.13.2 (Continued)

Anodize and prime.

Install bushings and line ream.
(Ream fixture design not available at this time.)

2.2.14 Propellant Line Supports

Propellant line supports consist of (5) box beam structures. Four (outboard) are rectangular shaped and located axially approximately as shown in Figure 2-45. The top of the outboard beam structure is located at approximately Station 183 and the bottom at approximately Station 167. All four outboard box beam structures are supported by struts attached to the thrust posts. (See Figure 2-46) The fifth propellant line support (inboard) is a trapezoidal shaped structure located axially, approximately as shown in Figure 2-45. The top of the inboard support is located at approximately Station 155 and the bottom is located at approximately Station 130. The inboard support will be supported by tying into the center engine support beams. (See Figure 2-47)

It is anticipated there will be two major assembly jigs (one for the outboard box beam structure and one for the inboard box beam structure). A series of sub-assembly tools will be required to assemble the components of the beams. Hoisting tools will be required. Details pertaining to the tooling for the propellant line supports are not available at this time because engineering has not been released.

2.2.15 Thrust Structure - Final Assembly

The thrust structure assembly is a cylindrical structure approximately 33-feet in diameter by 20-feet long having as its basic plane the aft surface of the holddown post base fittings (Station 111.000) and extending to Station 345.700, which represents the forward edge of the skin panels. The following details and sub-assemblies make up the thrust structure assembly:

Hold down post base fittings.

Engine support fitting.

Lower thrust ring assembly.

Center engine support assembly.

Hold down post assembly.

Auxiliary shear web assembly.

13 4211 4000

Figure [illegible] (ILLUSTRATION DELETED)

U3 4211 4000

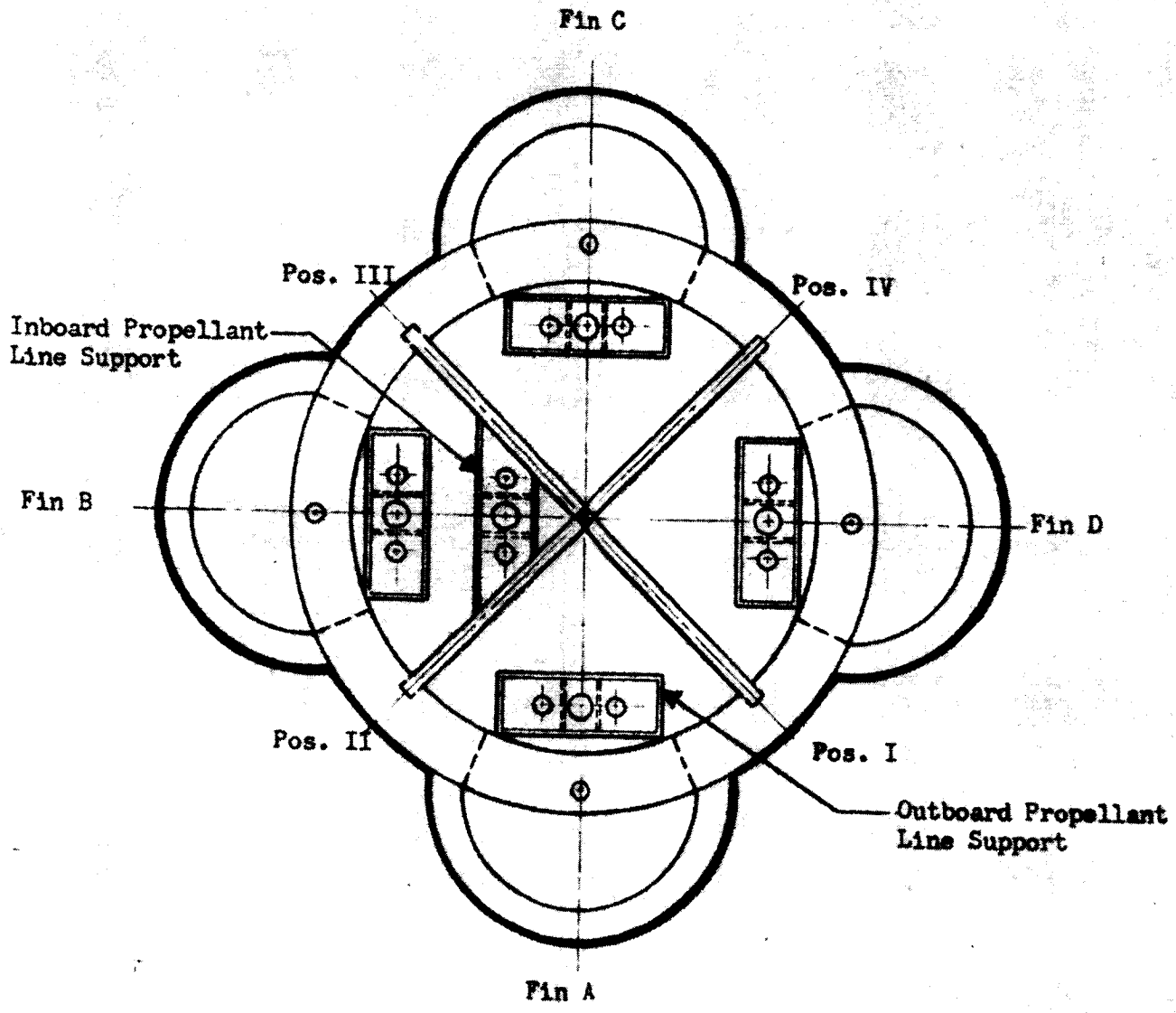

Figure 2-45 PROPELLANT LINE SUPPORT LOCATION

4211 4000

INFORMATION NOT AVAILABLE

Figure 2-46 OUTBOARD PROPELLANT LINE SUPPORT

U3 4211 4000

2.2.15 (Continued)

Thrust post assembly.

Upper thrust ring assembly.

Intermediate ring segment assemblies.

Intercostal assemblies.

Skin panel assemblies.

Intermediate ring details - Station 315.00.

Weld assembly, 5.0-inch to 7.0-inch diameter actuator support.

Actuator support assembly, 2.50-inch diameter.

Retro-rocket support structure.

Inboard propellant duct support assembly.

Outboard propellant duct support assemblies.

Base heat shield support structure assembly.

Miscellaneous plumbing, hydraulic and electronic equipment.

2.2.15.1 Loading and Assembly Sequence

The thrust structure assembly is completed with the following tools:

Assembly Fixture, thrust structure final assembly. (See Figure 2-49)

Holding Fixture, thrust structure-pick-up position. *(Michoud use tool only. Not used at MSFC).

Personnel Platforms.

Drill jigs.

Hoisting and lifting devices and other production aids.

(Note: All items with the exception of item (*) in the above listed tools are MSFC tool design responsibility and are not completed as of this date.)

3 4211 4000

2.2.15.2 Assembly Sequence is as Follows:

Load hold down post base fittings and engine support fittings on jack stands.

Position and secure drill plate common to hold down post base fitting.

Load lower thrust ring positioning as called for by tool drawing and using trunnion locators in tool holes.

Adjust intermediate ring supports.

Adjust position of hold down post base fitting and engine support fittings to locate outboard face of fitting common to flange of lower thrust ring.

Position center engine support assembly resting on lower thrust ring (exact location determined later in assembly sequence).

Position hold down post and auxiliary shear web assembly in approximate location and hold with pipe supports provided on tool.

Position thrust post assemblies in approximate position and support with pipe supports provided on tool.

Set towers of tool in position and adjust locators on towers.

Load upper thrust ring on locators on towers using trunnion locators for "clocking" position.

(Note: While loading upper thrust ring guide hold down post and thrust post assemblies to bring joggle inside upper ring cap.)

Position intermediate upper ring supports of tool and adjust.

Locate hold down posts, center engine support assembly and angle fittings.

Drill, ream and install fasteners using drill plate provided.

Locate, drill, ream and fasten auxiliary panels and center engine support using drill jig.

Use tooling aids provided to bring outboard face of engine fitting securely against inboard surface of thrust ring cap. Pin locators on tool to position thrust post and apply auxiliary drill jig provided to drill and ream holes common to engine fittings; lower thrust ring and thrust post.

U3 4211 4000

INFORMATION NOT AVAILABLE

Figure 2-47 INBOARD PROPELLANT LINE SUPPORT

U3 4211 4000

2.2.15.2 (Continued)

Apply applicable auxiliary drill jig to drill fittings at top of thrust post.

Load intermediate ring segment assemblies (Stations 152.5, 184.000, 216.00 and 248.00) using fairing tool provided for alignment and auxiliary drill jig.

Drill, ream and install fixtures on tool for positioning intercostal assemblies using locating fixtures on tool for positioning and auxiliary drill jig for drilling and reaming.

Install fasteners.

Position sizing ring tool on towers using trunnions for clockwise indexing.

Install eight skin panel assemblies adjacent to thrust post or fin positions using alignment blocks mounted on panel assemblies indexed to sizing ring.

Remove locating towers and install remaining eight skin panel assemblies.

Apply auxiliary locating drill jig to aid in installing skin panel assemblies.

Load and install intermediate ring (Station 315.00) using auxiliary drill jig to drill and ream. Install fasteners.

Using locators provided on tool and auxiliary drill jigs, locate, drill and ream actuator support assemblies.

Load, locate and drill retro-rocket actuator supports.

Load, position and drill inboard propellant duct support assembly.

Load, position and drill outboard propellant duct support assemblies (four assemblies).

Locate, drill, ream and fasten all stage attach fittings.

*Install certain miscellaneous plumbing, electric and hydraulic lines. (Details to be determined at a later date.)

*Install base heat shield support structure. (Details to be determined at a later date.)

*Install engine fairing attach fittings. (Details to be determined at a later date.)

U3 4211 4000

2.2.15.2 (Continued)

Prepare and transport to final stage assembly where major portion of plumbing, electrical and hydraulic lines will be installed. (Details to be determined at a later date.)

*These operations completed after removing assembly to pick-up position at Michoud only.

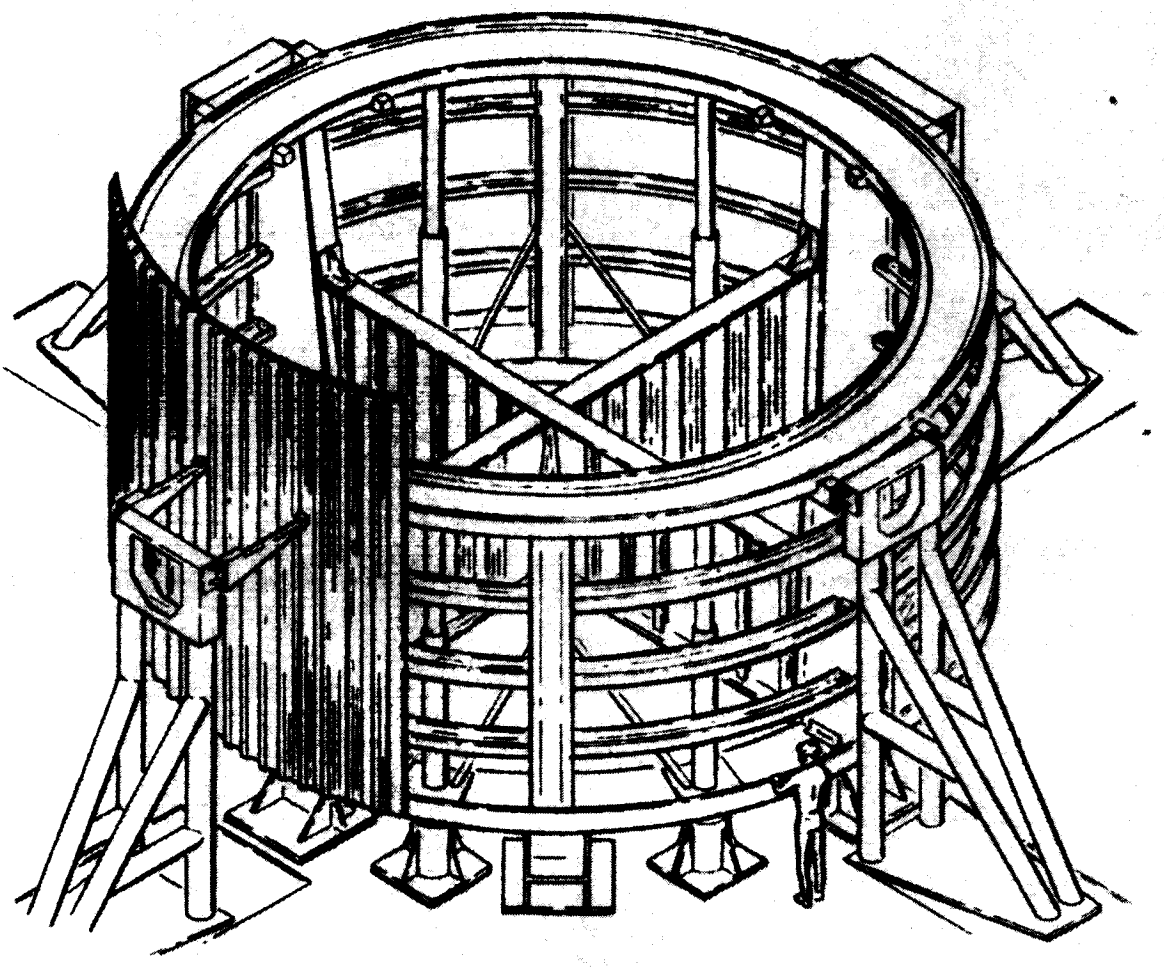

Figure 2-48 THRUST STRUCTURE ASSEMBLY FIXTURE WITH PARTIAL THRUST STRUCTURE

U3 4211 4000

2.3 FUEL TANK ASSEMBLY

The Fuel Tank Assembly is an aluminum vessel approximately 33 feet in diameter and 44 feet in height. It consists of two cylindrical skin ring assemblies each 10 feet high, closed at each end by an ellipsoidal bulkhead. Anti-Slosh Ring Baffles are located on the inside wall of the tank and an Anti-Vortex Cruciform Baffle is located in the lower bulkhead area. Five LOX tunnel assemblies extend from bulkhead to bulkhead, welded to the lower, and mechanically attached to the upper. A polyurethane foam exclusion riser is included in the lower bulkhead. Various fittings and plumbing installations complete the assembly.

2.3.1 Lower and Upper Head Assembly

The bulkhead assemblies consist of the machined "Y" Ring, Gore Assembly, Center Piece, and miscellaneous bracketry. (See Figure 2-50)

2.3.1.1 "Y" Ring to Bulkhead Assembly. (See Figure 2-51)

The "Y" Ring, delivered as a complete item, is placed on the turntable and the head assembly is lowered onto the "Y" Ring and aligned.

The head assembly is welded to the "Y" Ring, utilizing a welder boom Weld Fixture (See Figure 2-50). The weld is X-rayed and repaired as required.

The inboard tunnel transition segment is trimmed and welded, utilizing the trim and weld fixture. The transition segment is required in the lower fuel tank bulkhead only.

The miscellaneous brackets are assembled at this station. Some of these are bonded and others hand welded. The number of brackets is approximately 200 for each fuel tank bulkhead.

"Y" RING FABRICATION (See Figure 2-52)

Three aluminum billets, 5½ by 27 by 444 inches, are required for fabrication of the "Y" Ring.

The forged billets are received in a flat condition. They are roll formed, penetrant inspected, and rough-trimmed with excess on each end. Aging of the billets, three (3) at a time, from T-31 to T-81, is done on a heat treat fixture. The billets are trimmed to length with allowance for weld shrinkage, and the ends prepared for welding.

Upon receival at Michoud, the three "Y" Ring segments are clamped in the weld fixture and welded into a ring. The joints are X-Rayed and annealed. The "Y" Ring weldment is placed on the "Niles" boring mill. A turning fixture is used to extend the mill capacity and clamp the weldment in place. The "Y" Ring is machined complete. The ring is removed from the mill, radiographic inspected, cleaned, chemically etched, dye penetrant inspected, and part numbered.

U3 4211 4000

Figure 2-49 DELETED

U3 4211 4000

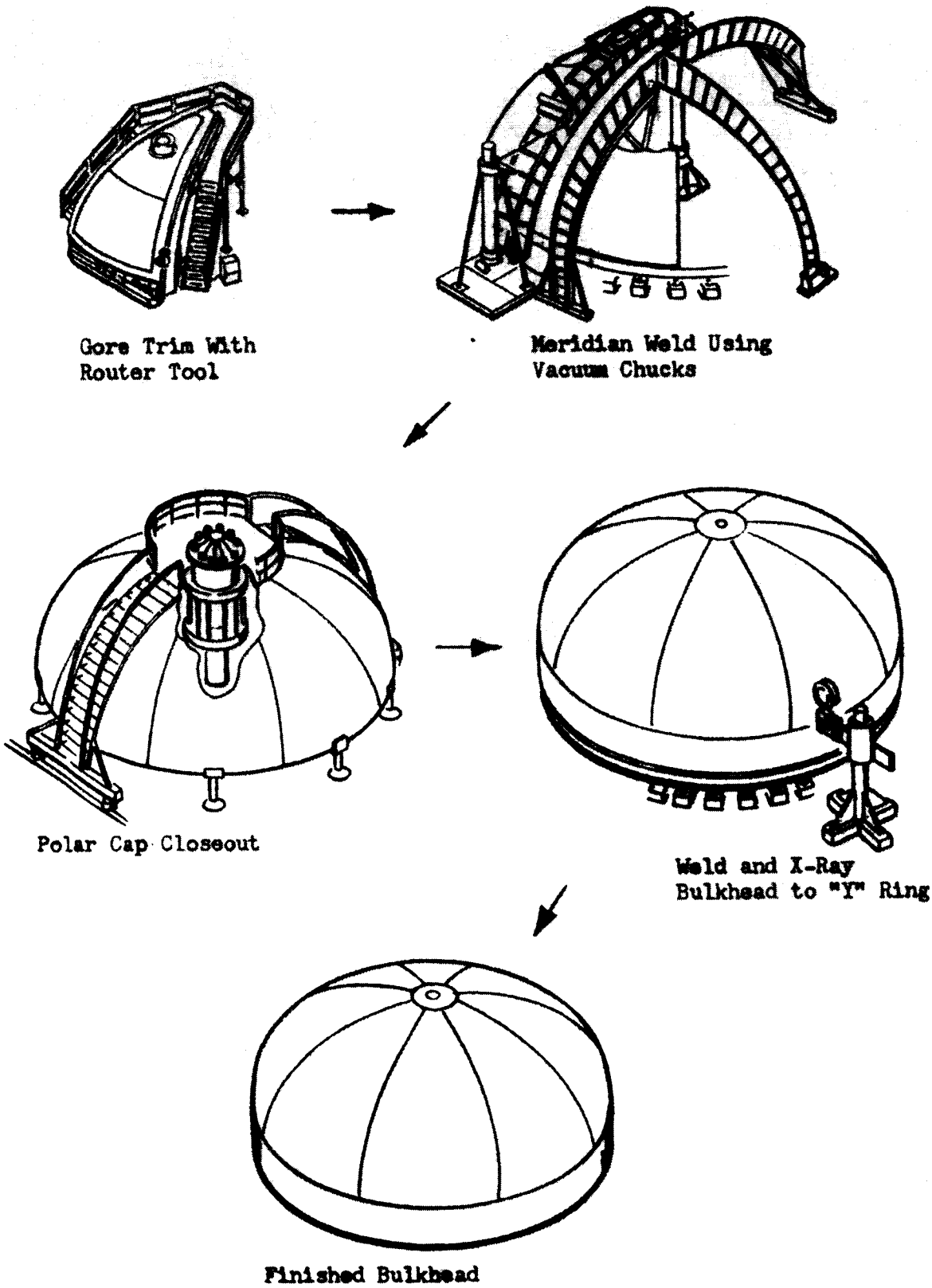

Figure 2-50 Bulkhead Assembly

U3 4211 4000

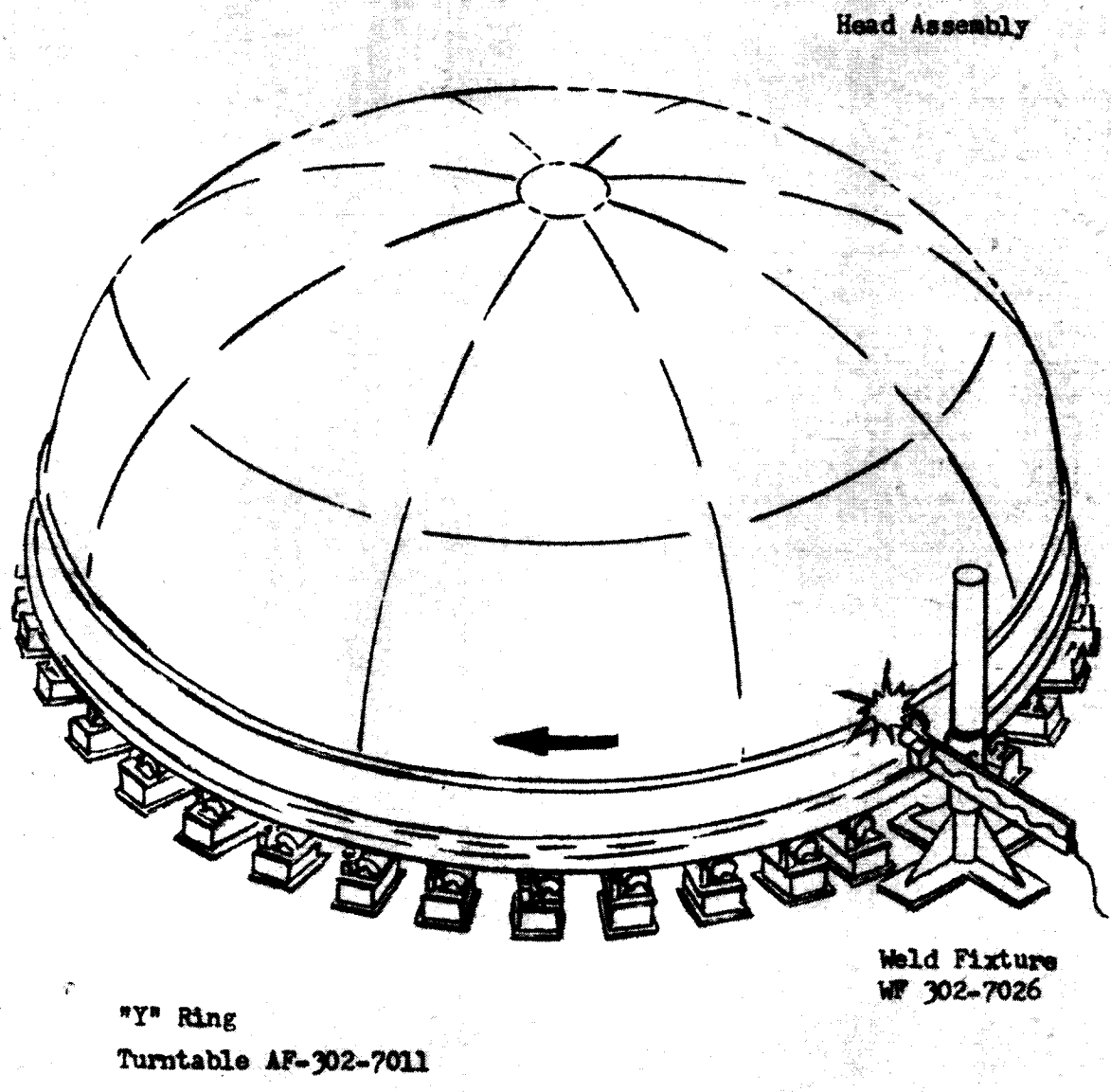

Figure 2-51 WELDING "Y" RING TO HEAD ASSEMBLY

U3 4211 4000

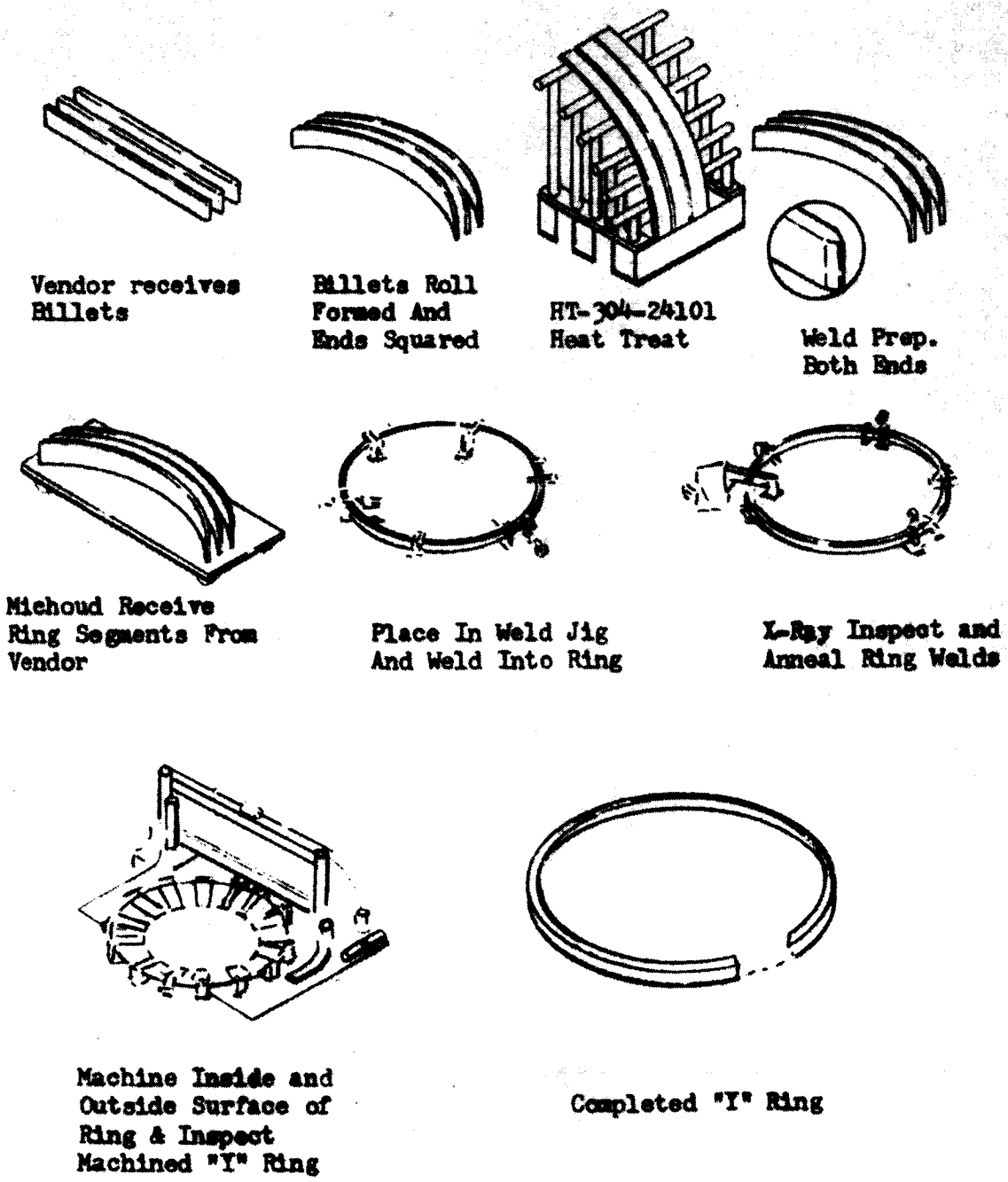

Figure 2-52 "Y" RING

U3 4211 4000

2.3.1.2 Polar Cap Assembly. (See Figure 2-56)

The head assembly is transferred to the trim and weld fixture, center piece to bulkhead, using a hoisting tool. The head assembly is positioned and clamped. Clamping, routing and welding components are removed and replaced as required by using a hoisting tool. The 54.010 plus .010 minus .000 diameter cut-out for center piece is verified after routing with a checking gage.

Access to the trim and weld fixture and head assembly is provided by a personnel platform. The center piece is lifted to the top of bulkhead using a hoisting tool.

The center piece weld is X-rayed by rotating the X-ray equipment about the center shaft of the trim and weld fixture, as in case of the router head and welding head.

The tooling boss is installed in the center piece to bulkhead position by removing the shaft of the trim and weld fixture. Locating the tooling boss with a weld fixture, the closure is welded, X-rayed and repaired as required (Aft Fuel Bulkhead only).

2.3.1.3 Gore to Gore Assembly. (See Figures 2-53)

Two gore assemblies are located on the bulkhead fabrication turntable and the mating edges checked and fitted. The mating edges of the two gore assemblies are welded, utilizing the bulkhead fabrication welding station fixture. The weld is X-rayed and repaired. The two welded gore assemblies are measured to determine weld shrinkage. The third gore assembly is trimmed net on one side of centerline and trimmed to allow for the weld shrinkage on opposite side on a trim fixture. This gore assembly is placed on a turntable and the mating edges checked, welded and X-rayed. (See Figure 2-53). The above process is repeated for the remaining gore assemblies with the exception of the last gore. The last gore assembly is trimmed to fit on both edges. The base of the welded head assembly is then trimmed net, utilizing the bulkhead skirt trim station fixture. (See Figure 2-55).

2.3.1.3.1 Gore Assembly (See Figure 2-55)

The gores are fabricated by both the sculptured bulge forming method and by bulge forming and chemical milling. The Apex Gores and Base Gores are received with tooling holes, heat treated to T-37 (un-aged), ½ inch pilot holes for fitting cutouts and 3-inch excess on all sides except for a 5-inch excess on Apex Gore. Gores with fittings are not conversion coated (MIL-C-5541). The gores are domestically packaged per BAC-5034.

Fittings are welded into the gores by the following process. The gore is vapor degreased per BAC-5408. With an "MIT", a rough cut is made for the gore fitting cutout while it is in a holding fixture. A hoisting tool loads the gore on the trim and weld fixture. The gore is located by tooling holes, and the completed

U3 4211 4000

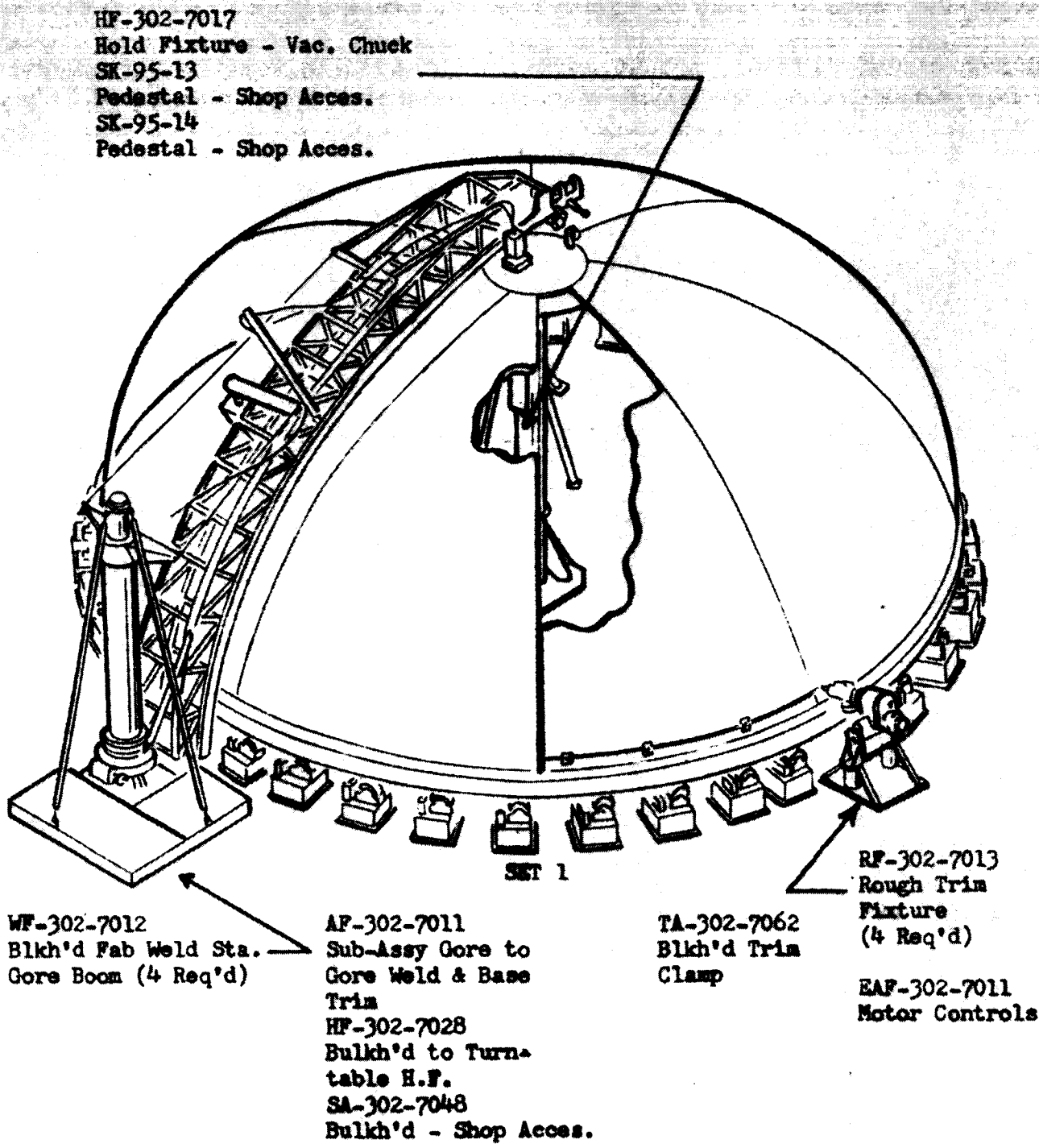

FIGURE 2-53 BULKHEAD GAGE - ROUGH TRIM

U3 4211 4000

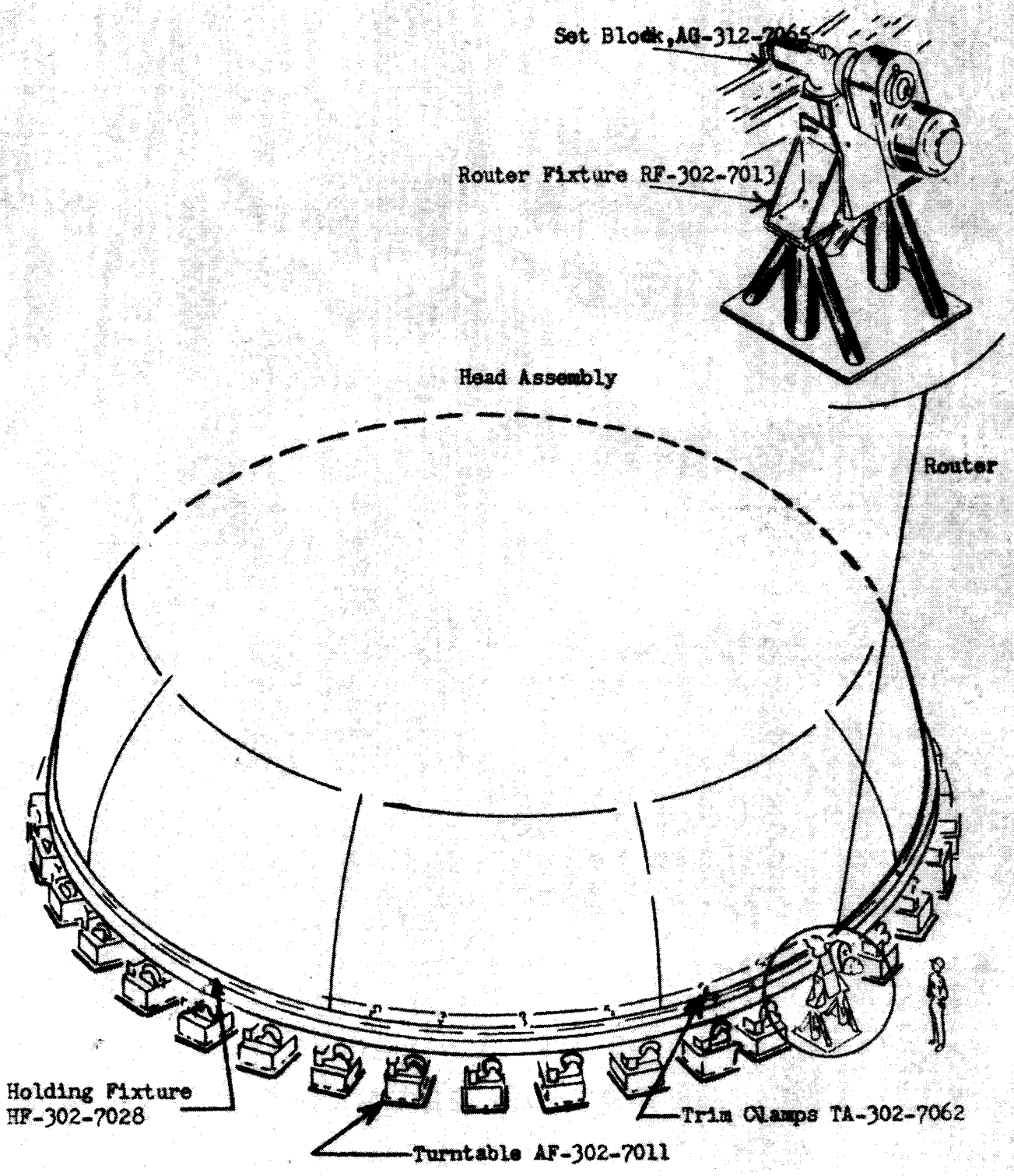

Figure 2-54 ROUTING BASE OF HEAD ASSEMBLY

U3 4211 4000

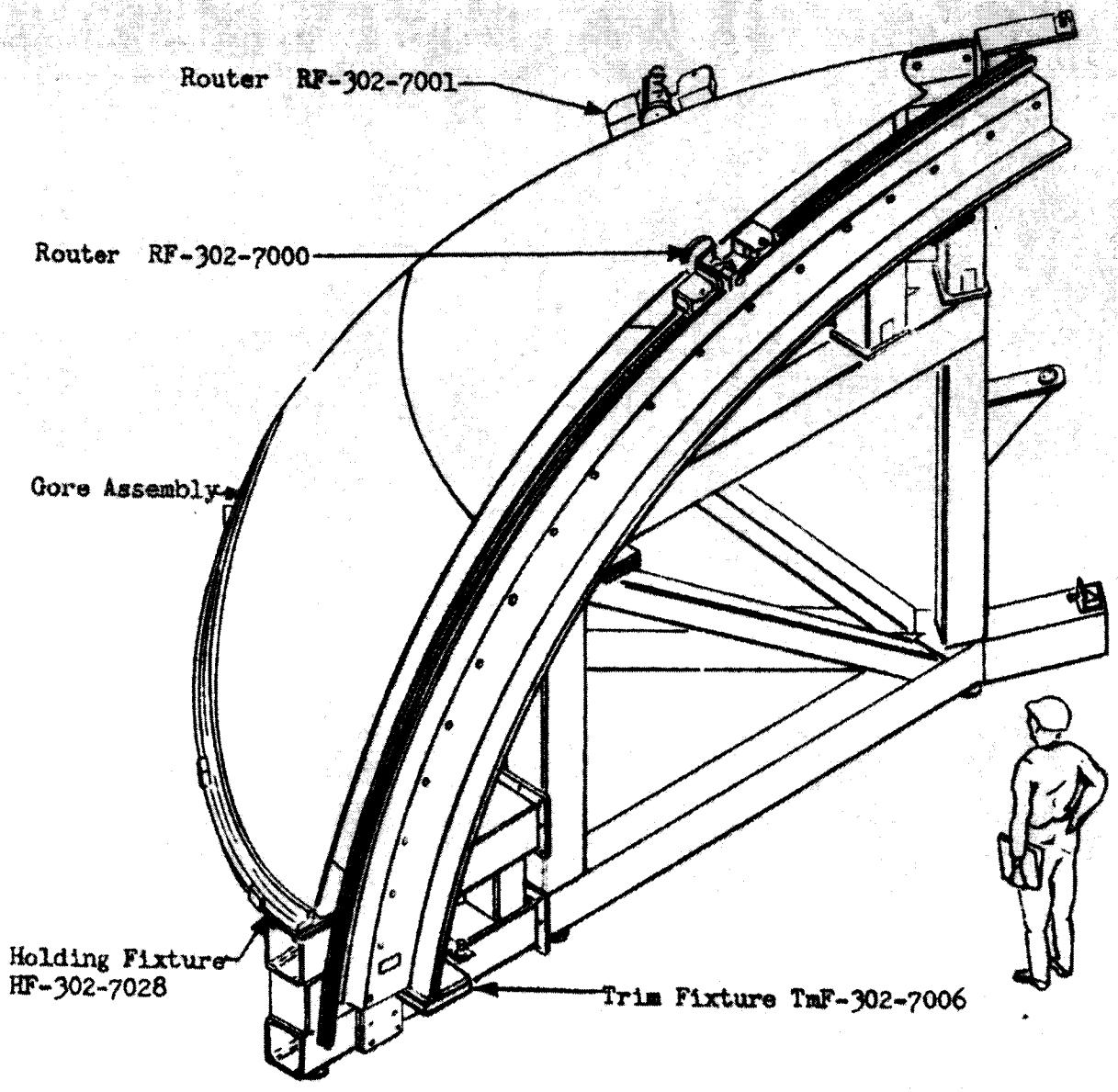

Figure 2-55 ROUTING GORE ASSEMBLY

U3 4211 4000

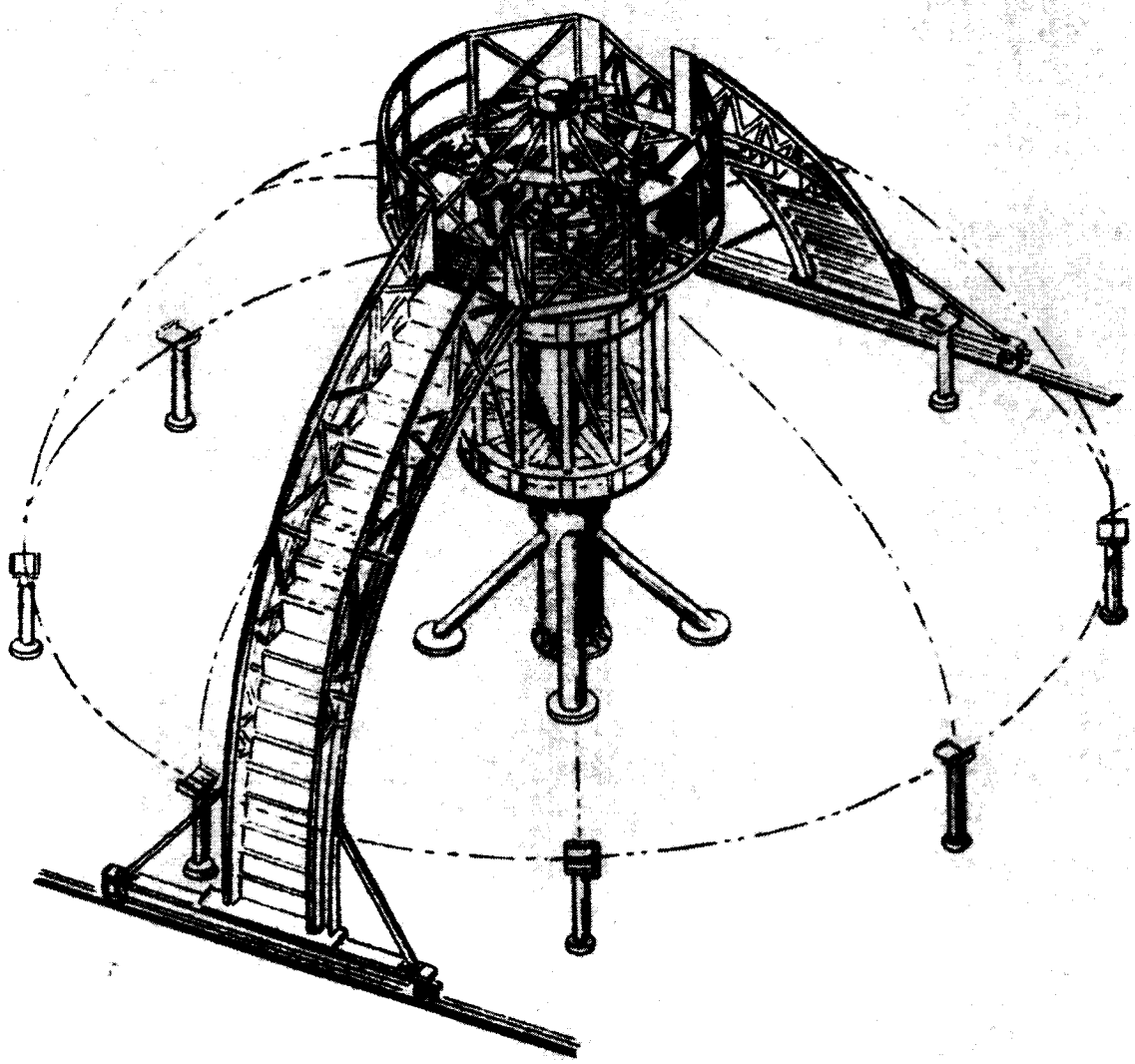

Figure 2-56 CENTER PIECE TO BULKHEAD TRIM AND WELD FIXTURE (T&WF-302-7014) AND CENTER PIECE TO BULKHEAD PERSONNEL PLATFORM (PP2-302-7047)

U3 4211 4000

2.3.1.3.1 (Continued)

cutout is made by a router fixture with the aid of a check gage. The fittings are located in the gore and welded in place. The gore is unloaded from the trim and weld fixture and loaded on a production dolly for removal to X-ray.

When the fittings are welded into the gore, the gore is heat-treated, the fittings are drilled and tapped for helicoil locations. The gore is cleaned and conversion coated.

Utilizing a hoisting tool, the Apex and Base Gores are placed in the Gore Trim Fixture, and the mating edges of the Apex or Base Gore are net trimmed. An Apex Gore and a Base Gore are placed on the tilting platform and welded. The weld is X-rayed with an Apex to Base Weld Fixture.

2.3.1.3.2 <u>Outboard Fuel Suction Fitting Assembly, Lower Head Fuel Tank</u>

The outboard fuel suction elbow halves are received from Wichita unaged, semi-finished, with tooling holes in excess at each end.

The elbow halves are placed in trim Fixture which is mounted on positioner and using manipulator; the halves are trimmed leaving .010 per edge for weld shrinkage.

The trimmed elbow halves are cleaned and prepared for welding, placed in weld fixture and, using positioner and manipulator, welded together.

The welded elbow halves are placed in trim fixture and a trim line is scribed at both ends. The large end is then trimmed with 1/8 inch excess, and the weld head is removed at this end. The welded elbow halves are placed in weld trim fixture and, using positioners and manipulator, the large end is trimmed to net size. The welded elbow halves and fittings, received from Wichita unaged and semi-finished, are cleaned and prepared for welding. They are placed in weld trim fixture and, using positioner and manipulator to locate, are welded together.

The small end of welded elbow halves is trimmed with 1/8 inch excess material and the weld bead is removed at this end.

The welded elbow halves and the fitting are placed in trim fixture, and using positioner, the circumference of the fitting is machined to net size.

The welded elbow halves and fitting are placed in weld and trim fixture and positioner and manipulator, the small end is trimmed to net size.

2.3.1.3.2 (Continued)

The welded elbow halves, fitting and flange, received from Wichita unaged and semi-finished, are cleaned and prepared for welding, placed in weld and trim fixture and, using positioner and manipulator, are welded together.

The completed weld assembly is placed in mill fixture and, using positioner and manipulator, the top face of the flange is machined to net size. The assembly is then placed in drill jig and the (40) .354/.342 diameter holes are drilled through the flange.

2.3.1.3.3 Inboard Fuel Suction Fitting Assembly, Lower Head Fuel Tank

This process is identical to that outlined on the outboard fuel suction fitting assembly.

2.3.1.3.4 Inboard and Outboard Fuel Suction Fitting Assemblies that are Modified by the Addition of Instrumentation Fitting(s).

The detail instrumentation fittings are received from Wichita minus tapping for the heli-coil, with a 3/8 inch tool hole in its place and in the unaged condition.

For these assemblies the instrumentation fitting(s) are welded in the elbow halves, in a weld and trim fixture, prior to any other assembly operations, after which the hole for the heli-coil is drilled and tapped. The follow-on assembly operations are identical to that outlined on the outboard fuel suction fitting assembly.

2.3.1.3.5 Tunnel, Manhole, Emergency Fuel Drain, Fill and Drain, Fuel Probe, Fuel Cutoff and Electronic Feed Through Fittings.

These fittings are received from Wichita complete and unaged.

To avoid heat distortion during welding the heli-coil insert holes are omitted and two (2) tooling holes are included at the two (2) heli-coil insert locations. One (1) tooling hole is required at "key" location for assembly purposes, the other for detail manufacturing purposes.

2.3.2 Tank Sub-Assemblies

2.3.2.1 Cylindrical Skin Section and Ring Baffle Assembly.

Assembly consists of four (4) skin segments welded together to form a cylinder 10 feet high and 33 feet in diameter, a series of circumferential ring baffles mechanically attached to the skin tees, and other bracketry.

2.3.2.1.1 Cylindrical Skin Section Assembly.

The tank cylindrical skin section assemblies, one (1) upper and one (1) lower, both consist of four (4) skin segments, each 10 feet high by approximately 26 feet long, formed to contour by Wichita; cleaned, etched, conversion coated and welded together at Michoud. (See Figure 2-57).

Skin section segments, after conversion coating, are transported to the skin weld fixture in a transportation dolly. Skin segments are lifted to position on the weld fixture, aligned and weld plate extensions attached.

The test weld fixture is positioned, test weld run, removed and certified.

Vertical welding of skin segments is accomplished with weld equipment and seam X-rayed. Weld and X-ray one seam at a time, rotating parts 90 degrees on the fixture between welds. The skin section assembly handling sling is attached to the skin section assembly and the skin section is lifted and positioned in cylindrical skin assembly fixture for installation of the ring baffle segment assemblies.

2.3.2.1.2 Fuel Tank Cylindrical Skin Section Assembly and Circumferential Ring Baffle Assembly Installation - Upper and Lowers.

The circumferential ring baffles, pre-assembled in quadrants, are attached to the inner skin tee stiffeners at this point to save time in the final tank assembly tower and to strengthen the skin ring sections during handling. (See figures 2-57 and 2-58)
The cylindrical skin assembly is first located in the assembly fixture for installation of the ring baffle segment assemblies to the inner skin tee stiffeners. Temporary support tooling is required for baffles and miscelaneous supporting members.

U3 4211 4000

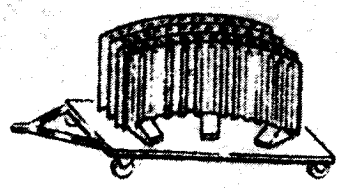

Cylindrical Skin Sections

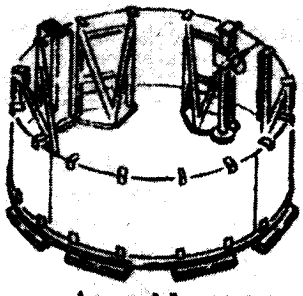

Assemble Weld & X-Ray

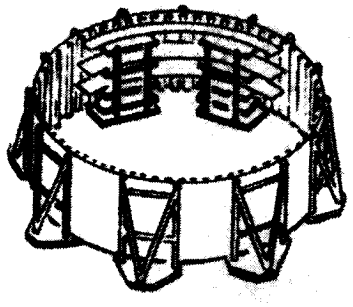

Install Circumferential
Baffle Assemblies

Figure 2-57 CYLINDRICAL SKIN SECTION ASSEMBLIES

2.3.2.1.2 (Continued)

Ring baffle segment assemblies, four (4) per ring baffle, are positioned individually, drilled and temporarily attached to skin tee stiffeners; segment splices are drilled and temporarily attached.

Parts are removed, deburred, wiped clean, and reinstalled with permanent fasteners, except assemblies near weld areas cannot be attached until after weld and associated repair of conversion coating of skin. These baffles are located and temporarily installed in the assembly fixture by drilling undersize holes and attaching with nylon rivets.

Tube assemblies and vertical stiffeners are positioned, drilled and either permanently or temporarily attached while in the assembly fixture.

2.3.2.1.2.1 Circumferential Ring Baffle Segment Assembly. (See Figure 2-59)

The Circumferential Ring Baffles are ring-shaped reinforced disk-type structures that are installed on the inner surface of the tank to minimize slosh of fuel in the tank and strengthen the structure. The Ring Baffle Segment Assemblies are pre-assembled in 90 degree segments. Fabricated details are obtained from Wichita. Assembly operations and standards procurement are Michoud responsibility.

Locate and assemble detail parts in the Ring Baffle Segment Assembly Fixture.

Drill rivet and bolt holes as required.

Disassemble, remove from fixture, deburr parts, wipe parts clean, reassemble in fixture, and rivet or bolt parts together as required.

2.3.2.2 Tube Assembly - Fuel Tank

Tube assemblies of various lengths are used as struts for the Ring Baffles and Cruciform Baffles.

All tube assemblies are basically the same, consisting of an aluminum tube swaged at each end with machined, aluminum fittings welded to each end.

Fittings without bolt holes and swaged tubes with excess on each end are procured from Wichita. Standards are procured by Michoud. All welding and drilling after assembly is accomplished at Michoud.

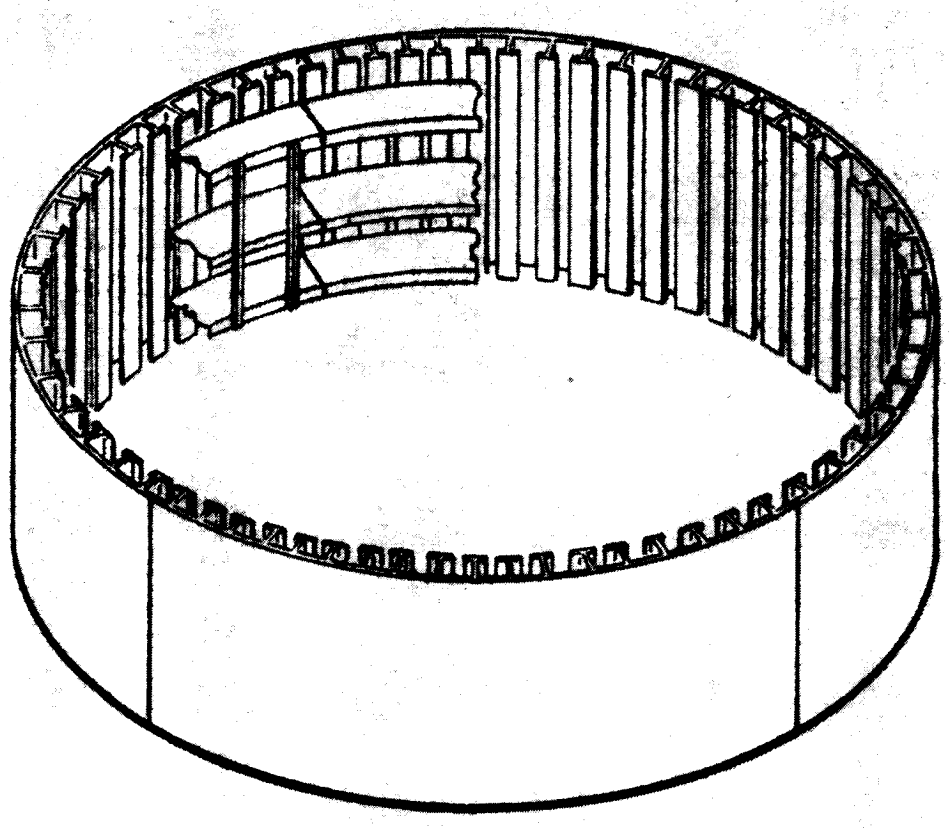

Figure 2-58 SKIN ASSEMBLY

3 4211 4000

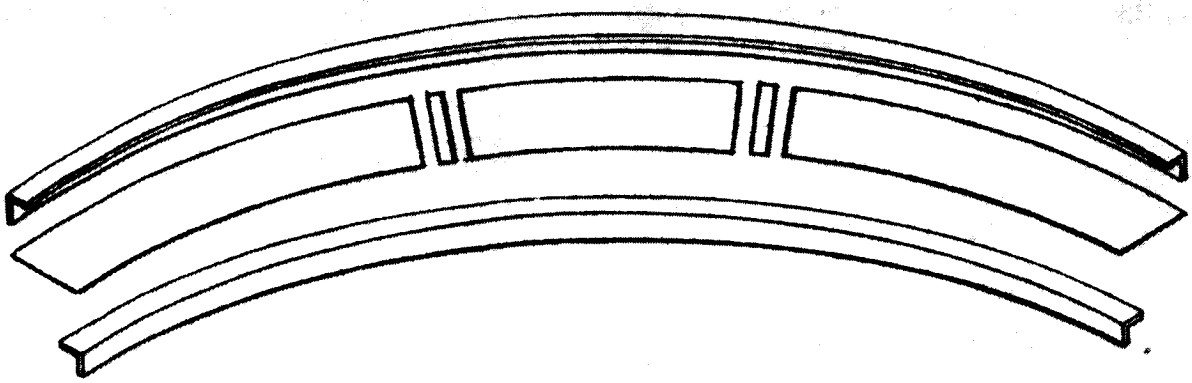

Ring Baffle Parts (1/4 Section)

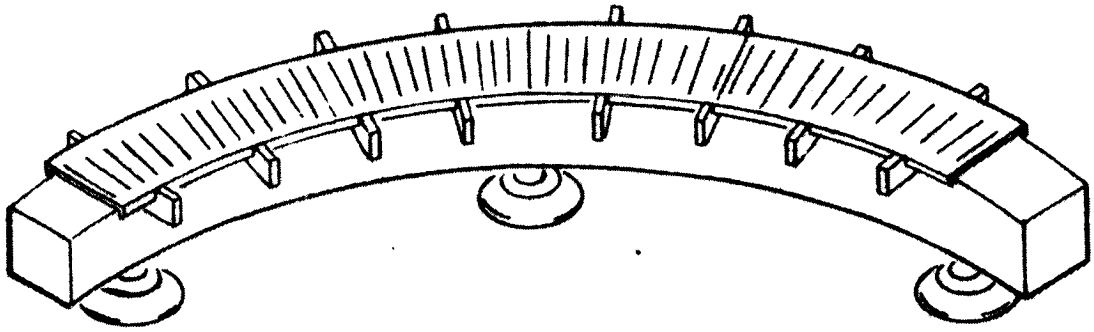

Ring Baffle Assembly (1/4 Section)

Figure 2-59 CIRCUMFERENTIAL BAFFLE (FUEL TANK)

U3 4211 4000

2.3.2.2 (Continued)

Swaged tubes are squared and cut to net length. Tube and fittings are positioned and aligned in weld fixture, welded, X-rayed and reconversion coated. The tube assembly is positioned in the drill fixture and end holes drilled.

The tube assembly is recleaned, and closed with plug and seal.

2.3.2.3 LOX Tunnel Assembly (Inboard and Outboard) (See Figure 2-60)

The LOX tunnel assembly consists of the tube tunnel assembly, and the tunnel upper and nut plates. The tube tunnel assembly is purchased complete with all stiffener rings bonded and spliced in place and with excess on the aft end. The tunnel upper is purchased complete.

Transport tube tunnel in storage rack. Use the hoisting tool to remove from rack and place in the weld fixture for girth welding to tunnel upper. Drill (72) rivet holes for nut plates in tunnel upper and place in weld fixture. Prepare the edges of the parts for welding. Align the parts and weld. X-ray weld while assembly is in the weld fixture, using the weld fixture accessory. Remove from the fixture and place in the production dolly. Hand clean and conversion coat the weld areas. Inspect and route to storage.

2.3.2.4 Lower Fuel Head, Baffle and Riser Assembly.

Information not available.

2.3.2.4.1 Installation of the Exclusion Riser.

Information not available, pending further process and tooling development.

2.3.2.4.2 Installation of Anti-Vortex Cruciform Baffle and Cantilevered Ring Baffle.

Information not available.

2.3.2.4.3 Cruciform Baffle Quadrant Assembly.

Insert the chords (3 required), webs (2 required), stiffeners (4 required), and all fittings and clips in the assembly fixture. Clamp the details in position and carry out the complete drilling operation. Remove the details from the fixture, deburr and clean.

3 4211 4000

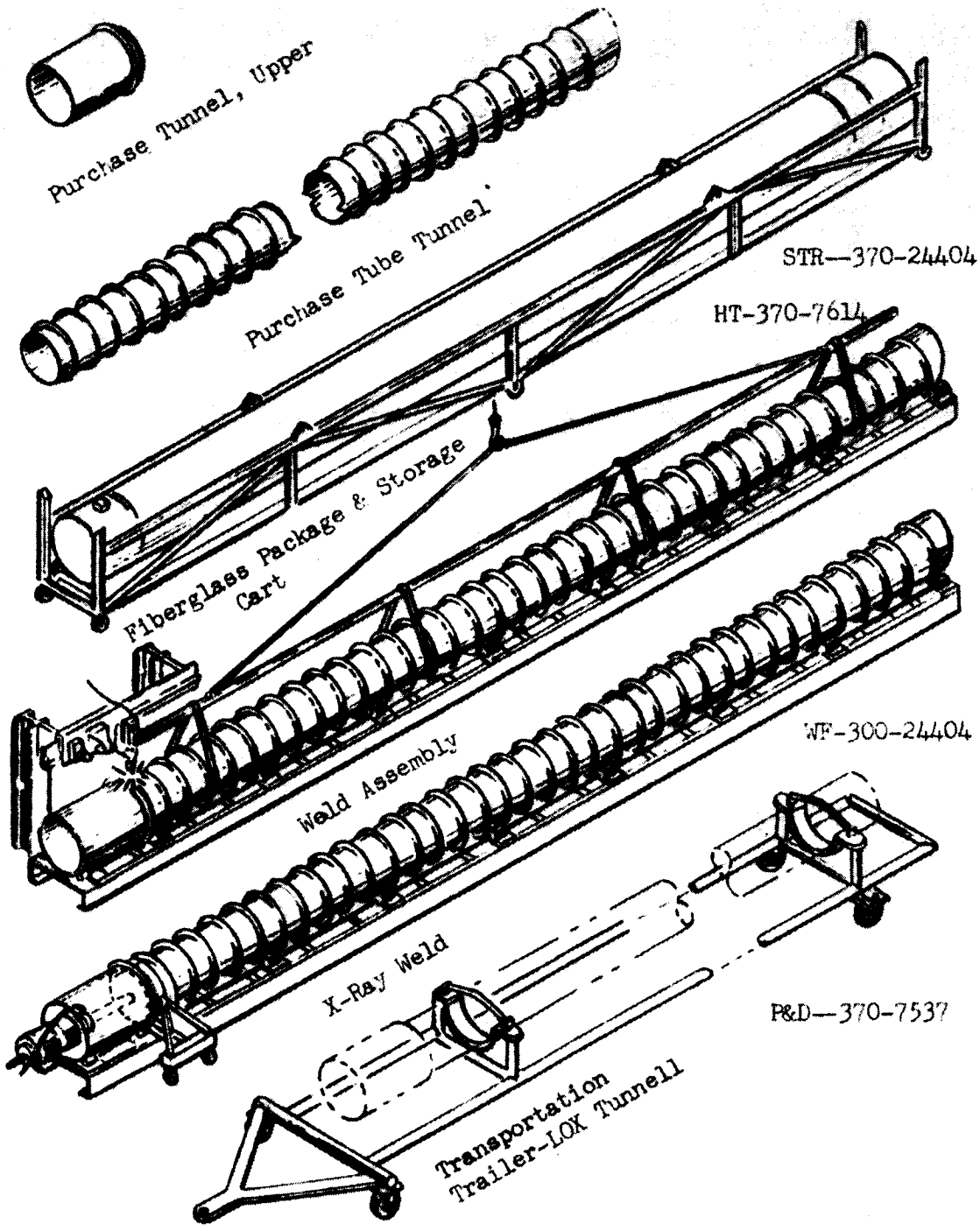

Figure 2-60 LOX TUNNEL ASSEMBLY

U3 4211 4000

2.3.2.4.3 (Continued)

Return the details to the fixture and fasten with rivets and lockbolts. Remove the sub-assembly from the fixture and clean.

2.3.2.4.4 Fuel Tank Cantilevered Ring Baffle Assembly.

The fuel tank cantilevered ring baffles consist of beaded sheet metal segments (webs) with angle extrusion (chords) on the inner and outer periphery. At 30 degree intervals, "T" sections are fastened from the outer chord to the inner chord for stiffeners and to splice the webs. The baffles have the general configuration of flat washers and consist of four (4) sub-assemblies (baffle quadrants) 90 degrees each, fastened together at each end with "T" and angle splices. They are supported inside the tank (at each end) by means of a cantilevered tubular structure from the preceeding rings, for the purpose of dampening fuel slosh.

2.3.2.4.4.1 Cantilevered Ring Baffle Assembly.

Position the chords (2 required), webs (3 required), web "T" splices (2 required), and all fittings in assembly fixture. Clamp the details in position and complete the drilling operation. Remove the details from the fixture, deburr and clean. Replace the details in the fixture and fasten with rivets and lockbolts. Remove the sub-assembly from the fixture and clean. Store the upper baffle quadrants.

2.3.2.4.5 Major Component Cleaning Facility.

Information not available.

3 4211 4000

2.3.3 Tank Assembly

The tank assembly consists of the lower tank sub-assembly, the upper tank sub-assembly, circumferential and cruciform baffles LOX tunnels, helium distributor, and other bracketry and equipment installations.

2.3.3.1 Lower Tank Sub-Assembly

This assembly consists of the lower bulkhead and related parts, skin ring assembly, and a portion of the ring baffle installation.

Transport lower head assembly to the high bay area on transportation trailer. Position personnel platform on top of bulkhead. Locate transportation trailer support tracks over the tank tower pit and position loaded transportation trailer on support tracks over turntable. Attach hoisting tool (previously installed on bulkhead) to tower hoist and lift approximately 15 feet above turntable. Remove transportation trailer and return to low bay area. (See Figure 2-61)

Transport lower skin assembly to the tank tower on transportation trailer and position over turntable. Using lifting sling, lift lower skin assembly from transporation trailer. Remove transportation trailer and support tracks from turntable. (See Figures 2-61 and 2-62)

Lower and position lower skin assembly onto turntable. Remove lifting sling. Raise internal elevator for work platform, (See Figure 2-63), and position external scaffolding. Close air conditioning curtain. Prepare edges for welding. Position welding fixture alignment tool. Lower and position head assembly to skin assembly. Position internal elevator and position test weld fixture opposite internal boom welder. Position test sample parts in fixture; weld and check samples Position test weld fixture opposite external boom welder. Position test sample parts in fixture; weld and check samples. Position test weld fixture opposite internal boom welder. Position test sample parts in fixture; weld and check samples. Remove test weld fixture. Position outside and inside boom welders for welding. Initiate outside arc. After tank sub-assembly has revolved approximately 8 feet, initiate inside arc. Weld inside and outside simultaneously (inside trailing outside by 8 feet). X-ray inspect. Clean locally and reconversion coat. Permanently install ring baffle adjacent to weld area, cantilevered ring baffle and cruciform baffle; (ring baffle previously installed, removed and placed on lower ring baffle). Remove support fixture, cruciform baffle and cantilevered ring baffle. Adjust temperature and open air conditioning curtain. Lower elevator and remove external scaffolding.

U3 4211 4000

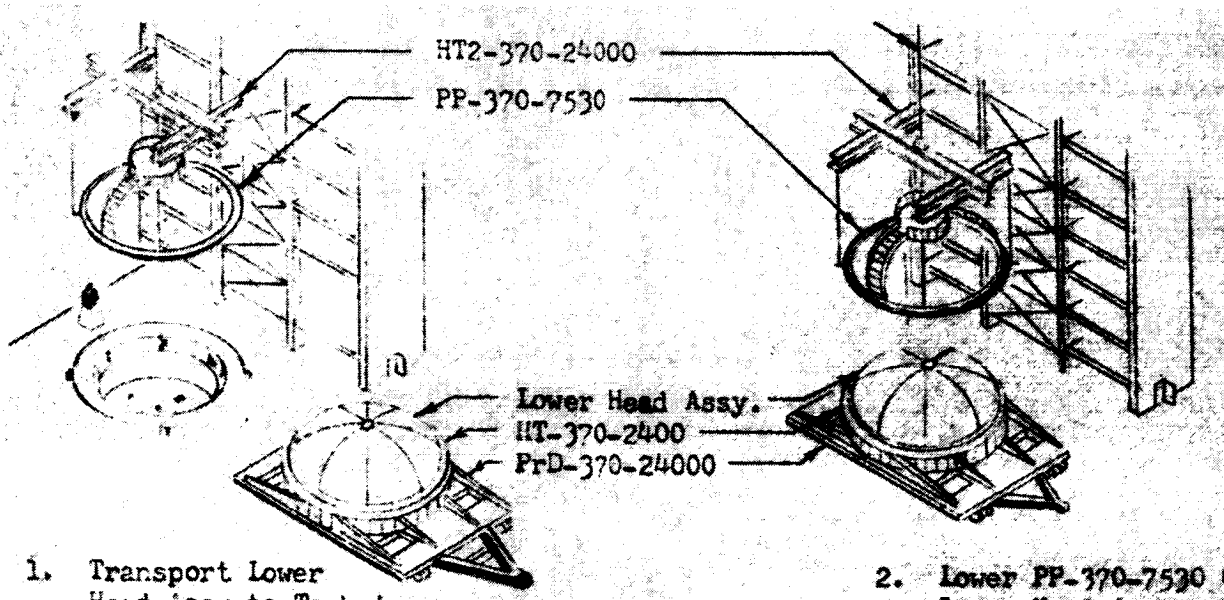

1. Transport Lower Head Assy to Tank Assy Tower

2. Lower PP-370-7530 Onto Lower Head Assy

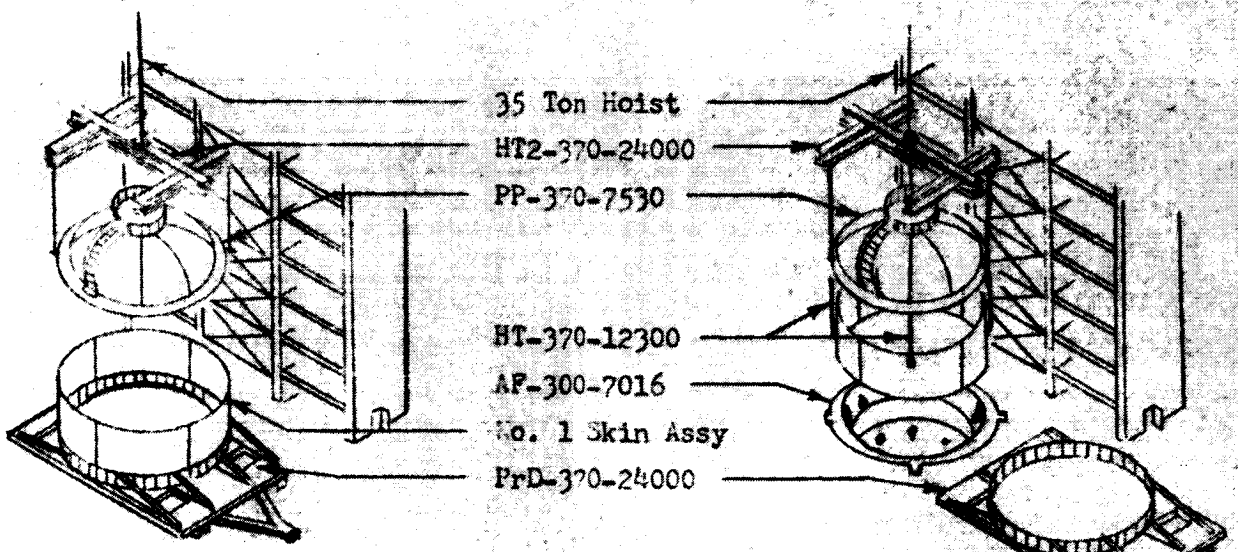

3. Position No. 1 Skin Assy

4. Lift No. 1 Skin Assy Off Dolly

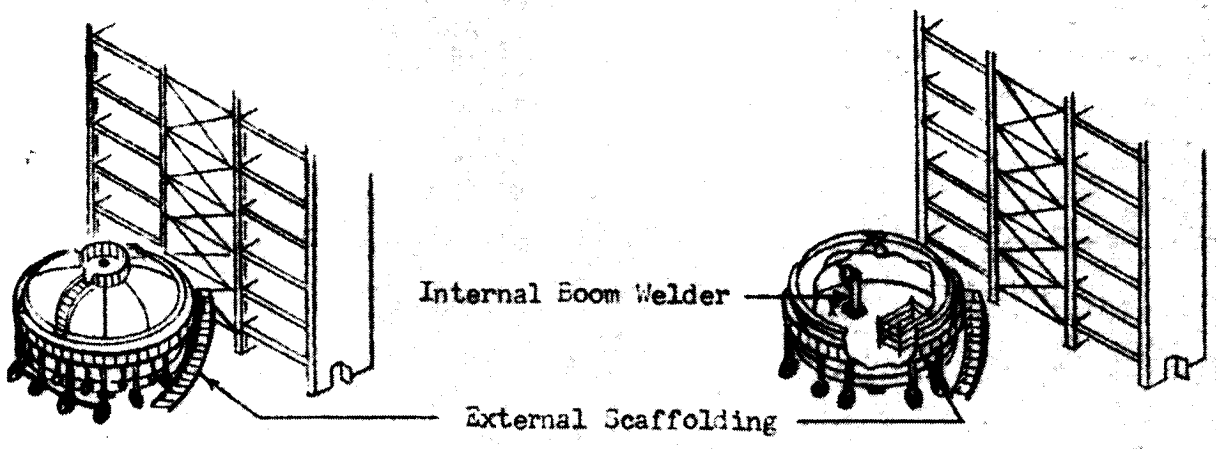

5. Position External Scaffolding

6. Weld Lower Head Assy To No. 1 Skin Assy

Figure 2-61 FUEL TANK ASSEMBLY (SHEET 1 of 4)

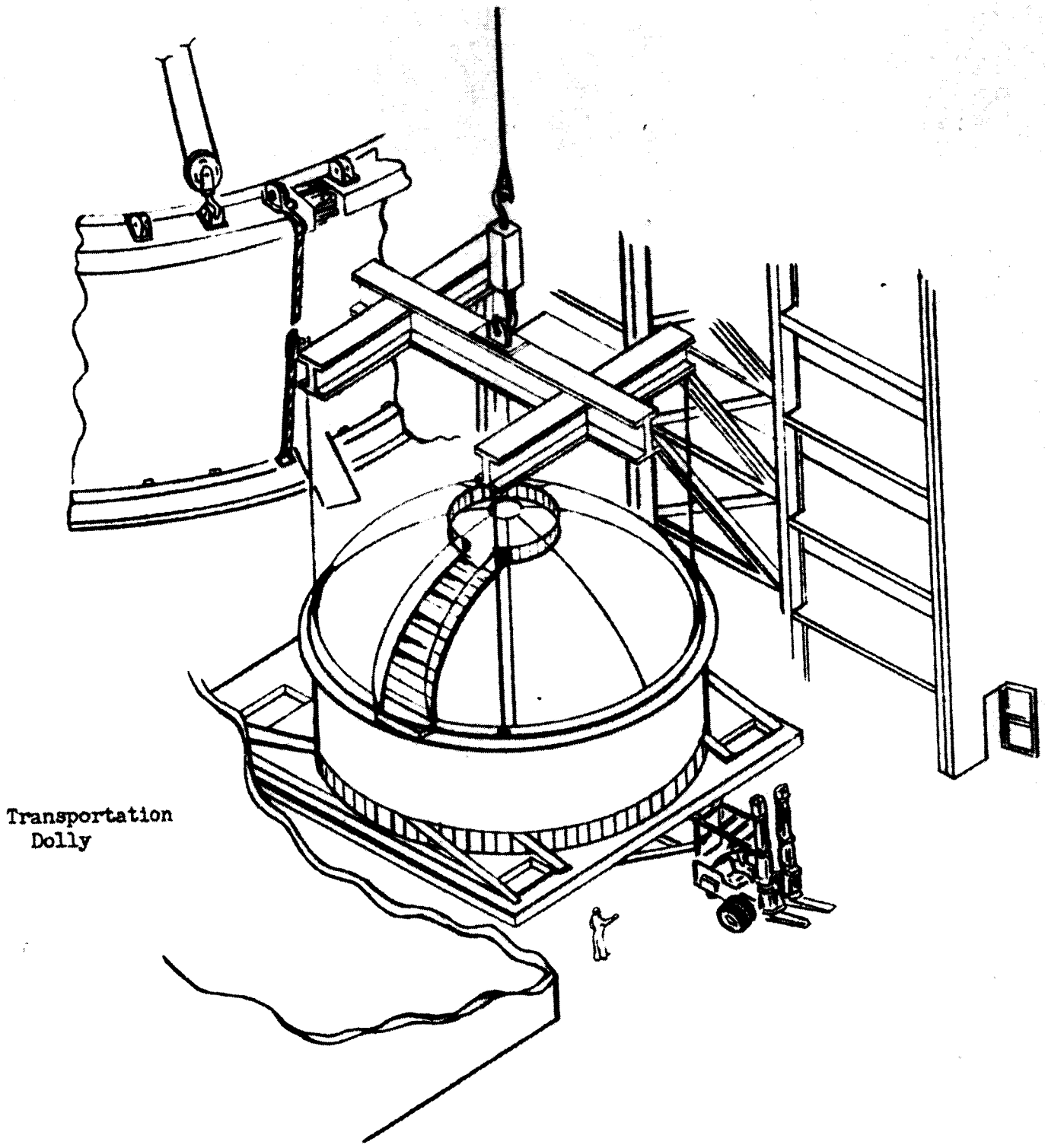

Figure 2-62 POSITIONING LOWER SKIN ASSEMBLY ON SKIN NO 1. IN VERTICAL TOWER

U3 4211 4000

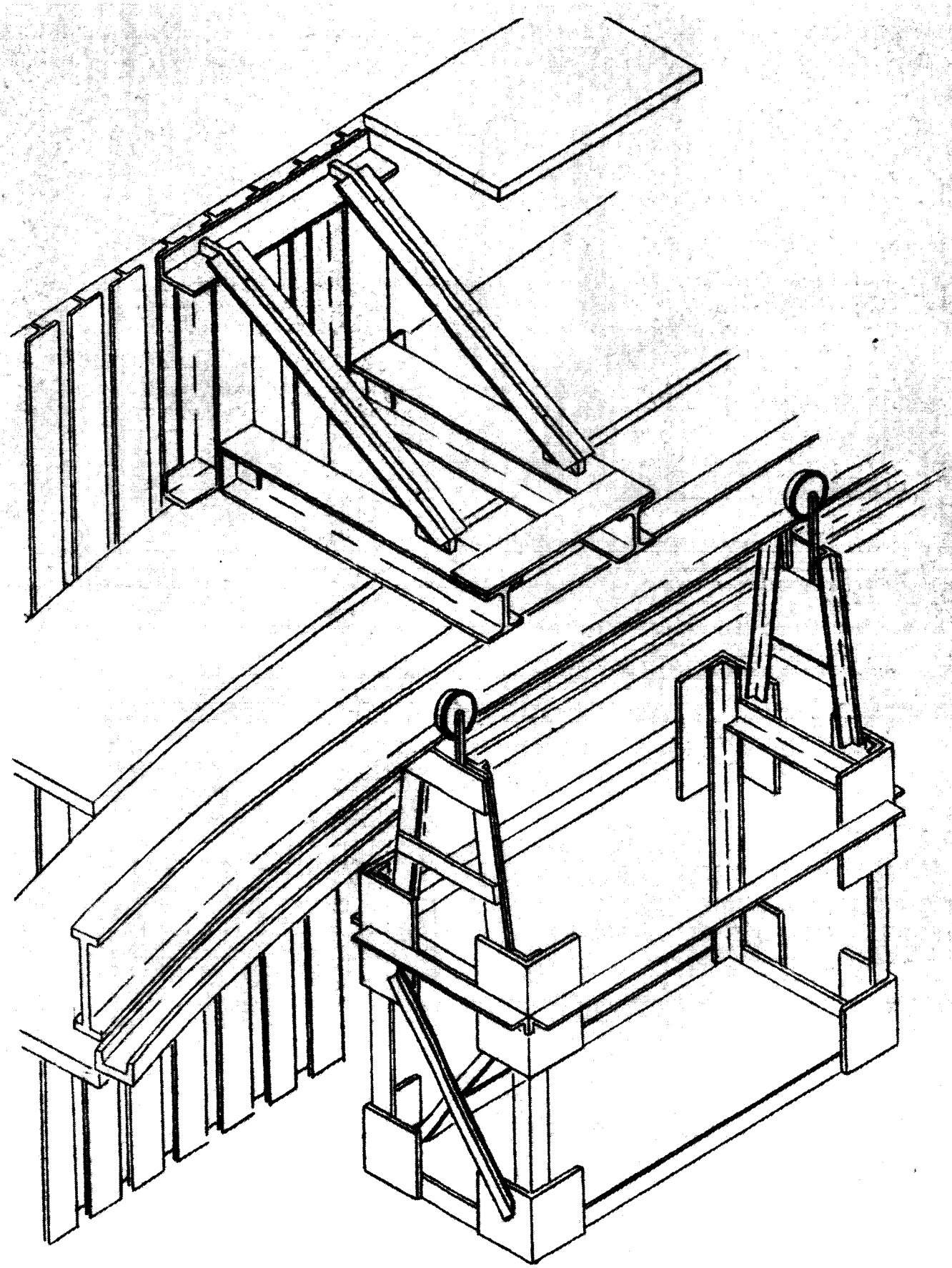

Figure 2-63 - Closeout Personnel Platform

2.3.3.1 (Continued)

Raise lower tank sub-assembly with hoisting tool and tower hoist to a height of 15 feet above the turntable. Place transportation trailer support tracks over pit and position transportation trailer on support tracks over pit. Lower the lower tank sub-assembly on to dolly. Disengage tower hoist from sling. Install protective cover over tank sub-assembly. Remove loaded transportation trailer from assembly tower. Using overhead crane, remove personnel platform.

2.3.3.2 Upper Tank Sub-Assembly

This assembly consists of the upper bulkhead and related parts, skin ring assembly and a portion of the ring baffle installation, (See Figures 2-61, 2-62, 2-63 and 2-64).
Transport upper head assembly to the high bay area on transportation trailer. Position personnel platform on top of the bulkhead. Locate transportation trailer support tracks over the tank tower pit and position loaded transportation trailer on support tracks over turntable. Attach hoisting tool, previously installed on bulkhead, to tower hoist and lift approximately 15 feet above turntable. Remove transportation trailer and return to low bay area.

Transport upper skin assembly to the tank tower on transportation trailer and position over turntable. Using lifting sling, lift upper skin assembly off transportation trailer. Remove transportation trailer and support tracks from over turntable.

Lower and position upper skin assembly on turntable. Remove lifting sling. Raise internal elevator for work platform and position external scaffolding. Close air conditioning curtain. Prepare edges for welding. Position welding fixture alignment tool. Lower and position head assembly to skin assembly. Position internal boom welder. Position test sample parts in fixture; weld and check samples. Position test weld fixture opposite external boom welder. Position test sample parts in fixture; weld and check samples. Remove test weld fixtures. Position outside and inside boom welders for welding. Initiate outside arc. After tank sub-assembly has revolved approximately 8 feet, initiate inside arc. Weld inside and outside simultaneously (inside trailing outside by 8 feet). X-ray inspect. Clean locally and reconversion cost. Permanently install ring baffle adjacent to weld area and cantilevered ring baffle (ring baffle previously installed, removed and placed on lower ring baffle). Adjust and remove external scaffolding. With tower hoist and hoisting tool, raise upper tank sub-assembly to a height of 25 feet above turntable.

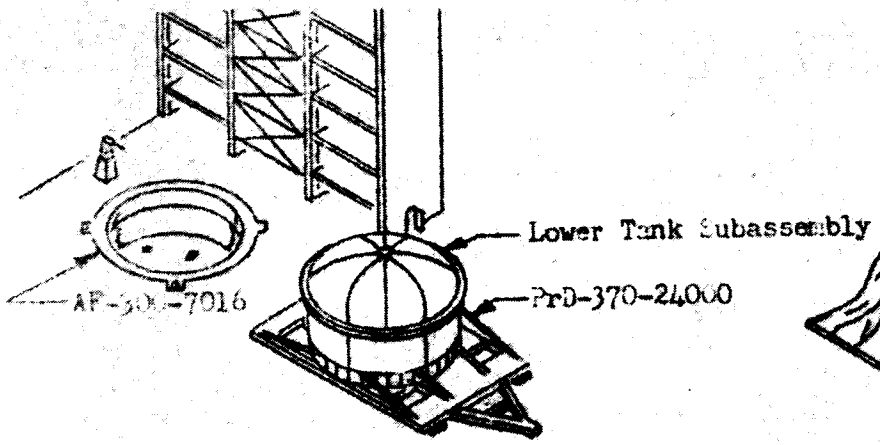

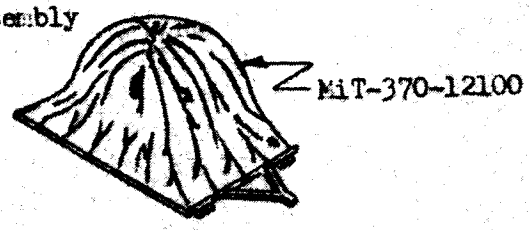

7. Remove Lower Tank Subassembly From Tank Assembly Tower.

8. Install Protective Cover On Lower Tank Subassembly

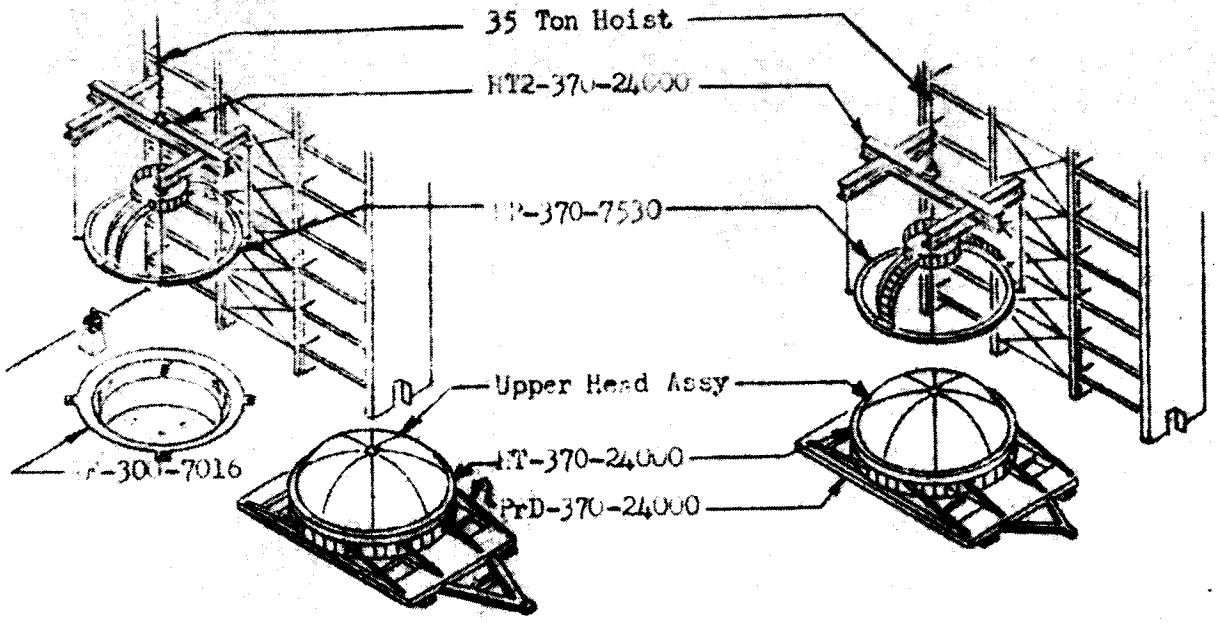

9. Transport Upper Head Assy To Tank Assy Tower

10. Lower PP-370-7530 Onto Upper Head Assy

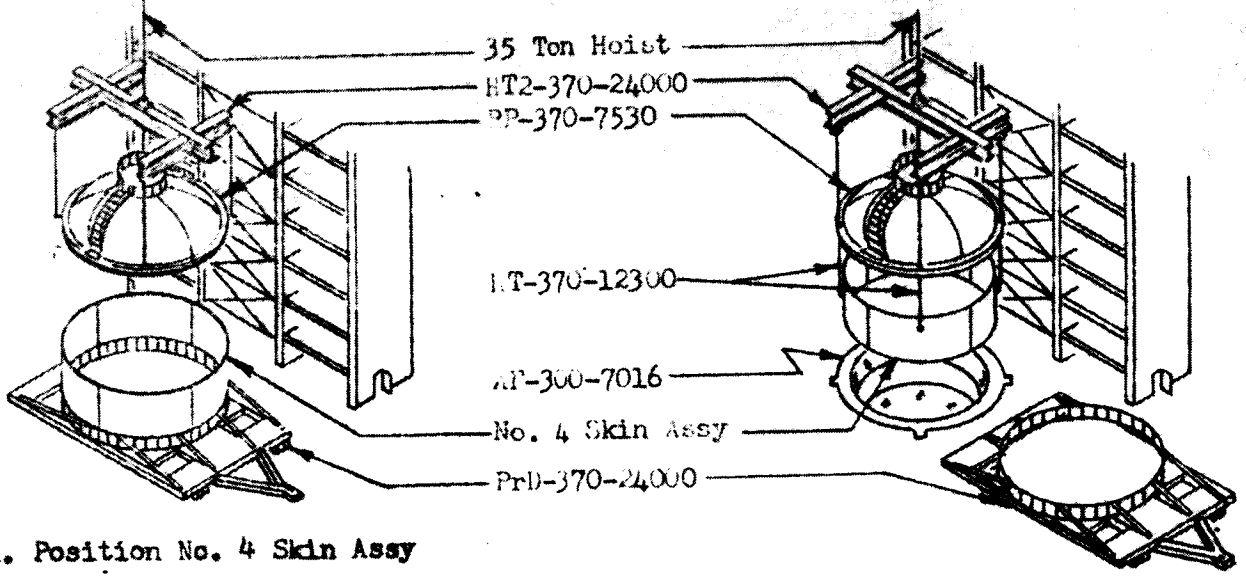

11. Position No. 4 Skin Assy

12. Lift No. 4 Skin Assy Off Dolly

Figure 2-64 FUEL TANK ASSY (SHT 2 of 4)

U3 4211 4000

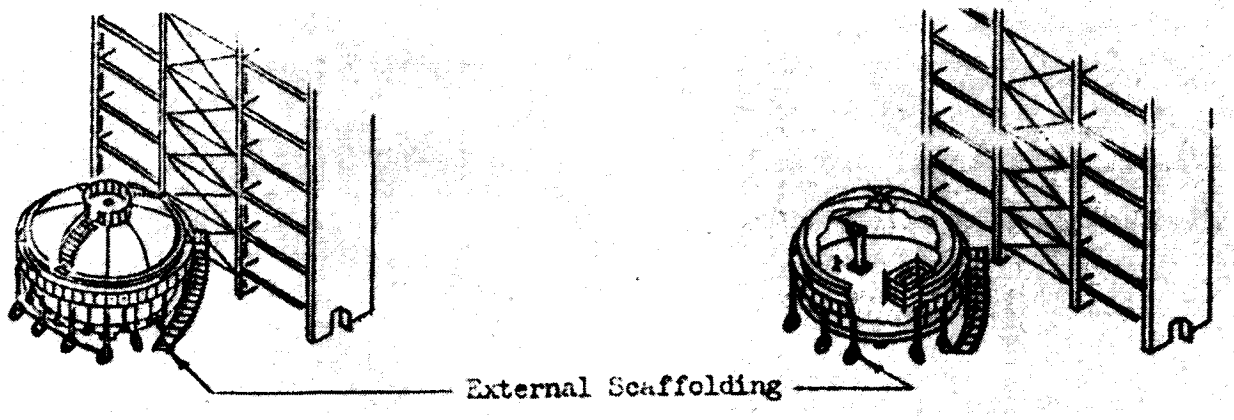

13. Position External Scaffolding

14. Weld Upper Head Assy To No. 4 Skin Assy

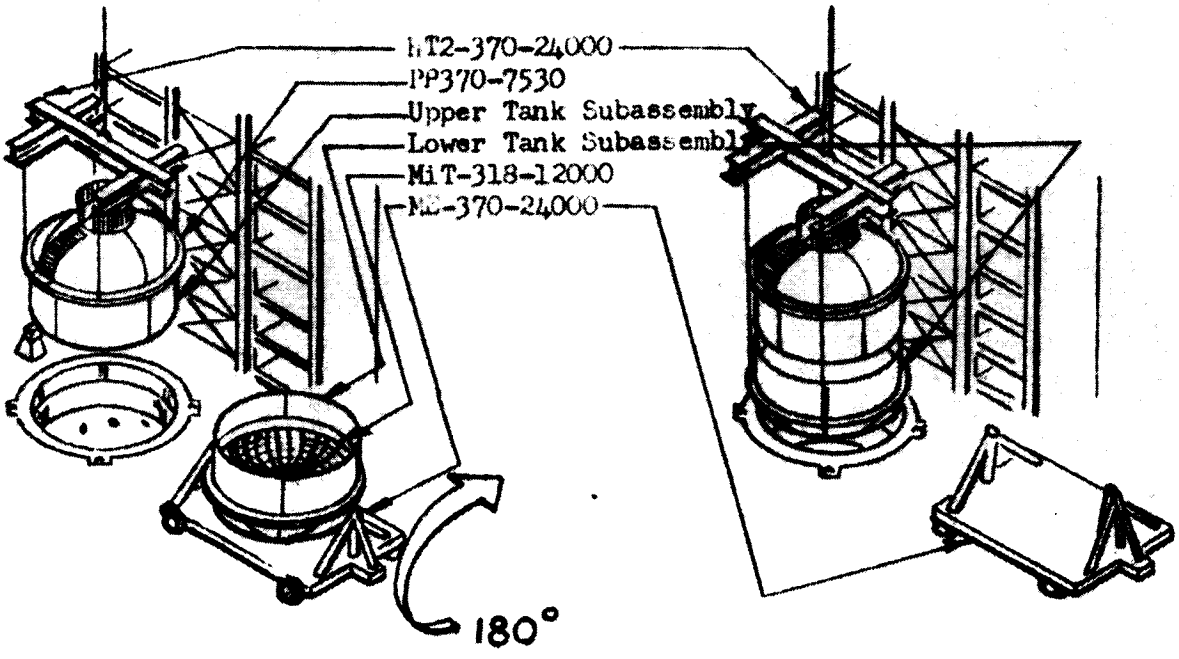

15. Invert & Position Lower Tank Subassembly

16. Position Upper & Lower Tank Subassemblies Onto Turntable

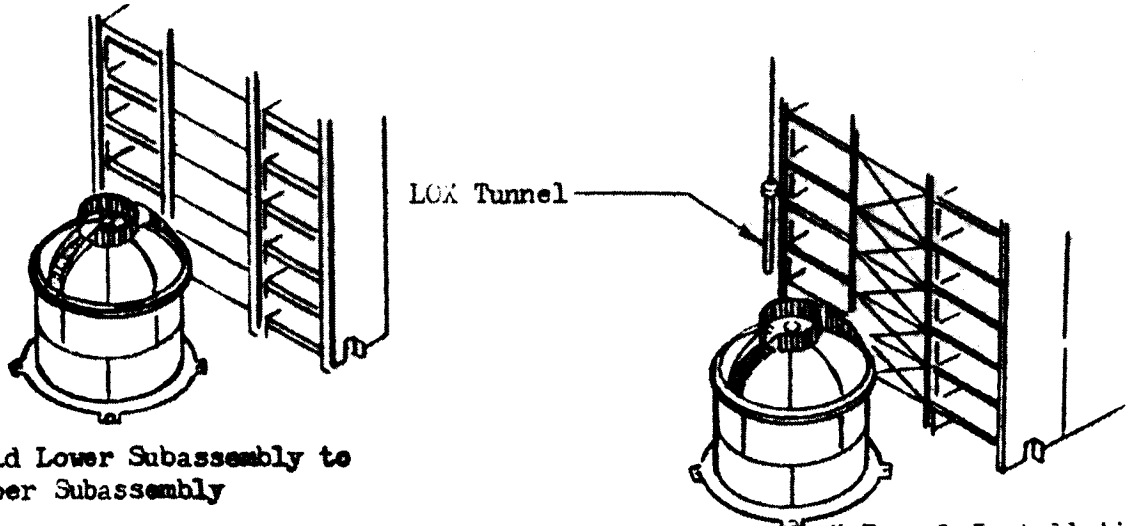

17. Weld Lower Subassembly to Upper Subassembly

18. LOX Tunnel Installation

Figure 2-64A FUEL TANK ASSEMBLY (SHEET 3 of 4)

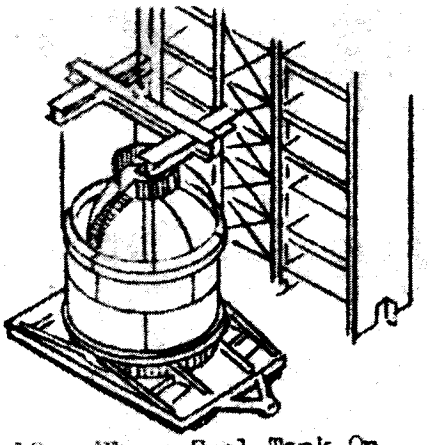

19. Place Fuel Tank On Production Dolly

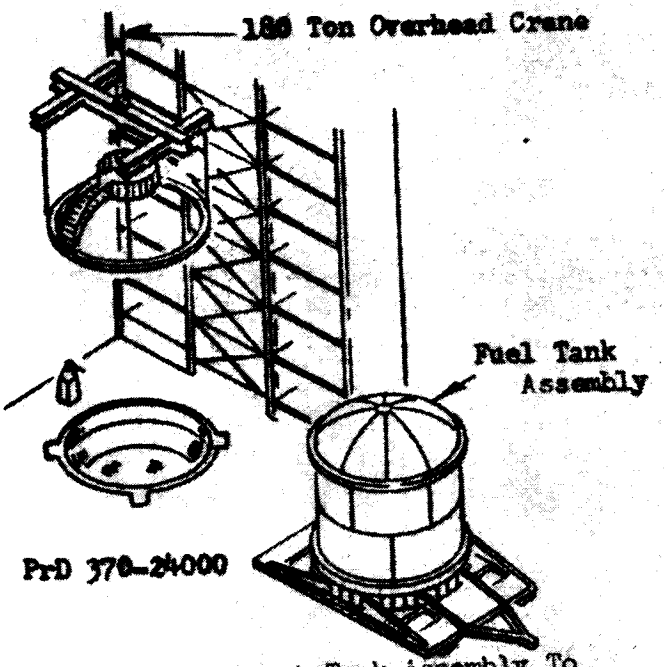

20. Transport Tank Assembly To Hydrostatic Test & Cleaning Tower

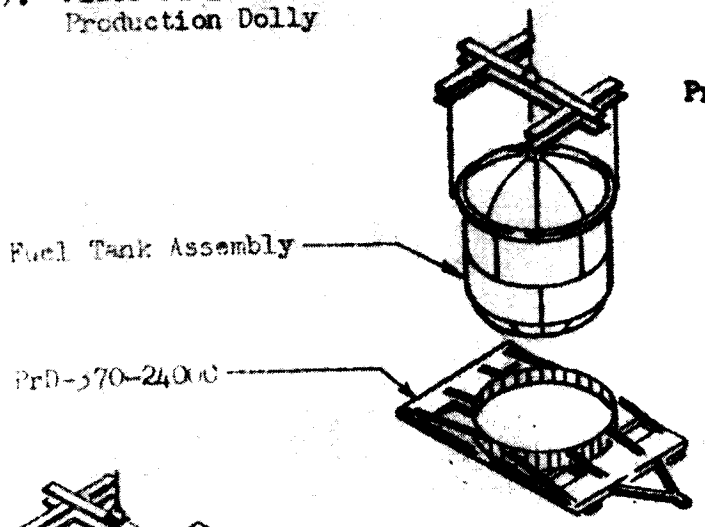

21. Lift Tank Assembly From Production Dolly

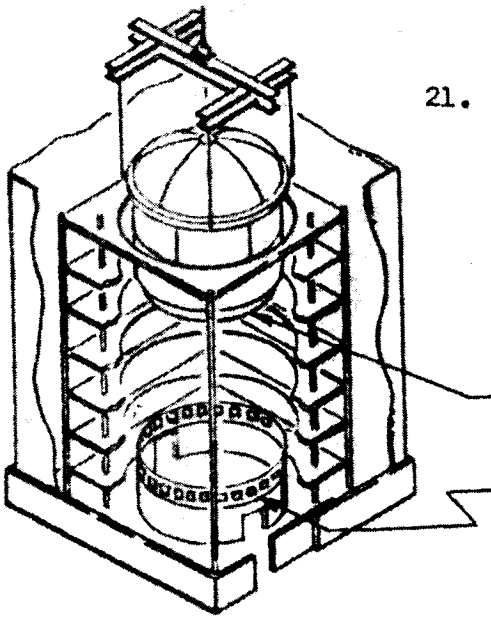

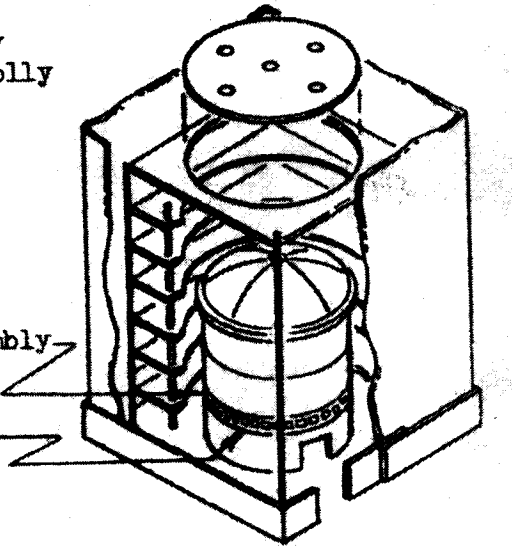

22. Position Tank Assembly Into Hydrostatic Test Facility

23. Clean And Hydrostatic Test Tank Assembly

Figure 2-64B FUEL TANK ASSEMBLY (SHEET 4 of 4)

JS 4211 4000

2.3.3.3 Final Tank Assembly

Consists of the upper and lower tank sub-assemblies and portion of ring baffle installation. (See Figure 2-64)

Remove protective cover from over lower tank sub-assembly. Using hoisting tool and overhead crane, remove lower tank sub-assembly from transportation trailer (used for storage rack), and place in inversion fixture and invert. Using overhead crane and hoisting tool, place inverted lower tank sub-assembly into production dolly. Position safety net and internal personnel platform in inverted lower tank sub-assembly. Place loose ring baffle below normal position (to be installed after close out weld). Position skate welding track and skate welder to the inside skin tee's.

Position production dolly over turntable. Using lifting sling, lift lower tank sub-assembly off production dolly. Remove production dolly from over turntable. Lower and position lower tank sub-assembly on turntable. Position external scaffolding around tank. Remove lifting sling and close air conditioning curtain.

Prepare edges for welding. Position welding fixture alignment tool.

Lower and align upper tank sub-assembly to lower tank sub-assembly. Position test weld fixture opposite external boom welder. Position test sample parts in fixture, weld and check samples. Remove test weld fixture. Position external boom welder and weld outside. X-ray inspect.

Position skate welder (See Figure 2-65) (track and welder previously installed) and weld skin tee's. Remove skate welder and track by means of manual hoist mounted on personnel platform. X-ray inspect. Using trim fixture (See Figure 2-66) trim excess off the sides of each Tee. Clean and reconversion coat the entire weld area. Install ring baffle adjacent to weld area (previously set on lower ring baffle). Remove safety net.

2.3.3.4 LOX Tunnel Installation (See Figure 2-64)

Attach crane hook to LOX tunnel setting gage; insert into tank assembly, set to length and angular trim as required (by clocking for inboard tunnel). Remove setting gage and place in production dolly; transfer setting gage to trim fixture and place in trim fixture for transferring angle and length to trim head; trim each tunnel (4 outboard and 1 inboard). Remove tunnel from trim fixture using hoisting tool and place in production dolly.

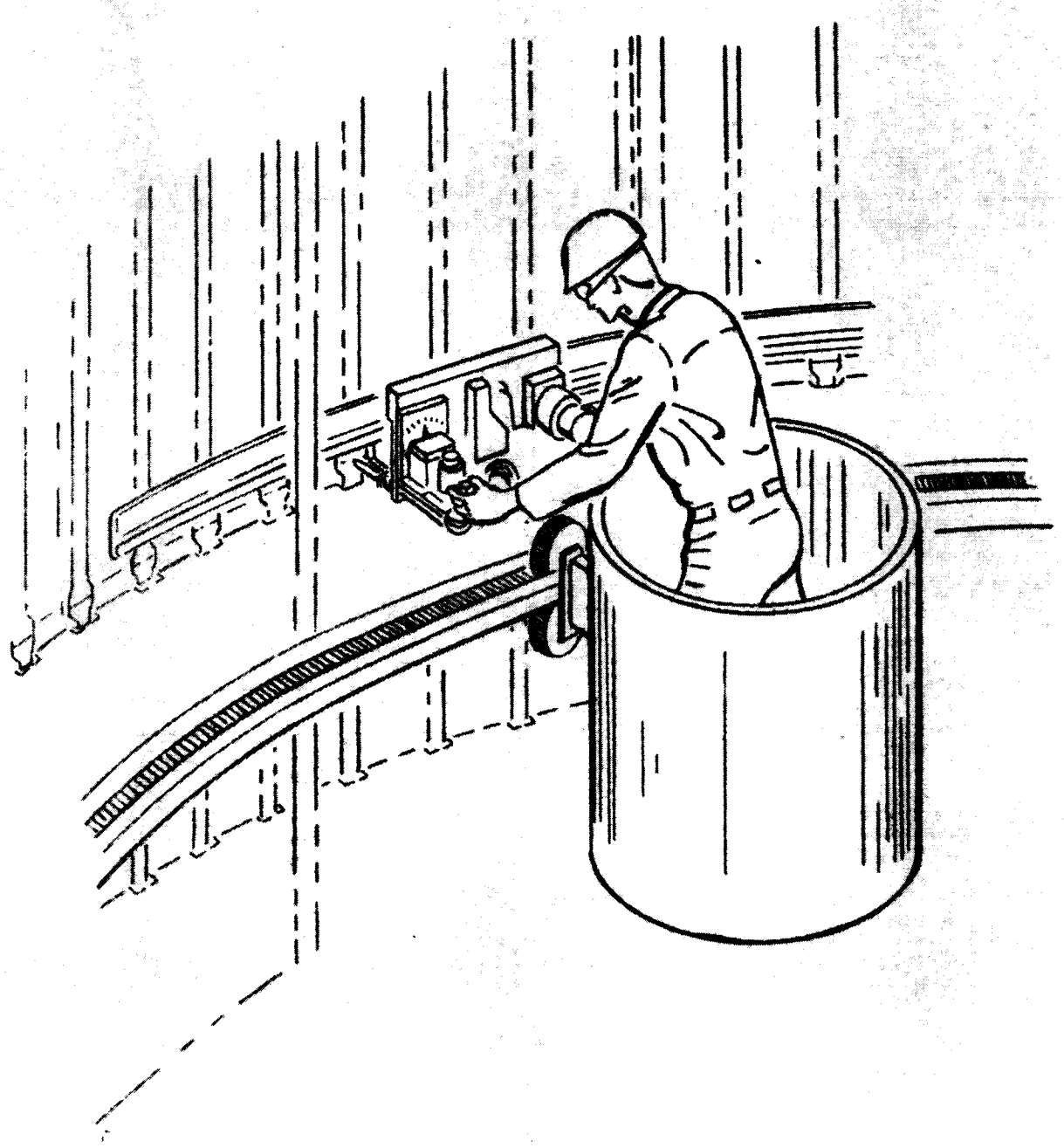

Figure 2-65 SKATE SKIN TEE WELDER

4211 4000

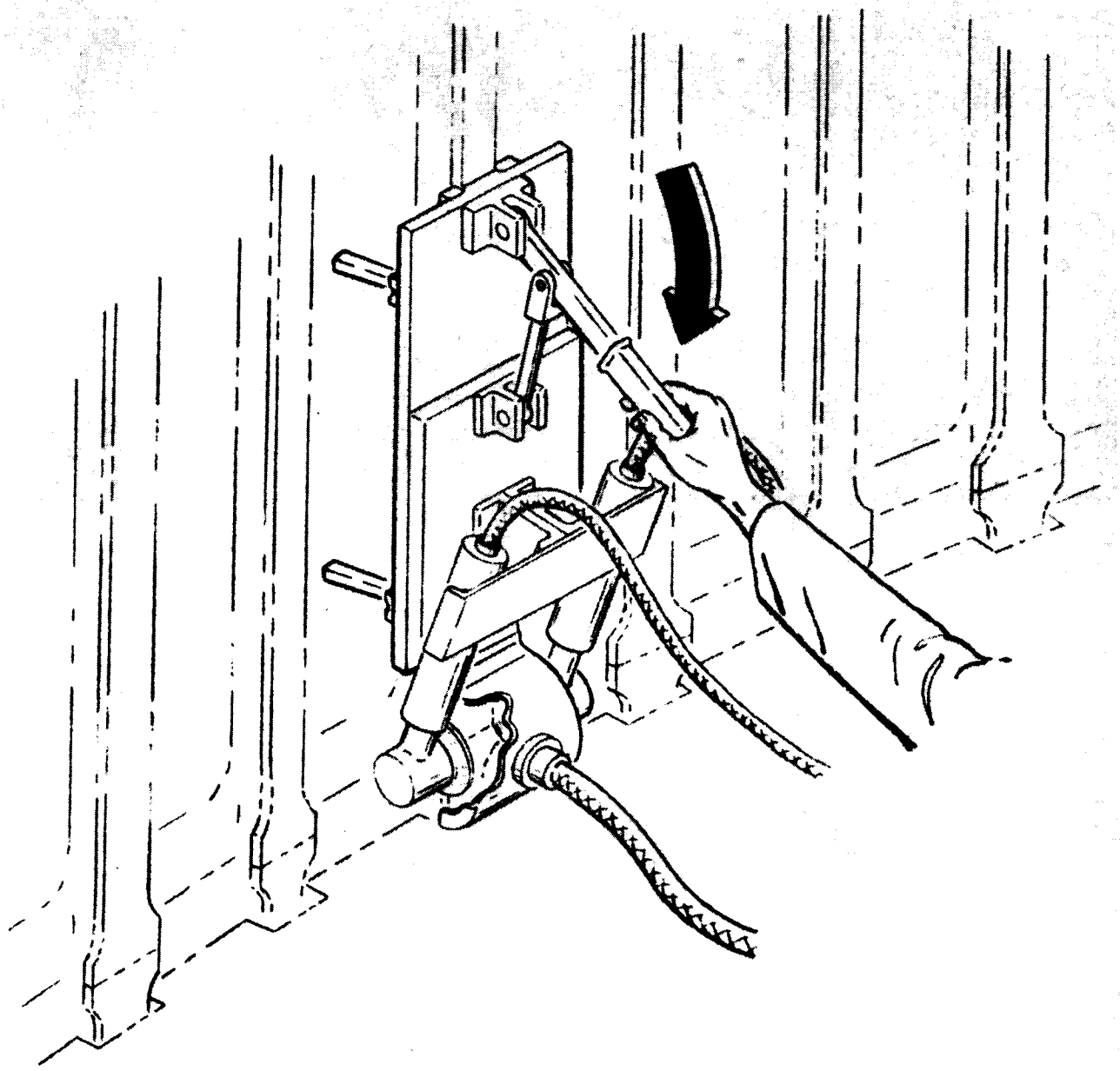

Figure 2-66 SKIN TEE TRIM

U3 4211 6000

2.3.3.4 (Continued)

Transfer to vertical assembly tower. Locate bellows on tunnel using hoisting tool. Install bolts and torque. Install protective cover over bellows. Attach hoisting tool and install tunnel in tank assembly and join tunnel to aft bulkhead fitting with alignment fixture (1 required of inboard and 1 required for outboard). Weld as required in weld fixture. X-ray welds using weld fixture accessory. Clean and conversion coat weld area.

Remove protective cover and make mechanical corrections between tunnel and upper LOX tunnel fitting.

Open air conditioning curtain. Remove all internal and external scaffolding and equipment.

Swing hoist out of position. Using overhead crane lift tank assembly and remove hoisting tool HT-370-24000 from lower section of tank, move to hydrostatic test tower.

2.3.3.5 Hydrostatic Test and Cleaning Facility

The Hydrostatic Test and Cleaning Facility is used basically for cleaning, conversion coating, pressure testing and calibrating the LOX and Fuel Tanks. (See Figures 2-64 and 2-68)

In addition, the GOX Distributor and the associated GOX line segment, the Helium Distributor, the Anti Vortex baffle assemblies, and various manhole covers are installed in this facility.

Remove fuel tank from tank assembly tower and remove lower handling ring.

Lower fuel tank on to positioning and holding fixture, using overhead crane (180) tons and upper tank handling rings. Disengage crane and remove handling ring.

Level tank using positioning and holding fixture. Attach all necessary plumbing and position spray nozzle in manhole openings.

Clean and conversion coat. This process consists of chemical cleaning, de-ionized water rinsing and nitrogen drying.

Seal tank for 24 hour minimum.

Fill tank with de-ionized water, sodium dichromate additive and 12 PPM fluorescent dye.

Level tank within $\pm$ 3 minutes of verticality and Hydrostatic Test. Check entire tank surface for leaks.

Calibrate tank by draining an incremental batches.

U3 4211 4000

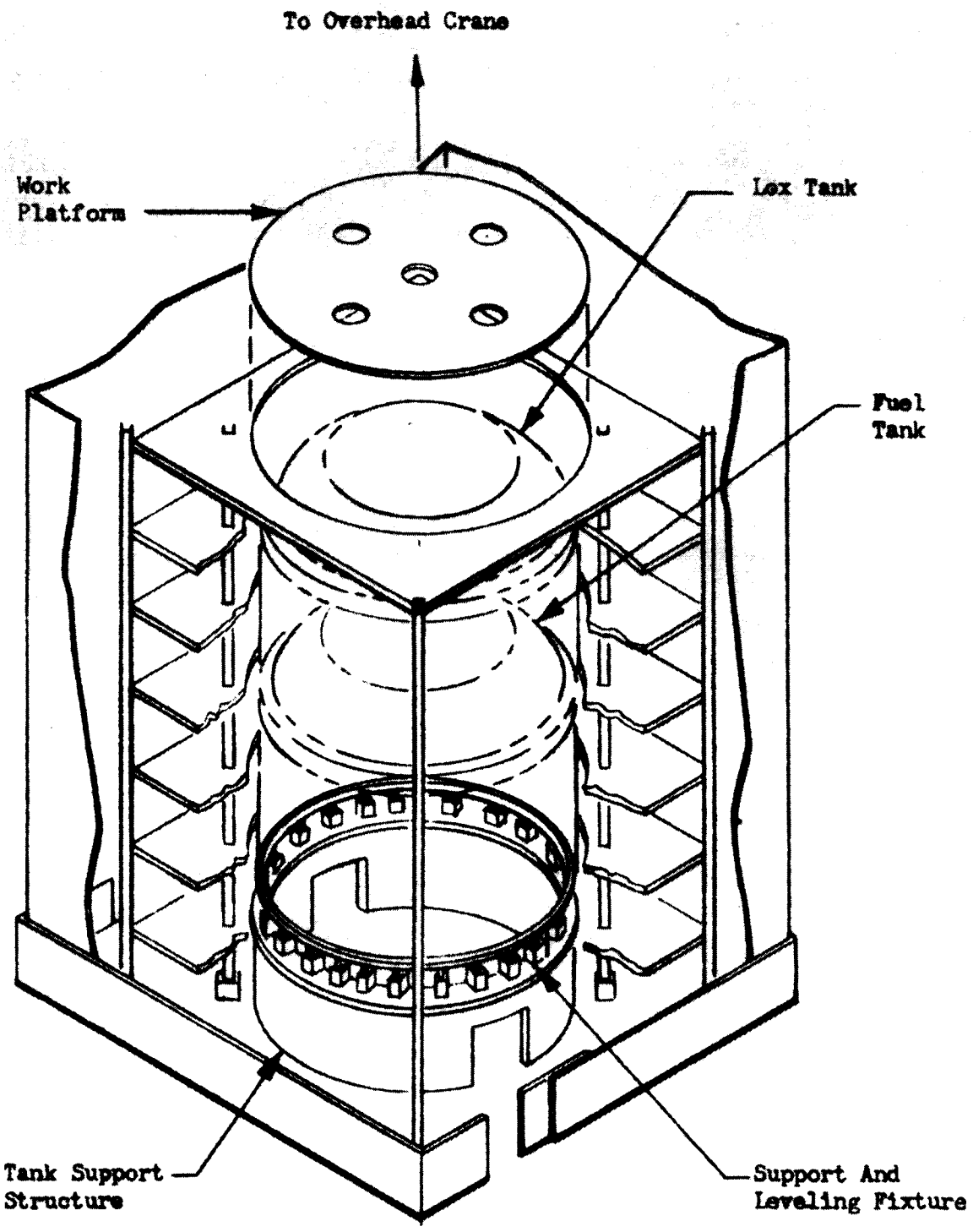

Figure 2-67 HYDROSTATIC TEST AND CLEANING FACILITY

U3 4211 4000

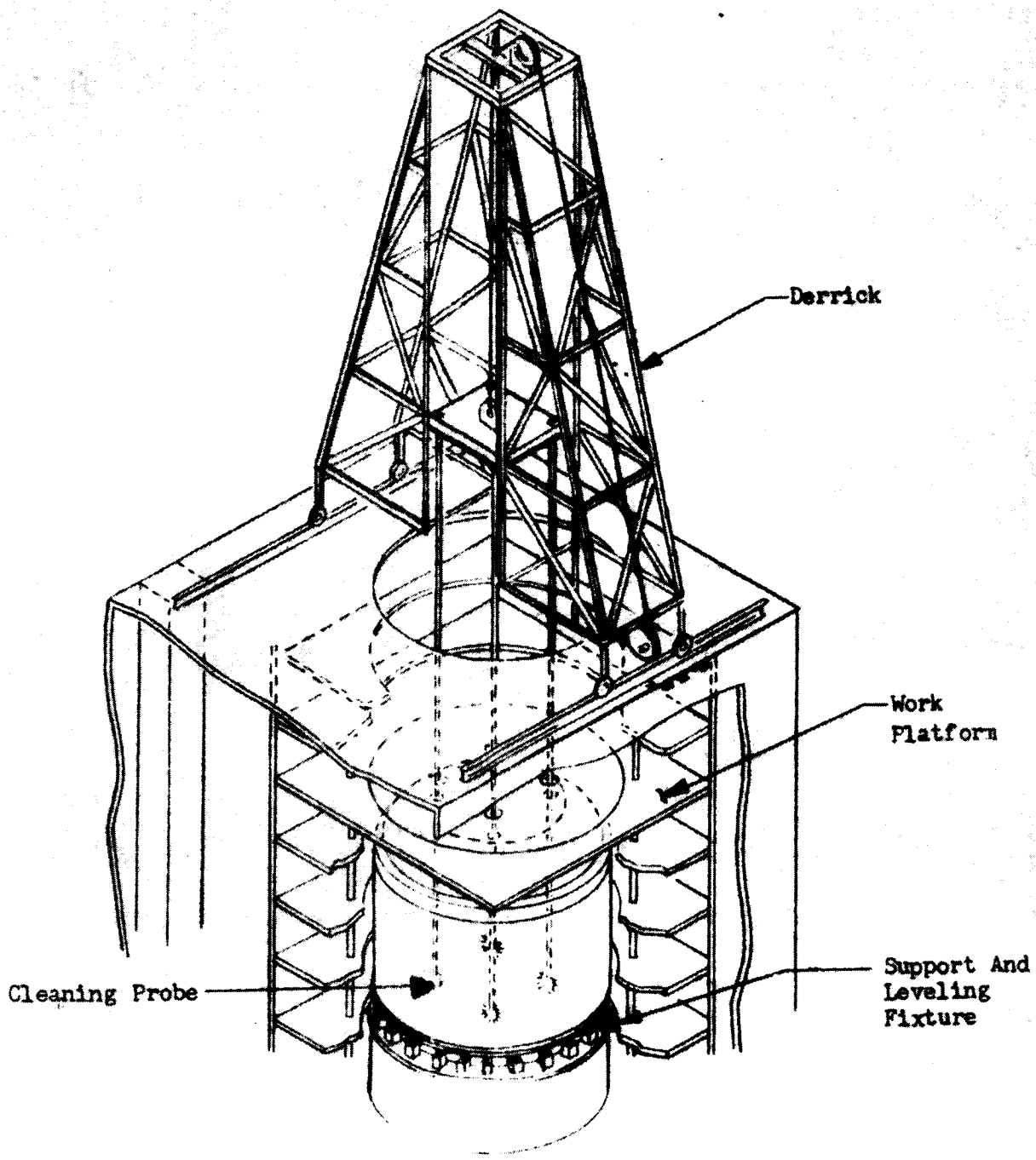

Figure 2-68 CLEANING FUEL TANK

13 4211 4000

2.3.3.5 (Continued)

Position spray nozzles in manhole openings. Final clean. This process consists of chemical cleaning, detergent washing, de-ionized water rinsing and nitrogen drying. Check tank for 48 hours for complete dryness.

Install anti vortex baffle assemblies, helium distributor, manhole covers, etc.

Fill tank with high purity N_2 to a positive pressure using pressurization - dehumidifying apparatus.

Replace upper handling ring and remove tank from tower using overhead crane. Reinstall lower handling ring and transport tank to painting.

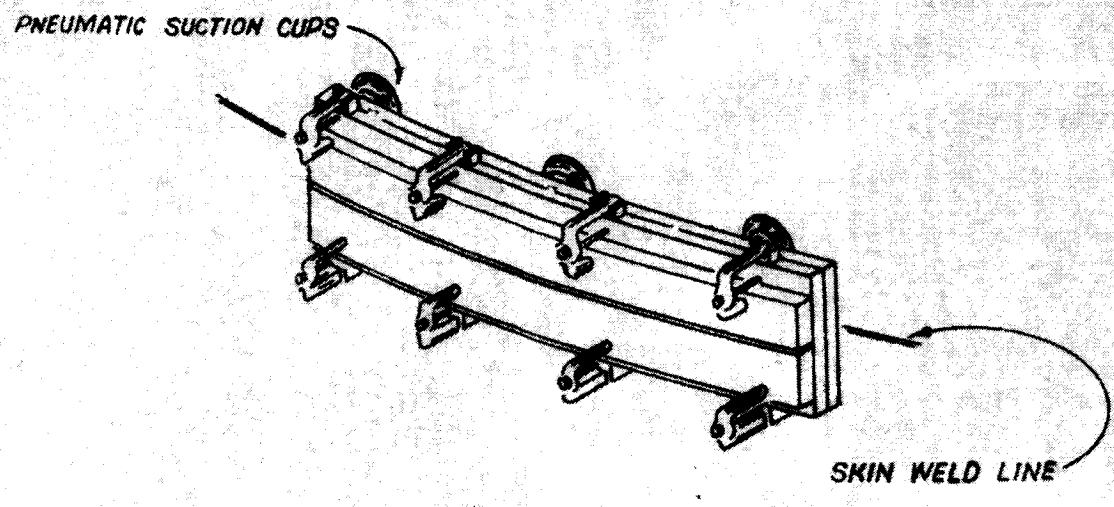

Figure 2-68A - TWF-300-24000 - Test Weld Fixture
"T" Ring Exterior Tank Assembly and Skin
to Skin

3 4211 4000

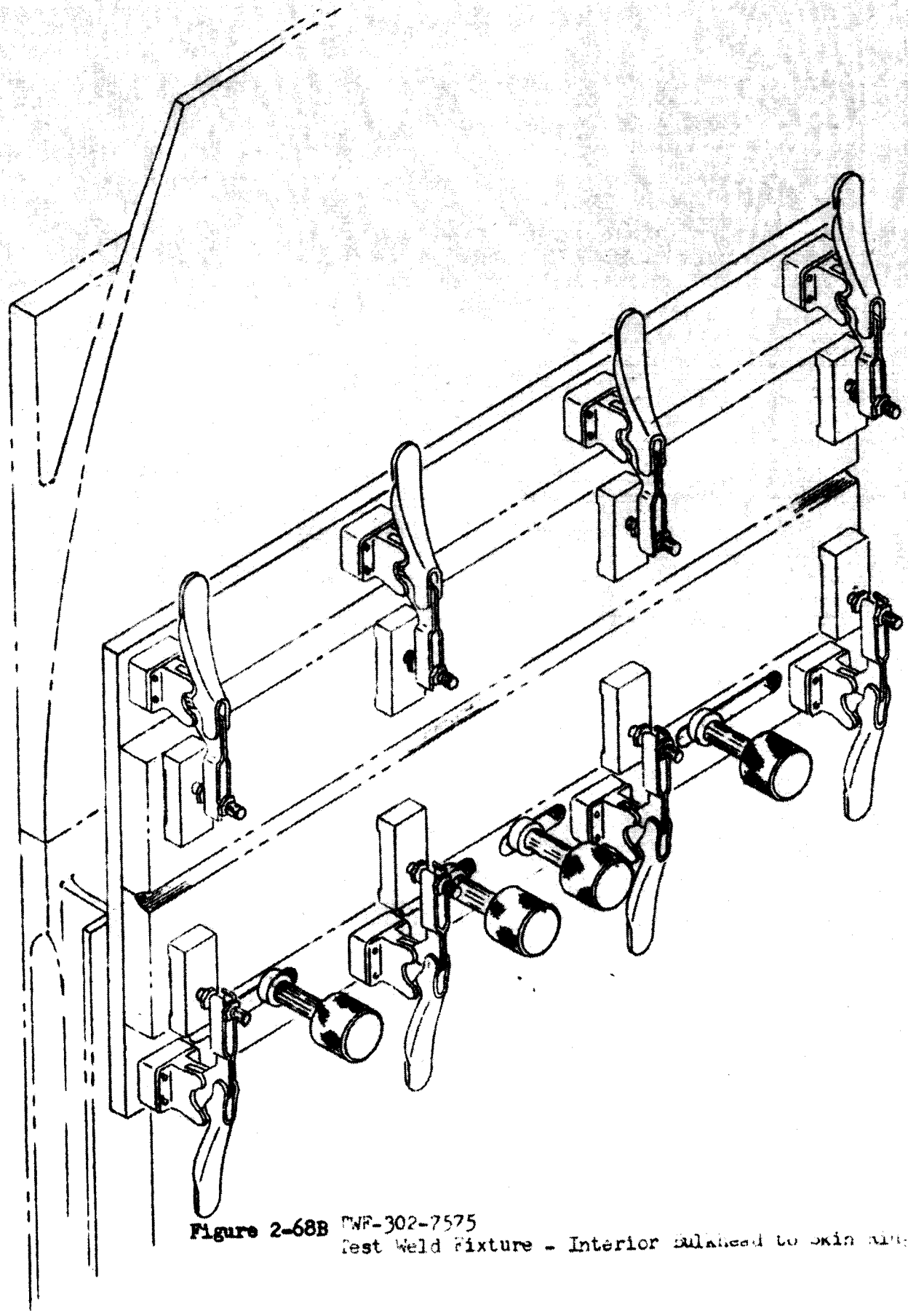

Figure 2-68B TWF-302-7575
Test Weld Fixture - Interior Bulkhead to Skin Ring

U3 4211 4000

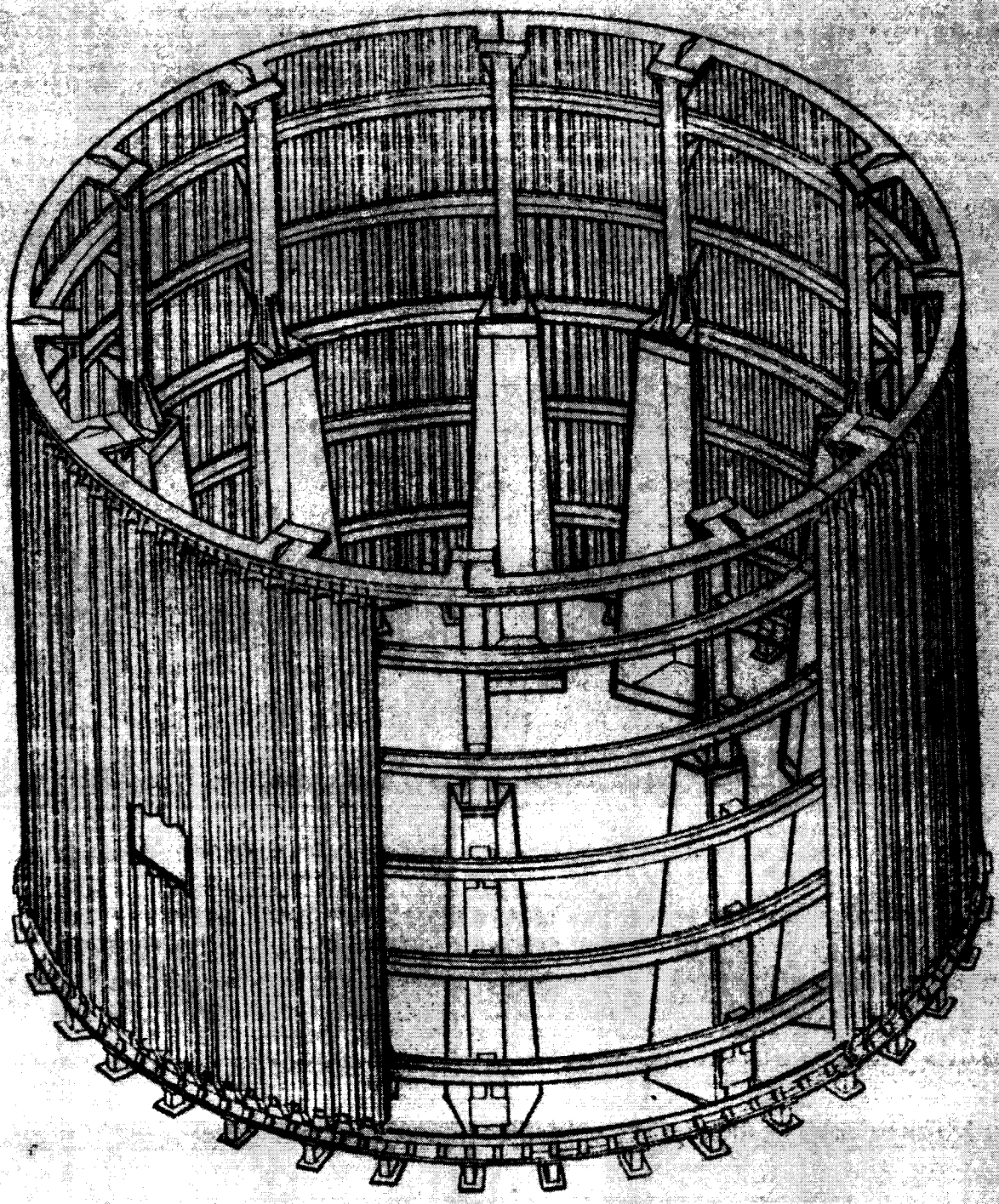

FIGURE 2-69 , INTERTANK STRUCTURE ASSEMBLY

3 4211 4000

2.4 INTERTANK STRUCTURE ASSEMBLY

The Intertank structure assembly is a cylindrical section which transmits all of the thrust loads and mechanically connects the LOX tank assembly to the fuel tank assembly. The intertank structure consists of five (5) equally-spaced frame ring assemblies covered with eighteen corrugated skin panels. Each end has attached one-hundred and eight (108) inner-forged fittings and 108 outer forged fittings for attachment to the "Y" ring of the fuel tank assembly and the LOX tank assembly. The skin panels contain openings such as: personnel access door, door drain, emergency LOX fuel vent, line pressurization, electrical conduit and provisions for venting internal pressure. **(Figure 2-69)**

Boeing will fabricate the intertank structure from (6) skin panel sub-assemblies, 60 degree frame ring segment sub-assemblies, forged fittings, and detail requirements. The diameter of the intertank structure will be controlled by dummy "Y" rings on the assembly fixture. The assembly will have attached fittings, (18) each on the fuel and LOX tank ends positioned to the dummy "Y" ring. All door and vent fittings will be attached and at the completion of all work in the assembly fixture, the rotational handler and locator MIT 330-7452 will be located and attached. After assembly, the intertank structure will be broken down into six, 60 degree skin assembly sections, crated in shipping fixture STR 370-7295, and shipped to MSFC.

At MSFC, re-assembly fixture AF 320-7290 will be used to re-assemble the intertank structure assembly components when received from Michoud. The re-assembly fixture will provide adjustable clamping features to move the skin assembly sections into proper relation for installing permanent fasteners to secure skin splice plates and frame ring splice. The intertank structure assembly is then removed from the re-assembly fixture and transported to the structural assembly tower.

2.4.1 Final Assembly of the Intertank Structure Assembly

The final assembly will be accomplished in an assembly fixture which consists of twelve towers mounted on a specially prepared, reinforced concrete platform. The diameter of the intertank structure assembly will be controlled by dummy "Y" rings.

2.4.1.1 Assembly Breakdown - MSFC Vehicles

For economy of manufacture the format of the generation breakdown will not be followed and the sub-assemblies will be planned on a -900 category. The sub-assembly compositions are listed under the sub-assembly sections of this plan. The final assembly consists of the following requirements: (1) -900 skin panels assembly, (2) -901 skin panel assembly, (1) -902 skin panel assembly, (1) -903

U3 4211 4000

2.4.1.1 (Continued)

skin panel assembly, (1) -904 skin panel assembly and (6) frame ring, 60 degree segments at each frame ring station.

Locate and drill all frame ring stiffener angles at skin splices and positioning hanger locations. Permanently attach stiffener angles to frame rings.

Locate and attach T-clips to stiffeners.

Install all frame ring gussets, attach angles, and T-clips.

Drill full size (4) holes, 16 places at the aft end, common to skin, frame rings and positioning hangers.

Install remaining opening frames.

Break assembly into (6) segments. Use handling tool to remove each segment and load into shipping fixture.

Package the inner forged fittings and unattached outer fitting in separate container for shipment to MSFC.

2.4.2 <u>Skin Panel Sub-Assembly - Mighoud Vehicles</u>

The six skin panel sub-assemblies will be assembled in an assembly fixture. Each sub-assembly will be made up of three skin panels, two sets of skin splice plates, and forged fittings on the skin panel sub-assembly fixture. All skins will be received with net trim on one edge and one end. The opposite edge and end will be trimmed in the assembly fixture. The outer forged fittings will be located, numbered for location, and permanently attached to the skin panels. The center fitting fuel tank end of each skin panel will be drilled and removed. The inner forged fittings will be located, drilled, numbered for location, and removed for separate packaging and shipment to MSFC. Six fittings will have .030 undersize holes, six vertical positioners, will be attached to skin at these locations, using undersized holes in skin. Skin panel assembly -903 will contain the personnel access door. Skin panel assembly -900 will contain a frame assembly, door, emergency LOX, that will be used for static test only. For flight simulation test, the frame assembly will be removed and the LOX door cover installed. Skin panel assembly -904 will have provisions for line pressurization, flight simulation tests, and static test. Skin Panel assembly -902 will accomodate the electrical conduit. All skin panel assemblies will have provisions for venting the internal pressure.

1 4211 4000

2.4.2.1 Skin Panel Sub-Assembly Breakdown

The -900 sub-assembly is composed of (3) skin panels, the LOX inner frame assembly, (18) aft inner fittings, (17) aft outer fittings, (18) forward inner fittings, (17) forward outer fittings, (4) outer splice plates and (10) inner splice plates. One panel will have the LOX door opening. One panel will have provisions for vent of internal pressure. One panel will have no opening.

The -901 sub-assembly (two required) is composed of (1) skin panel with pressure vent opening, and (2) skin panels with no openings. Fittings will be the same as the -900 sub-assembly.

The -902 sub-assembly is composed of (1) panel, fuel vent, (1) panel, pressure vent, and (1) panel assembly, electrical conduit. Fittings will be the same as the -900 sub-assembly.

The -903 sub-assembly is composed of (1) panel assembly, access door, (1) panel assembly, fuel vent, test, and (1) panel, no openings. Fittings will be the same as the -900 assembly.

The -904 sub-assembly is composed of (1) panel with pressure vent opening, (1) panel assembly, line pressurization-flight, and (1) panel assembly-line pressurization test fittings will be the same as the -900 assembly.

2.4.2.1.1 Skin Panel Sub-Assembly Outline

Load skin panel in position for trimming excess material on one edge. Trim one edge and deburr.

Load second skin panel and repeat.

Load outer skin splice plates.

Do not trim excess from third skin panel.

Load inner skin splice plates and splice drill plates and clamp in place.

Drill full size holes common to skins and splice plates per fixture drill plates.

Clear, deburr and install permanent fasteners common to skins and splice plates.

Cut openings and install structure assembly as required.

Using fixture provision trim remaining excess from skins as required.

Deburr trimmed edges.

U3 4211 4000

2.4.2.1.1 (Continued)

Index (17) outer fittings each end to dummy "Y" rings. Drill and ream holes common to skin and fittings (15) places each end. Drill holes undersize common to skins and skin splices. Number for location, clean, deburr and permanently install fasteners except at skin splices and at handling tool locations. Store unattached fittings for later packaging and shipment.

Index (18) inner fittings each end to dummy "Y" rings. Drill and ream holes full size common to skin except drill .030 undersize where positioners are installed in each skin panel on fuel tank and LOX tank ends.

Number for location, clean and deburr. Remove fittings and store for later packaging and shipment. Install (3) vertical positioners at each end, adjust to dummy "Y" ring.

Inspect completed assembly and use handling tool to remove skin panel sub-assembly from fixture.

Move to panel assembly storage area.

2.4.3 Frame Ring Segment Sub-Assembly

The frame ring 60 degree segment sub-assemblies will be assembled in vertical picture frame assembly fixtures. These sub-assemblies will be built as -900 assemblies, as the configuration will differ. Various stiffeners and attach angles will be omitted from the sub-assemblies and installed at final assembly of the intertank. All segment assemblies will have the frame ring chord splices omitted.

For the (5) MSFC vehicles, the frame ring chord splices will be piloted at assembly of the intertank assembly, and will be drilled and reamed full size at re-assembly at MSFC.

For the Michoud vehicles, the chord splices will be installed permanently at final assembly.

Each 60 degree frame ring segment will be comprised of an inner chord and an outer chord, two shear webs, stiffener angles, attach angles web splices, and tee-clips.

Load web splices in assembly fixture.

Load inner and outer T-chords in assembly fixture. Load (2) webs per tool holes. Adjust chords for trim and clamp. Scribe inner and outer chords for end trim and trim net.

Load stiffeners angles and attach angles.

3 4211 4000

2.4.3 (Continued)

Drill and ream holes per drill plates. Drill full size holes. Note: Omit web splice holes in one end and web and chord splice hole beyond web on opposite end. Omit holes common to skins.

Perform deburring and cleaming operations as required.

Permanently install all fasteners where possible except cleco end splices.

Use handling tool to remove assembly from fixture.

Position tee-clips and permanently install.

Install remaining fasteners.

Drill (2) pilot holes common to tee-clips and outer chord and (2) pilot holes common to outer chord and panel skins at all locations where clip is installed. Final inspect.

Drill (4) pilot holes through outer chord and (2) pilot holes at inner chord at attach angle locations.

Move to final assembly storage area.

2.4.4 <u>Final Assembly Procedure</u>

Load the (6) frame ring segments of each frame ring on station locators. Clamp out of position.

Use handling tool to load -903 and 905 skin panel sub-assemblies. Stop edges against skin stop near fin line C and fin line A.

Load -900 and -903 skin panel sub-assemblies.

Stop edges against skin panel stop near fin line A and fin line C.

Load two -901 skin panel sub-assemblies. Establish equal skin gaps.

Check the Vertical edges of the skin panels, optically, to insure that the skin joints are perpendicular to the top surface of the lower dummy "Y" ring. Adjust panels if required. Seal the vertical positioners.

Float the frame ring sub-assemblies against the skin panel assemblies. Clamp in position and clamp the segments together at splices. Pilot drill (4) 1/8-inch diameter holes in each splice joint of panel assemblies. Fasten skins to frame with 1/8-inch screws, two in each four-hole pattern to maintain intertank diameter.

U3 4211 4000

2.4.4 (Continued)

From one edge lay-out the location of (12) outside splice plates on the skin. Center the splice plates on the joints.

Starting at the bottom, use fixture drill plates and back up plates to drill inner and outer splice plates (6 places). Install temporary fasteners.

Use drill fittings and skins at skin splices (6 places) each end. Drill full size holes (1) side of splice and (4) pilot holes on opposite side.

Drill full size all holes common to frame rings and skins from pilots in frame rings. Permanently install fasteners.

Drill frame ring splices. Install permanent fasteners.

Pilot drill (2) holes in the upper and lower frame rings common to T-clips, from chord and positioning hangers at each location.

U3 4211 4000

Figure 2-70 (ILLUSTRATION NOT AVAILABLE)

U3 4211 4000

Figure 2-71 (ILLUSTRATION NOT AVAILABLE)

Figure 2-72 (ILLUSTRATION NOT AVAILABLE)

U3 4211 4000

Figure 2-73 (ILLUSTRATION NOT AVAILABLE)

Figure 2-74 (ILLUSTRATION NOT AVAILABLE)

U3 4211 4000

Figure 2-75 (ILLUSTRATION NOT AVAILABLE)

J3 6211 4000

Figure 2-76 (ILLUSTRATION NOT AVAILABLE)

U3 4211 4000

Figure 2-77 (ILLUSTRATION NOT AVAILABLE)

4211 4000

Figure 2-78 (ILLUSTRATION NOT AVAILABLE)

U3 4211 4000

Figure 2-79 (ILLUSTRATION NOT AVAILABLE)

J3 4211 4000

Figure 2-80 (ILLUSTRATION NOT AVAILABLE)

U3 4211 4000

Figure 2-81 (ILLUSTRATION NOT AVAILABLE)

13 4211 4000

2.4.5 **TUNNELS**

The Pressurization Tunnel Assembly is semi-eliptical in shape with a hyperbolic Fairing at each end. The Tunnel is approximately one foot by two feet by 113 feet long. The Tunnel attaches to the outside of the booster and looking forward is located 11 degrees and 15 minutes clockwise from position III. The Tunnel extends from the Thrust Structure (Station 180.4) to the Forward Skirt (Station 153.8) and houses the pressurization lines and electrical lines.

The Tunnel is divided into 16 sections consisting of the Forward Fairing and platform assembly, 15 platform assemblies, 14 cover assemblies and an aft fairing assembly. The length of the platform and cover assemblies varies from 67 inches to 102 inches. All components are of aluminum and are assembled by mechanical fasteners.

The Electrical Tunnel Assembly is the same as the Pressurization Tunnel Assembly with the exception that the platform and cover assemblies from Station 655.00 to 947.75, have a transition to a wider cross-section. The Electrical Tunnel is located directly opposite the Pressurization Tunnel, 11 degrees 15 minutes from position I, and houses the electrical lines.

2.4.5.1 Thrust Structure Tunnel Assembly

2.4.5.1.1 Platform Assembly - Engineering not available.

2.4.5.1.2 Cover Assembly - Engineering not available.

2.4.5.2 Fuel and LOX Tank

2.4.5.2.1 Platform Assembly.

The platform assemblies for the Electrical and Pressurization Tunnels are typical in construction but vary in length. They consist of two parallel side rails joined by two end members, one center member and two intermediate members, fastened together by rivets and angle clops. The platforms have six points of attachment to clevis type brackets installed on the skin of the Tank. (These brackets are fastened to the Tank by bolts in in blind holes with Heli-coil inserts). Five of these points are fastened by means of link assemblies, and one point is a fixed bracket. The fixed bracket is installed on one end of the center member. This bracket locates the platform about the periphery relative to position I or III, radially and stationwise. Opposite the fixed bracket, the platform is connected to the tank by a link assembly which allows circumferential movement. The end members have the other four points of connection and are held by link assemblies. The two links at the end members on the fixed bracket side of the platform permit vertical movement of the platform. The two links on the opposite

U3 4211 4000

2.4.5.2.1 (Continued)

side of the platform permit vertical and circumferential movement. The side rails have approximately eleven nut plates per rail, spaced about seven and one half inches apart for fastening the preassembled tunnel cover to the platform.

2.4.5.2.2 Platform Member Sub-Assemblies

To facilitate fabrication, the end, intermediate and center members are assigned -900 numbers and assembled as sub-assemblies. The end member sub-assemblies are assembled in ADF 358-27160. (Figure 2-82). This tool provides for side brace ling assemblies. The side brace attach holes are controlled for coordination by MrDP 358-26442. The center member sub-assembly is assembled in ADF2-358-27160. (See Figure 2-83). This tool provides for drilling and reaming the attach holes for the drag brace link assembly which is controlled for coordination by MrDP 358-26444. The intermediate member sub-assemblies are assembled in AF2-358-27160. (See Figure 2-84).

2.4.5.2.3 Platform Final Assembly

The platforms are assembled in Assembly AF 358-27160)See Figure 2-85), which is a picture frame, trunnion mounted tool with removable end and intermediate member locators to accommodate the different length assemblies.

The sub-assembly members, less the link assemblies, are loaded in assembly fixture AF 358-27160 with the side rails. After installation of the permanent fasteners, the permanent fasteners, the cover-to-platform attach holes are drilled in the plstform assembly from drill plates on the assembly fixture. The platform assembly is removed from the fixture and nut plates for the cover attachment are permanently installed on the platform side rails. The link assemblies are then permanently installed to complete the platform assembly.

2.4.5.3 Cover Assembly

The cover assemblies consist of rolled contoured skins having longitudinal beads for strength or reinforcement, formed hat section frames (usually seven on a typical cover assembly), and side plates on either side for attachment to the platform assemblies. The cover assemblies vary in length and are equivalent to the length of the platform assembly to which each is attached.

U3 4211 4000

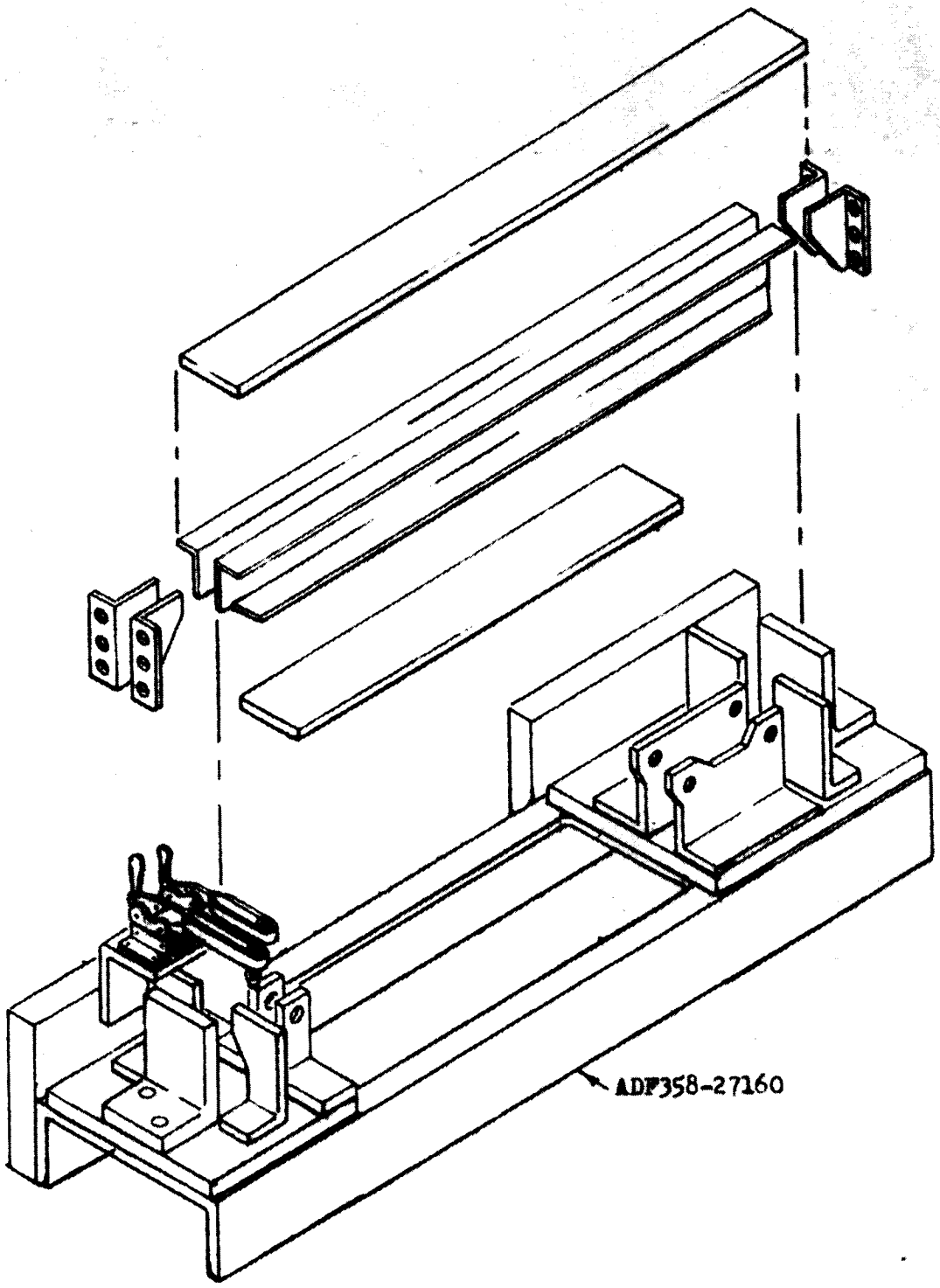

Figure 2-82 ASSEMBLY DRILL FIXTURE, END MEMBER

U3 4211 4000

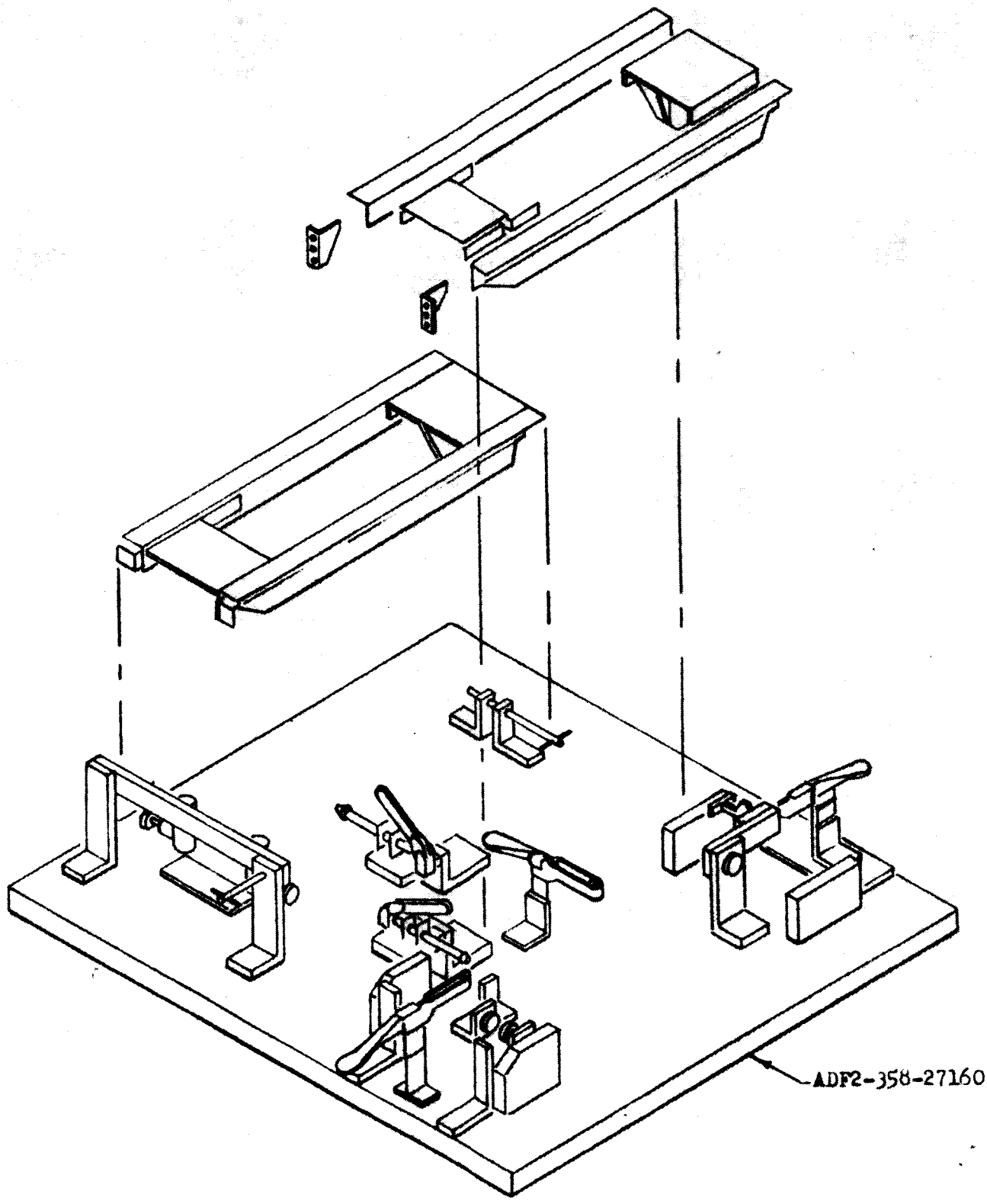

Figure 2-83 ASSEMBLY DRILL FIXTURE - CENTER MEMBER

J3 4211 4000

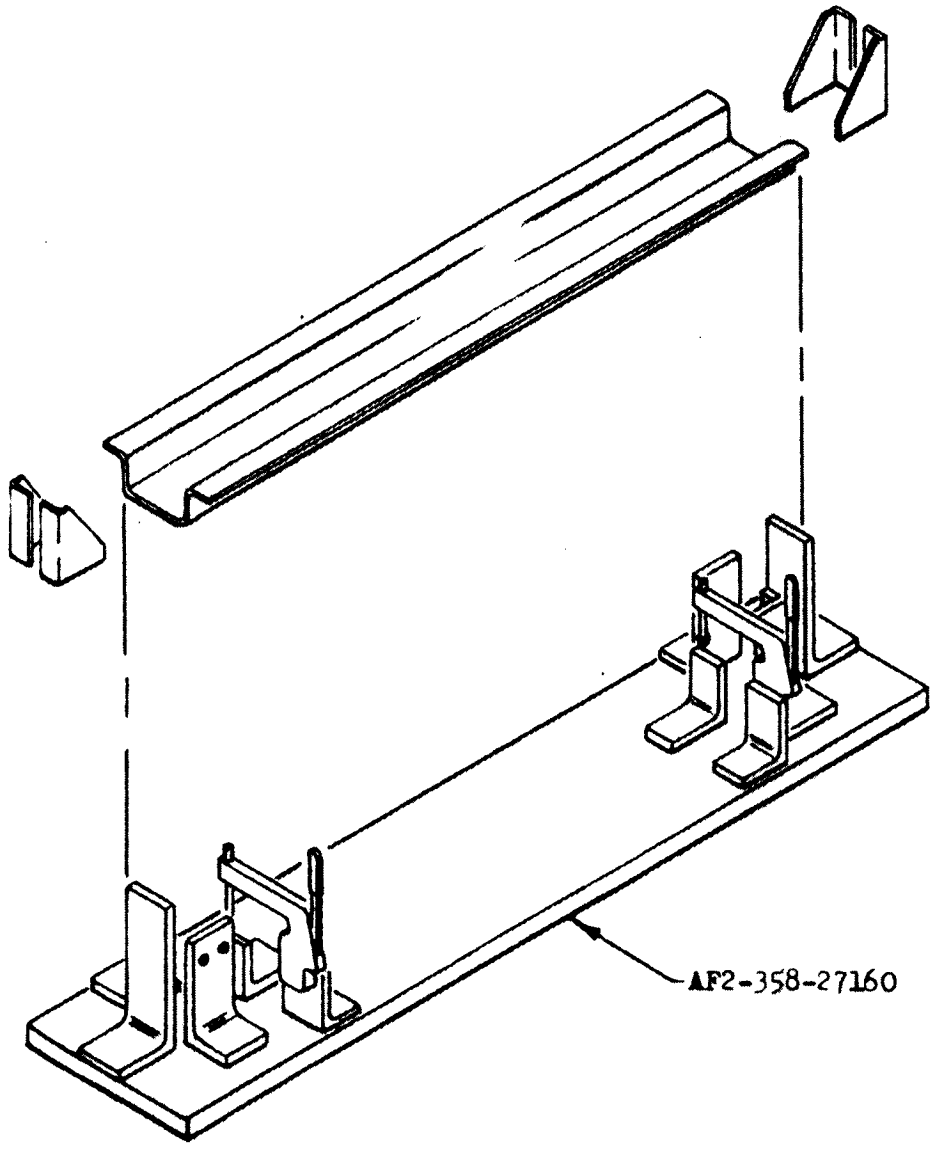

Figure 2-84 ASSEMBLY FIXTURE INTERMEDIATE MEMBER

U3 4211 4000

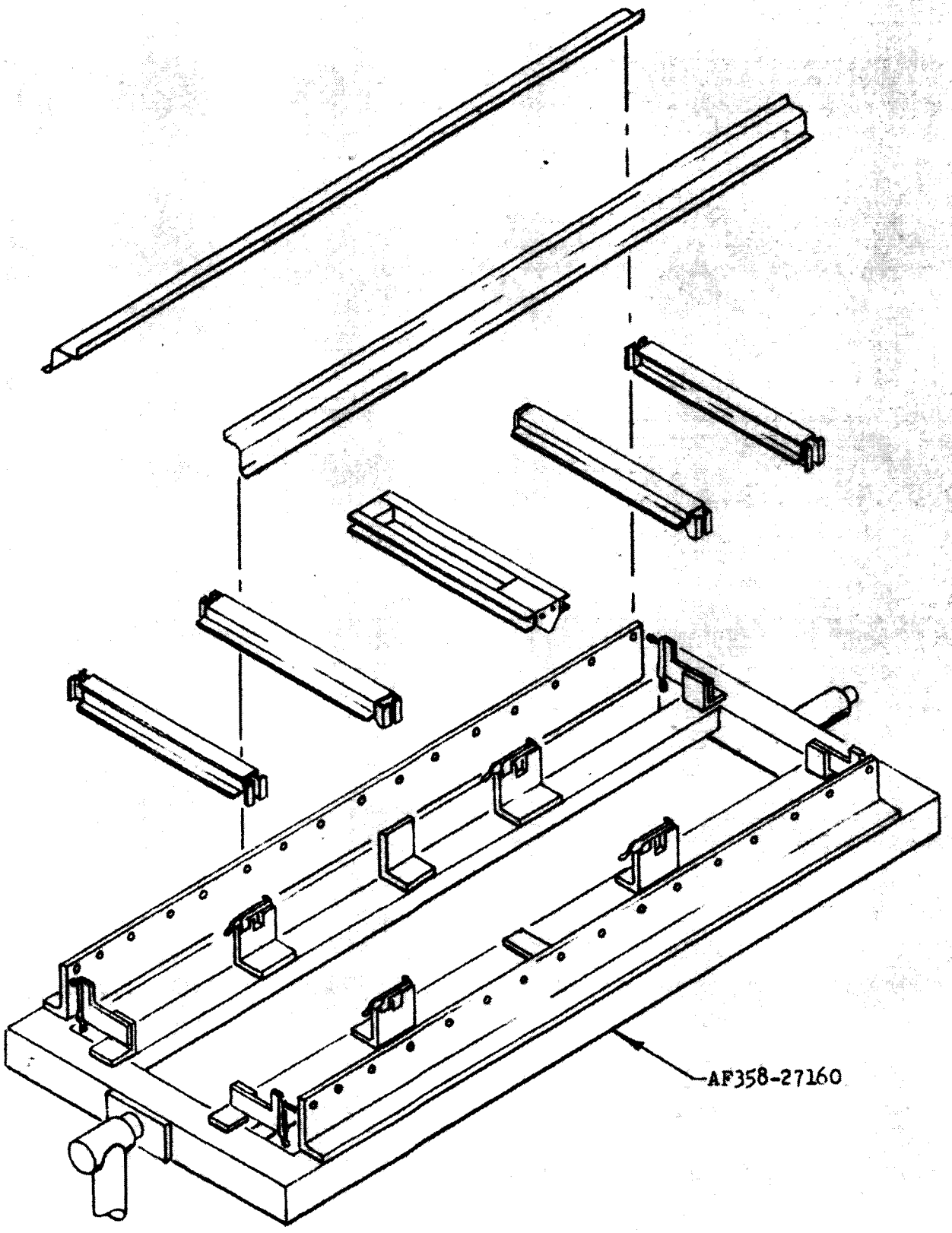

Figure 2-85 TYPICAL PLATFORM ASSEMBLY FIXTURE

J3 4211 4000

2.4.5.3.1 Cover Final Assembly

The cover details are located, drilled and assembled in Assembly Fixture AF 358-26130 which has movable locators to accommocate the different length assemblies. (Figure 2-86)

After installing all fasteners, the cover assembly is located in the assembly fixture for drilling two cover-to-platform attach holes, and one forward attach hole each side for indexing to the platform assembly on installation of the cover assembly. the remaining cover-to-platform attach holes are omitted.

2.4.5.4 Intertank

2.4.5.4.1 Pressurization Tunnel Platform (Forward).

The forward platform assembly consists of a ladder type frame supported by two longitudinal beam assemblies, eight cross members and two side rails. The beams attach at their center to the Intertank skin. The ends of the platform are supported and attached by link assemblies to clevis supported fittings attached to the Intertank skins.

2.4.5.4.2 Platform Beam Sub-Assemblies

The two platform beams are sub-assembled as -900 subassemblies using the bench type Assembly Fixture AF2-358-27220 to assemble the beam details. (Figure 2-87). Each beam sub-assembly consists of one extruded "T" (upper chord), one extruded angle (lower chord), one web, angle clips and a reinforcing machined fitting at center.

2.4.5.4.3 Forward Platform Final Assembly

The Platform Assembly Fixture AF 358-27220 is a trunnion mounted picture frame tool (Figure 2-88). It has provisions for locating beam sub-assemblies, side rails, cross-members and attach angle brackets. The sub-assemblies and remaining details are loaded into the fixture for drilling, reaming and installing permanent fasteners. The fixture provides for drilling the cover-to-platform attach holes and for drilling and reaming attach holes for the side and radial link assemblies. The side brace attach holes are controlled for coordination by MrDP 358-27228 and MrDP 358-27240. The cover-to-platform nut plates are permanently installed after the platform assembly isremoved from the Assembly Fixture. The radial and side brack link assemblies are then permanently installed to complete the platform assembly.

2.4.5.5 Aft Platform

The aft platform assembly consists of two rails, two end members, intermediate members, one center member and link assemblies. The end members, intermediate members and center members are sub-

U3 4211 4000

2.4.5.5 (Continued)

assembled as -900 numbers.

2.4.5.5.1 Aft Platform Sub-Assemblies

The end member sub-assemblies are assembled in AF 358-27300. (For typical sub-assembly fixture, (See Figure 2-82). This tool provides fro drilling and reaming the attach holes for the radial and side brace link assemalies. The side brace attach holes are controlled for coordination by MrDF 358-27232.

The center member sub-assembly is assembled in ADF 358-27230. For typical sub-assembly fixture, see figure 2-83. This tool provides fro drilling and reaming the attach holes for the drag brace link assembly. The drag brace attach holes are controlled for coordination by MrDF 358-27233.

The intermediate member sub-assemblies are assembled in AF2-358-27160. (See Figure 2-84).

2.4.5.5.2. Aft Platform Final Assembly

The side rails, end member sub-assemblies, intermediate member sub-assemblies and center member sub-assembly (less the link assemblies) are loaded in Platform Assembly Fixture AF 358-27230 (See Figure 2-85), for typical Assembly Fixture for drilling and reaming the fastener holes. After installation of the permanent fasteners, the cover-to-platform attach holes are drilled in the assembly fixture for installation of nutplates for cover attachment and installation of the link assemblies to complete the platform assembly.

2.4.5.6 Intertank Pressurization Tunnel Covers

The cover assemblies for the Intertank Pressurization Tunnel are similar to the covers in Paragraph 2.2.2 (See Figure 2-86) for typical assembly fixture.) The forward cover assembly is assembled in AF 358-27200. The aft cover is assembled in the Fuel and LOX Tank Cover Assembly Fixture AF 358-26130.

2.4.5.6.1 Electrical Tunnel Platforms - Engineering not available.

2.4.5.6.2 Electrical Tunnel Covers - Engineering not available.

2.4.5.7 Forward Skirt

2.4.5.7.1 Platform Assembly - Engineering not available.

2.4.5.7.2 Cover Assembly - Engineering Not Available.

J3 4211 4000

2.4.5.8 Tunnel Assembly Installation

The tunnel platform assemblies are attached to the Booster by clevis type brackets mounted on the outside surface of the Booster. These brackets are located at each inner frame ring of the sections. In the Forward Skirt, Intertank and Thrust Sections, the fasteners penetrate the skin. In the LOX and Fuel Tank, the support brackets are attached by screws in blind holes which have Heli-coil inserts.

2.4.5.8.1 Thrust Structure Installation

2.4.5.8.1.1 Platform Installation

The holes for attachment of the tunnel support brackets in the Thrust Structure are drilled in the final assembly stage of these sections. The detail support brackets are fabricated complete with full size attach holes.

The support brackets are attached to the Thrust Structure with mechanical fasteners. With the booster in the horizontal position the platforms are attached to the Thrust Structure by connecting the link assemblies to the support brackets.

2.4.5.8.1.2 Cover Installation

The cover assemblies are installed on the platform assemblies after the platform assemblies are installed on the Booster. The cover assemblies are located on their respective platform assemblies by means of the forward attach hole, one on each side. The covers are adjusted for edge margin and the remaining attach holes are transferred from the platform assembly by using a hole finder.

2.4.5.8.2 Fuel and LOX Tank Installation

In the LOX and Fuel Tanks the blind holes for installation of the platform support brackets are drilled and tapped in the detail skin segments. The Heli-coil inserts are installed in the detail skin segments except at the pad locations adjacent to a weld. At these locations the Heli-coil inserts are installed after the components are welded together.

2.4.5.8.2.1 Platform Installation

The Tunnels support brackets common to the LOX and Fuel Tanks are fabricated complete. The support fittings, common to the platform ends, have full size attach holes and two center support brackets for each platform have the attach holes omitted. The Positioning and Holding Fixture will be used to position and hold the center support brackets for back marking from existing holes in the skin fitted with threaded back-markers. The fixture is located and held in place using the two attach holes common to the ends of the platform section. (Figure 2-89). The fittings are identified for location and position.

U3 4211 4000

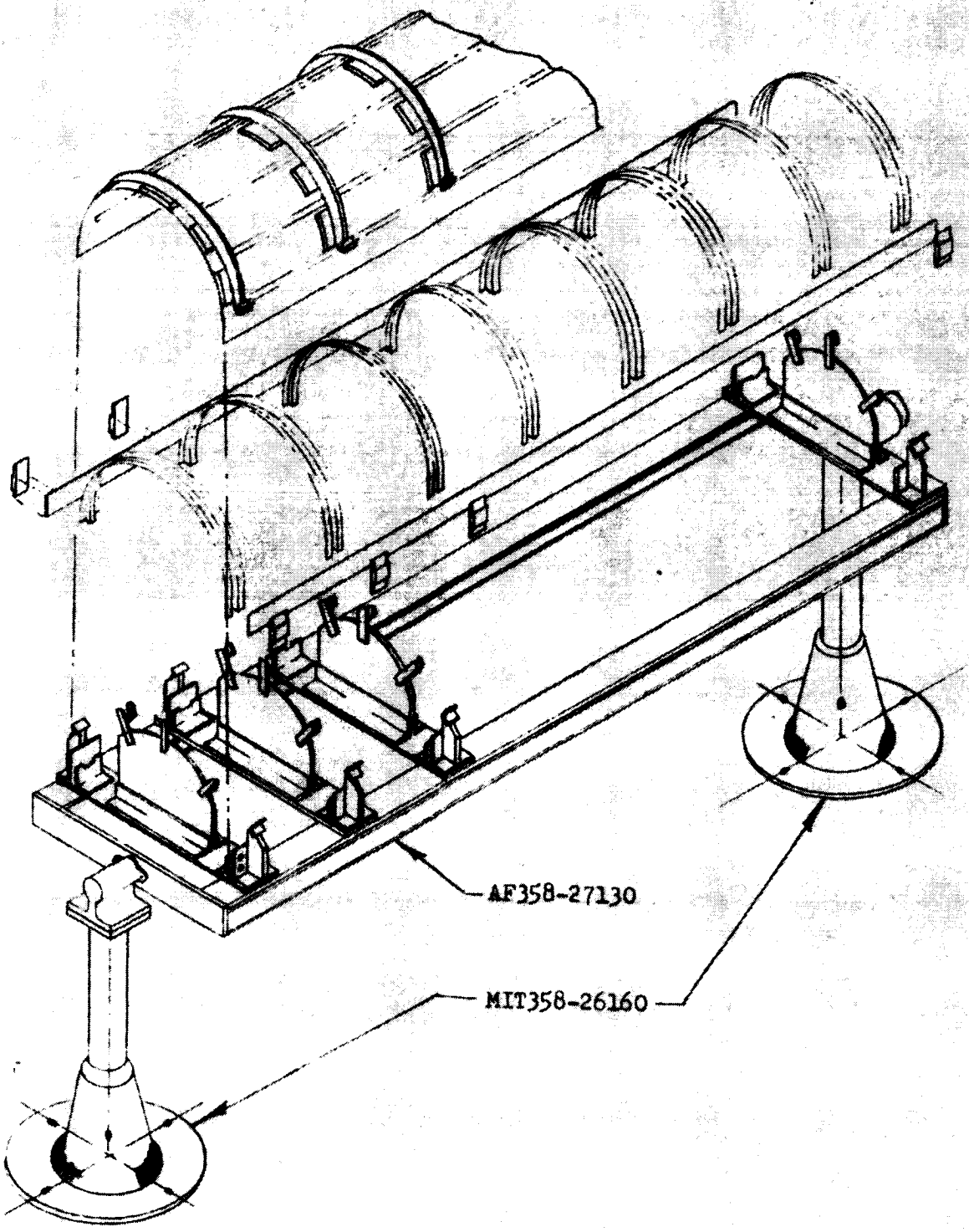

Figure 2-86 TYPICAL COVER ASSEMBLY FIXTURE

L 4211 4000

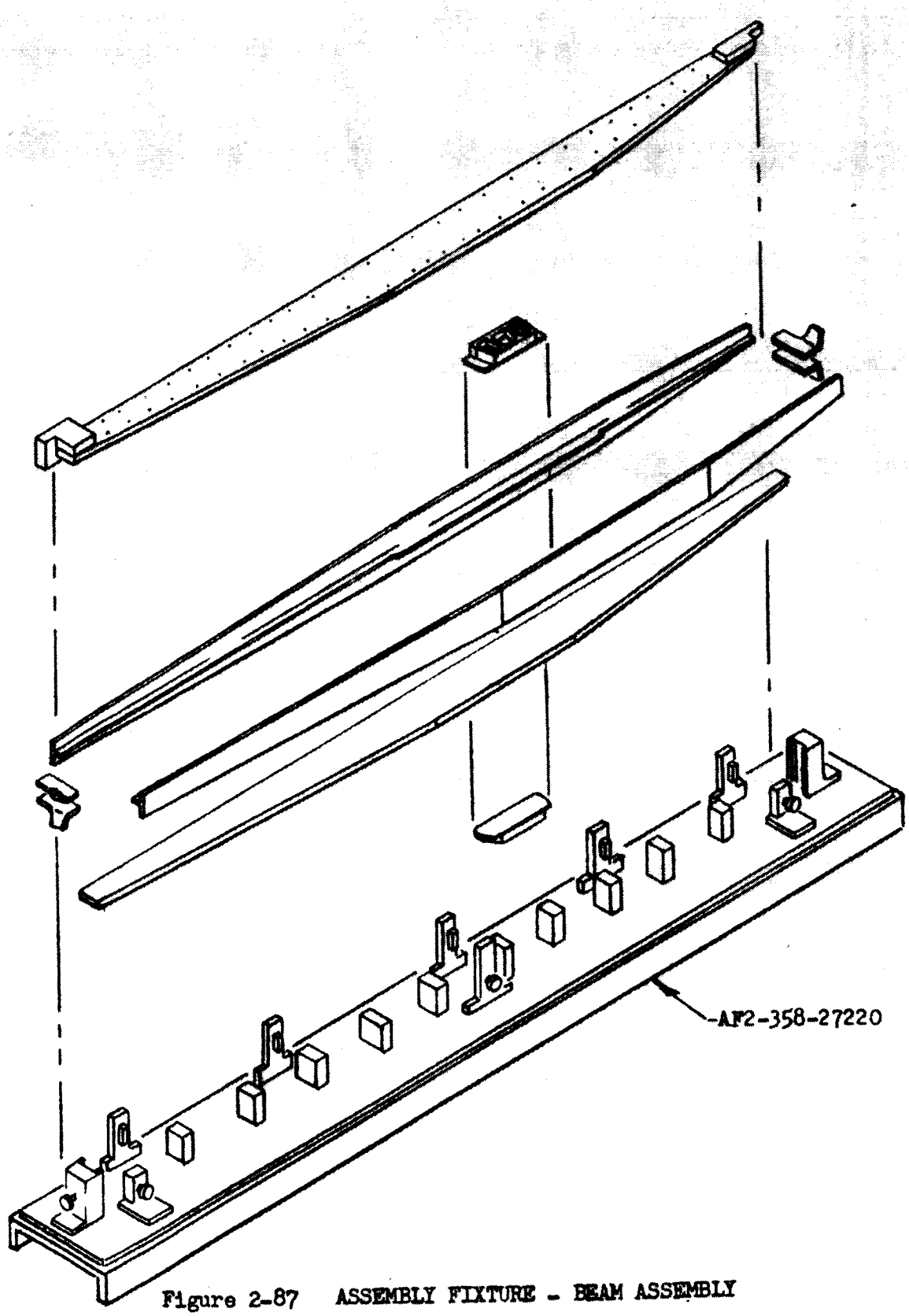

Figure 2-87 ASSEMBLY FIXTURE - BEAM ASSEMBLY

U3 4211 4000

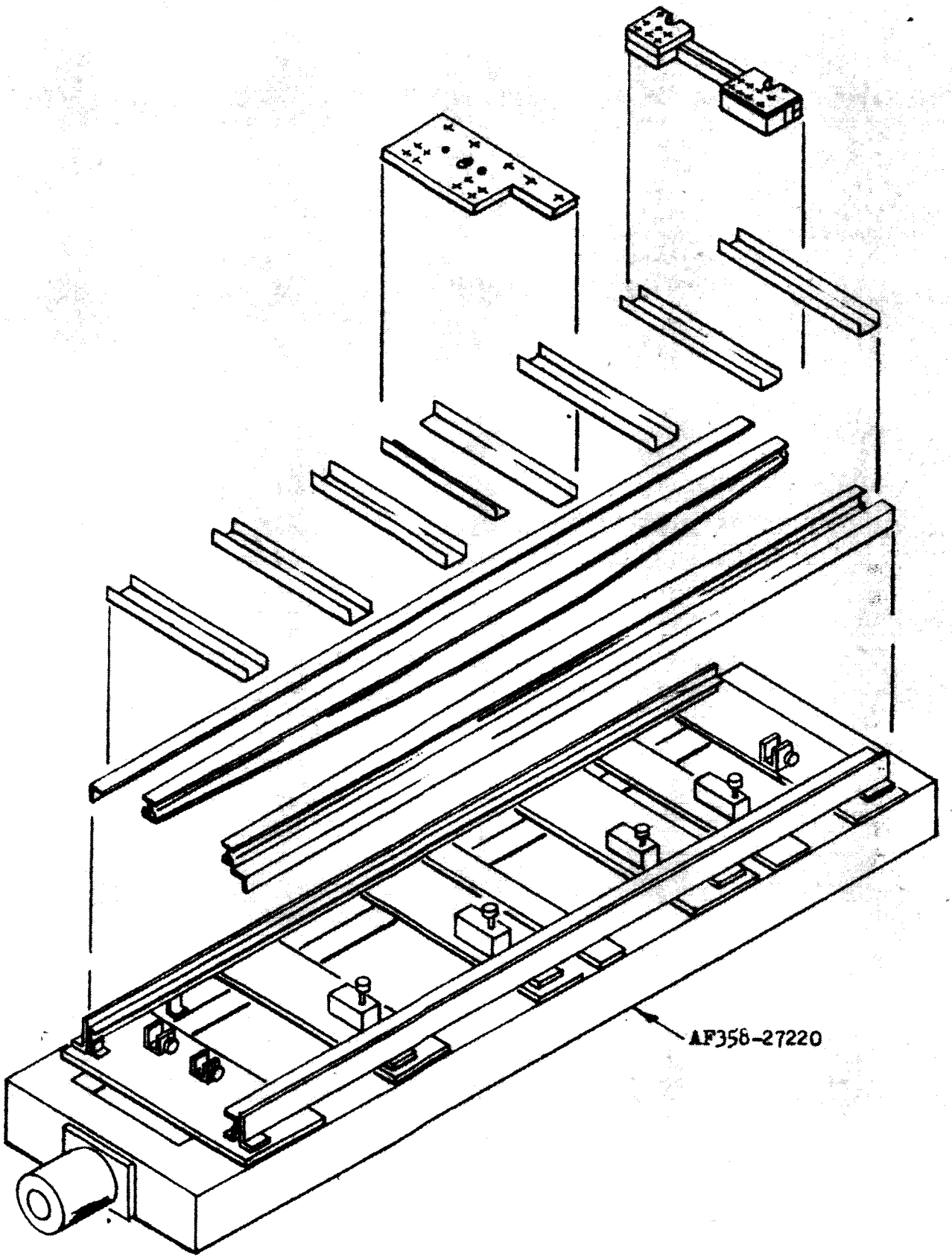

Figure 2-88 ASSEMBLY FIXTURE - PLATFORM ASSEMBLY INTERTANK

J2 4211 4000

2.4.5.8.2.1 (Continued)

After back-marking, the support fittings are removed, the attach holes are drilled and reamed full size. Care must be taken to maintain the hole pattern determined by the prick punch marks. After the Positioning and Handling Fixture has been removed the fittings will be permanently installed. This entire operation (with appropriate P&HF) will be repeated for each platform common to the LOX and Fuel Tanks and each platform spanning the four L-rings. With the booster in the horizontal position the platforms are attached to the Fuel and LOX Tanks by connecting the link assemblies to the support brackets.

2.4.5.8.2.2 Cover Installation

Installation for covers for Fuel and LOX Tank Tunnels is similar to the installation of covers in Paragraph 2.4.5.5.1.2.

2.4.58.3 Intertank Installation

The Intertank Tunnel support brackets are located and installed in the Final Assembly of the Intertank.

2.4.5.8.3.1 Platform Installation

In final assembly of the Intertank, use DJ3-320-28000 to drill three indexing holes, (one each common to the end support fittings which attach to the platform side braces), and pilot holes for all the remaining support fittings attach holes.

The support fitting details have one attach hole drilled corresponding to the holes drilled in the Intertank by DJ3-320-28000 except for one end fitting on each tunnel at Station 655.04. These fittings have the four attach holes drilled full size coordinated to MrDJ 330-7455 and cannot be installed until after removal of the Handling Tool HT 370-7292. These fittings are stored for later installation. The fittings are positioned and held by P&HF 358-27230 (See Figure 2-90), and P&HF 358-27220 (See Figure 2-91) for back drilling from the pilot holes (three at each fitting). After drilling and reaming these holes to size, permanent fasteners are installed through the fitting. After removal of the P&HF, the remaining hole in the installed fittings is reamed to size and the permanent fasteners installed.

The forward Pressurization Tunnel Platform is attached to the end support fittings and indexed to the pilot hole in the platform beam and the Intertank at Station 808.96. Back drill the platform beams from pilot holes in the Intertank. Permanently install fasteners common to the beams. The remaining platform assemblies are attached to the support fittings.

U3 4211 4000

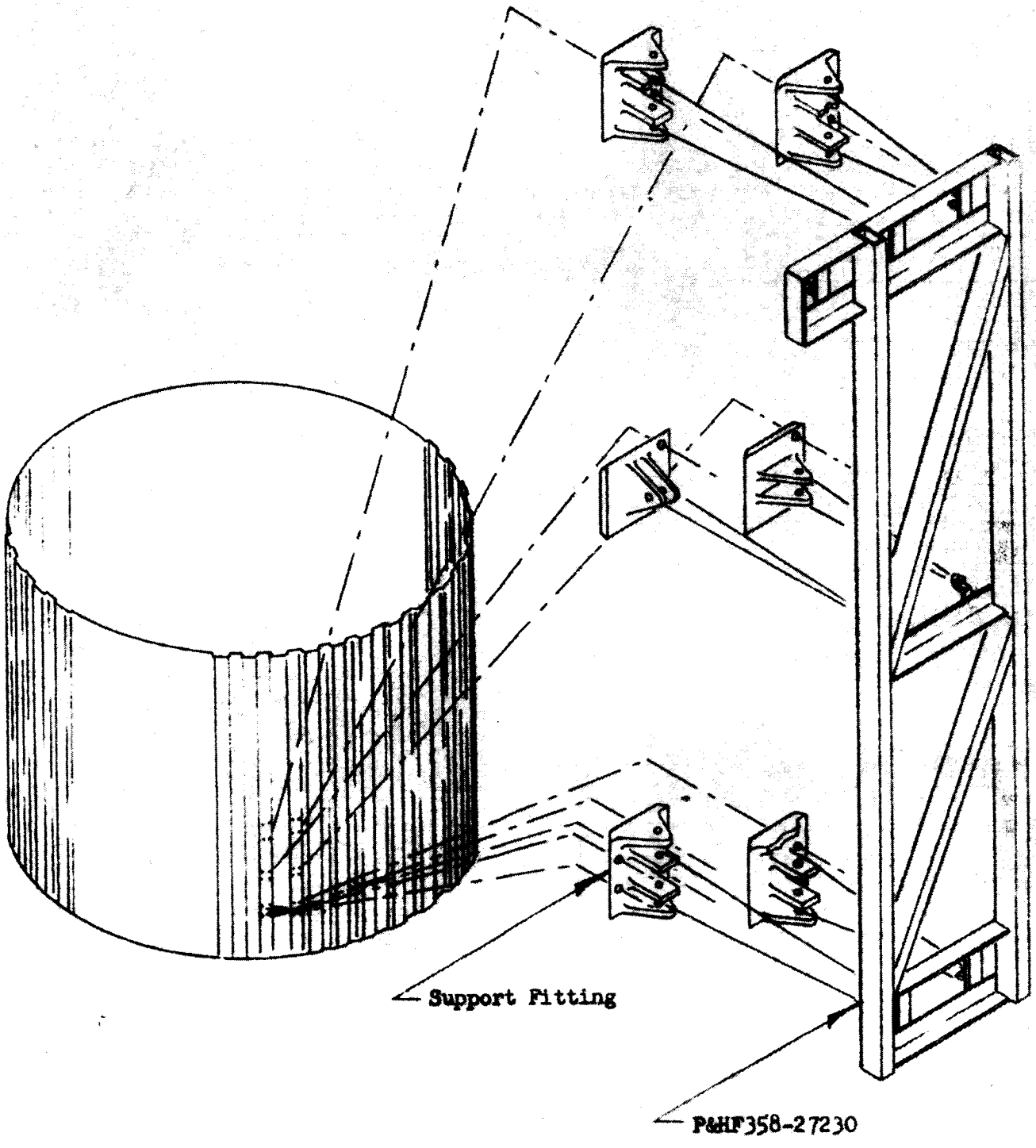

Figure 2-90 POSITIONING AND HOLDING FIXTURE INTERTANK INSTALLATION

13 4211 4000

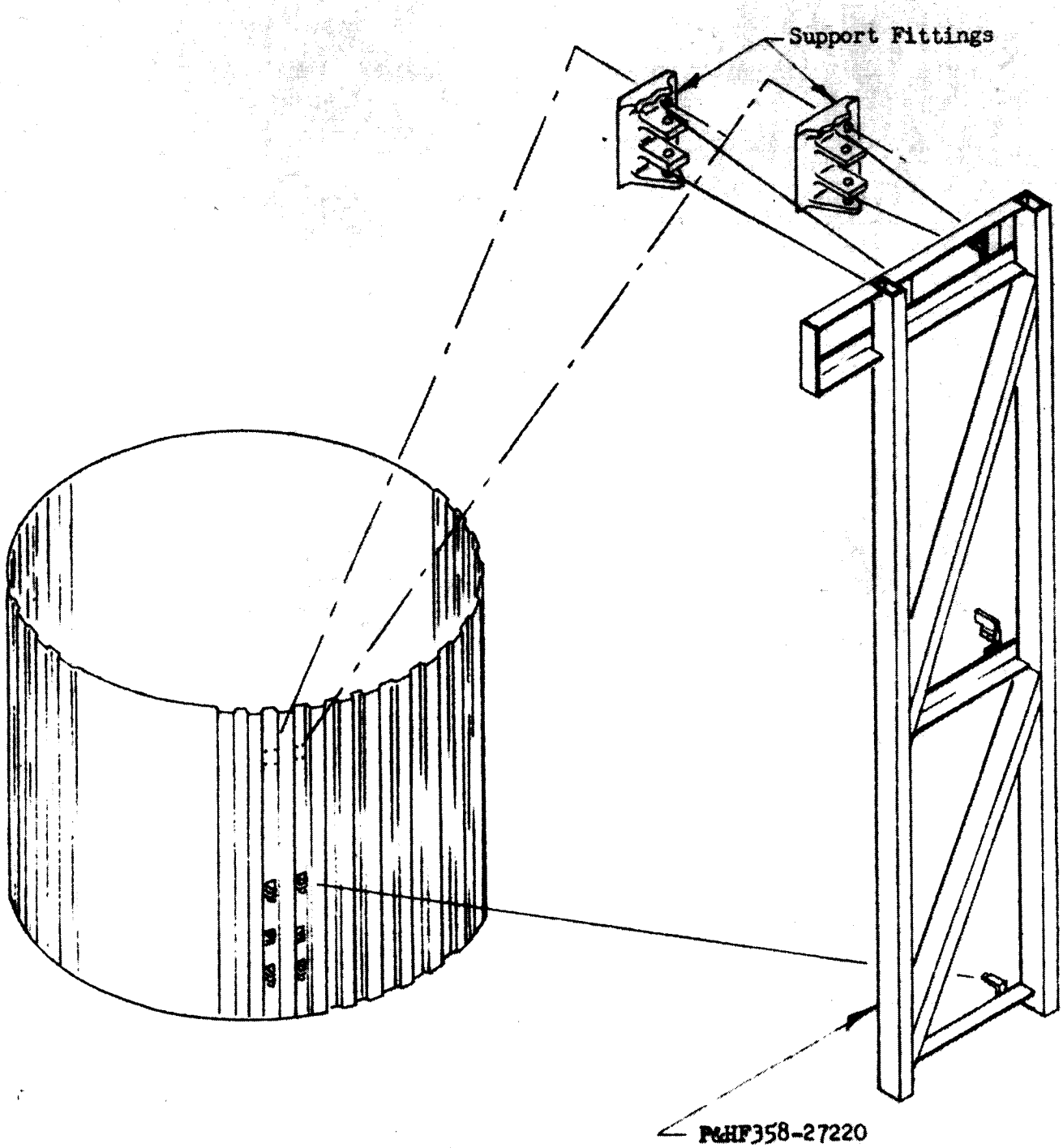

Figure 2-91 POSITIONING AND HOLDING FIXTURE - INTERTANK INSTALLATION

U3 4211 4000

2.4.5.8.3.2 Cover Installation

The Intertank Tunnel covers are installed the same as the LOX and Fuel Tank covers.

2.4.5.8.4 Forward Skirt Installation

Engineering not available.

J3 4211 4000

2.5 OXIDIZER (LOX) TANK ASSEMBLY

The oxidizer tank assembly is a cylindrical aluminum vessel approximately thirty-three (33) feet in diameter and sixty-five (65) feet high. It consists of two (2) major sub-assemblies and a final assembly. The two (2) sub-assemblies outlined below are assembled in a "dome up" position.

The upper head assembly consists of the upper bulkhead assembly (dome-up), #4 cylindrical skin ring assembly with related baffle assemblies.

The lower head assembly consists of a lower bulkhead assembly (dome up), #1, #2, #3 cylindrical skin ring assembly with related baffle assemblies and the cruciform baffle assembly.

The final assembly consists mainly of the above upper head and lower head assembled in the vertical assembly tower in an inverted flight position. This final assembly will include the final parts, of the baffle installation, the GOX distributor with related lines, hydrostatic test and cleaning and close up of the tank.

By joining these sub-assemblies per sequence illustrated (see figure A constant common elevated work level is maintained at which all vertical assembly welding, handwork and X-ray operations can be accomplished with a minimum tool and equipment requirement cost.

2.5.1 Cruciform Baffle

The LOX tank cruciform baffle is a sheet metal structure in the form of a cross that fits into the upper LOX bulkhead. Its purpose is to minimuze slosh and vortexing of the liquid oxygen. The cruciform baffle consists of four sub-assemblies (cruciform quadrants), each composed of a triangular piece of sheet (.040) 7079 aluminum with stiffening beads formed into them vertically in relation to launch position. Angles and tee's are reiveted and spliced into each quadrant of the entire sub-assembly. (See figure 2-69). All detail parts are manufactured by Wichita. The parts are shipped to Michoud for assembly. One quadrant at a time will be assembled in a floor mounted vertical assembly jig. (See figure 2-70).

2.5.2 Circumferential Ring Baffle

The circumferential ring baffles are ring-shaped sheet metal structures that fit on the inside of the LOX tank adjacent to the vertical skin tee stiffeners. (See figure 2-58). The ring baffles minimize slosh of the liquid oxygen. There are fifteen (15) ring baffles in the LOX tank, thirteen (13) of which are the same size and two (2) cantilevered ring baffles of smaller size. The smaller ring baffles are located (one at the top and one at the bottom) adjacent to the cruciform baffle. (See figure 2-71) All ring

U3 4211'0000

2.5.2 (Continued)

baffles consist of four quadrant sub-assemblies. The ring baffle quadrants will consist of .040 sheet 7079 aluminum with integral reinforcing beads formed radially into each section of the quadrant and riveted angles, tees and splices. All detail parts are manufactured at Wichita. All ring baffles are assembled into quadrants in a floor-mounted assembly fixture at Michoud. (See Figure 2-59).

2.5.3 Cruciform Baffle and Cantilevered Ring Baffle Assembly and Installation

The cantilevered ring quadrant and cruciform baffle quadrants are assembled at Michoud in a floor-mounted assembly fixture. (See figure 2-71). The cantilevered ring baffle and curciform baffle are temporarily positioned into lower LOX bulkhead (figure 2-71). They will be permanently assembled later in the High Bay (vertical tank assembly) building.

2.5.4 GOX Distributor

The GOX distributor is a stainless steel wire mesh screw assembly that fits into the top of the upper LOX bulkhead. The GOX distributor consists of stainless steel screen and hemispherical stainless steel sheet welded together with aluminum flanges united to the stainless steel. All detail parts are manufactured at Wichita. All welding and assembly will be Michoud responsibility.

2.5.5 Cylindrical Skin Section Ring Assembly

The tank cylindrical skin section ring assemblies each consist of four (4) skin segments ten feet high by approximately 26 feet long. These are formed to contour by Wichita; cleaned, etched, conversion coated, shipped to Michoud and welded together at that facility.

The skin section segments, after conversion coating, are transported to skin weld fixture in a transportation dolly. Skin segments are lifted in to position on a weld fixture, aligned, and weld plate extensions attached.

The test weld fixture is positioned; test weld run, sample parts removed and the test weld certified.

The vertical weld fixture is positioned; test weld sample parts run, removed and main weld run and certified. (See Figure 2-57).

The vertical welding of skin segments into a cylindrical skin ring assembly is accomplished by welding and preforming the X-ray operation one seam at a time. This will rotate the assembly 90 degrees between welds.

J3 4211 4000

2.5.6 LOX Tank Cylindrical Skin Section Assembly And Circumferential Ring Baffle Assembly Installation Upper And Lower

The skin section assembly handling sling is attached to the cylindrical skin section assembly. The assembly is lifted and positioned in the cylindrical skin and baffle assembly fixture for installation of the ring baffle segment assemblies, temporary tooling is required to support baffles and miscellaneous supporting members. (See Figures 2-57 and 2-58).

The circumferential ring baffles are pre-assembled in quadrants. These baffle quadrants assemblies are attached to the inner skin tee stiffeners during sub-assembly of the skin ring and baffle assembly. This will save time in the final tank assembly tower buildup and will strengthen the cylindrical skin ring assemblies during handling stages.

Ring baffle quadrant assemblies, (4) per ring baffle assembly are positioned individually, drilled and temporarily attached to skin tee stiffeners. Segment splices are drilled and temporarily attached. Parts are removed, deburred, wiped clean and reinstalled with permanent fasteners, except as noted below:

Ring baffle quadrant assemblies located near a circumferential tank weld area cannot be permanently attached during assembly in the cylindrical skin and baffle assembly fixture. These baffle quadrants are permanently attached after the tank assembly circumferential weld and conversion coating is completed at the tank final assembly position. These baffles are located and temporarily installed in the sub-assembly fixture by drilling undersize holes and temporarily attaching with nylon rivets, which will be subsequently drilled out. The parts will be removed, designated as a fitted part and reinstalled at the tank final assembly tower position.

Brace assemblies and vertical stiffeners are positioned, drilled and either permanently or temporarily attached while in the sub-assembly fixture. All temporarily attached parts are tagged and controlled per fitted part and assembly procedures.

2.5.7 Major Component Cleaning Facility

Information not available

U3 4211 4000

2.5.8 OXIDIZER TANK ASSEMBLY

The Oxidizer Tank is a cylindrical vessel with ellipsoidal shaped heads at both ends. The tank is fabricated of aluminum, weighs approximately 43,000 pounds is 33 feet in diameter and 70 feet long. The tank consists of four cylindrical skin rings assemblies, each 10 feet high and two heads 15 feet high. In the lower bulkhead is a cruciform baffle assembly made of light-weight aluminum paneling. Along the inside diameter of the skins are 15 ring baffle assemblies made of light-weight aluminum paneling. Along the inside diameter of the skins are 15 ring baffle assemblies made of light-weight aluminum paneling, 33 feet outside diameter by 28 feet inside diameter. These baffles prevent sloshing of the liquid oxygen. Mounted longitudinally in the ring baffles are four Helium bottles, 18 feet long and two feet in diameter made of aluminum and used for pressurization of the fuel tank.

2.5.8.1 Upper Tank Subassembly

The upper tank subassembly consists of the upper head assembly, the number 4 skin assembly and four ring baffles. The overall length is 25 feet and weight is 11,100 pounds.

a) Transport upper head assembly to vertical assembly building on production dolly PrD 370-24000. Open tank assembly tower air conditioning curtain. Position loaded production dolly over turntable AF 300-7016. Lower personnel platform PP 370-7530 suspended from tower hoist on hoisting tool HT2-370-24000 onto upper head assembly. Disconnect hoisting Tool HT2-370 24000 from personnel platform PP 370-7530 and attach to handling ring HT 370-24000 (previously attached to upper head assembly). Lift upper head assembly approximately 15 feet above turntable AF 300-7016. Remove production dolly PrD 370 24000 and return to low bay area. (See Figure 2-92)

b) Transport No. 4 skin assembly to tank assembly tower on production dolly PrD 370-24000 and position over turntable AF 300-7016. Using hoisting tool HT 370-12300, lift No. 4 skin assembly off production dolly PrD 370-24000. Remove production dolly PrD 370-24000 and return to low bay area. Close air conditioning curtain. (See Figure 2-92)

c) Lower and position No. 4 skin assembly onto turntable AF 300 7016. Raise internal elevator for work platform and position external scaffolding. Remove hoisting tool HT 370-12300. Lower and position upper head assembly to No 4 skin assembly, simultaneously installing routing fixture RF 310-12000 and check radial alinement. Using router mounted on external boom welder trim Y-Ring and skin ring weld joint edges simultaneously. Remove routing fixture RF 310-12000 and lift upper head assembly to provide access to weld edges. (See Figure 2-92).

13 6211 6000

2.5.8.1 (Continued)

d) Deburr and prepare edges for welding. Install alinement clamps MIT 370-7546. Lower and position upper head assembly to No. 4 skin assembly and check radial alinement. Disengage hoisting tool HT2-370-24000. Position test weld fixture TWF 300-24000 opposite external boom welder and install test weld sample parts. Weld and check samples. Position test weld fixture TWF 302-7575 opposite internal boom welder and install test weld sample parts. Weld and check samples. Remove test weld fixtures TWF 300-24000 and TWF 302-7575. (See Figure 2-92).

e) Position external and internal boom welders for welding. Begin rotation of turntable AF 300-7016. Initiate arc with external boom welder. After approximately eight feet of weld have been completed, initiate arc with internal boom welder. Weld outside and inside simultaneously, outside leading inside by eight feet. X-ray inspect. Manually repair welds and re-inspect as required. Clean entire weld area and re-conversion coat. (See Figure 2-92).

f) Using support fixture SF 318-12404, reinstall ring baffle adjacent to weld joint, cantilevered ring baffle, and ring baffle vertical stringers and diagonal struts (these baffles, stringers and struts previously installed, removed, and stored on lower ring baffle. Remove support fixture SF 318-12404 and temporary bracing MIT 318-12404.

g) Lower internal elevator and remove external scaffolding. Attach HT2-370-24000 (attached to tower hoist) to handling ring HT-370-24000 (attached to upper head assembly). Raise upper tank subassembly to a height of 15 feet above turntable AF 300-7016. Adjust temperature tower and open air conditioning curtain. Position production dolly PrD 370-24000 over turntable AF 300-7016. Lower the upper tank subassembly onto dolly. Disengage hoisting Tool HT 370-24000 from handling ring HT 370-24000. Attach hoisting tool HT2370-24000 to personnel platform PP 370-7530 and raise personnel platform to clear upper tank subassembly. Install protective cover MIT 370-12100 over tank subassembly. Remove loaded dolly from tank assembly tower and store. (See Figure 2-93).

2.5.8.2 <u>Lower Tank Subassembly</u>

The lower tank subassembly consists of the lower head assembly, three skin ring assemblies (No's 1,2,3), the cruciform baffle assembly, eleven ring baffles and four helium bottles. The overall length is 45 feet and weight is 32,300 pounds. (See Figure 2-95)

U3 4211 4000

2.5.8.2 (continued)

a) Transport lower head assembly to vertical assembly building on production dolly PrD 370-24000. Open tank assembly tower air-conditioning curtain. Position loaded production dolly over turntable AF 300-7016. Lower personnel platform PP 370-7530 (suspended from tower hoist on hoisting tool HT2-370-24000) onto lower head assembly. Disconnect hoisting tool HT2370-24000 from personnel platform PP370-7530 and attach to handling ring HT 370-24000 (previously attached to lower head assembly). Lift lower head assembly approximately 15 feet above turntable AF 300-7016. Remove production dolly and return to low bay area. (See Figure 2-94).

b) Transport No. 1 skin ring assembly to tank assembly tower on production dolly PrD 370-24000 and position over turntable AF 300-7016. Using hoisting tool HT 370-12300, lift No. 1 skin ring assembly off production dolly PrD 370-24000. Remove dolly and return to low bay area. Close air-conditioning curtain. (See Figure 2-94).

c) Lower and position No. 1 skin assembly onto turntable AF 300-7016. Raise internal elevator for work platform and position external scaffolding. Remove hoisting tool HT 370-12300. Lower and position lower head assembly to No. 1 skin assembly, simultaneously installing routing fixture RF 310-12000. Using router mounted on external boom welder trim Y-Ring and skin ring weld joint edges simultaneously. Check radial alinement. Remove routing fixture RF 310-12000 and lift lower head assembly to provide access to weld joint edges. (See Figure 2-94).

d) Deburr and prepare edges for welding. Install alinement clamps MIT 370-7546. Lower and position lower head assembly and check radial alinement. Disengage hoisting tool HT2-370-24000. Position test weld fixture TWF 300-24000 opposite external boom welder and install test weld sample parts. Weld and check samples. Position test weld fixtures TWF 302-7575 opposite internal boom welder and install test weld sample parts. Weld and check samples. Remove test weld fixtures TWF 300-24000 and TWF 302-7575. (See Figure 2-92).

e) Position external and internal boom welders for welding. Begin rotation of turntable AF 300-7016. Initiate arc with external boom welder. After approximately eight feet of weld have been completed initiate arc with internal boom welder. Weld outside and inside simultaneously, outside leading inside by eight feet. X-ray inspect. Manually repair welds and reinspect as required. Clean entire weld area and reconversion coat. (See Figure 2-92)

U3 4211 4000

2.5.3.2 (Continued)

f) Using support fixture SF 318-12401, reinstall ring baffle adjacent to weld joint (1B)(previously installed, removed, and stored on ring baffle 1C). Install curciform baffle and cantilevered ring baffle, (1A) subassembly (temporarily held in lower head assembly by support fixture SF 318-12413) and all struts and vertical stringers. Remove support fixtures SF 318-12413, SF 318-12401, and temporary bracing MIT 318-12401, and temporary bracing MIT 318-12401. Lower internal elevator, and remove external scaffolding. Attach hoisting tool HT2-370-24000 (attached to tower hoist) to handling ring HT 370-24000 (attached to lower tank subassembly). Raise lower tank subassembly to a height of 15 feet above turntable AF 300-7016. Adjust temperature in tower. Open air-conditioning curtain.

g) Transport No. 2 skin assembly to tank assembly tower on production dolly PrD 370-24000 and position over turntable AF 300-7016. Using hoisting tool HT 370-12300, lift No. 2 skin assembly off production dolly PrD 370-24000. Remove dolly and return to low bay area. Close air-conditioning curtain. (See Figure 2-95).

h) Lower and position No. 2 skin assembly onto turntable AF 300-7016. Raise internal elevator for work platform and position external scaffolding. Remove hoisting tool HT 370-12300. Lower and position lower tank subassembly (lower head assembly and No. 1 skin assembly) to No. 2 skin assembly, simultaneously installing routing fixture RF 310-12000. Check radial alinement. Using router mounted on external boom welder, trim No. 1 and No. 2 skin assembly weld joint edges simultaneously. Remove routing fixture RF 310-12000 and lift lower tank subassembly to provide access to weld joint edges. (See Figure2-95).

i) Deburr and prepare edges for welding. Install alinement clamps MIT 370-7546. Lower and position No. 1 skin assembly and check radial alinement. Disengage hoisting tool HT2-370-24000. Position test weld fixture TWF 300-24000 opposite external boom welder and install test weld sample parts. Weld and check samples. Remove test weld fixture TWF 300-24000. Position external boom welder for welding. Begin rotation of turntable AF 300-7016. Initiate arc and weld outside. (See Figure 2-95)

j) Connect skate welder to power supply. Using test weld fixture TWF2-300-24000 perform skin tee test weld (skate welder, track and test weld fixture TWF2-300-24000 previously installed in No. 2 skin ring assembly). Check test weld sample. Remove test weld fixture TWF2-300-24000.

U3 4211 4000

2.5.8.2 (Continued)

Position skate welder and weld skin tee's (168 tee's). Remove skate welder and track. X-ray inspect circumferential and tee welds. Manually repair welds and reinspect as required. Using trim fixture TMF 300-7644, trim weld lead tabs off skin tee's. Deburr trimmed edge. Clean and reconversion coat entire weld area.

k) Using support fixture SF 318-12402 reinstall ring baffle adjacent to weld joint (previously installed, removed, and stored on ring baffle 2A). Remove support fixture SF 318-12402. Lower internal elevator and remove external scaffolding. Attach hoisting tool HT2-370-24000 (attached to tower hoist) to handling ring HT 370-24000 (attached to lower tank subassembly). Raise lower tank subassembly (lower head assembly and No. 1 and No. 2 skin assemblies) to a height of 25 feet above turntable AF 300-7016. Adjust temperature in tower. Open air-conditioning curtain.

l) Position helium bottle installation fixture P&HF- 310 12400, with one helium bottle in position, on turntable AF 300-7016. Position support fixture SF 310-12400 on turntable AF 300-7016. Close air-conditioning curtain. Lower the tank subassembly over helium bottle and onto support fixture SF 310-12400. Using small jib crane on internal elevator, raise helium bottle into position and install lockwasher and nut. Swing jib crane back into elevator. Shift tower hoist to compensate for change in the center of gravity. Raise tank subassembly to a height of 25 feet above turntable AF 300-7016. Position second helium bottle into helium bottle installation fixture P&HF 310-12400. Repeat helium bottle installation sequence for second, third and fourth helium bottles. Install helium bottle plumbing. Raise tank subassembly to a height of 15 feet above turntable AF 300-7016. Adjust temperature in tower. Open air-conditioning curtain (See Figure 2-95).

m) Transport No. 3 skin ring assembly to tank assembly tower on production dolly PrD 370-24000 and position over turntable AF 300-7016. Using hoisting tool HT 370-12300 lift No. 3 skin assembly off production dolly PrD 370-24000. Remove dolly and return to low bay area. Close out air-conditioning curtain. (See Figure 2-95).

n) Lower and position No. 3 skin assembly onto turntable AF 300-7016. Raise internal elevator for work platform and position external scaffolding. Remove hoisting tool HT 370-12300. Lower and position lower tank subassembly (lower head assembly No. 1 and No. 2 assemblies and helium bottles to No. 3 skin assembly, simultaneously installing routing fixture FR 310-12000. Check radial alinement.

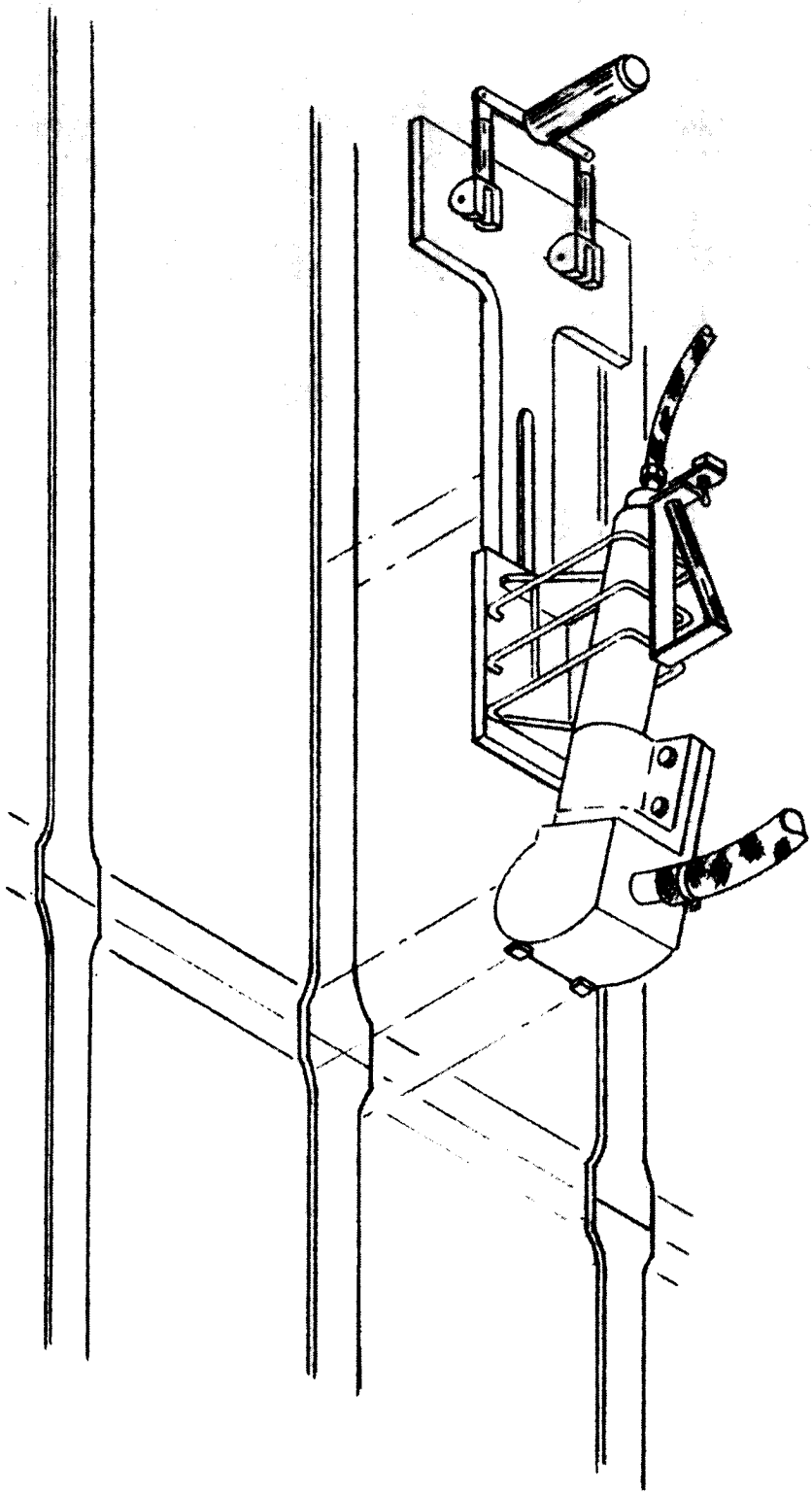

Figure 2-91A - TmF-300-7644 - TRIM FIXTURE - SKIN "T" - STIFFENER CAPS

U3 4211 4000

2.5.8.2 (Continued)

Using router mounted on external boom welder, trim No. 3 and No. 2 skin to skin weld joint edges simultaneously. Remove routing fixture RF 310-12000 and lift lower tank subassembly to provide access to weld joint edges. (See Figure 2-95)

o) Deburr and prepare edges for welding. Install alinement clamps MIT 370-2546. Lower and position No. 2 skin ring assembly to No. 3 skin assembly and check radial alinement. Disengage hoisting tool HT 370-24000. Position test weld fixture TWF 300-24000 opposite external boom welder and install test weld sample parts. Weld and check sample. Remove test weld fixture TWF 300-24000. Position external boom welder for welding. Begin rotation of turntable AF 300- 7016. Initiate arc and weld outside

p) Connect skate welder to power supply. Using test weld fixture TWF2-300-24000 perform skin tee test weld(skate welder, track and test weld fixture TWF2-300-24000 previously installed in No. 3 skin assembly). Check test weld sample. Remove test weld fixture TWF2-300-24000. Position skate welder and weld skin tee's (168 tee's) Remove skate welder and track. X-ray inspect circumferential and tee welds. Manually repair welds and reinspect as required. Using trim fixture TmF 300-7644 trim weld lead tabs off skin tee's. Deburr trimmed edge. Clean and re-conversion coat entire weld area.

q) Using support fixture SF 318-12403 reinstall ring baffle adjacent to weld joint (2C), vertical stringers and diagonal struts (baffle, stringers, and struts previously installed, removed, and stored on ring baffle 3A). Install helium bottle upper support fittings. Remove support fixture SF 318-12403, temporary bracing MIT 318-12402, and helium bottle and ring baffle protectors MIT 310-12400. Lower internal elevator and remove external scaffolding. (See Figure 2-95).

2.5.8.3 Tank Assembly (Close Out)

The tank closeout operation involves joining the upper and the lower LOX tank subasemblies, described in paragraphs 2.5.8.1 through 2.5.8.1 a)., and installing the ring baffle adjacent to the closeout weld joint.

a) Remove protective cover MIT 370-12100 from upper tank sub-assembly. Attach hoisting tool HT2-370-24000 (attached to 180 ton overhead crane) to handling ring HT 370-24000 (attached to upper tank subassembly). Remove forward tank subassembly). Remove forward tank subassembly from production dolly PrD 370-24000; place in inverting fixture ME-370-24000 and invert.

3 4211 4000

2.5.8.3 (Continued)

Position safety net MIT 318-12000 and internal personnel platform PP 370-7510 into inverted forward tank subassembly. Place support fixture SF2 318-12404 and ring baffle adjacent to weld joint (3C) on ring baffle 4A in inverted forward tank subassembly (ring baffle 3C to be installed after closeout weld). Position skate welder track, skate welder, and test weld fixture TWF2-300-24000 in inverted forward tank subassembly. (See Figure 2-95).

b) Transfer hoisting tool HT2-370-24000 in tank assembly tower from tower hoist to 180 ton overhead crane. Attach hoisting tool HT2-370-24000 to handling ring HT 370-24000 (attached to lower tank subassembly). Raise lower tank subassembly (lower head assembly, No's. 1, 2, 3, skin assemblies and helium bottles) to a height of 25 feet above turntable AF 300-7016. Adjust temperature in tower and open air-conditioning curtain. (See Figure 2-95)

c) Position inverting fixture ME 370-24000 with inverted forward tank subassembly over turntable AF 300-7016. Using hoisting tool HT 370-12300 lift forward tank subassembly off inverting fixture ME 370-24000 and remove inverting fixture. Close air-conditioning curtain. (See 2-96).

d) Lower and position forward tank subassembly onto turntable AF 300-7016. Position external scaffolding. Remove hoisting tool HT 370-12300. Lower and position lower tank subassembly to forward tank subassembly, simultaneously installing routing fixture RF 310-12000. Check radial alinement. Using router mounted on external boom welders, trim closeout weld joint edges simultaneously. Remove routing fixture RF 310-12000 and lift lower tank subassembly to provide access to weld joint edges. (See Figure 2-96).

e) Deburr and prepare edges for welding. Install alinement clamp MIT 370-7546. Lower and position lower tank subassembly to upper tank subassembly and check radial alinement. Disengage hoisting tool HT2-370-24000. Position test weld fixture TWF 300-24000 opposite external boom welder and install test weld sample parts. Weld and check samples. Remove test weld fixture TWF 300-24000. Position external boom welder for welding. Begin rotation of turntable AF 300-7016. Initiate arc and weld outside.

f) Connect skate welder to power supply. Using test weld fixture TWF2-300-24000 perform skin tee test weld. Check test weld sample. Remove test weld fixture TWF2-300-24000. Position skate welder and weld skin tee's (168) tee's. Remove skate welder and track with 5 ton auxiliary tower hoist. X-ray inspect circumferential and tee welds. Manually repair welds and reinspect as required.

U3 4211 4000

2.5.2.3 (Continued)

Using trim fixture TmF 300-7644, trim weld lead tabs off skin tee's. Remove trim fixture TmF 300-7644 with 5-ton auxiliary tower hoist. Deburr trimmed edges. Clean and re-conversion coat entire weld area.

g) Using support fixture SF2-318-12404, reinstall ring baffle adjacent to weld joint (3C) and vertical stringers. Remove support fixture SF2-318-12404, temporary bracing MIT 318-12403, personnel platform PP 370-7510, and safety net MIT 316-12000 with 5 ton auxiliary tower hoist. Attach hoisting tool HT2 370-24000 (attached to 180 ton overhead crane) to handling ring HT 370-24000 (attached to tank assembly) and raise tank to a height of 15 feet above turntable AF 300-7016. Adjust temperature in tower and open air-conditioning curtain. Position production dolly PrD 370-24000 over turntable AF 300-7016 and lower tank assembly onto dolly. Transfer hoisting tool HT2-370-24000 from 180 ton overhead crane to tower hoist. Disconnect hoisting tool HT2 370-24000 from tank assembly and attach to personnel platform PP 370-7530. Remove personnel platform PP 370-7530. Remove personnel platform PP 370-7530 from tank assembly. Remove tank assembly from tower. (See Figure 2-96).

h) Using 180 ton overhead crane and hoisting tool HT2 370-24000 lift tank assembly off production dolly PrD 370-24000. Invert tank assembly and carry to Hydrostatic Test and Cleaning Tower. (See Figures 2-96 & 2-97).

U3 4211 4000

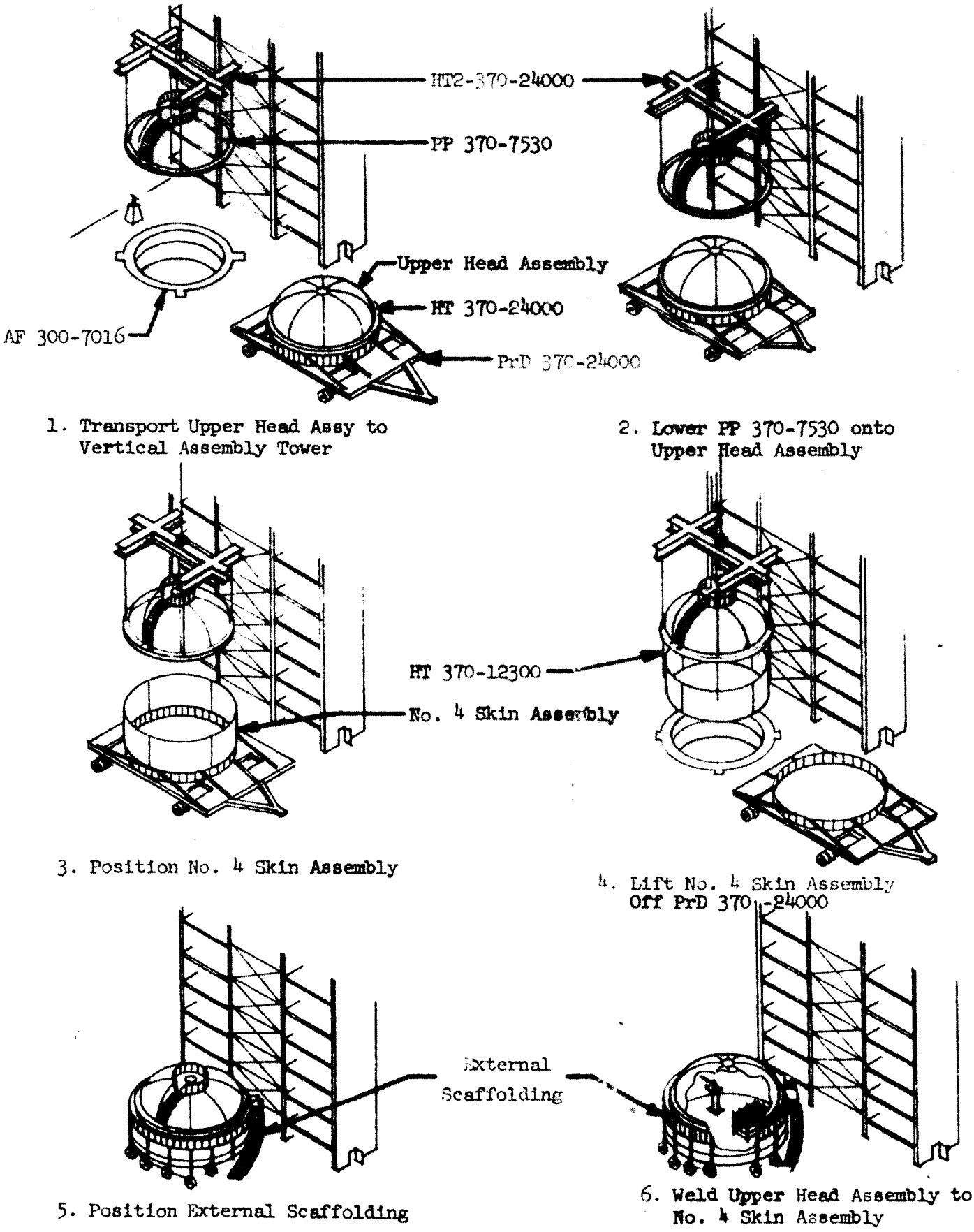

Figure 2-92 LOX TANK ASSEMBLY (Sheet 1 of 5)

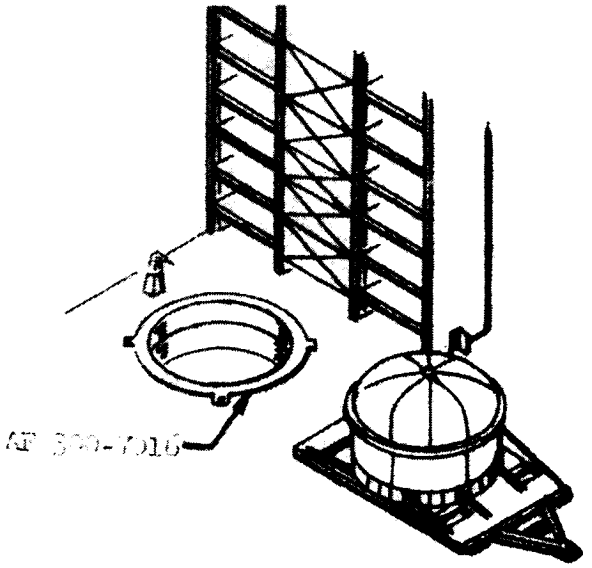

7. Remove Upper Tank Assembly

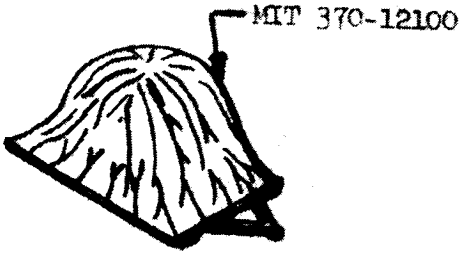

8. Install Protective Cover MIT 370-12100

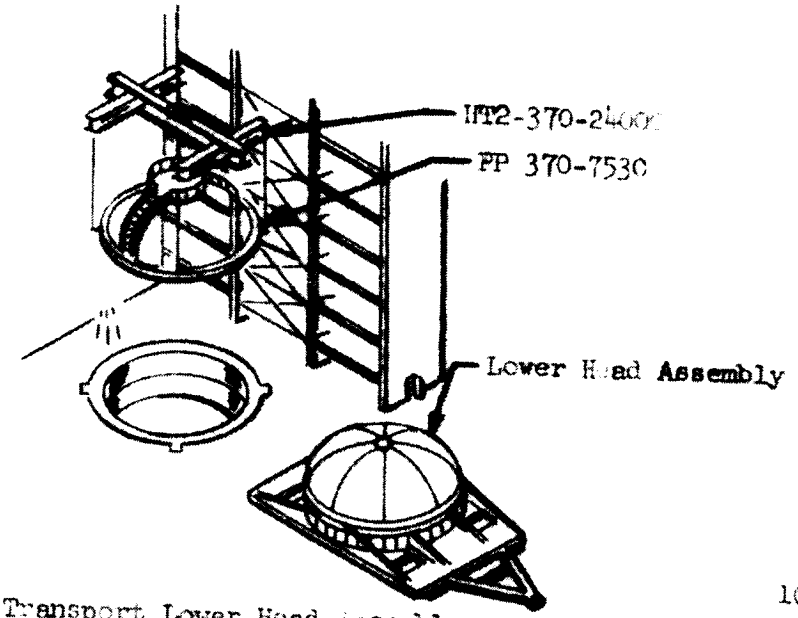

9. Transport Lower Head Assembly to Vertical Assembly Tower

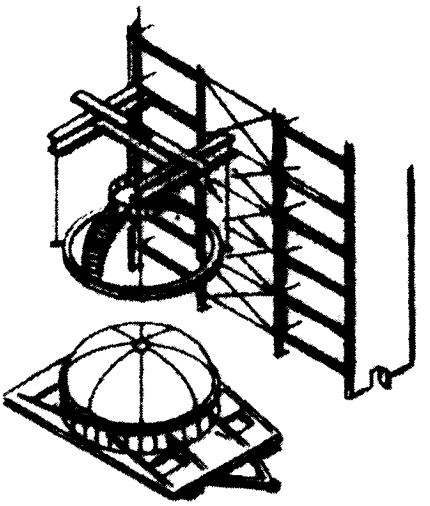

10. Lower FP 370-7530 onto Lower Head Assembly

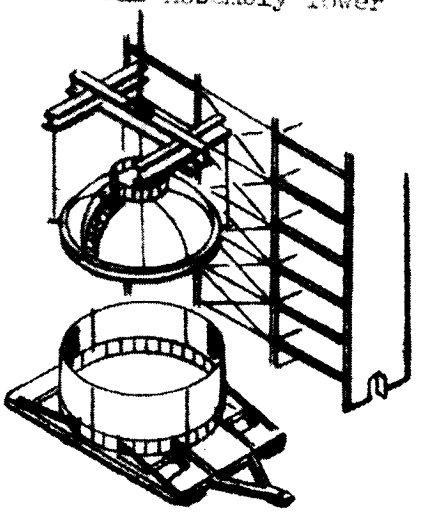

11. Position No. 1 Skin Assembly

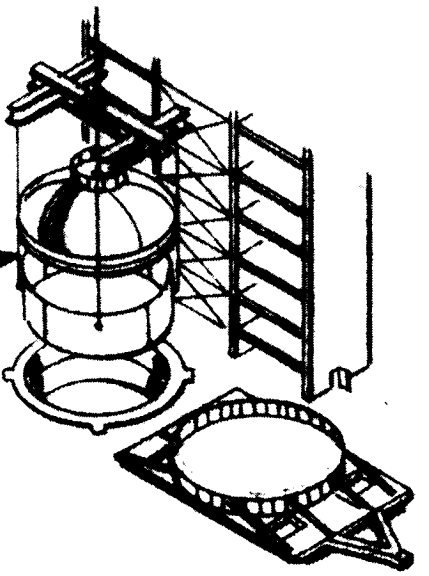

12. Lift No. 1 Skin Assy off Dolly

Figure 2-93 LOX TANK ASSEMBLY (Sheet 2 of 5)

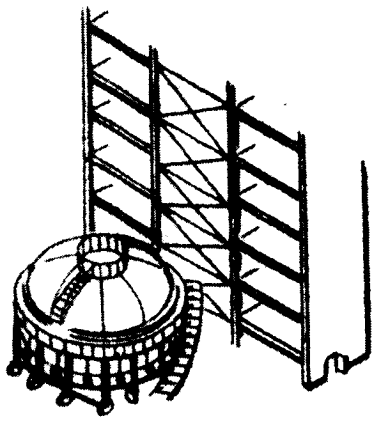

13. Position External Scaffolding

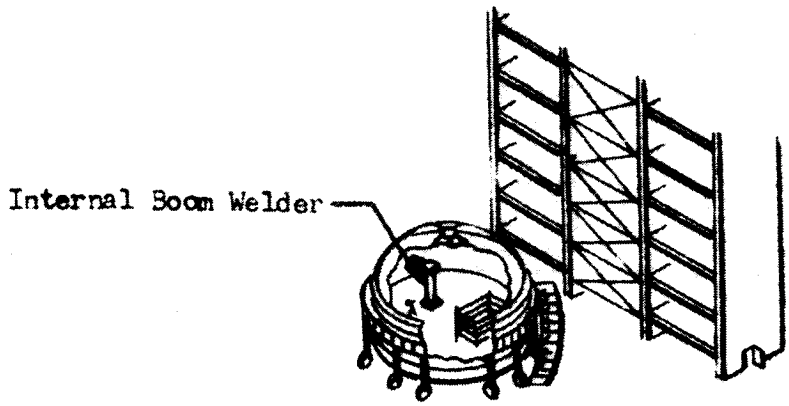

14. Weld Lower Head Assembly to No. 1. Skin

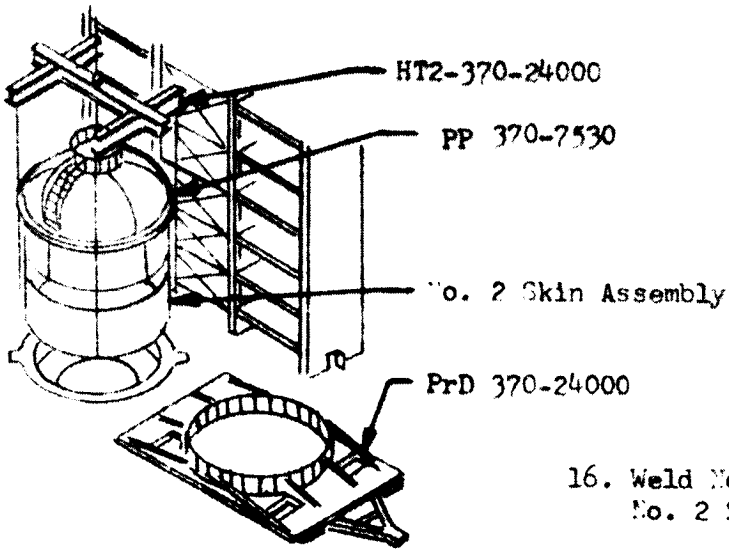

15. Position No. 2 Skin Assembly

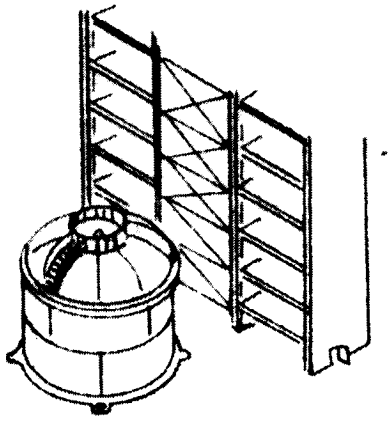

16. Weld No.1 Skin Assembly to No. 2 Skin Assembly

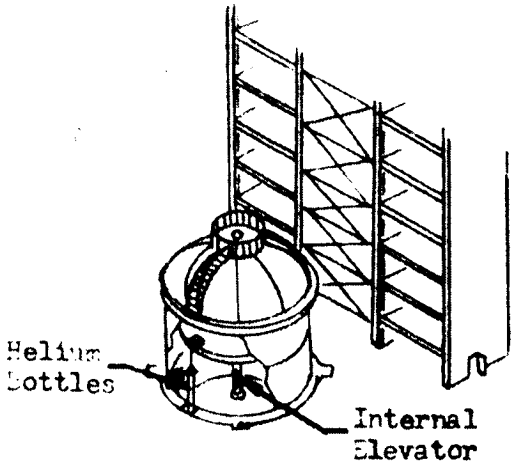

17. Install Helium Bottle

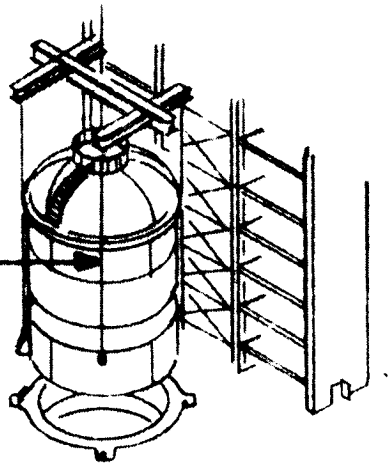

18. Position No. 3 Skin Assembly

Figure 2-94 LOX TANK ASSEMBLY (Sheet 3 of 5)

U3 4211 4000

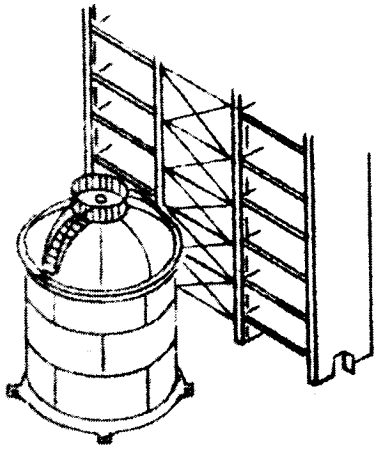

19. Weld No's. 2 and 3 Skin Assemblies

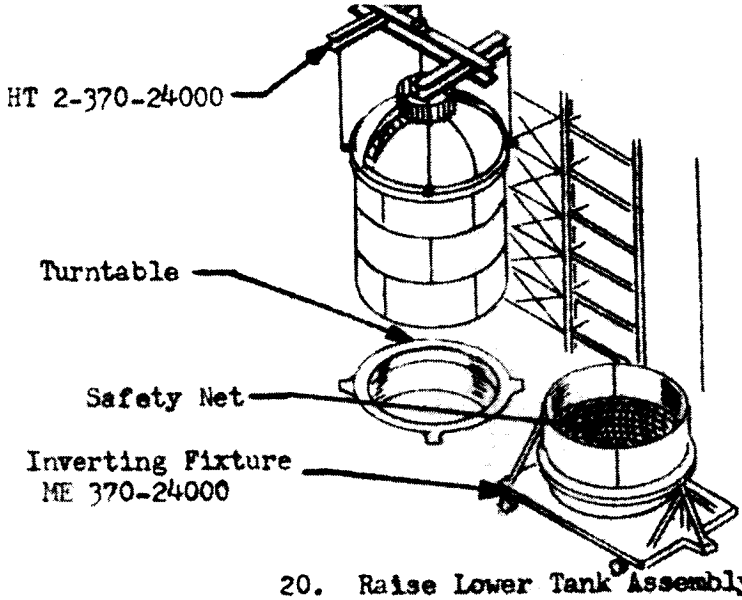

20. Raise Lower Tank Assembly Return Upper Tank Assembly to Vertical Assembly Tower

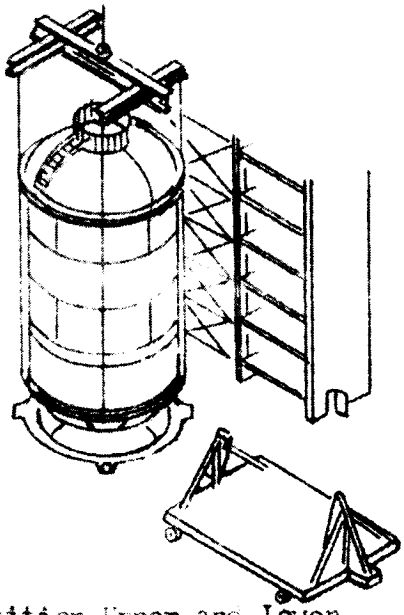

21. Position Upper and Lower Tank Assy in Vertical Assembly

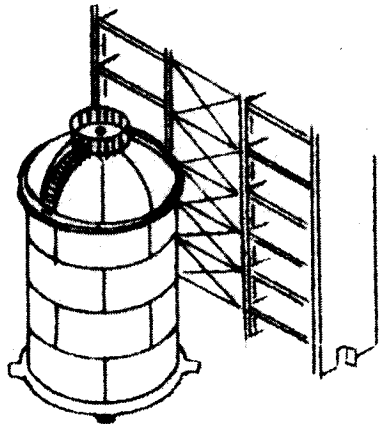

22. Perform Close-out Weld

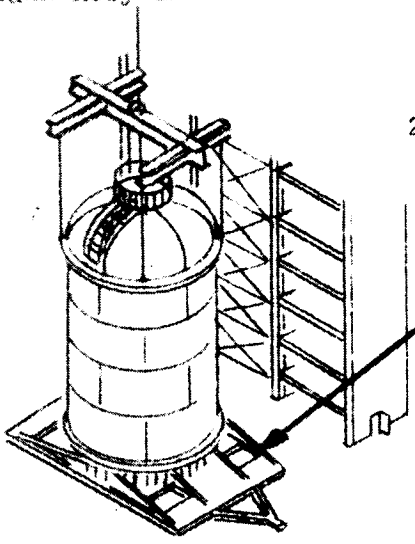

23. Position LOX Tank Assy onto PrD 370-24000

PrD370-24000

24. Remove LOX Tank Assembly from Vertical Assy Tower

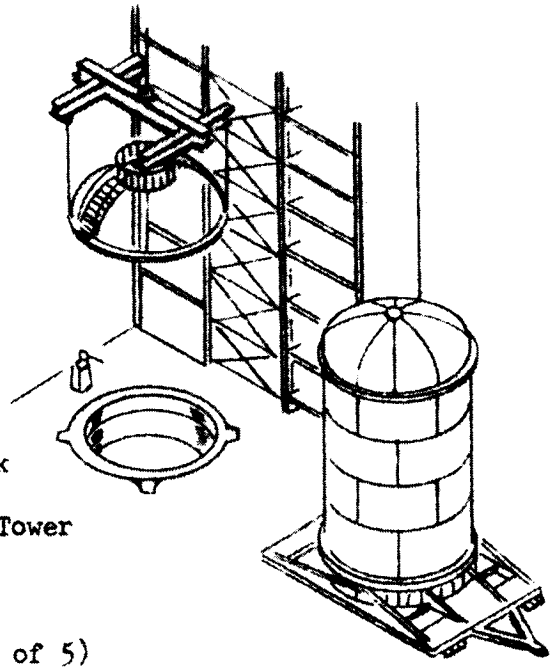

Figure 2-95 LOX TANK ASSEMBLY (Sheet 4 of 5)

U3 4211 6000

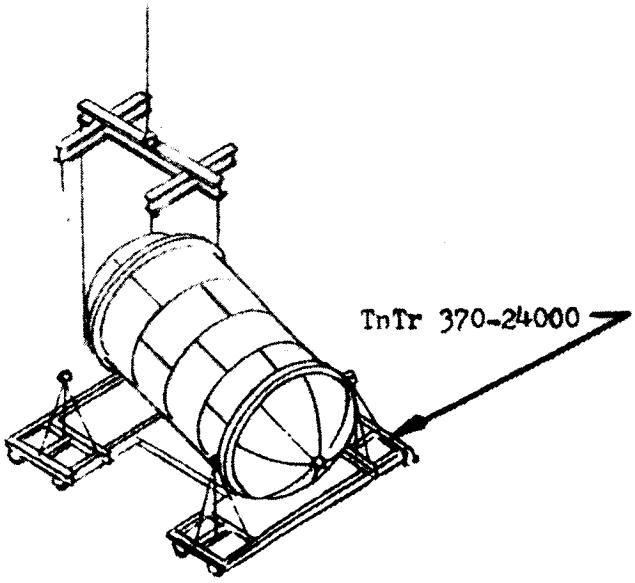

25. Invert LOX Tank Assembly

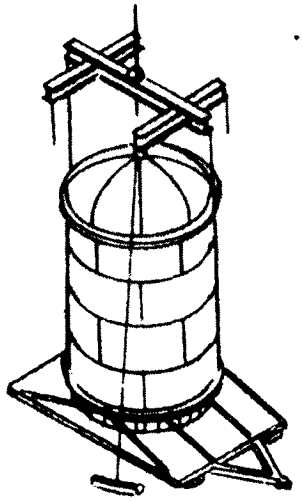

26. Transport LOX Tank Assembly to Hydrostatic Test and Cleaning Tower

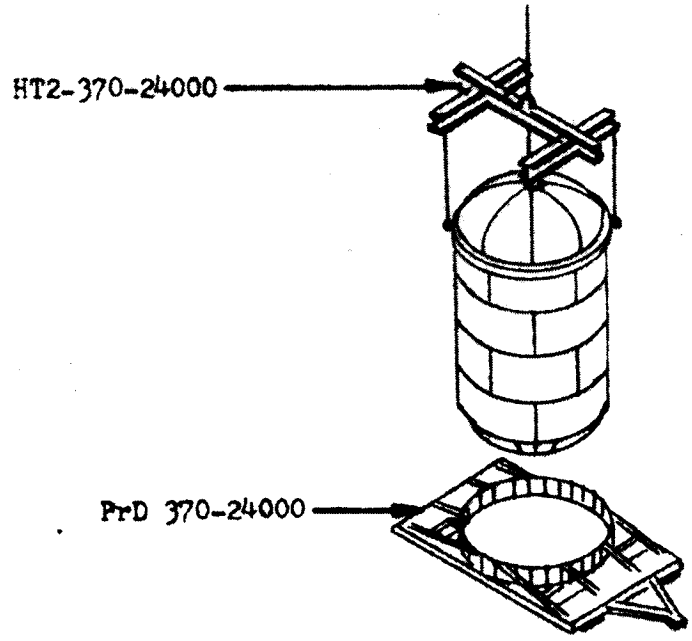

27. Lift LOX Tank Assembly from Production Dolly

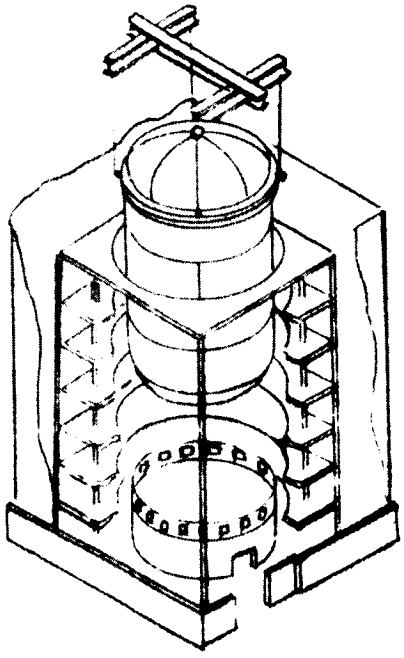

28. Position LOX Tank Assembly onto Hydrostatic Test Tower

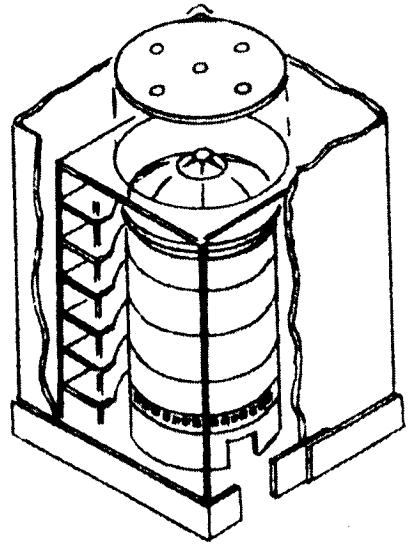

29. Clean and Hydrostatic Test LOX Tank Assembly

Figure 2-96 LOX TANK ASSEMBLY (Sheet 5 of 5)

U3 4211 4000

Figure 2-97 DELETED

U3 4211 4000

2.6 FORWARD SKIRT ASSEMBLY (See Figure 2-98)

The forward skirt assembly comprises that section of the first stage of the vehicle which extends from the upper head of the oxidizer tank to the second stage. The structure consists of 12 skin panels attached to three (3) circumferential support rings. The skin panels are reinforced by hat-shaped vertical stringers. The upper circumferential support ring is the interface between the first and second stage and contains the gage-controlled hole pattern for 216 fasteners. Mechanical fasteners are used at the "Y" ring to attach the forward skirt assembly to the upper head of the LOX tank.

North American will fabricate a master gage and coordinate with Boeing on tooling compatibility for the interface connection between the first and second stages.

A small access door permits entry for servicing of installation. An umbilitcl disconnect door is located above the access door. Cutouts or attach fittings for the GOX, LOX vent, and electrical cables are provided. The telemetry and command antennas are attached to the hat stringers. Various other instrumentation is placed within the structure.

2.6.1 Forward Skirt Final Assembly (See Figure 2-76).

The forward skirt assembly is assembled at Michoud in an inverted position using a major assembly fixture. The interface ring, which is a built-up assembly, center and lower circumferential rings, each consisting of six segments, is loaded into the fixture. The interface ring splice angles are attached to the interface ring segments to form a continuous ring. The 12 skin panel assemblies are located around the fixture by tooling holes, with the upper edges of the panel resting on the interface ring and the lower end common to the "Y" ring joint resting against a dummy ring. The installation of the three index pin fittings, drilling and reaming of the 216 attaching holes, and installation of the necessary optical targets are accomplished at this point. The vertical positioners are then planized to a plane of ± .010 in relation to the interface ring before removal from the fixture.

The forward skirt assembly is then removed from the assembly fixture. The brackets, clips, etc., for holding instrumentation are installed. The telemetry and command antennas and all instrumentation, installation of which is feasible and required prior to final assembly, are installed at this time.

U3 4211 4000

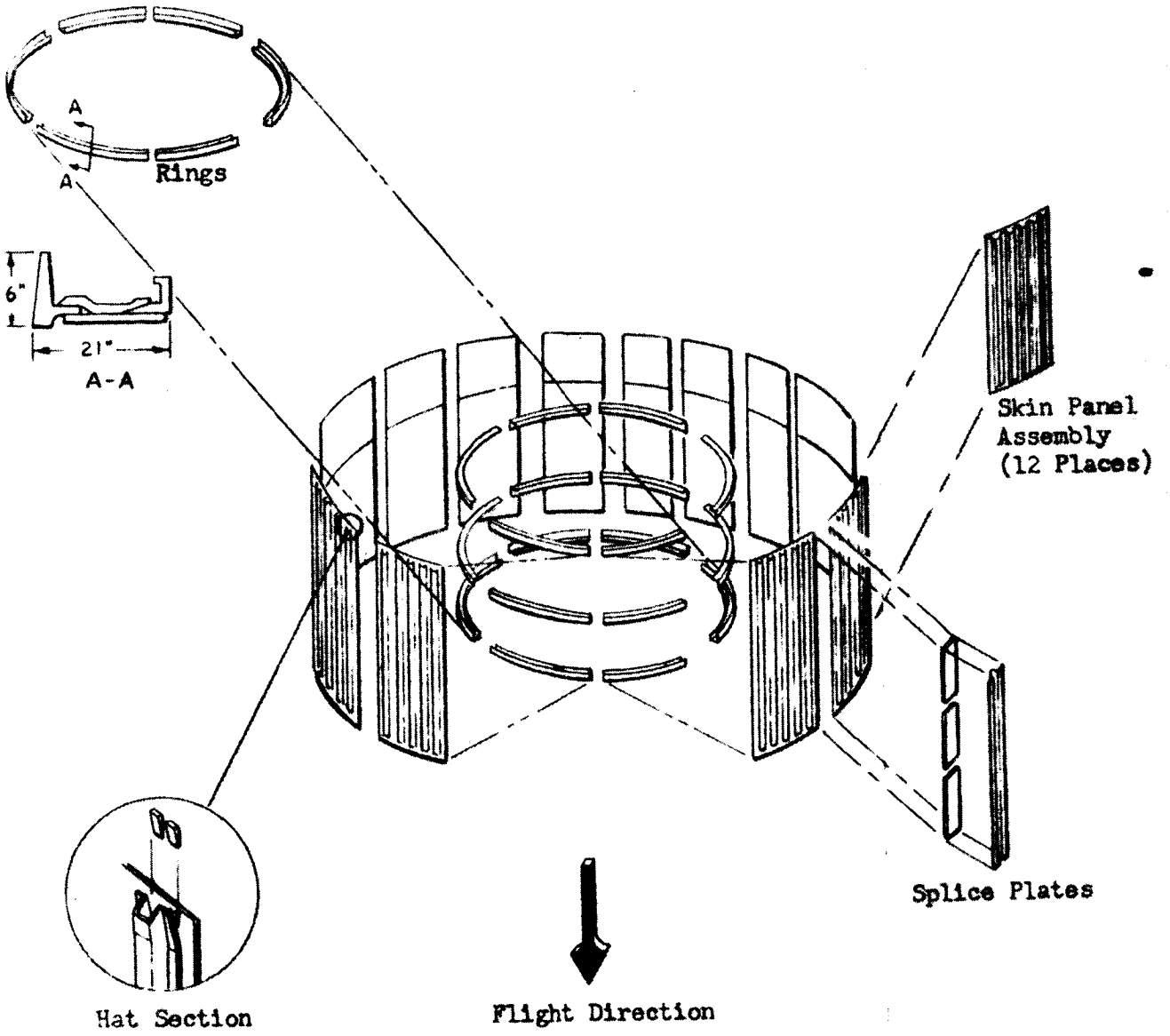

Figure 2-98 FORWARD SKIRT ASSEMBLY

U3 4211 4000

2.6.2 Skin Panel Sub-Assembly

The skin panel sub-assembly requires three sub-assembly fixtures which are floor-mounted. The upper skin (conical in shape) and the lower skin are located in the first fixture by tooling holes which are established in detail fabrication. The hat-shaped stringers are located in the fixture and the tapered spacers are bonded or tack riveted to the stringers prior to assembling the stringers to the skin panels. The skin panel assemblies are then removed and placed in one of the following assembly fixtures for completion. The access door, GOX line, LOX vent, etc., openings are routed and the supporting structure installed while the skin panel is in the second skin panel sub-assembly fixture. The standard skin panel assemblies are completed in the third skin panel sub-assembly fixture.

2.6.3 Access And Umbilical Door Assemblies

The access door assembly and umbilical door assembly are assembled in individual fixtures. Installation of the doors is made in the final assembly fixture or pick-up position.

2.6.4 Shipping And Handling

The forward skirt assembly is removed from the final assembly fixture and placed on the shipping and handling fixture in an inverted position. The forward skirt assembly and attached shipping fixture is then placed on a barge for shipment to Marshall Space Flight Center.

Upon arrival at Marshall Space Flight Center, the forward skirt assembly is inverted to flight position and located on a holding fixture while being inspected. The forward ring adapter is then attached. The completed assembly then moves into the structural assembly tower.

U3 4211 4000

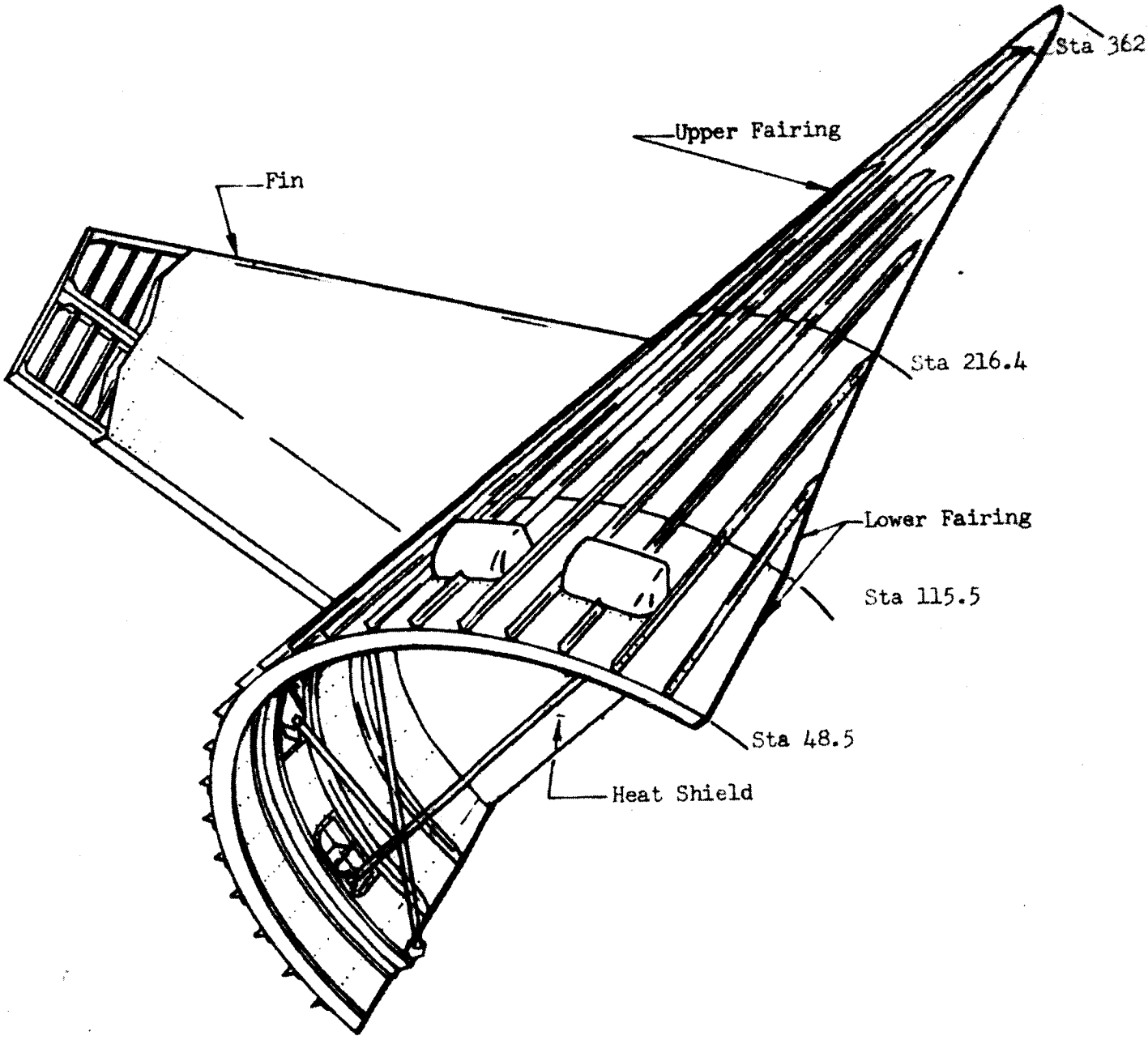

Figure 2-99 Engine Fairing and Fin

U3 4211 4000

2.7 FIN AND FAIRING

The Fairing (Figure 2-99) is a conically shaped structure that attaches to the Thrust Structure at each outboard engine location. The Fairing partially covers the outboard engine, houses the retro-rocket and the actuator support structure. The Fairing extends from stage station 48.5; it is approximately 16½ feet wide and 8 feet deep. It weighs approximately 1500 pounds. Construction is similar to conventional riveted and bolted aircraft structure. Below Station 115.5, the components are primarily titanium alloy. Above Station 115.5, the components are primarily aluminum alloy.

The Fairing divides at Station 216.4 into an upper and lower Fairing. Each of these assemblies is interchangeable at attach points. The lower Fairing attachments consist of two fixed fittings at Station 115.5 and six link fittings for attachment to the Thrust Structure and two pins for alinement of upper Fairing. The upper Fairing attachments consist of six link fittings and a hook for attachment to the Thrust Structure, and two holes for alinement with the lower Fairing.

The Fin is an airfoil structure that attaches to each lower engine Fairing. The Fin extends from stage Station 81.0 to 216.4. It is 11¼ feet high, 11½ feet long, 15 inches wide at the inboard end, four inches wide at the outboard end and weighs 511 pounds. All external components are titanium alloy and the internal components are aluminum alloy. The spar protrudes from the Fin and attaches to the Fairing frame at Station 115.5 (Figure 2-100). Closure angles attached to the Fin skin bolt to the Fairing skin. The Fin is a replaceable item.

2.7.1 Lower Fairing and Fin

2.7.1.1. Lower Fairing, Station 48.5 - 216.4 (60B16090)

A production break is made in the lower Fairing at Station 115.5. That portion of the lower Fairing below this station is called the lower Fairing Sub-assembly and is assigned the number 60B 16090-1-901. That portion of the lower Fairing above this station is called the center Fairing sub-assembly and is assigned the number 60B16090-1-902.

2.7.1.2 Lower Fairing Sub-Assembly, (60B16090-1-901)

2.7.1.2.1 Station 115.5 Frame 60B16150

This frame (Figure 2-100) forms the basic structural tie between the Thrust Structure and the Fairing and between the Fairing and Fin. It consists of two segments machined from aluminum plate; a steel center segment to which the Fin attaches, two steel terminal fittings which attach to the support assembly on the Thrust Structure; chords and shims.

U3 4211 4000

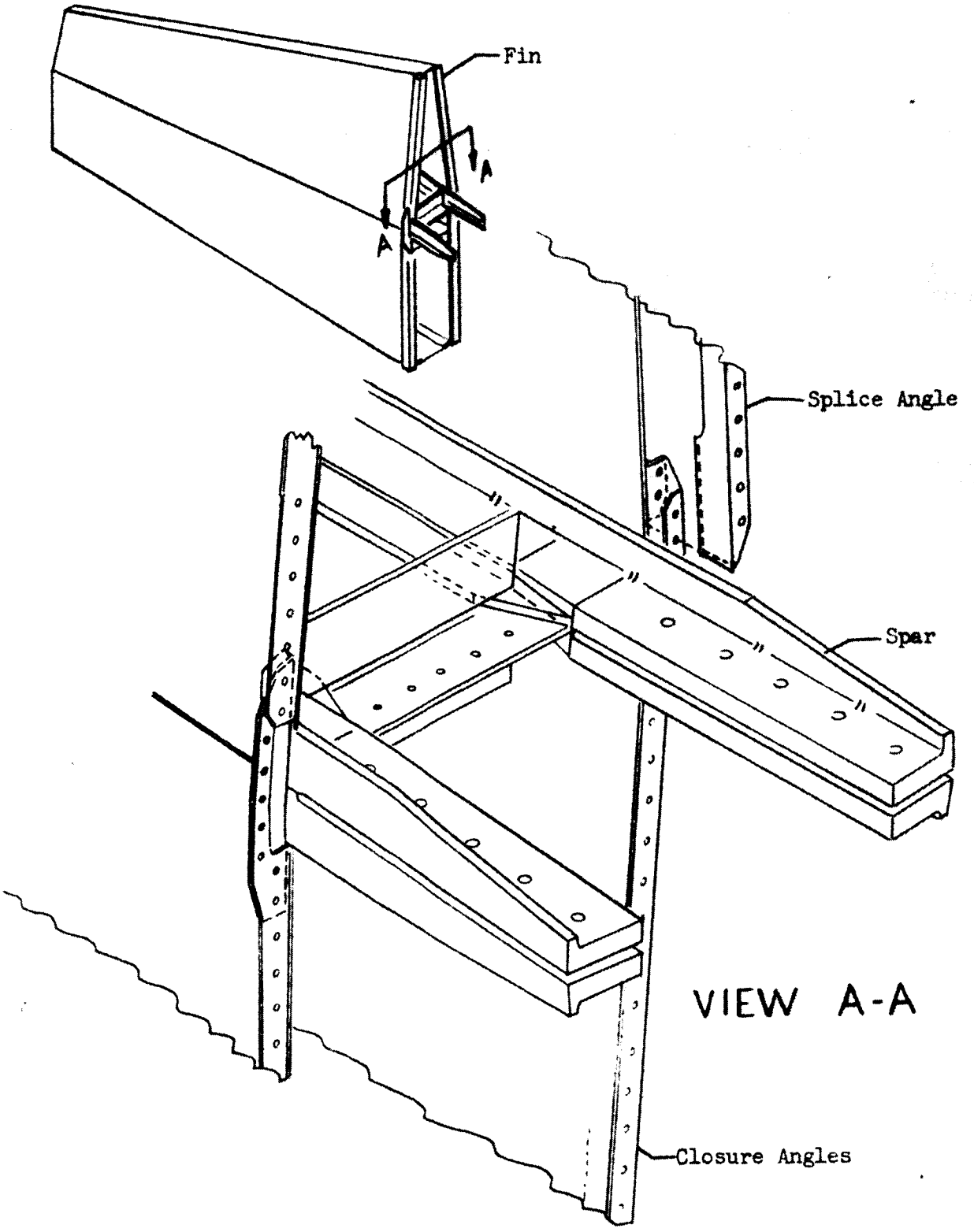

Figure 2-100 Fin Spar and Closure Angles

4211 4000

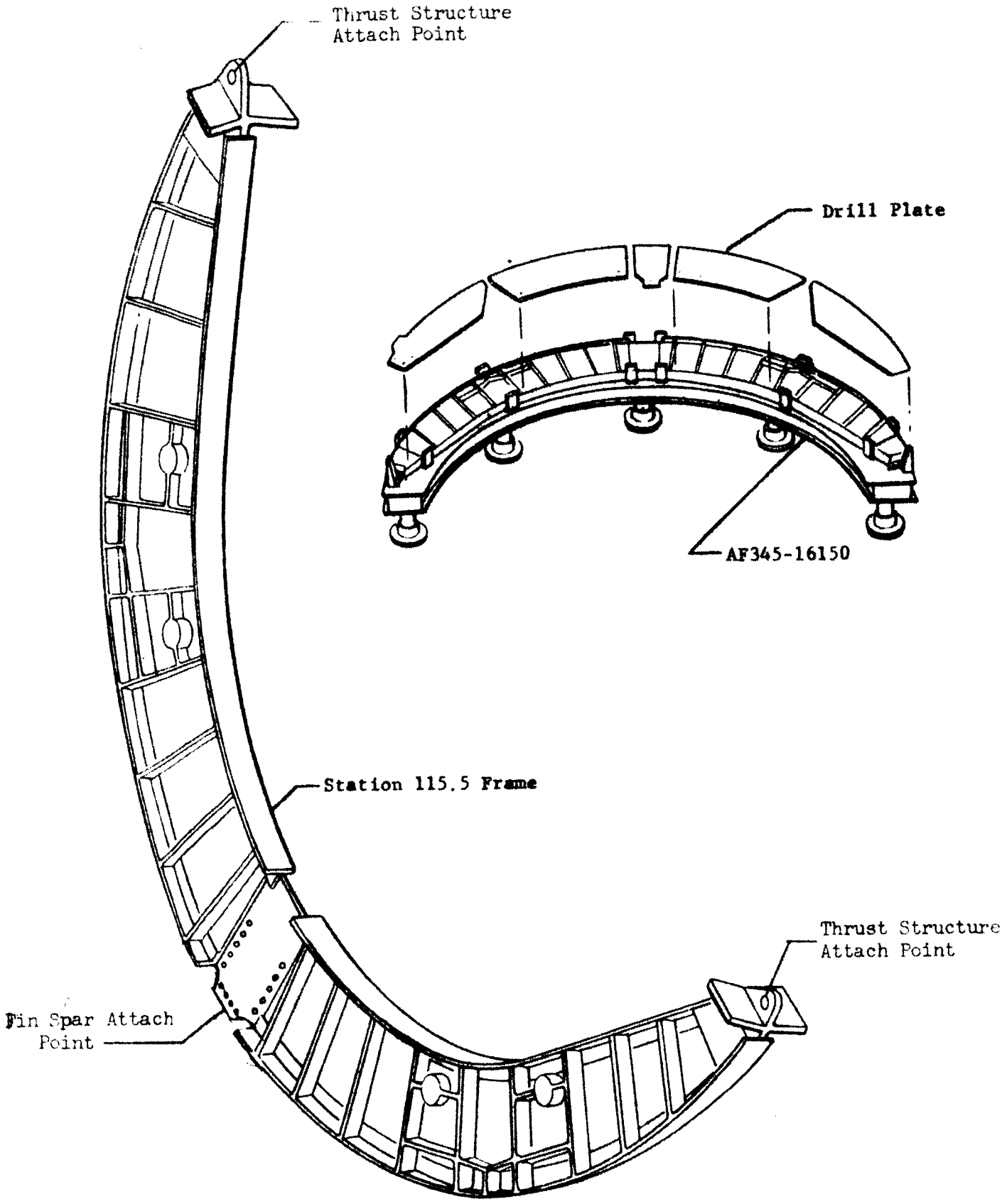

Figure 2-101 Station 115.5 Frame

U3 4211 4000

2.7.1.2.1 (Continued)

The terminal fittings include undersize holes common to the support assembly.

The details are indexed and clamped in AF 345-16150 which is coordinated to TT 345-16150. The terminal fittings are indexed to contour and edges. All fasteners are installed while the details are clamped in the jig. Holes through the center common to the Fin spar are drilled undersize from a drill plate. The frame is lifted from the tool with HT 370-16000. (Figure 2-102). The holes common to the Fin spar are not shown on the Engineering Documentation for the frame. The assembly is therefore assigned a -900 number (60B16150-1-900).

2.7.1.2.2 Station 66.75 Frame Assembly.

(Figure 2-103). This is the major structural frame in the portion of the Fairing which cantilevers below the Thrust Structure. It consists of a titanium alloy chord and a welded hastelloy truss assembly. The truss consists of a series of tubes and plates.

The truss details are indexed in AF 345-16110 and welded complete. The AF is a trunnion mounted picture frame tool which allows optimum access for welding. After welding, the truss assembly is reindexed in the same fixture, the chord is located and the fastener holes are drilled from drill plates with a positive feed drill. Selected fasteners are installed while the truss and chord are clamped in the fixture. The frame is lifted from the tool with HT 370-16000. (Figure 2-102).

2.7.1.2.3 Titanium Frame Assemblies. (Figure 2-117)

These assemblies are located in the lower Fairing sub-assemblies at Stations 48.5, 83.5 and 100.25. Each frame is composed of titanium alloy chords and webs.

The intercostal attach angles shown on the Station 83.5 Engineering Documentation are not included in the production assembly. Omission of the angles on the sub-assembly allows the intercostals to be located later to align with the external stringers on the Fairing. This frame is therefore assigned a 900 number, (60B16130-1-900).

One tool, AF 345-16101-903, serves for assembling all three of these frames. The details are located, clamped and drilled from plates with a positive feed drill. Selected fasteners are installed while the detials are clamped in the fixture.

2.7.1.2.4 Air Scoop Assembly. (Figure 2-104)

There are four air scoops on each lower Fairing assembly. Each air scoop consists of a skin, a doubler, an attach angle, a center frame called a splitter and two end frames each consist of a

U3 6211 4000

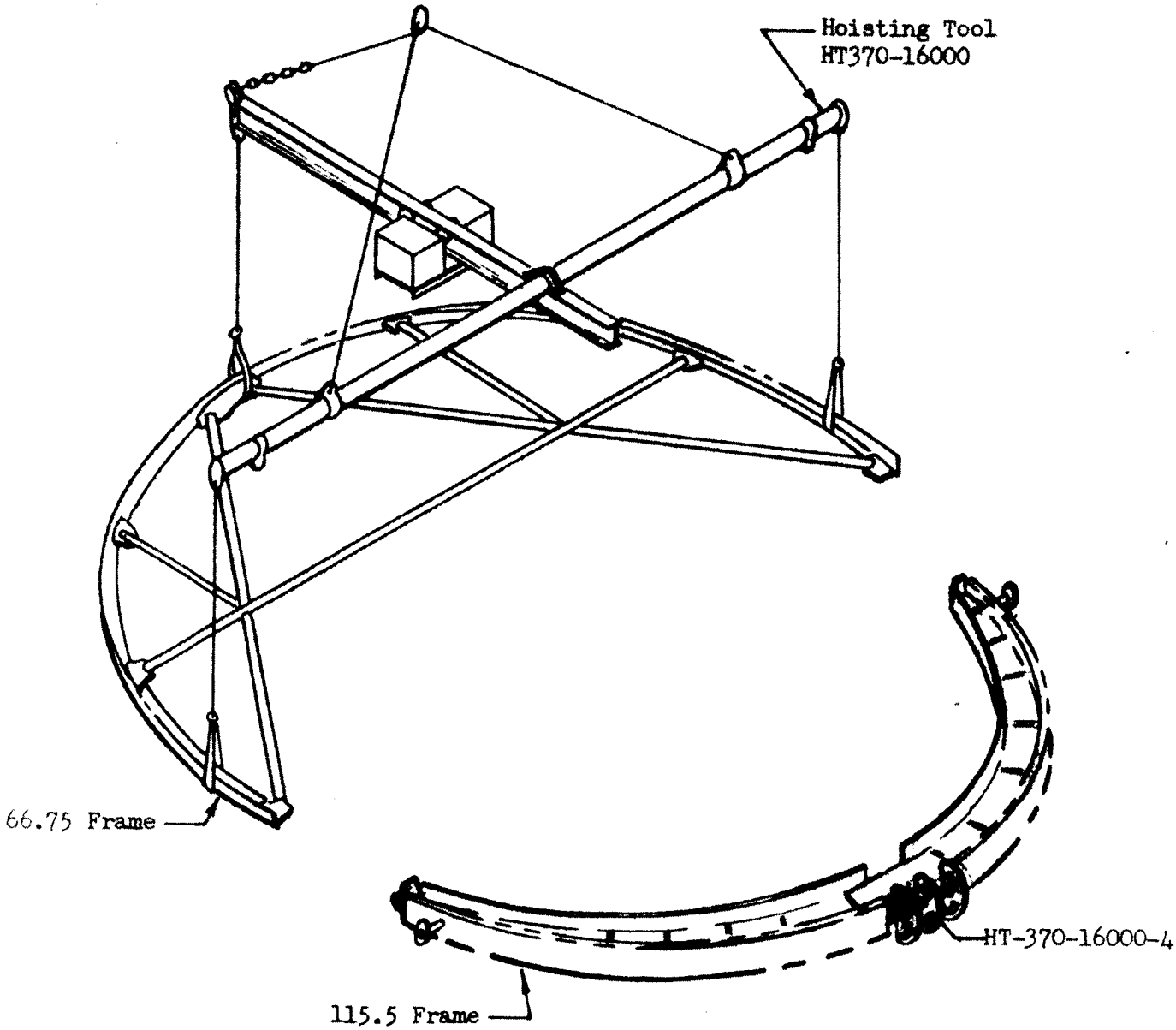

Figure 2-102 Hoisting Tool For Station 66.75 and 115.5 Frames

U3 4211 0000

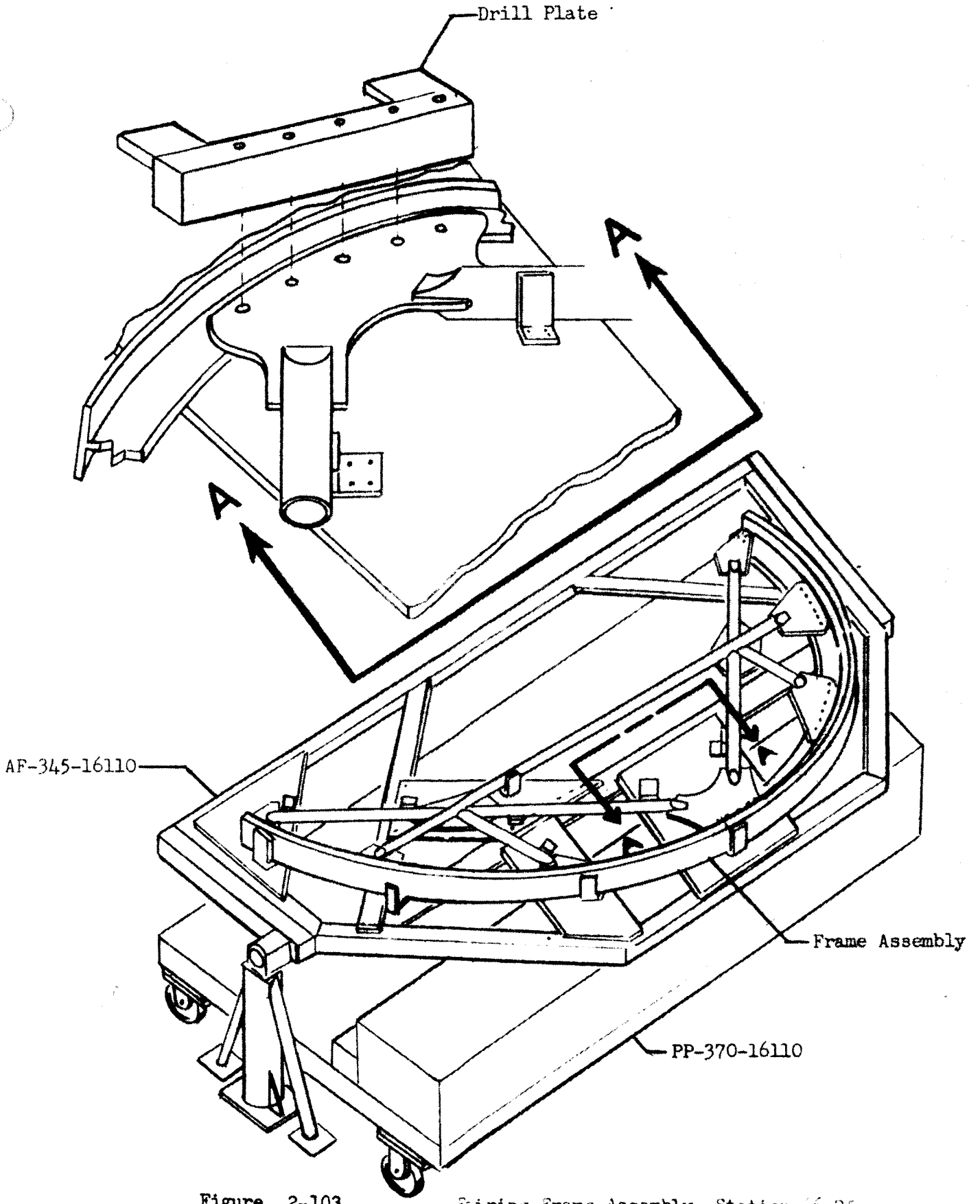

Figure 2-103 - Fairing Frame Assembly Station 66.75

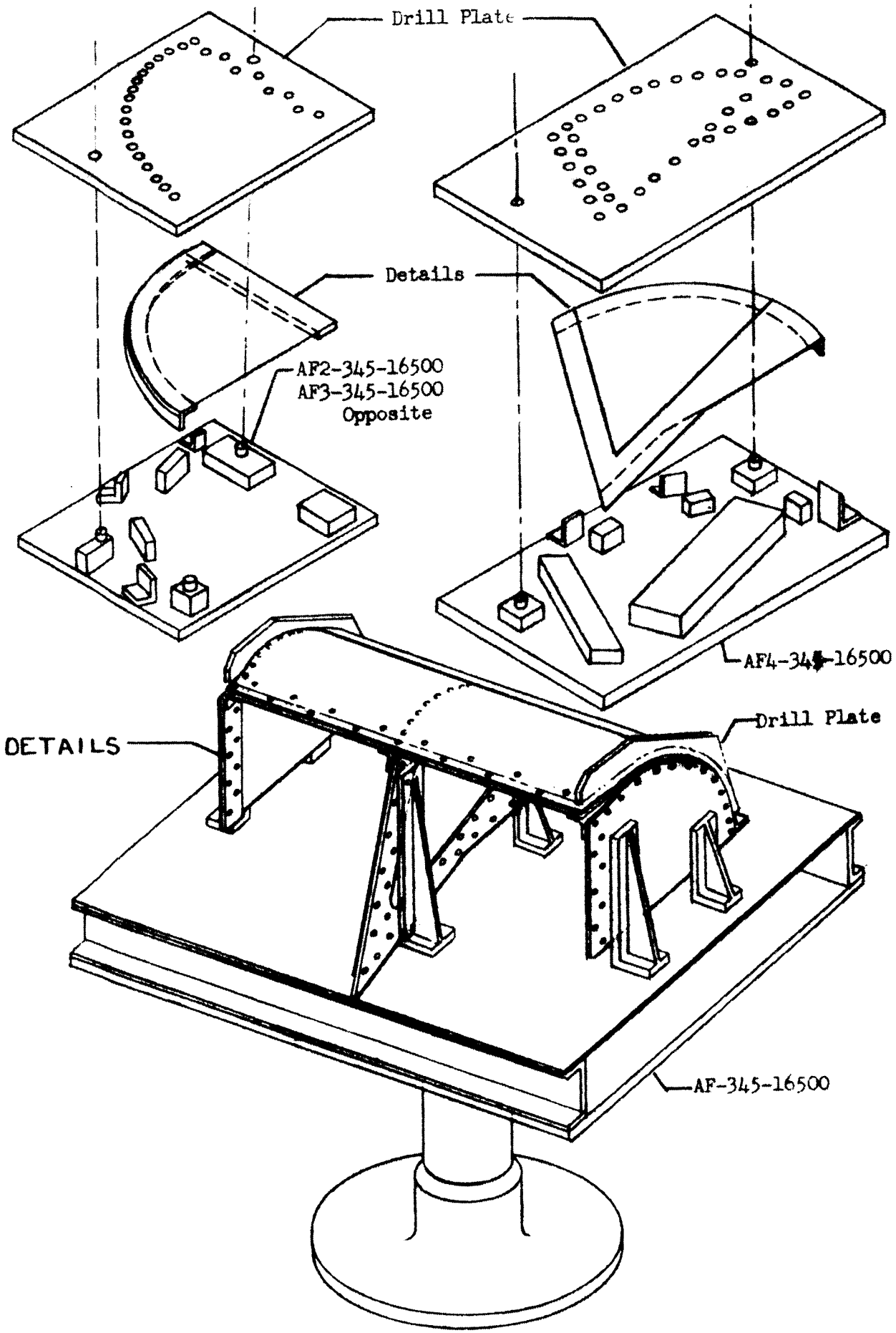

Figure 2-104 - Fixture Assembly Air Scoop

2.7.1.2.4 (Continued)

web, a chord, doublers and fillers. All details are titanium alloy.

The end frames and the splitter details are located and clamped in their respective assembly fixtures, AF2, AF3, and AF4-345-16500. Fastener holes are drilled from drill plates with a positive feed drill, and fasteners are installed.

The end frame and splitter sub-assemblies are indexed and clamped in AF 345-16500. The skin doubler, attach angle and a drill plate are indexed and clamped. The fastener holes are drilled with a positive feed drill. Selected fasteners are installed while the components are clamped in the jig. The assembly is removed from the jig and remaining fasteners are installed.

2.7.1.2.5 Assembly of Lower Fairing Sub-Assembly Sta. 48.5-115.5 (60[illegible]160 90-1-901)(Figure 2-105)

The following assemblies and details are included in the lower Fairing sub-assembly: frame assemblies at Stations 48.5, 66.75, 83.5, 100.25, and 115.5; two close-out channels; angles for attaching frames to close-out channels; intercostals which lie between frames and consist of channels or webs, chords, and attach angles; skins; external stringers, and four air scoop assemblies. All details not previously sub-assembled are titanium alloy.

The Station 115.5 frame is indexed in AF 345-16101-901 to the undersize holes in the terminal fittings. The AF is coordinated to TT 345-16150 for these hole locations. The close-out channels are indexed and clamped to the fixture and to the Station 115.5 frame. The remainder of the frames are indexed to the fixture and clamped. The attach angles common to the frames and the close-out channel are located, drilled and fasteners are installed. Each intercostal is fixture located, drilled and fastened with permanent fasteners. Positive feed drilling is provided where allowed by accessibility. The air scoops are located and clamped when the adjacent intercostals are drilled febore the air scoops are removed from the assembly. This completes the basic structure of the sub-assembly.

One of the Fairing skins is located and clamped. One external stringer is located and clamped to an external drill bar and the fastener holes are drilled with a positive feed drill. Additional stiffeners and skins are applied and drilled with fixture located external drill bars until all holes common to the external stringers have been drilled. The stringers are removed from the assembly and deburred after drilling. The holes common only to the frames and skins are then drilled from external drill plates which index to holes common to the stringers, frames, and skins. The skins are then removed for deburring. The skins and

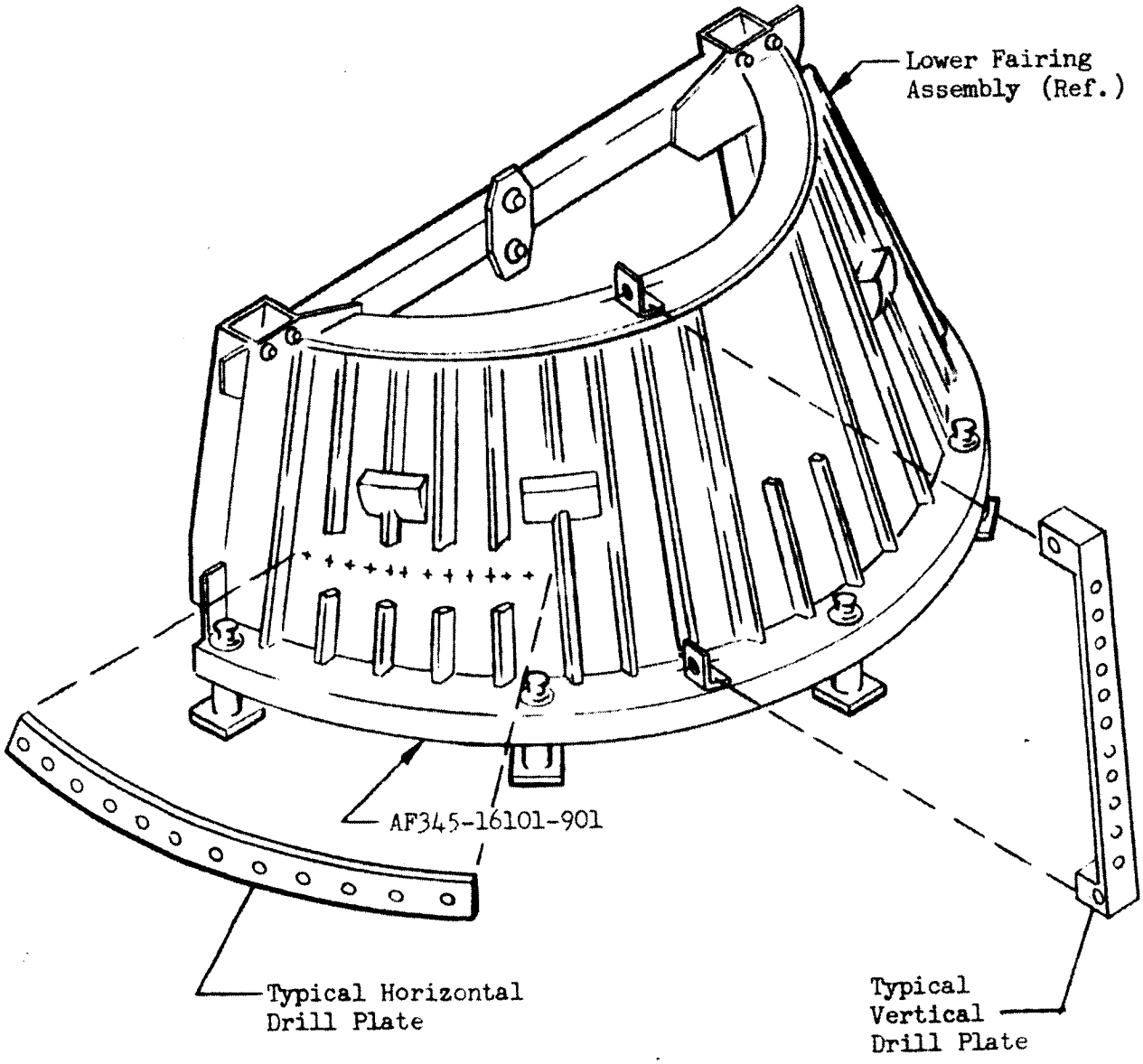

Figure 2-105 - Assembly Fixture for Lower Fairing

U3 4211 4000

2.7.1.2.5 (Continued)

stringers and air scoops are re-applied, located and clamped through the previously drilled holes. The remaining holes common to the air scoop are drilled. All fasteners are installed completing the sub-assembly. Handling fittings, MIT 370-16000, are bolted to the assembly and HT 370-7116 is used to lift the assembly. (Figure 2-106)

2.7.1.3 Center Fairing Sub-Assembly Sta. 115.5 - 216.4

2.7.1.3.1 Aluminum Frame Assemblies.

Three aluminum frame assemblies are located in the center Fairing sub-assembly at Stations 152.45, 183.89 and 216.4. Each of these assemblies consists of chords and webs.

The intercostal attach angles shown on the Engineering Documentation are not included in the production assemblies. The angles are omitted to allow location of intercostals to match the external stringers during a later assembly operation. Each one of the frames noted is therefore assigned a 900 number (60B16190-1-900, 60B16160-1-900, 60B16198-1-900).

The details of each frame are indexed and clamped in the applicable assembly fixture. The fastener holes are drilled from a drill plate. Selected fasteners are installed while the details are clamped in the assembly fixture. AF 345-16190 assembles the frames at Station 152.45 and 183.89. AF 345-16198 assembles the center Fairing frame at Station 216.4 is coordinated to TT 345-16135 for contour. The frames and the assembly fixtures are similar to those shown in Figures 2-117).

2.7.1.3.2 Intercostal Tube Assemblies.

Four intercostal tube assemblies are located in the center Fairing area. The assemblies attach to the Station 115.5 frame and to a fitting near Station 152. Each assembly consists of an aluminum tube with a gusset welded into a slot at each end. One assembly fixture, AF 345-16628, is used to position the components of each assembly for welding. These assemblies are not included in the center Fairing subassembly.

2.7.1.3.3 Assembly of Center Fairing Sub-Assembly (Fig. 2-107) Sta. 115.5 to Sta. 216.4 (60B16090-1-902).

The center Fairing sub-assembly consists of three frame assemblies, six formed frames, two close-out channels, angles for attaching close-out channels to the frames, and intercostals that lie between frames. These consist of webs, chords, attach angles, skins, and external stringers. All details are aluminum alloy.

3 4211 4000

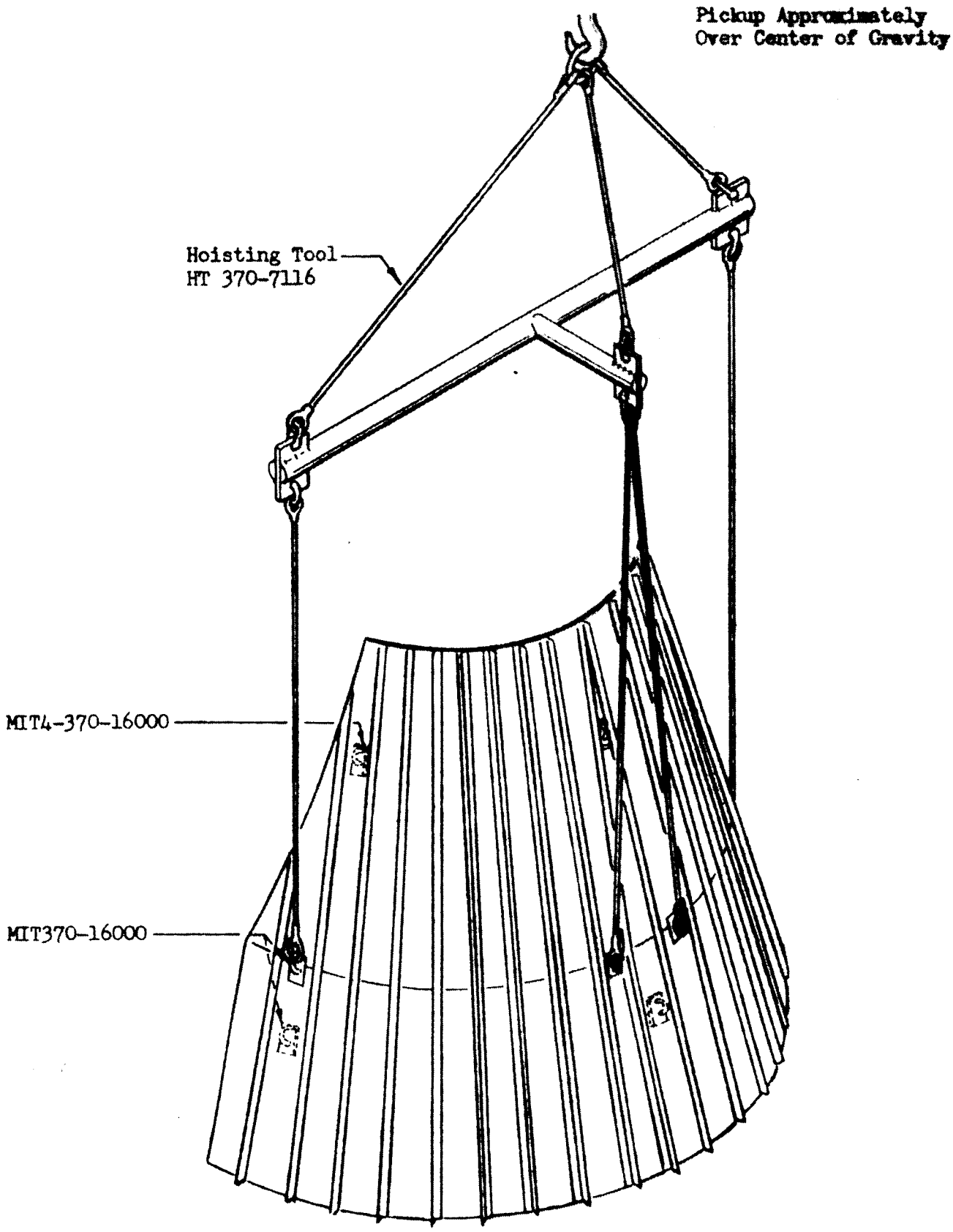

Figure 2-106 - Handling Tool
Lower Fairing

U3 4211 4008

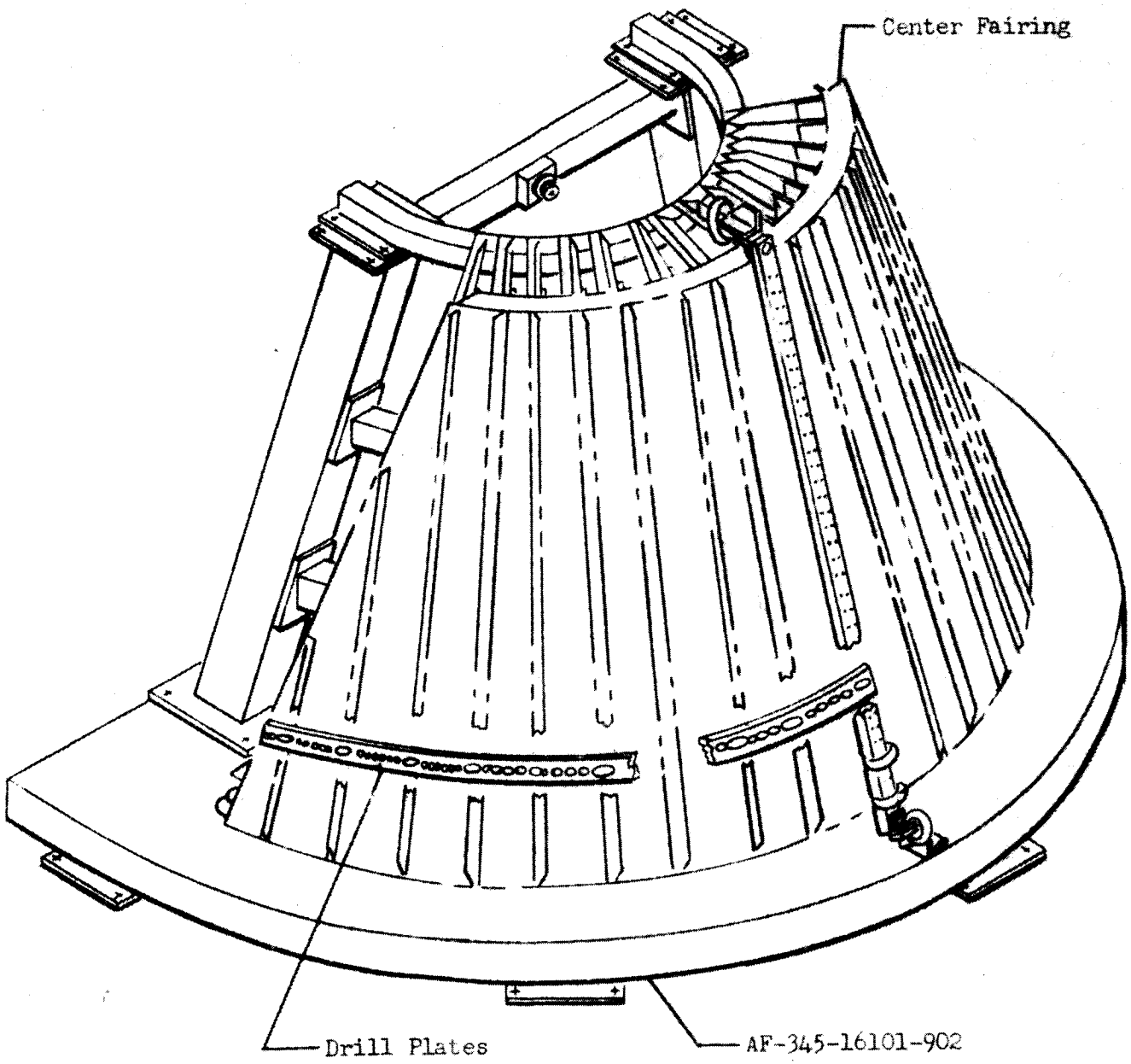

Figure 2-107 ASSEMBLY FIXTURE FOR CENTER FAIRING

2.7.1.3.3 (Continued)

The fittings along the close-out channels to which the link fittings attach are not included in the sub-assembly.

The close-out channels are located and clamped in assembly fixture AF 345-16101-902. All the frames are located and clamped in the fixture. The attach angles common to the frames and close-out channels are located, drilled, and permanent fasteners are installed. Each intercostal is fixture located, drilled and fastened with permanent fasteners. Drilling is from apply type drill templates and from pilots with hand drills. This completes the basic structure sub-assembly.

The external stringers are temporarily located on the basic structure to match the intercostals and frames. Fastener locations common to the frames and stringers are drilled pilot size from a small drill plate which indexes to the frame and the stringer. The stringers are then removed.

Each skin is located, clamped and drilled pilot size from the pilot holes in the frames. A stringer and an external drill bar are indexed and clamped to these pilot holes. The remaining fastener holes in the stringer are drilled full size from the drill bar. The stringer is then removed from the fixture. This is repeated for each stringer. The holes common only to the frames and skins are then drilled from horizontal external drill plates which index to the holes drilled through the frames at the stringer locations. The skins and stringers are deburred, re-indexed and the remainder of the fasteners are installed completing the sub-assembly. Handling Fittings MIT4-370-16000 are bolted to the assembly and MT 370-7116 is used to lift the assembly. (Figure 2-106).

2.7.1.3.4 Assembly of Lower Fairing Sta. 48.3 to Sta. 216.4 (60B16090).

The completion of the lower fairing asssmbly is accomplished in the final assembly position.

2.7.2 Fin

2.7.2.1 Forward Rib Assemblies

These assemblies extend from the spar to the leading edge connecting with the spar at Fin Stations 37.191, 47.400, 57.609 and 67.819. Each rib consists of the following aluminum alloy details: a web, two chords, and four tee stiffeners.

The details are loaded and clamped in an assemblyfixture. (Figure 2-108). A drill plate and a hand drill are used to drill all the holes. Selected fasteners are installed prior to removing the assembly from the fixture.

The following assembly fixtures are used to assemble the forward ribs:

U3 4211 4000

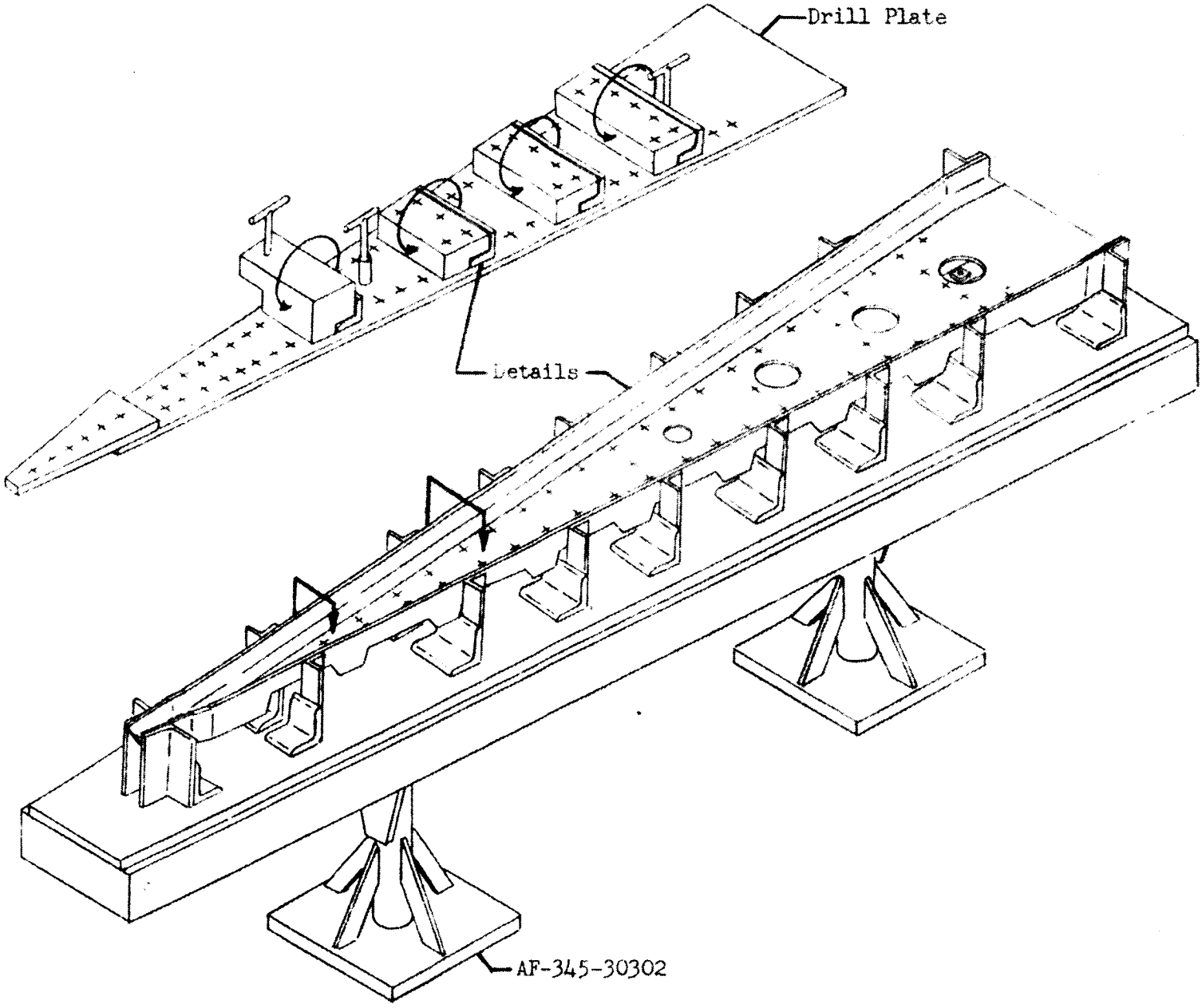

Figure 2-108 - Forward Fin Rib

U3 4211 4000

2.7.2.1 (Continued)

AF 345-30301, Fixture Assembly, Forward Rib Fin Sta. 37.191.
AF 345-30302, Fixture Assembly, Forward Rib Fin Sta. 47.400.
AF 345-30303, Fixture Assembly, Forward Rib Fin Sta. 57.609.
AF 345-30304, Fixture Assembly, Forward Rib Fin Sta. 67.819.

2.7.2.2 Aft Rib Assemblies

These assemblies extend from the spar to the trailing edge beam and are located on Fin Stations 37.191, 47.400, 57.609 and 67.819. Each rib consists of the following aluminum alloy details: a web, two chords, and four tee stiffeners.

The details are loaded and clamped in an assembly fixture. (Figure 2-109). A drill plate and a hand drill are used to drill all holes. Selected fasteners are installed prior to removing the assembly from the fixture.

The following assembly fixtures are used to assemble the aft ribs:

AF 345-30212, Fixture Assembly, Aft Rib Fin Station 37.191.
AF 345-30203, Fixture Assembly, Aft Rib Fin Station 47.400.
AF 345-30204, Fixture Assembly, Aft Rib Fin Station 57.609
AF 345-30205, Fixture Assembly, Aft Rib Fin Station 67.819.

2.7.2.3 Fin Tip Beam Assembly

The tip beam consists of the following titanium alloy details: two chords, a web and a tip channel. The details are located and clamped in place with the drill plate in AF 345-30400. The drilling of this assembly is accomplished with a drill plate and a positive feed drill. Selected fasteners are installed prior to removing the assembly from the fixture.

2.7.2.4 Trailing Edge Beam Assembly

The trailing edge beam consists of the following titanium alloy details: two chords, a web, stiffener angles, a filler angle and a close-out angle. The details are located and clamped in place with a drill plate in AF 345-30200. The drilling of this assembly is accomplished by the use of a drill plate and a positive feed drill. Selected fasteners are installed prior to removing the assembly from the fixture. (Figure 2-10).

2.7.2.5 Spar Assembly

The spar consists of the following aluminum alloy details: two chords, a web, stiffener angles, fillers, and laminated shim stock. The assembly fixture is AF 345-30100. (Figure 2-111).

The forward stiffeners, web and chords are located and clamped. The holes common to the web and chords are drilled from a drill plate with positive feed drills. The drill plate is removed and

U3 4311 4000

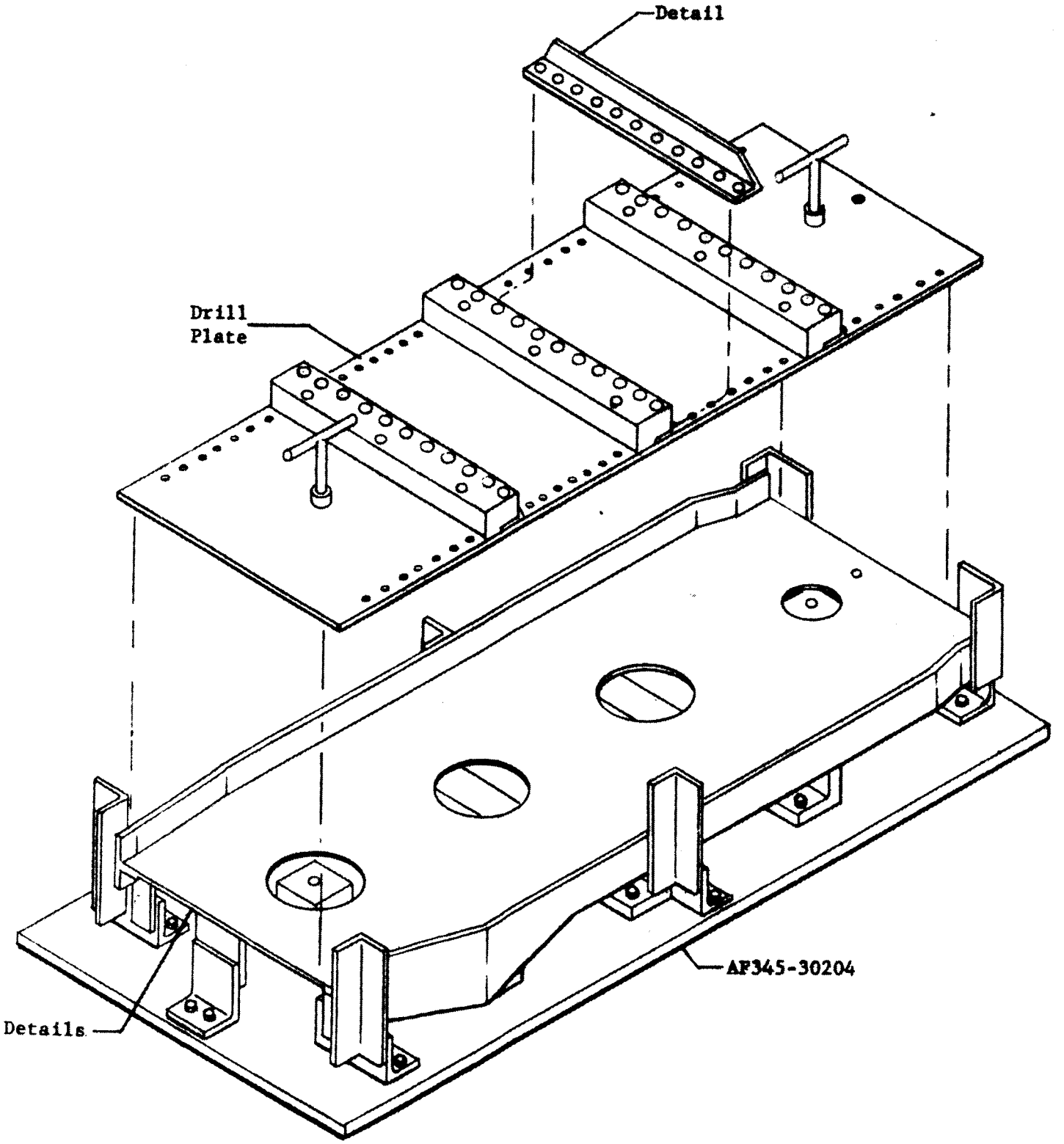

Figure 2-109 - Aft Rib Assembly

4211 4000

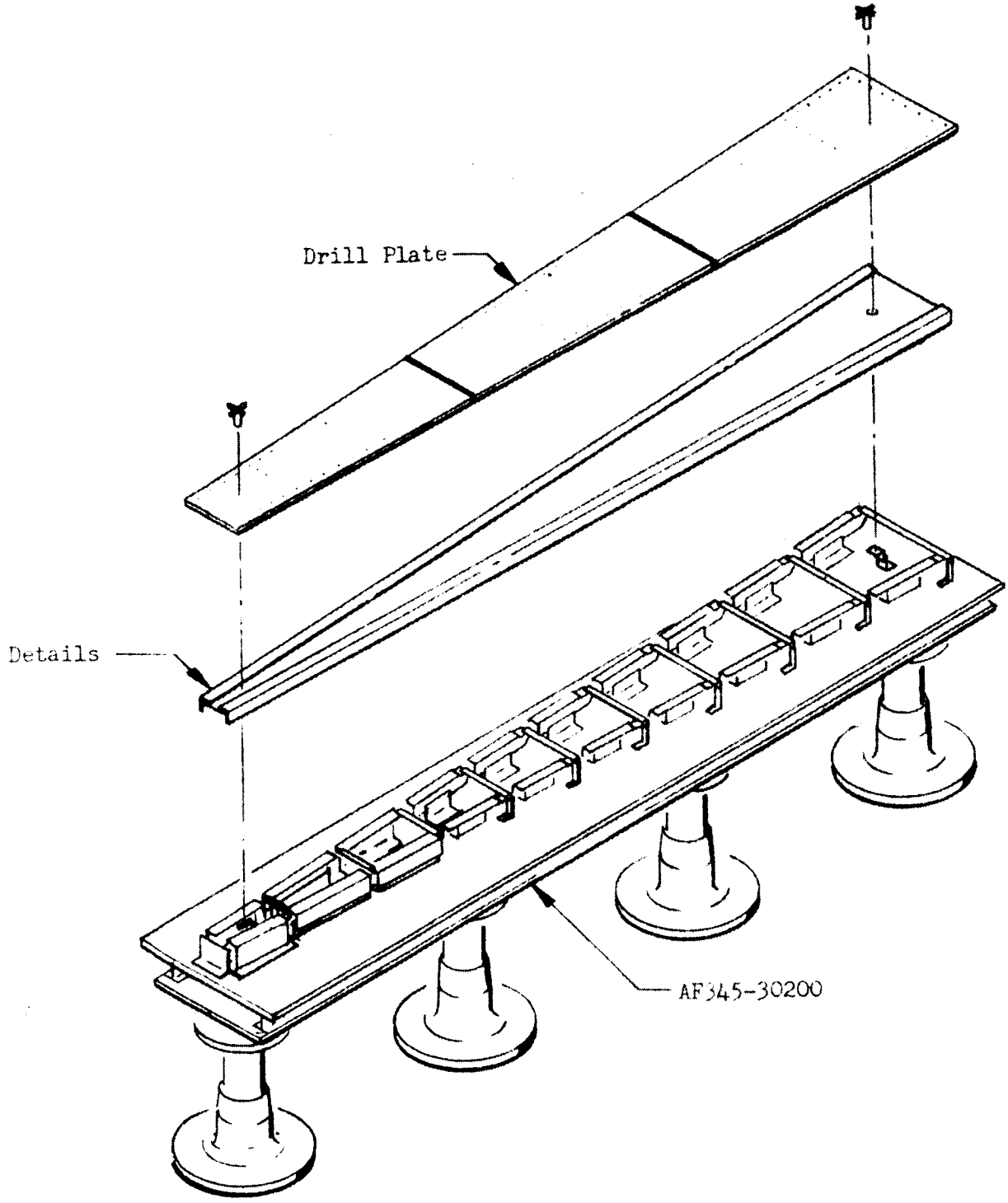

Figure 2-110 - TRAILING EDGE ASSEMBLY FIXTURE

U3 4211 4000

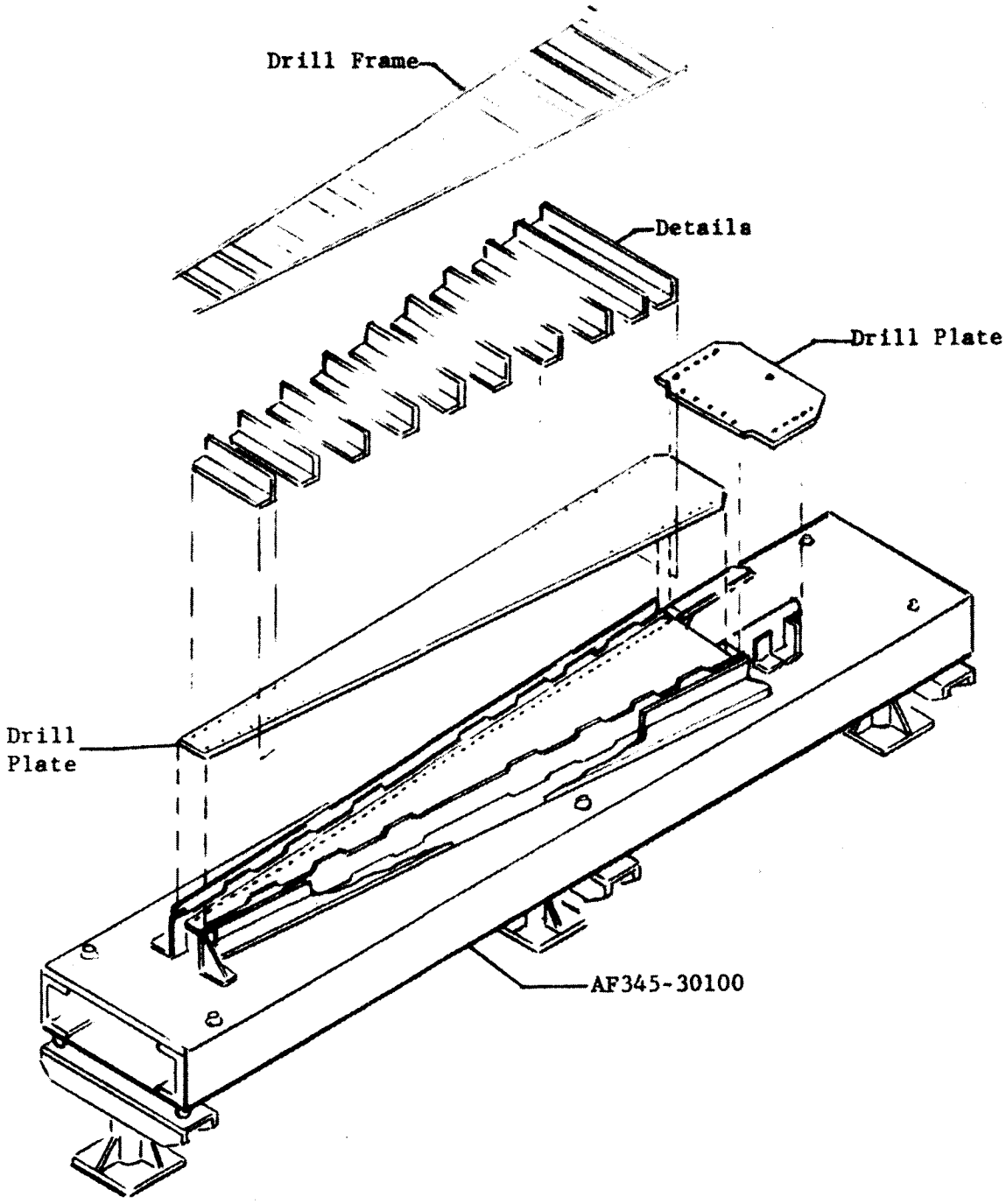

Figure 2-111 - SPAR ASSEMBLY

U3 4211 4000

2.7.2.5 (Continued(

the drill frame is loaded. The aft stiffeners, laminated shims and fillers are loaded and clamped.

The holes in the stiffeners are drilled from the drill frame with positive feed drills. The drill frame is removed and the aft stiffeners are dimensionally adjusted by removing strips of the shim as required.

The holes common to the Fairing frame at stage Station 115.5 are drilled with positive feed drills from a drill plate which is coordinated to TT 345-16150. Selected fasteners are installed prior to removing the assembly from the tool.

2.7.2.6 Assembly of Fin Sub-Assembly (60.30000).

The Fin is composed of a spar, a trailing edge beam, a tip beam, built-up and formed internal ribs, skins, a leading edge insert and channel, close-out angles common to the Fairing, intercostals, miscellaneous angles, and fillers.

The assembly fixture is AF 345-30000. PP4-370-16000 is used with the assembly fixture. (Figure 2-112). The assembly fixture is coordinated to Drg 345-30000 for contour and holes common to the Fairing. The attach holes common to the Fairing are in the close-out angles and the spar. The spar is located and clamped in the fixture. Primary index is from the undersize holes in the spar common to the Fairing. The trailing edge beam is located. The aft ribs are located and clamped to the stiffeners on the spar and trailing edge beam. Fastener holes common to the ribs are drilled by hand from pilot holes in the stiffeners.

The leading edge channel is located and clamped on the leading edge drill plate. The forward ribs are located to stiffeners on the spar and pins on the leading edge drill plate and clamped in position. The holes common to the ribs are drilled by hand from pilot holes in the spar stiffeners. The holes common to the ribs and leading edge channels are drilled undersize from the leading edge drill plate. A tack rivet is installed in one hole common to each rib and the leading edge channel.

The intercostals are located and clamped in position. The intercostals are held in position by the installation of one tack rivet at each intercostal and rib intersection. The splice plate is located and bonded in position. All fasteners not common to the skin are installed. One aft skin is located and clamped. All holes except holes common to the closure angle and skin are drilled from drill plates with positive feed drills. The skin is removed and the opposite side skin is located, clamped, and drilled. One set of (three) forward skins, the leading edge insert, and fillers are located and clamped. The holes common

U3 4211 4000

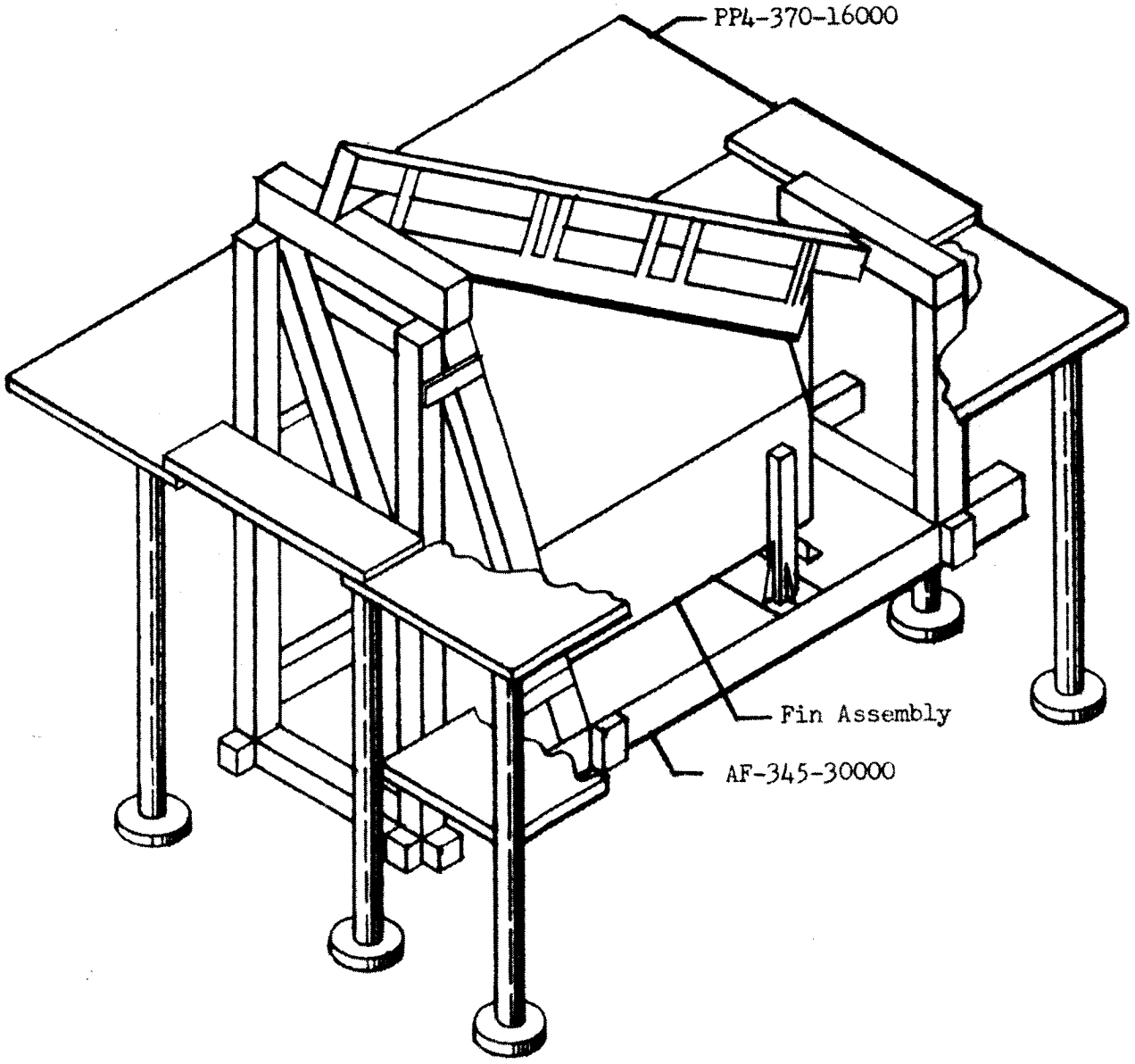

Figure 2-112 - Assembly Fixture For Fin

J3 4211 4000

2.7.[illegible] (Continued)

to the near and opposite side skins and the leading edge insert are drilled from a drill plate with positive feed drills. The near side skins are removed and the drilling is completed on the opposite side skins.

All skins are installed and permanently fastened in place. The closure angles are located and clamped. The holes common to the closure angle and Fin are drilled from drill plates with positive feed drills. The fasteners common to the Fin and closure angles are installed.

The holes in the closure angles common to the Fairing are drilled undersize from a drill plate with positive feed drills.

Four lifting lugs (MIT2-370-1[illegible]) are installed and the Fin is removed from the tool with HT 370-711[illegible]. (Figure 2-113).

2.7.[illegible] Assembly of Lower Fairing &Fin Assembly (6[illegible]516[illegible]1) Figures 2-114 & 2-115).

The Lower Fairing (Figures 2-114 and 2-115) consists of the lower Fairing sub-assemblies, the intercostal tube assemblies, six fittings which attach the link fitting to the Fairings, fillers, and shims. The link fittings are not attached to the Fairing during the assembly operation. The Fin is assembled with the Fairing during this operation, then removed and shipped separately.

AF 345-16000 is used for this assembly operation. MrG 345-16090 coordinates all the locators for the alinement pins common to the upper Fairing. MrG 345-30[illegible] coordinates the large external drill plate which drills undersize holes through the Fairing skin common to the Fin closure angles. For initial setting, this drill plate is oriented in the fixture using TT 345-16150 and TT 345-1[illegible]13; then the drill plate index points are set to the drill plate.

The lower Fairing subassembly is loaded and indexed by pinning to the undersize holes in the [illegible] fittings in the Station 115.[illegible] frame and supporting the Station 115.[illegible] in the area common to the Fin spar. The center Fairing sub-assembly is loaded and [illegible] indexed. The large external drill plate is then positioned on the tool. The center Fairing sub-assembly is indexed to the drill plate and to fixture locators at Station 216.4. The holes drilled from drill plates, and fasteners are installed. The intercostal tube assemblies are located, fastener holes are drilled and fasteners installed.

U3 4211 4000

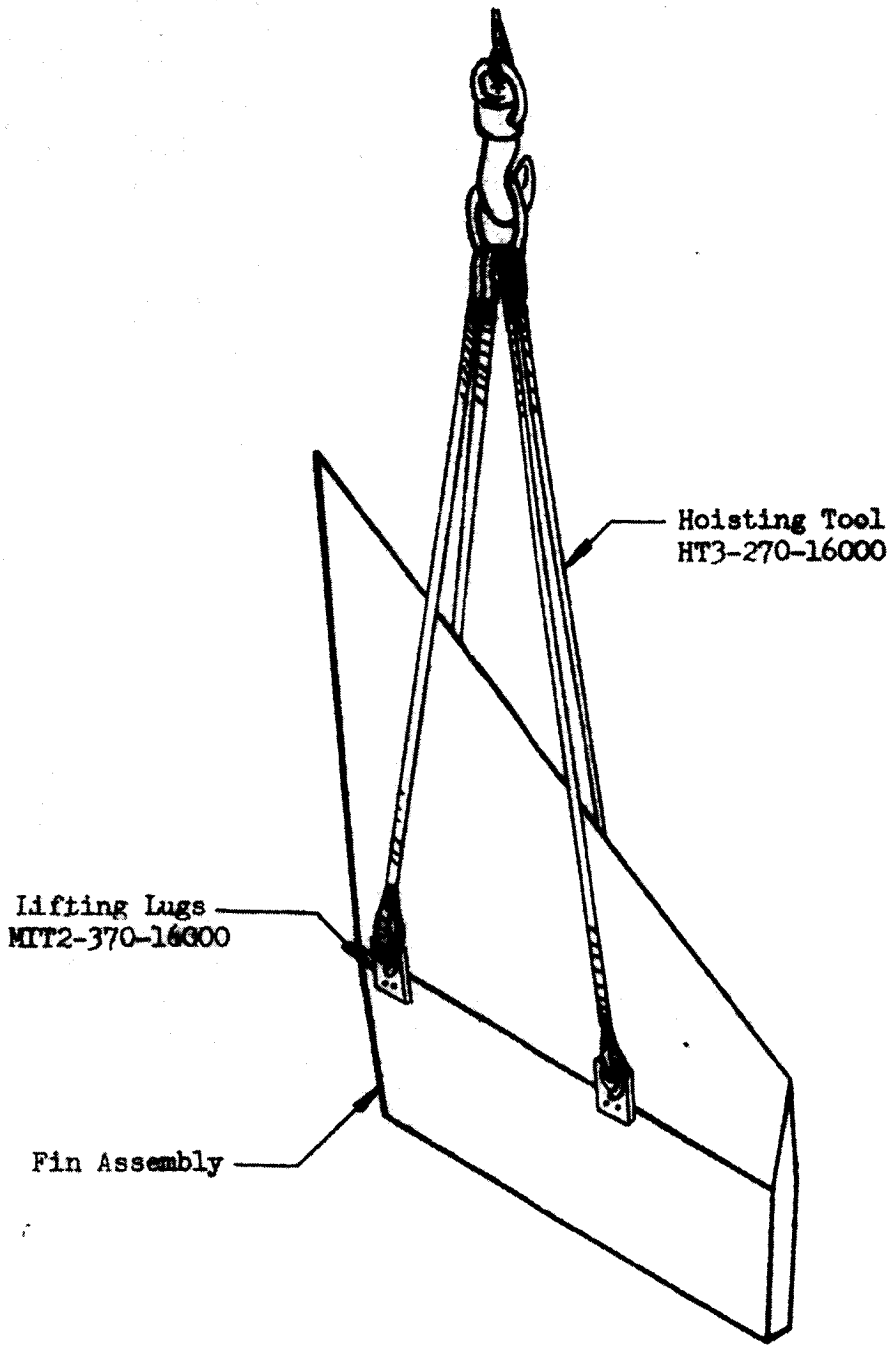

Figure 2-113 - Hoisting Tool for Fin Assembly

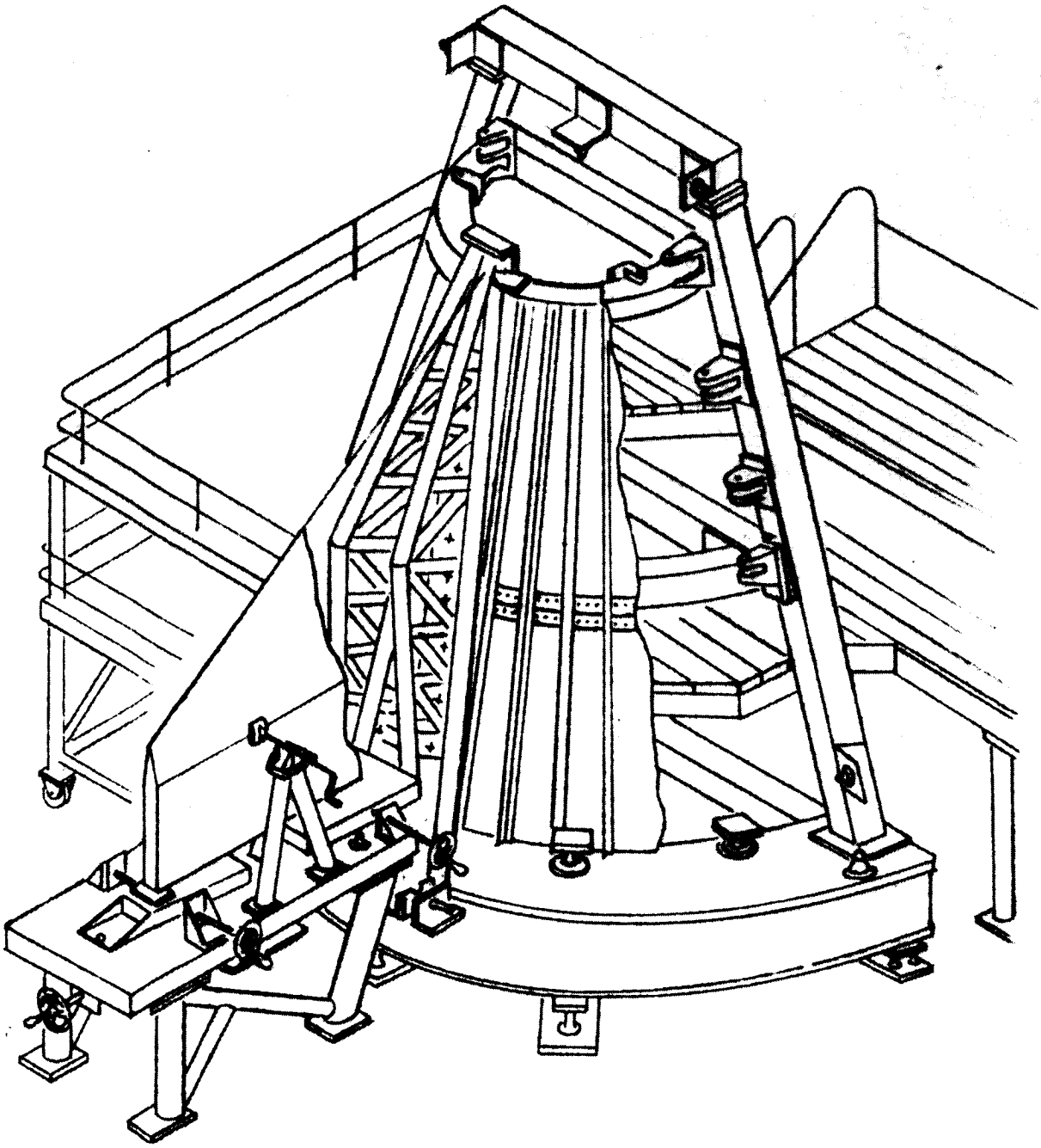

Figure 2-114 - Lower Fairing Final Assembly

U3 4211 4000

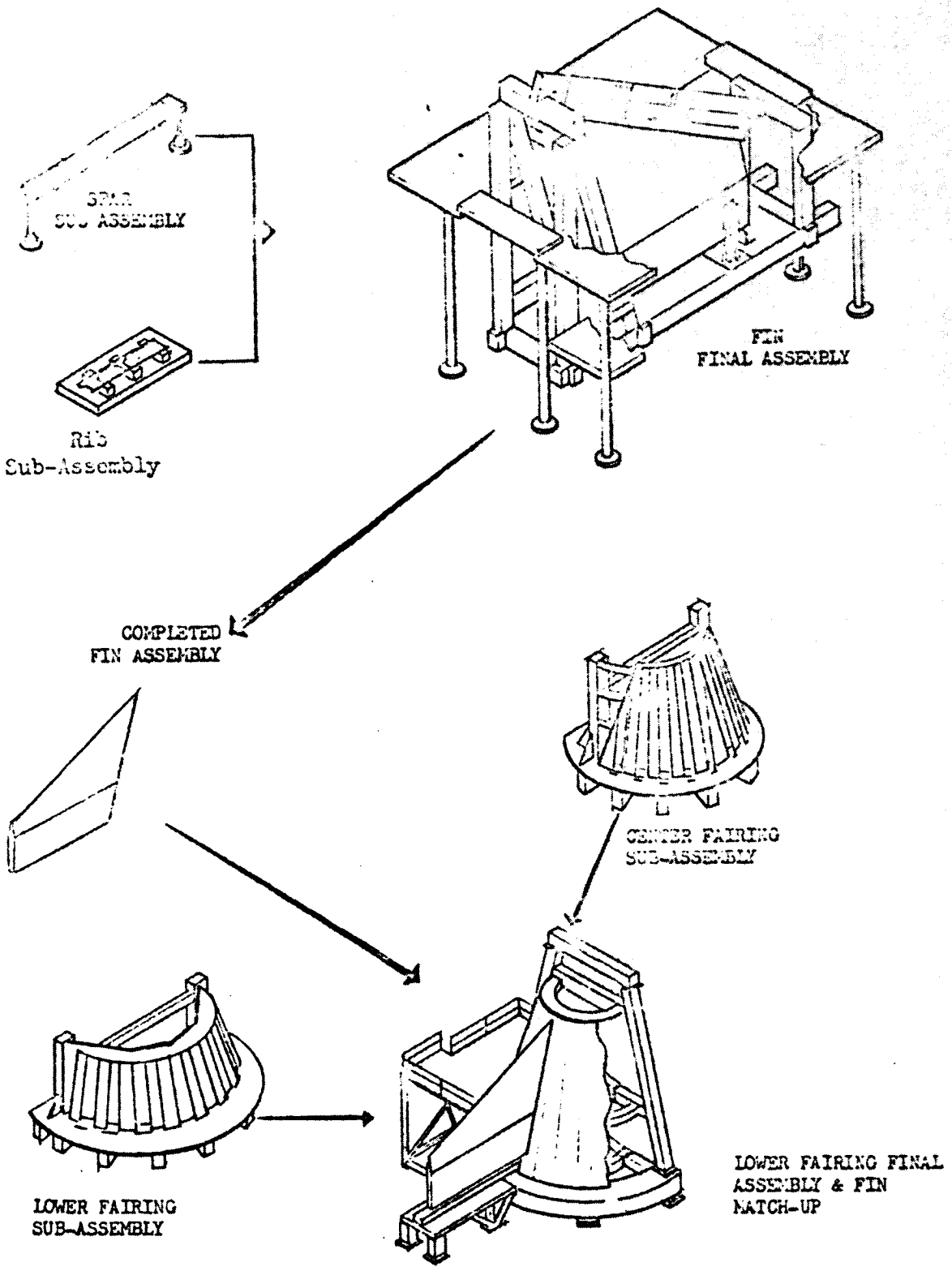

Figure 2-115 - Flow Diagram

4211 4000

2.7.3 (Continued)

The six fittings which attach the link fitting to the Fairing include an undersize hole common to the link. These fittings are located from this hole and shimmed common to the closure beam. Fastener holes common to the closure beam are drilled and fasteners installed. This completes the basic structure of the lower Fairing. The undersize holes in the fittings newly installed and the undersize holes in the terminal fitting on the Station 115.5 frame are now reamed full size from the fixture. The alinement pin holes common to the upper Fairing are drilled from the fixture and the alinement pins are installed. The holes common to the Fin closure angle are drilled undersize from the external drill plate and the drill plate is removed.

The Fin is secured to the adjustable support table and moved into rough position on the Fairing. The position of the Fin is adjusted to achieve the best possible alinement with all undersize attach holes. The Fin is then checked optically for alinement per engineering requirements. Additional adjustments are made as required. The hole pattern common to the Fin spar and the Station 115.5 frame is then reamed full size from a drill plate which is applied to the joint, and bolts are installed. The holes common to the Fin closure angle are reamed full size and bolts are installed. The Fin is then rechecked for conformance to the alinement requirements.

The fin is unbolted and transferred to the Fin shipping cradle, 65B63-17, a ground system design tool, (Figure 2-116). This cradle is also used as an inplant transportation dolly.

The Fairing is removed from the tool with HT 370-7116, (Figure 2 -106) and held for a subsequent check with the upper Fairing.

2.7.4 Upper Fairing

2.7.4.1 Aluminum Frame Sub-Assemblies. (Figure 2-117)

Three aluminum frame assemblies are located in the upper Fairing at stations 216.4, 247.8 and 279.2. Each of these assemblies consist of chords and webs.

The intercostal attach angles shown on the Engineering Documentation are not included in the production assembly. The angles are omitted to permit location of intercostals to match the external stringers during a later assembly operation. Each one of the frames noted is therefore assigned a -900 number, 60B16135-1-900, 60B16201-1-900, 60B16204-1-900.

The details of each frame are indexed and clamped in the applicable assembly fixture. The fastener holes are drilled from a drill plate. Selected fasteners are installed while the details are clamped in the assembly fixture. AF 345-16135

U3 4211 6000

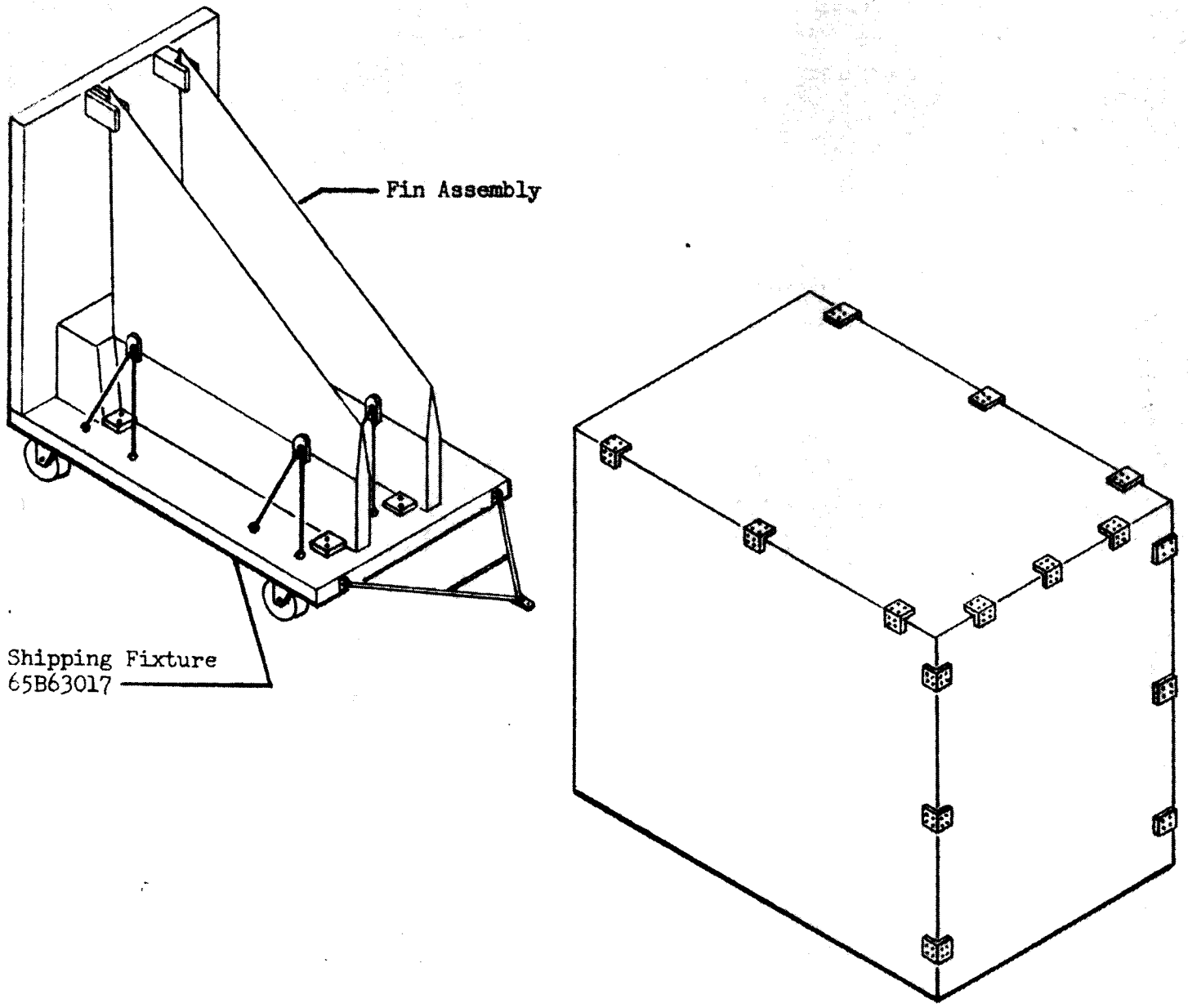

Figure 2-116 - Shipping Fixture For Fin Assembly

4211 4000

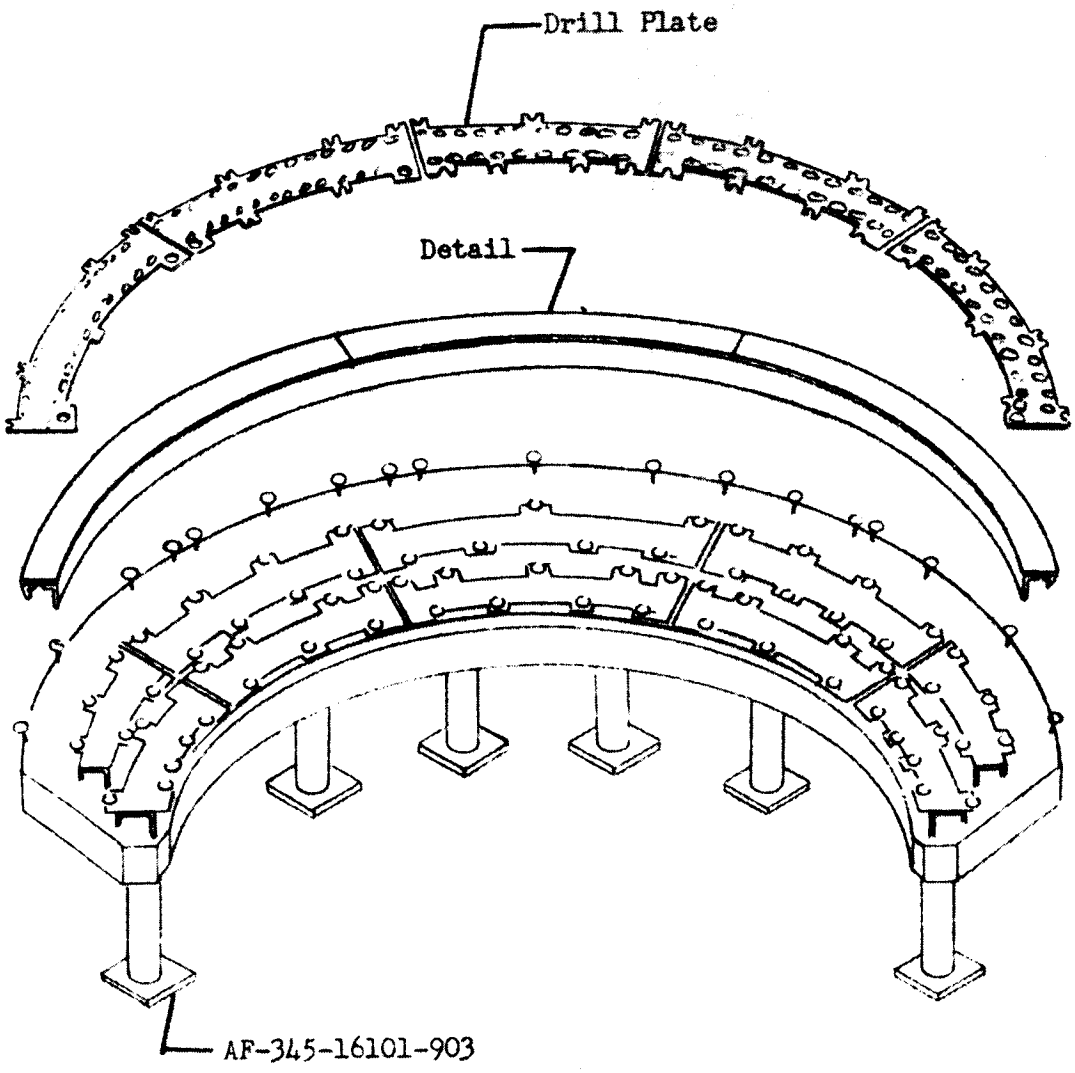

Figure 2-111 - Typical Frame Tool

U3 4211 6000

2.7.4.1 (Continued)

assembles the upper Fairing frame at Station 216.4. AF 345-16201 assembles the frames at Station 247.8 and 279.8. The assembly fixture at Station 216.4 coordinates to TT 345-16135 for contour.

2.7.4.2 Assembly of Upper Fairing Assembly (60B16102)

The Upper Fairing consists of a basic structure, skins, external stringers, six link support fittings and a hook common to the receiver installation on the Thrust Structure. The basic structure consists of three frame assemblies, ten formed frames, close-out channels, angles which attach to the close-out channels to the frames; also intercostals which consist of tee sections or webs, chords, and attach angles, and two closure pans and attach angles.

The upper Fairing is assembled complete in AF 345-16102, (Figure 2-118). MrG 345-16102 cooridnates the locators on the fixture for link support fittings, the hook fitting, and for drilling the holes common to the alinement pins on the lower Fairing. TT 345-16135 coordinates the contour at Station 216.4. The close-out channels are located and clamped in the fixture. All the frames are located and clamped. The angles common to the frames and the close-out channels are located, drilled, and permenent fasteners are installed. The closure pans are located and clamped. Attach angles common to the closure pans are located and clamped. Attach angles common to the closure pans are located, drilled, and permanent fasteners are installed. Each intercostal is located, drilled, and fastened with permanent fasteners. Drilling is from apply type drill plates and from pilots with hand drills. This completes the basic structure.

The external stringers are temporarily located on the basic structure to match the intercostals and frames. Fastener locations common to the frames and stringers are drilled pilot size from a small drill plate which indexes to the frame and the stringer. The Stringers are then removed.

Each skin is located, clamped and drilled pilot size from the pilot holes in the frames. A stringer and an esternal drill bar are indexed and clamped to these pilot holes. The remaining fastener holes in the stringer are drilled full size from the drill bar. The stringer is then removed from the fixture. This is repeated for each stringer. The holes common only to the frames and skins are then drilled from horizontal external drill plates which index to the stringer locations. The skins and stringers are deburred, reindexed, and the fasteners are installed to complete the basic structure.

S 4211 4000

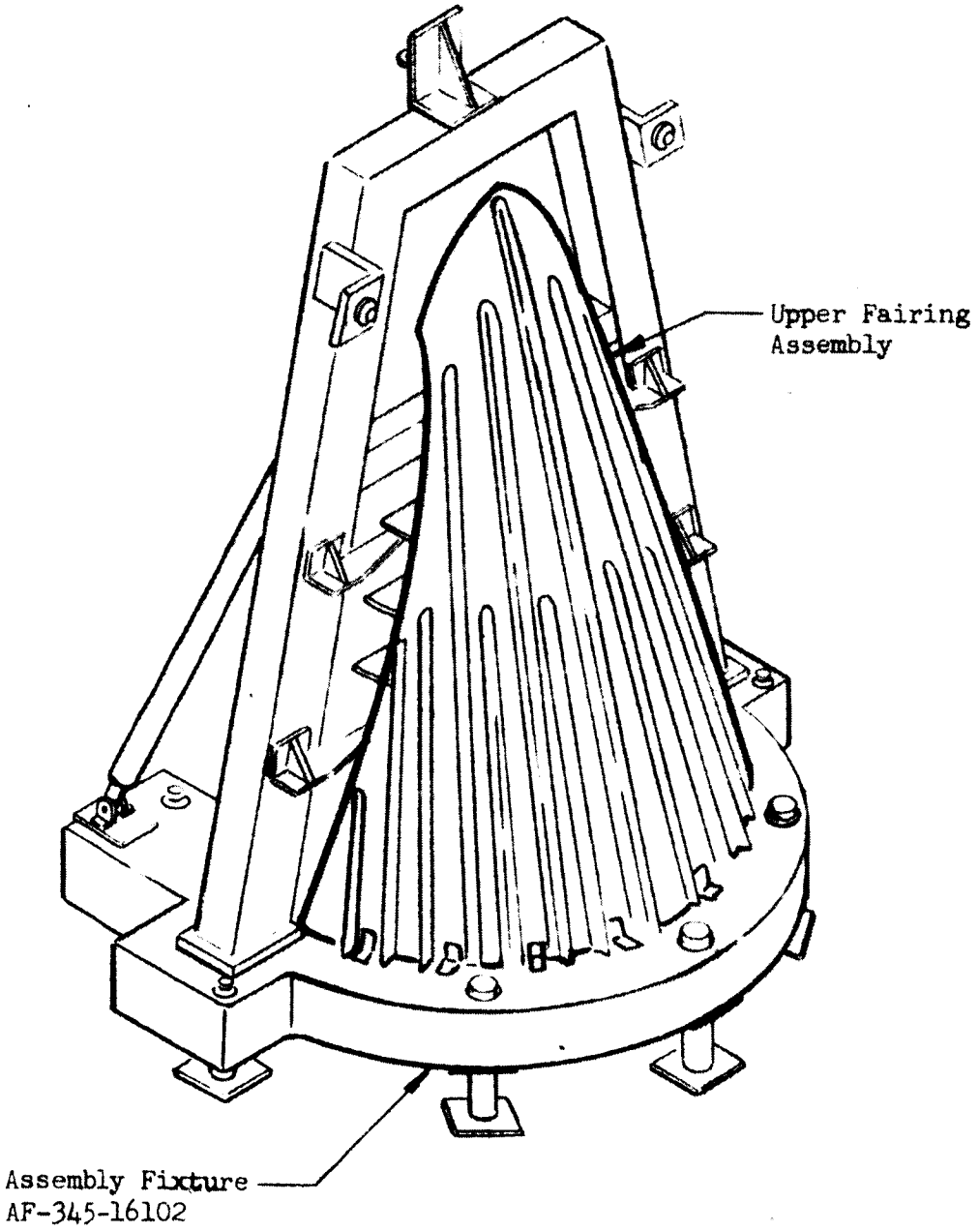

Figure 2-118 - Assembly Fixture Upper Fairing Assembly

U3 4211 4000

2.7.4.2 (Continued)

The six link support fitting includes an undersize hole common to the link. These fittings are located from this hole and shimmed common to the Fairing structure. Fastener holes common to the Fairing structure are drilled and fasteners are installed. The hook fitting is fixture located, drilled, and permanently fastened. The undersize holes in the link support fitting are reamed full size from the fixture to complete the assembly. MIT3-370-16000 handling fitting are bolted to the assembly and hoisting tool HT 370-7117 is used to lift the assembly from the tool (Figure 2-119).

2.7.5 Alinement Check

The upper and lower Fairing are positioned and indexed on MrSG-345-7114. Alinement and fitup between the Fairings are checked at this time to ensure match-up at installation.

Upon completion of this check , the Fairings are transferred to the Fairing shipping cradle, 65B63001, a ground support design tool, (Figure 2-120). This cradle is also used as an Inplant transportation dolly.

2.7.6 Fin & Fairing Master Tooling

Master tools are used to control the interchangeable and replaceable features of the Fairing and Fin. A general description of these tools follows:

a) MrG 345-7114 (Figure 2-121).

This gage represents the support and receiver assemblies on the Thrust Structure, including the link fittings at the link joints. This is the basic gage for the Fairing to Thrust Structure Interface.

b) MrG 345-16090 (Figure 2-122).

This gage represents the attach fittings on the lower Fairing less the link fittings at the link joints. This gage is coordinated to MrSG 345-7114.

c) MrSG 345 16103 (Figure 2-122).

This gage represents the attach fitting on the upper Fairing less the link fittings at the link joints. This gage is coordinated to MrSG 345-7114.

d) MrSG 345-30000. (Figure 2-123)

This gage represents the fin side of the Fin to Fairing

U3 4211 4000

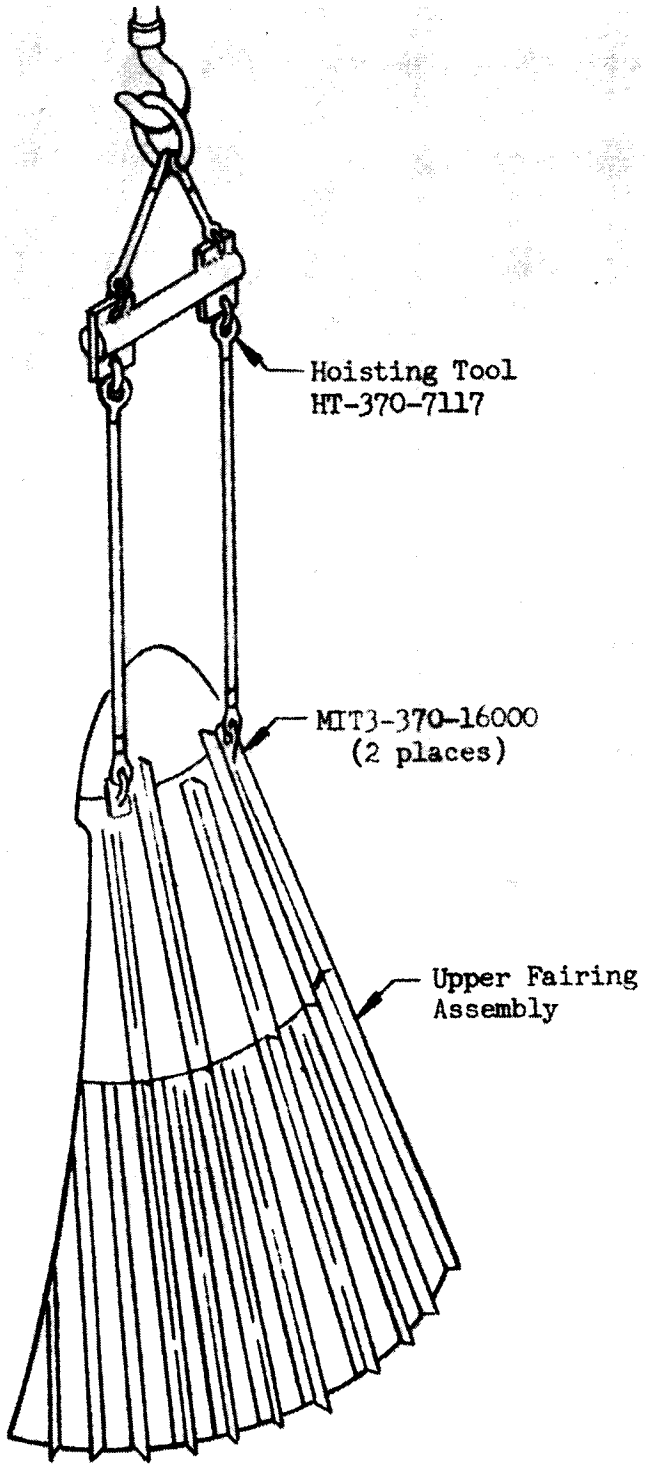

Figure 2-119 - Hoisting Tool For Upper Fairing Assembly

U3 4211 4000

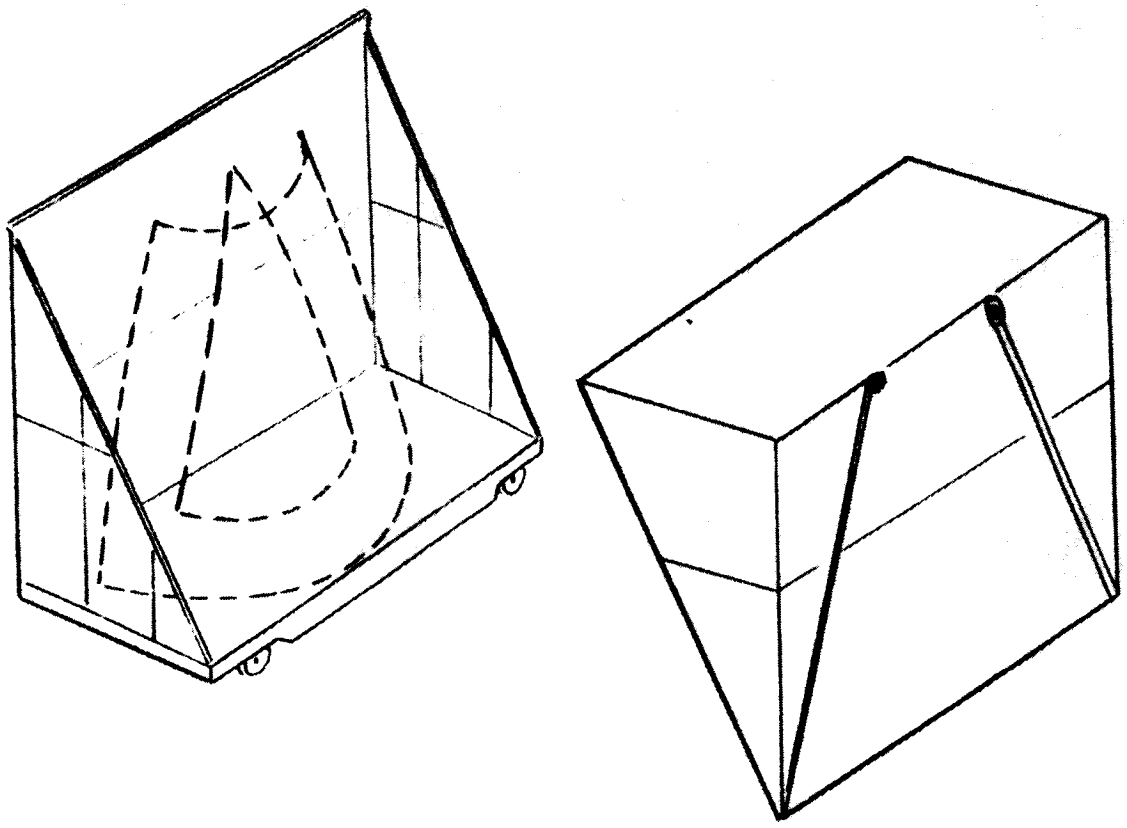

Figure 2-120 - Shipping Fixture for Fairing 65-63001

3 4211 4000

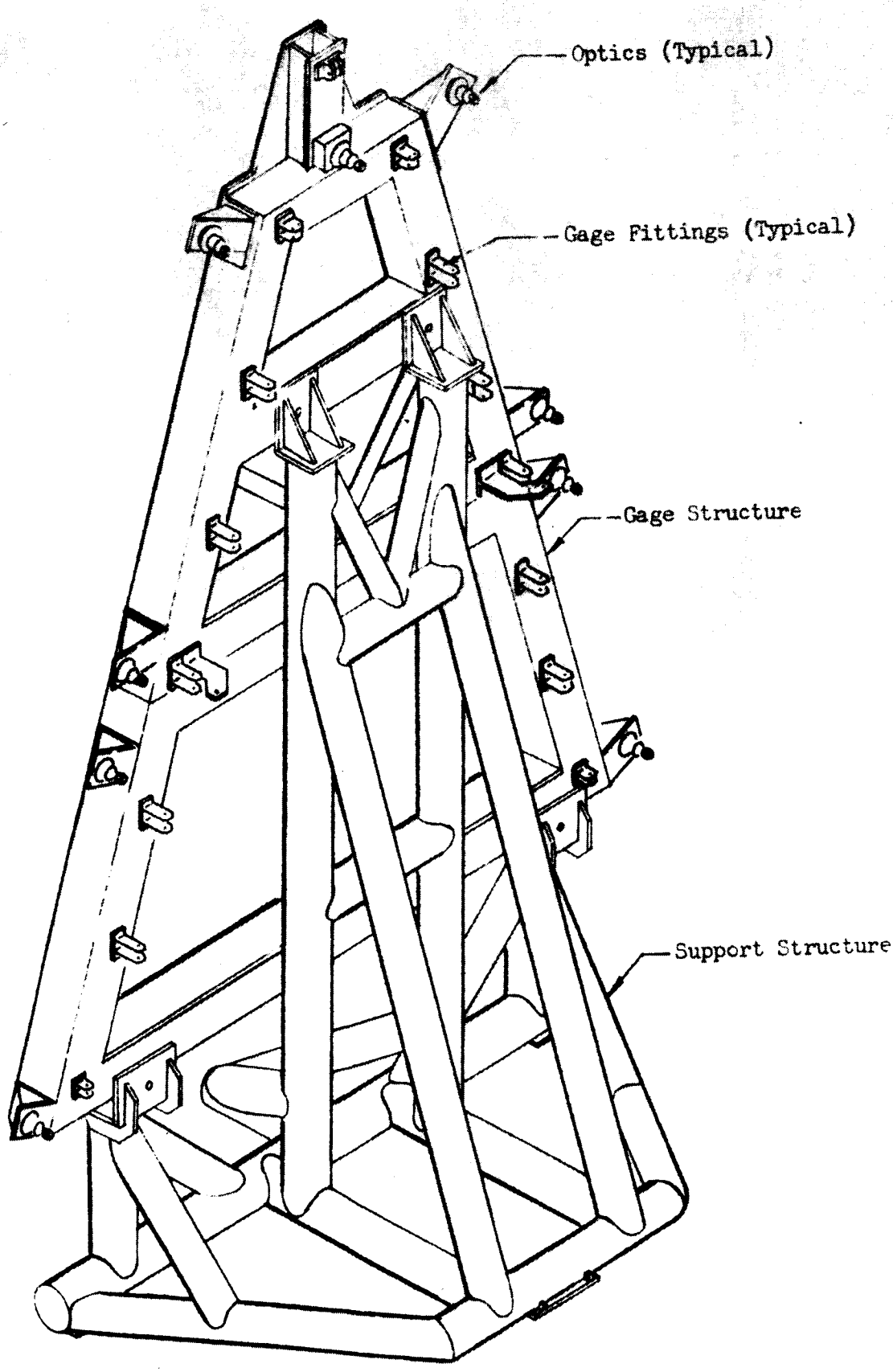

Figure 2-121 MASTER SETTING GAGE 345-7114

U3 4211 4000

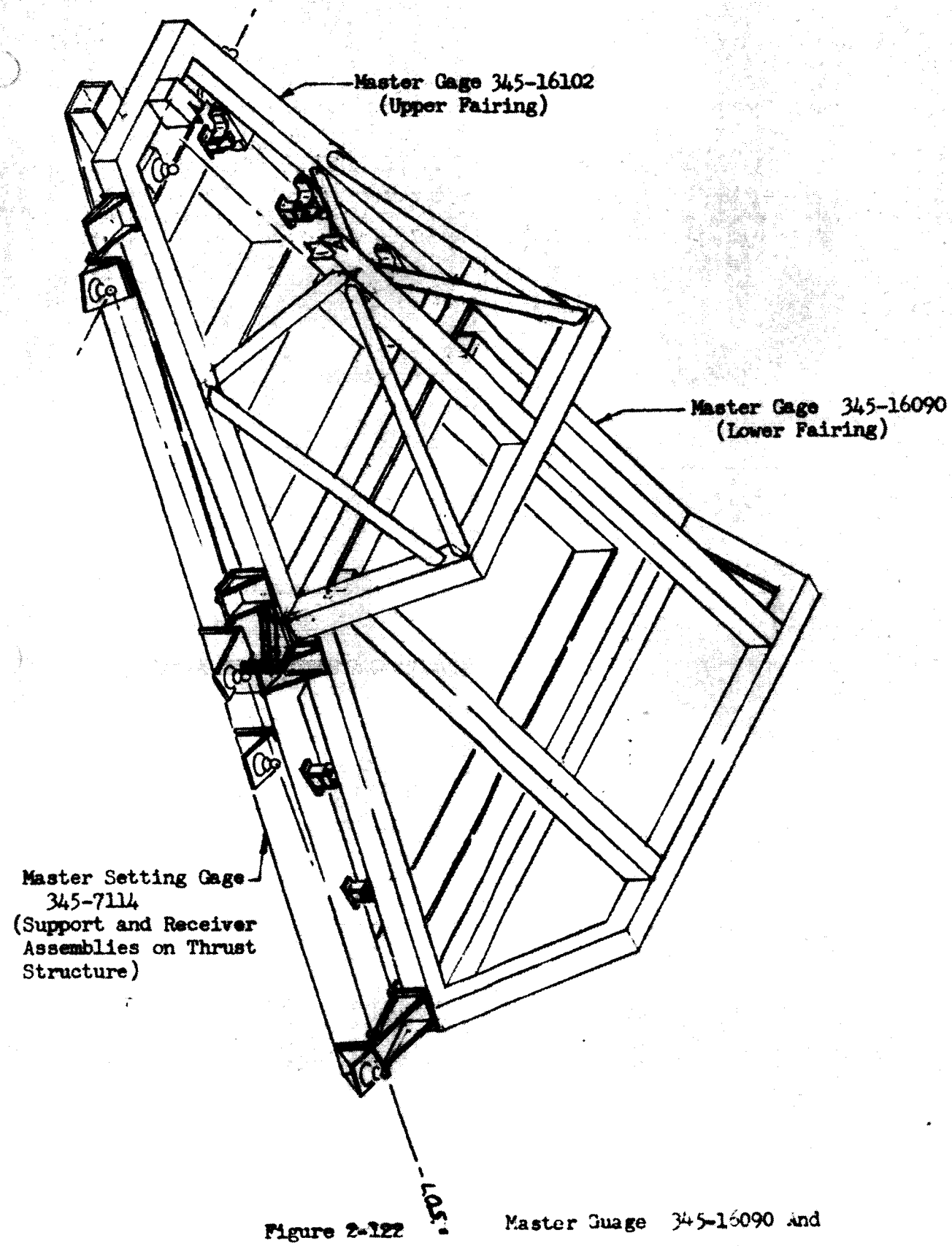

Figure 2-122 Master Guage 345-16090 And
Master Guage 345-16102

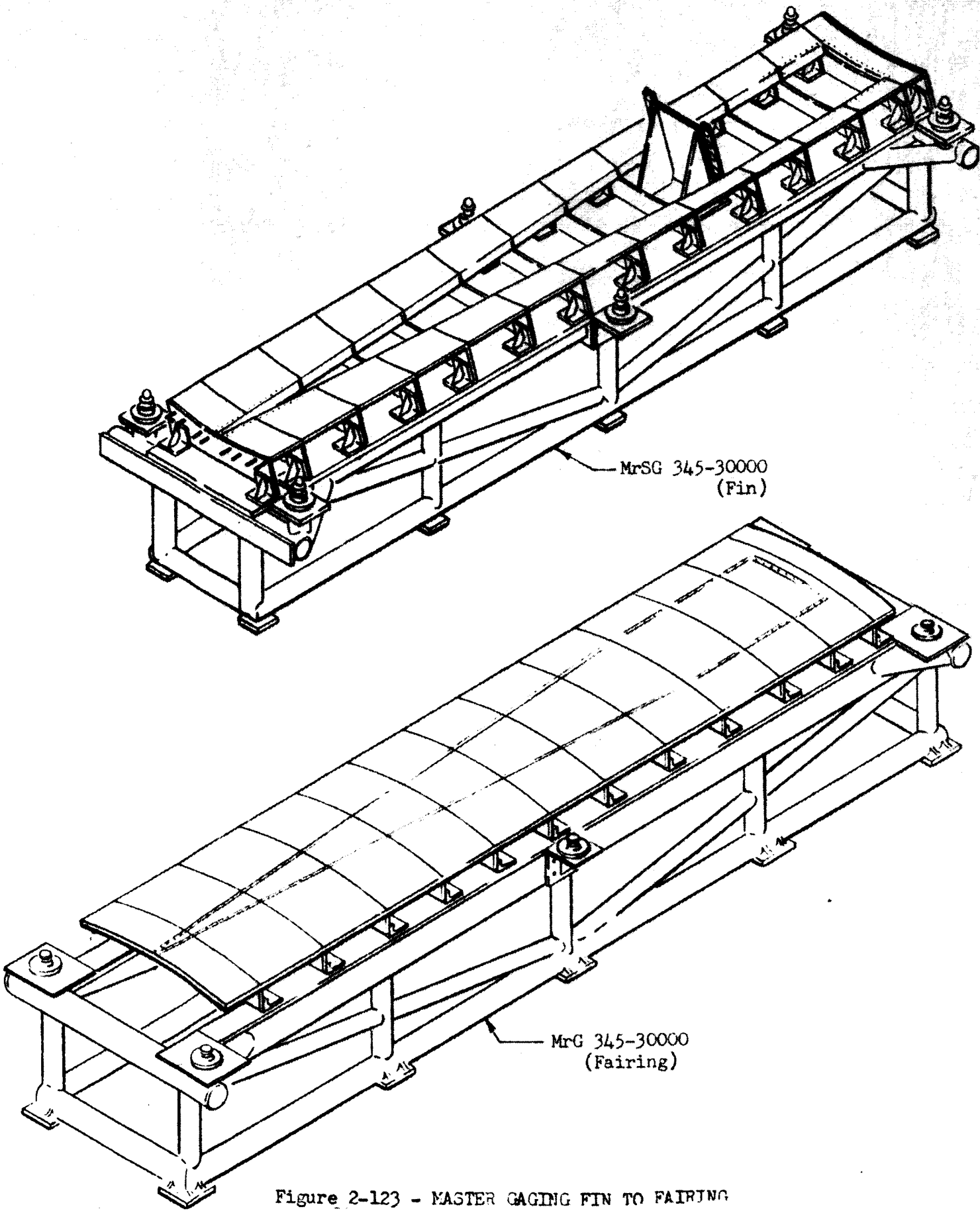

Figure 2-123 - MASTER GAGING FIN TO FAIRING

U3 4211 4000

2.7.6 (Continued)

d) Interface. This is the basic gage for this interface.

e) MrG 345-30000. (Figure 2-123).

This gage represents the Fairing side of the Fin to Fairing Interface. This gage is coordinated to MrSG 345-30000.

f) TT 345-16150 (Figure 2-124)

This tool represents the Station 115.5 plane of the Fairing. The Fin to Fairing attach points are included in the tool and are coordinated to MrSG 345-7114. The Fin spar to Fairing attach points are included in the tool and are coordinated to MrSG 345-30000. Contour in the area of the Fin closure angles is also coordinated to MrSG 345-30000.

g) TT 345-16135 (Figure 2-124)

This tool represents the Station 216.4 plane of the Fairing. The location of the pins which aline the upper Fairing to the lower Fairing are included and are coordinated to MrSG 345-7114. Contour is dimensionally controlled.

h) MrG 345-7109 (Figure 2-125). This tool is used to install the support assembly on the Thrust Structure. It is coordinated to MrSG 345-7114.

2.7.7 Stage Installation Fin And Fairing

2.7.7.1 Support Assembly.

The support assembly consists of a series of machines fittings bolted to the Thrust Structure. The Fairing is bolted to the support assembly. The fittings which constitute the support assembly include undersize holes common to the Fairing attach points. MrG 345-7109 is used to install the fittings on the Thrust Structure jig position. (Figures 2-126 and 2-127).

The fittings are located and clamped on the MrG, indexing to the undersize holes common to the Thrust Structure. The MrG is indexed to the Thrust Structure jig for vertical and rotational location, to the Thrust Structure for inboard - outboard location. It is leveled with a spirit level to establish a vertical axis.

When the MrG has been properly indexed, the fitting is shimmed and the fastener holes common to the Thrust Structure are drilled from the tool with power feed drills. Permanent fasteners are installed and torqued. As a final operation the undersize holes common to the Fairing are reamed to full size from the fixture.

2.7.7.2 Receiver Assembly.

The receiver assembly is attached to the Thrust Structure in

U3 4211 6000

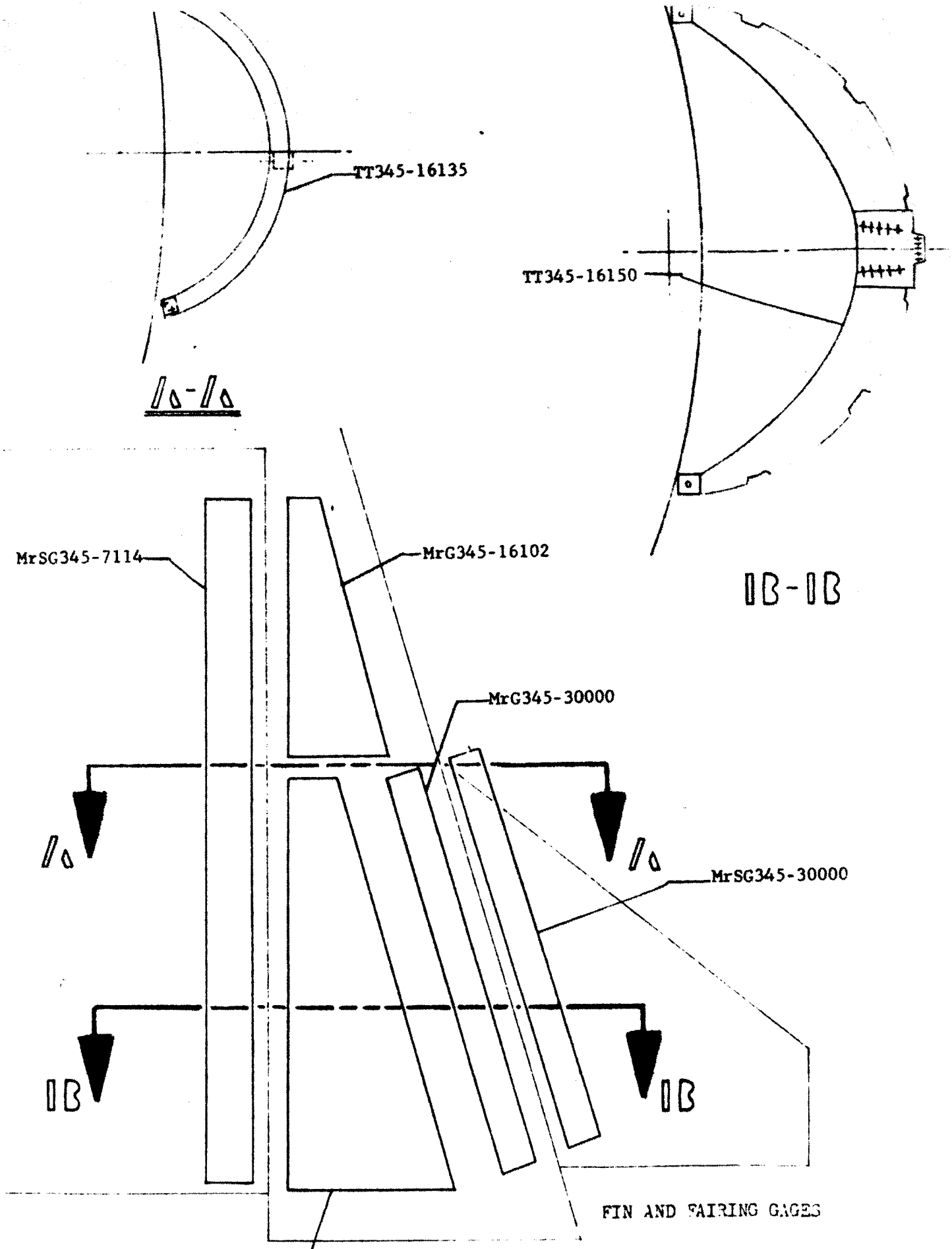

Figure 2-124

U3 4211 4000

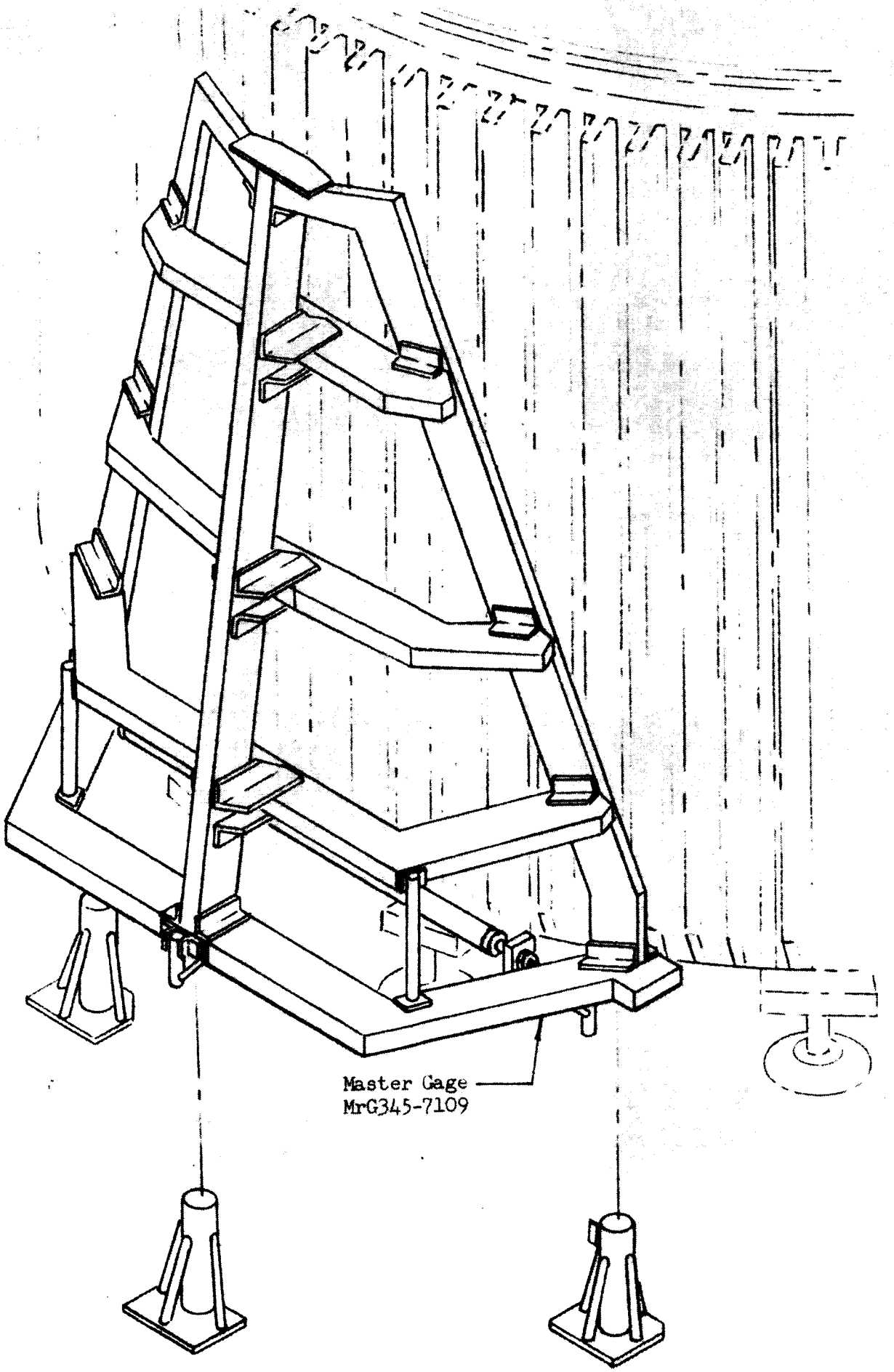

Figure 2-125 Master Gage MrG-345-7109

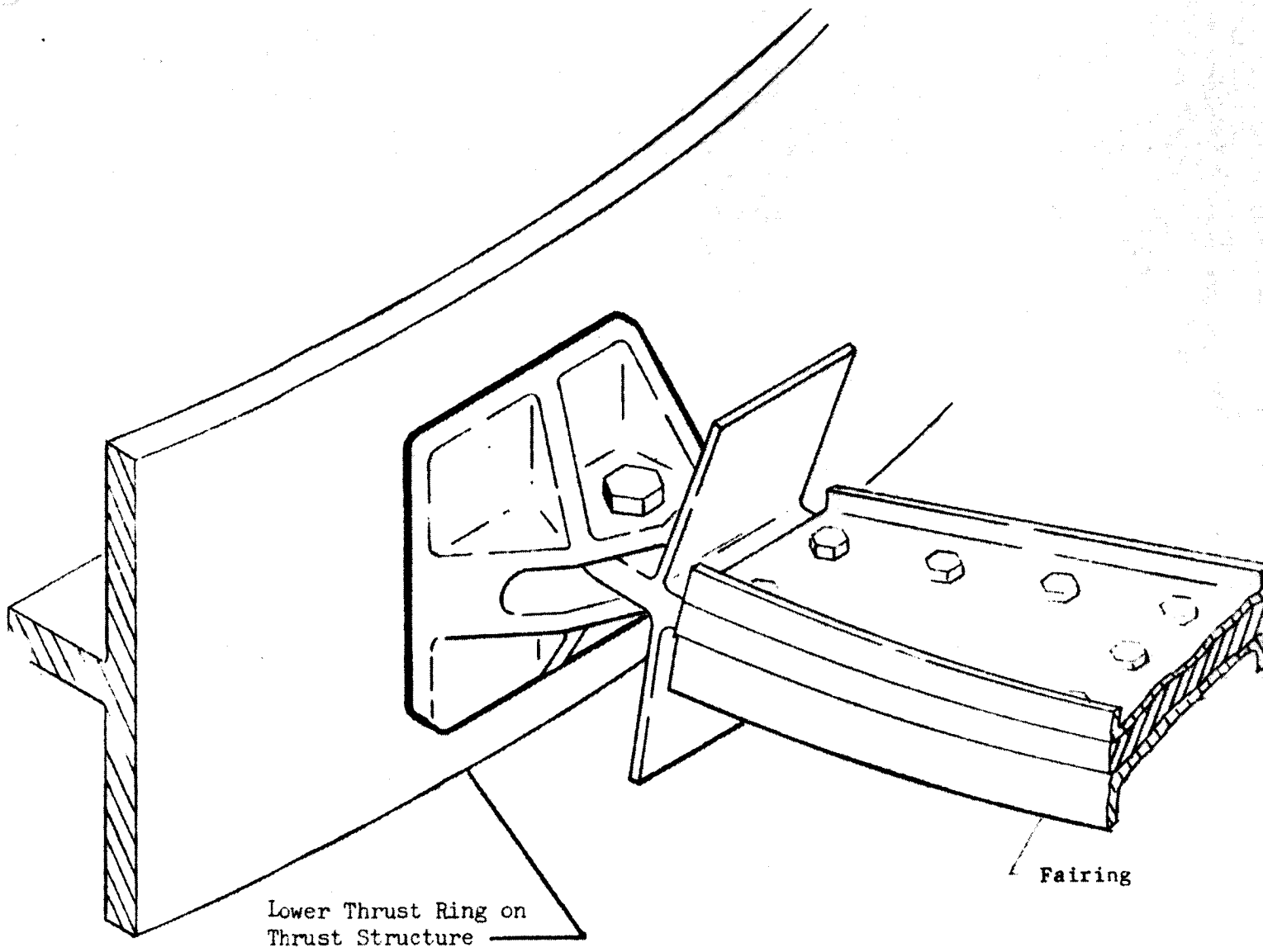

Figure 2-126-Support Assembly at Station 115.5

U3 4211 4000

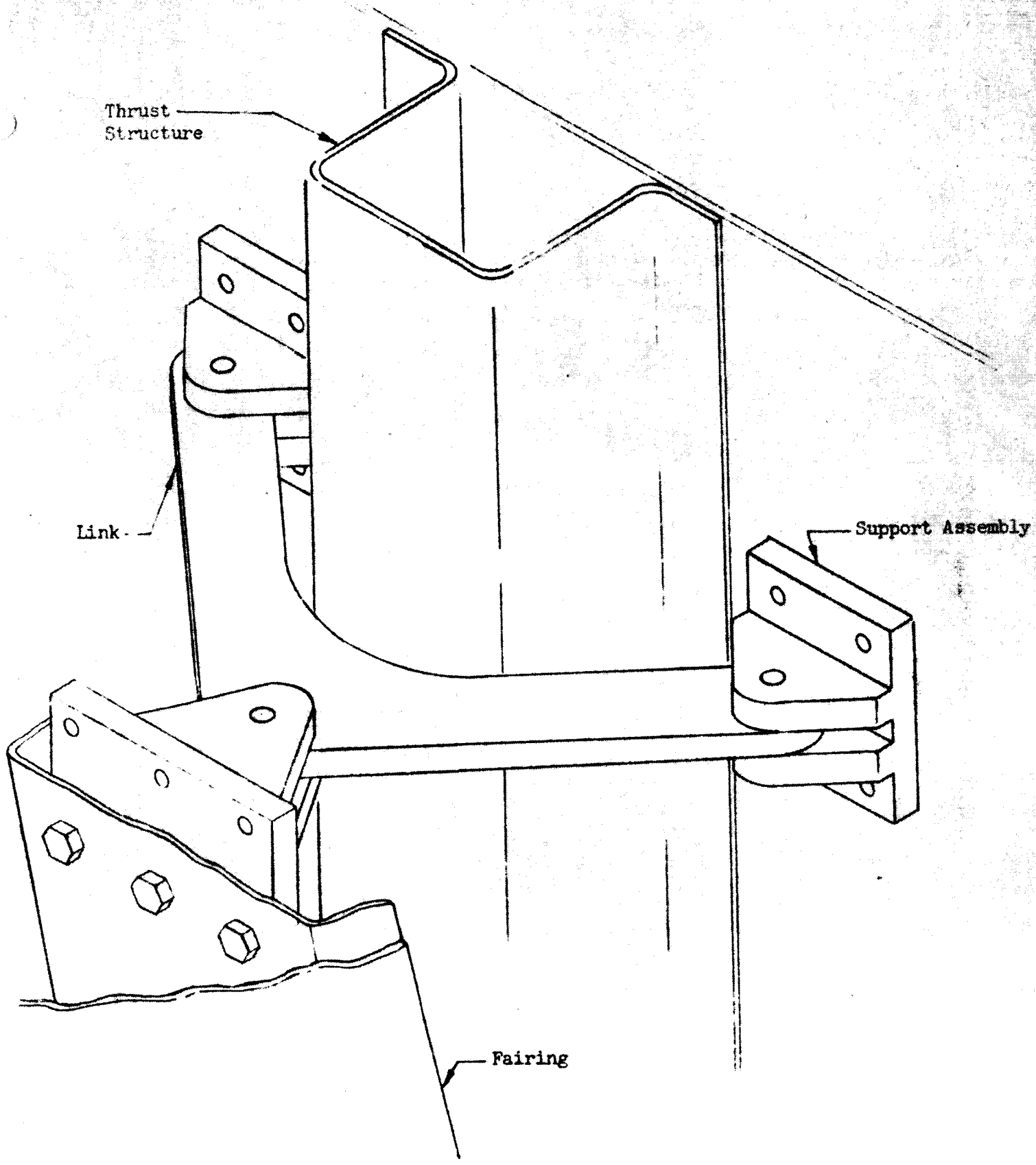

Figure 2-127 - Support Assembly and Link Attachment

J3 4211 6000

2.7.7.2 (Continued)

the area where the Thrust Structure joins the "Y"-Ring. The receiver assembly includes a pin which engages the hook on the upper Fairing. The receiver assembly is installed after the Thrust Structure has been joined to the Fuel Tank. LDJ 322-7467 (See Figure 2-128), is used to install the receiver The LDJ indexes to three of the support assembly fittings previously installed on the Thrust Structure. The LDJ is coordinated to MrSG 345-7114.

The receiver assembly is located and clamped on the LDJ. The LDJ is indexed and pinned to the support assembly. Shims are installed between the receiver and the Thrust Structure and the fastener holes are drilled from LDG. Fasteners are installed completing the receiver installation.

2.7.7.3 Fairing Assembly

The Fairing is supplied ready to bolt on the vehicle with no metal cutting operations. No special tools other than the hoisting tools, HT 370-7116 and HT 370-7117, and adequate scaffolding are required.

2.7.7.4 Fin Assembly.

The Fairing is supplied ready to bolt on the Fin. No special tools other than the hoisting tool HT 370-7115 and adequate scaffolding are required.

2.7.7.5 Seal Assembly.

The seal assembly consists of a series of sheet metal plates and rubber seals. The seal bolts to the Fairing and closes the gap between the Fairing and Thrust Structure. (Figure 2-129).

The seal assembly is supplied as a series of individual components. All holes are full size and all nut plates are installed. Installation consists of fitting each component to the Thrust Structure and bolting the components to the Fairing. Oversize and slotted bolt holes provide the means for adjustment.

2.7.8 Engine Fairing Heat Shield

2.7.8.1 Flight Heat Shield (Figure 2-133)

The Fairing heat shield is a protective barrier composed of eight heat resistant panels constructed of stainless steel honeycomb and covered with M-31 insulation. These panels are fastened to an aluminum support structure. The lower surface of the support structure is attached to the stage at Station 112.0 and slopes downward 7 degrees and 14 minutes from plane "E" of the stage. (Figure 2-131). The four inner panels and their support beams are independent of the four outer

U3 4211 4000

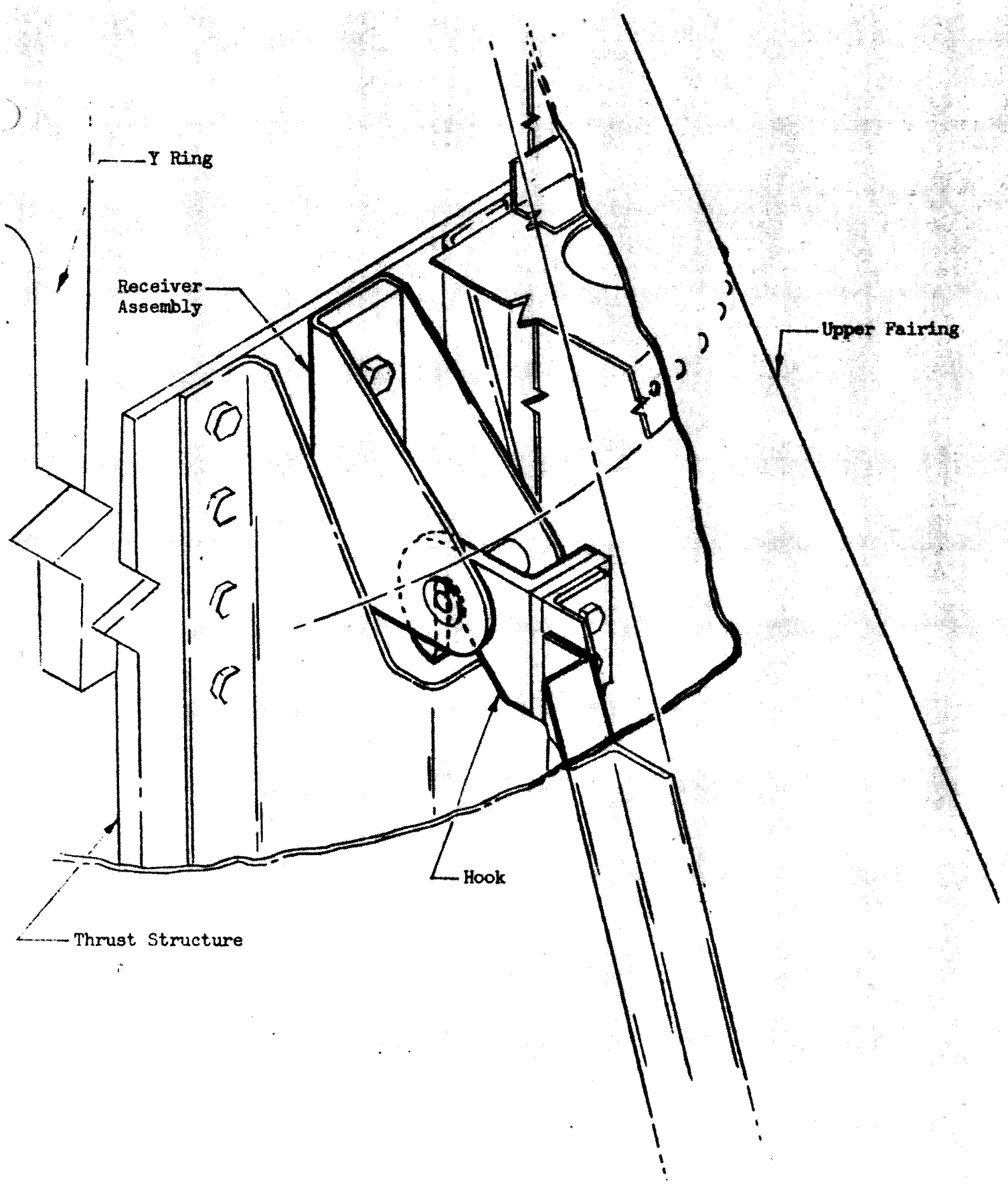

Figure 2-128 Receiver Assembly

U3 4211 4000

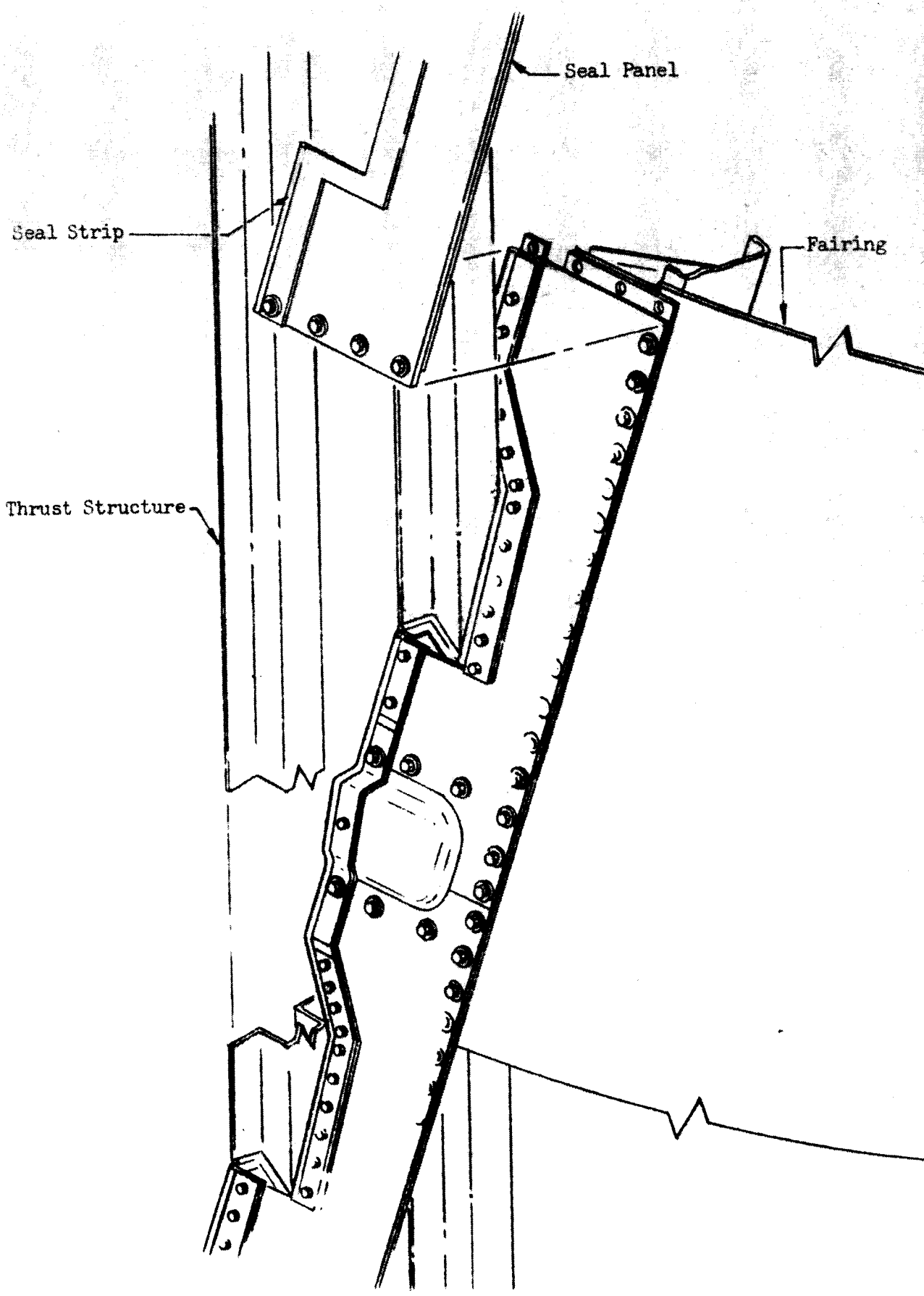

Figure 2-129 - Seal Assembly

US 4211 4000

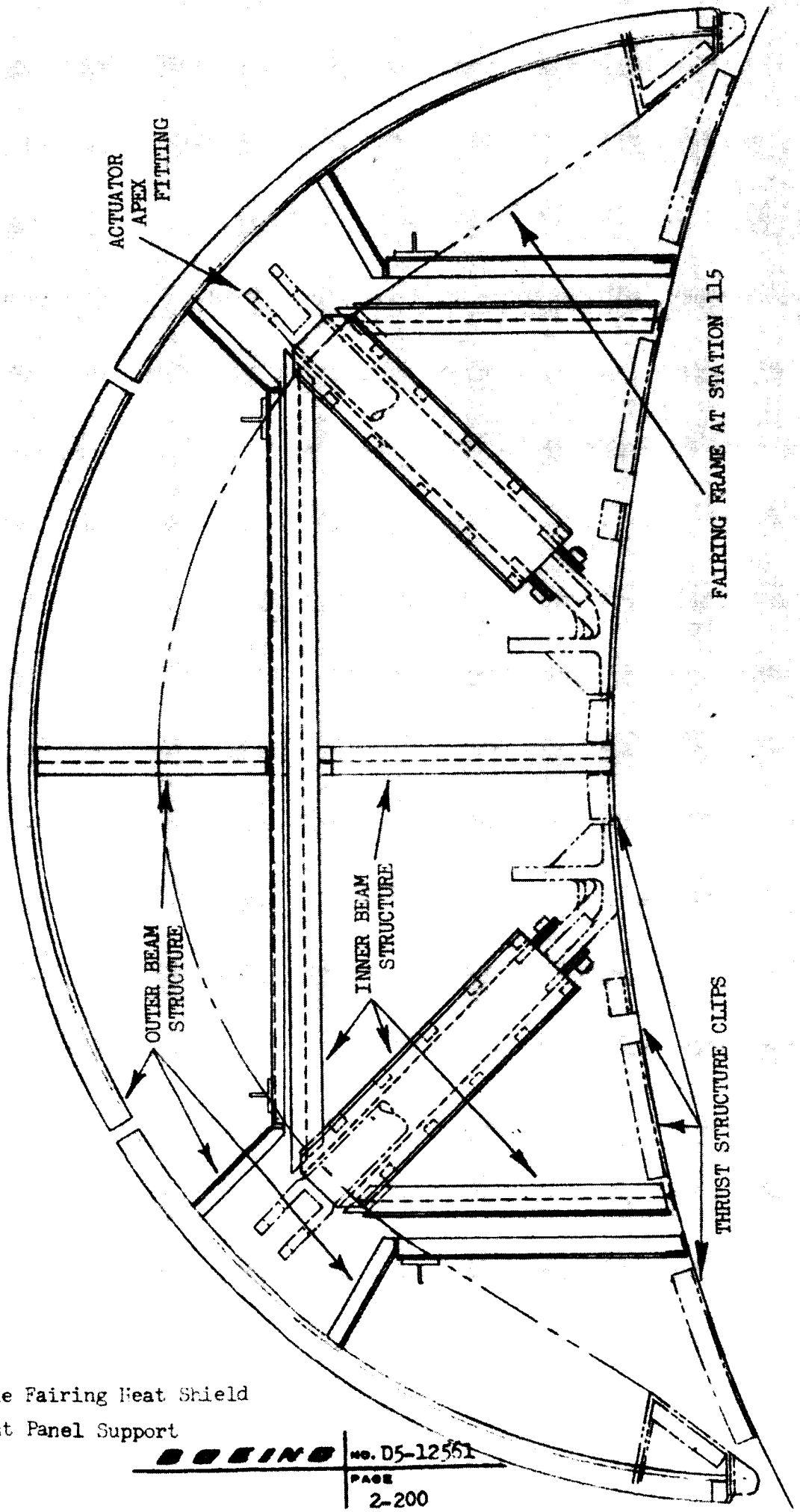

Fig. 2-130 Engine Fairing Heat Shield Flight Panel Support

U3 4811 4000

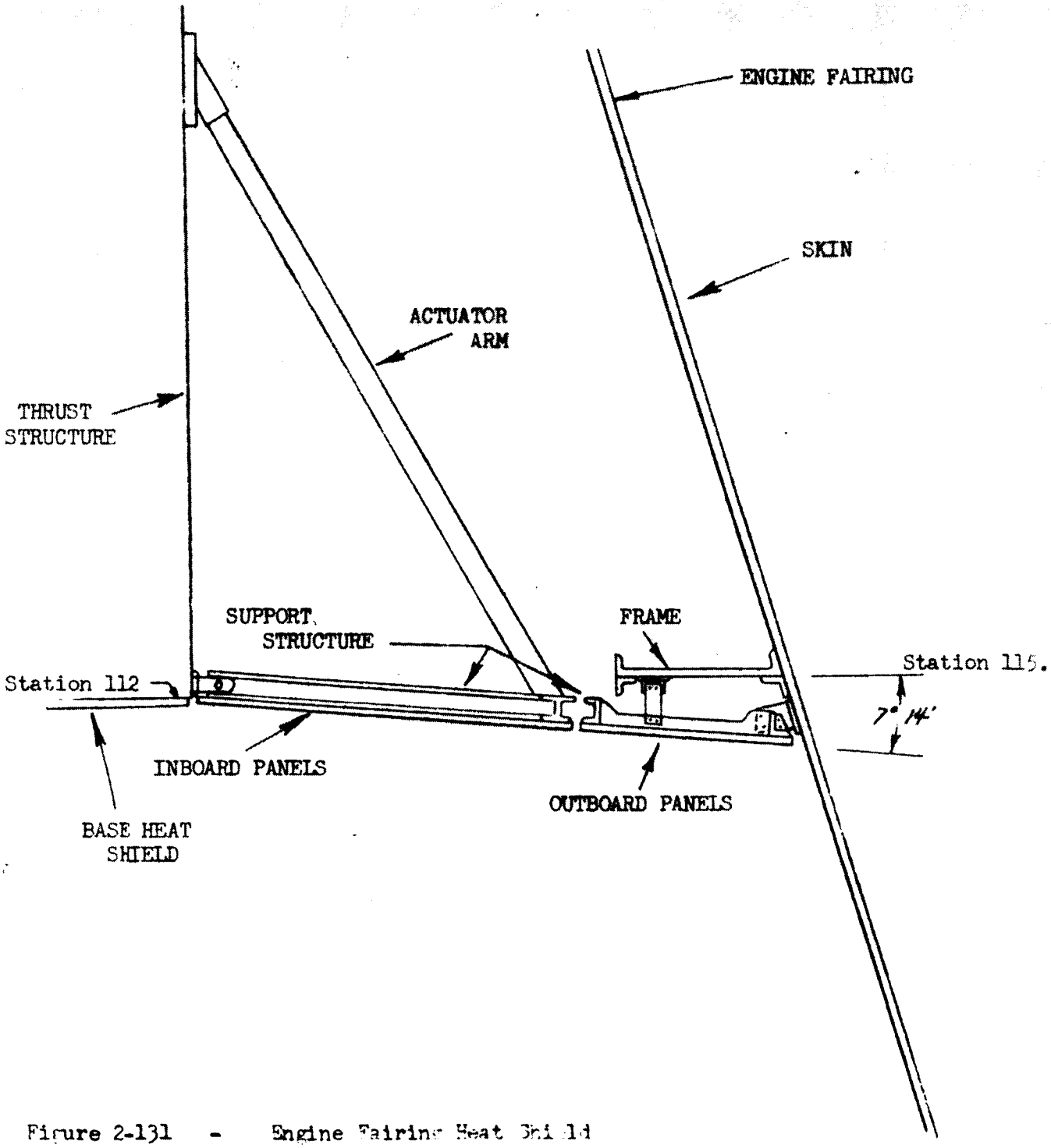

Figure 2-131 - Engine Fairing Heat Shield

U3 4211 4000

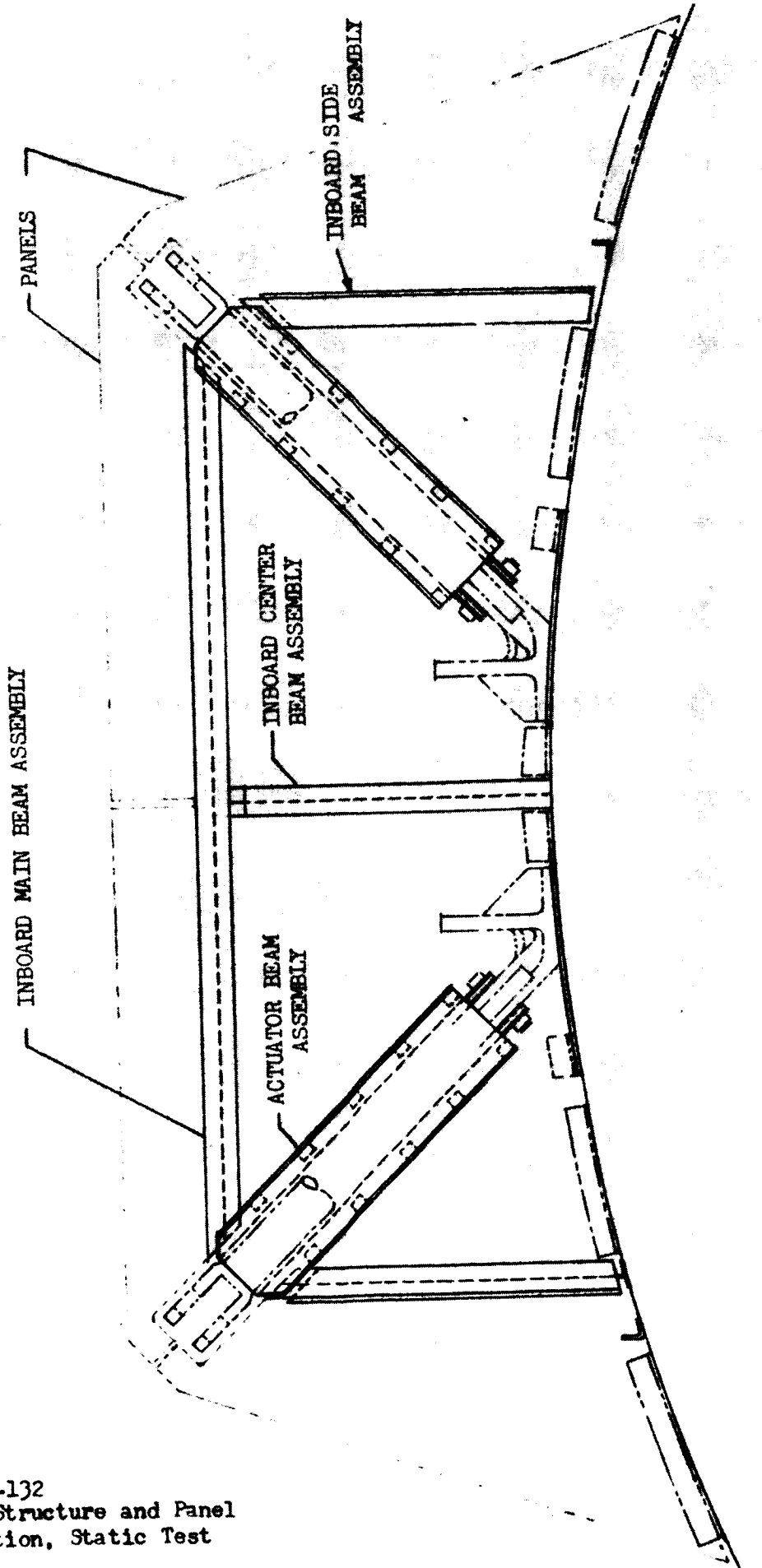

Figure 2-132
Support Structure and Panel
Installation, Static Test

U3 4211 4000

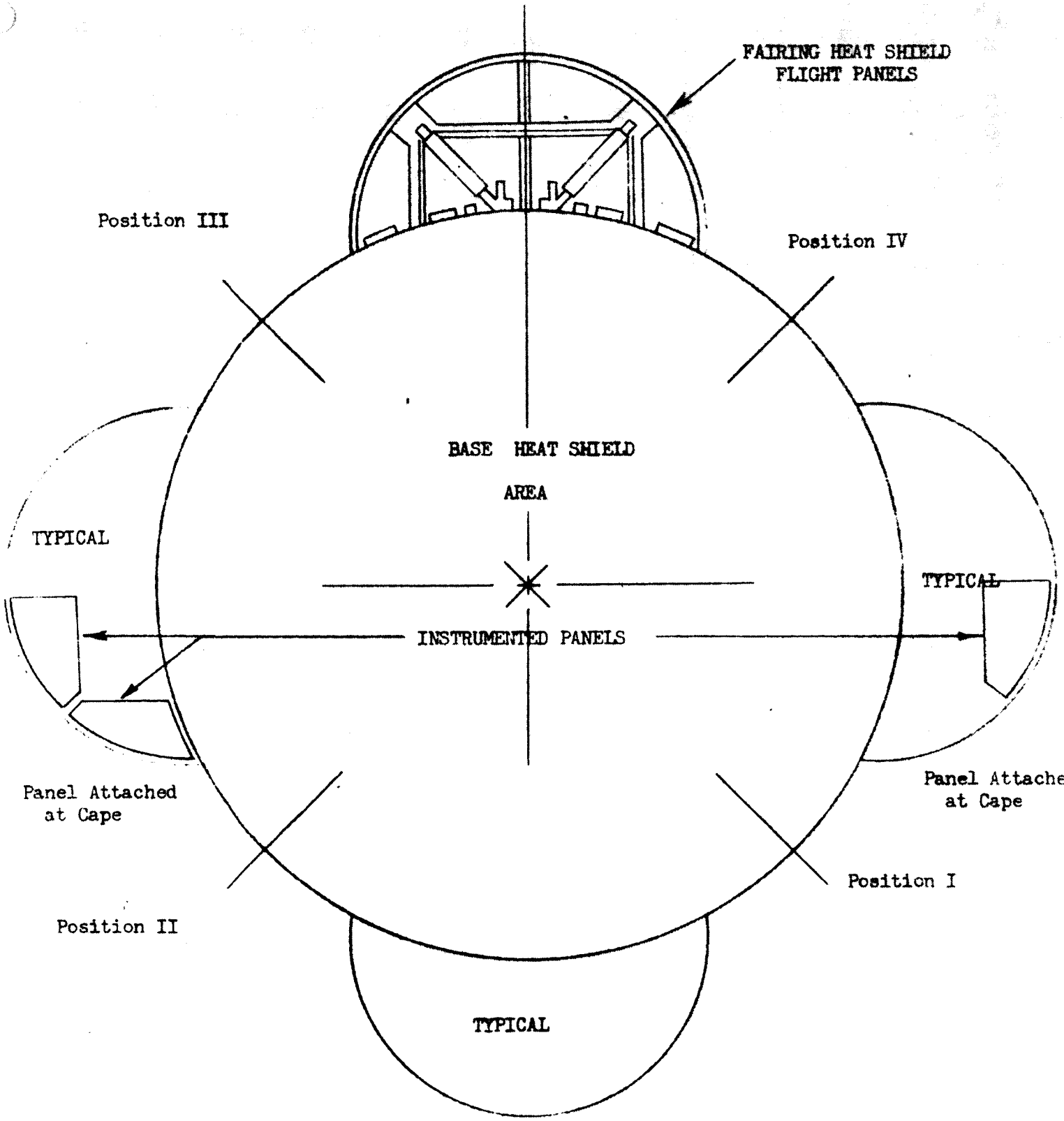

Figure 2-133 - Rear View (Looking Forward) Engine Heat Shield

U3 4211 4000

2.7.9.1 (Continued)

panels and support structure. The inner support beams are fastened to the actuator support structure and the Thrust Structure while the outer support beams fasten to the engine Fairing and Thrust Structure. The controlled gap between the sets of panels is filled with a seal at installation of the panels. Two of the inner panels are removable for access to inside the Fairing.

2.7.9.1.1 Flight Panel Support Structure (Figure 2-130)

2.7.9.1.1.1 Inner Beam Structure

The inner beam structure is the same as for the static test configuration. (See Paragraph 2.7.9.2.1)

2.7.9.1.1.2 Outer Beam Structure

The outer beam structure consists of built-up beams, three angular chords, clips, fittings and fasteners. No assembly tools are required to fabricate the beam assemblies. Hand layout and drilling are employed during fabrication.

2.7.9.1.2 Flight Panels. (Figure 2-141)

The flight panels consist of a stainless steel honeycomb core covered on the inside with a thin sheet of stainless steel. The outer surface is a layer of bonded M-31 insulation. Steel cups are bonded in the panels at the attachment locations. These panels are purchased as an end item ready for installation. The attach hole patterns are coordinated to master plates provided by the customer to ensure interchangeability.

2.7.9.2 Static Test Shield (Figure 2-140)

The static test head shield is a protective barrier consisting of four panels and a support structure. The support structure beams tie to the actuator arms and clips on the Thrust Structure. The support structure is identical to the support structure for the inner panels of the flight head shield. The four panels are larger than the flight panels of the same location. The Fairing is not on the stage when these panels are used.

2.7.9.2.1 Static Test Support Structure (Figure 2-132)

2.7.9.2.1.1 Actuator Attachment Beam (Figure 2-139)

The actuator attachment beam assembly consists of two formed channels, a lower cap, gussets, shims, terminal fitting and clips of aluminum alloy. The assembly weighs (19) pounds.

U3 4211 4000

2.7.8.2.1.1 (Continued)

The details are located and clamped in AF 342-21067 for drilling holes and installing fasteners. Drill plates are provided except for areas where pilot holes can be utilized. The left hand and right hand assemblies are fabricated in the same tool.

2.7.8.2.1.2 Inboard Center Beam (Figure 2-138)

The inboard center beam assembly consists of an aluminum "I" beam, three doublers, and an aluminum tee clip. No tool is required for this assembly. Hand layouts for dimensions and hole locations are employed to fabricate this assembly.

2.7.8.2.1.3 Inboard Side Beam Assembly (Figure 2-137)

The inboard side beam assembly consists of a modified aluminum "I" beam and two doublers. No tool is required to fabricate this assembly. Hand layout and drilling is employed to locate and install the two doublers on the beam.

Two assemblies are required per set, one being opposite the other. (See Figure 2-132).

2.7.8.2.1.4 Inboard Main Beam Assembly (Figure)

The inboard main beam assembly consists of an aluminum "I" beam and an aluminum tee clip. No tooling is required for this assembly. Hand layout and drilling are employed during fabrication.

2.7.8.2.2 Static Test Panels. (Figure 2-135)

The static test panels consist of $\frac{1}{8}$" thick steel plate with expanded wire mesh and M-31 insulation attached to the lower surface. These four panels are coordinated to the master plates that control the flight panels. The panels have two sides and hole patterns common to the flight panels.

2.7.8.3 Fairing Heat Shield Master Tooling.

2.7.8.3.1 Master Checking Gages (Figure 2-142)

The following master checking gages are required to ensure interchangeability of heat shield panels. These gages master peripheral contour and hole pattern of the flight panels.

MrCKG 342-21006 Master Checking Gage Triangle Panel
MrCKG 342-21007 Master Checking Gage Center Panel
MrCKG 342-21008 Master Checking Gage Inboard Panel
MrCKG 342-21009 Master Checking Gage Outboard Panel

Each panel has an opposite hand part; one gage serves two panels.

U3 4211 4000

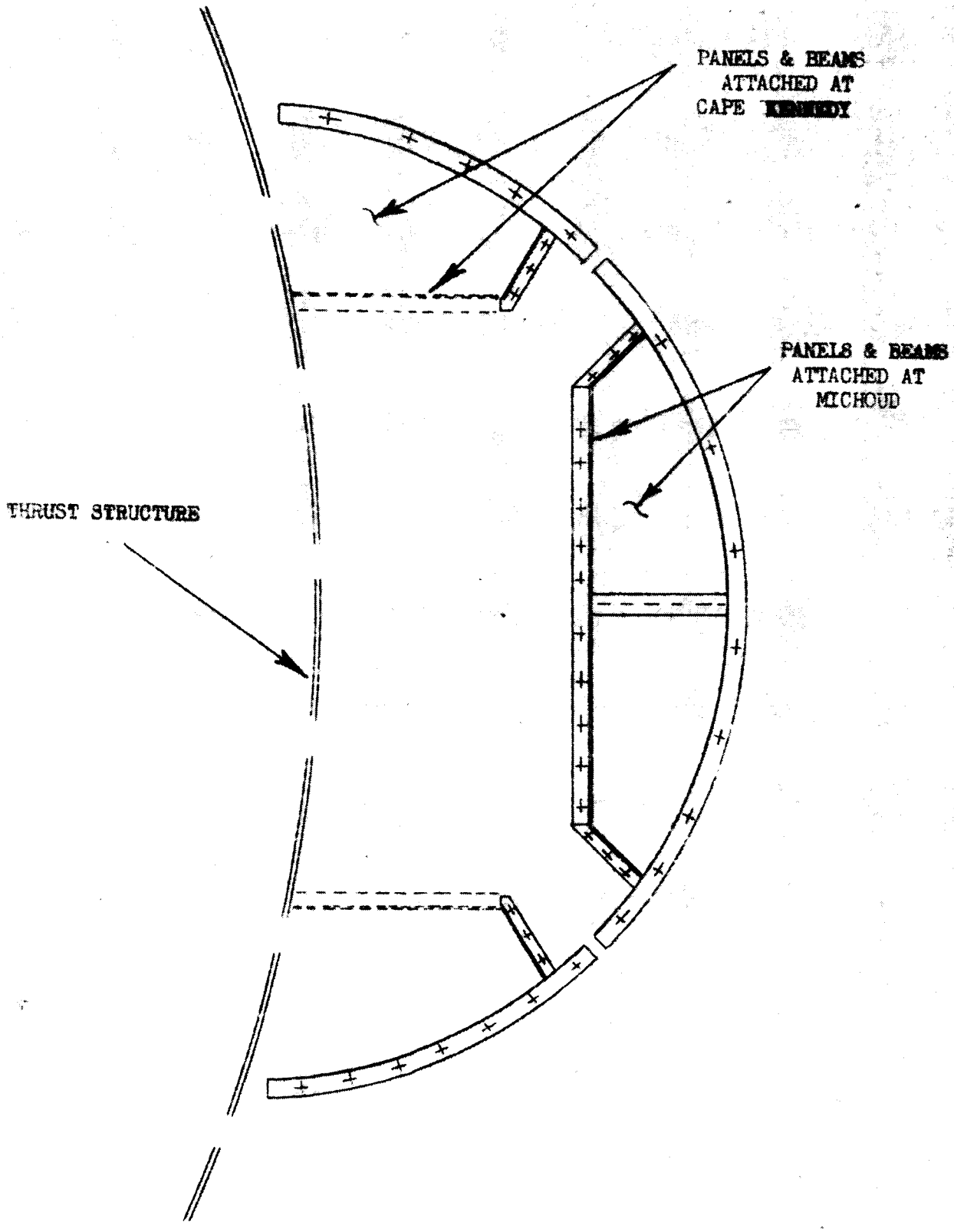

Figure 2-134 - Flight Panel Outer Support Structure

U3 4211 4000

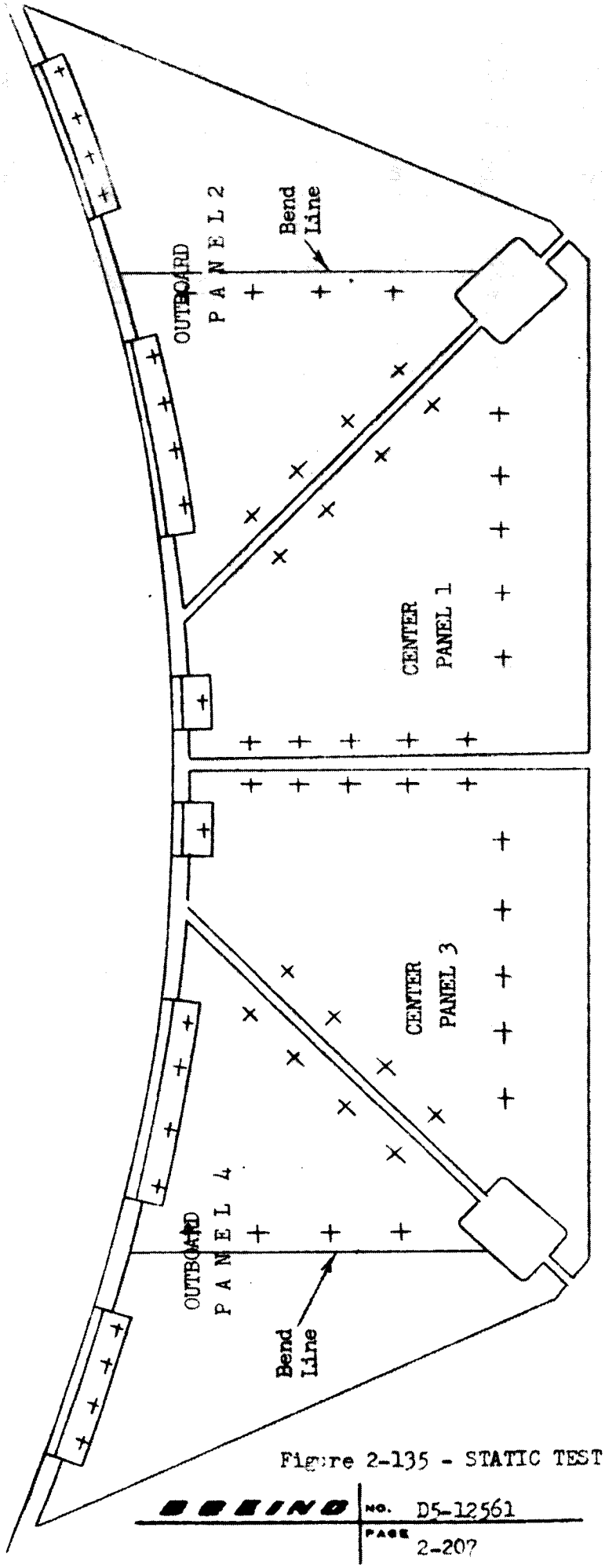

Figure 2-135 - STATIC TEST PANELS

U3 6211 4000

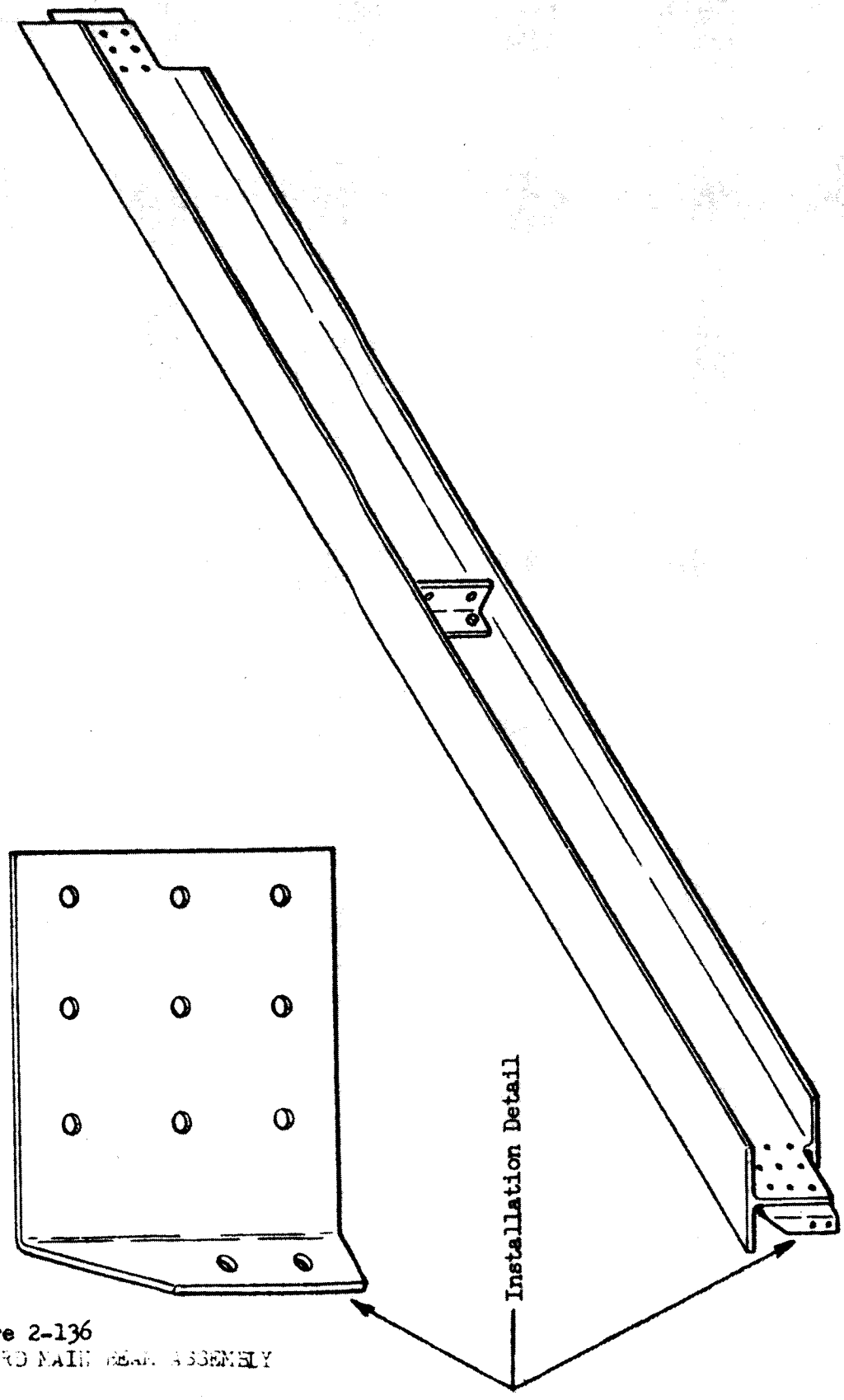

Figure 2-136
LEGARD MAIN GEAR ASSEMBLY

J3 4211 4000

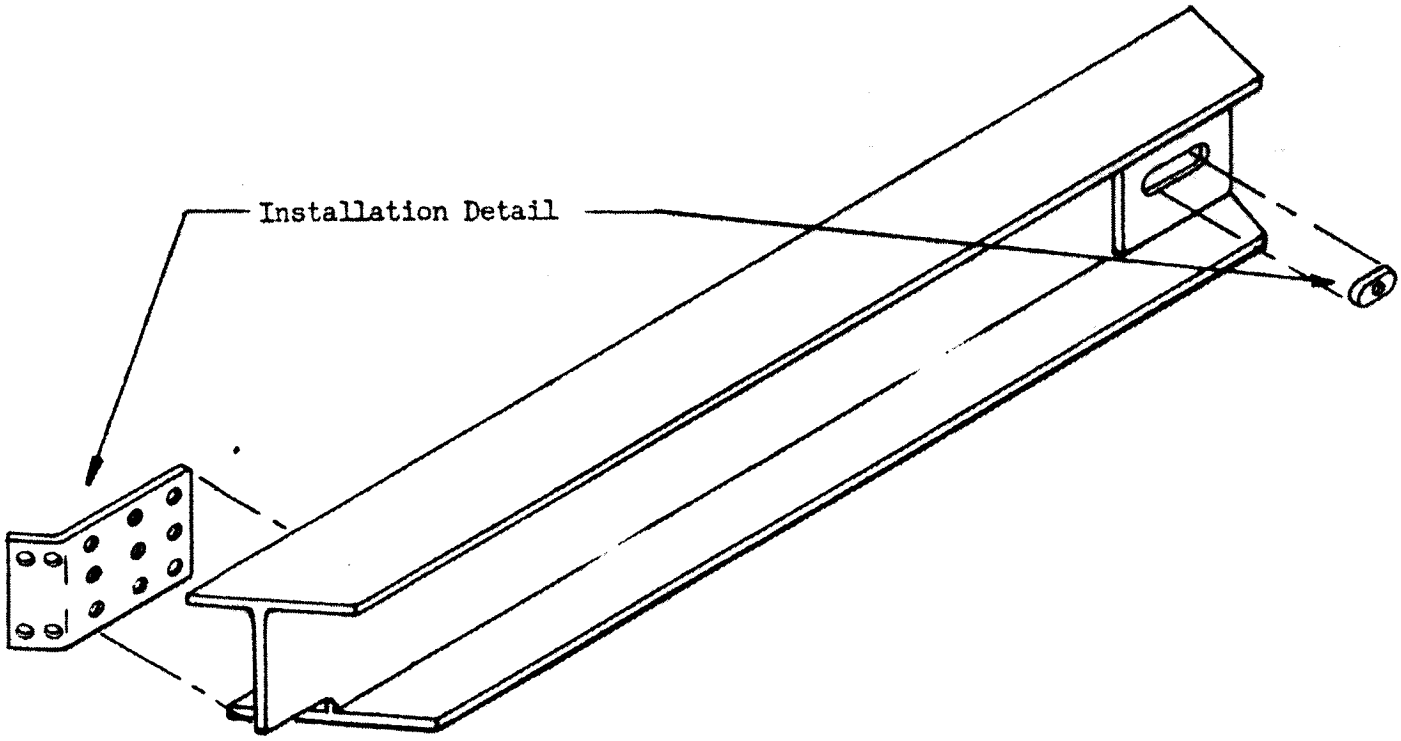

Figure 2-137 - **Inboard Side Beam Assembly**

U3 4211 4000

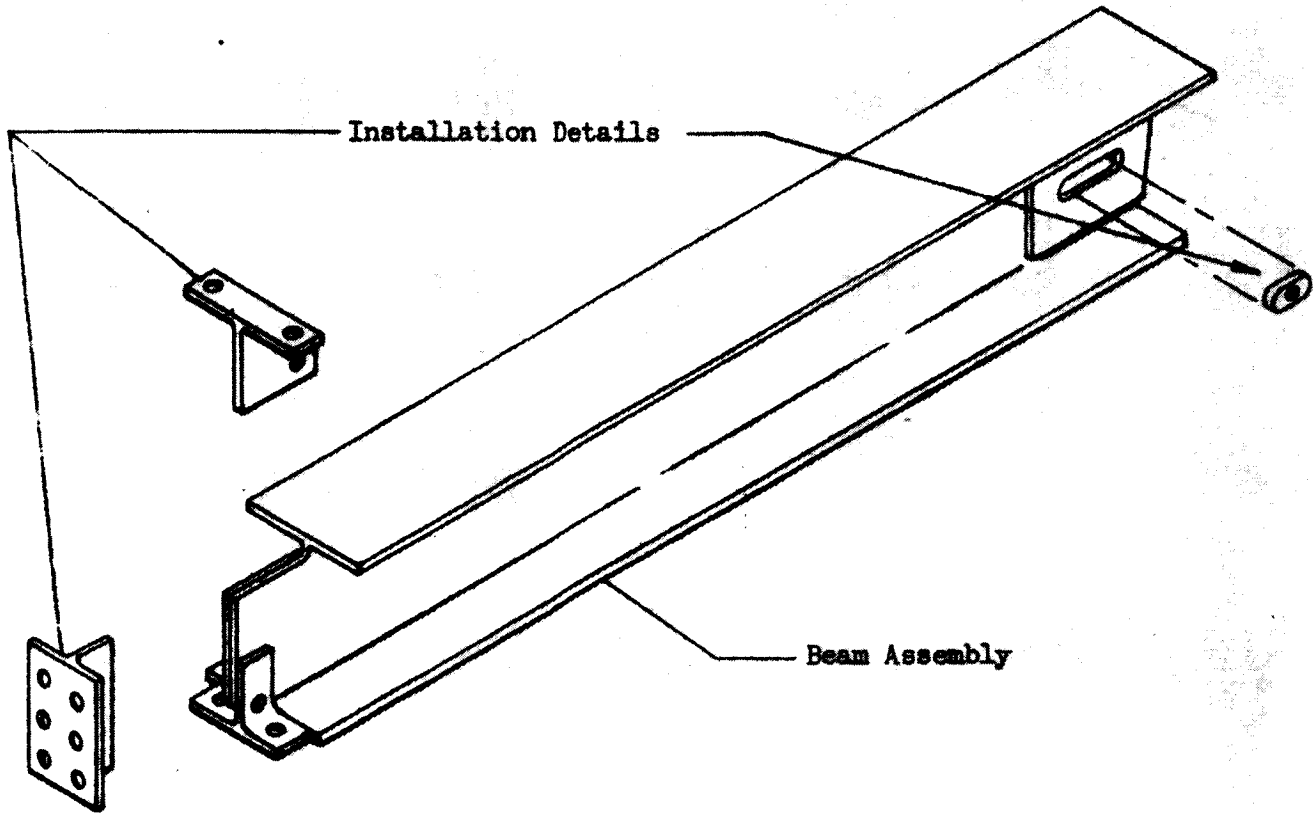

Figure 2-138 - Center Inboard Beam Assembly

U3 4211 4000

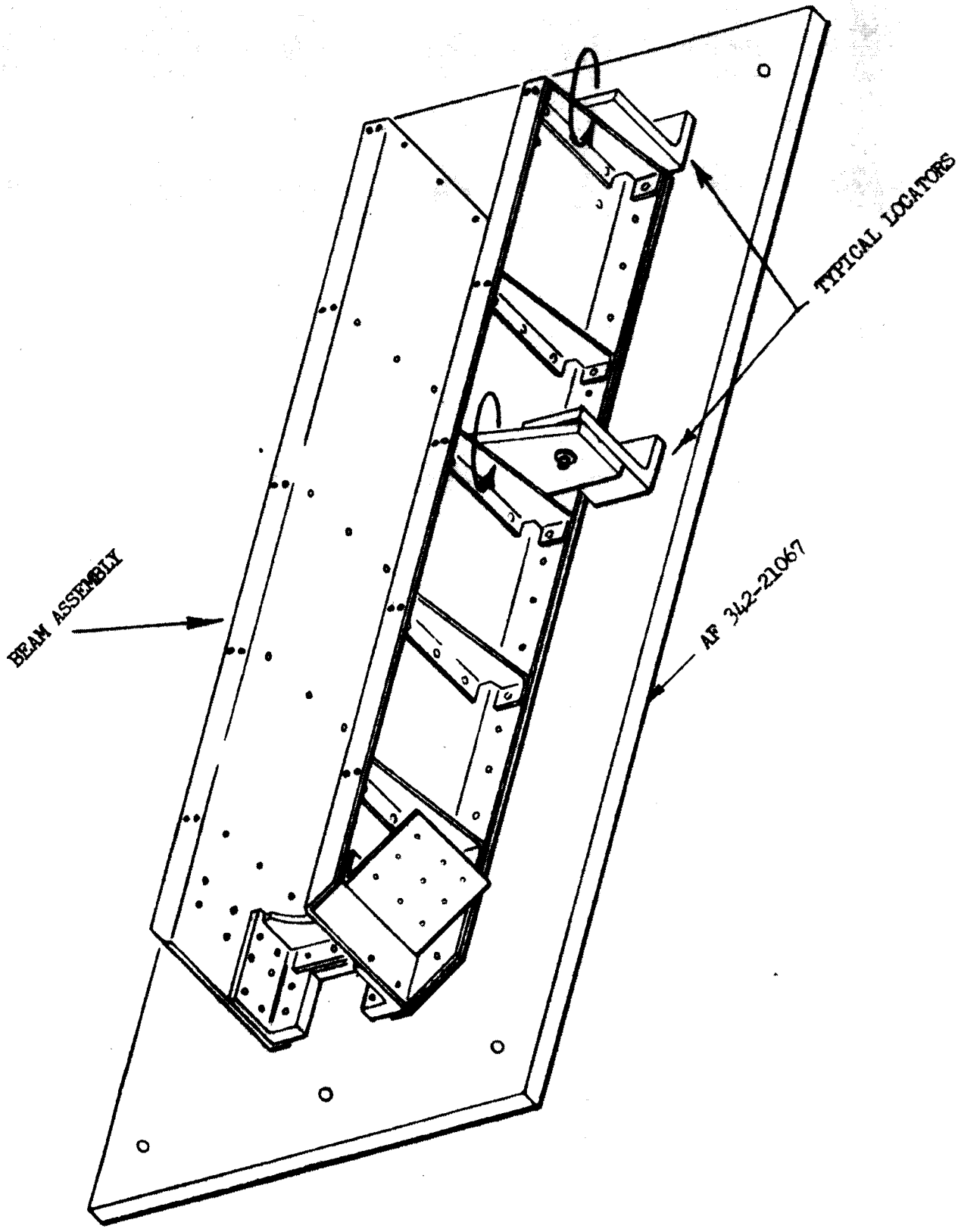

Figure 2-139 - Actuator Attach Beam Assembly

US 4811 4000

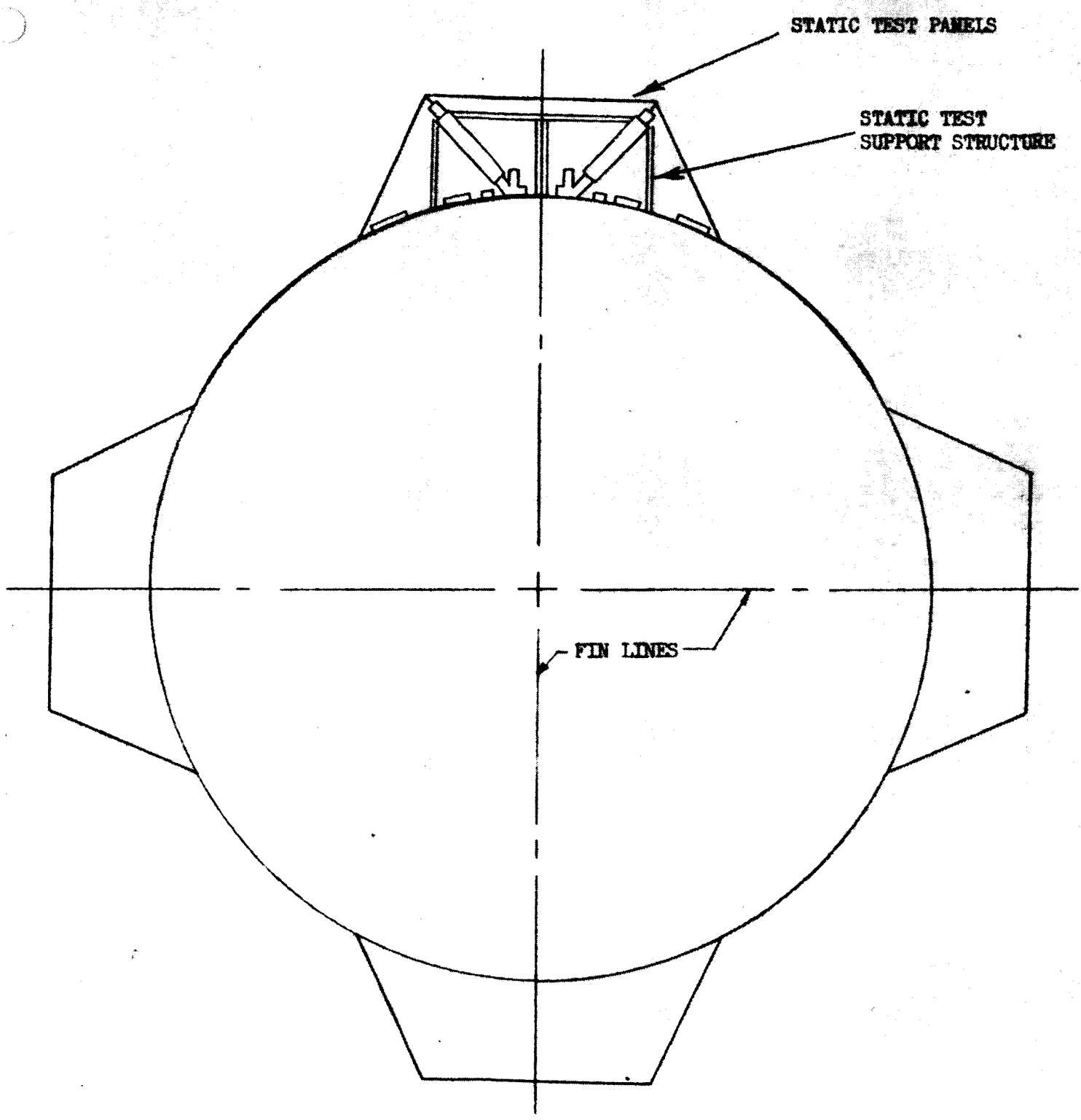

Figure 2-140 -Engine Fairing Heat Shield, Static Test

REAR VIEW
Looking Forward

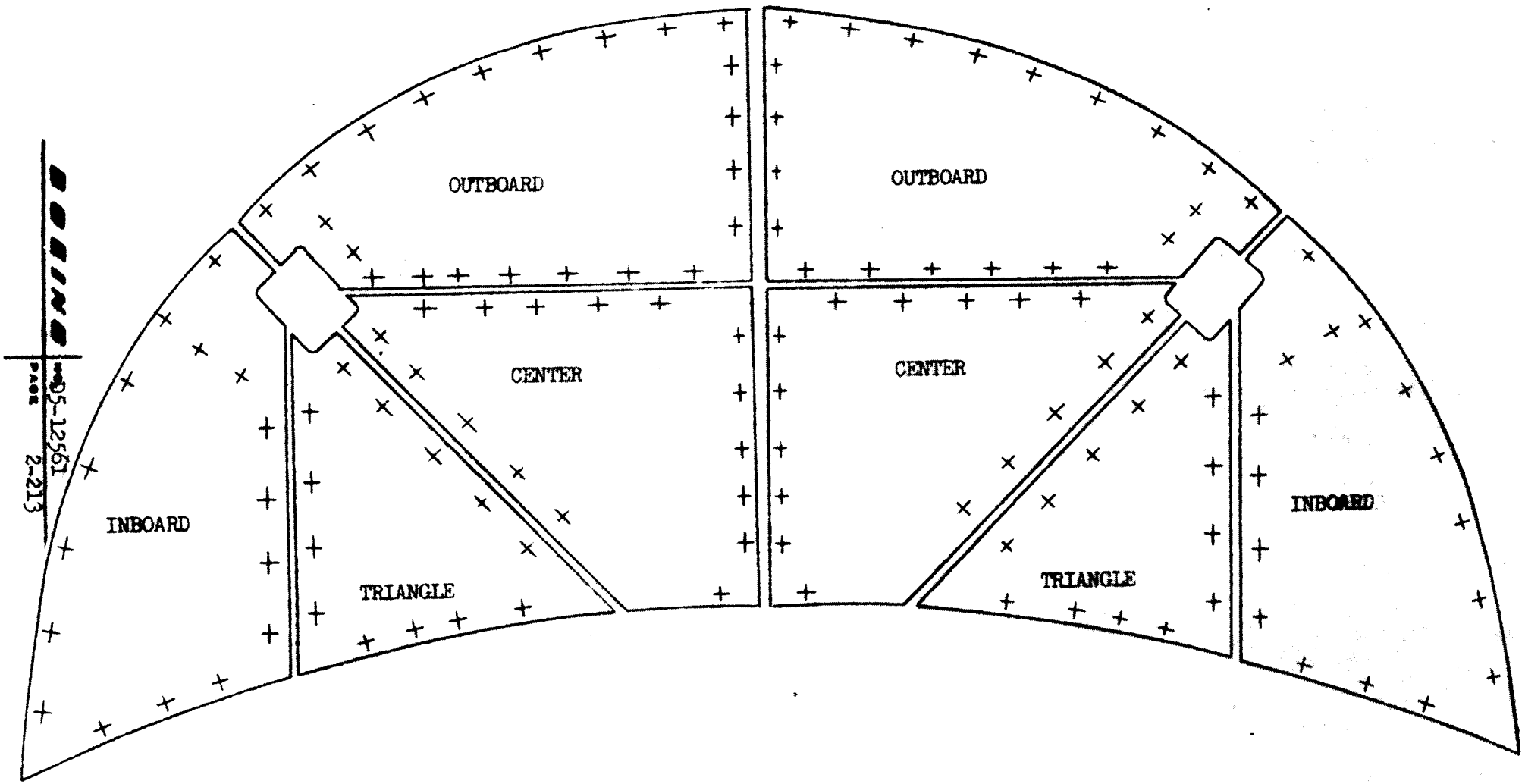

Figure 2-141 - Flight Panels

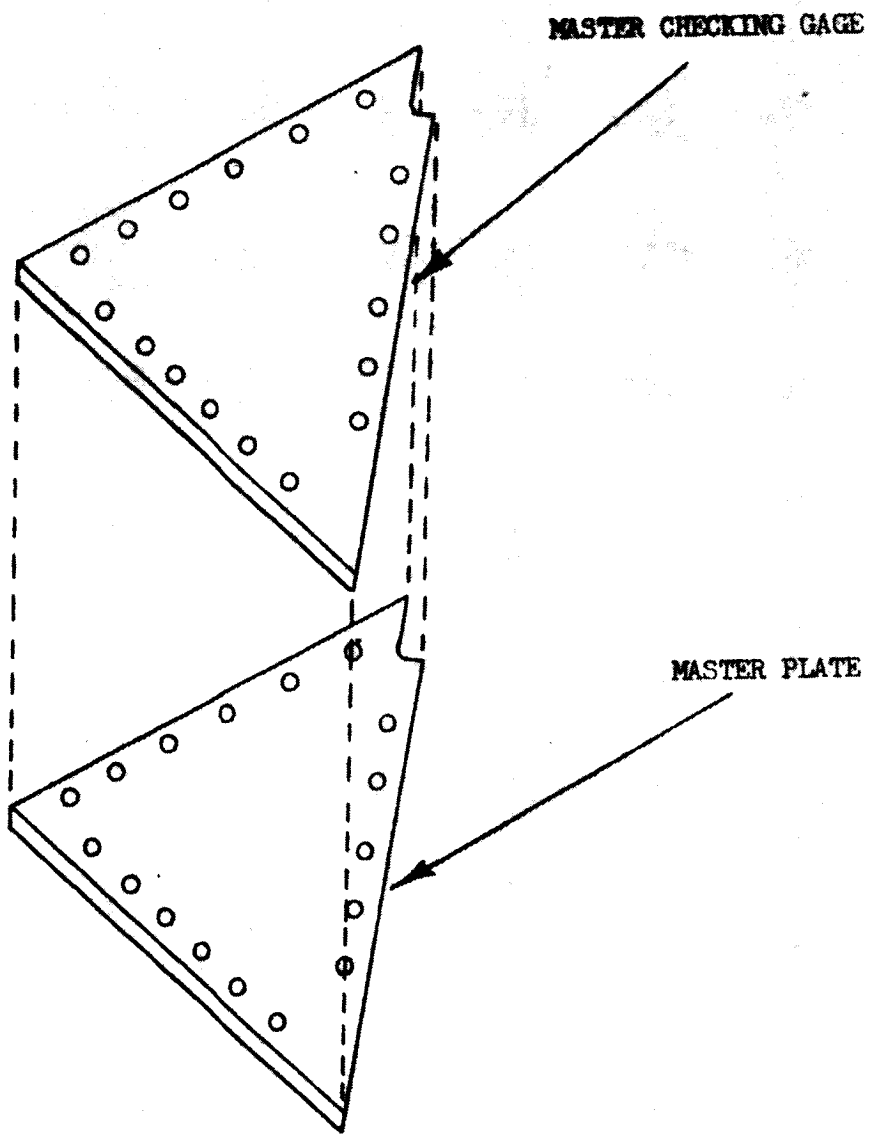

Figure 2-142 - Typical Heat Shield Plate Gage

U3 4811 4000

2.7.9.2.5 Outer Panels

2.7.9.2.5.1 Michoud Operation. (Figure 2-134)

The two outboard panels are installed on the Fairing Inplant with the exception of two panels per vehicle that require instrumentation. The instrumented panels are packaged separately and shipped with the Fairing for installation at Atlantic Missile Range. Holes for the instrumented panels are drilled Inplant.

The locating drill templates LDT 342-21009 and LDT2-342-21009 opposite are used to drill the holes in the support structure. The panels are placed in position and fasteners installed.

The two inboard panels are not installed Inplant; however, the attach holes in the beam structure on the Fairing are drilled with LDT 342-21008 and LDT2-21008 opposite. The remaining holes are drilled at Atlantic Missile Range after the Fairing and detail beam are installed. The above LDT's are required at Atlantic Missile Range for this operation.

2.7.9.2.5.2 Atlantic Missile Range Operation (Figure 2-134)

The two inboard panels adjacent to the Thrust Structure are installed at Atlantic Missile Range. The locating drill templates LDT 342-21008 and LDT2-342-21008 are indexed to the previously drilled fastener holes and the remaining holes in the beam and Thrust Structure clip are drilled with positive feed drills. The panels are placed in position and fasteners installed. One panel per stage in this area is instrumented.

2.7.9.3 Static Test Heat Shield

2.7.9.3.1 Support Structure (Figure 2-132)

2.7.9.3.1.1 Actuator Attachment Beam Assembly

This beam assembly attaches to the lower diagonal actuator support arm at two locations. The beam assembly is located in approximate position from the under side of the actuator arm. The inboard end of the beam is clamped loosely to the arm. A detail slotted fitting is positioned in the cut-out in the out-board end of the beam. The beam and slotted fitting are then moved inboard along the arm until the hole in the slotted fitting with the previously drilled hole in the actuator apex fitting. Install bolt from under side, rotate slotted fitting until dowel drops into alinement hole in apex fitting. Maintain .66 dimension on outboard fitting to beam and fair the inboard bottom face of beam with Station 112 of lower thrust ring. Maintain .40 dimension at apex fitting and tighten bolt to secure outer end of beam. Equal shim inboard beam to channel fittings that are common to retro-rocket actuator fitting.

U3 4211 4000

2.7.8.3.2 Master Plates (Figures 2-142)

Four master plates dummy the peripheral contour and hole pattern of the flight panels. These plates are used by the customer and vendor to coordinate drill templates. These master plates are coordinated to the master checking gages of the same number. The master plates are as follows:

MrP 342-21006	Master	Checking	Gage	Triangle	Panel
MrP 342-21007	"	"	"	Center	"
MrP 342-21008	"	"	"	Inboard	"
MrP 342-21009	"	"	"	Outboard	"

2.7.9 Stage Installation, Fairing Heat Shield

2.7.9.1 Flight Heat Shield

2.7.9.2 Support Structure

2.7.9.2.1 Inner Support Structure

The inner network of beams is identical to the static test test support structure, This installation is performed in the Thrust Structure Pick-Up position.

2.7.9.2.2 Outer Support Structure

2.7.9.2.2.1 Michoud Operation (Figure 2-134)

The outer beam assemblies and details are installed on the lower Fairing assembly in a pickup position. The locating drill jig LDJ 342-21000 indexes to the Fairing at the station 115.5 frame terminal fittings and center web. This tool provides locating surfaces and drilling provisions to install beams and details to existing clips and hangers in the Fairing.

2.7.9.2.2.2 Atlantic Missile Range (Figure 2-134)

Two beams are installed after the Fairing is installed on the Thrust Structure. Locating clips are provided on the Fairing and Thrust Structure. Attach holes are drilled from pilot holes in the clips.

2.7.9.2.3 Flight Panels

2.7.9.2.4 Inner Panels (MSFC)

The attach holes for the inner panels are previously drilled during installation of the static test panels. The hole pattern in the beam structure is common to the flight panels and the static test panels. See paragraph 2.7.9.5. The triangle panels are installed. The access panels are installed at Atlantic Missile Range.

U3 4211 4000

2.7.9.3.1.1 (Continued)

Drill from pilots the attach holes of the beam to channel fittings. Install detail beam cap plate and secure. Drill the attach holes from pilots. Complete the above operations on the opposite hand installation.

2.7.9.3.1.2 Inboard Main Beam Assembly.

This beam assembly attaches at each end to the actuator attachment beam assembly. The beam and two pilot-drilled detail clips are placed in position. The beam is centered between actuator beams and clamped to clips on the actuator attach beam. Drill attachment holes from piloted detail clips.

2.7.9.3.1.3 Inboard Center Beam Assembly.

This assembly is installed between the inboard main beam assembly and the Thrust Structure. Location for this assembly is provided by an angle clip on the Thrust Structure and the piloted tee clip on the main beam assembly. The beam is located to the clips on each end and faired with Station 112 on the inboard end prior to clamping. One additional clip is installed at the main beam to complete the installation at that point. Pilot holes are provided to drill all fastener holes. Install spacer in slot in beam at inboard attachment and maintain .500 dimension. Drill through spacer to clips and install fastener.

2.7.9.3.1.4 Inboard Side Beam Assembly

This assembly is installed between the actuator beam, (at actuator apex location), and the Thrust Structure. Clips are provided at each end for location. Pilot holes are provided to drill fastener locations. The installation is similar to that of the inboard center beam assembly.

2.7.9.4 Static Test Panels (Figure 2-135)

The attach hole patterns for the static test panels are drilled with the following locating drill templates.

LDT 342-21043 Locating Drill Template, Center Panel
LDT2 342-21043 Locating Drill Template, Center Opposite
LDT 342-21045 Locating Drill Template, Triangle Panel
LDT2 342-21045 Locating Drill Template, Triangle Opposite

The above templates are placed in position and adjusted for proper gap between panels. The holes are drilled with power feed drilling equipment. Nut plates are installed for the two access panels. The panels are placed in position and fasteners installed. This installation is implemented in the Thrust Structure pickup position.

U3 4211 4000

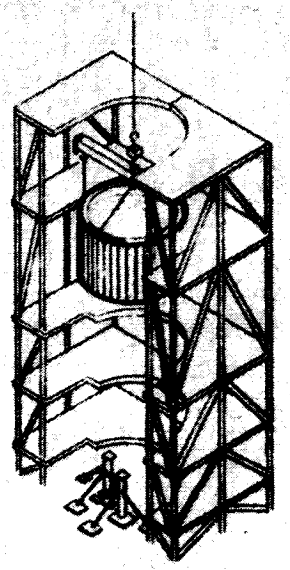

1. POSITION THRUST STRUCTURE ASSEMBLY IN TOWER

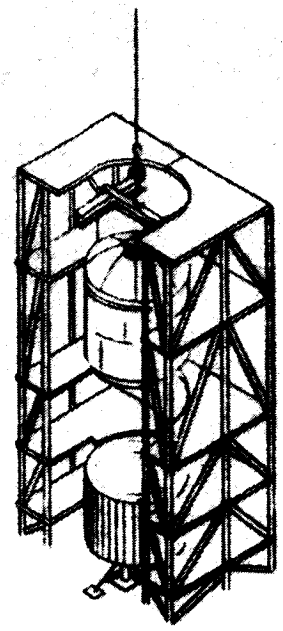

2. POSITION AND JOIN FUEL TANK ASSY TO THRUST STRUCTURE ASSEMBLY

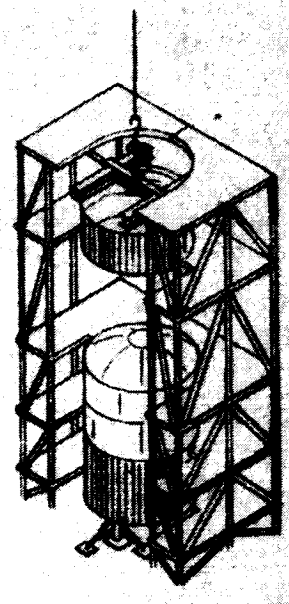

3. POSITION AND JOIN INTER-TANK STRUCTURE ASSY TO FUEL TANK ASSEMBLY

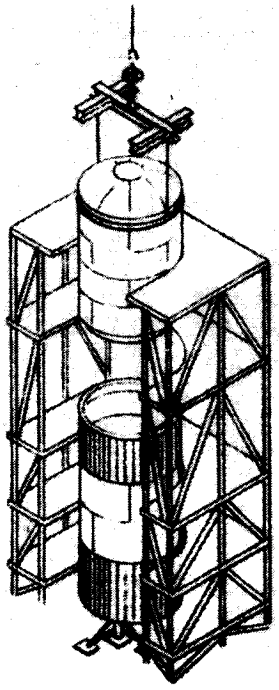

4. POSITION AND JOIN OXIDIZER TANK ASSY TO INTERTANK STRUCTURE ASSEMBLY

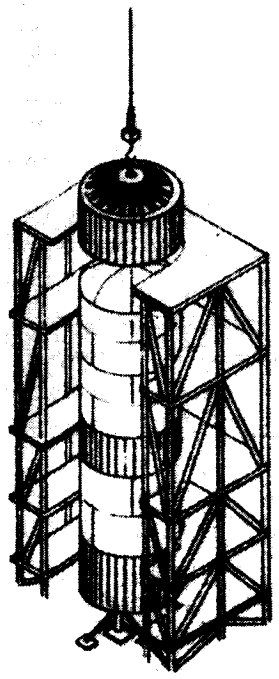

5. POSITION AND JOIN FORWARD SKIRT ASSEMBLY TO OXIDIZER TANK ASSEMBLY

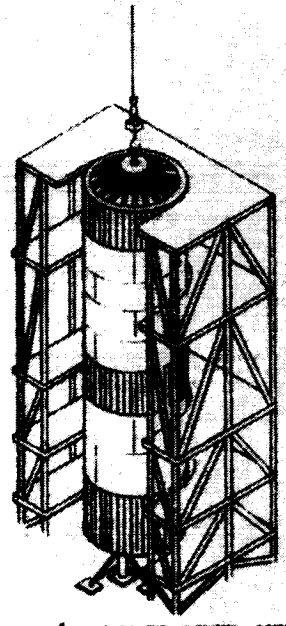

6. COMPLETED VERTICAL FINAL ASSEMBLY

Figure 2-143 VERTICAL FINAL ASSEMBLY

U3 6211 6000

2.8 VERTICAL FINAL ASSEMBLY

The Final Assembly operations consist of vertically joining the five (5) major subassemblies and lowering the completed assembly onto the transporter (See Figure 2-144). These operations are performed in a vertical assembly tower which is environmentally controlled. The vertical buildup of these major subassemblies begins with the first section being positioned on a set of four (4) pylons. These pylons, evenly spaced 90 degrees apart, are designed with support pads which are optically alined in a longitudinal plane. This is the only alinement adjustment provided throughout the entire assembly. All other alinements are controlled during major assembly.

2.8.1 Assembly Procedure

The Thrust Structure, which is the first major subassembly to be positioned, is 33 feet in diameter, 20 feet high and weighs 90,000 pounds. This weight includes all of the hardware previously installed.

The Fuel Tank is positioned above the Thrust Structure, radially alined, and lowered onto the Thrust Structure. The subassembly is 33 feet in diameter, 43 feet high, and weighs 42,000 pounds with the fuel system included.

The intertank is 33 feet in diameter, 23 feet high, and weighs 16,000 pounds including hardware previously installed. The Intertank is positioned above the Fuel Tank, radially alined, and lowered onto the Fuel Tank.

The Liquid Oxygen Tank (LOX) is 33 feet in diameter, 64 feet high and weighs 50,000 pounds. The LOX Tank is positioned above the Intertank, radially alined, and lowered onto the Intertank.

The Forward Skirt is positioned above the LOX Tank radially alined, and lowered onto the LOX Tank. The Forward Skirt has an overall height of 19 feet (with the Forward Handling Ring attached), a diameter of 33 feet and weighs 37,000 pounds including hardware previously installed.

The complete assembly is removed from the tower and lowered onto the transporter by the 180 ton overhead crane. This assembly is 33 feet in diameter, 120 feet high, and weighs 300,000 pounds.

NOTE: The weights and dimensions listed above are approximate figures.

Figure 2-144 FORMERLY SHEET 2 OF VERTICAL FINAL ASSEMBLY SEQUENCE. NOW COMBINED AS FIGURE 2-143.

U3 4211 4000

2.8.2 Thrust Structure

The Thrust Structure Assembly (which has previously been assembled, had its internal components installed, finish painted, and stored) is moved into the aisle of the Final Assembly Building by the self-powered "A" Frame ME 370-27000 (See Figure 2-145) utilizing the Thrust Structure Hoisting Tool HT 370-8111. The assembly is lowered by the "A" Frame onto Support Skid ME 370-18050 (See Figure 2-146) which supports the assembly at the four (4) Thrust Structure Engine Pads.

After the "A" Frame has been removed, connect the 180 ton overhead crane with Handling Tool HT 370-18050 (See Figure 2-147) to the overhead crane through a hydraulic unit (Hydra-Set) which provides positive vertical movement controllable to .001 of an inch (See Figure 2-148). The Handling Tool connects to two (2) GSE Handling Fittings 65B-61001 located at station 280 on Positions I and III. These fittings were installed during the Thrust Structure Subassembly operation.

Lift the Thrust Structure Assembly from Support Skid ME 370-18050 and move it into the Final Assembly Tower. Position the assembly onto the four (4) Pylon Support Pads AF 330-10000, which have previously been planized by optics (See Figure 2-149) mating the Thrust Structure Support Posts with the Pylon Support Pads. After positioning, detach Handling Tool HT 370-18050 from the Thrust Structure and remove it from the Hydra-Set and overhead crane.

2.8.3 Fuel Tank

The Fuel Tank (which has previously been assembled, finish painted and stored) is moved into the aisle of the Final Assembly Building on Transportation Trailer TMTR 370-24000 (See Figure 2-150). The Fuel Tank is supported on the Transportation Trailer TMTR 370-24000 by an upper and lower set of Handling Tools HT 370-24000. Each set consists of two (2) 180 degree segments attached to the "I" Ring by pins and clamps at twelve (12) .750 diameter holes (See Figure 2-151). The two (2) pins in the lower set of Handling Tool HT 370-24000 mate with trunnions on the trailer which allow the Fuel Tank to be rotated from the horizontal to the vertical position.

The 180 ton overhead crane is positioned with Handling Tool HT2-370-24000 (See Figure 2-152) and the Hydra-Set attached. Handling Tool HT2-370-24000 is attached to the trunnion pins of Handling Tool HT 370-24000 and the tank is rotated to the vertical position. Special adapters for HT2 370-24000 provide pickup at the trunnion pins. The Transportation Trailer TMTR 370-24000 is removed from the area when cleared of the tank.

U3 4211 4000

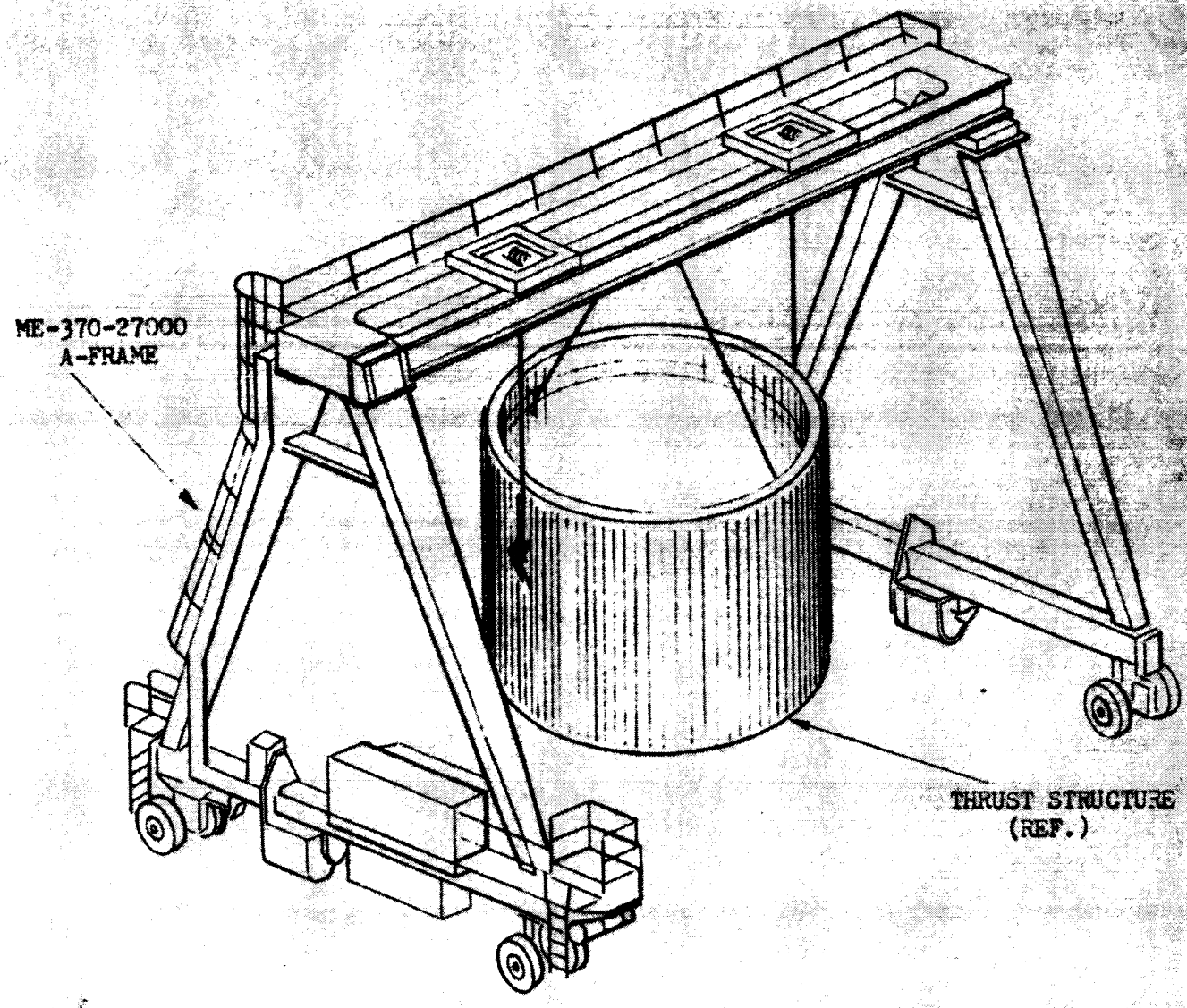

Figure 2-145 - Crane Transporting the Thrust Structure

U3 4211 4000

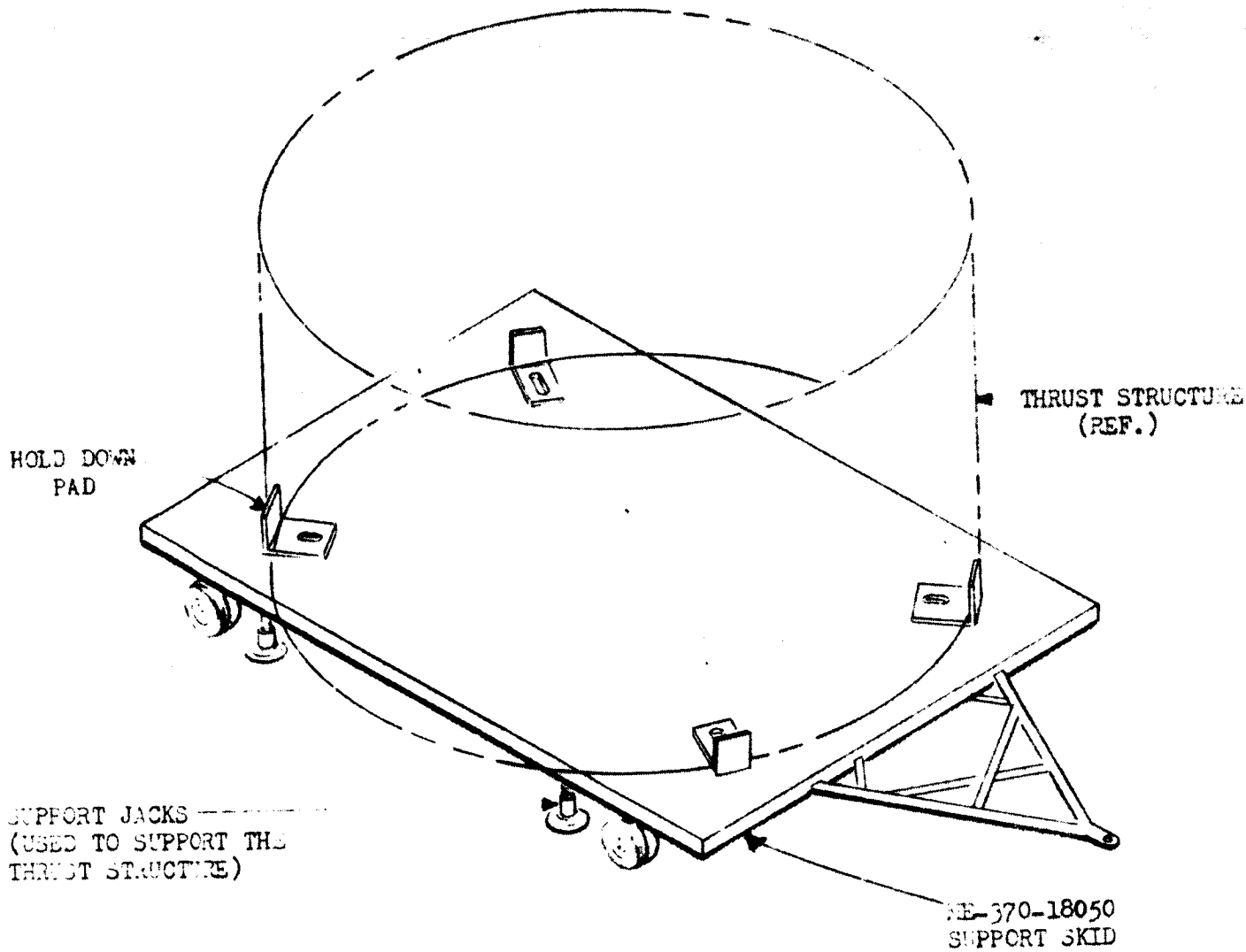

Fig. 2-246 Thrust Structure Positioned on Support Skid -
Note: This is a Paint and Storage Skid.

U3 4211 4000

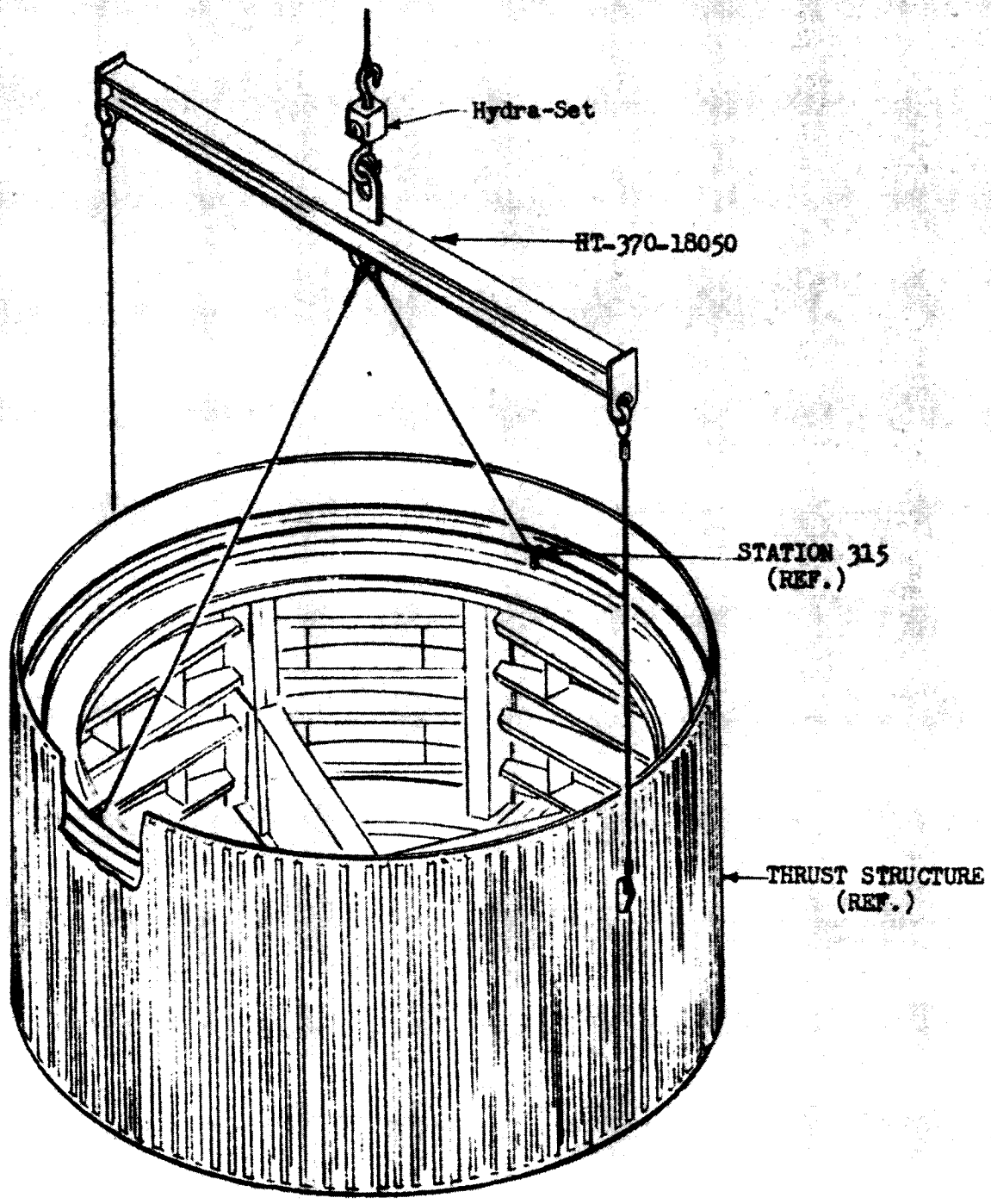

Fig. 2-147 Positioning the Thrust Structure In Vertical Assembly Tower

U3 4211 4000

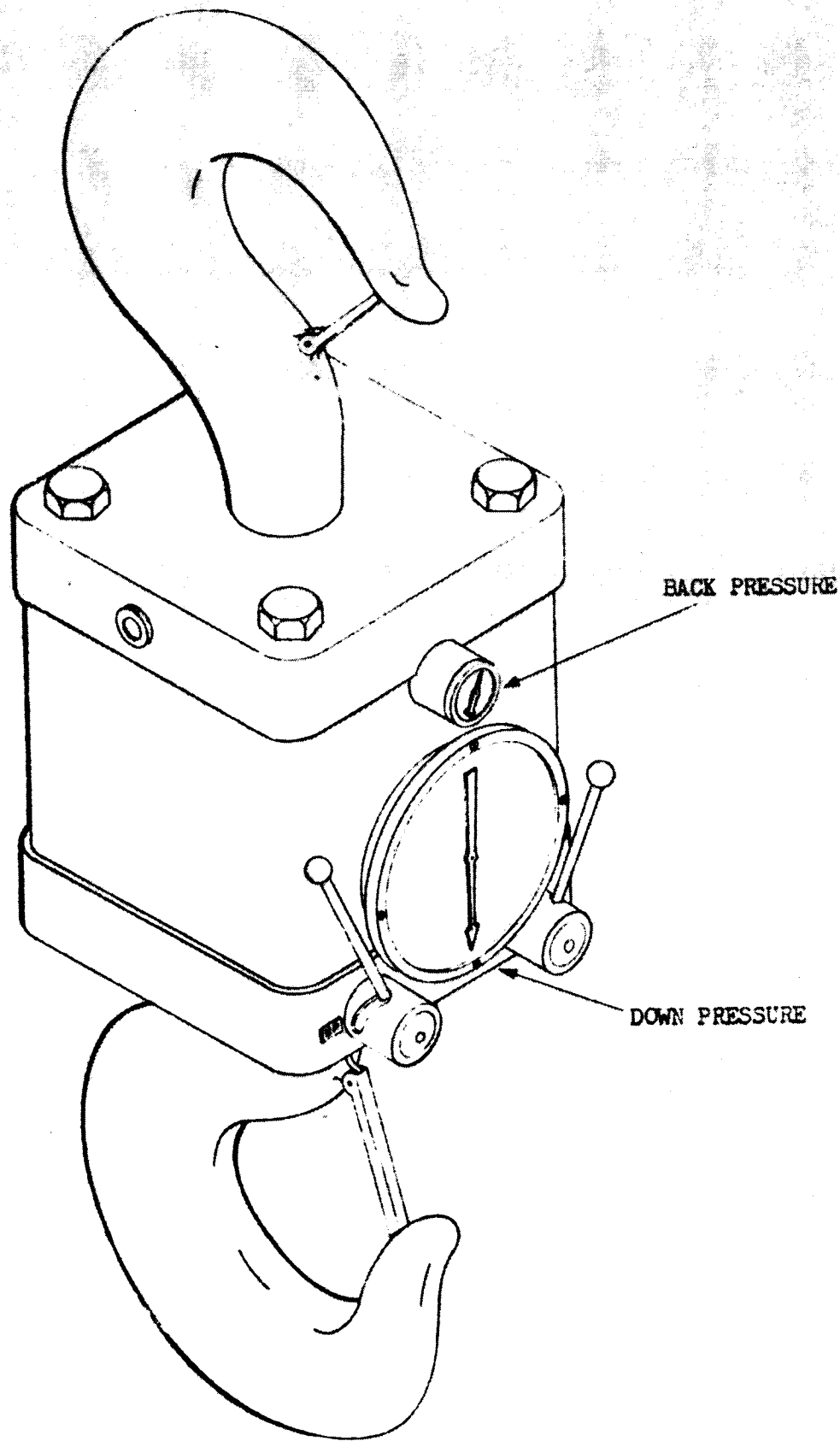

Figure 2-14[illegible] - [illegible]dra[illegible]

U3 4211 4000

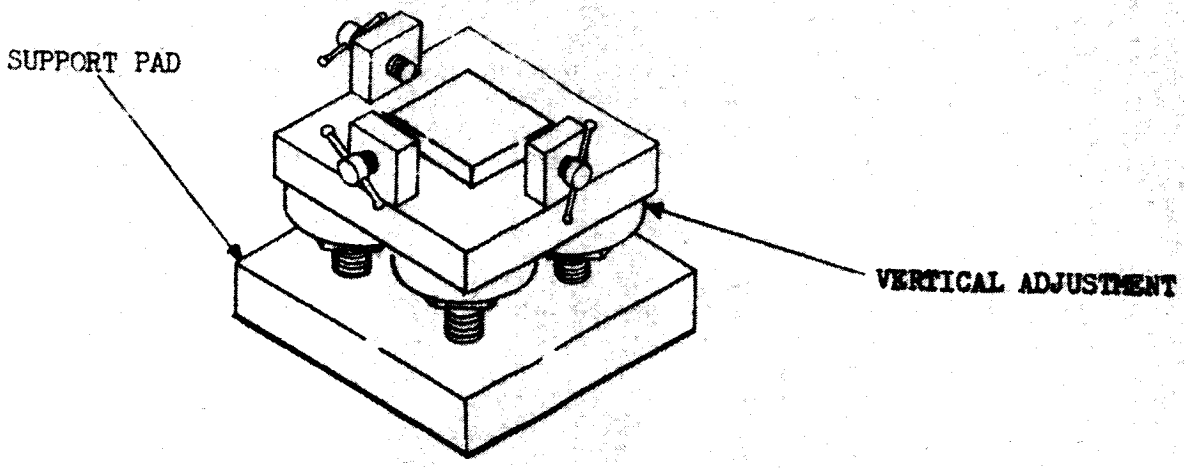

DETAIL A

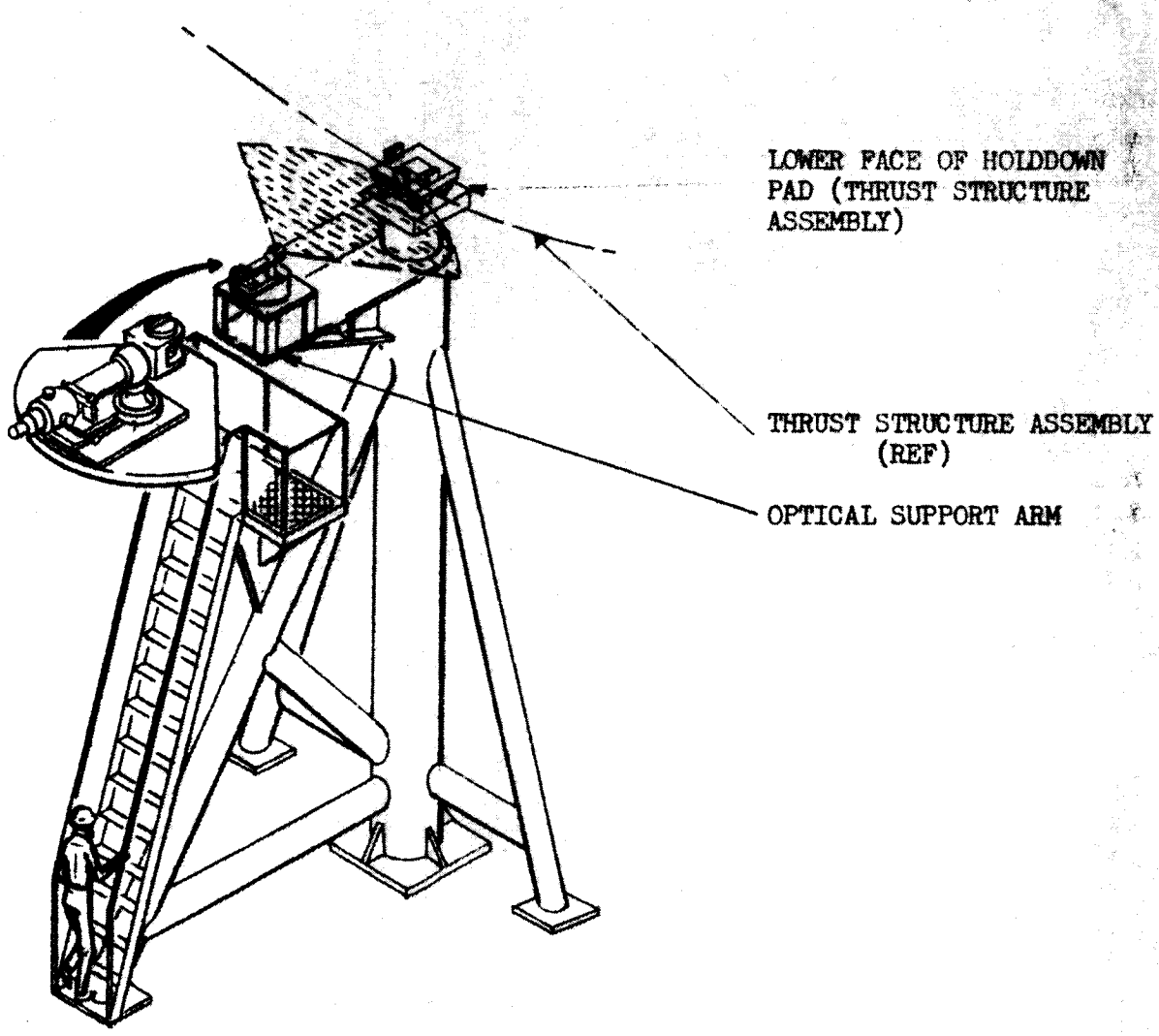

Figure 2-149 - Pylon Design

U3 4211 4000

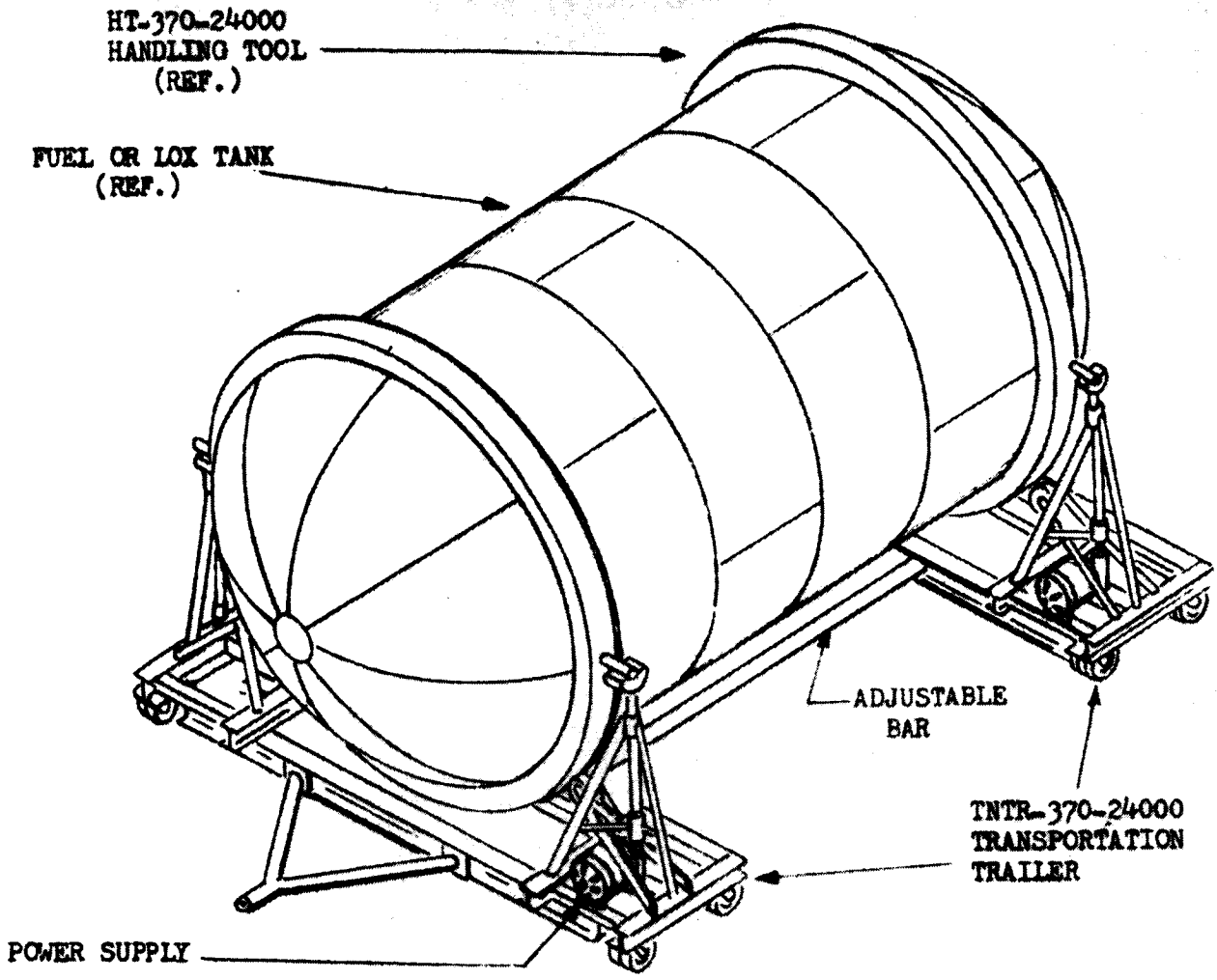

Figure 2-150 - Transporting the Fuel or LOX Tank

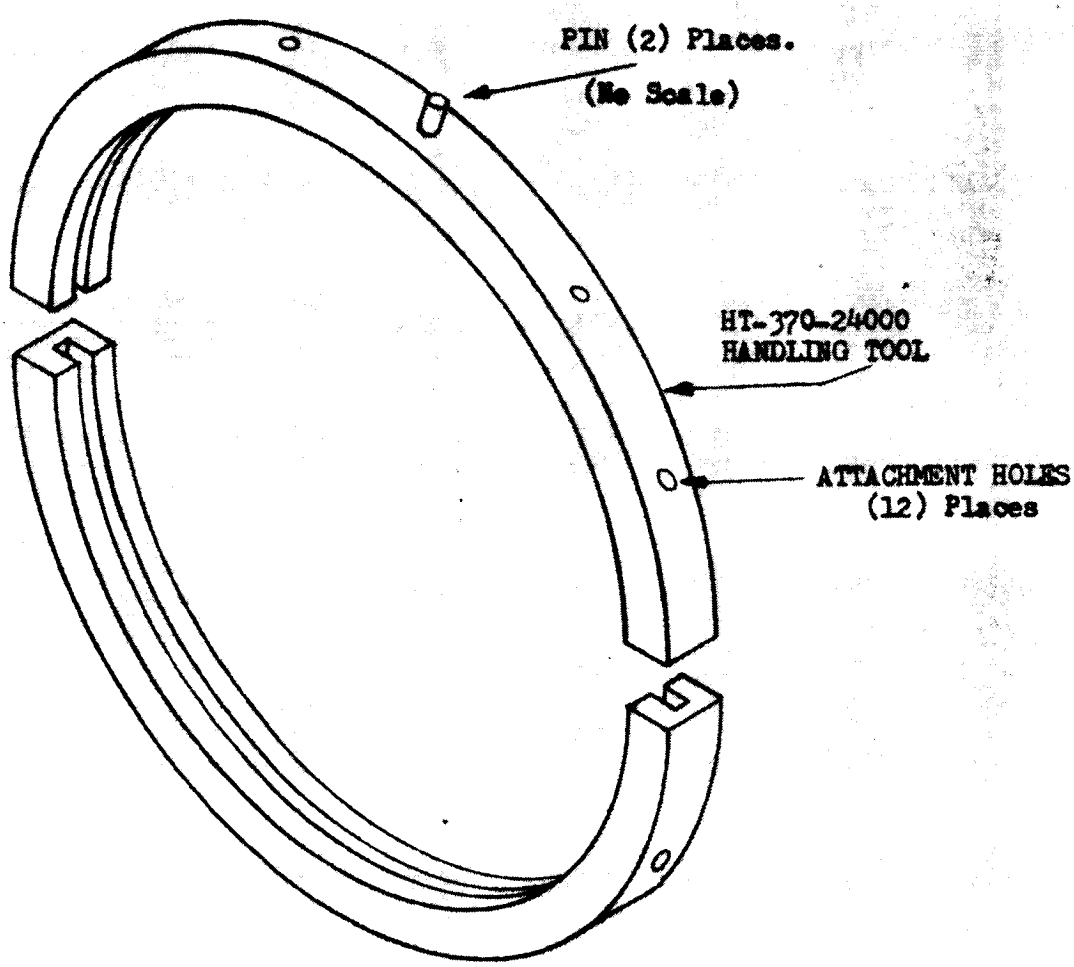

Figure 2-151 - Handling Tool Used to Support the Fuel and LOX Tank

U5 4211 4000

2.8.3 (Continued)

To remove the lower Handling Tool HT 370-24000, Production Dolly PrD 370-24000 (See Figure 2-153) is positioned under the tank which is being held in the vertical position by the overhead crane. Lower the Fuel Tank onto Production Dolly PrD 370-24000 which supports the Handling Tool as it is unbolted. The Tank is then lifted out of the Production Dolly and moved into the Final Assembly Tower.

During the operation of loading the Fuel Tank, four (4) tools are used to attain the proper alinement. These tools are utilized as follows:

a) The Rotational Positioner MIT 330-7442 (See Figure 2-154) is used to ensure proper rotational alignment between the two subassemblies. The positioner is located over Position I. The upper section of the tool is attached to a tooling hole in the Tank "Y" Ring and the lower section is attached to two (2) production holes in the Thrust Structure. This tool is installed after the Fuel Tank has been brought into the Final Assembly Tower.

b) The Guides MIT 330-7461 (See Figure 2-155) are installed at thirty (30) places around the upper periphery of the stringers from either edge of each skin panel except at position I (See Figure 2-155). These tools are installed after the Thrust Structure is placed in the Final Assembly Tower.

c) The Vertical Positioners ALF 335-7106 (See Figure 2-156) are located at thirty-two (32) places around the upper edge of the Thrust Structure. These tools are stops for alineing the Fuel Tank vertically and are installed in the subassembly area.

d) The fourth item of tooling used to aid with the alinement and mating of the two subassemblies is a commercial Hydra-Set.

With the use of the tools listed in Paragraph 2.8.3(a) through(d) the Fuel Tank is lowered and positioned onto the Thrust Structure.

After the Fuel Tank is positioned on top of the Thrust Structure, four (4) crews consisting of three (3) men per crew, at 90 degree intervals, install the fasteners common to the Thrust Structure Skin Panel and the lower Fuel Tank "Y" Ring (MSFC will use three (3) work crews, consisting of three (3) men, spaced at 120 degree intervals.)

U3 4211 6000

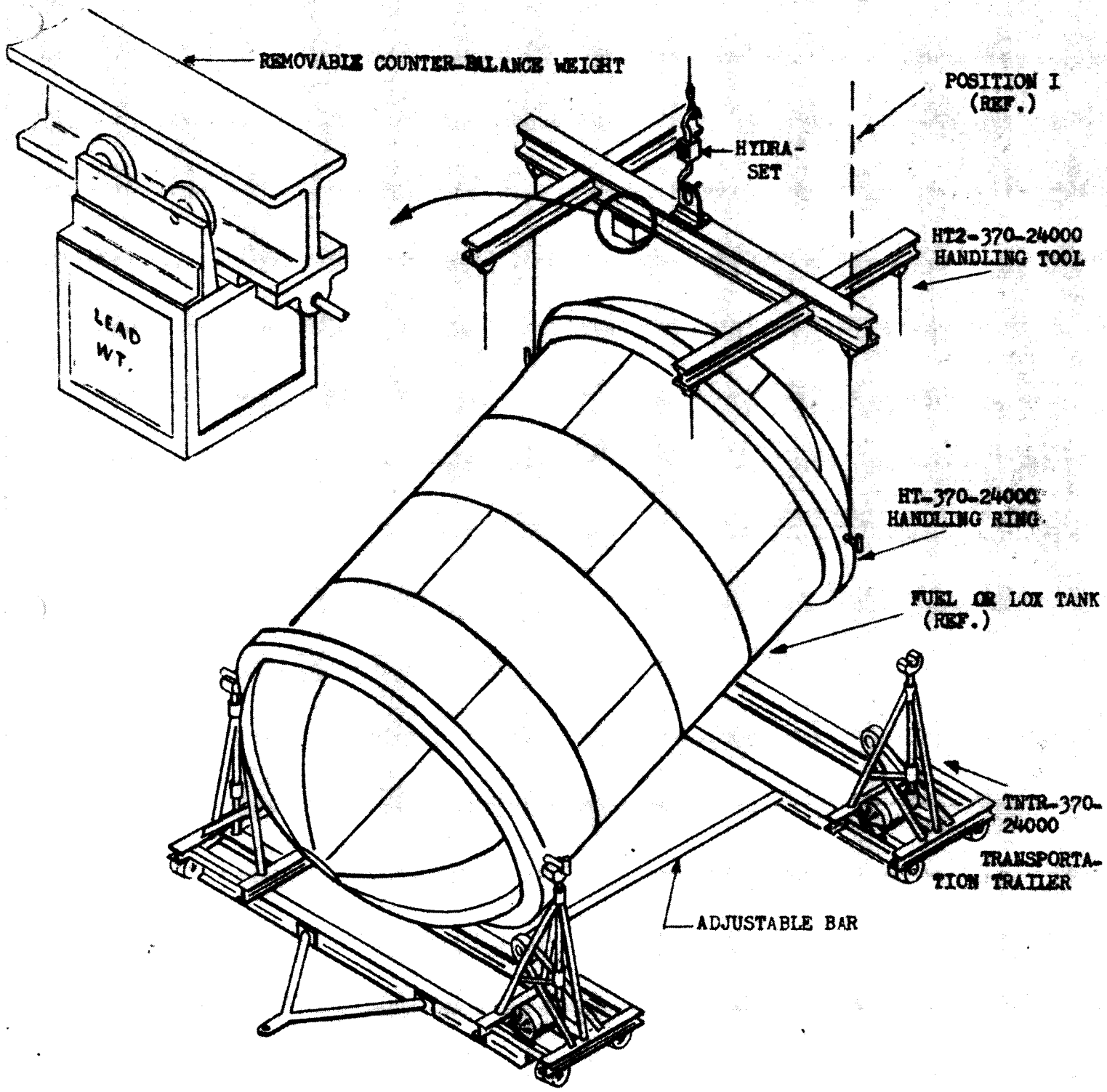

Fig. 2-152 - Positioning Fuel or LOX Tank in Transportation Trailer

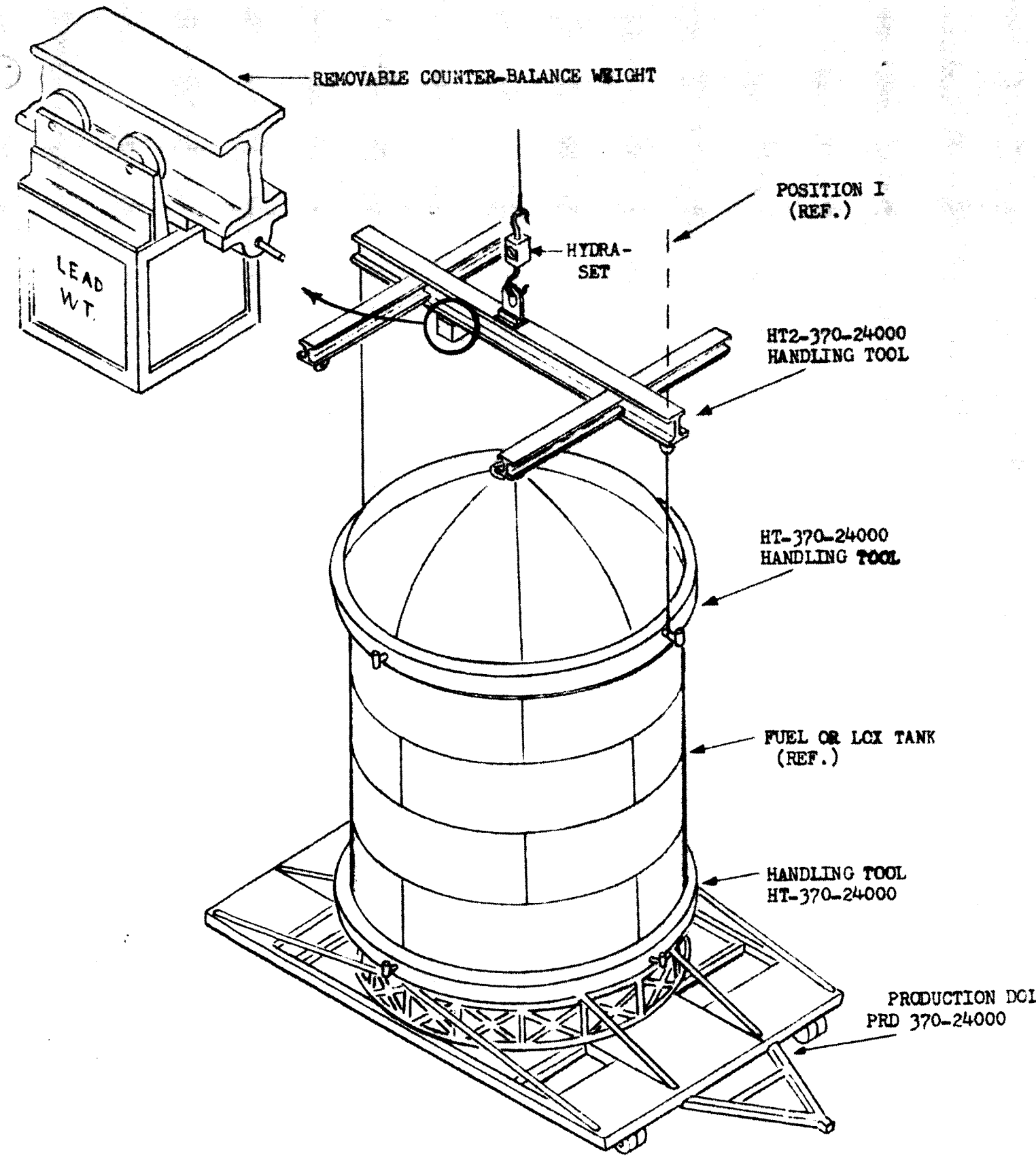

Fig. 2-153 - Loading Fuel or LOX Tank on Production Dolly Preparatory to Removing Lower Handling Ring

U3 4211 4000

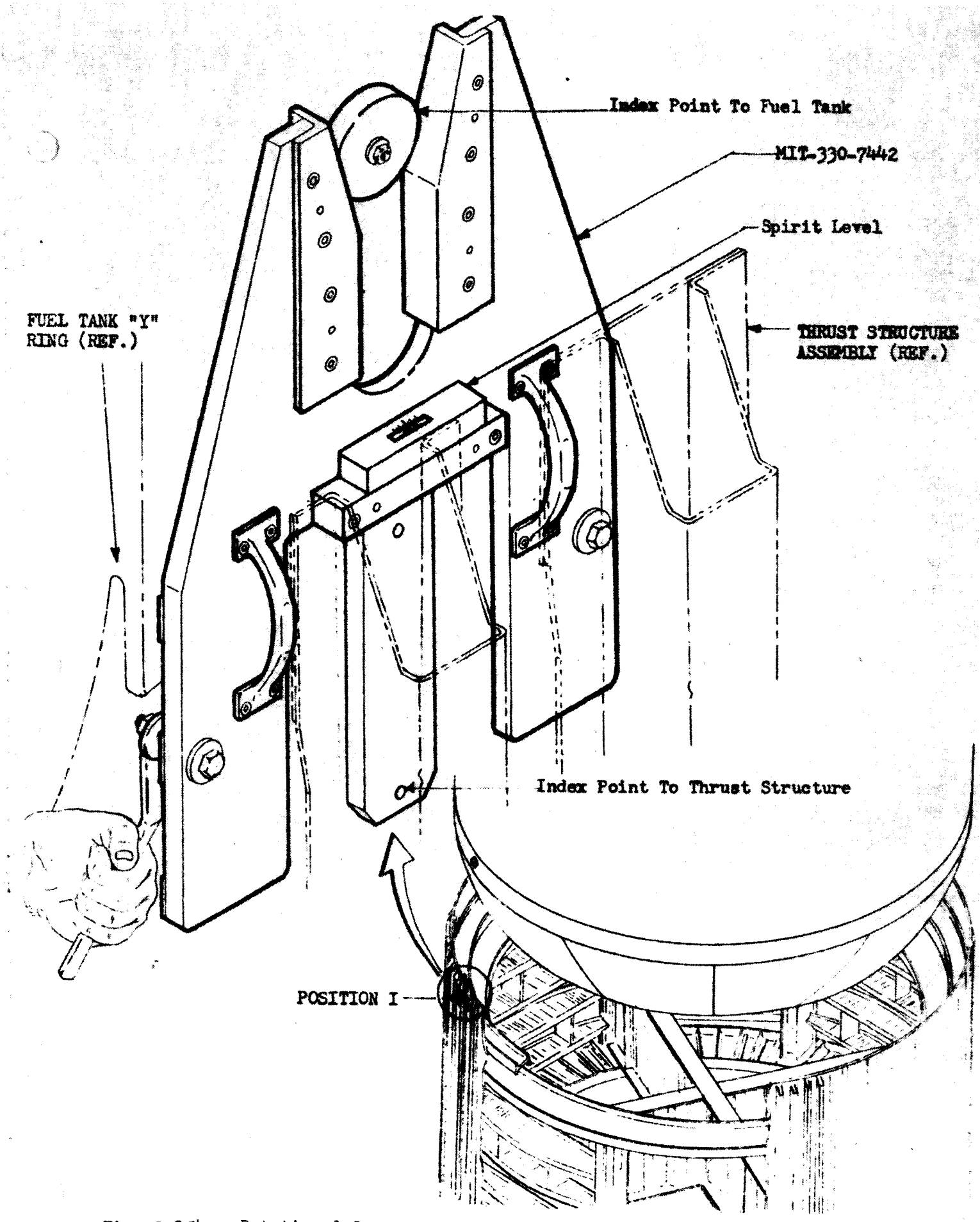

Fig. 2-154 - Rotational Location-Fuel Tank to Thrust Structure

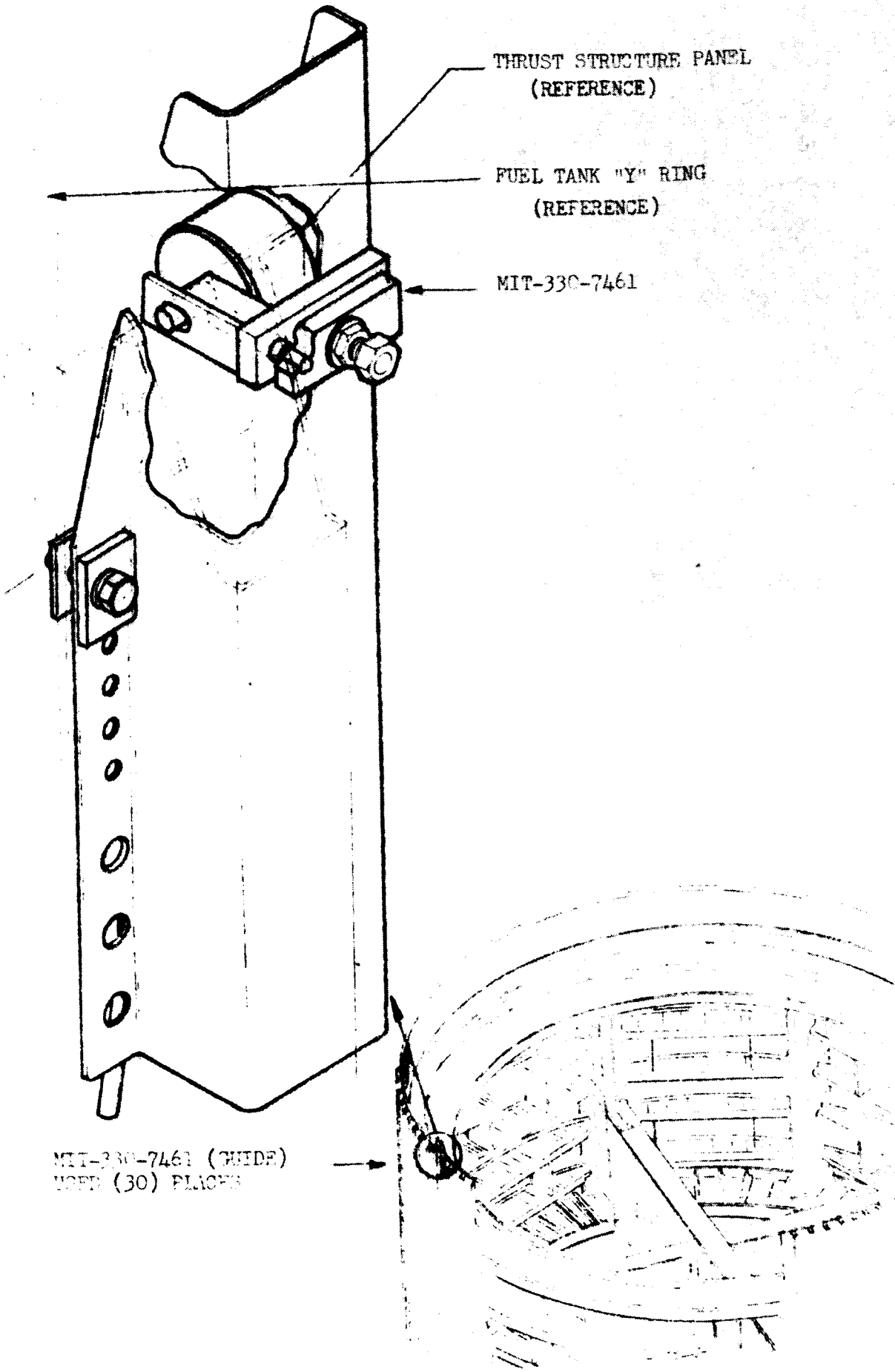

Fig. 2-155 - [illegible] fuel tank [illegible]

U3 4211 4000

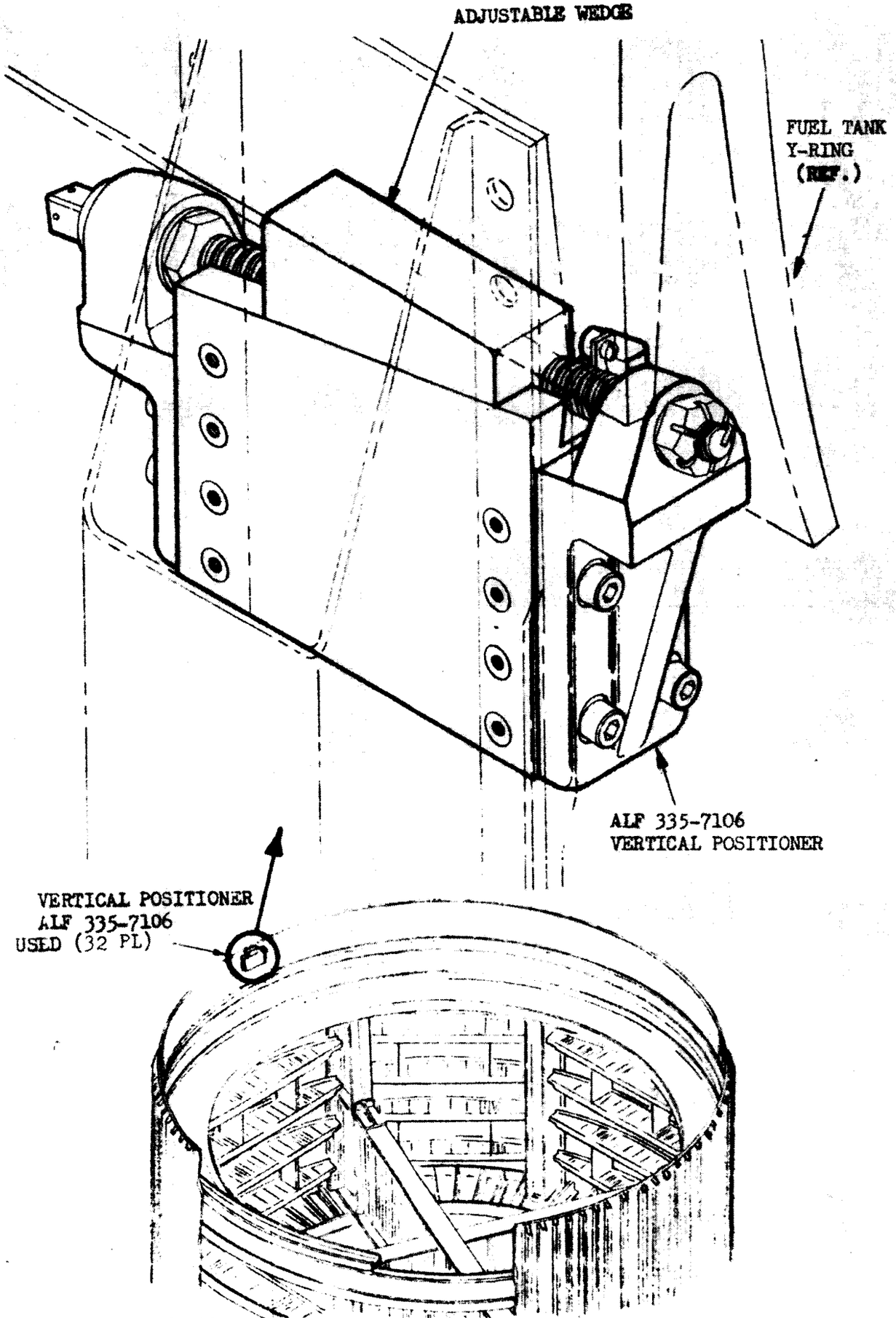

Fig. 2- 156 - Vertical Positioning Fuel Tank to Thrust Structure

U3 4211 4000

2.8.3 (Continued)

NOTE: It is imperative that the overhead crane remain attached to the Fuel Tank until 25 percent of the fasteners are installed. After these are installed, remove Handling Tool HT2-370-24000. Using the overhead crane and Handling Tool HT3-24000, remove the top Handling Ring HT 370-24000.

Using a positive feed drill with Drill Jig DJ 330-7443 (See Figure 2-157), drill and deburr all holes, eight (8) around each stringer, of the Thrust Structure (112 Places). This pattern of eight (8) holes around each Stringer is drilled, deburred, and the fasteners installed by one (1) man on the inside of the Thrust Structure locating and removing the back-up plate and aiding with the fastener installation, one (1) man drilling and deburring, and one (1) man installing fasteners and torquing.

NOTE: At sixteen (16) splice sections, where Drill Jig DJ 330-7443-1-0 is used, omit one (1) fastener to accommodate this drill jig (See Figure 2-158).

Before removing the drill jig, two (2) fasteners are installed and torqued. The balance of the fasteners are installed and torqued after the drill jig is removed. The man inside of the Thrust Structure uses Extension Wrench MIT 330-7447 to position the nut on the fastener during the torquing operations. The thirty two (32) Vertical Positioners ALP 335-7106, one (1) Radial Alignment Tool MIT 330-7442, and thirty (30) Guides MIT 330-7461 are removed as the drilling and fastener installation proceeds around the structure after 25 percent of the fasteners are installed.

Using the same work crew and a positive feed drill with Drill Jig DJ 330-7443-1-0 (See Figure 2-158 for method of installing drill jig), drill, deburr, and fasten the sixteen (16) splice joints with ten (10) holes at each splice. After the ten (10) holes are drilled and deburred, install two (2) fasteners and then remove the drill jig and install ten (10) fasteners; eight (8) at splice joint and two (2) which were previously omitted to accommodate this drill jig.

2.8.4 Intertank

The Intertank (which has previously been assembled and the Rotational Positioner and Vertical Positioners installed on each end and planized, finish painted and stored) is moved into the aisle of the Final Assembly Building on Transportation Trailer TNTR 370-18050 (See Figure 2-159). Using the 180 ton overhead crane and the Hydra-Set, position and secure Handling Tool HTF2-370-24000 (See Figure 2-160) to handling tool HT 370-28000 which was previously attached to the Intertank Structure Assembly. Move the structure into the Vertical Assembly Tower (See Figure 2-160). Before lowering the structure, rotate it until Position I

4211 4000

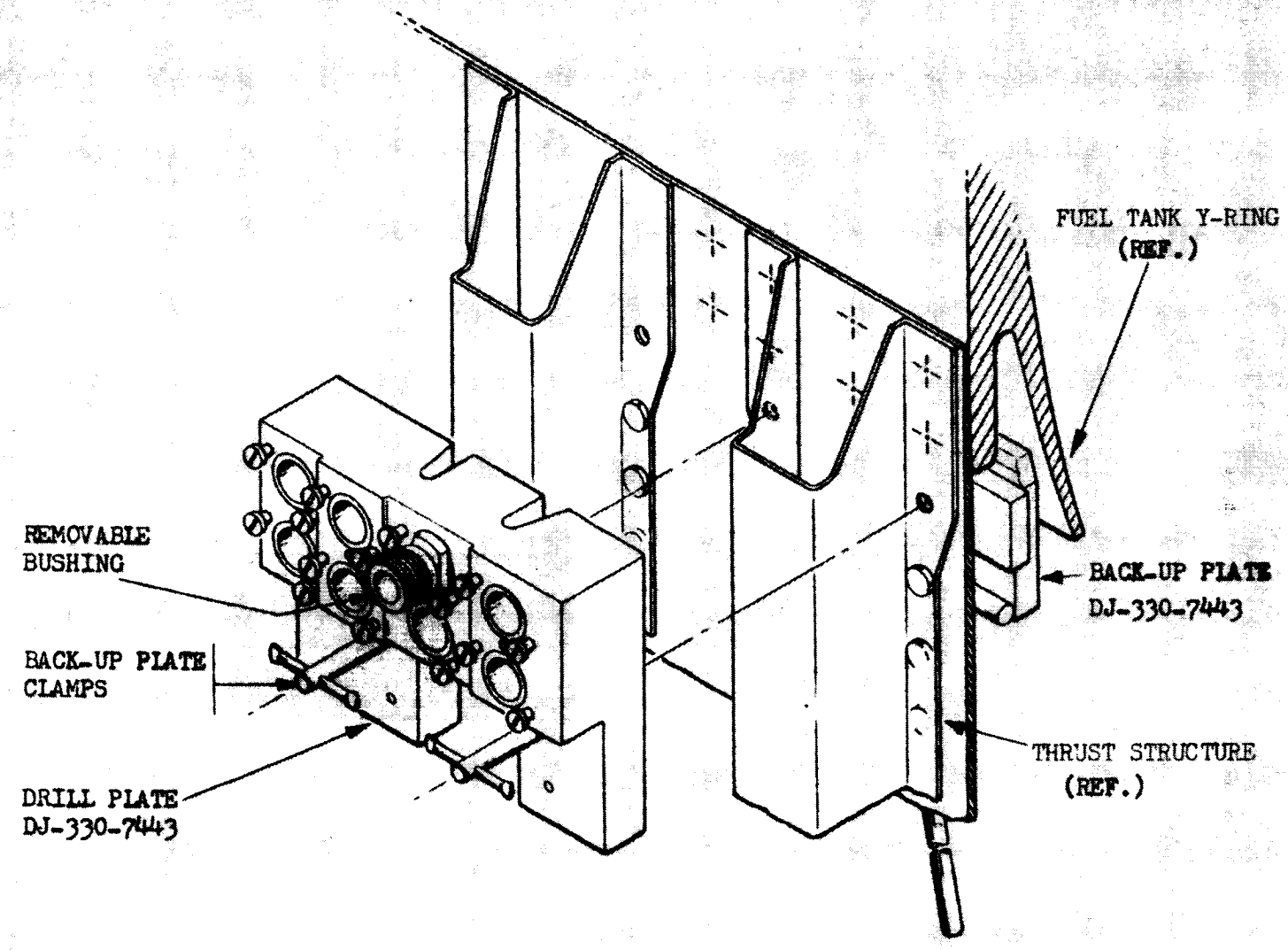

Figure 2-157 - Drilling Fuel Tank to Thrust Structure Joint

3 4211 4000

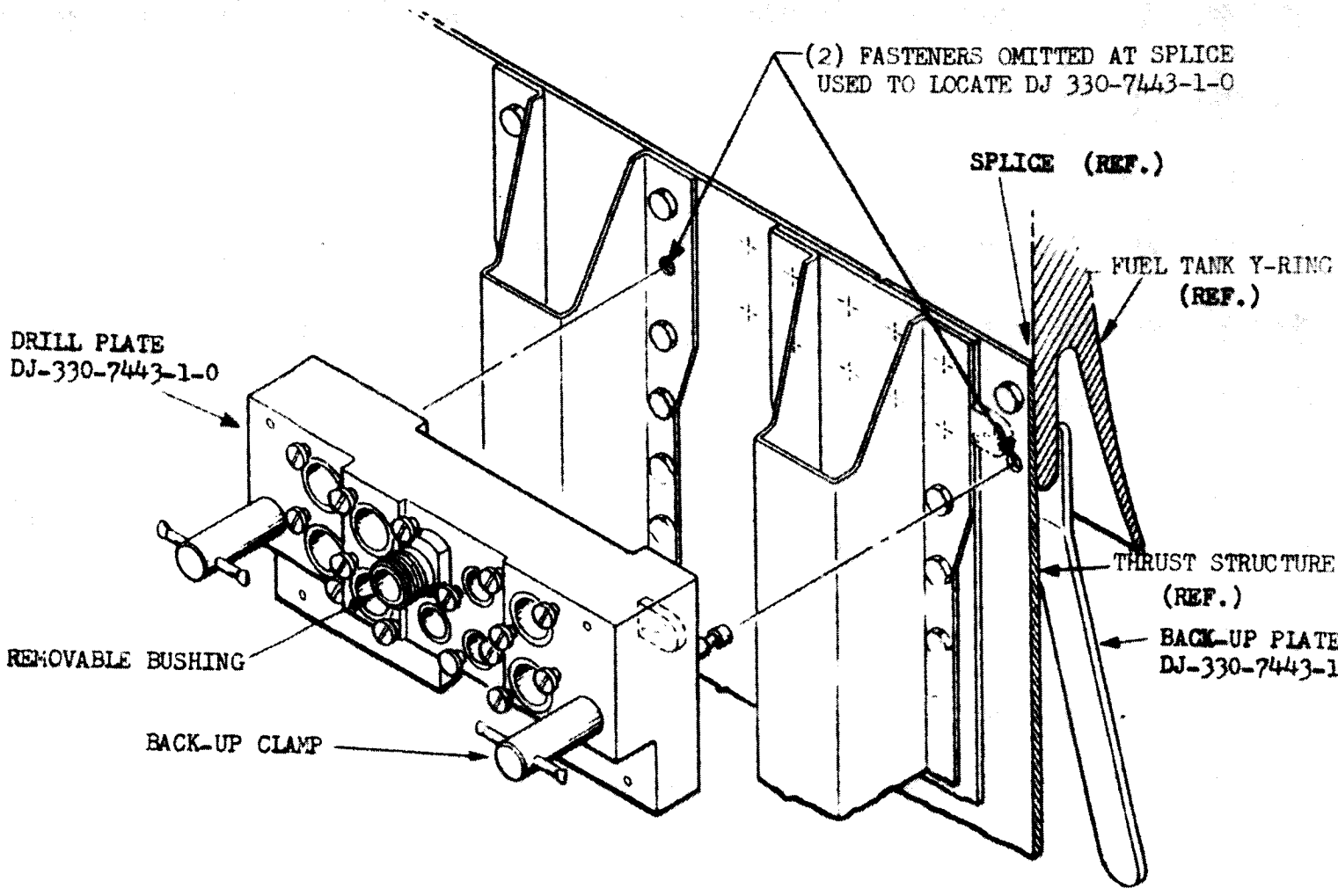

Fi . 2-15 - Drilling Fuel Tank to Thrust Structure at Splice Joint

U3 4211 4000

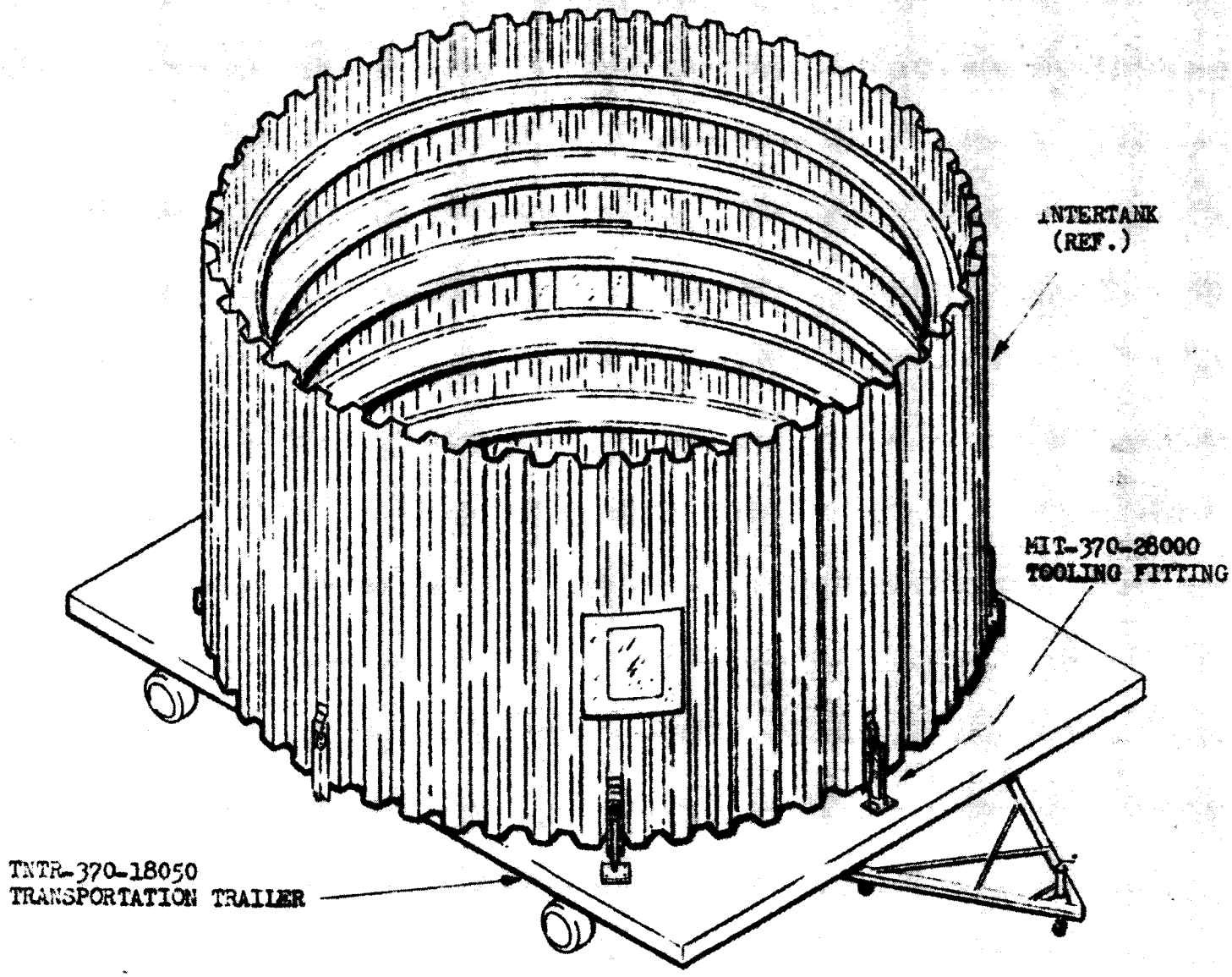

Figure 2-159 - Transporting the Intertank Assembly

J3 4211 4000

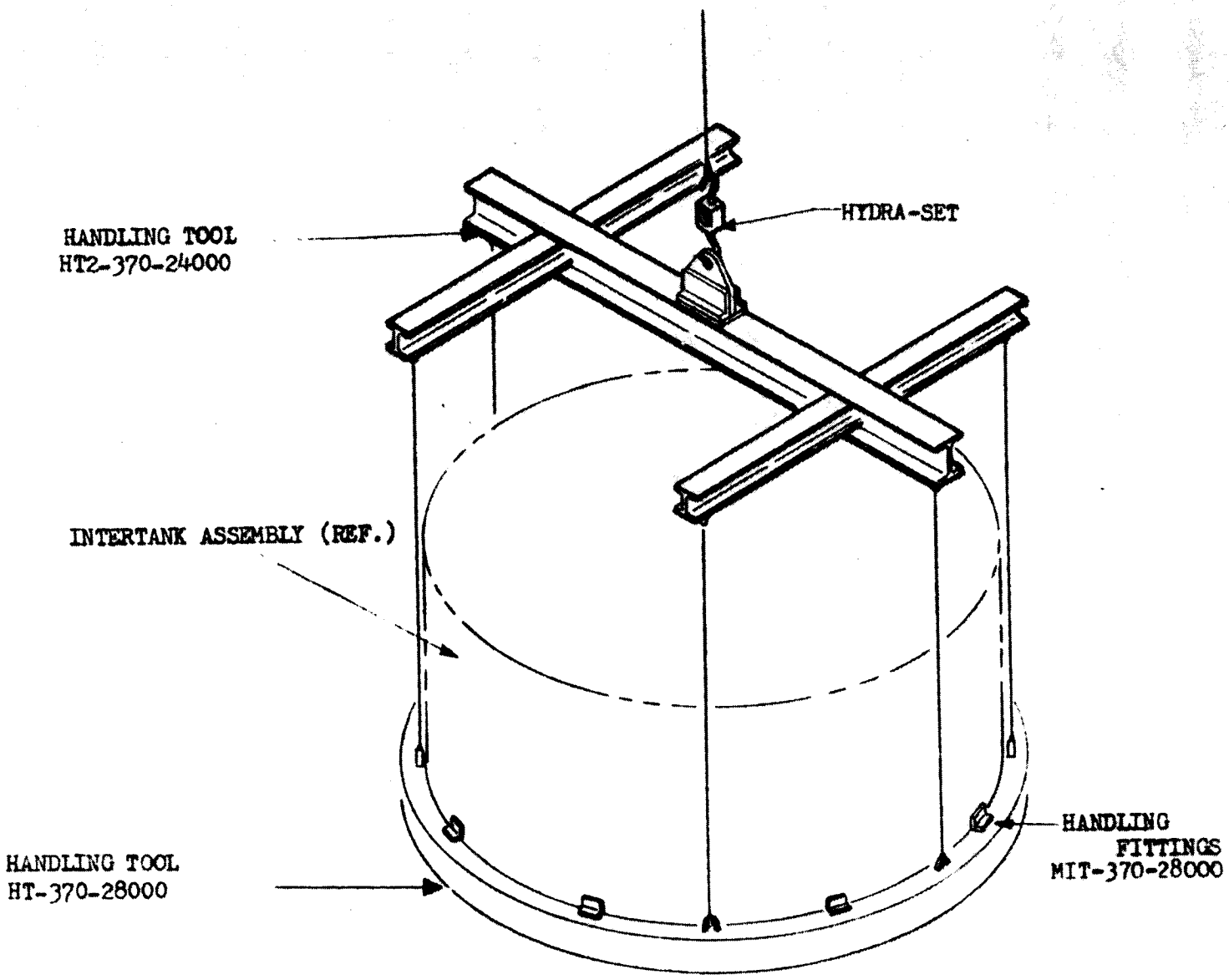

Figure 2-160 - Hoisting Tools Intertank

U3 4211 4000

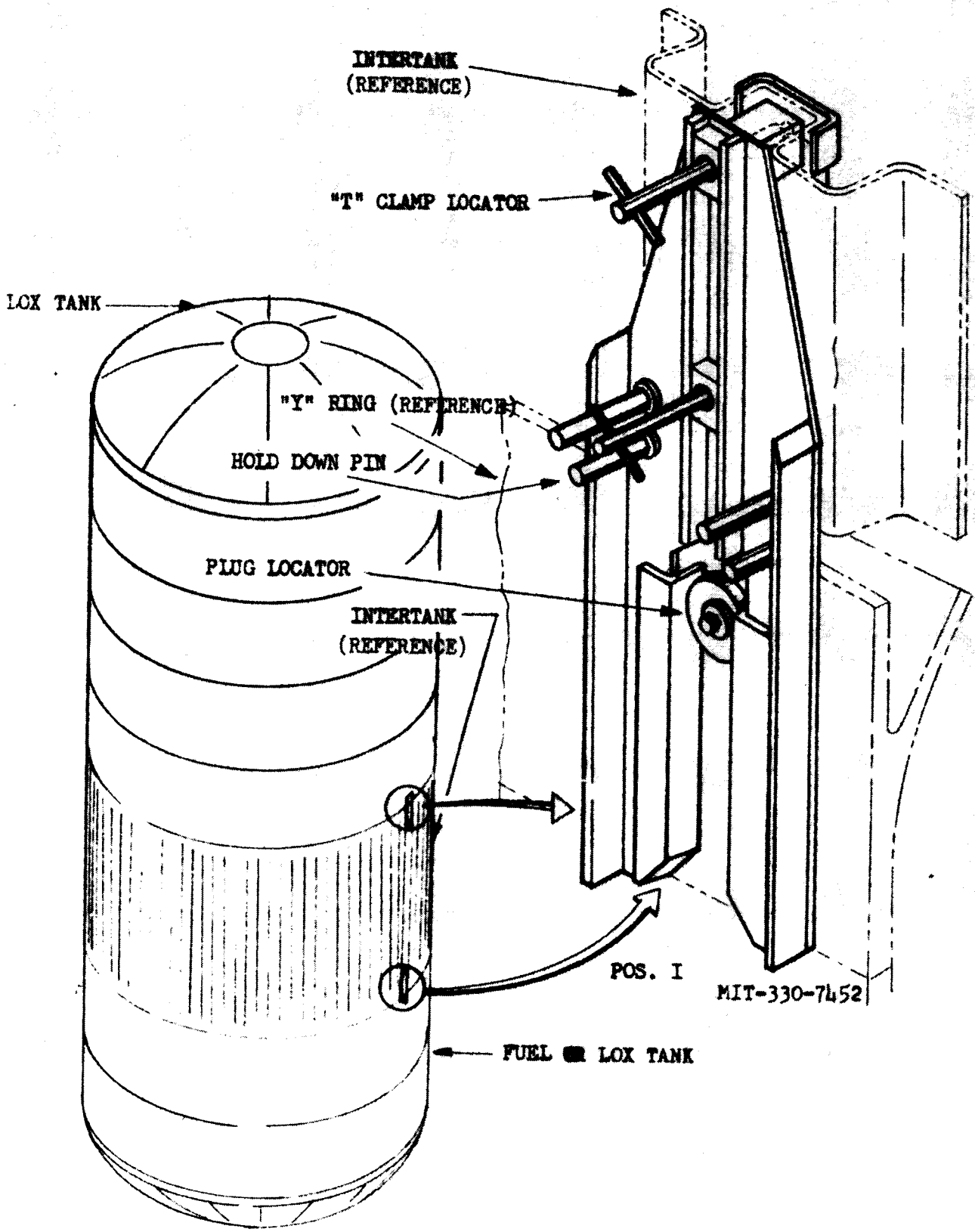

Fig. 2-161 - Rotational Positioning Intertank to Fuel or LOX Tank

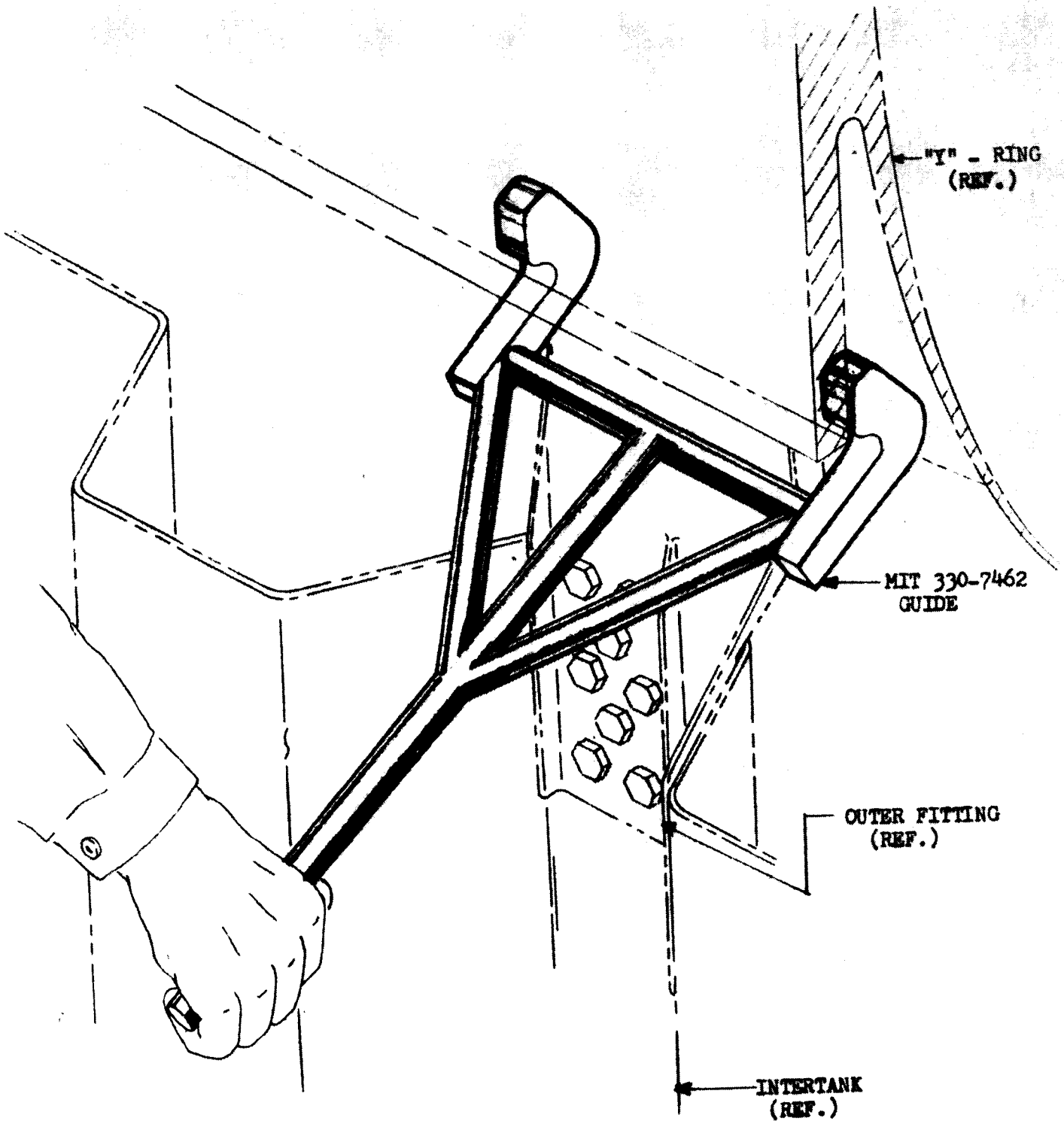

Figure 2-162 - Vertical Guide Intertank Fittings to the Fuel and LOX Tank "Y" Ring

U3 4211 4000

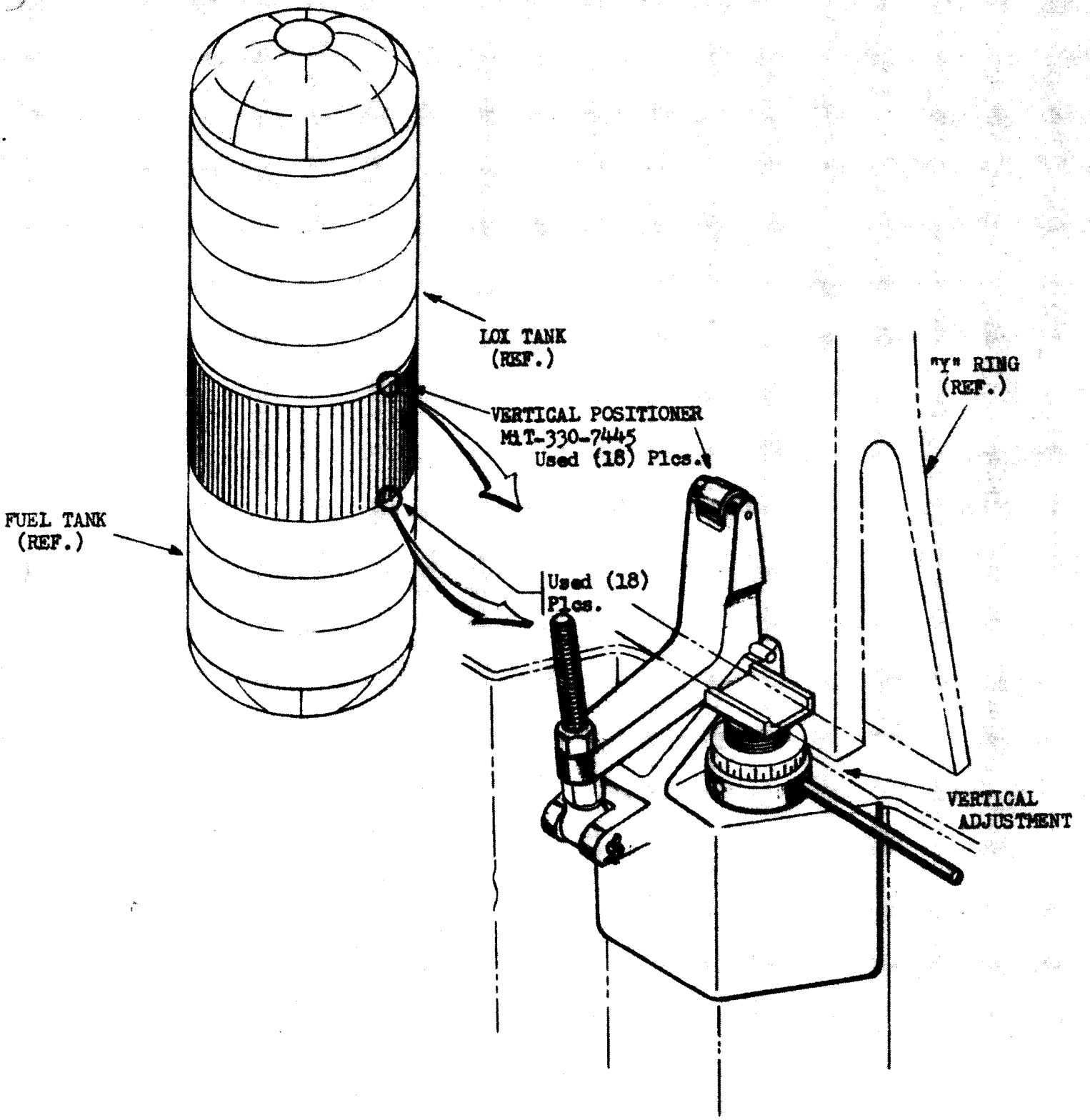

Fig. 2-163 - Guiding and Vertical Positioning Tanks to Intertank

U3 4211 4000

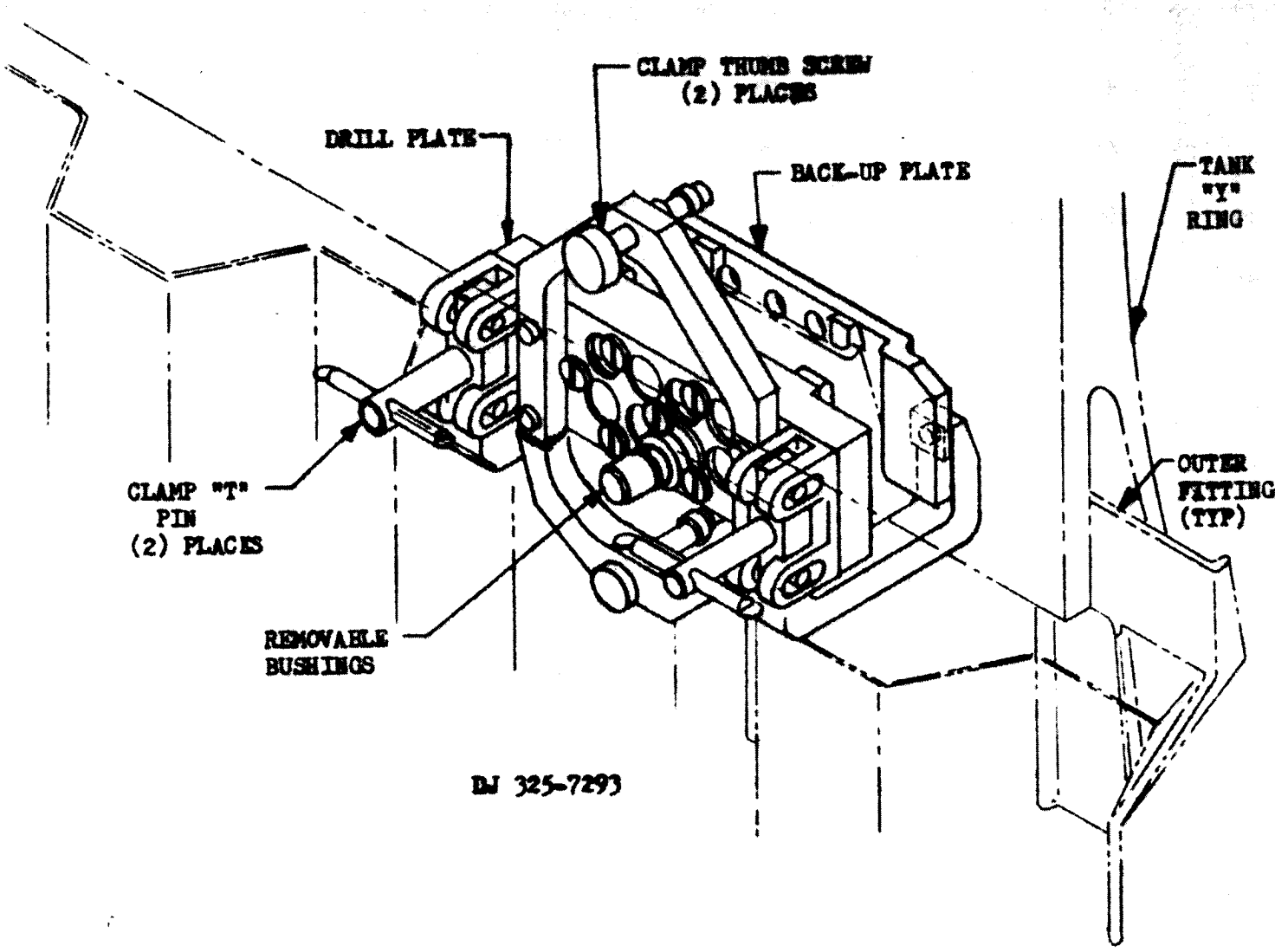

Figure 2-164 DRILL JIG FOR OUTER FITTINGS (INTERTANK TO TANKS) SHEET 1 of 2.

U3 4211 4000

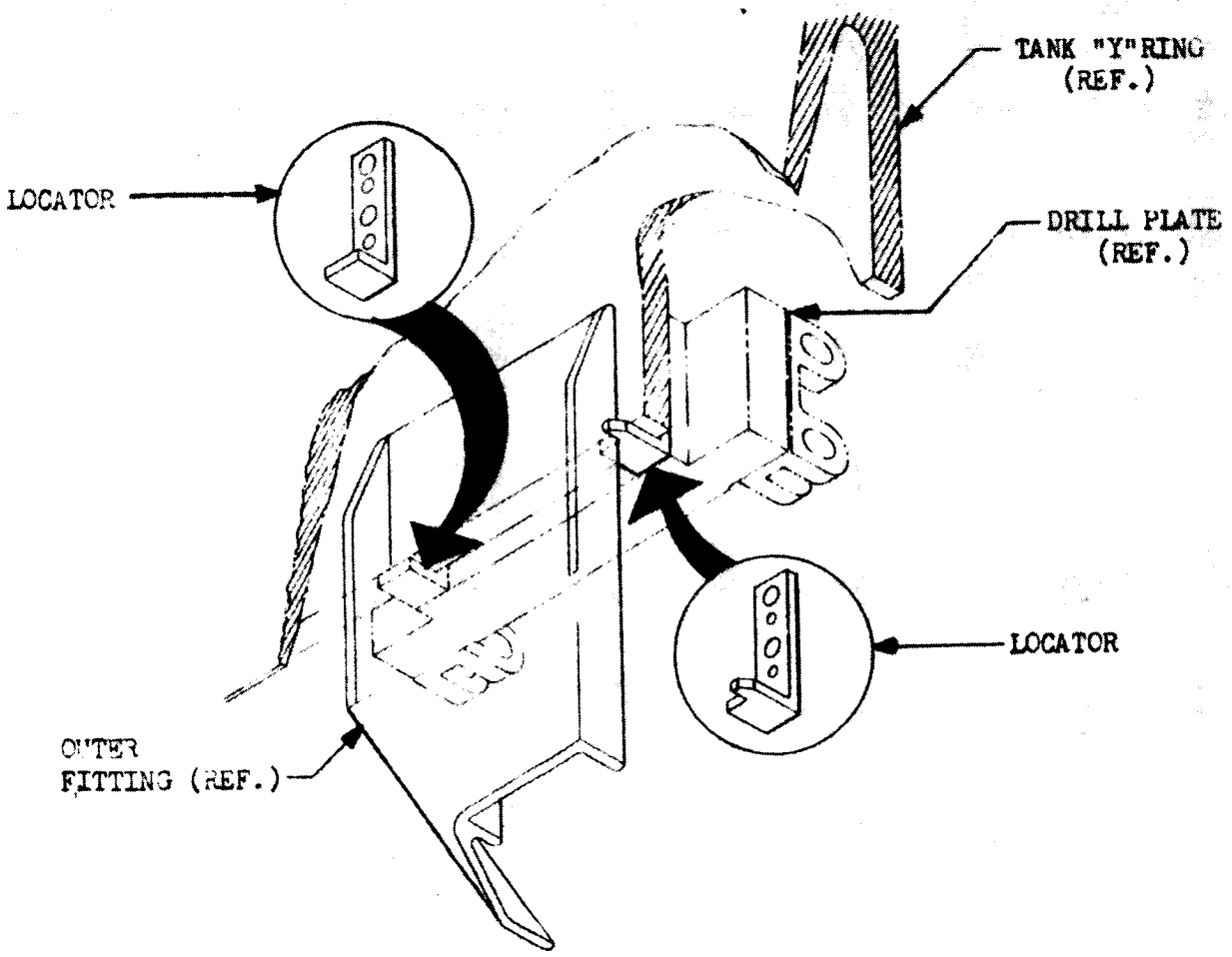

Figure 2-165 - Locating Drill Jig DJ 325-293 (Sheet 2 of 2)

U3 4211 4000

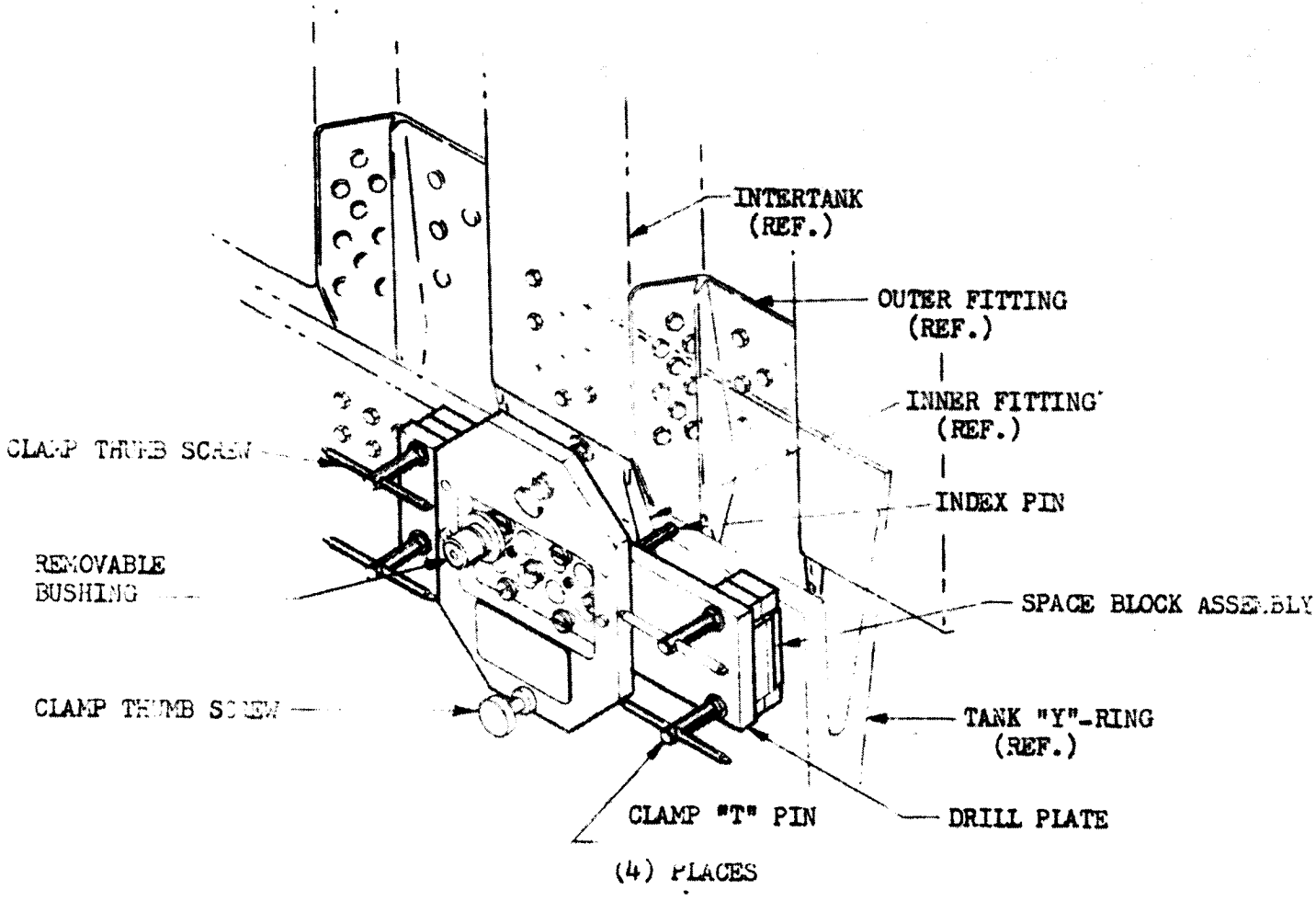

DJ-325-7291

Figure 2-1[illegible] - Drill Jig Interface to Tank Inner Fitting
(Sheet [illegible] of [illegible])

U3 4211 4000

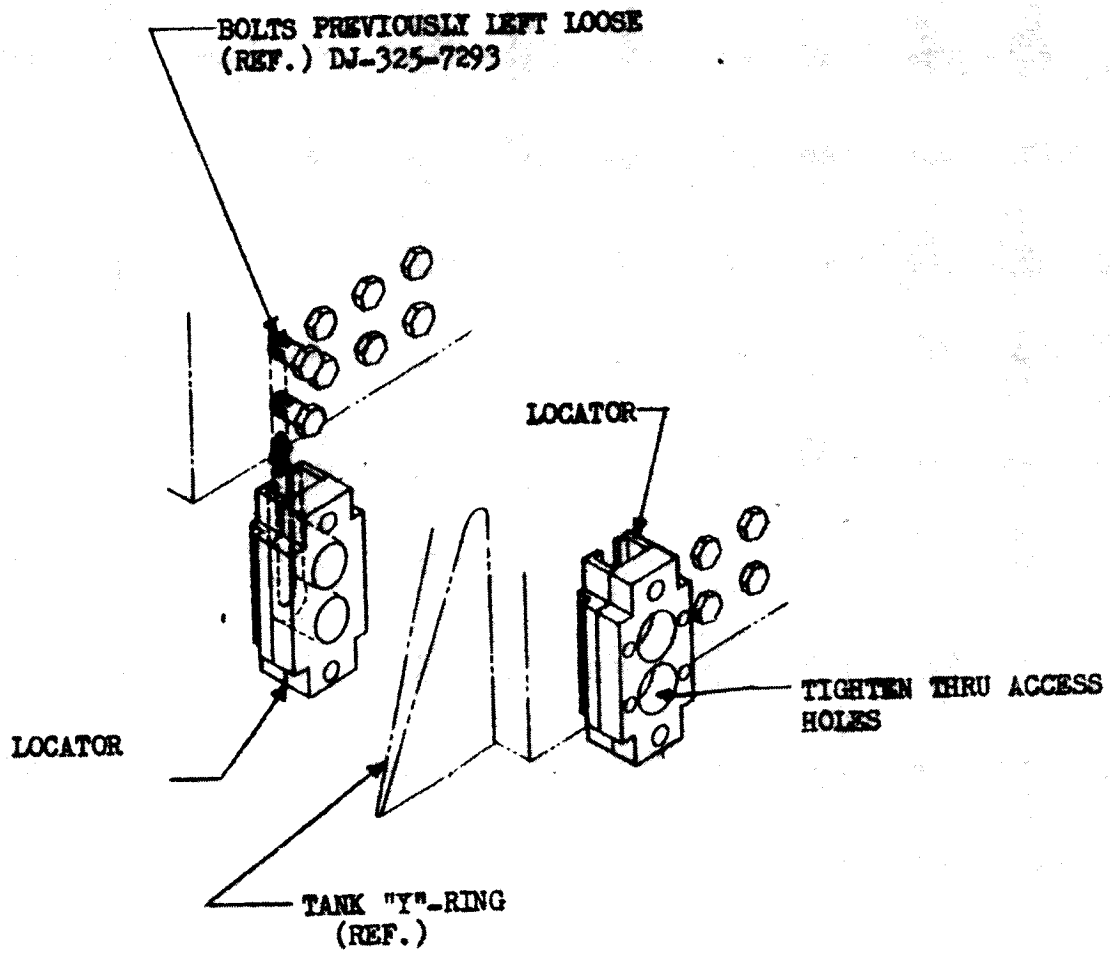

Figure 2-167 - Locating Drill Jig DJ-325-7291 (Sheet 2)

U3 4211 4000

2.9.4 (Continued)

on the Fuel Tank. Utilizing one (1) Rotational Positioner MIT 330-7452, guides MIT 330-7462 and one (1) Hydra-Set (See Figures 2-161, 162), mate the Intertank Structure Assembly with the Fuel Tank. It will seat on eighteen (18) Vertical Positioners MIT 330-7445 (See Figure 2-163).

Using four (4) work crews, three (3) men per crew spaced at 90 degree intervals, and a positive feed drill with DJ 325-7293 (See Figure 2-164) for method of installing drill jig), drill and deburr the "Y" Ring attach holes common to the Intertank outer fittings (108 places). (MSFC uses three (3) work crews, three (3) men per crew spaced at 120 degree intervals.) This pattern of eight (8) holes is drilled, deburred and the fasteners installed by one (1) man locating and removing the backup plate, one (1) man drilling and deburring and one (1) man installing and torquing the fasteners. Before removing DJ 325-7293 two (2) fasteners are installed and torqued. Four (4) fasteners are installed and torqued after the drill jig is removed. The remaining two (2) fasteners are installed loosely as these holes are used later to locate DJ 325-7291. (See Figures 2-166, 167) for the location of the two (2) fasteners to be left loose.) The eighteen (18) Vertical Positioners MIT 330-7445, one (1) Rotational Positioner MIT 330-7452, and eight (8) Handling Fittings MIT 330-7800, (See Figure 2-160), are removed and (2-160) replaced with the proper number production fittings as the drilling asd fastening proceeds around the structure.

NOTE: It is imperative that the overhead crane remain attached to the Intertank until 50 percent of these outer fittings are secured. After 50 percent of the fasteners are installed, remove Handling Tool HT 370-28000 by detaching it from the eight (8) Handling Fittings MIT 370-28000.

Before starting the installation of the Intertank Inner Fittings, all of the Outer Fittings must be installed as described in Section 9.4. The Inner Fittings are installed one (1) at a time just prior to positioning the drill jig. The installation proceeds in a counter clockwise direction around the missile. The fittings are identified with locations on the Intertank. This identification is accomplished by the Intertank Subassembly Group.

Install one (1) Inner Fitting and torque the eighteen (18) fasteners common to the Intertank. Using a positive feed drill with DK 325-7291 (See Figure 2-166) for method of installing the drill jig), drill and deburr the "Y" Ring attach holes. (This pattern of eight (8) holes is drilled, deburred and the fasteners are installed as stated in Section 9.4) Before removing the Drill Jig DJ 325-7291), two (2) fasteners are installed and torqued. Six (6) fasteners are installed and torqued after the drill jig is removed. Tighten and torque the two (2) previously installed fasteners which were left loose to accommodate the drill jig. The last fitting to be installed will be by the blind bolt method.

U3 4211 0000

2.8.5 Liquid Oxygen (LOX) Tank

The LOX Tank (which has previously been assembled, finish painted and stored) is moved into the aisle of the Final Assembly Building on Transportation Trailer TNTR 370-24000 (See Figure 2-150). The LOX Tank is supported on the Transportation Trailer TNTR 370-24000 by an upper and lower set of Handling Tools HT 370-24000. Each set consists of two (2) 180 degree segments attached to the "Y" Ring by pins and clamps at twelve (12) .750 diameter holes (See Figure 2-151). The two (2) pins in the lower set of Handling Tool HT 370-24000 mate with trunnions on the trailer which allow the LOX Tank to be rotated from the horizontal to the vertical position.

The 180 ton overhead crane is positioned with Handling Tool HT2-370-24000 (See Figure 2-152), and the Hydra-Set attached. Handling Tool HT2-370-24000, and the tank is rotated to the vertical position. There are special adapters for HT2-370-24000 to provide pickup at the trunnion pins and a removable counterbalance weight to offset the eccentricity caused by the Helium Bottles. The Transportation Trailer TNTR 370-24000 is removed from the area when cleared of the tank.

To remove the lower Handling Tool HT 370-24000, Production Dolly PrD 370-24000 (See Figure 2-153) is positioned under the tank which is being held in the vertical position by the overhead crane. Lower the LOX Tank onto Production Dolly PrD 370-24000 which will support the Handling Tool as it is unbolted. The Tank is then lifted out of the Production Dolly and moved into the Final Assembly Tower.

During the operation of loading the LOX Tank, four (4) tools are used to attain the proper alignment. These tools and their usage are as follows:

a) The Rotational Positioner MIT 330-7452 (See Figure 2-161) is used to assure proper rotational alignment between the two subassemblies. The positioner is located over Position I. One part of the tool is attached to the tooling hole in the Tank "Y" Ring and the other part is attached to two (2) Production holes in the Intertank Structure. This tool is installed after the LOX Tank has been brought into the Final Assembly Tower.

b) The Guides MIT 330-7462 (See Figure 2-162) are hand tools that are used to aid in mating the Intertank Fittings to the LOX Tank "Y" Ring.

c) The Vertical Positioners MIT 330-7445 (See Figure 2-161) are installed at eighteen (18) places around the upper periphery of the Intertank Structure. These tools are stops for aligning the LOX Tank vertically and also have rollers built into them to aid in guiding the two subassemblies together. These tools are installed in the subassembly area.

U3 4811 4000

2.8.5 (Continued)

d) The fourth item of tooling used to aid with the alignment and mating of the two (2) subassemblies is a commercial Hydra-Set.

With the use of tools listed in Section 2.8.5 a) through d) the LOX Tank is lowered and positioned onto the Intertank.

Using four (4) work crews, three (3) men per crew spaced at 90 degree intervals, and a positive feed drill with Drill Jig DJ-325-7293 (See Figure 2-164 for method of installing drill jig), drill and deburr the "Y" ring attach holes. (MSFC uses three (3) work crews, three (3) men per crew, spaced at 120 degree intervals.) This pattern of eight (8) holes is drilled, deburred, and the fasteners installed by using one (1) man locating and removing the backup place, one man drilling and deburring and one (1) man installing and torquing the fasteners.

Before removing the Drill Jig DJ 325-7293, two (2) fasteners are installed and torqued after the drill jig is removed. The remaining two (2) fasteners are installed loosely as these holes are used later to locate Drill Jig DJ 325-7291. (See figure 2-164) for the location of the two (2) fasteners to be left loose.) The eighteen (18) vertical positioners MIT 330-7445 and one (1) Rotational Positioner MIT 330-7452 are removed and replaced with the proper numbered production fittings as the drilling and fastening proceeds around the structure.

NOTE: It is imperative that the overhead crane remain attached to the LOX Tank until 50 percent of these outer fittings are secured. After 50 percent of the fasteners are installed, remove Handling Tool HT2-370-24000. Using overhead crane and Handling Tool HT3-370-24000, remove the top Handling Tool HT 370-24000.

Before starting the installation of the Intertank Inner Fitting, all of the outer fittings must be installed as described in Section 2.8.5. The Inner Fittings are installed one (1) at a time just prior to positioning the drill jig. The installation proceeds in a counter-clockwise direction around the missile. The fittings are identified with locations on the Intertank. This identification is accomplished by the Intertank Subassembly Group.

Using a positive feed drill with Drill Jig DJ 325-7291 (See Figure 2-166) for method of installing drill jig), drill and deburr the "Y" Ring attach holes. (This pattern of eight (8) holes is drilled, deburred, and the fasteners installed per Section 2.8.5) Before removing the Drill Jig DJ 325-7291, two (2) fasterers are installed and torqued after the drill jig is removed. Tighten and torque the two (2) previously installed fasteners which were left loose to accommodate the drill jig. The last fitting installed is by the blind bolt method.

2.8.6 <u>Forward Skirt</u>

The Forward Skirt is moved into the aisle of the final assembly

U3 4211 4000

2.8.6 (Continued)

building on the Forward Skirt Shipping Fixture ME 370-7353 (See Figure 2-168). The Rotational Positioners have been installed and planized in the subassembly area.

Using the overhead crane, with the Hydra-Set attach the Handling Tool HT2 370-24000 (See Figure 2-160) to the Forward Skirt Shipping Fixture ME 370-7353. Hoist and position the Shipping Fixture into the Turning Fixture ME 370-24000 (See Figure 2-169). Remove the Handling Tool HT2 370-24000 from the Forward Skirt shipping fixture ME 370-7353. Using the control power rotation switch, which is a part of Turning Fixture ME 370-24000, invert the Forward Skirt shipping Fixture with the overhead crane. Disconnect the Forward Skirt Shipping Fixture from the Turning Fixture ME 370-24000. Position both the Forward Skirt and the Forward Skirt Shipping Fixture onto Support Fixture SF 370-14000 which is located on Transportation Trailer TNTR 370-18050 (See Figure 2-170). Remove the Forward Skirt Shipping Fixture ME 370-7353 from the Forward Skirt. Transport the Forward Skirt Assembly to the Forward Skirt Subassembly pickup position with the Transportation Trailer. The Horizontal Assembly Group installs the internal hardware components at this time. Transport the Forward Skirt Assembly to the Final Assembly Building with the Transportation Trailer. Attach the Forward Handling Tool HT 370-7049 (See Figure 2-171) to the Forward Skirt using the overhead crane and the Hydra-Set. The Forward Handling Tool HT 370-7049 is held in tension by the overhead crane during assembly to the Forward Skirt.

The Forward Skirt, which has previously been assembled, finish painted, and stored is moved into the Final Assembly Tower. Before lowering the Forward Skirt, rotate the complete structure until Position I matches with Position I on the LOX Tank. Utilizing one (1) Radial Alignment Tool MIT 330-7354, eighteen (18) Guides MIT 330-7470, and eighteen (18) Vertical Positioners MIT 330-7446, (See Figures 2-172, 3, & 4) mate the Forward Skirt with LOX Tank.

Using four (4) work crews, three (3) men per crew spaced at 90 degree intervals, and drill jig DJ 325-7352 (See Figure 2-175) method of installing the drill jig), drill and deburr all the holes around the Hat Section (208 places of the Forward Skirt). MSFC uses three (3) work crews, three (3) men per crew, spaced at 120 degree intervals.) This pattern of twelve (12) holes around the Hat Section is drilled, deburred, and the fasteners installed by one (1) man locating and removing the back-up plate, one (1) man drilling and deburring and one (1) man installing the fasteners. At twelve (12) splice sections, where Drill Jig DJ 330-7465 is used, leave two (2) fasteners out to accommodate this drill jig (see Figure 2-175).

U3 4211 6000

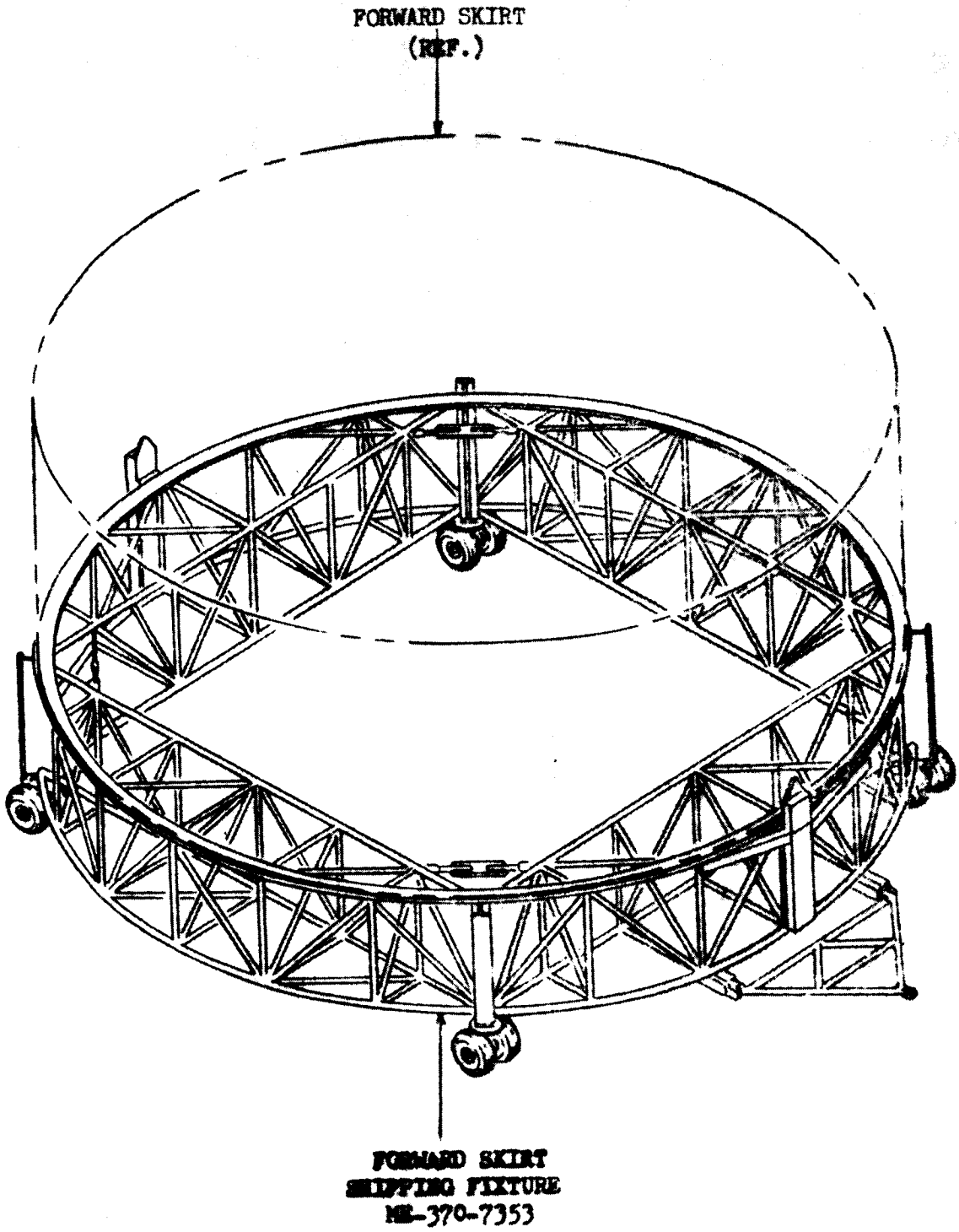

Figure 2-168 - Transporting the Forward Skirt Assembly To the Turning Fixture ME 370-24000

U3 4211 4000

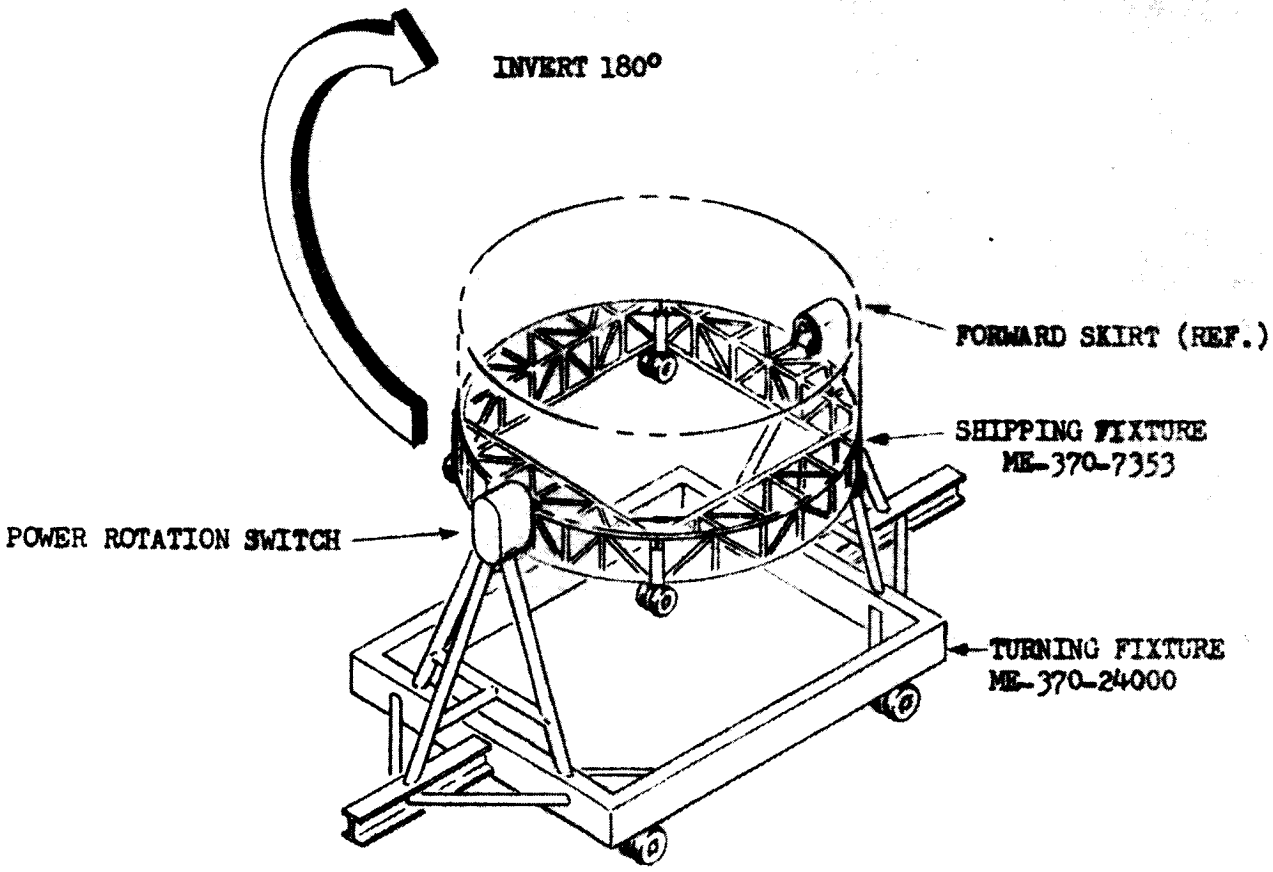

Fig. 2-169 - Inverting Forward Skirt To Flight Position

U3 4211 4000

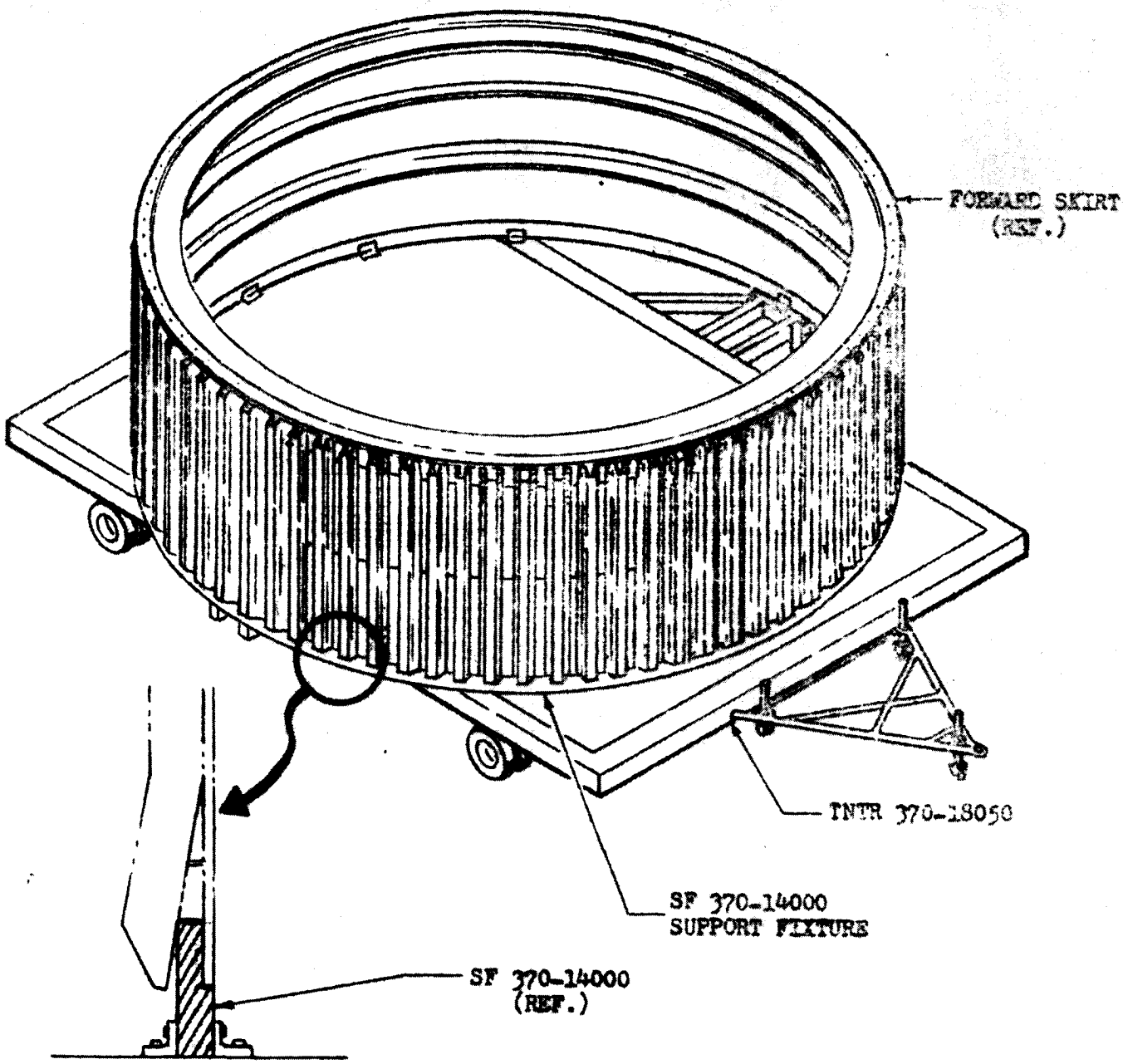

Fig. 2-170 - Positioning Forward Skirt on SF 370-14000

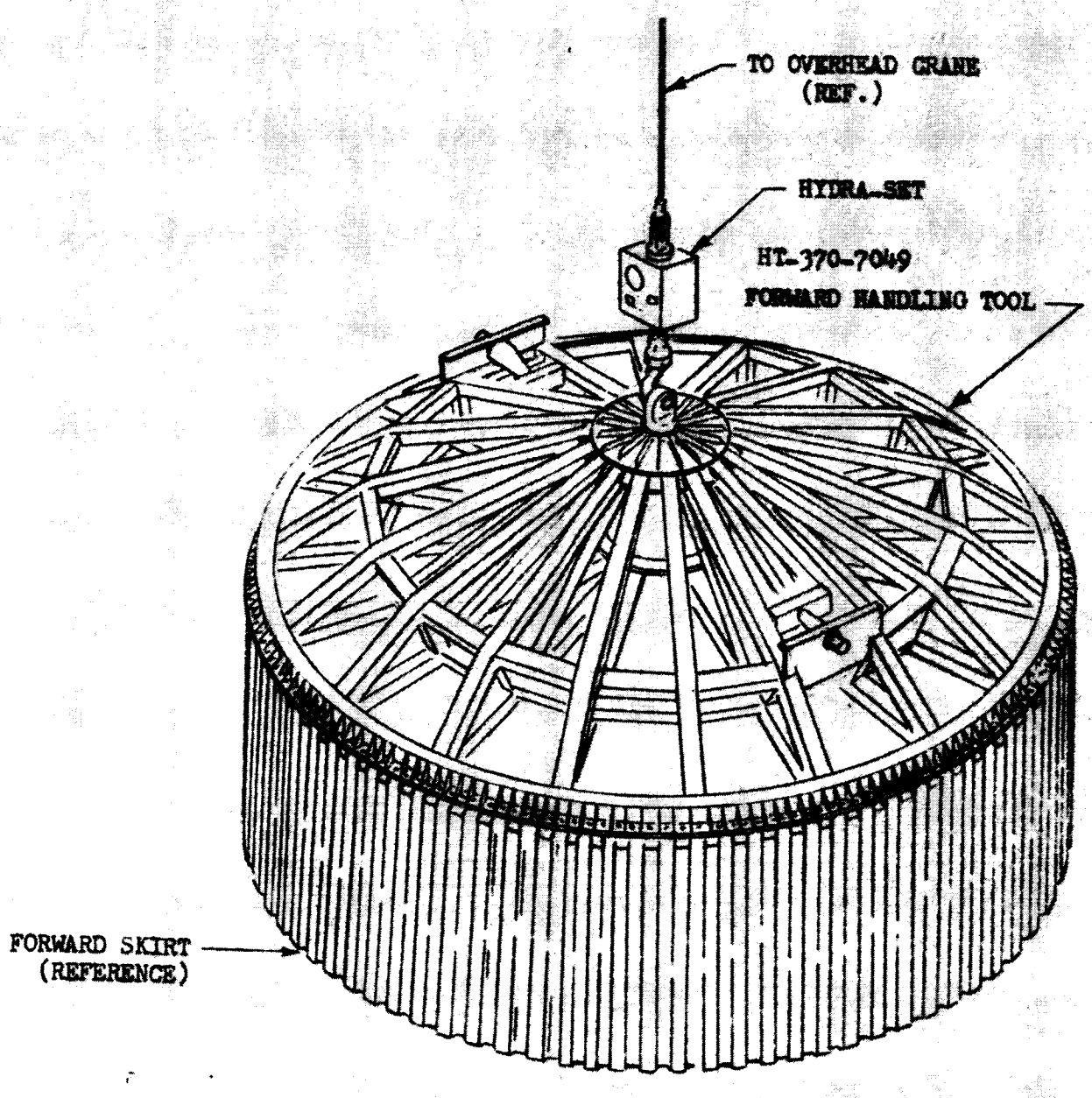

Fig. 2-171 - Lifting the Forward Skirt and the Forward Handling Ring Into the Vertical Tower

U3 6211 4000

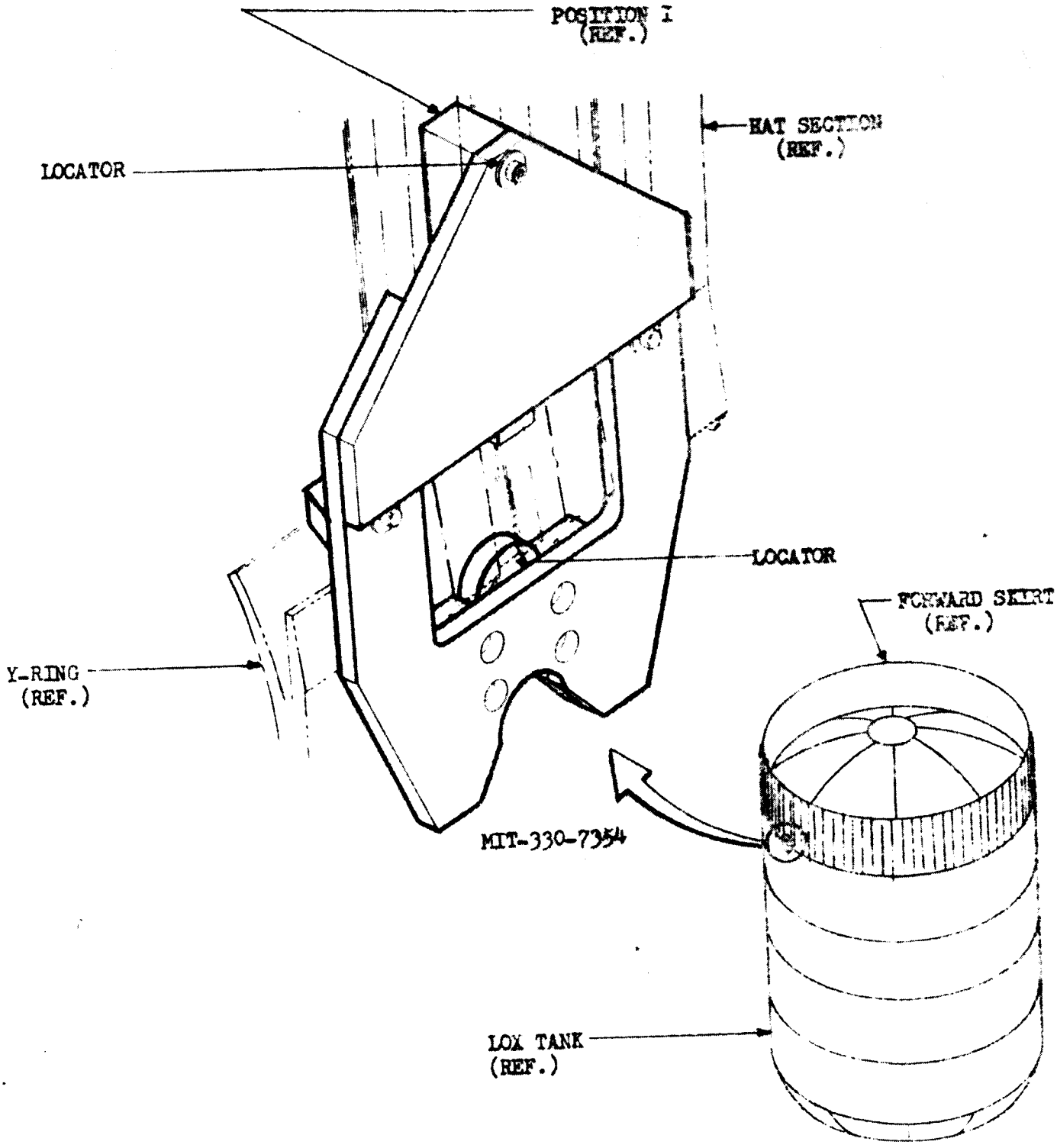

Figure 2-172 - Rotational Location - Forward Skirt to LOX Tank

U3 4211 4000

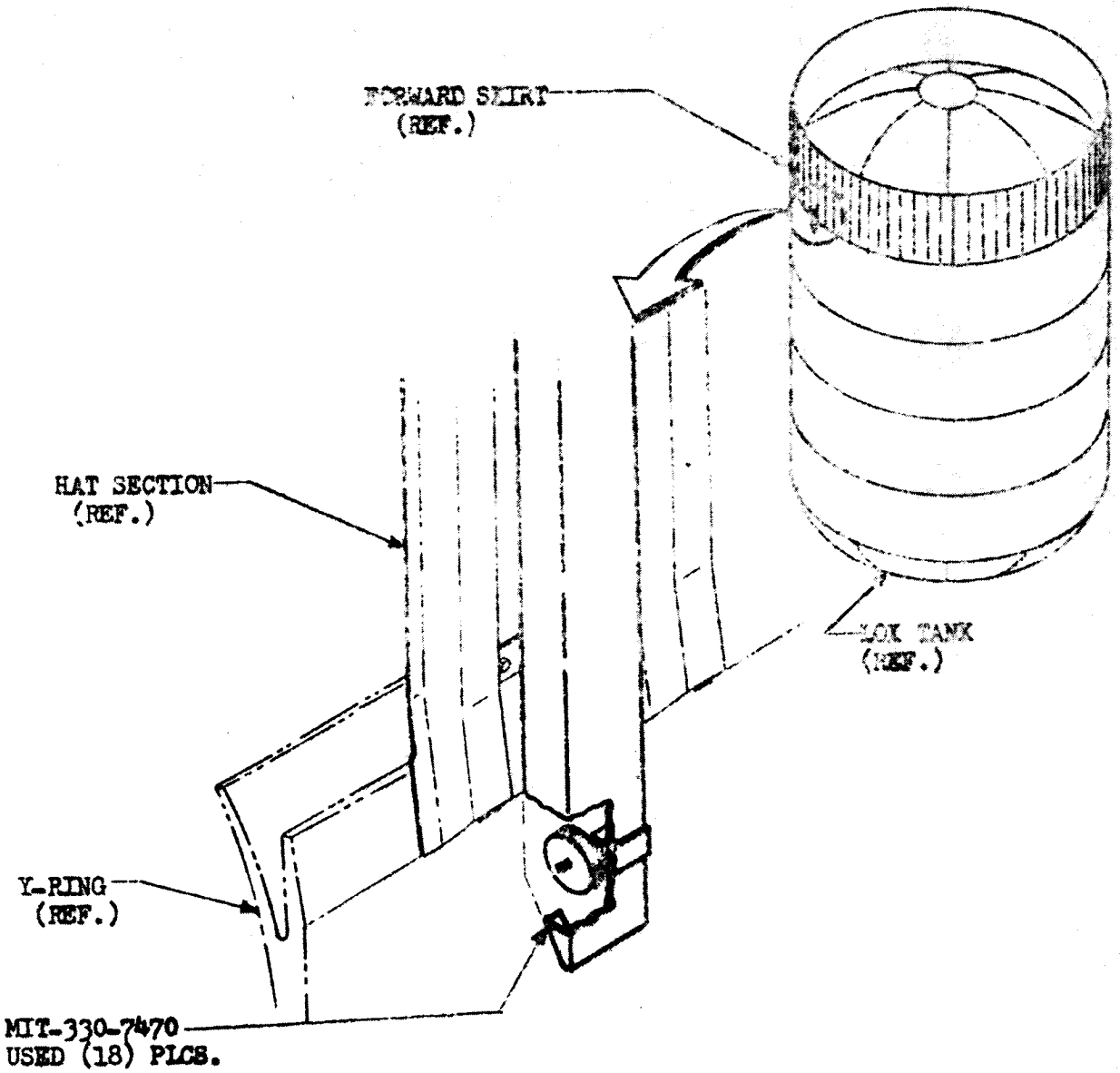

Figure 2-173 - Vertical Guide Forward Skirt to LOX Tank

U3 4211 4000

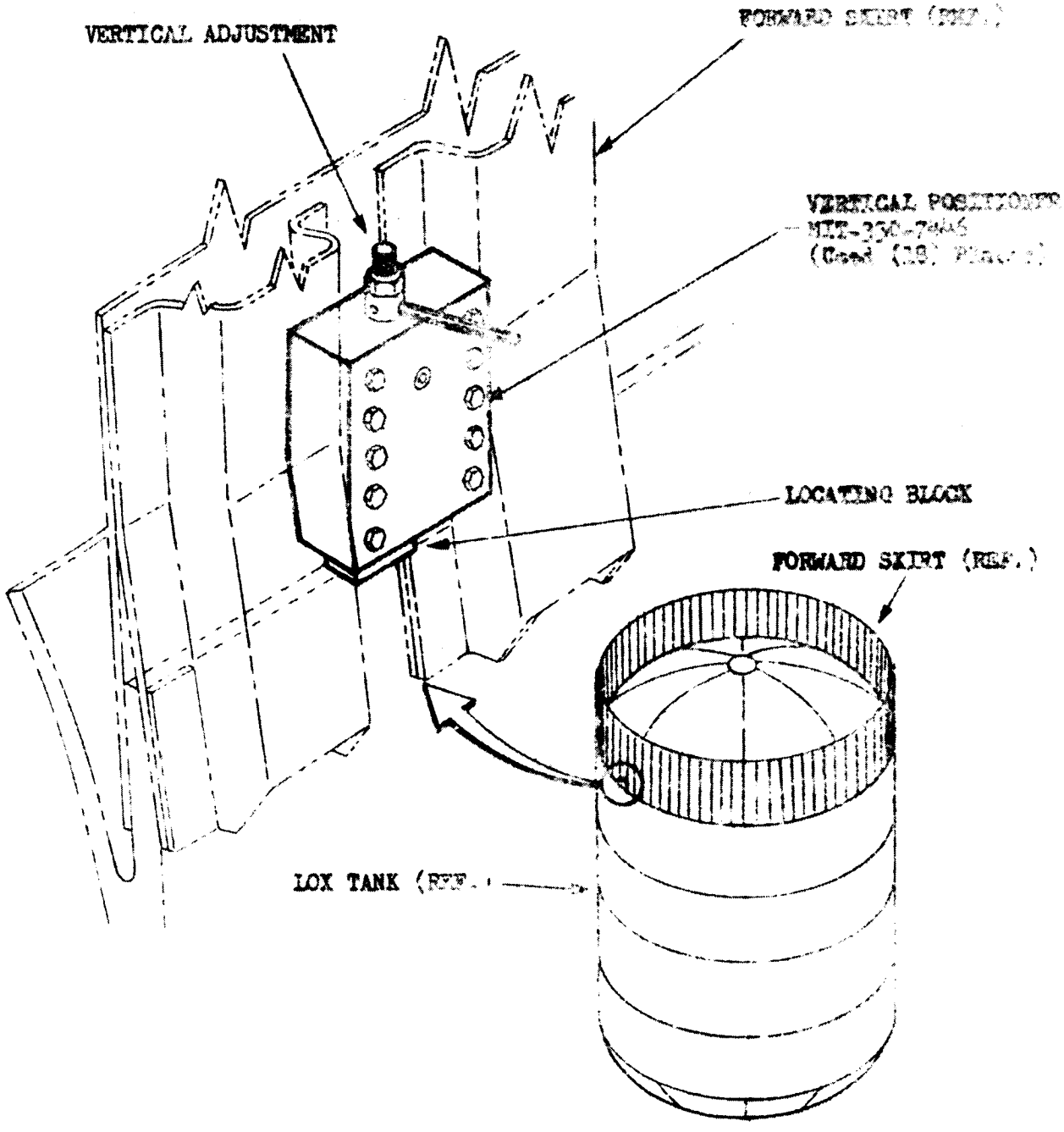

Fig. 2-174 - Vertical Positioning-Forward Skirt to LOX Tank

U3 4211 4000

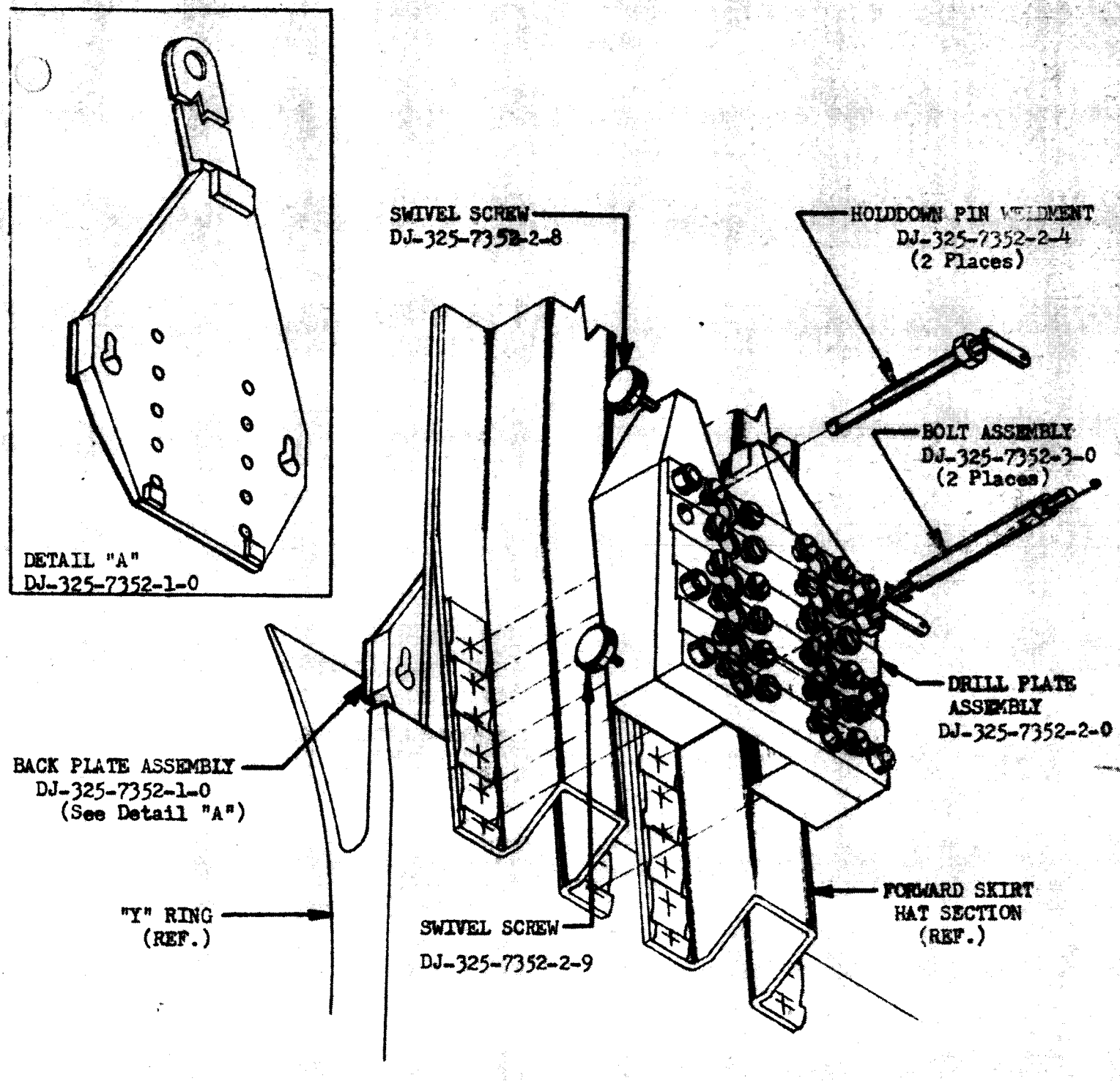

Figure 2-175 - DRILLING FORWARD SKIRT HAT SECTIONS TO "Y" RING

(Continued)

Before removing the drill jig, two (2) DJ 330-7352-3 assemblies are installed. The balance of the fasteners are installed after the drill jig is removed. Then the two (2) -3 assemblies are removed and the remaining two (2) fasteners installed. The eighteen (18) vertical positioners MIT 330-7446, one (1) Radial Alinement Tool MIT 330-7354, and eighteen (18) Guides MIT 330-7470, are removed as the drilling and fastening installation proceeds around the structure.

NOTE: It is imperative that the overhead crane remain attached to the Forward Skirt until 25 percent of these fasteners are installed.

Using the same work crew and a positive feed drill with Drill Jig DJ 330-7465 (See Figure 2-176), drill, deburr and fasten the twelve (12) splice joints with eight (8) holes at each splice. Install two (2) fillers in the drill jig before proceeding to drill the eight (8) holes.

After the eight(8) holes are drilled and deburred, remove the Drill Jig and install fourteen (14) fasteners - eight (8) at the splice joint, two (2) on the hat section, which were omitted to accommodate this Drill Jig, and four (4) additional on the adjacent hat sections which were omitted by the Subassembly Group.

Using the same work crew and a positive feed drill with Drill Jig DJ 330-7466 (See figure 2-177) , drill eighteen (18) holes in each of the two (2) umbilical channels. Remove the drill jig and install eighteen (18) fasteners to complete fastening the umbilical channel.

Using the same work crew and a positive feed drill with Drill Jigs DJ330-7468 and DJ 330-7469 (See Figure 2-178), drill six (6) holes on each side of the hat sections adjacent to the right and left side of the umbilical channel. Before removing the drill jig, install two (2) -4 bolt assemblies and install fasteners. DJ 330-7468 is used on the right side of the area adjacent to the umbilical channels (See Figure 2-178).

2.2.7 Parallelism Between Plane "E" and Stage Forward Interface

After all Vertical Final Assembly operations have been completed, a check will be made to determine the parallelism between Plane "E" and the plane of the Stage Forward Interface on the Forward Skirt. This check is performed to obtain information for the Log Book on the Stage. During this check, Handling Tool MT 370-[illegible] (See Figure 2-171) is attached to the Forward Skirt.

U3 4211 4000

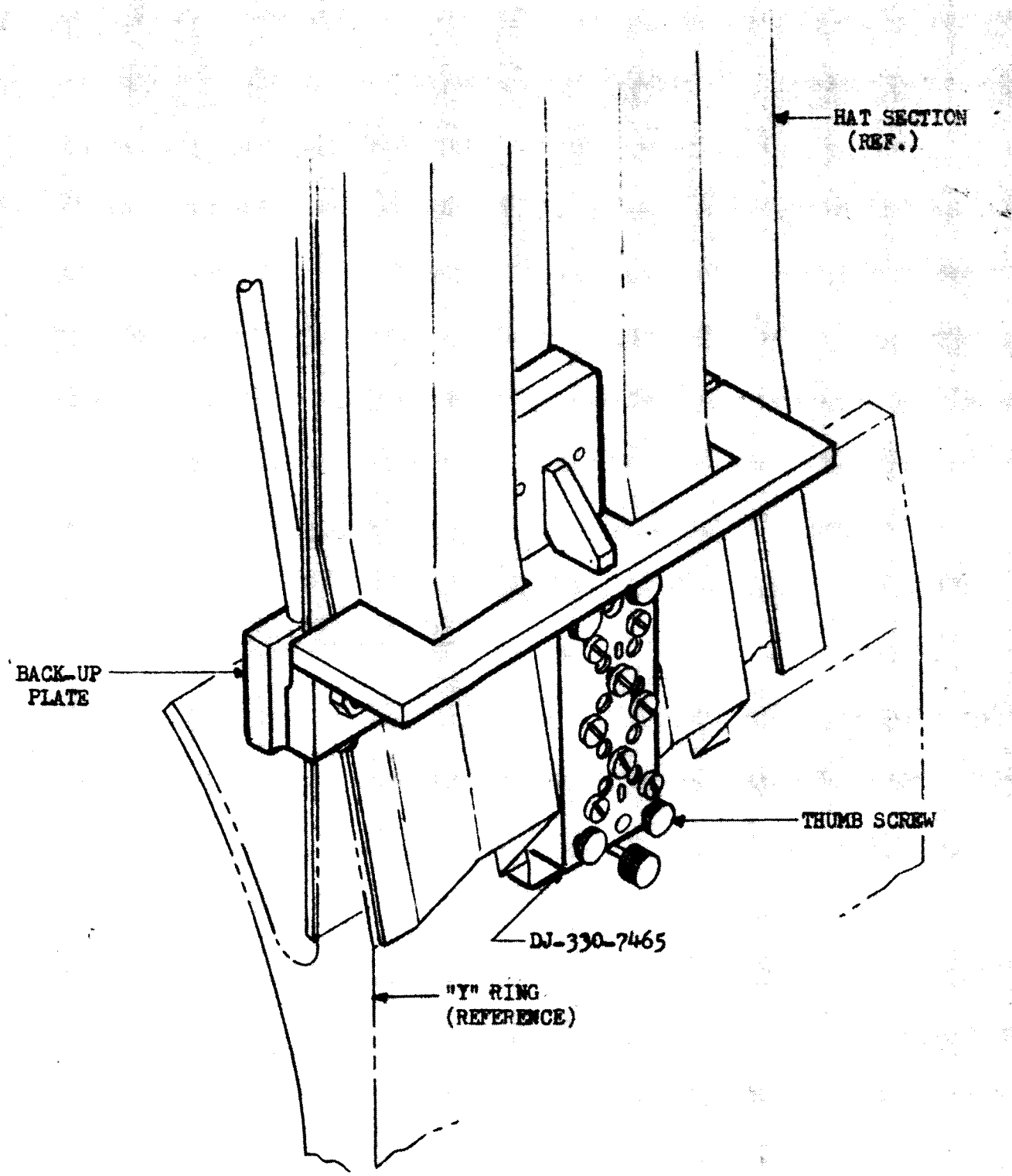

Figure 2-176 - Drilling Splice Locations, Forward Skirt to "Y" Ring

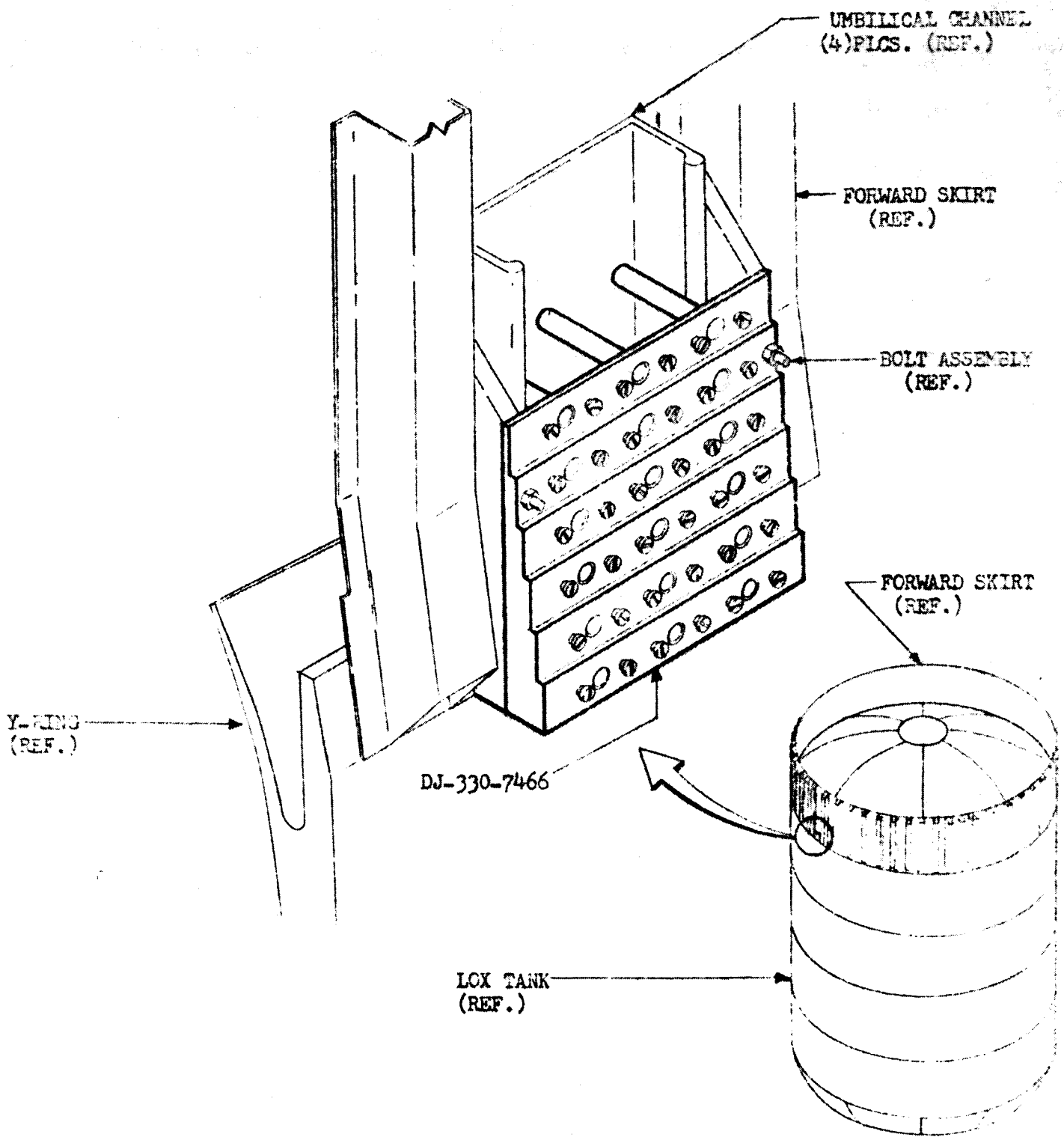

Figure 2-177 Drilling Umbilical Channels to Y-Ring and Doublers

U3 4211 4000

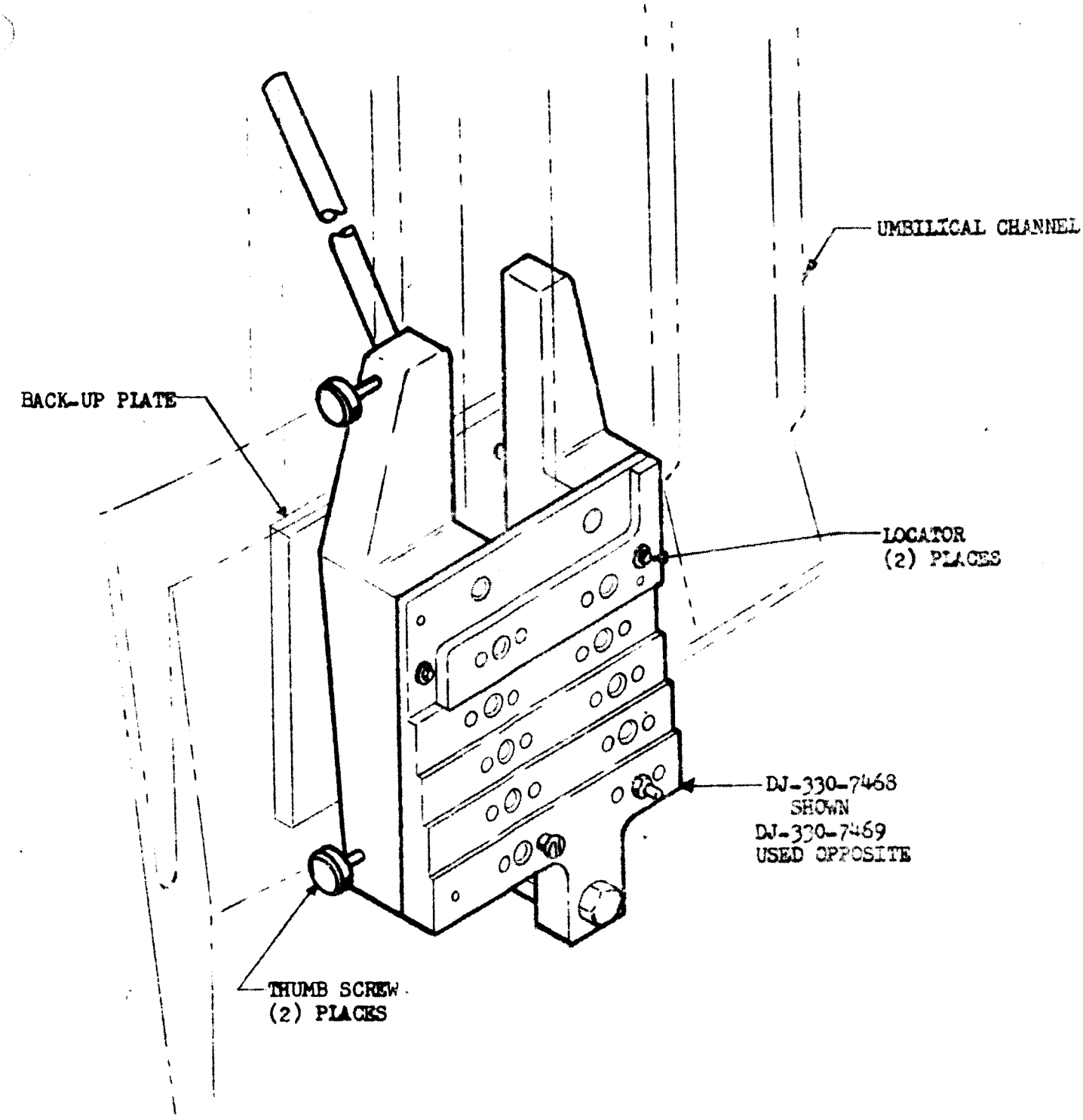

Figure 2-178 - Drilling Hat Sections Adjacent to Umbilical Channels-Forward Skirt to Y-Ring

2.8.7 (Continued)

The angle weldments 7049-71 and 7049-73, by which Handling Tool HT 370-7049 is attached to the Forward Skirt, mounts to the interface plane of the Forward Skirt. Between these angle weldments a clear space of approximately one-half inch is available. This space on the interface plane is utilized to secure a ground flat steel bar which extends beyond the circumference of the Stage. Fastened to the lower side of this bar, at point zero, is a steel tape. This tape is approximately 120 feet in length. (See Figure 2-179) and has a weight on the lower end to ensure constant pressure on the tape.

The lower part of the checking fixture consists of an adjustable plate which fits against plane "E" at the bottom of the Thrust Structure Hold Down Posts. This ground plate extends beyond the circumference of the Stage. Built into this ground plate is a groove through which the steel tape is passed. Also built into this bar is a vernier scale which allows the total length to be read in thousandths.

Readings will be taken at Positions I, II, III, and IV. From these readings the parallelism between Plane "E" and the Stage Forward Interface on the Forward Skirt is computed.

2.8.8 Stage Laydown

After completion of all Vertical Final Assembly operations, the Hydra-Set is removed from the overhead crane and installed on the Fixed Hinge (See Figure 2-180) located in the outside door to the Vertical Assembly Building. The Hydra-Set provides vertical movement in the Stage Laydown operation.

The Launch Operation Complex (LOC) Bar, 75M51015, is attached to the overhead crane and to the attach point in the center of the Forward Handling Ring (See Figure 2-180).

The LOC Rotational Guide, 75M51009, was attached to the Stage at Station 116 in the Thrust Structure Subassembly Station. While it is necessary for this Guide to be installed at the time of Stage shipment to the Mississippi Test Operation (MTO) and the Atlantic Missile Range (AMR), it will be removed after stage laydown and before refurbishment because of the limited ceiling height in the low bay area of the Michoud Plant. The Guide will be reinstalled prior to shipment to MTO and AMR.

The Stage is raised to clear the Pylons and positioned into the Fixed Hinge by pinning the LOC Rotational Guide, 75M51009, into the rotating points of Turning Fixture TRF 330-10000. The overhead crane lowers the forward end of the Stage to the horizontal position. Using the Hydra-Set vertical adjustment on the Fixted Hinge and the overhead crane, the Stage is lowered to a position directly above the handling points on the Stage Transporter (See Fig. 2-180). The jacks of the Transporter are utilized to raise it until engagement is made with the Stage. The Stage is secured to the Transporter at attach points.

U3 4211 4000

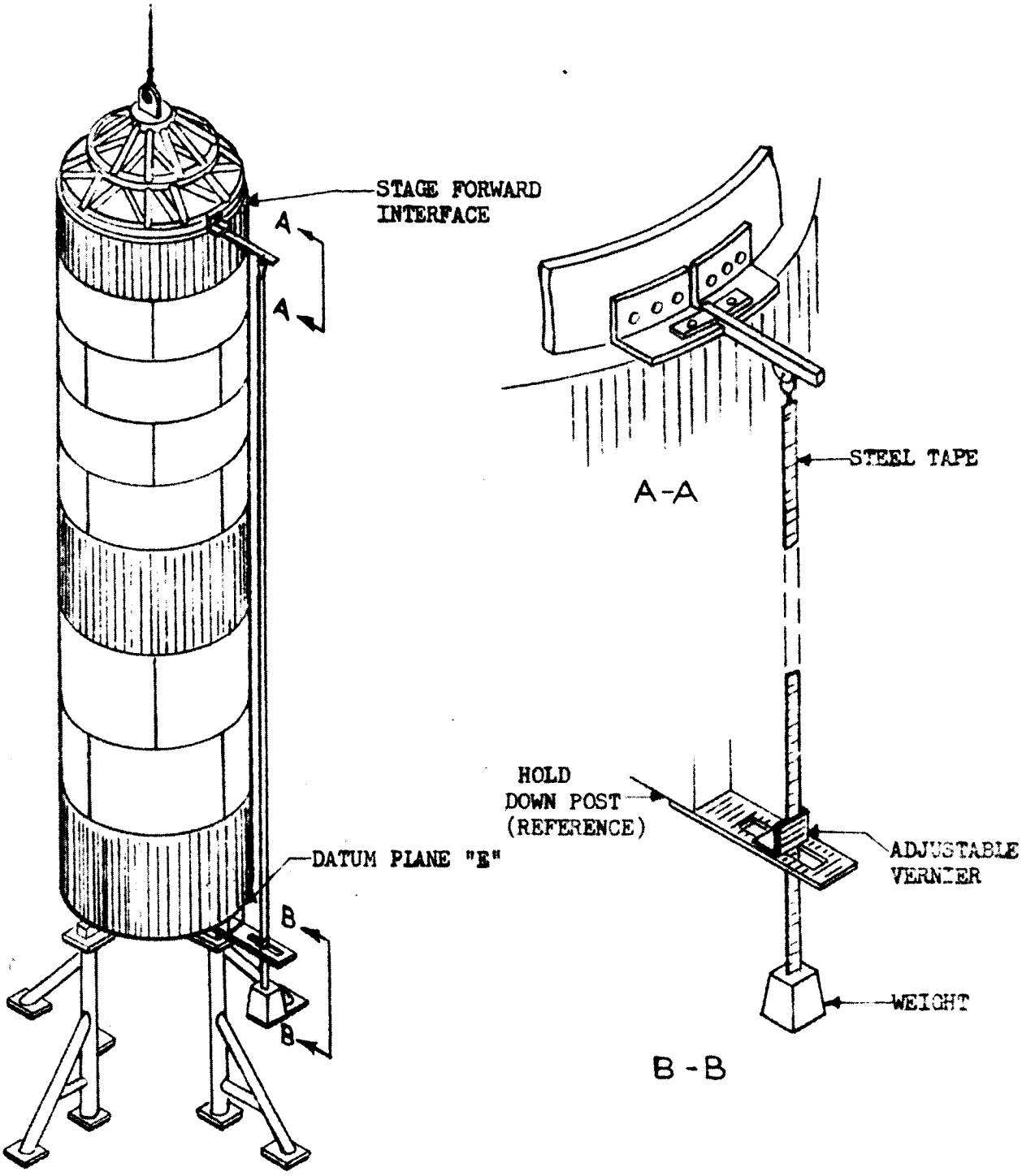

Fig. 2-179 - Checking the Parallelism Between Plane "E" And Stage Forward Interface

JB 4211 4000

2.9 HORIZONTAL INSTALLATION

Systems and Equipment Installation procedures for the S-1C Stage are predicated on the installation of all systems and equipment components at the earliest practical time. This policy generates the need for five major installation positions, terminating with the horizontal installation position.

The five major positions are: (1) Thrust Structure Pick-up, (2) Intertank Pick-up, (3) Forward Skirt Pick-up, (4) Vertical Assembly Tower and (5) Horizontal Installation. The Pick-up positions provided for structural completion of the three sections will be utilized for the installation of systems and equipment items during and/or immediately following structural pick-up operations. The vertical assembly position will be used to continue installation operations in the Thrust Structure and Intertank Compartments. The horizontal position will be the final major installation area at Michoud. All systems to be installed at Michoud will be completed in this position. The sequencing of component installation in the five assembly positions will be governed by the philosophy noted.

System and Equipment components which are located inside or extend through the skin of the LOX or Fuel Tank are installed during assembly and build-up of the tank structures. This sequencing reduces the possibility of contamination to a minimum while providing maximum accessibility during installation.

The S-1C Stage is received from the vertical assembly area on the Stage transporter and placed in either of the two areas assigned to the horizontal installation position. When properly positioned, removable (non-adjustable) jacks are placed under the forward and aft transporter carriage frames. The transporter is lowered to rest on the jacks which provide stabilization during equipment and systems installation. Personnel Platforms are positioned and secured about the Forward Skirt, Thrust Structure and Intertank Access Areas.

External and internal staging provides complete access to work areas. Internal platforms in the Forward Skirt, Intertank and Thrust Structure Sections remain installed through completion of the In-plant test operations where they are removed and returned to Horizontal Final Assembly Area for use in a subsequent stage.

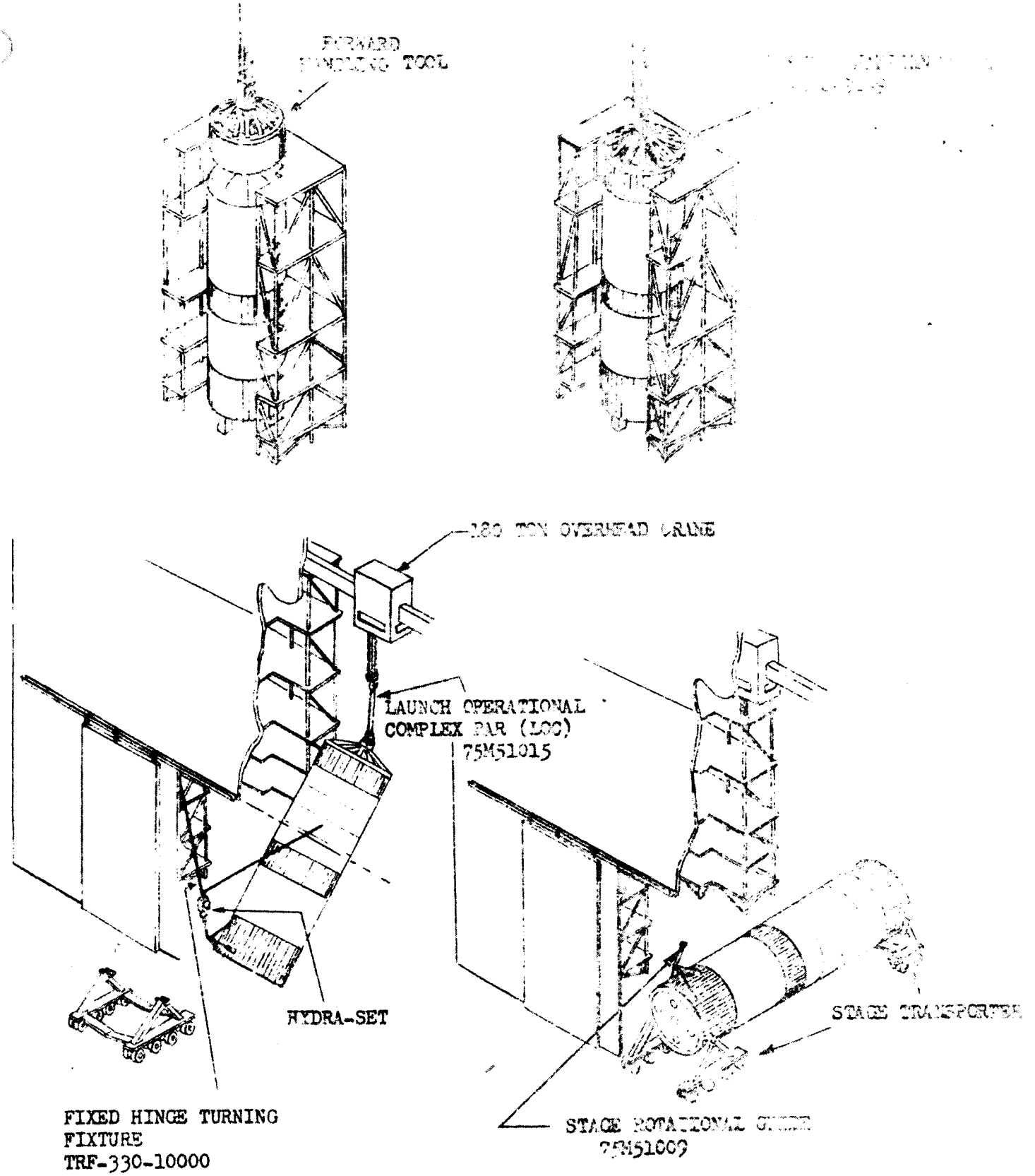

Fig. 2-180 - Lowering Stage To The Horizontal

U3 4211 4000

2.9 (Continued)

The following systems will be installed complete or in part while the Stage is so positioned.

(a) Destruct System (Non-explosive Components)

(b) Heat Shield - Static Test Panels and Curtains

(c) Water Deluge System (MTO Installation)

(d) Stage Instrumentation

(e) Electrical/Electronic Equipment and Cabling

(f) Tunnels - Electrical and Pressurization

(g) Umbilical Panels

(h) Electrical System Continuity Check

(i) LOX Fill, Feed and Drain

(j) Environmental Control System

(k) Fuel Fill, Feed and Drain System

(l) Fuel Pressurization

(m) LOX Pressurization

(n) Fluid Power System

(o) Control Pressure System

(p) Fuel Conditioning System

(q) Flight Control

(r) Horizontal Engine Installation

(s) Thrust Vectoring System

(t) LOX Conditioning System

2.9.1 <u>Destruct System</u>

Destruct System components are located in the Forward Skirt, LOX Tank and Fuel Tank areas. Installation procedures have not been defined due to lack of firm engineering releases. Design concepts are currently under review. It is anticipated that all components containing explosives will be installed at Atlantic Missile Range.

2.9.2 Base Heat Shield (Static Test)

The Base Heat Shield support structure will be installed during Thrust Structure Assembly and build-up (Ref. Section 2.2.15). Static Test Firing heat shield panels are installed subsequent to completion of in-plant test operations with exception of four access panels and one panel in each quadrant which interfere with installation of the manual engine gimbal actuator. These eight panels are installed at MTO.

Static Test Firing Heat Shield consists of fifty .25 inch steel plates mounted directly on the grid network, fifty matching honeycomb panels coated with M-31 insulation which are mounted directly on the steel plates and five flexible curtains which enclose the gap between the engine pan and stage structure.

Typical installation sequence for the Static Test Heat Shield is as follows:

2.9.2.1 Static Test Panel Installation

Tow Heat Shield Transport - Storage Dolly to installation area.

Position Lift Tractor to facilitate engagement of lift-plate and .25 inch steel panel. Fasten steel panel to lift-plate.

Raise steel panel to installation position with Lift-Tractor and match panel, beam and bracketry hole patterns.

Fasten steel panel to beam supports with bolt and nut (4) places.

Disengage lift-plate.

Honeycomb Panel installation similar to above except fasteners are fastened to the support beams through holes common to honeycomb and steel panels.

2.9.2.2 Curtain Installation (5 Places)

Match curtain, engine pan and support beam bracketry hole patterns

Position channel supports.

Install fasteners.

2.9.3 Water Deluge System

The Water Deluge System is installed at MTO. Base Heat Shield Panels which support this system will be installed at MTO to permit installation of the manual engine gimbal actuators during stage transportation.

2.9.4 Stage Instrumentation

The Stage Instrumentation consists of acoustic, calorimeter, flow rate, pressure, strain, temperature and vibration transducers. These hardware items have been defined; however, the locations in the Stage are indefinite. An installation sequence will be developed.

2.9.5 Electrical/Electronic Equipment

Stage Electrical/Electronic Equipment consists of Electrical Cabling Equipment Panels, Telemetry and RF Equipment. Specific locations of this hardware in the stage have not been defined. An installation sequence will be developed as this information becomes available.

2.9.6 Tunnels - Electrical and Pressurization

Tunnel platforms common to only one stage section are installed on the applicable section prior to vertical final assembly. Tunnel platforms located on section transition lines, electrical and pressurization components and ducts are installed during vertical final assembly. Tunnel covers are fitted in vertical final assembly and permanently installed upon completion of in-plant test.

2.9.7 Umbilical Panels

There are five Umbilical Panels on the S-1C Booster. Three panels are located in the Thrust Structure, one in the Intertank and one in the Forward Skirt. The Umbilical Panels will be installed during assembly and build-up of the Thrust Structure, Intertank and Forward Skirt sections.

2.9.8 Electrical System Continuity Check

A programmed Electrical Continuity Check (DITMCO) will be accomplished in the horizontal position following completion of Electrical Components, Equipment and Systems installation prior to delivery of the S-1C Stage to Inplant Test.

U3 4211 4000

2.9.9 LOX Fill, Feed And Drain System

This system will be installed at the Thrust Structure Pick-up and Vertical Assembly Positions. The installations will be accomplished as follows:

2.9.9.1 Thrust Structure Pick-Up Position

2.9.9.1.1 Install LOX Adapter Spools, Outboard

The LOX Adapter Spools outboard will be received LOX clean with all openings sealed.

a) Attach LOX Adapter Spool handling Fixture and sling to forward flange of spool.

b) Attach sling to hoisting device and hoist spool into Thrust Structure.

c) Position spool in support bracket and secure lower spool flange to bracket.

d) Remove hoist device, sling and handling fixture.

2.9.9.1.2 Install Lox Pressure Volume Compensator Duct Inboard

The LOX PVC Duct inboard will be received LOX clean with both ends sealed and gimbal restraining fixture in place.

a) Attach PVC Duct Handling Fixture to Duct.

b) Attach hoisting device to handling fixture and hoist duct into Thrust Structure and position it in bracket.

c) Secure duct to bracket.

d) Remove hoisting device and handling fixture.

e) Install temporary PVC Duct Support Fixture to hold duct in its flight position until the engine is installed.

f) Secure aft Flange of duct to temporary support fixture.

2.9.9.1.3 Install Lox Prevalves

The Lox prevalves will be received LOX clean with both ends sealed.

a) Attach LOX prevalve handling fixture and sling to forward flange of prevalve.

b) Attach sling to hoisting device and hoist prevalve into Thrust Structure.

J3 4211 4000

2.9.9.1.3. (Continued)

c) Position prevalve three (3) inches above upper flange of (A) LOX Adapter Spool, outboard, or (B) PVC Duct, inboard.

d) Remove seals simultaneously and mate flange immediately.

e) Secure joint and remove hoisting device, sling and handling fixture.

2.9.9.1.4 Install LOX Adapter Spool Inboard

The LOX Adapter Spool Inboard will be received LOX clean with all openings sealed.

a) Attach LOX Adapter Spool Handling Fixture and sling to forward flange of spool.

b) Attach sling to hoisting device and hoist spool into Thrust Structure.

c) Position spool three (3) inches from forward flange of PVC Duct.

d) Remove seals simultaneously and mate flanges immediately.

e) Remove hoisting device, sling and handling fixture.

2.9.9.1.5 Install Lox Pressure Volume Compensator Ducts Outboard

The LOX PVC Ducts, outboard will be received LOX clean with both ends sealed and gimbal restraining fixtures in place.

a) Attach PVC Duct Handling Fixture to duct.

b) Attach hoisting device to handling fixture and hoist duct into Thrust Structure and position it three (3) inches beneath the LOX adapter spool lower flange.

c) Remove seals simultaneously and mate flanges immediately.

d) Secure joint and remove hoisting device and handling fixture.

e) Install temporary PVC Duct support fixture.

f) Secure aft flange of duct to temporary support fixture

2.9.9.2 Vertical Assembly Position

2.9.9.2.1 Install LOX Suction Ducts

2.9.9.1 (Continued)

The LOX Suction Duct will be received with insulation, roller supports and gimbal restraining fixtures in place on ducts. The ducts will be clean with both ends sealed. The Fuel Tank-Intertank Joint is complete.

a) Attach funnel guide (roller support, compressor) to upper end of fuel tank tunnel.

b) Attach LOX Suction Duct Hoisting Tool to forward flange of duct.

c) Attach roller guide to aft Flange of Duct.

d) Attach overhead crane and rotate duct to a vertical position about a pivot point on dolly using the roller guide as the pivot.

e) Remove gimbal restraining fixtures and lift duct to mouth of funnel guide.

f) Lower duct ten (10) inches into funnel and hold duct there as the crane is moved to align duct with center line of the tunnel.

g) Lower duct through tunnel until the aft Flange ten (10) inches above its mating flange.

h) Remove roller guide and install guide pins in lower duct flange.

i) Lower duct six (6) inches and remove seals simultaneously and mate flanges immediately.

j) Remove guide pins, secure joint and remove lifting tools.

k) Install duct sliding joint, expansion and compression tool, at aft Suction Duct Sliding Joint.

l) Use tool to compress joint four (4) inches, to allow LOX Tank mating.

m) After the LOX Tank joint is 25% complete remove seals from both LOX Tank Fitting and LOX Suction Duct.

n) Using a radio communication system to direct the expansion of the sliding joint, mate surfaces immediately.

o) Secure joint and remove installation tools.

2.9.9.2.2 <u>Install LOX Bubbling System</u>

A detail plan will be prepared later.

U3 4211 4000

2.9.9.2.3 Install Lox Interconnect System

A detail plan will be prepared later.

2.9.9.2.4 Install LOX Fill And Drain Line

A detail plan will be prepared later.

2.9.9.2.5 Install LOX Emergency Drain Line

A detail plan will be prepared later.

2.9.10 Environmental Control System

That part of the system which purges the Thrust Structure is wholly contained in the Thrust Structure and will be installed in the structure pick-up position. That part of the system which purges the black boxes is contained in the Forward Skirt and will be installed in the Final Assembly Horizontal position.

No abnormal installation problems are anticipated.

2.9.11 Fuel Fill, Feed and Drain System

The Fuel System provides the necessary ducting, joints, connectors, valves, sensors and fittings to load and drain fuel between the ground supply system and the vehicle Fuel Tank and to deliver fuel from the tank to the F-1 engines at the required flow rates.

The limited number of engineering drawing releases precludes definition of installation sequencing at this time.

2.9.12 Fuel Pressurization System

The Fuel Pressurization System will be installed in the following sequence:

These items will be installed during the Thrust Structure Pick-up position:

Manifold-Hot Helium
Manifold-Cold Helium
Feeder Ducts-Hot Helium
Feeder Ducts-Cold Helium
Duct Lower-Hot Helium

The following items will be installed during Vertical Assembly position:

Duct Upper-Hot Helium
Duct Vents

The following items will be installed during the Horizontal Assembly position:

Duct Tunnel-Hot Helium
Duct Tunnel-High Pressure Supply
Flow Control Valve, Tunnel
Duct Fill and Dump-Helium
Duct Supply-Cold Helium

The Helium container manifold and other miscellaneous hardware will be installed during build-up of the tanks. A more detailed

13 4211 4000

2.9.12 (Continued)

sequence plan will be developed as Engineering is released.

2.9.13 Horizontal Engine Installation

With the use of an inplant tractor, tow the engine mounted on the horizontal handler to the Horizontal Assembly area.

With the GFE Engine Handling Fixture in place on the portable "A" Frame type crane, insert the Engine Handling Fixture into the engine, through the Engine Thrust Chamber exit.

After inflating the clamps on the Engine Handling Fixture, loosen the engine from the horizontal handler and position the engine to the Stage with the "A" Frame.

Position the engine work platforms to the Stage around the engine.

With the aid of the Engine Handling Fixture and the "A" Frame, index the engine gimbal bearing to the Stage.

Install the eight gimbal bearing attach bolts and torque.

Attach the Stage end of the actuators to the Stage with the washer and attach pin.

Deflate the clamps on the Engine Handling Fixture and remove the Engine Handling Fixture and the "A" Frame from the engine.

Remove the actuator support tool from the engine and return the tool to the Engine build-up area.

Install the nine wrap-around lines that attach to the engine and to the Stage Interface.

Secure the LOX Suction Duct to the engine, install the bolts and torque.

Secure the two Fuel Suction lines to the engine, install the bolts and torque.

The center engine will be handled in the same manner except that this engine does not have gimbaling capability.

2.9.14 Thrust Vectoring System

The Thrust Vectoring System will provide directional control of the S-IC Stage through an Engine Position Monitoring System, Control System, servo actuators and gimbals connected to the four outboard engines.

There have been no Engineering Installation Drawings received as of this time. Installation procedures will be forthcoming as drawings are released.

U3 4211 4000

2.9.15 LOX Pressurization System

The LOX Pressurization System will be installed in the following manner:

These items will be installed during the Thrust Structure Pick-up position:

GOX Manifold
GOX Ducts, Manifold to Heat Exchanger
GOX Flow Control Valve
GOX Duct, Flow Control Valve to Skin
LOX Pre-Pressurization Line

The following items will be installed during the Horizontal Assembly position:

GOX Duct, Skin to Bulkhead
GOX Duct, Tunnel
GOX Pressure Sensing Line
LOX Tank Vent and Relief System

The following items will be installed during LOX Tank buildup:

GOX Diffuser
GOX Duct, Bulkhead to Diffuser

A detailed plan will be developed as Engineering is released.

2.9.16 Fluid Power System

The Fluid Power System components will be installed as follows:

The parts of this system listed below will be installed during the Thrust Structure pick-up position. Those parts not listed are the Engine Group's responsibility.

Duct-Return
Duct-Umbilical Connection
Seals-Fuel
Duct-Supply

A detailed installation plan will be developed as Engineering becomes available.

U3 4211 4000

2.10 ENGINE BUILDUP

2.10.1 Engine Receival

The Engine, mounted on the Airborne Handler, is removed from the plane on arrival and utilizing sling and crane, the Airborne Handler and Engine is loaded on the trailer for transport to Michoud Facility. (See Figure 2-180).

Crane facilities at Michoud and the Airborne Handling Sling are used to remove the Engine and the Airborne Handler from the trailer and position on the factory floor. (See Figure 2-181).

Remove the Security Cover and the Thrust Chamber Plug from the Engine.

Elevate Engine from the Airborne Handler with the overhead crane facility and rotating sling.

Remove the Airborne Handler, rotate the Engine to the vertical position, and place the Engine on the Vertical Handler. (See Figure 2-182).

The Airborne Handler and the Security Cover are prepared for return to the Rocketdyne.

Transport the Engine and Vertical Handler to Inplant Test for receiving inspection check. (See Figure 2-85).

Upon completion of receiving inspection check, transport the engine mounted on the Vertical Handler, to the Engine Buildup Area. (See Figure 2-183).

Position the Vertical Engine Work Platforms around the Engine. (See Figure 2-184).

The Actuator Arms are bench-set to length, as specified in the data sheets supplied with the Engine, and locked in the nominal position.

2.10.1.1 Instrumentation System Installation

The instrumentation to be installed includes that which is attached to the Engine Skirts for Engines 101 and 105. Engine skirts for Engine 102, 103, and 104 do not require instrumentation. See drawing, Generation Breakdown, Engine Instrumentation Unit 101-105, for detail Engine Instrumentation.

a) Install cabling for the Instrumentation System
b) Install Engine Calorimeter Purge Lines
c) Install Overboard Drain Lines

The overboard drain lines are furnished by Rocketdyne and are shipped as loose equipment items. They are installed per the Rocketdyne Loose Equipment Installation Drawing.

U3 4211 4000

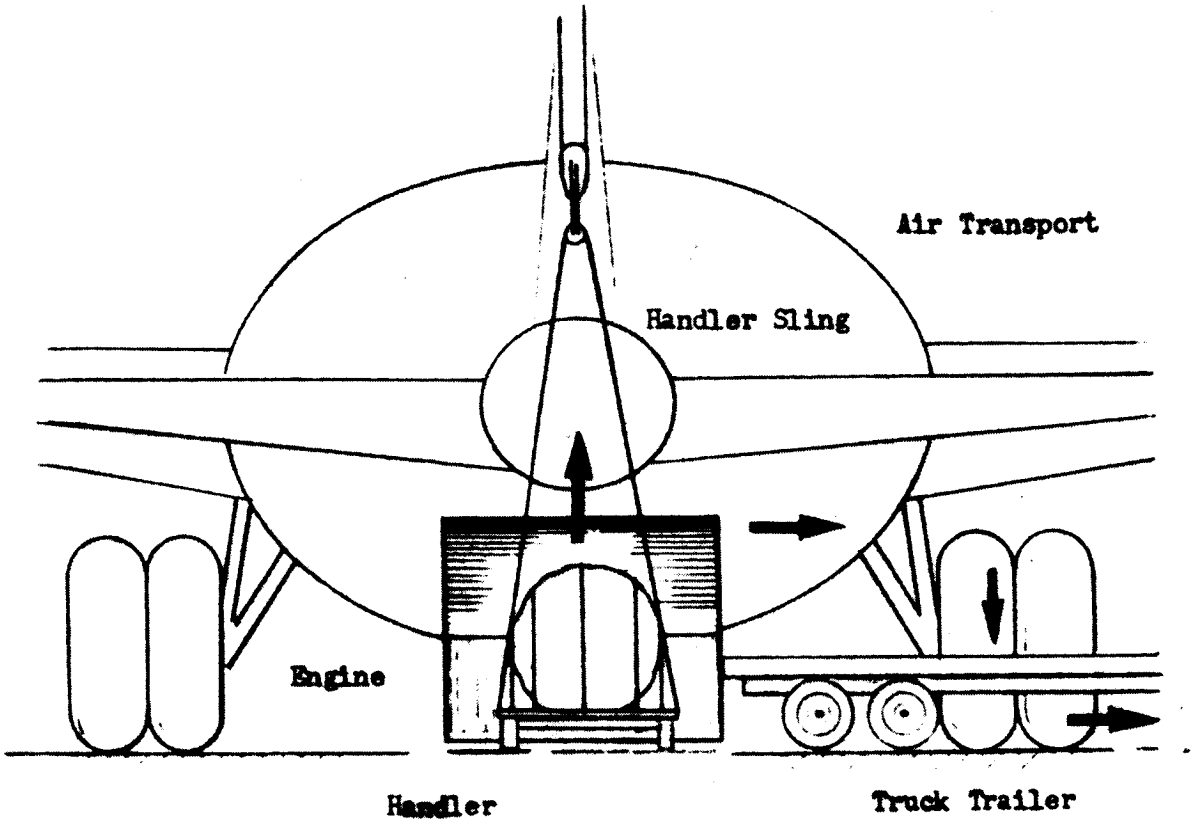

Figure 2-180 HANDLING ENGINE AT AIRPORT

U3 4211 4000

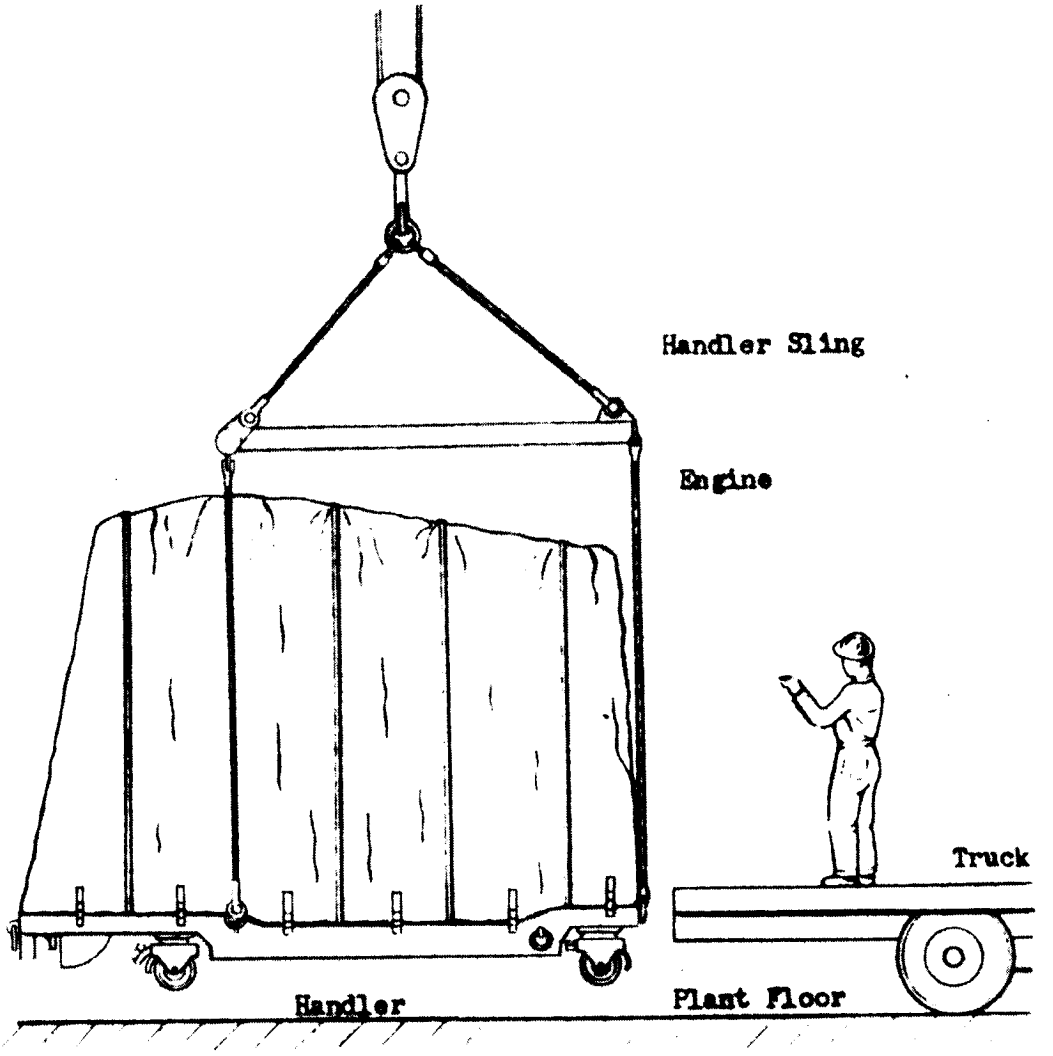

Figure 2-161 HANDLING ENGINE AT MICHOUD

U3 4211 4000

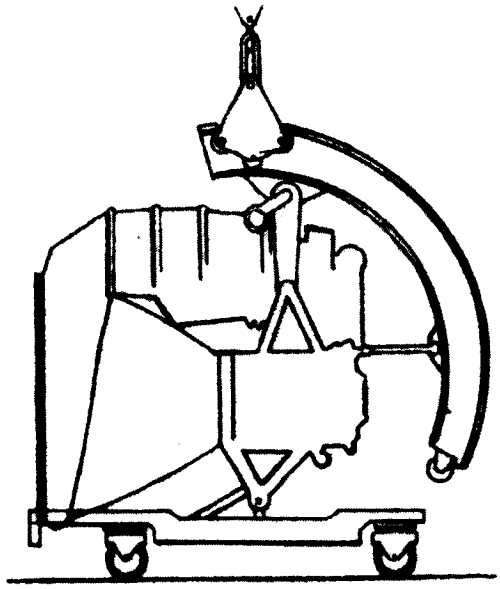

Rotating Sling

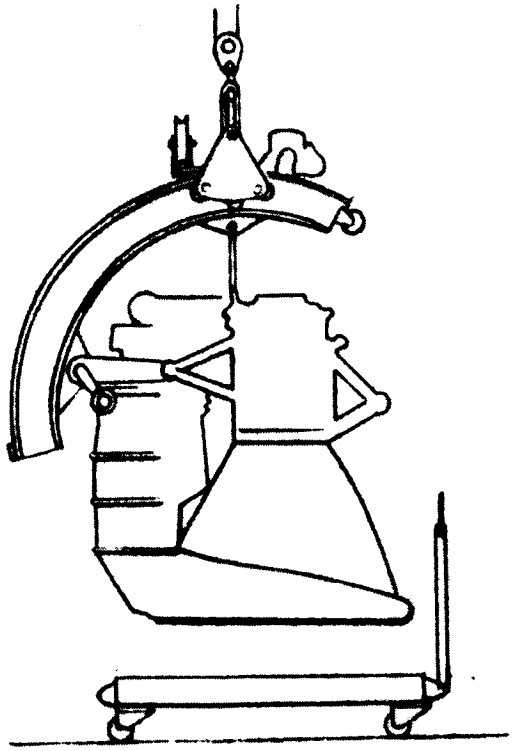

Vertical
Handler

Figure 2-182 ROTATING ENGINE TO VERTICAL POSITION

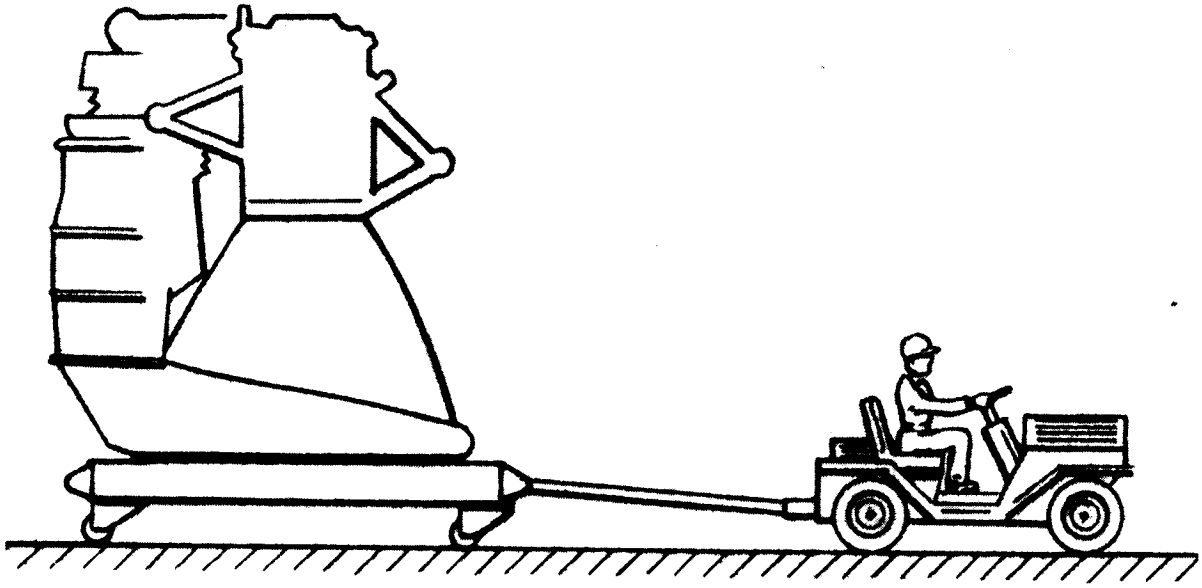

TOWING ENGINE TO RECEIVING INSPECTION

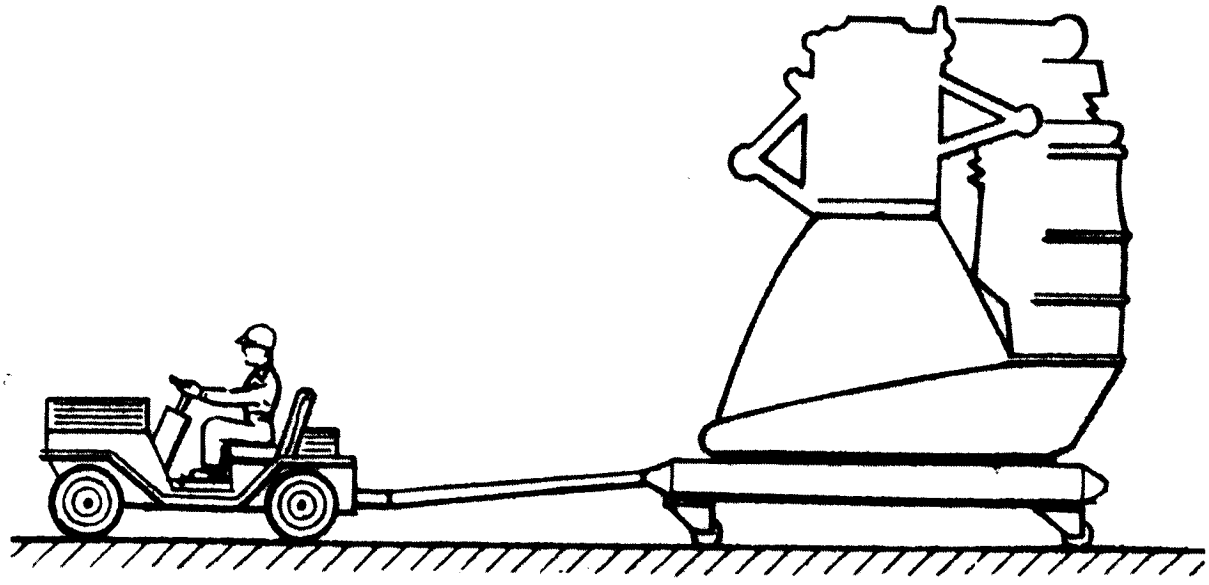

Figure 2-183 TOWING ENGINE FROM RECEIVING INSPECTION TO ENGINE BUILD-UP AREA.

U3 4211 4000

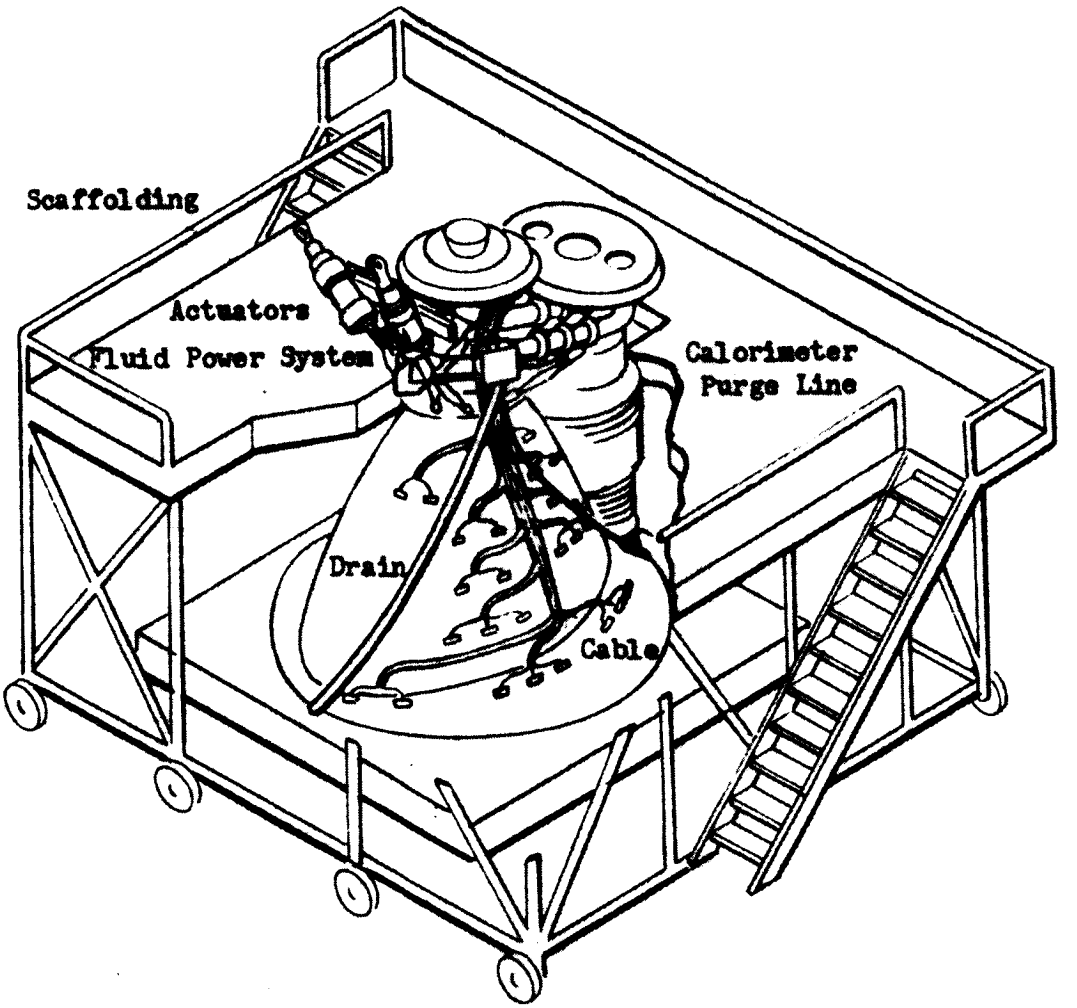

Figure 2-184 ENGINE BUILD-UP

U3 4211 4000

2.10.1.2 Actuator Fluid Power System Installation (See Figure 2-185)

The Actuator Arm lengths have been pre-set on the bench per the Rocketdyne Engine Data Sheet.

2.10.1.3 Actuator Arms Installation (See Figure 2-186)

a) Using the overhead crane and the actuator arm handling tool, hoist the actuators into position.

b) Attach the lower end of the actuator arm to the engine with one actuator attach pin and one actuator attach pin washer.

c) Clamp the upper end of the actuator arm to the actuator support tool.

2.10.1.4 Engine Fluid Power System Installation

The Engine Fluid Power System is installed per the installation drawing. This system is located in the general area from Station 35 to Station 53.

2.10.1.5 Insulation Installation

a) The Engine Insulation is installed per installation drawings.

b) The Insulation that is furnished by Rocketdyne is shipped as loose equipment. This insulation is installed per the Rocketdyne Loose Equipment Installation Drawing. It is a one time, flight insulation, and is installed in the refurbishment area after static firing tests have been completed at M.T.C.

c) Return the engine to Inplant Test on the vertical handler for post engine buildup checkout.

2.10.1.6 Buildup Checkout

After checkout is completed, return the engine to the engine buildup area. Remove the engine from the vertical handler and rotate the engine to the horizontal position with the rotating sling. Place the engine on a horizontal handler. The engine is now ready for installation on the S-1[illegible] Stage.

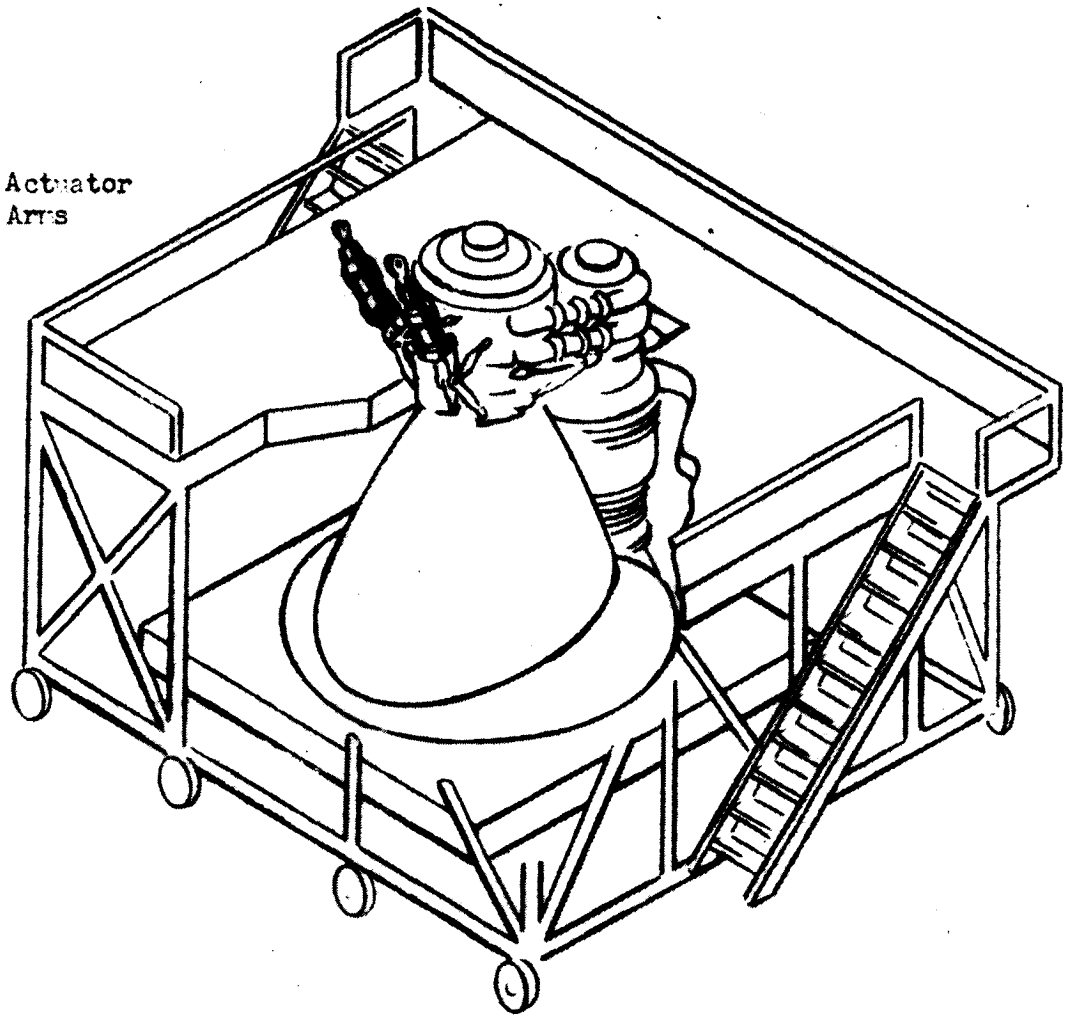

Figure 2-185 - ACTUATOR FLUID POWER SYSTEM INSTALLATION

U3 4211 4000

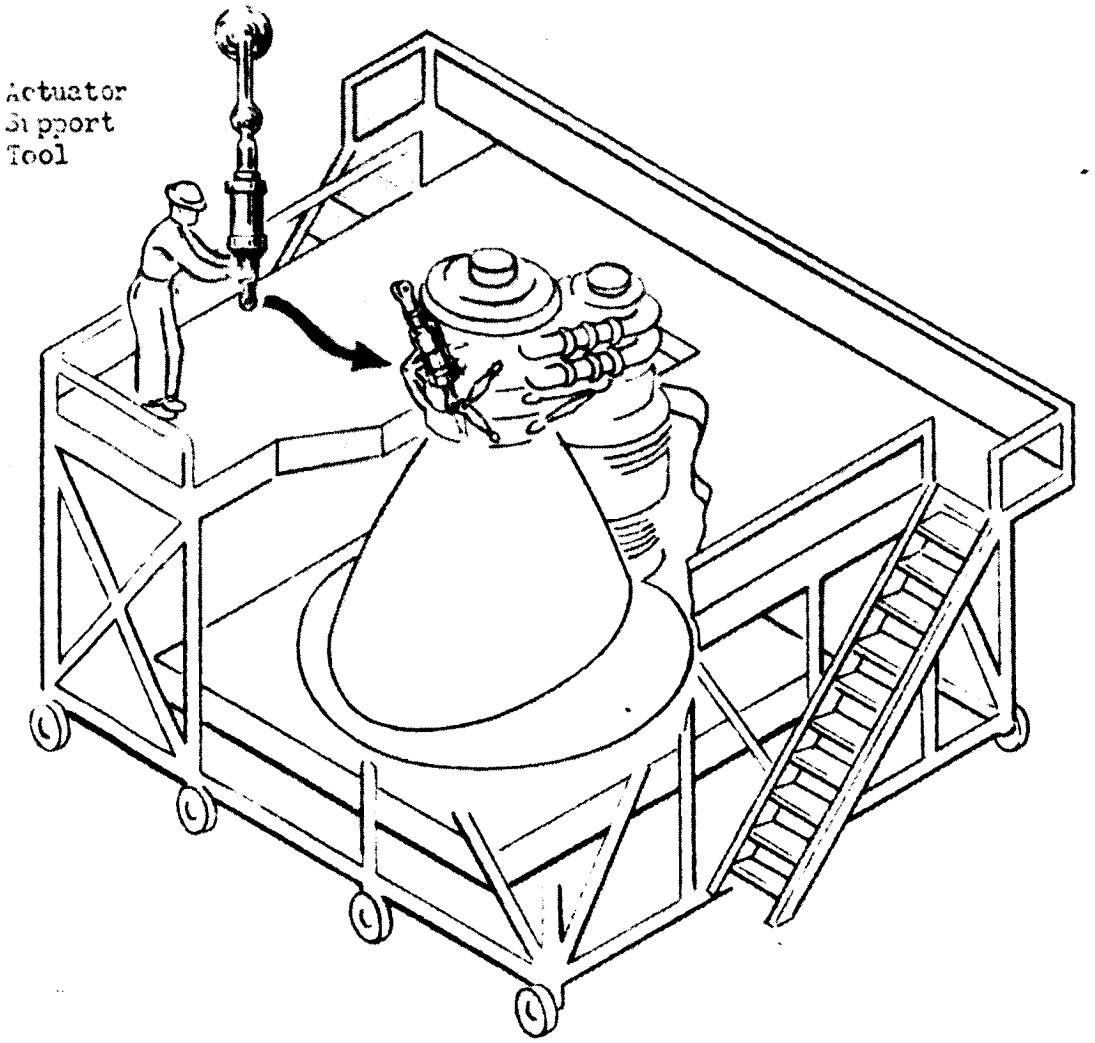

Figure 2-186 - ACTUATOR ARM INSTALLATION

U3 4211 4000

2.11 REFURBISHMENT

After completion of Static Test Firing at MTO, the Stage is returned to Michoud on the S-1C Transporter and placed in the position assigned for Stage Refurbishment. Personnel Platforms and Staging are positioned and secured. Internal Platforms in the Forward Skirt, Intertank and Thrust Structure areas remain installed through completion of in-plant test.

Systems which are utilized for Static Testing only, or have both Static Test and flight configurations are removed entirely or replaced with flight hardware.

Hardware removed entirely or replaced includes:

2.11.1 Base Heat Shield

Remove balance of Static Test Base Heat Shield Honeycomb Panels and .25 inch steel blast plates. MTO removes one panel and steel plate in each quadrant to permit installation of the manual engine gimbal actuators. All Heat Shield Flight Panels are installed at AMR. Flight curtains are installed during Thrust Structure refurbishment.

2.11.2 Water Deluge System - Static Test Only

Water Deluge System components will be removed at MTO. The Heat Shield panels to which they are secured are removed to allow installation of manual engine gimbal actuators.

2.11.3 LOX Emergency Drain System - Static Test Only

LOX emergency drain prevalve, seals, duct, adapter and drain valve are removed at MTO prior to return of the stage to Michoud.

2.11.4 LOX Pressurization System

Remove pressurization duct, vent and low pressure relief valve and install 50 pound valve. The pressurization duct opening will be sealed with a cover.

2.11.5 Engine Insulation

Remove all insulation and replace with flight quality material.

U3 4211 4000

2.11.6 Fuel Pressurization System

Remove vent and relief duct assembly in the RP-1 fuel tank and relief valve; (3) line assemblies, GN_2 vent valves, fuel pressure duct, and pressure relief switch. Install flight relief switch, pressure switch, helium tee plate and fuel vent and relief valve.

2.11.7 Other Work Items

Removal of engine measuring instruments; vacuum fittings and pressure differential instruments and their replacement with flight configuration items will be required.

U3 4211 4000

3.0 SUPPORT REQUIREMENTS-MISCELLANEOUS MANUFACTURING AND SPARES

3.1 PROGRAM SCHEDULES

Schedules are provided for the Boeing support of the MSFC Ground Test and S-1C-1 vehicles and the Boeing program for S-1C-F, S-1C-2 through S-1C-10. (See Figures 3-1 and 3-2.

Detail backup schedules are available for each major system, structure, or equipment package. These detail schedules are based on Engineering Release and current configuration. Buildup schedules, cycle projections and position requirements are based on vehicle delivery requirements.

PERT is utilized to study the current schedule position. A network of approximately 2,000 items and analysis is submitted to the customer bi-weekly.

U3 4211 4000

BOEING ASSIST C-5 S-IC MSFC PROGRAM

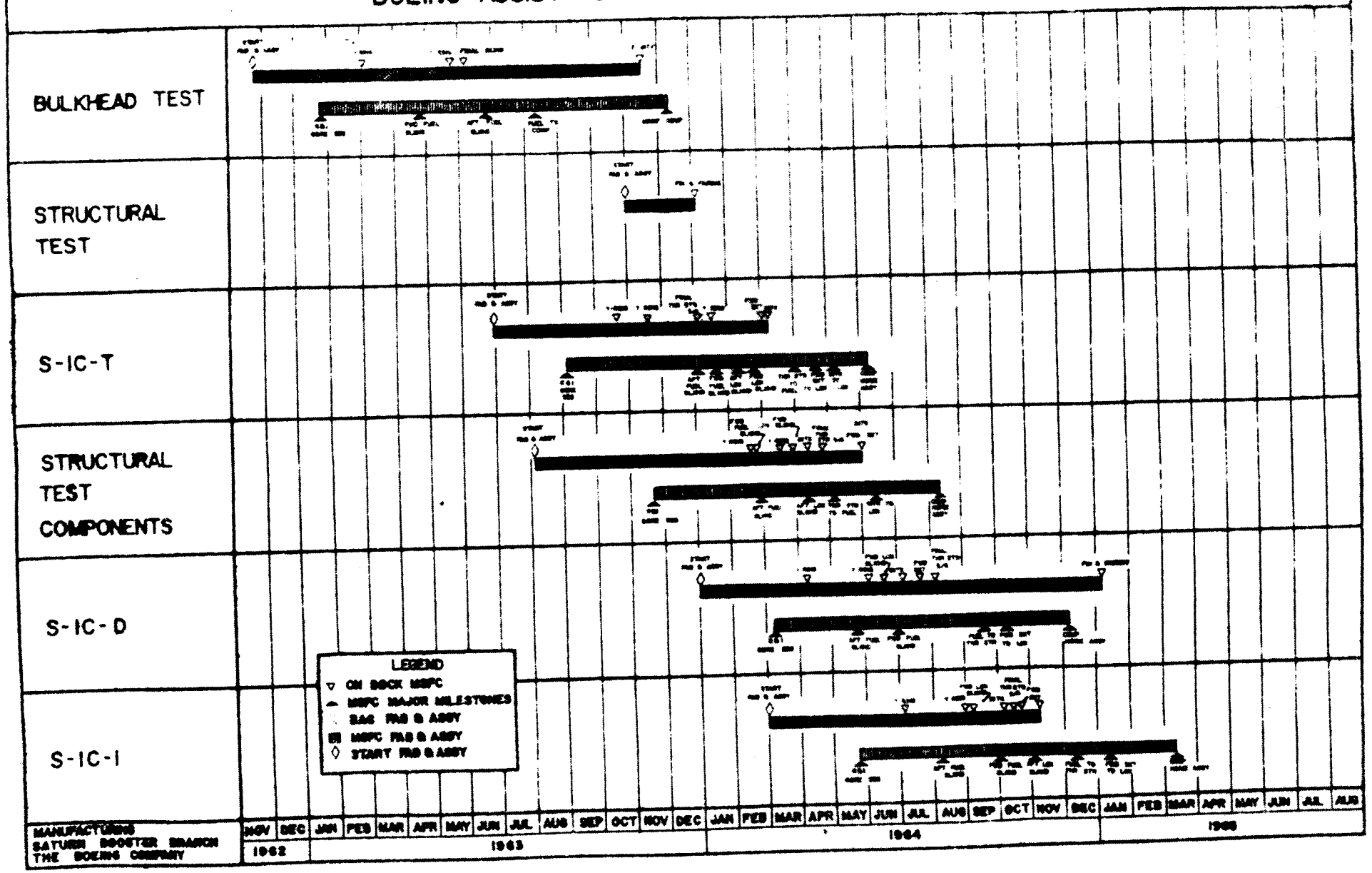

MANUFACTURING
SATURN BOOSTER BRANCH
THE BOEING COMPANY

REISSUED 3-20-63

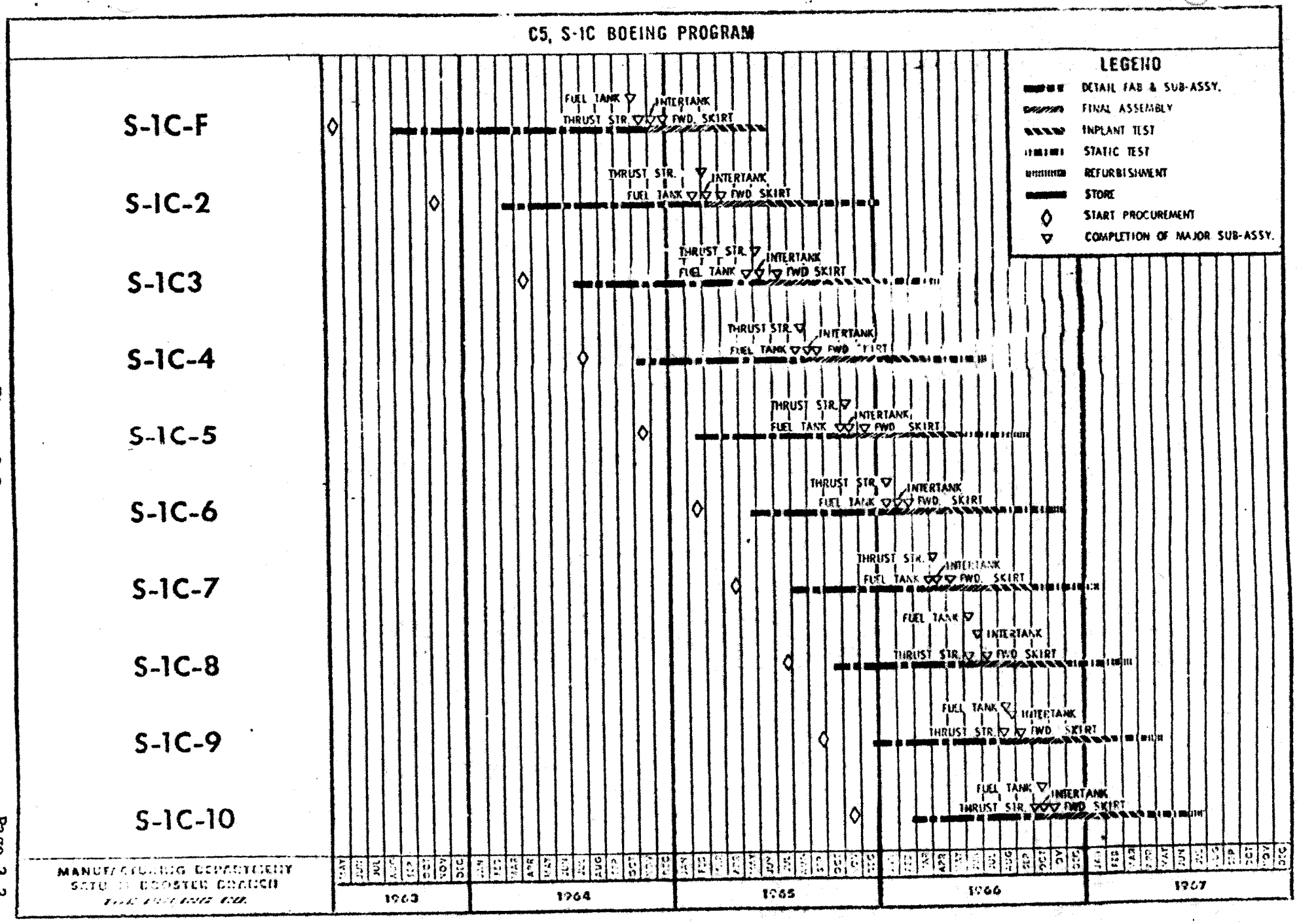
C5, S-1C BOEING PROGRAM
LEGEND
DETAIL FAB & SUB-ASSY.
FINAL ASSEMBLY
INPLANT TEST
STATIC TEST
REFURBISHMENT
STORE
START PROCUREMENT
COMPLETION OF MAJOR SUB-ASSY.
S-1C-F
S-1C-2
S-1C3
S-1C-4
S-1C-5
S-1C-6
S-1C-7
S-1C-8
S-1C-9
S-1C-10
FUEL TANK
INTERTANK
THRUST STR.
FWD. SKIRT
1963
1964
1965
1966
1967
MANUFACTURING DEPARTMENT
SATURN BOOSTER BRANCH

Figure 3-2

3.2 MANUFACTURING FULL SCALE MOCK-UP

The design of the Saturn V S-1C program included the utilization of a full scale Class III manufacturing mock-up. This manufacturing technique permits the scheduling of wiring and tubing planning, development and fabrication concurrent with the structural assembly. As a result, the wiring and tubing runs are installed directly in the initial production stage reducing the in-plant flow time for the assembled structure. Equally important, a manufacturing mock-up provides the medium to incorporate revisions to installation work generated by design changes. The attendatn installation items can be planned, developed and fabricated for installation without disrupting the scheduled production program.

A mock-up adequate for developing wiring and tubing runs requires the following sections:

a) Aft Fuel Tank and Thrust Structure Section extending approximately six feet forward of the bulkhead station.

b) Intertank section extending from approximately six feet aft of Fuel Tank bulkhead station to six feet forward of the LOX tank bulkhead station.

c) Forward Skirt Section extending approximately six feet aft of LOX bulkhead station.

Minor mock-ups are required to simulate hardware located between these sections.

The three main sections are floor mounted and spaced with respect to one another per production drawings. Mechanical means will be provided for alinement as dictated by optical tooling.

Mock-up structures are manufactured to significant production tolerances and configuration. Simulated equipment will approximate envelop dimensions but interface connections are held to production tolerances and configuration. Rejected production hardware will be used in place of simulated equipment when possible.

All electrical, electronic, mechanical and hydraulic systems are simulated in each of the sections.

Structures and hardware are constructed of metal, plastic, fiberboard or a good grade of wood. Actual selection is based on the shape and loading of individual items.

All bulkheads are fabricated in eight 1/2 inch fiberglass subassemblies using molds designed and fabricated according to TL-11. The design of the bulkhead provides a simulated Y-Ring.

Subassemblies are built to close tolerances so that they can be used in place of major tooling, to build the major assemblies.

U3 4211 4000

3.2 (Continued)

To save layout time and prevent adverse accumulation of tolerance, pilot holes for fasteners are drilled in only one of two or more mating parts or subassemblies. The holes are drilled through all parts at the assembly operation. The part chosen for the pilot holes is the one most accessible at the assembly operation.

The subassemblies built in the vertical position utilize standard optical equipment as defined in the Boeing Optical Tooling Manual TD-180.

After completion of the model, wire and tube development begins. This consists of wire and tube laying per engineering specifications with routing and junction points stipulated by Manufacturing Engineering.

Approximately 25 per cent of the skin area is eliminated for access and illumination.

3.2.1 Manufacturing Engineering Responsibility

Coordinate all mock-up programs with other Boeing units affected and with MSFC to assure compatibility with operational schedules.

Maintain adequate configuration accountability records.

Define mock-up requirements and issue directions to build new mock-up or to revise or terminate existing modes.

Issue drawings, sketches, and other specifications needed in the fabrication or use of the mock-up.

Submit sketches and production illustrations of developed wiring bundles and tubing runs for Project Engineering approval.

3.2.2 Final Assembly Sequence

3.2.2.1 Thrust Structure Section

3.2.2.1.1 Aft Thrust Structure Subassembly

3.2.2.1.2 Forward Intertank Section Subassembly

Same as intertank

3.2.2.1.3 Final Assembly (Intertank Section

The Forward and Aft Intertank Section Subassemblies are aligned and leveled with respect to each other using optical equipment, portable cranes, and hydraulic jacks. The subassemblies are mounted on four dollies at this point. They will be bolted together at Station 757. After the sections are bolted, the Intertank Section is elevated using portable cranes, and the dollies removed for use with the Forward Skirt Section. The following assemblies are installed after the Section Assembly is complete: Wiring and Tubing Tunnels, Structural Stiffeners.

U3 4211 4000

3.2.2.2 Forward Skirt Section

The Assembly starts by vertically lowering the Forward Skirt Subassembly over the bulkhead. After the skirt is installed, aligned and secured, the resulting assembly is vertically lowered over the LOX Tank segment, aligned and attached. At this point, portable cranes place the assembly on a low-boy dolly for movement to the mock-up area. At the mock-up area, the Section is lifted from the low-boy dolly, turned to the horizontal position and floor mounted. The Wiring and Tubing Tunnels are located and bolted to the skin of the Forward Skirt Section.

3.2.2.3 Installation of Electrical and Electronic Equipment

This equipment is installed after the mock-up has been placed in the horizontal position. It consists of electrical equipment, transducers, signal conditioners, a flight sequencer system, command destruct system, ODOP tracking system, RF system, telemetry system, TV and photographic auxiliary equipment. The simulated equipment is installed and located per production drawings. Actual production connectors, modified as required, are mounted per vendor or production drawings.

3.2.2.4 Installation of Mechanical Equipment

Equipment installation begins after the structure is complete.

3.2.3 Wiring and Tubing Development

After assembly of the mock-up, including installation of simulated electrical, electronics, mechanical and hydraulic gear, development of wiring and tubing runs begins.

From Engineering wire diagrams, preliminary layouts, sketches, and other specifications provided by Project Engineering, Manufacturing develops wire routing, junction points, wire supports, and assembly sequences. The resulting simulated wire runs are then installed on the mock-up.

After Quality Assurance has accepted the simulated wire runs, Manufacturing Engineering prepares installation sketches, wire bundle drawings, and production illustrations for submission to Project Engineering. Manufacturing then proceeds to fabricate forming boards upon which the first production bundles are assembled. Quality Assurance then buys off the bundles based on Project Engineering approval of the submitted sketches, drawings and production illustrations. Following Quality Assurance buy-off, the bundles are installed in the production stage.

Tubing runs are developed similarly except that templates are developed from the simulated runs and subsequent production tubing runs are made from the templates.

J3 4211 4000

3.2.3 (Continued)

Simulated wiring and tubing runs are re-installed in the mock-up after fabrication of forming boards and templates.

3.2.4 Configuration Control

Control is maintained through release of fabrication drawings by the Mock-up Group Engineer through Production Control and by the use of configuration accountability records.

The Mock-up Group Engineer confers with the representative of Quality Assurance for the resolution of all problems of interpretation.

Compliance of the Mock-up with production drawings and current configuration accountability is determined by comparison of production drawings with Mock-up drawings, configuration accountability records, and shop orders. All production changes are incorporated into the Mock-up with exceptions as authorized by the Mock-up Group Engineer.

Components and subassemblies are aligned and secured. Overhead or portable cranes (depending on the availability of overhead cranes) are required.

3.2.4.1 Forward Thrust Structure Subassembly

Same as Aft Thrust Structure Subassembly.

3.2.4.2 Final Assembly (Thrust Structure Section)

The Forward and Aft Thrust Structure Section Subassemblies are placed on a low-boy dolly and moved to the model area. The subassemblies are then removed from the low-boy dolly, turned to the horizontal plane and lowered into position. The subassemblies are leveled and bolted together (using Splice Rings) at Station 280. After removing the dollies the Thrust Structure Section is positioned with respect to the total assembly. After this has been completed, the following subassemblies are installed.

a) Wiring and Tubing Tunnels

b) Pin Stub Shroud

c) Actuator Post Supports

d) Heat Shield Support Beams and Panels

(The installation of these are deferred until mechanical and electrical equipment has been installed.)

3.2.4.3 Intertank Section

U3 4211 4000

3.2.4.3.1 Aft Intertank Section Sub-Assembly

The subassembly begins by installing the aft Intertank Skirt Sub-Assembly on the Fuel Bulkhead (the Bulkhead remaining on the assembly Shop Aid on which it was assembled(. After the aft Intertank Skirt Subassembly is installed, alined and secured, the resulting sub-assembly is vertically raised and lowered in place over the Fuel Tank Segment. The subassembly then is positioned and alined using several turn-buckle arrangements mounted between pairs of brackets located on the Skirt and Segment assemblies. The resulting assembly is moved to the mock-up area on a low-boy dolly. At this point, the assembly is removed and turned to a horizontal position (using portable cranes) and floor mounted.

U3 4211 4000

3.3 MANUFACTURING DEVELOPMENT AND PROCESS CONTROL

3.3.1 Manufacturing and Process Development

Process development requirements for the Booster Stage S-1C are divided into four general categories depending upon the location at which the development is performed. The preliminary process development work is being performed at the Marshall Space Flight Center. Other developments are being conducted at the Wichita and Michoud facilities of The Boeing Company. Development at the Michoud Plant consists primarily of refinement of MSFC processes as related to the manufacturing of the booster stage S-1C. A fourth category will cover subcontractor efforts.

Wherever possible, the same processing techniques will be used at both MSFC and Michoud facilities. At this time, the only firm methods are those applicable to the fuel tank assembly bulkhead structural test unit. Others are of a preliminary nature. These processes will be verified during the fabrication of the test components. Paragraph 3.3.1.4 of this section lists typical manufacturing process documents. These documents will be kept current and others added upon completion. The process development requirements to fabricate the booster stage S-1C. As work is accomplished to improve the state-of-the-art and as the design parameters are established, this section will be modified.

3.3.1.1 Process Development - Boeing/Michoud Plant

Refinement of techniques established at MSFC will be carried out to reflect Michoud requirements. Operator training and process and equipment certification will be conducted concurrently. Programs will be conducted in the areas listed.

3.3.1.1.1 Welding

Weld development programs will be conducted initially using a universal flat-plate holding fixture (Universal Development Weld Fixture DWF-300-00001) to establish basic welding parameter. This universal fixture may be used for welding test plates in the flat, vertical, and horizontal positions. (See Figures 3-3, 3-4 and 3-5)

Process development for fusion welding fittings to apex and base gore segments. The simulated fitting development weld fixture DWF-300-00002, capable of holding up to one-inch thick material, will be used to develop the welding techniques required to attach the fittings and polar cap to the gores. (See Figure 3-6)

Process development for fusion welding apex gore to base gore. Using the basic welding parameters established on universal fixture DWF-300-00001, full-scale test-panel welding of the apex-to-base joint will be conducted using apex-to-base development weld fixture DWF-300-00003. (See Figure 3-7)

U3 4211 4000

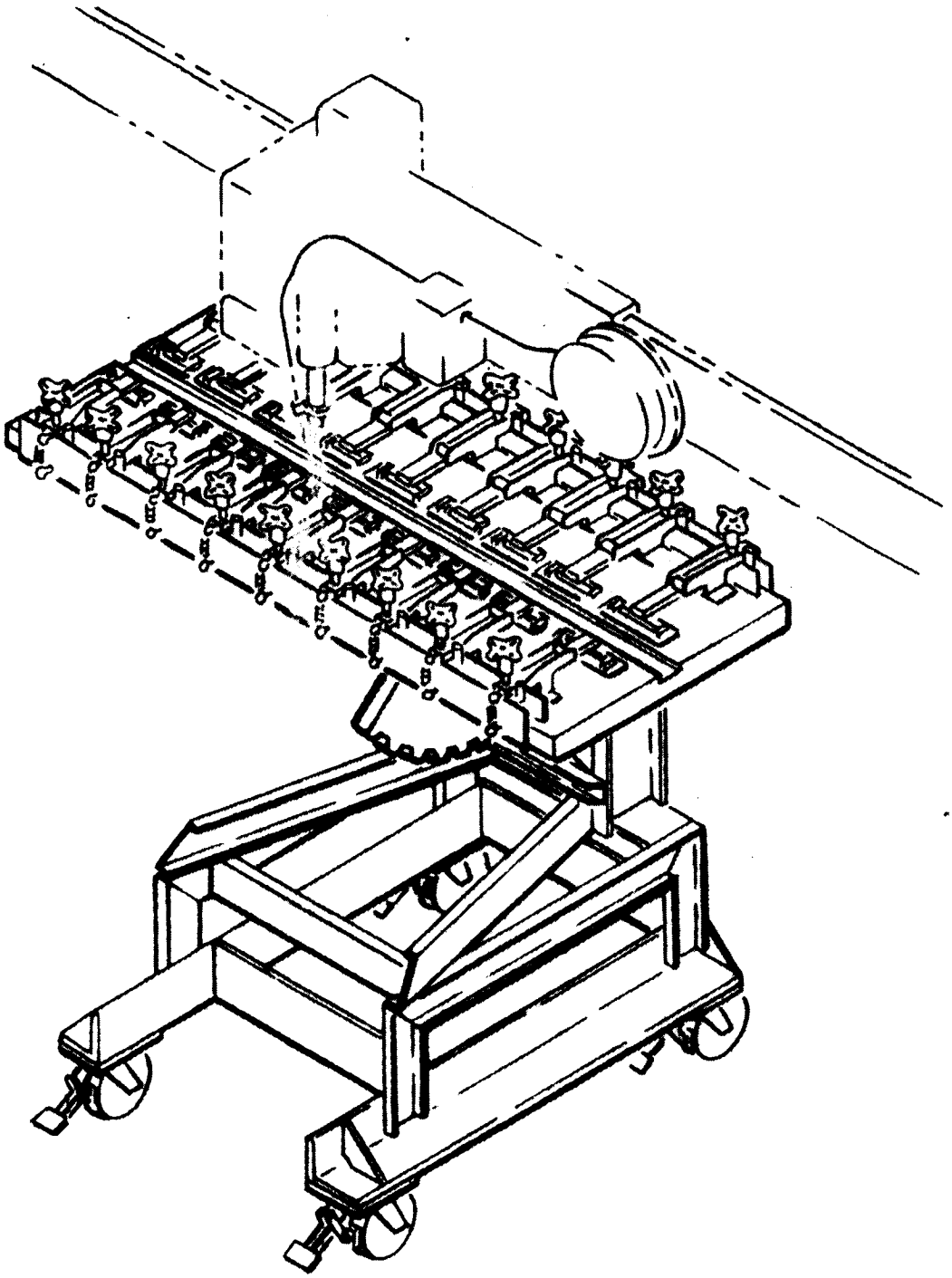

Figure 3-3 UNIVERSAL DEVELOPMENT WELD FIXTURE DWG 300-00001 FLAT POSITION

J 4211 4000

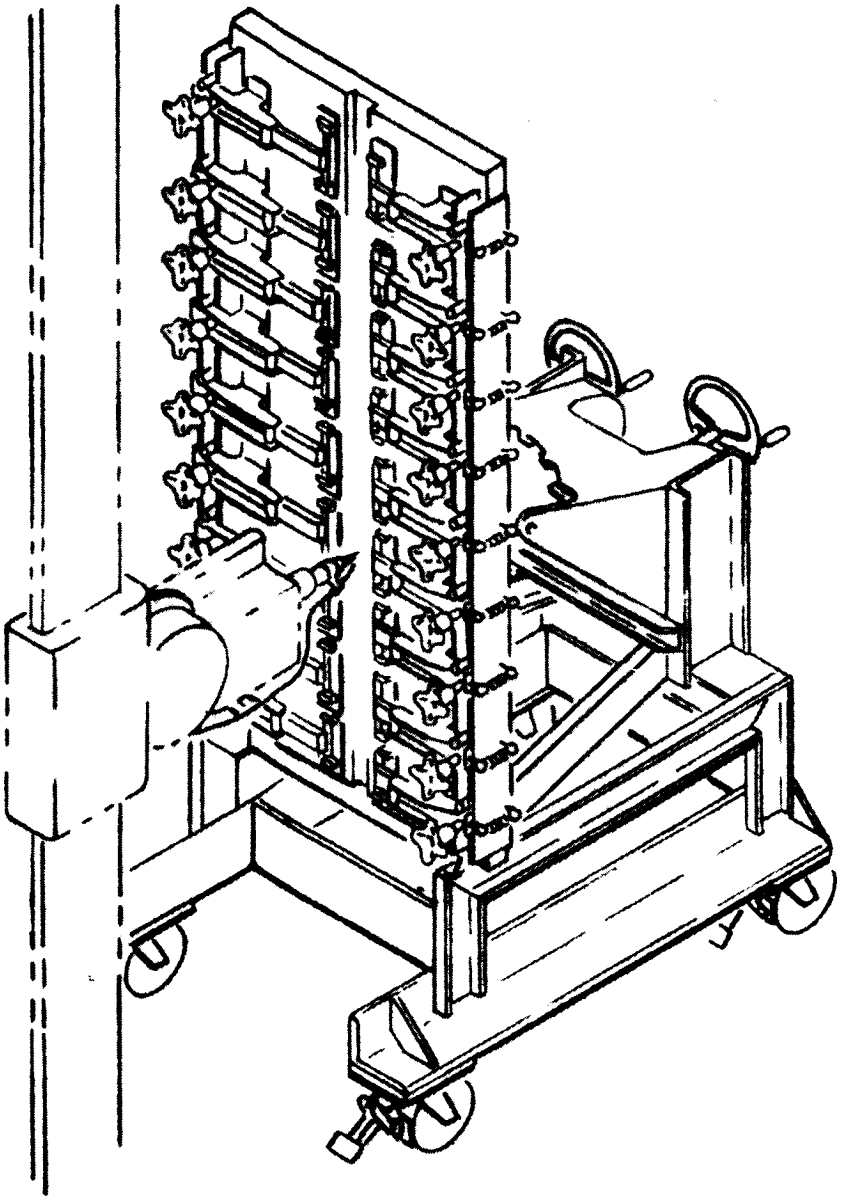

Figure 3-4 UNIVERSAL DEVELOPMENT WELD FIXTURE DWF-300-00001 ROTATED FOR VERTICAL WELDING.

U3 4211 4000

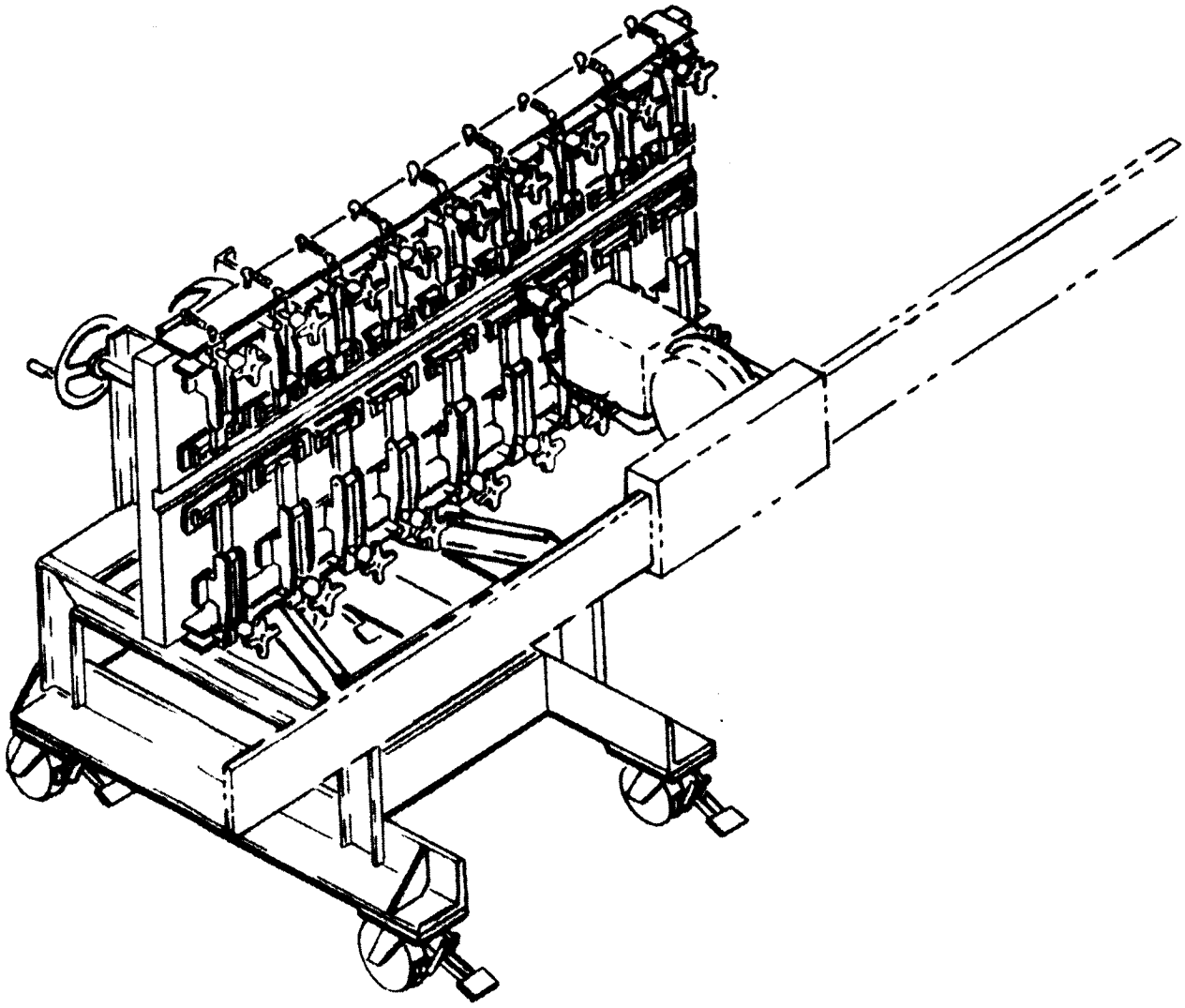

Figure 3-5 UNIVERSAL DEVELOPMENT WELD FIXTURE DWF-300-00001 ROTATED FOR HORIZONTAL WELDING.

U3 4211 4000

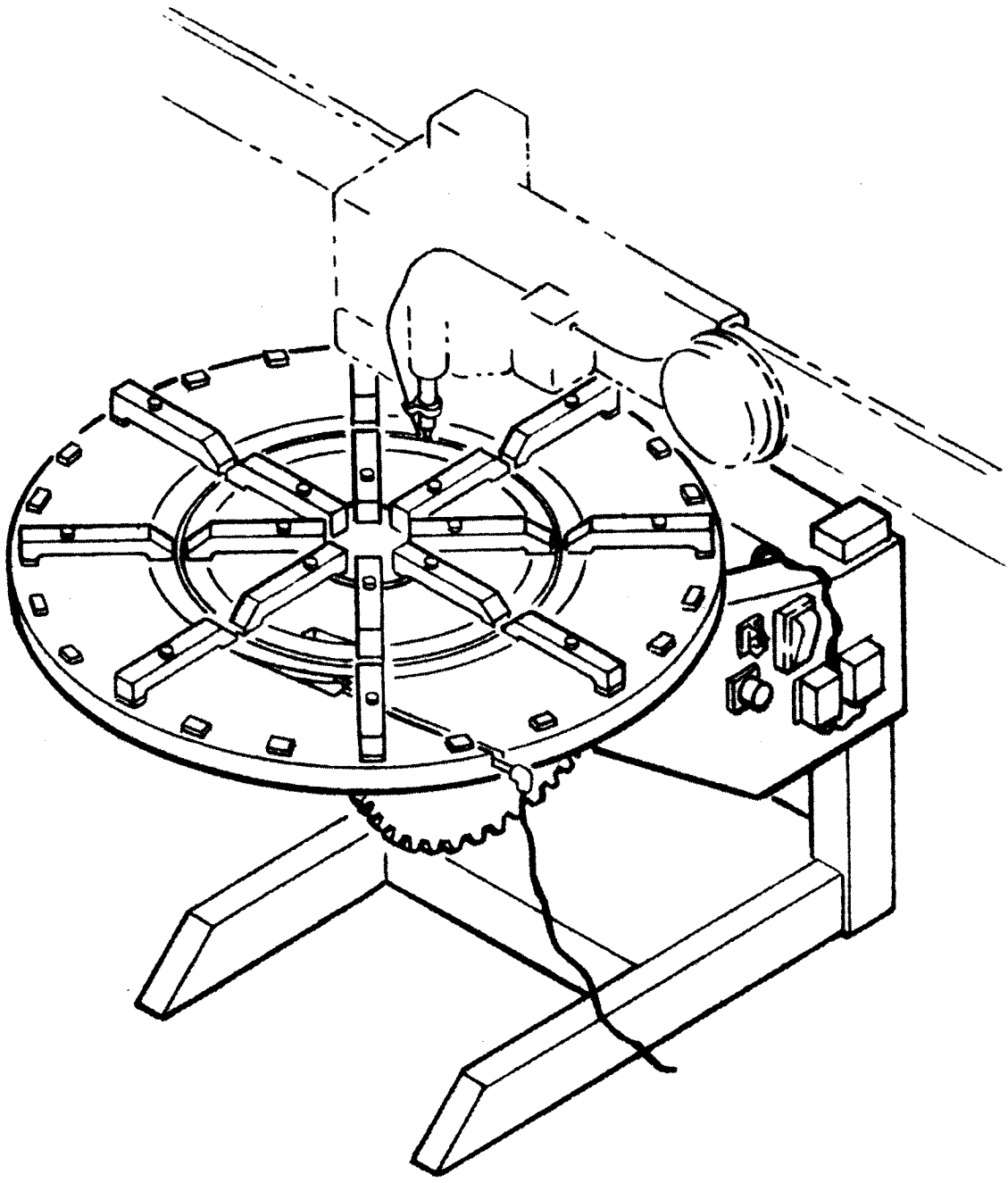

Figure 3-6 SIMULATED FITTING DEVELOPMENT WELD FIXTURE DWF-300-00002

U3 6211 4000

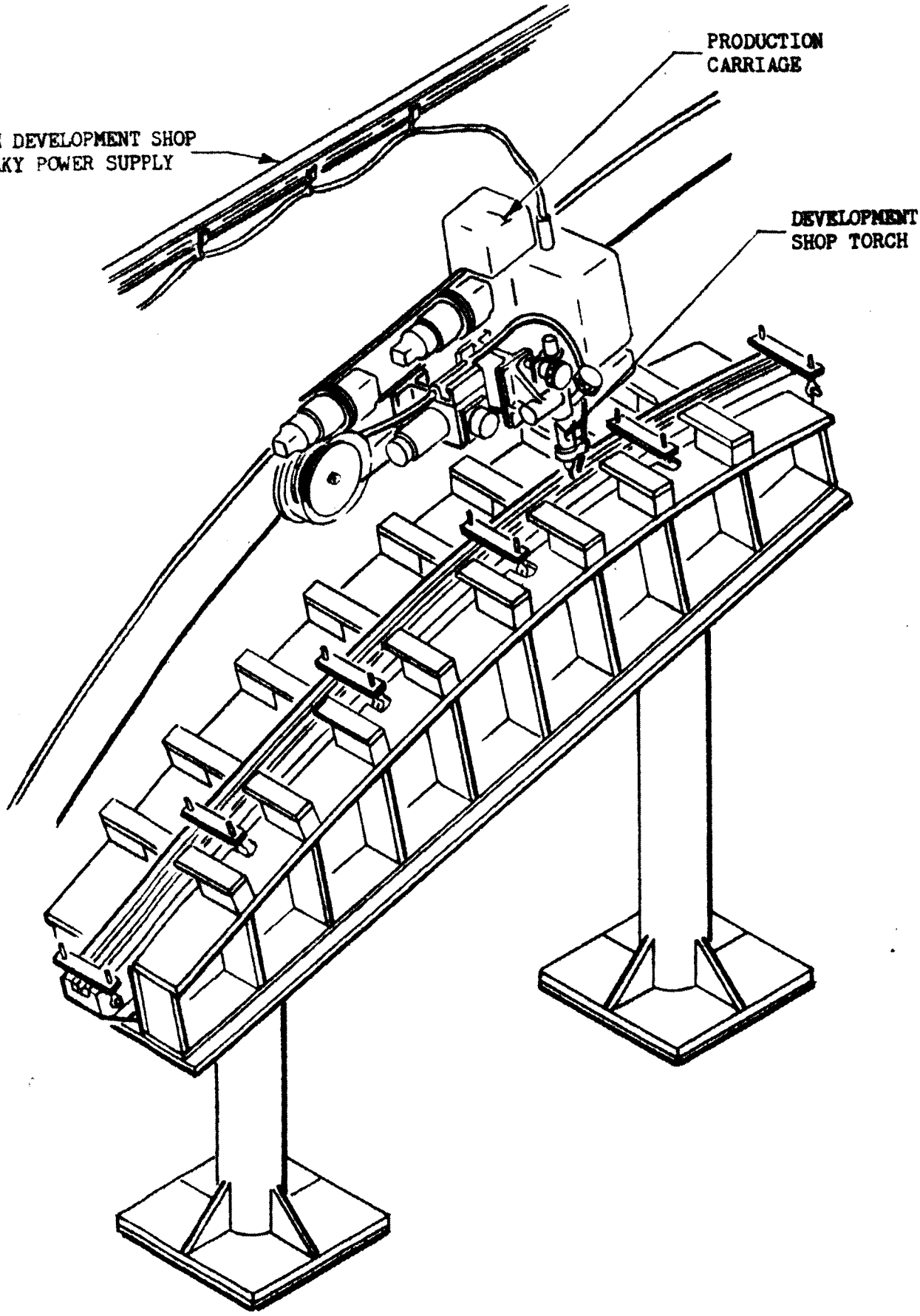

Figure 3-7 SIMULATED APEX TO BASE DEVELOPMENT WELD FIXTURE DWF-300-00003

13 4211 4000

3.3.1.1.1 (Continued)

Process development for gore-to-gore assemblies. Production welding carriages and facilities will be installed on gore-to-gore development weld fixture DWF-300-00004, where they will be debugged and used to develop setting and train operators. (See Figure 3-8)

Process development for fusion welding Bulkhead assembly to Y-Ring assemblies. (See Figure 3-9)

Process development for fusion welding polar cap to head assemblies. (See Figure 3-6)

Process development for fusion welding LOX and fuel fitting assemblies. To support the production welding of the fuel suction elbows, Manufacturing Development will be required to determine the weld settings, shrink tolerances, and techniques before production assemblies can be fabricated. Manufacturing Development will utilize aft fuel fitting test weld fixture TWF2-304-24216 and 60 to fabricate the aft fuel fitting assemblies for the first mockup head assembly (See Figure 3-10)

Determination of manual weld properties in terms of reliability and repeatability.

Acceptance-test weld equipment to verify performance and endurance capability. Welding equipment acceptance test weld fixture DWF-300-00007 will be constructed to utilize a standard side beam and carriage with motor and speed controls which will be mounted on a fabricated pedestal. The pedestal will be designed to allow the beam to be rotated for vertical acceptance weld testing. After acceptance tests are completed, the welding system would be released to production and the fixture made ready for the next acceptance test. (Figures 3-11, 3-12, and 3-13)

Refinement and improvement of fusion welding techniques for Y-Ring.

Process development for fusion welding of skin segments.

Process development for fusion welding of LOX tunnel components and assemblies.

Process development for TIG spot welding of clips and attachments.

Process development for fusion welding of circumferential joints.

Establishment of weld or training criteria.

Establishment of process control documentation for all production welding operations.

3.3.1.1.2 <u>Cleaning</u>

Development of cleanliness requirements for Saturn S-1C propulsion system and subsystem hardware.

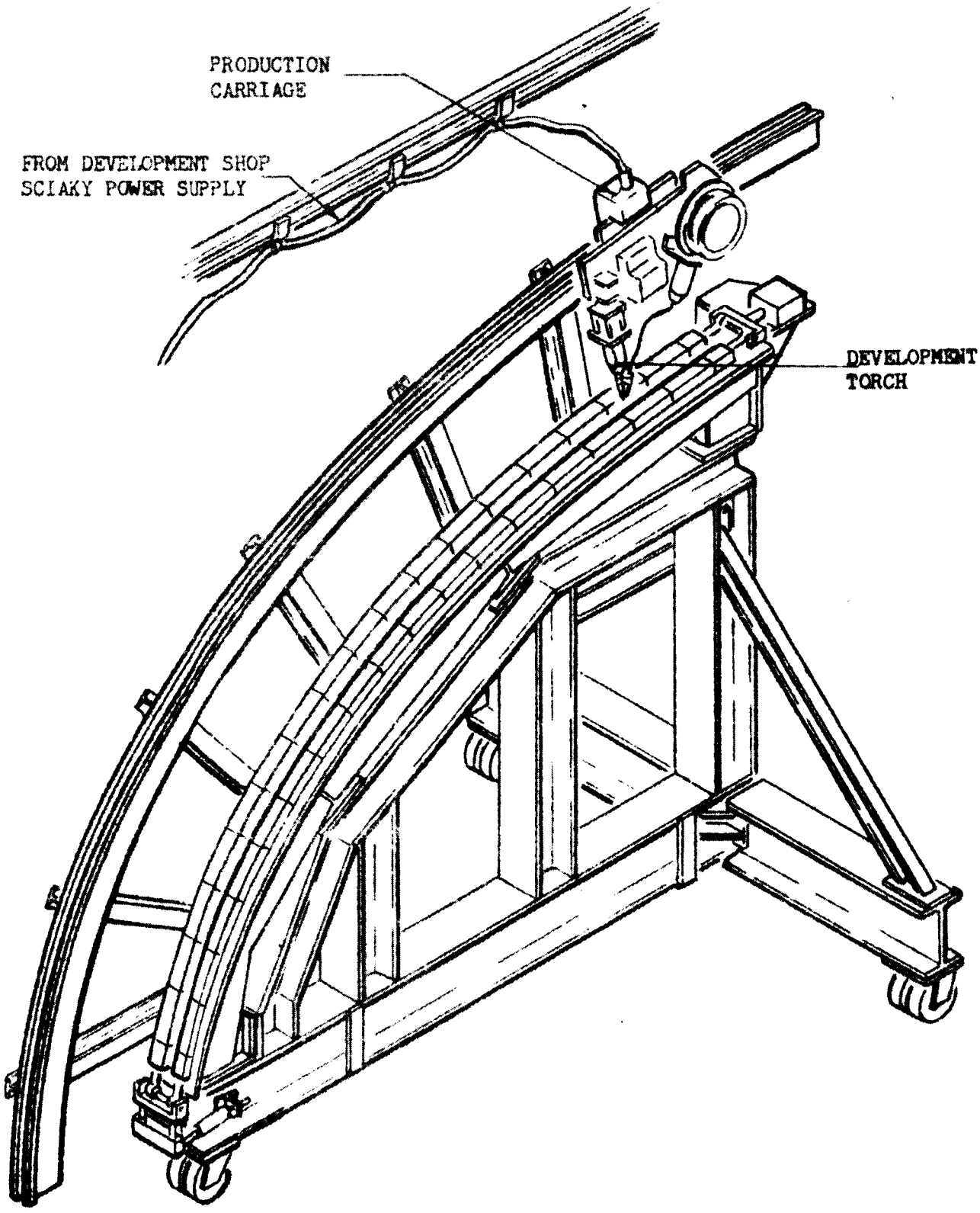

Figure 3-8 SIMULATED GORE TO GORE DEVELOPMENT WELD FIXTURE
D[illegible]-300-00004

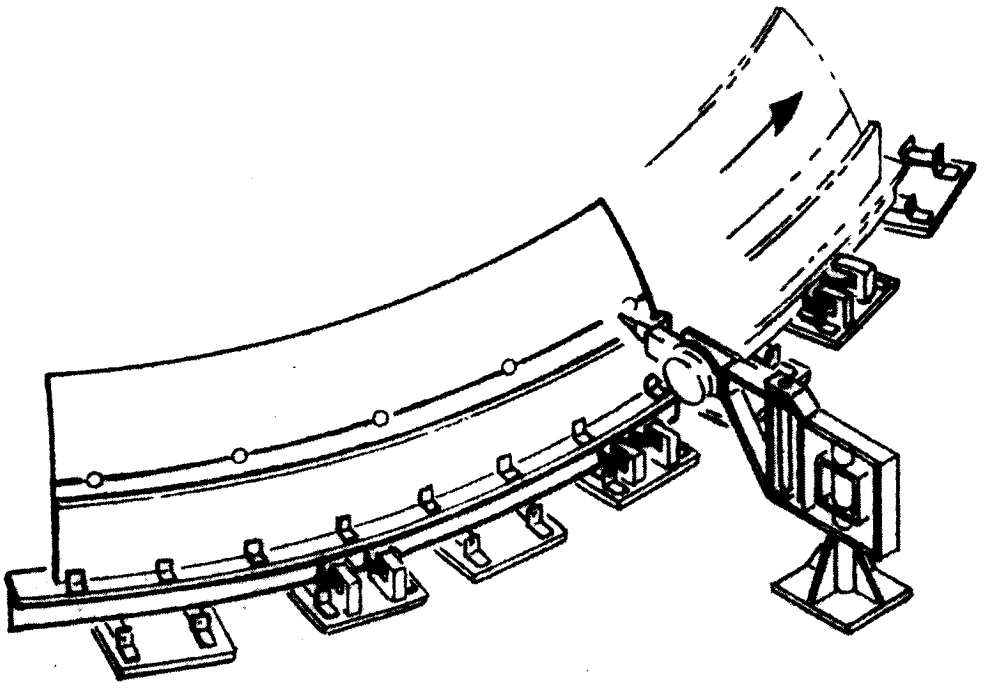

Figure 3-9 HORIZONTAL DEVELOPMENT WELD FIXTURE Y-RING TO BULKHEAD DWF-300-00005

U3 4211 4000

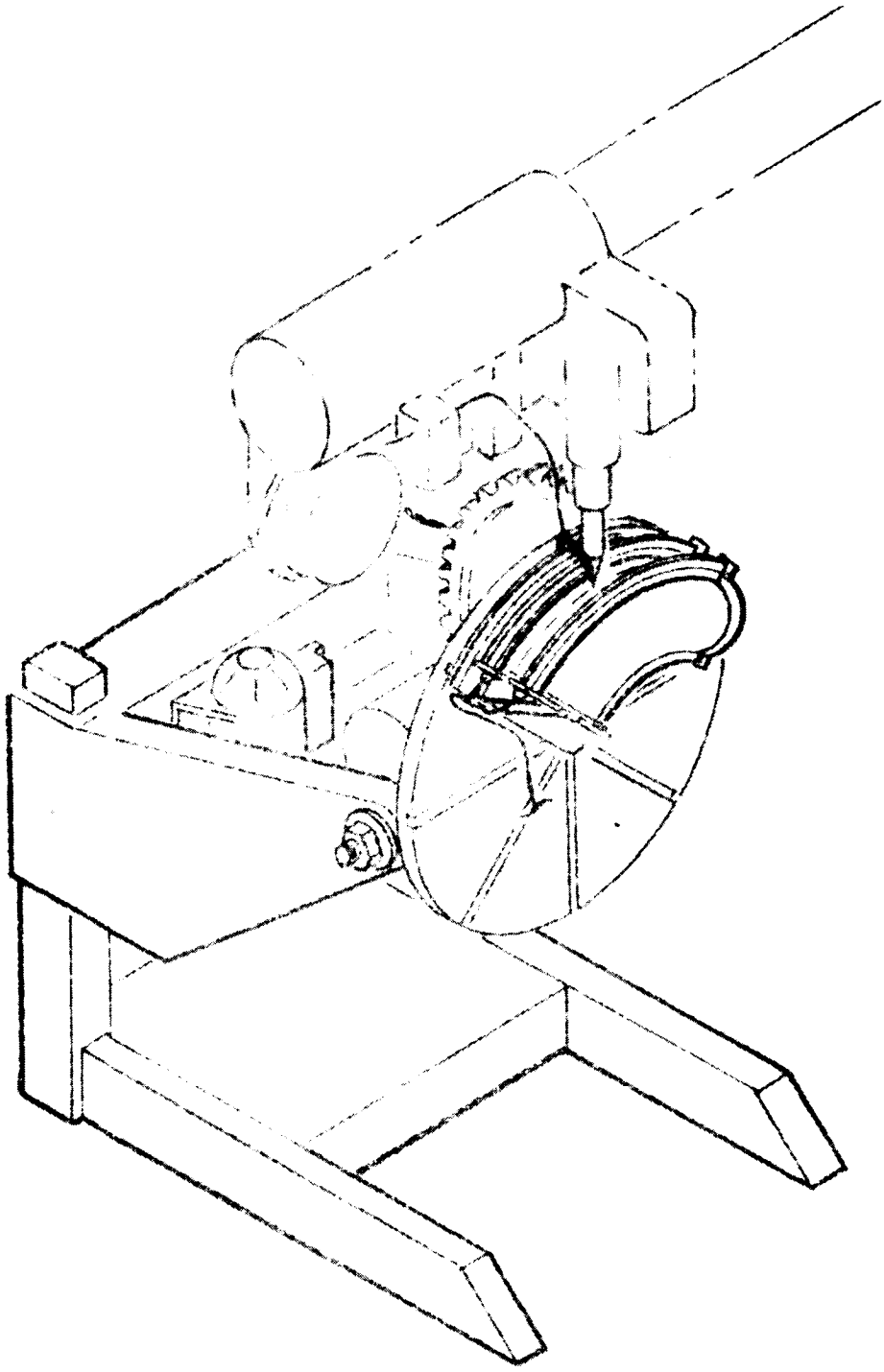

Figure 3-10 AFT FUEL FITTING TEST WELD FIXTURE ELBOW JOINING OPERATION SHOWN TWF2-304-24216 & 60

U3 4211 4000

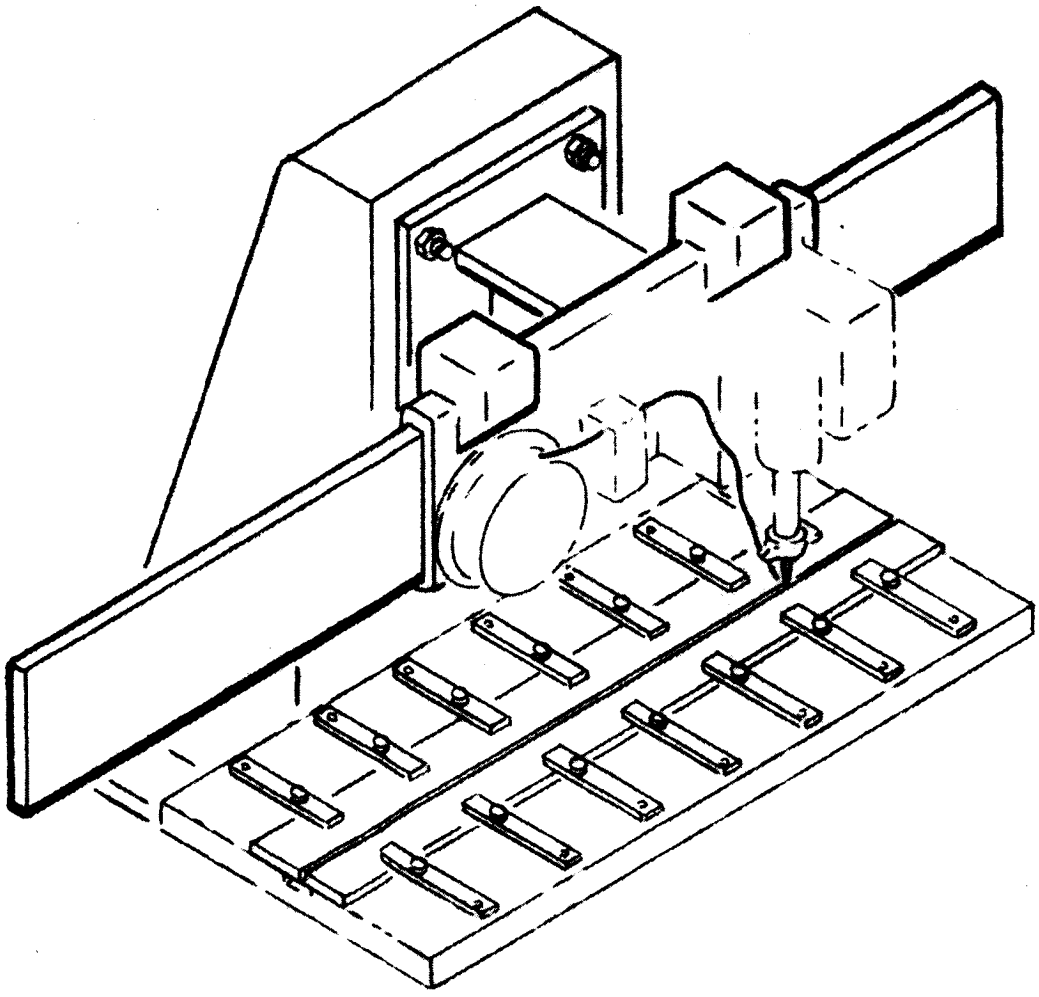

Figure 3-11 EQUIPMENT ACCEPTANCE TEST FIXTURE DWF-300-00007
FLAT POSITION

U3 6211 4000

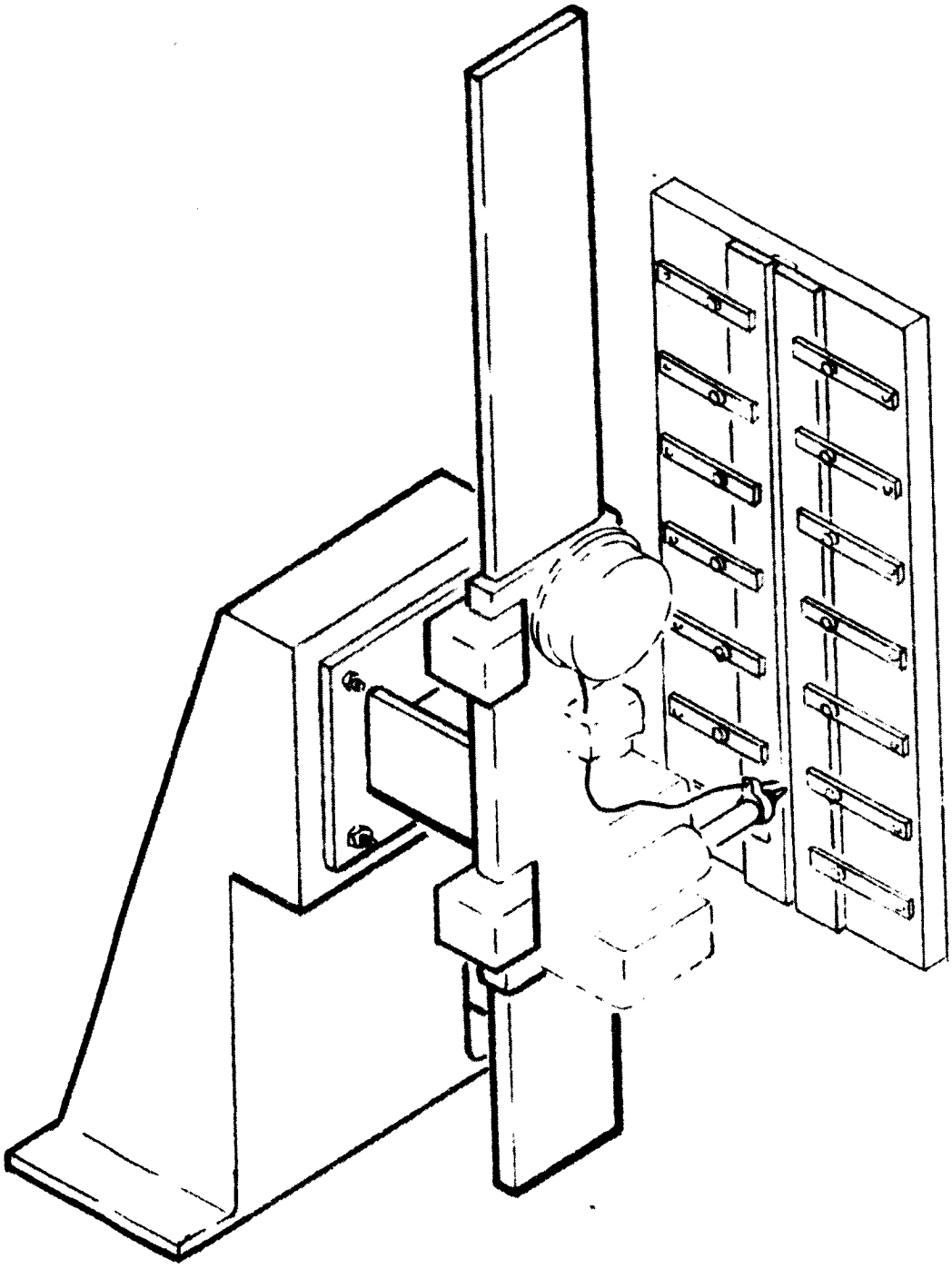

Figure 3-12 EQUIPMENT ACCEPTANCE TEST FIXTURE DWF-300-00007
ROTATED TO VERTICAL POSITION

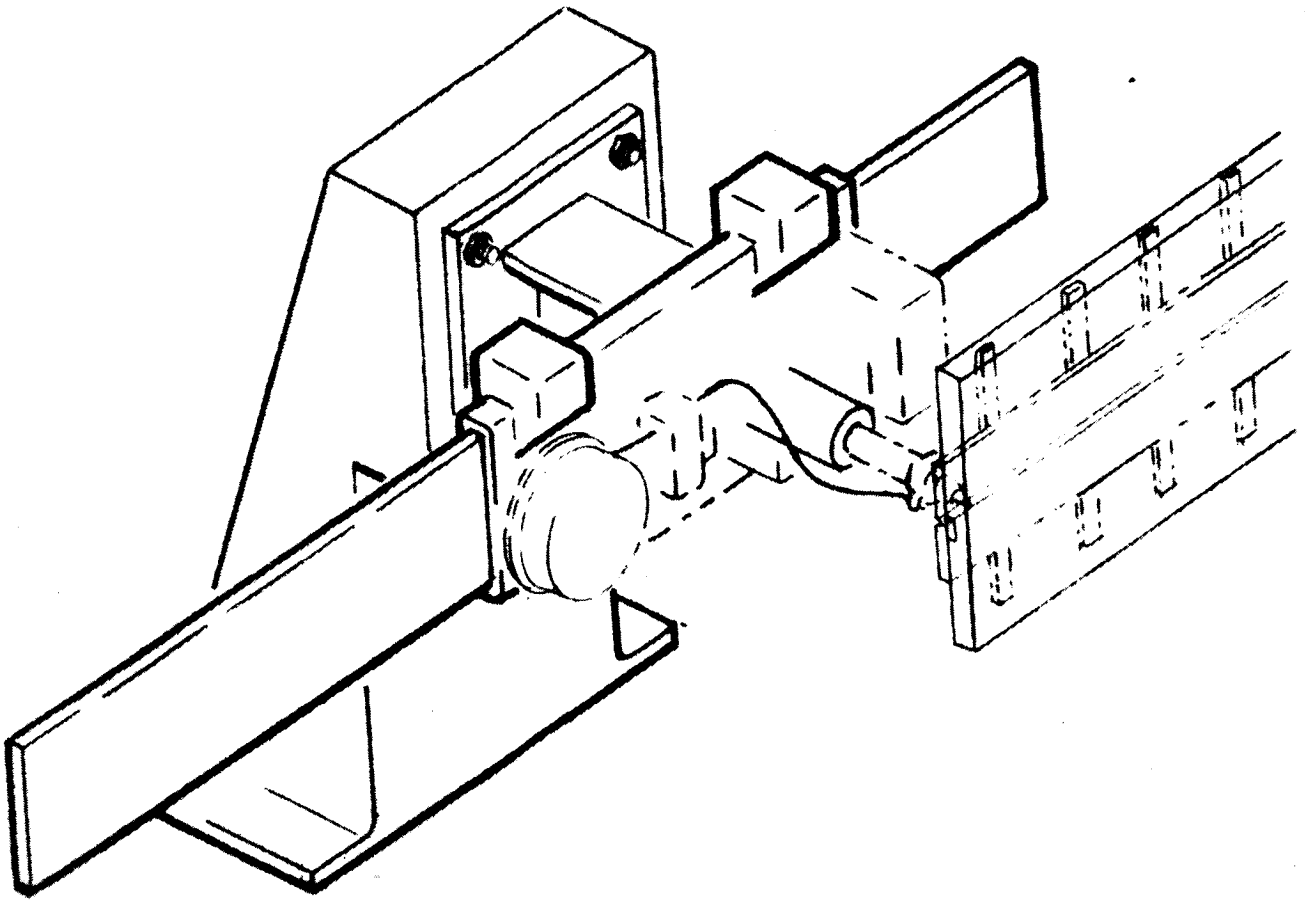

Figure 3-13 EQUIPMENT ACCEPTANCE TEST FIXTURE DWF-300-00007
HORIZONTAL POSITION

U3 4211 4000

3.3.1.1.2 (Continued)

Development of cleaning and etching processes for 2219 aluminum.

Development of chemical or mechanical methods for cleaning weld surfaces prior to and after welding.

Establishment of process control documentation for all production cleaning requirements.

3.3.1.1.3 Chemical Milling

Development of procedures for chemical milling 2219 aluminum.

Establishment of process control documentation for all production chemical milling requirements.

3.3.1.1.4 Conversion Coating

Development of methods for conversion coating in-process materials.

Establishment of process control documentation for all production conversion coating requirements.

3.3.1.1.5 Foaming

Development of foaming techniques for fabrication of the S-1C tuel tank exclusion riser.

Establishment of process control documentation for all production foaming requirements.

3.3.1.1.6 Insulation

Development of installation and repair procedures for all S-1C insulation requirements.

Establishment of process control documentation for application and repair of all insulating materials used in production.

3.3.1.1.7 Bonding

Development of techniques to satisfy established bonding requirements.

Establishment of process control documentation for all production bonding requirements.

3.3.1.1.8 Machining

Development of techniques for trimming of components prior to welding.

Development of Y-Ring machining techniques.

3 -211 4000

3.3.1.1.8 (Continued)

Evaluation of cutting fluidd for use in machining processes.

Evaluation of process control documentation for all production machining requirements.

3.3.1.1.9 Portable Tools

Evaluation and selection of portable tools to assure capability for intended application and compatibility with factory cleanliness requirements.

Establishemnt of process control documentation for all production portable tool requirements.

3.3.1.1.10 Fasteners

Establishment of fastener installation requirements.

Establishment of process control documentation for all production fastener installation requirements.

3.3.1.1.11 Heat Treating and Heat Sources

Development of heat-treat processing for Y-Ring weldments.

Development of heat-treat processing for Y-Ring segments after rolling to reduce residual stresses.

Development of methods and processes for aging gore apexes and bases to contour.

Establishment of process control documentation for all production heat-treat requirements.

3.3.1.1.12 Electrical/Electronic

Establishment of process criteria for printed cables and connectors.

Establishment of process criteria for potting of components.

Establishment of insulation and cable-sheathing process criteria

Definition of wire bundle processing requirements.

Definition of printed circuit board processing requirements.

Establishment of process control documentation for production electrical/electronic assemblies.

U3 4211 4000

3.3.1.1.13 Forming

Development of tube forming and flairing methods.

Establishment of process control documentation for all production tube forming and flairing requirements.

3.3.1.1.14 Metallurgy and Non-destructive Testing

Development of X-ray interpretation techniques for heavy aluminum weldments.

Development of weld defect locating techniques.

Development of producible weld allowables.

Development of stress corrosion allowables.

Establishment of process control documentation in the areas of metallurgy and non-destructive testing as required.

3.3.1.2 Process Development - Boeing/Wichita Facility

3.3.1.2.1 Chemical Processes

Development of cleaning, etching, conversion coating criteria for Wichita-produced hardware.

Establishment of process control documentation for all production chemical process requirements.

3.3.1.2.2 Machining

Development of machining criteria for presculptured skin and gore panels.

Establishment of process control documentation for critical production machining operations.

3.3.1.2.3 Heat Treating and Heat Sources

Development of heat treat source criteria for age-formed components.

Development of heat treat criteria for welded steel tubular assemblies.

Establishment of process control documentation for critical production heat treat operations.

3.3.1.2.4. Forming

Development of bulge forming techniques for gore segments and polar caps.

Development of age forming techniques for skin segments.

3.3.1.2.4 (Continued)

Development of hammer forming process criteria for fuel fitting elbows.

Development of forming methods for titanium and aluminum engine-fairing parts.

Development of tube gathering techniques for engine purge system.

Development of tube "T" forming techniques for S-1C components.

Establishment of process control documentation for all production forming operations.

3.3.1.3 Process Development - Subcontractor

MSFC and Boeing will use established subcontractors to minimuze out-plant development requirements. MSFC and Boeing will provide development support for their respective subcontractors where necessary. Each will work independently to assist the subcontractor; however, problems affecting both MSFC and Boeing concerning one subcontractor; will be jointly coordinated.

3.3.1.3.1 Chemical Milling

Development of chemical milling of bulge-forming gores by Ryan and Martin.

3.3.1.4 Typical Process Control Documents

3.3.1.4.1 MSFC - MPROC (Manufacturing Process)

Welding of fittings into the Bulkhead for the S-1C Vehicle	M-ME-MPROC-200.2 December 1, 1962
Welding of Skins for the S-1C Vehicle	M-ME-MPROC-300-3 December 1, 1962
Welding of Bulkhead Gores for the S-1C Vehicle	M-ME-MPROC-200.1 December 3, 1963
The Acceptance of Spooled Type 2319 Aluminum Weld Filler wire for the S-1C Vehicle	M-ME-MPROC-700.1 December 4, 1963
Hydraulic Bulge Forming of 34" Center Pieces for the S-1C (c-5) vehicle	M-ME-MPROC-445.0 December 27, 1963
Machining of Tank Skin Sections for the S-1C (C-5) Space Launch Vehicle	M-ME-MPROC-510.0 January 2, 1963
Surface Treatment of Weld Areas of the S-1C Bulkhead Test Fuel	M-ME-MPROC-150.9 January 22, 1963
The Surface Treatment of Skin and Bulkhead Material for the S-1C Vehicle	M-ME-MPROC-150-7A January 30, 1963

3.3.1.4.2 Boeing - MPCD (Manufacturing Process Control Document)

Y-Ring Welding	MPCD D5-11636
Y-Ring Stress Relief	MPCD D5-11578
Machining Welded Y-Ring	MPCD D5-12539
Y-Ring Cleaning and Coating	MPCD D5-11580

3.3.2 Specialized Manufacturing Development and Production Equipment

3.3.2.1 Introduction

This section covers the development shop specialized equipment and production shops specialized equipment of the Boeing Company, Michoud. The development and production effort to manufacture the S-1C Stage at Michoud will require equipment to support only the assembly installation and rework of fabricated components. Most of this equipment is standard; however, some specialized equipment will be required to perform specific tasks. Equipment of this nature is listed below for reference. This list will be kept current as new items are defined.

3.3.2.2 Development Shop Specialized Equipment - Fusion Welding Systems

Sciaky, 600 ampere, 100 percent duty cycle power supply, MIG - TIG capacity with mast-mounted side beam, carriage, wire feed system, proximity control, oscillator, vernistat, and special carriage curved track operation.

Linde, 500 ampere constant current TIG and 750 ampere constant potential MIG missile maker with mast-mounted side beam, wire feed system, carriage, oscillator, and proximity controls.

3.3.2.3 Production Shops Specialized Equipment

3.3.2.3.1 Vertical Boring Mill - Y-Ring Machining

Niles, 27-foot diameter table with maximum of 42 foot diameter. Special table extensions added to provide 33-foot diameter capacity. Maximum height under column - 12 feet. Table drive 250 horsepower. Table speed 0 to 10 rpm. Independent feed controls for each cutting head.

3.3.2.3.2 Welding and Machining Positioner - Aft Fuel Fitting Assembly (Proposed)

This is a 1000 pound (approximately) positioner designed for eccentric loading of fixtures with 0.0005 inch per inch radius backlash and 0.012 to 1.20 rpm speed range, one percent regulation and resetability.

6211 4000

3.3.2.3.3 Welding and Machining Manipulator - Aft Fuel Fitting (Proposed)

This manipulator is an eight-inch vertical by eight-inch horizontal unit with sufficient rigidity to support a millhead at the end of the horizontal beam, six feet from the vertical column centerline. Maximum deflection shall not be greater than 0.005 of an inch.

3.3.2.3.4 Fusion Welding System - Fittings-toGores

Linde, 500 ampere constant current TIG and 750 ampere constant potential MIG missile maker with torches, wire feed controls, and an oscillator specifically made for attachment to fixture WFA-302-7057.

3.3.2.3.5 Fusion Welding System - Apex-to-Base

Sciaky, 600 ampere, 100 percent duty cycle power supply, MIG - TIG capability, vernistat, oscillator, and special carriage for use on fixture WF-302-7010.

3 3.2.3.6 Fusion Welding System - Gore-to-Gore

Sciaky, 600 ampere, 100 percent duty cycle power supply, MIG - TIG capability, vernistat, oscillator, and a special carriage for use on fixture WF-302-7012.

U3 4211 4000

3.4 INTEGRATED SUPPORT PARTS REQUIREMENTS - SPARES

To achieve assets management of all Stage hardware, a technique has been developed to integrate the anticipated delivered spares with the parts scheduled for production installation, production overage and refurbishment. The anticipated delivered spares will be established as a capability, or stock level. A constraint is placed on the amount of accelerated procurement or fabrication to establish the stock levels. The total quantity shall not exceed that amount of hardware required to complete delivery of the ninth flight unit of the contract.

Further, the stock levels shall be such that, if no additional requirements for spare parts are received, the stocks of parts will be incorporated into production no later than the ninth flight unit.

Activation of the technique will be accomplished through the use of an Integrated Support Parts Requirements (ISPR) form. (Figure 3-14)

The method of operation, utilizing the Integrated Support Parts Form is outlined below:

The Integrated Support Parts Form is a means of indicating the estimated number of support parts which should be available in stores for both in-house use and anticipated NASA demands. As such, it is an aid to manufacturing in scheduling orders in advance of the normal production schedules to fulfill those support needs.

The form, when completed, indicates the latest point that a demand order from NASA under Exhibit A Part III-D of Contract NAS 8-5608 can be received without causing a disruption in production schedules; and it indicates support needs of Boeing after the production parts are no longer available.

4211 4000

INTEGRATED SUPPORT PARTS REQUIREMENTS

PART NO.
E.O. NO.
EFFECTIVITY

NOMENCLATURE

PROCUREMENT CODE	LEAD TIME	REPAIR TIME

NEXT HIGHER ASSY.	QTY/NHA	UNITS PER (STAGE)(GSE)	UNIT COST

REMARKS

ITEM REQUIREMENTS	1964												1965												1966												1967											
	J	F	M	A	M	J	J	A	S	O	N	D	J	F	M	A	M	J	J	A	S	O	N	D	J	F	M	A	M	J	J	A	S	O	N	D	J	F	M	A	M	J	J	A	S	O	N	D
MFG. & REFURBISH																																																
IN-PLANT TEST																																																
MTO																																																
MSFC & AMR																																																
PRODUCTION REQ'S.																																																
CUMULATIVE REQ'S.																																																
CAPABILITY																																																
ADDED CAPABILITY REQUIRED																																																

1 PRODUCTION DISRUPTION

2 PROGRAM DISRUPTION

MANUFACTURING						
IN-PLANT TEST						
BOOSTER TEST						
SYSTEMS ENG.						

Figure 3-14

U.S. 4211 4000

4.0 AUTHORIZED TOOLING

4.1 CONCEPTS

The tooling used at Michoud will be identical to the tooling used at MSFC wherever practical and conducive to economical production. When MSFC phases out of the S-1C program, the tooling will be transferred to Michoud and will enable increased production at the Michoud Facility.

4.2 TOOLING POLICY

4.2.1 Production Support

Tools will be designed to support a production rate as reflected in present schedules.

4.2.2 Duplicate Tools

Duplicate tools will be fabricated as required to support the established production schedules.

4.2.3 Tool Service Life

The service life of all tools will exceed the fabrication of twenty-five vehicles or be in excess of five years.

4.2.4 Master Gaging (See Figure 4-1)

Master gaging will be provided to control interchangeability and replaceability of those packages so designated by engineering design or required for manufacturing control. Internal interchangeability or replaceability of a subcontracted package will be negotiated between the Saturn Booster Branch Manufacturing Department and the subcontractor.

4.2.5 Design Tools

All designed tools will be constructed in accordance with established Boeing and MSFC tool specifications.

4.2.6 Non-Design Exceptions

Non-Design tools (tools which can be fabricated directly from information supplied on the engineering drawing and from existing Boeing tool documents) will be limited to those tools described in Boeing Tool Documents. Non-design tools will be designated and ordered by the Manufacturing Engineer during the preparation of the Manufacturing Plan.

AN INTERCHANGEABLE OR REPLACEABLE ITEM
AS ESTABLISHED BY CONTRACT

EITHER:

DOES NOT REQUIRE A MASTER TOOL
because dimensional control is practical.

OR:

DOES REQUIRE A MASTER TOOL because exceptionally close tolerances are not compatible with practical manufacturing processes.

IF

MASTER TOOL IS REQUIRED

IT IS CALLED:

A MASTER TOOL IS MADE → MASTER GAGE (MG) OR MASTER DRILL GAGE (MDG) → MULTIPLE SETS OF MG'S ARE DUPLICATED BY A REFERENCE GAGE. IT IS CALLED A MASTER CONTROL GAGE (MCG).

HOWEVER

THE MATING VEHICLE SECTION MAY BE MASTERED BY A SECONDARY GAGE (SEG)

OR

MULTIPLE SETS OF MDG'S ARE DUPLICATED FROM THE ORIGINAL UNIT.

Figure 4-1

U3 4211 4000

4.2.7 Tool Design Exceptions

Boeing tool designs will be comparable to MSFC tool designs with the following exceptions:

a) Boeing will assemble the basic booster structure in the vertical position (versus horizontal) for the MSFC.

b) Those MSFC designs not compatible with Boeing production schedules.

c) Those MSFC designs of large tools which will not permit shipment by common carrier.

d) Economical reason, i.e., where it can be ascertained that a change in design would prove beneficial either for tooling economy, production economy or a combination thereof.

4.2.8 Tool Design Criteria

Tool design criteria will satisfy the following basic requirements of affected organizations: manpower, time and motion, schedules, health, safety, power requirements, accessibility, inspection and factory location with respect to height, special footings and overhead service. All major tools will be designed to permit dimensional changes, relocation of critical positions, and as much flexibility as possible to allow incorporation of engineering changes with the least possible cost and production delay.

4.2.9 Optical Tooling

Items not requiring master tools will utilize dimensional control through use of optics.

4.3 SCOPE

4.3.1 The scope of the tooling program is as follows:

The Government will design and provide to the contractor the tooling drawings, and other documentation required for those tools which are common to the requirements of the Marshall Space Flight Center assembled stages, the contractor Systems Checkout Stage and flight stages. The contractor shall notify the Contracting Officer in writing those dates upon which the Contractor will require such documentation to support manufacturing and assembly operations at the Michoud Facility. Such design shall be provided either as completed drawings or, in the event that such drawings will not be required by Marshall Space Flight Center, or will not be provided on the schedule requested by the Contractor for operationf at Michoud, a Task Order shall be issued under Part IX hereof upon request by the contractor to permit the development of such operation at the Michoud Facility.

U3 4211 4000

4.3.1 (Continued)

Tooling for fabrication of components common to the Marshall Space Flight Center Ground Test Stages shall be designed and fabricated on a schedule and in a manner to support the orders for such components issued under PART IX. Contractor shall, in coordination with MSFC, prepare a tooling plan for the fabrication of stage components setting forth a description of the tool, the design concept, starting date for design and for fabrication and the required activation date. The plan shall also include estimated design hours, fabrication hours, and activation hours and material cost. Contractor shall report the status of physical completion and manhours for such tools in a manner to be specified by the Contracting Officer. Contractor shall obtain Contracting Officer's approval of the tooling concept prior to proceeding with fabrication of those tools for components to be provided under PART IX. With respect to tools required for the performance of PART III which have not been released to support PART IX, Contractor shall submit the tooling concept and the tool design for review and approval prior to proceeding with the design or the fabrication of such tools; provided, however, that the contractor may proceed with the design and fabrication of the fabrication of such tooling pending approval.

4.4 TYPES

The following are the major types of authorized manufacturing tooling to be used for component fabrication and assembly of the S-1C vehicle.

4.4.1 Assembly Fixtures

Those tools which are used for the mechanical assembly of components subassemblies, major assemblies and final stage assembly.

4.4.2 Welding Fixtures

Those tools which support and dimensionally locate component parts for subassembly and major assembly welding operations.

4.4.3 Holding Fixtures

Those tools used to hold and support components parts for subsequent machining operation.

4.4.4 Handling Tools

Those tools which handle, transport, and position all components, subassemblies and major assemblies for in and outplant manufacturing operations.

3 4211 4000

4.4.5 Fabrication Tools

Those tools which hold the component parts or assembly and guide the cutting tools for subsequent machining operations.

4.4.6 Gages

Those tools used to control locations of installations, holes, patterns, diameters of assemblies, contours and/or mating surfaces.

4.5 MASTER GAGE PLAN

The Master Gage Plan for the Saturn S-1C stage establishes control of the eight major areas known at present. Additional gaging requirements will be determined upon the release of firm engineering design information. The necessary master gaging for the known requirements are as follows:

4.5.1 Interface Joint S-1C Stage to S-II Stage

Master gaging is required to control the bolt hole pattern on the interface of the S-1C stage forward skirt and the S-II stage (MG furnished by NAA).

Master gaging is required to control the outside periphery and diameter of the mating sections to facilitate assembly.

4.5.2 Engine Fairing and Fin Assembly

Master gaging is required to control the mating contour and hole pattern between the engine shrouds and the fins, and the Thrust Structure.

4.5.3 Heat Shield

Master gaging is required to control the bolt pattern and periphery.

4.5.4 Engine Mountings

Master gaging is required for interface control of the gimbal attach plane and the mating hole patterns. Gaging is also required to control the actuator linkage attach fittings.

4.5.5 Thrust Hold Down Posts and Engine Pads

Master gaging is required to control the radial and diametrical positions of the engines and thrust hold down posts.

4.5.6 LOX and Fuel Line Bolt Flanges

Master gaging is required to control the hole patterns in mating flanges.

U3 4211 4000

4.5.7 Access Doors and Panels

Master gaging is required to control the periphery and hole patterns of the access doors and panels.

4.5.8 Raceway Covers and Caps

Master gaging is required to control the contour and hole patterns for the raceway covers and caps.

4211 4000

IN THOSE CASES WHERE DIMENSIONAL CONTROL IS NOT PRACTICAL

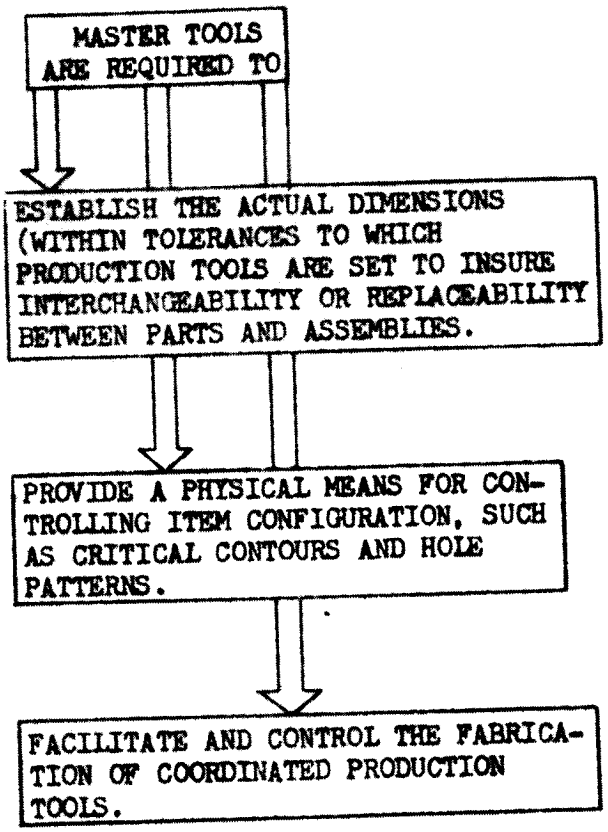

FIGURE 4-2

U3 4211 6000

THRUST STRUCTURE	M G Manufacturing Break M C G (1) Ea. Req'd.	M G Thrust Ring M C G (1) Ea. Req'd.	M D G Thrust Pad STR Engine (1) Req'd.	M G Heat Shields (1) Ea. Req'd.
FUEL TANK	MDG'S Fuel Lines Bolt Pattern (2) Req'd.	M D G Outb'd Thrust Post & Engine Pads	S E G Fairing To Thrust Structure (1) Req'd.	SEG Fin to Thrust Structure (1) Req'd.
LOX TANK	MDG's LOX Lines Bolt Pattern (2) Ea. Req'd.	MG Access Doors (1) Ea. Required		
FORWARD SKIRT	MG Interface S-1C to S-II MCG (1) Ea. Req'd. MG-C to S-II Supplier	M G Access Doors (1) Ea. Req'd.		
INTERTANK STRUCTURE	M G Access Doors (1) Ea. Req'd.	MG Access Doors (1) Ea. Req'd.		
ENGINES	MG Engine Attach MCG (1) Each MG Eng. Supplier	MDG Thrust Pad CTR Engine		
FIN	MG Fin to Thrust Structure MCG (1) Ea. Required	SEG Fin to Thrust Structure	2 MG Fin to Fairing 2 MG (1) Ea. Required	
FAIRING	MG Fairing to Thrust Structure MCG (1) Ea. Required	SEG Fairing to Thrust Structure		
RACEWAYS	MM Raceway Master Model Caps & Covers (1) Req'd.	TBG Raceway Cap Transfer Gage (1) Req'd.	2 TRG Raceway Cover Transfer Gage (1) Req'd.	

KEY 1 MDG from Engine MG 2 SEG from FAiring MG 3 SEG from Fin MG

MASTER GAGE FAMILY

Figure 4-3

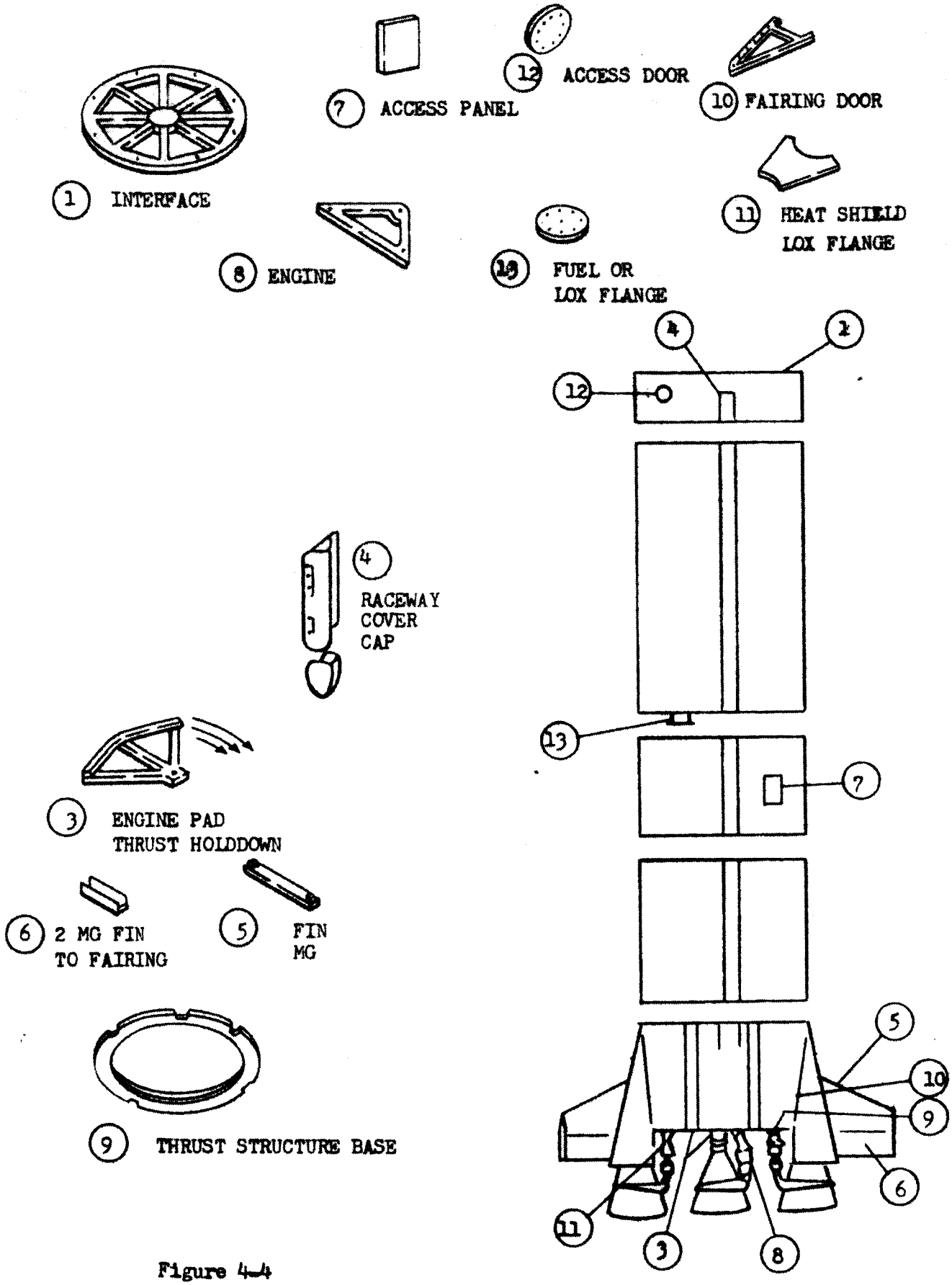

Figure 4-4

U3 4211 4000

4.6 LIST OF AUTHORIZED TOOLS

4.6.1 Thrust Structure

AF340-7071	Assembly Fixture, Upper and Lower Thrust Rings
HT370-7092	Tool - Hoisting, Center Engine Support Panel
HT370-7069	Hoisting Tool, Upper and Lower Caps, Center Engine Support
HT370-7101	Tool - Hoisting Sling, Thrust Ring
HT-370-7102	Tool - Hoisting, Center Engine Support Assembly
HT370-7107	Hoisting Tool, Holddown Post, Outboard
HT370-7108	Hoisting Tool, Thrust Post
HT370-7110	Hoisting Tool, Center Engine Post
TnTr370-18050	Trailer - Transportation, Thrust Structure
MiT335-18100	Miscellaneous Tool, Skin Panel Sub-Assembly
STR370-18100	Rack - Storage, Thrust Structure, Cylindrical Skin Panel
HT370-18100	Hoisting Tool, Skin Panel Sub Assembly Section
AF335-18100	Assembly Fixture, Skin Panel Assembly, Holddown Position
AF2-335-18100	Assembly Fixture, Skin Panel Assembly, Holddown Position
AG335-18100	Auxiliary Gage, Skin Panel Assembly, Holddown Position
HF335-18100	Holding Fixture, Skin Panel Sub-Assembly Section
HF2-335-18100	Holding Fixture, Skin Panel Pick-up Position
AF335-18300	Assembly Fixture, Skin Panel Assembly, Fin Position
AF2-335-18300	Assembly Fixture, Skin Panel Assembly, Fin Position
AG-335-18300	Auxiliary Gage, Skin Panel Assembly, Fin Position
TMF335-18300	Trim Fixture, Skin Panel Assemblies

U3 4211 4000

4.6.1 (Continued)

PP370-18300	Personnel Platform, Cylindrical Skin Assembly Thrust Structure
MrCkG335-18320	Master Checking Gage, Aft Umbilical Plate, Skin Panel Assembly
AF337-18602	Assembly Fixture, Web Assembly, Upper Ring, Fin Position
AF337-18605	Assembly Fixture, Web Assembly, Upper Ring, Holddown Position
AF337-18607	Assembly Fixture, Panel Assembly, Access Upper Ring
HT370-18703	Hoisting Tool, Web and Stiffener Assembly, Upper and Lower Thrust Ring
AF340-18703	Assembly Fixture, Web Assembly, Lower Ring, Fin Position
TT340-18703	Tooling Template, Web Assembly, Lower Ring Fin Position
AF340-18704	Assembly Fixture, Web Assembly Lower Ring, Hold Down Position
HT370-18709	Tool, Hoisting, Ring Caps, Upper and Lower
AF335-18800	Assembly Fixture, Outboard Thrust Support Assembly
MF335-18800	Mill Fixture, Thrust Post Assembly, Outboard Engine
HT370-18800	Hoisting Tool, Outboard Thrust Post Assembly and Drill Jig
LDJ335-18901	Locating Drill Jig, Stiffeners Shear Web Position I and III
PP370-18901	Personnel Platform, Assembly Fixture and Web Assembly, Center Engine Support Position I and II
AF335-18901	Assembly Fixture, Web Assembly, Center Engine Support Pos I and II

U3 4211 4000

4.6.1 (Continued)

AF335-18902	Assembly Fixture, Web Assembly, Center Engine Support, Position III and IV
LDJ335-18919	Locating Drill Jig, Stiffener Shear Web Position II and IV
AF335-18940	Assembly Fixture, Auxiliary Web, Center Engine Support Position I and III
AF2-335-18940	Assembly Fixture, Auxiliary Web, Center Engine Support, Position II and IV
AF335-19110	Assembly Fixture, Intermediate Ring Assembly, Station 152.5
AF335-19120	Assembly Fixture, Intermediate Ring Assembly Station 184.0
AF335-19130	Assembly Fixture, Intermediate Ring Assembly, Station 216
AF335-19140	Assembly Fixture, Intermediate Ring Assembly, Station 248
AF335-19300	Fixture Assembly, Intercostal Intermediate Ring
AF335-19301	Fixture Assembly Intercostal Intermediate Ring
WF335-32220	Weld Fixture, 5.0 Diameter and 7.0 Diameter Tubes, Actuator Support
WF335-32230	Weld Fixture, Structure Assembly, Actuator Support, Lower Ring
HT2-370-28800	Hoisting Tool, Inter-Tank Ring Segment, Horizontal Position

U3 4211 4000

U3 4211 4000

4.6.2 Fuel Tank

Tool Number	Nomenclature
HTF395-5045	Heat Treat Fixture - Gore Base
RF302-7000	Router Carriage - R. H. Router for Trim Fixture, Bulkhead, Gore Section
RF302-7001	Router Carriage - L. H. Router for Trim Fixture, Bulkhead Gore
WF302-7002	Carriage - Welding - Bulkhead Welding Station
T&WF302-7003	Trim & Weld Fixture - Sub Base Bulkhead Gore Section
WF302-7004	Bar Back-Up-Gore Apex to Base Section
TMF302-7006	Trim Fixture-Bulkhead Gore
HF302-7009	Holding Fixture - Apex Gore
WF302-7010	Weld Fixture - Bulkhead Gore Section Apex to Gore to Base Gore
AF302-7011	Turntable - Bulkhead Fabrication
WF302-7012	Weld Fixture - Welding Station Bulkhead Fabrication
RF302-7013	Router Fixture - Trim Station Bulkhead Skirt ("V" Ring)
T&TWF302-7014	Trim & Weld Fixture - Center Piece to Bulkhead
HT370-3015	Hoisting Tool (sling) - Bulkhead Gore Section AFT Trim
AF300-7016	Turntable - Assembly Tower Main Weld Station
HF302-7017	Holding Fixture - Bulkhead Gore Assembly
W&TF302-7018	Weld & Trim Fixture - Outboard Lox Tunnel Fitting Forward Fuel Tank to Apex Gore
TWF302-7019	Test Weld Fixture - Gore
WFA302-7020	Weld Head Manipulator Bulkhead Gore Assembly
ETMF320-7023	Control System Trim Fixture Skirt Assembly
TMF302-7023	Trim Fixture - Apex & Base Assembly

U3 4211 4000

4.6.2 (continued)

Tool Number	Nomenclature
WF302-7026	Weld Fixture - Welder Boom
HF302-7028	Holding Fixture - Bulkhead to Turntable
RF302-7030	Router Fixture - Chamfer Edge Gore Base
W&TF304-7035	Weld & Trim Fixture - Outboard Lox Tunnel to Rear Fuel Tank
W&TF304-7036	Weld & Trim Fixture - Inboard Lox Tunnel to Rear Fuel Tank
RF302-7037	Routing Spindle - Apex Gore
WF302-7038	Weld Spindle - Apex Gore
WFA302-7040	Weld Head Manipulator Long Adapter Bulkhead Gore Assembly
T[illegible]3-[illegible]-7042	Test [illegible] Fixture for Gore [illegible]ction
PF302-7043	Personnel Platform - Gore Trim Fixture
P[illegible]-30[illegible]-7047	Personnel Platform - Tri[illegible] Weld Center Piece to [illegible]lkhead (redesign of PF 302-7047)
[illegible] 302-7048	[illegible] Accessory - [illegible] Holding Bulkhead Fabrication
[illegible]37[illegible]-7053	Holding Tool ([illegible]) Bulkhead Gore (Before trim)
[illegible]-7054	Weld & Trim Fixture - Manhole in Forward Fuel & Forward Lox Tank
W&TF304-7055	Weld & Trim Fixture - Fuel Fill & Drain in Rear Fuel Tank
W&TF304-7056	Weld & Trim Fixture - Fuel Pressure Drain - Rear Fuel Tank
[illegible] 304-7057	Gantry - Tri[illegible] Fuel Fitting to Gore Apex
[illegible] 302-7058	Tilting Platform - Weld Fixture Accessory
Box[illegible]2-7059	Box Template - Gore Apex
Box[illegible]-7060	Box Template - Gore Apex

U3 4211 4000

4.6.2 (Continued)

Tool Number	Nomenclature
T.6-303-10005	Tooling Accessory for Minik Tracer "Y" Ring
T.9-300-10005	Safety Guards "Y" Ring
TrF303-10005	Turning Fixture "Y" Ring Boring Mill
HT370-10006	Hoisting Tool - Sling "Y" Ring
HT2-370-10006	Hoisting Tool - Unmachined "Y" Ring
ME300-10006	Dolly - X-Ray - "Y" Ring Weld Joints
RF300-10006	Router Fixture - "Y" Ring
TA7-303-10006	Bracket Weld Fixture "Y" Ring
T.10-300-10006	Saw Fixture - "Y" Ring
TwF303-10006	Test Weld Fixture "Y" Ring
WF303-10006	Weld Fixture "Y" Ring
HT370-24000	Hoisting Tool - Bulkhead "Y" Ring Weld Assembly
ME370-24000	Mechanical Equipment - Turning Fixture Dolly Type Bulkhead "Y" Ring Tank Section Weld Assembly
WFA300-24100	Weld Fixture Accessory Tube Carriage Track - Gore to Gore X-Ray
WFA2-300-24100	Weld Fixture Accessory - X-Ray Tube Carriage Apex to Base & Gore to Gore
WFA3-300-24100	Weld Fixture Accessory- Film Carriage Track Gore to Gore
WFA4-300-24100	Weld Fixture Accessory - Motorized X-Ray Film Carriage
WFA5-300-24100	Weld Fixture Accessory - Electrical Control Console - Gore to Gore X-Ray
WFA6-300-24100	Weld Fixture Accessory - Electrical Control Console - Gore Apex-Base X-Ray
WFA7-300-24100	Weld Fixture Accessory - Film Carriage Track Gore Apex to Base X-Ray
WFA8-300-24100	Weld Fixture Accessory - Tube Carriage Track Gore Apex to Base X-Ray

4.6.2 (Continued)

Tool Number	Nomenclature
WFA9-300-24100	Weld Fixture Accessory - Gore Support Gore Apex to Base X-Ray
WFA10-300-24100	X-Ray Tube Support
WFA11-300-24100	Accessory Weld Fixture Polar Cap to Bulkhead X-Ray
WFA12-300-24100	Weld Fixture Accessory - X-Ray Personnel Platform Polar Cap to Bulkhead
WFA13-300-24100	X-Ray Tube Shielding, Weld Fixture Accessory
WFA14-300-24100	Weld Fixture Accessory Qualification and Storage Polar Cap to Bulkhead X-Ray
WFA15-300-24100	Weld Fixture Accessory Control Console "Y" Ring to Bulkhead
HTF304-24101	Heat Treat Fixture "Y" Ring
DJ300-24102	Drill Jig "Y" Ring Weep Holes
TA300-24102	Tooling Accessory- Cutting Tool Holder "Y" Ring
TA2-300-24102	Tooling Accessory - Cutting Tool Holder "Y" Ring
TA3-300-24102	Tooling Accessory - Optical Locator "Y" Ring
Tmf304-24215	Trim Fixture - Outboard Fuel Suction Fitting Rough
HF304-24216	Holding Fixture - Weld Head & Mill Head Manipulator Inboard & Outboard Fuel Suction Fittings Lower Head Fuel Tank
MF304-24216	Mill Fixture - Inboard & Outboard Fuel Suction Lower Head Fuel Tank
TA304-24216	Tooling Accessory (Turntable) Inboard & Outboard Fuel Suction Fitting Lower Head Fuel Tank
TmF304-24216	Trim Fixture - Inboard Fuel Suction Fitting Rough Trim Lower Head Fuel Tank
W&TF304-24216	Weld & Trim Fixture - Inboard & Outboard Fuel Suction Fitting Lower Head Fuel Tank
W&TF2-304-24216	Weld & Trim Fixture - Inboard & Outboard Fuel Suction Fitting Lower Head Fuel Tank

U3 4211 4000

4.6.2 (Continued)

Tool Number	Nomenclature
MrG304-24218	Master Gage - Inboard Fuel Suction Fitting Lower Head Fuel Tank
TmF304-24218	Trim fixture - Inboard Fuel Suction Fitting Lower Head Fuel Tank
WF304-24218	Weld Fixture - Inboard Fuel Suction Fitting Lower Head Fuel Tank
MrG304-24219	Master Gage - Outboard Fuel Suction Lower Head Fuel Tank
TmF304-24219	Trim Fixture - Outboard Fuel Suction Fitting Lower Head Fuel Tank
DJ304-24220	Drill Jig - Inboard & Outboard Fuel Suction Fitting Lower Head Fuel Tank
MIT304-24250	Misc. Tool - Rough Cut Fitting Opening Gore Tank
WF300-24404	Weld Fixture - LOX Tunnel Assembly
AF322-24705	Assembly Fixture - Anti Slosh Cantilever Circumferential Baffle Quadrants - Sub Assembly
AF322-24733	Sub Assembly Fixture - Ring Baffle Accessories Sub Assembly
WF-304-24219	Weld Fixture - Outboard Fuel Suct. Ftg. Lower Head, Fuel Tank
TmF-304-24207	Trim Fixture, Inboard & Outboard, Fuel Suct. Ftg., Lower Head, Fuel Tank
W&TF-304-24218	Fixture - Weld & Trim - Elbow - Inboard Fuel Suct. Ftg. Assy., Lwr. Hd., Fuel Tank
W&TF-304-24219	Fixture - Weld & Trim - Elbow - Outboard Fuel Suct. Ftg. Assy., Lower Head, Fuel Tank
ETMF-302-7006	Control System - Trim Fixture Gore Assembly
TmF-300-7644	Trim Fixture - Skin "T" Cap

4.6.2 (Continued)

Tool Number	Nomenclature
HTF302-7061	Heat Treat Fixture - Gore Apex & Outboard LOX Tunnel Fitting Fuel Tank
TA302-7062	Clamp - Bulkhead Trim
WF302-7063	Weld Head Manipulator - Short Adaptor Gore Apex to Weld Base
RT302-7064	Router Fixture - Edge Chamfer L. H. Gore Segment
AG302-7065	Gage Auxiliary, Bulkhead Base Trim
AFA302-7066	Assembly Fixture Accessory, "Y" Ring to Turntable
WF306-7067	Weld Fixture - Cylindrical Skin Tank Section
HT302-7069	Hoisting Tool - Sling - Gore Fitting Apex
HT370-7073	Hoisting Tool - Apex Gore Concave Side up (sling)
MIT302-7078	Filler Blankets - Bulkhead Gore Apex, Gore Assembly
MIT370-7079	Vacuum Seal Plate - LOX Tunnel Fitting - Plug
HT370-7080	Hoisting Tool - Sling finished "Y" Ring Bulkhead
HF302-7082	Holding Fixture - Bulkhead Gore Section
MIT-302-7496	Retaining Ring, Manhole Fitting Upper Head -
W&TF302-7498	Weld & Trim Fixture - LOX Tunnel Fitting & Center Piece Upper Fuel Tank
AG302-7503	Auxiliary Gage - for C/D of Weld & Trim Fixture
AG302-7504	Auxiliary Gage (Dummy Gore Apex) to include T/H's LOX of fitting, C/L. C/D to MrF-302-7041 for contour
AG302-7505	Auxiliary Gage -For C/D of attach Holes on Rocker Arms
AG302-7506	Auxiliary Gage - For C/D Attach Holes & Clamp Spiders
WF302-7511	Weld Fixture - Bulkhead, Tool Hole Closure
MIT302-7512	Retaining Ring, Outboard LOX Tunnel Fitting Upper Head Fuel Tank

U3 4211 4000

4.6.2 (Continued)

Tool Number	Nomenclature
MIT304-7513	Plate Vacuum Seal, Opening in Outboard LOX Tunnel Fitting
MIT304-7514	Plate Vacuum Seal - Opening in Fuel Suction Fitting
MIT304-7515	Plate Vacuum Seal - Opening in Fuel Fill and Drain Fitting
MIT304-7516	Plate Vacuum Seal - Opening in Inboard LOX Tunnel Fitting
MIT302-7517	Plate Vacuum Seal - Opening in Fuel Emergency Fitting
TWF302-7541	Test Weld Fixture - Y-Ring Bulkhead to Y-Ring
HT370-7543	Hoisting Tool for TWF302-7014 Components
MIT370-7546	Alignment Clamps - Head Assembly-to-Cylindrical Skin Section
CkG302-7547	Check Gage - Gore Fitting, Cut Out, Gore Apex
MIT302-7550	Misc. Tool Holding Fixture, Lead Back-up Shield
AFA302-7560	Assembly Fixture Accessory, Spacer Bulkhead to Y-Ring
W&TF302-7563	Weld and Trim Fixture, Fitting Assembly Electrical Feed Through Gore Base Fuel Tank
W&TF302-7564	Weld and Trim Fixture Fuel Cut Off Sensor Lower Head Fuel Tank
MIT302-7565	Misc. Tool Vacuum Seal Plate Electrical Feed Fitting
MIT302-7566	Misc. Tool Plate, Vacuum Seal, Fuel Cut Off Sensor Gore Apex Fuel Tank
MIT302-7567	Misc. Tool Vacuum Seal Plug
HTF302-7569	Heat-Treat Fixture, Apex Gore and Fitting-Aging
W&TF302-7580	Weld and Trim Fixture Load Probe Fitting Upper Head Fuel Tank to Apex Gore
W&TF302-7581	Weld and Trim Fixture Elect. Feed-Through Fitting Assembly Upper-Head-Fuel-Tank-to-Base Gore

4.6.2 (Continued)

Tool Number	Nomenclature
W&TF302-7583	Weld & Trim Fixture - Outboard and Inboard Panel Suction Fitting Assembly to Apex Gores
MIT302-7600	Misc. Tool - Portable Steps for Personnel Attached to Outside Contour of Bulkhead
WF300-7608	Weld Fixture - Skate Skin Tee
MIT370-7612	Misc. Tool - Sleeve LOX Tunnel Instl.
HT370-7614	Hoisting Tool - LOX Tunnel Shipping Fixture Sling
SG300-7615	Setting Gage - Measure Length of LOX Tunnel
TMF300-7616	Trim Fixture - Trim LOX Tunnel to Length and Angle
MIT300-7617	Misc. Tool Protectives Sleeve LOX Tunnel Bellows Instl.
HT370-7618	Hoisting Tool - LOX Tunnel Bellows
TWF300-00011	Test Weld Fixture - Weld Equipment Certification
CkG303-10005	Check Gage O.D. - "Y" Ring Machining
CkG2-303-10005	Set Gage - "Y" Ring Cutter
CkG3-303-10005	Set Gage - "Y" Ring Cutter
CkG4-303-10005	Set Gage - "Y" Ring Cutter
CT303-10005	Contour Template "Y" Ring
CT5-324-10005	Contour Template "Y" Ring
MF303-10005	Mill Fixture "Y" Ring
MIT303-10005	PI Tape - 33 Foot Change
HT370-10005	Handling & Shipping Fixture Y-Ring (Finished)
OTG3030-10005	Optical Tooling Gage - "Y" Ring
OTG2-303-10005	Optical Tooling Gage - "Y" Ring
PrD370-10005	Production Dolly - "Y" Ring (Finished) Cleaning Dolly
TA3-303-10005	Holder - Cutter Bits "Y" Ring
PT33[illegible]-10005	Profile Template - o,al Tracer "Y" Ring

U3 4211 4000

4.6.3 Intertank

AF 320-28000	Final Assembly Jig Intertank
AF 320-28800	Assembly Jig "H" Ring Segment Sub-Assembly
AF 320-28820	Assembly Jig "H" Ring Segment Sub-Assembly
CT 320-28800	Contour Template-Frame Ring Segment
ATDT 320-28803	Apply Trim and Drill Template-Web Frame Ring
ATDT 320-28844	Apply Trim and Drill Template-Web Left Frame Ring
DJ 320-28800	Drill Jig-Chord & Web Splice Frame Ring
DJ2-320-28800	Drill Jig Chord Splice - Frame Ring
DJ3-320-28800	Drill Jig Chord Splice - Frame Ring
DJ4-320-28800	Drill Jig-T-Chord and T-Clip - "H" Ring Segment Assembly
AF 320-28050	Fixture Assembly - Skin Panel - Intertank
MrCKG 320-28201	Gage-Master-Check "Y" Ring-Inner Fitting Intertank
DJ 320-28201	Drill Jig-Fitting Inner-Intertank
MrCKG 320-28202	Gage-Master-Check "Y" Ring-Outer Fitting Intertank Assembly
DJ 320-28202	Drill Jig - Fitting Outer-Intertank
DJ 320-28203	Drill Jig - Fitting Inner-Intertank
DJ 320-28204	Drill Jig - Fitting Outer-Intertank
MF 320-28100	Mill Fixture Umbilical Attach Panel Assembly Intertank
DJ 320-28240	Drill Jig-Skin Cutout-Intertank
MrCKG 320-28202-900	Gage-Master-Check "Y" Ring-Outer Fitting Intertank Assembly.
DJ 320-28202-900	Drill Jig Splice-Fitting Outer-Intertank
DJ 320-28204-900	Drill Jig Splice-Fitting Outer-Intertank
MrDJ 330-7455	Master Drill Jig

3 4211 4000

4.6.3 (Continued)

MIT 320-28000	Locating Tool - Frame Ring Stiffener
ATDT 320-28103	Drill Template - Access Door
ATDT 320-28241	Apply Trim & Drill Template - Electrical Concuit
DJ 320-28000	Drill Jig-Hanger Hoisting Tool-Intertank Assembly
ADJ-2-320-28160	Assemble and Drill - Fuel Vent Doubler
ADJ 320-28220	Assemble and Drill-Line Pressurization-Doubler-Inner
ADJ2-320-28220	Assemble and Drill-Line Pressurization-Doubler
ADJ 320-28260	Assemble and Drill-Line Pressurization-Test-Doubler-Inner
ADJ-2-320-28260	Assemble and Drill-Line Pressurization Test-Doubler
ADJ 320-28156	Assemble and Drill-LOX Frame-Assembly-Outer
ADJ 320-28157	Assemble and Drill-LOX Frame Assembly-Inner
ADJ 320-28150	Assemble and Drill-LOX-Inner
ADJ 2-320-28150	Assemble and Drill-LOX-Outer
ADJ 320-28100-901	Access Door-Assemble & Drill-Doubler Outer
ADJ 320-28100-902	Access Door-Assemble and Drill-Doubler Inner
DJ-4-320-28800	Drill Jig-Frame Ring Chords-Pilot Holes
CKT 320-28221	Check Template-Fuel Pressurization-Flight
CKT 320-28162	Check Template-Fuel Pressurization-Test
CKT 320-28143	Check Template - LOX Opening
MIT-2-320-28000	Locate Stiffeners-Frame Ring
DJ3-320-28000	Drill Jig-Tunnel Attach-Intertank
MIT-320-28205	Miscellaneous Tool-Panel Trim
MIT-320-28261	Miscellaneous Tool-Fuel Vent Opening

U3 4211 4000

4.6.3 (Continued)

MIT 320-28162	Miscellaneous Tool-Fuel Pressurization Opening Test
MIT 320-28221	Miscellaneous Tool-Fuel Pressurization Opening Flight

J 4211 4000

4.6.4 LOX Tank

Tool Number	Nomenclature
HT-370-7080	Hoisting Tool - Sling Finished "Y" Ring Bulkhead
W&TF-312-7084	Weld & Trim Fixture - LOX Vent Fitting Upper HD LOX Tank
W&TF-312-7085	Weld & Trim Fixture - LOX Line Upper Head LOX Tank
W&TF-314-7499	Weld & Trim Fixture - LOX Tunnel FTG. & Center Piece
W&TF-314-7500	Weld & Trim Fixture-Emergency Drain, Gore Skirt Lower
MIT-302-7501	Plate Vacuum Seal-Opening, Manhole FTG, Upper Apex Gore Fuel Tank
AG-302-7503	Auxiliary Gage-for C/D of Weld & Trim Fixture
AG-302-7504	Auxiliary Gage (Dummy Gore Apex) to include T/H's
AG-302-7505	Auxiliary Gage - for C/D of Attach Holes on Rocker Arms
AG-302-7506	Auxiliary Gage - for C/D Attach Holes & Clamp Spiders
RF-302-7037	Routing Spindle-Apex Gore
WF-302-7038	Weld Spindle - Apex Gore
WFA-302-7040	Weld Head Manipulator Long Adapter Gore Assy.
TWF-302-7043	Test Weld Fixture - For Gore Section
PP-302-7043	Personnel Platform - Gore Trim Fixture
PP2-302-7047	Personnel Platform-Trim & Weld Center Piece to Bulkhead (Redesign of PP-302-7047)
SA-302-7048	Shop Accessory-Station Welding Bulkhead Fabrication
HT-370-7053	Hoisting Tool (Sling) Bulkhead Gore (Before Trim)
WFA-304-7057	Gantry - Trim & Weld Fitting to Gore Apex
WFA-302-7058	Tilting Platform - Weld Fixture Accessory
BxT-302-7059	Box Template - Gore Apex
BxT-302-7060	Box Template - Gore Apex
TA-302-7062	Clamp-Bulkhead Trim

4.6.4 (Continued)

Tool Number	Nomenclature
WF-302-7063	Weld-Head Manipulator-Short Adapter Gore Apex to Base Weld
HTF-395-5045	Heat-Treat Fixture - Gore Base
RF-302-7000	Router Carriage - R. H. Router for Trim Fixture
RF-302-7001	Router Carriage - L. H. Router for Trim Fixture
WF-302-7002	Carriage-Welding - Bulkhead Welding Station
T&WF-302-7003	Trim & Weld Fixture - Sub Base Bulkhead Gore Station
WF-302-7004	Bar Back-up Gore Apex to Base Station
TMF-302-7006	Trim Fixture - Bulkhead Gore
HF-302-7009	Holding Fixture - Apex Gore
WF-302-7010	Weld Fixture - Bulkhead Gore Sec. Apex Gore to Base Gore
AF-302-7011	Turntable - Bulkhead Fabrication
WF-302-7012	Weld Fixture - Welding Station Bulkhead Fabrication
RF-302-7013	Router Fixture - Trim Station Bulkhead Skirt ("V" Ring)
HT-370-7015	Hoisting Tool (Sling) - Bulkhead Gore Section Aft. Trim
AF-300-7016	Turntable - Assembly Tower Main Weld Station
HF-302-7017	Holding Fixture - Bulkhead Gore Assy.
TWF-302-7019	Test Weld Fixture - Gore
WFA-302-7020	Weld Head Manipulator Bulkhead Gore Assy.
ETMF-302-7023	Control System Trim Fixture Skirt Assembly
TMF-302-7023	Trim Fixture - Apex & Base Assy.
WF-302-7026	Weld Fixture - Welder Boom
HF-302-7028	Holding Fixture - Bulkhead to Turntable
RF-302-7030	Router Fixture - Chamber Gore Base
W&TF-314-7032	Weld & Trim Fixture - LOX Outlet in Rear LOX Tank
MIT-302-7078	Filler Blankets - Bulkhead Gore Apex, Gore Assy.

4.6.4 (Continued)

Tool Number	Nomenclature
MIT-370-7079	Vacuum-Seal Plant - LOX Tunnel Fitting Plug
RT-302-7064	Router Fixture/Edge Chamber L. H. Gore Segment
AG-302-7065	Gage Auxiliary, Bulkhead Base Trim
AFA-302-7066	Assembly Fixture Accessory Y-Ring to Turntable
WF-306-7067	Weld Fixture Cylindrical Skin Tank Section
HT-302-7069	Hoisting Tool/Sling Fitting Apex
HT-370-7073	Hoisting Tool/Apex Gore Concave Side up (Sling)
MIT-302-7078	Filler Blankets/Bulkhead Gore Apex, Gore Assy.
MIT-370-7079	Vacuum-Seal Plant/LOX Tunnel Fitting Plug
HT-370-7080	Hoisting Tool Sling/Finished Y-Ring Bulkhead
W&TF-312-7084	Weld and Trim Fixture/LOX Vent Fitting Upper HD LOX Tank
W&TF-312-7085	Weld and Trim Fixture/LOX Line Upper Head LOX Tank
W&TF-314-7499	Weld and Trim Fixture/LOX Tunnel Ftg. and Center Piece
W&TF-314-7500	Weld and Trim Fixture/Emergency Drain, Gore Skirt Lwr.
MIT-302-7501	Plate Vacuum Seal Opening, Manhole Ftg., Upper Apex Gore Fuel Tank
AG-302-7503	Auxiliary Gage for C/D of Weld and Trim Fixture
AG-302-7504	Auxiliary Gage (Dummy Gore Apex) to include T/H's LOX of Ftg., C/L. C/D to MRF-302-7041 for Countour
AG-302-7505	Auxiliary Gage for C/D of Attach Holes on Rocker Arms
AG-302-7506	Auxiliary Gage for C/D of Attach Holes and Clamp Spiders
MIT-304-7513	Plate Vacuum Seal, Opening in Outb'd. LOX Tunnel Ftg.
MIT-304-7516	Plate Vacuum Seal, Opening in Inb'd. LOX Tunnel Ftg.
TWF-302-7541	Test Weld Fixture, Y-Ring Bulkhead to Y-Ring
HT-[illegible]543	Hoisting Tool for TWF-302-7014 Components
[illegible]-7546	Alignment Clamps, Head-to-Cylindrical Assembly

U3 4211 4000

4.[illegible].4 (Continued)

Tool Number	Nomenclature
[illegible]-302-7547	Check Gage-Gore, Fitting, Cutout, Gore Apex
[illegible]-302-7550	Misc. Tool-Holding Fixture, Load Back-Up Shield
[illegible]-302-7560	Assembly Fixture Accessory, Spacer Bulkhead to "Y" Ring
[illegible]-302-7567	Misc. Tool Vacuum Seal Plug
[illegible]-302-7569	Heat Treat Fixture, Apex Gore and Fitting Aging
[illegible]-302-7600	Misc. Tool-Portable Steps for Personnel Attached to Outside Contour of Bulkhead
[illegible]-300-7608	Weld Fixture Skate Skin Tee
TWF-300-00011	Test Weld Fixture-Weld Equipment Certification
Ck -303-10005	Check Gage O.D. - "Y" Ring Machining
Ck[illegible]2-303-10005	Set Gage - "Y" Ring Cutter
Ck[illegible]3-303-10005	Set Gage - "Y" Ring Cutter
Ck[illegible]4-303-10005	Set Gage "Y" Ring Cutter
CT-303-10005	Contour Template "Y" Ring
CT5-324-10005	Contour Template "Y" Ring
MF-303-10005	Mill Fixture "Y" Ring
MIT-303-10005	PI Tape -33 Foot Change
[illegible]-370-10005	Handling & Shipping Fixture "Y" Ring (Finished)
OT[illegible]-303-10005	Optical Tooling Gage - "Y" Ring
OT[illegible]2-303-10005	Optical Tooling Gage - "Y" Ring
PrD-370-10005	Production Dolly - "Y" Ring (finished) Cleaning Dolly
T[illegible]3-303-10005	Holder - Cutter Bits "Y" Ring
PT-331-10005	Profile Template Mimik Tracer - "Y" Ring
T[illegible]6-303-10005	Tooling Accessory for Mimik Tracer - "Y" Ring
T[illegible]9-300-10005	Safety Guards "Y" Ring
TrF-303-1005	Turning Fixture - "Y" Ring Boring Mill

U3 4211 4000

4.6.4 (Continued)

Tool Number	Nomenclature
HT-370-10006	Hoisting Tool - Sling "Y" Ring Segment
HT2-370-10006	Hoisting Tool - Unmachined "Y" Ring
ME-300-10006	Dolly X-Ray - "Y" Ring Weld Joints
RF-300-1006	Router Fixture "Y" Ring
TA7-303-10006	Bracket Weld Fixture "Y" Ring
TA10-300-10006	Saw Fixture - "Y" Ring
TWF-303-10006	Test Weld Fixture "Y" Ring
WF-303-10006	Weld Fixture "Y" Ring
HT-370-24000	Hoisting Tool - Bulkhead "Y" Ring Weld Assembly
ME-370-24000	Mechanical Equipment - Turning Fixture Dolly Type Bulkhead "Y" Ring Tank Section Weld Assembly
WFA-300-24100	Weld Fixture Accessory Tube Carriage Track - Gore to Gore X-Ray
WFA2-300-24100	Weld Fixture Accessory - X-Ray Tube Carriage Apexto Base & Gore to Gore
WFA3-300-24100	Weld Fixture Accessory - Film Carriage Track Gore to Gore
WFA4-300-24100	Weld Fixture Accessory- Motorized X-Ray Film Carriage
WFA5-300-24100	Weld Fixture Accessory - Electric Control Console Gore-to-Gore X-Ray
WFA6-300-24100	Weld Fixture Accessory - Electrical Control Console Gore Apex Base X-Ray
WFA8-300-24100	Weld Fixture Accessory- Tube Carriage Track Gore Apex to Base X-Ray
WFA9-300-24100	Weld Fixture Accessory-Gore Support Gore Apex to Base X-Ray
WFA10-300-24100	X-Ray Tube Support
WFA11-300-24100	Accessory Weld Fixture Polar Cap to Bulkhead X-Ray

4.[illegible].4 (Continued)

Tool Number	Nomenclature
WFA12-300-24100	Weld Fixture Accessory X-Ray Personnel Platform Polar Cap to Bulkhead
WFA13-300-24100	X-Ray Tube Shielding, Weld Fixture Accessory
WFA14-300-24100	Weld Fixture Accessory Qualification and Storage Polar Cap to Bulkhead X-Ray
WFA15-300-24100	Weld Fixture Accessory Control Console "Y" Ring to Bulkhead
HTF-304-24101	Heat Treat Fixture - "Y" Ring
DJ-300-24102	Drill Jig "Y" Ring Weep Holes
TA-300-24102	Tooling Accessory - Cutting Tool Holdr. "Y" Ring
TA2-300-24102	Tooling Accessory - Cutting Tool Holdr "Y" Ring
TA3-300-24102	Tooling Accessory - Optical Locator "Y" Ring
MiT-304-24250	Misc. Tool - Rough Cut Fitting Opening Core Tank
TmF-300-7644	Trim Fixture - Skin T Cap
AF-318-12411	Assembly Fixture - Cruciform Baffle Quadrant
AF-318-12428	Assembly Fixture - Ring Baffle Quadrant
AF-318-12414	Assembly Fixture - Cantilevered Ring Baffle Quadrant

U3 4211 4000

4.6.5 **Forward Skirt Assembly**

Tool Number	Nomenclature
AF 425-14220	Assembly Fixture
AF 425-14400	Assembly Fixture
AF 425-14000	Assembly Fixture
AF2-425-14400	Assembly Fixture
AF 425-15200	Assembly Fixture
WF 425-14325	Weld Fixture

U3 4211 4000

4.6.6 Fin and Fairing

Tool Number	Nomenclature
AF-345-16000	Fixture Assembly Joining Position Engine Fairing.
AF-345-16101-901	Fixture Assembly Lower Fairing Sub-Assembly Station 48.5 to 115.5.
AF-345-16101-902	Fixture Assembly Center Fairing Sub-Assembly Station 115.5 to 216.
AF-345-16101-903	Fixture Assembly Frame Assemblies Station 48.5, 83.5 and 100.25.
AF-345-16102	Fixture Assembly Upper Fairing Assembly.
AF-345-16110	Fixture Assembly Frame Assembly Station 66.75.
AF-345-16135	Fixture Assembly Frame Assembly Station 216.4 Upper.
AF-345-16150	Fixture Assembly Frame Assembly Station 115.5.
AF-345-16190	Fixture Assembly Frame Assemblies Station 152.45 and 183.89.
AF-345-16198	Fixture Assembly Frame Assembly Station 216.4 Lower.
AF-345-16201	Fixture Assembly Frame Assemblies Station 247.8 and 279.8.
AF-345-16500	Fixture Assembly Air Scoop Assembly.
AF2-345-16500	" " " " "
AF3-345-16500	" " " " "
AF4-345-16500	" " " " "
TT-345-16150	Template-Tooling Engine Fairing Station 115.5.

U3 4211 4000

4.6.6 Fin and Fairing (continued).

Tool Number	Nomenclature
AF-345-20000	Fixture Assembly Fin Final Assembly.
AF-345-30100	Fixture Assembly Fin Spar Assembly.
AF-345-30200	Fixture Assembly Trailing Edge Beam Assembly.
AF-345-30203	Fixture Assembly Rib Assembly Aft. Station 47.400.
AF-345-30204	Fixture Assembly Rib Assembly Aft. Station 57.609.
AF-345-30205	Fixture Assembly Rib Assembly Aft. Station 67.819.
AF-345-30212	Fixture Assembly Rib Assembly Aft. Station 37.191.
AF-345-30301	Fixture Assembly Rib Assembly Forward Station 37.191.
AF-345-30302	Fixture Assembly Rib Assembly Forward Station 47.400.
AF-345-30303	Fixture Assembly Rib Assembly Forward Station 57.609.
AF-345-30304	Fixture Assembly Rib Assembly Forward Station 67.819.
AF-345-30400	Fixture Assembly Closure Rib Assembly.
MrG-345-7109	Master Gage Fairing Attach, Thrust Structure Points.
MrG-345-16090	Master Gage Fairing.
MrG-345-16102	Master Gage Fairing.
MrG-345-30000	Master Gage Fairing and Fin.
MrSG-345-7114	Master Setting Gage Fairing.
MrSG-345-30000	Master Setting Gage Fairing & Fin.

U3 4211 4000

4.6.7 **Tunnels**

Information not available.

U3 4211 4000

4.6.8 Engine Buildup

Tool Number	Nomenclature
G-4044	Handler, Air Transport, Engine, (GFE)
G-4050	Rotating Sling, Engine. (GFE)
G-4052	Airborne Handler Sling (GFE)
G-4058	Thrust Chamber, Vertical Handler (GFE)
9014100	R and D Horizontal Handler, Engine (GFE)

U3 4211 4000

4.6.9 **Vertical Final Assembly**

Tool Number	Nomenclature
DJ-325-7291	Drill Jig- Outside Intertank Bracket
DJ-325-7293	Drill Jig - Inside Intertank Bracket
DJ-325-7352	Drill Jig - Forward Skirt to Tank
MIT-330-7354	Miscellaneous tool - radial alignment Forward Skirt to Oxidizer Tank
MIT-330-7442	Tool Miscellaneous- radial alignment Fuel Tank to Thrust Structure
DJ-330-7443	Drill Jig - Thrust Structure to Fuel Tank
MIT-330-7445	Vertical Positioner - Intertank to Tank
MIT-330-7446	Tool miscellaneous - positioner, Forward Skirt to Oxidizer Tank
MIT-330-7447	Miscellaneous tool - extension wrench, Fuel Tank to Thrust Structure
MIT-330-7452	Miscellaneous tool - radial alignment Intertank to Tank
MIT-330-7461	Tool- miscellaneous, guide, Thrust to Tank
MIT-330-7462	Tool - miscellaneous, guide Intertank to Tank
DJ-330-7465	Jig- drill Forward Skirt to Upper "Y" Ring of Oxidizer Tank - Splice
DJ-330-7466	Jig- drill Forward Skirt to Upper "Y" Ring of Oxidizer Tank - Umbilical
DJ-330-7468	Jig- drill Forward Skirt Skin Hat Stiffeners Structure Assembly - left side
DJ-330-7469	Jig-drill, Forward Skirt Skin Hat Stiffeners Structure Assembly - right side
ALF-335-7106	Fixture Alignment Cylinder Panel Assembly
TNTR-370-18050	Low boy dolly
TNTR-370-24000	Transportation trailer

4.6.9 (Continued)

ME-370-7353	Low boy dolly
HT-370-7049	Handling tool
HT-370-7111	Handling sling
PRD-370-24000	Hoisting tool

U3 4211 4000

4.6.10 Horizontal Installation

Tool Number	Nomenclature
MT 470-8016	Hoisting Tool LOX Suction Line
HT 470-8004	Counter Balance Beam Thrust Structure
PP 470-8009	Personnel Platform Fuel and LOX Tank Interior Horizontal

U3 4211 4000

4.6.11 Handling Equipment

Tool Number	Nomenclature
PP2-302-7047	Redesign of PP-302-7047
HF-370-24250	Gore Apex Storage Rack
HF2-370-24250	Gore Base Storage Rack
MIT-370-7592	Misc. Tool - Protective Cover, Upper Bulkhead
HT-370-7618	Hoisting Tool - Bellows Assy. LOX Tunnel
PRD-370-7537	Production Dolly -LOX Tunnel Assembly
HT-370-19110	Intermediate Ring Segments
SA-370-7098	C-Frame 50 Ton Travel Lift
TNTR-340-7099	Thrust Structure Components
HT-370-18703	Upper and Lower Thrust Ring Web Assembly
MIT-370-18100	Skin Panel
STR-370-18100	Cylindrical Skin Panel
STR-370-18901	Web Assembly Center Engine Support
HT-370-18800	Thrust Post Assembly Fixture
HT-370-7118	Hoisting Tool - Intermediate Ring Segment-Thrust Structure, Major Assembly Jig
HT2-370-28000	Forward Skirt Assembly also one-half Intertank Assembly
HT-370-14400	Forward Skirt Skin Segment
PP-370-14000	Forward Skirt Assembly Fixture
HT-370-14000	Hoisting Tool - Forward Skirt
HT2-370-14000	Hoisting Tool - Forward Skirt - Dummy Y-Ring
MIT-370-14400	Forward Skirt Skin Panel
HT-370-28050	Skin Assemblies
PP-370-28000	Intertank Assembly Fixture
ME-370-28000	Half Intertank Assembly
HT-370-28000	Intertank Assembly
HT-370-28205	Intertank Skin Panel
HT2-370-28800	Intertank Ring Segment
PP-370-28050	Intertank Sub-Panel Assembly Fixture
HT3-370-28000	Handle - STR-370-7295 ME-370-7353 STR-370-18901
PRD-370-7537	LOX Tunnel Assembly
HT-408-8016	Install LOX Suction Line
MIT-470-8020	Protective Cover for F-1 Engine in horizontal position
HT-370-16000	Fairing Bulkhead Frame Assemblies
PP-370-16000	Center Fairing Assembly Fixture
PP2-370-16000	Upper Fairing Assembly Fixture
PP3-370-16000	Lower and Center Fairing Assembly Fixture-Internal
PP5-370-16000	Lower and Center Fairing Assembly Fixture-External
PP4-370-16000	Fin Assembly Fixture

U3 4211 4000

4.6.11 (Continued)

PP6-370-16000	Lower Fairing Sub-Assembly Fixture
MIT-370-16000	Fairing Assembly - Lifting Lugs
MIT2-370-16000	Fin Assembly - Lifting Lugs
MIT3-370-16000	Upper Fairing Assembly, Lifting Lugs
PP-370-16110	Fairing Bulkhead Assembly Fixture

US 4211 0000

5.0 DESCRIPTION, FUNCTION AND CAPACITY OF TOOLS

5.1 DESCRIPTION BY TOOL TYPES

5.1.1 Assembly Drill Fixture

A holding device used to locate and clamp parts in proper position for performing drilling operation.

5.1.2 Assembly Drill Jig

A drill guiding device that provides for locating and fastening parts of an assembly in proper position.

5.1.3 Apply Drill Template

A template shaped to the inside (or outside) mold line of the part that provides hole locations for transfer prick-punching in preparation for drilling.

5.1.4 Assembly Fixture

A holding device used to locate and clamp parts in proper position for performing assembly operation.

5.1.5 Assembly Fixture Accessory

Removable parts of a fixture such as production part locators used in duplicate fixture or in succeeding operation fixtures, for the p8rpose of duplicating the location or part in each fixture.

5.1.6 Auxiliary Gage

A tool used to position several gages of separate sections of the same gage with respect to one another.

5.1.7 Alignment Fixture

A fixture used to align detail parts on assembly.

5.1.8 Adapter Plate

Any plate used to connect unmatched or unrelated parts during buildup operation.

5.1.9 Assembly Tool

A tool used for assembling or disassembling parts.

U3 4211 4000

5.1.10 Apply Trim Drill Template

Same as "ADT" with outer edge shaped to desired shape of part for the purpose of trimming part over which the template fits.

5.1.11 Apply Trim Template

Same as "ADT" without holes

.2 Boring Bar

A bar used on a lathe or similar machine, supporting one or more tools for an internal machining operation.

5.1.13 Blanking Die

A plate in which a hole is cut to the outline of a part and a punch the size of the blan, which cuts material by shearing action. (Type shall be specified on the tool order).

5.1.13.1 Type I

Water die made of "kirksite" and with a steel punch, for small runs of aluminum alloy .102 a maximum thickness. Used in sub-press or die-set to which die is fastened. Punch and die are fastened to their respective backing plates which are located on the die set with short pins. Blank is ejected by rubber or cork stripper.

5.1.13.2 Type II

Custom die with positive or spring-stripped. Especially designed for a specific part. Used for long runs and/or heavy sheet stock.

5.1.13.3 Type III

Interchangeable die consisting of a punch fastened to a backing plate, which in turn is used in a die set. Backing plate has a hole large enough for blank or slug to fall through.

5.1.14 Bonding Tool

A tool used to prepare the surface of two metals for joining.

5.1.15 Blanking Form Die

A two stage die combining the functions of a blanking die and a form die.

U3 4211 4000

5.1.16 Bulging Die

A die which contains a recess for a bulge to be formed in cylindrical parts; a rubber insert placed within the part is compressed by a punch to form the bulge.

5.1.17 Bending Block

A block over which metal tubes are bent or formed to a radius, excluding compound bends, in a tube bender.

5.1.18 Broach

A cutting tool consisting of a bar having a series of stepped cutting edges, consecutively increasing in size, pushed or pulled through or along the material to produce regular or irregular shapes.

5.1.19 Brake Bar

A punch used to bend or form flat metal parts to required shapes on a press brake, and is not necessarily the same shape as the formed part.

5.1.20 Brake Die

A punch and die combination used to bend or form flat metal parts, to required shapes on a press brake. The punch or die section is not necessarily the smae shape as the formed part.

5.1.21 Burnishing Tool

A tool used to smooth a surface by compressing the outer layer of metal.

5.1.22 Box Template

A template used to check parts, dies, jigs, and patterns especially those involving compound curves or angles. A box template is made up of a group of contoured templates so joined that each represents a plane of the tool or part to be checked.

5.1.23 Compound Bend Block

A block used to hold a prebent tube for compound bending operations in a tube bender.

5.1.24 Check Block

Similar to "HFB", used primarily for checking of formed parts.

U3 4211 4000

5.1.25 Combination Die

Any die combining two or moreoperations, such as piercing and blanking, blanking and forming, etc. Die may be either progressive or compound. Construction similar to blank die or form die.

5.1.26 Check Fixture

A holding device designed for locating and fastening a Manufacturing part or parts in proper position for checking.

5.1.27 Cut-Off and Form Die

A dual purpose die for cutting one or more ends of a part's outline, and then forming the part, all with one stroke of a press.

5.1.28 Check Gage

The physical medium of control to check the dimensions or contours of production parts.

5.1.29 Clip Jig

Any simple tool used to locate parts or production holes in a part by an easy attachment medium (C-clamps, etc.).

5.1.30 Check Template

A flat piece of material used to check the shape of a part after forming.

5.1.31 Coining Die

A die used in cold squeezing in which the metal must flow under pressure to fill die.

5.1.32 Cut-Off Die

A die designed for shearing extrusions and/or formed angles or channels.

5.1.33 Cut-Off and Pierce Die

Same as "COD", but also pierces one or more holes or slots.

5.1.34 Contour Rolls

A set of rolls used to form a contour in a drawn or extruded section.

U3 4211 4000

5.1.35 Contour Template

A template made to the contour of part, die, form block, etc., for application in a specific plane.

5.1.36 Drill Block

A nesting device for a part and a drill plate.

5.1.37 Development Block Template

A template developed from a form die to be used in cutting blank part in the flat and providing tooling holes so that formed size will be correct or slightly oversize for subsequent trimming.

5.1.38 Dinking Die

A die made by imbedding "printers tape" in a block, the tape being formed to the desired contour. Used to cut soft material such as cloth, rubber, and felt backed by a wooden block, pressure being applied either in hydropress or by hand with a hammer.

5.1.39 Drill Fixture

A holding device for locating and clamping a part or parts in proper position for drilling and/or in combination with other locating and drilling tools.

5.1.40 Drop Hammer Die

A die made to the contour of a part. Part is formed by dropping punch into die. Used for deep drawn parts where shringing and/or stretching of the material is required.

5.1.41 Drill Jig

A jig in which a part is located and clamped while a drilling and/or reaming operation is performed. The tool is provided with hardened bushings (guides) for locating desired holes and gor guiding the drills or reamers.

5.1.42 Development Layout Drill Template

A full scale flat template that shown bendings, hole locations (with $\frac{1}{4}$ diameter standard template holes), slot locations, outside contour of part in the flat, and all pertinent information as to directions, degrees, and lengths of bends and joggles and with finish sizes of holes (above drill size) and slots scribed about locations. Holes are alphabetically coded as to drill size and/or numerically designated as to finish size at scrive line. This template shall be used to prick-punch hole location, and for setting up punch-press guides by inserting a diameter pilot in punch. "DDLDT" shall be used as a reference tool for all other related tooling for same part.

U3 4211 4000

5.1.43 Development Layout Template

A pattern of production part, giving information to define the part, except holes, which are not shown.

5.1.44 Dimpling Die

A die which forms conical impressions in sheet metal to receive countersink screw heads.

5.1.45 Drill Plate

A piece of material provided with bushings or adapter size holes, used for drilling and/or reaming a hole or pattern of holes in a part. Tool is indexed to the part by means of pins or by using edge(s) of the plate for alignment.

5.1.46 Drill Spacer Block

A block spacing adjacent leg of a part and/or assembly having guides for drilling. The pre-drilled holes in one leg are used to locate the block for line drilling the other leg.

5.1.47 Draw Die

A die in which the punch is to the desired inside shape of a part and the die section is to outside shape with proper clearance. The material is held by pressure pads and the punch draws or stretches the material into the die.

5.1.48 Extrusion Die

A punch and a die which forcible extrudes material through an aperature between the die and the punch by applying pressure against a mass of material with the punch. Used for making impact extrusions.

5.1.49 Expansion Mandrel

A mandrel (form forming reinforced plastic parts) made from a material (usually a metal) which will expand when heated during curing cycle and thus apply pressure to the laminate.

5.1.50 Form Block

A block of required shape used to form sheet metal in a power press.

U3 4211 4000

5.1.51 Form Block Template

A flat tooling template showing bend lines, contour and tooling holes. Used in making hand form blocks and hydro-blocks.

5.1.52 Form Die

A tool consisting of a punch and die that imparts a desired shape to a part. Template for blank part is developed in the flat from the die.

5.1.53 Flattening Die

A flat surfaced anvil and punch used to flatten metal parts in a power press.

5.1.54 Form Mandrel

A mandrel used to support a part during swage, bned, form stretch, and wipe operations.

5.1.55 Finishing Reamer

A rotating fluted edge finishing tool used for enlarging and finishing holes to accurate dimensions.

5.1.56 Forging Die

A punch and die used for producing a forging from a billet on a bar.

5.1.57 Flat Pattern Template

A template developed to layout a production part prior to forming.

5.1.58 Form Roll

A set of rolls which progressively form the desired cross section shape of a part. The development or number of rolls depends upon the complexity of the shape to be formed. Guide bars, mandrels, and special spacers will be ordered from sketch and will be assigned same tool number and symbol as the set of rolls.

U3 4211 4000

5.1.58 (Continued)

All rolls of the same set will have the same tool number.

5.1.59 Flaring Die

A die in which a part is clamped and flared by means of the action of a punch or roller.

5.1.60 Hydro-Block

A block shaped to desired part that will be formed or cut by rubber being pressed against the part, cuasing it to bend, form and/or cut against the block. Part may be nested or located on pins.

5.1.61 Holding Fixture

A holding device, normally a unit having integral clamps, designated for locating and fastening work in proper position for operations that are controlled by a separate means.

5.1.62 Hand Form Block

A block shaped to the inside or outside mold line of a desired part which is to be formed by hand. Part should be nested, clamped, or placed over locating pins.

5.1.63 Holding Jig

A tool-guiding device that provided for locating and fastening work in proper position.

5.1.64 Heat Treat Fixture

A fixture in which parts are held during heat treating, normalizing, quanching, or straightening, and in which a part may be checked after heat treating or straightening operation.

5.1.65 Hoisting Tool

A tool used with a crane or other lifting unit for handling assemblies or parts during manufacturing.

U3 4211 4000

5.1.66 Inspection Fixture

A fixture which holds parts or assemblies in correct position for checking such items as the contour, attaching points, hole sizes, locations, etc., and used by the Inspection Department.

5.1.67 Inspection Gage

The physical medium of control to inspect such items as dimensions, contours, angles, hole locations, etc., of parts and assemblies, and used by the Inspection Department.

5.1.68 Impression Die

A die for stamping lines, knurls, or designs in metal or plastics.

5.1.69 Joggle Block

A pair of blocks used to form an off-set in parts particularly those blocks used in hand forming or in machine forming in cases not requiring a die.

5.1.70 Joggle Die

A punch and die used to offset a relatively small selection of a part so that it will overlap an adjoining member.

5.1.71 Lapping Block

A block of copper, cast iron, or other material suitable for surface charging with an abrasive substance for a lapping operation.

5.1.72 Locating Drill Jig

A device employed for locating and drilling a part or parts in the proper location.

5.1.73 Locating Drill Plate

Same as "LDT", except with bushings in plate.

5.1.74 Locating Drill Template

A template which is used to locate a hole or holes and/or parts, particularly in assembly on installation.

5.1.75 Locating Template

A template to locate detail parts on assembly.

U3 4211 4000

5.1.76 Master Check Gage

A gage from which other gages or tools are made. It is used as a control for other gages or tools by Tool Manufacturing Departments only.

5.1.77 Master Drill Jig

A tool used for the purpose of transferring or locating the hole pattern of a drill jig.

5.1.78 Master Drill Plate

A single plane replica of the portion of a production part requiring precise coordination of holes. Used for the construction and checking of working tools only and shall not be duplicated.

5.1.79 Mechanical Equipment

Handling equipment, dollies, racks, stands, etc.

5.1.80 Master Form

A plaster or wood form made full size of an assembly. Used to control tooling forms or production mockup.

5.1.81 Mill Fixture

A holding device used to locate and clamp work in proper relation to milling cutter. Specify machine.

5.1.82 Master Gage

In principle, a dummy of a production part used for constructing and checking of work tools, and may be duplicated as required.

5.1.83 Miscellaneous Tool

Any tool other than a standard tool or machine accessory that does not apply solely to a specific part of assembly.

5.1.84 Metal Pattern

A metal form used to make a mold for casting parts.

5.1.85 Match Plate Template

A production template made form a Master Templat.

5.1.86 Master Template

An exact duplicate of a sectional profile providing an edge contour identical to lofted profile showing all loft lines of that section.

U3 4211 4000

5.1.87 Master Setting Gage

In principle, a dummy of a production part used for the construction and checking of gages only and shall not be duplicated.

5.1.88 Master Plate

A plate in which a pattern of holes is accurately controlled. Used by Tool Manufacturing Departments only for control of other tools. May include other information such as mold line, perimeter of part, location of cutouts, reference lines, etc.

5.1.89 Masking Template

A template employed for masking and/or marking a specific area.

5.1.90 Nibbling Template

Is used as a guide for trimming parts in a nibbling machine. May be flat or cylindrical as for trimming of tubes.

5.1.91 Optical Alignment Fixture

A fixture or instrument used to ensure precision alignment by the use of optics.

5.1.92 Optical Target

A tool used to locate a point by use of optics.

5.1.93 Pierce and Blank Die

A die with matching punch or punches that combines the function of a pierce die and a blanking die.

5.1.94 Positioning and Holding Fixture

A fixture to position and hold parts for operation in which this is a requirement.

5.1.95 Pierce Die

A die used for piercing a hole or a pattern of holes in a part. Used in high production or when hole patterns must be accurately located in a series of parts.

5.1.96 Router Drill Template

A template used as a guide for drilling pilot holes with the router drill. It is often combined with a router template or block.

5.1.97 Routing Fixture

A fixture which holds parts in a correct position for routing operations.

U3 4211 4000

5.1.98 Roughing Reamer

A rotating fluted edge tool used for enlarging and rough finishing a hole previously formed.

5.1.99 Router Template

Same as "RF" except metal plate is 1/8 inch thick, and does not have bottom block. Used on plywood table for short runs or parts.

5.1.100 Shop Accessory

Any tool used in the shop as an aid, requiring documentation or design by Tool Engineering Section.

5.1.101 Subassembly Fixture

A fixture to hold a subassembly to an entire assembly.

5.1.102 Spinning Block

A laminated kiln-dried wooden form block turned to the inside dimensions of a desired part for spinning into a shape that can be generated by revolving a line about an axis.

5.1.103 Scribe Drill Jig

A tool-guiding device that provides for locating work in proper position for scribing and drilling operations.

5.1.104 Scribe Template

A template used as a guide for scribing operations.

5.1.105 Support Fixture

A fixture used to hold and support a part or assembly to perform a particular operation.

5.1.106 Stretch Form Block

A block made to the inside size and shape of a desired part, around which sheet metal is drawn in a press by clamping the metal in press-jaws, forcing the form block against the metal.

5.1.107 Shaper Block

A contoured block, used on shaper machines to guide the work against cutter to shape metal parts.

5.1.108 Shaper Form

A contoured plate or form, used on shaper machine to guide the work against the cutter to shape metal parts.

5.1.109 Stretcher Jaws

A set of blocks or jaws used for handling or gripping a part while being stretched formed or drawn.

5.1.110 Spin Die

A form die turned to the inside dimensions of a desired part for spinning the desired part into shape.

5.1.111 Stretch Form Die

A die made to the inside size and shape of a desired part around which sheet metal is drawn in a press by clamping the metal in press-jaws, forcing the form die against the metal.

5.1.112 Slotting Die

A pierce-type die with matching punch designed for punching slots within the body of a part.

5.1.113 Spreader Ring

A tool used for spreading or rounding out thin wall cylinders.

5.1.114 Special Reamer

A non-standard type design or size reamer restricted to use on or in conjunction with specific tools only.

5.1.115 Staking Tool

A tool used to secure one metal part to another by forcing the metal edge of one member to flow either inward or outward around the other part, thereby effecting a holding fit, as in staking a bushing or a shoulder on a raft.

5.1.116 Storage Rack

Any rack used for the storage of jig part, vehicle parts, and/or vehicle assemblies, and may be either stationary or portable in design.

5.1.117 Setup Template

A template used for setting up Whistler Dies, Wales, Strippets, press brake, and dies.

5.1.118 Swaging Dies

A set of steel blocks, having grooves that are smaller than the original size of a tube or rod, which by repeated blows will reduce parts to the desired size. Used in a rotary swaging machine for tapering, sizing, or reducing bars, rods, wire, or tubing, into roung corss sections; press operated closing die for operation such as a cable terminal swaging, or

U3 4211 4000

5.1.118 hydraulic hose coupling attachment.

5.1.119 Spot Weld Template

A template used to transfer spot weld patterns to parts.

5.1.120 Tooling Accessory

A tool made for use on/or in conjunction with antoher tool.

5.1.121 Trim Die

A punch and a die used for trimming a part after forming or for trimming the ends of a strip.

5.1.122 Trim Drill Shell

Has same function as TS with additional provisions for locating holes for drilling.

5.1.123 Trim Fixture Accessory

A tool or device used in conjunction with a trim fixture.

5.1.124 Thread Gage

A gage used for checking pitch diameter, lead, and/or threat form of internal threaded parts.

5.1.125 Tooling Layout

A layout or drawing of a part assembly made on metal, showing the part or assembly in one plane. Used for the fabrication of the other tools.

5.1.126 Trim Fixture

A fixture used to trim a part to finish dimensions after forming.

5.1.127 Tooling Pattern

A pattern made of plaster used for casting purposes in making other tools. Pattern is made oversize to allow for shrinkage.

5.1.128 Turning Fixture

A fixture used to locate and clamp a part in a position relative to a cutting tool while turning the part.

U3 4211 4000

5.1.129 Trim Shell

A thin shell made to the exact size and shape of either the inside or outside of the part on which it fits. Used in marking, drilling, cutting, or any combination of these operations on a part.

5.1.130 Transportation Trailer

A trailer used to move a part from one position to another.

5.1.131 Trim Template

A template shaped to the inside (or outside) mold line of the part that provides locations for trimming.

5.1.132 Testing Tool

A tool used to check the function of a production part or assembly mechanically, electrically, hydraulically, or pneumatically.

5.1.133 Tooling Templates

Tool designed by Tool Design manufactured by the template department, and used by the Tool Shop to build a tool. Also used for setting and inspecting subassembly and major assembly fixtures.

5.1.134 Test Tool Accessory

A tool used in conjunction with test equipment to assist the test equipment or make it adaptable to a number of parts, assemblies, or systems. May involve mechanical, electronic, electrical, hydraulic, or pneumatic principles.

5.1.135 Tube Template

An apply template made from a tube large enough to slip over the part to locate trim, holes, cutouts, and slots, as required.

5.1.136 Vee Die

A "V" type female die used with brake press.

5.1.137 Vise Jaws

A set of shaped jaws or blocks mounted in a vise. Used for clamping and/or locating a part while performing the required operation(s)

5.1.138 Weld Fixture

Any suitable rigid structure holding component parts of an assembly while the work is being welded.

U3 4211 4000

5.1.139 Weld Fixture Accessory

A tool or device used in conjunction with a weld fixture.

5.1.140 Wiping Form Block

A tool used in a power press for flanging sheet aluminum parts with irregular contours. Consists of a form block made to the inside contour of a part, a pressure plate overlapping a pressure plate shim, together with a backup plate and a split wiping block made to outside contour of the formed parts; supported by a filler plate when required.

5.1.141 Wire Harness Board

A tool used for the fabrication of electrical harnesses showing length of wire, where connections are located, and all other information needed to fabricate harnesses.

5.1.142 Wood Pattern

Same as plaster pattern except made of wood.

5.1.143 Wiping Radius Block

A tool for bending solid rod to various bend radii.

5.1.144 Weld and Trim Fixture

A fixture which holds parts in correct position for welding and trimming operations.

U3 4211 4000

5.2 TOOL FUNCTION OF SPECIFIC TOOLS

PP-2-302-7047	Redesign of PP-302-7047
HF-370-24250	Holding Fixture Gore Apex - This picture frame type holding fixture will be used as a storage rack (capable of being stacked one on top of the other) and is supplied with trunnions for use with PrD-370-24250 for positioning and transport to X-ray.
HF-2-370-24250	Holding Fixture Gore Base - This picture frame type holding fixture will be used as a storage rack (capable of being stacked one on top of the other) and is supplied with trunnions for use with PrD2-370-24250 for positioning and transportation to X-ray.
MIT-370-7592	Miscellaneous - Tool used as a Protective Cover in structural assembly tower for upper bulkhead.
HT-370-7618	Hoisting Tool - Bellows Assembly LOX Tunnel.
PrD-370-7537	Production Dolly - LOX Tunnel Assembly.
HT-370-19110	Hoisting Tool - Intermediate Ring Segments. This spreader bar type sling will be used to handle the ring segments in the horizontal position for assembly into the thrust structure assembly fixture.
SA-370-7098	Shop Accessory - C-Frame, 50 Ton Travel lift - NASA Design.
TnTR-340-7099	Transportation Trailer - Thrust Structure Components - NASA Design.
HT-370-18703	Hoisting Tool - Upper and Lower Thrust Ring Web Assembly.
MIT-370-18100	Misc. Tool - Skin Panel Thrust Structure Strong Backs for HT-370-18100 (2) Sets required.
STR-370-18100	Shipping and Storage Rack - Cylindrical Skin Panel Assembly.
STR-370-18901	Shipping and Storage Rack - Web Assembly, Center Engine Support.

U3 4211 4000

5.2 (Continued)

HT-370-18800	Hoisting Tool - Thrust Post Assembly Fixture. This sling is used to lift the section of the assembly fixture prior and after all assembly operations.
HT-370-7118	Hoisting Tool - Intermediate Ring Segment Thrust Structure Assembly Fixture.
HT-2-370-28000	Hoisting Tool - Half Intertank Assembly. This sling will be used to remove the half intertank from the final assembly fixture. It is also used in conjunction with HT-370-14400 to remove the forward skirt from its final assembly fixture. The sling is an "H" design spreader bar, of "I" beam structural steel construction.
HT-370-14000	Hoisting Tool - Forward Skirt Skin Segment. This spreader bar type sling will lift the skin segments in the vertical position for installation in the forward skirt assembly fixture.
PP-370-14000	Personnel Platform - Forward Skirt Assembly Fixture. This personnel platform will permit access to all assembly areas of the fixture. It will be of a semi-permanent of various levels.
HT-370-14000	Hoisting Tool - Forward Skirt, Dummy Y-Ring.
HT2-370-14000	Hoisting Tool - This tool is used to facilitate attachment and removal of the Dummy Y-Ring Assembly AF 425-14000-21-00K Forward Skirt Assembly Fixture AF 425-14000.
MIT-370-14400	Miscellaneous Tool - Forward Skirt Panel. These (16) lifting lugs willbe used to facilitate lifting the skin panel in the horizontal position and the vertical position. Eight of the lugs will be utilized to lift the complete forward skirt from its assembly fixture.

U3 4211 4000

5.2 (Continued)

HT-370-28050	Hoisting Tool - Intertank Skin Assemblies. This sling will handle the skin assemblies in the vertical position for locating and installing in the intertank assembly fixture.
PP-370-28000	Personnel Platform - Intertank Structure Assembly Fixture. This platform will be a mobile type and if possible a commercial item. The way in which the fixture is loaded and the intertank removed, it is impossible to use any permanent type platforms.
ME-370-28000	Mechanical Equipment - Half Intertank Assembly - Shipping and Storage Rack.
HT-370-28000	Hoisting Tool - Intertank Assembly. This sling will utilize two bridge cranes at each side of the Intertank. The Intertank will be lifted between the two cranes to obtain a maximum overhead height for clearing the fixture.
HT-370-28205	Hoisting Tool - Intertank Skin Panel. This spreader bar type sling will handle (one) skin panel in the horizontal position for positioning and installing in the skin bub-assembly fixture.
HT2-370-28800	Hoisting Tool - Intertank Ring Segment. This sling will handle the individual ring segments in the horizontal position for assembly to the skin assembly in the Intertank final assembly fixture.
PP-370-28050	Personnel Platform - Intertank Sub-Panel Assembly Fixture. Permanent platform which sorrounds the fixture and is designed with a portable accessory platform which bridges over the fixture.
HT-3-370-28000	Hoisting Tool - Used to handle the following: STR-370-7295, ME-370-7353, STR-370-18901.

U3 4211 4000

5.2 (Continued)

PRD-370-7537	Production Dolly-LOX Tunnel Assembly. This dolly will support the LOX Tunnel in the horizontal position for storage and transport to the high bay assembly area.
HT-408-8016	Hoisting Tool - Installation of the LOX Suction Line.
MiT-470-8020	Miscellaneous Tool - Protective Cover for the F-1 Engine in horizontal position.
HT-370-16000	Hoisting Tool - Fairing and Fin - Fairing bulkhead and frame assemblies.
PP-370-16000	Personnel Platform - Cneter Fairing Assembly Fixture - This platform will permit access to the center fairing assembly fixture for all assembly operations.
PP2-370-16000	Personnel Platform - Upper Fairing Assembly Fixture - This platform will permit personnel access to the upper fairing assembly fixture for all assembly operations.
PP-370-1600 (Inside Fixture) PP-5-370-16000 (Outside Fixture)	Personnel Platform - Lower and Center Fairing Assembly Fixture. This platform will consist of several levels and will permit personnel access to the assembly fixture for all assembly operations, inside the fixture and outside the fixture.
PP4-370-16000	Personnel Platform - Fin Assembly Fixture. This portable platform will consist of several levels surrounding the fin assembly fixture to permit access to the fin components for all assembly operations.
PP6-370-16000	Lower Fairing Sub-Assembly Fixture.
MIT-370-16000 (Temp.) (Fittings-Lifting Lugs).	Miscellaneous Tool - Fairing Assembly. These fittings will be used to enable lifting of the lower fairing assembly, center fairing assembly and the center lower fairing assembly.

U3 4211 4000

5.2 (Continued)

MIT2-370-16000 (Temp.) Fittings-Lifting Lugs	Miscellaneous Tool - Fina Assembly. These fittings will be used to lift and transport the fin assembly.
MIT3-370-16000 (Temp.) Fittings-Lifting Lugs.	Miscellaneous Tool - Upper Fairing Assembly. These fittings will be used to lift and transport the upper fairing assembly.
PP-370-16110	Personnel Platform - Fairing, Bulkhead Assembly Fixture. This portable platform will be used to permit fit-up and welding personnel access to the weld fixture.

U3 4211 4000

5.3 FUNCTION OF AUTHORIZED TOOLS

5.3.1 Thrust Structure

AF340-7071	To Assemble Lower Thrust Ring
HT370-7107	To Handle Holddown Post
HT370-7108	To Handle Outboard Thrust Post Assembly
MIT335-18100	To Locate Hat Sections on Aft Adapter Skin Panel Assemblies
HT370-18100	To Handle Skin Panels and Assemblies in Sub-Assembly Fixture
AF335-18100	To Assemble Skin Panel Assemblies at Holddown Position
AF2-335-18100	To Assemble Skin Panel Assemblies at Holddown Position
AF335-18100	To Coordinate Headers for Skin Fixtures
HF335-18100	To Assemble Aft Adapter Skin Panel Assemblies
AF335-18300	To Assemble Skin Panel Assemblies at Fin Position
TMF335-18300	To Trim (2) Sides and Aft End of Skin Panel Assemblies
AF335-18300	To Coordinate Headers for Skin Assembly Fixtures
AF337-18602	To Assemble Upper Ring Web-Assembly - Fin Position
AF337-18605	To Assemble Upper Ring Web-Assembly - Holddown Position
AF337-18607	To Assemble Upper Ring Access Panel Assembly
AF340-18703	To Assemble Lower Ring Web Assembly Fin Position
AF340-18704	To Assemble Lower Ring Web Assembly Holddown Position
LDJ335-18901	To Locate and Drill Center Engine Clips at Center Engine Thrust Post Position I and III
PP370-18901	To Support Personnel On Shear Web Assembly Tools
AF335-18901	To Assemble Web Assemblies of Center Engine Support Position I and II

U3 4211 4000

5.3.1 (Continued)

AF335-18902	To Assemble Web Assemblies of Center Engine Support Position III and IV
LDJ335-18919	To Locate and Drill Center Engine Clips at Thrust Posts at Position II and IV
AF335-19110	To Assemble Intermediate Ring Assembly Sta. 152
AF335-19120	To Assemble Intermediate Ring Assembly Sta. 184
AF335-19300	To Assemble Intercostal Assembly Sta. 152 to Sta. 184
AF335-19301	To Assemble Intercostal Assembly Sta. 216 to 248
TnTr370-18050	To hold and support the Thrust Structure Assembly, Thrust Ring Assemblies, Center Engine Support Assemblies while Transporting
StR370-18100	To Hold and Protect the Cylindrical Skin Panel Assemblies when stored.
HF2-335-18100	To Hold Skin Panel Assemblies while removing miscellaneous tooling and completing finishing operations.
AF2-335-18300	To position and hold all parts of the Skin Panel Assemblies, Fin Position.
PP-335-18300	Personnel Platform to Facilitate Operation carried on in the Skin Panel Assembly Jigs.
MrCkG-335-18320	To Gage Hole Pattern common to Umbilical Plate and Thrust Structure
HT370-18703	To Hold various Web Assemblies of Upper and Lower Thrust Rings while Hoisting
TT340-18703	To Locate for Drilling Tool Holes common to Web Assembly and Thrust Ring Assembly.
AF335-18800	To Position and Hold all component parts of the Thrust Post Assembly for Drilling and Fastening
MF335-18800	To Hold and Traverse Outboard Thrust Post Assembly while Milling Aft End Surface

U3 4211 4000

5.3.1 (Continued)

HT370-18800	To Hold Outboard Thrust Post Assembly while Hoisting
AF335-18940	To Position and Hold Details of the Auxilliary Shear Panel Assemblies while Drilling and Fastening
AF2-335-18940	To Position and Hold Details of the Auxilliary Shear Panel Assemblies while Drilling and Fastening
AF335-19130	To Hold and Position Details of the Intermediate Ring Segments, Sta. 216, while Drilling and Fastening
AF335-19140	To Hold and Position Details of the Intermediate Ring Segments, Sta. 248, while Drilling and Reaming
WF335-32220	To Hold and Position Details of the Engine Actuator Support while Welding 5.0 and 7.0 Diameter Tubes
WF335-32230	To Hold and Position Details of the Engine Actuator Support while Welding 2.50 Diameter Tube
HT2-370-28800	To Hold Inter-Tank Ring Segment and "J" Ring, Sta. 315.0, while Hoisting

U3 4211 4000

5.3.2 Fuel Tank

HTF-395-5045	Heat Treat Fixture For Base Gore After Fitting is Welded
RF-302-7000	Router for Apex and Base Gores Trim Station - Perforation for Apex to Base Weld
RF-302-7001	Router for Gore Assembly Trim Station - Perforation for Bulkhead Weld
WF-302-7002	Weld Carriage for Apex to Base Weld Station (Cancelled) Purchased by Facility per Doc. - D-5-12080
T&WF-302-7003	Weld Fixture for Apex to Base Weld Station
WF-302-7004	Back-Up Bar for Weld Fixture - Apex to Base Weld Station
TWF-302-7006	Trim Fixture for Gore Assembly - Perforation for Bulkhead Weld
HF-302-7009	Holding Fixture for Positioning the Gore to Base in Welding Operation
WF-302-7010	Weld Fixture for Apex to Base Weld Station and Y-Ring to Gore Assembly
AF-302-7011	Turntable for Gore to Gore Weld
WF-302-7012	Weld Station for Gore to Gore Weld
RF-302-7013	Router to Trim Periphery of Bulkhead prior to Welding of Y-Ring
T&WF-302-7014	Weld Center Piece to Bulkhead
HT-370-7015	Hoisting Tool for Lifting Gore Assembly
AF-300-7016	Tank Sub Assembly Turntable
HF-302-7017	Vacuum Chuck for Gore to Gore Weld
W&TF-302-7018	Weld and Trim Fixture - for Welding Outboard LOX Tunnel Fitting into Apex
TWF-302-7019	Test Welding of Gore to Gore
WFA-302-7020	Weld Head Manipulator For Apex to Base Weld Station

U3 4811 4000

5.3.2 (Continued)

ETMF-320-7023	Control Trim fixture for Apex and Base Gores Trim Station - Perforation for Apex to Base Weld
TMF-302-7023	Trim Fixture for Apex and Base Gore Trim Station-Perforation for Apex to Base Weld
WF-302-7026	Weld Station for Y-Ring to Gore Assembly (Purchased by Facilities Per Doc. D-512080)
HF-302-7028	Holding Fixture for Gore Assembly Trim Station and Bulkhead Weld Station
RF-302-7030	Router-Chamfer Edge- for Apex and Base Gores Trim Station - Perforation for Apex to Base Weld
W&TF-304-7035	Weld and Trim Fixture Outboard LOX Tunnel Fitting Apex, Aft Fuel Tank
W&TF-304-7036	Weld and Trim Fixture Inboard LOX Tunnel Fitting to Apex, Aft Fuel Tank
RF-302-7037	Router Head Mounted on WFA-304-7057 Gantry
WF-302-7038	Weld Equipment to be mounted and used on WFA-304-7057 Gantry
WFA-302-7040	Weld Head Manipulator for Apex to Base Weld Station
TWF-302-7042	Test Weld Fixture with the Apex to Base Weld Station
PP-302-7043	Personnel Platform for Gore Assembly Trim Fixture
PP2-302-7047	Personnel Platform for Weld Jig
SA-302-7048	Used for Assembly of AF-302-7011 (only) (borrowed from Huntsville)
HT-370-7053	Sling Used For Placing Gore into Fixture
W&TF-302-7054	Weld and Trim Fixture Manhold Fitting to Apex, Forward Fuel Tank
W&TF-304-7055	Weld and Trim Fixture Fuel Fill and Drain Fitting to Apex, Aft Fuel Bulkhead
W&TF-304-7056	Weld and Trim Fixture Emergency and Drain Fitting to Apex, Aft Fuel Bulkhead
WFA-304-7057	Gantry to be used with Weld and Trim Fixtures for Routing Holes in Gores and Welding Fitting into Gores

U3 4211 4000

5.3.7 (Continued)

WFA-302-7058	Tilting Platform for Apex to Base Weld Station
LXT-302-7059	Lox Template for Gore Apex
RXT-302-7060	Rox Template for Gore Apex
HTF-302-7061	Heat Treat Fixture for Apex Fitting has been Welded
TC-302-7062	Clamps used during Milling of Gore Assembly
WF-302-7063	Weld Head Manipulator - Apex to Base Weld
RT-302-7064	Router-Chamfer Gage - for Apex and Base Trim Station
WG-302-7065	Gage for setting Milling Cutter on RF-302-7013
WFA-302-7066	Guide to install Bulkhead on Y-ring
WF-302-7067	Weld Fixture Skin Segment to Skin Segment
HT-302-7069	Hoisting Tool for Position of Fore Apex Weld Fixture
HT-370-7073	Hoisting Tool for Aft Gore Concave Side up into WF-302-7057
HIT-302-7078	Filler Blanket for Apex and Base Trim and Weld
HIT-370-7079	Seal LOX Tunnel Opening for Vacuum Chuck
HT-370-7080	Hoisting to Finished Y-ring
HTA-302-7496	Retaining ring, Manhole Fitting Upper Head - Fuel Tank Fittings to Apex Weld
WTF-302-7498	Weld and Trim Fixture Inboard LOX Tunnel Fitting to Center piece Forward Fuel Tank
AG-302-7503	Auxiliary Gage - for use with the WFA-302-7057
AG-302-7504	Auxiliary Gage - for use with the WFA-302-7057
AG-302-7505	Auxiliary Gage - for use with the WFA-302-7057
AG-302-7506	Auxiliary Gage - for use with the WFA-302-7057
WF-302-7511	Welding Tool Boss to Polar Cap
HIT-302-7512	Retaining ring, Outboard LOX Tunnel Fitting Upper Head Fuel Tank for Welding Fitting to Apex
HIT-304-7513	Used in conjunction with HF-302-7017

US 4211 4000

5.3.2 (Continued)

MIT-304-7514	Used in conjunction with HF-302-7017
MIT-304-7514	Used in conjunction with HF-302-7017
MIT-304-7515	Used in conjunction with HF-302-7017
MIT-304-7516	Used in conjunction with HF-302-7017
MIT-304-7515	Used in conjunction with HF-302-7017
TWF-302-7514	Test Weld Fixture
HT-370-7543	Hoist Tool Components into position during production
MIT-370-7546	Bulkhead to Skin Cylinder and Skin Cylinder to Skin Cylinder Alignment Tool
CKG-302-7547	Gages used to check Diameter of holes Router under Gantry
MIT-302-7550	Y-Ring to Bulkhead X-Ray
AFA-302-7560	Y-Ring to Bulkhead Weld
W&TF-302-7563	Weld and Trim Fixture Electrical Feed thru Fitting to Base Aft Fuel Tank
W&TF-302-7564	Weld and Trim Fixture Fuel Sensor Fitting to Apex, Aft Fuel Tank
MIT-302-7565	Used in conjunction with Vacuum Chuck
MIT-302-7566	Used in conjunction with Vacuum Chuck
MIT-302-7567	Used in conjunction with Vacuum Chuck
HTF-302-7569	Heat Treat Fixture After Fitting is Welded in Gore
W&TF-302-7580	Weld and Trim Fixture Fuel Loading Probe Fitting to Apex, Forward Fuel Tank
W&TF-302-7581	Weld and Trim Fixture Electrical Feed thru Base, Forward Fuel tank
W&TF-302-7583	Weld and Trim Fixture Fitting to Apex, Aft Fuel Tank
MIT-302-7600	Access to External Side- Bulkhead Assembly
WF-300-7608	Weld Fixture for Welding Skin Tee's

U3 4211 4000

5.3.2 (Continued)

MIF-370-7612	To protect Upper LOX Tunnel Fitting During LOX Tunnel Installation
HT-370-7614	To hoist LOX Tunnel Shipping Container, Tunnel from container to Weld Fixture and Tunnel Assembly from Weld Fixture to Production Dolly
SG-300-7615	Setting Gage to measure length and angular Trim of LOX Tunnel
TMF-300-7616	To trim LOX Tunnel to length and angle taken from SG-300-7615
MIT-300-7617	To protect LOX Tunnel Bellows during Tunnel Installation
HT-370-7618	To hoist Bellows for Installation on LOX Tunnel
TWF-300-00011	Bulkhead Assembly - General Purpose
CKG-303-10005	Used for checking O.D.
CKG2-303-10005	Used for setting Cutter
CKG3-303-10005	Used for setting Cutter
CKG4-303-10005	Set Gage
CT-303-10005	Contour Template
CT5-324-10005	Contour Template
MF-303-10005	Used for Milling Y-Ring
MIT-303-10005	Rough Measurement of O.D. or I.D.
HT-370-10005	Self Explanatory
OTG-303-10005	Tooling Dock - Y-Ring Check
OTG2-303-10005	Check Finished Dimensions - Y-Ring
PRD-370-10005	Transport Y-Ring
TA3-303-10005	Self Explanatory
PT-331-10005	Template to check profile of Y-Ring
TA6-303-10005	Tool Holders
TA9-300-10005	Table Extension Guards - Boring Mill
TRF-303-10005	Clamp Y-Ring Weldment for Machining on Boring Mill

U3 4811 4000

5.3.2 (Continued)

HT-370-10006	Sling used to handle individual Billets prior to Welding
HT2-370-10006	Sling used to handle Y-Ring Weldment
MD-300-10006	Used to manipulate "X-Ray" Tube for Radiographic Inspection of Y-Ring Welds
RF-300-10006	Used to remove Weld Defects for Y-Ring Repair
TA7-303-10006	Hold Weld Head and provide adjustment
TA10-300-10006	Remove Weld Starter and Run-Off Blocks
TWF-303-10006	Used for Weld Certification prior to Welding Y-Ring Billets
WF-303-10006	Weld Y-Ring Billets
HT-370-24000	Hoisting Tool for Bulkhead Assembly
MT-370-24000	Hoisting Tool for Bulkhead Assembly
WFA-300-24100	X-Ray Accessory
WFA2-300-24100	X-Ray Tube Carriage
WFA3-300-24100	X-Ray Film Carriage
WFA4-300-24100	Motorized Weld Film Carriage
WFA5-300-24100	Electric Control Console
WFA6-300-24100	Electric Control Console
WFA7-300-24100	X-Ray Film Carriage
WFA8-300-24100	X-Ray Tube Carriage
WFA9-300-24100	X-Ray Accessory
TMF-304-24219	Trims Elbow Halves
WF-304-24219	Welds Elbow Halves (Outboard)
DJ-304-24220	Locates and holds completely welded Assembly while drills 40 holes
MIT-304-24250	Rough cut holes in Apex for Fittings
WF-300-24404	Weld Upper Tunnel to Lower Assembly

U3 4211 4000

5.3.2 (Continued)

AF-322-24705	A Floor Mounted Assembly Fixture Used to Locate and hold component parts of the Cantilevered Ring Baffle Segment Assembly during Assembly of 60B24705-1 and -5
AF-322-24733	A Floor Mounted Assembly Fixture used to locate and hold Component Parts of the Ring Baffle Segment Assembly during Assembly of 60B24733-1 -3 -5 and 60B24704-1
WFA10-300-24100	X-Ray Tube Support
WFA11-300-24100	Polar Cap Weld X-Ray
WFA12-300-24100	Personnel Platform
WFA13-300-24100	X-Ray Tube Shield
WFA14-300-24100	Qualification and Storage Polar Cap X-Ray
WFA15-300-24100	X-Ray Control Console
HTF-304-24101	Used For Heat Treat
DJ-300-24102	Used to Weed Holes in Y-Ring
TA-300-24102	Tool Holder
TA2-300-24102	Tool Holder
TA3-300-24102	Optical Tool Locater
TMF-304-24215	Scribe Rough Trim at Both ends of Welded Elbow Halves (Outboard)
HF-304-24216	Holds Weld Head and Mill Head while matching and drilling Fuel Suction Fittings
MF-304-24216	To Machine Upper Flange Face Net
TA-304-24216	Turntable (Positioner) to position Fixtures in correct Orientation for Matching and Welding
TMF-304-24216	Scribes Rough Trim at both ends of Weld Elbow Halves (Inboard)
W&TF-304-24216	Trims large end of Welded Elbow Halves net, and welds same to 60B24207-1
W&TF2-304-24216	Trims small end of Welded Elbow Halves net, and welds same to 60B24220-1

U3 4211 6000

5.3.2 (Continued)

MrG-304-24218	Shows Contour and Tooling Holes in Inboard Elbow Halves
TMF-304-24218	Trims Elbow Halves for Welding (Inboard)
WF-304-24218	Welds Elbow Halves (Inboard)
MrG-304-24219	Shows Contour and Tooling Holes in Elbow Halves
TmF-304-24219	Trims Elbow Halves for Welding (Outboard)
WF-304-24219	Welds Elbow Halves (Outboard)
TmF-304-24207	Trims Excess from Fitting Assembly.
DJ-304-24220	Drills hole Pattern in Flange
W&TF-304-24218	Trims and Welds Instrument Fitting to Elbows (Inboard)
W&TF-304-24219	Trims and Welds Instrument Fitting to Elbows (Outboard)
TmF-300-7644	Skin Trim Fixture
ETMF-302-7006	Electrical Control System for the Gore Assembly Trim Station

U3 4211 4000

5.3.3 Intertank

AF 320-28000	Assembles Skin Panel Sub-Assemblies and Frame Rings - Intertank
AF 320-28800	Assembles Components into a 60 Degree Segment of Frame Ring
AF 320-28820	Assembles Components into a 60 Degree Segment of Frame Ring
CT 320-28800	Used to Check Contour of Outer T Chord and Tooling Coordination
ATDT 320-28803	Coordinates Tool Holes and Contains Pilots for Rivet Locations Common to Chords and Webs
ATDT 320-28844	Coordinates Tool Holes and Contains Pilots for Rivet Locations Common to Chords and Webs
DJ 320-28800	Drill Fastener Locations Through Chords, Chord Splices and Webs
DJ-2-320-28800	Drill Fastener Locations Through Opposite From Above
DJ-3-320-28800	Drill Pilot Holes in T Clip
AF 320-28050	Assembles Three Skins
MrCKG 320-28201	Controls Hole Locations In Drill Jigs for Inner "Y" Ring Fittings
DJ 320-28201	Drills and Reams Fitting to Skin Attach Holes in Inner Fuel "Y" Ring Fittings
MrCKG 320-28202	Controls Hole Locations in Drill Jigs for Outer "Y" Ring Fittings
DJ 320-28202	Drills and Reams Fitting to Skin Attach Holes in Outer Fuel "Y" Ring Fittings
DJ 320-28203	Drills and Reams Fitting to Skin Attach Holes in Inner LOX "Y" Ring Fittings

U3 4211 4000

5.3.3 (Continued)

DJ 320-28204	Drills and Reams Fitting to Skin Attach Holes
MF 320-28100	Drill & Mill Attach Holes in Umbilical Opening
DJ 320-28240	Drills Attach Holes for Doublers and Stiffeners
MrCKG 320-28202-900	Controls Holes in Drill Jigs for Outer "Y" Ring Fittings at Splice
DJ 320-28202-900	Drills and Ream Fittings to Skin Attach Holes in Outer Fuel "Y" Rings Fittings at Splice
DJ 320-28204-900	Drills and Reams Fittings to Skin Attach Holes in Outer LOX "Y" Ring Fittings at Splice
MRDJ 330-7455	Controls Holes Drilled in Intertank to Match HT 370-7292
MTT 320-2800	Position Frame Ring Stiffeners to Splices
ATDT 320-28103	Scribe periphery of (2) Openings
ATDT 320-28241	Drill and Trims Opening for Electrical Conduit Also use for Pressure Vent
DJ 320-28000	Drills Intertank for Attach of HT 370-1292 Positioners
ADJ 2-28160	Assembles Inner Fuel Vent Doubler Assemb ly to Panel
ADJ 320-28220	Assembles Inner Fuel Pressurization Doubler Assembly
ADJ 2-320-28220	Assembles Fuel Pressurization Doubler Assembly to Panel
ADJ 320-28260	Assembles Inner Fuel Pressurization Test-Doubler Assembly
ADF 2-320-28260	Assembles Inner Fuel Pressurization Test-Doubler Assembly to Panel
ADJ 320-28156	Assembles and Drills LOX Outer Frame Assembly
ADJ 320-28157	Assembles and Drills LOX Inner Frame Assembly

U3 4211 4000

5.3.3 (Continued)

ADJ 320-28150	Positions LOX Inner Frame to Panel and Drills Attach Holes
ADJ 2-320-28150	Positions LOX Outer Frame to Panel and Drills Attach Holes
ADJ 320-28100-901	Assembles Access Door Outer Doubler Assembly
ADJ 320-28100-902	Assembles and Drills Access Door Outside Doubler Assembly
DJ 4-320-28800	Drills Pilots in Frame Ring Outer and Inner Chord.
CKG 320-28221	Checks Opening in Panel
CKG 320-28162	Checks Opening in Panel
CKG 320-28143	Checks LOX Opening in Panel
MIT-2-320-28000	Locates Stiffeners in Frame Ring
DJ3-320-28000	Drills Pilot Holes in Intertank for Tunnel Attach
MIT 320-28205	Router Bar for Panel Trim
MIT 320-28261	Routs Opening - Locates and Drills Outer Doubler
MIT 320-28162	Routs Opening-Locates and Drills Outer Doubler Also Used for Fuel Vent
MIT 320-28221	Routs Opening-Locates and Drills Outer Doubler

U3 4211 4000

5.3.4 LOX Tank

HTF-395-5045	See Fuel Tank
RF-302-7000	See Fuel Tank
RF-302-7001	See Fuel Tank
WF-302-7002	See Fuel Tank
T&WF-302-7003	See Fuel Tank
WF-302-7004	See Fuel Tank
TmF-302-7006	See Fuel Tank
HF-302-7009	See Fuel Tank
AF-302-7010	See Fuel Tank
AF-302-7011	See Fuel Tank
WF-302-7012	See Fuel Tank
RF-302-7013	See Fuel Tank
HT-370-7015	See Fuel Tank
AF-300-7016	See Fuel Tank
HF-302-7017	See Fuel Tank
TWF-302-7019	See Fuel Tank
WFA-302-7020	See Fuel Tank
ETMF-320-7023	See Fuel Tank
TmF-302-7023	See Fuel Tank
WF-302-7026	See Fuel Tank
HF-302-7028	See Fuel Tank
RF-302-7030	See Fuel Tank
W&TF-314-7032	Weld And Trim Fixture Outb'd., LOX Suct. Ftg. To Apex, (Aft. LOX Bulkhead)
RF-302-7037	See Fuel Tank

U3 4211 4600

5.3.4 (Continued)

WF-302-7038	See Fuel Tank
WFA-302-7040	See Fuel Tank
TWF-302-7042	See Fuel Tank
PP-302-7043	See Fuel Tank
PP2-302-7047	See Fuel Tank
SA-302-7048	See Fuel Tank
HT-370-7053	See Fuel Tank
WFA-304-7057	See Fuel Tank
WFA-302-7058	See Fuel Tank
BxT-302-7060	See Fuel Tank
TA-302-7062	See Fuel Tank
NF-302-7063	See Fuel Tank
RT-302-7064	See Fuel Tank
RG-302-7065	See Fuel Tank
AFA-302-7066	See Fuel Tank
WF-306-7067	See Fuel Tank
HT-302-7069	See Fuel Tank
HT-370-7073	See Fuel Tank
MiT-302-7078	See Fuel Tank
MiT-370-7079	See Fuel Tank
HT-370-7080	See Fuel Tank
HF-302-7082	Holding Fixture Used With The TmF-302-7023
W&TF-312-7084	Weld and Trim Fixture LOX Vent Fitting To Apex Forward LOX Tank
W&TF-312-7085	Weld and Trim Fixture GOX Vent Fitting to Apex Forward LOX Tank

U3 4211 4000

5.3.4 (Continued)

W&TF-314-7499	Weld and Trim Fixture Inboard LOX Suction Fitting to Center Piece, Forward Fuel Tank
W&TF-314-7500	Weld and Trim Fixture LOX Fill and Emergency Drain Fitting to Base, Aft LOX Tank
MiT-302-7501	Used in Conjunction with Vacuum Chuck
AG-302-7503	See Fuel Tank
AG-302-7504	See Fuel Tank
AG-302-7505	See Fuel Tank
AG-302-7506	See Fuel Tank
MiT-304-7513	See Fuel Tank
MiT-304-7516	See Fuel Tank
TWF-302-7541	See Fuel Tank
HT-370-7543	See Fuel Tank
MiT-370-7546	See Fuel Tank
CkG-302-7547	See Fuel Tank
MiT-302-7550	See Fuel Tank
AFA-302-7560	See Fuel Tank
MiT-302-7567	See Fuel Tank
HTF-302-7569	See Fuel Tank
MiT-302-7600	See Fuel Tank
WF-300-7608	See Fuel Tank
TWF-300-00011	See Fuel Tank
CKG-303-10005	See Fuel Tank
CKG2-303-10005	See Fuel Tank
CKG3-303-10005	See Fuel Tank
CKG4-303-10005	See Fuel Tank
CT-303-10005	See Fuel Tank

5.3.4 (Continued)

CT5-324-10005	See Fuel Tank
MF-303-10005	See Fuel Tank
MIT-303-10005	See Fuel Tank
HT-370-10005	See Fuel Tank
OTG-303-10005	See Fuel Tank
OTG2-303-10005	See Fuel Tank
PRD-370-10005	See Fuel Tank
TA3-303-10005	See Fuel Tank
PT-331-10005	See Fuel Tank
TA6-303-10005	See Fuel Tank
TA9-300-10005	See Fuel Tank
TRF-303-10005	See Fuel Tank
HT-370-10006	See Fuel Tank
HT2-370-10006	See Fuel Tank
ME-300-10006	See Fuel Tank
RF-300-10006	See Fuel Tank
TA7-303-10006	See Fuel Tank
TA10-300-10006	See Fuel Tank
TWF-303-10006	See Fuel Tank
WF-303-10006	See Fuel Tank
HT-370-24000	See Fuel Tank
ME-370-24000	See Fuel Tank
WFA-300-24100	See Fuel Tank
WFA2-300-24100	See Fuel Tank
WFA3-300-24100	See Fuel Tank
WFA4-300-24100	See Fuel Tank

U3 4811 4060

5.3.4 (Continued)

WFA5-300-24100	See Fuel Tank
WFA6-300-24100	See Fuel Tank
WFA7-300-24100	See Fuel Tank
WFA8-300-24100	See Fuel Tank
WFA9-300-24100	See Fuel Tank
WFA10-300-24100	See Fuel Tank
WFA11-300-24100	See Fuel Tank
WFA12-300-24100	See Fuel Tank
WFA13-300-24100	See Fuel Tank
WFA14-300-24100	See Fuel Tank
WFA15-300-24100	See Fuel Tank
HTF-304-24101	See Fuel Tank
DJ-300-24102	See Fuel Tank
TA-300-24102	See Fuel Tank
TA2-300-24102	See Fuel Tank
TA3-300-24102	See Fuel Tank
MIT-304-24250	See Fuel Tank
AF-318-12411	Assy. Fixt. LOX Cruciform Baffle Quadrant
AF-318-12414	Assy. Fixt. LOX Cantilevered Ring Baffle Quadrant
AF-318-12428	Assy. Fixt. LOX Ring Baffle Quadrant
TmF-300-7644	Skin Trim Fixture

5.3.5 Forward Skirt Assembly

Tool Number	Nomenclature
AF425-14220	Locate, hold and drill all details to complete an access door.
AF-425-14400	Locate, hold, drill and temporarily attach all details of skin panel assembly.
AF425-14000	Locate, hold, and drill all details and sub-assemblies to complete Forward Skirt Assembly.
AF425-14400	Locate, hold, drill and route all details of skin panel assembly.
AF425-15200	Locate, hold and drill all details to assemble a 1/6 segment of the Interface ring.
WF425-14325	Locate, hold, drill and weld all details necessary to complete the unbilical door frame assembly.

U3 4211 4000

5.3.6 Fin and Fairing

AF-345-16000	Join Lower Fairing, Center Fairing and Fin.
AF-345-16101-901	Assemble Lower Fairing
AF-345-16101-902	Assemble Center Fairing
AF-345-16101-903	Assemble Frames for Station 48.5, 83.5 and 100.25
AF-345-16102	Assemble Upper Fairing
AF-345-16110	Assemble Station 66.75 Frame
AF-345-16135	Assemble Upper Portion of Station 216.4 Frame
AF-345-16150	Assemble Station 115.5 Frame
AF-345-16190	Assemble 152.45 and 183.89 Frame
AF-345-16198	Assemble Lower Portion of Station 216.4 Frame
AF-345-201	Assemble Station 247.8 and 279.8 Frames
AF-345-16500	Assemble Fairing Air Scoop
AF2-345-16500	" " " "
AF3-345-16500	" " " "
AF4-345-16500	" " " "
AF-345-30000	Assemble Fin
AF-345-30100	Assemble Fin Spar
AF-345-30200	Assemble Fin Trailing Edge Beam
AF-345-30203	Assemble Aft Fin Rib and Fin Station 47.400
AF-345-30204	Assemble Aft Fin Rib and Fin Station 57.609
AF-345-30205	Assemble Aft Fin Rib, Fin Station 67.819

U3 4211 4000

5.3.6 Fin and Fairing (Cont'd.)

AF-345-30212	Assemble Aft Fin Rib, Fin Station 37.191
AF-345-30301	Assemble Forward Fin Rib, Fin Station 37.191
AF-345-30302	Assemble Forward Fin Rib, Fin Station 47.400
AF-345-30303	Assemble Forward Fin Rib, Fin Station 57.609
AF-345-30304	Assemble Forward Fin Rib, Fin Station 67.819
AF-345-30400	Assemble Fin Tip Beam
MrG-345-7109	Install the Support Fittings to the Thrust Structure
MrG-345-16090	Controls the Points of Interchangeability on AF-345-16000
MrG-345-16102	Controls the Points of Interchangeability on AF-345-16102
MrG-345-30000	Controls the Points of Interchangeability on AF-345-30000
MrSG-345-7114	Controls the Points of Interchangeability on MrG-345-7109, MrG-345-16090 and MrG-345-10102
MrSG-345-30000	Control the Points of Interchangeability on MrG-345-30000
TT-345-16150	Locates the Spar Attach Holes and Thrust Structure Holes in AF-345-16150, Coordinates the Drill Plates for Drilling the Fin Closure Angles in AF-345-16000, Coordinates the Spar to Fairing Attach Holes in AF-345-30100 and Coordinates the 115.5 Frame location in AF-345-16101-901.

U3 4211 4000

5.3.6 Fin and Fairing

AF-345-16000	Join Lower Fairing, Center Fairing and Fin
AF-345-16101-901	Assemble Lower Fairing
AF-345-16101-903	Assemble Frames
MrSG-345-7114	To Control Fairing interchangeability and Fin replaceability
AF-345-16101-902	Assemble Center Fairing
AF-345-16135	Assemble Frame
AF-345-16110	Assemble Frame

U3 4211 4000

5.3.7 **Tunnels**

Information not available

U3 4811 4000

5.3.8 Engine Buildup

G-4044	The Basic Function Of This Tool Is A Shipping Fixture. Production Work Will Not Be Performed On This Tool.
G-4050	Rotates The Engine From Vertical To Horizontal Position And Back Again.
G-4052	This Sling Is Used To Lift The Air Transport Handler While The Engine Is Mounted On The Handler. It Is Also Used To Handle Engine Skirts.
G-4058	The Engine Will Be Positioned Vertically On This Tool. All Shop Functions Through Engine Buildup And Testing Will Be Performed On This Handler.
9014100	After The Engine Is Built Up And Ready For Installation, The Engine Is Placed On This Handler.

U3 4211 4000

5.3.9 Vertical Assembly

DJ-325-7291	Drills fastener locations common to the Intertank outer fittings and the Upper "Y" Ring of the Fuel Tank
DJ-325-7293	Drills fastener locations common to the Intertank Fittings and the Upper "Y" Ring of the Fuel Tank
DJ-325-7352	Drills fastener locations common to Forward Skirt Assembly and the Upper LOX Tank "Y" Ring
MIT-330-7354	Provides radial alignment for the Forward Skirt to LOX Tank Assembly
MIT-330-7442	Provides radial alignment, Fuel Tank to Thrust Structure
DJ-330-7443	Drills fastener locations common to the Thrust Structure and the lower Fuel Tank "Y" Ring
MIT-330-7445	Provides vertical alignment, Intertank to Tank
MIT-330-7446	Provides vertical alignment, Forward Skirt to Oxidizer Tank
MIT-330-7447	Provides back-up for the fastener locations common to the Thrust Structure and Fuel Tank
MIT-330-7452	Provides radial alignment Intertank to Tank
MIT-330-7461	Provides guides when installing Fuel Tank to Thrust Structure
MIT-330-7462	Provides guide when installing Intertank to Tank
DJ-330-7465	Clamps and drills holes in Forward Skirt skins and doublers in skin splice areas common to "Y" Ring
DJ-330-7466	Clamps and drills holes in the Forward Skirt Skins and channels
DJ-330-7468	Clamps and drills holes in Hat Section adjacent to left side of the umbilical channel members

U3 4211 4000

5.3.9 (Continued)

DJ-330-7469	Clamps and drills holes in Hat Section adjacent to right side of the umbilical channel members
ALF-335-7106	Provides a level condition for the Thrust Structure to Fuel Tank Assembly
TNTR-370-18050	Transport Thrust and Intertank Structure
TNTR-370-24000	Provides method of transportating Fuel Tank and LOX Tank
ME-370-7353	Provides method of transportating Forward Skirt
HT-370-7049	Provides method of handling Forward Skirt
HT-370-7111	Sling used for handling of Thrust Structure
PRD-370-24000	Provides method of transportating Fuel Tank and LOX Tank

5.3.10 Horizontal Installation

Tool Number	Nomenclature
MT 470-8016	Provides an attach point at the forward end of the LOX Suction Duct for a sling by which the Duct will be lifted.
HT 470-8004	A probe type installation tool which provides a positioning capability for items installed in the Thrust Structure during the Stage Horizontal Position.
PP 470-8009	Provides access to the Fuel and LOX Tank interior while the stage is in the Horizontal Position.

U3 4211 4000

5.4 CAPACITY OF TOOLS

The tools built to support contract NAS 8-5608 are of a quality and quantity to produce a minimum of twenty-five vehicles, and to meet the contracted delivery schedule.

All major tools will be designed to permit dimensional changes, relocation of critical positions, and as much flexibility as possible to allow for incorporation of engineering changes with a minimum of cost and production delay. Following are charts showing descriptions functions and capacities of major tools and facilities.

TOOL OR FACILITY	NO. UNITS	DESCRIPTION	FUNCTION	CAPACITY
Main Assembly Fixture Thrust Structure Assy AF-335-7027	2	A vertical-mounted barrel type fixture consisting of vertical towers, removable locators and tower.	To hold details and sub-assemblies in position for drilling, reaming and fastening.	3/4 Stage/month
Assembly Fixture, Center Engine Support Structure AF-335-7070	1	A vertically mounted crucifix consisting of 4 picture frame type jigs.	To position and hold details for assembly of center engine support structure.	2 Stage/month
Assembly Fixture, Cylindrical - Panel Assembly AF-335-18100-1 & -2	1	A vertically mounted fixture of the picture frame type with headers to control skin contour.	To position and hold details for drilling and assembly of cylindrical panel assembly.	2½ Stage/month
Assembly Fixture, Outboard Thrust Post AF 335-18800	1	Horizontal floor-mounted table type fixture to assemble outboard thrust post.	To position and secure details for drilling of positive feed portable drill motor.	3 Stage/month
Assembly Fixture, Position I and III Center engine Support Web Assembly AF 335-18901	1	A picture frame type fixture used to assemble center engine support shear web assembly Pos. I & II.	To position and hold details for drilling with a power feed drill.	3 Stage/month
Assy Fixture Position II and IV center engine support web assembly AF-335-18902	1	Vertically mounted, picture frame type with straight header and nesting web & locating stiffeners.	To locate center engine web to stiffeners for the assembly of center engine support web sub-assembly.	3 Stage/month
Upper & Lower Thrust Ring Assembly AF-340-7071	2	A horizontally mounted cylincrical fixture 33 feet in diameter by 4.5 feet section.	To locate components of upper and lower thrust ring for assemb.y.	1¼ Stage/month
Intermediate Ring Assy AF 335-19110	1	A horizontally mounted bench type fixture	To locate intermediate ring caps & shear webs for assembly.	3 Stage/month

TOOL OR FACILITY	No. UNITS.	DESCRIPTION	FUNCTION	CAPACITY
Intertank Final Assembly Fixture AF-320-28000	1	Vertically mounted fixture consisting of 12 pier locators	To assemble the H-Ring segment subassemblies, splice plates and intertank S/A's.	1 Stage/month
Skin Panel Assembly Jig AF-320-28050	1	Horizontally mounted tool consisting of a locator bed and edge and trim attachment.	Trim and fasten together three skin panels followed by installation of end fittings and locating the LOX Door, access door, etc.	1 3/4 Stages/mos.
Ring Sub-Assembly Fixture AF-330-28800	1	Vertically floor mounted tool consisting of position locators and applied drill jigs.	To assemble the H-Ring frame sub-assembly segments.	1 3/4 Stages/mo.
Forward Skirt Assembly Fixture AF-425-14000	1	A floor mounted assembly fixture optically set up, consisting of 12 piers interconnected structurally.	To locate for drilling and assembling the interface ring channel ring, J ring, and various brackets to the skin panels.	1 Stages/month
Assembly Jig - Skin Panels - Forward AF 425-14400	1	A floor mounted trunnion assembly fixture.	To locate for drilling and assembling hat stiffeners and angles to the skin panel.	1 Stages/month
Umbilical Door Assembly Fixture AF-425-14260	1	A floor mounted trunnion assembly fixture	To locate for drilling and assembling hat stiffeners, angles, and bracket handle to the skin panel.	10/Stages/month
Access Door Assembly	1	A floor mounted trunnion assembly fixture	To locate for drilling and assembling hat stiffeners, angles, and hinges to the skin panels.	10/Stages/month

TOOL OR FACILITY	NO. UNITS	DESCRIPTION	FUNCTION	CAPACITY
Fin Final Assembly Fixture AF-345-30,000	1	Tool set on permanent foundation. A rectangular base with upright columns and removable upper beam to unload tool from the top.	To locate and hold detail parts for drilling and installing fasteners.	1½ Stages/month
Main Spar Assembly Fixture AF-345-30,100	1	Floor mounted trunnion type assembly tool of aluminum picture frame structure. The pedestals are lagged to the floor.	To locate the spar web, two chords and web stiffeners for drilling, reaming, and installing fasteners.	4 Stages/month
Trailing Edge Assembly Fixture AF-345-30-200	1	A trunnion mounted assembly tool. The trunnion is lagged to the floor.	To locate web and angles for drilling and installing fasteners.	4 Stages/month
Closure Rib Assembly Fixture AF-345-30,400	1	A trunnion mounted assembly tool, no foundation required; lagged to floor.	To locate and hold webs and chord angles for drilling and installing fasteners	4 Stages/month
Fairing Final Assembly Fixture AF-345-16,000	1	The structure of this tool is approximately 16 feet high, 16 feet wide, and 8 feet deep. The beam and tubing weldments are mechanically fastened. The tool rests on a permanent foundation.	Joins the lower and center fairing assemblies and also accepts the fin for hole reaming and alignment.	2/Stages/month
Lower Fairing Assembly	1	Conical shaped tool resting on a base supported by a permanent foundation. The tool has ray type locators	To locate and hold detail parts and assembly for installing clips, fasteners, intercostals, etc.	2 Stages/month

US 4311 4000

TOOL OR FACILITY	NO. UNITS	DESCRIPTION	FUNCTION	CAPACITY
Assembly Fixture, Upper Thrust Ring Assembly, Web Assembly AF-337-18602 and AF-337-18605	1	A vertically mounted drill plate fixture.	To position and hold the details of this assembly for drilling with a power feed drill.	3 stage/months
Assembly Fixture, Upper Thrust Ring Assembly Access Panel Assembly AF-337-18607	1	A vertically mounted drill plate fixture used to assemble access panel assemblies on upper thrust ring.	To Position and hold details for drilling and assembly	4 Stage/months
Assembly fixture, lower Thrust Ring Assembly Web Assembly Af-340-18703 and AF-340-18704	1	A vertical mounted drill plate fixture used to assemble the web Assembly.	To position and hold details for drilling with power feed drill.	3 Stage/months
Turntable, Bulkhead Fabrication AF-302-7011	1	A horizontal floor mounted tool used in assembly of the bulkhead.	To locate, support & rotate the gore sections into correct position for welding into a bulkhead assembly.	1¼ Stages/month
Trim & Weld Fixture Center piece to bulkhead T & WF 302-7014	1	A floor mounted tool using a series of pedestals to support gore base or gore apex assembly after completion of gore to gore welding.	To trim apex of the bulkhead assemble and to position & hold center piece during welding operation.	1¼ Stages/month
Turntable, Assembly Tower Main Weld Station	2	A horizontal floor mounted fixture capable of supporting, holding and rotating a LOX or fuel tank assembly or half section in the vertical position.	To provide rotation for welding & trimming the fuel and LOX tank girth welds and tee stiffener welds.	1Stage each 3 months

U3 4211 4000

TOOL OR FACILITY	NO. UNITS.	DESCRIPTION	FUNCTION	CAPACITY
Vertical Assembly Building	1	A high bay area having the capability to assemble S-IC stages in the vertical position. Building contains Fuel and LOX Tank assembly towers, a hydrostatic test and cleaning tower, and a final assembly tower.	To assemble LOX and Fuel Tanks and complete S-IC Stages.	1 Stage/month
Boring Mill	1	A vertical boring mill with the capability of turning 42 feet. The mill has two machine heads and utilizes template and tracer type control.	To machine the 33 foot diameter "Y" ring.	3/4 Stage/month

U3 4211 4000

TOOL OR FACILITY	NO. UNITS	DESCRIPTION	FUNCTION	CAPACITY
Center Fairing Assembly Fixture AF-345-16,101-902	1	A conical shaped tool resting on a base supported by a permanent foundation. The tool has ray type locators.	To locate and hold detail parts and assembly for installing clips, fasteners, intercostals, etc.	2 Stage/months
Upper Fairing Assembly	1	Same description as Center Fairing Assembly above.	Same function as Center Fairing Assembly above.	2 Stage/months
Sub-system Test Area	1	Composed of seven major test areas: Telemeter; Instrument; RF and TV; E/E Components; equipment maintenance and Special Test; F-1 Engine; and Pneumatic and Cryogenic. Each area is equipped with the special facilities and test equipment necessary to perform the required tests.	To test all components, parts, sub-assemblies, assemblies, and sub systems of GSE/MSE and S-1C Stage Hardware. Fucntions of the seven major test areas are included in Section III. Paragraph 5.1 of this Document	1 set FSE/MSE per month 1 set Stage items each six weeks.
Stage Test Facility	1	A test complex consisting of four individual test positions which are served by two sets of automatic test equipment located in a three story test center at the forward end of the test positions. (See illustration Section III, Chart 4).	To demonstrate that each part of the S-1C stage is capable of meeting its design requirement in conjunction with other systems.	1 stage each 3 months.

6.0 DESCRIPTION, FUNCTION AND CAPACITY OF FACILITIES

The Michoud Facility has been designed around product oriented Manufacturing Shops and supporting Engineering groups. Each facility has been designed with reliability as a prime consideration. Capable facilities assure reliability when coupled with proper design, manufacture, and inspections. Each facility has been assigned to a "functional" description indicative of the type and extent of activity performed in that area.

Total facility capacity is paced primarily by the Vertical Assembly Building. Provisions have been made to permit the addition of a vertical assembly position with minimum impact. This additional position would provide the capacity to attain delivery rates in excess of those currently contracted. General factory area presently assigned can be rearranged to provide more major structures assembly area (i.e. Intertank, Forward Skirt and Thrust Structure Assembly Fixtures) by transferring minor subassembly work to out-plant sources. Major processing systems (cleaning, plating, testing, etc.) can be extended to handle the additional rate based on requirements as presently known. The Michoud facility is divided into seven general areas: (See Figure 6-1).

a) Final Assembly (Vertical and Horizontal)
b) Major Sub-Assembly and Engine Build-Up
c) Minor Sub-Assembly
d) Electrical and Electronic
e) Manufacturing Full Scale Model
f) Rework, Modification and Tool Maintenance
g) Component Cleaning and Finish Process

6.1 FINAL ASSEMBLY FACILITY

Functional responsibilities attributed to this facility are:

a) Vertical Assembly
b) Horizontal Assembly
c) Refurbish Position

6.1.1 Vertical Assembly

This facility is located in a separate building, built specifically for this task. The building will measure approximately 200 feet long by 200 feet wide by 215 feet high, will be environmentally controlled for temperature and humidity and will conform to Class "Y" clean room specifications per BAC 5703, and class zero specifications per AFTO-00-25-203. This building will be serviced by 440/220/110 volt A.C. 60 cycle power, oil free compressed air, dry nitrogen, hot and cold demineralized water, an overhead 180 ton bridge crane and a 12 ton auxiliary high speed crane on the same bridge.

U3 4211 4000

1. Final Assembly (Vertical and Horisontal)
2. Major Sub-Assembly and Engine Build-Up
3. Minor Sub-Assembly
4. Electrical and Electronic
5. Manufacturing Full Scale Model
6. Rework, Modification and Tool Maintenance
7. Component Cleaning and Finish Process

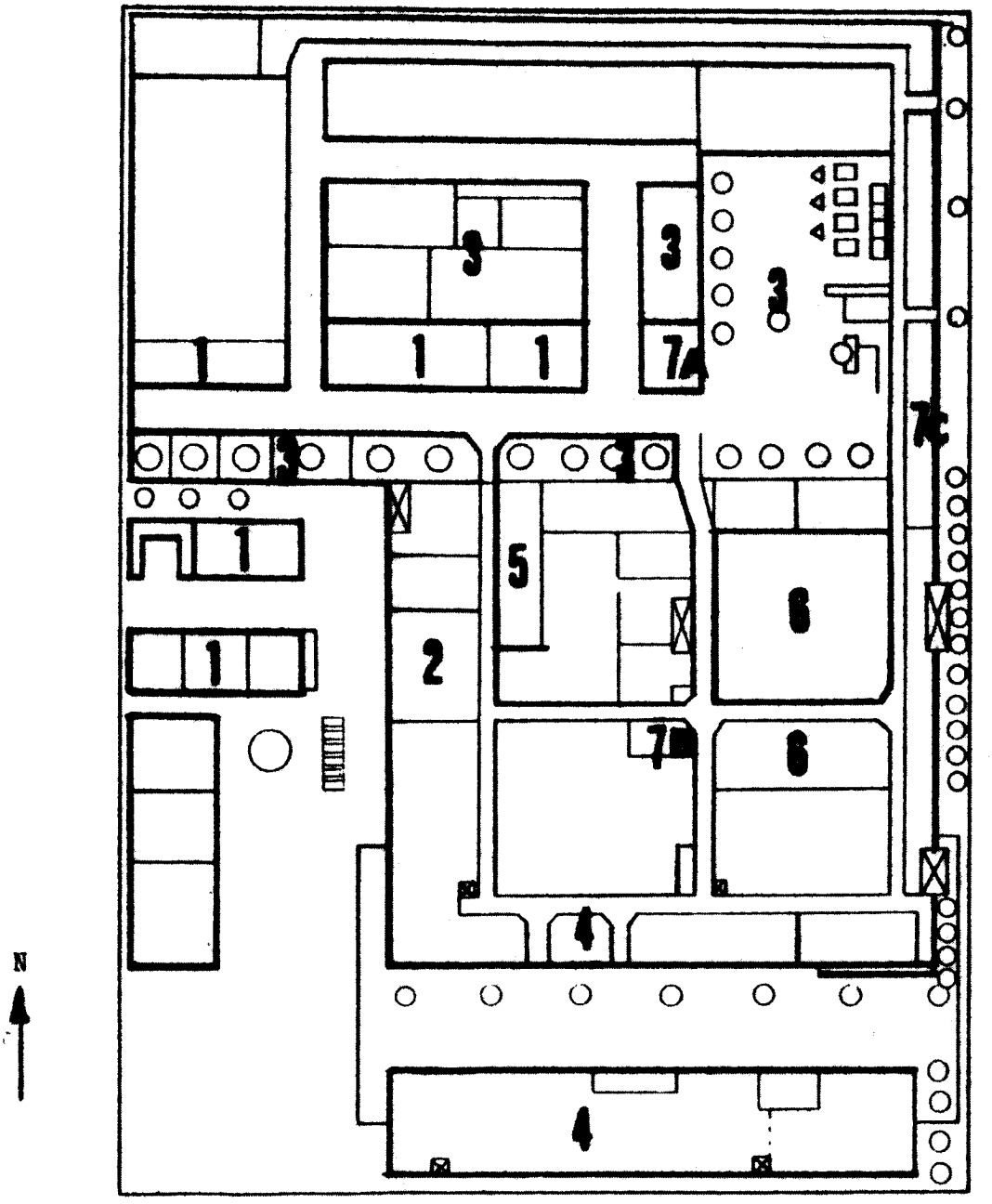

Figure 6-1 MAIN FACTORY LAYOUT

U3 4211 4000

6.1.1 (Continued)

demineralized water, an overhead 180 ton bridge crane and a 12 ton auxiliary high speed crane on the same bridge, both with hook heights of 185 feet. The Vertical Assembly position is located in the northeast corner of the building and will have the capability to assemble the stage in the vertical position. This step by step erection requires close tolerance assembly capabilities. The stage will be erected less the engines and will be lowered to the horizontal position with the 180 ton crane. Area is available within this building for erection of a second vertical assembly position. (See Figure 6-2)

6.1.2 Horizontal Installation Position

This area is located in the Minor Sub-Assembly Area on the 45 foot aisle adjacent to the Major Structure Assembly area. This area contains facilities for installing the F-1 engines and the sub-systems hardware, including propulsion system components and electrical, electronic, and pneumatic equipment. It will be supplied with 440/220/110 volt A.C. 60 cycle power, oil free compressed air, dry nitrogen, and special foundations for supporting the stage and transporter. (See Figure 6-3)

6.1.3 Refurbishment Position

This area shall have the capability to completely refurbish the S-1C booster after static firing. All test gages, fittings, instruments, and engines will be removed and replaced with actual flight ready components. The area is located on the 45 foot aisle adjacent to the Major Structure Area. The area will be serviced with 440/220/110 volt A. C. cycle power, oil free compressed air, dry nitrogen for purging and general factory air-conditioning. (See Figure 6-3)

6.2 MAJOR SUB-ASSEMBLY FACILITY

The Major sub-Assembly Area consists of the following functional areas:

a) Fuel and Oxidizer Assembly Build-Up
b) Hydrostatic Test and Cleaning
c) Engine Build-Up

6.2.1 Fuel and Oxidizer Tank Assembly Build-Up

This area is located in the Vertical Assembly Building. Three assembly positions are provided, two on the North side and one on the South side. Each position will provide capability to

(See Area 1,
Figure 5-1)

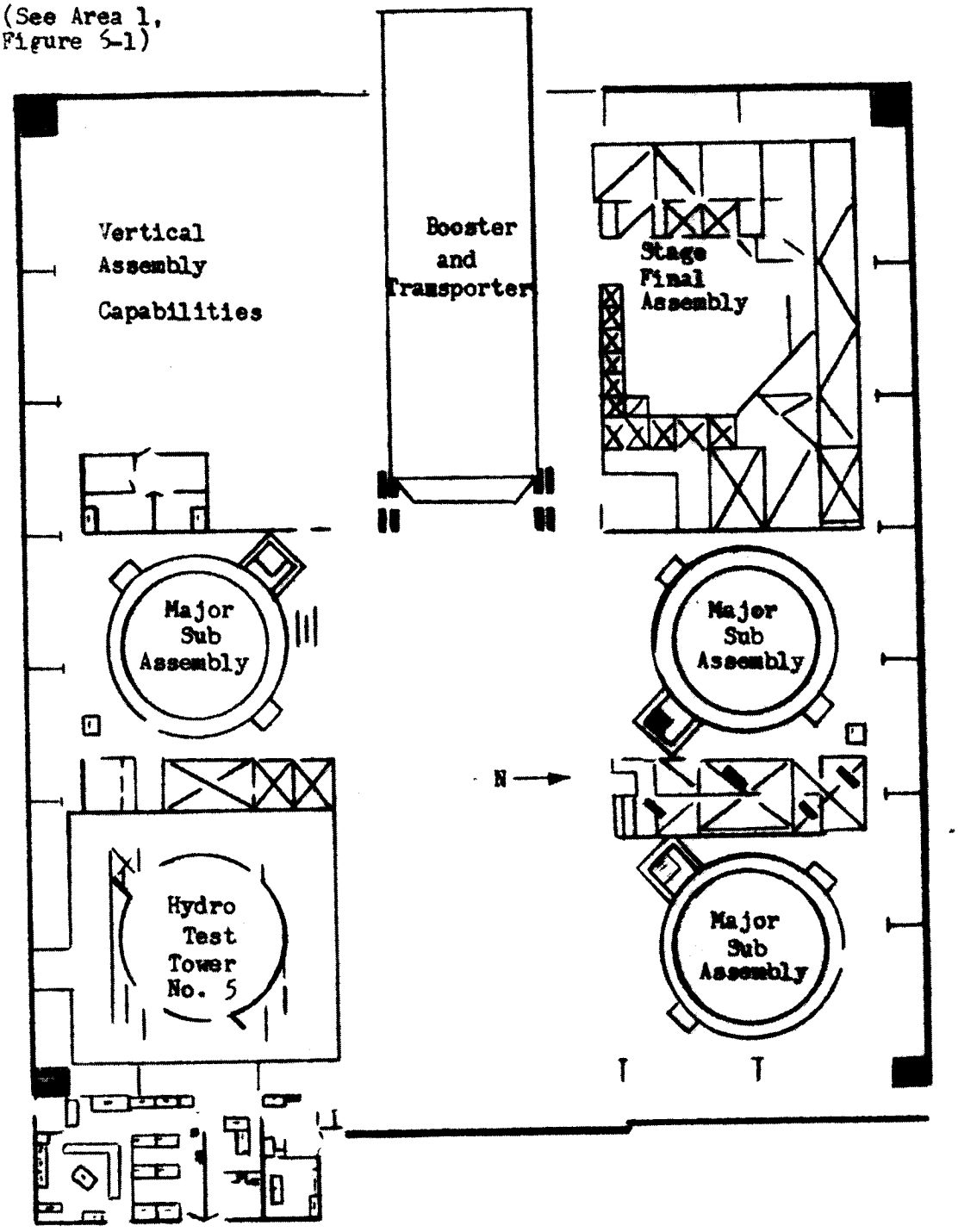

Figure 6-2 VERTICAL ASSEMBLY BUILDING

U3 4211 4000

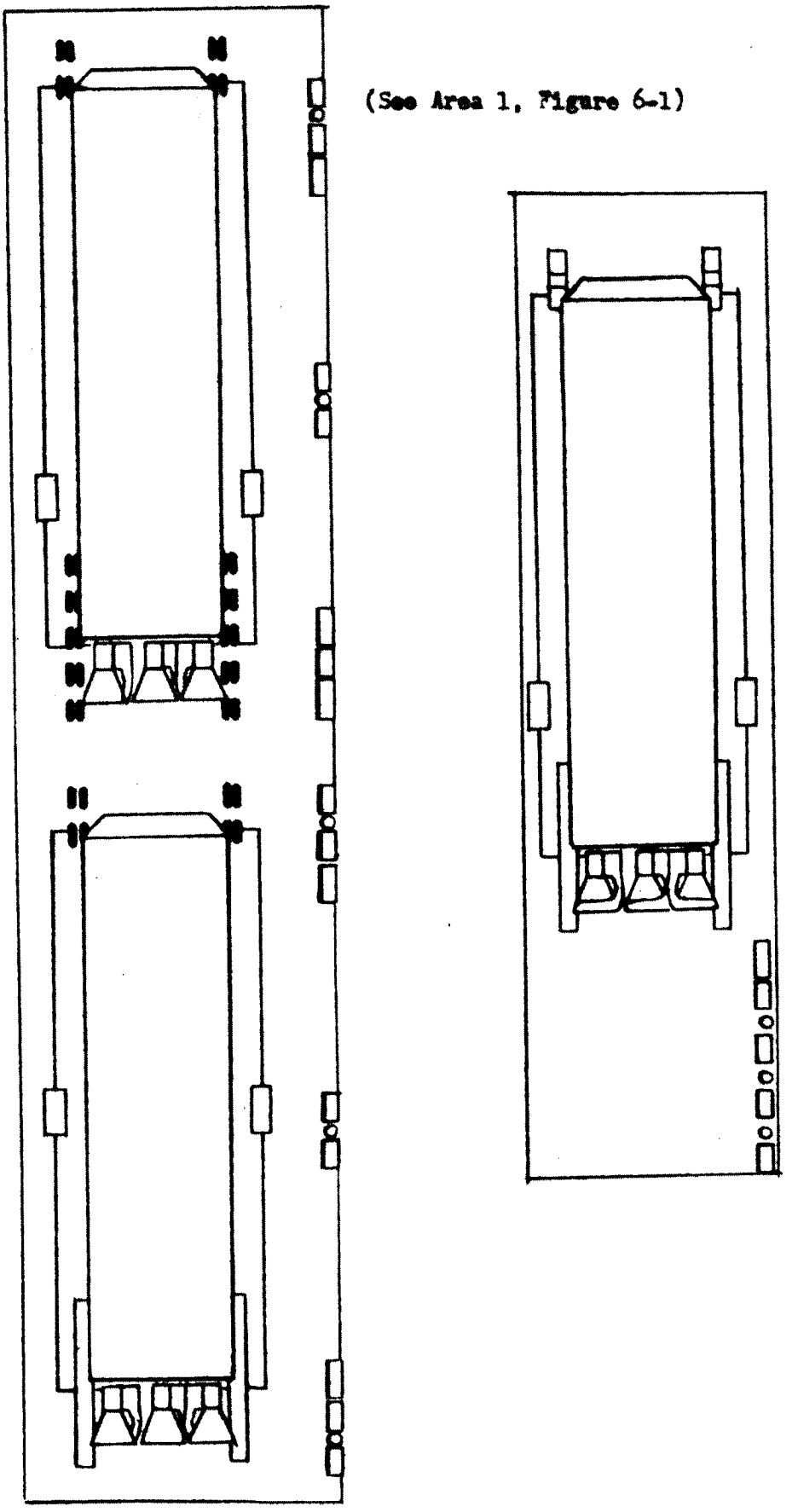

Figure 6-3 HORIZONTAL INSTALLATION

U3 4211 4000

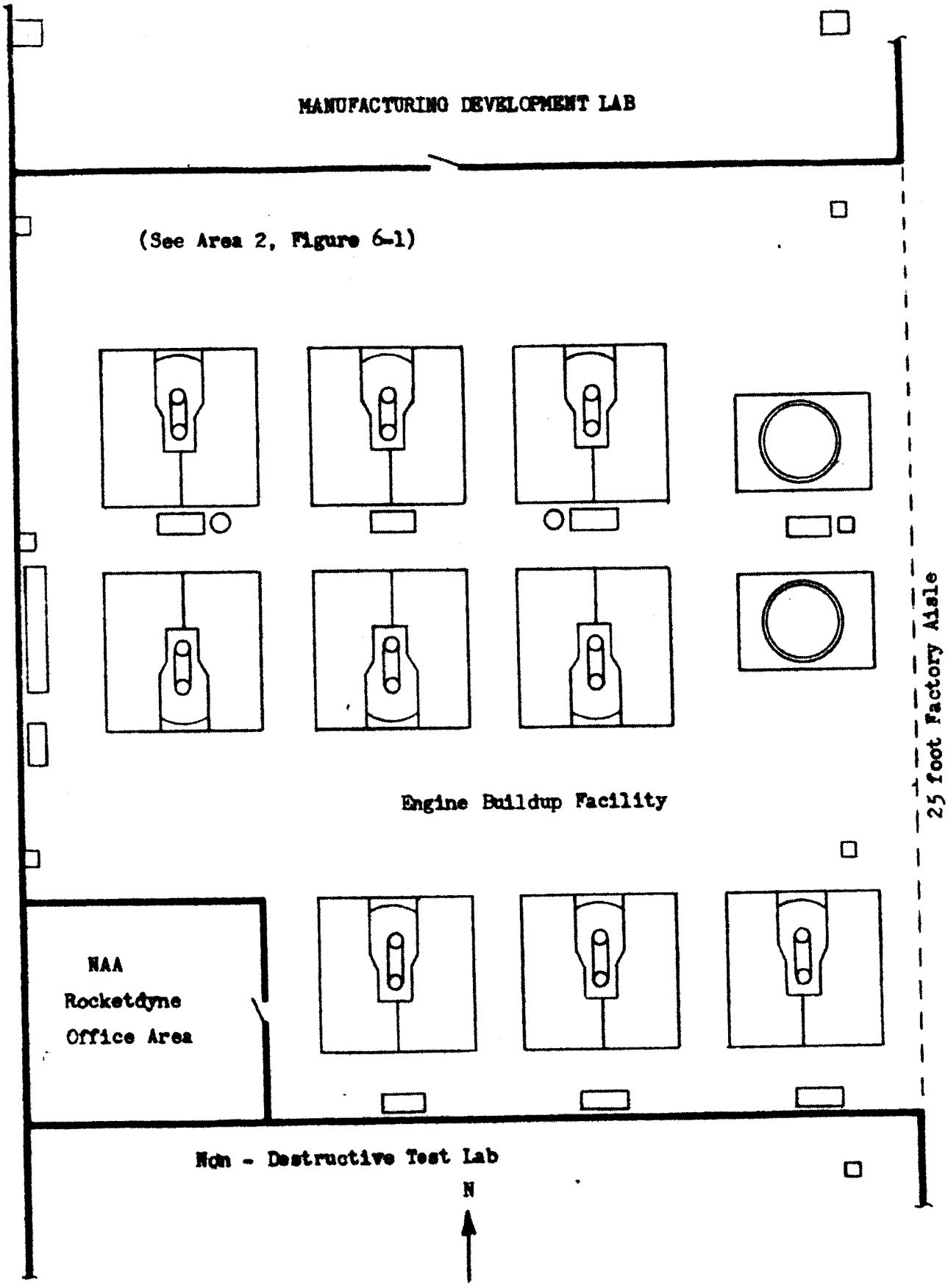

Figure 6-4 ENGINE BUILDUP FACILITY

U3 4211 4000

6.1.1 (Continued)

both eith hook heights of 185 feet. The Vertical Assembly position is located in the northeast corner of the building and will have the capability to assemble the stage in the vertical position. This step by step erection requires close tolernace assembly capabilities. The stage will be erected less the engines and will be lowered to the horizontal position with the 180 ton crane. Area is available within this building for erection of a second vertical assembly position. (See Figure 6-2).

6.1.2 Horizontal Installation Position

This area is located in the Minor Sub-Assemble Area on the 45 foot aisle adjacent to the Major Structure Assembly area. This area contains facilities for installing the F-1 system components and electrical, electronic, and pneumatic equipment. It will be supplied with 440/220/110 volt A.C. 60 cycle power, oil free compressed air, dry nitrogen, and special foundations for supporting the stage and transporter. (See Figure 6-3)

6.1.3 Refurbishment Position

This area shall have the capability to completely refurbish the S-1C booster after static firing. All test gages, fittings, instruments and engines will be removed and replaced with actual flight ready components. The area is located on the 45 foot aisle adjacent to the Major Structure Area. The area will be serviced with 440/220/110 volt A.C. cycle power, oil free compressed air, dry nitrogen for purging and general factory air-conditioning. (See Figure 6-3).

6.2 MAJOR SUB-ASSEMBLY FACILITY

The Major sub-assembly Area consists of the following functional areas:

a) Fuel and Oxidizer Assembly Build-Up
b) Hydrostatic Test and Cleaning
c) Engine Buildup

6.2.1 Fuel and Oxidizer Tank Assembly Build-UP

This area is located in the Vertical Assembly Building. Three assembly positions are provided, two on the North side and one on the South side. Each position will provide capability to assemble, weld and radiographically inspect the Fuel and LOX tanks. This area will be temperature and humidity controlled with the use of fabric curtains to obtain Class "Y" clean room specifications in accordance with BAC05703 and Class Zero per AFTO-00-25-203. The area will be service by Jib type cranes mounted on the assembly tower. Utilities supplied will be 440/220/110/ volt A.C. 60 cycle power, oil free compressed air nitrogen, and vacuum distribution equipment. (See Figure 6-2)

U3 4211 4000

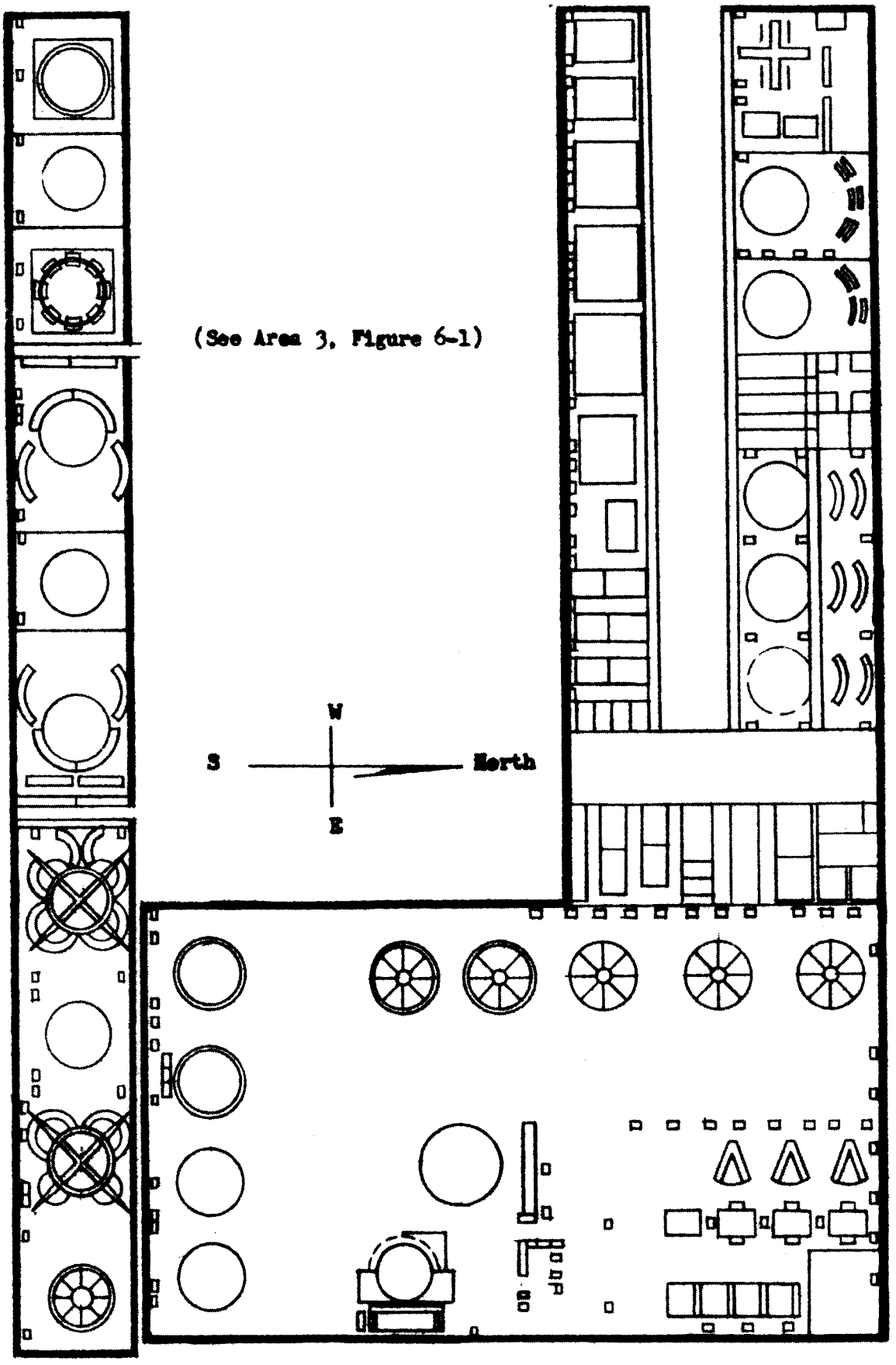

Figure 6-5 MINOR SUB-ASSEMBLY AREA

U3 4211 4000

6.2.2 Hydrostatic Test and Cleaning

This area will provide space and equipment to hydrostatically pressure test for leaks and structural integrity of the Fuel and Oxidizer Tanks, calibrate LOX and Fuel Tank volume, final clean both tanks, and clean Flight Vehicle LOX piping. This facility, located on the South side of the Vertical Assembly Building, will consist of a test and cleaning cell, mechanical equipment rool, office, and control room. The test and cleaning cell will be located at the main floor level for test fluid retention in the event of tank rupture. The lower surface of the cell will be above the factory floor, and the sides vented for easy cleaning, and installed with a manually operated floor level purge sustem. Cell walls are reinforced concrete or double tongue and groove construction with a smooth waterproof membrane lining. Closed circuit television will be provided for remote viewing during the test operation provided by the 180 ton crane and 12 ton auxiliary. Utilities will be provided as follows: 440/220/110 volt A.C. Cycly power, oil free compressed air, hot and cold demineralized water, detergent, missile grade air, dry nitrogen, and flushing facilities for trisodium phosphate, dilute nitric acid and trichlorethelene. Temperature and humidity control shall be provided with LOX clean atmosphere. (See Figure 6-2)

Temperature will be controlled at $750^{\circ} \pm 5^{\circ}$ with a relative humidity of 50% ± 5. Air will be filtered to 85% efficient filtration, 250,000 countable particles per cubic foot.

6.2.3 Engine Build-Up Facility

This facility shall have the capability of installing sub-system hardware, and skirt and actuator arms. There will be eleven positions required; nine engine and dolly positions, (six work and three rework) and two skirt positions. Work will be performed in both vertical and horizontal positions. Standard factory air-conditioning will be required, 440/220/110 A.C., 60 cycle power, oil free compressed air, and a nitrogen engine purging facility willbe required. This area will be located directly east of the Vertical Assembly Building and inside the main factory, between the Non-destructive Test and Manufacturing Development Facilities. (See Figure 6-4).

6.3 MINOR SUB-ASSEMBLY AREA

The Minor Sub-Assembly Area consists of two major areas:

a) Sub-Assembly
b) Major Structures Assembly

U3 4211 4000

(See Area 4, Figure 6-1)

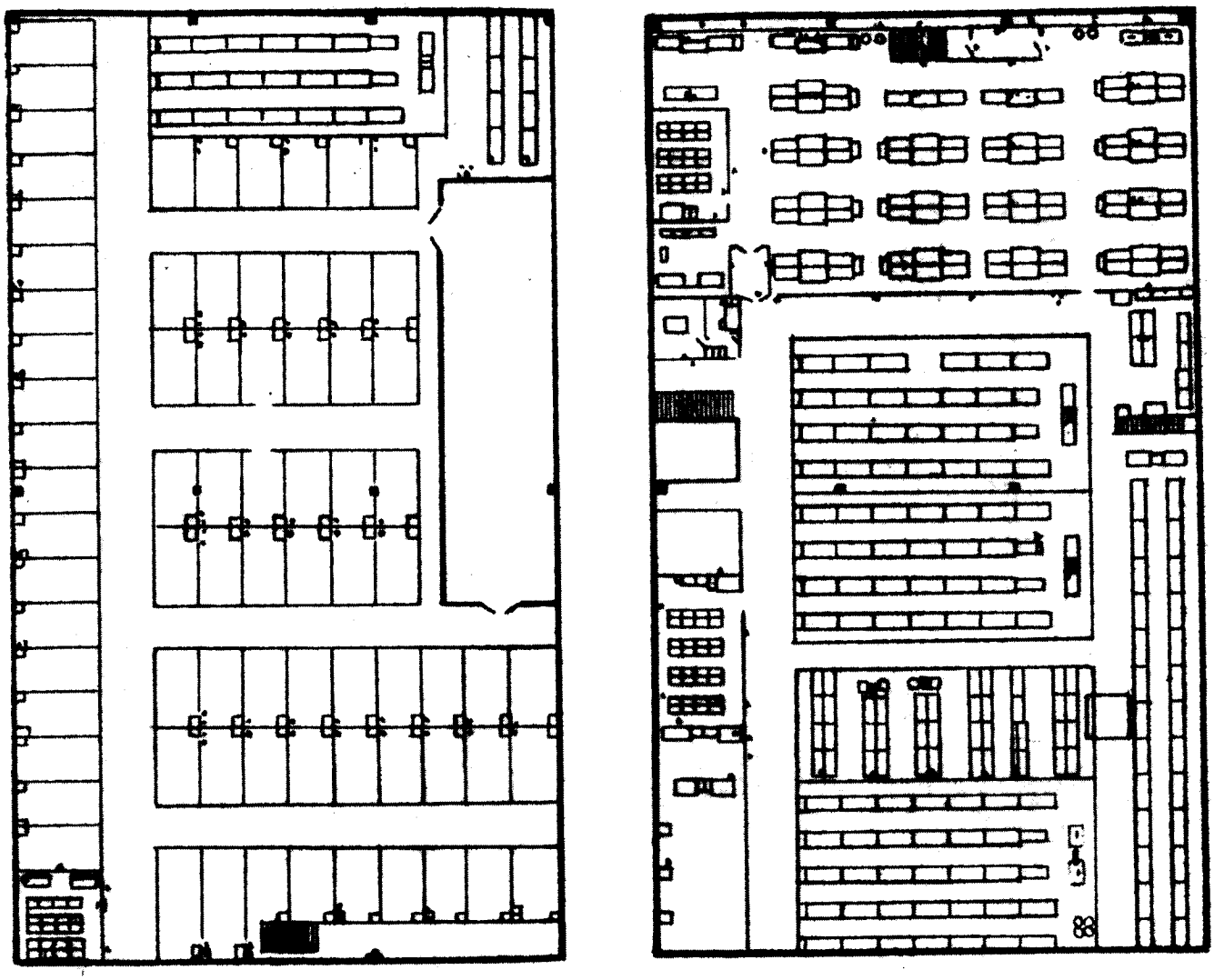

Figure 6-6 ELECTRICAL AND ELECTRONIC FACILITY

U3 6211 4000

6.3.1 Sub-Assembly Area

The Sub-Assembly Area will be responsible for all sub-assemblies of the Thrust Structure,, Intertank, Forward Skirt, Fin and Fairing Assembly and Tank Baffle Ring Assembly. The Sub-Assembly area will conform to Class "U" specifications per BAC-5703 and Class Zero per AFTO-00-25-203. Utilities furnished will be 440/220/110 volt, A.C. 60 cycle power and oil free compressed air. It will be service with two five ton bridge cranes with 32 foot hook height. The area is located adjacent to the main 45 fool factory aisle east of the Final Stage Check Out positions (See Figure 6-5)

6.3.2 Major Structures Assembly Area

The Major Structures Assembly Area will contain the Thrust Structure, Forward Skirt, Intertank, bulkhead and Tank Skin Section Assembly. The Thrust Structure, Forward Skirt and Intertank will be serviced by 440/220/110 volt A.C. 60 cycle power and oil free compressed air. General factory environmental control will be provided. Overhead crane service consists of two 15 ton bridge cranes with 32 foot hook height. This area is adjacent to the main 45 foot factory aisle, south of the Horizontal Installation and Refurbish Facility. The Bulkhead and Skin Section Assembly Area is located inside the Minor Assembly enclosed welding area ans will conform to Class "Y" clean room specifications per BAC-5703 and Class Zero per HFTO-00-25-203. 440/220/110 volt A.C. 60 cycle power, oil free compressed air, and a vacuum distribution system will be provided. Overhead crane service consists of a 12½ ton bridge crane with 32 foot hook height. (See Figure 6-5)

6.4 ELECTRICAL AND ELECTRONIC FACILITY

The Electrical and Electronic Fabrication and Assembly Area is divided into two major functional areas: (See Figure 6-6)

a) Electrical Fabrication and Assembly
b) Electronic Fabrication and Assembly

6.4.1 Electrical Fabrication and Assembly Area

The Electrical area consists of three adjoining functional work areas:

a) Cabling and Wire Harness Fabrication
b) Molding or Potting
c) Console Assembly

6.4.1.1 Cabling and Wire Harness Fabrication Area

The Cabling and Wire Harness Fabrication Area will have the capability to manufacture, code and assemble, cable connectors, wire terminals, apply sheathing and perform continuity and deaelectric

U3 4211 4000

See Area 5, Figure 6-1)

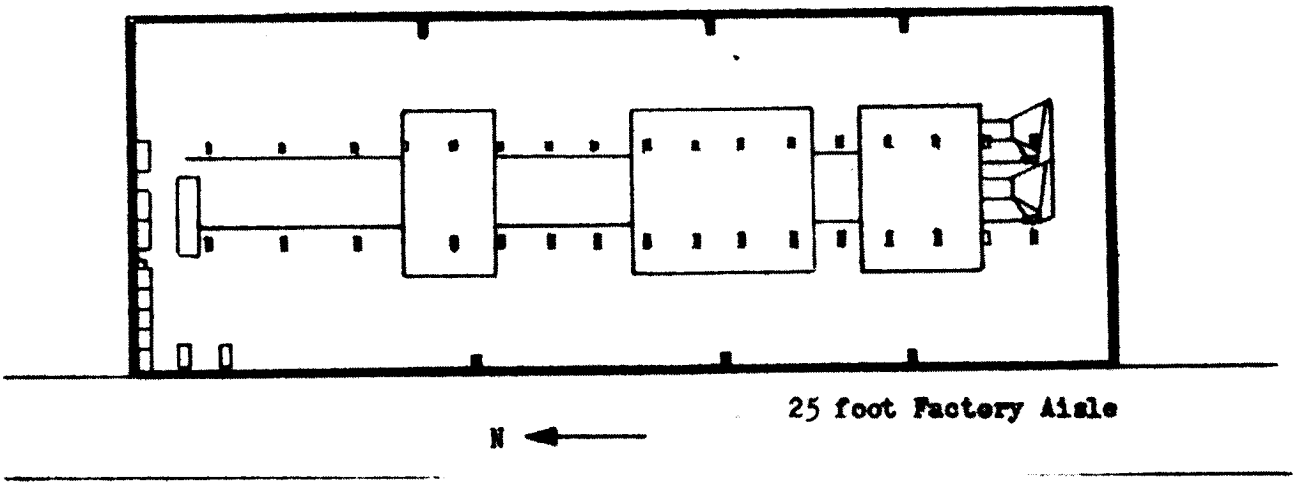

Figure 6-7 MANUFACTURING FULL SCALE MOCK-UP

U3 4211 4000

6.4.1.1 (Continued)

(i.e. insulation resistance checks, etc.) for all Stage and Ground Support Equipment.

6.4.1.2 Molding or Potting Area

The Molding or Potting Area will perform potting and encapsulation of plugs or connectors and breakout areas of stranded helix cables.

6.4.1.3 Console Assembly Area

The Console Assembly Area will assemble, and modify when necessary, all consoles, drawers and modules, including such propulsion mobile test equipment as the "Control and Monitor Console", "Engine Firing and Sequence Test Set", and an "Emergency Detection Test Set". Generally speaking, most of the racks, carts, test sets, and consoles will be purchased standrad items, modified as required for their intended usage after pre-assembling in the Electronic Area.

These areas will consist mainly of steel flat work benches in long runs each with electrical and air outlets for soldering, drilling, testing, etc. The areas will be air-conditioned, dust controlled to laboratory conditions and will be supplied with testing equipment (circuit analyzer, continuity tester, oscilloscope, ohmmeter, meggers etc.) for in-process test checks.

6.4.2 Electronic Fabrication and Assembly Area

The Electronic Fabrication and Assembly Area will assemble all electronic components into sub-assemblies, generally referred to as "Modules" or "Black Boxes". The fabricated and purchased components used in these assemblies will range from fabricated terminal boards and wire harnesses to more critical components such as resistors, capacitors, switches, relays, semi-conductors, and complete pre-assembled items including amplifiers, computers, telemetry multiplexers, modules, and switching circuits. The assembly of all electro-mechanical devices such as rate gyros, linear accelerometers, resolvers, and commutators will be done in this area. Basic operational checks will also be made prior to sub-assembly or enclosure into packages. These basic in-process tests will be made on dual usage test equipment from the Electrical Area. The area will be air-conditioned and dust and humidity will be controlled.

6.5 MANUFACTURING FULL SCALE MOCK-UP

The Mock-Up will be a class III configuration, full size, horizontal, and consist of partial stage developments located in the Michoud Facility. The Mock-Up will serve as a forming board for developing and fabricating propulsion, electrical and hydraulic systems, critical tank contours, component assembly locations, and will implement production techniques. The area will have general factory

U3 4211 4000

6.5 (Continued)

environment, all utilities and such equipment as may be necessary to perform the task of erecting full size partial components. The three main sections will be floor mounted and will be spaced with respect to one another per production drawings. Mechanical means will be provided for alignment as dictated by optical tooling. (See Figure 6-7)

6.6 REWORK, MODIFICATION AND TOOL MAINTENANCE FACILITY

This facility is divided into two major functional areas: (See Figure 6-8)

a) Rework and Modification Area
b) Tool Maintenance

6.6.1 The Rework and Modification Area

This area is responsible for all rework, modification, and refurbishment of Stage and MSE/GSE hardware. This facility will have the capability of performing functions in the following areas:

a) Tube Bending and Flaring
b) Sheet Metal
c) Machining
d) Heat Treat
d) Woodwork and Plaster
f) MSE/GSE Assembly and Maintenance

6.6.1.1 Tube Bending and Flaring Area

The Tube Bending and Flaring Area will have the capability of forming, bending and flaring steel and aluminum tubing up to 4 inches in diameter. Tubing will be required for hydraulic, electrical and chemical transmission on both Stage and MSE/GSE equipment.

6.6.1.2 Sheet Metal Area

The Sheet Metal Area will have the capability to modify, repair or assemble sheet metal chassis, electronic drawers and details, brackets, panels, console and module structures and all other general sheet metal requirements associated with MSE/GSE and Stage Hardware.

6.6.1.3 Machining Area

The Machining Area will have full job shop capability in machining functions. This capability includes general milling, boring, turning, drilling, grinding, lapping and forming as required to support all other assembly shops.

U3 4211 4000

6.6.1.4 Heat Treat Area

The Heat Treat Area has been restricted to the following capability: A small heat treat furnace will be provided to age pins, shafts, bearings, gears etc. for tool maintenance. A larger furnace will be provided for aging Apex Cores and its available time is to be fully utilized in this task. No other heat treat capability has been provided.

6.6.1.5 Woodwork and Plaster Facility

The Wookwork and Plaster Facility will have the capability of supplying support to all Factory operations and will be able to provide for Manufacturing Full Scale Model requirements. A curing facility for non-metallic and plastic materials will also be provided.

6.6.1.6 MSE/GSE Assembly and Maintenance

The MSE/GSE Assembly and Maintenance Area will modify repair, maintain ans support the assembly of MSE/GSE equipment, and stage handling fixtures, i.e.; Forward Handling Ring and Stage Jack and Support Fixtures.

6.6.2 Tool Maintenance Area

This area is subdivided into the following functional areas:

a) Machining
b) Welding
c) Jig Bore
d) Bench Assembly
e) Jig Maintenance

Dual usage of area and machines has been planned with rework and modification requirements.

6.6.2.1 Machining Area

The Machining Area will specialize in machining large bulky tool components and will provide the capability and versatility to perform all milling, boring, turning, drilling and grinding required for maintenance and modification of Ground Support Equipment and Stage Components.

6.6.2.2 Welding Area

The Welding Area shall have adequate welding capability to modify and maintain stage handling fixtures, MSE/GSE Equipment amd perform other welding requirements for support of other assembly areas.

U3 4211 4000

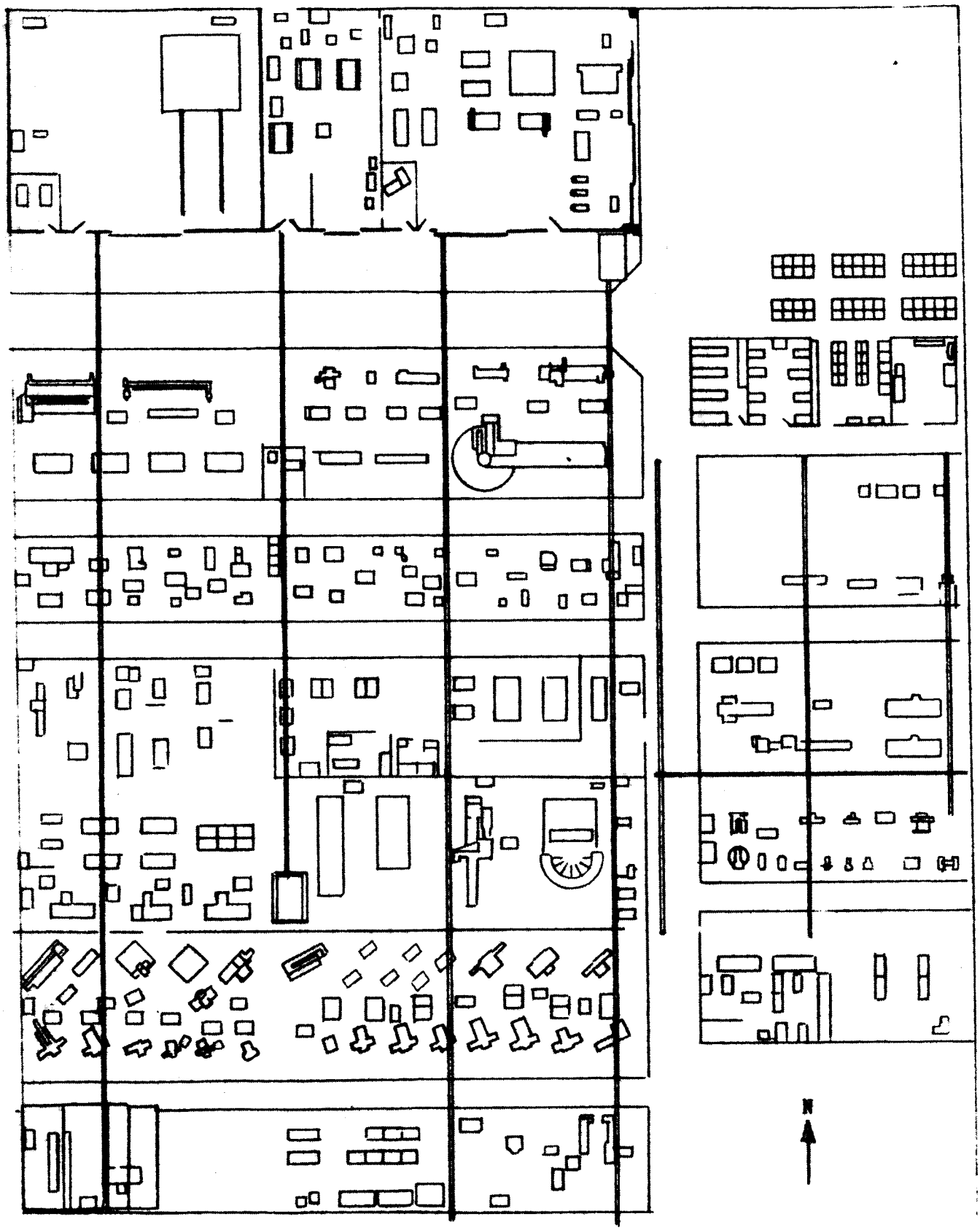

Figure 6-8 REWORK, MODIFICATION AND TOOL MAINTENANCE FACILITY

U3 6211 6000

6.6.2.3 Jig Bore Area

The Jig Bore Areas shall provide the capability for precision boring and locating of tooling holes. The prime responsibility of this facility will be precision boring of assembly jigs and fixtures.

6.6.2.4 Bench Assembly Area

The Bench Assembly Area shall repair and modify dollies, weldments, structural assemblies, etc. This area shall also repair and modify small contract tools, gages, drill jigs, fixtures, dies, press plates, etc.

6.6.2.5 Jig Maintenance Area

The Jig Maintenance area will maintain, service, rework and routine all floor mounted tools. General factory conditions prevail in all areas except the Jig Bore Area. The Jig Bore Area has temperature and humidity control equivalent to Class I Clean Room.

6.7 COMPONENT CLEANING AND CHEMICAL CLEANING AND FINISH PROCESS AREA

The Component Cleaning and Chemical Cleaning and Finish Process Shop consists of four major areas: Valve Clinic, Tube and Valve Cleaning facility, Major Component Cleaning facility and the Chemical Cleaning and Finish Process facility. The Valve Clinic and the Tube and Valve Cleaning facility is located in the Sub-Systems Test area, near the machine shop, and receiving and inspection areas. The Chemical Cleaning and Finish Process facility is located adjacent to and east of the Bulkhead Weld Assembly Area. The Major Component Cleaning facility is located adjacent to and west of the Bulkhead Weld Assembly Area on the 45 foot aisle. (See Figure 6-9)

6.7.1 Valve Clinic

This facility has the capability of disassembling and assembling inoperable valves, regulators, bellows, and other contamination sensitive components as directed by Qualtiy Assurance malfunction reports. This function will be performed in two major areas: Valve Disassembly and Valve Assembly. These areas consist of two adjacent environmentally controlled areas located in the Valve Equipment Maintenance and Special Test Shop of the In-Plant Test Facility. (See Figure 6-9)

6.7.1.1 Functional Shop Description

The primary function of the Valve Disassembly Area is to disassemble and examine inoperable valve assemblies and determine the cause of malfunction. Types of valves to be processed include LOX, Pneumatic, Fuel and Hydraulic, etc. Detail parts within engineering drawing tolerance will be packaged and stored. Detail parts requiring

U3 4211 4000

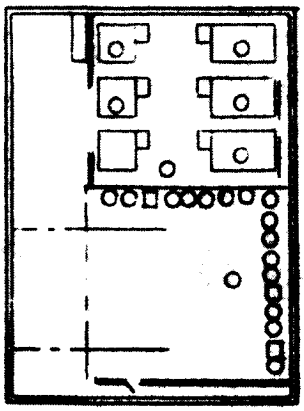

Major Component
Cleaning
(See Area 7A, Figure 6-1)

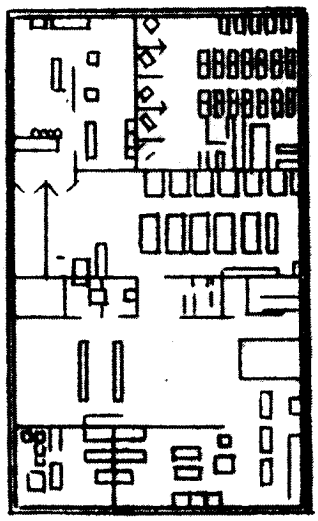

Tube and Valve
Cleaning
(See Area 7B, Figure 6-1)

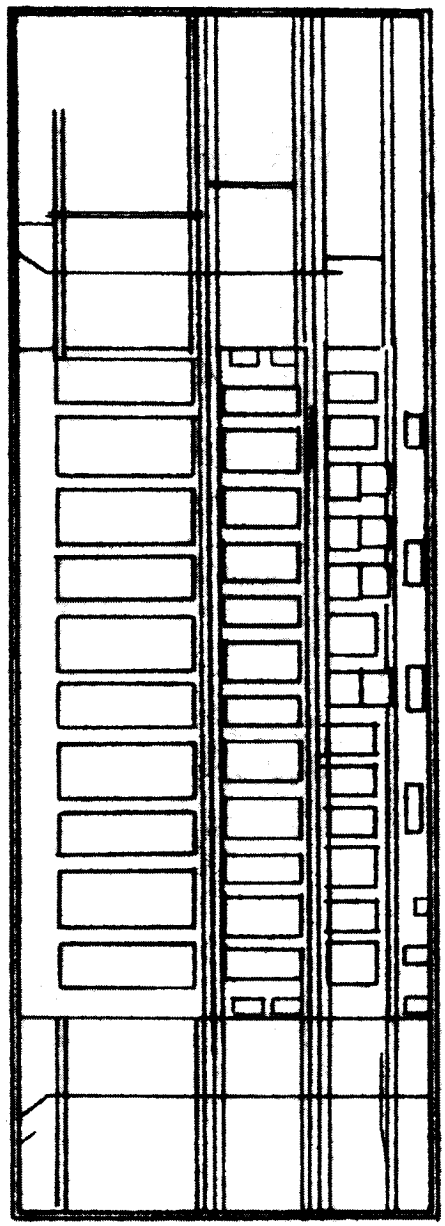

Chemical Cleaning
and Plating
(See Area 7C, Figure 6-1)

Figure 6-9 COMPONENT CLEANING AND FINISHING PROCESS FACILITIES

U3 4211 4000

6.7.1.1 (Continued)

modification or rework will be dispatched to the Machine Shop for lapping, honing, etc. All reworked components will then be routed to the Tube and Valve Cleaning Facility for cleaning and packaging prior to their return to the Valve Clinic for reassembly. The Valve Assembly Shop will receive valve components from the Valve Disassembly and Cleaning Areas and reassemble them. The valves will them be routed to the appropriate test shop for acceptance tests. Both areas of the Valve Clinic will conform to Class "M" clean room specifications per BAC 5703 and Class II per A.F.T.O. 00-25-203 and will be serviced with 220/120 volt A.C. power, oil free compressed air per BAC 5703, hot and cold demineralized water, 175° ± 10° F Nitrogen Gas, and a central vacuum system.

6.7.2 Tube and Valve Cleaning Facility

This facility will have the capacity to clean tubes, valve parts, contaminated valves and other components used in the fabrication, assembly and test of the S-1C stage and GSE. This function is divided into two areas: Pre-Clean and Final Clean. These areas are adjacent with an equipment room, located between the end of the Pre-Clean Area and an outside aisle in the Sub-Systems Test Area. (See Figure 6-9)

6.7.2.1 Functional Requirements

The Pre-Clean Area will remove oils from all tubes, valves, and components by vapor degreasing per BAC 5408. All parts contaminated with surface grease shall be cleaned in the Chemical Cleaning and Finish Process area before being routed into this shop. A detergent ultrasonic tank will be used to clean conversion coated and plated components. Bare metal tubing and associated components will be alkaline flushed and ultrasonic cleaned. Demineralized water will be used for final rinse and a vacuum oven for drying. An air curtain will be provided with "pass through" capability between the pre-clean and final clean rooms.

The Final Clean Area will re-clean tubing, valves, and components by trichlorethylene or demineralized water flush methods. Gages and transducers will be processed with a gage cleaning console within the limits of MSFC specifications MS-100-0 and PC-1050-9305. After "LOX Cleanliness" is certified, each tube will be wrapped and routed to an outside aisle. All valve components will be returned to the Valve Clinic. The Pre-Clean and Final Clean Areas will conform to Class "S" clean room requirements per BAC 5703 and Class I per A.F.T.O. 00-25-203. All cleaning solutions used in the Pre-Clean and Final Clean Areas, i.e., trichlorethylene, oakite #90, etc., will be filtered to a 10 micron particle level. Both areas will be serviced with 115/220/440 volt A.C. power, a central vacuum system oil free compressed air per BAC 5703, hot and cold demineralized water and 100 PSI missile grade air. In addition, the pre-clean area will have a 208-230 volt A.C. power.

U3 4211 4000

6.7.3 Major Component Cleaning Facility

This facility will clean and conversion coat bulkheads, skin sections, and "Y" rings prior to final tank assembly. (See Figure 6-9)

6.7.3.1 Functional Shop Description

The Major Component Cleaning Facility will be 40 foot square by 20 foot high enclosure with stainless steel walls and ceiling. It will contain an automatic cycling spraying system capable of thoroughly spraying components with required cleaning solutions. Five holding tanks equipped with recycling filter systems will be provided in the cleaning area for trichlorethylene and alkaline cleaner per BAC 5765, a conversion coating solution (irridite), and alkaline etching solution per BAC 5786, and a desmutting solution per BAC 5765.

Assemblies cleaned in the Major Component Cleaning Facility will be moved to the cleaning chamber on a dolly through a 20 foot by 40 foot door from the 45 foot aisle. Rubber shields and special designed spraying systems of one one to four spraying heads will be used to minimize the excess spray field.

Each cleaning solution will be pumped from its storage tank through a line heater and sprayed on the object to be cleaned at a pressure of 80 PSI. A sump in the middle of the floor will return the solution through a filter on the line to the holding tank. Between each cleaning operation the spraying system will be purged of the previous solution, and the part and area around it will be rinsed with demineralized water. The rinse water will be routed into a chemical waste drain in the sump. Air for drying the conversion coating will be taken from the atmosphere, filtered and heated to 160° F.

U3 4211 4000

7.0 DESCRIPTION, FUNCTION AND CAPACITY OF TEST STATIONS

7.1 INTRODUCTION

All parts or components defined by test requirements in the makeup of the S-1C Stage must be tested to ensure functional integrity. These parts may be supplied by vendors, by our own manufacturing operation, or by GFE. Sub-system and systems which are made up from parts and components must also be tested for functional integrity during various phases of the manufacturing operation. A final test of the completed S-1C Stage or completed GSE checks total functional integrity before the vehicle or GSE is shipped from the Michoud Plant.

7.2 SUMMARY

All Inplant Test activities are confined to two test areas: A Sub-system Test Complex and a Stage Test Complex.

The Sub-System Test Complex, comprised of nine (9) general areas, has the capability of testing components, parts, sub-assemblies, sub-systems, and systems of Stage and GSE/MSE to ensure that acceptable hardware is installed. This includes electrical, electronic, mechanical, and hydraulic flight hardware and ground support equipment. The area is capable of testing GSE/MSE at the rate of one set per month and S-1C Stage hardware at the rate of one vehicle's worth every six weeks.

The Stage Test Cimplex is composed of four individual test positions which are served by two (2) sets of automatic test equipment located in a three story test center at the forward end of the test cells. This area is used to perform tests on the completely assembled S-1C Stage in order to demonstrate that each part is capable of meeting its design requirement in conjunction with other systems. The Stage Test Complex has the capability to test one complete stage in three (3) months including time for necessary test equipment modification and periodic calibration.

The documentation necessary to accomplish the testing plan consists of test equipment design, test and calibration procedures, test planning, and end item test data and reports.

Test equipment design required to perform Level V and VI inplant testing of GSE/MSE and Stage hardware is prepared, released, and maintained by the Inplant Test Department.

U3 4211 4000

7.2 (Continued)

Test procedures are documented for all vendor fabricated components, all Boeing fabricated Stage and test equipment components, all purchases test equipment components which are not standard off-the-shelf items, and all completed test consoles, carts, and racks or portable equipment if not purchased standard off-the-shelf items. Calibration procedures are documented for Stage instrumentation, installation and check out of each test station, engine and Stage handling. Calibration procedures are also documented for all test equipment except standard off-the-shelf items not installed in systems of test consoles, carts, or racks.

Test planning is issued in accordance with the Boeing Saturn Records System to all test areas to perform test operations from the part level through the completely assembled GSE/MSE and S-1C Stages.

At the conclusion of a test on a completed end item, and end-item data package is assembled covering the operations performed on the end item while it is under inplant test control. The package consists of a report which includes indentification of the test period, vehicle weight and center of gravity, optical alignment problems encountered, corrective actions taken, pending corrective actions (incomplete tests, etc.) and supplementary information in the form of computer print outs.

U3 4211 4000

7.3 AREA LAYOUT CHARTS

Layouts of the General Area used by Inplant Test for Subsystem Test and Stage Checkout are indicated on Figure 7-1 and Figure 7-2.

Detailed Layouts of each area are included in Section 7.4.1, Subsystem Test Complex and Section 7.5.1, Stage Test Complex.

U3 4211 4000

MICHOUD TEST FACILITY

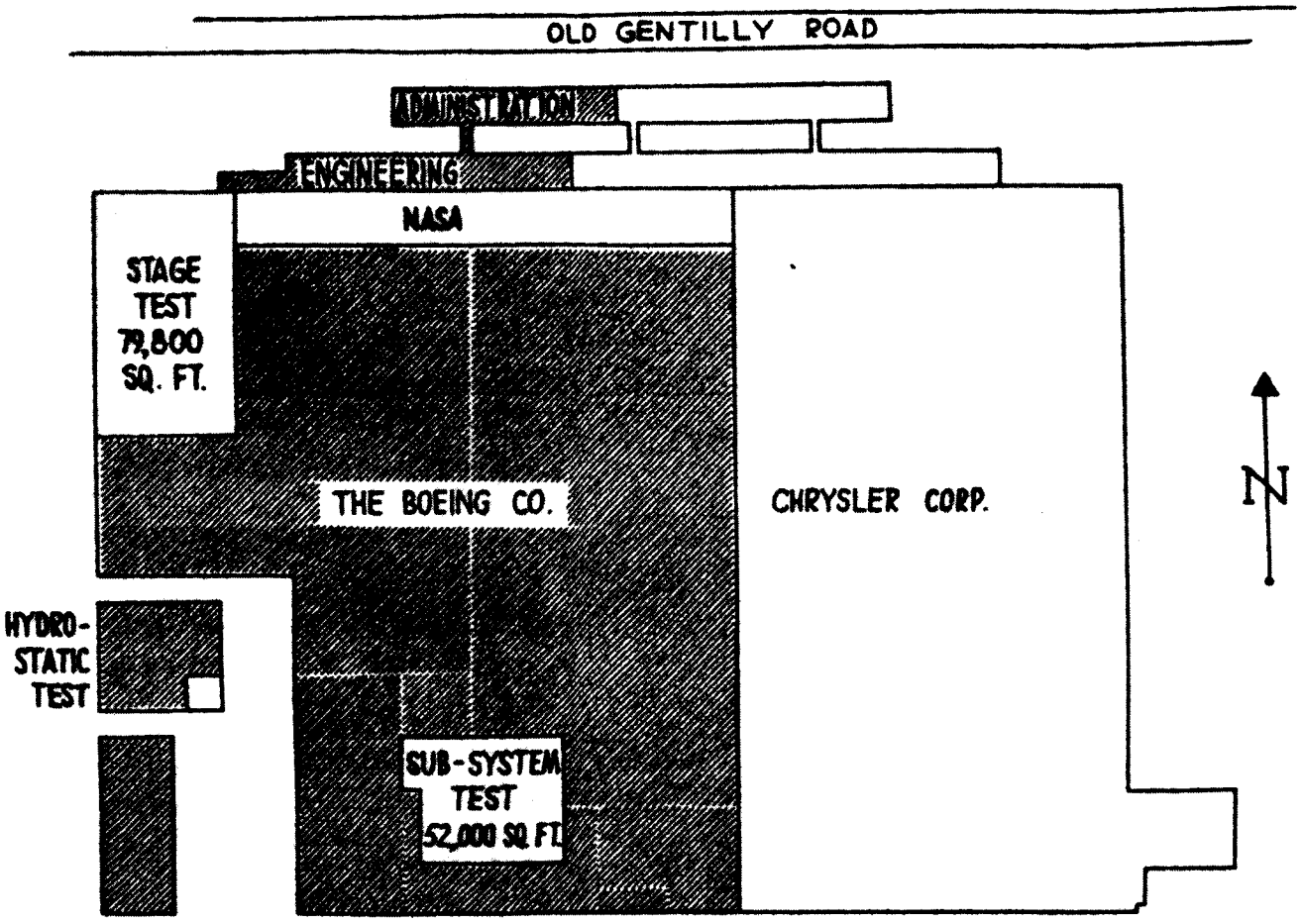

FIGURE 7-1

U3 4211 4000

TEST AREA LOCATIONS

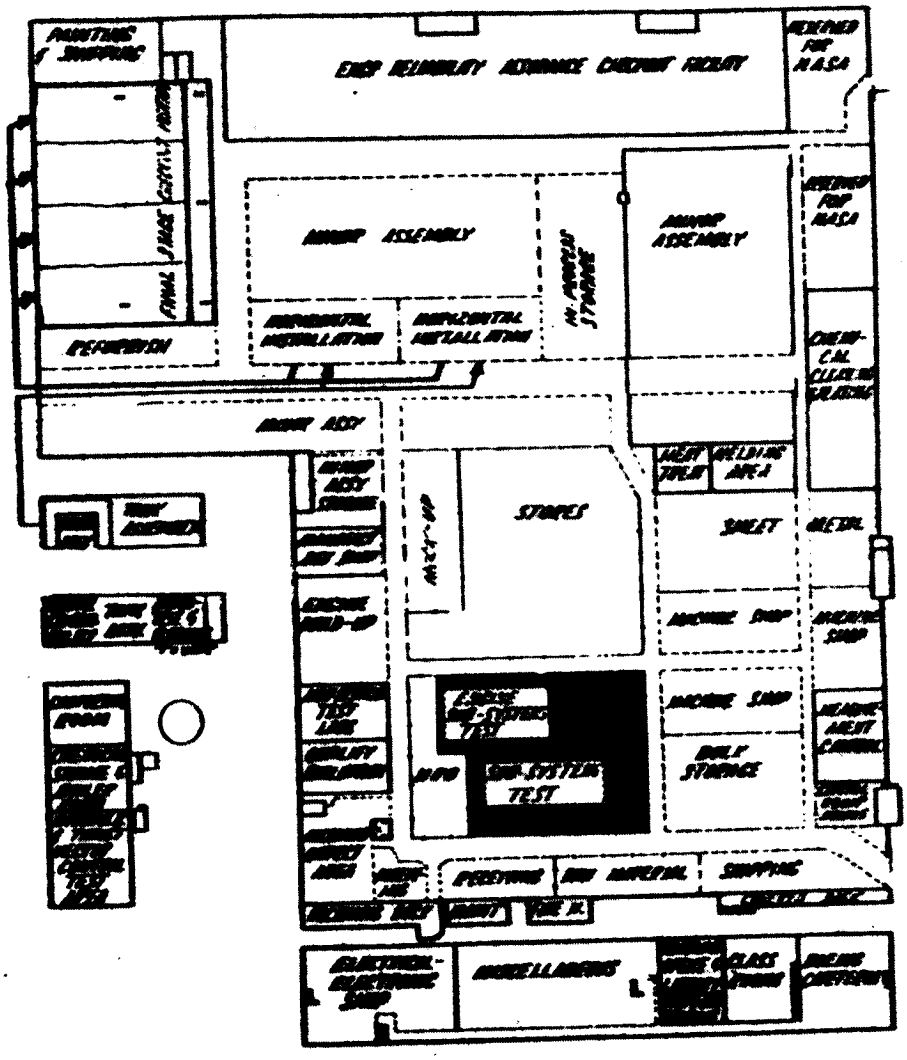

FIGURE 7-2

U3 4211 4000

7.4 SUBSYSTEM TEST

7.4.1 Test Complex

7.4.1.1 Subsystem Test Complex

The Subsystem Test Complex will have the capability of testing component parts, packages, and systems of the S-1C Booster to insure that acceptance hardware will be installed. This includes electrical, electronic, mechanical, and hydraulic flight hardware and ground support equipment. The Subsystem Test Area is divided into nine general areas as indicated on the layout of the Sub-system Test Area. (See Figure 7-3).

These general areas include: The Engine Test Area, the Electrical/Electronic Test Area, and the Pneumatic Test Area, where routine testing occurs. Support activities occur in other areas which include: The Pre-Clean and Final Clean Areas, the Test Staging Area, the Material Review Board Area, the Equipment Maintenance and Special Test Area, and the Office Area.

7.4.1.2 Engine Test Area

The Engine Test Area consists of five test locations as indicated on the Test Area Layout. The total area is 13,440 square feet. (See Figure 7-4).

The Engine Airlock will be used for cleaning and inspection of each engine received. (See Figure 7-7). The Acceptance Test Station comprises an area of 2,928 square feet and will contain provisions for performing acceptance test of the engine and Rocketdyne furnished associated equipment. (See Figure 7-8). The alignment test station comprises an area of 3,240 square feet and will be utilized to perform tests of systems on the built-up engine. The Hydraulic Components test station comprises an area of 1,288 square feet and will be used to test actuators and any additional Hydraulic components. (See Figure 7-10).

7.4.1.3 Electrical/Electronic Test Area

The Electrical/Electronic Test Area consists of four specified areas as indicated on the test area layout. Total area is 10,070 square feet. (See Figure 7-11).

U3 4211 6000

SUBSYSTEM TEST AREA

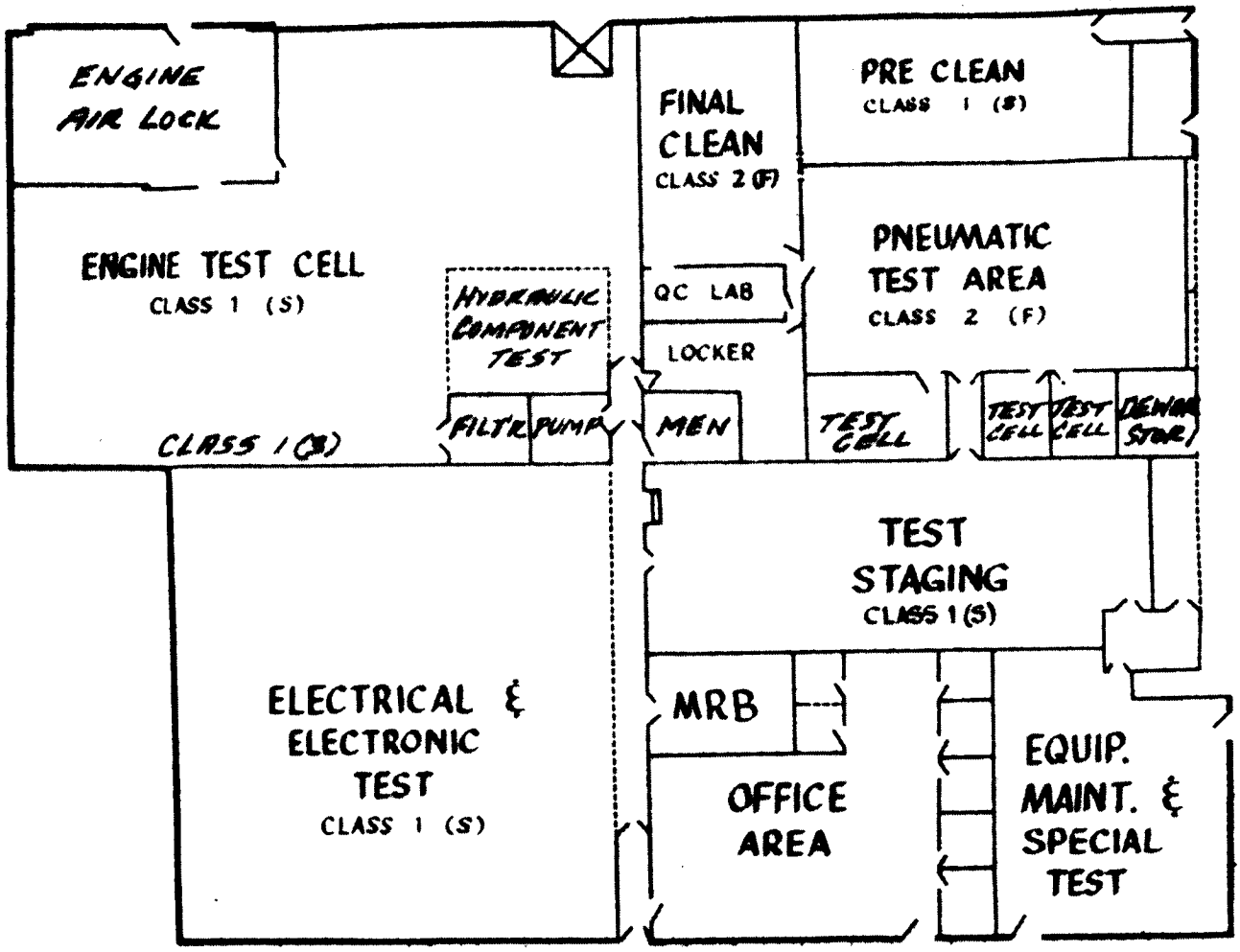

FIGURE 7-3

U3 4211 4000

F-I ENGINE TEST AREA

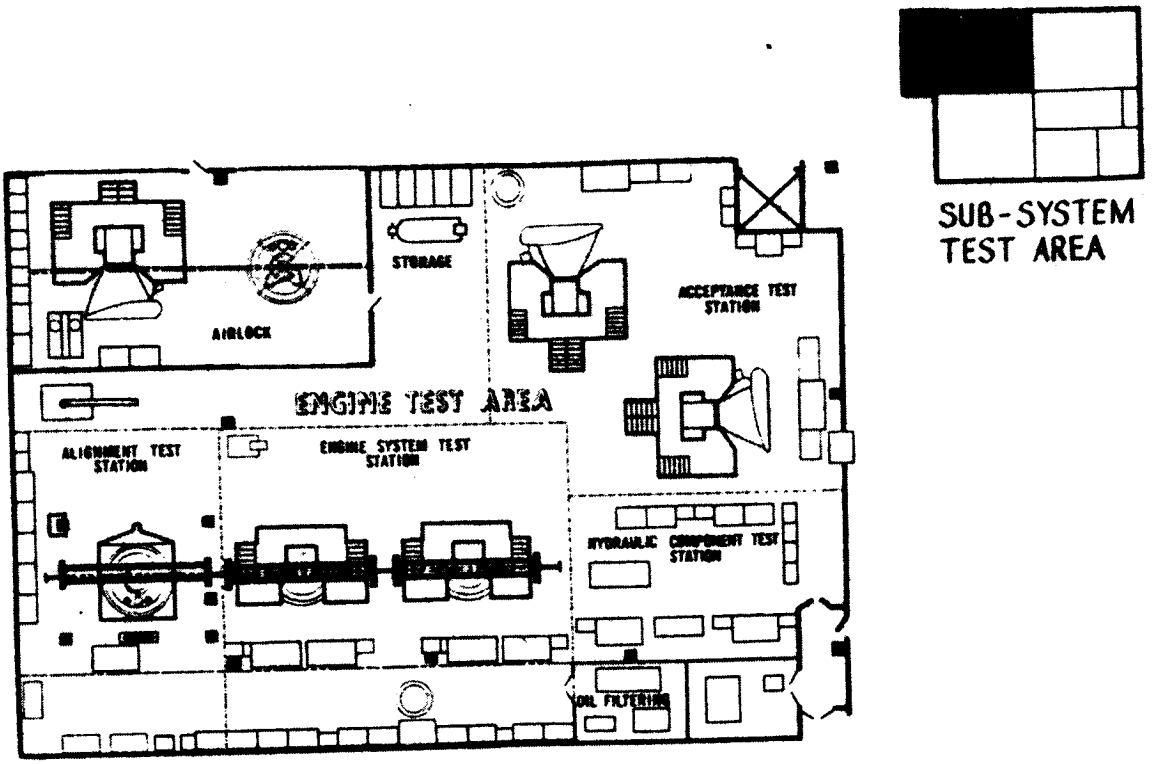

13,440 SQUARE FEET

FIGURE 7-4

U3 4211 4000

ENGINE SYSTEM TEST STATION

GFE

● NOMENCLATURE

1	ELECT/PNEUMATIC C/O CART	(2)
* 2	ENGINE SIMULATOR	(1)
3	FLIGHT INSTRUMENT TEST SET	(2)
* 4	FUEL SYSTEM - PNEUMATIC FLOW MONITOR	(2)
* 5	OXIDIZER SYSTEM - PNEUMATIC FLOW MONITOR	(2)
* 6	HYPERGOL SYSTEM - TOOL KIT	(2)
7	TEST PLATES - KIT	(1)
8	THROAT PLUG	(1)

HANDLING EQUIPMENT

9	30 FT. LIFT ALOFT	(1)
10	ENGINE SUPPORT STRUCTURE	(2)
11	VERT ENGINE WORK PLATFORMS	(2)

BOEING EQUIPMENT

12	HYDRAULIC TEST CONSOLE	(2)
13	SERVO AMPLIFIER & RECORDER SET	(2)
14	HYDRAULIC CALIBRATION CART	(1)

* SUITCASE TYPE

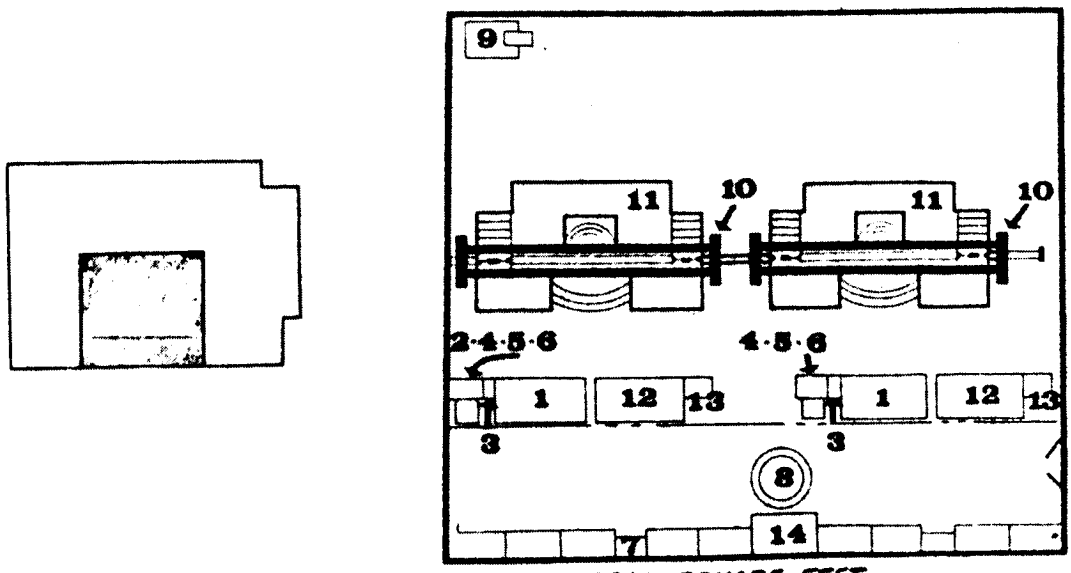

3240 SQUARE FEET

FIGURE 7-5

U3 4211 4000

ALIGNMENT TEST STATION

GFE

- NOMENCLATURE

1	THRUST CHAMBER ASS'Y DOLLY (MODIFIED TO SUPPORT ENGINE IN VERT POSITION)	(2)
2	HYDRA BOOM	(1)
3	MANIPULATOR, HYDRBOOM	(1)
4	SET-COMPONENTS HANDLING FIXTURE	(1)
5	HYDRAULIC CONTROL CONSOLE	(1)

HANDLING EQUIPMENT

6	SLING, ENGINE HANDLER (MODIFIED)	(1)
7	HOIST, ELECTRICAL - 25 TONS	(1)

BOEING EQUIPMENT

8	ALIGNMENT WORK PLATFORMS	
9	ALIGNMENT STANDS	
10	ENGINE SUPPORT STRUCTURE	(1)
11	GIMBAL ATTACH FIXTURE	(2)
12	OPTICAL EQUIPMENT	

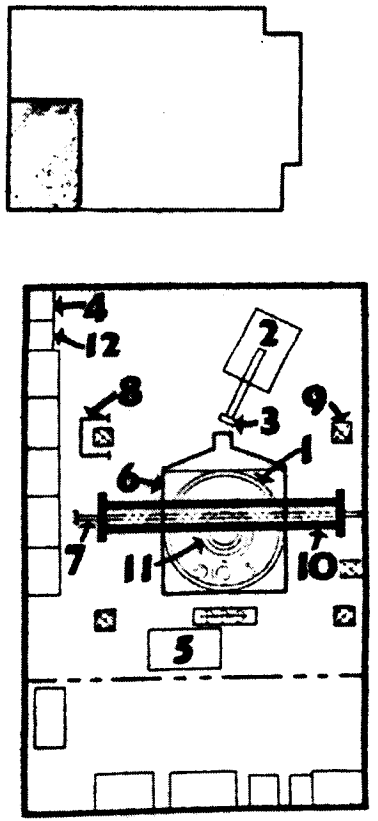

1826 SQUARE FEET

S-273-548-10

FIGURE 7-6

U3 4211 4000

AIRLOCK

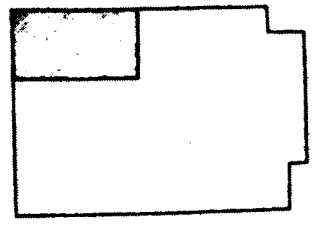

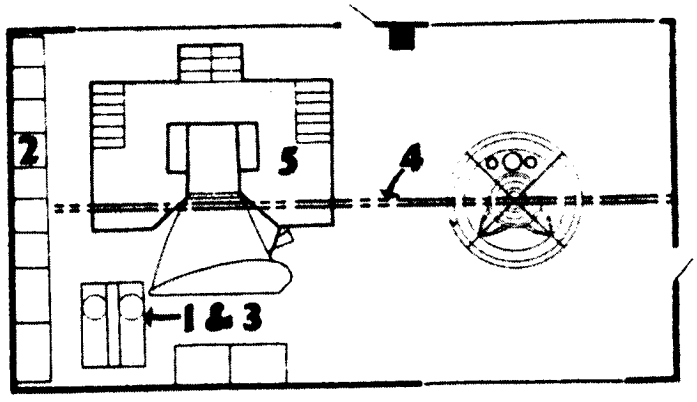

GFE

1. ENGINE ROTATING SLING (1)
2. ENGINE PROTECTIVE COVER (1)
3. DOLLY STORAGE (1)

HANDLING EQUIPMENT

4. ELECTRICAL HOIST 15 TON CAP (1)
5. HORIZONTAL WORK PLATFORM (1)

FIGURE 7-7

U3 4211 4000

ACCEPTANCE TEST STATION

GFE

- NOMENCLATURE

1	ENGINE ELECT/PNEU C/O CART	(2)
* 2	ENGINE SIMULATOR	(1)
* 3	FUEL SYSTEM - PNEUMATIC FLOW MONITOR	(2)
* 4	OXIDIZER SYSTEM - PNEUMATIC FLOW MONITOR	(2)
* 5	HYPERGOL SYSTEM - TOOL KIT	(2)
6	TEST PLATES	(1)
7	THROAT PLUG ASSEMBLY	(1)

HANDLING EQUIPMENT

8	HORIZONTAL ASS'Y WORK PLATFORM	(2)
9	TOW TRACTOR ELECTRIC	

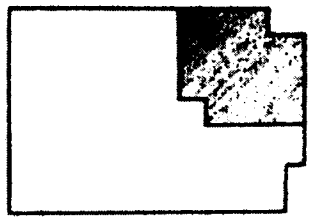

* SUITCASE TYPE

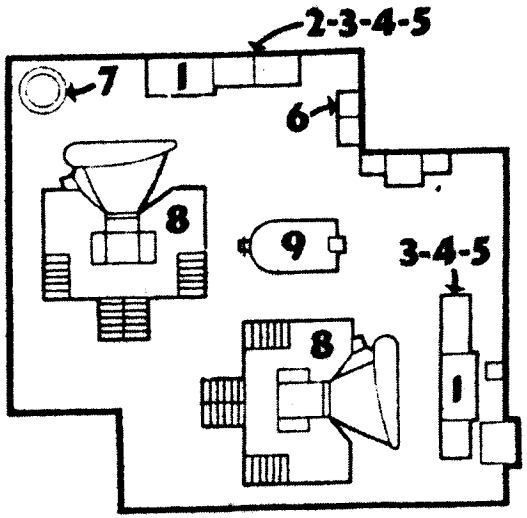

2,928 SQUARE FEET

S-273-548-2

FIGURE 7-8

U3 4211 4000

HYDRAULIC COMPONENT TEST STATION

BOEING EQUIPMENT

1. ACTUATOR TEST STAND (1)
2. ACTUATOR & SERVO TEST BENCH (1)
3. HYDRAULIC COMPONENT TEST BENCH (1)
4. FIXTURE TEST MECHANICAL (5)
5. SERVO AMPLIFIER & RECORDER SET (1)

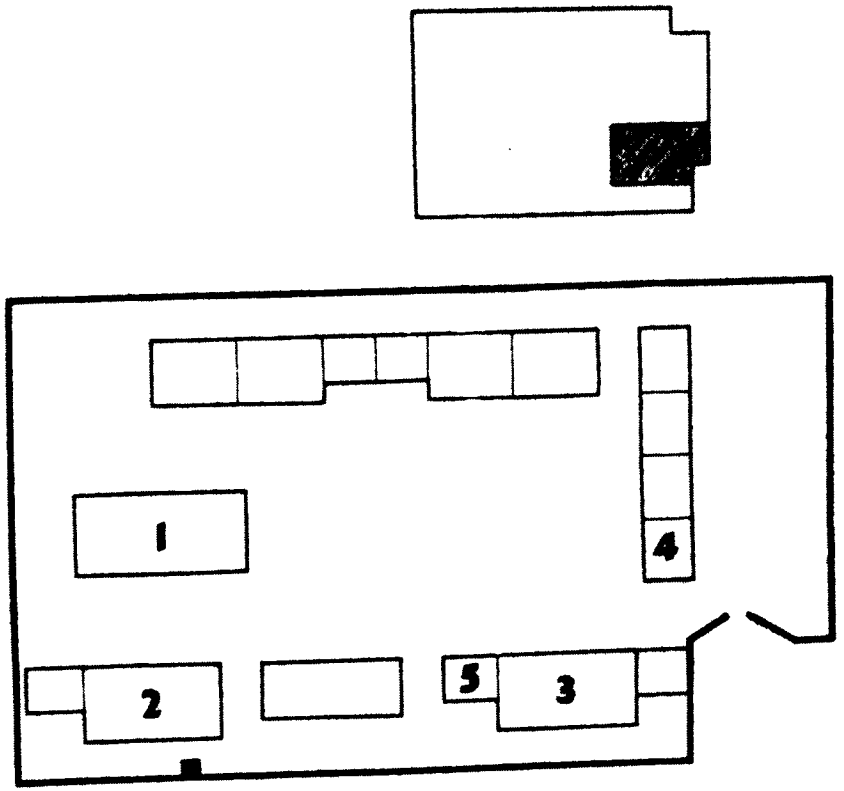

1288 SQ. FT.

FIGURE 7-9

U3 4211 4000

OIL FILTERING & STORAGE AREA

BOEING EQUIPMENT

1 OIL FILTERING SYSTEM UNIT (1)

2 FILTER CLEANING UNIT (1)

3 OIL STORAGE RESERVOIR (100 GALS) (1)

4 OIL PUMP - TRANSFER (1)

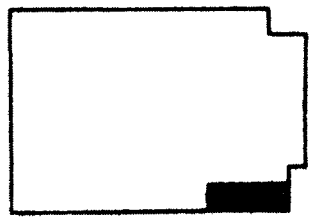

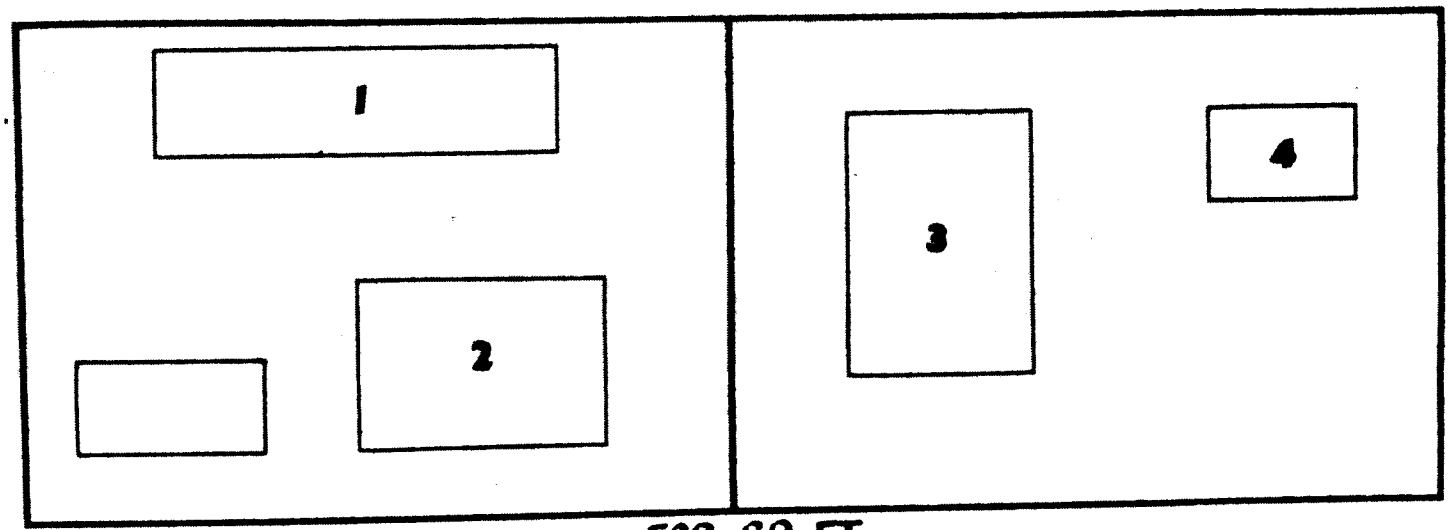

532 SQ. FT.

S-273-540-6

FIGURE 7-10

U3 4211 4000

ELECTRICAL/ELECTRONIC SUBSYSTEMS TEST AREA

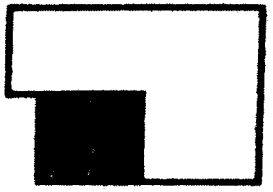

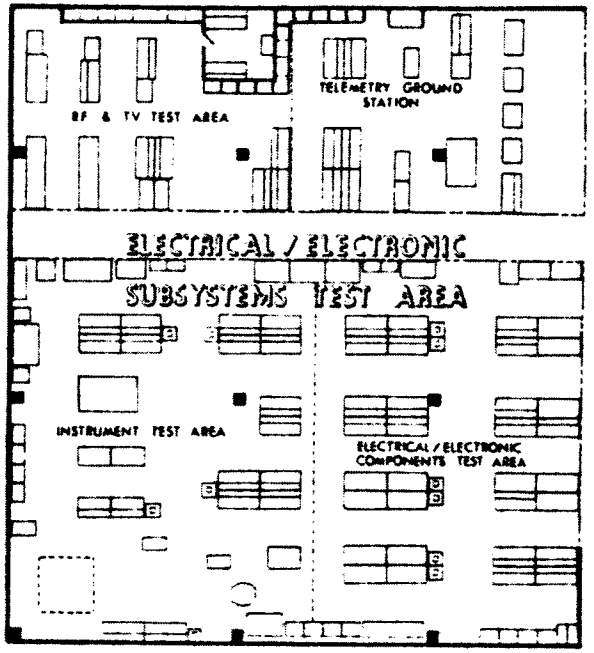

10,070 SQUARE FT.

FIGURE 7-11

U S 4211 4000

7.4.1.3 (Continued)

The Instrument Test Area contains the individual test stations used for testing various stage transducers. The area comprises 3.657 square feet. The equipment layout is indicated in Figure 7-12.

The Electrical/Electronic Components Test Area will contain test stations and equipment capable of testing standard electronic components as well as provisions for tests of electrical/electronic stage assemblies. In addition, this area will contain the signal conditioner test station. This area comprises 2,284 square feet. The equipment layout is indicated in Figure 7-13.

The RF and TV Test Area will contain RF benches and Antenna Test Sets capable of testing stage RF assemblies and antennas and GSE closed loop TV assemblies. This area comprises 1,998 square feet. The equipment layout is indicated in Figure 7-14.

The telemetry Test Area will contain Telemetry Bench Test Sets required to perform tests on the Stage T/M assemblies, as well as the GSE associated T/M equipment. This area comprises 1,1332 square feet. The equipment layout is indicated in Figure 7-15.

The Electrical/Electronic Test Area will be activated March 1, 1964.

7.4.1.4 <u>Pneumatic Test Area</u>

The Pneumatic Test Area consists of five test locations as indicated on the Detailed Area Layout. The total Pneumatic Test Area is 4,888 square feet. (See Figure 7-16.)

The Pneumatic Test Cell will be used to test S-1C Stage and GSE Pneumatic components. The cell comprises 384 square feet. The equipment layout is indicated in Figure 7-17.

The Cryogenic Test Cell will contain equipment necessary to subject stage components to Cryogenic environmental testing. This cell comprises 480 square feet. The equipment layout is indicated in (Figure 7-18).

The Valve and Component Assembly Area contains equipment required to assemble and disassemble stage and GSE mechanical components. This area comprises 416 square feet. The equipment layout is indicated in Figure 7-19.

U3 4211 4000

INSTRUMENT TEST AREA

EQUIPMENT

1 ELECTRONIC BENCH
2 WORK BENCH
3 TEST STAND
4 POWER SUPPLY
5 CRYSTAL ACCELEROMETER TEST STATION (POT & CONSOLE)
6 PRESSURE TRANSDUCER TEST STATION (WEIGHT HANDLER, FLAK BENCH & CONSOLE)
7 "G" ACCELEROMETER TEST STATION (ACCELERATOR & CONSOLE)
8 RATE GYRO TEST STATION (RATE TABLE & CONSOLE)
9 ACOUSTIC CRYSTAL TEST STATION (BENCH & ENCLOSURE)
10 DISCRETE LIQUID LEVEL TEST STATION
11 ENVIRONMENTAL TEST STATION
12 PROPELLANT DENSITY TEST STATION
13 TACHOMETER TEST STATION
14 CONTINUOUS LIQUID LEVEL MONITOR TEST STATION
15 TEMPERATURE CALIBRATION TEST STATION

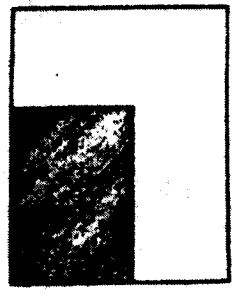

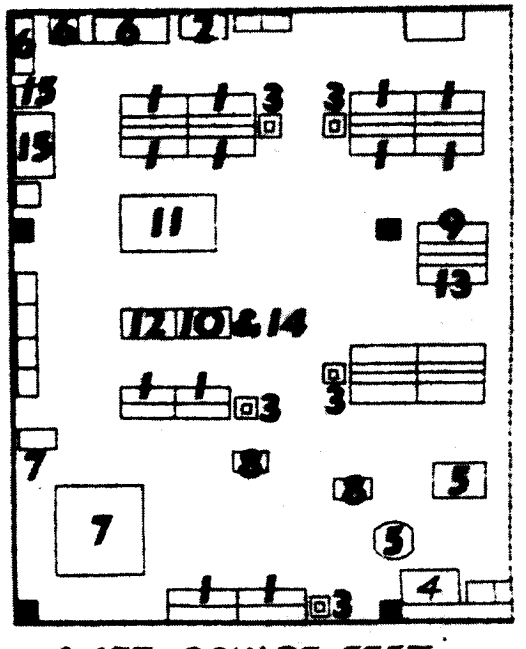

3,657 SQUARE FEET

FIGURE 7-12

U3 4211 4000

ELECTRICAL / ELECTRONIC COMPONENTS TEST AREA

EQUIPMENT

1 ELECTRONICS BENCH
2 WORK BENCH
3 TEST STAND
4 POWER SUPPLY
5 HERMETIC SEAL TEST STATION
6 RELAY TEST STATION
7 TRANSISTOR TEST STATION
8 EBW UNIT TEST STATION
9 EDS TEST STATION
10 INVERTER TEST STATION
11 SIGNAL CONDITIONER TEST SET
12 CAPACITOR TEST STATION
13 CONNECTOR TEST STATION
14 RESISTOR TEST STATION

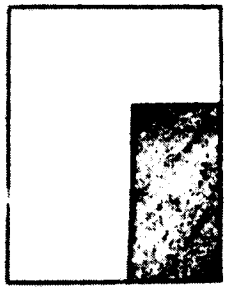

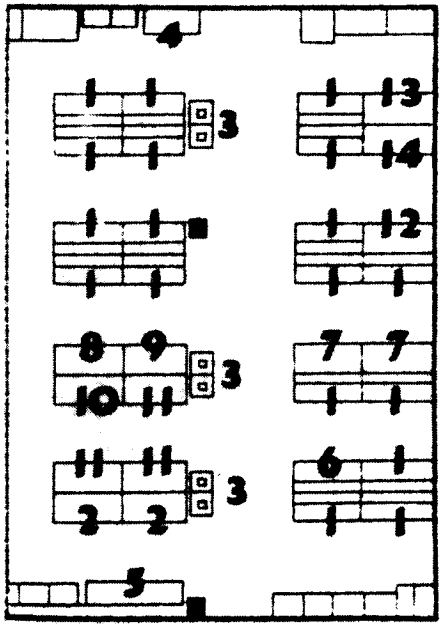

2,284 SQ. FEET

FIGURE 7-13

U3 4211 4000

RF AND TV TEST AREA

EQUIPMENT

1 ELECTRONIC BENCH
2 SCREEN ROOM
3 RF TEST BENCH
4 ANTENNA TEST BENCH
5 ANTENNA TEST SET
6 INSTRUMENT TV TEST SET
7 RANGE SAFETY COMMAND SET
8 ODOP TEST SET

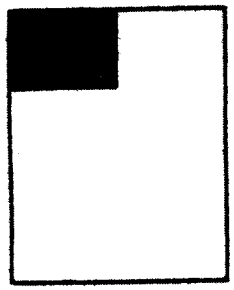

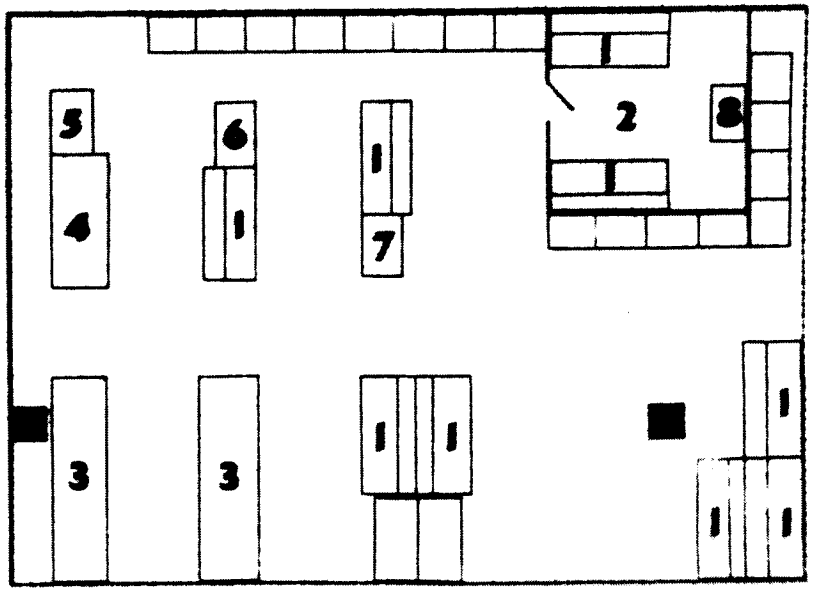

1,998 SQUARE FEET

FIGURE 7-14

U3 4311 4000

TELEMETRY TEST AREA

EQUIPMENT

1 ELECTRONIC BENCH
2 PCM TEST SET
3 RF TEST SET
4 PAM TEST SET
5 SSB TEST SET
6 MULTIPLEXER TEST SET

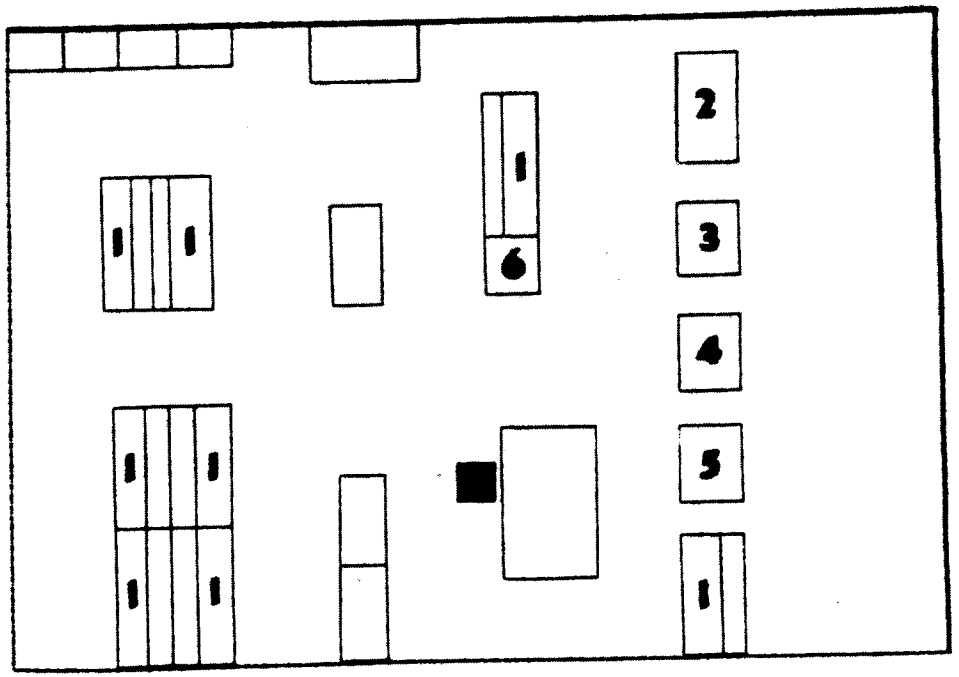

1,332 SQUARE FEET

FIGURE 7-15

U3 4211 4000

PNEUMATIC TEST AREA

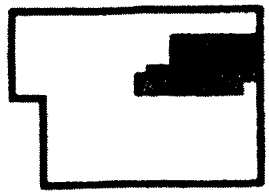

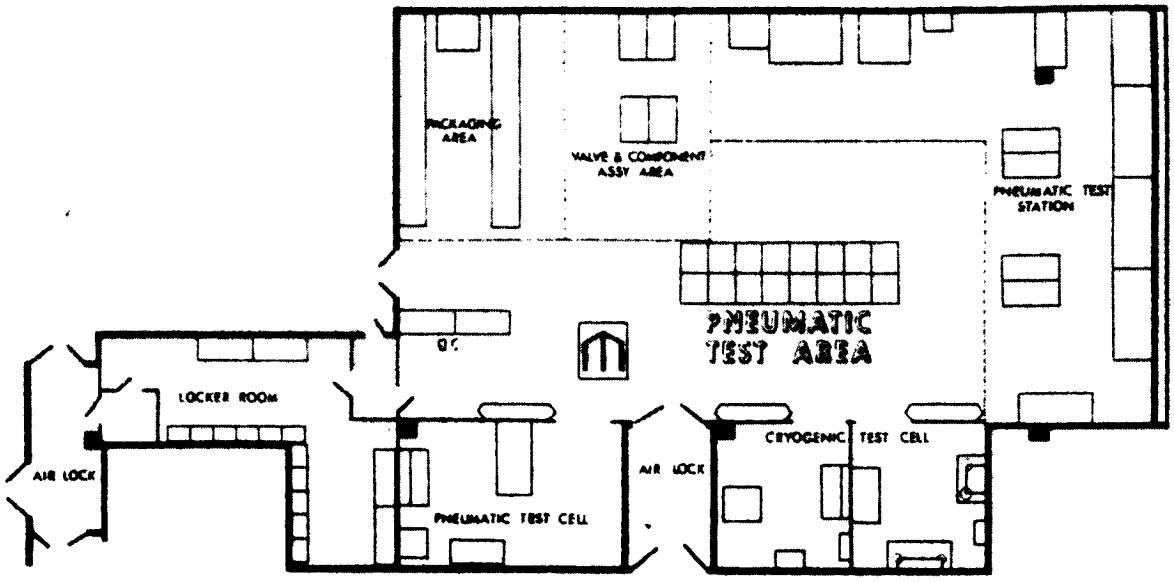

4,888 SQUARE FEET

FIGURE 7-16

US 4211 4000

PNEUMATIC TEST CELL

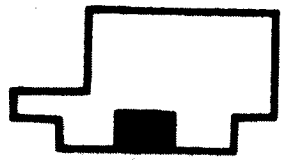

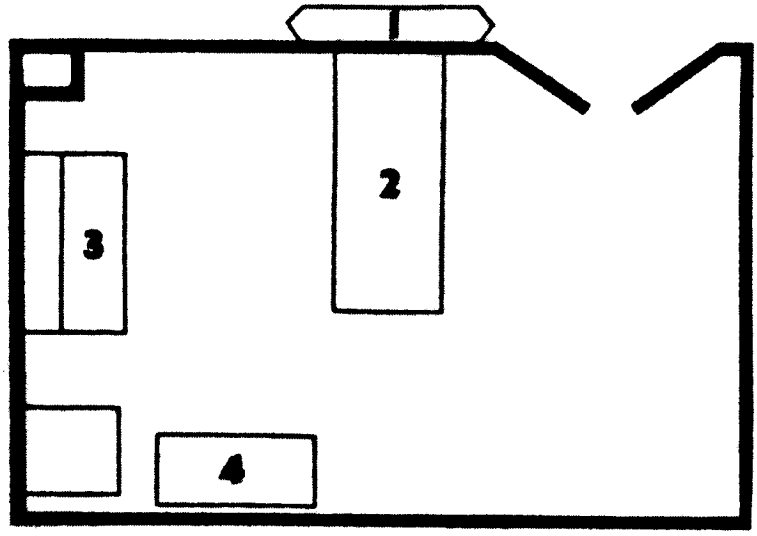

384 SQUARE FEET

1. PNEUMATIC CONTROL CONSOLE
2. PNEUMATIC TEST BENCH
3. TEST BENCH
4. WORK BENCH

FIGURE 7-17

U3 4211 4000

CRYOGENIC TEST CELL

TANK CELL

1. CONTROL CONSOLE (1)
2. LN2 TEST TANK 4'x4' (1)
3. LN2 TEST TANK 2'x2' (1)
4. TEST PANEL (1)
5. TEST BENCH (1)

TOWER CELL

6. CONTROL CONSOLE
7. 250 PSIG TEST TOWER (1)
8. THERMISTOR 50 PSIG TEST TOWER (1)
9. TEST BENCH (3)
10. TEST PANEL

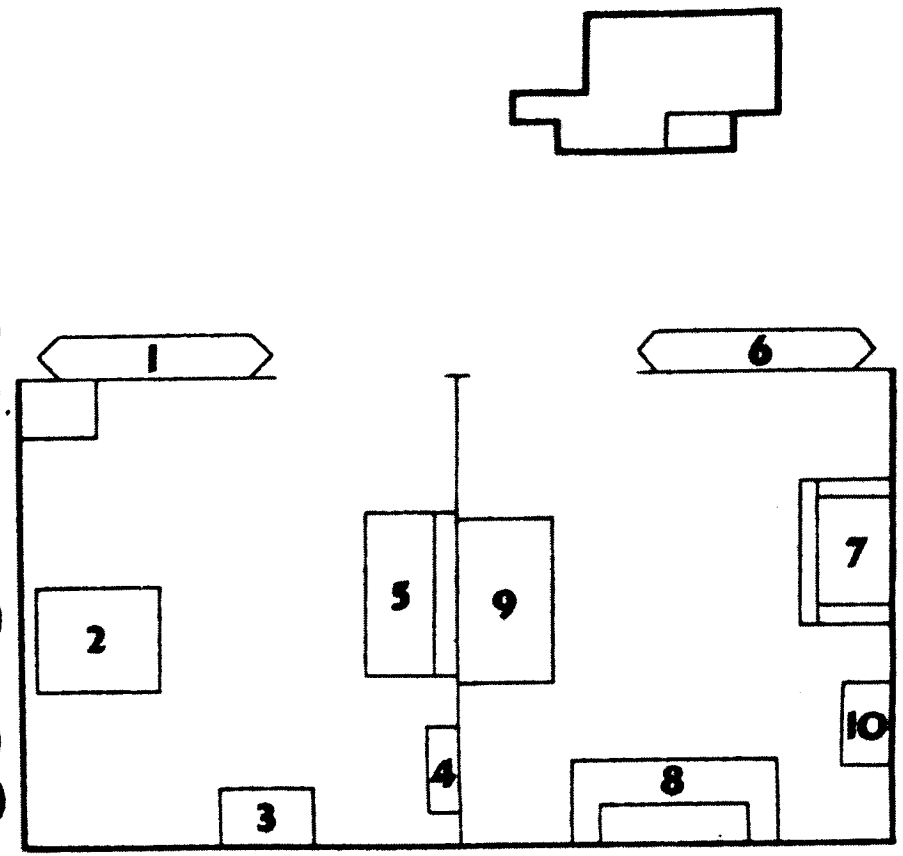

480 SQUARE FEET

FIGURE 7-18

U3 4811 4000

VALVE & COMPONENT ASSEMBLY AREA

ASSEMBLY STATION

1. WORK BENCH (4)
- ANALYSIS TEST BENCH (1)

DISASSEMBLY STATION • •

PNEUMATIC FLACK BENCH (1)
WORK BENCH (1)

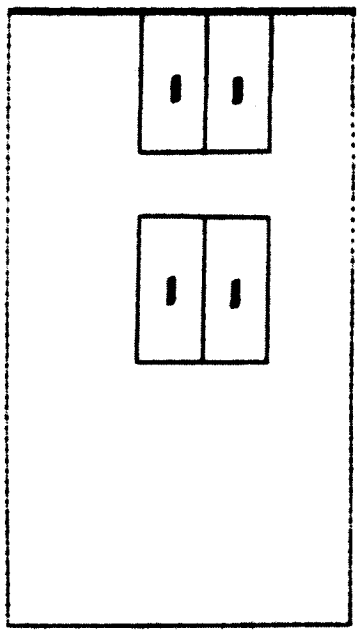

416 SQUARE FEET

• LOCATED IN THE PNEUMATIC TEST STATION

• • LOCATED IN THE EQUIPMENT & SPECIAL TEST AREA

FIGURE 7-19

U3 '82 11 4000

7.4.1.4 (Continued)

The Pneumatic Test Station contains equipment required to functionally test Stage and GSE pneumatic components. This area comprises 1,428 square feet. The equipment layout is indicated in Figure 7-20.

The Pakcaging Area will contain equipment and tables necessary to adequately package components tested in the Pneumatic Test Area. This packaging area comprises 468 square feet. The equipment layout is indicated in Figure 7-21.

The Pneumatic Test Area will be activated March 1, 1964.

7.4.1.5 Subsystem Test Supporting Areas

There are six locations included in the Subsystem Area Layout which are utilized for performance of support functions.

The Pre-Clean and Final Clean Areas are utilized by Boeing Manufacturing to clean stage mechanical components prior to test or assembly. Manufacturing is responsible for area requirements and equipment layout for these areas.

The Test Staging Area comprises 5,560 square feet utilized for receiving, storage, and shipping of components routed to the Subsystem Test Comples. In addition, the Test Staging Area contains the Subsystems Test Instrument Crib. The equipment layout is indicated in Figure 7-22.

The Material Review Board Area will comprise 616 square feet utilized to hold components having a test discrepancy until review by the MRB is completed. The area layout is indicated in Figure 7-23.

The Subsystem Technical Support Office comprises 3,600 square feet consisting of two conference rooms, five offices, an an open office area, containing approximately 40 desks. The area layout is indicated in Figure 7-23.

The Equipment Maintenance and Special Test Area will consist of mechanical and electrical general laboratories, the function of which is to perform special tests on GSE and Stage components when required. In addition this area includes space for valve and component disassembly and a work shop for minor maintenance of subsystem test equipment and fixtures. This area comprises 2,895 square feet.

The equipment layout is indicated in Figure 7-25.

These Subsystem Test Support Areas will be activated on March 1, 1964.

U3 4211 4000

PNEUMATIC TEST STATION

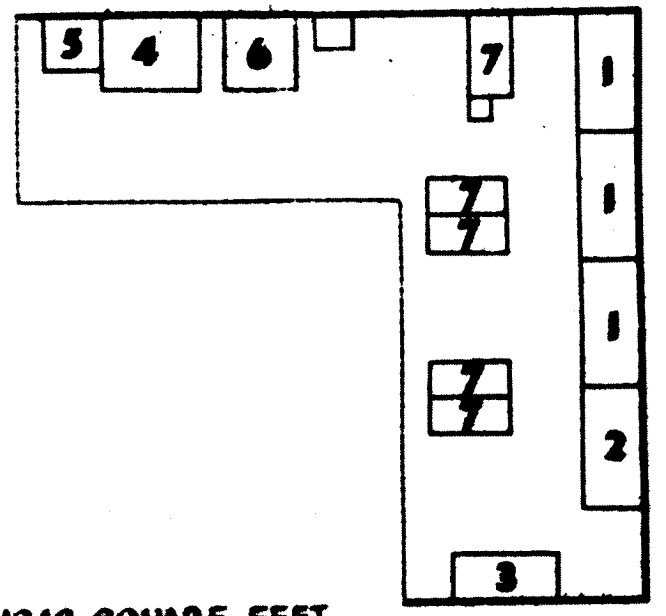

1248 SQUARE FEET

1. PNEUMATIC FLACK BENCH (3)
2. PNEUMATIC FLOW BENCH (1)
3. ANALYSIS TEST BENCH (1)
4. VACUUM OVEN (LARGE) (1)
5. VACUUM OVEN (SMALL) (1)
6. ENVIRONMENTAL CHAMBER (1)
7. WORK BENCH (5)

FIGURE 7-20

U3 4211 4000

PACKAGING AREA

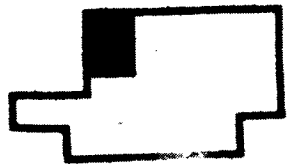

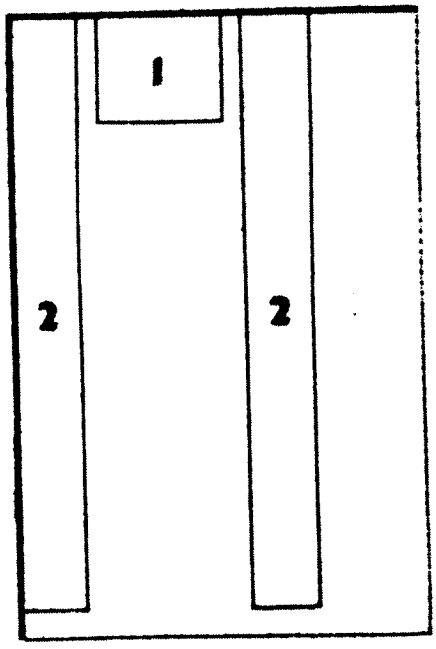

468 SQUARE FEET

1. SEALERS (1)
2. WORK TABLES (2)

FIGURE 7-21

U3 4211 4000

TEST STAGING AREA

1 INSTRUMENT CRIB
2 STORAGE
3 SHIPPING AND WRAPPING STATION
4 RECEIVING AREA
5 SKID DUMP
6 AIR LOCK

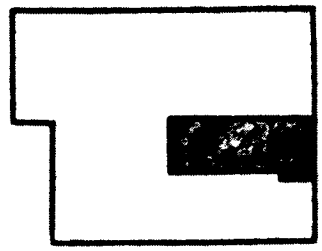

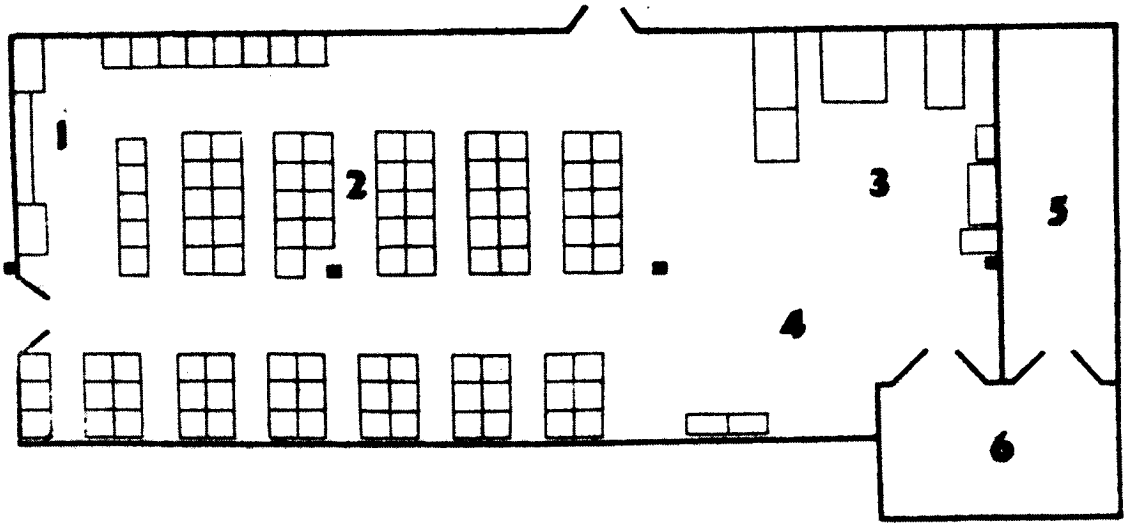

5560
SQUARE FEET

FIGURE 7-22

U3 4211 4080

SUB-SYSTEMS MATERIAL REVIEW BOARD AREA

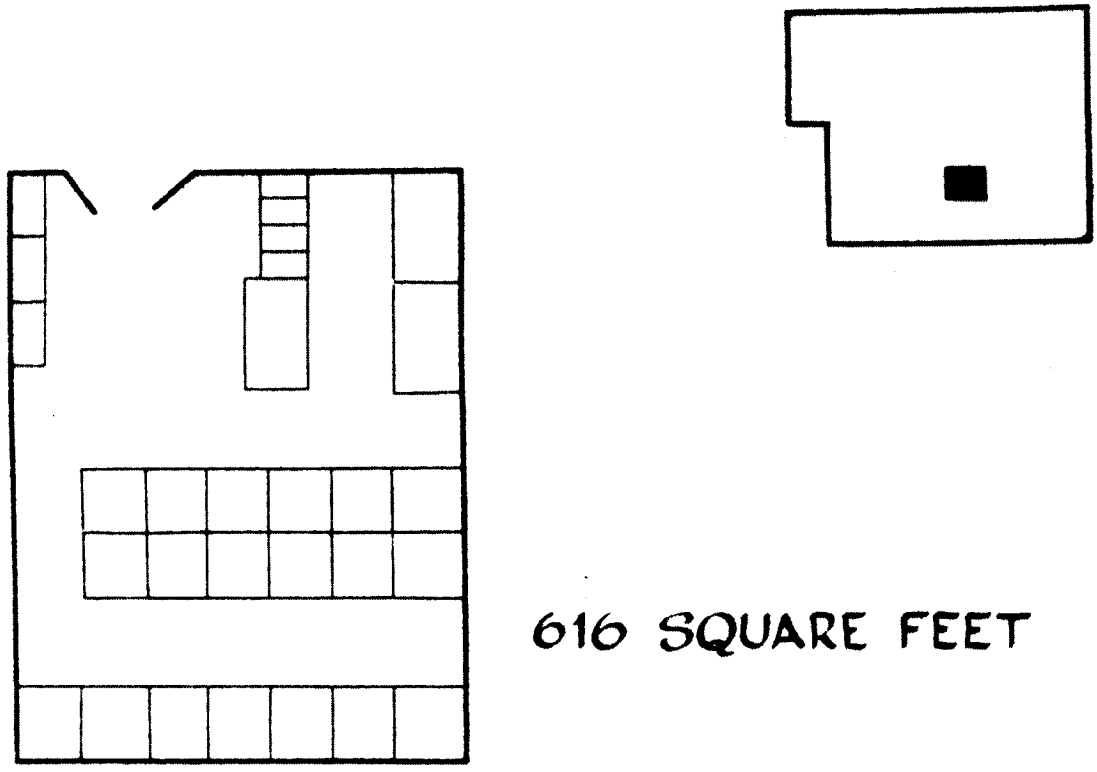

FIGURE 7-23

U3 4211 4000

SUB-SYSTEMS TECHNICAL SUPPORT OFFICE

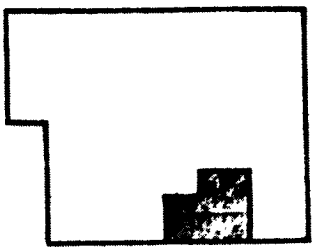

1 CONFERENCE ROOM
2 CONFERENCE ROOM
3 TEST OPERATIONS
4 TEST OPERATIONS
5 TECH STAFF
6 TECH STAFF
7 Q. C. OFFICE

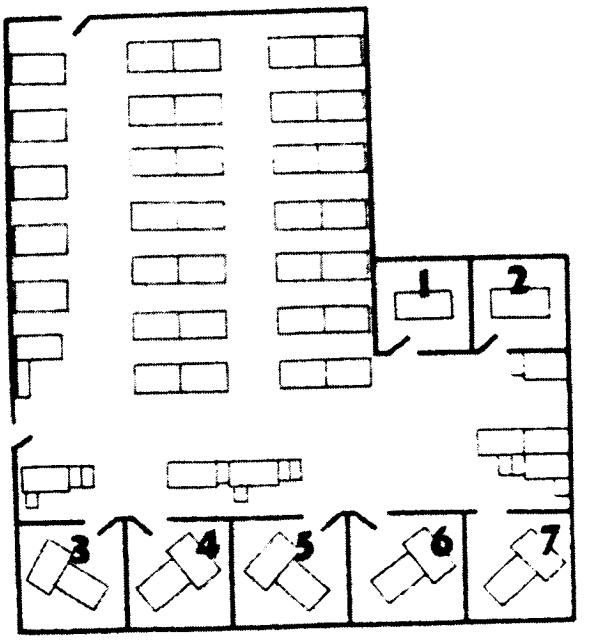

3600 SQUARE FEET

FIGURE 7-24

U3 4211 4000

EQUIPMENT MAINTENANCE & SPECIAL TEST

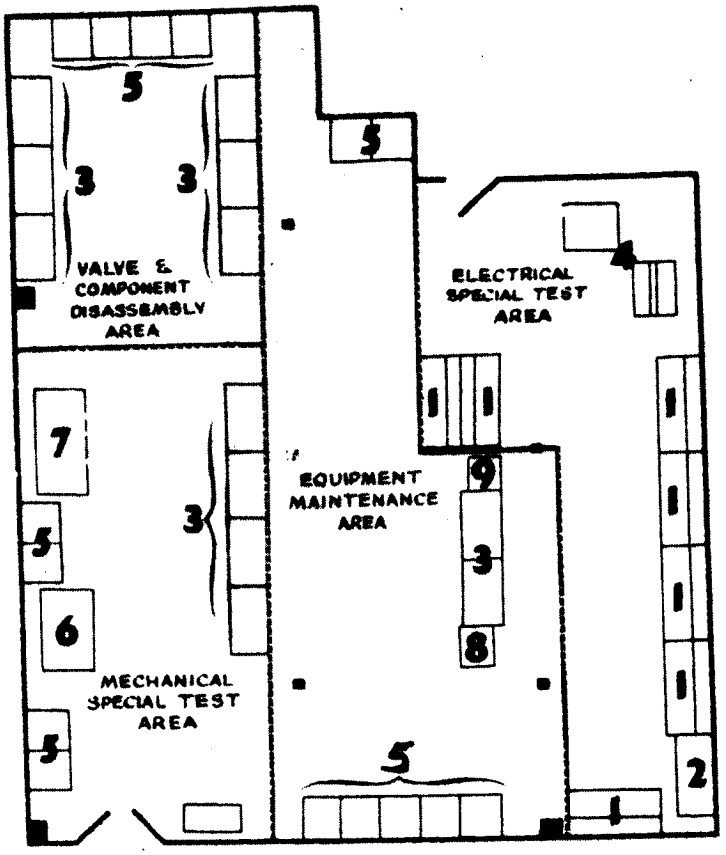

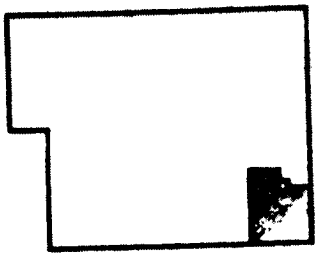

2895 SQUARE FEET

1 ELECTRICAL BENCH
2 400 CPS POWER SUPPLY
3 WORK BENCH
4 CALORIMETER TEST STATION
5 SHELVES
6 PNEUMATIC FLAK BENCH
7 HYDRAULIC COMPONENT TEST BENCH
8 REFRIGERATOR
9 POTTING OVEN

FIGURE 7-25

U3 4211 4000

7.4.1.6 Interim Test Area

The Subsystem Test Area complex will not be activated until March 1, 1964; an Interim Facility supports early testing of GSE and Stage Components.

The Interim Laboratroy consists of three test cells, two control rooms, two heat exchanger rooms and the Pneumatic Test and LOX Cleaning Vans. These areas will be used to test GSE and Stage components until the Subsystem Test Area is activated.

7.4.2 Test Equipment Installation, Checkout, Calibration, and Maintenance.

7.4.2.1 Subsystem Test Equipment

Installation of Inplant Subsystem Test Facility Equipment will be performed by direction of the Facilities Department in accordance with Inplant Test Facilities Requirement releases. This equipment installation will be complete on March 1, 1964, when the Subsystem Test Facilities are activated.

Checkout and Calibration of facility equipment will be performed by Inplant Test Operations personnel under the directions of the Inplant Test Technical Staff utilizing test station checkout and calibration procedures prepared by Inplant Test Procedures Group.

Standard commercial equipment which is a part of Facilities Equipment will be routed to the Calibration/Certification Laboratories of Quality and Reliability Assurance Department for individual calibration before the test station is checked out and calibrated.

Installation of Inplant Subsystem Test Contract Equipment will be performed under the direction of Inplant Test.

Checkout and Calibration of contract equipment will be performed by Inplant Test Operations personnel under the Inplant Test Technical Staff utilizing checkout and calibration procedures prepared by Inplant Test Procedures Group.

Standard commercial equipment which is a part of Contract equipment will be routed to the Calibration/Certification Laboratory of Quality and Reliability Assurance Department for individual calibration before a test station is checked out and calibrated.

7.4.2.2 Interim Test Equipment

The test equipment for use in the Interim Laboratory will be, with few exceptions, standard commercial equipment, purchased by Facilities Department. It will require no installation. This equipment will be routed through the Calibration/Certification Laboratory of the Quality and Reliability Assurance Department.

Checkout and Calibration of the LOX Cleaning Van and the Pneumatic Test Van will be performed by Inplant Test Operations personnel under the direction of the IPT Procedures Group.

7.4.3 Subsystem Test Operation

7.4.3.1 Normal Hardware Flow

Equipment will be received in the Test Staging Area. Records control and inspection will be performed prior to shipment of the parts to the test area. The functional test of the hardware will be performed in the test area and will vary from item to item. The basic test operation will be standard for all items regardless of test. Test Operations will perform all functional tests. Quality Assurance (4-4000) will survey all tests to insure proper techniques, correct procedures, calibrated test equipment, etc. The Technical Staff will monitor tests to insure no problem areas arise and maintain all planning paper. Program Control will prepare schedules and progress reports on tests and test stations. Parts which pass their functional test are sent to the Test Staging Area.

Flow charts illustrating the flow of hardware through sybsystem test are shown on the following figures:

a) Figure 7-26 illustrates the flow plan for handling GSE/MSE and Special Tooling used in subsystem test.

b) Figure 7-27 illustrates the flow plan for handling flight hardware and other components in subsystem test.

c) Figure 7-28 illustrates the flow plan for handling GSE in subsystem test.

7.4.3.2 Abnormal Hardware Flow

In the event of the failure of a part through its functional test, the following procedure will be followed. (See Figure 7-29). A representative of the Technical Staff group who has primary responsibility for this part will be contacted first. He will evaluate the malfunction and prescribe a retest. He will then notify the Reliability Group.

U3 6211 4000

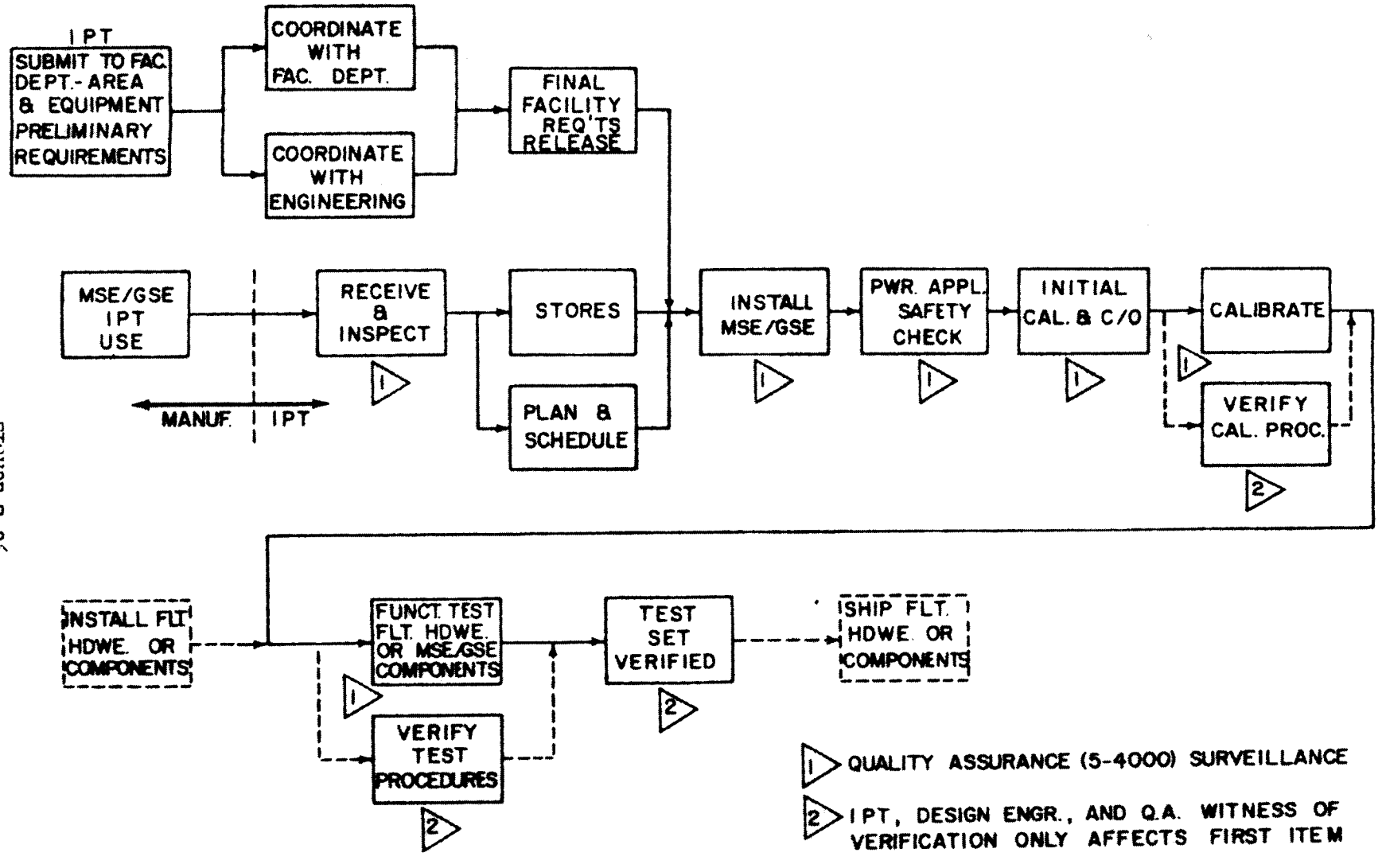

FIGURE 7-26

FLOW PLAN FOR HANDLING GSE, MSE & SPECIAL TESTING IN SUBSYSTEMS TEST

US 4211 4000

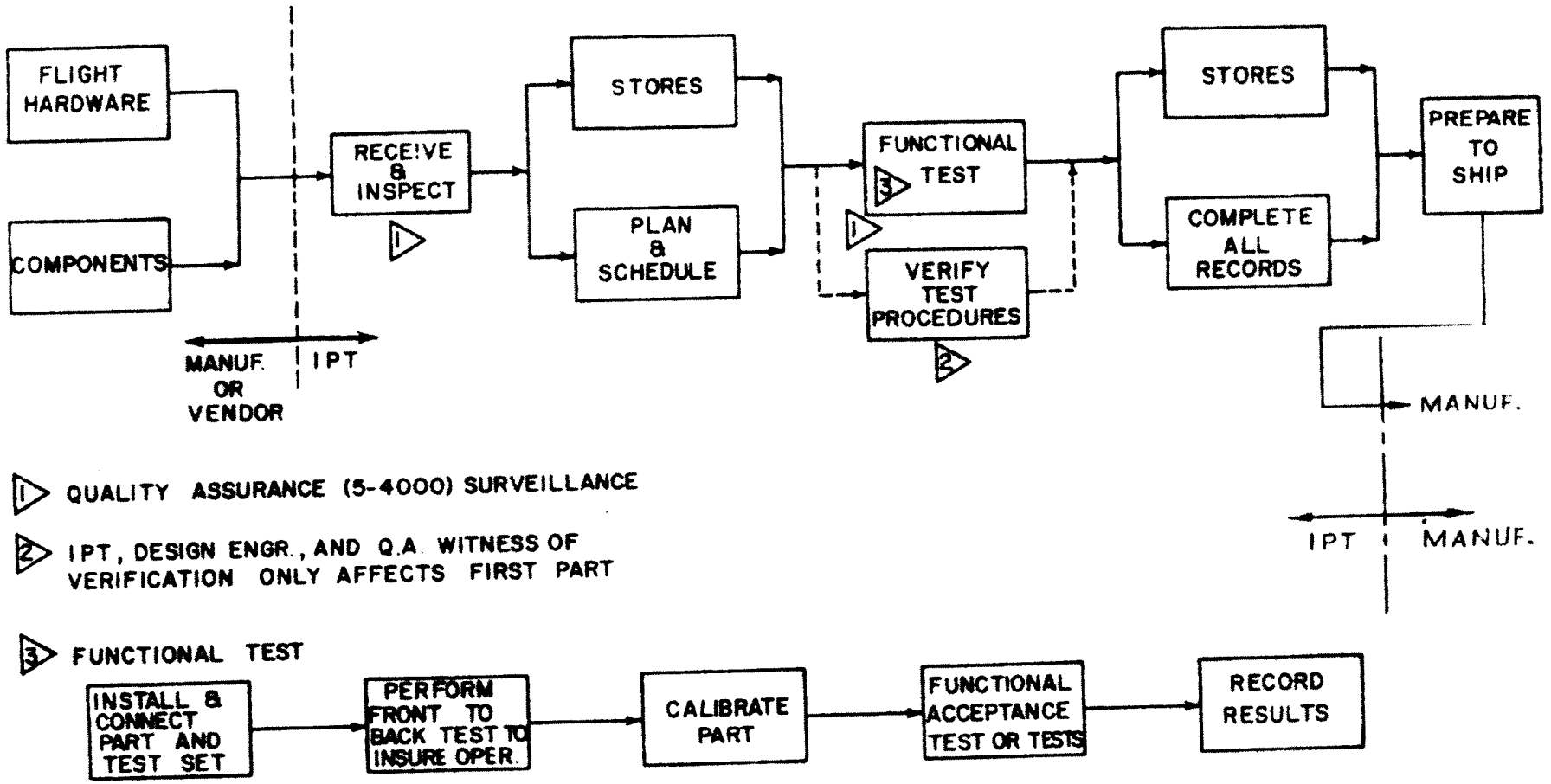

FLOW PLAN FOR HANDLING FLIGHT HARDWARE AND COMPONENTS IN SUBSYSTEM TEST

FIGURE 7-22

US 4211 4000

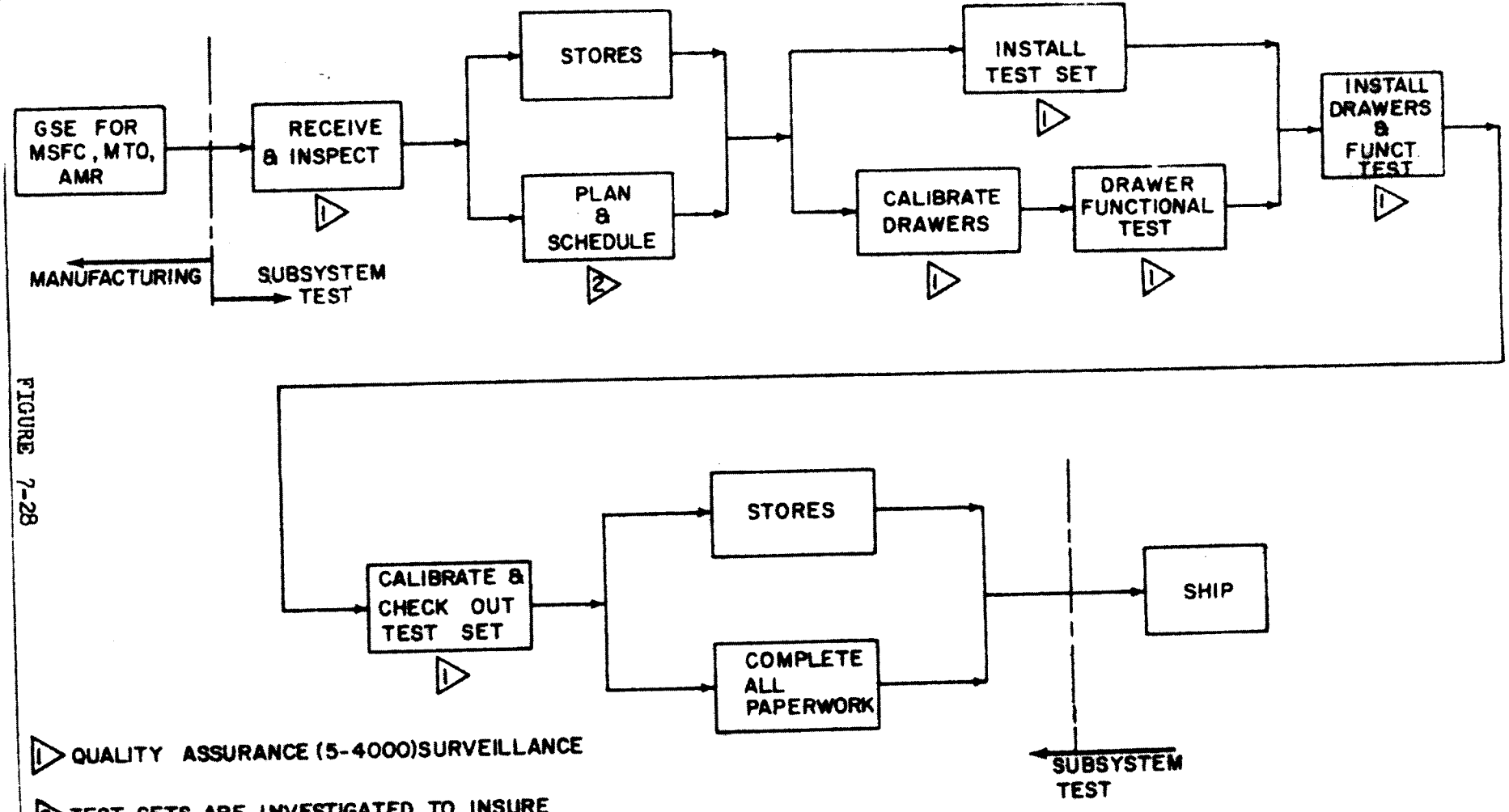

1 QUALITY ASSURANCE (5-4000) SURVEILLANCE

2 TEST SETS ARE INVESTIGATED TO INSURE EQUIPMENT TO PERFORM TESTS IS AVAILABLE. ALL PROCEDURES ARE CHECKED TO INSURE THEY MEET TEST REQUIREMENTS.

FIGURE 7-28

FLOW PLAN FOR GSE FOR MSFC

U3 4211 4000

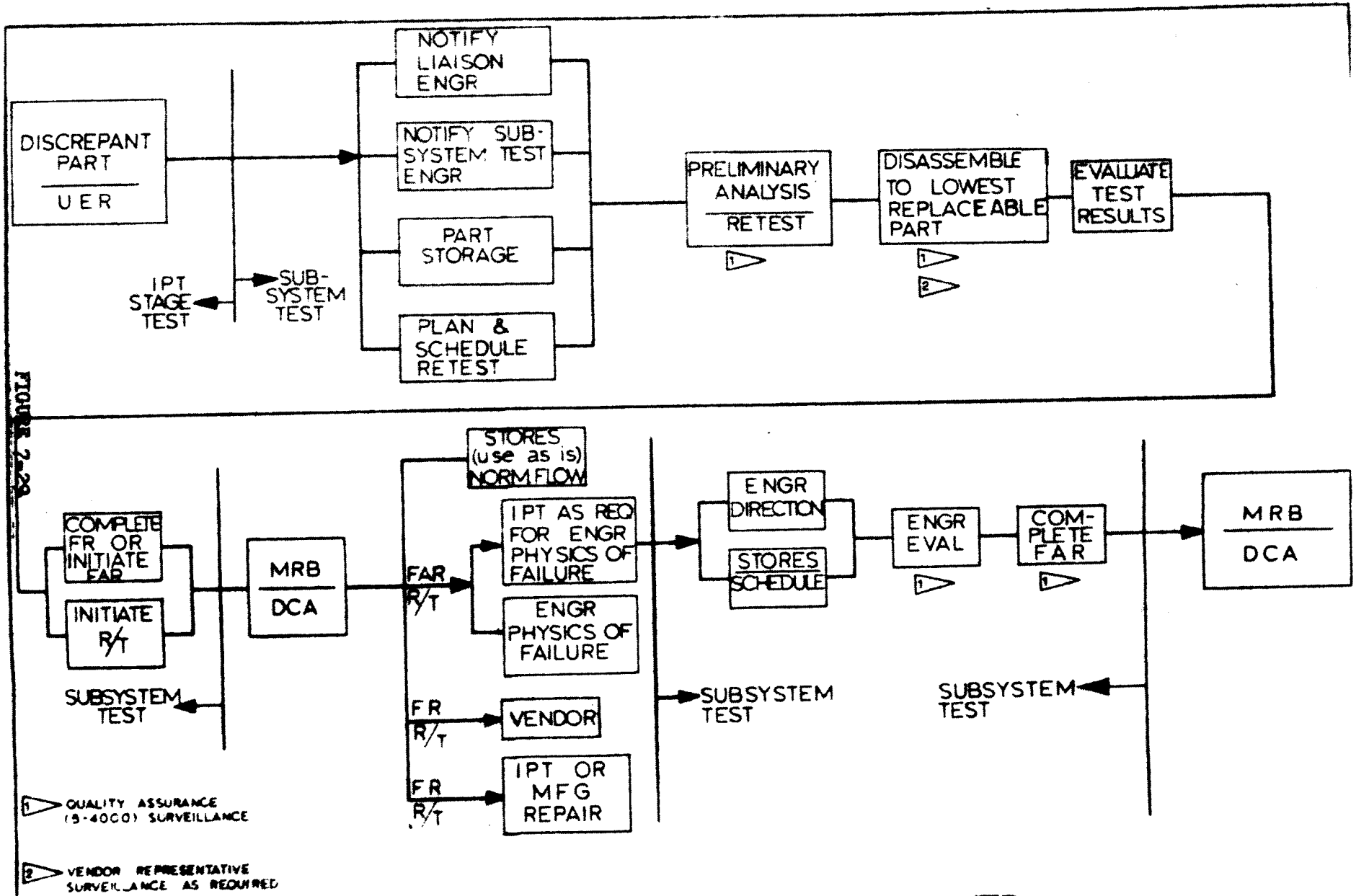

FIGURE 7-28

FLOW PLAN OF ABNORMAL EVENTS IN SUBSYSTEMS TEST

U.S. 4211 4000

7.4.3.2 (Continued)

Engineering will be contacted if investigation of the part reveals a problem of which they should be aware. Normally no attempt will be made to rework small inexpensive parts. Test sets and more complex items will undergo rework as recommended by the failure examination by the affected groups.

7.4.3.3 Preparation for Shipment

Parts that do not require packaging in a clean environment will be sent to the test staging area after successful completion of the required functional tests. Parts requiring processing in a clean environment will be packaged in the proper area after successful completion of the functional tests before being forwarded to the Test Staging Area.

Records Control will then check the accompanying paper work to assure proper dispositions of the part. Parts not already packaged will be vacuum wrapped, sealed, and packed in a shake proof container as required to insure the integrity of the part prior to installation in the next higher assembly. The records and parts will then be sent to a Parts Control Area where they will be stored until needed.

7.5 STAGE CHECKOUT

7.5.1 Stage Test Complex

The Stage Test Complex contains four adjacent stage test cells and a three story operations center. The operations center is divided into separate rooms housing equipment and offices required for stage test functions. To simplify discussion of the complex, it is divided into four areas designed "A", "B", "C" and "D", (See Figure 7-30). The following is a listing of the test cell and rooms located in each area:

Area A

Cell A
Control Room A
*Telemetry Room A-B
*Computer Room A-B
Conference Room
Technical Staff Office Space
Test Operations Office Space

Area B

Cell B
Control Room B
Telemetry Room A-B
Computer Room A-B
Equipment Room A-B
Technical Staff Office Space
Test Operations Office Space

Area C

Cell C
Control Room C
*Telemetry Room C-D
*Computer Room C-D
Equipment Room C
Technical Staff Office Space
Rework Room

Area D

Cell D
Control Room D
Telemetry Room C-D
Computer Room C-D
Equipment Room D
Quality Assurance Office
Rework Room

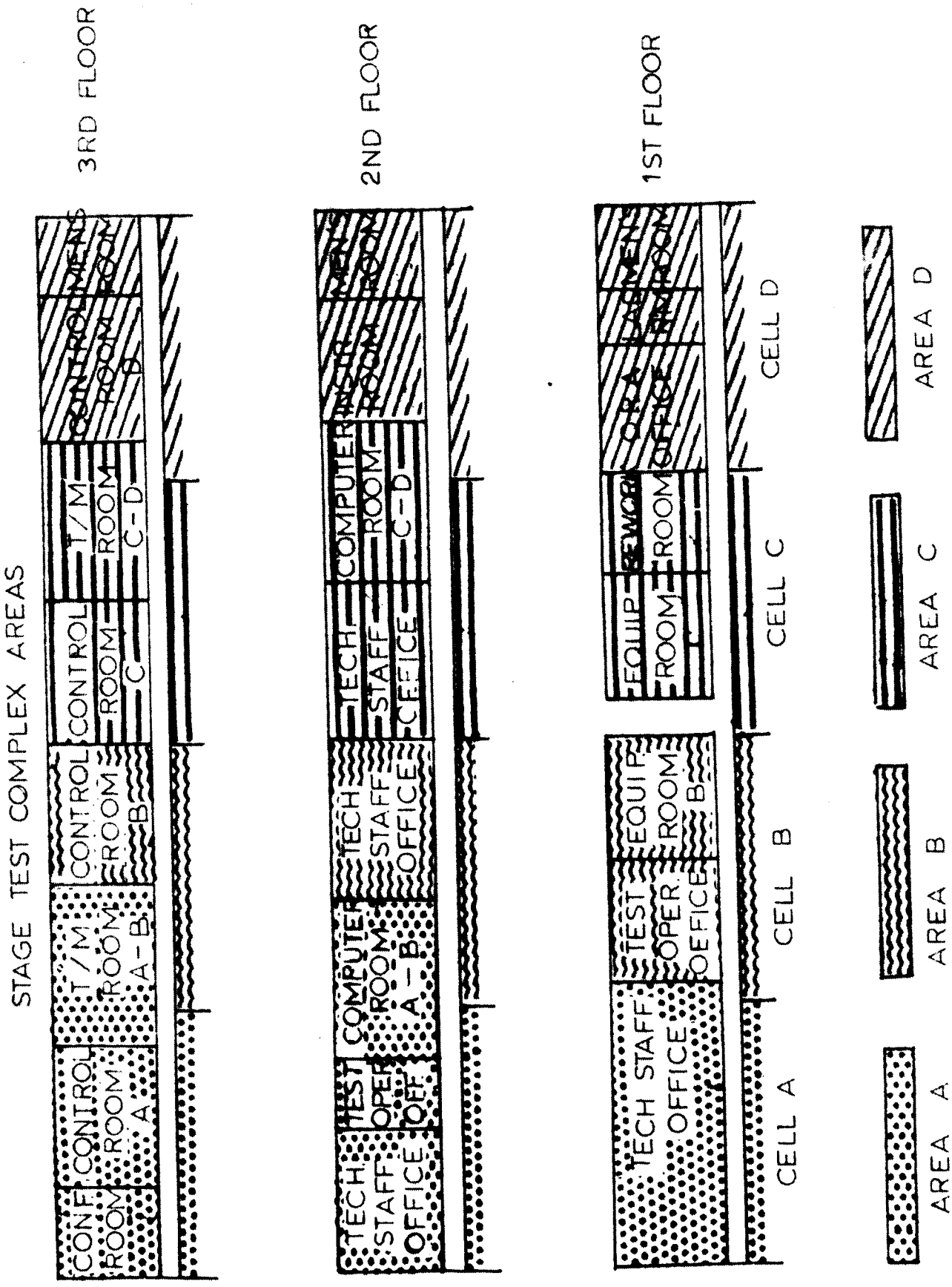

FIGURE 7-30

U3 4211 4000

7.5.1 (Continued)

*Telemetry Room A-B services both area A and B. (See Figure 7-31).
*Telemetry Room C-D services both area C and D.
*Computer Room A-B services both area A and B. (See Figure 7-32).
*Computer Room C-D services both area C and D.

Two additional Computer Rooms are under consideration for inclusion within the Operations Center. If these requirements become firm, they will be located on the second floor in areas "B" and "C". Then Computer Rooms A-B and C-D will be redesignated A and D respectively and will service areas "A" and "D".

The Stage Test Complex facilities will be completed in two phases. Areas "C" and "D" will be completed May 1, 1964, to allow early Engineering evaluation of the MSE. A eas "A" and "B" will be completed August 1, 1964 to allow installation, checkout and calibration of the MSE to support testing of S-1C-F.

The Facility completion date is the date construction and facility services are complete and the area is ready for equipment installation.

7.5.2 Installation, Checkout and Calibration

7.5.2.1 Installation of Stage Test Equipment

All subassemblies will be functionally tested in the Subsystem Test Area prior to installation. After passing the functional test, subassemblies will be installed in system racks located in the Stage Test Complex. This will be accomplished per released Engineering Drawings.

Facilities Layout Engineering Drawings 50-1-1-180 and 5-1-4-179 provide layout of the equipment within the Test Complex. Accessibility for maintenance and calibration shall be a prime consideration in the location of this installation. (See Figures 7-34 and 7-35).

The main cable that runs from the stage and GSE equipment will be routed overhead to the operations center. It will then be routed to the test equipment through false flooring. Cabling ducts will carry the cables between floors. All cables will be routed per released Engineering drawings.

The computer main frame, peripheral equipment and software are GFE. Responsibility for the installation of this equipment has not been defined. Installation and checkout information concerning GFE equipment will be added when available.

7.5.2.2 Checkout of Stage Test Equipment

A continuity and isolation check of all cabling installed in the Test Complex will be performed to ensure that all wiring configurations agree with released drawings.

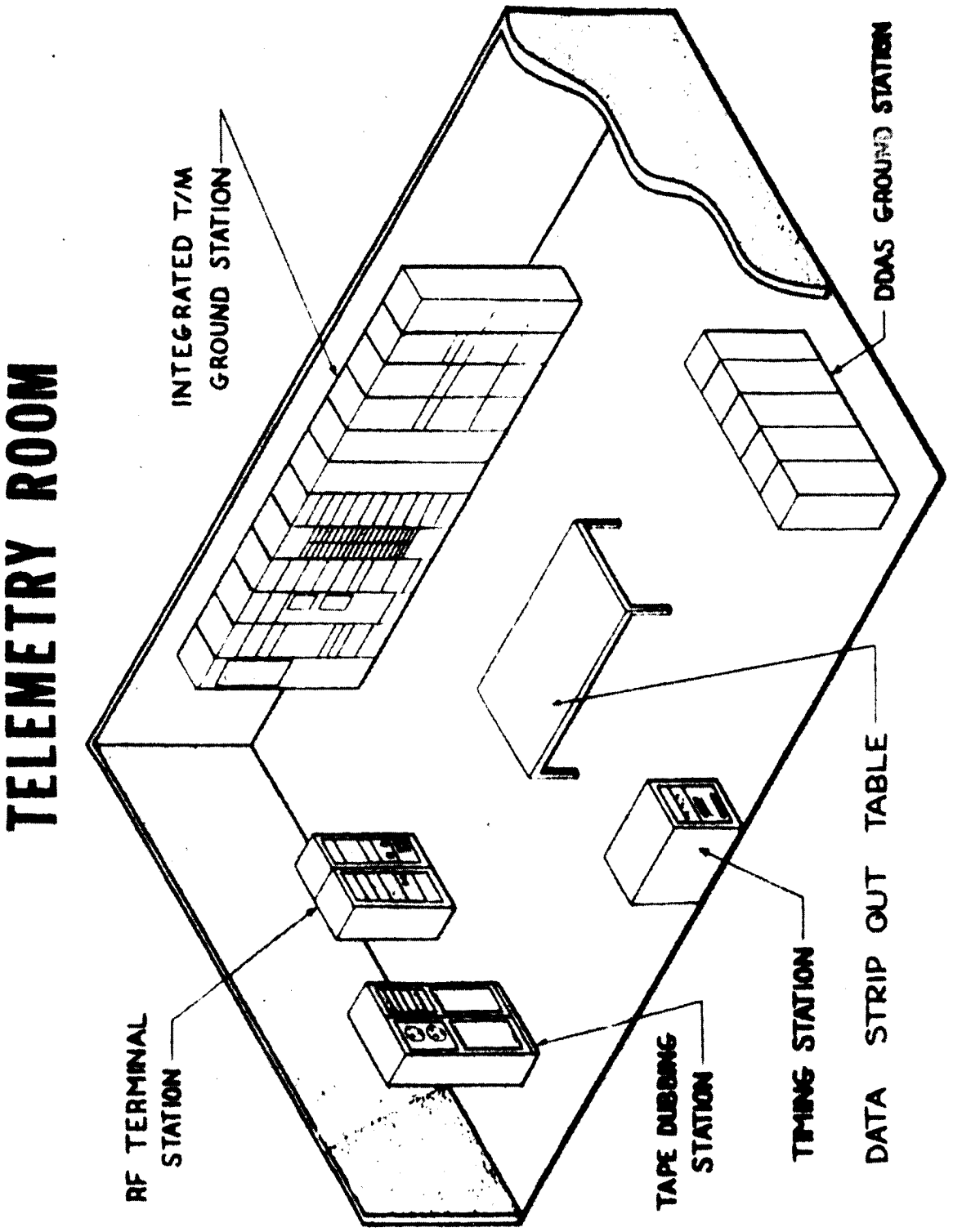

FIGURE 7-31

U3 4211 4000

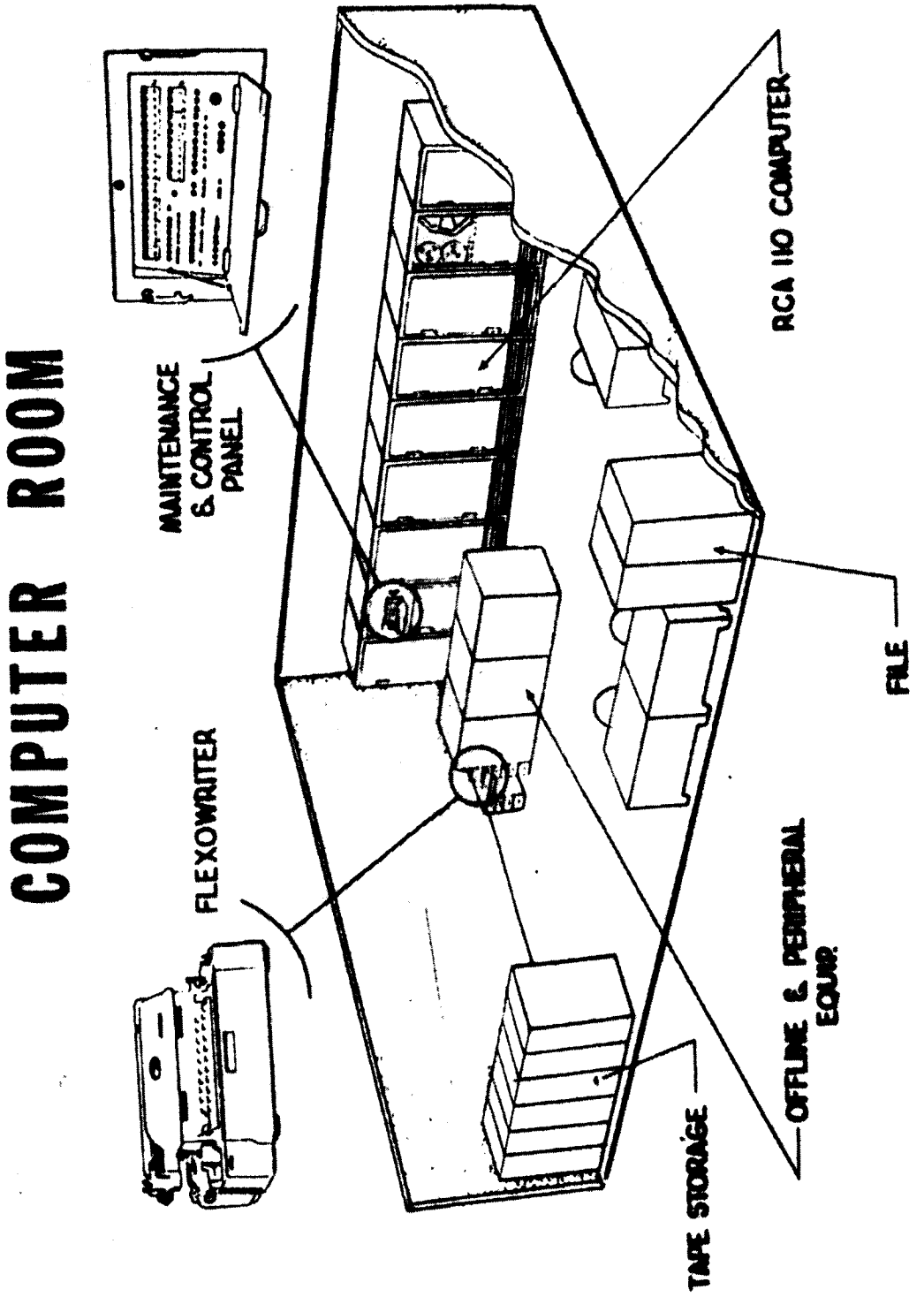

FIGURE 7-32

U3 4211 4000

CONTROL ROOM

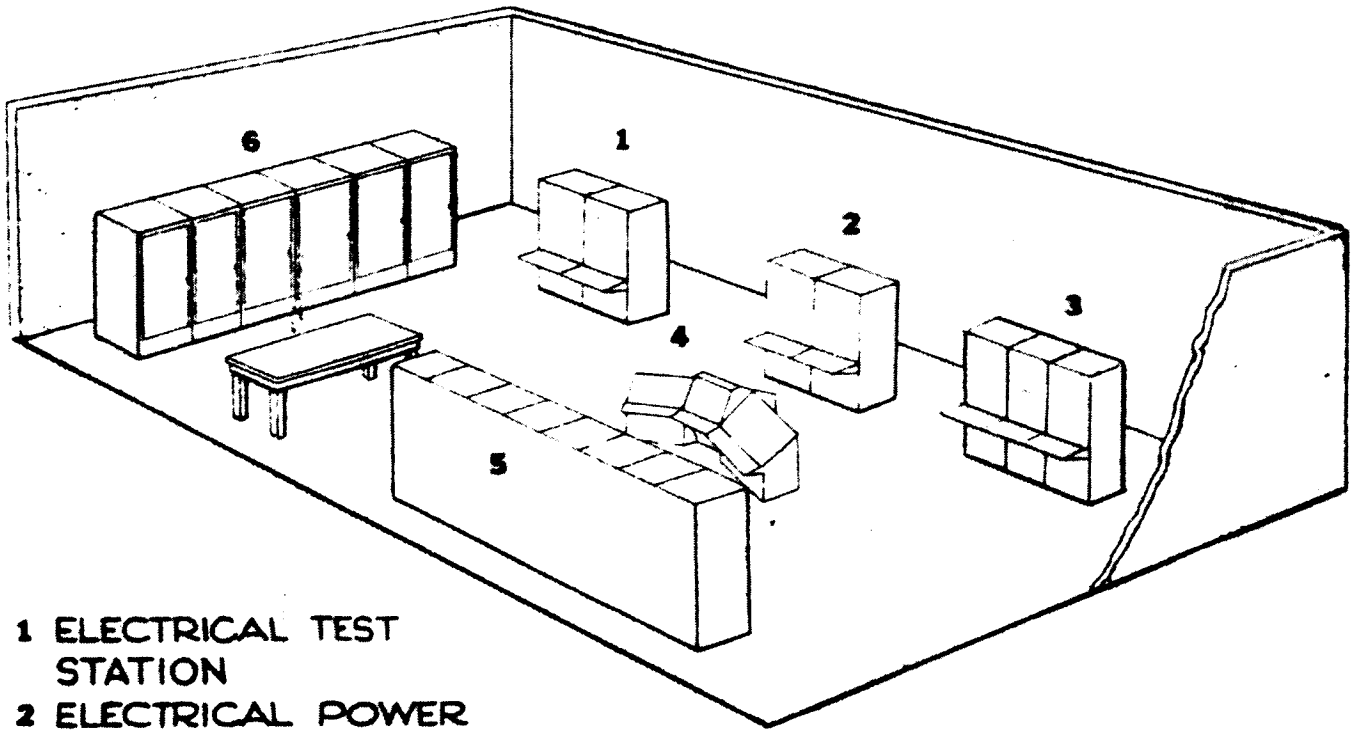

1 ELECTRICAL TEST STATION
2 ELECTRICAL POWER STATION
3 MECHANICAL TEST STATION
4 CONTROL & MONITOR STATION
5 T.V., AUDIO, POWER & POWER DISTRIBUTION
6 CONTROL ROOM TEST DISTRIBUTOR & RELAY RACKS

FIGURE 7-33

U3 4211 4000

MICHOUD INPLANT TEST STAGE CHECKOUT FACILITY

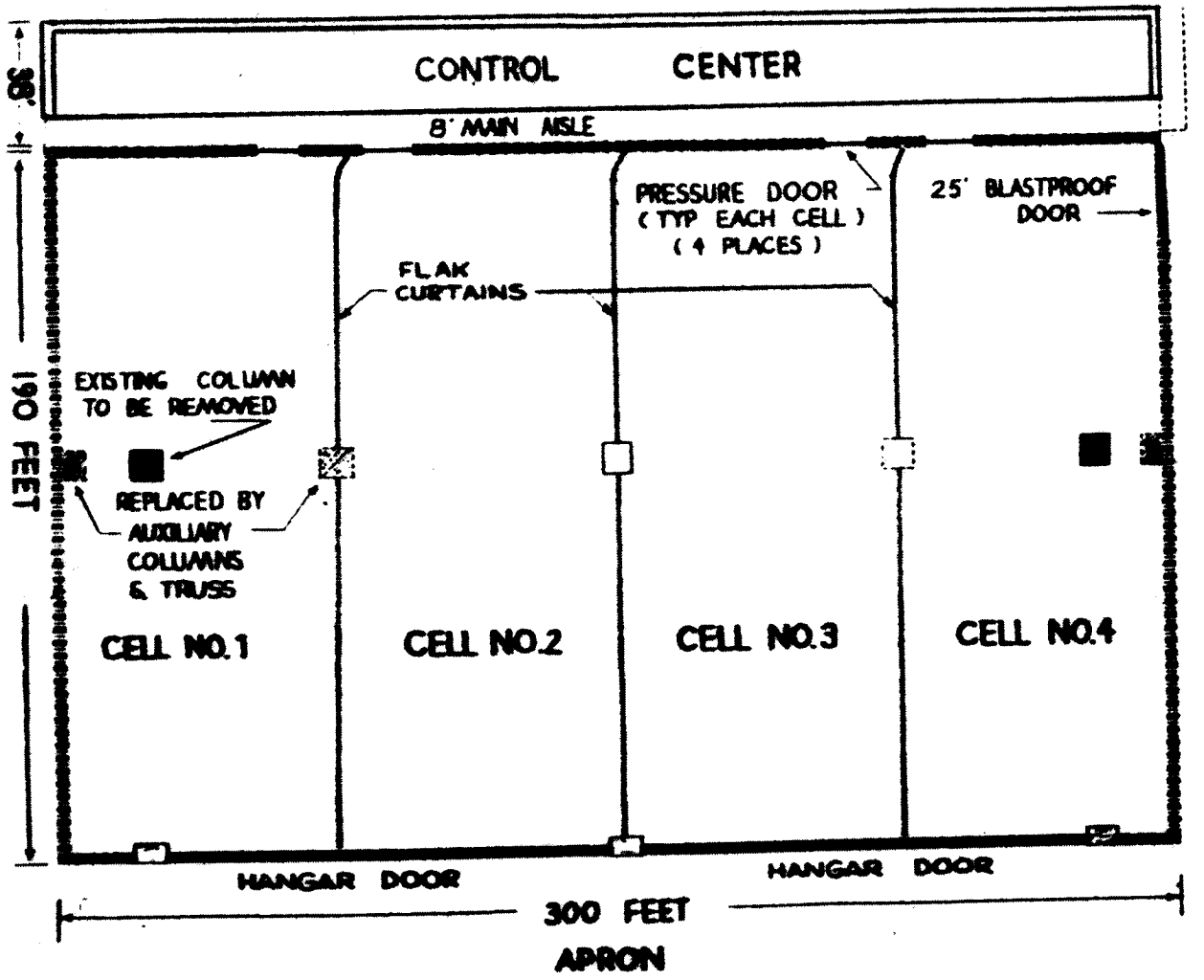

FIGURE 7-34

U3 4211 4000

STAGE CHECKOUT AREA

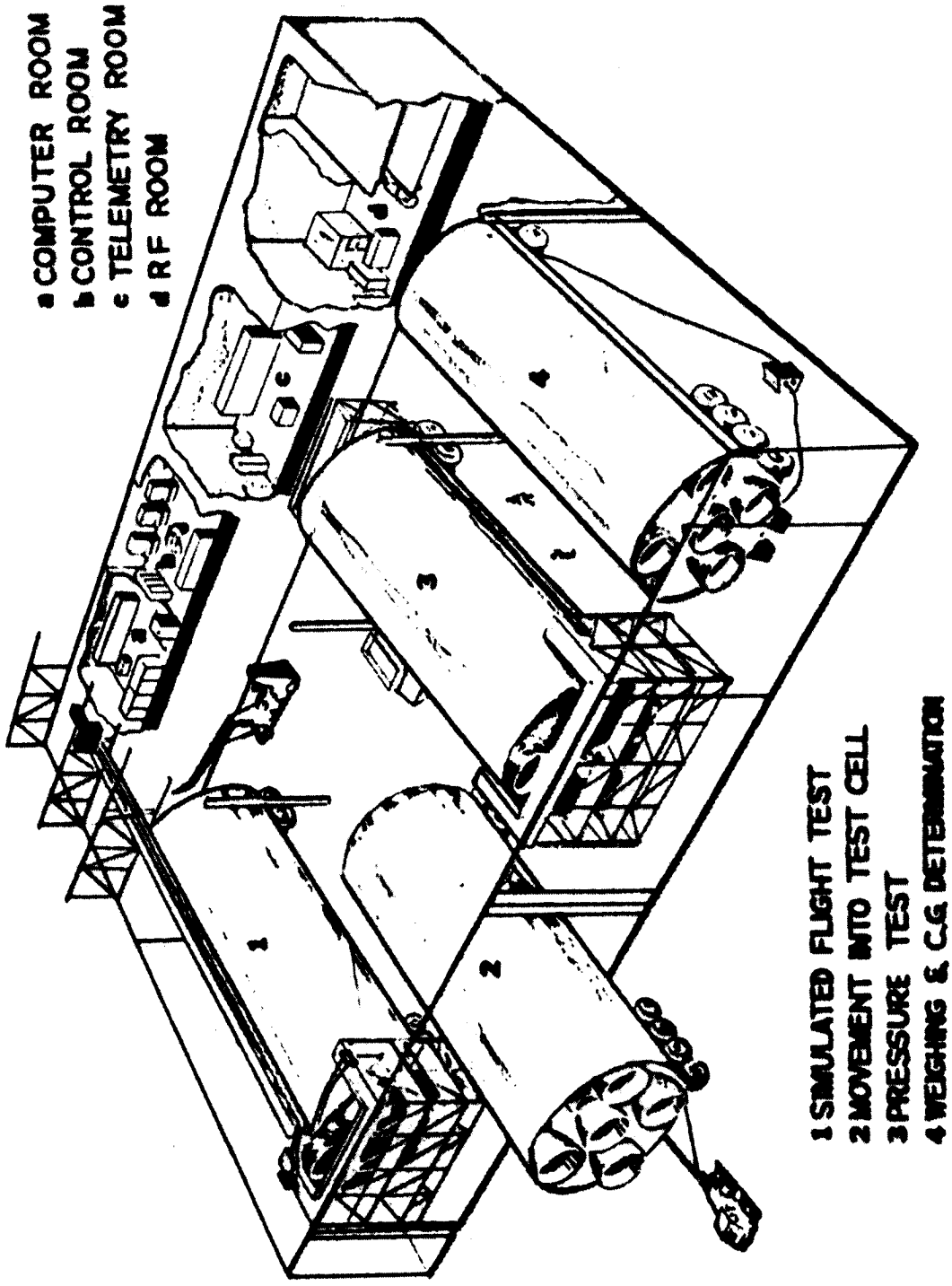

FIGURE 7-35

U3 4211 4006

7.5.2.2 (Continued)

Systems referred to in this paragraph are as follows: Test Conductors Console, Digital Data Acquisition, Integrated Analog Ground Station, Power and Signal Distribution System, Test Sets, and Computer.

For systems checkout, the control of the systems will be at individual test stations. Individual systems must be operating properly prior to an integrated systems test. Input and output parameters of each system will be monitored to ensure successful integration with other systems.

All remaining MSE interconnections will be made when each system is operating independently within the required specification. At this time an integrated systems test will be performed, using a Ground Equipment Test Set. (This provides simulation of an S-1C Stage). Individual systems will be controlled by the Test Conductor's Console through Computer programming. This test will assure compatibility of all GSE.

7.5.2.3 Calibration and Qualification of Stage Test Equipment

The final calibration will be performed when all tests satisfy design requirements. This calibration will consist of an overall recertification and calibration of all MSE/GSE. This calibration will serve two purposes. It will revalidate all previous test results and provide current calibration during stage test.

A qualification test will be performed after final calibration. The test will consist of a completely automated test of a flight configuration stage using established document procedures. The first flight configuration stage to be processed through the Stage Test Complex will be used for qualification testing.

Test Equipment for Stage Test Area "A" will be delivered starting July 23, 1964 and continuing until January 1, 1965. Installation and checkout will begin August 1, 1965 and continue until March 1, 1966.

Test equipment for Stage Test Area "B" will be delivered starting July 23, 1964 and continuing until March 1, 1965. Installation and checkout will begin August 1964 and continue until April 1, 1965.

Test equipment for Stage Test Area "C" will be delivered starting March 23, 1964 and continue until August 1, 1964. Installation and checkout will begin June 1, 1964 and continue until March 1, 1966.

U3 4211 4000

7.5.2.3 (Continued)

Test equipment for Stage Test Area "D" will be delivered starting March 23, 1964 and continue until February 7, 1965. Installation and checkout will begin June 1, 1964 and continue until August 1, 1965.

7.5.3 Stage Transportation and Handling

Movement of the stage from the Manufacturing area into the Stage Checkout Area will be accomplsihed with the Transporter and the A-2 Euclid Wheeled Tractor (Prime Mover). A move coordinator will be assigned the responsibility of directing transportation. Stage walkers will be utilized to observe stage movement and warn coordinator of any obstacles or troubles. Movement of the stage will be coordinated by use of transreceiver type communications equipment available to both transporter operators, prime mover operator, stage walkers, and the move coordinator.

The prime mover will supply electrical and pneumatic power to the stage transporter during all moving operations.

The transporter wheels have an angular steering capability of plus or minus 100 degrees and can be operated by parallel or Ackerman steering. These operations are controlled by either transporter operator.

Guide lines will be painted on the stage checkout floors for the transporter drivers to follow in relation to a Stage Positioning Guide Pointer adjacent to each driver. Cross lines will be located in each test cell to determine the depth of stage penetration.

Due to the location of the entrance doors in cells 1 and 4, the stage will enter one side of the cell, and will require centering in the cell by angular movement of the stage over predetermined route.

A straight in approach will be used when moving the stage into test cells 2 and 3.

7.5.4 Test Operations

7.5.4.1 Preparation for Test

All GSE and Stage substitutes will be connected and checked for proper operation prior to installing the stage in the test cell. Each item will utilize built-in, self-check provisions to check and report on its own condition. A GSE checkout program will then be used by the digital computer to determine if the over-all stage test system is functioning properly.

U3 4211 4000

7.5.4.1 (Continued)

For Post-Static Tests, prior to and during the period of refurbishment, the records and the results of the Static Test Firings will be reviewed to determine if any new post-static tests are required. Additional procedures, if required, will be prepared by the IPT Procedures Group.

7.5.4.2 Stage Test

The acceptability of the booster is assured by demonstrating the proper operation of mechanical and electrical systems, proper interfaces between systems, and between the booster and upper stage to S-1C wiring harnesses.

The sequence in which these tests will be conducted is shown in the flow diagram in Figure 7-35. This is a tentative sequence formed by placing known prerequisites near the beginning and estimating the best order for the remaining tests. Revisions will be made as required prior to and during Stage Checkout. Most post-static tests are identical to pre-static tests.

U3 4211 4000

STAGE TEST SEQUENCE

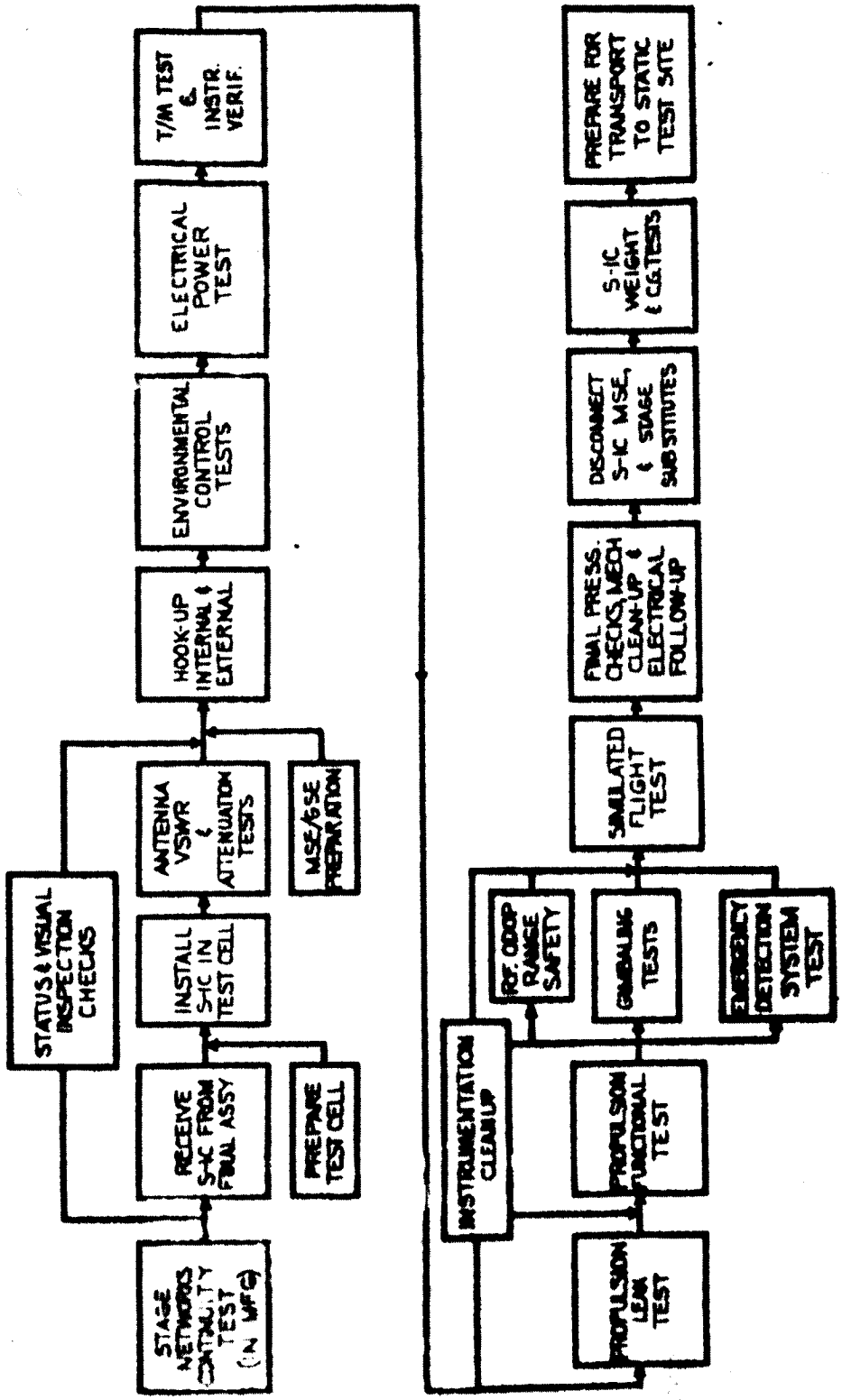

FIGURE 7-36

U3 4211 4000

7.6 TEST PLANNING

7.6.1 Test Equipment Procurement

7.6.1.1 Schedules and Equipment Requirements

IPT Planning Group will monitor Program Schedules and Test Equipment Requirements to assure availability of the necessary equipment to perform various level of test in accordance with scheduled test dates.

7.6.1.2 Levels V and VI Test Equipment

IPT Planning Group will review test procedures for levels 5 and 6 tests to determine tooling, special test equipment and spare requirements, and initiate procurement action for smae.

IPT Planning Group will negotiate with Manufacturing for fabrication of required equipment, and if support is committed, initiate necessary planning and release orders as required.

If Manufacturing cannot supply the necessary support, negotiations will be initiated with Materiel for outside production support. If outside production commitment is compatible with program requirements, the necessary authorization will be released to Materiel to proceed with procurement.

If Manufacturing and Materiel both fail to support program requirements, the Engineering Development Support capabilities will be investigated. Planning will be initiated and orders released as necessary to the Engineering Development Labs for the fabrication of equipment and tools. Partial support may be required from Manufacturing and/or Materiel in order to complete the equipment schedule. Negotiations for such assistance and release of the necessary orders or authorizations will be the responsibility of the Test Planner assigned to the equipment in question.

7.6.1.3 Levels One Through Four Test Equipment

Procurement or fabrication of Levels 1, 2, 3, and 4 test equipment and test fixtures is a basic Manufacturing responsibility. The Test Planning Group will, however, monitor progress in order to be aware of potential problem areas due to behind schedule equipment or delivery of equipment not compatible with flight hardware configuration.

U3 4211 4000

7.6.2 Test Equipment and GSE/MSE Checkout and Calibration

Planning for checkout, calibration, and certification of GSE/MSE test equipment will be initiated and maintained by the Inplant Test Planning Group in accordance with provisions of D5-11593, "Records System Saturn Booster Branch," and Standard Operating Instructions 812.1, "Inplant Test Saturn Record System."

Planned removal and re-installation of components of the item being tested in order to properly perform the test will be a part of the original planning package. Removal for repair or replacement of components and subsequent re-installation will be recorded on a Re-installation and Removal Record in support of an Unplanned Event Record (UER).

The Test Planner will ascertain that test equipment delivered for checkout is up to latest drawing configuration and that test procedures are compatible. Design changes not incorporated at time of delivery will be incorporated by Inplant Test Support Shop in accordance with Change Review Committee commitments and planning initiated and released by Inplant Test Planning.

Test Procedures which are not compatible with equipment configuration will be brought to the attention of the Inplant Test Procedure Group Engineer for necessary action.

Calibration and Certification Orders for initial, periodically scheduled and non-scheduled calibration and certification of instruments and test equipment will be released by Inplant Test Planning.

7.6.3 Stage and Ground Support Equipment Functional Test, Calibration and Checkout

Planning required for the accomplishment of Inplant Functional Testing, Calibration and Certification of Stage and GSE end items and components will be initiated and maintained by the Inplant Test Planning Group in accordance with provisions of D5-11593 and Inplant Test Standard Operating Instruction 812.1.

Planned removal and re-installation of components of the item being tested in order to properly perform the tests, will be a part of the original planning package. Removal for repair or replacement of components and subsequent re-installation will be recorded on a Re-installation and Removal Record in support of a UER.

U3 4211 4000

7.6.3 (Continued)

The Test Planner will determine the configuration of items requiring test and the compatibility with associated test equipment. Data Central Configuration status of hardware to be tested and of test equipment to be used, as well as design changes incorporated but not recorded by Data Central, will be used to make this determination. Discrepancies will be resolved by coordination with responsible organizations prior to release of test orders.

Compatibility between Test Procedures, articles requiring test, and test equipment will be determined by the Test Planner. Incompatibilities will be referred to the Test Procedures Group for necessary action.

Calibration and Certification orders for initial, periodic and non-scheduled calibration of Stage instrumentation and GSE, while under the control of Inplant Tests, will be released by the Inplant Test Planning Group.

7.6.4 Configuration and Accountability

7.6.4.1 Configuration Control

The configuration of Stage hardware and test equipment, while under Inplant Test Department jurisdiction, will be controlled by the Test Planning Group through the Saturn Record System (SRS) and engineering drawings. Drawings will describe the configuration desired at the particular point in time. The SRS will describe the actual configuration at any point in time. Configuration forms of the SRS will, upon request, be routed through the Inplant Test Data Evaluation and Reliability Group to be programmed into the Data Central Computer, which can print out actual design configurations of all test stations. The Engineering Department has the over-all responsibility for design and configuration control of stage hardware and test equipment through the release of drawings and documents.

The actual configuration is the responsibility of the organizations that fabricate, modify, and repair the Stage hardware and test equipment through their planning paper. Work accomplished per the planning paper will be approved by Quality Reliability Assurance personnel assigned in this area.

The accountability of Stage hardware, test equipment, or any items assigned to Inplant Test will be controlled by the Test Planning Group through the Saturn Record System and Engineering drawings.

The Engineering Department has the responsibility for providing drawings and documents describing the components, sub assemblies, assemblies and end items which are necessary to meet contractual requirements.

U3 4211 4000

8.0 OBJECTIVES AND DOCUMENTATION CONTROLLING OPERATIONS

8.1 GENERAL DESCRIPTION

The Manufacturing effort is controlled by documents, directives, procedures, status reports and schedules. Documents include those of contractual (NASA) and non-contractual (Boeing Internal) nature encompassing plans and schedules, specifications, technical procedures, lists and indices, and administrative and technical reports. The Boeing Saturn Records Station controls document issuance and maintains a permanent file of all documents and procedures.

Directives provide management direction to the Manufacturing effort. Procedures document agreements concerning continuing activities. Status reports are used to keep management informed of Manufacturing progress and areas of critical impact, Manufacturing schedules serve as guides for tool and hardware fabrication and manufacturing subassembly and assembly operations.

Manufacturing change activities are controlled by the Change Review Committee which determines the impact of changes on the Manufacturing Plan and schedules as well as required action to accommodate the change.

U3 4211 4000

8.2 CONTRACTUAL REQUIREMENTS

The Boeing Company is required to furnish NASA with certain contractual reports which are primarily concerned with significant progress, problem areas, delays and potential delays, and program inpact or potential program impact items. The Operations Department accordingly must provide periodic inputs for incorporation within the following contractual reports:

a) Item II Monthly Progress Report
b) Monthly Technical Progress Report
c) Quarterly Technical Progress Report
d) Annual Report
e) Bi-Weekly PERT Analysis Report

8.2.1 Item II Monthly Progress Report

This report is concerned with status reporting on Work Directives (TL's) for Contract NAS 8-2577 (Item II).

8.2.2 Monthly Technical Progress Report

This report contains information not only on current work activity but on projected activities for the forthcoming reporting period. When feasible, this report will be incorporated within the Quarterly Technical Progress Report. Basically the Monthly Technical Progress Report will include the following:

8.2.2.1 Departmental Highlights

A summary of highlight activities, both of technical and administrative nature.

8.2.2.2 Technical Progress

Included will be status charts depicting accomplishments, schedule slides, etc.; explanatory data regarding behind schedule items or manhour overruns; significant departmental activities, including amplification of departmental highlights; significant facts, changes in plans, or trends affecting or potentially affecting higher levels of activity.

8.2.2.3 Major Problems

Included will be only major technical, scheduling, or administrative problems confronting the department requiring a decision from a higher level of authority involving NASA

U3 4211 6000

8.2.2.4 Predictions and Conclusions

Predictions will be made for a short range period only, within the year. Conclusions will reflect the Operations Department's curretn position on the overall program, including a brief evaluation of same.

8.2.3 Quarterly Technical Progress Report

This serves as Boeing's official record of quarterly achievements by which NASA makes a determination and evaluation of Boeing's status and accomplishments. Information reflected within this report is essentially of the same nature as contained within the Monthly Technical Progress Report.

8.2.4 Annual Report

This report, published at the mid-point of the year, is aimed at presenting to NASA an historical record of accomplishments of a positive nature occurring during the reporting period. Charts and pictorial coverage are required to substantiate the narrative portion of the report. Problem areas will be covered primarily in the light of action initiated to resolve them. Also included will be forecase information of a significnat nature for the forthcoming twelve month period.

8.2.5 Bi-Weekly PERT Analysis Report

This report issued every two weeks, depicts program status through utilization of the PERT technique. The basis of the report is a computer run reflection completions, deliveries, deliquencies, and critical items. The report is an analysis of the computer run, primarily concerned with behind schedule conditions and work around methods or other measures initiated to alleviate same.

8.3 BOEING INTERNAL DOCUMENTATION

8.3.1 Documents

The document control system regulates the issuance of all D5-documents, assuring all such documents are properly numbered and do not duplicate existing documents, have approvals consistent with the level of the material documented, and are properly classified as to security. The Boeing Saturn Records Station is the agency for implementing document control as well as providing additional copies of all published documents.

8.3.2 Directives

Management utilizes directives as a method for providing effective direction to subordinate levels. The management directive normally deals with areas of non-continuing activities, administrative type direction, or with situations requiring immediate direction. The latter type management directive is superseded by an operating procedure as rapidly as possible.

8.3.3 Operating Procedures

Operating Procedures document continuing manufacturing activities. The inter-organizational operating procedure contains agreements between Manufacturing management and managers of other organizations concerning continuing interface activities between these organizations. The Standard Operating Instructions (SOI) are used at a lower organization level to issue detailed instructions to the individual or group of individuals on specific job responsibilities and duties.

U3 4211 4000

8.4 SPECIFICATION - NASA ENGINEERING STANDARDS

Spec. Nomenclature	Purpose
a) NASA Engineering Standards Manual Volume #I	Defines Mechanical Standard Parts
b) NASA Engineering Standards Manual Volume #II	Defines Electrical Standard Parts
c) NASA Engineering Standards Manual Volume #III	Defines Design Standards
d) NASA Engineering Standards Manual - Appendix - "A"	Tabulates inactive, superseded and cancelled AN and AND standards.

U3 4211 4000

MANUFACTURING OR TESTING PROCESS

Figure 8-1 - MANUFACTURING OR TESTING PROCESS FORM

U3 4211 4000

8.5 THE BOEING SATURN RECORD SYSTEM

A contractual requirement to provide a composite record of events that occur during the fabrication, testing and launching of the vehicle requires implementation of a single record system for use in the Saturn Booster Branch. This system is called "The Boeing Saturn Record System". This record system is used to direct, describe and record fabrication, assembly, installation, testing, and inspection data during "inplant" and "outplant" operations. This system utilizes single forms for multipurpose use which, upon completion, provide an historical record of all planned and unplanned events. Forms used and a brief description of each follows.

8.5.1 Manufacturing or Testing Process (Form No. S-812-65-29)

The M.O.R.T.P. page provides authorization and control of manufacturing and test work. It provides an orderly means of sequencing the operations required to assemble or test to engineering requirements. It also provides a means for transmittal of information between departments and approval of completed work. (See figure 8-1).

8.5.2 Parts List Page (P.L.P.) (Form No. S-812-65-31)

The P.L.P. is a listing of all the components and subassemblies required to fabricate an assembly or a part of an assembly or installation. It is used to supplement or deviate from an engineering parts list. In addition it becomes a record of serialized components incorporated into an end item. It provides a means of parts accountability and controls and authorizes the release of hardware from stores and further provides a transmittal of information between department. (See Figure 8-2).

8.5.3 Test Equipment Configuration Log (Form No. S-812-65-32)

The T.E.C.L. provides a record of equipment required and used to perform a given test including calibration and configuration status. The form is prepared by planning organizations for test operation levels (1) to (3) inclusive and is used to maintain a record indicating the date of last calibration and the date for all measuring and test equipment in accordance with Quality Publication NPC 200-2. (See Figure 8-3).

8.5.4 Calibration Record Card

The Calibration Record Card is in IBM format and provides quantitative calibration data, serial number identifications and other pertinent data for each measurement of the airborne instrumentation system and further provides a transmittal of detailed instrumentation information between departments. (See Document D5-11593, "Records System - Saturn Booster Branch", page 19 for authorization and example of this form).

U3 4211 4000

PART NUMBER	SERIAL NO.	IMPLEMENT NO.	[illegible]	BOEING SATURN RECORD SYSTEM	PAGE OF

COM.	[illegible]	[illegible]	[illegible]	[illegible]	START [illegible]	[illegible]	[illegible]	[illegible]	[illegible]	[illegible]	[illegible]	[illegible]

PROD. SHOP	ROUTING	PARTS LISTING [illegible]	PARTS LISTING [illegible]

T

PARTS LIST PAGE

PART NUMBER	NOMENCLATURE	SERIAL NO.	PROC.	QUAN.	REMARKS	INST. LOC.	R/M CODE	SHOP	INSP	CUST.

PAGE OF	PART NUMBER	NOMENCLATURE	PART SERIAL NO.

Figure 8-2 PARTS LIST PAGE FORM

U3 4211 4000

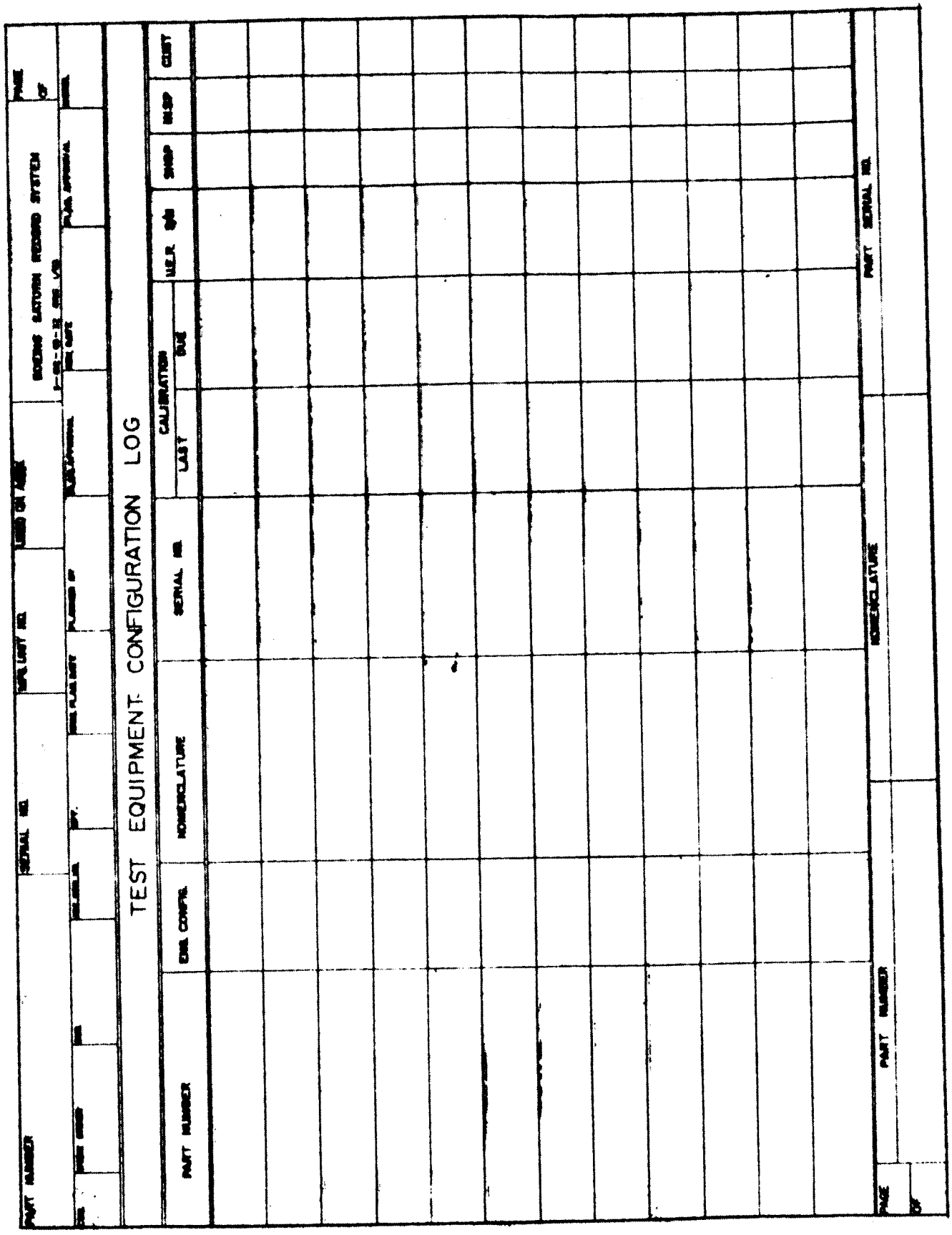

Figure 8-3 TEST EQUIPMENT CONFIGURATION LOG FORM

US 4211 4000

PART NUMBER | SERIAL NO. | MFG UNIT NO | USED ON ASSY | BOEING SATURN RECORD SYSTEM | PAGE OF

MODEL | LOCAL | DISCLOSURE DATE | PLANNED BY | PLAN APPROVAL | REV DATE | PLAN APPROVAL

TIME & CYCLE LOG

PART NUMBER	LIFE LIMIT TIME — CYCLES	SERIAL NO	NOMENCLATURE	BEFORE INSTL TIME — CYCLES	AFTER INSTL. TIME — CYCLES	TOTAL	SHOP	INSP.	CUST

PAGE OF | PART NUMBER | NOMENCLATURE | PART SERIAL NO.

Figure 8-4 - TIME AND CYCLE LOG FORM

U3 4211 4000

8.5.5 Time and Cycle Log (Form No. S-812-65-27)

Use of the Time and Cycle Log form is required to provide a record of time and cycle data which remains with each item of critical or limited life equipment until delivery. The data is required for failure reports, Operational Data Reports as required by Quality Publication NPC 200-2, and for compilation of summary reports by the Quality Assurance Department. The Time and Cycle Log also provides reliability information and the necessary information required for replacement of sensitive equipment before expiration of time and cycle limits. (See Figure 8-4).

8.5.6 Test Data Sheet (Form No. S-812-65-33)

The Test Data Sheet is used to provide an inventory of all data taken during testing. It also provides a convenient means of recording numerical results as required by test procedures. (See Figure 8-5).

8.5.7 Event Index Log (E.I.L.) (Form No. S-812-65-28)

The E.I.L. is an inventory of released orders and other required records and provides a transmittal of information as well as an accountability of such records. It identifies drawings and documents used to control processing. The required drawing or document number, Drawing Change Status, Time and Cycle Log, Test Data Sheet, Test Equipment Configuration Log, Manufacturing or Testing Process, Parts List Page, Unplanned Event Record Log are listed for the manufacture or testing of a part, assembly or installation. (See Figure 8-6).

8.5.8 Unplanned Event Record (U.E.R.) (Form No.S-812-65-16)

The Unplanned Event Record is used to describe an unplanned event, direct action required, and obtain resolution. The U.E.R. provides a means of recording unplanned events, such as failures, rejection and deviations from planned tests. It also provides a transmittal of information necessary for corrective action and a means of defining final hardware configuration. (See Figure 8-7).

8.5.9 Unplanned Event Record Supplement (U.E.R.S.) (Form No. S-812-65-25)

The Unplanned Event Record Supplement is used to provide additional pages to complete any UER entry where sufficient space is not available in UER. (See Figure 8-8).

8.5.10 Unplanned Event - Pickup (UEP) (Form No. S-812-65-24)

This form is used to record discrepancies which do not require specific disposition instructions in order to bring the discrepant item into conformance with engineering requirements and which do not require a record of nonrecurrence action. It is used on items controlled by the Manufacturing or Testing Process (M.O.R.T.P.) record. (See Figure 8-9).

U3 4211 4000

PART NO.

SERIAL OR VEHICLE NO.

TEST NO.

BOEING SATURN ROCKET SYSTEM

PAGE

TEST DATA SHEET

RESULTS

CHECK

SHOP | INSP | CUST.

DRG | DATE | REV. | DATE

NOMENCLATURE

PART NO.

REVISED BY

Figure 8-5 TEST DATA SHEET FORM

U3 4211 4000

PART NUMBER	SERIAL NO	MFG. UNIT NO	USED ON ASSY	BOEING SATURN RECORD SYSTEM S-812-65-38 Orig. 1/63	PAGE OF

COM	WORK ORDER	SUH	ACC SER NO	EFF.	ORIG PLAN DATE	PLANNED BY	PLAN. APPROVAL	REV. DATE	PLAN. APPROVAL	MODEL

T

EVENT INDEX LOG

DRAWING OR DOCUMENT \ SRS. FORM NO OF PAGE	DASH NO.	DWG. REV.	NOMENCLATURE	M OR T P P/N	M OR T P REV	ENGINEERING CHANGE NO.	EFF	INSP.	CUST.

PAGE OF	PART NUMBER	NOMENCLATURE	PART SERIAL NO

Figure 8-6 EVENT INDES LOG FORM

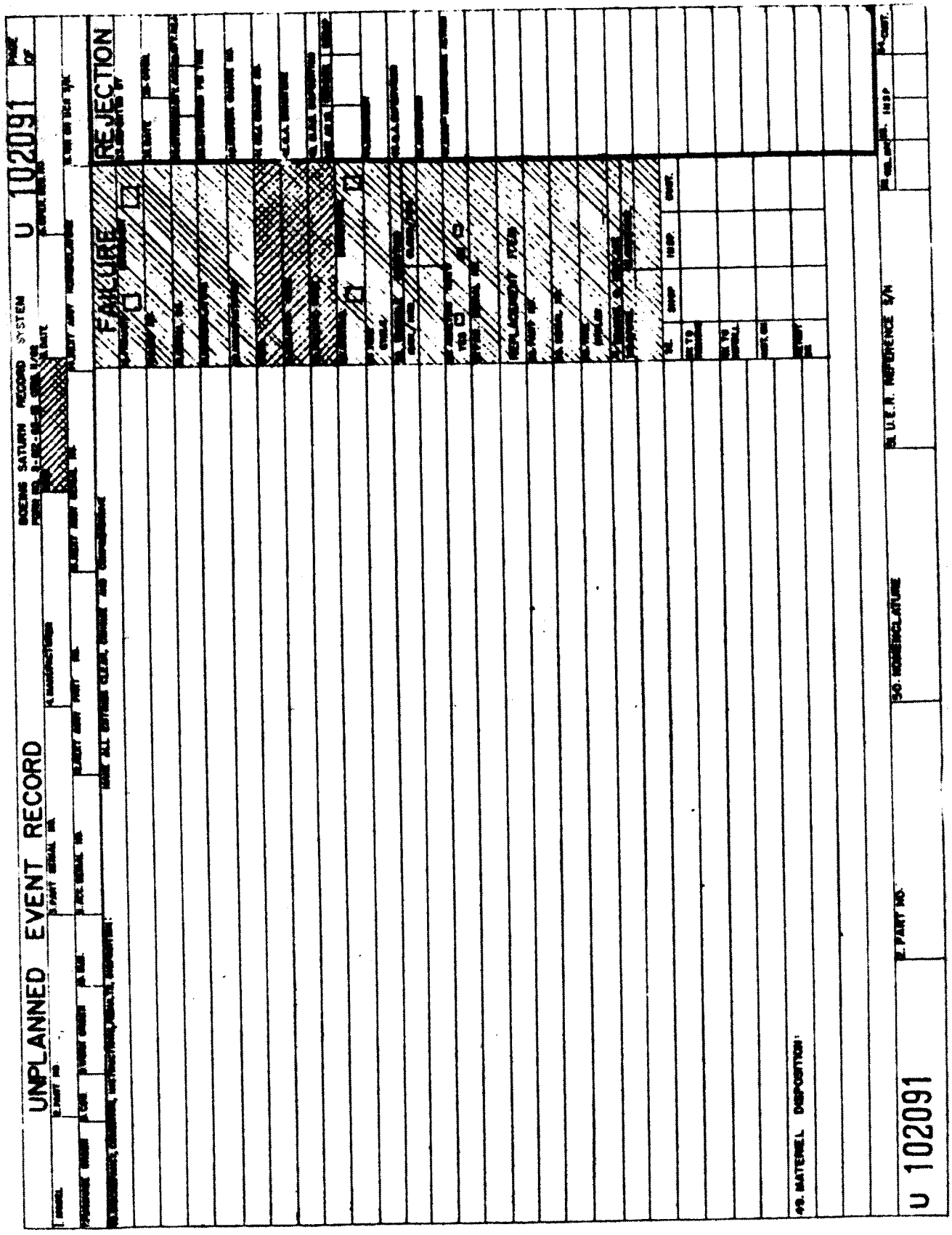

Figure 8-7 UNPLANNED EVENT RECORD FORM

U3.4211 4000

UNPLANNED EVENT RECORD SUPPLEMENT	UNPLANNED EVENT RECORD S/N _____	BOEING SATURN RECORD SYSTEM S-812-65-25 CRG 1/63	PAGE OF

ENTRY NO	DISCREPANCY, CONDITION INSTRUCTIONS, RESULTS, DISPOSITION

PAGE OF	PART NUMBER	NOMENCLATURE	PART SERIAL NO.	REL.	INSP.	CUST.

Figure 8-8 UNPLANNED EVENT RECORD SUPPLEMENT FORM

U3 4211 4000

8.5.11 Re-installation and Removal Record (Form No. S-812-65-23)

The Re-installation and Removal Record form is used for recording removal, re-installation and re-test of items and provides a record of all facility removals and removals for access purposes. It also provides a record of approval of re-installation and re-test of removed items. A removal is defined to include wire bundle disconnect, the opening of inspection sealed doors, or any breaks of inspection seals as well as physical removal of an item. (See Figure 8-10)

8.5.12 Unplanned Event Record Log (U.E.R.L.) (Form No. S-812-65-26)

The Unplanned Event Record Log is used to record and provide an accountability of all UER's, UEP's, and RRR's which are applicable to each MORTP work order until that work order is completed, inspected and accepted. (See Figure 8-11).

U3 4211 4000

UNPLANNED EVENT — PICKUP

BOEING SATURN RECORD SYSTEM

PAGE OF

P Nº 108145

UNPLANNED EVENT RECORD LOG S/N _____

ITEM NO.	TYPE ONE DISCREPANCY	REPORTED BY DATE	REPORTED BY BY	ATTENDED TO DATE	ATTENDED TO BY	ACCEPTED BY DATE	ACCEPTED BY BY	DISPOSITION

PAGE OF	P Nº 108145	PART NUMBER	NOMENCLATURE	PART SERIAL NO.

Figure 8-9 UNPLANNED EVENT RECORD - PICKUP FORM

U3 4311 4000

BOEING SATURN RECORD SYSTEM
S-IVB-203 ORB 1/A1

PAGE OF

REINSTALLATION AND REMOVAL RECORD

R

UNPLANNED EVENT RECORD S/N. _____

PART NO. DESCRIPTION AND LOCATION	REASON FOR REMOVAL	OK TO REMOVE				OK TO INSTALL				REMOVALLED				REINSTALLED			
		SHOP	SHIP.	CUST.		SHOP	SHIP.	CUST.		SHOP	SHIP.	CUST.		SHOP	SHIP.	CUST.	
			SERIAL NO.				SERIAL NO.				SERIAL NO.				SERIAL NO.		
			SERIAL NO.				SERIAL NO.				SERIAL NO.				SERIAL NO.		
			SERIAL NO.				SERIAL NO.				SERIAL NO.				SERIAL NO.		
			SERIAL NO.				SERIAL NO.				SERIAL NO.				SERIAL NO.		
			SERIAL NO.				SERIAL NO.				SERIAL NO.				SERIAL NO.		
			SERIAL NO.				SERIAL NO.				SERIAL NO.				SERIAL NO.		
			SERIAL NO.				SERIAL NO.				SERIAL NO.				SERIAL NO.		
			SERIAL NO.				SERIAL NO.				SERIAL NO.				SERIAL NO.		
			SERIAL NO.				SERIAL NO.				SERIAL NO.				SERIAL NO.		
			SERIAL NO.				SERIAL NO.				SERIAL NO.				SERIAL NO.		
			SERIAL NO.				SERIAL NO.				SERIAL NO.				SERIAL NO.		
			SERIAL NO.				SERIAL NO.				SERIAL NO.				SERIAL NO.		
			SERIAL NO.				SERIAL NO.				SERIAL NO.				SERIAL NO.		
			SERIAL NO.				SERIAL NO.				SERIAL NO.				SERIAL NO.		
			SERIAL NO.				SERIAL NO.				SERIAL NO.				SERIAL NO.		

PART NUMBER | NOMENCLATURE | PART SERIAL NO.

PAGE R OF R

Figure 8-10 REINSTALLATION AND REMOVAL RECORD FORM

U3 4211 4000

UNPLANNED EVENT RECORD LOG

BOEING SATURN RECORD SYSTEM
1-812-65-26 ORIG 1/63

PAGE OF

E Nº 101013

[illegible] NUMBER	PAGE NO	[illegible]	SEQ NO	LOGGED BY	LOGGED DATE	COMPLETED INSP	COMPLETED CUST	SERIAL NUMBER	PAGE NO	OPERATION SEQ NO	LOGGED BY	LOGGED DATE	COMPLETED INSP	COMPLETED CUST

PAGE OF E Nº 101013

PART NUMBER	NOMENCLATURE	PART SERIAL NO

Figure 8-11 UNPLANNED EVENT RECORD LOG FORM

U3 4211 4000