NASA CONTRACTOR REPORT

NASA CR-1456

NASA CR-14
C. 1

TECH LIBRARY KAFB, NM
0060030

LOAN COPY: RETURN TO
AFWL (WLOL)
KIRTLAND AFB, N MEX

ANALYSIS OF GEOMETRY AND DESIGN-POINT PERFORMANCE OF AXIAL-FLOW TURBINES USING SPECIFIED MERIDIONAL VELOCITY GRADIENTS

by A. F. Carter and F. K. Lenherr

Prepared by
NORTHERN RESEARCH AND ENGINEERING CORPORATION
Cambridge, Mass.
for Lewis Research Center

NATIONAL AERONAUTICS AND SPACE ADMINISTRATION • WASHINGTON, D. C. • DECEMBER 1969

NASA CR-1456

TECH LIBRARY KAFB, NM

0060630

ANALYSIS OF GEOMETRY AND DESIGN-POINT PERFORMANCE OF AXIAL-FLOW TURBINES USING SPECIFIED MERIDIONAL VELOCITY GRADIENTS

By A. F. Carter and F. K. Lenherr

Distribution of this report is provided in the interest of information exchange. Responsibility for the contents resides in the author or organization that prepared it.

Issued by Originator as NREC Report 1147-1

Prepared under Contract No. NAS 3-12419 by
NORTHERN RESEARCH AND ENGINEERING CORPORATION
Cambridge, Mass.

for Lewis Research Center

NATIONAL AERONAUTICS AND SPACE ADMINISTRATION

For sale by the Clearinghouse for Federal Scientific and Technical Information
Springfield, Virginia 22151 – Price $3.00

FOREWORD

The research described herein, which was conducted by the Northern Research and Engineering Corporation, was performed under NASA Contract NAS 3-12419. The work was done under the technical management of Mr. Arthur J. Glassman, Fluid System Components Division, NASA-Lewis Research Center. The report was originally issued as Northern Research and Engineering Corporation Report 1147-1, July 11, 1969.

TABLE OF CONTENTS

SUMMARY 1
INTRODUCTION 2
Report Arrangement 4
Capabilities and Limitations of the Program 5
THE BASIS FOR THE REVISED ANALYSIS 7
Introduction 7
The Stream-Filament Design Approach to Turbine Design . . . 7
Modifications to the Stream-Filament Approach 9
Additional Assumptions 12
REVISIONS OF THE ANALYSIS 15
Specification of Design Requirement and Analysis Variables 15
Required Data from a Design-Point Analysis 17
The Revised Analysis 18
Radial Equilibrium Equation 20
Total-Pressure Equation 21
The Velocity Components Equation 22
INPUT DATA 25
Description of Input Data 25
Discussion of Input Data 32
DESCRIPTION OF NORMAL OUTPUT 38
ERROR MESSAGES 44
MISCELLANEOUS OPERATIONAL INFORMATION 47
SAMPLE CASE 48
Introduction 48
Discussion of the Sample Case 48
CONCLUSIONS 52
REFERENCES 53
NOMENCLATURE 54
APPENDICES
I: INPUT DATA AND COMPUTER OUTPUT FOR THE SAMPLE CASE . . . 61

II: OVER-ALL PROGRAM LOGIC 95
III: CALCULATION PROCEDURE AND NUMERICAL TECHNIQUES 103
IV: CØMMØN FORTRAN NOMENCLATURE 129
V: MAIN ROUTINE 148
VI: SUBRØUTINE INPUT2 159
VII: SUBRØUTINE STRAC 165
VIII: SUBRØUTINE SPECHT 168
IX: SUBRØUTINE PØWER2 171
X: SUBRØUTINE HAP1 174
XI: SUBRØUTINE SLØPE 177
XII: SUBRØUTINE STRIP 180
XIII: SUBRØUTINE STRVL2 182
XIV: SUBRØUTINE VMNTL2 186
XV: SUBRØUTINE RADEQ2 189
XVI: SUBRØUTINE RUNGA2 192
XVII: SUBRØUTINE DERIV2 195
XVIII: SUBRØUTINE SIMEQ 204
XIX: SUBRØUTINE VMSUB2 208
XX: SUBRØUTINE REMAN2 211
XXI: SUBRØUTINE SETUP2 215
XXII: SUBRØUTINE ØUTPUT 223
XXIII: SUBRØUTINE START 229
XXIV: SUBRØUTINE LØSCØR 232

ANALYSIS OF GEOMETRY AND DESIGN-POINT PERFORMANCE OF AXIAL-FLOW TURBINES USING SPECIFIED MERIDIONAL VELOCITY GRADIENTS

by A. F. Carter and F. K. Lenherr

Northern Research and Engineering Corporation

SUMMARY

A computer program for the design-point analysis of axial turbines using a modified stream-filament approach has previously been prepared for NASA-LeRC and is documented in program contractor reports NASA CR-1181 and NASA CR-1187. However, with use it has been clear that, for some design requirements, the resultant solution of the design station flow fields was extremely sensitive to two of the originally selected design analysis variables. Since design specifications which failed to yield a solution or produced a mechanically unacceptable solution could be characterized by large radial gradients of through-flow velocity at a design station, it was logical to assume that the use of through-flow velocity gradients as design analysis variables would lead to a more useful computer program.

The report presents the modification of the analysis necessary for a solution using the new analysis variables, documents the resultant computer program, and provides a sample case. The new program complements the original rather than replaces it in that not all the originally selected optional specifications of a design are made available in the new program. However, the program can be used independently of the original for designs in which blade-element performance is directly specified by total-pressure-loss coefficients or indirectly by the coefficients of a correlation of the total-pressure-loss coefficient chosen for fully consistent analyses.

INTRODUCTION

Under Contract No. NAS3-9418 for NASA-Lewis Research Center, Northern Research and Engineering Corporation developed a computer program for the analysis of the geometry and design-point performance of axial flow turbines. During the development of the program and its subsequent use for particular design specifications, it became clear that for some design requirements, the resultant solution of the design problem was extremely sensitive to two of the analysis variables which had to be selected by the program user. These two analysis variables were the radial variation of stator exit tangential velocity and the variation of power output function with streamline number. Flow conditions at stator exit are controlled by the first of these variables; the second is the major factor influencing the solution at rotor exit. While the choice of these variables for a stream-filament analysis of a turbine design-point requirement appeared logical and acceptable, experience with the computer program has shown that considerable skill and experience are required in order to obtain satisfactory design solutions.

The underlying reason for the sensitivity of the stator flow field solution to the tangential velocity distribution is that radial equilibrium has to be satisfied for a flow in which the tangential velocity is a dominant factor. Thus, if a tangential velocity distribution is specified, the value of local static pressure required to maintain radial equilibrium has to be obtained by changes in the relatively minor component of velocity. Hence, outside of a fairly narrow band of tangential velocity distributions, it is often impossible to obtain a radial equilibrium solution with positive axial velocities through the flow field.

In the case of the stage exit design plane, it has been found that there is a similarly narrow band of power output distributions for which there are satisfactory solutions. Since the static pressure level at any point in the flow field must be consistent with the over-all annulus radial equilibrium requirement, injudicious choice of streamline enthalpy drops can imply unacceptably large variations in axial velocity

levels. The difficulties are, of course, compounded by the presence of significant gradients of total pressure which are introduced by the radial variations of rotor losses.

A modified computer program, designated Program TD2, has been developed to overcome these deficiencies in the original program. This has been accomplished by deleting the specification of stator exit tangential velocity distributions and stage power output distributions, and substituting in their place options to specify implicitly distributions of meridional velocity at stator and/or rotor exits. In this manner, the variable which has in the past exhibited the greatest variation may be limited by the turbine designer in advance to a reasonable range of values. Thus, the computation of designs for which there is no acceptable solution in terms of blading angles has been largely eliminated.

The analysis procedure employed by Program TD2 is very similar to that of the original program. All of the useful refinements of the basic stream-filament model have been retained. These include treatment of cases of interfilament mixing, coolant flows, and variations of specific heat through the turbine. In addition, the options of specifying radial distributions of stator exit flow angle and/or radially uniform stage work output have been preserved. In this way the utility of the new program should be greatly increased, by permitting the designer to apply its special capabilities to only those rows for which such an approach is indicated, while treating the remaining rows in a manner fully compatible with the original program.

The opportunity presented by the preparation of a new program has been taken to make two improvements in the method of solution. Firstly, the four unknowns, P_o , T_o , V_u, and V_m are now obtained by integration of the four derivatives obtained from the simultaneous solution of the four differential equations. Secondly, loss coefficients for individual streamlines are now determined iteratively; the reasons for claiming these changes as improvements are as follows. In the original program despite the fact that values of dV_m^2/dr , $1/\rho_o \, d\rho_o/dr$, and dV_u/dr were obtained from the solution of the simultaneous equations, only the meridional velocity gradient was integrated to obtain an adjacent streamline value while the

value of total pressure at that streamline was obtained from the calculated value of exit dynamic head and a local loss coefficient. Although this procedure is analytically justified, small inaccuracies in the forward step procedure (introduced by the assumption that the derivative dY/dr could be expressed as an analytical function) occasionally produced local values of static pressure not consistent with the radial equilibrium requirement. By simultaneously integrating all the principal unknowns, the occasional inconsistency has been eliminated. The change from a direct solution of the loss coefficient to an iterative solution is judged to be an improvement primarily because in the resultant program structure the loss coefficient correlation appears in its explicit form in a subroutine rather than implicitly in various coefficients of the differential equations. Thus, the new program will not require any major change in the event that some other loss correlation is subsequently shown to be more realistic than the one currently proposed.

Report Arrangement

The report can be considered as having two parts. The first of these presents the basic analysis used in the computer program and a functional description of the program suitable for personnel who use the program as a design tool. The main body of the report presents in turn a review of the original analysis which is retained in the new program, the revision of the analysis for flow field solutions using the new design analysis variables, a description of the program input, normal output, error messages, miscellaneous operational information, a sample case, and conclusions. Appendix I contains the input data sheets and computer printout for the sample case.

The second part of the report is concerned with the more detailed description of the computer program. Appendix II and Appendix III present the over-all program logic and the calculation procedures. Appendix IV lists the CØMMØN Fortran nomenclature. The remaining appendices consider the main routine and then each of the subroutines as individual parts of the complete program.

Capabilities and Limitations of the Program

The basic assumptions used in the development of the analysis method are:

1. The flow is inviscid and axisymmetric at each of the design stations.
2. The effect on radial equilibrium of any variation of meridional velocity in the meridional direction at the design stations is negligible.
3. The value of specific heat at constant pressure is radially constant at all design stations.
4. The meridional components of streamline slope and curvature vary linearly with radius between values established at the annulus walls, when slopes and curvatures are internally computed, or are directly specified as a function of radius by input data.

The program will compute the standard turbine design parameters at a preselected number of streamlines. These parameters will be consistent with the specified design requirements and analysis variables, the requirement of radial equilibrium, and the definition of row total-pressure-loss coefficients used in the analysis. For multispool applications, spool designs can be computed consecutively; for single spool designs, any number of sets of analysis variables can be considered for alternative design analyses.

The row performance is defined by either directly specified values of local total-pressure-loss coefficients or by coefficients defining a correlation which is used for internally computed consistent values of total-pressure-loss. The optional specifications of row or stage performance using kinetic-energy-loss coefficients or efficiencies provided in the original program have been omitted from the new program.

The use of the specification of meridional velocity gradients will significantly reduce the number of cases for which there is no valid solution of the design problem for the selected analysis variables. However, when this optional specification is not used and consistent row total-pressure-loss coefficients are computed using the internal correlation,

large gradients of meridional velocity may be generated in the attempt to obtain a solution of the design problem. When the specifications imply large gradients of meridional velocity, the possibility exists that the program will fail to converge to a valid solution. Experience with the original version of the program has shown that when a convergence problem occurs, there is in fact no solution having positive values of meridional velocity throughout the flow field.

THE BASIS FOR THE REVISED ANALYSIS

Introduction

The over-all approach to the design problem with the alternative specification of the design analysis variables remains that used for the original computer program, Program TD. That is, the stream-filament design procedure presented in Reference 1 forms the basis for the modified computer program (designated TD2). In this section of the report, the original analysis procedure is briefly reviewed. The principal objective is to present the basic equations which are common to both the original and revised analysis.

The Stream-Filament Design Approach to Turbine Design

The stream-filament approach to turbine design is essentially a simplification of the streamline curvature method of solution of a time-steady axisymmetric flow in an arbitrary duct or annulus. The streamline curvature method which has been applied to axial and centrifugal compressors for both design and off-design analysis usually involves iterative solutions of the meridional components of streamline slope and curvature, these being streamline quantities which occur in the radial equilibrium equation. In Reference 1, it is argued that these quantities cannot be realistically evaluated at a particular design station using computed streamline positions at adjacent design stations which are upstream or downstream of blade rows adjoining the design station. Hence, the annulus geometry is used to define meridional components of streamline slope and curvature. In particular, both these quantities are assumed to vary linearly across the annulus between annulus wall values which are also assumed to be the boundary streamlines of the flow. As a consequence of this approach, it is possible to complete the design analysis station-by-station from turbine inlet to final exit without any major iteration of streamline locations involving more than one design station.

The second simplification of the stream-filament approach is to assume that the effect of the derivative of meridional velocity with respect to the meridional flow direction on the radial equilibrium condition

is negligibly small in the interrow gap where the solution of the flow field is to be obtained. Hence, the assumed radial equilibrium equation for the stream-filament approach is as follows:

$$\frac{g_o}{\rho}\frac{dP}{dr} = \frac{V_u^2}{r} - \frac{V_m^2}{r_m}\cos A \tag{1}$$

where the streamline slope angle, A , and the meridional component of streamline curvature, $1/r_m$, can be regarded as known or readily calculated quantities.

In the original analysis, the total pressure and the tangential and meridional components of velocity were considered as the three basic analysis variables with the total temperature considered as a specified or readily calculated streamline flow parameter which would satisfy the design power output requirement. Hence, because the radial equilibrium equation which has to be satisfied at each design station is a differential equation and there are three unknowns, two additional differential equations were obtained from the definition of streamline element blade row total-pressure-loss coefficient and the equation relating the velocity components. These three differential equations, together with the mass flow continuity equation, then permit the solution of the three unknowns for the specified mass flow at the design station.

The four basic equations of the analysis were therefore the radial equilibrium equation (Equation 1) and the following:

$$Y_N = \frac{P_{01S} - P_{01}}{P_{01} - P_1} \quad \text{or} \quad Y_R = \frac{P'_{02S} - P'_{02}}{P'_{02} - P_2} \tag{2}$$

$$V_u = V_m \cos A \tan\beta \tag{3}$$

and

$$w = 2\pi \int_{r_h}^{r_c} \rho V_m \cos A \, r \, dr \tag{4}$$

In the original analysis, three differential equations of the following form were obtained from Equations 1, 2, and 3.

$$C_{n1} \frac{dV_m^2}{dr} + C_{n2} \frac{1}{P_0} \frac{dP_0}{dr} + C_{n3} \frac{dV_u}{dr} = C_{n4} \tag{5}$$

The set of three differential equations was then solved at streamline locations starting at the central streamline using initial values of the coefficients determined iteratively in the solution of the over-all mass flow continuity and the location of streamlines which would satisfy the individual filament mass flow continuity. To simplify the solution, the basic differential equations are solved in the same manner, irrespective of the design station being considered or the type of specification; the twelve coefficients are evaluated for the particular requirement.

Modifications to the Stream-Filament Approach

The stream-filament approach to turbine design essentially treats the total flow as a number of stream filaments which can be identified at each design station. The flow in any given filament, defined by adjacent streamlines, is assumed to remain in that filament throughout the turbine. Thus, the method can be considered to be deficient in two respects. Firstly, it ignores interfilament mixing which can occur in the complex flow field within blade rows. Secondly, the addition of coolant flows to the mainstream in the case of cooled turbines is neglected. Precisely how these two factors should be introduced in the stream-filament analysis involving only the interblade row design stations is open to question. However, an empirical approach was adopted in the analysis of Reference 1 and will be retained in the revised analysis.

Interfilament Mixing

Within a turbine blade row, whether it is a stator or a rotor, there can be significant secondary flow effects which could redistribute the flow between the stream filaments defined on an axisymmetric basis at inlet and outlet planes. The total-pressure loss of a preceding blade

row exists in wakes and low-momentum flows near the end walls and these regions of low-momentum fluid do not fully mix before entering the following row, and therefore interfilament mixing can be expected within the complex flow field of the blade row. In Reference 1, it was decided to model the probable mixing as a mass flow mixing process. Thus, total-pressure and total-temperature profiles were permitted to change, while the mass flow weighted quantities remained constant. To simplify the calculation procedures, the mixing process was assumed to occur somewhere between two design stations, but revised profiles of total temperature and total pressure were used as inlet values to a blade row for the purpose of computing blade row losses and work output. The formulations of mixed values (from Ref 1) are as follows:

$$P_{oj}^{*} = (1 - X_{mj}) P_{oj} + X_{mj} \frac{\sum_k X_{mk} \Delta W_k P_{ok}}{\sum X_{mk} \Delta W_k} \tag{6}$$

and

$$T_{oj}^{*} = (1 - X_{mj}) T_{oj} + X_{mj} \frac{\sum_k X_{mk} \Delta W_k T_{ok}}{\sum X_{mk} \Delta W_k} \tag{7}$$

where P_{oj}^{*} and T_{oj}^{*} are the mixed values and the suffix j denotes a streamline value. The mixing parameter, X_{mj}, could be specified for individual streamlines, or as a constant for the entire flow, X_m. In the latter case, the Equations 6 and 7 simplify to yield

$$P_{oj}^{*} = (1 - X_m) P_{oj} + X_m \overline{P_o} \tag{8}$$

and

$$T_{oj}^{*} = (1 - X_m) T_{oj} + X_m \overline{T_o} \tag{9}$$

where $\overline{P_o}$ and $\overline{T_o}$ are mass flow weighted mean values for the original profile. Unfortunately, the analysis provides a means of simulating mixing without necessarily providing any guidance in the selection of the values of the mixing parameter. Nevertheless, the inclusion of the

mixing parameter could provide a basis for future analyses where experimental data are available.

The Addition of Coolant Flow

For many turbines, blade or disk coolant flows will be required and these will enter the main turbine flow. Obviously, for cooled turbine designs in which the coolant flow can be a significant percentage of the total flow, the effect of the addition of coolant flows should be considered in the design-point analysis. In the previous analysis, the addition of coolant flow was treated on an equal basis for all stream filaments. That is, no attempt was made to associate the coolant flow originating at a rotor tip or at the rim of a disk with the local stream filament at the outer or inner annulus wall. In effect, it was assumed that any coolant flow is fully mixed throughout the entire flow at the exit of the row in which the coolant was introduced. The two equations used to describe the addition of coolant in Reference 1 will be retained. These are:

$$w_n = w_{n-1} + \Delta w = 2\pi \int_{r_h}^{r_t} \rho V_m \cos A \, r \, dr \tag{10}$$

and

$$T_{oj}^{**} = \frac{w_{n-1} T_{oj} + \Delta w T_{oc}}{w_{n-1} + \Delta w} \tag{11}$$

where $n-1$ and n are suffices denoting the upstream inlet station and the exit design station of the row in which the coolant is introduced. The coolant flow, Δw, for any particular row, while considered to fully mix with the main flow causing a change of temperature level, is not assumed to produce any total-pressure loss due to mixing. It was assumed that any total-pressure loss due to the addition of coolant could be specified as a factor by which the basic loss coefficient is increased. Similarly, it was assumed that specific heat differences between coolant and main flow

could be neglected as having a negligibly small effect on the calculated temperatures after mixing.

Additional Assumptions

To improve the validity of any particular design analysis, two additional assumptions were made in the original analysis and these will be retained. The first of these concerns the treatment of the thermodynamic process in which the variation of temperature through the turbine is sufficiently large that the ratio of specific heats, γ, cannot be considered as a constant for the over-all expansion. The second assumption concerns the type of correlation of elemental row total-pressure-loss coefficients.

Variation of Specific Heat

Since the ratio of specific heats and the value of specific heat at constant pressure are temperature dependent, a rigorous analysis would include consideration of both these quantities as dependent on the local temperature. However, the numerical solution of the flow field at any station is considerably simplified if the values of γ and C_p are assumed to be radially constant despite the fact that a large static temperature difference could be obtained between hub and casing streamlines at a stator exit. Nevertheless, in a multistage turbine the temperature drop from inlet to exit may be sufficiently large that significant errors could be introduced if the value of specific heat were assumed invariant throughout. Hence, it was assumed that design station values of specific heat would be specified for turbines in which the over-all decrease in temperature would result in a significant change in the value of specific heat.

For equations which involve more than one station, appropriate simple mean specific heats were assumed. For example, the Euler work equation is expressed as

$$\overline{C_p}\,\Delta T_0 = \frac{u_1 V_{u1} - u_2 V_{u2}}{g_0 J} \tag{12}$$

where

$$\bar{C}_p \equiv \frac{C_{p_1} + C_{p_2}}{2}$$

Similarly, a stage isentropic temperature ratio is related to the stage total-pressure ratio as follows:

$$\frac{T_{00}}{T_{02S}} = \left(\frac{P_{00}}{P_{02}}\right)^{\frac{\gamma_S - 1}{\gamma_S}} \tag{13}$$

where

$$\frac{\gamma_S - 1}{\gamma_S} = \frac{R}{J} \cdot \frac{2}{C_{p_0} + C_{p_2}}$$

Hence, three station values of C_p appear in the following expression for stage efficiency:

$$\eta_S = \frac{(C_{p_1} + C_{p_2})(T_{01} - T_{02})}{T_{00}\left[1 - \left(\frac{P_{02}}{P_{00}}\right)^{\frac{2R}{J(C_{p_0} + C_{p_2})}}\right](C_{p_0} + C_{p_2})} \tag{14}$$

Total-Pressure-Loss Coefficient Correlation

The relatively sophisticated turbine design-point analysis would be of little real value unless row performance in terms of the expected total-pressure loss is reasonably consistent with the computed flow conditions. Since it was desirable to develop a computer program for turbine design analyses which did not require a detailed specification of the blading, a correlation of total-pressure-loss coefficients in terms of aerodynamic design parameters was developed as part of the original program of work. The form of the correlation used originally, and which will be retained, is as follows:

$$Y = \frac{|\tan\beta'_{in} - \tan\beta'_{ex}|}{(a_4 + a_5 \cos\beta'_{ex})} f\left(\frac{V'_{in}}{V'_{ex}}\right) \tag{15}$$

where $$f\left(\frac{V_{in}'}{V_{ex}'}\right) = a_1 + a_2\left(\frac{V_{in}'}{V_{ex}'} - a_3\right) \quad \text{when} \quad \frac{V_{in}'}{V_{ex}'} \geq a_3$$

and $$f\left(\frac{V_{in}'}{V_{ex}'}\right) = a_6 + a_7\left(\frac{V_{in}'}{V_{ex}'}\right)^{a_8} \quad \text{when} \quad \frac{V_{in}'}{V_{ex}'} < a_3$$

The coefficients a_1 to a_8 were assigned recommended values but their actual values were to be selected as program inputs by individual users. In general, it is believed that the form of the correlation is realistic in terms of the loss dependence on a change in tangential velocity, the row reaction as reflected by its inlet to exit velocity ratio, and the probable effect of trailing edge blockage.

REVISIONS OF THE ANALYSIS

Specification of Design Requirement and Analysis Variables

As previously stated, the principal reason for undertaking a modification of the turbine design-point analysis program documented in Reference 2 is that two of the originally selected analysis variables were found to be difficult to use. For some design examples it was found that the flow field solution was so sensitive to the selection of these analysis variables that it was extremely difficult or even, in some cases, impossible to obtain solutions. However, with the exception of the replacement of the two analysis variables by more suitable ones, the specification of design requirements and other analysis variables remains substantially the same as that for the original program. Although, from the point of view of the numerical solution of a particular design problem, there is no real distinction between design requirements and analysis variables, these are subdivided in a conventional manner in the following list.

Design Requirements

1. Number of spools.
2. Rotational speed of each shaft (rpm).
3. Total power output of each shaft (horsepower).
4. Inlet mass flow, lbm per sec.
5. Inlet total pressure as a function of radius (psia).
6. Inlet total temperature as a function of radius (deg R).
7. Inlet flow angle as a function of radius (degrees).
8. Additional coolant flow for each blade row in turn expressed as a fraction of the inlet mass flow.
9. Coolant temperature at each point of addition (optional).
10. Gas constant and specific heat at constant pressure for each design station.

Analysis Variables

1. Number of stages per spool.

2. Individual stage power outputs expressed as a fraction of the total power output of the spool.

3. Annulus dimension, hub and casing radii at first stator inlet and each blade row exit (inches).

4a. If streamline meridional slopes and curvatures are to be computed from local annulus wall values, the axial spacing of the design stations (inches) must be specified together with additional upstream and downstream annulus definition.

4b. If streamline meridional slopes and curvatures are to be specified as an alternative to the internal calculation, values of these quantities (degrees and ins^{-1}) must be specified as a function of radius for each design station.

5a. Mean streamline stator exit tangential velocities (fps) and the radial gradients of meridional velocity as a function of radius (per sec).

5b. Stator exit absolute flow angles as a function of radius (degrees).

6a. The gradients of meridional velocities at stage exit as a function of radius (per sec).

6b. Radially constant stage total temperature drop.

7a. The coefficients a_1 to a_8 defining the total-pressure-loss coefficient correlation and additional loss factors as a function of radius for each blade row.

7b. The blade row total-pressure-loss coefficients as a function of radius.

8. The streamline mixing parameter for any blade row in which some degree of interfilament mixing is to be specified.

Items 5a and 5b are alternative specifications of stator exit conditions, 6a and 6b are alternative specifications for stage exit conditions, and item 7b is provided as an alternative for any case in which an analysis other than that provided by the internally computed loss coefficients is required. Items 5a and 6a are the new analysis variables, while 5b and 6b are considered the most useful of alternatives which in fact are also available in the original computer program.

Required Data from a Design-Point Analysis

Basically the data required from any design-point analysis is a complete definition of the velocity triangles at each interrow design station together with the total pressures, total temperatures, and Mach numbers. These data together with the gas constant and specific heat at constant pressure then permit the calculation of any quantities of interest using standard aerodynamic and thermodynamic formulae.

The desirable output of a design-point analysis computer program (together with a complete printout of design requirements and analysis variables which comprise the program input) are as follows for each of the streamline locations considered in the analysis:

1. Radius of streamline.
2. Meridional, axial, and tangential velocity components.
3. Absolute velocity and flow angle.
4. Blade speed and relative flow angle.
5. Absolute total pressure and total temperature.
6. Rotor relative total pressure and total temperature.
7. Static pressure and static temperature.
8. Absolute and relative Mach numbers.

For analyses in which interfilament mixing and/or the addition of coolant flows has been specified, the modified values of total pressure and total temperature are also required.

From the basic velocity triangle and thermodynamic data of each stage the following information is also desirable.

1. Streamline values of stator and rotor velocity ratios as indicators of the section reactions.
2. Streamline values of stator and rotor total-pressure-loss coefficients.
3. Streamline values of stator and rotor blade row efficiencies.
4. Streamline values of rotor and stage isentropic efficiencies.
5. Stator and rotor blade row efficiencies.
6. Stage work output in Btu per lbm.
7. Stage total-to-total and total-to-static isentropic efficiency.

8. Stage blade-to-jet speed velocity ratio.

Items 5 to 8 require the use of mass flow weighted pressures and temperatures.

For multistage analyses, spool performance data comprising the following quantities are normally required.

1. Spool work and power.
2. Over-all total-to-total and total-to-static pressure ratios.
3. Over-all total-to-total and total-to-static isentropic efficiencies.
4. Over-all spool blade-to-jet speed velocity ratio.

The Revised Analysis

The original analysis treated $\frac{dV_m^2}{dr}$, $\frac{1}{\rho_0}\frac{d\rho_0}{dr}$, and $\frac{dV_u}{dr}$ as the three principal unknown quantities at each of the design stations. In each case the total temperature and derivatives of total temperature with respect to radius were considered either as known quantities or quantities which could be obtained readily from the specified power output function. When a specification of dV_m/dr at stage exit is permitted, it becomes desirable to consider the total temperature as a variable and to include its solution with that of the total pressure, meridional velocity, and tangential velocity. Thus, four differential equations must be formulated. A relatively minor modification of the original analysis, involving the change of one of the unknowns from $\frac{dV_m^2}{dr}$ to $\frac{dV_m}{dr}$, is also suggested by the use of dV_m/dr as a possible input specification at either stator or stage exit design stations. Therefore, the revision to the analysis consists primarily of deriving four differential equations in which $\frac{dV_m}{dr}$, $\frac{d}{dr}(\log \rho_0)$, $\frac{dV_u}{dr}$, and $\frac{d}{dr}(\log T_0)$ are the unknowns. As in the previous analysis, three differential equations are derived from:

1. The radial equilibrium equation (radial momentum).
2. The element performance equation (total-pressure-loss coefficient equation).
3. The velocity components equation.

The fourth equation is derived trivially from the total-temperature distribution with radius in the cases where this distribution is known or

from the Euler work equation in the case of stage exit design station where the power output distribution is not specified. The work equation is, of course,

$$g_0 J \bar{C}_p (T_{01} - T_{02}) = u_1 V_{u1} - u_2 V_{u2} \tag{16}$$

where the mean specific heat, $\bar{C}_p$, is as defined in Equation 12.

Since the solution of the differential equations will yield values of $\frac{d(\log T_0)}{dr}$ rather than the actual total temperature, the total power output of the stage (which is invariably a design requirement) must be satisfied in order to establish the actual values of total temperature as a function of radius at stage exit. The integral form of the power output equation is as follows:

$$P = \frac{2\pi J \bar{C}_p}{550} \int_{r_h}^{r_c} \rho V_m \cos A (T_{00} - T_{02}) r \, dr \tag{17}$$

Although it would be possible to simplify the set of differential equations to a form which is dependent on the design station under consideration and the selected analysis variables for a particular design analysis, from the point of view of efficiently programming a design analysis, it is desirable to retain the basic set of differential equations. Thus, at each design station irrespective of the selection of design analysis variable, the following equations have been derived:

$$C_{11} \frac{dV_m}{dr} + C_{12} \frac{d(\log P_0)}{dr} + C_{13} \frac{dV_u}{dr} + C_{14} \frac{d(\log T_0)}{dr} = C_{15} \tag{18}$$

$$C_{21} \frac{dV_m}{dr} + C_{22} \frac{d(\log P_0)}{dr} + C_{23} \frac{dV_u}{dr} + C_{24} \frac{d(\log T_0)}{dr} = C_{25} \tag{19}$$

$$C_{31} \frac{dV_m}{dr} + C_{32} \frac{d(\log P_0)}{dr} + C_{33} \frac{dV_u}{dr} + C_{34} \frac{d(\log T_0)}{dr} = C_{35} \tag{20}$$

$$C_{41}\frac{dV_m}{dr} + C_{42}\frac{d(\log P_0)}{dr} + C_{43}\frac{dV_u}{dr} + C_{44}\frac{d(\log T_0)}{dr} = C_{45} \qquad (21)$$

where the coefficients C_{11} through C_{45} can be computed for particular variants of the problem of obtaining a solution of the flow field which satisfies the design requirements. The remainder of this section of the report considers each of these four differential equations in turn and describes how they are derived for particular design stations and/or choice of the optional specification of the design parameters.

Radial Equilibrium Equation

Equation 1 is expressed in terms of static pressure and density and, hence, to obtain an equation of type required (Equation 18) these quantities are first to be expressed in terms of total pressure, total temperature, and the velocity components (V_m and V_u). The standard formulae are as follows:

$$\rho = \frac{P_0}{RT_0}\left[1 - \frac{V_m^2+V_u^2}{2g_0JC_pT_0}\right]^{\frac{1}{\gamma-1}} \qquad (22)$$

and

$$P = P_0\left[1 - \frac{V_m^2+V_u^2}{2g_0JC_pT_0}\right]^{\frac{\gamma}{\gamma-1}} \qquad (23)$$

From the differentiation of Equation 23, Equation 22, and the original expression of the condition of radial equilibrium, the form of the radial equilibrium equation used throughout the analysis is as follows:

$$2V_m\frac{dV_m}{dr} + \left(\frac{\gamma-1}{\gamma}\right)\left[V_m^2+V_u^2-2g_0JC_pT_0\right]\frac{d}{dr}(\log P_0) + 2V_u\frac{dV_u}{dr}$$
$$-\left(V_m^2+V_u^2\right)\frac{d}{dr}(\log T_0) = \frac{2V_m^2\cos A}{r_m} - \frac{2V_u^2}{r} \qquad (24)$$

The coefficients of Equation 18, C_{11} to C_{15}, are identified by Equation 24 and remain in this standard form throughout any design analysis.

Total-Pressure Equation

At the turbine inlet, the total pressure will be specified as a function of radius. Hence, Equation 19 is readily derived as

$$\frac{d}{dr}\left(\log P_{00}\right) = \frac{1}{P_{00}(r)} \frac{d}{dr}\left(P_{00}(r)\right) \tag{25}$$

For subsequent design stations, the total pressure is dependent on a row total-pressure-loss coefficient, the isentropic value of total pressure, and the row exit dynamic head. Thus, for a stator row

$$P_{01} = \frac{P_{01S}}{1 + Y_N\left(1 - \frac{P_1}{P_{01}}\right)} \tag{26}$$

or

$$\log P_{01} = \log P_{01S} - \log\left\{1 + Y_N\left(1 - \frac{P_1}{P_{01}}\right)\right\} \tag{26a}$$

Expressing the ratio P_1/P_{01} in terms of the velocity component (using Equation 23), the differentiation of Equation 26a yields an equation of required form. The coefficients of Equation 19 are then identified. Since the expressions for the coefficients are relatively complex, they are not stated here; they are presented in the relevant steps (35-38) of the detailed calculation procedure of Appendix III.

In the case of the stage exit design stations, the total pressure is somewhat more complex in that the rotor row total-pressure-loss coefficient is expressed in terms of the relative total pressures. The rotor loss coefficient definition of Equation 2 can be reexpressed in terms of the stage exit absolute total pressure as follows:

$$Y_R = \frac{\frac{P_{02S}'}{P_{02}'} - 1}{1 - \frac{P_2}{P_{02}'}} = \frac{\left(\frac{P_{02S}'}{P_{01}'}\right)\left(\frac{P_{01}'}{P_{02}}\right)\left(\frac{P_{02}}{P_{02}'}\right) - 1}{1 - \left(\frac{P_2}{P_{02}}\right)\left(\frac{P_{02}}{P_{02}'}\right)} \tag{27}$$

Hence,

$$P_{02} = \frac{P_{01}' \left(\frac{P_{02s}'}{P_{01}'}\right)\left(\frac{P_{02}}{P_{02}'}\right)}{1 + Y_R\left\{1 - \left(\frac{P_2}{P_{02}}\right)\left(\frac{P_{02}'}{P_{02}'}\right)\right\}} \tag{28}$$

or

$$\log P_{02} = \log P_{01}' + \log\left(\frac{P_{02s}'}{P_{01}'}\right) + \log\left(\frac{P_{02}}{P_{02}'}\right) - \log\left[1 + Y_R\left\{1 - \left(\frac{P_2}{P_{02}}\right)\left(\frac{P_{02}}{P_{02}'}\right)\right\}\right] \tag{28a}$$

The three pressure ratios occurring on the right-hand side of Equation 28a can all be expressed in terms of velocity and the total temperature. Thus,

$$\frac{P_{02s}'}{P_{01}'} = \left[1 + \frac{u_2^2 - u_1^2}{2 g_0 J C_p T_{01}'}\right]^{\frac{\gamma}{\gamma-1}} \tag{29}$$

$$\frac{P_{02}'}{P_{02}} = \left[1 + \frac{u_2(u_2 - 2V_{u2})}{2 g_0 J C_p T_{02}}\right]^{\frac{\gamma}{\gamma-1}} \tag{30}$$

and the appropriate expression for P_2 / P_{02} can be obtained from Equation 23.

The coefficients for Equation 19 can therefore be obtained from the differentiation with respect to τ of Equation 28a. The actual expression for the coefficients are presented as part of the step-by-step calculation given in Appendix III.

The Velocity Components Equation

The third differential equation (Equation 20) required for the

flow field solution is either derived from Equation 3 or obtained directly from the selected design specifications.

At the first stator inlet design station or at any stator exit where the absolute flow angle is specified, the coefficients of Equation 20 are obtained from the differentiation of Equation 3 which yields the following:

$$-\tan A \cos\beta \frac{dV_m}{dr} + \frac{dV_u}{dr} = V_m \frac{d}{dr}(\cos A \tan\beta) \tag{31}$$

Although the C_{35} coefficient can be evaluated directly, the differential of the product $\frac{d}{dr}(\cos A \tan\beta) = \frac{\cos A}{\cos^2\beta} \cdot \frac{d\beta}{dr} - \tan\beta \sin A \frac{dA}{dr}$ is used in the actual solution.

For the optional specification of the stator exit flow condition, the specification of the gradient of meridional velocity as a function of radius is used directly to provide the coefficients of Equation 20. Thus,

$$\frac{dV_{m1}}{dr} = \frac{dV_{m1}(r)}{dr} \tag{32}$$

Similarly, at a stage exit, when the gradient of meridional velocity is specified, $C_{31} = 1.0$, $C_{32} = C_{33} = C_{34} = 0$, and $C_{35} = \frac{d}{dr} V_{m2}(r)$.

The solution of a stage exit flow field when radially constant work extraction is specified can be considered as a special case. Rather than to derive a velocity components equation, Equation 20 is obtained directly from the fact that the stage exit total temperature distribution is known directly from the stator exit total temperature distribution and the stage power output. Hence, the third differential equation becomes

$$T_{02}(r) \frac{d}{dr}(\log T_{02}) = \frac{d}{dr}(T_{02}(r)) \tag{33}$$

Since the total temperature is specified at the first stator inlet and there is no change of total temperature along streamlines from any stator inlet to exit in the absence of mixing or the addition of

coolant, for the first stator inlet and each stator exit station a "no-work" rather than the work equation is used to obtain the fourth differential equation. Thus, the forms of Equation 21 are as follows:

$$T_{00}(r)\,\frac{d}{dr}\left(\log T_{00}\right) = \frac{d}{dr}\,T_{00}(r) \tag{34}$$

and

$$T_{01}(r)\,\frac{d}{dr}\left(\log T_{01}\right) = \frac{d}{dr}\,T_{01}(r) \tag{35}$$

For stage exit design stations the differentiation of Equation 12 yields:

$$-\frac{u_2}{g_0 J \bar{C}_p}\cdot\frac{dV_{u2}}{dr} + T_{02}\frac{d}{dr}\left(\log T_{02}\right) = \frac{dT_{01}}{dr} - \frac{1}{g_1 J \bar{C}_p}\left\{u_1\frac{dV_{u1}}{dr} + \Omega\left(V_{u1}-V_{u2}\right)\right\} \tag{36}$$

INPUT DATA

Description of Input Data

The physical input data used by Program TD2 can be divided into three categories: input options, general design requirements, and spool design requirements and analysis variables. Input data in the first two categories are specified once for each turbine as a unit. Input data in the latter category are specified for each spool of the turbine, if there is more than one spool, or for each set of analysis variables to be considered.

The information required to prepare the input data for a typical case is furnished below. This information contains a description of each input item as well as a description of the form in which these items are written on input data sheets. It should be noted that the units of the input items are not consistent but, rather, are those units which have found common usage. The units of each input item are included in the description of the item.

The first group of input items read by Program TD2 consists of description of the case and the general input options. These items, which appear in the following table, are read into the program using FØRMAT statements. The case description given on the first card is read as an alphanumeric field; any combination of numbers, capital letters, punctuations, or blanks may be used. The general input options are read as integer fields; these numbers may never contain a decimal point.

Line	Location	Fortran Symbol	Description
1	1-72	CØMENT	A statement describing the case to be considered; this may not be omitted but may be left blank
2	12	ISPEC	Indicator: ISPEC=0 if values of total-pressure-loss coefficient as a function of radius are specified at each blade row exit ISPEC=1 if streamline values of total-pressure-loss coefficient

Line	Location	Fortran Symbol	Description
			are calculated from the internal correlation without an additional loss factor at each blade row exit ISPEC=2 if streamline values of total-pressure-loss coefficient are calculated from the internal correlation with an additional loss factor at each blade row exit
	30	ICØØL	Indicator: ICØØL=0 if a coolant schedule is not specified in the input data ICØØL=1 if a coolant mass flow schedule is specified in the input data ICØØL=2 if a coolant mass flow and total-temperature schedule are specified in the input data
	36	IMIX	Indicator: IMIX=0 if a mixing schedule is not specified in the input data IMIX=1 if a mixing schedule is specified in the input data
	42	ISTRAC	Indicator: ISTRAC=0 if the streamline angles of inclination and curvatures are calculated internally at each design station ISTRAC=1 if values of streamline angle of inclination and curvature as a function of radius are specified at each design station
	48	IDLETE	Indicator: IDLETE=0 if only the converged results of the iteration loop on streamline position are to be printed at each design station IDLETE=1 if the results of each pass through the iteration loop on streamline position are to be printed at each design station

Line	Location	Fortran Symbol	Description
	54	IEXTRA	Indicator: IEXTRA=0 if the results of the passes through the iteration loop on meridional velocity at the mean streamline are not to be printed IEXTRA=1 if the results of the passes through the iteration loop on meridional velocity at the mean streamline are to be printed when the results of a pass through the iteration loop on streamline position are to be printed

The remaining input items are read into Program TD2 using NAMELIST statements. Input data referring to a NAMELIST statement begins with a $ in the second location on a new line, immediately followed by the NAMELIST name, immediately followed by one or more blank characters. Any combination of three types of data items may then follow. The data items must be separated by commas. If more than one line is needed for the input data, the last item on each line, except the last line, must be a number followed by a comma. The first location on each line should always be left blank since it is ignored. The end of a group of data items is signaled by a $ anywhere except in the first location of a line. The form that data items may take is:

1. Variable name = constant, where the variable name may be an array element or a simple variable name. Subscripts must be integer constants.
2. Array name = set of constants separated by commas where k* constant may be used to represent k consecutive values of a constant. The number of constants must be equal to the number of elements in the array.
3. Subscripted variable = set of constants separated by commas where, again, k* constant may be used to represent k consecutive values of a constant. This results in the set of constants being placed in consecutive array elements, starting with the element designated by the subscripted variable.

The namelist NAM1 is used to read the input items which include the general design requirements. The items in NAM1 are as follows:

Fortran Symbol	Input Item	Description
NSPØØL	n''	Number of spools of the turbine being considered; 1, 2, or 3 spools are allowed
NAV		Number of sets of analysis variables; any number is allowed if NSPØØL=1, but only one set of analysis variables is allowed if NSPØØL > 1 and NAV need not be specified
NLINES	n	Number of streamlines to be used in the calculations (including the hub and casing streamlines); any odd number from 3 to 17 is allowed but 9 is recommended
GASC	R	Gas constant of the working fluid, ft lbf per lbm deg R
FLWM	$(w_T)_{inlet}$	Mass flow rate at the inlet of the turbine, lbm per sec
NLT		Number of radii at which the inlet conditions of the turbine are specified; any number from 1 to 17 is allowed
(RLT(J), J=1,NLT)	r_{inlet}	Radial coordinates at which the inlet conditions of the turbine are specified, in; the values of RLT must be monotonically increasing
(TØLT(J), J=1,NLT)	$(T_o)_{inlet}$	Values of the absolute total temperature at the inlet of the turbine corresponding to the radial coordinates RLT, deg R
(PØLT(J), J=1,NLT)	$(P_o)_{inlet}$	Values of the absolute total pressure at the inlet of the turbine corresponding to the radial coordinates RLT, psi
(BETLT(J), J=1,NLT)	β_{inlet}	Values of the absolute flow angle at the inlet of the turbine corresponding to the radial coordinates RLT, deg

The namelist NAM2 is used to read the input items for a spool,

including the spool design requirements and the spool analysis variables. Each spool of the turbine, or each set of analysis variables is specified in separate namelist groups. The items in NAM2 are as follows:

Fortran Symbol	Input Item	Description
RPM	Ω	Rotative speed of the spool, rpm
HP	P_T	Power output of the spool, hp
NSTG		Number of stages on the spool; any number from 1 to 8 is allowed
(FHP(I), I=1,NSTG)	P_{Ti}	Power output of each stage of the spool, expressed as a fraction of the total power output of the spool
(CP(I), I=1,NDSTAT)	C_{pi}	Specific heat at constant pressure of the working fluid at each design station of the spool (where NDSTAT=2*NSTG+1), Btu per lbm deg R
If ISTRAC=1, the following three items should be omitted.		
(XSTAT(I), I=1,NSTAT)	x_i	Axial coordinate of each station of the spool (where NSTAT=2* NSTG+3), in
(RANN(I,1), I=1,NSTAT)	r_{hi}	Radial coordinate of the hub at each station of the spool, in
(RANN(I,2), I=1,NSTAT)	r_{ci}	Radial coordinate of the casing at each station of the spool, in
If ISTRAC=0, the following six items should be omitted.		
(RANN(I,1), I=1,NDSTAT)	r_{hi}	Radial coordinate of the hub at each design station of the spool, in
(RANN(I,2), I=1,NDSTAT)	r_{ci}	Radial coordinate of the casing at each design station of the spool, in
NSTRAC		Number of radii at which streamline angles of inclination and curvatures are specified at each design station of the spool; any number from 1 to 17 is allowed
((RSTRAC(J,I), J=1,NSTRAC), I=1,NDSTAT)	r_i	Radial coordinates at which streamline angles of inclination and

Fortran Symbol	Input Item	Description
		curvatures are specified at each design station of the spool, in; the values of RSTRAC at each design station must be monotonically increasing
((ASTR(J,I), J=1,NSTRAC), I=1,NDSTAT)	A_i	Values of the streamline angle of inclination at each design station of the spool corresponding to the radial coordinates RSTRAC, deg
((CSTR(J,I), J=1,NSTRAC), I=1,NDSTAT	$(1/r_m)_i$	Values of the streamline curvature at each design station of the spool corresponding to the radial coordinates RSTRAC, per in
(FLWCN(I), I=1,NBR)	$\dot{\omega}_{CL}$	Mass flow of the coolant added in each blade row of the spool (where NBR=2*NSTG), expressed as a fraction of the inlet mass flow of the turbine; this item should be omitted if ICØØL=0
(TØC(I), I=1,NBR)	$(T_{oc})_i$	Absolute total temperature of the coolant added in each blade row of the spool, deg R; this item should be omitted if ICØØL=0 or 1
((XMIX(J,I), J=1,NLINES), I=1,NBR)	$(X_i)_j$	Streamline values of the mixing coefficient for each blade row of the spool; this item should be omitted if IMIX=0
NXT		Number of radii at which the exit conditions of each blade row of the spool are specified; any number from 1 to 17 is allowed
(IWRL(I), I=1,NSTG)		Indicator: IWRL(I)=0 if values of the derivative of meridional velocity with respect to radius, per sec, are specified as a function of radius at a stator exit of the spool IWRL(I)=1 if values of flow angle, deg, are specified as a function of radius at a stator exit of the spool and the subsonic solution is desired

Fortran Symbol	Input Item	Description
		IWRL(I)=2 if values of flow angle, deg, are specified as a function of radius at a stator exit of the spool and the supersonic solution is desired
((RNXT(J,I), J=1,NXT), I=1,NSTG)	r_i	Radial coordinates at which the exit conditions of each stator of the spool are specified, in; the values of RNXT at each stator exit must be monotonically increasing

The following two items should be given for each stage for which IWRL(I)=0.

(VUM(I), I=1,NSTG)	$(V_{u1})_m$	Values of whirl velocity, fps, at the mean streamline
((DVMDR(J,2*I-1), J=1,NXT), I=1,NSTG)	$\frac{dV_{m1}}{dr}$	Values of the derivative of meridional velocity with respect to radius, per sec, at a stator exit of the spool corresponding to the radial coordinates RNXT

The following item should be given for each of the remaining stages for which IWRL(I)=1 or 2.

((WRL(J,I), J=1,NXT), I=1,NSTG)	β	Values of flow angle, deg, at a stator exit of the spool corresponding to the radial coordinates RNXT
(IPØF(I), I=1,NSTG)		Indicator: IPØF(I)=0 if a uniform power output distribution is desired at a stage exit of the spool IPØF(I)=1 if a gradient of meridional velocity will be specified at a stage exit of the spool

If IPØF(I)=0, the following item should be omitted.

((DVMDR(J,2*I), J=1,NXT), I=1,NSTG)	$\frac{dV_{m1}}{dr}$	Values of the derivative of meridional velocity with respect to radius, per sec, at a stage exit of the spool corresponding to the radial coordinates RSXT

Fortran Symbol	Input Item	Description
If IPØF(I)=0 and ISPEC=1, the following item should be omitted.		
((RSXT(J,I), J=1,NXT), I=1,NSTG)	r_i	Radial coordinates at which the exit conditions of each stage of the spool are specified; the values of RXST at each stage exit must be monotonically increasing
If ISPEC=1, the following two items should be omitted.		
((YØSS(J,2*I-1), J=1,NXT), I=1,NSTG)		Values of the loss coefficient (if ISPEC=0) or an additional loss factor (if ISPEC=2) at each stator exit of the spool corresponding to the radial coordinates RNXT
((YØSS(J,2*I), J=1,NXT), I=1,NSTG)		Values of the quantity indicated by ILØSS (if ISPEC=0) or an additional loss factor (if ISPEC=2) at each stage exit of the spool corresponding to the radial coordinates RSXT
If ISPEC=0, the following item should be omitted.		
(YCØN(I), I=1,9)	a	Value of the nine constants which define the internal loss correlation

This completes the input data for a single spool, one spool of a multispool design, or one set of analysis variables. For each new case the complete input specification from "line 1", the comment card, will be required. For additional spools or sets of analysis variables, the input specification returns to the beginning of the NAM2 namelist. When more than one set of analysis variables is used, any quantity which is not explicitly reset will remain unchanged from the value previously specified.

Discussion of Input Data

The following point-by-point discussion of the input data contains suggestions for the most efficient use of Program TD2. The items are discussed in the same order as they appear in the Detailed Description of Input Data. In several instances, reference is made to a preliminary design calculation. These calculations should be performed before the preparation of any input data for a new design. A typical

input data sheet is shown later in the report in the appendix devoted to the sample case. Input items which differ from those used by Program TD have been indicated by an asterisk.

Case Description and General Input Options

1. ISPEC - It will be noted that several locations on the input options card have purposely been left blank. This allows the program to use the same indicator locations as Program TD, thereby increasing input compatibility between the two programs. The additional loss factor (ISPEC=2) should be used to increase the over-all loss level when excessive losses due to tip clearance, trailing edge thickness, low aspect ratio, and so forth, are expected.
2. ICØØL - A preliminary design calculation should be made to determine if the use of a coolant is required. The gross effects of the coolant mass flow and the temperature of the coolant are included in the analysis to increase the validity of the solution.
3. IMIX - The specification of a mixing schedule may be used when the assumption of totally unmixed stream-filament flow appears unrealistic. Experimental data are required in this area.
4. ISTRAC - Streamline angles of inclination and curvature should be calculated internally to reduce the input data requirements unless better information is available or simple radial equilibrium is to be considered.
5. IDLETE - In the initial phases of a design, IDLETE=1 should be used to obtain as much information as possible. As a design is refined, IDLETE=0 will usually provide sufficient information.*
6. IEXTRA - In almost all cases, IEXTRA should have the same value as IDLETE.*

* Additional output is described in the following chapter.

General Input Data

7. NSPØØL - The initial phases of a design should probably consider the turbine as a unit. However, as noted previously, NSPØØL=1 is required if a number of sets of analysis variables is to be investigated.
8. NLINES - Since the accuracy of the calculations should improve as the number of streamlines is increased, a large number of streamlines should be used if substantial radial gradients are specified in the input data and a small number of streamlines should be used if minimal radial gradients are specified.
9. NLT - Set NLT=1 if the turbine inlet conditions do not vary with radius. If the inlet conditions are the output of a previous run, NLT should be set equal to number of streamlines used in that output. Otherwise, NLT should increase as the magnitude of the radial gradients increases.
10. RLT - If NLT=1, any value for RLT will suffice. If the inlet conditions are the output of a previous run, RLT should be specified to be the streamline radial coordinates (proceeding from the hub to the casing) of that output. Otherwise, the first value of RLT should be the hub radius, the last value should be the casing radius, and approximately evenly spaced values should be specified for the interior points.
11. TØLT, PØLT, BETLT - Design requirements corresponding to the radial positions RLT. It should be noted that only the subsonic solution for the values of BETLT can be obtained.

Spool Input Data

12. NSTG, FHP - The number of stages of a spool should be selected on the basis of mean stage loading factor. A first approximation to the power split among the stages should be based on rotor root loading factors.
13. CP - The design station values of specific heat should be based upon the static temperatures obtained from the

preliminary design calculation. These values can be refined if necessary on subsequent runs.

14. XSTAT - The axial spacing between design stations should be selected to be representative of the anticipated final design standard in terms of annulus angles of inclination and curvatures.

15. RANN - Hub and casing radii should be selected to insure that:

    a. The Mach number at the inlet and exit of the spool is reasonable.

    b. The hub-tip ratios are mechanically acceptable.

    c. In conjunction with the values of XSTAT, that the geometry of the annulus walls is satisfactory.

16. NSTRAC - The same general comments concerning NLT apply to the number of radial positions at which streamline angles of inclination and curvatures are specified at each design station.

17. RSTRAC - Again, the same general comments concerning RLT apply to RSTRAC.

18. ASTR, CSTR - The values of ASTR and CSTR should be set equal to zero if simple radial equilibrium is to be considered.

19. FLWCN, TØC - The amount of coolant added in each blade row and the coolant temperature should be specified with sufficient accuracy to insure a valid analysis. The coolant temperature should be that at the source of the coolant.

20. XMIX - The values of XMIX for a blade row should be set equal to zero if no mixing is to be considered or equal to 1 if complete mixing of the absolute total pressure and temperature is desired.

21. NXT - The same general comments concerning NLT apply to the number of radial positions at which blade exit conditions are specified.

*22. IWRL - Since it may be desirable to specify both flow angle distribution and meridional velocity gradients for the various stators of a spool, the former indicator IWRL has been made an analysis variable. The analysis variable ISØNIC of Program TD thus becomes redundant and has been deleted.

*23. RNXT - The same general comments concerning RLT apply to RNXT.

*24. VUM - Stator exit tangential velocity at the mean streamline should be chosen on the basis of desired stage mean reaction for each stator in which the option of specifying gradients of meridional velocity is exercised. It should be omitted for stages in which flow angle distributions are supplied.

*25. DVMDR - Note that the second index associated with the meridional velocity gradient is the blade row index, as with YØSS. A free-vortex design can, of course, be obtained by simply specifying DVMDR=0. Although radii are input in inches, there is no advantage in this approach with DVMDR. Thus, DVMDR=1200 implies an increase of 100 fps in V_m for each inch increase in radius.

26. WRL - Specification of the radial distribution of flow angle is recommended for final design analyses, since the resulting blade designs will be more easily manufactured than those based on arbitrary meridional velocity distributions.

*27. IPØF - The option of radially constant work output (IPØF=0) has been retained for compatibility, as with IWRL=1 or 2. When IPØF=1, the program calculates the radial work output distribution which yields the desired stage exit meridional velocity distribution.

28. YØSS - For the preliminary assessment of a design or the assessment of loss level variations, a constant value for a blade exit is recommended. Otherwise, test data should be used to obtain the loss parameter variation.

29. RSXT - The same general comments concerning RLT apply to RSXT. Note that RSXT must be specified whenever rotor exit meridional velocity gradients, total-pressure-loss coefficients, or additional loss factors are specified.

30. YCØN - The correlation developed in Reference 1 relates the total-pressure-loss coefficient for any element of blading to its inlet and exit relative flow angles and its reaction defined as the ratio of inlet-to-exit velocity (V_{i-1}/V_i). The nine coefficients a_1 to a_9 are used in the following correlation:

$$Y = \frac{f_L \left| \tan\beta_{i-1} - \tan\beta_i \right| \left[a_1 + a_2 \left\{ \left(\frac{V_{i-1}}{V_i} \right) - a_3 \right\} \right]}{a_4 + a_5 \cos\beta_1} \quad \text{if} \quad \frac{V_{i-1}}{V_i} \geq a_3$$

$$Y = \frac{f_L \left| \tan\beta_{i-1} - \tan\beta_i \right| \left[a_6 + a_7 \left(\frac{V_{i-1}}{V_i} \right)^{a_8} \right]}{a_4 + a_5 \cos\beta_1} \quad \text{if} \quad \frac{V_{i-1}}{V_i} < a_3$$

$$Y \leq a_9$$

where f_L is the additional loss factor. In the absence of total-pressure-loss coefficient data which could be considered more relevant to a particular design analysis, it is recommended that the following values of the nine coefficients should be used:

$a_1 = 0.055$
$a_2 = 0.15$
$a_3 = 0.6$
$a_4 = 0.6$
$a_5 = 0.8$
$a_6 = 0.03$
$a_7 = 0.157255$
$a_8 = 3.6$
$a_9 = 1.0$

DESCRIPTION OF NORMAL OUTPUT

The output of Program TD2 consists entirely of printed data. Reference to the section containing the computer output from the sample case will show that all the quantities listed are fully described. The information included in the normal output can be divided into the following categories:

1. General input data.
2. Spool input data.
3. Values of selected flow and performance parameters obtained from each pass through the iteration loop to satisfy continuity at a design station (if IEXTRA=1).
4. Tabulated streamline values of flow and performance parameters which satisfy continuity obtained from each pass through the iteration loop on streamline position at a design station (if IDLETE=1).
5. Tabulated streamline values of the flow parameters obtained from the converged pass at a design station.
6. Tabulated streamline values of the mixed and/or cooled flow parameters for a blade row (if IMIX=1 or ICØØL=2).
7. Tabulated streamline values of the performance parameters of the stator and rotor blade rows.
8. Mass averaged performance parameters for a stage.
9. Tabulated mass averaged performance parameters for each stage of a spool (if NSTG > 1).
10. Mass averaged performance parameters for a spool.
11. Mass averaged performance parameters for the turbine (if NSPØØL > 1).

A description of the items in each category is given below.

The normal output of a typical case begins with the statement describing the case, immediately followed by the items in category 1 - general input data. (If there is more than one set of analysis variables, the output for each set of analysis variables is treated as if it were a new case.) The general input data consists of:

1. Number of spools.
2. Number of sets of analysis variables (if NSPØØL=1).
3. Number of streamlines.
4. Gas constant, lbf ft per lbm deg R.
5. Mass flow at the turbine inlet, lbm per sec.
6. Tabulated values of absolute total temperature, deg R, absolute total pressure, psi, and absolute flow angle, deg, versus radial position, in, at the turbine inlet.

The normal output of a typical case continues with the items in category 2 - spool input data. The spool input data consists of:

1. Rotative speed, rpm.
2. Power output, hp.
3. Number of stages.
4. Tabulated power output split among the stages of the spool, expressed as fractions of the power output of the spool.
5. Tabulated design station values of the specific heat at constant pressure, Btu per lbm deg R.
6. Tabulated station values of axial position, in, hub radius, in, and casing radius, in (if ISTRAC=0).
7. Tabulated design station values of hub radius, in, and casing radius, in (if ISTRAC=1).
8. Tabulated values of streamline angle of inclination, deg, and curvature, per in, versus radial position, in, at each design station of the spool (if ISTRAC=1).
9. Tabulated blade row values of coolant mass flow, expressed as fractions of the mass flow at the turbine inlet (if ICØØL=1 or 2) and coolant total temperature, deg R (if ICØØL=2).
10. Tabulated streamline values of the mixing coefficient for each blade row of the spool (if IMIX=1).
11. Tabulated values of the exit conditions for each blade row of the spool. For stators, one exit condition consists of values of either meridional velocity gradient, per sec, and meanline whirl velocity, fps (if IWRL=0) or flow angle,

deg (if IWRL=1 or 2) versus radial position, in. For rotors, the corresponding exit condition is either a choice of radially constant work output (if IPØF=0) or values of the meridional velocity gradient versus radius. If ISPEC=1, there are no other exit conditions. However, if ISPEC=0 or 2, the other exit condition for both stators and rotors is values of either total-pressure-loss coefficient or additional loss factor, respectively, versus radial position, in.

12. If the total-pressure-loss coefficients are internally computed (ISPEC=1 or 2) the loss correlation is defined with the input values of the nine correlation coefficients appropriately inserted.

The results of the spool calculations appear next in the normal output for a typical case, beginning with the first design station of the spool. (If the spool is not the first spool of the turbine, the results shown for the first design station are taken from the converged results at the exit of the previous spool.) If IDLETE=1, results are shown for each pass through the iteration loop on streamline position whereas if IDLETE=0, results are shown for only the converged values of streamline position. In either case, if IEXTRA=1, the results begin with the items in category 3 - selected flow and performance parameters - for each pass through the iteration loop to satisfy continuity. The selected flow and performance parameters consist of:

1. Meridional velocity at the mean streamline, fps.
2. Calculated value of the mass flow, lbm per sec.
3. Tabulated streamline values of meridional velocity, fps, tangential velocity fps, absolute total pressure, psi, and, if the design station is a blade row exit and ISPEC=1 or 2, pressure-loss coefficient.

The items in category 4 - flow and performance parameters which satisfy continuity - complete the output for each pass through the iteration loop on streamline position. These flow and performance parameters consist of:

1. Tabulated streamline values of radial position, in, mass flow function, lbm per sec, meridional velocity, fps, axial velocity, fps, tangential velocity, fps, absolute velocity, fps, absolute Mach number, absolute total pressure, psi, absolute total temperature, deg R, absolute flow angle, deg, static pressure, psi, and static temperature, deg R, for the design station.
2. Tabulated streamline values of streamline angle of inclination, deg, and curvature, per in, if the design station is the turbine inlet.
3. Tabulated streamline values of pressure-loss coefficient, blade row efficiency, blade velocity, fps, relative velocity, fps, relative Mach number, relative total pressure, psi, relative total temperature, deg R, and relative flow angle, deg, if the design station is a blade row exit.

The items in category 5 - flow parameters - complete the output of the converged pass at a design station. These flow parameters consist of the same items as in category 4 with the exception that streamline angle of inclination, deg, and curvature, per in, replace pressure-loss coefficient and blade row efficiency in item 3.

If either IMIX=1 or ICØØL=2, the items in category 6 - mixed and/or cooled flow parameters - follow the output of each design station except the spool exit. The mixed and/or cooled flow parameters consist of:

1. Tabulated streamline values of mixed and/or cooled absolute total pressure, psi, and absolute total temperature, deg R, in the blade row.
2. Tabulated streamline values of mixed and/or cooled relative total pressure, psi, and relative total temperature, deg R, if the blade row is a stator.

If the design station is a stage exit, the design station output of a typical case continues with the items in category 7 - stage performance parameters. The stage performance parameters consist of tabulated streamline values of: stator reaction, rotor reaction, stator pressure-loss coefficient, rotor pressure-loss coefficient, stator blade row

efficiency, rotor blade row efficiency, rotor isentropic efficiency, and stage isentropic efficiency.

The stage performance output continues with the items in category 8 - mass averaged stage performance parameters. The mass averaged performance parameters consist of:

1. Stator blade row efficiency.
2. Rotor blade row efficiency.
3. Stage work output, Btu per lbm.
4. Stage total efficiency.
5. Stage static efficiency.
6. Stage blade-to-jet speed ratio.

If the design station is the spool exit, the normal output of a typical case continues with spool performance summary. If the spool has more than one stage, the spool performance summary begins with the items in category 9 - tabulated stage values of the mass averaged performance parameters. These tabulated values consist of the same items as in category 8.

The spool performance summary continues with the items in category 10 - mass averaged spool performance parameters. These mass averaged performance parameters consist of:

1. Spool work output, Btu per lbm.
2. Spool power output, hp.
3. Spool total-to-total pressure ratio.
4. Spool total-to-static pressure ratio.
5. Spool total efficiency.
6. Spool static efficiency.
7. Spool blade-to-jet speed ratio.

If the design station is the turbine exit and there is more than one spool, the normal output of a typical case concludes with the items in category 11 - mass averaged turbine performance parameters. These mass averaged performance parameters consist of:

1. Over-all work output, Btu per lbm.
2. Over-all total-to-total pressure ratio.
3. Over-all total-to-static pressure ratio.

4. Over-all total efficiency.
5. Over-all static efficiency.
6. Over-all blade-to-jet speed ratio.

ERROR MESSAGES

In addition to the normal output, various messages may appear in the output. These messages occur when difficulty has been encountered in the calculation. Each of the four messages are considered in turn. All are outputs from the main program.

In all cases, some output data will be provided with the message. This output can be used as a basis for the modification of the input specifications. In general, errors in input data will be immediately obvious if a preliminary design calculation has been performed before the input was prepared.

1. CALCULATIØN ABANDØNED ØN PASS _____ BECAUSE ØF INSTABILITY IN MEANLINE MERIDIØNAL VELØCITY ITERATION DUE TØ CHØKED CØNDITIØNS.

As the program attempts to find a meanline meridional velocity which will satisfy the specified mass flow requirement, the variation of mass flow with meanline velocity is assessed by Subroutine VMSUB2. If the slope of the flow versus velocity characteristic changes sign more than four times the calculations are aborted. Normally, the reason for these sign changes is that the specified mass flow exceeds the choked value. Following the message, conditions from the final pass through the continuity loop are printed.

Choking will occur whenever the mass averaged flow parameter, defined as $w\sqrt{T_o}/P_oA$, exceeds the critical value. There are therefore four possible remedies, listed here in order of decreasing importance.

a. Increase the available flow area, by modifying either
   (1) the annulus dimensions
   or (2) the average flow angle.
b. Increase the design station total pressure by improving the efficiency level of the row or reducing rotor work output.
c. Reduce the specified inlet mass flow and/or the coolant flows entering upstream of the choked row.
d. Reduce the total temperature.

2. ITERATIØN FØR THE MERIDIØNAL VELØCITY AT THE MEAN STREAMLINE HAS NØT CØNVERGED WHEN ILØØP=_____.

A limit of thirty-five iterations is placed on the continuity loop by step 47 in the calculation procedure (Appendix III). If the mass flow has not converged to the required value within the preset tolerance, the results from the thirty-fifth loop are printed and the case is aborted. The convergence procedure is such that if any design station has not converged within thirty-five loops, the probability of the design being aerodynamically acceptable is remote.

Since message 1 will normally appear in such a case, full output will be necessary to determine why convergence has failed without choking being indicated. Remedial action should be based on the results of this analysis; in particular, the flow and velocity tolerances, TØLFLW and TØLVM, should be reviewed.

3. EQUATIØNS ARE SINGULAR WHEN VMM=_____, ILØØP=_____, AND ILLØØP=_____.

This message (controlled by Subroutine SIMEQ) indicates that radial equilibrium could not be established at some radial position within the annulus, because the four simultaneous equations which must be solved for the gradients of the principal unknowns are not independent. Appearance of this message is highly improbable, since such an interdependence would be a numerical coincidence. Results from the loop in which the error was detected are printed, and the remainder of the case is aborted.

4. ITERATIØN FØR STREAMLINE PØSITIØNS, PRESSURE-LØSS CØEFFICIENTS, ØR STAGE WØRK ØUTPUT HAS NØT CØNVERGED.

The number of loops on streamline position, streamline values of total-pressure-loss coefficient, and streamline values of total temperature drop is limited to twenty-five. If any one of these quantities has not converged to within the preset tolerance by this pass, the results are printed. The program is, however, allowed to proceed to the next design station if one exists. For designs in which the meridional velocity distributions are not extreme, it is extremely unlikely that the streamline positions will fail to converge. Moreover, the loss coefficient

and power output iterations have converged rapidly in all cases investigated so far. However, the error message is provided to guard against the possibility that one or more of these quantities are oscillating about the converged value but just outside the tolerance.

It is possible that the streamline position iteration may fail to converge when the secondary option of constant work output at a rotor exit is chosen. When this occurs, the case should be rerun employing the primary option of specifying radial gradients of meridional velocity.

The loss iteration convergence behavior is dependent on both the specific correlation chosen and the damping factor employed by Subroutine LØSCØR. The values of the input constants to the correlation should accordingly be checked, particularly for continuity at the change point of the reaction term. The damping factor (FY) is currently set at zero; higher values will, of course, slow the convergence and should therefore be used only as needed.

MISCELLANEOUS OPERATIONAL INFORMATION

Program TD2 requires approximately 16,000 storage locations for execution on a CDC 6600 computer system. Of this total, approximately 4000 locations are reserved for the operating system and library subroutines. An additional 4000 locations are used during program loading.

Typical running time for the program using the CDC 6600 system is 4 seconds per single stage, including input-output operations. If full output is obtained for the case, the running time increases to about 5 seconds. Using an IBM 7044/94 directly coupled system, the running time for a multistage analysis with standard output is approximately 9 seconds per stage. These figures can vary in either direction by a factor of two or three, depending on the total number of stages involved and the ease with which the solutions are obtained.

Adoption of the simultaneous Runge-Kutta integration appears to have eliminated the occasional inaccuracies in static pressure distributions produced by the prior program. For a relatively conventional design at a moderate value of hub-to-tip radius ratio, sufficient accuracy can be obtained with as few as five streamlines. However, a nine streamline analysis is generally recommended. If the accuracy of the solution is in question at any time it is suggested that a larger number of streamlines be specified to check over-all accuracy.

The convergence procedures for satisfying the design mass flow and the location of the streamlines to define stream filaments of equal flow have been found to be adequate with the maximum number of loops specified within the program. The power output and loss correlation iterations, which are made simultaneously with streamline position iteration, do not appear to affect the convergence of the latter.

SAMPLE CASE

Introduction

The selected example to illustrate the use of the program is for a two-spool design requirement which could not be completed using the original version of the program. The design has two hp stages and five lp stages. The second sample case of Reference 2 is a design analysis for the hp spool and the first three stages of the lp shaft; at this stage in the original design analysis the radial variation of axial velocity had degenerated to a point that excluded a converged solution for the flow field at subsequent design stations. Various attempts to use the original design analysis variable to obtain a complete design for the entire lp spool proved unsuccessful. The failure of the original program to complete this and similar designs led to the revision of the analysis procedure. Thus, the sample case in addition to illustrating the input and output of the new program, serves to justify the changes in the design analysis variables. Input data sheets and the computer printout for the sample case are given in Appendix I; a stage-by-stage tabulation of the specified design requirement forms the initial portion of this printout.

Discussion of the Sample Case

The actual design requirements, the selection of the annulus geometry, and the power output split between stages are of relatively little importance in the context of a demonstration of the capabilities of the computer program. Similarly, the predicted performance of the individual stages, the two spools, and the over-all turbine are of secondary importance. For the analysis, the coefficients defining the correlation of total-pressure-loss coefficient differ in some instances from the recommended values given in Reference 2. These coefficients were made equal to those assumed in the original sample case for this turbine design so that reasonably valid comparisons can be made between the results of the two versions of the turbine design program. A nonstandard correlation had been used with the original version of the program to limit the level of loss coefficients near the rotor blade hub sections in an

attempt to complete the design-point analysis for all five stages of the lp shaft.

In the case of the hp stages, the option selected for the specification of the stator exit conditions is that in which a mean streamline tangential velocity is given and the meridional velocity gradient is specified to be radially constant at zero. Radially constant work extraction is specified for the rotors. Of interest in the comparison between the first stator exit condition of the current sample case and sample case II of Reference 2 is the fact that the elimination of a meridional velocity difference of approximately 48 ft per sec between hub and casing values where the mean streamline value was approximately 437 ft per sec has produced a tangential velocity distribution which is not significantly different from the "free-vortex" distribution originally specified. For the analysis using the original program, the specified hub and casing values of first stator exit tangential velocity were 1425 and 1321 ft per sec, respectively; in the present case the computed tangential velocities are 1431 and 1318 ft per sec, respectively. The fact that relatively small changes in the specification of tangential velocity distribution could produce large changes in the meridional velocity distribution at stator exit was, of course, the reason why the alternative to specifying tangential velocity as a function of radius at stator exit design stations was provided in the new program.

For rotor exit flow conditions in the hp stages, the radially constant power output was specified to illustrate the simplest option. A number of factors made it impossible to compare directly the results from the original and current sample cases. However, one point of interest is that the improved solution procedure has produced the expected decrease in static pressure from casing to hub at the first stage exit where the meridional component of streamline curvature is zero. Although the actual static pressure variation from hub to casing is extremely small, the output from the original version of the program (see page 78 of Ref 2) showed a small increase in static pressure with decreasing radius from the mean streamline to the hub. It is reasonable to assume, therefore, that the numerical accuracy of the forward-step procedure has been

improved in the revised version of the computer program.

Results for the complete lp spool have been obtained without the specification of mixing. That is, a stream-filament solution is obtained without any redistribution of losses between streamtubes. The specification of analysis variables consisted of stator exit tangential velocities and meridional velocity gradients at stator and stage exit design stations. The gradients were specified to be zero for a constant meridional velocity solution at each design station. A review of the output data will show that the computed flow angles, absolute and relative, all show mechanically acceptable variations with radius.

During the previous attempts to complete the lp spool design, considerable difficulty was experienced in estimating streamline values of total temperature drop which would allow a valid solution of radial equilibrium at rotor exit design stations even when full mixing of the total-pressure profile was specified at each stage inlet. Since these stages have near-zero exit swirl, the requirement of radial equilibrium is for approximately constant static pressure across the annulus. Thus, if the meridional velocity is also to be held fairly constant so as to produce a mechanically acceptable design, it was necessary for the designer to choose streamline values of ΔT_0 such that $\Delta T_0 / \eta_s T_{00}$ did not vary from hub to casing. This process proved quite difficult for designs employing the internal performance correlation.

When the revised program is used, the streamline values of total temperature drop are in effect automatically chosen by the program in the course of satisfying radial equilibrium simultaneously with the assumed row performance and the specified distribution of meridional velocity. Examination of the output reveals that each of the rotors of the lp spool required increasing total temperature drop with radius. For the five stages, casing values of ΔT_0 exceed those at the hubs by 6.5, 2.6, 3.7, 4.9, and 9.0 deg R, respectively. As would be expected, these results exhibit generally increasing radial variation of total temperature drop as the ratio of hub-to-tip losses increases. (The first stage of the lp spool must employ additional variable work to overcome the inlet total-pressure profile generated by the constant work rotors of the

hp spool.) Thus, local limiting loading near the inefficient hub sections has been avoided by unloading these sections as required during the course of the calculations.

CONCLUSIONS

1. A new computer program has been written to solve the basic equations which govern the design-point performance of axial flow turbines. The program retains most of the valuable features of the prior version, allowing the turbine designer to take into account the effects of non-uniform inlet conditions, coolant flows, interfilament mixing, and station-to-station variation of specific heat. The optional specification of stator exit flow conditions by the radial variation of tangential velocity has been replaced by a single value of tangential velocity at the mean streamline and the gradient of meridional velocity as a function of radius. Similarly, the gradient of meridional velocity as a function of radius has been introduced as a design analysis variable replacing the specification of a rotor work function for designs having a radial variation of work output.
2. The introduction of the new design analysis variables has produced a greatly improved turbine design tool. Whereas the use of the replaced specifications in conjunction with fully consistent total-pressure-loss coefficients frequently resulted in unacceptable meridional velocity distributions or no solution for some applications, valid solutions have been obtained at the first attempt for every case investigated to date in which the new analysis variables have been used. Hence, preliminary comparisons of a family of related designs using realistic assessments of blade element performance can be performed rapidly and efficiently.

REFERENCES

1. Carter, A. F., Platt, M., and Lenherr, F. K., Analysis of Geometry and Design Point Performance of Axial Flow Turbines, Part I - Development of the Analysis Method and the Loss Coefficient Correlation (NASA CR-1181), National Aeronautics and Space Administration, Washington, D. C., September, 1968.

2. Platt, M. and Carter, A. F., Analysis of Geometry and Design Point Performance of Axial Flow Turbines, Part II - Computer Program (NASA CR-1187), National Aeronautics and Space Administration, Washington, D. C., October, 1968.

3. Romanelli, M. J., "Runge-Kutta Methods for the Solution of Ordinary Differential Equations", Mathematical Methods for Digital Computers, Chapter 9, edited by A. Ralston and H. S. Wilf, John Wiley and Sons, Inc., New York, 1960.

NOMENCLATURE

The nomenclature for axisymmetric flow in an arbitrary turbine annulus is illustrated in Figure 1. The turbine velocity triangle nomenclature is shown in Figure 2. (Figures 1 and 2 appear at the end of this nomenclature.)

Symbol	Description	Units
A	Streamline angle of inclination in the meridional plane	deg, rad
A	Annulus area	ft^2, in^2
a	Constants in loss correlation	--
C	Coefficient	--
c_p	Specific heat at constant pressure	Btu per lbm deg R
f, g	Function or variable	--
f_L	Additional loss factor	--
g_o	Constant in Newton's law	ft lbm per lbf sec^2
J	Mechanical equivalent of heat	ft lbf per Btu
j	Streamline index	--
M	Mach number	--
n	Number of streamlines	--
n'	Number of design stations on a spool	--
n''	Number of spools on the turbine	--
P	Power output	hp, ft lbf per sec
p	Static pressure	psf, psi
p_o	Total pressure	psf, psi
R	Gas constant	ft lbf per lbm deg R
R	Reaction of a blade row	--
r	Radial position	ft, in
r_{js}	Blade-to-jet speed ratio	--
$1/r_m$	Streamline curvature in the meridional plane	ft^{-1}, in^{-1}

Symbol	Description	Units
π_{pts}	Total-to-static pressure ratio	--
π_{ptt}	Total-to-total pressure ratio	--
T	Static temperature	deg R
T_0	Total temperature	deg R
ΔT_0	Drop in total temperature	deg R
u	Blade velocity	fps
V	Velocity	fps
V_m	Meridional component of velocity	fps
V_u	Tangential component of velocity	fps
V_x	Axial component of velocity	fps
W	Work output along a streamline	Btu per lbm
w_c	Coolant flow as fraction of inlet flow	--
w_T	Total mass flow at a design station	lbm per sec
w	Mass flow function	lbm per sec
x	Axial position	ft, in
x	Independent variable	--
x_m	Mixing coefficient	--
Y	Pressure-loss coefficient	--
$\mathcal{Y}$	Solution vector	--
y	Dependent variable	--
β	Flow angle	deg, rad
γ	Ratio of specific heats	--
η_B	Blade row efficiency	--
η_R	Rotor isentropic efficiency	--
η_S	Stage isentropic efficiency	--
η_{stat}	Static efficiency	--
η_{Tot}	Total efficiency	--
ρ	Density	lbm per cu ft
Ω	Rotative speed	rpm, rad per sec

Subscript	Description
c	Coolant
c	Casing streamline

Subscript	Description
ex	Blade row exit
exit	Turbine exit
h	Hub streamline
i	Design station index
i′	Blade row index
i″	Stator, rotor, or stage index
i‴	Spool index
in	Blade row inlet
inlet	Turbine inlet
initial	First estimate
j	Streamline index
k	Index of the downstream design station
m	Mean streamline
N	Nozzle
n	Last streamline at a design station
n′	Last design station of a spool
new	New estimate
old	Old estimate
ov	Over-all
R	Rotor
s	Isentropic
S	Stage
T	Total
ζ	Hub or casing
0	Stage inlet
1	Stator exit/rotor
2	Stage exit inlet

Superscript	Description
′	Relative value
′	Nondimensional value

Superscript	Description
$\bar{}$	Mean or mass flow weighted value
*	Value which is modified if mixing or cooling are specified

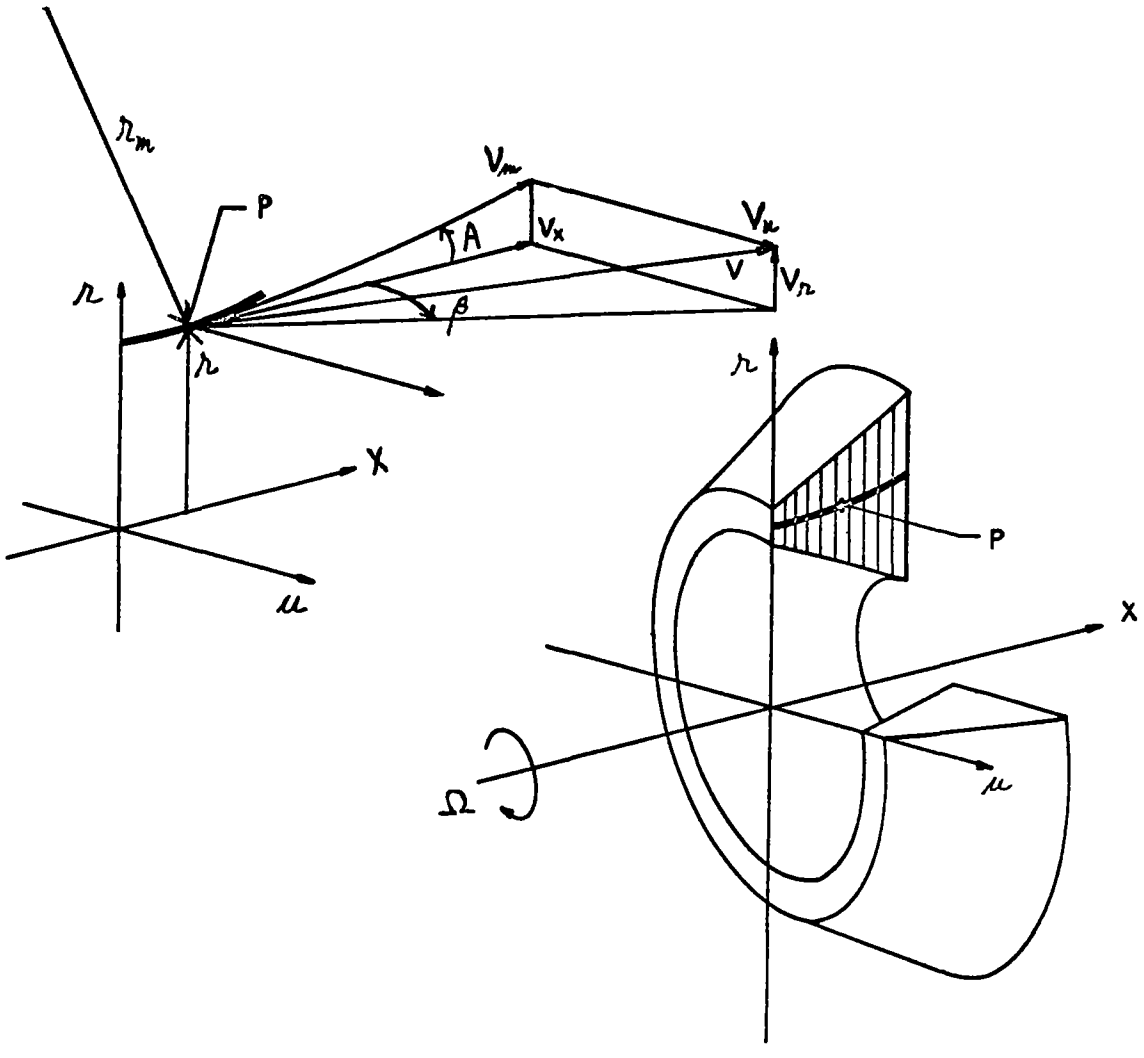

FIGURE 1 - NOMENCLATURE FOR AXISYMMETRIC FLOW IN AN ARBITRARY TURBINE ANNULUS

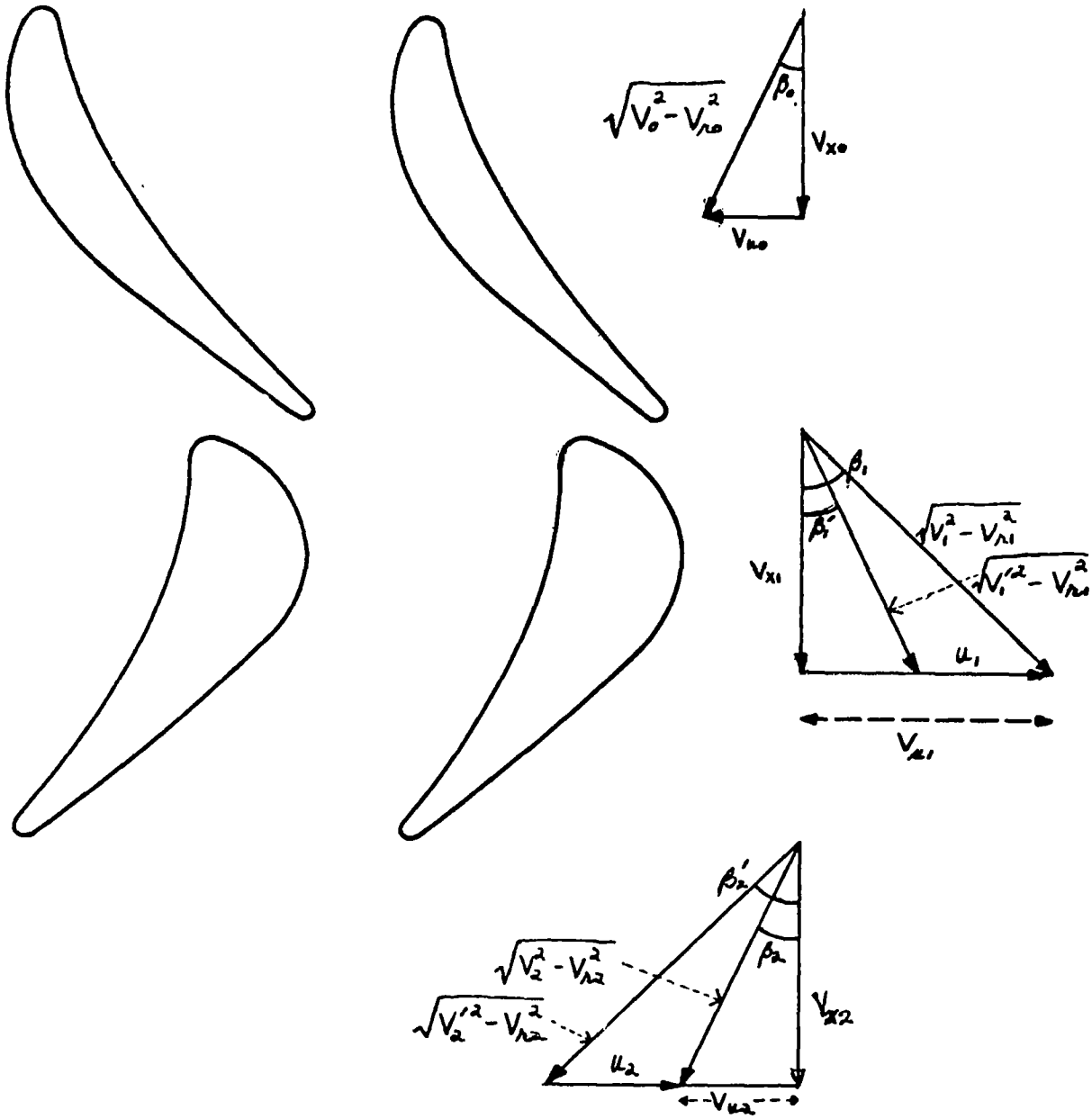

FIGURE 2 - TURBINE VELOCITY TRIANGLE NOMENCLATURE USED IN THE STREAM-FILAMENT ANALYSIS

APPENDIX I

INPUT DATA AND COMPUTER OUTPUT FOR THE SAMPLE CASE

The sample case presented on the following pages has been selected to illustrate the operation of the revised input option of specifying gradients of meridional velocity at blade row exit design stations. The data sheets from which the input cards were punched are presented first, followed by the actual computer output for the case. This sample design is intended only as an illustration of program capabilities and does not necessarily represent a final design. Therefore, the meridional velocity gradients have simply been set equal to zero for each row except the rotors of the HP spool, where radially constant work output has been specified.

NORTHERN RESEARCH AND ENGINEERING CORPORATION

DATA INPUT SHEET

ENGINEER: FKL PROJECT: PROGRAM TD2 PROJECT NO: 1147

TITLE: SAMPLE CASE SHEET: 1 OF 2

LOCATION

1 6	7 12	13 18	19 24	25 30	31 36	37 42	43 48	49 54	55 60	61 66	67 72
		NASA MULTISTAGE TWINSPØØL TURBINE WITHØUT MIXING									
	1				2	0	0	0	0		
$NAM1											
NSPØØL=2,NLINES=9,GASC=53.35,FLWM=111.9,NLT=1,											
RLT(1)=14.5,TØLT(1)=2410.,PØLT(1)=342.4,BETLT(1)=0.0 $											
$NAM2											
RPM=10800.,HP=24530.,NSTG=2,FHP(1)=.49,.51,CP(1)=2*.288,2*.282,.275,											
XSTAT(1)=0.0,1.5,3.0,4.5,6.0,7.5,9.0,											
RANN(1,1)=13.975,14.0,14.025,14.05,14.075,14.1,14.14,											
RANN(1,2)=14.85,15.1,15.35,15.60,15.85,16.1,16.65,											
FLWCN(1)=2*.01698,.01609,0.0,TØC(1)=4*1400.,											
NXT=1, RNXT(1,1)=14.69, RNXT(1,2)=14.96,											
IWRL(1)=2*0, VUM(1)=1370.7,1395.6, DVMDR(1,1)=0.0, DVMDR(1,3)=0.0,											
YCØN(1)=.043,.0936,.5,1.0,0.0,.03,.157255,3.6,2.0,											
IPØF(1)=0,0 $											
$NAM2											
RPM=4646., HP=20110., NSTG=5, FHP(1)=.1723,.1856,.1995,.2139,.2287,											
CP(1)=2*.275,2*.273,2*.271,2*.268,2*.265,.262,											
XSTAT(1)=7.5,9.0,10.5,12.0,13.5,15.0,16.5,18.0,19.5,21.,22.5,24.,25.5,											
RANN(1,1)=14.075,14.1,14.14,14.18,14.22,14.26,14.30,14.34,14.38,											

NORTHERN RESEARCH AND ENGINEERING CORPORATION

DATA INPUT SHEET

ENGINEER: FKL PROJECT: PROGRAM TD2 PROJECT NO: 1147

TITLE: SAMPLE CASE SHEET: 2 OF 2

LOCATION

```
14.42,14.46,14.50,14.54,
RANN(1,2)=15.85,16.1,16.65,17.20,17.75,18.30,18.85,19.40,19.95,
20.50,21.05,21.60,22.15,
FLWCN(1)=10*0.0,TØC(1)=10*0.0,
NXT=1, RNXT(1,1)=15.5, RNXT(1,2)=16.0, RNXT(1,3)=16.5,
RNXT(1,4)=17.0, RNXT(1,5)=17.5,
RSXT(1,1)=15.5, RSXT(1,2)=16.0, RSXT(1,3)=16.5,
RSXT(1,4)=17.0, RSXT(1,5)=17.5,
IWRL(1)=5*0, VUM(1)=728.5,767.9,784.2,813.1,955.9, IPØF(1)=5*1,
DVMDR(1,1)=0.0,
DVMDR(1,2)=0.0,
DVMDR(1,3)=0.0,
DVMDR(1,4)=0.0,
DVMDR(1,5)=0.0,
DVMDR(1,6)=0.0,
DVMDR(1,7)=0.0,
DVMDR(1,8)=0.0,
DVMDR(1,9)=0.0,
DVMDR(1,10)=0.0 $
```

PROGRAM TD2 - AERODYNAMIC CALCULATIONS FOR THE DESIGN OF AXIAL TURBINES

NASA MULTISTAGE TWINSPOOL TURBINE WITHOUT MIXING

*** GENERAL INPUT DATA ***

NUMBER OF SPOOLS = 2
NUMBER OF STREAMLINES = 9

GAS CONSTANT = 53.35000 LBF FT/LBM DEG R
INLET MASS FLOW = 111.90000 LBM/SEC

* TABULAR INLET SPECIFICATIONS *

RADIAL COORDINATE (IN)	TOTAL TEMPERATURE (DEG R)	TOTAL PRESSURE (PSI)	ABSOLUTE FLOW ANGLE (DEG)
14.5000	2410.00	342.4000	0.000

*** INPUT DATA FOR SPOOL 1 ***

** DESIGN REQUIREMENTS **

ROTATIVE SPEED = 10800.0 RPM
POWER OUTPUT = 24530.00 HP

** ANALYSIS VARIABLES **

NUMBER OF STAGES = 2

* POWER-OUTPUT SPLIT *

STAGE NUMBER	FRACTION OF SPOOL POWER OUTPUT
1	.49000
2	.51000

* SPECIFIC-HEAT SPECIFICATION *

DESIGN STATION NUMBER	SPECIFIC HEAT (BTU/LBM DEG R)
1	.28800
2	.28800
3	.28200
4	.28200
5	.27500

* ANNULUS SPECIFICATION *

STATION NUMBER	AXIAL POSITION (IN)	HUB RADIUS (IN)	CASING RADIUS (IN)
1	0.0000	13.9750	14.8500
2	1.5000	14.0000	15.1000
3	3.0000	14.0250	15.3500
4	4.5000	14.0500	15.6000
5	6.0000	14.0750	15.8500
6	7.5000	14.1000	16.1000
7	9.0000	14.1400	16.6500

* COOLANT SCHEDULE *

BLADE ROW NUMBER	FRACTION OF INLET MASS FLOW	TOTAL TEMPERATURE (DEG R)
1	.01698	1400.00
2	.01698	1400.00
3	.01609	1400.00
4	0.00000	1400.00

* BLADE-ROW EXIT CONDITIONS *

STATOR 1

RADIAL POSITION (IN)	MERIDIONAL VELOCITY GRADIENT (PER SEC)
14.6900	0.00

WHIRL VELOCITY AT THE MEAN STREAMLINE = 1370.7000 FEET PER SEC

ROTOR 1

SOLUTION COMPUTED FOR RADIALLY CONSTANT WORK OUTPUT

STATOR 2

RADIAL POSITION (IN)	MERIDIONAL VELOCITY GRADIENT (PER SEC)
14.9600	0.00

WHIRL VELOCITY AT THE MEAN STREAMLINE = 1395.6000 FEET PER SEC

ROTOR 2

SOLUTION COMPUTED FOR RADIALLY CONSTANT WORK OUTPUT

* BASIC INTERNAL LOSS CORRELATION *

TAN(INLET ANGLE) + TAN(EXIT ANGLE) (.03000000 + .15725500 * (V RATIO)** 3.60) IF (V RATIO) .LT. .50000000

```
Y = ---------------------------------------- *TIMES*
    1.00000000 + 0 00000000 * COS(EXIT ANGLE)          ( .04300000 +  .09360000 *((V RATIO)- .500))  IF (V RATIO) .GE.  .50000000

                THE PRESSURE-LOSS COEFFICIENT COMPUTED IN THIS MANNER MAY NOT EXCEED A LIMIT OF   2.00000000
```

*** OUTPUT OF DESIGN ANALYSIS FOR SPOOL 1 ***

** STATOR INLET 1 **

STREAMLINE NUMBER	RADIAL POSITION (IN)	MASS-FLOW FUNCTION (LBM/SEC)	MERIDIONAL VELOCITY (FPS)	AXIAL VELOCITY (FPS)	WHIRL VELOCITY (FPS)	ABSOLUTE VELOCITY (FPS)	ABSOLUTE MACH NUMBER	ABSOLUTE TOTAL PRESSURE (PSI)	ABSOLUTE TOTAL TEMPERATURE (DEG R)	ABSOLUTE FLOW ANGLE (DEG)
1	14.0000	0.00000	427.145	427.086	0.000	427.145	.18380	342.4000	2410.00	0.000
2	14.1415	13.98750	427.145	426.872	0.000	427.145	.18380	342.4000	2410.00	0.000
3	14.2817	27.97500	427.145	426.507	0.000	427.145	.18380	342.4000	2410.00	0.000
4	14.4207	41.96250	427.145	425.994	0.000	427.145	.18380	342.4000	2410.00	0.000
5	14.5585	55.95000	427.145	425.337	0.000	427.145	.18380	342.4000	2410.00	0.000
6	14.6953	69.93750	427.145	424.539	0.000	427.145	.18380	342.4000	2410.00	0.000
7	14.8311	83.92500	427.145	423.604	0.000	427.145	.18380	342.4000	2410.00	0.000
8	14.9660	97.91250	427.145	422.535	0.000	427.145	.18380	342.4000	2410.00	0.000
9	15.1000	111.90000	427.145	421.334	0.000	427.145	.18380	342.4000	2410.00	0.000

STREAMLINE NUMBER	STATIC PRESSURE (PSI)	STATIC TEMPERATURE (DEG R)	STREAMLINE SLOPE ANGLE (DEG)	STREAMLINE CURVATURE (PER IN)
1	334.9123	2397.35	.955	0.00000
2	334.9123	2397.35	2.049	0.00000
3	334.9123	2397.35	3.134	0.00000
4	334.9123	2397.35	4.208	0.00000
5	334.9123	2397.35	5.274	0.00000
6	334.9123	2397.35	6.332	0.00000
7	334.9123	2397.35	7.383	0.00000
8	334.9123	2397.35	8.426	0.00000
9	334.9123	2397.35	9.462	0.00000

** STATOR 1 MIXED AND/OR COOLED QUANTITIES **

STREAMLINE NUMBER	ABSOLUTE TOTAL PRESSURE (PSI)	ABSOLUTE TOTAL TEMPERATURE (DEG R)
1	342.4000	2393.14
2	342.4000	2393.14
3	342.4000	2393.14
4	342.4000	2393.14

5	342.4000	2393.14
6	342.4000	2393.14
7	342.4000	2393.14
8	342.4000	2393.14
9	342.4000	2393.14

** STATOR EXIT - ROTOR INLET 1 **

STREAMLINE NUMBER	RADIAL POSITION (IN)	MASS-FLOW FUNCTION (LBM/SEC)	MERIDIONAL VELOCITY (FPS)	AXIAL VELOCITY (FPS)	WHIRL VELOCITY (FPS)	ABSOLUTE VELOCITY (FPS)	ABSOLUTE MACH NUMBER	ABSOLUTE TOTAL PRESSURE (PSI)	ABSOLUTE TOTAL TEMPERATURE (DEG R)	ABSOLUTE FLOW ANGLE (DEG)
1	14.0250	0.00000	435.227	435.167	1430.928	1495.270	.66592	333.8600	2393.14	73.080
2	14.1993	14.22491	435.227	434.942	1414.738	1480.171	.65874	334.0800	2393.14	72.911
3	14.3707	28.44983	435.227	434.559	1399.532	1465.644	.65184	334.2854	2393.14	72.750
4	14.5395	42.67474	435.227	434.025	1384.866	1451.646	.64521	334.4776	2393.14	72.599
5	14.7059	56.89965	435.227	433.348	1370.700	1438.138	.63882	334.6577	2393.14	72.456
6	14.8699	71.12456	435.227	432.532	1356.999	1425.085	.63266	334.8268	2393.14	72.321
7	15.0319	85.34948	435.227	431.583	1343.730	1412.457	.62671	334.9857	2393.14	72.194
8	15.1919	99.57439	435.227	430.506	1330.866	1400.224	.62095	335.1351	2393.14	72.075
9	15.3500	113.79930	435.227	429.305	1318.379	1388.360	.61538	335.2760	2393.14	71.963

STREAMLINE NUMBER	STATIC PRESSURE (PSI)	STATIC TEMPERATURE (DEG R)	STREAMLINE SLOPE ANGLE (DEG)	STREAMLINE CURVATURE (PER IN)	BLADE VELOCITY (FPS)	RELATIVE VELOCITY (FPS)	RELATIVE MACH NUMBER	RELATIVE TOTAL PRESSURE (PSI)	RELATIVE TOTAL TEMPERATURE (DEG R)	RELATIVE FLOW ANGLE (DEG)
1	251.9823	2238.10	.955	.00000	1321.825	448.597	.19978	258.6483	2252.05	14.025
2	253.6240	2241.21	2.074	.00000	1338.251	441.897	.19666	260.1255	2254.75	9.974
3	255.1965	2244.18	3.175	.00000	1354.408	437.560	.19460	261.5987	2257.46	5.928
4	256.6994	2247.01	4.258	.00000	1370.318	435.470	.19355	263.0693	2260.16	1.920
5	258.1399	2249.72	5.327	-.00000	1385.996	435.496	.19345	264.5385	2262.87	-2.022
6	259.5223	2252.31	6.380	-.00000	1401.459	437.492	.19422	266.0074	2265.58	-5.869
7	260.8509	2254.79	7.420	-.00000	1416.722	441.305	.19581	267.4770	2268.30	-9.599
8	262.1293	2257.18	8.447	-.00000	1431.799	446.778	.19813	268.9484	2271.02	-13.195
9	263.3609	2259.47	9.462	-.00000	1446.703	453.751	.20112	270.4224	2273.75	-16.642

** ROTOR 1 MIXED AND/OR COOLED QUANTITIES **

STREAMLINE NUMBER	ABSOLUTE TOTAL PRESSURE (PSI)	ABSOLUTE TOTAL TEMPERATURE (DEG R)	RELATIVE TOTAL PRESSURE (PSI)	RELATIVE TOTAL TEMPERATURE (DEG R)
1	333.8600	2376.83	258.1816	2235.74
2	334.0800	2376.83	259.6656	2238.44
3	334.2854	2376.83	261.1458	2241.15
4	334.4776	2376.83	262.6235	2243.85
5	334.6577	2376.83	264.0998	2246.56

6	334.8268	2376.83	265.5759	2249.27
7	334.9857	2376.83	267.0529	2251.99
8	335.1351	2376.83	268.5318	2254.71
9	335.2760	2376.83	270.0134	2257.44

** STAGE EXIT 1 **

STREAMLINE NUMBER	RADIAL POSITION (IN)	MASS-FLOW FUNCTION (LBM/SEC)	MERIDIONAL VELOCITY (FPS)	AXIAL VELOCITY (FPS)	WHIRL VELOCITY (FPS)	ABSOLUTE VELOCITY (FPS)	ABSOLUTE MACH NUMBER	ABSOLUTE TOTAL PRESSURE (PSI)	ABSOLUTE TOTAL TEMPERATURE (DEG R)	ABSOLUTE FLOW ANGLE (DEG)
1	14.0500	0.00000	433.925	433.865	26.960	434.762	.19895	202.4322	2119.19	3.556
2	14.2612	14.46245	443.213	442.912	32.006	444.368	.20337	202.6695	2119.19	4.133
3	14.4656	28.92494	450.708	449.989	36.430	452.178	.20697	202.8670	2119.19	4.628
4	14.6643	43.38745	456.730	455.429	40.351	458.509	.20989	203.0301	2119.19	5.063
5	14.8503	57.84998	461.577	459.535	43.876	463.658	.21226	203.1649	2119.19	5.454
6	15.0483	72.31252	465.443	462.511	47.082	467.819	.21418	203.2754	2119.19	5.813
7	15.2349	86.77508	468.457	464.493	50.028	471.120	.21570	203.3643	2119.19	6.147
8	15.4187	101.23765	470.698	465.568	52.762	473.646	.21687	203.4333	2119.19	6.466
9	15.6000	115.70025	472.218	465.793	55.320	475.447	.21770	203.4834	2119.19	6.773

STREAMLINE NUMBER	STATIC PRESSURE (PSI)	STATIC TEMPERATURE (DEG R)	STREAMLINE SLOPE ANGLE (DEG)	STREAMLINE CURVATURE (PER IN)	BLADE VELOCITY (FPS)	RELATIVE VELOCITY (FPS)	RELATIVE MACH NUMBER	RELATIVE TOTAL PRESSURE (PSI)	RELATIVE TOTAL TEMPERATURE (DEG R)	RELATIVE FLOW ANGLE (DEG)
1	197.2242	2105.80	.955	-.00000	1324.181	1367.871	.62594	253.4960	2238.31	-71.507
2	197.2249	2105.21	2.114	-.00000	1344.089	1384.919	.63383	255.0667	2241.04	-71.347
3	197.2258	2104.71	3.236	-.00000	1363.351	1401.377	.64144	256.6071	2243.79	-71.267
4	197.2269	2104.30	4.327	-.00000	1382.080	1417.335	.64880	258.1233	2246.56	-71.251
5	197.2282	2103.97	5.391	.00000	1400.363	1432.868	.65597	259.6210	2249.36	-71.285
6	197.2296	2103.69	6.434	.00000	1418.271	1448.032	.66295	261.1041	2252.18	-71.360
7	197.2312	2103.47	7.459	.00000	1435.859	1462.867	.66978	262.5752	2255.02	-71.470
8	197.2329	2103.30	8.467	.00000	1453.177	1477.403	.67646	264.0361	2257.88	-71.611
9	197.2348	2103.18	9.462	.00000	1470.265	1491.663	.68301	265.4883	2260.76	-71.779

** STAGE 1 PERFORMANCE **

STREAMLINE NUMBER	STATOR REACTION	ROTOR REACTION	STATOR PRESSURE LOSS COEFFICIENT	ROTOR PRESSURE LOSS COEFFICIENT	STATOR BLADE ROW EFFICIENCY	ROTOR BLADE ROW EFFICIENCY	ROTOR ISENTROPIC EFFICIENCY	STAGE ISENTROPIC EFFICIENCY
1	.28566	.32795	.10430	.10640	.92036	.92776	.94940	.90012
2	.28858	.31908	.10341	.10223	.92070	.93093	.95032	.90201
3	.29144	.31224	.10260	.09885	.92100	.93345	.95096	.90358
4	.29425	.30725	.10186	.09608	.92127	.93543	.95137	.90489
5	.29701	.30393	.10118	.09380	.92151	.93698	.95159	.90597
6	.29973	.30213	.10057	.09191	.92172	.93820	.95166	.90685

7	.30241	.30167	.10001	.09035	.92190	.93913	.95160	.90757
8	.30506	.30241	.09951	.08909	.92205	.93980	.95140	.90812
9	.30766	.30419	.09906	.08810	.92217	.94025	.95109	.90853

* MASS-AVERAGED QUANTITIES *

STATOR BLADE-ROW EFFICIENCY = .92143

ROTOR BLADE-ROW EFFICIENCY = .93599

STAGE WORK = 73.427 BTU PER LBM

STAGE TOTAL EFFICIENCY = .91851

STAGE STATIC EFFICIENCY = .87271

STAGE BLADE- TO JET-SPEED RATIO = .67350

** STATOR 2 MIXED AND/OR COOLED QUANTITIES **

STREAMLINE NUMBER	ABSOLUTE TOTAL PRESSURE (PSI)	ABSOLUTE TOTAL TEMPERATURE (DEG R)
1	202.4322	2108.17
2	202.6695	2108.17
3	202.8670	2108.17
4	203.0301	2108.17
5	203.1649	2108.17
6	203.2754	2108.17
7	203.3643	2108.17
8	203.4333	2108.17
9	203.4834	2108.17

** STATOR EXIT - ROTOR INLET 2 **

STREAMLINE NUMBER	RADIAL POSITION (IN)	MASS-FLOW FUNCTION (LBM/SEC)	MERIDIONAL VELOCITY (FPS)	AXIAL VELOCITY (FPS)	WHIRL VELOCITY (FPS)	ABSOLUTE VELOCITY (FPS)	ABSOLUTE MACH NUMBER	ABSOLUTE TOTAL PRESSURE (PSI)	ABSOLUTE TOTAL TEMPERATURE (DEG R)	ABSOLUTE FLOW ANGLE (DEG)
1	14.0750	0.00000	510.394	510.323	1471.473	1557.477	.74323	197.2437	2108.17	70.873
2	14.3138	14.68748	510.394	510.051	1451.391	1538.518	.73339	197.6342	2108.17	70.637
3	14.5469	29.37496	510.394	509.590	1432.093	1520.326	.72399	197.9755	2108.17	70.413
4	14.7748	44.06244	510.394	508.951	1413.510	1502.834	.71497	198.2737	2108.17	70.198
5	14.9979	58.74993	510.394	508.147	1395.600	1486.002	.70631	198.5355	2108.17	69.993
6	15.2167	73.43741	510.394	507.186	1378.319	1469.784	.69800	198.7659	2108.17	69.798
7	15.4314	88.12489	510.394	506.078	1361.619	1454.134	.69000	198.9685	2108.17	69.611
8	15.6424	102.81237	510.394	504.830	1345.449	1439.004	.68228	199.1458	2108.17	69.433
9	15.8500	117.49985	510.394	503.449	1329.760	1424.347	.67482	199.2997	2108.17	69.263

STREAMLINE NUMBER	STATIC PRESSURE (PSI)	STATIC TEMPERATURE (DEG R)	STREAMLINE SLOPE ANGLE (DEG)	STREAMLINE CURVATURE (PER IN)	HUB VELOCITY (FPS)	RELATIVE VELOCITY (FPS)	RELATIVE MACH NUMBER	RELATIVE TOTAL PRESSURE (PSI)	RELATIVE TOTAL TEMPERATURE (DEG R)	RELATIVE FLOW ANGLE (DEG)
1	139.0482	1936.38	.955	0.00000	1326.537	530.573	.25319	145.0316	1956.32	15.855
2	140.5577	1940.54	2.099	0.00000	1349.041	520.555	.24814	146.3638	1959.73	11.347
3	141.9803	1944.45	3.216	0.00000	1371.009	514.036	.24479	147.6852	1963.19	6.835
4	143.3240	1948.22	4.309	0.00000	1392.487	510.826	.24302	148.9990	1966.70	2.365
5	144.5959	1951.79	5.378	0.00000	1413.517	510.708	.24275	150.3079	1970.26	-2.019
6	145.8021	1955.18	6.427	0.00000	1434.135	513.437	.24383	151.6142	1973.85	-6.280
7	146.9483	1958.42	7.456	0.00000	1454.374	518.753	.24615	152.9198	1977.48	-10.386
8	148.0392	1961.52	8.467	0.00000	1474.262	526.398	.24958	154.2265	1981.15	-14.314
9	149.0792	1964.49	9.462	0.00000	1493.827	536.115	.25400	155.5360	1984.85	-18.050

** ROTOR 2 MIXED AND/OR COOLED QUANTITIES **

STREAMLINE NUMBER	ABSOLUTE TOTAL PRESSURE (PSI)	ABSOLUTE TOTAL TEMPERATURE (DEG R)	RELATIVE TOTAL PRESSURE (PSI)	RELATIVE TOTAL TEMPERATURE (DEG R)
1	197.2437	2108.17	145.0316	1956.32
2	197.6342	2108.17	146.3638	1959.73
3	197.9755	2108.17	147.6852	1963.19
4	198.2737	2108.17	148.9990	1966.70
5	198.5355	2108.17	150.3079	1970.26
6	198.7659	2108.17	151.6142	1973.85
7	198.9685	2108.17	152.9198	1977.48
8	199.1458	2108.17	154.2265	1981.15
9	199.2997	2108.17	155.5360	1984.85

** STAGE EXIT 2 **

STREAMLINE NUMBER	RADIAL POSITION (IN)	MASS-FLOW FUNCTION (LBM/SEC)	MERIDIONAL VELOCITY (FPS)	AXIAL VELOCITY (FPS)	WHIRL VELOCITY (FPS)	ABSOLUTE VELOCITY (FPS)	ABSOLUTE MACH NUMBER	ABSOLUTE TOTAL PRESSURE (PSI)	ABSOLUTE TOTAL TEMPERATURE (DEG R)	ABSOLUTE FLOW ANGLE (DEG)
1	14.1000	0.00000	501.935	501.817	34.207	503.099	.24665	110.1343	1837.96	3.900
2	14.3940	14.68743	522.790	521.947	43.555	524.601	.25730	110.4846	1837.96	4.770
3	14.6718	29.37492	542.108	539.915	51.063	544.507	.26718	110.7762	1837.96	5.403
4	14.9360	44.06243	560.652	556.516	57.094	563.552	.27664	111.0207	1837.96	5.858
5	15.1883	58.74995	579.089	572.440	61.928	582.391	.28601	111.2303	1837.96	6.174
6	15.4300	73.43747	597.845	588.126	65.764	601.451	.29551	111.4136	1837.96	6.380
7	15.6620	88.12499	617.187	603.848	68.744	621.003	.30526	111.5769	1837.96	6.495
8	15.8851	102.81252	637.283	619.777	70.972	641.223	.31536	111.7249	1837.96	6.533
9	16.1000	117.50004	658.217	635.992	72.532	662.201	.32586	111.8605	1837.96	6.506

STREAMLINE NUMBER	STATIC PRESSURE (PSI)	STATIC TEMPERATURE (DEG R)	STREAMLINE SLOPE ANGLE (DEG)	STREAMLINE CURVATURE (PER IN)	BLADE VELOCITY (FPS)	RELATIVE VELOCITY (FPS)	RELATIVE MACH NUMBER	RELATIVE TOTAL PRESSURE (PSI)	RELATIVE TOTAL TEMPERATURE (DEG R)	RELATIVE FLOW ANGLE (DEG)
1	105.7824	1819.58	1.241	.00066	1328.893	1388.578	.68076	142.4168	1959.61	-68.814
2	105.7439	1817.98	3.254	.02336	1356.603	1413.296	.69319	143.8739	1963.03	-68.322
3	105.6619	1816.43	5.155	.03915	1382.786	1437.834	.70552	145.2985	1966.57	-67.931
4	105.5373	1814.90	6.964	.05415	1407.684	1462.336	.71785	146.6998	1970.19	-67.606
5	105.3706	1813.33	8.691	.06849	1431.463	1486.934	.73024	148.0871	1973.89	-67.316
6	105.1622	1811.69	10.345	.08222	1454.242	1511.718	.74275	149.4674	1977.65	-67.044
7	104.9122	1809.96	11.933	.09540	1476.111	1536.750	.75541	150.8453	1981.46	-66.778
8	104.6205	1808.10	13.461	.10807	1497.139	1562.077	.76825	152.2249	1985.31	-66.511
9	104.2868	1806.12	14.931	.12028	1517.389	1587.722	.78129	153.6080	1989.19	-66.242

** STAGE 2 PERFORMANCE **

STREAMLINE NUMBER	STATOR REACTION	ROTOR REACTION	STATOR PRESSURE LOSS COEFFICIENT	ROTOR PRESSURE LOSS COEFFICIENT	STATOR BLADE ROW EFFICIENCY	ROTOR BLADE ROW EFFICIENCY	ROTOR ISENTROPIC EFFICIENCY	STAGE ISENTROPIC EFFICIENCY
1	.27914	.38210	.08913	.10003	.93377	.93656	.95908	.91625
2	.28883	.36833	.08819	.09321	.93406	.94180	.96092	.91905
3	.29742	.35751	.08733	.08762	.93434	.94599	.96232	.92139
4	.30510	.34932	.08655	.08285	.93458	.94941	.96340	.92338
5	.31202	.34346	.08582	.07863	.93480	.95233	.96427	.92511
6	.31829	.33964	.08515	.07478	.93500	.95492	.96503	.92669
7	.32399	.33757	.08451	.07119	.93519	.95731	.96572	.92816
8	.32915	.33699	.08390	.06779	.93538	.95957	.96640	.92958
9	.33380	.33766	.08331	.06452	.93555	.96175	.96708	.93097

* MASS-AVERAGED QUANTITIES *

STATOR BLADE-ROW EFFICIENCY = .93475

ROTOR BLADE-ROW EFFICIENCY = .95131

STAGE WORK = 75.253 BTU PER LBM

STAGE TOTAL EFFICIENCY = .93900

STAGE STATIC EFFICIENCY = .86676

STAGE BLADE- TO JET-SPEED RATIO = .67605

*** SPOOL 1 PERFORMANCE SUMMARY (MASS-AVERAGED QUANTITIES) ***

STAGE NUMBER	STATOR BLADE-ROW EFFICIENCY	ROTOR BLADE-ROW EFFICIENCY	STAGE WORK (BTU/LBM)	STAGE TOTAL EFFICIENCY	STAGE STATIC EFFICIENCY	STAGE BLADE- TO JET-SPEED RATIO
1	.92143	.93599	73.427	.91851	.87271	.67350
2	.93475	.95131	75.253	.93900	.86676	.67605

SPOOL WORK = 148.679 BTU PER LBM
SPOOL POWER = 24530.00 HP
SPOOL TOTAL- TO TOTAL-PRESSURE RATIO = 3.08044
SPOOL TOTAL- TO STATIC-PRESSURE RATIO = 3.25304
SPOOL TOTAL EFFICIENCY = .93493
SPOOL STATIC EFFICIENCY = .89738
SPOOL BLADE- TO JET-SPEED RATIO = .68290

*** INPUT DATA FOR SPOOL 2 ***

** DESIGN REQUIREMENTS **

ROTATIVE SPEED = 4646.0 RPM
POWER OUTPUT = 20110.00 HP

** ANALYSIS VARIABLES **

NUMBER OF STAGES = 5

* POWER-OUTPUT SPLIT *

STAGE NUMBER	FRACTION OF SPOOL POWER OUTPUT
1	.17230
2	.18560
3	.19950
4	.21390
5	.22870

* SPECIFIC-HEAT SPECIFICATION *

DESIGN STATION NUMBER	SPECIFIC HEAT (BTU/LBM DEG R)
1	.27500
2	.27500
3	.27300
4	.27300
5	.27100
6	.27100
7	.26800
8	.26800
9	.26500
10	.26500
11	.26200

* ANNULUS SPECIFICATION *

STATION NUMBER	AXIAL POSITION	HUB RADIUS	CASING RADIUS

	(IN)	(IN)	(IN)
1	7.5000	14.0750	15.8500
2	9.0000	14.1000	16.1000
3	10.5000	14.1400	16.6500
4	12.0000	14.1800	17.2000
5	13.5000	14.2200	17.7500
6	15.0000	14.2600	18.3000
7	16.5000	14.3000	18.8500
8	18.0000	14.3400	19.4000
9	19.5000	14.3800	19.9500
10	21.0000	14.4200	20.5000
11	22.5000	14.4600	21.0500
12	24.0000	14.5000	21.6000
13	25.5000	14.5400	22.1500

* COOLANT SCHEDULE *

BLADE ROW NUMBER	FRACTION OF INLET MASS FLOW	TOTAL TEMPERATURE (DEG R)
1	0.00000	0.00
2	0.00000	0.00
3	0.00000	0.00
4	0.00000	0.00
5	0.00000	0.00
6	0.00000	0.00
7	0.00000	0.00
8	0.00000	0.00
9	0.00000	0.00
10	0.00000	0.00

* BLADE-ROW EXIT CONDITIONS *

STATOR 1

RADIAL POSITION (IN)	MERIDIONAL VELOCITY GRADIENT (PER SEC)
15.5000	0.00

WHIRL VELOCITY AT THE MEAN STREAMLINE = 728.5000 FEET PER SEC

ROTOR 1

RADIAL POSITION (IN)	MERIDIONAL VELOCITY GRADIENT (PER SEC)
15.5000	0.00

STATOR 2

RADIAL POSITION (IN)	MERIDIONAL VELOCITY GRADIENT (PER SEC)
16.0000	0.00

WHIRL VELOCITY AT THE MEAN STREAMLINE = 767.9000 FEET PER SEC

ROTOR 2

RADIAL POSITION (IN)	MERIDIONAL VELOCITY GRADIENT (PER SEC)
16.0000	0.00

STATOR 3

RADIAL POSITION (IN)	MERIDIONAL VELOCITY GRADIENT (PER SEC)
16.5000	0.00

WHIRL VELOCITY AT THE MEAN STREAMLINE = 784.2000 FEET PER SEC

ROTOR 3

RADIAL POSITION (IN)	MERIDIONAL VELOCITY GRADIENT (PER SEC)
16.5000	0.00

STATOR 4

RADIAL POSITION (IN)	MERIDIONAL VELOCITY GRADIENT (PER SEC)
17.0000	0.00

WHIRL VELOCITY AT THE MEAN STREAMLINE = 813.1000 FEET PER SEC

ROTOR 4

RADIAL POSITION (IN)	MERIDIONAL VELOCITY GRADIENT (PER SEC)
17.0000	0.00

STATOR 5

RADIAL POSITION (IN)	MERIDIONAL VELOCITY GRADIENT (PER SEC)
17.5000	0.00

WHIRL VELOCITY AT THE MEAN STREAMLINE = 955.9000 FEET PER SEC

ROTOR 5

RADIAL POSITION (IN)	MERIDIONAL VELOCITY GRADIENT (PER SEC)
17.5000	0.00

* BASIC INTERNAL LOSS CORRELATION *

```
      TAN(INLET ANGLE) + TAN(EXIT ANGLE)            ( .03000000 +  .15725500 * (V RATIO)** 3.60)  IF (V RATIO) .LT.  .50000000
Y = ------------------------------------------ *TIMES*
    1.00000000 + 0 00000000 * COS(EXIT ANGLE)       ( .04300000 +  .09360000 *((V RATIO)- .500))  IF (V RATIO) .GE.  .50000000
```

THE PRESSURE-LOSS COEFFICIENT COMPUTED IN THIS MANNER MAY NOT EXCEED A LIMIT OF 2.00000000

*** OUTPUT OF DESIGN ANALYSIS FOR SPOOL 2 ***

** STATOR INLET 1 **

STREAMLINE NUMBER	RADIAL POSITION (IN)	MASS-FLOW FUNCTION (LBM/SEC)	MERIDIONAL VELOCITY (FPS)	AXIAL VELOCITY (FPS)	WHIRL VELOCITY (FPS)	ABSOLUTE VELOCITY (FPS)	ABSOLUTE MACH NUMBER	ABSOLUTE TOTAL PRESSURE (PSI)	ABSOLUTE TOTAL TEMPERATURE (DEG R)	ABSOLUTE FLOW ANGLE (DEG)
1	14.1000	0.00000	501.935	501.817	34.207	503.099	.24665	110.1343	1837.96	3.900
2	14.3940	14.68743	522.790	521.947	43.555	524.601	.25730	110.4846	1837.96	4.770
3	14.6718	29.37492	542.108	539.915	51.063	544.507	.26718	110.7762	1837.96	5.403
4	14.9360	44.06243	560.652	556.516	57.094	563.552	.27664	111.0207	1837.96	5.858
5	15.1883	58.74995	579.089	572.440	61.928	582.391	.28601	111.2303	1837.96	6.174
6	15.4300	73.43747	597.845	588.126	65.764	601.451	.29551	111.4136	1837.96	6.380
7	15.6620	88.12499	617.187	603.848	68.744	621.003	.30526	111.5769	1837.96	6.495
8	15.8851	102.81252	637.283	619.777	70.972	641.223	.31536	111.7249	1837.96	6.533
9	16.1000	117.50004	658.217	635.992	72.532	662.201	.32586	111.8605	1837.96	6.506

STREAMLINE NUMBER	STATIC PRESSURE (PSI)	STATIC TEMPERATURE (DEG R)	STREAMLINE SLOPE ANGLE (DEG)	STREAMLINE CURVATURE (PER IN)
1	105.7824	1819.58	1.241	.00666
2	105.7439	1817.98	3.254	.02336
3	105.6619	1816.43	5.155	.03915
4	105.5373	1814.90	6.964	.05415
5	105.3706	1813.33	8.691	.06849
6	105.1622	1811.69	10.345	.08222
7	104.9122	1809.96	11.933	.09540
8	104.6205	1808.10	13.461	.10807
9	104.2868	1806.12	14.931	.12028

** STATOR 1 MIXED AND/OR COOLED QUANTITIES **

STREAMLINE NUMBER	ABSOLUTE TOTAL PRESSURE (PSI)	ABSOLUTE TOTAL TEMPERATURE (DEG R)
1	110.1343	1837.96
2	110.4846	1837.96
3	110.7762	1837.96
4	111.0207	1837.96

5	111.2303	1837.96
6	111.4136	1837.96
7	111.5769	1837.96
8	111.7249	1837.96
9	111.8605	1837.96

** STATOR EXIT - ROTOR INLET 1 **

STREAMLINE NUMBER	RADIAL POSITION (IN)	MASS-FLOW FUNCTION (LBM/SEC)	MERIDIONAL VELOCITY (FPS)	AXIAL VELOCITY (FPS)	WHIRL VELOCITY (FPS)	ABSOLUTE VELOCITY (FPS)	ABSOLUTE MACH NUMBER	ABSOLUTE TOTAL PRESSURE (PSI)	ABSOLUTE TOTAL TEMPERATURE (DEG R)	ABSOLUTE FLOW ANGLE (DEG)
1	14.1400	0.00000	483.970	483.798	756.181	897.795	.44509	109.1644	1837.96	57.389
2	14.4741	14.68840	483.970	482.789	750.558	893.064	.44267	109.4873	1837.96	57.249
3	14.8004	29.37679	483.970	480.932	743.914	887.488	.43982	109.7558	1837.96	57.110
4	15.1200	44.06519	483.970	478.262	736.470	881.258	.43663	109.9786	1837.96	56.999
5	15.4340	58.75358	483.970	474.883	728.500	874.608	.43323	110.1654	1837.96	56.901
6	15.7432	73.44198	483.970	470.769	720.210	867.715	.42971	110.3240	1837.96	56.829
7	16.0484	88.13037	483.970	465.969	711.731	860.691	.42613	110.4601	1837.96	56.767
8	16.3504	102.81877	483.970	460.503	703.145	853.604	.42252	110.5777	1837.96	56.778
9	16.6500	117.50716	483.970	454.388	694.484	846.484	.41889	110.6793	1837.96	56.804

STREAMLINE NUMBER	STATIC PRESSURE (PSI)	STATIC TEMPERATURE (DEG R)	STREAMLINE SLOPE ANGLE (DEG)	STREAMLINE CURVATURE (PER IN)	BLADE VELOCITY (FPS)	RELATIVE VELOCITY (FPS)	RELATIVE MACH NUMBER	RELATIVE TOTAL PRESSURE (PSI)	RELATIVE TOTAL TEMPERATURE (DEG R)	RELATIVE FLOW ANGLE (DEG)
1	95.8735	1779.43	1.528	.00000	573.292	517.374	.25649	100.1442	1798.87	20.700
2	96.2905	1780.04	4.004	.00000	586.838	510.912	.25325	100.4702	1799.00	18.732
3	96.6837	1780.76	6.424	.00000	600.067	504.895	.25021	100.7788	1799.28	16.652
4	97.0546	1781.56	8.793	.00000	613.025	499.465	.24747	101.0744	1799.68	14.472
5	97.4052	1782.41	11.121	.00000	625.754	494.756	.24508	101.3607	1800.19	12.208
6	97.7371	1783.28	13.413	.00000	638.290	490.854	.24308	101.6409	1800.78	9.871
7	98.0518	1784.17	15.676	.00000	650.666	487.807	.24151	101.9171	1801.45	7.466
8	98.3510	1785.05	17.915	.00000	662.912	485.640	.24038	102.1913	1802.18	4.993
9	98.6360	1785.93	20.136	.00000	675.057	484.360	.23969	102.4649	1802.96	2.440

** ROTOR 1 MIXED AND/OR COOLED QUANTITIES **

STREAMLINE NUMBER	ABSOLUTE TOTAL PRESSURE (PSI)	ABSOLUTE TOTAL TEMPERATURE (DEG R)	RELATIVE TOTAL PRESSURE (PSI)	RELATIVE TOTAL TEMPERATURE (DEG R)
1	109.1644	1837.96	100.1442	1798.87
2	109.4873	1837.96	100.4702	1799.00
3	109.7558	1837.96	100.7788	1799.28
4	109.9786	1837.96	101.0744	1799.68
5	110.1654	1837.96	101.3607	1800.19

6	110.3240	1837.96	101.6409	1800.78
7	110.4601	1837.96	101.9171	1801.45
8	110.5777	1837.96	102.1913	1802.18
9	110.6793	1837.96	102.4649	1802.96

** STAGE EXIT 1 **

STREAMLINE NUMBER	RADIAL POSITION (IN)	MASS-FLOW FUNCTION (LBM/SEC)	MERIDIONAL VELOCITY (FPS)	AXIAL VELOCITY (FPS)	WHIRL VELOCITY (FPS)	ABSOLUTE VELOCITY (FPS)	ABSOLUTE MACH NUMBER	ABSOLUTE TOTAL PRESSURE (PSI)	ABSOLUTE TOTAL TEMPERATURE (DEG R)	ABSOLUTE FLOW ANGLE (DEG)
1	14.1800	0.00000	423.149	422.999	-120.663	446.017	.21960	91.9086	1765.84	-15.921
2	14.5837	14.68722	423.149	422.110	-117.869	439.258	.21930	91.9129	1764.47	-15.602
3	14.9773	29.37443	423.149	420.478	-114.643	438.404	.21894	91.9144	1763.31	-15.251
4	15.3624	44.06165	423.149	418.153	-111.080	437.486	.21854	91.9136	1762.34	-14.877
5	15.7402	58.74887	423.149	415.174	-107.272	436.534	.21811	91.9111	1761.53	-14.487
6	16.1119	73.43609	423.149	411.575	-103.284	435.572	.21767	91.9073	1760.85	-14.087
7	16.4785	88.12331	423.149	407.381	-99.159	434.612	.21722	91.9025	1760.27	-13.680
8	16.8409	102.81052	423.149	402.613	-94.926	433.666	.21678	91.8970	1759.78	-13.267
9	17.2000	117.49774	423.149	397.284	-90.598	432.739	.21633	91.8909	1759.38	-12.846

STREAMLINE NUMBER	STATIC PRESSURE (PSI)	STATIC TEMPERATURE (DEG R)	STREAMLINE SLOPE ANGLE (DEG)	STREAMLINE CURVATURE (PER IN)	BLADE VELOCITY (FPS)	RELATIVE VELOCITY (FPS)	RELATIVE MACH NUMBER	RELATIVE TOTAL PRESSURE (PSI)	RELATIVE TOTAL TEMPERATURE (DEG R)	RELATIVE FLOW ANGLE (DEG)
1	89.0081	1751.67	1.528	0.00000	574.914	814.176	.40633	99.2322	1800.16	-58.695
2	89.0199	1750.35	4.015	-.00000	591.280	825.801	.41228	99.5602	1800.24	-59.237
3	89.0306	1749.25	6.440	-.00000	607.240	836.762	.41789	99.8732	1800.47	-59.780
4	89.0402	1748.34	8.813	-.00000	622.853	847.179	.42320	100.1738	1800.85	-60.328
5	89.0488	1747.59	11.141	-.00000	638.172	857.170	.42828	100.4648	1801.34	-60.884
6	89.0565	1746.97	13.432	-.00000	653.241	866.825	.43318	100.7486	1801.93	-61.452
7	89.0633	1746.45	15.691	-.00000	668.104	876.212	.43794	101.0268	1802.61	-62.034
8	89.0694	1746.03	17.924	-.00000	682.797	885.386	.44258	101.3010	1803.37	-62.630
9	89.0748	1745.68	20.136	-.00000	697.357	894.387	.44712	101.5720	1804.20	-63.243

** STAGE 1 PERFORMANCE **

STREAMLINE NUMBER	STATOR REACTION	ROTOR REACTION	STATOR PRESSURE LOSS COEFFICIENT	ROTOR PRESSURE LOSS COEFFICIENT	STATOR BLADE ROW EFFICIENCY	ROTOR BLADE ROW EFFICIENCY	ROTOR ISENTROPIC EFFICIENCY	STAGE ISENTROPIC EFFICIENCY
1	.56037	.63546	.07273	.11261	.93724	.90499	.93128	.88671
2	.58742	.61869	.07530	.10925	.93511	.90883	.93352	.88852
3	.61354	.60339	.07788	.10619	.93306	.91233	.93547	.89011
4	.63949	.58956	.08057	.10345	.93094	.91541	.93708	.89133
5	.66589	.57720	.08345	.10105	.92863	.91802	.93835	.89210
6	.69314	.56627	.08661	.09900	.92609	.92018	.93925	.89238

7	.72152	.55672	.09009	.09732	.92330	.92192	.93983	.89221
8	.75119	.54851	.09394	.09599	.92022	.92323	.94009	.89156
9	.78230	.54156	.09819	.09500	.91683	.92414	.94001	.89044

* MASS-AVERAGED QUANTITIES *

STATOR BLADE-ROW EFFICIENCY = .92805

ROTOR BLADE-ROW EFFICIENCY = .91681

STAGE WORK = 20.842 BTU PER LBM
STAGE TOTAL EFFICIENCY = .89082
STAGE STATIC EFFICIENCY = .76678
STAGE BLADE- TO JET-SPEED RATIO = .54116

** STATOR 2 MIXED AND/OR COOLED QUANTITIES **

STREAMLINE NUMBER	ABSOLUTE TOTAL PRESSURE (PSI)	ABSOLUTE TOTAL TEMPERATURE (DEG R)
1	91.9086	1765.84
2	91.9129	1764.47
3	91.9144	1763.31
4	91.9136	1762.34
5	91.9111	1761.53
6	91.9073	1760.85
7	91.9025	1760.27
8	91.8970	1759.78
9	91.8909	1759.38

** STATOR EXIT - ROTOR INLET 2 **

STREAMLINE NUMBER	RADIAL POSITION (IN)	MASS-FLOW FUNCTION (LBM/SEC)	MERIDIONAL VELOCITY (FPS)	AXIAL VELOCITY (FPS)	WHIRL VELOCITY (FPS)	ABSOLUTE VELOCITY (FPS)	ABSOLUTE MACH NUMBER	ABSOLUTE TOTAL PRESSURE (PSI)	ABSOLUTE TOTAL TEMPERATURE (DEG R)	ABSOLUTE FLOW ANGLE (DEG)
1	14.2200	0.00000	385.815	385.678	860.282	942.835	.47752	90.6384	1765.84	65.853
2	14.7059	14.68866	385.815	384.833	834.054	918.966	.46517	90.7077	1764.47	65.231
3	15.1747	29.37732	385.815	383.289	810.163	897.339	.45400	90.7646	1763.32	64.681
4	15.6289	44.06598	385.815	381.112	788.210	877.570	.44379	90.8115	1762.35	64.195
5	16.0709	58.75464	385.815	378.356	767.900	859.374	.43439	90.8504	1761.53	63.770
6	16.5025	73.44330	385.815	375.060	749.020	842.547	.42571	90.8834	1760.84	63.401
7	16.9253	88.13196	385.815	371.258	731.376	826.900	.41765	90.9117	1760.27	63.087
8	17.3407	102.82061	385.815	366.976	714.790	812.267	.41010	90.9358	1759.78	62.824
9	17.7500	117.50927	385.815	362.232	699.125	798.517	.40302	90.9561	1759.38	62.610

STREAMLINE NUMBER	STATIC PRESSURE (PSI)	STATIC TEMPERATURE (DEG R)	STREAMLINE SLOPE ANGLE (DEG)	STREAMLINE CURVATURE (PER IN)	BLADE VELOCITY (FPS)	RELATIVE VELOCITY (FPS)	RELATIVE MACH NUMBER	RELATIVE TOTAL PRESSURE (PSI)	RELATIVE TOTAL TEMPERATURE (DEG R)	RELATIVE FLOW ANGLE (DEG)
1	78.0594	1700.81	1.528	-.00000	576.535	478.921	.24256	81.1712	1717.59	36.342
2	78.7065	1702.70	4.089	-.00000	596.238	453.221	.22942	81.5090	1717.72	31.715
3	79.2794	1704.41	6.560	-.00000	615.243	432.258	.21870	81.8415	1718.08	26.955
4	79.7913	1706.01	8.955	-.00000	633.660	415.619	.21018	82.1708	1718.65	22.074
5	80.2524	1707.51	11.285	-.00000	651.580	402.968	.20369	82.4987	1719.38	17.089
6	80.6707	1708.91	13.560	-.00000	669.078	394.010	.19908	82.8267	1720.27	12.032
7	81.0526	1710.25	15.789	-.00000	686.220	388.448	.19619	83.1559	1721.28	6.935
8	81.4033	1711.51	17.979	-.00000	703.062	385.993	.19488	83.4872	1722.41	1.830
9	81.7269	1712.74	20.136	-.00000	719.656	386.361	.19500	83.8216	1723.66	-3.244

** ROTOR 2 MIXED AND/OR COOLED QUANTITIES **

STREAMLINE NUMBER	ABSOLUTE TOTAL PRESSURE (PSI)	ABSOLUTE TOTAL TEMPERATURE (DEG R)	RELATIVE TOTAL PRESSURE (PSI)	RELATIVE TOTAL TEMPERATURE (DEG R)
1	90.6384	1765.84	81.1712	1717.59
2	90.7077	1764.47	81.5090	1717.72
3	90.7846	1763.32	81.8415	1718.08
4	90.8115	1762.35	82.1708	1718.65
5	90.8504	1761.53	82.4987	1719.38
6	90.8834	1760.84	82.8267	1720.27
7	90.9117	1760.27	83.1559	1721.28
8	90.9358	1759.78	83.4872	1722.41
9	90.9561	1759.38	83.8216	1723.66

** STAGE EXIT 2 **

STREAMLINE NUMBER	RADIAL POSITION (IN)	MASS-FLOW FUNCTION (LBM/SEC)	MERIDIONAL VELOCITY (FPS)	AXIAL VELOCITY (FPS)	WHIRL VELOCITY (FPS)	ABSOLUTE VELOCITY (FPS)	ABSOLUTE MACH NUMBER	ABSOLUTE TOTAL PRESSURE (PSI)	ABSOLUTE TOTAL TEMPERATURE (DEG R)	ABSOLUTE FLOW ANGLE (DEG)
1	14.2600	0.00000	357.977	357.850	-108.296	373.999	.19065	74.1822	1685.10	-16.837
2	14.8147	14.68746	357.977	357.069	-105.828	373.292	.19040	74.1889	1683.05	-16.509
3	15.3504	29.37492	357.977	355.640	-102.852	372.459	.19007	74.1927	1681.33	-16.130
4	15.8700	44.06238	357.977	353.625	-99.430	371.529	.18968	74.1941	1679.91	-15.705
5	16.3759	58.74983	357.977	351.070	-95.601	370.523	.18923	74.1936	1678.74	-15.233
6	16.8701	73.43729	357.977	348.013	-91.382	369.457	.18873	74.1909	1677.79	-14.713
7	17.3546	88.12475	357.977	344.483	-86.884	368.370	.18822	74.1872	1677.03	-14.156
8	17.8307	102.81221	357.977	340.505	-82.230	367.301	.18770	74.1826	1676.44	-13.578
9	18.3000	117.49967	357.977	336.096	-77.485	366.267	.18719	74.1776	1675.99	-12.982

STREAMLINE NUMBER	STATIC PRESSURE (PSI)	STATIC TEMPERATURE (DEG R)	STREAMLINE SLOPE ANGLE (DEG)	STREAMLINE CURVATURE (PER IN)	BLADE VELOCITY (FPS)	RELATIVE VELOCITY (FPS)	RELATIVE MACH NUMBER	RELATIVE TOTAL PRESSURE (PSI)	RELATIVE TOTAL TEMPERATURE (DEG R)	RELATIVE FLOW ANGLE (DEG)
1	72.4047	1674.79	1.528	0.00000	578.157	774.187	.39465	80.2516	1718.96	-62.467
2	72.4157	1672.78	4.083	.00000	600.649	791.996	.40397	80.6542	1719.01	-63.187
3	72.4255	1671.11	6.550	.00000	622.368	808.759	.41273	81.0414	1719.31	-63.877
4	72.4341	1669.73	8.943	.00000	643.433	824.617	.42099	81.4150	1719.85	-64.544
5	72.4416	1668.62	11.274	.00000	663.943	839.676	.42882	81.7762	1720.58	-65.193
6	72.4482	1667.73	13.550	.00000	683.983	854.013	.43626	82.1258	1721.48	-65.828
7	72.4539	1667.03	15.781	.00000	703.623	867.784	.44339	82.4667	1722.53	-66.454
8	72.4588	1666.50	17.975	.00000	722.928	881.156	.45029	82.8024	1723.71	-67.076
9	72.4630	1666.10	20.136	.00000	741.955	894.220	.45702	83.1349	1725.03	-67.699

** STAGE 2 PERFORMANCE **

STREAMLINE NUMBER	STATOR REACTION	ROTOR REACTION	STATOR PRESSURE LOSS COEFFICIENT	ROTOR PRESSURE LOSS COEFFICIENT	STATOR BLADE ROW EFFICIENCY	ROTOR BLADE ROW EFFICIENCY	ROTOR ISENTROPIC EFFICIENCY	STAGE ISENTROPIC EFFICIENCY
1	.46670	.61861	.10093	.14359	.91638	.88090	.92850	.86971
2	.47799	.57225	.10038	.12921	.91641	.89335	.93398	.87788
3	.48856	.53447	.10006	.11777	.91632	.90344	.93841	.88465
4	.49852	.50401	.09996	.10871	.91609	.91149	.94187	.89016
5	.50797	.47991	.10009	.10178	.91575	.91766	.94437	.89448
6	.51697	.46136	.10024	.09693	.91537	.92206	.94589	.89766
7	.52559	.44763	.10048	.09353	.91496	.92506	.94658	.89988
8	.53390	.43805	.10082	.09120	.91448	.92702	.94662	.90132
9	.54193	.43206	.10127	.08970	.91394	.92814	.94609	.90207

* MASS-AVERAGED QUANTITIES *

STATOR BLADE-ROW EFFICIENCY = .91557

ROTOR BLADE-ROW EFFICIENCY = .91308

STAGE WORK = 22.451 BTU PER LBM

STAGE TOTAL EFFICIENCY = .89148

STAGE STATIC EFFICIENCY = .80448

STAGE BLADE- TO JET-SPEED RATIO = .55536

** STATOR 3 MIXED AND/OR COOLED QUANTITIES **

STREAMLINE NUMBER	ABSOLUTE TOTAL PRESSURE	ABSOLUTE TOTAL TEMPERATURE

	(PSI)	(DEG R)
1	74.1822	1685.10
2	74.1889	1683.05
3	74.1927	1681.33
4	74.1941	1679.91
5	74.1934	1678.74
6	74.1909	1677.79
7	74.1872	1677.03
8	74.1826	1676.44
9	74.1776	1675.99

** STATOR EXIT - ROTOR INLET 3 **

STREAMLINE NUMBER	RADIAL POSITION (IN)	MASS-FLOW FUNCTION (LBM/SEC)	MERIDIONAL VELOCITY (FPS)	AXIAL VELOCITY (FPS)	WHIRL VELOCITY (FPS)	ABSOLUTE VELOCITY (FPS)	ABSOLUTE MACH NUMBER	ABSOLUTE TOTAL PRESSURE (PSI)	ABSOLUTE TOTAL TEMPERATURE (DEG R)	ABSOLUTE FLOW ANGLE (DEG)
1	14.3000	0.00000	342.577	342.455	905.165	967.824	.50224	73.0304	1685.10	69.277
2	14.9473	14.68858	342.577	341.668	869.408	934.467	.48454	73.1271	1683.05	68.546
3	15.5636	29.37716	342.577	340.240	837.871	905.200	.46903	73.2048	1681.33	67.899
4	16.1544	44.06574	342.577	338.254	809.680	879.170	.45527	73.2678	1679.91	67.327
5	16.7240	58.75432	342.577	335.769	784.200	855.762	.44290	73.3194	1678.74	66.821
6	17.2758	73.44290	342.577	332.833	760.955	834.513	.43167	73.3619	1677.79	66.376
7	17.8125	88.13148	342.577	329.482	739.582	815.071	.42141	73.3971	1677.03	65.987
8	18.3366	102.82006	342.577	325.742	719.796	797.161	.41196	73.4265	1676.43	65.651
9	18.8500	117.50864	342.577	321.637	701.370	780.564	.40320	73.4509	1675.98	65.365

STREAMLINE NUMBER	STATIC PRESSURE (PSI)	STATIC TEMPERATURE (DEG R)	STREAMLINE SLOPE ANGLE (DEG)	STREAMLINE CURVATURE (PER IN)	BLADE VELOCITY (FPS)	RELATIVE VELOCITY (FPS)	RELATIVE MACH NUMBER	RELATIVE TOTAL PRESSURE (PSI)	RELATIVE TOTAL TEMPERATURE (DEG R)	RELATIVE FLOW ANGLE (DEG)
1	61.9016	1616.07	1.528	0.00000	579.779	472.478	.24519	64.4301	1632.52	43.536
2	62.6836	1618.70	4.175	-.00000	606.024	432.123	.22406	64.8165	1632.46	37.628
3	63.3509	1620.95	6.696	-.00000	631.012	400.187	.20736	65.1938	1632.75	31.299
4	63.9288	1622.95	9.112	-.00000	654.965	375.893	.19465	65.5654	1633.36	24.579
5	64.4355	1624.77	11.441	-.00000	678.058	358.643	.18561	65.9342	1634.25	17.543
6	64.8844	1626.47	13.698	-.00000	700.429	347.883	.17995	66.3022	1635.39	10.307
7	65.2857	1628.07	15.893	-.00000	722.191	343.018	.17735	66.6709	1636.74	3.022
8	65.6472	1629.60	18.037	-.00000	743.439	343.392	.17746	67.0419	1638.29	-4.151
9	65.9751	1631.08	20.136	-.00000	764.254	348.301	.17991	67.4161	1640.02	-11.862

** ROTOR 3 MIXED AND/OR COOLED QUANTITIES **

STREAMLINE NUMBER	ABSOLUTE TOTAL PRESSURE (PSI)	ABSOLUTE TOTAL TEMPERATURE (DEG R)	RELATIVE TOTAL PRESSURE (PSI)	RELATIVE TOTAL TEMPERATURE (DEG R)

1	73.0304	1685.10	64.4301	1632.52
2	73.1271	1683.05	64.8165	1632.46
3	73.2048	1681.33	65.1938	1632.75
4	73.2678	1679.91	65.5654	1633.36
5	73.3194	1678.74	65.9342	1634.25
6	73.3619	1677.79	66.3022	1635.39
7	73.3971	1677.03	66.6709	1636.74
8	73.4265	1676.43	67.0419	1638.29
9	73.4509	1675.98	67.4161	1640.02

** STAGE EXIT 3 **

STREAMLINE NUMBER	RADIAL POSITION (IN)	MASS-FLOW FUNCTION (LBM/SEC)	MERIDIONAL VELOCITY (FPS)	AXIAL VELOCITY (FPS)	WHIRL VELOCITY (FPS)	ABSOLUTE VELOCITY (FPS)	ABSOLUTE MACH NUMBER	ABSOLUTE TOTAL PRESSURE (PSI)	ABSOLUTE TOTAL TEMPERATURE (DEG R)	ABSOLUTE FLOW ANGLE (DEG)
1	14.3400	0.00000	332.026	331.908	-121.519	353.565	.18469	58.2711	1598.15	-20.109
2	15.0532	14.68731	332.026	331.155	-120.388	353.178	.18467	58.2860	1595.02	-19.978
3	15.7349	29.37463	332.026	329.787	-117.867	352.326	.18437	58.2952	1592.45	-19.667
4	16.3905	44.06194	332.026	327.876	-113.926	351.028	.18381	58.2989	1590.40	-19.161
5	17.0241	58.74924	332.026	325.477	-108.928	349.437	.18306	58.2984	1588.79	-18.504
6	17.6392	73.43655	332.026	322.633	-103.411	347.757	.18225	58.2954	1587.54	-17.772
7	18.2386	88.12386	332.026	319.378	-97.679	346.096	.18143	58.2911	1586.59	-17.006
8	18.8249	102.81117	332.026	315.737	-91.877	344.503	.18063	58.2859	1585.88	-16.225
9	19.4000	117.49847	332.026	311.731	-86.063	342.999	.17987	58.2803	1585.39	-15.434

STREAMLINE NUMBER	STATIC PRESSURE (PSI)	STATIC TEMPERATURE (DEG R)	STREAMLINE SLOPE ANGLE (DEG)	STREAMLINE CURVATURE (PER IN)	BLADE VELOCITY (FPS)	RELATIVE VELOCITY (FPS)	RELATIVE MACH NUMBER	RELATIVE TOTAL PRESSURE (PSI)	RELATIVE TOTAL TEMPERATURE (DEG R)	RELATIVE FLOW ANGLE (DEG)
1	56.9546	1588.84	1.528	.00000	581.401	777.392	.40609	63.5299	1633.87	-64.724
2	56.9694	1585.73	4.150	.00000	610.318	802.604	.41967	64.0134	1633.73	-65.620
3	56.9826	1583.20	6.658	.00000	637.958	825.537	.43201	64.4680	1633.99	-66.427
4	56.9942	1581.21	9.068	.00000	664.536	846.312	.44316	64.8916	1634.59	-67.160
5	57.0041	1579.69	11.399	.00000	690.224	865.382	.45336	65.2897	1635.49	-67.840
6	57.0125	1578.53	13.661	.00000	715.163	883.349	.46294	65.6722	1636.67	-68.489
7	57.0196	1577.66	15.865	.00000	739.467	900.586	.47211	66.0458	1638.10	-69.118
8	57.0256	1577.04	18.021	.00000	763.236	917.311	.48097	66.4145	1639.74	-69.734
9	57.0306	1576.63	20.136	.00000	786.553	933.649	.48960	66.7806	1641.59	-70.341

** STAGE 3 PERFORMANCE **

STREAMLINE NUMBER	STATOR REACTION	ROTOR REACTION	STATOR PRESSURE LOSS COEFFICIENT	ROTOR PRESSURE LOSS COEFFICIENT	STATOR BLADE ROW EFFICIENCY	ROTOR BLADE ROW EFFICIENCY	ROTOR ISENTROPIC EFFICIENCY	STAGE ISENTROPIC EFFICIENCY

1	.38643	.60777	.10348	.16287	.91533	.86984	.92441	.86620
2	.39947	.53840	.10165	.13873	.91611	.88905	.93275	.87861
3	.41147	.48476	.10025	.12064	.91669	.90358	.93913	.88843
4	.42259	.44415	.09918	.10893	.91708	.91367	.94340	.89566
5	.43297	.41443	.09838	.10143	.91733	.92021	.94580	.90066
6	.44272	.39382	.09780	.09650	.91746	.92444	.94697	.90411
7	.45195	.38088	.09741	.09324	.91747	.92712	.94721	.90638
8	.46076	.37435	.09722	.09113	.91736	.92867	.94674	.90769
9	.46923	.37305	.09721	.08988	.91713	.92935	.94567	.90820

* MASS-AVERAGED QUANTITIES *

STATOR BLADE-ROW EFFICIENCY = .91697

ROTOR BLADE-ROW EFFICIENCY = .91329

STAGE WORK = 24.133 BTU PER LBM

STAGE TOTAL EFFICIENCY = .89607

STAGE STATIC EFFICIENCY = .82225

STAGE BLADE- TO JET-SPEED RATIO = .56263

** STATOR & MIXED AND/OR COOLED QUANTITIES **

STREAMLINE NUMBER	ABSOLUTE TOTAL PRESSURE (PSI)	ABSOLUTE TOTAL TEMPERATURE (DEG R)
1	58.2711	1598.15
2	58.2860	1595.02
3	58.2952	1592.45
4	58.2989	1590.40
5	58.2984	1588.79
6	58.2954	1587.54
7	58.2911	1586.59
8	58.2859	1585.88
9	58.2803	1585.39

** STATOR EXIT - ROTOR INLET & **

STREAMLINE NUMBER	RADIAL POSITION (IN)	MASS-FLOW FUNCTION (LBM/SEC)	MERIDIONAL VELOCITY (FPS)	AXIAL VELOCITY (FPS)	WHIRL VELOCITY (FPS)	ABSOLUTE VELOCITY (FPS)	ABSOLUTE MACH NUMBER	ABSOLUTE TOTAL PRESSURE (PSI)	ABSOLUTE TOTAL TEMPERATURE (DEG R)	ABSOLUTE FLOW ANGLE (DEG)
1	14.3800	0.00000	330.115	329.998	966.671	1021.483	.54547	57.1546	1598.15	71.151
2	15.2001	14.68882	330.115	329.200	919.436	976.903	.52107	57.2806	1595.02	70.300
3	15.9695	29.37764	330.115	327.767	879.160	939.094	.50043	57.3779	1592.46	69.554
4	16.6985	44.06647	330.115	325.801	844.102	906.358	.48260	57.4541	1590.40	68.895
5	17.3947	58.75529	330.115	323.373	813.100	877.558	.46693	57.5145	1588.79	68.312

6	18.0634	73.44411	330.115	320.538	785.340	851.901	.45298	57.5630	1587.54	67.797
7	18.7105	88.13293	330.115	317.334	760.229	828.809	.44042	57.6026	1586.58	67.343
8	19.3382	102.82175	330.115	313.793	737.315	807.843	.42902	57.6352	1585.87	66.946
9	19.9500	117.51058	330.115	309.937	716.248	788.662	.41859	57.6622	1585.39	66.601

STREAMLINE NUMBER	STATIC PRESSURE (PSI)	STATIC TEMPERATURE (DEG R)	STREAMLINE SLOPE ANGLE (DEG)	STREAMLINE CURVATURE (PER IN)	BLADE VELOCITY (FPS)	RELATIVE VELOCITY (FPS)	RELATIVE MACH NUMBER	RELATIVE TOTAL PRESSURE (PSI)	RELATIVE TOTAL TEMPERATURE (DEG R)	RELATIVE FLOW ANGLE (DEG)
1	47.0303	1520.39	1.528	0.00000	583.022	506.124	.27027	49.3810	1539.48	49.299
2	47.9265	1523.90	4.267	-.00000	616.273	448.201	.23906	49.7933	1538.87	42.642
3	48.6630	1526.74	6.838	-.00000	647.467	403.308	.21492	50.1908	1538.86	35.256
4	49.2818	1529.19	9.273	-.00000	677.024	369.988	.19701	50.5794	1539.39	27.150
5	49.8107	1531.40	11.599	-.00000	705.251	347.286	.18478	50.9632	1540.39	18.444
6	50.2694	1533.45	13.835	-.00000	732.382	334.336	.17777	51.3452	1541.78	9.382
7	50.6718	1535.39	15.995	-.00000	758.598	330.119	.17542	51.7276	1543.51	.294
8	51.0285	1537.24	18.092	-.00000	784.048	333.406	.17706	52.1119	1545.53	-8.471
9	51.3475	1539.04	20.136	-.00000	808.852	342.858	.18197	52.4994	1547.80	-16.635

** ROTOR 4 MIXED AND/OR COOLED QUANTITIES **

STREAMLINE NUMBER	ABSOLUTE TOTAL PRESSURE (PSI)	ABSOLUTE TOTAL TEMPERATURE (DEG R)	RELATIVE TOTAL PRESSURE (PSI)	RELATIVE TOTAL TEMPERATURE (DEG R)
1	57.1546	1598.15	49.3810	1539.48
2	57.2806	1595.02	49.7933	1538.87
3	57.3779	1592.46	50.1908	1538.86
4	57.4541	1590.40	50.5794	1539.39
5	57.5145	1588.79	50.9632	1540.39
6	57.5630	1587.54	51.3452	1541.78
7	57.6026	1586.58	51.7276	1543.51
8	57.6352	1585.87	52.1119	1545.53
9	57.6622	1585.39	52.4994	1547.80

** STAGE EXIT 4 **

STREAMLINE NUMBER	RADIAL POSITION (IN)	MASS-FLOW FUNCTION (LBM/SEC)	MERIDIONAL VELOCITY (FPS)	AXIAL VELOCITY (FPS)	WHIRL VELOCITY (FPS)	ABSOLUTE VELOCITY (FPS)	ABSOLUTE MACH NUMBER	ABSOLUTE TOTAL PRESSURE (PSI)	ABSOLUTE TOTAL TEMPERATURE (DEG R)	ABSOLUTE FLOW ANGLE (DEG)
1	14.4200	0.00000	330.227	330.109	-117.739	350.588	.18840	44.2649	1504.68	-19.630
2	15.2991	14.68714	330.227	329.332	-119.345	351.131	.18900	44.2860	1499.97	-19.920
3	16.1305	29.37428	330.227	327.929	-118.248	350.759	.18903	44.2994	1496.21	-19.829
4	16.9232	44.06141	330.227	325.989	-114.569	349.536	.18855	44.3054	1493.30	-19.364
5	17.6839	58.74854	330.227	323.577	-109.121	347.789	.18774	44.3059	1491.12	-18.636
6	18.4180	73.43567	330.227	320.744	-102.912	345.891	.18681	44.3035	1489.50	-17.789

7	19.1299	88.12280	330.227	317.525	-96.447	344.023	.18587	44.2997	1488.31	-16.896
8	19.8229	102.80993	330.227	313.950	-89.941	342.256	.18497	44.2951	1487.48	-15.986
9	20.5000	117.49705	330.227	310.042	-83.469	340.612	.18411	44.2901	1486.95	-15.068

STREAMLINE NUMBER	STATIC PRESSURE (PSI)	STATIC TEMPERATURE (DEG R)	STREAMLINE SLOPE ANGLE (DEG)	STREAMLINE CURVATURE (PER IN)	BLADE VELOCITY (FPS)	RELATIVE VELOCITY (FPS)	RELATIVE MACH NUMBER	RELATIVE TOTAL PRESSURE (PSI)	RELATIVE TOTAL TEMPERATURE (DEG R)	RELATIVE FLOW ANGLE (DEG)
1	43.2209	1495.41	1.528	-.00000	584.644	776.139	.41709	48.5172	1540.81	-64.827
2	43.2350	1490.68	4.218	-.00000	620.287	810.003	.43598	49.0470	1540.13	-65.998
3	43.2477	1486.94	6.763	-.00000	653.996	839.887	.45264	49.5371	1540.10	-66.992
4	43.2587	1484.09	9.189	-.00000	686.134	866.126	.46722	49.9842	1540.62	-67.847
5	43.2681	1482.00	11.517	-.00000	716.976	889.655	.48025	50.3973	1541.65	-68.610
6	43.2759	1480.48	13.764	.00000	746.741	911.570	.49234	50.7915	1543.10	-69.318
7	43.2823	1479.39	15.943	.00000	775.600	932.479	.50382	51.1760	1544.92	-69.993
8	43.2876	1478.65	18.064	.00000	803.698	952.701	.51487	51.5555	1547.05	-70.643
9	43.2919	1478.21	20.136	.00000	831.152	972.409	.52560	51.9327	1549.47	-71.274

** STAGE 4 PERFORMANCE **

STREAMLINE NUMBER	STATOR REACTION	ROTOR REACTION	STATOR PRESSURE LOSS COEFFICIENT	ROTOR PRESSURE LOSS COEFFICIENT	STATOR BLADE ROW EFFICIENCY	ROTOR BLADE ROW EFFICIENCY	ROTOR ISENTROPIC EFFICIENCY	STAGE ISENTROPIC EFFICIENCY
1	.34613	.65211	.11023	.18833	.91197	.85328	.91917	.85659
2	.36153	.55333	.10743	.15198	.91310	.88041	.93041	.87340
3	.37518	.48019	.10521	.12618	.91402	.90011	.93881	.88637
4	.38729	.42718	.10334	.11092	.91483	.91300	.94416	.89562
5	.39819	.39036	.10175	.10195	.91554	.92077	.94693	.90177
6	.40821	.36677	.10043	.09639	.91612	.92549	.94812	.90590
7	.41758	.35402	.09936	.09284	.91656	.92832	.94821	.90853
8	.42645	.34996	.09853	.09061	.91687	.92988	.94751	.91005
9	.43491	.35259	.09792	.08931	.91705	.93049	.94616	.91064

* MASS-AVERAGED QUANTITIES *

STATOR BLADE-ROW EFFICIENCY = .91519

ROTOR BLADE-ROW EFFICIENCY = .91123

STAGE WORK = 25.875 BTU PER LBM
STAGE TOTAL EFFICIENCY = .89561
STAGE STATIC EFFICIENCY = .82723
STAGE BLADE- TO JET-SPEED RATIO = .56574

** STATOR 5 MIXED AND/OR COOLED QUANTITIES **

STREAMLINE NUMBER	ABSOLUTE TOTAL PRESSURE (PSI)	ABSOLUTE TOTAL TEMPERATURE (DEG R)
1	44.2649	1504.68
2	44.2860	1499.97
3	44.2994	1496.21
4	44.3054	1493.30
5	44.3059	1491.12
6	44.3035	1489.50
7	44.2997	1488.31
8	44.2951	1487.48
9	44.2901	1486.95

** STATOR EXIT - ROTOR INLET 5 **

STREAMLINE NUMBER	RADIAL POSITION (IN)	MASS-FLOW FUNCTION (LBM/SEC)	MERIDIONAL VELOCITY (FPS)	AXIAL VELOCITY (FPS)	WHIRL VELOCITY (FPS)	ABSOLUTE VELOCITY (FPS)	ABSOLUTE MACH NUMBER	ABSOLUTE TOTAL PRESSURE (PSI)	ABSOLUTE TOTAL TEMPERATURE (DEG R)	ABSOLUTE FLOW ANGLE (DEG)
1	14.4600	0.00000	352.859	352.733	1173.362	1225.270	.68259	42.9550	1504.67	73.268
2	15.4795	14.68754	352.859	351.816	1102.902	1157.973	.64340	43.1394	1499.95	72.308
3	16.4139	29.37508	352.859	350.195	1045.561	1103.498	.61192	43.2763	1496.22	71.483
4	17.2842	44.06262	352.859	348.017	997.367	1057.946	.58572	43.3804	1493.31	70.764
5	18.1044	58.75016	352.859	345.378	955.900	1018.947	.56334	43.4613	1491.12	70.135
6	18.8845	73.43770	352.859	342.345	919.578	984.954	.54388	43.5254	1489.49	69.580
7	19.6319	88.12524	352.859	338.965	887.311	954.898	.52668	43.5774	1488.30	69.092
8	20.3523	102.81278	352.859	335.271	858.313	928.015	.51132	43.6201	1487.46	68.664
9	21.0500	117.50032	352.859	331.291	832.001	903.734	.49745	43.6556	1486.94	68.288

STREAMLINE NUMBER	STATIC PRESSURE (PSI)	STATIC TEMPERATURE (DEG R)	STREAMLINE SLOPE ANGLE (DEG)	STREAMLINE CURVATURE (PER IN)	BLADE VELOCITY (FPS)	RELATIVE VELOCITY (FPS)	RELATIVE MACH NUMBER	RELATIVE TOTAL PRESSURE (PSI)	RELATIVE TOTAL TEMPERATURE (DEG R)	RELATIVE FLOW ANGLE (DEG)
1	31.7535	1391.53	1.528	0.00000	586.266	684.975	.38160	34.9876	1426.89	59.002
2	32.9452	1398.90	4.406	0.00000	627.601	591.963	.32891	35.4149	1425.31	53.491
3	33.8842	1404.45	7.045	0.00000	665.485	518.620	.28759	35.8140	1424.72	47.343
4	34.6491	1408.96	9.502	0.00000	700.769	460.955	.25520	36.1961	1424.97	40.439
5	35.2875	1412.87	11.818	0.00000	734.024	416.819	.23045	36.5684	1425.97	32.717
6	35.8307	1416.38	14.021	0.00000	765.653	384.970	.21257	36.9352	1427.55	24.210
7	36.3001	1419.58	16.132	0.00000	795.956	364.493	.20104	37.2998	1429.59	15.083
8	36.7109	1422.56	18.166	0.00000	825.162	354.412	.19528	37.6642	1432.03	5.647
9	37.0743	1425.39	20.136	0.00000	853.451	353.510	.19458	38.0302	1434.81	-3.704

** ROTOR 5 MIXED AND/OR COOLED QUANTITIES **

STREAMLINE NUMBER	ABSOLUTE TOTAL PRESSURE (PSI)	ABSOLUTE TOTAL TEMPERATURE (DEG R)	RELATIVE TOTAL PRESSURE (PSI)	RELATIVE TOTAL TEMPERATURE (DEG R)
1	42.9550	1504.67	34.9876	1426.89
2	43.1394	1499.95	35.4149	1425.31
3	43.2763	1496.22	35.8140	1424.72
4	43.3804	1493.31	36.1961	1424.97
5	43.4613	1491.12	36.5684	1425.97
6	43.5254	1489.49	36.9352	1427.55
7	43.5774	1488.30	37.2998	1429.59
8	43.6201	1487.46	37.6642	1432.03
9	43.6556	1486.94	38.0302	1434.81

** STAGE EXIT 5 **

STREAMLINE NUMBER	RADIAL POSITION (IN)	MASS-FLOW FUNCTION (LBM/SEC)	MERIDIONAL VELOCITY (FPS)	AXIAL VELOCITY (FPS)	WHIRL VELOCITY (FPS)	ABSOLUTE VELOCITY (FPS)	ABSOLUTE MACH NUMBER	ABSOLUTE TOTAL PRESSURE (PSI)	ABSOLUTE TOTAL TEMPERATURE (DEG R)	ABSOLUTE FLOW ANGLE (DEG)
1	14.5000	0.00000	350.122	349.998	47.008	353.264	.19607	32.2324	1405.88	7.650
2	15.5528	14.68661	350.122	349.143	27.604	351.209	.19542	32.2283	1398.72	4.521
3	16.5376	29.37321	350.122	347.610	15.223	350.453	.19540	32.2284	1393.06	2.508
4	17.4685	44.05982	350.122	345.512	7.967	350.213	.19557	32.2301	1388.62	1.321
5	18.3556	58.74643	350.122	342.930	4.176	350.147	.19578	32.2318	1385.23	.698
6	19.2068	73.43303	350.122	339.922	3.245	350.137	.19595	32.2333	1382.73	.547
7	20.0282	88.11964	350.122	336.531	4.660	350.153	.19608	32.2344	1380.99	.793
8	20.8246	102.80624	350.122	332.789	7.529	350.203	.19619	32.2354	1379.84	1.296
9	21.6000	117.49285	350.122	328.721	11.198	350.301	.19630	32.2363	1379.16	1.951

STREAMLINE NUMBER	STATIC PRESSURE (PSI)	STATIC TEMPERATURE (DEG R)	STREAMLINE SLOPE ANGLE (DEG)	STREAMLINE CURVATURE (PER IN)	BLADE VELOCITY (FPS)	RELATIVE VELOCITY (FPS)	RELATIVE MACH NUMBER	RELATIVE TOTAL PRESSURE (PSI)	RELATIVE TOTAL TEMPERATURE (DEG R)	RELATIVE FLOW ANGLE (DEG)
1	31.4069	1396.36	1.528	.00000	587.888	644.310	.35760	34.2150	1428.01	-57.093
2	31.4082	1389.32	4.287	.00000	630.571	697.248	.38796	34.7321	1426.38	-59.927
3	31.4086	1383.70	6.868	.00000	670.500	742.950	.41423	35.2178	1425.77	-62.055
4	31.4087	1379.28	9.308	.00000	708.241	782.924	.43722	35.6730	1426.00	-63.738
5	31.4087	1375.88	11.633	.00000	744.209	818.679	.45775	36.1043	1426.97	-65.137
6	31.4087	1373.39	13.864	.00000	778.720	850.850	.47617	36.5115	1428.57	-66.330
7	31.4087	1371.65	16.017	.00000	812.021	880.010	.49280	36.8961	1430.68	-67.372
8	31.4087	1370.50	18.104	.00000	844.311	907.077	.50817	37.2661	1433.21	-68.312
9	31.4088	1369.81	20.136	.00000	875.750	932.757	.52269	37.6286	1436.12	-69.182

** STAGE 5 PERFORMANCE **

STREAMLINE NUMBER	STATOR REACTION	ROTOR REACTION	STATOR PRESSURE LOSS COEFFICIENT	ROTOR PRESSURE LOSS COEFFICIENT	STATOR BLADE ROW EFFICIENCY	ROTOR BLADE ROW EFFICIENCY	ROTOR ISENTROPIC EFFICIENCY	STAGE ISENTROPIC EFFICIENCY
1	.28613	1.06311	.11690	.30720	.91306	.77847	.91192	.82874
2	.30323	.84900	.11241	.23290	.91439	.82520	.92371	.85033
3	.31786	.69806	.10888	.18279	.91555	.86066	.93393	.86794
4	.33039	.58876	.10591	.14772	.91665	.88720	.94236	.88228
5	.34132	.50914	.10333	.12281	.91769	.90683	.94902	.89381
6	.35117	.45245	.10114	.10664	.91861	.92009	.95346	.90239
7	.36027	.41419	.09929	.09763	.91939	.92791	.95560	.90809
8	.36880	.39072	.09774	.09235	.92004	.93216	.95606	.91165
9	.37689	.37899	.09645	.08923	.92056	.93428	.95542	.91370

* MASS-AVERAGED QUANTITIES *

STATOR BLADE-ROW EFFICIENCY = .91739

ROTOR BLADE-ROW EFFICIENCY = .88955

STAGE WORK = 27.665 BTU PER LBM

STAGE TOTAL EFFICIENCY = .88588

STAGE STATIC EFFICIENCY = .82192

STAGE BLADE- TO JET-SPEED RATIO = .56591

*** SPOOL 2 PERFORMANCE SUMMARY (MASS-AVERAGED QUANTITIES) ***

STAGE NUMBER	STATOR BLADE-ROW EFFICIENCY	ROTOR BLADE-ROW EFFICIENCY	STAGE WORK (BTU/LBM)	STAGE TOTAL EFFICIENCY	STAGE STATIC EFFICIENCY	STAGE BLADE- TO JET-SPEED RATIO
1	.92805	.91681	20.842	.89082	.76678	.54116
2	.91557	.91308	22.451	.89148	.80448	.55536
3	.91697	.91329	24.133	.89607	.82225	.56263
4	.91519	.91123	25.875	.89561	.82723	.56574
5	.91739	.88955	27.665	.88588	.82192	.56591

SPOOL WORK = 120.967 BTU PER LBM
SPOOL POWER = 20110.13 HP
SPOOL TOTAL- TO TOTAL-PRESSURE RATIO = 3.44853
SPOOL TOTAL- TO STATIC-PRESSURE RATIO = 3.53895
SPOOL TOTAL EFFICIENCY = .90448
SPOOL STATIC EFFICIENCY = .88873
SPOOL BLADE- TO JET-SPEED RATIO = .26144

*** OVERALL PERFORMANCE SUMMARY (MASS-AVERAGED QUANTITIES) ***

OVERALL WORK =	269.647	BTU PER LBM
OVERALL TOTAL- TO TOTAL-PRESSURE RATIO =	10.62298	
OVERALL TOTAL- TO STATIC-PRESSURE RATIO =	10.90150	
OVERALL TOTAL EFFICIENCY =	.93764	
OVERALL STATIC EFFICIENCY =	.93019	
OVERALL BLADE- TO JET-SPEED RATIO =	.27066	

APPENDIX II

OVER-ALL PROGRAM LOGIC

Program TD2 is composed of a main routine and nineteen subroutines. Fifteen subroutines can be classified as specialized subroutines; they are INPUT2, STRAC, SPECHT, PØWER2, STRIP, STRVL2, VMNTL2, RADEQ2, DERIV2, VMSUB2, REMAN2, SETUP2, ØUTPUT, START, and LØSCØR. The remaining four subroutines are classified as general service subroutines; they are IIAP1, SLØPE, RUNGA2, and SIMEQ. Detailed operational information on each of these subroutines is given in later appendices to this volume. In this section, the over-all solution procedure is described and illustrated by a flow diagram.

Over-All Solution Procedure

The over-all design analysis proceeds from known inlet conditions station by station through the turbine. The basic calculations are performed using grid points within the flow field which are defined by an even number of equal-flow stream filaments. Since initially the flow distribution is unknown, the initial streamline positions are estimated from equal areas for each filament. Hence, streamline positions have to be relocated after each solution of radial equilibrium and continuity until a converged solution for streamline positions has been obtained. Included in this major iterative loop will be an iteration on streamline values of total-pressure-loss coefficients when the internal correlation is employed, and on stage power output when meridional velocity gradients are specified at rotor exit design stations.

When the meridional velocity satisfies the radial equilibrium equation, the specified design variables, and the continuity equation within a preset tolerance, new streamline positions, and where applicable, loss coefficients and meanline total temperature drop are obtained. Revised values of the streamline dependent variables required for the coefficients of the four differential equations are then obtained. The solution of the radial equilibrium and continuity equations is then

repeated until the streamline positions, loss coefficients, and stage power output have converged to within preset tolerances.

Having obtained the basic solution at one design station, streamline values of all the relevant aerodynamic parameters in both relative and absolute reference systems are readily obtainable using conventional turbine design procedures. Among the quantities computed will be those necessary as input for the solution of the flow field at the following design station. These will include, where applicable, revised streamline values of total pressure and total temperature when the addition of coolant flow and/or interfilament mixing has been specified for the downstream blade row.

From the point of view of a numerical solution, the following design stations are solved in an identical manner. The only basic differences between stations and input options are in the evaluation of the streamline coefficients of the set of four differential equations and in the selection of the initial estimate of the meridional velocity.

Because it is possible to have two solutions to compressible flow problems, it is advisable to commence the simultaneous solution of the radial equilibrium and continuity equations at a streamline which is most representative of the flow in the annulus. Hence, a mean streamline is selected, which equally divides the flow in the annulus. In practice this selection complicates the logic of the computer program in that the solution of the meridional velocity distribution has to proceed to each of the two boundary streamlines in turn. Nevertheless, for stator exit planes in particular, the variation in absolute Mach number across the annulus will be sufficiently large that convergence of the required solution will be best achieved when the meridional velocity is reestimated at the most representative streamline for the flow field.

When the flow angle is specified, for example at the first stator inlet or stator exit planes, both subsonic and supersonic solutions are possible. At stator inlet it will be assumed that only the subsonic solution is of interest, and the initial meridional velocity will be selected to correspond to a Mach number of 0.4. At stator exit planes, it will be necessary to specify which of the two solutions is required. If

the subsonic is chosen, the initial estimate of meridional velocity will be based on a mean Mach number of 0.8; for supersonic solutions the starting point of the flow iteration will be a Mach number of 1.2.

When a meridional velocity gradient and meanline tangential velocity or stage work output are specified at stator or stage exit planes, two solutions are again possible. However, only one is of real interest, since the second will correspond to a design in which the axial component of velocity is supersonic. For these cases the first estimate of meridional velocity will be based on a stator exit angle of 60 degrees or a rotor relative exit angle of -60 degrees. For all design analysis of practical interest, the numerical solution will converge to that for which the axial component of Mach number is subsonic even though the absolute Mach number may be either subsonic or supersonic.

Flow Diagram

An over-all flow diagram for Program TD2 is given on the following pages. This diagram is intended to illustrate the purpose of each section of the program and the general relationship between the sections. Detailed descriptions of the actual equations employed, the various CØMMØN blocks, the main routine, and each of the subroutines are presented in the remaining appendices to this report.

It can be seen that the main routine directs the over-all sequence of the calculations while Subroutine RADEQ2 supervises the computation of the meridional velocity distribution. The logic flow is organized into five major nested loops, numbered 1 through 5 on the flow diagram. The outermost loop (1) is performed, in turn, for each turbine to be analyzed. The next loop (2) within the nest is performed, in turn, for each spool of the turbine or, if there is only one spool, for each set of analysis variables. The next loop (3) is performed, in turn, for each design station of the spool. The iterative determination of streamline positions and, where applicable, pressure-loss coefficients and meanline total temperature drop constitutes the next loop (4). The innermost loop (5) shown on the flow diagram is the iterative determination of the meridional velocity at the mean streamline which satisfies continuity.

In addition, within this loop at various stages of the calculations are loops performed for each streamline of the design station.

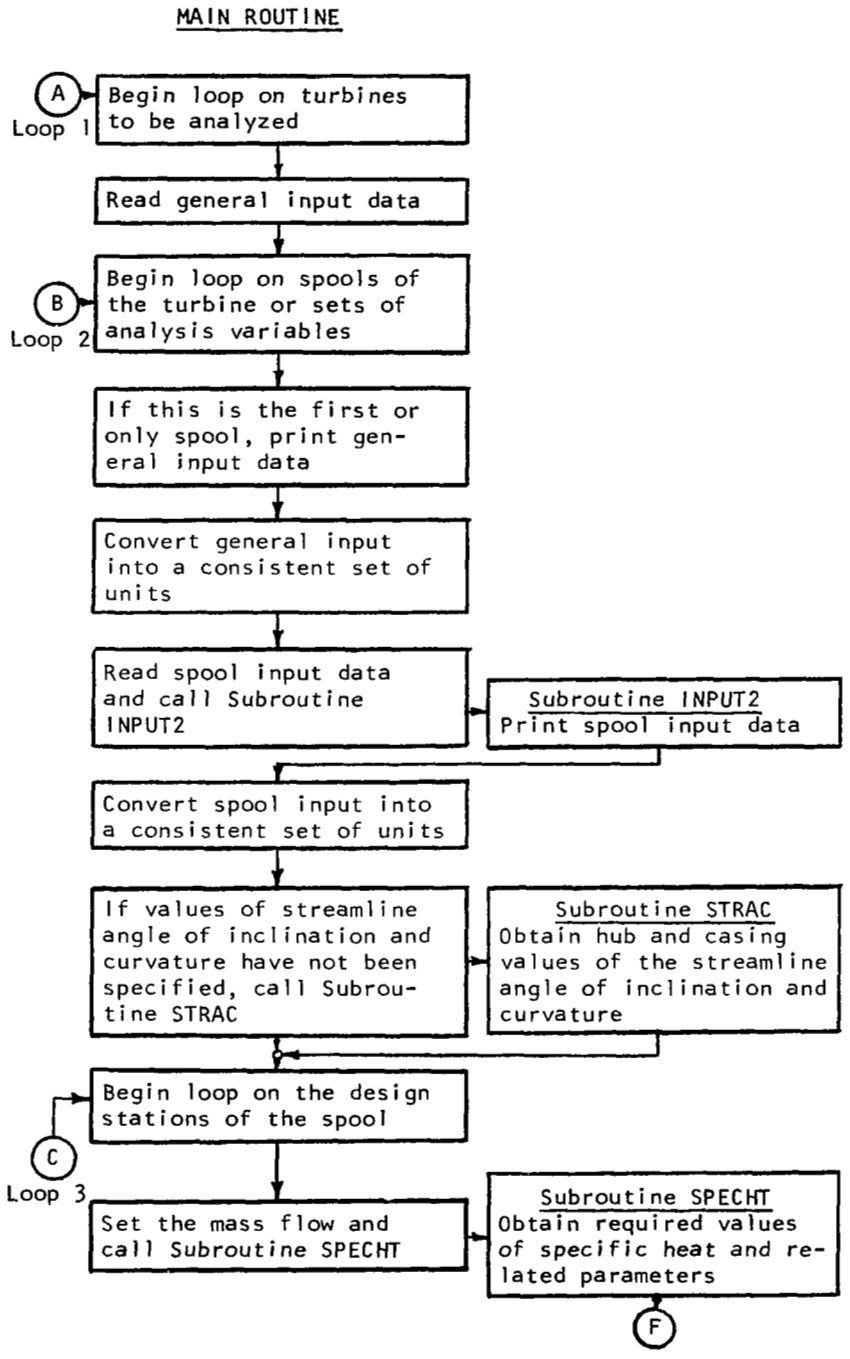

OVER-ALL FLOW DIAGRAM FOR PROGRAM TD2

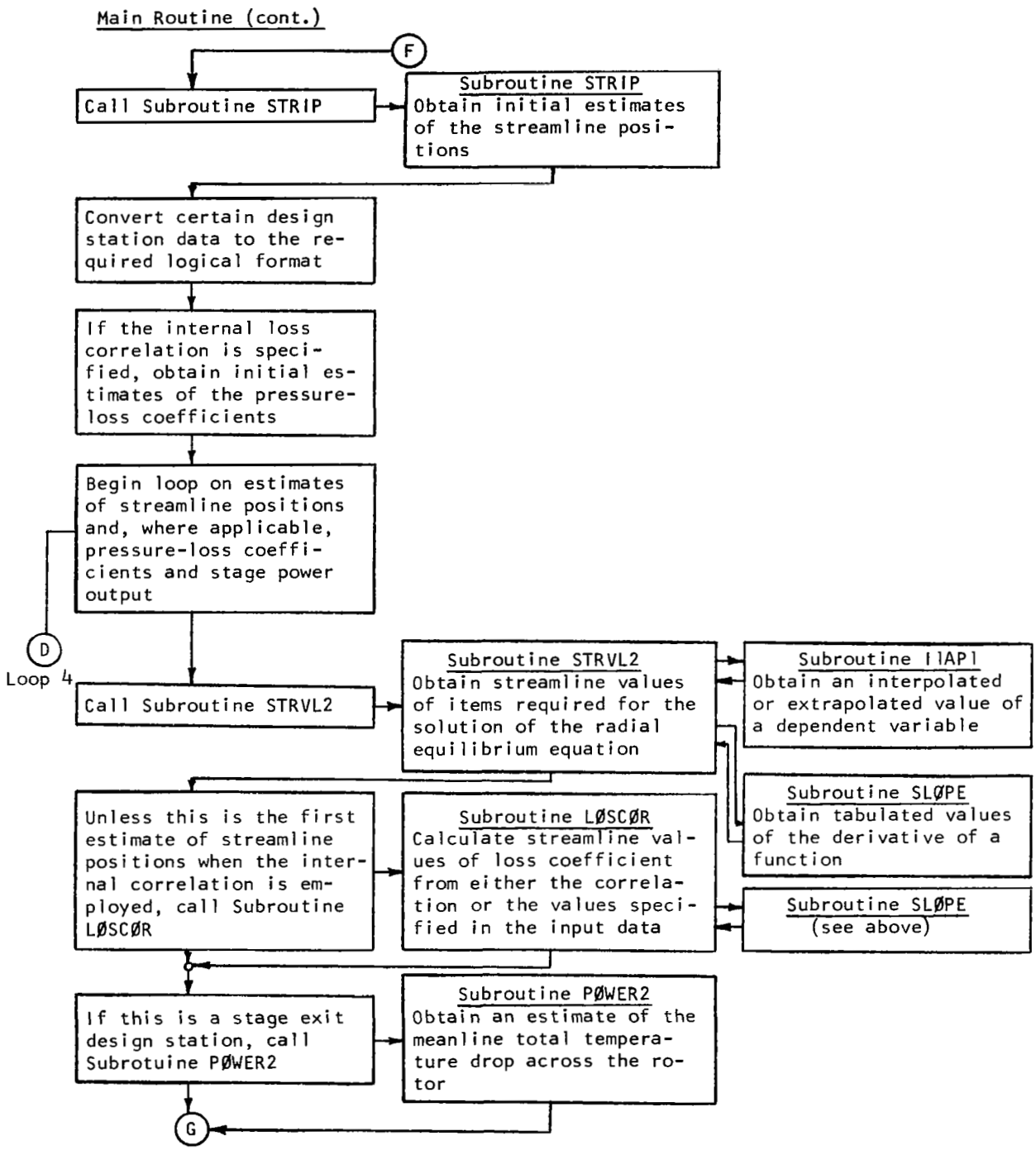

OVER-ALL FLOW DIAGRAM FOR PROGRAM TD2 (CONTINUED)

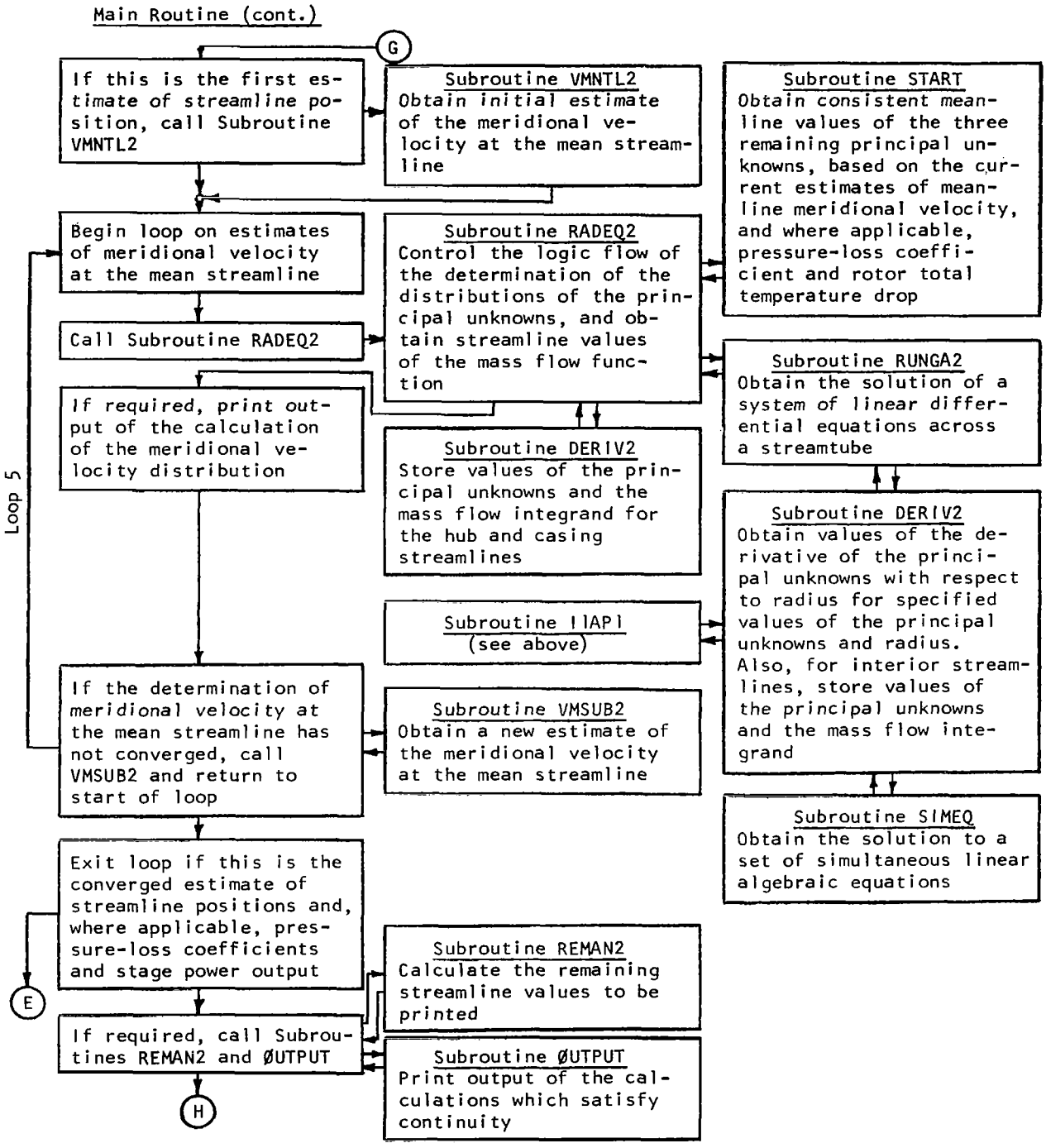

OVER-ALL FLOW DIAGRAM FOR PROGRAM TD2 (CONTINUED)

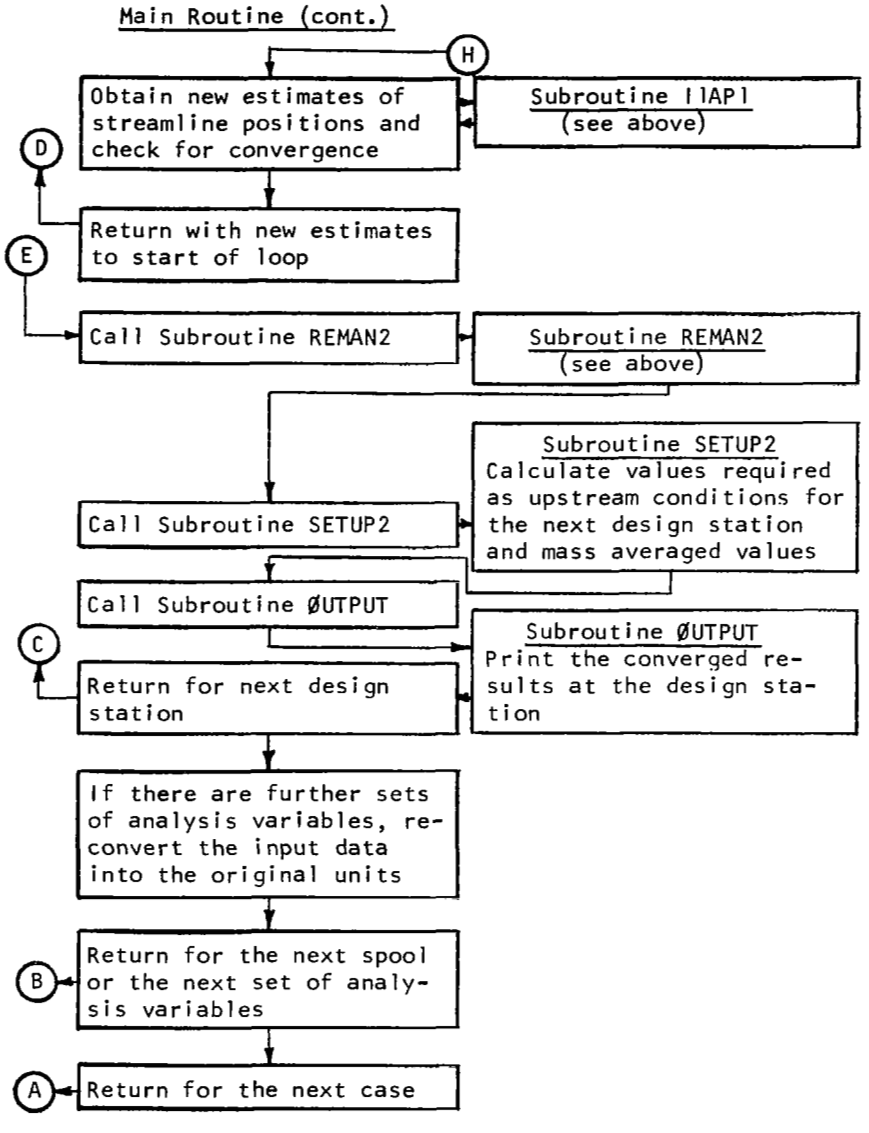

OVER-ALL FLOW DIAGRAM FOR PROGRAM TD2 (CONTINUED)

APPENDIX III

CALCULATION PROCEDURE AND NUMERICAL TECHNIQUES

The development of the analysis method has been presented in the earlier sections of this report. In the following, the program operation is considered as 77 individual steps in a linear progression of the analysis. Following the step number, the portion of the program in which the step is executed is identified by either TD2, which is the main program, or the name of the subroutine. The numerical techniques for interpolation, extrapolation, differentiation, integration, the Runge-Kutta method for the forward-step solution of ordinary differential equations, and the solution of simultaneous linear equations are discussed later.

1. TD2 - The values of certain constants used in the calculations are set. These constants include conversion factors, tolerances and upper limits of iteration loops, and tape assignments.
2. TD2 - Begin case loop on the analysis of a turbine; steps 3 through 77 are performed for each case.
3. TD2 - The general input items for the case are read into the program. These items include the general indicators and the general design requirements.
4. TD2 - Streamline values of a nondimensional mass flow function are calculated from

$$\omega_j' = (j-1)/(n-1) \qquad j = 1, 2, \cdots n$$

where ω' is the nondimensional mass flow function, j is the streamline index, and n is the number of streamlines used in the calculations. It can be seen that ω' varies from 0 at the hub (the first streamline) to 1 at the casing (the nth streamline) so that each streamtube, by definition, contains the same amount of flow.

5. TD2 - Begin loop on the analysis of a spool; steps 6 through 76 are performed for each spool of the turbine or, if there is only one spool, for each set of analysis variables.

6. TD2 - If this is a single-spool turbine or the first spool of a multispool turbine, print the general input items and convert the items into a consistent set of units.

7.1. TD2 - Read the spool input items.

7.2. INPUT2 - Print these spool input items out.

7.3. TD2 - Convert the spool input items into a consistent set of units. The items include the spool design requirements and the spool analysis variables.

8. STRAC - If tabulated values of streamline angles of inclination and curvatures as a function of radius are not specified in the input data, calculate the angle of inclination and curvature of the hub and casing streamlines at each design station from

$$A_{is} = \tan^{-1}\left(\frac{dr_s}{dx}\right)_i$$

$$\left(\frac{1}{r_m}\right)_{is} = \frac{\left(\frac{d^2 r_s}{dx^2}\right)_i}{\left[1 + \left(\frac{dr_s}{dx}\right)_i^2\right]^{3/2}}$$

where

$$\left(\frac{dr_s}{dx}\right)_i = \frac{1}{2}\left\{\frac{r_{i+1,s} - r_{i,s}}{x_{i+1} - x_i} + \frac{r_{i,s} - r_{i-1,s}}{x_{i,s} - x_{i-1,s}}\right\}$$

$$\left(\frac{d^2 r_s}{dx^2}\right)_i = \frac{\left\{\frac{r_{i+1,s} - r_{is}}{x_{i+1} - x_i} + \frac{r_{is} - r_{i-1,s}}{x_i - x_{i-1}}\right\}}{\mathrm{MIN}\left(x_{i+1} - x_i,\ x_i - x_{i-1}\right)}$$

A is the angle of inclination, $1/r_m$ is the curvature, i is the design-station index, s denotes the hub or casing, r is the radial position, x is the axial position, and $\mathrm{MIN}\left(x_{i+1} - x_i,\ x_i - x_{i-1}\right)$ denotes the smaller of $x_{i+1} - x_i$ and $x_i - x_{i-1}$.

9. TD2 - Begin loop on the analysis of a design station. Steps 10 through 73 are performed for each design station if the first or only spool is under consideration. If a subsequent spool is under consideration, steps 60 through 73 are performed for the spool inlet and steps 10 through 73 are

performed for the remaining design stations of the spool.

10. TD2 - If a coolant mass flow schedule is specified in the input data and the design station is not the turbine inlet, calculate the total mass flow at the design station from

$$\omega_{T_i} = \omega_{T,i-1} + \omega'_{ci'}\,\omega_{T,inlet}$$

where ω_T is the total mass flow at a design station, i is the design station index, ω'_c is the nondimensional coolant mass flow, i' is the blade row index and denotes the upstream blade row in this case, and $\omega_{T,inlet}$ is the mass flow at the turbine inlet.

11. SPECHT - Calculate the specific heat ratio corresponding to the specific heat at constant pressure specified in the input data for the design station from

$$\gamma_i = JC_{pi} / (JC_{pi} - R)$$

where γ is the specific heat ratio, i is the design station index, J is a conversion factor, C_p is the specific heat at constant pressure, and R is the gas constant. Further, if the design station is:

a. a blade row exit, calculate the average specific heat across the blade from

$$\overline{C}_{p_{i'}} = \frac{1}{2}(C_{pi} + C_{pi-1})$$

where i' is the blade row index

b. a stage exit, calculate the average specific heat across the stage from

$$\overline{C}_{p_{i''}} = \frac{1}{2}(C_{pi} + C_{p,i-2})$$

where i'' is the stage index

c. a spool exit, calculate the average specific heat across the spool from

$$\overline{C}_{p_{i'''}} = \frac{1}{2}(C_{p_1} + C_{pn'})$$

where i''' is the spool index and n' denotes the last design station of the spool

d. the turbine exit, calculate the average specific heat across the turbine from

$$\overline{C_{p,ov}} = \frac{1}{2}\left(C_{p,inlet} + C_{p,exit}\right)$$

where ov denotes the average turbine value, $C_{p,inlet}$ is the specific heat at the turbine inlet, and $C_{p,exit}$ is the specific heat at the turbine exit.

In each of these situations the corresponding specific heat ratio γ is calculated as above. Further, values of related parameters used in the calculations to follow are obtained.

12. STRIP - Obtain the initial estimate of the radial position of each interior streamline at the design station from

$$r_{ij} = \left\{ r_{i,1}^2 + \omega_j'\left(r_{i,n}^2 - r_{i,1}^2\right)\right\}^{1/2} \qquad j = 2, 3, \cdots n-1$$

where r is the radial position of a streamline, i is the design station index, j is the streamline index, 1 denotes the hub streamline, and n denotes the casing streamline. It can be seen that this formulation results in each streamtube having the same annulus area.

13. TD2 - If the design station is a blade row exit and the internal loss correlation is employed, obtain the initial estimate of the pressure-loss coefficients and loss gradients at each streamline from

$$Y_{ij} = 0.05 \text{ for a stator exit}$$
$$Y_{ij} = 0.10 \text{ for a stage exit} \qquad j = 1, 2, \cdots n$$
$$\frac{dY_{ij}}{dr} = 0$$

where Y is the pressure-loss coefficient, i is the design station index, and j is the streamline index.

14. TD2 - Begin major iteration loop on streamline positions; steps 15 through 72 are performed for each estimate of streamline positions and pressure-loss coefficients.

15. STRVL2 - Begin loop on streamlines; steps 16 through 23 are performed for each streamline of the design station, proceeding from the hub to the casing.

16. STRVL2 - Interpolate the streamline value of the streamline angle of inclination and curvature from the values specified in the input data or from the hub or casing values calculated in step 8.

17. STRVL2 - If the design station is the turbine inlet, interpolate the streamline value of total temperature, total pressure, and flow angle from the values specified in the input data, and return to step 16 for the remaining streamlines. Further, go to step 24 after the last streamline has been considered.

18. STRVL2 - Calculate the streamline value of the adjoining rotor blade velocity from

$$u_{ij} = \Omega r_{ij}$$

where u is the rotor blade velocity, i is the design station index, j is the streamline index, Ω is the rotative speed of the spool, and r is the radial position of the streamline.

19. STRVL2 - If the design station is a stator exit, (a) obtain the streamline value of the total temperature from

$$(T_{oi})_j = (T^*_{o,i-1})_j$$

where T_o is the total temperature, i is the design station index, j is the streamline index, and $*$ denotes a value which may have been modified if a coolant schedule or a mixing schedule has been specified in the input data, and (b) interpolate the streamline value of either the meridional velocity gradient or flow angle, whichever values have been specified in the input data.

20. STRVL2 - If the design station is a stage exit, interpolate the streamline value of the meridional velocity gradient, unless radially constant work output has been specified for the stage.

21. STRVL2 - If pressure-loss coefficients are calculated from the internal loss correlation without additional loss factors,

return to step 16 for the remaining streamlines. Further, go to step 24 after the last streamline has been considered.

22. STRVL2 - Interpolate the streamline value of the total-pressure-loss coefficient or additional loss factor specified in the input data.

23. STRVL2 - Return to step 16 for the remaining streamlines. After the last streamline has been considered, continue with step 24.

24. STRVL2 - If the design station is a stator inlet, obtain the derivative with respect to radial position of (a) the inlet total temperature, (b) the inlet flow angle, (c) the streamline angle of inclination, and (d) the inlet total pressure.

25. STRVL2 - If the design station is a stator exit, obtain the derivative with respect to radial position of (a) the total temperature, (b) the upstream total pressure, and, if a flow angle distribution has been specified in the input, of (c) the flow angle, and (d) the streamline angle of inclination.

26. STRVL2 - If the design station is a stage exit, obtain the derivative with respect to radial position of (a) the upstream relative total pressure, (b) the upstream relative total temperature, (c) the upstream total temperature, and (d) the upstream whirl velocity.

27. LØSCØR - Obtain new streamline values of total-pressure-loss coefficient and their radial derivatives from either interpolation of the input values (if ISPEC=0), or, after the first pass on streamline locations, application of the internal correlation (if ISPEC=1 or 2). Also, if this is a "converged pass", check that streamline values of loss coefficient have converged, and treat the pass as unconverged if they have not.

28. PØWER2 - If this is a stage exit, obtain an estimate of the meanline total temperature drop from

    a. if this is the first pass through the loop on

streamline position

$$\left(\Delta T_{o,i''}\right)_{initial} = \frac{P_{T\,i''}' \, P_T}{J \bar{C}_{p_{i'}} \, w_{Ti}}$$

where ΔT_o is the total temperature drop across a rotor, i'' is the stage index, P_T' is the fraction of spool power output produced by a rotor, P_T is the spool power output, and i' is the blade row index.

b. if this is the second or subsequent pass through the loop on streamline position

$$\left(\Delta T_{o,i''}\right)_{new} = \frac{\left(\Delta T_{o,i''}\right)_{initial}}{\left(\Delta T_{o,i''}\right)_{mass\ averaged}} \times \left(\Delta T_{o,i''}\right)_{previous}$$

If this is a "converged pass", check that the new meanline total temperature drop is within the specified tolerance of its previous value, and treat the pass as unconverged if it is not.

29. TD2 - If the design station is a stage exit, calculate meanline values of total temperature and whirl velocity from

$$\left(T_{oi}\right)_m = \left(T_{oi-1}\right)_m - \left(\Delta T_{o,i''}\right)_{new}$$

$$\left(V_{ui}\right)_m = \frac{\left(u_{i-1} V_{ui-1}\right)_m - g_o J \bar{C}_{p_{i'}} \left(\Delta T_{o,i''}\right)_{new}}{\left(u_i\right)_m}$$

30. VMNTL2 - If this is the first pass through the iteration loop on streamline position, obtain the initial estimate of the meridional velocity at the mean streamline as follows:

a. when the flow angle is known

$$\left(V_{mi}\right)_m = M \left[\left\{ \frac{g_o R \gamma_i}{1 + \left(\frac{\gamma_i - 1}{2}\right) M^2} \right\} \left\{ \frac{\left(T_{oi}\right)_m}{1 + \cos^2\left(\beta_h\right)_m \tan^2\left(\beta_t\right)_m} \right\} \right]^{1/2}$$

$$\text{where } M = \begin{cases} 0.4 \text{ for the turbine inlet} \\ 0.8 \text{ for a subsonic solution at stator exit} \\ 1.2 \text{ for a supersonic solution at a stator exit} \end{cases}$$

b. When the whirl velocity is known

1. at a stator exit

$$(V_{mi})_m = \cot\frac{\pi}{3}\cdot(V_{ui})_m \Big/ \cos(A_i)_m$$

2. at a rotor exit

$$(V_{mi})_m = \frac{-\cot\pi/3\,\{(V_{ui})_m - u_{im}\}}{\cos(A_i)_m}$$

where the meridional velocity is limited to values between Mach numbers of 0.1 and 0.8; that is

$$\frac{0.1}{\left\{1+0.01\left(\frac{\gamma_i-1}{2}\right)\right\}^{1/2}} \le \frac{(V_{mi})_m}{\left\{g_0 R\gamma_i (T_{oi})_m - \left(\frac{\gamma_i-1}{2}\right)(V_{ui})_m^2\right\}^{1/2}} \le \frac{0.8}{\left\{1+0.64\left(\frac{\gamma_i-1}{2}\right)\right\}^{1/2}}$$

where V_m is the meridional velocity, i is the design station index, m denotes the mean streamline, and β is the flow angle. If this is a subsequent pass through the iteration loop on streamline position, set the estimate of the meridional velocity at the mean streamline equal to the last value from the previous pass.

31. TD2 - Begin minor iteration loop to satisfy continuity. Steps 32 through 49 are performed for each estimate of the meridional velocity at the mean streamline.

32. START - Obtain the remaining components of the solution vector, y, defined as

$$y \equiv (V_m, \log P_o, V_u, \log T_o)$$

at the mean streamline, based on the current values of meanline meridional velocity ($\equiv y_1$), meanline total-pressure-loss coefficient, and meanline total temperature drop (where applicable), from

a. at stator inlet design stations

$$y_2 = \log(P_{oo})_m$$

$$y_3 = y_1 \tan(\beta_o)_m \cdot \cos(A_o)_m$$

$$y_4 = \log(T_{oo})_m$$

b. at stator exit design stations

$$y_2 = \log\left[(P^*_{i-1})_m \Big/ \left\{1+(Y_i)_m\left(1-\frac{P_{im}}{P_{oim}}\right)\right\}\right]$$

$$y_3 \begin{cases} = (V_{ui})_m & \text{if a gradient of meridional velocity has been specified} \\ = y_1 \tan(\beta_{im}) \cdot \cos(A_i)_m & \text{otherwise} \end{cases}$$

$$y_4 = \log\{(T^*_{oi-1})_m\}$$

c. at rotor exit design stations

$$y_2 = \log\left\{ P^{*\prime}_{oi-1} \cdot \frac{P'_{ois}}{P^*_{oi-1}} \; \frac{P'_{oi}}{P'_{ois}} \cdot \frac{P_{oi}}{P'_{oi}} \right\}_m$$

$$y_3 = \frac{(u_{i-1} V_{ui-1})_m - g_o J C_{pi} (\Delta T_o)_{new,m}}{(u_i)_m}$$

$$y_4 = \log\{T^*_{oi-1} - (\Delta T_o)_{new,m}\}$$

33. RADEQ2 - Begin loop on streamlines; steps 34 through 42 are performed for each streamline, first proceeding from the mean streamline to the hub and then proceeding from the mean streamline to the casing.

34. RUNGA2 - If the streamline is not the hub or casing, begin loop on stages of the Runge-Kutta determination of the meridional velocity at the following streamline. Steps 35 through 41 are performed for each of the four sets of values of radial position and meridional velocity; the first set being the radial position and meridional velocity of the streamline itself.

35. DERIV2 - If the streamline is the hub or casing streamline, go to step 40. Otherwise, set the coefficients of the first equation in the set of equations used to satisfy radial equilibirum (the radial equilibrium equation itself) as follows:

$$C_{11} = 2V_{mi}$$

$$C_{12} = \left(\frac{\gamma-1}{\gamma}\right)\left(V_i^2 - 2g_o J C_{pi} T_{oi}\right)$$

$$C_{13} = 2V_{ui}$$

$$C_{14} = -V_i^2$$

$$C_{15} = \frac{2V_{mi}^2 \cos A_i}{r_{mi}} - \frac{2V_{ui}^2}{r}$$

36. DERIV2 - Set the coefficients of the second equation used to satisfy radial equilibrium (the pressure-loss equation) as follows:

a. at stator inlet design stations

$$C_{21} = 0$$

$$C_{22} = 1.0$$

$$C_{23} = 0$$

$$C_{24} = 0$$

$$C_{25} = \frac{1}{P_{0i}} \cdot \frac{dP_{0i}}{dr}$$

b. at stator exit design stations

$$C_{21} = 2g_{2i} V_{mi}$$

$$C_{22} = 1.0$$

$$C_{23} = 2g_{2i} V_{ui}$$

$$C_{24} = -g_{2i} V_i^2$$

$$C_{25} = \frac{1}{P_{0i-1}^*} \cdot \frac{dP_{0i-1}^*}{dr} - \frac{P_{0i}\left(1 - \frac{P_i}{P_{0i}}\right)}{P_{0i-1}^*} \frac{dY_i}{dr}$$

where

$$g_{2i} = \frac{\left(\frac{\gamma_i}{\gamma_i - 1}\right) Y_i \left(\frac{T_i}{T_{0i}}\right)^{\frac{1}{\gamma_i - 1}}}{2g_0 J c_{p_i} T_{0i} \left\{1 + Y_i\left(1 - \frac{P_i}{P_{0i}}\right)\right\}}$$

c. at rotor exit design stations

$$C_{21} = 2g_{2i} V_{mi}$$

$$C_{22} = 1.0$$

$$C_{23} = 2(g_{2i} V_{ui} - V_i g_{3i})$$

$$C_{24} = g_{3i} V_i (2V_{ui} - u_i) - g_{2i} V_i^2$$

$$C_{25} = \frac{1}{P_{0i-1}^{*\prime}} \frac{dP_{0i-1}^{*\prime}}{dr} - g_{5i} \frac{dY_i}{dr} - g_{4i}(u_i^2 - u_{i-1}^2) \frac{1}{T_{0i-1}^{*\prime}} \cdot \frac{dT_{0i-1}^{*\prime}}{dr}$$

$$- 2\Omega\left[g_{3i}(u_i - V_{ui}) - g_{4i}(u_i - u_{i-1})\right]$$

where

$$\frac{T_i}{T_{oi}} = 1 - \frac{V_i^2}{2 g_o J C_{pi} T_{oi}}$$

$$\frac{T'_{oi}}{T_{oi}} = 1 + \frac{u_i (u_i - 2V_{\mu i})}{2 g_o J C_{pi} T_{oi}}$$

$$\frac{T'_{oi}}{T'^{*}_{oi-1}} = 1 + \frac{(u_i^2 - u_{i-1}^2)}{2 g_o J C_{pi} T'^{*}_{oi-1}}$$

$$\frac{P'_{oi}}{P_{oi}} = \left(\frac{T'_{oi}}{T_{oi}}\right)^{\frac{\gamma_i}{\gamma_i - 1}}$$

and

$$g_{1i} = \frac{P'_{oi}}{P_{oi}} + Y_i\left(\frac{P'_{oi}}{P_{oi}} - \frac{P_i}{P_{oi}}\right)$$

$$g_{2i} = \left(\frac{\bar{\gamma}'_i}{\bar{\gamma}'_i - 1}\right) Y_i \left(\frac{T_i}{T_{oi}}\right)^{\frac{1}{\gamma_i - 1}} \Big/ \left(g_{1i}\, 2 g_o J C_{pi} T_{oi}\right)$$

$$g_{3i} = \left(\frac{\gamma_i}{\gamma_i - 1}\right)(1 + Y_i)\left(\frac{T'_{oi}}{T_{oi}}\right)^{\frac{1}{\gamma_i - 1}} \Big/ \left(g_{1i}\, 2 g_o J C_{pi} T_{oi}\right)$$

$$g_{4i} = \left(\frac{\bar{\gamma}'_i}{\bar{\gamma}'_i - 1}\right)\left(\frac{T'^{*}_{oi-1}}{T'_{oi}}\right) \Big/ \left(2 g_o J C_{pi} T'^{*}_{oi-1}\right)$$

$$g_{5i} = \frac{1}{g_{1i}}\left\{\frac{P'_{oi}}{P_{oi}} - \frac{P_i}{P_{oi}}\right\}$$

37. DERIV2 - Set the coefficients of the third equation used to satisfy radial equilibrium (the meridional velocity equation) as follows:

a. at stator inlet design stations, and at stator exit design stations where a distribution of flow angle has been specified

$$C_{31} = -\tan\beta_i \cos A_i$$

$$C_{32} = 0$$

$$C_{33} = 1.0$$

$$C_{34} = 0$$

$$C_{35} = V_{mi}\left\{\frac{\cos A_i}{\cos^2\beta_i} \cdot \frac{d\beta_i}{dr} - \tan\beta_i \sin A_i \frac{dA_i}{dr}\right\}$$

b. at stator and stage exit design stations where gradients of meridional velocity have been specified

$$C_{31} = 1.0$$
$$C_{32} = 0$$
$$C_{33} = 0$$
$$C_{34} = 0$$
$$C_{35} = \frac{dV_{mi}}{dr}$$

c. at stage exit design stations where radially constant rotor work output has been specified

$$C_{31} = 0$$
$$C_{32} = 0$$
$$C_{33} = 0$$
$$C_{34} = T_{oi}$$
$$C_{35} = \frac{d\overline{T}^{*}_{oi-1}}{dr}$$

38. DERIV2 - Set coefficients of the final equation used to satisfy radial equilibrium (the Euler work equation) as follows:

a. at stator inlet and exit design stations

$$C_{41} = 0$$
$$C_{42} = 0$$
$$C_{43} = 0$$
$$C_{44} = T_{oi}$$
$$C_{45} = \frac{dT_{oi}}{dr}$$

b. at stage exit design stations

$$C_{41} = 0$$
$$C_{42} = 0$$
$$C_{43} = -\frac{u_i}{g_0 J \overline{C}_{pi}}$$
$$C_{44} = T_{oi}$$
$$C_{45} = \frac{d\overline{T}^{*}_{oi-1}}{dr} + \frac{1}{g_0 J \overline{C}_{pi}}\left[-\Omega(V_{ui} - V_{ui-1}) - u_{i-1}\frac{dV_{ui-1}}{dr}\right]$$

39. SIMEQ - Solve the set of four equations used to satisfy radial equilibrium for the unknowns $\frac{dV_{mi}}{dr}$, $\frac{d}{dr}(\log P_{oi})$, $\frac{dV_{ui}}{dr}$, and $\frac{d}{dr}(\log T_{oi})$

40. DERIV2 - For a streamline only, store the current values of V_{mi}, P_{oi}, V_{ui}, and T_{oi}, and calculate the value of the mass flow integrand from

$$\left(\rho V_m \cos A\, r\right)_{ij} = \left[\frac{P_o}{RT_o}\left(1 - \frac{V^2}{2g_c J C_p T_o}\right)^{\frac{1}{\gamma-1}} V_m \cos A\, r\right]_{ij}$$

and if the streamline is the hub, return to step 34 for the outward integration from meanline to casing. Otherwise, go to step 43.

41. RUNGA2 - Substitute the obtained values of the derivatives of the four unknowns into the Runge-Kutta formulation and return to step 35 for the remaining stages of the calculation of the solution vector at the following streamline.

42. RADEQ2 - After the calculation of the solution vector at the following streamline is complete, return to step 34 for the remaining streamlines.

43. RADEQ2 - Calculate streamline values of the mass flow function from

$$\omega_{ij} = 2\pi \int_{r_{i1}}^{r_{ij}} \left(\rho V_m \cos A\, r\right)_i dr$$

using numerical integration.

44. TD2 - If required, print the results of the pass through the continuity loop.

45. TD2 - Obtain the ratio of calculated mass flow ω_{in} to specified mass flow ω_{Ti} at the design station and, if this is the first pass through the continuity loop, go to step 48.

46. TD2 - If continuity is satisfied and $(V_{mi})_m$ has converged, both within the allowable tolerance, go to step 50.

47. TD2 - If the sign of the slope of the mass flow versus $(V_m)_m$ curve has changed four times, or if the maximum number of passes through the minor iteration loop has been exceeded, then this is the last pass before abandoning the analysis of the turbine; go to step 52.

48. VMSUB2 - Obtain a new estimate of $(V_{mi})_m$. If this is the first estimate of $(V_{mi})_m$, then (a)

$$(V_{mi})_{m,new} = \left(\frac{w_{in}}{w_{Ti}}\right)(V_{wi})_m$$

when a supersonic solution is desired for a specified flow angle, or (b) otherwise

$$(V_{mi})_{m,new} = \left(\frac{w_{Ti}}{w_{in}}\right)\cdot(V_{mi})_m$$

where $0.833 \leq w_{Ti}/w_{in} \leq 1.2$. If there have been several estimates of $(V_{mi})_m$, then (a)

$$(V_{mi})_{m,new} = (V_{mi})_m + \left[(V_{mi})_m - (V_{mi})_{m,old}\right]\left\{\frac{w_{Ti} - w_{in}}{w_{in} - w_{in,old}}\right\}$$

when $w_{in} \neq w_{in,old}$ and

$$-2 \leq \frac{w_{Ti} - w_{in}}{w_{in} - w_{in,old}} \leq 2$$

or (b)

$$(V_{mi})_{m,new} = \frac{1}{2}\left[(V_{mi})_m - (V_{mi})_{m,old}\right]$$

when $w_{in} = w_{in,old}$. It should be noted that $(V_{mi})_{m,old}$ and $w_{in,old}$ denote the previous values of $(V_{mi})_m$ and w_{in}, respectively.

49. TD2 - Return to step 32 with the new estimate of (V_{mi}).

50. TD2 - If this is the converged pass through the streamline position loop, go to step 52. Further, if the maximum number of passes through the loop on streamline position has been exceeded, assume that this is a converged pass and go to step 52.

51. TD2 - If the results of each pass through the streamline position loop are not to be printed, go to step 71.

52. REMAN2 - Begin output loop on streamlines; steps 53 through 58 are performed for each streamline of the design station, proceeding from the hub to the casing.

53. REMAN2 - Calculate the absolute velocity, axial velocity, static temperature, static pressure, and absolute Mach

number from respectively,

$$V_{ij} = \left\{ \left(V_{mi}^2\right)_j + \left(V_{ui}^2\right)_j \right\}^{1/2}$$

$$\left(V_{xi}\right)_j = \cos A_{ij} \left(V_{mi}\right)_j$$

$$T_{ij} = T_{oij} \left[1 - \frac{V_{ij}^2}{2 g_o J C_p T_{oij}} \right]$$

$$P_{ij} = P_{oij} \left\{ \frac{T_{ij}}{T_{oij}} \right\}^{\frac{\gamma_i}{\gamma_i - 1}}$$

$$M_{ij} = \left\{ V_{ij}^2 / \gamma_{ij} g_o R T_{ij} \right\}^{1/2}$$

54. REMAN2 - If the design station is the turbine inlet, return to step 53 for the remaining streamlines; after the last streamline has been considered, go to step 60 if this is the converged pass of the major iteration loop or, otherwise, go to step 69.

55. REMAN2 - Calculate the relative velocity, relative Mach number, relative total temperature, relative total pressure, and relative flow angle from, respectively,

$$V_{ij}' = \left\{ \left(V_{mij}^2\right) + \left[\left(V_{ui}\right)_j - u_{ij}\right]^2 \right\}^{1/2}$$

$$M_{ij}' = \left\{ V_{ij}^2 / \gamma_i g_o R T_{ij} \right\}^{1/2}$$

$$\left(T_{oij}'\right) = T_{ij} \left\{ 1 + \left(\frac{\gamma_i - 1}{2}\right) M_{ij}'^2 \right\}$$

$$\left(P_{oi}'\right)_j = P_{ij} \left\{ \left(T_{oi}'\right)_j / T_{ij} \right\}^{\frac{\gamma_i}{\gamma_i - 1}}$$

$$\beta_{ij}' = \tan^{-1} \left\{ \left(V_{ui,j} - u_{ij}\right) / V_{xi,j} \right\}$$

56. REMAN2 - If the design station is a stator exit, calculate the blade row efficiency from

$$\left(\eta_{Bi}\right)_j = \frac{\left(1 - \frac{T_{ij}}{\left(T_{oi}\right)_j}\right)}{\left\{1 - \left(\frac{P_{ij}}{\left(P_{oi}\right)_j}\right)^{\frac{\gamma_i - 1}{\gamma_i}}\right\}}$$

calculate the reaction from

$$R_{ij} = \frac{V_{i-1,j}}{V_{i,j}}$$

if this is the converged pass of the major iteration loop; calculate the absolute flow angle from

$$\beta_{ij} = \tan^{-1} \left\{ \frac{\left(V_{ui}\right)_j}{\left(V_{xi}\right)_j} \right\}$$

if the tangential velocity is specified; and return to step 53 for the remaining streamlines. After the last streamline

has been considered, go to step 60 if this is the converged pass of the major iteration loop or, otherwise, go to step 69.

57. REMAN2 - For a design station which is a stage exit, calculate the blade row efficiency from

$$(\eta_{Bi})_j = \frac{\left\{1 - \frac{T_{ij}}{(T_{0i}')_j}\right\}}{\left[1 - \left\{\frac{P_{ij}}{(P_{0i}')_j}\right\}^{\frac{\gamma-1}{\gamma}} \cdot \frac{T_{0i-1,j}'}{(T_{0i}')_j}\right]}$$

calculate the absolute flow angle from

$$\beta_{ij} = \tan^{-1} \frac{(V_{\theta i})_j}{(V_{xi})_j}$$

and, if this is not the converged pass of the major iteration loop, return to step 53 for the remaining streamlines or go to step 69 after the last streamline has been considered.

58. REMAN2 - For a converged pass of the major iteration loop at a stage exit, calculate the reaction from

$$R_{ij} = \frac{V_{i-1,j}'}{V_{ij}'}$$

and calculate the isentropic stage and rotor efficiency from, respectively,

$$(\eta_{Si})_j = \frac{\overline{C}_{pi''}(\Delta T_{0i''})_j}{\overline{C}_{pi''}(T_{0i-2})_j\left[1 - \left\{\frac{(P_{0i})_j}{(P_{0i-2})_j}\right\}^{\frac{\gamma_{i''}-1}{\gamma_{i''}}}\right]}$$

$$(\eta_{Ri})_j = \frac{(\Delta T_{0i''})_j}{(T_{0i-1})_j\left[1 - \left\{\frac{(P_{0i})_j}{(P_{0i-1})_j}\right\}^{\frac{\gamma_i-1}{\gamma_i'}}\right]}$$

and return to step 53 for the remaining streamlines or simply continue with step 59 after the last streamline has been considered.

59. SETUP2 - If this is the last design station of a spool, go to step 64.

60. SETUP2 - If mixing is specified, modified streamline values

of the absolute total pressure and absolute total temperature which will be used as the upstream conditions for the next design station are calculated using numerical integration from, respectively,

$$\left(P^*_{0,k-1}\right)_j = \left\{1-\left(X_{mi'}\right)_j\right\}\left(P_{0i}\right)_j + \left(X_{mi'}\right)_j \frac{\int_0^1 X_{mi'} P_{0i}\, dw'}{\int_0^1 X_{mi'}\, dw'}$$

$$\left(T^*_{0,k-1}\right)_j = \left\{1-\left(X_{mi'}\right)_j\right\}\left(T_{0i}\right)_j + \left(X_{mi'}\right)_j \frac{\int_0^1 X_{mi'} T_{0i}\, dw'}{\int_0^1 X_{mi'}\, dw'}$$

where $j = 1, 2, \cdots n$

$$\int_0^1 X_{mi'}\, dw' \neq 0$$

and k is the index of the next design station $(k = i+1)$, * denotes a value which may have been modified to include the effect of interfilament mixing, i' is the blade row index and denotes the blade row upstream of design station k, and X_m is the mixing coefficient. If $\int_0^1 X_{mi'}\, dw' = 0$ or if mixing is not specified, then

$$\left(P^*_{0,k-1}\right)_j = \left(P_{0i}\right)_j$$

$$\left(T^*_{0,k-1}\right)_j = \left(T_{0i}\right)_j$$

61. SETUP2 - If a coolant schedule is specified which includes the coolant total temperature, streamline values of the absolute total temperature which will be used as the upstream condition for the next design station are again modified as follows:

$$\left(T^{**}_{0,k-1}\right)_j = \frac{w_{Ti}\left(T^*_{0,k-1}\right)_j + w_{ci'}\left(T_{0c}\right)_{i'}}{w_{Ti} + w_{ci'}}$$

where k is the index of the next design station $(k = i+1$, ** denotes a value which may have been modified to include the effects of interfilament mixing and cooling, i' is the blade row index and denotes the blade row upstream of design station k, and T_{0c} is the absolute total temperature of the

coolant.

62. SETUP2 - If the design station is not a stator exit, set the following streamline values which will be used as upstream conditions for the next design station

$$(V_{k-1})_j = V_{ij}$$
$$(\beta_{k-1})_j = \beta_{ij} \qquad j = 1, 2 \cdots, n$$

and go to step 64

63. SETUP2 - If the design station is a stator exit, (a) set the following streamline values which will be used as upstream conditions for the next design station

$$(V_{u,k-1})_j = V_{uij}$$
$$(V'_{k-1})_j = V'_{ij}$$
$$(\beta'_{k-1})_j = \beta'_{ij}$$

(b) calculate the following streamline values which will be used as upstream conditions for the next design station

$$(T'^{*}_{o\,k-1})_j = (T^{*}_{o,k-1})_j + \frac{V'^{2}_{ij} - V^{2}_{ij}}{2g_o J C_{pi}}$$

$$(P'^{*}_{o\,k-1})_j = (P^{*}_{o\,k-1})_j \left\{ \frac{(T'^{*}_{o\,k-1})_j}{(T^{*}_{o\,k-1})_j} \right\}^{\frac{\gamma_i}{\gamma_i - 1}}$$

and go to step 65

64. SETUP2 - Using numerical integration, obtain mass averaged values at the design station of the absolute total temperature and absolute total pressure from

$$\overline{P}_{o2} = \int_0^1 P_{o2}\, dw'$$
$$\overline{T}_{o2} = \int_0^1 T_{o2}\, dw'$$

and, if the design station is a stage exit, the static pressure and the drop in absolute total temperature across the rotor from

$$\overline{P}_2 = \int_0^1 P_2\, dw'$$
$$\overline{\Delta T}_{o,2''} = \int_0^1 (\Delta T_{o,2''})\, dw'$$

Further, if the design station is a spool inlet, go to step 69.

65. SETUP2 - Using numerical integration, obtain mass averaged

values at the blade row exit of the blade velocity and the blade row efficiency from

$$\overline{u}_i = \int_0^1 u_i \, d\omega'$$

$$\overline{\eta}_{Bi} = \int_0^1 \eta_{Bi} \, d\omega'$$

Further, if the design station is a stator exit, go to step 69.

66. SETUP2 - For a stage exit, calculate mass averaged values of (a) the stage work output, power output, blade velocity, and blade-to-jet speed ratio from, respectively,

$$\overline{W}_{i''} = \overline{C}_{p_{i''}} \left(\overline{\Delta T}_{0i''} \right)$$

$$P_{Ti''} = \omega_{Ti} \overline{W}_{i''}$$

$$\overline{u}_{i''} = \frac{1}{2} \left(\overline{u}_i + \overline{u}_{i-1} \right)$$

$$\left(\overline{r}_{js} \right)_{i''} = \frac{\overline{u}_{i''}}{\left[2 g_0 J \overline{C}_{p_{i''}} \overline{T}_{0i-2} \left\{ 1 - \left(\frac{\overline{P}_i}{\overline{P}_{0i-2}} \right)^{\frac{\overline{\gamma}_{i''}-1}{\overline{\gamma}_{i''}}} \right\} \right]^{1/2}}$$

and (b) the stage total efficiency and static efficiency from, respectively, either

$$\left(\eta_{TOT} \right)_{i''} = \frac{P_{Ti''}}{\omega_{Ti} \overline{C}_{p_{i''}} \overline{T}_{0,i-2} \left\{ 1 - \left(\frac{\overline{P}_{0i}}{\overline{P}_{0i-2}} \right)^{\frac{\overline{\gamma}_{i''}-1}{\overline{\gamma}_{i''}}} \right\}}$$

$$\left(\eta_{STAT} \right)_{i''} = \frac{P_{Ti''}}{\omega_{Ti} \overline{C}_{p_{i''}} \overline{T}_{0,i-2} \left\{ 1 - \left(\frac{\overline{P}_i}{\overline{P}_{0i-2}} \right)^{\frac{\overline{\gamma}_{i''}-1}{\overline{\gamma}_{i''}}} \right\}}$$

if a coolant temperature schedule is not provided, or

$$\left(\eta_{TOT} \right)_{i''} = \frac{P_{Ti''}}{\overline{C}_{p_{i''}} \left\{ \omega_{Ti-2} \overline{T}_{0i-2} + \omega_{ci-1} \left(\overline{T}_{0c} \right)_{i-1} + \omega_{ci} \left(\overline{T}_{0c} \right)_i \right\} \left\{ 1 - \left(\frac{\overline{P}_{0i}}{\overline{P}_{0i-2}} \right)^{\frac{\overline{\gamma}_{i''}-1}{\overline{\gamma}_{i''}}} \right\}}$$

$$\left(\eta_{STAT} \right)_{i''} = \frac{P_{Ti''}}{\overline{C}_{p_{i''}} \left\{ \omega_{Ti-2} \overline{T}_{0i-2} + \omega_{ci-1} \left(\overline{T}_{0c} \right)_{i-1} + \omega_{ci} \left(\overline{T}_{0c} \right)_i \right\} \left\{ 1 - \left(\frac{\overline{P}_i}{\overline{P}_{0i-2}} \right)^{\frac{\overline{\gamma}_{i''}-1}{\overline{\gamma}_{i''}}} \right\}}$$

if a coolant temperature schedule is provided.

67. SETUP2 - If the stage exit is also a spool exit, calculate mass averaged values of (a) the spool work output, power

output, total-to-total pressure ratio, total-to-static pressure ratio, and blade-to-jet speed ratio from, respectively,

$$\overline{W}_{i'''} = \sum_{i''=1}^{(n'-1)/2} \overline{W}_{i''}$$

$$P_{Ti'''} = \sum_{i''=1}^{(n'-1)/2} P_{Ti''}$$

$$(\overline{\tau}_{ptt})_{i'''} = (\overline{P}_0)_{i=1} / (\overline{P}_0)_i$$

$$(\overline{\tau}_{pts})_{i'''} = (\overline{P}_0)_{i=1} / (\overline{P})_i$$

$$(\tau_{js})_{i'''} = \overline{u}_{i'''} \Big/ \left[2 g_0 J \overline{c}_{p_{i'''}} (\overline{T}_0)_{i=1} \left\{ 1 - \left(\overline{P}_i / (\overline{P}_0)_{i=1} \right)^{\frac{\overline{\gamma}_{i'''}-1}{\overline{\gamma}_{i'''}}} \right] \right]^{1/2}$$

and (b) the spool total efficiency and static efficiency from, respectively, either

$$(\eta_{Tot})_{i'''} = P_{Ti'''} \Big/ \omega_{Ti} \overline{c}_{p_{i'''}} (\overline{T}_0)_{i=1} \left[1 - \left\{ \overline{P}_{0i} / (\overline{P}_0)_{i=1} \right\}^{\frac{\overline{\gamma}_{i'''}-1}{\overline{\gamma}_{i'''}}} \right]$$

$$(\eta_{stat})_{i'''} = P_{Ti'''} \Big/ \omega_{Ti} \overline{c}_{p_{i'''}} (\overline{T}_0)_{i=1} \left[1 - \left\{ \overline{P}_i / (\overline{P}_0)_{i=1} \right\}^{\frac{\overline{\gamma}_{i'''}-1}{\overline{\gamma}_{i'''}}} \right]$$

if a coolant temperature schedule is not provided, or

$$(\eta_{Tot})_{i'''} = P_{Ti'''} \Big/ \overline{c}_{p_{i'''}} \left[\omega_{Ti} (\overline{T}_0)_{i=1} + \sum_{i=1}^{n'-1} \omega_{ci} (T_{0c})_i \right] \left[1 - \left\{ \overline{P}_{0i} / (\overline{P}_0)_{i=1} \right\}^{\frac{\overline{\gamma}_{i'''}-1}{\overline{\gamma}_{i'''}}} \right]$$

$$(\eta_{stat})_{i'''} = P_{Ti'''} \Big/ \overline{c}_{p_{i'''}} \left[\omega_{Ti} (\overline{T}_0)_{i=1} + \sum_{i=1}^{n'-1} \omega_{ci} (T_{0c})_i \right] \left[1 - \left\{ \overline{P}_i / (\overline{P}_0)_{i=1} \right\}^{\frac{\overline{\gamma}_{i'''}-1}{\overline{\gamma}_{i'''}}} \right]$$

if a coolant temperature schedule is provided.

68. SETUP2 - If the stage exit is also the exit of a multi-spool turbine, calculate mass averaged values of (a) the over-all work output, power output, total-to-total pressure ratio, total-to-static pressure ratio, blade velocity, and blade-to-jet speed ratio from, respectively,

$$\overline{W}_{ov} = \sum_{i''=1}^{n''} \overline{W}_{i'''}$$

$$(P_T)_{ov} = \sum_{i''=1}^{n''} P_{Ti''}$$

$$(\bar{r}_{ptt})_{ov} = (\bar{P}_o)_{inlet} / (\bar{P}_o)_i$$

$$(\bar{r}_{pts})_{ov} = (\bar{P}_o)_{inlet} / (\bar{P})_i$$

$$\bar{u}_{ov} = \frac{1}{n''} \sum_{i''=1}^{n''} \bar{u}_{i''}$$

$$(\bar{r}_{js})_{ov} = \bar{u}_{ov} \Big/ \left[2 g_o J \bar{c}_{pov} (\bar{T}_o)_{inlet} \left\{ 1 - \left(\bar{P}_2 / \bar{P}_{o\,inlet} \right)^{\frac{\bar{\gamma}_{ov}-1}{\bar{\gamma}_{ov}}} \right\} \right]^{1/2}$$

where n'' denotes the number of spools of the turbine; and (b) the over-all total efficiency and static efficiency from, respectively, either

$$(\bar{\eta}_{Tot})_{ov} = (P_T)_{ov} \Big/ w_{Ti} \bar{c}_{pov} (\bar{T}_o)_{inlet} \left[1 - \left(\bar{P}_{o2} / \bar{P}_{o\,inlet} \right)^{\frac{\bar{\gamma}_{ov}-1}{\bar{\gamma}_{ov}}} \right]$$

$$(\bar{\eta}_{Stat})_{ov} = (P_T)_{ov} \Big/ w_{Ti} \bar{c}_{pov} (\bar{T}_o)_{inlet} \left[1 - \left(\bar{P}_2 / \bar{P}_{o\,inlet} \right)^{\frac{\bar{\gamma}_{ov}-1}{\bar{\gamma}_{ov}}} \right]$$

if a coolant temperature schedule is not provided, or

$$(\bar{\eta}_{Tot})_{ov} = (P_T)_{ov} \Big/ \bar{c}_{pov} \left[w_{T\,inlet} (\bar{T}_o)_{inlet} + \sum_{i''=1}^{n''} \sum_{i'=1}^{n'-1} w_{ci} (T_{oc})_i \right] \left[1 - \left(\bar{P}_{o2} / \bar{P}_{o\,inlet} \right)^{\frac{\bar{\gamma}_{ov}-1}{\bar{\gamma}_{ov}}} \right]$$

$$(\eta_{Stat})_{ov} = (P_T)_{ov} \Big/ \bar{c}_{pov} \left[w_{T\,inlet} (\bar{T}_o)_{inlet} + \sum_{i''=1}^{n''} \sum_{i'=1}^{n'-1} w_{ci} (T_{oc})_i \right] \left[1 - \left(\bar{P}_2 / \bar{P}_{o\,inlet} \right)^{\frac{\bar{\gamma}_{ov}-1}{\bar{\gamma}_{ov}}} \right]$$

69. ØUTPUT - Convert the output items into the original units of the input data, print the design station output, and reconvert the output items into a consistent set of units.

70. TD2 - If this is the converged pass of the streamline position loop, go to step 73. If this is the last pass before abandoning the analysis of the turbine, go to step 77. Otherwise, simply continue with step 71.

71. TD2 - Obtain new estimates of streamline position at the design station through interpolation of the curve of radial position versus calculated mass flow function for those values of radius which give equal increments in the mass flow function. Further, check whether the values of streamline position have converged within the allowable tolerance.

72. TD2 - Return to step 15 for the converged pass of the major iteration loop or simply for a new pass through the major iteration loop.

73. TD2 - Return to step 10 for the next design station of the spool. After the last design station has been considered, simply continue with step 74.
74. TD2 - If the turbine has more than one spool, go to step 76.
75. TD2 - If there are remaining sets of analysis variables to be considered, reconvert the input data into its original units and return to step 6. Otherwise, go to step 77.
76. TD2 - Return to step 6 for the remaining spools of the turbine. After the last spool has been considered, simply continue with step 77.
77. Return to step 3 for the remaining turbines to be analyzed.

Numerical Techniques

The standard numerical techniques used in Program TD2 are discussed below. The techniques discussed are: interpolation and extrapolation, numerical differentiation, numerical integration, the Runge-Kutta method for the solution of ordinary differential equations, and the solution of simultaneous linear equations.

Interpolation and Extrapolation

Interpolation or extrapolation is performed when a function is to be evaluated for a specific value of the independent variable from tabular entries of dependent versus independent variable. If the specific value of the independent variable is within the range of the independent variable as expressed in the table, interpolation is performed; if not, extrapolation is performed.

The interpolation which is performed is always parabolic unless there are less than three tabular entries. If there are only two tabular entries, linear interpolation is performed. With only one tabular entry, the value of the dependent variable is assumed constant for all values of the independent variable. Extrapolation, on the other hand, is always linear unless there is only one tabular entry. The following nomenclature will be used in the interpolation and extrapolation formulas given below:

Y_p = interpolated or extrapolated value of the dependent variable

X_p = value of the independent variable at which interpolation or extrapolation is desired

Y_{i-1}, Y_i, Y_{i+1} = three consecutive tabular entries of the dependent variable corresponding to X_{i-1}, X_i, and X_{i+1}, respectively

X_{i-1}, X_i, X_{i+1} = three consecutive tabular entries of the independent variable

The formula used for parabolic interpolation is:

$$Y_p = a(X_p - X_{i-1})^2 + b(X_p - X_{i-1}) + Y_{i-1}$$

where

$$a = \frac{(X_i - X_{i-1})(Y_{i+1} - Y_i) - (X_{i+1} - X_i)(Y_i - Y_{i-1})}{(X_{i+1} - X_{i-1})(X_i - X_{i-1})(X_{i+1} - X_i)}$$

$$b = \frac{(Y_i - Y_{i-1})}{(X_i - X_{i-1})} - a(X_i - X_{i-1})$$

and X_i is the tabular entry of the independent variable which is nearest to X_p. (However, since a tabular entry on either side of X_i is necessary, X_i is not allowed to be the first or last entry in the table.) The formula used for linear interpolation or extrapolation is:

$$Y_p = \frac{(X_p - X_{i-1})}{(X_i - X_{i-1})}(Y_i - Y_{i-1}) + Y_{i-1}$$

where $X_{i-1} \leq X_p \leq X_i$ for interpolation, and either X_{i-1} is the first or X_i is the last tabular entry for extrapolation.

Parabolic, rather than linear, interpolation was selected for the program so that typical variations in the analysis variables can be represented accurately with relatively few data points. However, since this interpolation is used to assign values to the streamline quantities, it is recommended that whenever more than two items are specified for any of the program input quantities, the user should consider the manner in which these data will be interpreted by the program.

Numerical Differentiation

Numerical differentiation is performed to obtain streamline values of the derivative of a function with respect to the independent variable from tabular entries of the function and the independent variable at each streamline. The values are found by differentiating a second-order curve which is fitted to the streamline values of the function. Using the nomenclature given above, the formulas used to obtain the derivatives are:

(a) for interior streamlines

$$\left(\frac{dy}{dx}\right)_i = a(x_i - x_{i-1}) + \frac{(y_i - y_{i-1})}{(x_i - x_{i-1})}$$

(b) for the hub streamline

$$\left(\frac{dy}{dx}\right)_1 = \frac{(y_1 - y_{1-1})}{(x_1 - x_{1-1})} - a(x_1 - x_{1-1})$$

(c) for the casing streamline

$$\left(\frac{dy}{dx}\right)_i = \frac{(y_i - y_{i-1})}{(x_i - x_{i-1})} + a\left\{(x_i - x_{i-1}) + 2(x_{i+1} - x_i)\right\}$$

where

$$a = \frac{(x_i - x_{i-1})(y_{i+1} - y_i) - (x_{i+1} - x_i)(y_i - y_{i-1})}{(x_{i+1} - x_{i-1})(x_i - x_{i-1})(x_{i+1} - x_i)}$$

Numerical Integration

Numerical integration is performed when a function, say ϕ, is to be integrated across the annulus at a design station. The independent variable may be the radial position, r, or the nondimensional mass flow function, w'. The value of the integral is obtained from the trapezoidal rule so that ϕ is replaced by a series of chords; the chords connect adjacent streamline values of the function. Hence, if r is the independent variable, then

$$\int_{r_1}^{r_n} \phi \, dr = \frac{1}{2} \sum_{j=1}^{n-1} (\phi_{j+1} + \phi_j)(r_{j+1} - r_j)$$

where the subscripts 1 and n denote the hub and casing streamlines, respectively. If w' is the independent variable, the expression becomes

$$\int_0^1 \phi \, d\omega' = \frac{1}{(n-1)} \left[\frac{1}{2} (\phi_1 + \phi_n) + \sum_{j=2}^{n-1} \phi_j \right]$$

since $\omega_{j+1} - \omega_j = 1/(n-1)$ for all values of j .

Runge-Kutta Method

The Runge-Kutta method for the solution of simultaneous ordinary differential equations is used to determine the remaining streamline values of the principal unknowns (meridional velocity, total pressure, tangential velocity, and total temperature), based on their values at the mean streamline. The equations are of the form

$$\frac{dy_i}{dr} = f_i(r, y_i) \qquad i = 1, 2, 3, 4$$

where

$$y_1 = V_m$$
$$y_2 = \log P_0$$
$$y_3 = V_u$$
$$y_4 = \log T_0$$

The f_i are obtained from the simultaneous solution of the radial equilibrium equation and the three subsidiary differential equations.

Given the values of the y_i at one streamline, y_{i0} , the unknown values at the adjacent streamline, y_{i4} , are determined in four stages. Each stage is repeated four times before proceeding to the next, once for each of the unknowns, since each of the required derivatives (f_i) depends on the values of all the unknowns.

$$\begin{cases} y_{i1} = y_{i0} + h k_{i1} \\ q_{i1} = q_{i0} + 3 k_{i1} - \frac{1}{2} f_i(r_0, y_{i0}) \end{cases}$$

where

$$h = r_4 - r_0$$
$$k_{i1} = \frac{1}{2} \left[f_i(r_0, y_{i0}) - 2 q_{i0} \right]$$
$$q_{i0} = \begin{cases} 0 & \text{at the mean line} \\ q_{i4} & \text{thereafter} \end{cases}$$

$$\begin{cases} y_{22} = y_{21} + h\,k_{22} \\ q_{22} = q_{21} + 3\,k_{22} - \left(1-\sqrt{\tfrac{1}{2}}\right) f_i\left(r_0 + h/2,\, y_{21}\right) \end{cases}$$

where

$$k_{22} = \left(1-\sqrt{\tfrac{1}{2}}\right)\left[\, f_i\left(r_0 + h/2,\, y_{21}\right) - q_{21}\right]$$

$$\begin{cases} y_{23} = y_{22} + h\,k_{23} \\ q_{23} = q_{22} + 3\,k_{23} - \left(1+\sqrt{\tfrac{1}{2}}\right) f_i\left(r_0 + \tfrac{h}{2},\, y_{22}\right) \end{cases}$$

where

$$k_{23} = \left(1+\sqrt{\tfrac{1}{2}}\right)\left[\, f_i\left(r_0 + \tfrac{h}{2},\, y_{22}\right) - q_{22}\right]$$

$$\begin{cases} y_{24} = y_{23} + h\,k_{24} \\ q_{24} = q_{23} + 3\,k_{24} - \tfrac{1}{2} f_i\left(r_0 + h,\, y_{24}\right) \end{cases}$$

where

$$k_{24} = \tfrac{1}{6}\left[\, f_i\left(r_0 + h,\, y_{23}\right) - 2\,q_{23}\right]$$

The above is known as the Gill procedure; it possesses the refinement, by introducing q_0 and q_4, that some of the round-off errors accumulated during each step are canceled. The method used is based on that given in Reference 3.

Solution of Simultaneous Linear Equations

The numerical solution of a set of simultaneous linear equations is obtained by the method known as the Gauss Reduction. That is, the set of equations is triangularized and, therefore, the final equation of the set is reduced to one unknown. After that unknown has been evaluated, the remaining unknowns are found by back substitution into the other equations. It should be noted that during the triangularization procedure, the order of the equations may be changed to maximize the leading coefficient in each equation and thereby increase the accuracy of the solution.

APPENDIX IV

CØMMØN FORTRAN NOMENCLATURE

The following tables give the Fortran nomenclature for the blank and labeled blocks of CØMMØN. There are twelve blocks of labeled CØMMØN in addition to blank CØMMØN. Singly and doubly subscripted arrays are indicated by indices I to N; the nomenclature for these is as follows:

I	Design station index
J	Streamline index
K	Radial position index
L	Stator, rotor, or stage index
M	Blade row index
N	Station index

Nomenclature for Blank CØMMØN

Fortran Symbol	Symbol	Description	Units
IBR	i'	Blade row index	--
ICØNV		Indicator: ICØNV=0, primarily, if a converged solution at a design station has not yet been obtained ICØNV=1, primarily, if a converged solution at a design station has been obtained	--
ICØØL		Indicator: ICØØL=0 if a coolant schedule is not specified in the input data ICØØL=1 if a coolant mass flow schedule is specified in the input data ICØØL=2 if a coolant mass flow and total temperature schedule is specified in the input data	--
IDLETE		Indicator: IDLETE=0 if only the converged results of the iteration loop on streamline position are to be printed at each design station	

Fortran Symbol	Symbol	Description	Units
		IDLETE=1 if the results of each pass through the iteration loop on streamlines are to be printed	--
IDS	i	Design station index	--
ILLØØP		Pass index of the iteration loop on meridional velocity at the mean streamline	--
ILØØP		Pass index of the iteration loop on streamline position	--
IMIX		Indicator: IMIX=0 if a mixing schedule is not specified in the input data IMIX=1 if a mixing schedule is specified in the input data	--
IPØFS		Indicator: IPØFS=0 if radially constant work output is specified at a rotor-exit design station IPØFS=1 if values of meridional velocity gradient are specified as a function of radius at a rotor-exit design station	--
ISAV		Spool index or, if there is only one spool, index of the sets of analysis variables	--
ISØN		Indicator: ISØN=0 if a subsonic solution is desired at a stator exit ISØN=1 if a supersonic solution is desired at a stator exit	--
ISPEC		Indicator: ISPEC=0 if values of total-pressure-loss coefficient as a function of radius are specified at each blade row exit ISPEC=1 if streamline values of pressure-loss coefficient are calculated from the internal correlation without an additional loss factor at each blade row exit ISPEC=2 if streamline values of pressure-loss coefficients	

Fortran Symbol	Symbol	Description	Units
		are calculated from the internal correlation with an additional loss factor at each blade row exit	--
ISRI		Indicator: ISRI=1 if a design station is a stator exit ISRI=2 if a design station is a stage exit ISRI=3 if a design station is the inlet of the turbine ISRI=4 if a design station is the inlet of a subsequent spool	--
ISTG	i''	Stage index	--
IWRLS		Indicator: IWRLS=0 if values of meridional velocity gradient as a function of radius are specified at a stator-exit design station IWRLS=1 if values of flow angle as a function of radius are specified at a stator-exit design station and a subsonic solution is desired IWRLS=2 if values of flow angle as a function of radius are specified at a stator-exit design station and a supersonic solution is desired	--
NDSTAT	n'	Number of design stations on a spool	--
NLINES	n	Number of streamlines used in the calculations (including the hub and casing streamlines)	--
NSPØØL	n''	Number of spools	--
NSTG	$(n'-1)/2$	Number of stages on a spool	--
NTAPE		Output tape number	--
NTUBES	$n-1$	Number of streamtubes used in the calculations	--

Nomenclature for CØMMØN/CØM1/

Fortran Symbol	Symbol	Description	Units
AY(J)	A_{ij}	Streamline values of the streamline angle of inclination at a design station	rad, deg
BET(J)	β_{ij}	Streamline values of the absolute flow angle at a design station	rad, deg
BETR(J)	β'_{ij}	Streamline values of the relative flow angle at a blade row exit	rad, deg
BREFF(J)	$(\eta_{B2})_j$	Streamline values of the blade row efficiency at a blade row exit	--
CRV(J)	$(1/r_m)_{ij}$	Streamline values of the streamline curvature at a design station	per ft, per in
DFLØW(J)	ω_{ij}	Streamline values of the calculated mass flow function at a design station	lbm per sec
EFFR(J)	$(\eta_{R2})_j$	Streamline values of the rotor isentropic efficiency at a stage exit	--
EFFS(J)	$(\eta_{S2})_j$	Streamline values of the stage isentropic efficiency at a stage exit	--
EM(J)	M_{ij}	Streamline values of the absolute Mach number at a design station	--
EMR(J)	M'_{ij}	Streamline values of the relative Mach number at a blade row exit	--
FACL(J)	$(f_{L2})_j$	Streamline values of the total-pressure-loss coefficient or the additional loss factor used in conjunction with the internal loss correlation at a blade row exit	--
GRND(J)	$(\rho V_m r \cos A)_{ij}$	Streamline values of the integrand appearing in the continuity equation for nonuniform flow at a design station	lbm per ft sec

Fortran Symbol	Symbol	Description	Units
P(J)	P_{ij}	Streamline values of the static pressure at a design station	psf, psi
PØ(J)	$(P_o)_{ij}$	Streamline values of the absolute total pressure at a design station	psf, psi
PØR(J)	$(P_o')_{ij}$	Streamline values of the relative total pressure at a blade row exit	psf, psi
REAC(J)	R_{ij}	Streamline values of the reaction at a blade row exit	--
T(J)	T_{ij}	Streamline values of the static temperature at a design station	deg R
TØ(J)	$(T_o)_{ij}$	Streamline values of the absolute total temperature at a design station	deg R
TØR(J)	$(T_o')_{ij}$	Streamline values of the relative total temperature at a blade row exit	deg R
U(J)	u_{ij}	Streamline values of the blade velocity at a blade row exit	fps
V(J)	V_{ij}	Streamline values of the absolute velocity at a design station	fps
VM(J)	$(V_m)_{ij}$	Streamline values of the meridional component of the velocity at a design station	fps
VR(J)	V'_{ij}	Streamline values of the relative velocity at a blade row exit	fps
VT(J)	$(V_u)_{ij}$	Streamline values of the tangential component of the absolute velocity at a design station	fps
VX(J)	$(V_x)_{ij}$	Streamline values of the axial component of the velocity at a design station	fps
WYE(J)	Y_{ij}	Streamline values of the pressure-loss coefficient at a blade row exit	--

Nomenclature for CØMMØN/CØM2/

Fortran Symbol	Symbol	Description	Units
CP(I)	C_{pi}	Specified values of the specific heat at constant pressure at each design station of a spool	Btu per lbm deg R
CP1	C_{pi}	Specific heat at constant pressure at a design station	Btu per lbm deg R
CP2	$\bar{C}_{pi'}$	Average value of the specific heat at constant pressure across a blade row	Btu per lbm deg R
CP3	$\bar{C}_{pi''}$	Average value of the specific heat at constant pressure across a stage	Btu per lbm deg R
CP4	$\bar{C}_{pi'''}$	Average value of the specific heat at constant pressure across a spool	Btu per lbm deg R
CP5	$\bar{C}_{pav}$	Average value of the specific heat at constant pressure across the turbine	Btu per lbm deg R
EJCP1	JC_{pi}	Parameter related to the specific heat at a design station	ft lbf per lbm deg R
EJCP2	$J\bar{C}_{pi'}$	Parameter related to the average specific heat across a blade row	ft lbf per lbm deg R
GAMA1	$\gamma_i/(\gamma_i-1)$	Parameter related to the specific heat ratio at a design station	--
GAMA2	$\bar{\gamma}_{i'}/(\bar{\gamma}_{i'}-1)$	Parameter related to the average specific heat ratio across a blade row	--
GAMA3	$\bar{\gamma}_{i''}/(\bar{\gamma}_{i''}-1)$	Parameter related to the average specific heat ratio across a stage	--
GAMB1	$1/(\gamma_i-1)$	Parameter related to the specific heat ratio at a design station	--
GAMC1	$(\gamma_i-1)/2$	Parameter related to the specific heat ratio at a design station	--
GAMD2	$(\bar{\gamma}_{i'}-1)/\bar{\gamma}_{i'}$	Parameter related to the average specific heat ratio across a blade row	--

Fortran Symbol	Symbol	Description	Units
GAMD3	$(\bar{\gamma}_{i''}-1)/\bar{\gamma}_{i''}$	Parameter related to the average specific heat ratio across a stage	--
GAMD4	$(\bar{\gamma}_{i'''}-1)/\bar{\gamma}_{i'''}$	Parameter related to the average specific heat ratio across a spool	--
GAMD5	$(\bar{\gamma}_{ov}-1)/\bar{\gamma}_{ov}$	Parameter related to the average specific heat ratio across the turbine	--
GAM1	γ_i	Specific heat ratio at a design station	--
GAM2	$\bar{\gamma}_{i'}$	Average value of the specific heat ratio across a blade row	--
GAM3	$\bar{\gamma}_{i''}$	Average value of the specific heat ratio across a stage	--
GAM4	$\bar{\gamma}_{i'''}$	Average value of the specific heat ratio across a spool	--
GAM5	$\bar{\gamma}_{ov}$	Average value of the specific heat ratio across the turbine	--
GASC	R	Gas constant of the working fluid	ft lbf per lbm deg R
GGG1	$g_o R \gamma_i$	Parameter related to the gas constant and the specific heat ratio at a design station	ft^2 per sec^2 deg R
GJCP1	$g_o J C_{pi}$	Parameter related to the specific heat at a design station	ft^2 per sec^2 deg R
GJCP12	$2 g_o J C_{pi}$	Parameter related to the specific heat at a design station	ft^2 per sec^2 deg R
GJCP2	$g_o J \bar{C}_{pi'}$	Parameter related to the average specific heat across a blade row	ft^2 per sec^2 deg R
GJCP22	$2 g_o J \bar{C}_{pi'}$	Parameter related to the average specific heat across a blade row	ft^2 per sec^2 deg R
GJCP32	$2 g_o J \bar{C}_{pi''}$	Parameter related to the average specific heat across a stage	ft^2 per sec^2 deg R

Fortran Symbol	Symbol	Description	Units
GJCP42	$2g_oJ\bar{C}_{p2''}$	Parameter related to the average specific heat across a spool	ft^2 per sec^2 deg R
GJCP52	$2g_oJ\bar{C}_{p2'''}$	Parameter related to the average specific heat across the turbine	ft^2 per sec^2 deg R

Nomenclature for CØMMØN/CØM3/

Fortran Symbol	Symbol	Description	Units
BETRU(J)	$\beta'_{2-1,j}$	Streamline values of the relative flow angle upstream of a design station	rad
BETU(J)	$\beta_{2-1,j}$	Streamline values of the absolute flow angle upstream of a design station	rad
BREFFØ(J)	$(\eta_{B,2-1})_j$	Streamline values of the blade row efficiency at a stator exit	--
DPØUDR(J)	$(dP^*_{o,2-1}/dr)_j$	Streamline values of the derivative of the modified upstream absolute total pressure with respect to radius	lbf per ft^3
DPRUDR(J)	$(dP'^*_{o,2-1}/dr)_j$	Streamline values of the derivative of the modified upstream relative total pressure with respect to radius	lbf per ft^3
DTØUDR(J)	$(dT_{o,2-1}/dr)_j$	Streamline values of the derivative of the modified upstream absolute total temperature with respect to radius	deg R per ft
DTRUDR(J)	$(dT'^*_{o,2-1}/dr)_j$	Streamline values of the derivative of the modified upstream relative total temperature with respect to radius	deg R per ft
DVTUDR	$(dV_{u,2-1}/dr)_j$	Streamline values of the derivative of the stator exit tangential velocity with respect to radius	per sec

Fortran Symbol	Symbol	Description	Units
PØØ(J)	$(P_{0,r-1})_j$	Streamline values of absolute total pressure at the previous design station	psf
PØØ2(J)	$(P_{0,r-2})_j$	Previous set of values of PØØ	psf
PØRU(J)	$(P'^{*}_{0\,r-1})_j$	Streamline values of relative total pressure upstream of a design station which may have been modified through mixing	psf
PØU(J)	$(P^{*}_{0\,r-1})_j$	Streamline values of absolute total pressure upstream of a design station which may have been modified through mixing	psf
REACØ(J)	$(R_{r-1})_j$	Streamline values of reaction at a stator exit	--
TØØ(J)	$(T_{0,r-1})_j$	Streamline values of absolute total temperature at the previous design station	deg R
TØØ2(J)	$(T_{0,r-2})_j$	Previous set of values of TØØ	deg R
TØRU(J)	$(T'^{*}_{0\,r-1})_j$	Streamline values of relative total temperature upstream of a design station which may have been modified through mixing and/or cooling	deg R
TØU(J)	$(T^{*}_{0,r-1})_j$	Streamline values of absolute total temperature upstream of a design station which may have been modified through mixing and/or cooling	deg R
UU(J)	$(u_{r-1})_j$	Streamline values of the blade velocity at the previous design station	fps
VRU(J)	$(V'_{r-1})_j$	Streamline values of the relative velocity at the previous design station	fps
VTU(J)	$(V_{u,r-1})_j$	Streamline values of the tangential velocity at the previous design station	fps
VU(J)	$(V_{r-1})_j$	Streamline values of the absolute velocity at the previous design station	fps

Fortran Symbol	Symbol	Description	Units
WYEØ(J)	$Y_{2-1,j}$	Streamline values of the pressure-loss coefficient at a stator exit	--

Nomenclature for CØMMØN/CØM4/

Fortran Symbol	Symbol	Description	Units
FLW(I)	w_{Ti}	Total mass flow at each design station of a spool	lbm per sec.
FLWP	w_{Ti}	Total mass flow at a particular design station	lbm per sec
HP	P_T	Total power output of a spool	ft lbf per sec, hp
RPM	Ω	Rotative speed of a spool	rad per sec, rpm
RST(J)	r_{ij}	Streamline values of the streamline radial position at a design station	ft, in
WFN(J)	w'_j	Streamline values of the nondimensional mass flow function	--

Nomenclature for CØMMØN/CØM5/

Fortran Symbol	Symbol	Description	Units
ASTR(K,I)	A_i	Radial values of the streamline angle of inclination specified at each design station of a spool	rad, deg
ASTS(K)	A_i	Radial values of the streamline angle of inclination specified at a design station	rad
BETLT(K)	β_{inlet}	Radial values of the flow angle specified at the turbine inlet	rad, deg
CSTR(K,I)	$(1/r_m)_i$	Radial values of the streamline curvature specified at each design station of a spool	per ft, per in
CSTS(K)	$(1/r_m)_i$	Radial values of the streamline curvature specified at a design station	per ft

Fortran Symbol	Symbol	Description	Units
DTØ(J)	$(\Delta T_{0i''})_j$	Streamline values of the drop in absolute total temperature across a rotor	deg R
DVMDRS(J)	$(dV_{mi}/dr)_j$	Streamline values of the derivative of the meridional component of velocity with respect to radius at a design station	per sec
DVMDS(K)	(dV_{mi}/dr)	Radial values of the derivative of the meridional component of velocity with respect to radius specified at a design station	per sec
FHP(L)	$P'_{T_{i''}}$	Fractions of the total power output of a spool produced by each stage	--
FLWC	$\omega_{ci'}$	Coolant mass flow added in a blade row	lbm per sec
IPØF(L)		Values of an indicator at each stage exit of a spool: IPØF(I)=0 if a uniform power output distribution is desired at a stage exit IPØF(I)=1 if values of the gradient of meridional velocity as a function of radius are specified at a stage exit	--
ISTRAC		Indicator: ISTRAC=0 if the streamline angles of inclination and curvatures are calculated internally at each design station ISTRAC=1 if values of streamline angle of inclination and curvature as a function of radius are specified at each design station	--
IWRL(L)		Indicator: IWRL(I)=0 if values of meridional velocity gradient as a function of radius are specified at a stator exit IWRL(I)=1 if values of flow angle as a function of radius are specified at a stator exit and a subsonic solution is desired	

Fortran Symbol	Symbol	Description	Units
		IWRL(I)=2 if values of flow angle as a function of radius are specified at a stator exit and a supersonic solution is desired	--
NLT		Number of radii at which the turbine inlet conditions are specified	--
NSTAT	$n+2$	Number of stations of the spool, including one upstream station and one downstream station	--
NSTRAC		Number of radii at which streamline angles of inclination and curvatures at each design station of a spool are specified	--
NXT		Number of radii at which the exit conditions of each blade row of the spool are specified	--
PØLT(K)	$(P_o)_{inlet}$	Radial values of the absolute total pressure specified at the turbine inlet	psf, psi
RANN(N,1) or RANN(N,2)	r_{hi} or r_{ci}	Radial position of the hub and casing at either each station or each design station of the spool	ft, in
RLT(K)	r_{inlet}	Radial coordinates at which the turbine inlet conditions are specified	ft, in
RSTRAC(K,I)	r_i	Radial coordinates at which the streamline angles of inclination and curvature are specified at each design station of a spool	ft, in
RSTRAS(K)	r_i	Radial coordinates at which the streamline angles of inclination and curvature are specified at a design station	ft
RXTS(K)	r_i	Radial coordinates at which the exit conditions of a blade row are specified	ft
TØC(M)	$(T_{oc})_i$	Absolute total temperature of the coolant added in each blade row	deg R

Fortran Symbol	Symbol	Description	Units
TØLT(K)	$(T_0)_{inlet}$	Radial values of the absolute total temperature specified at the turbine inlet	deg R
VUM(L)	$(V_{ui})_m$	Tangential velocity at the mean streamline for each stator exit for which a distribution of the gradient of meridional velocity is specified	fps
VUMS		Tangential velocity at the mean streamline for a stator exit for which a distribution of the gradient of meridional velocity is specified	fps
WRLS(K)		Radial values of the flow angle specified at a stator exit	rad
XMIX(J,M)	$(X_{mi})_j$	Streamline values of the mixing coefficient specified for each blade row of the spool	--
XSTAT(N)	X_i	Axial position of each station of the spool	ft, in
YØS(K)		Radial values of the loss parameter specified at the exit of a blade row	--

Nomenclature for CØMMØN/CØM6/

Fortran Symbol	Symbol	Description	Units
CNV1	12	Conversion factor from ft to in	in per ft
CNV2	144	Conversion factor from sq ft to sq in	sq in per sq ft
CNV3	$180/\pi$	Conversion factor from rad to deg	deg per rad
CNV5	550	Conversion factor from hp to ft lbf per sec	ft lbf per sec hp
EJAY	J	Conversion factor from Btu to ft lbf	ft lbf per Btu
GØ	g_0	Conversion factor from lbf to lbm ft per sec^2	lbm ft per lbf sec^2

Fortran Symbol	Symbol	Description	Units
PI	π	Constant factor	--
TØLWY		Tolerance used to test the convergence of the iteration for loss coefficient	--

Nomenclature for CØMMØN/CØM7/

Fortran Symbol	Symbol	Description	Units
CØT60	$\cot\left(\frac{\pi}{3}\right)$	Constant equal to 0.57735	--
DFLWT	w_{in}	Mass flow at a design station as calculated from the continuity equation for the current estimate of meridional velocity at the mean streamline	lbm per sec
DFLWTØ	$w_{in,old}$	Mass flow at a design station as calculated from the continuity equation for the previous estimate of meridional velocity at the mean streamline	lbm per sec
EMMAX		Constant equal to 0.8	--
EMMIN		Constant equal to 0.1	--
ICNT		Index of the number of changes in sign of the derivative of calculated mass flow with respect to meridional velocity at the mean streamline in the iteration procedure	--
JJ		Variant of the streamline index	--
JJP		Index of the streamline following that streamline indicated by JJ	--
MEAN	m	Index of the mean streamline	--
RATIØ	w_{in}/w_{Ti}	Ratio of calculated mass flow based on the current estimate of meridional velocity at the mean streamline to the specified mass flow at a design station	--
VMM	$(V_{m2})_m$	Current estimate of the meridional velocity at the mean streamline of a design station	fps

Fortran Symbol	Symbol	Description	Units
VMMØ	$(V_{mi})_{m,old}$	Previous estimate of the meridional velocity at the mean streamline	fps
VMMØØ	$(V_{mi})_{m,old}$	Previous value of VMMØ	fps

Nomenclature for CØMMØN/CØM8/

Fortran Symbol	Symbol	Description	Units
DADR(J)	$\left(\frac{d\alpha_2}{dr}\right)_j$	Streamline values of the derivative of streamline angle of inclination with respect to radius at a design station	per ft
DBDR(J)	$\left(\frac{d\beta_2}{dr}\right)_j$	Streamline values of the derivative of flow angle with respect to radius at a design station	per ft
DPØDR(J)	$\left(\frac{dP_{o2}}{dr}\right)_j$	Streamline values of the derivative of the total pressure with respect to radius at a design station	lbf per ft^3
DTØDR(J)	$\left(\frac{dT_o}{dr}\right)_j$	Streamline values of the derivative of the total temperature with respect to radius at a design station	deg R per ft
DVTDR(J)	$\left(\frac{dV_u}{dr}\right)_j$	Streamline values of the derivative of the tangential velocity with respect to radius at a design station	per sec
DWYDR(J)	$\left(\frac{dY_2}{dr}\right)_j$	Streamline values of the derivative of the pressure-loss coefficient with respect to radius at a blade row exit	per ft

Nomenclature for CØMMØN/CØM9/

Fortran Symbol	Symbol	Description	Units
BREA(M)	$\bar{\eta}_{Bi}$	Mass averaged value of the blade row efficiency for each blade row of the spool	--
BREAP	$\bar{\eta}_{B2}$	Mass averaged value of the blade row efficiency for a blade row	--

Fortran Symbol	Symbol	Description	Units
ENMI	$n-1$	Floating point representation of the number of streamtubes	--
FLWM	$\omega_{T,\,inlet}$	Mass flow rate at the inlet of the turbine	lbm per sec
ØJS	$(\bar{\tau}_{JS})_{ov}$	Over-all blade-to-jet speed ratio based on mass averaged values	--
ØSE	$(\bar{\eta}_{stat})_{ov}$	Over-all static efficiency based on mass averaged values	--
ØTE	$(\eta_{Tot})_{ov}$	Over-all total efficiency based on mass averaged values	--
ØTS	$(\tau_{pts})_{ov}$	Over-all total-to-static pressure ratio based on mass averaged values	--
ØTT	$(\tau_{ptt})_{ov}$	Over-all total-to-total pressure ratio based on mass averaged values	--
ØW	$\overline{W}_{ov}$	Over-all work output of the turbine based on mass averaged values	Btu per lbm
SJS(L)	$(\bar{\tau}_{JS})_{i''}$	Stage blade-to-jet speed ratio based on mass averaged values for each stage of a spool	--
SJSP	$(\bar{\tau}_{JS})_{i''}$	Stage blade-to-jet speed ratio based on mass averaged values	--
SPJS	$(\bar{\tau}_{JS})_{i'''}$	Spool blade-to-jet speed ratio based on mass averaged values	--
SPP	$P_{Ti'''}$	Spool power output based on mass averaged values	hp
SPSE	$(\bar{\eta}_{stat})_{i'''}$	Spool static efficiency based on mass averaged values	--
SPTE	$(\bar{\eta}_{Tot})_{i'''}$	Spool total efficiency based on mass averaged values	--
SPTS	$(\tau_{pts})_{i'''}$	Spool total-to-static pressure ratio based on mass averaged values	--
SPTT	$(\tau_{ptt})_{i'''}$	Spool total-to-total pressure ratio based on mass averaged values	--

Fortran Symbol	Symbol	Description	Units
SPW	$\overline{W}_{2'''}$	Spool work output based on mass averaged values	Btu per lbm
SSE(L)	$(\eta_{Stat})_{i''}$	Stage static efficiency based on mass averaged values for each stage of a spool	--
SSEP	$(\eta_{Stat})_{i''}$	Stage static efficiency based on mass averaged values	--
STE(L)	$(\eta_{Tot})_{i''}$	Stage total efficiency based on mass averaged values for each stage of a spool	--
STEP	$(\eta_{Tot})_{i''}$	Stage total efficiency based on mass averaged values	--
SW(L)	$\overline{W}_{i''}$	Stage work output based on mass averaged values for each stage of a spool	Btu per lbm
SWP	$\overline{W}_{i''}$	Stage work output based on mass averaged values	Btu per lbm

Nomenclature for CØMMØN/CØM10/

Fortran Symbol	Symbol	Description	Units
FLWCN(M)	$w'_{c2'}$	Mass flow of the coolant added in each blade row of the spool expressed as a fraction of the inlet mass flow of the turbine	--
NAV		Number of sets of analysis variables	--
NBR	$n'-1$	Number of blade rows of a spool	--
RNXT(K,L)	r_i	Radial coordinates at which exit conditions are specified for each stator	ft, in
RSXT(K,L)	r_i	Radial coordinates at which exit conditions are specified for each rotor	ft, in
WRL(K,L)		Radial values of the flow angle specified at each stator exit of a spool	deg, rad
YØSS(K,M)		Radial values of the loss parameter specified at each blade row exit of a spool	--

Fortran Symbol	Symbol	Description	Units
DVMDR(K,M)	$\frac{dV_{mi}}{dr}$	Radial values of the derivative of meridional velocity with respect to radius specified at a blade row exit of a spool	per sec

Nomenclature for CØMMØN/CØM11/

Fortran Symbol	Symbol	Description	Units
AYP	A_i	A value of the streamline angle of inclination	rad
CØSA	$\cos A_i$	Cosine of the streamline angle of inclination	--
CØSB	$\cos \beta_i$	Cosine of the flow angle	--
CØSQB	$\cos^2 \beta_i$	Square of CØSB	--
DBDRP	$\frac{d\beta_i}{dr}$	A value of the derivative of flow angle with respect to radius	per ft
DBRUDR(J)	$\left(\frac{d\beta'_{i-1}}{dr}\right)_j$	Streamline values of the derivative of the upstream relative flow angle with respect to radius	per ft
DBUDR(J)	$\left(\frac{d\beta_{i-1}}{dr}\right)_j$	Streamline values of the derivative of the upstream absolute flow angle with respect to radius	per ft
DVRUDR(J)	$\left(\frac{dV'_{i-1}}{dr}\right)_j$	Streamline values of the derivative of the upstream relative velocity with respect to radius	per sec
DVUDR(J)	$\left(\frac{dV_{i-1}}{dr}\right)_j$	Streamline values of the derivative of the upstream absolute velocity with respect to radius	per sec
IJ		Variant of the streamline index	--
TANB	$\tan \beta_i$	Tangent of the flow angle	--
VMP	V_{mi}	A value of the meridional velocity	fps
VSQ	V_i^2	A value of the square of the absolute velocity	fps^2
VTP	V_{ui}	A value of the tangential velocity	fps

Nomenclature for CØMMØN/CØM12/

Fortran Symbol	Symbol	Description	Units
YCØN(1)	a_1	Constant in the internal correlation of total-pressure-loss coefficient	--
YCØN(2)	a_2	Constant in the internal correlation of total-pressure-loss coefficient	--
YCØN(3)	a_3	Constant in the internal correlation of total-pressure-loss coefficient	--
YCØN(4)	a_4	Constant in the internal correlation of total-pressure-loss coefficient	--
YCØN(5)	a_5	Constant in the internal correlation of total-pressure-loss coefficient	--
YCØN(6)	a_6	Constant in the internal correlation of total-pressure-loss coefficient	--
YCØN(7)	a_7	Constant in the internal correlation of total-pressure-loss coefficient	--
YCØN(8)	a_8	Constant in the internal correlation of total-pressure-loss coefficient	--
YCØN(9)	a_9	Constant in the internal correlation of total-pressure-loss coefficient	--

APPENDIX V

MAIN ROUTINE

The primary function of the main routine (deckname TD2) is to control the over-all logic flow of the computer program. In addition, the main routine reads the input data, writes sections of the output, sets certain values, and performs several elementary calculations.

The main routine calls Subroutines INPUT2, STRAC, SPECHT, PØWER2, STRIP, STRVL2, VMNTL2, RADEQ2, VMSUB2, HAP1, REMAN2, SETUP2, ØUTPUT, and LØSCØR. The external input required by the main routine consists of:

ASTR	BETLT	CØMENT	CP	CSTR
DVMDR	FHP	FLWCN	FLWM	GASC
HP	ICØØL	IDLETE	IEXTRA	IMIX
IPØF	ISPEC	ISTRAC	IWRL	NAV
NLINES	NLT	NSPØØL	NSTG	NSTRAC
NXT	PØLT	RANN	RLT	RNXT
RPM	RSTRAC	RSXT	TØC	TØLT
VUM	WRL	XMIX	XSTAT	YCØN
YØSS				

(These symbols are defined in the appropriate sections of the CØMMØN Fortran Nomenclature.)

The external output provided by the main routine, in addition to four error messages, consists of:

BETLT	CØMENT	DFLWT	FLWM	GASC
NAV	NLINES	NSPØØL	PØ	PØLT
RLT	TØLT	VM	VMM	VT
WYE				

A majority of these symbols, as well as others used in the main routine, are described in the CØMMØN Fortran Nomenclature; the main routine has access to all of the blocks of CØMMØN.

Additional Fortran Nomenclature for the Main Routine

The following table gives the Fortran nomenclature for those symbols used in the main routine which are not part of CØMMØN.

Fortran Symbol	Symbol	Description	Units
CNV4	$60/2\pi$	Conversion factor from rad per sec to rpm	rpm per rad per sec
CØMENT		A statement describing the case under consideration	--
DFLØWP	ω_{ij}	A streamline value of the mass flow function	lbm per sec
IEXTRA		Indicator: IEXTRA=0 if the results of the passes through the iteration loop on meridional velocity at the mean streamline are not to be printed IEXTRA=1 if the results of the passes through the iteration loop on meridional velocity at the mean streamline are to be printed when the results of a pass through the iteration loop on streamline position are to be printed	--
IPCØNV		Indicator: IPCØNV=0 if the iteration on stage power output has not converged within the allowable tolerance IPCØNV=1 if the iteration on stage power output has converged within the allowable tolerance	--
ITAPE		Input tape number	--
IYCØNV		Indicator: IYCØNV=0 if the iteration on streamline values of total-pressure-loss coefficient has not converged IYCØNV=1 if the iteration on streamline values of total-pressure-loss coefficient has converged	
J	j	Streamline index	--

Fortran Symbol	Symbol	Description	Units
LSGN		Indicator: LSGN=0 if the matrix of the coefficients of the four major equations used to satisfy radial equilibrium is non-singular LSGN=1 if the matrix of the coefficients of the four major equations used to satisfy radial equilibrium is singular	--
NCNT		Maximum number of allowable changes in sign of the slope of the curve of mass flow versus meridional velocity at the mean streamline	--
NLLØØP		Maximum number of iterative loops used to satisfy continuity	--
NLØØP		Maximum number of iterative loops used to converge on streamline position, pressure-loss coefficient, and stage work output	--
RP	r_{ij}	A streamline value of the radial position	ft
TØLFLW		Tolerance used to check whether continuity is satisfied	--
TØLRAD		Tolerance used to check whether converged streamline positions have been obtained	--
TØLVM		Tolerance used to check whether the meanline meridional velocity has converged when continuity has been satisfied	--
TUBFLW	$\frac{w_{in}}{(n-1)}$	Mass flow in a streamtube	lbm per sec

```
C                                                                       TD2*0001
C     TURBINE DESIGN PROGRAM - MAIN ROUTINE                             TD2*0002
C                                                                       TD2*0003
      COMMON IBR,ICOEF,ICONV,ICOOL,IDLETE,IDS,ILLCOP,ILOOP,ILOSS,       TD2*0004
     1IMIX,ISAV,ISON,ISPEC,ISRI,ISTG,IPOFS,NDSTAT,NLINES,NSPOOL,        TD2*0005
     2NSTG,NTAPE,NTUBES,IWRLS                                           TD2*0006
      COMMON /COM1/AY(17),BET(17),BETR(17),BREFF(17),CRV(17),           TD2*0007
     1DFLCW(17),EFFR(17),EFFS(17),EM(17),EMR(17),FACL(17),GRND(17),     TD2*0008
     2P(17),PO(17),POR(17),REAC(17),T(17),TO(17),TOR(17),U(17),         TD2*0009
     3V(17),VM(17),VR(17),VT(17),VX(17),WYE(17),WYK(17)                 TD2*0010
      COMMON /COM2/CP(17),CP1,CP2,CP3,CP4,CP5,EJCP1,EJCP2,              TD2*0011
     1GAMA1,GAMA2,GAMA3,GAMB1,GAMC1,GAMD2,GAMD3,GAMD4,GAMD5,            TD2*0012
     2GAM1,GAM2,GAM3,GAM4,GAM5,GASC,GGG1,GJCP1,GJCP12,GJCP2,            TD2*0013
     3GJCP22,GJCP32,GJCP42,GJCP52                                       TD2*0014
      COMMON /COM3/BETRU(17),BETU(17),BREFFO(17),DPOUDR(17),            TD2*0015
     1DPRUDR(17),DTRUDR(17),POO(17),POO2(17),PORU(17),POU(17),          TD2*0016
     2REACO(17),TOO(17),TOO2(17),TORU(17),TOU(17),UU(17),               TD2*0017
     3VRU(17),VTU(17),VU(17),WYEO(17),DTOUDR(17),DVTUDR(17)             TD2*0018
      COMMON /COM4/FLW(17),FLWP,HP,RPM,RST(17),WFN(17)                  TD2*0019
      COMMON /COM5/ASTR(17,17),ASTS(17),BETLT(17),CSTR(17,17),          TD2*0020
     1CSTS(17),DTC(17),FHP(8),FLWC,IPOF(8),ISTRAC,NLT,                  TD2*0021
     2NSTAT,NSTRAC,NXT,POF(17,8),POLT(17),RANN(19,2),RLT(17),           TD2*0022
     3RSTRAC(17,17),RSTRAS(17),RXTS(17),TOC(16),TOLT(17),               TD2*0023
     4WRLS(17),XMIX(17,16),XSTAT(19),YOS(17),IWRL(8),VUM(8),VUMS,       TD2*0024
     5DVMDRS(17),DVMDS(17)                                              TD2*0025
      COMMON /COM6/CNV1,CNV2,CNV3,CNV5,EJAY,GO,PI,TOLWY                 TD2*0026
      COMMON /COM7/COT60,DFLWT,DFLWTO,EMMAX,EMMIN,ICNT,JJ,              TD2*0027
     1JJP,MEAN,RATIO,VMM,VMMO,VMMOO                                     TD2*0028
      COMMON /COM8/DADR(17),DBDR(17),DPODR(17),DTODR(17),               TD2*0029
     1DVTDR(17),DWYDR(17)                                               TD2*0030
      COMMON /COM9/BREA(16),BREAP,ENM1,FLWM,OJS,OSE,OTE,OTS,            TD2*0031
     1OTT,OW,SJS(8),SJSP,SPJS,SPP,SPSE,SPTE,SPTS,SPTT,SPW,SSE(8),       TD2*0032
     2SSEP,STE(8),STEP,SW(8),SWP                                        TD2*0033
      COMMON /COM10/FLWCN(16),NAV,NBR,RNXT(17,8),RSXT(17,8),            TD2*0034
     1WRL(17,8),YOSS(17,16),DVMDR(17,16)                                TD2*0035
      COMMON /COM11/ AYP,COSA,COSB,COSQB,DBDRP,DBRUDR(17),DBUDR(17),    TD2*0036
     1DFLDR(17),DVRUDR(17),DVUDR(17),IJ,TANB,VMP,VSQ,VTP                TD2*0037
      COMMON /COM12/ YCON(9)                                            TD2*0038
      DIMENSION COMENT(12)                                              TD2*0039
      NAMELIST /NAM1/NSPOOL,NAV,NLINES,GASC,FLWM,NLT,RLT,TOLT,POLT,BETLTTD2*0040
      NAMELIST /NAM2/RPM,HP,NSTG,FHP,CP,XSTAT,RANN,NSTRAC,              TD2*0041
     1RSTRAC,ASTR,CSTR,FLWCN,TOC,XMIX,NXT,RNXT,WRL,IPOF,IWRL,           TD2*0042
     2RSXT,YOSS,YCON,DVMDR,VUM                                          TD2*0043
      ITAPE=5                                                           TD2*0044
      NTAPE=6                                                           TD2*0045
      CNV1=12.0                                                         TD2*0046
      CNV2=144.0                                                        TD2*0047
      CNV3=57.29578                                                     TD2*0048
      CNV4=9.54930                                                      TD2*0049
      CNV5=550.0                                                        TD2*0050
      EJAY=778.16                                                       TD2*0051
      GO=32.1739                                                        TD2*0052
      COT60=0.57735                                                     TD2*0053
      EMMAX=0.8                                                         TD2*0054
      EMMIN=0.1                                                         TD2*0055
      PI=3.141593                                                       TD2*0056
```

```
      TOLFLW=0.00010                                                    TD2*0057
      TOLVM=0.0001                                                      TD2*0058
      NLLOOP=35                                                         TD2*0059
      NCNT=3                                                            TD2*0060
      TOLRAD=0.00010                                                    TD2*0061
      TOLWY=0.00010                                                     TD2*0062
      NLOOP=25                                                          TD2*0063
C                                                                       TD2*0064
C     BEGIN CASE LOOP                                                   TD2*0065
C                                                                       TD2*0066
C     READ GENERAL INPUT DATA                                           TD2*0067
C                                                                       TD2*0068
   10 READ (ITAPE,20) COMENT                                            TD2*0069


   20 FORMAT (12A6)                                                     TD2*0072
   25 READ (ITAPE,30) ISPEC,ICOOL,IMIX,ISTRAC,IDLETE,IEXTRA             TD2*0073
   30 FORMAT (6X,I6,12X,5I6)                                            TD2*0074
      READ (ITAPE,NAM1)                                                 TD2*0075
      MEAN=(NLINES+1)/2                                                 TD2*0076
C                                                                       TD2*0077
C     CALCULATE STREAMLINE VALUES OF NONDIMENSIONAL MASS-FLOW FUNCTION  TD2*0078
C                                                                       TD2*0079
      NTUBES=NLINES-1                                                   TD2*0080
      ENM1=FLOAT(NTUBES)                                                TD2*0081
      DO 40 J=1,NLINES                                                  TD2*0082
   40 WFN(J)=FLOAT(J-1)/ENM1                                            TD2*0083
      ISAV=0                                                            TD2*0084
C                                                                       TD2*0085
C     BEGIN SPOOL LOOP OR ANALYSIS VARIABLE LOOP                        TD2*0086
C                                                                       TD2*0087
   50 ISAV=ISAV+1                                                       TD2*0088
      IF (NSPOOL.GT.1.AND.ISAV.GT.1) GO TO 150                          TD2*0089
C                                                                       TD2*0090
C     PRINT GENERAL INPUT                                               TD2*0091
C                                                                       TD2*0092
      WRITE (NTAPE,60) COMENT                                           TD2*0093
   60 FORMAT (1H1///28X,77H** PROGRAM TD2 - AERODYNAMIC CALCULATIONS FORTD2*0094
     1 THE DESIGN OF AXIAL TURBINES **////30X,12A6)                     TD2*0095
      WRITE (NTAPE,70) NSPOOL                                           TD2*0096
   70 FORMAT (////53X,26H*** GENERAL INPUT DATA ***          ////54X,   TD2*0097
     119HNUMBER OF SPOOLS = ,I4)                                        TD2*0098
      IF (NSPOOL.GT.1) GO TO 90                                         TD2*0099
      WRITE (NTAPE,80) NAV                                              TD2*0100
   80 FORMAT (34X,39HNUMBER OF SETS OF ANALYSIS VARIABLES = ,I4)        TD2*0101
   90 WRITE (NTAPE,100) NLINES,GASC,FLWM                                TD2*0102
  100 FORMAT (49X,24HNUMBER OF STREAMLINES = ,I4//58X,15HGAS CONSTANT = TD2*0103
     1,F10.5,17H LBF FT/LBM DEG R/55X,18HINLET MASS FLOW = ,F10.5,      TD2*0104
     28H LBM/SEC)                                                       TD2*0105
      WRITE (NTAPE,110) (RLT(J),TOLT(J),POLT(J),BETLT(J),J=1,NLT)       TD2*0106
  110 FORMAT (///50X,32H* TABULAR INLET SPECIFICATIONS *///43X,         TD2*0107
     16HRADIAL,8X,5HTOTAL,8X,5HTOTAL,6X,8HABSOLUTE/41X,10HCOORDINATE,   TD2*0108
     23X,11HTEMPERATURE,3X,8HPRESSURE,4X,10HFLOW ANGLE/44X,4H(IN),      TD2*0109
     38X,7H(DEG R),7X,5H(PSI),8X,5H(DEG)//(39X,F10.4,6X,F8.2,           TD2*0110
     44X,F9.4,5X,F8.3))                                                 TD2*0111
C                                                                       TD2*0112
C     CONVERT GENERAL INPUT INTO A CONSISTENT SET OF UNITS              TD2*0113
C                                                                       TD2*0114
```

```
      DO 120 J=1,NLT                                                    TD2*0115
      RLT(J)=RLT(J)/CNV1                                                TD2*0116
      POLT(J)=CNV2*POLT(J)                                              TD2*0117
  120 BETLT(J)=BETLT(J)/CNV3                                            TD2*0118
C                                                                       TD2*0119
C     READ SPOOL INPUT                                                  TD2*0120
C                                                                       TD2*0121
  150 READ (ITAPE,NAM2)                                                 TD2*0122
      NBR=2*NSTG                                                        TD2*0123
      NDSTAT=NBR+1                                                      TD2*0124
      NSTAT=NBR+3                                                       TD2*0125
C                                                                       TD2*0126
C     PRINT SPOOL INPUT                                                 TD2*0127
C                                                                       TD2*0128
      CALL INPUT2                                                       TD2*0129
      IF (NSPOOL.GT.1) GO TO 586                                        TD2*0130
      IF (NAV.GT.1) GO TO 582                                           TD2*0131
      WRITE (NTAPE,580)                                                 TD2*0132
  580 FORMAT (1H1////46X,39H*** OUTPUT OF SPOOL DESIGN ANALYSIS ***)    TD2*0133
      GO TO 590                                                         TD2*0134
  582 WRITE (NTAPE,584) ISAV                                            TD2*0135
  584 FORMAT (1H1////31X,41H*** OUTPUT OF SPOOL DESIGN ANALYSIS (SET ,  TD2*0136
     1I2,27H OF ANALYSIS VARIABLES) ***)                                TD2*0137
      GO TO 590                                                         TD2*0138
  586 WRITE (NTAPE,588) ISAV                                            TD2*0139
  588 FORMAT (1H1////43X,40H*** OUTPUT OF DESIGN ANALYSIS FOR SPOOL ,   TD2*0140
     1I2,4H ***)                                                        TD2*0141
C                                                                       TD2*0142
C     CONVERT SPOOL INPUT INTO A CONSISTENT SET OF UNITS                TD2*0143
C                                                                       TD2*0144
  590 RPM=RPM/CNV4                                                      TD2*0145
      HP=CNV5*HP                                                        TD2*0146
      IF (ISTRAC.EQ.1) GO TO 610                                        TD2*0147
      DO 600 I=1,NSTAT                                                  TD2*0148
      XSTAT(I)=XSTAT(I)/CNV1                                            TD2*0149
      DO 600 J=1,2                                                      TD2*0150
  600 RANN(I,J)=RANN(I,J)/CNV1                                          TD2*0151
      GO TO 630                                                         TD2*0152
  610 DO 620 I=1,NDSTAT                                                 TD2*0153
      DO 615 J=1,2                                                      TD2*0154
  615 RANN(I,J)=RANN(I,J)/CNV1                                          TD2*0155
      DO 620 J=1,NSTRAC                                                 TD2*0156
      RSTRAC(J,I)=RSTRAC(J,I)/CNV1                                      TD2*0157
      ASTR(J,I)=ASTR(J,I)/CNV3                                          TD2*0158
  620 CSTR(J,I)=CNV1*CSTR(J,I)                                          TD2*0159
  630 DO 640 I=1,NSTG                                                   TD2*0160
      IPOFS=IPOF(I)                                                     TD2*0161
      IWRLS=IWRL(I)                                                     TD2*0162
      DO 640 J=1,NXT                                                    TD2*0163
      RNXT(J,I)=RNXT(J,I)/CNV1                                          TD2*0164
      IF (IPOFS.EQ.0.AND.ISPEC.EQ.1) GO TO 635                          TD2*0165
      RSXT(J,I)=RSXT(J,I)/CNV1                                          TD2*0166
  635 IF (IWRLS.EQ.0) GO TO 640                                         TD2*0167
      WRL(J,I)=WRL(J,I)/CNV3                                            TD2*0168
  640 CONTINUE                                                          TD2*0169
C                                                                       TD2*0170
C     IF TABULATED VALUES OF STREAMLINE ANGLES AND CURVATURES HAVE NOT  TD2*0171
C     BEEN GIVEN, ENTER SUBROUTINE STRAC                                TD2*0172
```

```
C                                                                       TD2*0173
  660 IF (ISTRAC.EQ.0) CALL STRAC                                       TD2*0174
      IDS=0                                                             TD2*0175
C                                                                       TD2*0176
C     BEGIN DESIGN STATION LOOP                                         TD2*0177
C                                                                       TD2*0178
  700 IDS=IDS+1                                                         TD2*0179
      ISTG=IDS/2                                                        TD2*0180
      IBR=IDS-1                                                         TD2*0181
      IF (IDS.EQ.1) GO TO 720                                           TD2*0182
      IF (2*ISTG.NE.IDS) GO TO 710                                      TD2*0183
      ISRI=1                                                            TD2*0184
      GO TO 750                                                         TD2*0185
  710 ISRI=2                                                            TD2*0186
      GO TO 750                                                         TD2*0187
  720 IF (NSPOOL.GT.1.AND.ISAV.GT.1) GO TO 730                          TD2*0188
      ISRI=3                                                            TD2*0189
      GO TO 750                                                         TD2*0190
  730 ISRI=4                                                            TD2*0191
  750 IF (IDLETE.EQ.1.AND.ISRI.LT.3) WRITE (NTAPE,760)                  TD2*0192
  760 FORMAT (1H1)                                                      TD2*0193
      IF (ISRI.LT.3) GO TO 780                                          TD2*0194
      WRITE (NTAPE,770)                                                 TD2*0195
  770 FORMAT (////56X,20H** STATOR INLET 1 **)                          TD2*0196
      GO TO 820                                                         TD2*0197
  780 IF (ISRI.EQ.2) GO TO 800                                          TD2*0198
      WRITE (NTAPE,790) ISTG                                            TD2*0199
  790 FORMAT (////49X,29H** STATOR EXIT - ROTOR INLET ,I1,3H **)        TD2*0200
      GO TO 820                                                         TD2*0201
  800 WRITE (NTAPE,810) ISTG                                            TD2*0202
  810 FORMAT (////57X,14H** STAGE EXIT ,I1,3H **)                       TD2*0203
C                                                                       TD2*0204
C     OBTAIN THE MASS FLOW                                              TD2*0205
C                                                                       TD2*0206
  820 IF (ICOOL.EQ.0.OR.ISRI.EQ.3) GO TO 830                            TD2*0207
      IF (ISRI.EQ.4) GO TO 840                                          TD2*0208
      FLWP=FLWP+FLWC                                                    TD2*0209
      IF (IDS.EQ.NDSTAT) GO TO 850                                      TD2*0210
      GO TO 840                                                         TD2*0211
  830 FLWP=FLWM                                                         TD2*0212
      IF (ICOOL.EQ.0) GO TO 850                                         TD2*0213
  840 FLWC=FLWCN(IDS)*FLWM                                              TD2*0214
  850 FLW(IDS)=FLWP                                                     TD2*0215
      IF (ISRI.EQ.4) GO TO 1710                                         TD2*0216
      CALL SPECHT                                                       TD2*0217
      CALL STRIP                                                        TD2*0218
C                                                                       TD2*0219
C     CERTAIN DATA FOR THE DESIGN STATION ARE PUT INTO A MORE CONVENIENTTD2*0220
C     FORM                                                              TD2*0221
C                                                                       TD2*0222
      DO 900 J=1,NSTRAC                                                 TD2*0223
      RSTRAS(J)=RSTRAC(J,IDS)                                           TD2*0224
      ASTS(J)=ASTR(J,IDS)                                               TD2*0225
  900 CSTS(J)=CSTR(J,IDS)                                               TD2*0226
      IF (ISRI.EQ.3) GO TO 1050                                         TD2*0227
      IF (ISRI.EQ.2) GO TO 920                                          TD2*0228
      IWRLS=IWRL(ISTG)                                                  TD2*0229
      DO 910 J=1,NXT                                                    TD2*0230
```

```
      RXTS(J)=RNXT(J,ISTG)                                              TD2*0231
      IF (ISPEC.EQ.0.OR.ISPEC.EQ.2) YOS(J)=YOSS(J,IBR)                  TD2*0232
      IF (IWRLS.NE.0) GO TO 905                                         TD2*0233
      DVMDS(J)=DVMDR(J,IBR)                                             TD2*0234
      GO TO 910                                                         TD2*0235
  905 WRLS(J)=WRL(J,ISTG)                                               TD2*0236
  910 CONTINUE                                                          TD2*0237
      IF (IWRLS.EQ.0) VUMS=VUM(ISTG)                                    TD2*0238
      ISON=0                                                            TD2*0239
      IF (IWRLS.EQ.2) ISON=1                                            TD2*0240
      GO TO 950                                                         TD2*0241
  920 IF (ISPEC.EQ.1) GO TO 930                                         TD2*0242
      DO 925 J=1,NXT                                                    TD2*0243
      RXTS(J)=RSXT(J,ISTG)                                              TD2*0244
  925 YOS(J)=YOSS(J,IBR)                                                TD2*0245
  930 IPOFS=IPOF(ISTG)                                                  TD2*0246
      IF (IPOFS.EQ.0) GO TO 950                                         TD2*0247
      DO 940 J=1,NXT                                                    TD2*0248
      DVMDS(J)=DVMDR(J,IBR)                                             TD2*0249
  940 RXTS(J)=RSXT(J,ISTG)                                              TD2*0250
C                                                                       TD2*0251
C     WHEN REQUIRED, OBTAIN INITIAL ESTIMATE OF LOSS COEFFICIENTS       TD2*0252
C                                                                       TD2*0253
  950 IF (ISPEC.EQ.0) GO TO 1050                                        TD2*0254
      IF (ISRI.EQ.1) GO TO 990                                          TD2*0255
      DO 970 J=1,NLINES                                                 TD2*0256
      DWYDR(J)=0.0                                                      TD2*0257
  970 WYE(J)=0.10                                                       TD2*0258
      GO TO 1050                                                        TD2*0259
  990 DO 1010 J=1,NLINES                                                TD2*0260
      DWYDR(J)=0.0                                                      TD2*0261
 1010 WYE(J)=0.05                                                       TD2*0262
 1050 ICONV=0                                                           TD2*0263
      ILOOP=0                                                           TD2*0264
C                                                                       TD2*0265
C     BEGIN ITERATION ON STREAMLINE POSITION, LOSS COEFFICIENTS, AND    TD2*0266
C     WHEN REQUIRED, POWER OUTPUT                                       TD2*0267
C                                                                       TD2*0268
 1100 ILOOP=ILOOP+1                                                     TD2*0269
      CALL STRVL2                                                       TD2*0270
      IF (ISRI.GE.3) GO TO 1110                                         TD2*0271
      IF (ILOOP.EQ.1.AND.ISPEC.NE.0) GO TO 1105                         TD2*0272
      CALL LOSCOR(IYCONV)                                               TD2*0273
      IF (IYCONV.NE.1) ICONV=0                                          TD2*0274
 1105 IF (ISRI.EQ.1) GO TO 1110                                         TD2*0275
      CALL POWER2(IPCONV)                                               TD2*0276
      IF (IPCONV.NE.1) ICONV=0                                          TD2*0277
 1110 IF (IDLETE.EQ.0) GO TO 1120                                       TD2*0278
      IF (ICONV.EQ.1) GO TO 1115                                        TD2*0279
      WRITE (NTAPE,1112) ILOOP                                          TD2*0280
 1112 FORMAT (////60X,7H* PASS ,I2,2H *)                                TD2*0281
      GO TO 1120                                                        TD2*0282
 1115 WRITE (NTAPE,1117)                                                TD2*0283
 1117 FORMAT (////57X,18H* CONVERGED PASS *)                            TD2*0284
 1120 IF (ILOOP.NE.1) GO TO 1124                                        TD2*0285
      IF (ISRI.NE.2) GO TO 1122                                         TD2*0286
      TO(MEAN)=TOU(MEAN)-DTO(MEAN)                                      TD2*0287
      VT(MEAN)=(UU(MEAN)*VTU(MEAN)-GJCP2*DTO(MEAN))/(RPM*RST(MEAN))     TD2*0288
```

```
 1122 CALL VMNTL2                                                       TD2*0289
      GO TO 1126                                                        TD2*0290
 1124 VMM=VM(MEAN)                                                      TD2*0291
 1126 IF (IEXTRA.EQ.0) GO TO 1140                                       TD2*0292
      IF (ICONV.EQ.0.AND.IDLETE.EQ.0) GO TO 1140                        TD2*0293
      WRITE (NTAPE,1130)                                                TD2*0294
 1130 FORMAT (////31X,69HITERATIVE DETERMINATION OF MERIDIONAL VELOCITY TD2*0295
     1AT THE MEAN STREAMLINE)                                           TD2*0296
      IF (ISRI.EQ.3) GO TO 1134                                         TD2*0297
      WRITE (NTAPE,1132)                                                TD2*0298
 1132 FORMAT (//22X,10HMERIDIONAL/23X,8HVELOCITY,66X,8HABSOLUTE,        TD2*0299
     14X,8HPRESSURE/12X,4HPASS,6X,11HAT THE MEAN,3X,10HCALCULATED,      TD2*0300
     214X,10HSTREAMLINE,2X,10HMERIDIONAL,5X,5HWHIRL,7X,5HTOTAL,         TD2*0301
     37X,4HLOSS/11X,6HNUMBER,5X,10HSTREAMLINE,4X,9HMASS FLOW,17X,       TD2*0302
     46HNUMBER,5X,8HVELOCITY,4X,8HVELOCITY,4X,8HPRESSURE,3X,            TD2*0303
     511HCOEFFICIENT/25X,5H(FPS),6X,9H(LBM/SEC),30X,5H(FPS),7X,         TD2*0304
     65H(FPS),7X,5H(PSI))                                               TD2*0305
      GO TO 1140                                                        TD2*0306
 1134 WRITE (NTAPE,1136)                                                TD2*0307
 1136 FORMAT (//28X,10HMERIDIONAL/29X,8HVELOCITY,66X,8HABSOLUTE/        TD2*0308
     118X,4HPASS,6X,11HAT THE MEAN,3X,10HCALCULATED,14X,10HSTREAMLINE,  TD2*0309
     22X,10HMERIDIONAL,5X,5HWHIRL,7X,5HTOTAL/17X,6HNUMBER,5X,           TD2*0310
     310HSTREAMLINE,4X,9HMASS FLOW,17X,6HNUMBER,5X,8HVELOCITY,4X,       TD2*0311
     48HVELOCITY,4X,8HPRESSURE/31X,5H(FPS),6X,9H(LBM/SEC),30X,          TD2*0312
     55H(FPS),7X,5H(FPS),7X,5H(PSI))                                    TD2*0313
 1140 ICNT=0                                                            TD2*0314
      ILLOOP=0                                                          TD2*0315
C                                                                       TD2*0316
C     BEGIN ITERATION LOOP ON MERIDIONAL VELOCITY AT THE MEAN STREAMLINETD2*0317
C                                                                       TD2*0318
 1150 ILLOOP=ILLOOP+1                                                   TD2*0319
      CALL RADEQ2(LSGN)                                                 TD2*0320
      IF (LSGN.NE.1) GO TO 1200                                         TD2*0321
      WRITE (NTAPE,1155) VMM,ILOOP,ILLOOP                               TD2*0322
 1155 FORMAT (25X,34HEQUATIONS ARE SINGULAR WHEN VMM = ,F12.4,8HILOOP = TD2*0323
     1,I6,13HAND ILLOOP = ,I6)                                          TD2*0324
      CALL REMAN2                                                       TD2*0325
      CALL OUTPUT                                                       TD2*0326
 1160 IF (NSPOOL.EQ.1) GO TO 1730                                       TD2*0327
      IF (ISAV.EQ.NSPOOL) GO TO 10                                      TD2*0328
      ISAV=ISAV+1                                                       TD2*0329
      DO 1170 IABRT=ISAV,NSPOOL                                         TD2*0330
 1170 READ (ITAPE,NAM2)                                                 TD2*0331
      GO TO 10                                                          TD2*0332
 1200 IF (IEXTRA.EQ.0) GO TO 1250                                       TD2*0333
      IF (ICONV.NE.1.AND.IDLETE.NE.1) GO TO 1250                        TD2*0334
      DO 1205 J=1,NLINES                                                TD2*0335
 1205 PO(J)=PO(J)/CNV2                                                  TD2*0336
      IF (ISRI.EQ.3) GO TO 1215                                         TD2*0337
      WRITE (NTAPE,1210) ILLOOP,VMM,DFLWT,(J,VM(J),VT(J),PO(J),WYE(J),  TD2*0338
     1                   J=1,NLINES)                                    TD2*0339
 1210 FORMAT (/13X,I2,6X,F10.3,4X,F10.5,19X,I2,5X,F10.3,2X,F10.3,       TD2*0340
     13X,F9.4,4X,F8.5/(64X,I2,5X,F10.3,2X,F10.3,3X,F9.4,4X,F8.5))       TD2*0341
      GO TO 1230                                                        TD2*0342
 1215 WRITE (NTAPE,1220) ILLOOP,VMM,DFLWT,(J,VM(J),VT(J),PO(J),         TD2*0343
     1                   J=1,NLINES)                                    TD2*0344
 1220 FORMAT (/19X,I2,6X,F10.3,4X,F10.5,19X,I2,5X,F10.3,2X,F10.3,       TD2*0345
     13X,F9.4/(70X,I2,5X,F10.3,2X,F10.3,3X,F9.4))                       TD2*0346
```

```
 1230 DO 1240 J=1,NLINES                                                TD2*0347
 1240 PO(J)=CNV2*PO(J)                                                  TD2*0348
 1250 RATIO=DFLWT/FLWP                                                  TD2*0349
C                                                                       TD2*0350
C     CHECK CONVERGENCE ON MASSFLOW AND MEANLINE VM                     TD2*0351
C                                                                       TD2*0352
 1260 IF (ABS(RATIO-1.0).GT.TOLFLW) GO TO 1305                          TD2*0353
      IF (ABS(VMM/VMMO-1.0).LE.TOLVM) GO TO 1500                        TD2*0354
 1305 IF(ILLOOP.LT.NLLOOP)GO TO 1350                                    TD2*0355
      WRITE (NTAPE,1310) ILOOP                                          TD2*0356
 1310 FORMAT (//19X,92HITERATION FOR THE MERIDIONAL VELOCITY AT THE MEANTD2*0357
     1 STREAMLINE HAS NOT CONVERGED WHEN ILOOP = ,I2)                   TD2*0358
      CALL REMAN2                                                       TD2*0359
      CALL OUTPUT                                                       TD2*0360
      GO TO 1160                                                        TD2*0361
C                                                                       TD2*0362
C     MAKE NEXT ESTIMATE OF MEANLINE MERIDIONAL VELOCITY                TD2*0363
C                                                                       TD2*0364
 1350 VMMOO=VMMO                                                        TD2*0365
 1360 VMMO=VMM                                                          TD2*0366
 1370 CALL VMSUB2                                                       TD2*0367
      IF (ICNT.GT.NCNT) GO TO 1380                                      TD2*0368
      DFLWTO=DFLWT                                                      TD2*0369
      GO TO 1150                                                        TD2*0370
 1380 WRITE (NTAPE,1390) ILOOP                                          TD2*0371
 1390 FORMAT (//5X,29HCALCULATION ABANDONED ON PASS,I3,90H BECAUSE OF INTD2*0372
     1STABILITY IN MEANLINE MERIDIONAL VELOCITY ITERATION DUE TO CHOKED TD2*0373
     2CONDITIONS)                                                       TD2*0374
      CALL REMAN2                                                       TD2*0375
      CALL OUTPUT                                                       TD2*0376
      GO TO 1160                                                        TD2*0377
 1500 IF (ICONV.EQ.1) GO TO 1700                                        TD2*0378
      IF(ILOOP.LT.NLOOP)GO TO 1520                                      TD2*0379
      WRITE (NTAPE,1510)                                                TD2*0380
 1510 FORMAT (//12X, 103HITERATION FOR STREAMLINE POSITIONS, PRESSURE LOTD2*0381
     1SS COEFFICIENTS, OR STAGE WORK OUTPUT HAS NOT CONVERGED  )        TD2*0382
      ICONV=1                                                           TD2*0383
      GO TO 1700                                                        TD2*0384
 1520 IF (IDLETE.EQ.0) GO TO 1550                                       TD2*0385
      CALL REMAN2                                                       TD2*0386
      CALL OUTPUT                                                       TD2*0387
C                                                                       TD2*0388
C     OBTAIN NEW ESTIMATES OF STREAMLINE POSITIONS                      TD2*0389
C                                                                       TD2*0390
 1550 ICONV=1                                                           TD2*0391
      TUBFLW=DFLWT/ENM1                                                 TD2*0392
      DFLOWP=0.0                                                        TD2*0393
      DO 1560 J=2,NTUBES                                                TD2*0394
      DFLOWP=DFLOWP+TUBFLW                                              TD2*0395
      CALL I1AP1(DFLOWP,RP,DFLOW,RST,NLINES)                            TD2*0396
      IF (ICONV.EQ.0) GO TO 1560                                        TD2*0397
      IF (ABS(RP/RST(J)-1.0).LE.TOLRAD) GO TO 1560                      TD2*0398
      ICONV=0                                                           TD2*0399
 1560 RST(J)=RP                                                         TD2*0400
      GO TO 1100                                                        TD2*0401
C                                                                       TD2*0402
C     WRITE OUTPUT OF CONVERGED PASS AND PREPARE DATA FOR NEXT STATION  TD2*0403
C                                                                       TD2*0404
```

```
 1700 CALL REMAN2                                                       TD2*0405
 1710 CALL SETUP2                                                       TD2*0406
      CALL OUTPUT                                                       TD2*0407
      IF (IDS.LT.NDSTAT) GO TO 700                                      TD2*0408
      IF (NSPOOL.GT.1) GO TO 2000                                       TD2*0409
 1730 IF (ISAV.GE.NAV) GO TO 10                                         TD2*0410
C                                                                       TD2*0411
C     RECONVERT INPUT DATA INTO THE ORIGINAL UNITS                      TD2*0412
C                                                                       TD2*0413
      DO 1800 J=1,NLT                                                   TD2*0414
      RLT(J)=CNV1*RLT(J)                                                TD2*0415
      POLT(J)=POLT(J)/CNV2                                              TD2*0416
 1800 BETLT(J)=CNV3*BETLT(J)                                            TD2*0417
      RPM=CNV4*RPM                                                      TD2*0418
      HP=HP/CNV5                                                        TD2*0419
      IF (ISTRAC.EQ.1) GO TO 1820                                       TD2*0420
      DO 1810 I=1,NSTAT                                                 TD2*0421
      XSTAT(I)=CNV1*XSTAT(I)                                            TD2*0422
      DO 1810 J=1,2                                                     TD2*0423
 1810 RANN(I,J)=CNV1*RANN(I,J)                                          TD2*0424
      GO TO 1840                                                        TD2*0425
 1820 DO 1830 I=1,NDSTAT                                                TD2*0426
      DO 1825 J=1,2                                                     TD2*0427
 1825 RANN(I,J)=CNV1*RANN(I,J)                                          TD2*0428
      DO 1830 J=1,NSTRAC                                                TD2*0429
      RSTRAC(J,I)=CNV1*RSTRAC(J,I)                                      TD2*0430
      ASTR(J,I)=CNV3*ASTR(J,I)                                          TD2*0431
 1830 CSTR(J,I)=CSTR(J,I)/CNV1                                          TD2*0432
 1840 DO 1850 I=1,NSTG                                                  TD2*0433
      IPOFS=IPOF(I)                                                     TD2*0434
      IWRLS=IWRL(I)                                                     TD2*0435
      DO 1850 J=1,NXT                                                   TD2*0436
      RNXT(J,I)=CNV1*RNXT(J,I)                                          TD2*0437
      IF (IPOFS.EQ.0.AND.ISPEC.EQ.1) GO TO 1845                         TD2*0438
      RSXT(J,I)=CNV1*RSXT(J,I)                                          TD2*0439
 1845 IF (IWRLS.EQ.0) GO TO 1850                                        TD2*0440
      WRL(J,I)=CNV3*WRL(J,I)                                            TD2*0441
 1850 CONTINUE                                                          TD2*0442
      GO TO 50                                                          TD2*0443
 2000 IF (ISAV.LT.NSPOOL) GO TO 50                                      TD2*0444
      GO TO 10                                                          TD2*0445
      END                                                               TD2*0446
```

APPENDIX VI

SUBRØUTINE INPUT2

The function of Subroutine INPUT2 is to write the input data for a spool onto the output tape unit.

Subroutine INPUT2 is called by the main routine; it does not call any other subroutines. The subroutine does not require external input. Internal input to the subroutine is transmitted through blank CØMMØN, CØMMØN/CØM2/, CØMMØN/CØM4/, CØMMØN/CØM5/, CØMMØN/CØM10/, and CØMMØN/CØM12/. The internal input consists of:

ASTR	CP	CSTR	DVMDR	FHP
FLWCN	HP	ICØØL	IMIX	IPØF
ISAV	ISPEC	ISTRAC	IWRL	NAV
NBR	NDSTAT	NLINES	NSTAT	NSTG
NSTRAC	NSPØØL	NTAPE	NXT	RANN
RNXT	RPM	RSTRAC	RSXT	TØC
VUM	WFN	WRL	XMIX	XSTAT
YCØN	YØSS			

(These symbols are described in the appropriate sections of the CØMMØN Fortran Nomenclature.) Subroutine INPUT2 does not provide internal output. The external output of the subroutine consists of:

ASTR	CP	CSTR	DVMDR	FHP
FLWCN	HP	ISAV	NSTG	RANN
RNXT	RPM	RSTRAC	RSXT	TØC
VUM	WRL	XMIX	XSTAT	YCØN
YØSS				

Additional Fortran Nomenclature for Subroutine INPUT2

The following table gives the Fortran nomenclature for those symbols used in Subroutine INPUT2 which are not part of CØMMØN.

Fortran Symbol	Symbol	Description	Units
CØN1		Alternative name for YCØN(1)	--
CØN2		Alternative name for YCØN(2)	--

Fortran Symbol	Symbol	Description	Units
CØN3		Alternative name for YCØN(3)	--
CØN4		Alternative name for YCØN(4)	--
CØN5		Alternative name for YCØN(5)	--
CØN6		Alternative name for YCØN(6)	--
CØN7		Alternative name for YCØN(7)	--
CØN8		Alternative name for YCØN(8)	--
CØN9		Alternative name for YCØN(9)	--
FMT1		Format specification	--
FMT2		Format specification	--
FMT3		Format specification	--
FMT4		Format specification	--
HW1		Alphanumeric information	--
HW2		Alphanumeric information	--
ISTG	τ''	Stage index	--
IW		Integer used to control format specifications	--
NB		Integer used to control format specifications	--
NBLNK		Integer used to control format specifications	--
NE		Integer used to control format specifications	--
NF		Integer used to control format specifications	--
NFILL		Integer used to control format specifications	--

```
      SUBROUTINE INPUT2                                                 INP*0000
C                                                                       INP*0001
C     INPUT2 - PRINT THE SPOOL INPUT DATA                               INP*0002
C                                                                       INP*0003
      COMMON IBR,ICOEF,ICONV,ICOOL,IDLETE,IDS,ILLOOP,ILOOP,ILOSS,       INP*0004
     1IMIX,ISAV,ISON,ISPEC,ISRI,ISTG,IPOFS,NDSTAT,NLINES,NSPOOL,        INP*0005
     2NSTG,NTAPE,NTUBES,IWRLS                                           INP*0006
      COMMON /COM2/CP(17),CP1,CP2,CP3,CP4,CP5,EJCP1,EJCP2,              INP*0007
     1GAMA1,GAMA2,GAMA3,GAMB1,GAMC1,GAMD2,GAMD3,GAMD4,GAMD5,            INP*0008
     2GAM1,GAM2,GAM3,GAM4,GAM5,GASC,GGG1,GJCP1,GJCP12,GJCP2,            INP*0009
     3GJCP22,GJCP32,GJCP42,GJCP52                                       INP*0010
      COMMON /COM4/FLW(17),FLWP,HP,RPM,RST(17),WFN(17)                  INP*0011
      COMMON /COM5/ASTR(17,17),ASTS(17),BETLT(17),CSTR(17,17),          INP*0012
     1CSTS(17),DTO(17),FHP(8),FLWC,IPOF(8),ISTRAC,NLT,                  INP*0013
     2NSTAT,NSTRAC,NXT,POF(17,8),POLT(17),RANN(19,2),RLT(17),           INP*0014
     3RSTRAC(17,17),RSTRAS(17),RXTS(17),TOC(16),TOLT(17),               INP*0015
     4WRLS(17),XMIX(17,16),XSTAT(19),YOS(17),IWRL(8),VUM(8),VUMS,       INP*0016
     5DVMDRS(17),DVMDS(17)                                              INP*0017
      COMMON /COM10/FLWCN(16),NAV,NBR,RNXT(17,8),RSXT(17,8),            INP*0018
     1WRL(17,8),YOSS(17,16),DVMDR(17,16)                                INP*0019
      COMMON /COM12/ CON1,CON2,CON3,CON4,CON5,CON6,CON7,CON8,CON9       INP*0020
      DIMENSION FMT1(3),FMT2(3),FMT3(5),FMT4(7),HW1(8),HW2(5)           INP*0021
      DATA FMT1(1),FMT1(3)/6H(//    ,6H,18A6)/,FMT2(1),FMT2(3)          INP*0022
     1/6H(      ,6H,18A6)/,FMT3(1),(FMT3(I),I=3,5)/6H(                  INP*0023
     2,6H,8(4X,,6HI2,6X),6H)      /,FMT4(1),(FMT4(I),I=3,7)             INP*0024
     3/6H(      ,6H,5X,  ,6HI2,5X ,6H,8(1X,,6HF8.5, ,6H3X))   /         INP*0025
      DATA (HW1(I),I=1,8)/6H STREA,6HMLINE ,6H    BLA,6HDE     ,         INP*0026
     16H    NUM,6HBER    ,6H     RO,6HW      /                          INP*0027
      DATA (HW2(I),I=1,5)/6H12X    ,6H24X    ,6H36X    ,6H48X    ,      INP*0028
     26H60X    /                                                        INP*0029
      IF (NSPOOL.GT.1) GO TO 170                                        INP*0030
      WRITE (NTAPE,160)                                                 INP*0031
  160 FORMAT (1H1////54X,24H*** SPOOL INPUT DATA ***)                   INP*0032
      GO TO 190                                                         INP*0033
  170 WRITE (NTAPE,180) ISAV                                            INP*0034
  180 FORMAT (1H1////51X,25H*** INPUT DATA FOR SPOOL ,I1,4H ***)        INP*0035
  190 WRITE (NTAPE,200) RPM,HP                                          INP*0036
  200 FORMAT (////53X,25H** DESIGN REQUIREMENTS **///51X,   17HROTATIVE INP*0037
     1SPEED = ,F9.1,4H RPM/53X,15HPOWER OUTPUT = ,F9.2,3H HP)           INP*0038
      IF (NSPOOL.EQ.1.AND.NAV.GT.1) GO TO 220                           INP*0039
      WRITE (NTAPE,210)                                                 INP*0040
  210 FORMAT (////54X,24H** ANALYSIS VARIABLES **)                      INP*0041
      GO TO 240                                                         INP*0042
  220 WRITE (NTAPE,230) ISAV                                            INP*0043
  230 FORMAT (////49X, 7H** SET ,I2,25H OF ANALYSIS VARIABLES **)       INP*0044
  240 WRITE (NTAPE,250) NSTG                                            INP*0045
  250 FORMAT (///56X,19HNUMBER OF STAGES = ,I1)                         INP*0046
      WRITE (NTAPE,260) (I,FHP(I),I=1,NSTG)                             INP*0047
  260 FORMAT (///55X,22H* POWER-OUTPUT SPLIT *///69X,11HFRACTION OF/    INP*0048
     151X,12HSTAGE NUMBER,3X,18HSPOOL POWER OUTPUT//(56X,I1,13X,F8.5))  INP*0049
      WRITE (NTAPE,270) (I,CP(I),I=1,NDSTAT)                            INP*0050
  270 FORMAT (///50X,31H* SPECIFIC-HEAT SPECIFICATION *///44X,          INP*0051
     121HDESIGN STATION NUMBER,5X,13HSPECIFIC HEAT/69X,                 INP*0052
     215H(BTU/LBM DEG R)//(54X,I2,16X,F8.5))                            INP*0053
      WRITE (NTAPE,280)                                                 INP*0054
  280 FORMAT (///53X,25H* ANNULUS SPECIFICATION *)                      INP*0055
      IF (ISTRAC.EQ.1) GO TO 300                                        INP*0056
```

```
      WRITE (NTAPE,290) (I,XSTAT(I),(RANN(I,J),J=1,2),I=1,NSTAT)
  290 FORMAT (//32X,14HSTATION NUMBER,4X,14HAXIAL POSITION,6X,
     110HHUB RADIUS,6X,13HCASING RADIUS/55X,4H(IN),14X,4H(IN),
     214X,4H(IN)//(38X,I2,2X,3F18.4))
      GO TO 350
  300 WRITE (NTAPE,310) (I,(RANN(I,J),J=1,2),I=1,NDSTAT)
  310 FORMAT (//37X,21HDESIGN STATION NUMBER,4X,10HHUB RADIUS,6X,
     113HCASING RADIUS/65X,4H(IN),14X,4H(IN)//(46X,I2,5X,2F18.4))
      WRITE (NTAPE,320)
  320 FORMAT (///51X,29H* STREAMLINE SPECIFICATIONS *)
      DO 330 I=1,NDSTAT
  330 WRITE (NTAPE,340) I,(RSTRAC(J,I),ASTR(J,I),CSTR(J,I),J=1,NSTRAC)
  340 FORMAT (//57X,6HRADIAL,7X,8HANGLE OF/36X,14HDESIGN STATION,
     1I3,2X,10HCOORDINATE,3X,11HINCLINATION,4X,9HCURVATURE/58X,4H(IN),
     29X,5H(DEG),8X,8H(PER IN)//(50X,3F14.5))
  350 IF (ICOOL.EQ.0) GO TO 400
      WRITE (NTAPE,360)
  360 FORMAT (///56X,20H* COOLANT SCHEDULE *)
      IF (ICOOL.EQ.1) GO TO 380
      WRITE (NTAPE,370) (I,FLWCN(I),TOC(I),I=1,NBR)
  370 FORMAT (//60X,11HFRACTION OF,8X,5HTOTAL/40X,          16HBLADE ROW
     1NUMBER,2X,15HINLET MASS FLOW,3X,11HTEMPERATURE/78X,7H(DEG R)//
     2(47X,I2,4X,F16.5,F16.2))
      GO TO 400
  380 WRITE (NTAPE,390) (I,FLWCN(I),I=1,NBR)
  390 FORMAT (//68X,11HFRACTION OF/48X,      16HBLADE ROW NUMBER,2X,
     115HINLET MASS FLOW//(55X,I2,4X,F16.5))
  400 IF (IMIX.EQ.0) GO TO 460
      WRITE (NTAPE,410)
  410 FORMAT (///54X,23H* MIXING COEFFICIENTS *)
      IW=0
  420 IW=IW+1
      NB=1
      NE=NBR
      IF (IW.EQ.2) NB=9
      IF (IW.EQ.1.AND.NBR.GT.8) GO TO 430
      NFILL=NBR-8*(IW-1)
      NBLNK=(10-NFILL)/2
      GO TO 440
  430 NE=8
      NFILL=8
      NBLNK=1
  440 NBLNK1=NBLNK+1
      FMT1(2)=HW2(NBLNK)
      FMT2(2)=HW2(NBLNK)
      FMT3(2)=HW2(NBLNK1)
      FMT4(2)=HW2(NBLNK)
      WRITE (NTAPE,FMT1) HW1(1),HW1(2),(HW1(3),HW1(4),I=1,NFILL)
      WRITE (NTAPE,FMT2) HW1(5),HW1(6),(HW1(7),HW1(8),I=1,NFILL)
      WRITE (NTAPE,FMT3) (I,I=NB,NE)
      WRITE (NTAPE,445)
  445 FORMAT (1X)
      DO 450 J=1,NLINES
  450 WRITE (NTAPE,FMT4) J,(XMIX(J,I),I=NB,NE)
      IF (IW.EQ.1.AND.NBR.GT.8) GO TO 420
  460 WRITE (NTAPE,470)
  470 FORMAT (///51X,29H* BLADE-ROW EXIT CONDITIONS *)
      DO 680 I=1,NBR
```

```
      ISTG=(I+1)/2                                                      INP*0115
      IF (2*(I/2).EQ.I) GO TO 600                                       INP*0116
      WRITE(NTAPE,500) ISTG                                             INP*0117
  500 FORMAT (///30X,6HSTATOR,I2)                                       INP*0118
      IF (ISPEC.NE.1) GO TO 550                                         INP*0119
      IF (IWRL(ISTG).EQ.0) GO TO 520                                    INP*0120
      WRITE (NTAPE,510) (RNXT(J,ISTG),WRL(J,ISTG),J=1,NXT)              INP*0121
  510 FORMAT (47X,6HRADIAL,9X,5HWHIRL/46X,8HPOSITION,8X,5HANGLE/48X,4H(IINP*0122
     1N),10X,5H(DEG)//(45X,F10.4,4X,F10.4))                             INP*0123
      GO TO 680                                                         INP*0124
  520 WRITE (NTAPE,530) (RNXT(J,ISTG),DVMDR(J,I),J=1,NXT)               INP*0125
  530 FORMAT (59X,10HMERIDIONAL/47X,6HRADIAL,7X,8HVELOCITY/46X,8HPOSITIOINP*0126
     1N,6X,8HGRADIENT/48X,4H(IN),7X,10H(PER  SEC)//(45X,F10.4,4X,F10.2))INP*0127
  535 WRITE (NTAPE,540) VUM(ISTG)                                       INP*0128
  540 FORMAT (//30X,40HWHIRL VELOCITY AT THE MEAN STREAMLINE = ,F10.4,  INP*0129
     1 6H FEET PER SECOND )                                             INP*0130
      GO TO 680                                                         INP*0131
  550 IF (IWRL(ISTG).EQ.0) GO TO 570                                    INP*0132
      IF (ISPEC.EQ.0) GO TO 565                                         INP*0133
      WRITE (NTAPE,560) (RNXT(J,ISTG),WRL(J,ISTG),YOSS(J,I),J=1,NXT)    INP*0134
  560 FORMAT (47X,6HRADIAL,9X,5HWHIRL,6X,10HADDITIONAL/46X,8HPOSITION,  INP*0135
     18X,5HANGLE,9X,4HLOSS/48X,4H(IN),10X,5H(DEG),8X,6HFACTOR//(45X,F10.INP*0136
     24,4X,F10.4,4X,F10.4))                                             INP*0137
      GO TO 680                                                         INP*0138
  565 WRITE(NTAPE,566) (RNXT(J,ISTG),WRL(J,ISTG),YOSS(J,I),J=1,NXT)     INP*0139
  566 FORMAT (47X,6HRADIAL,9X,5HWHIRL,7X,8HPRESSURE/46X,8HPOSITION,8X,5HINP*0140
     1ANGLE,9X,4HLOSS/48X,4H(IN),10X,5H(DEG),5X,11HCOEFFICIENT//(45X,F10INP*0141
     2.4,4X,F10.4,4X,F10.4))                                            INP*0142
      GO TO 680                                                         INP*0143
  570 IF (ISPEC.EQ.0) GO TO 585                                         INP*0144
      WRITE(NTAPE,580) (RNXT(J,ISTG),DVMDR(J,I),YOSS(J,I),J=1,NXT)      INP*0145
  580 FORMAT (59X,10HMERIDIONAL/47X,6HRADIAL,7X,8HVELOCITY,5X,10HADDITIOINP*0146
     1NAL/46X,8HPOSITION,6X,8HGRADIENT,8X,4HLOSS/48X,4H(IN),7X,10H(PER  INP*0147
     2SEC),6X,6HFACTOR//(45X,F10.4,4X,F10.2,4X,F10.4))                  INP*0148
      GO TO 535                                                         INP*0149
  585 WRITE(NTAPE,586) (RNXT(J,ISTG),DVMDR(J,I),YOSS(J,I),J=1,NXT)      INP*0150
  586 FORMAT(59X,10HMERIDIONAL/47X,6HRADIAL,7X,8HVELOCITY,6X,8HPRESSURE/INP*0151
     146X,8HPOSITION,6X,8HGRADIENT,8X,4HLOSS/48X,4H(IN),7X,10H(PER  SEC)INP*0152
     2,4X,11HCOEFFICIENT//(45X,F10.4,4X,F10.2,4X,F10.4))                INP*0153
      GO TO 535                                                         INP*0154
  600 WRITE (NTAPE,610) ISTG                                            INP*0155
  610 FORMAT (///30X,5HROTOR,I2)                                        INP*0156
      IF (ISPEC.NE.1) GO TO 650                                         INP*0157
      IF (IPOF(ISTG).EQ.1) GO TO 630                                    INP*0158
  615 WRITE (NTAPE,620)                                                 INP*0159
  620 FORMAT (//40X,51HSOLUTION COMPUTED FOR RADIALLY CONSTANT WORK OUTPINP*0160
     1UT)                                                               INP*0161
      GO TO 680                                                         INP*0162
  630 WRITE (NTAPE,640) (RSXT(J,ISTG),DVMDR(J,I),J=1,NXT)               INP*0163
  640 FORMAT (59X,10HMERIDIONAL/47X,6HRADIAL,7X,8HVELOCITY/46X,8HPOSITIOINP*0164
     1N,6X,8HGRADIENT/48X,4H(IN),7X,10H(PER  SEC)//(45X,F10.4,4X,F10.2))INP*0165
      GO TO 680                                                         INP*0166
  650 IF (IPOF(ISTG).EQ.1) GO TO 670                                    INP*0167
      IF (ISPEC.EQ.0) GO TO 665                                         INP*0168
      WRITE (NTAPE,660) (RSXT(J,ISTG),YOSS(J,I),J=1,NXT)                INP*0169
  660 FORMAT (47X,6HRADIAL,20X,10HADDITIONAL/46X,8HPOSITION,22X,4HLOSS/ INP*0170
     1 48X,4H(IN),23X,6HFACTOR//(45X,F10.4,18X,F10.4))                  INP*0171
      GO TO 615                                                         INP*0172
```

```
665 WRITE (NTAPE,666) (RSXT(J,ISTG),YOSS(J,I),J=1,NXT)                INP*0173
666 FORMAT(47X,6HRADIAL,21X,8HPRESSURE/46X,8HPOSITION,22X,4HLOSS/48X,4INP*0174
   1H(IN),21X,11HCOEFFICIENT//(45X,F10.4,18X,F10.4))                  INP*0175
    GO TO 615                                                         INP*0176
670 IF (ISPEC.EQ.0) GO TO 676                                         INP*0177
    WRITE(NTAPE,675) (RSXT(J,ISTG),DVMDR(J,I),YOSS(J,I),J=1,NXT)      INP*0178
675 FORMAT (59X,10HMERIDIONAL/47X,6HRADIAL,7X,8HVELOCITY,5X,10HADDITIOINP*0179
   1NAL/46X,8HPOSITION,6X,8HGRADIENT,8X,4HLOSS/48X,4H(IN),7X,10H(PER  INP*0180
   2SEC),6X,6HFACTOR/(45X,F10.4,4X,F10.2,4X,F10.4))                   INP*0181
    GO TO 680                                                         INP*0182
676 WRITE(NTAPE,677) (RSXT(J,ISTG),DVMDR(J,I),YOSS(J,I),J=1,NXT)      INP*0183
677 FORMAT(59X,10HMERIDIONAL/47X,6HRADIAL,7X,8HVELOCITY,6X,8HPRESSURE/INP*0184
   146X,8HPOSITION,6X,8HGRADIENT,8X,4HLOSS/48X,4H(IN),7X,10H(PER  SEC)INP*0185
   2,4X,11HCOEFFICIENT//(45X,F10.4,4X,F10.2,4X,F10.4))                INP*0186
680 CONTINUE                                                          INP*0187
    IF(ISPEC.EQ.0) GO TO 710                                          INP*0188
    WRITE(NTAPE,685)                                                  INP*0189
685 FORMAT(///48X,35H* BASIC INTERNAL LOSS CORRELATION *  ,///)       INP*0190
    WRITE(NTAPE,690) CON6,CON7,CON8,CON3                              INP*0191
690 FORMAT(57H          TAN(INLET ANGLE) + TAN(EXIT ANGLE)            INP*0192
   1(  ,F10.8,3H +   ,F10.8,14H * (V RATIO)**  ,F5.2,21H)  IF (V RATIOINP*0193
   2) .LT.   ,F10.8)                                                  INP*0194
    WRITE(NTAPE,695)                                                  INP*0195
695 FORMAT(2X,53HY = ------------------------------------- *TIMES*INP*0196
   1  )                                                              INP*0197
    WRITE(NTAPE,700) CON4,CON5,CON1,CON2,CON3,CON3                    INP*0198
700 FORMAT(6X,F10.8,3H +   ,F10.8,28H * COS(EXIT ANGLE)          (  ,F1INP*0199
   10.8,3H +   ,F10.8,13H *((V RATIO)- ,F5.3,22H))  IF (V RATIO) .GE. INP*0200
   2 ,F10.8)                                                          INP*0201
    WRITE(NTAPE,705) CON9                                             INP*0202
705 FORMAT(///20X,82HTHE PRESSURE-LOSS COEFFICIENT COMPUTED IN THIS MAINP*0203
   1NNER MAY NOT EXCEED A LIMIT OF    ,F10.8)                        INP*0204
710 CONTINUE                                                          INP*0205
    RETURN                                                            INP*0206
    END                                                               INP*0207
```

APPENDIX VII

SUBRØUTINE STRAC

The function of Subroutine STRAC is to obtain the angles of inclination and curvatures of the hub and casing streamlines at each design station of a spool. This is done in a manner such that the obtained values can be treated as if they had been specified in the input data.

Subroutine STRAC is called by the main routine when streamline angles of inclination and curvatures are not specified in the input data; it does not call any other subroutines. The subroutine does not require external input and does not provide external output. Internal input and output of the subroutine are transmitted through blank CØMMØN, and CØMMØN/CØM5/. The internal input consists of:

NDSTAT RANN XSTAT

The internal output consists of:

ASTR CSTR NSTRAC RSTRAC

(These symbols are described in the appropriate sections of the CØMMØN Fortran Nomenclature.)

Additional Fortran Nomenclature for Subroutine STRAC

The following table gives the Fortran nomenclature for those symbols used in Subroutine STRAC which are not part of CØMMØN.

Fortran Symbol	Symbol	Description	Units
DTDX	$\left(\frac{d^2r}{dx^2}\right)_i$	Second derivative of the radial position of the hub or casing at a design station with respect to axial position	per ft
DX	$\min(x_{i+1}-x_i, x_i-x_{i-1})$	Smaller of DXL and DXR	ft
DXL	$x_i - x_{i-1}$	Axial distance between a design station and the upstream station	ft
DXR	$x_{i+1} - x_i$	Axial distance between the downstream station and a design station	ft
TANA	$\left(\frac{dr}{dx}\right)_i$	Derivative of the radial position of the hub or casing at a	

Fortran Symbol	Symbol	Description	Units
		design station with respect to axial position	--
TANL	$\frac{(r_i - r_{i-1})}{(x_i - x_{i-1})}$	Straight-line slope of the hub or casing streamline between a design station and the upstream station	--
TANR	$\frac{(r_{i+1} - r_i)}{(x_{i+1} - x_i)}$	Straight-line slope of the hub or casing streamline between the downstream station and a design station	--

```
      SUBROUTINE STRAC                                                  STC*0000
C                                                                       STC*0001
C     STRAC - DETERMINATION OF HUB AND CASING VALUES OF STREAMLINE      STC*0002
C             ANGLES OF INCLINATION AND CURVATURES                      STC*0003
C                                                                       STC*0004
      COMMON IBR,ICOEF,ICONV,ICOOL,IDLETE,IDS,ILLCOP,ILOOP,ILOSS,       STC*0005
     1IMIX,ISAV,ISON,ISPEC,ISRI,ISTG,IPOFS,NDSTAT,NLINES,NSPOOL,        STC*0006
     2NSTG,NTAPE,NTUBES,IWRLS                                           STC*0007
      COMMON /COM5/ASTR(17,17),ASTS(17),BETLT(17),CSTR(17,17),          STC*0008
     1CSTS(17),DTO(17),FHP(8),FLWC,IPOF(8),ISTRAC,NLT,                  STC*0009
     2NSTAT,NSTRAC,NXT,POF(17,8),POLT(17),RANN(19,2),RLT(17),           STC*0010
     3RSTRAC(17,17),RSTRAS(17),RXTS(17),TOC(16),TOLT(17),               STC*0011
     4WRLS(17),XMIX(17,16),XSTAT(19),YOS(17),IWRL(8),VUM(8),VUMS,       STC*0012
     5DVMDRS(17),DVMDS(17)                                              STC*0013
      NSTRAC=2                                                          STC*0014
      DO 200 J=1,2                                                      STC*0015
      DXL=XSTAT(2)-XSTAT(1)                                             STC*0016
      TANL=(RANN(2,J)-RANN(1,J))/DXL                                    STC*0017
      DO 200 I=1,NDSTAT                                                 STC*0018
      DXR=XSTAT(I+2)-XSTAT(I+1)                                         STC*0019
      TANR=(RANN(I+2,J)-RANN(I+1,J))/DXR                                STC*0020
      TANA=0.5*(TANR+TANL)                                              STC*0021
      ASTR(J,I)=ATAN(TANA)                                              STC*0022
      IF (DXR.GT.DXL) GO TO 50                                          STC*0023
      DX=DXR                                                            STC*0024
      GO TO 100                                                         STC*0025
   50 DX=DXL                                                            STC*0026
  100 DTDX=(TANR-TANL)/DX                                               STC*0027
      CSTR(J,I)=DTDX/(1.0+TANA**2)**1.5                                 STC*0028
      RSTRAC(J,I)=RANN(I+1,J)                                           STC*0029
      DXL=DXR                                                           STC*0030
  200 TANL=TANR                                                         STC*0031
      RETURN                                                            STC*0032
      END                                                               STC*0033
```

APPENDIX VIII

SUBRØUTINE SPECHT

The function of Subroutine SPECHT is to determine various values of the specific heat at constant pressure, specific heat ratio, and related parameters which are required to perform the calculations at a particular design station.

Subroutine SPECHT is called by the main routine; it does not call any other subroutines. The subroutine does not require external input and does not provide external output. Internal input and output of the subroutine are transmitted through blank CØMMØN, CØMMØN/CØM2/, and CØMMØN/CØM6/. The internal input consists of:

CP	EJAY	GASC	GØ	ISAV
ISRI	NDSTAT	NSPØØL		

The internal output consists of:

CP1	CP2	CP3	CP4	CP5
EJCP1	EJCP2	GAMA1	GAMA2	GAMA3
GAMB1	GAMC1	GAMD2	GAMD3	GAMD4
GAMD5	GAM1	GAM2	GAM3	GAM4
GAM5	GGG1	GJCP1	GJCP12	GJCP2
GJCP22	GJCP32	GJCP42	GJCP52	

(These symbols are described in the appropriate sections of the CØMMØN Fortran Nomenclature.)

Additional Fortran Nomenclature for Subroutine SPECHT

The following table gives the Fortran nomenclature for those symbols used in Subroutine SPECHT which are not part of CØMMØN.

Fortran Symbol	Symbol	Description	Units
CP10	c_{p_1}	Specific heat at constant pressure at the inlet of a spool	Btu per lbm deg R
CP100	$c_{p\ inlet}$	Specific heat at constant pressure at the inlet of the turbine	Btu per lbm deg R

Fortran Symbol	Symbol	Description	Units
FUN1		Arithmetic statement function defining specific heat ratio in terms of specific heat at constant pressure and gas constant	--
FUN2		Arithmetic statement function defining a parameter related to specific heat ratio	--
FUN3		Arithmetic statement function defining a parameter related to specific heat ratio	--

```
      SUBROUTINE SPECHT                                                 SPE*0000
C                                                                       SPE*0001
C     SPECHT - DETERMINATION OF SPECIFIC HEATS, SPECIFIC-HEAT RATIOS,   SPE*0002
C              AND RELATED PARAMETERS                                   SPE*0003
C                                                                       SPE*0004
      COMMON IBR,ICOEF,ICONV,ICOOL,IDLETE,IDS,ILLOOP,ILOOP,ILOSS,       SPE*0005
     1IMIX,ISAV,ISON,ISPEC,ISRI,ISTG,IPOFS,NDSTAT,NLINES,NSPOOL,        SPE*0006
     2NSTG,NTAPE,NTUBES,IWRLS                                           SPE*0007
      COMMON /COM2/CP(17),CP1,CP2,CP3,CP4,CP5,EJCP1,EJCP2,              SPE*0008
     1GAMA1,GAMA2,GAMA3,GAMB1,GAMC1,GAMD2,GAMD3,GAMD4,GAMD5,            SPE*0009
     2GAM1,GAM2,GAM3,GAM4,GAM5,GASC,GGG1,GJCP1,GJCP12,GJCP2,            SPE*0010
     3GJCP22,GJCP32,GJCP42,GJCP52                                       SPE*0011
      COMMON /COM6/CNV1,CNV2,CNV3,CNV5,EJAY,GO,PI,TOLWY                 SPE*0012
      FUN1(A)=EJAY*A/(EJAY*A-GASC)                                      SPE*0013
      FUN2(A)=A/(A-1.0)                                                 SPE*0014
      FUN3(A)=2.0*GO*EJAY*A                                             SPE*0015
      CP1=CP(IDS)                                                       SPE*0016
      GAM1=FUN1(CP1)                                                    SPE*0017
      GAMA1=FUN2(GAM1)                                                  SPE*0018
      GAMB1=GAMA1/GAM1                                                  SPE*0019
      GAMC1=0.5/GAMB1                                                   SPE*0020
      GGG1=GO*GASC*GAM1                                                 SPE*0021
      EJCP1=EJAY*CP1                                                    SPE*0022
      GJCP1=GO*EJCP1                                                    SPE*0023
      GJCP12=2.0*GJCP1                                                  SPE*0024
      IF (ISRI.NE.3) GO TO 100                                          SPE*0025
      CP100=CP1                                                         SPE*0026
      CP10=CP1                                                          SPE*0027
      RETURN                                                            SPE*0028
  100 CP2=0.5*(CP1+CP(IDS-1))                                           SPE*0029
      GAM2=FUN1(CP2)                                                    SPE*0030
      GAMA2=FUN2(GAM2)                                                  SPE*0031
      GAMD2=1.0/GAMA2                                                   SPE*0032
      EJCP2=EJAY*CP2                                                    SPE*0033
      GJCP2=GO*EJCP2                                                    SPE*0034
      GJCP22=2.0*GJCP2                                                  SPE*0035
      IF (ISRI.EQ.1) RETURN                                             SPE*0036
      CP3=0.5*(CP1+CP(IDS-2))                                           SPE*0037
      GAM3=FUN1(CP3)                                                    SPE*0038
      GAMA3=FUN2(GAM3)                                                  SPE*0039
      GAMD3=1.0/GAMA3                                                   SPE*0040
      GJCP32=FUN3(CP3)                                                  SPE*0041
      IF (IDS.NE.NDSTAT) RETURN                                         SPE*0042
      CP4=0.5*(CP1+CP10)                                                SPE*0043
      GAM4=FUN1(CP4)                                                    SPE*0044
      GAMD4=1.0/FUN2(GAM4)                                              SPE*0045
      GJCP42=FUN3(CP4)                                                  SPE*0046
      CP10=CP1                                                          SPE*0047
      IF (NSPOOL.EQ.1) RETURN                                           SPE*0048
      IF (ISAV.LT.NSPOOL) RETURN                                        SPE*0049
      CP5=0.5*(CP1+CP100)                                               SPE*0050
      GAM5=FUN1(CP5)                                                    SPE*0051
      GAMD5=1.0/FUN2(GAM5)                                              SPE*0052
      GJCP52=FUN3(CP5)                                                  SPE*0053
      RETURN                                                            SPE*0054
      END                                                               SPE*0055
```

APPENDIX IX

SUBRØUTINE PØWER2

The function of Subroutine PØWER2 is to control the iteration on rotor meanline total temperature drop used to satisfy the over-all stage power output requirement.

Subroutine PØWER2 is called by the main routine each time streamline locations are reestimated at a stage exit design station; it does not call any other subroutines. Subroutine PØWER2 does not require external input and does not provide external output. Internal input and output are transmitted through blank CØMMØN, CØMMØN/CØM1/, CØMMØN/CØM2/, CØMMØN/CØM3/, CØMMØN/CØM4/, CØMMØN/CØM5/, CØMMØN/CØM7/, and CØMMØN/CØM9/. The internal input consists of:

DTØ	EJCP2	ENM1	FHP
FLWP	HP	ILØØP	ISTG
MEAN	NLINES	NTUBES	TØ
TØU			

(These symbols are defined in the appropriate sections of the CØMMØN Fortran Nomenclature.) The internal output transmitted through CØMMØN consists of:

DTØ

The internal output transmitted as the argument of the calling sequence is:

IPCØNV

Additional Fortran Nomenclature for Subroutine PØWER2

Fortran Symbol	Symbol	Description	Units
DTØA	$\overline{\Delta T_o}$	Streamtube average total temperature drop across a rotor; equivalent to mass average total temperature drop when streamline locations have converged	deg R
DTØØ	$(\Delta T_o)_m$	Meanline total temperature drop across a rotor employed in the	

Fortran Symbol	Symbol	Description	Units
		previous pass through the loop on streamline positions	deg R
IPCØNV		Indicator: IPCØNV=0 if the achieved stage power output has not converged to the desired value IPCØNV=1 if the achieved stage power output has converged to the value specified in the input	--
PARAM	ΔT_o	Specified mass averaged total temperature drop across the rotor	deg R
PØW	$w J \bar{c}_{p_2} \cdot \Delta T_o$	Specified mass averaged power output of a rotor	ft lbf/sec
TØLPØW		Tolerance used to check whether the iteration on stage power output has converged	--

```
      SUBROUTINE POWER2(IPCONV)                                         POW*0000
C                                                                       POW*0001
C     POWER2 - DETERMINE MEANLINE TOTAL TEMPERATURE DROP ACROSS ROTOR   POW*0002
C                                                                       POW*0003
      COMMON IBR,ICOEF,ICONV,ICOOL,IDLETE,IDS,ILLOOP,ILOOP,ILOSS,       POW*0004
     1IMIX,ISAV,ISON,ISPEC,ISRI,ISTG,IPOFS,NDSTAT,NLINES,NSPOOL,        POW*0005
     2NSTG,NTAPE,NTUBES,IWRLS                                           POW*0006
      COMMON /COM1/AY(17),BET(17),BETR(17),BREFF(17),CRV(17),           POW*0007
     1DFLOW(17),EFFR(17),EFFS(17),EM(17),EMR(17),FACL(17),GRND(17),     POW*0008
     2P(17),PO(17),POR(17),REAC(17),T(17),TO(17),TOR(17),U(17),         POW*0009
     3V(17),VM(17),VR(17),VT(17),VX(17),WYE(17),WYK(17)                 POW*0010
      COMMON /COM2/CP(17),CP1,CP2,CP3,CP4,CP5,EJCP1,EJCP2,              POW*0011
     1GAMA1,GAMA2,GAMA3,GAMB1,GAMC1,GAMD2,GAMD3,GAMD4,GAMD5,            POW*0012
     2GAM1,GAM2,GAM3,GAM4,GAM5,GASC,GGG1,GJCP1,GJCP12,GJCP2,            POW*0013
     3GJCP22,GJCP32,GJCP42,GJCP52                                       POW*0014
      COMMON /COM3/BETRU(17),BETU(17),BREFFO(17),DPOUDR(17),            POW*0015
     1DPRUDR(17),DTRUDR(17),POO(17),POO2(17),PORU(17),POU(17),          POW*0016
     2REACO(17),TOO(17),TOO2(17),TORU(17),TOU(17),UU(17),               POW*0017
     3VRU(17),VTU(17),VU(17),WYEO(17),DTOUDR(17),DVTUDR(17)             POW*0018
      COMMON /COM4/FLW(17),FLWP,HP,RPM,RST(17),WFN(17)                  POW*0019
      COMMON /COM5/ASTR(17,17),ASTS(17),BETLT(17),CSTR(17,17),          POW*0020
     1CSTS(17),DTO(17),FHP(8),FLWC,IPOF(8),ISTRAC,NLT,                  POW*0021
     2NSTAT,NSTRAC,NXT,POF(17,8),POLT(17),RANN(19,2),RLT(17),           POW*0022
     3RSTRAC(17,17),RSTRAS(17),RXTS(17),TOC(16),TOLT(17),               POW*0023
     4WRLS(17),XMIX(17,16),XSTAT(19),YOS(17),IWRL(8),VUM(8),VUMS,       POW*0024
     5DVMDRS(17),DVMDS(17)                                              POW*0025
      COMMON /COM7/COT60,DFLWT,DFLWTO,EMMAX,EMMIN,ICNT,JJ,              POW*0026
     1JJP,MEAN,RATIO,VMM,VMMO,VMMOO                                     POW*0027
      COMMON /COM9/BREA(16),BREAP,ENM1,FLWM,OJS,OSE,OTE,OTS,            POW*0028
     1OTT,OW,SJS(8),SJSP,SPJS,SPP,SPSE,SPTE,SPTS,SPTT,SPW,SSE(8),       POW*0029
     2SSEP,STE(8),STEP,SW(8),SWP                                        POW*0030
      DATA TOLPOW /0.0001/                                              POW*0031
      IPCONV=0                                                          POW*0032
      POW=FHP(ISTG)*HP                                                  POW*0033
      PARAM=POW/(FLWP*EJCP2)                                            POW*0034
      IF (ILOOP.NE.1) GO TO 50                                          POW*0035
      DTO(MEAN)=PARAM                                                   POW*0036
      RETURN                                                            POW*0037
   50 DTOO=DTO(MEAN)                                                    POW*0038
      DO 100 I=1,NLINES                                                 POW*0039
  100 DTO(I)=TOU(I)-TO(I)                                               POW*0040
      DTOA=0.5*DTO(1)                                                   POW*0041
      DO 200 J=2,NTUBES                                                 POW*0042
  200 DTOA=DTOA+DTO(J)                                                  POW*0043
      DTOA=(DTOA+0.5*DTO(NLINES))/ENM1                                  POW*0044
      DTO(MEAN)=PARAM/DTOA*DTO(MEAN)                                    POW*0045
      IF (ABS(DTO(MEAN)/DTOO-1.0).LE.TOLPOW)IPCONV=1                    POW*0046
      RETURN                                                            POW*0047
      END                                                               POW*0048
```

APPENDIX X

SUBRØUTINE I1AP1

The primary function of Subroutine I1AP1 is to perform parabolic interpolation of a tabulated function of one variable. If parabolic interpolation cannot be performed, linear interpolation or extrapolation, or extrapolation of a single value is performed.

Subroutine I1AP1 is called by the main routine and Subroutines STRVL2 and DERIV2; it does not call any other subroutines. Subroutine I1AP1 does not require external input and does not provide external output. Internal input and output are transmitted as arguments of the subroutine. The internal input consists of:

IMX X XP Y

The internal output consists of:

YP

Fortran Nomenclature for Subroutine I1AP1

The following table gives the Fortran nomenclature for those symbols used in Subroutine I1AP1. Since the subroutine may be used with any consistent set of units, the units of the symbols are not specified. The subscript I, where indicated, is a tabular entry index.

Fortran Symbol	Symbol	Description	Units
A	a	Coefficient of the second-order term in the expression for y as a function of x	--
B	b	Coefficient of the first-order term in the expression for y as a function of x	--
DI	$\lvert x - x_p \rvert$	Distance between a tabular entry of x and the value of x at which a value of y is to be obtained	--
DREF	$\min \lvert x - x_p \rvert$	Smallest distance between a tabular entry of x and the value of x at which a value of y is to be obtained	--

Fortran Symbol	Symbol	Description	Units
IE		Index of the first tabular entry used to obtain a linear variation of Y as a function of X	--
IMX		Number of tabular entries	--
IREF	i	Index of the tabular entry of X which gives DREF	--
IRM	$i-1$	Index of the tabular entry preceding IREF	--
IRP	$i+1$	Index of the tabular entry following IREF	--
NE		Index of the second tabular entry used to obtain a linear variation of Y as a function of X	--
X(I)	X	Tabular entries of the independent variable	--
XP	X_p	The value of the independent variable at which a value of the dependent variable is to be obtained	--
XP1	$X_p - X_{i-1}$	Difference in two values of the independent variable	--
X21	$X_i - X_{i-1}$	Difference in two values of the independent variable	--
X32	$X_{i+1} - X_i$	Difference in two values of the independent variable	--
Y(I)	Y	Tabular entries of the dependent variable	--
YP	Y_p	The value of the dependent variable to be obtained	--
Y21	$Y_i - Y_{i-1}$	Difference in two values of the dependent variable	--
Y32	$Y_{i+1} - Y_i$	Difference in two values of the dependent variable	--

```
      SUBROUTINE I1AP1(XP,YP,X,Y,IMX)                                   I1A*0000
C                                                                       I1A*0001
C     I1AP1 - PARABOLIC INTERPOLATION OR LINEAR EXTRAPOLATION OF A      I1A*0002
C             FUNCTION OF ONE VARIABLE                                  I1A*0003
C                                                                       I1A*0004
      DIMENSION X(17),Y(17)                                             I1A*0005
      IF (IMX-2) 10,30,20                                               I1A*0006
   10 YP=Y(1)                                                           I1A*0007
      RETURN                                                            I1A*0008
   20 IF (XP.GT.X(1)) GO TO 40                                          I1A*0009
   30 IE=1                                                              I1A*0010
      NE=2                                                              I1A*0011
      GO TO 50                                                          I1A*0012
   40 IF (XP.LT.X(IMX)) GO TO 60                                        I1A*0013
      IE=IMX-1                                                          I1A*0014
      NE=IMX                                                            I1A*0015
   50 YP=Y(IE)+(XP-X(IE))*(Y(NE)-Y(IE))/(X(NE)-X(IE))                   I1A*0016
      RETURN                                                            I1A*0017
   60 IM1=IMX-1                                                         I1A*0018
      IREF=2                                                            I1A*0019
      DREF=ABS(X(2)-XP)                                                 I1A*0020
      DO 70 I=2,IM1                                                     I1A*0021
      DI=ABS(X(I)-XP)                                                   I1A*0022
      IF (DI.GE.DREF) GO TO 70                                          I1A*0023
      IREF=I                                                            I1A*0024
      DREF=DI                                                           I1A*0025
   70 CONTINUE                                                          I1A*0026
      IRM=IREF-1                                                        I1A*0027
      IRP=IREF+1                                                        I1A*0028
      X21=X(IREF)-X(IRM)                                                I1A*0029
      X32=X(IRP)-X(IREF)                                                I1A*0030
      Y21=Y(IREF)-Y(IRM)                                                I1A*0031
      Y32=Y(IRP)-Y(IREF)                                                I1A*0032
      A=(X21*Y32-X32*Y21)/(X21*X32*(X32+X21))                           I1A*0033
      B=Y21/X21-X21*A                                                   I1A*0034
      XP1=XP-X(IRM)                                                     I1A*0035
      YP=A*XP1**2+B*XP1+Y(IRM)                                          I1A*0036
      RETURN                                                            I1A*0037
      END                                                               I1A*0038
```

APPENDIX XI

SUBRØUTINE SLØPE

The function of Subroutine SLØPE is to obtain the derivative of a tabulated function with respect to the independent variable at each tabular entry of the variable.

Subroutine SLØPE is called by Subroutines STRVL2 and LØSCØR; it does not call any other subroutines. Subroutine SLØPE does not require external input and does not provide external output. Internal input and output are transmitted as arguments of the subroutine. The internal input consists of:

X Y IMX

The internal output consists of:

DYDX

Fortran Nomenclature for Subroutine SLØPE

The following table gives the Fortran nomenclature for those symbols used in Subroutine SLØPE. Since the subroutine may be used with any consistent set of units, the units of the symbols are not specified. The subscript I, where indicated, is a tabular entry index.

Fortran Symbol	Symbol	Description	Units
A	a	Coefficient of the first-order term in the expression for y as a function of x	--
DYDX(I)	$\left(\frac{dy}{dx}\right)_i$	Tabulated values of the derivative of y with respect to x	--
I	i	Index of the tabular entries	--
IMX		Number of tabular entries	--
IM1		Number of tabular entries minus one	--
X(I)	x_i	Tabular entries of the independent variable	--
X21	$x_i - x_{i-1}$	Difference in two values of the independent variable	--

Fortran Symbol	Symbol	Description	Units
X32	$X_{i+1} - X_i$	Difference in two values of the independent variable	--
Y(I)	Y_i	Tabular entries of the dependent variable	--
Y21	$Y_i - Y_{i-1}$	Difference in two values of the dependent variable	--
Y32	$Y_{i+1} - Y_i$	Difference in two values of the dependent variable	--

```
      SUBROUTINE SLOPE(X,Y,DYDX,IMX)                                    SLO*0000
C                                                                       SLO*0001
C     SLOPE - DETERMINATION OF DY/DX AT EACH TABULAR ENTRY OF X         SLO*0002
C                                                                       SLO*0003
      DIMENSION X(17),Y(17),DYDX(17)                                    SLO*0004
      IF (IMX-2) 10,20,30                                               SLO*0005
   10 DYDX(1)=0.0                                                       SLO*0006
      RETURN                                                            SLO*0007
   20 DYDX(1)=(Y(2)-Y(1))/(X(2)-X(1))                                   SLO*0008
      DYDX(2)=DYDX(1)                                                   SLO*0009
      RETURN                                                            SLO*0010
   30 IM1=IMX-1                                                         SLO*0011
      X21=X(2)-X(1)                                                     SLO*0012
      Y21=Y(2)-Y(1)                                                     SLO*0013
      DO 40 I=2,IM1                                                     SLO*0014
      X32=X(I+1)-X(I)                                                   SLO*0015
      Y32=Y(I+1)-Y(I)                                                   SLO*0016
      A=(X21*Y32-X32*Y21)/(X21*X32*(X21+X32))                           SLO*0017
      DYDX(I)=Y21/X21+X21*A                                             SLO*0018
      IF (I.EQ.2) DYDX(1)=Y21/X21-X21*A                                 SLO*0019
      IF (I.EQ.IM1) DYDX(IMX)=Y21/X21+(X21+2.0*X32)*A                   SLO*0020
      X21=X32                                                           SLO*0021
   40 Y21=Y32                                                           SLO*0022
      RETURN                                                            SLO*0023
      END                                                               SLO*0024
```

APPENDIX XII

SUBRØUTINE STRIP

The function of Subroutine STRIP is to obtain the initial estimate of the radial position of each streamline at a design station.

Subroutine STRIP is called by the main routine; it does not call any other subroutines. The subroutine does not require external input and does not provide external output. Internal input and output of the subroutine are transmitted through blank CØMMØN, CØMMØN/CØM4/, and CØMMØN/CØM5/. The internal input consists of:

IDS ISTRAC NLINES NTUBES RANN

WFN

The internal output consists of:

RST

(These symbols are described in the appropriate sections of the CØMMØN Fortran Nomenclature.)

Additional Fortran Nomenclature for Subroutine STRIP

The following table gives the Fortran nomenclature for those symbols used in Subroutine STRIP which are not part of CØMMØN.

Fortran Symbol	Symbol	Description	Units
ISTAT		Station index	--
J	j	Streamline index	--

```
      SUBROUTINE STRIP                                                  STP*0000
C                                                                       STP*0001
C     STRIP - DETERMINATION OF INITIAL STREAMLINE POSITIONS             STP*0002
C                                                                       STP*0003
      COMMON IBR,ICOEF,ICONV,ICOOL,IDLETE,IDS,ILLOOP,ILOOP,ILOSS,       STP*0004
     1IMIX,ISAV,ISON,ISPEC,ISRI,ISTG,IPOFS,NDSTAT,NLINES,NSPOOL,        STP*0005
     2NSTG,NTAPE,NTUBES,IWRLS                                           STP*0006
      COMMON /COM4/FLW(17),FLWP,HP,RPM,RST(17),WFN(17)                  STP*0007
      COMMON /COM5/ASTR(17,17),ASTS(17),BETLT(17),CSTR(17,17),          STP*0008
     1CSTS(17),DTO(17),FHP(8),FLWC,IPOF(8),ISTRAC,NLT,                  STP*0009
     2NSTAT,NSTRAC,NXT,POF(17,8),POLT(17),RANN(19,2),RLT(17),           STP*0010
     3RSTRAC(17,17),RSTRAS(17),RXTS(17),TOC(16),TOLT(17),               STP*0011
     4WRLS(17),XMIX(17,16),XSTAT(19),YOS(17),IWRL(8),VUM(8),VUMS,       STP*0012
     5DVMDRS(17),DVMDS(17)                                              STP*0013
      IF (ISTRAC.EQ.1) GO TO 50                                         STP*0014
      ISTAT=IDS+1                                                       STP*0015
      RST(1)=RANN(ISTAT,1)                                              STP*0016
      RST(NLINES)=RANN(ISTAT,2)                                         STP*0017
      GO TO 100                                                         STP*0018
   50 RST(1)=RANN(IDS,1)                                                STP*0019
      RST(NLINES)=RANN(IDS,2)                                           STP*0020
  100 DO 200 J=2,NTUBES                                                 STP*0021
  200 RST(J)=SQRT(RST(1)**2+WFN(J)*(RST(NLINES)**2-RST(1)**2))          STP*0022
      RETURN                                                            STP*0023
      END                                                               STP*0024
```

APPENDIX XIII

SUBRØUTINE STRVL2

The function of Subroutine STRVL2 is to obtain streamline values of the items which are required for the solution of the radial equilibrium equation at a design station.

Subroutine STRVL2 is called by the main routine; it, in turn, calls Subroutines IIAP1 and SLØPE. Subroutine STRVL2 does not require external input and does not provide external output. Internal input and output of the subroutine are transmitted through blank CØMMØN, CØMMØN/CØM1/, CØMMØN/CØM2/, CØMMØN/CØM3/, CØMMØN/CØM4/, CØMMØN/CØM5/, CØMMØN/CØM8/, and CØMMØN/CØM11/. The internal input consists of:

ASTS	BETLT	CSTS	DVMDS
IPØFS	ISPEC	ISRI	IWRLS
NLINES	NLT	NSTRAC	NXT
PØLT	PØRU	PØU	RLT
RPM	RST	RSTRAS	RXTS
TØLT	TØRU	TØU	VTU
WRLS	YØS		

(These symbols are defined in the appropriate sections of the CØMMØN Fortran Nomenclature.) The internal output consists of:

AY	BET	CRV	DADR
DBDR	DPØDR	DPØUDR	DPRUDR
DTØDR	DTØUDR	DTRUDR	DVMDRS
DVTUDR	FACL	PØ	TØ
U			

Additional Fortran Nomenclature for Subroutine STRVL2

Fortran Symbol	Symbol	Description	Units
AYP	A_{ij}	Streamline value of the streamline angle of inclination	rad
BETP	β_{ij}	Streamline value of the flow angle	rad
CRVP	$(1/r_m)_{ij}$	Streamline value of the streamline curvature	per ft

Fortran Symbol	Symbol	Description	Units
DVMDRP	$\left(\frac{dV_{mi}}{dr}\right)_j$	Streamline value of meridional velocity gradient	per sec
PØP	$(P_o)_{ij}$	Streamline value of the total pressure	psf
RP	r_{ij}	Radial position of a streamline	ft
TØP	$(T_o)_{ij}$	Streamline value of the total temperature	deg R
WRLP		Streamline value of the flow angle at a stator exit	rad
YØSP		Streamline value of total-pressure-loss coefficient or additional loss factor	--

```
      SUBROUTINE STRVL2                                                 STV*0000
C                                                                       STV*0001
C     STRVL2 - CALCULATION OF STREAMLINE VALUES OF INPUT ITEMS TO THE   STV*0002
C              RADIAL EQUILIBRIUM EQUATION                              STV*0003
C                                                                       STV*0004
      COMMON IBR,ICOEF,ICONV,ICOOL,IDLETE,IDS,ILLOOP,ILOOP,ILOSS,       STV*0005
     1IMIX,ISAV,ISON,ISPEC,ISRI,ISTG,IPOFS,NDSTAT,NLINES,NSPOOL,        STV*0006
     2NSTG,NTAPE,NTUBES,IWRLS                                           STV*0007
      COMMON /COM1/AY(17),BET(17),BETR(17),BREFF(17),CRV(17),           STV*0008
     1DFLOW(17),EFFR(17),EFFS(17),EM(17),EMR(17),FACL(17),GRND(17),     STV*0009
     2P(17),PO(17),POR(17),REAC(17),T(17),TO(17),TOR(17),U(17),         STV*0010
     3V(17),VM(17),VR(17),VT(17),VX(17),WYE(17),WYK(17)                 STV*0011
      COMMON /COM2/CP(17),CP1,CP2,CP3,CP4,CP5,EJCP1,EJCP2,              STV*0012
     1GAMA1,GAMA2,GAMA3,GAMB1,GAMC1,GAMD2,GAMD3,GAMD4,GAMD5,            STV*0013
     2GAM1,GAM2,GAM3,GAM4,GAM5,GASC,GGG1,GJCP1,GJCP12,GJCP2,            STV*0014
     3GJCP22,GJCP32,GJCP42,GJCP52                                       STV*0015
      COMMON /COM3/BETRU(17),BETU(17),BREFFO(17),DPOUDR(17),            STV*0016
     1DPRUDR(17),DTRUDR(17),POO(17),POO2(17),PORU(17),POU(17),          STV*0017
     2REACO(17),TOO(17),TOO2(17),TORU(17),TOU(17),UU(17),               STV*0018
     3VRU(17),VTU(17),VU(17),WYEO(17),DTOUDR(17),DVTUDR(17)             STV*0019
      COMMON /COM4/FLW(17),FLWP,HP,RPM,RST(17),WFN(17)                  STV*0020
      COMMON /COM5/ASTR(17,17),ASTS(17),BETLT(17),CSTR(17,17),          STV*0021
     1CSTS(17),DTO(17),FHP(8),FLWC,IPOF(8),ISTRAC,NLT,                  STV*0022
     2NSTAT,NSTRAC,NXT,POF(17,8),POLT(17),RANN(19,2),RLT(17),           STV*0023
     3RSTRAC(17,17),RSTRAS(17),RXTS(17),TOC(16),TOLT(17),               STV*0024
     4WRLS(17),XMIX(17,16),XSTAT(19),YOS(17),IWRL(8),VUM(8),VUMS,       STV*0025
     5DVMDRS(17),DVMDS(17)                                              STV*0026
      COMMON /COM8/DADR(17),DBDR(17),DPODR(17),DTODR(17),               STV*0027
     1DVTDR(17),DWYDR(17)                                               STV*0028
      COMMON /COM11/ AYP,COSA,COSB,COSQB,DBDRP,DBRUDR(17),DBUDR(17),    STV*0029
     1DFLDR(17),DVRUDR(17),DVUDR(17),IJ,TANB,VMP,VSQ,VTP                STV*0030
      DO 500 J=1,NLINES                                                 STV*0031
      RP=RST(J)                                                         STV*0032
      CALL I1AP1(RP,AYP,RSTRAS,ASTS,NSTRAC)                             STV*0033
      AY(J)=AYP                                                         STV*0034
      CALL I1AP1(RP,CRVP,RSTRAS,CSTS,NSTRAC)                            STV*0035
      CRV(J)=CRVP                                                       STV*0036
      IF (ISRI.NE.3) GO TO 50                                           STV*0037
      CALL I1AP1(RP,TOP,RLT,TOLT,NLT)                                   STV*0038
      TO(J)=TOP                                                         STV*0039
      CALL I1AP1(RP,POP,RLT,POLT,NLT)                                   STV*0040
      PO(J)=POP                                                         STV*0041
      CALL I1AP1(RP,BETP,RLT,BETLT,NLT)                                 STV*0042
      BET(J)=BETP                                                       STV*0043
      GO TO 500                                                         STV*0044
   50 U(J)=RPM*RP                                                       STV*0045
      IF (ISRI.NE.1) GO TO 150                                          STV*0046
      TO(J)=TOU(J)                                                      STV*0047
      IF (IWRLS.EQ.0) GO TO 100                                         STV*0048
      CALL I1AP1(RP,WRLP,RXTS,WRLS,NXT)                                 STV*0049
      BET(J)=WRLP                                                       STV*0050
      GO TO 200                                                         STV*0051
  100 CALL I1AP1(RP,DVMDRP,RXTS,DVMDS,NXT)                              STV*0052
      DVMDRS(J)=DVMDRP                                                  STV*0053
      GO TO 200                                                         STV*0054
  150 IF (IPOFS.EQ.0) GO TO 200                                         STV*0055
      CALL I1AP1(RP,DVMDRP,RXTS,DVMDS,NXT)                              STV*0056
```

```
      DVMDRS(J)=DVMDRP                                                  STV*0057
  200 IF (ISPEC.EQ.1) GO TO 500                                         STV*0058
      CALL I1AP1(RP,YOSP,RXTS,YOS,NXT)                                  STV*0059
      FACL(J)=YOSP                                                      STV*0060
  500 CONTINUE                                                          STV*0061
      IF (ISRI.EQ.2) GO TO 600                                          STV*0062
      CALL SLOPE(RST,TO,DTODR,NLINES)                                   STV*0063
      IF (ISRI.EQ.3) GO TO 550                                          STV*0064
      CALL SLOPE(RST,POU,DPOUDR,NLINES)                                 STV*0065
  550 IF (IWRLS.EQ.0.AND.ISRI.EQ.1) GO TO 800                           STV*0066
      CALL SLOPE(RST,BET,DBDR,NLINES)                                   STV*0067
      CALL SLOPE(RST,AY,DADR,NLINES)                                    STV*0068
      IF (ISRI.EQ.1) GO TO 800                                          STV*0069
      CALL SLOPE(RST,PO,DPODR,NLINES)                                   STV*0070
      GO TO 800                                                         STV*0071
  600 CALL SLOPE(RST,PORU,DPRUDR,NLINES)                                STV*0072
      CALL SLOPE(RST,TORU,DTRUDR,NLINES)                                STV*0073
      CALL SLOPE(RST,TOU,DTOUDR,NLINES)                                 STV*0074
      CALL SLOPE(RST,VTU,DVTUDR,NLINES)                                 STV*0075
  800 RETURN                                                            STV*0076
      END                                                               STV*0077
```

APPENDIX XIV

SUBRØUTINE VMNTL2

The function of Subroutine VMNTL2 is to obtain an initial estimate of the meridional velocity at the mean streamline of a design station.

Subroutine VMNTL2 is called by the main routine on the first pass through the iterative loop on streamline position; the subroutine does not call any other subroutines. Subroutine VMNTL2 does not require external input and does not provide external output. The internal input and output of the subroutine are transmitted through blank CØMMØN, CØMMØN/CØM1/, CØMMØN/CØM2/, CØMMØN/CØM5/, and CØMMØN/CØM7/. The internal input consists of:

AY	BET	CØT60	EMMAX	EMMIN
GAMC1	GGG1	ISØN	ISR1	IWRLS
MEAN	TØ	U	VT	VUMS

The internal output consists of:

VMM

(These symbols are described in the appropriate sections of the CØMMØN Fortran Nomenclature.)

Additional Fortran Nomenclature for Subroutine VMNTL2

The following table gives the Fortran nomenclature for those symbols used in Subroutine VMNTL2 which are not part of CØMMØN.

Fortran Symbol	Symbol	Description	Units
EKAY	$M\sqrt{\dfrac{g_o R \gamma_i}{1+\left(\frac{\gamma_i-1}{2}\right)M^2}}$	Parameter related to specific heat ratio and Mach number	fps per deg $R^{\frac{1}{2}}$
EMI	M	Assumed value of Mach number when flow angle is specified at a design station	--
PARAM	$\left\{g_o R \gamma_i (T_{o1})_m - \left(\frac{\gamma_i-1}{2}\right)(V_{u1}^2)_m\right\}^{1/2}$	Parameter related to specific heat ratio, and total temperature and tangential velocity at the mean streamline	fps
VMMAX	$\max\left\{(V_{m1})_m\right\}$	Maximum allowable estimate of the meridional velocity at the mean streamline	fps

Fortran Symbol	Symbol	Description	Units
VMMIN	$\min\left\{(V_{mi})_m\right\}$	Minimum allowable estimate of the meridional velocity at the mean streamline	fps

```
      SUBROUTINE VMNTL2                                                 VMN*0000
C                                                                       VMN*0001
C     VMNTL2 - OBTAIN AN INITIAL ESTIMATE OF THE MERIDIONAL VELOCITY AT VMN*0002
C              THE MEAN STREAMLINE                                      VMN*0003
C                                                                       VMN*0004
      COMMON IBR,ICOEF,ICONV,ICOOL,IDLETE,IDS,ILLOOP,ILOOP,ILOSS,       VMN*0005
     1IMIX,ISAV,ISON,ISPEC,ISRI,ISTG,IPOFS,NDSTAT,NLINES,NSPOOL,        VMN*0006
     2NSTG,NTAPE,NTUBES,IWRLS                                           VMN*0007
      COMMON /COM1/AY(17),BET(17),BETR(17),BREFF(17),CRV(17),           VMN*0008
     1DFLOW(17),EFFR(17),EFFS(17),EM(17),EMR(17),FACL(17),GRND(17),     VMN*0009
     2P(17),PO(17),POR(17),REAC(17),T(17),TO(17),TOR(17),U(17),         VMN*0010
     3V(17),VM(17),VR(17),VT(17),VX(17),WYE(17),WYK(17)                 VMN*0011
      COMMON /COM2/CP(17),CP1,CP2,CP3,CP4,CP5,EJCP1,EJCP2,              VMN*0012
     1GAMA1,GAMA2,GAMA3,GAMB1,GAMC1,GAMD2,GAMD3,GAMD4,GAMD5,            VMN*0013
     2GAM1,GAM2,GAM3,GAM4,GAM5,GASC,GGG1,GJCP1,GJCP12,GJCP2,            VMN*0014
     3GJCP22,GJCP32,GJCP42,GJCP52                                       VMN*0015
      COMMON /COM5/ASTR(17,17),ASTS(17),BETLT(17),CSTR(17,17),          VMN*0016
     1CSTS(17),DTO(17),FHP(8),FLWC,IPOF(8),ISTRAC,NLT,                  VMN*0017
     2NSTAT,NSTRAC,NXT,POF(17,8),POLT(17),RANN(19,2),RLT(17),           VMN*0018
     3RSTRAC(17,17),RSTRAS(17),RXTS(17),TOC(16),TOLT(17),               VMN*0019
     4WRLS(17),XMIX(17,16),XSTAT(19),YOS(17),IWRL(8),VUM(8),VUMS,       VMN*0020
     5DVMDRS(17),DVMDS(17)                                              VMN*0021
      COMMON /COM7/COT60,DFLWT,DFLWTO,EMMAX,EMMIN,ICNT,JJ,              VMN*0022
     1JJP,MEAN,RATIO,VMM,VMMO,VMMOO                                     VMN*0023
      IF (ISRI-2) 50,350,200                                            VMN*0024
   50 IF (IWRLS-1) 300,150,100                                          VMN*0025
  100 IF (ISON.EQ.0) GO TO 150                                          VMN*0026
      EMI=1.2                                                           VMN*0027
      GO TO 250                                                         VMN*0028
  150 EMI=0.8                                                           VMN*0029
      GO TO 250                                                         VMN*0030
  200 EMI=0.4                                                           VMN*0031
  250 EKAY=SQRT(GGG1/(1.0+GAMC1*EMI**2))*EMI                            VMN*0032
      VMM=EKAY*SQRT(TO(MEAN)/(1.0+(COS(AY(MEAN))*TAN(BET(MEAN)))**2))   VMN*0033
      RETURN                                                            VMN*0034
  300 VMM=COT60*VUMS/COS(AY(MEAN))                                      VMN*0035
      VT(MEAN)=VUMS                                                     VMN*0036
      GO TO 400                                                         VMN*0037
  350 VMM=-COT60*(VT(MEAN)-U(MEAN))/COS(AY(MEAN))                       VMN*0038
  400 PARAM=SQRT(GGG1*TO(MEAN)-GAMC1*VT(MEAN)**2)                       VMN*0039
      VMMAX=PARAM*EMMAX/SQRT(1.0+GAMC1*EMMAX**2)                        VMN*0040
      VMMIN=PARAM*EMMIN/SQRT(1.0+GAMC1*EMMIN**2)                        VMN*0041
      IF (VMM.GT.VMMAX) VMM=VMMAX                                       VMN*0042
      IF (VMM.LT.VMMIN) VMM=VMMIN                                       VMN*0043
      RETURN                                                            VMN*0044
      END                                                               VMN*0045
```

APPENDIX XV

SUBRØUTINE RADEQ2

The primary function of Subroutine RADEQ2 is to control the logic of the calculation of the meridional velocity distribution. In addition, the subroutine obtains streamline values of the mass flow function corresponding to the meridional velocity distribution.

Subroutine RADEQ2 is called by the main routine; it, in turn, calls Subroutines START, RUNGA2, and DERIV2. Further, Subroutine RADEQ2 specifies that Subroutine DERIV2 be called by Subroutine RUNGA2. Subroutine RADEQ2 does not require external input and does not provide external output. The subroutine has access to blank CØMMØN, CØMMØN/CØM1/, CØMMØN/CØM4/, CØMMØN/CØM6/, and CØMMØN/CØM7/. The internal input transmitted through CØMMØN consists of:

MEAN NLINES PI RST VMM

The internal output transmitted through CØMMØN consists of:

DFLØW DFLWT

(These symbols, as well as others used in Subroutine RADEQ2, are described in the appropriate sections of the CØMMØN Fortran Nomenclature.) One item of the internal output is transmitted as an argument of the subroutine; namely,

LSGN

Additional Fortran Nomenclature for Subroutine RADEQ2

The following table gives the Fortran Nomenclature for those symbols used in Subroutine RADEQ2 which are not part of CØMMØN.

Fortran Symbol	Symbol	Description	Units
DELR	$(r_{j+1}-r_j)$ or (r_j-r_{j-1})	Radial distance between adjacent streamlines	ft
I	i	Index on the four principal unknowns	--
IUPDN		Indicator: IUPDN=1 if the calculation proceeds from the mean streamline to the hub	

Fortran Symbol	Symbol	Description	Units
		IUPDN=2 if the calculation proceeds from the mean streamline to the casing	--
J	j	Streamline index	--
JM	$j-1$	Index of the streamline preceding that indicated by J	--
LSGN		Indicator: LSGN=0 if the calculation of the meridional velocity distribution corresponding to a particular value at the mean streamline is proceeding normally LSGN=1 if the calculation of the meridional velocity distribution corresponding to a particular value at the mean streamline has been abandoned	--
QUE(I)	q_i	A measure of the round-off error in the Runge-Kutta determination of the principal unknowns	--
RP	r_{ij}	A streamline value of radial position	ft
Y(I)	y_i	Array of values of the four principal unknowns (see discussion of the Runge-Kutta method in the section on numerical techniques)	--

```
      SUBROUTINE RADEQ2(LSGN)                                           RAD*0000
C                                                                       RAD*0001
C     RADEQ2 - OBTAIN THE SOLUTION OF THE RADIAL EQUILIBRIUM            RAD*0002
C              EQUATION BASED ON AN ESTIMATED VALUE OF VM(MEAN)         RAD*0003
C                                                                       RAD*0004
      COMMON IBR,ICOEF,ICONV,ICOOL,IDLETE,IDS,ILLOOP,ILOOP,ILOSS,       RAD*0005
     1IMIX,ISAV,ISON,ISPEC,ISRI,ISTG,IPOFS,NDSTAT,NLINES,NSPOOL,        RAD*0006
     2NSTG,NTAPE,NTUBES,IWRLS                                           RAD*0007
      COMMON /COM1/AY(17),BET(17),BETR(17),BREFF(17),CRV(17),           RAD*0008
     1DFLOW(17),EFFR(17),EFFS(17),EM(17),EMR(17),FACL(17),GRND(17),     RAD*0009
     2P(17),PO(17),POR(17),REAC(17),T(17),TO(17),TOR(17),U(17),         RAD*0010
     3V(17),VM(17),VR(17),VT(17),VX(17),WYE(17),WYK(17)                 RAD*0011
      COMMON /COM4/FLW(17),FLWP,HP,RPM,RST(17),WFN(17)                  RAD*0012
      COMMON /COM6/CNV1,CNV2,CNV3,CNV5,EJAY,GO,PI,TOLWY                 RAD*0013
      COMMON /COM7/COT60,DFLWT,DFLWTO,EMMAX,EMMIN,ICNT,JJ,              RAD*0014
     1JJP,MEAN,RATIO,VMM,VMMO,VMMOO                                     RAD*0015
      DIMENSION Y(4),QUE(4),DUMMY(4)                                    RAD*0016
      EXTERNAL DERIV2                                                   RAD*0017
      IUPDN=0                                                           RAD*0018
   50 IUPDN=IUPDN+1                                                     RAD*0019
      RP=RST(MEAN)                                                      RAD*0020
      Y(1)=VMM                                                          RAD*0021
      DO 75 I=1,4                                                       RAD*0022
   75 QUE(I)=0.0                                                        RAD*0023
      CALL START(Y)                                                     RAD*0024
      DO 300 J=2,MEAN                                                   RAD*0025
      IF (IUPDN.EQ.2) GO TO 100                                         RAD*0026
      JJ=MEAN-J+2                                                       RAD*0027
      JJP=JJ-1                                                          RAD*0028
      GO TO 150                                                         RAD*0029
  100 JJ=MEAN+J-2                                                       RAD*0030
      JJP=JJ+1                                                          RAD*0031
  150 DELR=RST(JJP)-RST(JJ)                                             RAD*0032
      CALL RUNGA2(RP,DELR,Y,QUE,DERIV2,LSGN)                            RAD*0033
      IF (LSGN.EQ.1) RETURN                                             RAD*0034
  300 CONTINUE                                                          RAD*0035
      JJ=JJP                                                            RAD*0036
      CALL DERIV2(RP,Y,DUMMY,5,LSGN)                                    RAD*0037
      IF (LSGN.EQ.1) RETURN                                             RAD*0038
      IF (IUPDN.EQ.1) GO TO 50                                          RAD*0039
      DFLOW(1)=0.0                                                      RAD*0040
      DO 400 J=2,NLINES                                                 RAD*0041
      JM=J-1                                                            RAD*0042
  400 DFLOW(J)=DFLOW(JM)+PI*(GRND(JM)+GRND(J))*(RST(J)-RST(JM))         RAD*0043
      DFLWT=DFLOW(NLINES)                                               RAD*0044
      RETURN                                                            RAD*0045
      END                                                               RAD*0046
```

APPENDIX XVI

SUBRØUTINE RUNGA2

The function of Subroutine RUNGA2 is to obtain the solution of a system of four first-order ordinary differential equations by the Gill variation of the Runge-Kutta method.

Subroutine RUNGA2 is called by Subroutine RADEQ2; it, in turn, calls Subroutine DERIV2 which has been specified as an argument in the CALL statement for Subroutine RUNGA2. The subroutine does not require external input and does not provide external output. Internal input and output are transmitted as arguments of the subroutine. The internal input consists of:

DELX	FUNCTN	Q	X	Y

The internal output consists of:

LSGN	Q	X	Y

Fortran Nomenclature for Subroutine RUNGA2

The following table gives the Fortran nomenclature for those symbols used in Subroutine RUNGA2. Since the subroutine may be used with any consistent set of units, the units of the symbols are not specified. The subscript K , where it appears, is the index of the step in the Runge-Kutta solution.

Fortran Symbol	Symbol	Description	Units
A(K)	a_K	A set of constants used to determine SLØPE	--
B(K)	b_K	A set of constants used to determine SLØPE	--
C(K)	c_K	A set of constants used to determine Q	--
D(K)	d_K	A set of constants used to determine X	--
DELX	h	Increment in the independent variable across which the differential equation is to be solved	--

Fortran Symbol	Symbol	Description	Units
FUNCTN		An argument in the CALL statement for RUNGA2; it operates as a dummy name for Subroutine DERIV2	--
IK		Index of the stage of the solution for Subroutine FUNCTN	--
IY	i	Index of the four principal unknowns	--
K	K	Index of the stage of the solution	--
LSGN		Indicator: LSGN=0 if no difficulties have been encountered in the solution of the differential equations LSGN=1 if a solution to the differential equations cannot be found	--
Q(IY)	q_{iK}	Quantity used to calculate SLØPE at each stage of the solution; the value of Q in the final stage of the solution is a measure of the round-off error in Y	--
SLOPE(IY)	k_{iK}	Modified values of dy_i/dx for each of the principal unknowns at each stage of the solution	--
X	x_K	Value of the independent variable at each stage of the solution	--
Y(IY)	y_{iK}	Values of the dependent variables at each stage of the solution	--
YPRIME(IY)	f_i	Values of dy_i/dx at each stage of the solution	--

```
      SUBROUTINE RUNGA2(X,DELX,Y,Q,FUNCTN,LSGN)                         RUN*0000
C                                                                       RUN*0001
C     RUNGA2 - SOLUTION OF A SYSTEM OF ORDINARY LINEAR DIFFERENTIAL     RUN*0002
C              EQUATIONS BY THE GILL VARIATION OF THE RUNGA-KUTTA METHODRUN*0003
C                                                                       RUN*0004
      DIMENSION A(4),B(4),C(4),D(4),Y(4),Q(4),YPRIME(4),SLOPE(4)        RUN*0005
      DATA (A(I),I=1,4)/0.5,0.2928932,1.7071068,0.1666667/,(B(I),I=1,4) RUN*0006
     1/2.0,1.0,1.0,2.0/,(C(I),I=1,4)/0.5,0.2928932,1.7071068,0.5/,      RUN*0007
     2(D(I),I=1,4)/0.0,0.5,0.0,0.5/                                     RUN*0008
      DO 100 K=1,4                                                      RUN*0009
      X=X+D(K)*DELX                                                     RUN*0010
      IK=K                                                              RUN*0011
      CALL FUNCTN(X,Y,YPRIME,IK,LSGN)                                   RUN*0012
      IF (LSGN.EQ.1) RETURN                                             RUN*0013
      DO 100 IY=1,4                                                     RUN*0014
      SLOPE(IY)=A(K)*(YPRIME(IY)-B(K)*Q(IY))                            RUN*0015
      Y(IY)=Y(IY)+DELX*SLOPE(IY)                                        RUN*0016
  100 Q(IY)=Q(IY)+3.0*SLOPE(IY)-C(K)*YPRIME(IY)                         RUN*0017
      RETURN                                                            RUN*0018
      END                                                               RUN*0019
```

APPENDIX XVII

SUBRØUTINE DERIV2

The primary function of Subroutine DERIV2 is to obtain the derivatives with respect to radius of the principal unknowns (V_m, $C_{p_0} P_0$, V_u, $C_{p_0} T_0$) at a specified radial position where their values are known. In addition, Subroutine DERIV2 stores the integrated streamline values of the principal unknowns as they become available.

Subroutine DERIV2 is called by Subroutine RUNGA2 to perform its primary and secondary functions; it is also called by Subroutine RADEQ2 to perform its secondary function for the hub and casing streamlines. Subroutine DERIV2 calls Subroutines IIAP1 and SIMEQ. The subroutine does not require external input and does not provide external output. The subroutine has access to blank CØMMØN, CØMMØN/CØM1/, CØMMØN/CØM2/, CØMMØN/CØM3/, CØMMØN/CØM4/, CØMMØN/CØM5/, CØMMØN/CØM7/, CØMMØN/CØM8/, and CØMMØN/CØM11/. The internal input transmitted through CØMMØN consists of:

AY	BET	CRV	DADR
DBDR	DPØDR	DPØUDR	DPRUDR
DTØDR	DTØUDR	DTRUDR	DVMDRS
DVTUDR	DWYDR	GAMA1	GAMA2
GAMB1	GASC	GJCP12	GJCP2
GJCP22	IPØFS	ISR1	IWRLS
JJ	JJP	MEAN	NLINES
PØRU	PØU	RPM	RST
TØRU	U	UU	VTU
WYE			

(These symbols are defined in the appropriate sections of the CØMMØN Fortran Nomenclature.) The internal input transmitted as arguments of the subroutine consists of:

IK	RP	Y

The internal output transmitted through CØMMØN consists of:

GRND	PØ	TØ	VM	VT

Finally, internal output transmitted as arguments of the subroutine

consists of:

LSGN YPRIME

Additional Fortran Nomenclature for Subroutine DERIV2

The following table gives the Fortran nomenclature for those symbols used in Subroutine DERIV2 which are not part of CØMMØN. Subscripts I and J are row and column indices, respectively.

Fortran Symbol	Symbol	Description	Units
BETP	β_i	A value of the absolute flow angle	rad
CØF(I,J)	C_{ij}	Coefficient matrix augmented by a constant vector (i.e., the right-hand sides) representing the set of four equations used to satisfy radial equilibrium	*
CRVP	$(1/r_m)_i$	A value of streamline curvature	ft^{-1}
DADRP	$\frac{dA_1}{dr}$	A value of the derivative of the streamline angle of inclination with respect to radius	rad per ft
DDR(I)		Solution vector for the set of four equations used to satisfy radial equilibrium	*
DPØDRP	$\frac{dP_{o1}}{dr}$	A value of the derivative of the absolute total pressure with respect to radius	lbf per ft^3
DPØUDP	$\frac{dP^*_{o1-1}}{dr}$	A value of the derivative of the modified upstream absolute total pressure with respect to radius	lbf per ft^3
DPRUDP	$\frac{dP'_{o1-1}}{dr}$	A value of the derivative of the modified upstream relative total pressure with respect to radius	lbf per ft^3

* Since the units of the elements of the matrix differ from one another, no units are shown.

Fortran Symbol	Symbol	Description	Units
DTØDRP	$\frac{dT_{oi}}{dr}$	A value of the derivative of the absolute total temperature with respect to radius	deg R per ft
DTØUDP	$\frac{dT^{*}_{o\,i-1}}{dr}$	A value of the derivative of the modified upstream absolute total temperature with respect to radius	deg R per ft
DTRUDP	$\frac{dT'^{*}_{o\,i-1}}{dr}$	A value of the derivative of the modified upstream relative total temperature with respect to radius	deg R per ft
DVMDRP	$\frac{dV_{mi}}{dr}$	A value of the derivative of the meridional velocity with respect to radius	sec^{-1}
DVTUDP	$\frac{dV_{u,i-1}}{dr}$	A value of the derivative of the upstream tangential velocity with respect to radius	sec^{-1}
DWYDRP	$\frac{dY_i}{dr}$	A value of the derivative of the pressure-loss coefficient with respect to radius	ft^{-1}
FUN1		A grouping of terms in the second equation of the set used to satisfy radial equilibrium	--
FUN2		Similar to FUN1	fps^{-2}
FUN3		Similar to FUN1	fps^{-2}
FUN4		Similar to FUN1	fps^{-2}
FUN5		Similar to FUN1	--
GJCPT1	$2g_o J C_{pi} T_{oi}$	Parameter related to the absolute total temperature at a design station	fps^2
GJCPT2	$2g_o J \bar{C}_{p_{i-1}} T^{*}_{o\,i-1}$	Parameter related to the modified upstream relative total temperature	fps^2
IK		Index of the stage of the Runge-Kutta solution	--
LSGN		Indicator: LSGN=0 if the calculation of the meridional velocity distribution corresponding to a	

Fortran Symbol	Symbol	Description	Units
		particular value at the mean streamline is proceeding normally LSGN=1 if the calculation of the meridional velocity distribution corresponding to a particular value at the mean streamline cannot be continued	--
PØP	P_{oi}	A value of the absolute total pressure	psf
PØRUP	P'^{*}_{oi}	A value of the modified upstream relative total pressure	psf
PØUP	P^{*}_{oi}	A value of the modified upstream absolute total pressure	psf
PRAT	P_i/P_{oi}	Static-to-total pressure ratio	--
PRRAT	P'_{oi}/P_{oi}	Relative-to-absolute total pressure ratio	--
RP	r_i	A value of the radial position	ft
SINA	$\sin A_i$	Sine of streamline angle of inclination	--
TØP	T_{oi}	A value of the absolute total temperature	deg R
TØRUP	T'^{*}_{oi}	A value of the modified upstream relative total temperature	deg R
TRAT	T_i/T_{oi}	Static-to-total temperature ratio	--
TRRAT	T'_{oi}/T_{oi}	Relative-to-absolute total temperature ratio	--
TRRRAT	$T'_{oi}/T'^{*}_{o,i-1}$	Design station-to-upstream relative total temperature ratio	--
UP	u_i	A value of the blade velocity	fps
UUP	u_{i-1}	A value of the upstream blade velocity	fps
VMPSQ	V^2_{mi}	A value of the square of the meridional velocity	fps^2
VTPSQ	V^2_{ui}	A value of the square of the tangential velocity	fps^2
VTUP	$V_{u,i-1}$	A value of the upstream tangential velocity	fps

Fortran Symbol	Symbol	Description	Units
WYEP	Y_i	A value of the total-pressure-loss coefficient	--
Y(I)	y_i	Array of values of the four principal unknowns	*
YPRIME(I)	$\frac{dy_i}{dr}$	Array of values of the derivatives of the four principal unknowns with respect to radius	*

* Since the units of the elements of the array differ from one another, no units are shown.

```
      SUBROUTINE DERIV2(RP,Y,YPRIME,IK,LSGN)                            DER*0000
C                                                                       DER*0001
C     DERIV2 - DETERMINE COEFFICIENTS OF THE FOUR MAJOR EQUATIONS       DER*0002
C                                                                       DER*0003
      COMMON IBR,ICOEF,ICONV,ICOOL,IDLETE,IDS,ILLOOP,ILOOP,ILOSS,       DER*0004
     1IMIX,ISAV,ISON,ISPEC,ISRI,ISTG,IPOFS,NDSTAT,NLINES,NSPOOL,        DER*0005
     2NSTG,NTAPE,NTUBES,IWRLS                                           DER*0006
      COMMON /COM1/AY(17),BET(17),BETR(17),BREFF(17),CRV(17),           DER*0007
     1DFLOW(17),EFFR(17),EFFS(17),EM(17),EMR(17),FACL(17),GRND(17),     DER*0008
     2P(17),PO(17),POR(17),REAC(17),T(17),TO(17),TOR(17),U(17),         DER*0009
     3V(17),VM(17),VR(17),VT(17),VX(17),WYE(17),WYK(17)                 DER*0010
      COMMON /COM2/CP(17),CP1,CP2,CP3,CP4,CP5,EJCP1,EJCP2,              DER*0011
     1GAMA1,GAMA2,GAMA3,GAMB1,GAMC1,GAMD2,GAMD3,GAMD4,GAMD5,            DER*0012
     2GAM1,GAM2,GAM3,GAM4,GAM5,GASC,GGG1,GJCP1,GJCP12,GJCP2,            DER*0013
     3GJCP22,GJCP32,GJCP42,GJCP52                                       DER*0014
      COMMON /COM3/BETRU(17),BETU(17),BREFFO(17),DPOUDR(17),            DER*0015
     1DPRUDR(17),DTRUDR(17),POO(17),POO2(17),PORU(17),POU(17),          DER*0016
     2REACO(17),TOO(17),TOO2(17),TORU(17),TOU(17),UU(17),               DER*0017
     3VRU(17),VTU(17),VU(17),WYEO(17),DTOUDR(17),DVTUDR(17)             DER*0018
      COMMON /COM4/FLW(17),FLWP,HP,RPM,RST(17),WFN(17)                  DER*0019
      COMMON /COM5/ASTR(17,17),ASTS(17),BETLT(17),CSTR(17,17),          DER*0020
     1CSTS(17),DTO(17),FHP(8),FLWC,IPOF(8),ISTRAC,NLT,                  DER*0021
     2NSTAT,NSTRAC,NXT,POF(17,8),POLT(17),RANN(19,2),RLT(17),           DER*0022
     3RSTRAC(17,17),RSTRAS(17),RXTS(17),TOC(16),TOLT(17),               DER*0023
     4WRLS(17),XMIX(17,16),XSTAT(19),YOS(17),IWRL(8),VUM(8),VUMS,       DER*0024
     5DVMDRS(17),DVMDS(17)                                              DER*0025
      COMMON /COM7/COT60,DFLWT,DFLWTO,EMMAX,EMMIN,ICNT,JJ,              DER*0026
     1JJP,MEAN,RATIO,VMM,VMMO,VMMOO                                     DER*0027
      COMMON /COM8/DADR(17),DBDR(17),DPODR(17),DTODR(17),               DER*0028
     1DVTDR(17),DWYDR(17)                                               DER*0029
      COMMON /COM11/ AYP,COSA,COSB,COSQB,DBDRP,DBRUDR(17),DBUDR(17),    DER*0030
     1DFLDR(17),DVRUDR(17),DVUDR(17),IJ,TANB,VMP,VSQ,VTP                DER*0031
      DIMENSION COF(4,5),DDR(4)                                         DER*0032
      DIMENSION Y(4),YPRIME(4)                                          DER*0033
C                                                                       DER*0034
C     CALCULATE COEFFICIENTS OF RADIAL EQUILIBRIUM EQUATION             DER*0035
C                                                                       DER*0036
      VMP=Y(1)                                                          DER*0037
      POP=EXP(Y(2))                                                     DER*0038
      VTP=Y(3)                                                          DER*0039
      TOP=EXP(Y(4))                                                     DER*0040
      GO TO (100,130,140,110,650),IK                                    DER*0041
  100 IF (JJ.NE.MEAN) GO TO 140                                         DER*0042
      IJ=JJ                                                             DER*0043
      GO TO 120                                                         DER*0044
  110 IJ=JJP                                                            DER*0045
  120 AYP=AY(IJ)                                                        DER*0046
      CRVP=CRV(IJ)                                                      DER*0047
      GO TO 140                                                         DER*0048
  130 CALL I1AP1(RP,AYP,RST,AY,NLINES)                                  DER*0049
      CALL I1AP1(RP,CRVP,RST,CRV,NLINES)                                DER*0050
  140 GJCPT1=GJCP12*TOP                                                 DER*0051
      COSA=COS(AYP)                                                     DER*0052
      VMPSQ=VMP**2                                                      DER*0053
      VTPSQ=VTP**2                                                      DER*0054
      VSQ=VMPSQ+VTPSQ                                                   DER*0055
      COF(1,1)=2.0*VMP                                                  DER*0056
```

```
      COF(1,2)=(VSQ-GJCPT1)/GAMA1                                       DER*0057
      COF(1,3)=2.0*VTP                                                  DER*0058
      COF(1,4)=-VSQ                                                     DER*0059
      COF(1,5)=2.0*VMPSQ*COSA*CRVP-2.0*VTPSQ/RP                         DER*0060
C                                                                       DER*0061
C     CALCULATE COEFFICIENTS OF THE PRESSURE LOSS EQUATION              DER*0062
C                                                                       DER*0063
      IF (ISRI.NE.3) GO TO 200                                          DER*0064
      GO TO (160,180,190,170),IK                                        DER*0065
  160 IF (JJ.NE.MEAN) GO TO 190                                         DER*0066
  170 DPODRP=DPODR(IJ)                                                  DER*0067
      GO TO 190                                                         DER*0068
  180 CALL I1AP1(RP,DPODRP,RST,DPODR,NLINES)                            DER*0069
  190 COF(2,1)=0.0                                                      DER*0070
      COF(2,2)=1.0                                                      DER*0071
      COF(2,3)=0.0                                                      DER*0072
      COF(2,4)=0.0                                                      DER*0073
      COF(2,5)=DPODRP/POP                                               DER*0074
  200 IF (ISRI.NE.1) GO TO 250                                          DER*0075
      GO TO (210,230,240,220),IK                                        DER*0076
  210 IF (JJ.NE.MEAN) GO TO 240                                         DER*0077
  220 WYEP=WYE(IJ)                                                      DER*0078
      DWYDRP=DWYDR(IJ)                                                  DER*0079
      POUP=POU(IJ)                                                      DER*0080
      DPOUDP=DPOUDR(IJ)                                                 DER*0081
      GO TO 240                                                         DER*0082
  230 CALL I1AP1(RP,WYEP,RST,WYE,NLINES)                                DER*0083
      CALL I1AP1(RP,DWYDRP,RST,DWYDR,NLINES)                            DER*0084
      CALL I1AP1(RP,POUP,RST,POU,NLINES)                                DER*0085
      CALL I1AP1(RP,DPOUDP,RST,DPOUDR,NLINES)                           DER*0086
  240 TRAT=1.0-VSQ/GJCPT1                                               DER*0087
      PRAT=TRAT**GAMA1                                                  DER*0088
      FUN2=GAMA1*WYEP*POP*TRAT**GAMB1/(GJCPT1*POUP)                     DER*0089
      COF(2,1)=2.0*VMP*FUN2                                             DER*0090
      COF(2,2)=1.0                                                      DER*0091
      COF(2,3)=2.0*VTP*FUN2                                             DER*0092
      COF(2,4)=-VSQ*FUN2                                                DER*0093
      COF(2,5)=DPOUDP/POUP-POP*(1.0-PRAT)*DWYDRP/POUP                   DER*0094
  250 IF (ISRI.NE.2) GO TO 300                                          DER*0095
      GO TO (260,280,290,270),IK                                        DER*0096
  260 IF (JJ.NE.MEAN) GO TO 290                                         DER*0097
  270 WYEP=WYE(IJ)                                                      DER*0098
      DWYDRP=DWYDR(IJ)                                                  DER*0099
      PORUP=PORU(IJ)                                                    DER*0100
      DPRUDP=DPRUDR(IJ)                                                 DER*0101
      UP=U(IJ)                                                          DER*0102
      UUP=UU(IJ)                                                        DER*0103
      TORUP=TORU(IJ)                                                    DER*0104
      DTRUDP=DTRUDR(IJ)                                                 DER*0105
      GO TO 290                                                         DER*0106
  280 CALL I1AP1(RP,WYEP,RST,WYE,NLINES)                                DER*0107
      CALL I1AP1(RP,DWYDRP,RST,DWYDR,NLINES)                            DER*0108
      CALL I1AP1(RP,PORUP,RST,PORU,NLINES)                              DER*0109
      CALL I1AP1(RP,DPRUDP,RST,DPRUDR,NLINES)                           DER*0110
      UP=RPM*RP                                                         DER*0111
      CALL I1AP1(RP,UUP,RST,UU,NLINES)                                  DER*0112
      CALL I1AP1(RP,TORUP,RST,TORU,NLINES)                              DER*0113
      CALL I1AP1(RP,DTRUDP,RST,DTRUDR,NLINES)                           DER*0114
```

```
  290 TRAT=1.0-VSQ/GJCPT1                                              DER*0115
      TRRAT=1.0+UP*(UP-2.0*VTP)/GJCPT1                                 DER*0116
      GJCPT2=GJCP22*TORUP                                              DER*0117
      TRRRAT=1.0+(UP**2-UUP**2)/GJCPT2                                 DER*0118
      PRAT=TRAT**GAMA1                                                 DER*0119
      PRRAT=TRRAT**GAMA1                                               DER*0120
      FUN1=PRRAT+WYEP*(PRRAT-PRAT)                                     DER*0121
      FUN2=GAMA1*WYEP*TRAT**GAMB1/(GJCPT1*FUN1)                        DER*0122
      FUN3=GAMA1*(1.0+WYEP)*TRRAT**GAMB1/(GJCPT1*FUN1)                 DER*0123
      FUN4=GAMA2/(TRRRAT*GJCPT2)                                       DER*0124
      FUN5=(PRRAT-PRAT)/FUN1                                           DER*0125
      COF(2,1)=2.0*VMP*FUN2                                            DER*0126
      COF(2,2)=1.0                                                     DER*0127
      COF(2,3)=2.0*(VTP*FUN2-UP*FUN3)                                  DER*0128
      COF(2,4)=FUN3*UP*(2.0*VTP-UP)-FUN2*VSQ                           DER*0129
      COF(2,5)=DPRUDP/PORUP-FUN5*DWYDRP-FUN4*(UP**2-UUP**2)*DTRUDP/TORUPDER*0130
     1-2.0*RPM*(FUN3*(UP-VTP)-FUN4*(UP-UUP))                           DER*0131
C                                                                      DER*0132
C     CALCULATE COEFFICIENTS OF MERIDIONAL VELOCITY EQUATION           DER*0133
C                                                                      DER*0134
  300 IF (ISRI.EQ.2.OR.(ISRI.EQ.1.AND.IWRLS.EQ.0)) GO TO 350           DER*0135
      GO TO (310,330,340,320),IK                                       DER*0136
  310 IF (JJ.NE.MEAN) GO TO 340                                        DER*0137
  320 BETP=BET(IJ)                                                     DER*0138
      DBDRP=DBDR(IJ)                                                   DER*0139
      DADRP=DADR(IJ)                                                   DER*0140
      GO TO 335                                                        DER*0141
  330 CALL I1AP1(RP,BETP,RST,BET,NLINES)                               DER*0142
      CALL I1AP1(RP,DBDRP,RST,DBDR,NLINES)                             DER*0143
      CALL I1AP1(RP,DADRP,RST,DADR,NLINES)                             DER*0144
  335 SINA=SIN(AYP)                                                    DER*0145
      TANB=TAN(BETP)                                                   DER*0146
      COSB=COS(BETP)                                                   DER*0147
      COSQB=COSB**2                                                    DER*0148
  340 COF(3,1)=-TANB*COSA                                              DER*0149
      COF(3,2)=0.0                                                     DER*0150
      COF(3,3)=1.0                                                     DER*0151
      COF(3,4)=0.0                                                     DER*0152
      COF(3,5)=VMP*(COSA*DBDRP/COSQB-TANB*SINA*DADRP)                  DER*0153
      GO TO 450                                                        DER*0154
  350 IF (ISRI.EQ.2.AND.IPOFS.EQ.0) GO TO 400                          DER*0155
      GO TO (360,380,390,370),IK                                       DER*0156
  360 IF (JJ.NE.MEAN) GO TO 390                                        DER*0157
  370 DVMDRP=DVMDRS(IJ)                                                DER*0158
      GO TO 390                                                        DER*0159
  380 CALL I1AP1(RP,DVMDRP,RST,DVMDRS,NLINES)                          DER*0160
  390 COF(3,1)=1.0                                                     DER*0161
      COF(3,2)=0.0                                                     DER*0162
      COF(3,3)=0.0                                                     DER*0163
      COF(3,4)=0.0                                                     DER*0164
      COF(3,5)=DVMDRP                                                  DER*0165
  400 IF (ISRI.NE.2.OR.IPOFS.NE.0) GO TO 450                           DER*0166
      GO TO (410,430,440,420),IK                                       DER*0167
  410 IF (JJ.NE.MEAN) GO TO 440                                        DER*0168
  420 DTOUDP=DTOUDR(IJ)                                                DER*0169
      GO TO 440                                                        DER*0170
  430 CALL I1AP1(RP,DTOUDP,RST,DTOUDR,NLINES)                          DER*0171
  440 COF(3,1)=0.0                                                     DER*0172
```

```
      COF(3,2)=0.0                                                      DER*0173
      COF(3,3)=0.0                                                      DER*0174
      COF(3,4)=TOP                                                      DER*0175
      COF(3,5)=DTOUDP                                                   DER*0176
C                                                                       DER*0177
C     CALCULATE COEFFICIENTS OF EULER WORK EQUATION                     DER*0178
C                                                                       DER*0179
  450 IF (ISRI.EQ.2) GO TO 500                                          DER*0180
      GO TO (460,480,490,470),IK                                        DER*0181
  460 IF (JJ.NE.MEAN) GO TO 490                                         DER*0182
  470 DTODRP=DTODR(IJ)                                                  DER*0183
      GO TO 490                                                         DER*0184
  480 CALL I1AP1(RP,DTODRP,RST,DTODR,NLINES)                            DER*0185
  490 COF(4,1)=0.0                                                      DER*0186
      COF(4,2)=0.0                                                      DER*0187
      COF(4,3)=0.0                                                      DER*0188
      COF(4,4)=TOP                                                      DER*0189
      COF(4,5)=DTODRP                                                   DER*0190
      GO TO 550                                                         DER*0191
  500 GO TO (510,530,540,520),IK                                        DER*0192
  510 IF (JJ.NE.MEAN) GO TO 540                                         DER*0193
  520 UP=U(IJ)                                                          DER*0194
      DTOUDP=DTOUDR(IJ)                                                 DER*0195
      UUP=UU(IJ)                                                        DER*0196
      DVTUDP=DVTUDR(IJ)                                                 DER*0197
      VTUP=VTU(IJ)                                                      DER*0198
      GO TO 540                                                         DER*0199
  530 UP=RP*RPM                                                         DER*0200
      CALL I1AP1(RP,DTOUDP,RST,DTOUDR,NLINES)                           DER*0201
      CALL I1AP1(RP,UUP,RST,UU,NLINES)                                  DER*0202
      CALL I1AP1(RP,DVTUDP,RST,DVTUDR,NLINES)                           DER*0203
      CALL I1AP1(RP,VTUP,RST,VTU,NLINES)                                DER*0204
  540 COF(4,1)=0.0                                                      DER*0205
      COF(4,2)=0.0                                                      DER*0206
      COF(4,3)=-UP/GJCP2                                                DER*0207
      COF(4,4)=TOP                                                      DER*0208
      COF(4,5)=DTOUDP+(RPM*(VTP-VTUP)-UUP*DVTUDP)/GJCP2                 DER*0209
C                                                                       DER*0210
C     OBTAIN SOLUTION AND STORE ANSWERS                                 DER*0211
C                                                                       DER*0212
  550 CALL SIMEQ(COF,DDR,4,LSGN,4,5)                                    DER*0213
      IF (LSGN.NE.1) GO TO 600                                          DER*0214
      RETURN                                                            DER*0215
  600 DO 625 I=1,4                                                      DER*0216
  625 YPRIME(I)=DDR(I)                                                  DER*0217
  650 IF (IK.NE.1.AND.IK.NE.5) GO TO 700                                DER*0218
      VM(JJ)=VMP                                                        DER*0219
      PO(JJ)=POP                                                        DER*0220
      VT(JJ)=VTP                                                        DER*0221
      TO(JJ)=TOP                                                        DER*0222
      GRND(JJ)=COSA*VMP*RP*PO(JJ)*(1.0-VSQ/GJCPT1)**GAMB1/(GASC*TOP)    DER*0223
  700 RETURN                                                            DER*0224
      END                                                               DER*0225
```

APPENDIX XVIII

SUBRØUTINE SIMEQ

The function of Subroutine SIMEQ is to obtain the solution to a set of simultaneous linear algebraic equations.

Subroutine SIMEQ is called by Subroutine DERIV2; it does not call any other subroutines. The subroutine does not require external input and does not provide external output. Internal input and output are transmitted as arguments of the subroutine. The internal input consists of:

A ND NDP NR

The internal output consists of:

LSGN X

Fortran Nomenclature for Subroutine SIMEQ

The following table gives the Fortran nomenclature for the symbols used in Subroutine SIMEQ. Since the subroutine may be used with any consistent set of units, the units of the symbols are not specified. The subscripts I and J refer to row and column indices, respectively.

Fortran Symbol	Symbol	Description	Units
A(I,J)		Coefficient matrix augmented by a constant vector	--
I		Row or column index	--
J		Row or column index	--
K		Row or column index	--
LSGN		Indicator: LSGN=0 if the coefficient matrix is nonsingular LSGN=1 if the coefficient matrix is singular	--
NC		Number of simultaneous equations to be solved plus one	--
ND		Maximum number of simultaneous equations	--
NDP		Maximum number of simultaneous equations plus one	--

Fortran Symbol	Symbol	Description	Units
NR		Number of simultaneous equations to be solved	--
R		Dummy matrix element	--
S		Maximum absolute value of a column element	--
T		Absolute value of a column element	--
X(I)		Solution vector	--

```
      SUBROUTINE SIMEQ(A,X,NR,LSGN,ND,NDP)                              SIM*0000
C                                                                       SIM*0001
C     SIMEQ - SOLUTION OF SIMULTANEOUS LINEAR ALGEBRAIC EQUATIONS       SIM*0002
C                                                                       SIM*0003
      DIMENSION A(ND,NDP),X(ND)                                         SIM*0004
      NC=NR+1                                                           SIM*0005
      I=1                                                               SIM*0006
C                                                                       SIM*0007
C     THE PIVOTAL ELEMENT IS MAXIMIZED                                  SIM*0008
C                                                                       SIM*0009
  100 S=ABS(A(I,I))                                                     SIM*0010
      J=I                                                               SIM*0011
      IF (I-NR) 150,300,600                                             SIM*0012
  150 K=I+1                                                             SIM*0013
  200 T=ABS(A(K,I))                                                     SIM*0014
      IF (T.LE.S) GO TO 250                                             SIM*0015
      S=T                                                               SIM*0016
      J=K                                                               SIM*0017
  250 K=K+1                                                             SIM*0018
      IF (K.LE.NR) GO TO 200                                            SIM*0019
  300 IF (S.EQ.0.0) GO TO 750                                           SIM*0020
C                                                                       SIM*0021
C     THE ROWS ARE INTERCHANGED IF NECESSARY                            SIM*0022
C                                                                       SIM*0023
      IF (J.LE.I) GO TO 375                                             SIM*0024
      LSGN=-LSGN                                                        SIM*0025
      K=I                                                               SIM*0026
  350 R=A(I,K)                                                          SIM*0027
      A(I,K)=A(J,K)                                                     SIM*0028
      A(J,K)=R                                                          SIM*0029
      K=K+1                                                             SIM*0030
      IF (K.LE.NC) GO TO 350                                            SIM*0031
C                                                                       SIM*0032
C     REDUCE THE ELEMENTS WITH A ZERO CHECK                             SIM*0033
C                                                                       SIM*0034
  375 J=I+1                                                             SIM*0035
  400 IF (J.LE.NC) GO TO 450                                            SIM*0036
      I=I+1                                                             SIM*0037
      GO TO 100                                                         SIM*0038
  450 IF (A(I,J).EQ.0.0) GO TO 550                                      SIM*0039
      A(I,J)=A(I,J)/A(I,I)                                              SIM*0040
      K=I+1                                                             SIM*0041
  500 IF (K.GT.NR) GO TO 550                                            SIM*0042
      A(K,J)=A(K,J)-A(I,J)*A(K,I)                                       SIM*0043
      K=K+1                                                             SIM*0044
      GO TO 500                                                         SIM*0045
  550 J=J+1                                                             SIM*0046
      GO TO 400                                                         SIM*0047
C                                                                       SIM*0048
C     COMPUTE THE SOLUTION                                              SIM*0049
C                                                                       SIM*0050
  600 K=NR+1                                                            SIM*0051
      X(NR)=A(NR,K)                                                     SIM*0052
      I=NR-1                                                            SIM*0053
  650 J=I+1                                                             SIM*0054
      R=0.0                                                             SIM*0055
  700 R=R+A(I,J)*X(J)                                                   SIM*0056
```

```
      J=J+1                                                     SIM*0057
      IF (J.LE.NR) GO TO 700                                    SIM*0058
      X(I)=A(I,K)-R                                             SIM*0059
      I=I-1                                                     SIM*0060
      IF (I.GT.0) GO TO 650                                     SIM*0061
      LSGN=0                                                    SIM*0062
      RETURN                                                    SIM*0063
  750 LSGN=1                                                    SIM*0064
      RETURN                                                    SIM*0065
      END                                                       SIM*0066
```

APPENDIX XIX

SUBRØUTINE VMSUB2

The function of Subroutine VMSUB2 is to obtain a new estimate of the meridional velocity at the mean streamline which will satisfy continuity.

Subroutine VMSUB2 is called by the main routine; it does not call any other subroutines. The subroutine does not require external input and does not provide external output. Internal input and output of the subroutine are transmitted through blank CØMMØN, CØMMØN/CØM4/, and CØMMØN/CØM7/. The internal input consists of:

DFLWT	DFLWTØ	FLWP	ICNT	ILLØØP
ISØN	ISRI	IWRLS	RATIØ	VMMØ
VMMØØ				

The internal output consists of:

ICNT	VMMØ

(These symbols are described in the appropriate sections of the CØMMØN Fortran Nomenclature.)

Additional Fortran Nomenclature for Subroutine SPECHT

The following table gives the Fortran nomenclature for those symbols used in Subroutine VMSUB2 which are not part of CØMMØN.

Fortran Symbol	Symbol	Description	Units
DENØM	$w_{m} - w_{m,old}$	Difference in the calculated mass flow based on the two previous estimates of meridional velocity at the mean streamline	lbm per sec
DVMM	$(V_{m2})_m - (V_{m2})_{m,old}$	Difference in the two previous estimates of meridional velocity at the mean streamline	fps
DWRAT	$\frac{w_{T2} - w_m}{w_m - w_{m,old}}$	Ratio of the difference between the actual mass flow and the previously calculated mass flow to DENØM	--
ISGN		Indicator: ISGN=0 if the ratio of DVMM to	

Fortran Symbol	Symbol	Description	Units
		DENØM is negative ISGN=1 if the ratio of DVMM to DENØM is positive ISGN=ISGNØ if the ratio of DVMM to DENØM is zero	--
ISGNØ		Previous value of the indicator ISGN	--

```
      SUBROUTINE VMSUB2                                                 VMS*0000
C                                                                       VMS*0001
C     VMSUB2- OBTAIN A NEW ESTIMATE OF THE MERIDIONAL VELOCITY AT THE   VMS*0002
C             MEAN STREAMLINE                                           VMS*0003
C                                                                       VMS*0004
      COMMON IBR,ICOEF,ICONV,ICOOL,IDLETE,IDS,ILLOOP,ILOOP,ILOSS,       VMS*0005
     1IMIX,ISAV,ISON,ISPEC,ISRI,ISTG,IPOFS,NDSTAT,NLINES,NSPOOL,        VMS*0006
     2NSTG,NTAPE,NTUBES,IWRLS                                           VMS*0007
      COMMON /COM4/FLW(17),FLWP,HP,RPM,RST(17),WFN(17)                  VMS*0008
      COMMON /COM7/COT60,DFLWT,DFLWTO,EMMAX,EMMIN,ICNT,JJ,              VMS*0009
     1JJP,MEAN,RATIO,VMM,VMMO,VMMOO                                     VMS*0010
      IF (ILLOOP.GT.1) GO TO 200                                        VMS*0011
      ISGNO=0                                                           VMS*0012
      IF (RATIO.LE.1.2) GO TO 50                                        VMS*0013
      RATIO=1.2                                                         VMS*0014
      GO TO 100                                                         VMS*0015
   50 IF (RATIO.LT.0.833) RATIO=0.833                                   VMS*0016
  100 IF (ISRI.NE.1.OR.IWRLS.NE.2) GO TO 150                            VMS*0017
      IF (ISON.EQ.0) GO TO 150                                          VMS*0018
      VMM=VMMO*RATIO                                                    VMS*0019
      RETURN                                                            VMS*0020
  150 VMM=VMMO/RATIO                                                    VMS*0021
      RETURN                                                            VMS*0022
  200 DENOM=DFLWT-DFLWTO                                                VMS*0023
      IF (DENOM.NE.0.0) GO TO 250                                       VMS*0024
      VMM=0.5*(VMMO+VMMOO)                                              VMS*0025
      RETURN                                                            VMS*0026
  250 DWRAT=(FLWP-DFLWT)/DENOM                                          VMS*0027
      IF (DWRAT.LE.2.0) GO TO 300                                       VMS*0028
      DWRAT=2.0                                                         VMS*0029
      GO TO 350                                                         VMS*0030
  300 IF (DWRAT.LT.-2.0) DWRAT=-2.0                                     VMS*0031
  350 DVMM=VMMO-VMMOO                                                   VMS*0032
      VMM=VMMO+DWRAT*DVMM                                               VMS*0033
      IF (DVMM/DENOM) 400,450,500                                       VMS*0034
  400 ISGN=0                                                            VMS*0035
      GO TO 550                                                         VMS*0036
  450 ISGN=ISGNO                                                        VMS*0037
      GO TO 550                                                         VMS*0038
  500 ISGN=1                                                            VMS*0039
  550 IF (ILLOOP.EQ.2) GO TO 600                                        VMS*0040
      IF (ISGN.NE.ISGNO) ICNT=ICNT+1                                    VMS*0041
  600 ISGNO=ISGN                                                        VMS*0042
      RETURN                                                            VMS*0043
      END                                                               VMS*0044
```

APPENDIX XX

SUBRØUTINE REMAN2

The function of Subroutine REMAN2 is to obtain streamline values for those quantities tabulated in the output for a design station which have not already been obtained.

Subroutine REMAN2 is called by the main routine; it does not call any other subroutines. The subroutine does not require external input and does not provide external output. Internal input and output are transmitted through blank CØMMØN, CØMMØN/CØM1/, CØMMØN/CØM2/, CØMMØN/CØM3/, and CØMMON/CØM5/. The internal input consists of:

AY	CP2	CP3	DTØ	GAMA1
GAMC1	GAMD2	GAMD3	GGG1	GJCP12
ICØNV	ISR1	IWRLS	NLINES	PØ
PØØ	PØØ2	PØRU	PØU	TØ
TØØ	TØØ2	TØRU	U	VM
VRU	VT	VU		

The internal output consists of:

BET	BETR	BREFF	EFFR	EFFS
EM	EMR	P	PØR	REAC
REACØ	T	TØR	V	VR
VX				

(These symbols are described in the appropriate sections of the CØMMØN Fortran Nomenclature.)

Additional Fortran Nomenclature for Subroutine REMAN2

The following table gives the Fortran nomenclature for those symbols used in Subroutine REMAN2 which are not part of CØMMØN.

Fortran Symbol	Symbol	Description	Units
EMRSQ	$M_r'^2$	A streamline value of the square of the relative Mach number	--
GJCPT1	$2g_o J C_{pi}(T_o)_{ij}$	Parameter related to a streamline value of the total temperature and the specific heat at a design station	fps^2

Fortran Symbol	Symbol	Description	Units
PØP	$(P_o)_{ij}$	A streamline value of the absolute total pressure	psf
PØRP	$(P_o')_{ij}$	A streamline value of the relative total pressure	psf
PP	P_{ij}	A streamline value of the static pressure	psf
TØP	$(T_o)_{ij}$	A streamline value of the absolute total temperature	deg R
TØRP	$(T_o')_{ij}$	A streamline value of the relative total temperature	deg R
TP	T_{ij}	A streamline value of the static temperature	deg R
VMSQ	$(V_{m2}^2)_j$	A streamline value of the square of the meridional velocity	fps^2
VRSQ	$V_{ij}'^2$	A streamline value of the square of the relative velocity	fps^2
VTRP	$(V_{u2})_j - u_{2j}$	A streamline value of the relative tangential velocity	fps
VTSQ	$(V_{u2}^2)_j$	A streamline value of the square of the tangential velocity	fps^2
VXP	$(V_{xi})_j$	A streamline value of the axial velocity	fps

```
      SUBROUTINE REMAN2                                                 REM*0000
C                                                                       REM*0001
C     REMAN2 - OBTAIN THE REMAINDER OF THE TABULAR OUTPUT               REM*0002
C                                                                       REM*0003
      COMMON IBR,ICOEF,ICONV,ICOOL,IDLETE,IDS,ILLOOP,ILOOP,ILOSS,       REM*0004
     1IMIX,ISAV,ISON,ISPEC,ISRI,ISTG,IPOFS,NDSTAT,NLINES,NSPOOL,        REM*0005
     2NSTG,NTAPE,NTUBES,IWRLS                                           REM*0006
      COMMON /COM1/AY(17),BET(17),BETR(17),BREFF(17),CRV(17),           REM*0007
     1DFLOW(17),EFFR(17),EFFS(17),EM(17),EMR(17),FACL(17),GRND(17),     REM*0008
     2P(17),PO(17),POR(17),REAC(17),T(17),TO(17),TOR(17),U(17),         REM*0009
     3V(17),VM(17),VR(17),VT(17),VX(17),WYE(17),WYK(17)                 REM*0010
      COMMON /COM2/CP(17),CP1,CP2,CP3,CP4,CP5,EJCP1,EJCP2,              REM*0011
     1GAMA1,GAMA2,GAMA3,GAMB1,GAMC1,GAMD2,GAMD3,GAMD4,GAMD5,            REM*0012
     2GAM1,GAM2,GAM3,GAM4,GAM5,GASC,GGG1,GJCP1,GJCP12,GJCP2,            REM*0013
     3GJCP22,GJCP32,GJCP42,GJCP52                                       REM*0014
      COMMON /COM3/BETRU(17),BETU(17),BREFFO(17),DPOUDR(17),            REM*0015
     1DPRUDR(17),DTRUDR(17),POO(17),POO2(17),PORU(17),POU(17),          REM*0016
     2REACO(17),TOO(17),TOO2(17),TORU(17),TOU(17),UU(17),               REM*0017
     3VRU(17),VTU(17),VU(17),WYEO(17),DTOUDR(17),DVTUDR(17)             REM*0018
      COMMON /COM5/ASTR(17,17),ASTS(17),BETLT(17),CSTR(17,17),          REM*0019
     1CSTS(17),DTO(17),FHP(8),FLWC,IPOF(8),ISTRAC,NLT,                  REM*0020
     2NSTAT,NSTRAC,NXT,POF(17,8),POLT(17),RANN(19,2),RLT(17),           REM*0021
     3RSTRAC(17,17),RSTRAS(17),RXTS(17),TOC(16),TOLT(17),               REM*0022
     4WRLS(17),XMIX(17,16),XSTAT(19),YOS(17),IWRL(8),VUM(8),VUMS,       REM*0023
     5DVMDRS(17),DVMDS(17)                                              REM*0024
      DO 500 J=1,NLINES                                                 REM*0025
      VMP=VM(J)                                                         REM*0026
      VMSQ=VMP**2                                                       REM*0027
      VTP=VT(J)                                                         REM*0028
      VTSQ=VTP**2                                                       REM*0029
      VSQ=VMSQ+VTSQ                                                     REM*0030
      V(J)=SQRT(VSQ)                                                    REM*0031
      COSA=COS(AY(J))                                                   REM*0032
      VXP=COSA*VMP                                                      REM*0033
      VX(J)=VXP                                                         REM*0034
      TOP=TO(J)                                                         REM*0035
      GJCPT1=GJCP12*TOP                                                 REM*0036
      TP=TOP*(1.0-VSQ/GJCPT1)                                           REM*0037
      T(J)=TP                                                           REM*0038
      POP=PO(J)                                                         REM*0039
      PP=POP*(TP/TOP)**GAMA1                                            REM*0040
      P(J)=PP                                                           REM*0041
      EM(J)=SQRT(VSQ/(GGG1*TP))                                         REM*0042
      IF (ISRI.EQ.3) GO TO 500                                          REM*0043
      VTRP=VTP-U(J)                                                     REM*0044
      VRSQ=VMSQ+VTRP**2                                                 REM*0045
      VR(J)=SQRT(VRSQ)                                                  REM*0046
      EMRSQ=VRSQ/(GGG1*TP)                                              REM*0047
      EMR(J)=SQRT(EMRSQ)                                                REM*0048
      TORP=TP*(1.0+GAMC1*EMRSQ)                                         REM*0049
      TOR(J)=TORP                                                       REM*0050
      PORP=PP*(TORP/TP)**GAMA1                                          REM*0051
      POR(J)=PORP                                                       REM*0052
      BETR(J)=ATAN(VTRP/VXP)                                            REM*0053
      IF (ISRI.EQ.2) GO TO 150                                          REM*0054
   50 BREFF(J)=(1.0-TP/TOP)/(1.0-(PP/POU(J))**GAMD2)                    REM*0055
  100 IF (ICONV.EQ.1) REACO(J)=VU(J)/V(J)                               REM*0056
```

```
      IF (IWRLS.EQ.0) GO TO 450                                         REM*0057
      GO TO 500                                                         REM*0058
  150 BREFF(J)=(1.0-TP/TORP)/(1.0-(PP/PORU(J))**GAMD2*TORU(J)/TORP)     REM*0059
  300 IF (ICONV.EQ.0) GO TO 450                                         REM*0060
      REAC(J)=VRU(J)/VR(J)                                              REM*0061
  350 EFFS(J)=CP2*DTO(J)/(CP3*TOO2(J)*(1.0-(POP/POO2(J))**GAMD3))       REM*0062
  400 EFFR(J)=(DTO(J)/TOO(J))/(1.0-(POP/POO(J))**GAMD2)                 REM*0063
  450 BET(J)=ATAN(VTP/VXP)                                              REM*0064
  500 CONTINUE                                                          REM*0065
      RETURN                                                            REM*0066
      END                                                               REM*0067
```

APPENDIX XXI

SUBRØUTINE SETUP2

The function of Subroutine SETUP2 is to obtain:

1. Streamline values of quantities which are required for the calculations at the following design station.
2. Mass averaged values which are to be printed in the output.

Subroutine SETUP2 is called by the main routine; it does not call any other subroutines. Subroutine SETUP2 does not require external input and does not provide external output. Internal input and output are transmitted by blank CØMMØN, CØMMØN/CØM1/, CØMMØN/CØM2/, CØMMØN/CØM3/, CØMMØN/CØM4/, CØMMØN/CØM5/, CØMMØN/CØM6/, CØMMØN/CØM9/, and CØMMØN/CØM11/. The internal input consists of:

BET	BETR	BREFF	CNV5	CP2
CP3	CP4	CP5	DTØ	EJAY
ENM1	FLW	FLWC	FLWM	FLWP
GAMA1	GAMD3	GAMD4	GAMD5	GJCP12
GJCP32	GJCP42	GJCP52	IBR	ICØØL
IDS	IMIX	ISAV	ISRI	ISTG
NDSTAT	NLINES	NSPØØL	NSTG	NTUBES
P	PØ	TØ	TØC	U
V	VR	VT	WYE	XMIX

The internal output consists of:

BETRU	BETU	BREA	BREAP	BREFFØ
ØJS	ØSE	ØTE	ØTS	ØTT
ØW	PØØ	PØØ2	PØRU	PØU
SJS	SJSP	SPJS	SPP	SPSE
SPTE	SPTS	SPTT	SPW	SSE
SSEP	STE	STEP	SW	SWP
TØØ	TØØ2	TØRU	TØU	UU
VRU	VTU	VU	WYEØ	

(These symbols are described in the appropriate sections of the CØMMØN Fortran Nomenclature.)

Additional Fortran Nomenclature for Subroutine SETUP2

The following table gives the Fortran Nomenclature for those symbols used in Subroutine SETUP2 which are not part of CØMMØN.

Fortran Symbol	Symbol	Description	Units
DTØA	$\overline{\Delta T_{or}}''$	Mass averaged value of the absolute total temperature drop across a rotor	deg R
FLWCØ	$w_{c\,r-1}$	Coolant mass flow added to the upstream blade row	lbm per sec
J	j	Streamline index	--
ØP	$(P_T)_{ov}$	Over-all power output of the turbine	hp
ØPB	$(P_T)_{ov}$	Over-all power output of the turbine	Btu per sec
PA	$\overline{P_i}$	Mass averaged value of the static pressure at a design station	psf
PARAM		Product of the specific heat, mass flow, and mass averaged total temperature	Btu per sec
PARMB	$\frac{\int_0^1 x_{mi} P_{oi}\, dw'}{\int_0^1 x_{mi}\, dw'}$	Quotient containing SUMB and SUMA	psf
PARMC	$\frac{\int_0^1 x_{mi} T_{oi}\, dw'}{\int_0^1 x_{mi}\, dw'}$	Quotient containing SUMC and SUMA	deg R
PØA	$\overline{P}_{or}$	Mass averaged value of the absolute total pressure at a stage exit	psf
PØAØ	$(\overline{P}_o)_{r-2}$	Mass averaged value of the absolute total pressure at a stage inlet	psf
PØAØØ	$(\overline{P}_o)_{r-1}$	Mass averaged value of the absolute total pressure at a spool inlet	psf
PØAØØØ	$(\overline{P}_o)_{inlet}$	Mass averaged value of the absolute total pressure at the turbine inlet	psf
SP	P_{Tr}''	Stage power output	hp
SPB	P_{Tr}''	Stage power output	Btu per sec
SPPB	P_{Tr}'''	Spool power output	Btu per sec

Fortran Symbol	Symbol	Description	Units
SUMA	$\int_0^1 X_{mi}\, dw'$	Integral of the mixing coefficient with respect to the non-dimensional mass flow function	lbm per sec
SUMB	$\int_0^1 X_{mi} P_{oi}\, dw'$	Integral of the product of the mixing coefficient and absolute total pressure with respect to the mass flow function	psf lbm per sec
SUMC	$\int_0^1 X_{mi} T_{oi}\, dw'$	Integral of the product of the mixing coefficient and absolute total temperature with respect to the mass flow function	deg R lbm per sec
TFLWC		Sum of the product of coolant total temperature and coolant mass flow for a stage	deg R lbm per sec
TFLWCØ		Sum of the product of coolant total temperature and coolant mass flow for the turbine	deg R lbm per sec
TFLWCT		Sum of the product of coolant total temperature and coolant mass flow for a spool	deg R lbm per sec
TØA	$\overline{T}_{oi}$	Mass averaged value of the absolute total temperature at a stage exit	deg R
TØAØ	$(\overline{T}_o)_{i-2}$	Mass averaged value of the absolute total temperature at a stage inlet	deg R
TØAØØ	$(\overline{T}_o)_{i=1}$	Mass averaged value of the absolute total temperature at a spool inlet	deg R
TØAØØØ	$(\overline{T}_o)_{inlet}$	Mass averaged value of the absolute total temperature at the turbine inlet	deg R
TØCP	$(T_{oc})_{i'}$	Total temperature of the coolant added to the downstream blade row	deg R
TØCPØ	$(T_{oc})_{i-1}$	Total temperature of the coolant added to the upstream blade row	deg R
TSRAT		Mass averaged static-to-total temperature ratio	--
TTRAT		Mass averaged total-to-total temperature ratio	--

Fortran Symbol	Symbol	Description	Units
UA	$\bar{u}_{i'}$	Mass averaged blade velocity at a blade row exit	fps
UAA	$\bar{u}_{i''}$	Average blade velocity for a rotor	fps
UAAA	$\bar{u}_{i'''}$	Average blade velocity for a spool	fps
UAAAA	$\bar{u}_{ov}$	Average blade velocity for the turbine	fps
UAØ	$(\bar{u})_{i-1}$	Mass averaged blade velocity at a stator exit	fps
XMIXP	$(X_{mi})_j$	A streamline value of the mixing coefficient	--

```
      SUBROUTINE SETUP2                                                 SET*0000
C                                                                       SET*0001
C     SETUP2- OBTAIN THE QUANTITIES WHICH ARE REQUIRED BEFORE           SET*0002
C             PROCEEDING TO THE NEXT DESIGN STATION                     SET*0003
C                                                                       SET*0004
      COMMON IBR,ICOEF,ICONV,ICOOL,IDLETE,IDS,ILLOOP,ILOOP,ILOSS,       SET*0005
     1IMIX,ISAV,ISON,ISPEC,ISRI,ISTG,IPOFS,NDSTAT,NLINES,NSPOOL,        SET*0006
     2NSTG,NTAPE,NTUBES,IWRLS                                           SET*0007
      COMMON /COM1/AY(17),BET(17),BETR(17),BREFF(17),CRV(17),           SET*0008
     1DFLOW(17),EFFR(17),EFFS(17),EM(17),EMR(17),FACL(17),GRND(17),     SET*0009
     2P(17),PO(17),POR(17),REAC(17),T(17),TO(17),TOR(17),U(17),         SET*0010
     3V(17),VM(17),VR(17),VT(17),VX(17),WYE(17),WYK(17)                 SET*0011
      COMMON /COM2/CP(17),CP1,CP2,CP3,CP4,CP5,EJCP1,EJCP2,              SET*0012
     1GAMA1,GAMA2,GAMA3,GAMB1,GAMC1,GAMD2,GAMD3,GAMD4,GAMD5,            SET*0013
     2GAM1,GAM2,GAM3,GAM4,GAM5,GASC,GGG1,GJCP1,GJCP12,GJCP2,            SET*0014
     3GJCP22,GJCP32,GJCP42,GJCP52                                       SET*0015
      COMMON /COM3/BETRU(17),BETU(17),BREFFO(17),DPOUDR(17),            SET*0016
     1DPRUDR(17),DTRUDR(17),POO(17),POO2(17),PORU(17),POU(17),          SET*0017
     2REACO(17),TOO(17),TOO2(17),TORU(17),TOU(17),UU(17),               SET*0018
     3VRU(17),VTU(17),VU(17),WYEO(17),DTOUDR(17),DVTUDR(17)             SET*0019
      COMMON /COM4/FLW(17),FLWP,HP,RPM,RST(17),WFN(17)                  SET*0020
      COMMON /COM5/ASTR(17,17),ASTS(17),BETLT(17),CSTR(17,17),          SET*0021
     1CSTS(17),DTO(17),FHP(8),FLWC,IPOF(8),ISTRAC,NLT,                  SET*0022
     2NSTAT,NSTRAC,NXT,POF(17,8),POLT(17),RANN(19,2),RLT(17),           SET*0023
     3RSTRAC(17,17),RSTRAS(17),RXTS(17),TOC(16),TOLT(17),               SET*0024
     4WRLS(17),XMIX(17,16),XSTAT(19),YOS(17),IWRL(8),VUM(8),VUMS,       SET*0025
     5DVMDRS(17),DVMDS(17)                                              SET*0026
      COMMON /COM6/CNV1,CNV2,CNV3,CNV5,EJAY,GO,PI,TOLWY                 SET*0027
      COMMON /COM9/BREA(16),BREAP,ENM1,FLWM,OJS,OSE,OTE,OTS,            SET*0028
     1OTT,OW,SJS(8),SJSP,SPJS,SPP,SPSE,SPTE,SPTS,SPTT,SPW,SSE(8),       SET*0029
     2SSEP,STE(8),STEP,SW(8),SWP                                        SET*0030
      COMMON /COM11/ AYP,COSA,COSB,COSQB,DBDRP,DBRUDR(17),DBUDR(17),    SET*0031
     1DFLDR(17),DVRUDR(17),DVUDR(17),IJ,TANB,VMP,VSQ,VTP                SET*0032
      IF (IDS.EQ.NDSTAT) GO TO 800                                      SET*0033
      IF (IMIX.EQ.0) GO TO 200                                          SET*0034
C                                                                       SET*0035
C     OBTAIN THE MIXED VALUES OF TOTAL TEMPERATURE AND PRESSURE         SET*0036
C                                                                       SET*0037
      SUMA=0.0                                                          SET*0038
      SUMB=0.0                                                          SET*0039
      SUMC=0.0                                                          SET*0040
      DO 100 J=1,NLINES                                                 SET*0041
      XMIXP=XMIX(J,IDS)                                                 SET*0042
      IF (J.EQ.1.OR.J.EQ.NLINES) XMIXP=0.5*XMIXP                        SET*0043
      SUMA=SUMA+XMIXP                                                   SET*0044
      SUMB=SUMB+XMIXP*PO(J)                                             SET*0045
  100 SUMC=SUMC+XMIXP*TO(J)                                             SET*0046
      IF (SUMA.EQ.0.0) GO TO 200                                        SET*0047
      PARMB=SUMB/SUMA                                                   SET*0048
      PARMC=SUMC/SUMA                                                   SET*0049
      DO 150 J=1,NLINES                                                 SET*0050
      XMIXP=XMIX(J,IDS)                                                 SET*0051
      POU(J)=(1.0-XMIXP)*PO(J)+PARMB*XMIXP                              SET*0052
  150 TOU(J)=(1.0-XMIXP)*TO(J)+PARMC*XMIXP                              SET*0053
      GO TO 300                                                         SET*0054
  200 DO 250 J=1,NLINES                                                 SET*0055
      POU(J)=PO(J)                                                      SET*0056
```

```
  250 TOU(J)=TO(J)                                                      SET*0057
  300 IF (ICOOL.NE.2) GO TO 500                                         SET*0058
C                                                                       SET*0059
C     OBTAIN THE COOLED VALUES OF TOTAL TEMPERATURE                     SET*0060
C                                                                       SET*0061
      TOCP=TOC(IDS)                                                     SET*0062
      DO 400 J=1,NLINES                                                 SET*0063
  400 TOU(J)=(FLWP*TOU(J)+FLWC*TOCP)/(FLWP+FLWC)                        SET*0064
  500 IF (ISRI.EQ.1) GO TO 600                                          SET*0065
      DO 550 J=1,NLINES                                                 SET*0066
      POO2(J)=PO(J)                                                     SET*0067
      TOO2(J)=TO(J)                                                     SET*0068
  550 VU(J)=V(J)                                                        SET*0069
      DO 575 J=1,NLINES                                                 SET*0070
  575 BETU(J)=BET(J)                                                    SET*0071
      GO TO 800                                                         SET*0072
  600 DO 650 J=1,NLINES                                                 SET*0073
      POO(J)=PO(J)                                                      SET*0074
      TOO(J)=TO(J)                                                      SET*0075
      WYEO(J)=WYE(J)                                                    SET*0076
      BREFFO(J)=BREFF(J)                                                SET*0077
      UU(J)=U(J)                                                        SET*0078
      VTU(J)=VT(J)                                                      SET*0079
      VRU(J)=VR(J)                                                      SET*0080
      TORU(J)=TOU(J)+(VR(J)**2-V(J)**2)/GJCP12                          SET*0081
  650 PORU(J)=POU(J)*(TORU(J)/TOU(J))**GAMA1                            SET*0082
  700 CONTINUE                                                          SET*0083
      DO 750 J=1,NLINES                                                 SET*0084
  750 BETRU(J)=BETR(J)                                                  SET*0085
      GO TO 950                                                         SET*0086
  800 TOA=0.5*TO(1)                                                     SET*0087
      POA=0.5*PO(1)                                                     SET*0088
      DO 850 J=2,NTUBES                                                 SET*0089
      TOA=TOA+TO(J)                                                     SET*0090
  850 POA=POA+PO(J)                                                     SET*0091
      TOA=(TOA+0.5*TO(NLINES))/ENM1                                     SET*0092
      POA=(POA+0.5*PO(NLINES))/ENM1                                     SET*0093
      IF (ISRI-3) 875,1600,1650                                         SET*0094
  875 PA=0.5*P(1)                                                       SET*0095
      DTOA=0.5*DTO(1)                                                   SET*0096
      DO 900 J=2,NTUBES                                                 SET*0097
      PA=PA+P(J)                                                        SET*0098
  900 DTOA=DTOA+DTO(J)                                                  SET*0099
      PA=(PA+0.5*P(NLINES))/ENM1                                        SET*0100
      DTOA=(DTOA+0.5*DTO(NLINES))/ENM1                                  SET*0101
  950 UA=0.5*U(1)                                                       SET*0102
      BREAP=0.5*BREFF(1)                                                SET*0103
      DO 1000 J=2,NTUBES                                                SET*0104
      UA=UA+U(J)                                                        SET*0105
 1000 BREAP=BREAP+BREFF(J)                                              SET*0106
      UA=(UA+0.5*U(NLINES))/ENM1                                        SET*0107
      BREAP=(BREAP+0.5*BREFF(NLINES))/ENM1                              SET*0108
      BREA(IBR)=BREAP                                                   SET*0109
      IF (ISRI.EQ.1) GO TO 1750                                         SET*0110
      SWP=CP2*DTOA                                                      SET*0111
      SW(ISTG)=SWP                                                      SET*0112
      SPB=FLWP*SWP                                                      SET*0113
      SP=EJAY*SPB/CN/5                                                  SET*0114
```

```
      TTRAT=(POA/POAO)**GAMD3                                           SET*0115
      IF (ICOOL.EQ.2) GO TO 1050                                        SET*0116
      PARAM=CP3*FLWP*TOAO                                               SET*0117
      GO TO 1150                                                        SET*0118
 1050 TFLWC=FLWC*TOCP+FLWCO*TOCPO                                       SET*0119
      PARAM=CP3*(FLW(IDS-2)*TOAO+TFLWC)                                 SET*0120
      IF (ISTG.NE.1) GO TO 1100                                         SET*0121
      TFLWCT=TFLWC                                                      SET*0122
      GO TO 1150                                                        SET*0123
 1100 TFLWCT=TFLWCT+TFLWC                                               SET*0124
 1150 STEP=SPB/(PARAM*(1.0-TTRAT))                                      SET*0125
      TSRAT=(PA/POAO)**GAMD3                                            SET*0126
      SSEP=SPB/(PARAM*(1.0-TSRAT))                                      SET*0127
      STE(ISTG)=STEP                                                    SET*0128
      SSE(ISTG)=SSEP                                                    SET*0129
      UAA=0.5*(UA+UAO)                                                  SET*0130
      SJSP=UAA/SQRT(GJCP32*TOAO*(1.0-TSRAT))                            SET*0131
      SJS(ISTG)=SJSP                                                    SET*0132
      IF (ISTG.NE.1) GO TO 1200                                         SET*0133
      SPW=SWP                                                           SET*0134
      SPP=SP                                                            SET*0135
      UAAA=UAA                                                          SET*0136
      GO TO 1250                                                        SET*0137
 1200 SPW=SPW+SWP                                                       SET*0138
      SPP=SPP+SP                                                        SET*0139
      UAAA=UAAA+UAA                                                     SET*0140
 1250 IF (ISTG.NE.NSTG) GO TO 1700                                      SET*0141
      SPTT=POAOO/POA                                                    SET*0142
      SPTS=POAOO/PA                                                     SET*0143
      IF (ICOOL.EQ.2) GO TO 1300                                        SET*0144
      PARAM=CP4*FLWP*TOAOO                                              SET*0145
      GO TO 1400                                                        SET*0146
 1300 PARAM=CP4*(FLW(1)*TOAOO+TFLWCT)                                   SET*0147
      IF (NSPOOL.EQ.1) GO TO 1400                                       SET*0148
      IF (ISAV.NE.1) GO TO 1350                                         SET*0149
      TFLWCO=TFLWCT                                                     SET*0150
      GO TO 1400                                                        SET*0151
 1350 TFLWCO=TFLWCO+TFLWCT                                              SET*0152
 1400 SPPB=CNVS*SPP/EJAY                                                SET*0153
      TTRAT=1.0/SPTT**GAMD4                                             SET*0154
      ONE=1.0                                                           SET*0155
      TSRAT=ONE/SPTS**GAMD4                                             SET*0156
      SPTE=SPPB/(PARAM*(1.0-TTRAT))                                     SET*0157
      SPSE=SPPB/(PARAM*(1.0-TSRAT))                                     SET*0158
      UAAA=UAAA/FLOAT(NSTG)                                             SET*0159
      SPJS=UAAA/SQRT(GJCP42*TOAOO*(1.0-TSRAT))                          SET*0160
      IF (NSPOOL.EQ.1) RETURN                                           SET*0161
      IF (ISAV.NE.1) GO TO 1450                                         SET*0162
      OW=SPW                                                            SET*0163
      OP=SPP                                                            SET*0164
      UAAAA=UAAA                                                        SET*0165
      RETURN                                                            SET*0166
 1450 OW=OW+SPW                                                         SET*0167
      OP=OP+SPP                                                         SET*0168
      UAAAA=UAAAA+UAAA                                                  SET*0169
      IF (ISAV.NE.NSPOOL) RETURN                                        SET*0170
      OTT=POAOOO/POA                                                    SET*0171
      OTS=POAOOO/PA                                                     SET*0172
```

```
550          IF (ICOOL.EQ.2) GO TO 1500                                  SET*0173
552          PARAM=CP5*FLWP*TOA000                                       SET*0174
554          GO TO 1550                                                  SET*0175
555     1500 PARAM=CP5*(FLWM*TOA000+TFLWCO)                              SET*0176
561     1550 OPB=CNV5*OP/EJAY                                            SET*0177
564          TTRAT=1.0/OTT**GAMD5                                        SET*0178
570          TSRAT=ONE/OTS**GAMD5                                        SET*0179
574          OTE=OPB/(PARAM*(1.0-TTRAT))                                 SET*0180
600          OSE=OPB/(PARAM*(1.0-TSRAT))                                 SET*0181
603          UAAAA=UAAAA/FLOAT(NSPOOL)                                   SET*0182
605          OJS=UAAAA/SQRT(GJCP52*TOA000*(1.0-TSRAT))                   SET*0183
614          RETURN                                                      SET*0184
614     1600 TOA000=TOA                                                  SET*0185
616          POA000=POA                                                  SET*0186
617     1650 TOA00=TOA                                                   SET*0187
621          POA00=POA                                                   SET*0188
622     1700 TOAO=TOA                                                    SET*0189
624          POAO=POA                                                    SET*0190
625          RETURN                                                      SET*0191
626     1750 UAO=UA                                                      SET*0192
630          IF (ICOOL.NE.2) RETURN                                      SET*0193
632          TOCPO=TOCP                                                  SET*0194
634          FLWCO=FLWC                                                  SET*0195
635          RETURN                                                      SET*0196
636          END                                                         SET*0197
```

APPENDIX XXII

SUBRØUTINE ØUTPUT

The function of Subroutine ØUTPUT is to write the results of the calculations at a design station onto the output tape unit.

Subroutine ØUTPUT is called by the main routine; it does not call any other subroutines. The subroutine does not require external input. The internal input is transmitted through blank CØMMØN, CØMMØN/CØM1/, CØMMØN/CØM3/, CØMMØN/CØM4/, CØMMØN/CØM6/, and CØMMØN/CØM9/; it consists of:

AY	BET	BETR	BREA	BREAP
BREFF	BREFFØ	CNV1	CNV2	CNV3
CRV	DFLØW	EFFR	EFFS	EM
EMR	ICØNV	ICØØL	IDS	IMIX
ISAV	ISRI	ISTG	NDSTAT	NLINES
NSPØØL	NSTG	NTAPE	ØJS	ØSE
ØTE	ØTS	ØTT	ØW	P
PØ	PØR	PØRU	PØU	REAC
REACØ	RST	SJS	SJSP	SPJS
SPP	SPSE	SPTE	SPTS	SPTT
SPW	SSE	SSEP	STE	STEP
SW	SWP	T	TØ	TØR
TØRU	TØU	U	V	VM
VR	VT	VX	WYE	WYEØ

(These symbols are described in the appropriate sections of the CØMMØN Fortran Nomenclature.) The external output consists of:

AY	BET	BETR	BREA	BREAP
BREFF	BREFFØ	CRV	DFLØW	EFFR
EFFS	EM	EMR	ØJS	ØSE
ØTE	ØTS	ØTT	ØW	P
PØ	PØR	PØRU	PØU	REAC
REACØ	RST	SJS	SJSP	SPJS
SPP	SPSE	SPTE	SPTS	SPTT

SPW	SSE	SSEP	STE	STEP
SW	SWP	T	TØ	TØR
TØRU	TØU	U	V	VM
VR	VT	VX	WYE	WYEØ

Subroutine ØUTPUT does not provide internal output.

Additional Fortran Nomenclature for Subroutine ØUTPUT

The following table gives the Fortran nomenclature for those symbols used in Subroutine OUTPUT which are not part of CØMMØN.

Fortran Symbol	Symbol	Description	Units
HW5		Alphanumeric information	--
HW6		Alphanumeric information	--
I		General index	--
J	j	Streamline index	--

```
      SUBROUTINE OUTPUT                                                 OUT*0000
C                                                                       OUT*0001
C     OUTPUT - PRINT THE OUTPUT OF THE CALCULATIONS                     OUT*0002
C                                                                       OUT*0003
      COMMON IBR,ICOEF,ICONV,ICOOL,IDLETE,IDS,ILLOOP,ILOOP,ILOSS,       OUT*0004
     1IMIX,ISAV,ISON,ISPEC,ISRI,ISTG,IPOFS,NDSTAT,NLINES,NSPOOL,        OUT*0005
     2NSTG,NTAPE,NTURES,IWRLS                                           OUT*0006
      COMMON /COM1/AY(17),BET(17),BETR(17),BREFF(17),CRV(17),           OUT*0007
     1DFLOW(17),EFFR(17),EFFS(17),EM(17),EMR(17),FACL(17),GRND(17),     OUT*0008
     2P(17),PO(17),POR(17),REAC(17),T(17),TO(17),TOR(17),U(17),         OUT*0009
     3V(17),VM(17),VR(17),VT(17),VX(17),WYE(17),WYK(17)                 OUT*0010
      COMMON /COM3/BETRU(17),BETU(17),BREFFO(17),DPOUDR(17),            OUT*0011
     1DPRUDR(17),DTRUDR(17),POO(17),POO2(17),PORU(17),POU(17),          OUT*0012
     2REACO(17),TOO(17),TOO2(17),TORU(17),TOU(17),UU(17),               OUT*0013
     3VRU(17),VTU(17),VU(17),WYEO(17),DTOUDR(17),DVTUDR(17)             OUT*0014
      COMMON /COM4/FLW(17),FLWP,HP,RPM,RST(17),WFN(17)                  OUT*0015
      COMMON /COM6/CNV1,CNV2,CNV3,CNV5,EJAY,GO,PI,TOLWY                 OUT*0016
      COMMON /COM9/BREA(16),BREAP,ENM1,FLWM,OJS,OSE,OTE,OTS,            OUT*0017
     1OTT,OW,SJS(8),SJSP,SPJS,SPP,SPSE,SPTE,SPTS,SPTT,SPW,SSE(8),       OUT*0018
     2SSEP,STE(8),STEP,SW(8),SWP                                        OUT*0019
      DIMENSION HW5(28),HW6(2)                                          OUT*0020
      DATA (HW5(I),I=1,28)/6H  PRES,6HSURE  ,6H    LO,6HSS    ,          OUT*0021
     16H  BLAD,6HE-ROW ,6H COEFF,6HICIENT,6H EFFIC,6HIENCY ,            OUT*0022
     24*6H       ,6H STREA,6HMLINE ,6H    SL,6HOPE   ,6H STREA,         OUT*0023
     36HMLINE ,6H    AN,6HGLE   ,6H  CURV,6HATURE ,6H    (D,            OUT*0024
     46HEG)   ,6H  (PER,6H IN)  /                                       OUT*0025
      DATA (HW6(I),I=1,2)/6HSTATOR,6H ROTOR/                            OUT*0026
C                                                                       OUT*0027
C     CONVERT THE TABULAR OUTPUT INTO THE UNITS OF THE INPUT            OUT*0028
C                                                                       OUT*0029
      DO 200 J=1,NLINES                                                 OUT*0030
      RST(J)=CNV1*RST(J)                                                OUT*0031
      PO(J)=PO(J)/CNV2                                                  OUT*0032
      BET(J)=CNV3*BET(J)                                                OUT*0033
      P(J)=P(J)/CNV2                                                    OUT*0034
      IF (ICONV.EQ.0.AND.ISRI.LT.3) GO TO 100                           OUT*0035
      AY(J)=CNV3*AY(J)                                                  OUT*0036
      CRV(J)=CRV(J)/CNV1                                                OUT*0037
      IF (ISRI.GE.3) GO TO 150                                          OUT*0038
  100 POR(J)=POR(J)/CNV2                                                OUT*0039
      BETR(J)=CNV3*BETR(J)                                              OUT*0040
      IF (IDS.EQ.NDSTAT) GO TO 200                                      OUT*0041
  150 IF (ICONV.EQ.0.OR.(IMIX.EQ.0.AND.ICOOL.NE.2)) GO TO 200           OUT*0042
      POU(J)=POU(J)/CNV2                                                OUT*0043
      IF (ISRI.NE.1) GO TO 200                                          OUT*0044
      PORU(J)=PORU(J)/CNV2                                              OUT*0045
  200 CONTINUE                                                          OUT*0046
C                                                                       OUT*0047
C     PRINT THE TABULAR OUTPUT                                          OUT*0048
C                                                                       OUT*0049
      WRITE (NTAPE,300) (J,RST(J),DFLOW(J),VM(J),VX(J),VT(J),V(J),      OUT*0050
     1                   EM(J),PO(J),TO(J),BET(J),J=1,NLINES)           OUT*0051
  300 FORMAT (////82X,4(4X,8HABSOLUTE)/1X,10HSTREAMLINE,4X,             OUT*0052
     16HRADIAL,5X,9HMASS-FLOW,2X,10HMERIDIONAL,5X,5HAXIAL,7X,           OUT*0053
     25HWHIRL,5X,8HABSOLUTE,6X,5HMACH ,2(7X,5HTOTAL),7X,4HFLOW/         OUT*0054
     33X,6HNUMBER,5X,8HPOSITION,4X,8HFUNCTION,4(4X,8HVELOCITY),         OUT*0055
     45X,6HNUMBER,5X,8HPRESSURE,3X,11HTEMPERATURE,4X,5HANGLE/           OUT*0056
```

```
     516X,4H(IN),6X,9H(LBM/SEC),5X,4(5H(FPS),7X),12X,5H(PSI),          OUT*0057
     66X,7H(DEG R),6X,5H(DEG)//(5X,I2,5X,F10.4,3X,F10.5,1X,            OUT*0058
     74(F10.3,2X),2X,F8.5,3X,F9.4,4X,F8.2,3X,F8.3))                    OUT*0059
      IF (ISRI.LT.3) GO TO 400                                         OUT*0060
      WRITE (NTAPE,350) (J,P(J),T(J),AY(J),CRV(J),J=1,NLINES)          OUT*0061
  350 FORMAT (////37X,10HSTREAMLINE/1X,10HSTREAMLINE,4X,               OUT*0062
     12(6HSTATIC,6X),1X,5HSLOPE,4X,10HSTREAMLINE/3X,6HNUMBER,          OUT*0063
     25X,8HPRESSURE,3X,11HTEMPERATURE,4X,5HANGLE,5X,9HCURVATURE/       OUT*0064
     316X,5H(PSI),6X,7H(DEG R),6X,5H(DEG),5X,8H(PER IN)//              OUT*0065
     4(5X,I2,6X,F9.4,4X,F8.2,4X,F8.3,3X,F10.5))                        OUT*0066
      IF (ICONV.EQ.0) GO TO 1800                                       OUT*0067
      GO TO 1500                                                       OUT*0068
  400 IF (ICONV.EQ.1) GO TO 600                                        OUT*0069
      WRITE (NTAPE,450) (HW5(I),I=1,14)                                OUT*0070
  450 FORMAT (////36X,2A6,34X,4(4X,8HRELATIVE)/1X,10HSTREAMLINE,4X,    OUT*0071
     16HSTATIC,6X,6HSTATIC,3X,4A6,4X,5HBLADE,5X,8HRELATIVE,6X,         OUT*0072
     24HMACH,8X,2(5HTOTAL,7X),4HFLOW/3X,6HNUMBER,5X,8HPRESSURE,3X,     OUT*0073
     311HTEMPERATURE,4A6,2X,2(8HVELOCITY,4X),7H NUMBER,5X,             OUT*0074
     48HPRESSURE,3X,11HTEMPERATURE,4X,5HANGLE/16X,5H(PSI),6X,          OUT*0075
     57H(DEG R),2X,4A6,4X,2(5H(FPS),7X),12X,5H(PSI),6X,7H(DEG R),      OUT*0076
     66X,5H(DEG)//)                                                    OUT*0077
      WRITE (NTAPE,500) (J,P(J),T(J),WYE(J),BREFF(J),U(J),VR(J),       OUT*0078
     1                  EMR(J),POR(J),TOR(J),BETH(J),J=1,NLINES)       OUT*0079
  500 FORMAT((5X,I2,6X,F9.4,4X,F8.2,4X,F8.5,4X,F8.5,2X,2(F10.3,2X),    OUT*0080
     12X,F8.5,3X,F9.4,4X,F8.2,3X,F8.3))                                OUT*0081
      GO TO 1800                                                       OUT*0082
  600 WRITE (NTAPE,450) (HW5(I),I=15,28)                               OUT*0083
      WRITE (NTAPE,650) (J,P(J),T(J),AY(J),CRV(J),U(J),VR(J),          OUT*0084
     1                  EMR(J),POR(J),TOR(J),BETR(J),J=1,NLINES)       OUT*0085
  650 FORMAT((5X,I2,6X,F9.4,4X,F8.2,3X,F8.3,3X,F10.5,2X,2(F10.3,2X),   OUT*0086
     12X,F8.5,3X,F9.4,4X,F8.2,3X,F8.3))                                OUT*0087
      IF (ISRI.EQ.1) GO TO 1500                                        OUT*0088
      WRITE (NTAPE,700) ISTG                                           OUT*0089
  700 FORMAT (////53X, 8H** STAGE,I2,15H PERFORMANCE **)               OUT*0090
      WRITE (NTAPE,750) (J,REACO(J),REAC(J),WYEO(J),WYE(J),BREFFO(J),  OUT*0091
     1                  BREFF(J),EFFR(J),EFFS(J),J=1,NLINES)           OUT*0092
  750 FORMAT (////51X,6HSTATOR,7X,5HROTOR/50X,2(8HPRESSURE,4X),        OUT*0093
     17H STATOR,7X,2(5HROTOR,7X),5HSTAGE/13X,10HSTREAMLINE,4X,         OUT*0094
     26HSTATOR,7X,5HROTOR,3X,2(4X,4HLOSS,4X),2(2X,9HBLADE ROW,1X),     OUT*0095
     32(1X,10HISENTROPIC,1X)/15X,7HNUMBER ,2(4X,8HREACTION),2X,        OUT*0096
     42(1X,11HCOEFFICIENT),1X,4(10HEFFICIENCY,2X)//(17X,I2,6X,         OUT*0097
     52(F9.5,3X),1X,6(F8.5,4X)))                                       OUT*0098
      WRITE (NTAPE,800)                                                OUT*0099
  800 FORMAT (////52X,28H* MASS-AVERAGED QUANTITIES *)                 OUT*0100
      WRITE (NTAPE,850) BREA(IBR-1),BREAP,SWP,STEP,SSEP,SJSP           OUT*0101
  850 FORMAT (//43X,30HSTATOR BLADE-ROW EFFICIENCY = ,F9.5//44X,       OUT*0102
     129HROTOR BLADE-ROW EFFICIENCY = ,F9.5//60X,13HSTAGE WORK = ,     OUT*0103
     2F9.3,12H BTU PER LBM     /48X,25HSTAGE TOTAL EFFICIENCY = ,      OUT*0104
     3F9.5/47X,26HSTAGE STATIC EFFICIENCY = ,F9.5/39X,                 OUT*0105
     434HSTAGE BLADE- TO JET-SPEED RATIO = ,F9.5)                      OUT*0106
      IF (IDS.NE.NDSTAT) GO TO 1500                                    OUT*0107
      IF (NSPOOL.GT.1) GO TO 950                                       OUT*0108
      WRITE (NTAPE,900)                                                OUT*0109
  900 FORMAT (1H1/////36X,60H*** SPOOL PERFORMANCE SUMMARY (MASS-AVERAGEOUT*0110
     1D QUANTITIES) ***)                                               OUT*0111
      GO TO 1050                                                       OUT*0112
  950 WRITE (NTAPE,1000) ISAV                                          OUT*0113
 1000 FORMAT (1H1/////35X,9H*** SPOOL,I2,51H PERFORMANCE SUMMARY (MASS-AOUT*0114
```

```
     1VERAGED QUANTITIES) ***)                                          OUT*0115
 1050 IF (NSTG.EQ.1) GO TO 1150                                         OUT*0116
      WRITE (NTAPE,1100) (I,BREA(2*I-1),BREA(2*I),SW(I),STE(I),SSE(I),  OUT*0117
     1                   SJS(I),I=1,NSTG)                               OUT*0118
 1100 FORMAT (////100X,5HSTAGE/39X,6HSTATOR,7X,5HROTOR,12X,             OUT*0119
     12(7X,5HSTAGE),5X,9HBLADE- TO/28X,5HSTAGE,2X,2(3X,9HBLADE-ROW),    OUT*0120
     25X,5HSTAGE,7X,5HTOTAL,6X,6HSTATIC,5X,9HJET-SPEED/27X,             OUT*0121
     3HHNUMBER  ,2(2X,10HEFFICIENCY),5X,4HWORK,3X,2(2X,10HEFFICIENCY),  OUT*0122
     45X,5HRATIO/62X,9H(BTU/LBM)//(29X,I2,6X,2(F9.5,3X),F9.3,           OUT*0123
     53(3X,F9.5)))                                                      OUT*0124
 1150 WRITE (NTAPE,1200) SPW,SPP,SPTT,SPTS,SPTE,SPSE,SPJS               OUT*0125
 1200 FORMAT (////60X,13HSPOOL WORK = ,F9.3,12H BTU PER LBM/            OUT*0126
     159X,14HSPOOL POWER = ,F9.2,3H HP/34X,                             OUT*0127
     239HSPOOL TOTAL- TO TOTAL-PRESSURE RATIO = ,F9.5/33X,              OUT*0128
     340HSPOOL TOTAL- TO STATIC-PRESSURE RATIO = ,F9.5/48X,             OUT*0129
     425HSPOOL TOTAL EFFICIENCY = ,F9.5/47X,                            OUT*0130
     526HSPOOL STATIC EFFICIENCY = ,F9.5/39X,                           OUT*0131
     634HSPOOL BLADE- TO JET-SPEED RATIO = ,F9.5)                       OUT*0132
      IF (NSPOOL.EQ.1.OR.ISAV.NE.NSPOOL) GO TO 1800                     OUT*0133
      WRITE (NTAPE,1250)                                                OUT*0134
 1250 FORMAT (1H1/////35X,62H*** OVERALL PERFORMANCE SUMMARY (MASS-AVERAOUT*0135
     1GED QUANTITIES) ***)                                              OUT*0136
      WRITE (NTAPE,1300) OW,OTT,OTS,OTE,OSE,OJS                         OUT*0137
 1300 FORMAT (////58X,15HOVERALL WORK = ,F9.3,12H BTU PER LBM/32X,      OUT*0138
     141HOVERALL TOTAL- TO TOTAL-PRESSURE RATIO = ,F9.5/31X,            OUT*0139
     242HOVERALL TOTAL- TO STATIC-PRESSURE RATIO = ,F9.5/46X,           OUT*0140
     327HOVERALL TOTAL EFFICIENCY = ,F9.5/45X,                          OUT*0141
     428HOVERALL STATIC EFFICIENCY = ,F9.5/37X,                         OUT*0142
     536HOVERALL BLADE- TO JET-SPEED RATIO = ,F9.5)                     OUT*0143
      GO TO 1800                                                        OUT*0144
 1500 IF (IMIX.EQ.0.AND.ICOOL.NE.2) GO TO 1800                          OUT*0145
      IF (ISRI.NE.1) GO TO 1700                                         OUT*0146
      WRITE (NTAPE,1550) HW6(2),ISTG                                    OUT*0147
 1550 FORMAT (////43X, 3H** ,A6,I2,34H MIXED AND/OR COOLED QUANTITIES **OUT*0148
     1)                                                                 OUT*0149
      WRITE (NTAPE,1600) (J,POU(J),TOU(J),PORU(J),TORU(J),J=1,NLINES)   OUT*0150
 1600 FORMAT (////50X,2(8HABSOLUTE,4X),2(8HRELATIVE,4X)/37X,            OUT*0151
     110HSTREAMLINE,5X,4(5HTOTAL,7X)/39X,6HNUMBER,3X,2(2X,8HPRESSURE,   OUT*0152
     23X,11HTEMPERATURE)/46X,2(6X,5H(PSI),6X,7H(DEG R))//(41X,I2,       OUT*0153
     33X,2(3X,F9.4,4X,F8.2)))                                           OUT*0154
      GO TO 1800                                                        OUT*0155
 1700 ISTGP=ISTG+1                                                      OUT*0156
      WRITE (NTAPE,1550) HW6(1),ISTGP                                   OUT*0157
      WRITE (NTAPE,1750) (J,POU(J),TOU(J),J=1,NLINES)                   OUT*0158
 1750 FORMAT (////62X,2(8HABSOLUTE,4X)/49X,10HSTREAMLINE,5X,            OUT*0159
     12(5HTOTAL,7X)/51X,6HNUMBER,5X,8HPRESSURE,3X,11HTEMPERATURE/       OUT*0160
     264X,5H(PSI),6X,7H(DEG R)//(53X,I2,6X,F9.4,4X,F8.2))               OUT*0161
C                                                                       OUT*0162
C     RECONVERT THE TABULAR OUTPUT INTO A CONSISTENT SET OF UNITS       OUT*0163
C                                                                       OUT*0164
 1800 DO 2000 J=1,NLINES                                                OUT*0165
      RST(J)=RST(J)/CNV1                                                OUT*0166
      PO(J)=CNV2*PO(J)                                                  OUT*0167
      BET(J)=BET(J)/CNV3                                                OUT*0168
      P(J)=CNV2*P(J)                                                    OUT*0169
      IF (ICONV.EQ.0.AND.ISRI.LT.3) GO TO 1850                          OUT*0170
      AY(J)=AY(J)/CNV3                                                  OUT*0171
      CRV(J)=CNV1*CRV(J)                                                OUT*0172
```

```
      IF (ISRI.GE.3) GO TO 1900                                         OUT*0173
 1850 POR(J)=CNV2*POR(J)                                                OUT*0174
      BETR(J)=BETR(J)/CNV3                                              OUT*0175
      IF (IDS.EQ.NDSTAT) GO TO 2000                                     OUT*0176
 1900 IF (ICONV.EQ.0.OR.(IMIX.EQ.0.AND.ICOOL.NE.2)) GO TO 2000          OUT*0177
      POU(J)=CNV2*POU(J)                                                OUT*0178
      IF (ISRI.NE.1) GO TO 2000                                         OUT*0179
      PORU(J)=CNV2*PORU(J)                                              OUT*0180
 2000 CONTINUE                                                          OUT*0181
      RETURN                                                            OUT*0182
      END                                                               OUT*0183
```

APPENDIX XXIII

SUBRØUTINE START

Each time a pass is made through the continuity loop, a new value of meanline meridional velocity is chosen. The function of Subroutine START is to obtain consistent meanline values of the remaining unknowns, namely the tangential velocity, and the natural logarithms of absolute total pressure and absolute total temperature.

Subroutine START is called twice by Subroutine RADEQ2 during each continuity iteration, for the integrations first toward the hub and then toward the casing; it does not call any other subroutines. The subroutine does not require external input and does not provide external output. Internal input and output are transmitted through blank CØMMØN, CØMMØN/CØM1/, CØMMØN/CØM2/, CØMMØN/CØM3/, CØMMØN/CØM5/, and CØMMØN/CØM7/. The internal input consists of:

AY	BET	DTØ	GAMA1
GAMA2	GJCP12	GJCP2	GJCP22
ISRI	IWRLS	MEAN	PØ
PØU	TØ	TØU	TØRU
U	UU	VTU	VUMS
WYE	Y		

(These symbols are defined in the appropriate sections of the CØMMØN Fortran Nomenclature.) The internal output, transmitted as the argument of the calling sequence, consists of:

Y

Additional Fortran Nomenclature for Subroutine START

Fortran Symbol	Symbol	Description	Units
FUN1		Rotor relative total pressure ratio in the absence of radial streamline displacement	--
GJCPT1	$2g_c J C_{pi} T_{oi}$	Parameter related to the absolute total temperature at a design station	fps^2

Fortran Symbol	Symbol	Description	Units
GJCPT2	$2g_o J \bar{C}_{p_i} T'^{*}_{o,i-1}$	Parameter related to the modified upstream relative total temperature	fps^2
PRAT	P_i / P_{oi}	Static-to-total pressure ratio	--
PRRAT	P'_{oi} / P_{oi}	Relative-to-absolute total pressure ratio	--
TRRRAT	$T'_{oi} / T'^{*}_{o,i-1}$	Design station-to-upstream relative total temperature ratio	--
UP	$(u_i)_m$	Meanline blade speed	fps
UUP	$(u_{i-1})_m$	Upstream meanline blade speed	fps
Y(1)	$(V_{mi})_m$	Meanline meridional velocity	fps
Y(2)	$\log(P_{oi})_m$	Natural log of meanline absolute total pressure	--
Y(3)	$(V_{ui})_m$	Meanline tangential velocity	fps
Y(4)	$\log(T_{oi})_m$	Natural log of meanline absolute total temperature	--

```
      SUBROUTINE START(Y)                                               STA*0000
C                                                                       STA*0001
C     START - FURNISHES STARTING VALUES OF LN PO, VU, AND LN TO FOR THE STA*0002
C             RUNGA-KUTTA INTEGRATION, BASED ON THE CURRENT VMM         STA*0003
C                                                                       STA*0004
      COMMON IBR,ICOEF,ICONV,ICOOL,IDLETE,IDS,ILLOOP,ILOOP,ILOSS,       STA*0005
     1IMIX,ISAV,ISON,ISPEC,ISRI,ISTG,IPOFS,NDSTAT,NLINES,NSPOOL,        STA*0006
     2NSTG,NTAPE,NTUBES,IWRLS                                           STA*0007
      COMMON /COM1/AY(17),BET(17),BETR(17),BREFF(17),CRV(17),           STA*0008
     1DFLOW(17),EFFR(17),EFFS(17),EM(17),EMR(17),FACL(17),GRND(17),     STA*0009
     2P(17),PO(17),POR(17),REAC(17),T(17),TO(17),TOR(17),U(17),         STA*0010
     3V(17),VM(17),VR(17),VT(17),VX(17),WYE(17),WYK(17)                 STA*0011
      COMMON /COM2/CP(17),CP1,CP2,CP3,CP4,CP5,EJCP1,EJCP2,              STA*0012
     1GAMA1,GAMA2,GAMA3,GAMB1,GAMC1,GAMD2,GAMD3,GAMD4,GAMD5,            STA*0013
     2GAM1,GAM2,GAM3,GAM4,GAM5,GASC,GGG1,GJCP1,GJCP12,GJCP2,            STA*0014
     3GJCP22,GJCP32,GJCP42,GJCP52                                       STA*0015
      COMMON /COM3/BETRU(17),BETU(17),BREFFO(17),DPOUDR(17),            STA*0016
     1DPRUDR(17),DTRUDR(17),POO(17),POO2(17),PORU(17),POU(17),          STA*0017
     2REACO(17),TOO(17),TOO2(17),TORU(17),TOU(17),UU(17),               STA*0018
     3VRU(17),VTU(17),VU(17),WYEO(17),DTOUDR(17),DVTUDR(17)             STA*0019
      COMMON /COM5/ASTR(17,17),ASTS(17),BETLT(17),CSTR(17,17),          STA*0020
     1CSTS(17),DTO(17),FHP(8),FLWC,IPOF(8),ISTRAC,NLT,                  STA*0021
     2NSTAT,NSTRAC,NXT,POF(17,8),POLT(17),RANN(19,2),PLT(17),           STA*0022
     3RSTRAC(17,17),RSTRAS(17),RXTS(17),TOC(16),TOLT(17),               STA*0023
     4WRLS(17),XMIX(17,16),XSTAT(19),YOS(17),IWRL(8),VUM(8),VUMS,       STA*0024
     5DVMDRS(17),DVMDS(17)                                              STA*0025
      COMMON /COM7/COT60,DFLWT,DFLWTO,EMMAX,EMMIN,ICNT,JJ,              STA*0026
     1JJP,MEAN,RATIO,VMM,VMMO,VMMOO                                     STA*0027
      DIMENSION Y(4)                                                    STA*0028
      IF (ISRI.LE.2) GO TO 100                                          STA*0029
      Y(2)=ALOG(PO(MEAN))                                               STA*0030
      Y(3)=Y(1)*TAN(BET(MEAN))*COS(AY(MEAN))                            STA*0031
      Y(4)=ALOG(TO(MEAN))                                               STA*0032
      RETURN                                                            STA*0033
  100 IF (ISRI.EQ.2) GO TO 200                                          STA*0034
      Y(4)=ALOG(TOU(MEAN))                                              STA*0035
      IF (IWRLS.NE.0) GO TO 120                                         STA*0036
      Y(3)=VUMS                                                         STA*0037
      GO TO 140                                                         STA*0038
  120 Y(3)=Y(1)*TAN(BET(MEAN))*COS(AY(MEAN))                            STA*0039
  140 PRAT=(1.0-(Y(1)**2+Y(3)**2)/(GJCP12*TOU(MEAN)))**GAMA1            STA*0040
      Y(2)=ALOG(POU(MEAN)/(1.0+WYE(MEAN)*(1.0-PRAT)))                   STA*0041
      RETURN                                                            STA*0042
  200 Y(4)=ALOG(TOU(MEAN)-DTO(MEAN))                                    STA*0043
      UP=U(MEAN)                                                        STA*0044
      UUP=UU(MEAN)                                                      STA*0045
      Y(3)=(UUP*VTU(MEAN)-GJCP2*DTO(MEAN))/UP                           STA*0046
      GJCPT1=GJCP12*(TOU(MEAN)-DTO(MEAN))                               STA*0047
      GJCPT2=GJCP22*TORU(MEAN)                                          STA*0048
      PRAT=(1.0-(Y(1)**2+Y(3)**2)/GJCPT1)**GAMA1                        STA*0049
      PRRAT=(1.0+UP*(UP-2.0*Y(3))/GJCPT1)**GAMA1                        STA*0050
      TRRRAT=1.0+(UP**2-UUP**2)/GJCPT2                                  STA*0051
      FUN1=PRRAT+WYE(MEAN)*(PRRAT-PRAT)                                 STA*0052
      Y(2)=ALOG(PORU(MEAN)*TRRRAT**GAMA2/FUN1)                          STA*0053
      RETURN                                                            STA*0054
      END                                                               STA*0055
```

APPENDIX XXIV

SUBRØUTINE LØSCØR

Subroutine LØSCØR furnishes streamline values of total-pressure-loss coefficient and the derivative of total-pressure-loss coefficient with respect to radius for each blade row exit design station. The loss coefficients are obtained either from the input data, or from the internal correlation and additional loss factors, if any. When the internal correlation is used, Subroutine LØSCØR also checks for convergence of the loss iteration.

Subroutine LØSCØR is called by the main routine each time streamline locations are reestimated at a blade row exit design station; it calls Subroutine SLØPE after obtaining revised values of streamline loss coefficient. Subroutine LØSCØR does not require external input and does not provide external output. Internal input and output are transmitted through blank CØMMØN, CØMMØN/CØM1/, CØMMØN/CØM3/, CØMMØN/CØM4/, CØMMØN/CØM6/, CØMMØN/CØM8/, and CØMMØN/CØM12/. The internal input consists of:

AY	FACL	ISPEC	ISRI
NLINES	TØLWY	U	VM
VRU	VT	VU	YCØN

(These symbols are defined in the appropriate sections of the CØMMØN Fortran Nomenclature.) The internal output transmitted through CØMMØN consists of:

WYE	DWYDR

The internal output transmitted as the argument of the calling sequence is:

IYCØNV

Additional Fortran Nomenclature for Subroutine LØSCØR

The following table gives the Fortran nomenclature for those symbols used in Subroutine LØSCØR which are not part of CØMMØN.

Fortran Symbol	Symbol	Description	Units
BETAP	β	A streamline value of absolute	

Fortran Symbol	Symbol	Description	Units
		flow angle at a stator-exit design station	rad
BETARP	β'	A streamline value of relative flow angle at a stage-exit design station	rad
FVØNV	$f\left(\frac{V'_m}{V'_{ex}}\right)$	A function of row inlet-to-exit relative velocity ratio; the reaction term of the loss correlation	--
FY		Damping factor for the loss iteration; FY=0 implies zero damping	--
IYCØNV		Indicator: IYCØNV=0 if the iteration on streamline values of total-pressure-loss coefficient has not converged IYCØNV=1 if the iteration on streamline values of total-pressure-loss coefficient has converged	--
REACP	$\frac{V'_m}{V'_{ex}}$	A streamline value of row inlet-to-exit relative velocity ratio	--

```
      SUBROUTINE LOSCOR(IYCONV)                                         LOS*0000
C                                                                       LOS*0001
C     LOSCOR - CALCULATES NEW STREAMLINE VALUES OF TOTAL-PRESSURE-LOSS  LOS*0002
C              COEFFICIENTS FROM THE CORRELATION AND CHECKS THEIR       LOS*0003
C              CONVERGENCE WITHIN THE SPECIFIED TOLERANCE               LOS*0004
C                                                                       LOS*0005
      COMMON IBR,ICOEF,ICONV,ICOOL,IDLETE,IDS,ILLOOP,ILOOP,ILOSS,       LOS*0006
     1IMIX,ISAV,ISON,ISPEC,ISRI,ISTG,IPOFS,NDSTAT,NLINES,NSPOOL,        LOS*0007
     2NSTG,NTAPE,NTUBES,IWRLS                                           LOS*0008
      COMMON /COM1/AY(17),BET(17),BETR(17),BREFF(17),CRV(17),           LOS*0009
     1DFLOW(17),EFFR(17),EFFS(17),EM(17),EMR(17),FACL(17),GRND(17),     LOS*0010
     2P(17),PO(17),POR(17),REAC(17),T(17),TO(17),TOR(17),U(17),         LOS*0011
     3V(17),VM(17),VR(17),VT(17),VX(17),WYE(17),WYK(17)                 LOS*0012
      COMMON /COM3/BETRU(17),BETU(17),BREFFO(17),DPOUDR(17),            LOS*0013
     1DPRUDR(17),DTRUDR(17),POO(17),POO2(17),PORU(17),POU(17),          LOS*0014
     2REACO(17),TOO(17),TOO2(17),TORU(17),TOU(17),UU(17),               LOS*0015
     3VRU(17),VTU(17),VU(17),WYEO(17),DTOUDR(17),DVTUDR(17)             LOS*0016
      COMMON /COM4/FLW(17),FLWP,HP,RPM,RST(17),WFN(17)                  LOS*0017
      COMMON /COM6/CNV1,CNV2,CNV3,CNV5,EJAY,GO,PI,TOLWY                 LOS*0018
      COMMON /COM8/DADR(17),DBDR(17),DPODR(17),DTODR(17),               LOS*0019
     1DVTDR(17),DWYDR(17)                                               LOS*0020
      COMMON /COM12/ CON1,CON2,CON3,CON4,CON5,CON6,CON7,CON8,CON9       LOS*0021
      DIMENSION WYECOR(17)                                              LOS*0022
      DATA FY /0.0/                                                     LOS*0023
      IF (ISRI.GT.2) RETURN                                             LOS*0024
      IF (ISPEC.EQ.0) GO TO 1000                                        LOS*0025
      IF (ISRI.EQ.2) GO TO 400                                          LOS*0026
      DO 300 I=1,NLINES                                                 LOS*0027
      REACP=VU(I)/SQRT(VT(I)**2+VM(I)**2)                               LOS*0028
      IF (REACP.GE.CON3) GO TO 100                                      LOS*0029
      FVONV=CON6+CON7*REACP**CON8                                       LOS*0030
      GO TO 200                                                         LOS*0031
  100 FVONV=CON1+CON2*(REACP-CON3)                                      LOS*0032
  200 BETAP=ATAN(VT(I)/(VM(I)*COS(AY(I))))                              LOS*0033
  300 WYECOR(I)=ABS(TAN(BETAP)-TAN(BETU(I)))/(CON4+CON5*COS(BETAP))*    LOS*0034
     1FVONV                                                             LOS*0035
      GO TO 800                                                         LOS*0036
  400 DO 700 I=1,NLINES                                                 LOS*0037
      REACP=VRU(I)/SQRT((VT(I)-U(I))**2+VM(I)**2)                       LOS*0038
      IF (REACP.GE.CON3) GO TO 500                                      LOS*0039
      FVONV=CON6+CON7*REACP**CON8                                       LOS*0040
      GO TO 600                                                         LOS*0041
  500 FVONV=CON1+CON2*(REACP-CON3)                                      LOS*0042
  600 BETARP=ATAN((VT(I)-U(I))/(VM(I)*COS(AY(I))))                      LOS*0043
  700 WYECOR(I)=ABS(TAN(BETRU(I))-TAN(BETARP))/(CON4+CON5*COS(BETARP))* LOS*0044
     1FVONV                                                             LOS*0045
  800 IYCONV=1                                                          LOS*0046
      IF (ISPEC.EQ.1) GO TO 850                                         LOS*0047
      DO 825 I=1,NLINES                                                 LOS*0048
  825 WYECOR(I)=FACL(I)*WYECOR(I)                                       LOS*0049
  850 DO 900 I=1,NLINES                                                 LOS*0050
      IF (WYECOR(I).GT.CON9) WYECOR(I)=CON9                             LOS*0051
      IF (ABS(WYECOR(I)/WYE(I)-1.0).GE.TOLWY) IYCONV=0                  LOS*0052
  900 WYE(I)=FY*WYE(I)+(1.0-FY)*WYECOR(I)                               LOS*0053
      CALL SLOPE(RST,WYE,DWYDR,NLINES)                                  LOS*0054
      RETURN                                                            LOS*0055
 1000 DO 1100 I=1,NLINES                                                LOS*0056
```

```
1100 WYE(I)=FACL(I)                                                    LOS*0057
     CALL SLOPE(RST,WYE,DWYDR,NLINES)                                  LOS*0058
     IYCONV=1                                                          LOS*0059
     RETURN                                                            LOS*0060
     END                                                               LOS*0061
```