TECH LIBRARY KAFB, NM
0060678

NASA CONTRACTOR REPORT

NASA-CR-1
c. 1

NASA CR-1495

LOAN COPY: RETURN TO
AFWL (WLOL)
KIRTLAND AFB, N MEX

A COMPUTER PROGRAM FOR THE PREDICTION OF DUCTED FAN PERFORMANCE

by Michael R. Mendenhall and Selden B. Spangler

Prepared by
NIELSEN ENGINEERING & RESEARCH, INC.
Mountain View, Calif.
for Ames Research Center

NATIONAL AERONAUTICS AND SPACE ADMINISTRATION • WASHINGTON, D. C. • FEBRUARY 1970

NASA CR-1495

TECH LIBRARY KAFB, NM

0060678

A COMPUTER PROGRAM FOR THE PREDICTION OF DUCTED FAN PERFORMANCE

By Michael R. Mendenhall and Selden B. Spangler

Distribution of this report is provided in the interest of information exchange. Responsibility for the contents resides in the author or organization that prepared it.

Issued by Originator as Report No. NEAR TR 16

Prepared under Contract No. NAS 2-4953 by
NIELSEN ENGINEERING & RESEARCH, INC.
Mountain View, Calif.

for Ames Research Center

NATIONAL AERONAUTICS AND SPACE ADMINISTRATION

For sale by the Clearinghouse for Federal Scientific and Technical Information
Springfield, Virginia 22151 – Price $3.00

TABLE OF CONTENTS

Section	Page No.
SYMBOLS	iv
SUMMARY	1
1. INTRODUCTION	1
2. THEORETICAL APPROACH AND FLOW MODEL	2
2.1 Axial Flow	2
2.2 Angle of Attack	11
3. PROGRAM DESCRIPTION	16
3.1 Calculation Procedure	16
3.2 Flow of Calculations	16
3.3 Use of Program	21
4. DESCRIPTION OF INPUT	21
4.1 Input Data	22
4.2 Duct Camber and Thickness	26
4.3 Centerbody	28
4.4 Fan Blade Characteristics	29
5. DESCRIPTION OF OUTPUT	29
6. DESCRIPTION OF ERROR MESSAGES AND STOPS	33
7. PROGRAM LISTING	35
8. SAMPLE CASES	98
9. DATA COMPARISONS	99
REFERENCES	101
FIGURES 1 THROUGH 12	102

SYMBOLS

A	area of duct exit plane, $\pi D^2/4$
A_n	Fourier series coefficients for the radial velocity induced on the reference cylinder by all the internal vortex cylinders, eq. (10)
A_n^*	Fourier series coefficients for the axial velocity induced on the reference cylinder by all the internal vortex cylinders, eq. (11)
A_p	propeller disk area, $\pi(R_p^2 - R_{CB}{}^2)$
B_n	Fourier series coefficients for the radial velocity induced on the reference cylinder by the outer trailing vortex cylinder, eq. (8)
B_n^*	Fourier series coefficients for the axial velocity induced on the reference cylinder by the outer trailing vortex cylinder, eq. (9)
b	propeller chord length, fig. 2
C_M	pitching moment coefficient, M/RAq or $M/\rho n^2 D_p^5$
C_N	normal force coefficient, N/Aq or $N/\rho n^2 D_p^4$
C_n	Glauert series coefficients for γ_D, eq. (6)
C_p	pressure coefficient, eq. (44)
C_T	thrust coefficient, T/Aq or $T/\rho n^2 D_p^4$
c	chord length of duct
c_ℓ	lift coefficient for fan blade section
c_{ℓ_α}	lift curve slope for fan blade section
c_n	Glauert series coefficients for γ_α, eq. (25)
D	diameter of duct in the exit plane
D_n	Fourier series coefficients for the radial velocity induced on the reference cylinder by the centerbody, eq. (12)
D_n^*	Fourier series coefficients for the axial velocity induced on the reference cylinder by the centerbody, eq. (13)

D_p	propeller diameter
E_n	Fourier series coefficients for the radial velocity induced on the reference cylinder by γ, γ_w, and the centerbody, eq. (29)
E_n^*	Fourier series coefficients for the axial velocity induced on the reference cylinder by γ_D, γ, γ_w, and the centerbody, eq. (34)
E_n'	Fourier series coefficients for the radial velocity induced on the reference cylinder by γ_D, γ, γ_w, and the centerbody, eq. (40)
F_n	Fourier series coefficients for the radial velocity induced on the reference cylinder by the duct-bound vorticity, eq. (43)
F_n^*	Fourier series coefficients for the axial velocity induced on the reference cylinder by the duct-bound vorticity, eq. (38)
$F(x)$	scaling factor
G_n^*	Fourier series coefficients for the axial velocity induced on the reference cylinder by the γ_α vorticity, eq. (37)
H_n	Fourier series coefficients for the radial velocity induced on the reference cylinder by the trailing vortex filaments associated with γ_α
h	fan blade thickness, fig. 2
i	incidence angle of fan blade section measured from the line of zero lift, fig. 2
J	advance ratio, V/nD_p
$\bar{J}$	effective advance ratio, $J \cos \alpha$
J'	advance ratio parameter, eq. (3)
$\bar{J}'$	effective advance ratio parameter, $J' \cos \alpha$
ℓ_{CB}	length of centerbody
M	pitching moment
N	number of fan blades or normal force
n	fan rotational speed, rev/sec
$P_{k\ell}$	coefficients for velocity induced by duct-bound vorticity, eq. (16)

q	free-stream dynamic pressure, $\rho V^2/2$
R	radius of duct exit plane, $D/2$
R_{CB}	radius of fan root (nominally same as centerbody radius at fan station)
R_n	Fourier series coefficients of duct geometric camberline
R_n^*	Fourier series coefficients of the duct effective camberline, eq. (14)
R_p	radius of fan tip
$\bar{r}$	mean radius of equal area element of fan disk
r_c	radius from duct centerline to duct camberline, fig. 1
r_e	radius from duct centerline to effective duct camberline
r_{max}	maximum radius of centerbody
T	thrust force
t	duct thickness
u	induced axial velocity
u_{CB}	axial velocity induced by centerbody singularity distribution
u_{q_d}	axial velocity induced by duct thickness distribution
u_s	duct surface velocity
u_γ	axial velocity induced by the vortex cylinder trailing from the duct trailing edge
u_{γ_w}	total axial velocity induced by all internal vortex cylinders trailing from the fan
u_{γ_D}	axial velocity induced by duct-bound vorticity, γ_D
V	free-stream velocity
$\bar{V}$	effective free-stream velocity, $V \cos \alpha$
v_{CB}	radial velocity induced by centerbody singularity distribution
v_γ	radial velocity induced by the vortex cylinder trailing from the duct trailing edge

v_{γ_w}	total radial velocity induced by all the internal vortex cylinders trailing from the fan
v_{γ_D}	radial velocity induced by duct-bound vorticity, γ_D
x	axial distance from leading edge of duct
x_{CB}	location of centerbody nose in duct coordinate system, fig. 1
x_p	fan location within duct
$x_{r_{max}}$	location of maximum centerbody radius in duct coordinate system
x_s	axial distance measured from c/2, fig. 1
z	number of equal area elements making up fan disk area
α	free-stream angle of attack
β	fan blade section pitch angle, fig. 2
Γ	circulation bound to fan blade, eq. (1)
ϵ	convergence criterion
γ	strength of outer trailing vortex cylinder
γ_D	axially symmetric component of duct-bound vorticity, eq. (6)
γ_w	strength of wth inner trailing vortex cylinder
γ_α	duct-bound vorticity component due to angle of attack, eq. (25)
Δp	rise in static and total pressure across actuator disk
θ	transformed axial distance, $x = 1/2\ (1 - c \cos \theta)$
ρ	free-stream density
ϕ	azimuthal angle
ω	fan rotational speed, rad/sec

Subscripts

DP	for the complete ducted propeller
D(P)	for the duct in the presence of the propeller
D(α)	for the duct at angle of attack
P(D)	for the propeller shrouded by the duct
3/4	at 3/4 radius location of the fan blade
tip	at the tip of the fan blade
z	indicating the outer trailing vortex cylinder or outer fan annulus

A COMPUTER PROGRAM FOR THE PREDICTION OF DUCTED FAN PERFORMANCE

By Michael R. Mendenhall and Selden B. Spangler
Nielsen Engineering & Research, Inc.

SUMMARY

This document is a user's manual for a computer program developed to determine the performance of a ducted fan in axial flow and at angle of attack. The program is used to predict the performance at a specified advance ratio and angle of attack of a given fan-duct combination, which is specified by the radial distributions of blade pitch, chord, and thickness; the duct chord, diameter, camber, and thickness distribution; the fan location; and the centerbody geometry. The information obtained from the program is duct and fan thrust and ducted fan normal force and pitching moment coefficient. Radial distributions of fan inflow velocity and blade angle of attack are also obtained. The program calculates the duct surface pressure distribution at any specified azimuthal angle. The program is written in Fortran IV for the IBM 7094 computer and requires approximately two minutes running time per case. Included in this manual are a brief description of the theory and the calculation procedure, descriptions of input and output, program listing, sample cases, and some comparisons with data.

1. INTRODUCTION

This report is one of two documents prepared under Contract NAS2-4953 for the Ames Research Center, NASA. The work on this contract is concerned with development of methods for predicting the aerodynamic performance of ducted fans in uniform flow. This document is a user's manual for the computer program developed under the contract. The second document (ref. 1) describes the analysis on which the computer program is based.

The authors and their associates have done a considerable amount of prior work on ducted fan analysis (refs. 2-6). The final task of that work involved the preparation of a computer program for calculating the aerodynamic characteristics of a ducted fan in a uniform, axial

flow (ref. 6). The purpose of the present investigation is to make certain improvements and additions to the computer program of reference 6. The additional analysis required to make these improvements is reported in reference 1. The improvements consist of adding a capability for angle of attack flow, computing duct surface pressure distributions, adding a centerbody model, and removing certain restrictions on advance ratio and nonlinear blade lift characteristics. This report includes a brief discussion of the theoretical approach and the assumed flow model with a summary of the equations used in the program. No derivations are included, but references are given to all the derivations of interest. The actual operation of the program is discussed along with descriptions of input and output. Program listings and sample cases are also included. Some brief comparisons with data are presented to give some information on the range of usefulness of the program. This document completely supersedes reference 6.

2. THEORETICAL APPROACH AND FLOW MODEL

The discussion of this section is intended to describe the theoretical approach in sufficient detail to permit the user of the program to understand the sequence of calculations in the program. The equations in the program are given with references to the source in which each is derived.

The flow model is inviscid and is based on potential flow theory. The approach used is to decouple the axial flow and angle of attack problems, treat each individually, and superimpose the solutions.

2.1 Axial Flow

The analysis for axial flow is basically that described in reference 5 with the modifications and additions described in reference 1. Singularity distributions are used to represent the fan wake, the duct loading, the duct thickness, and the centerbody. The basic axisymmetric flow model is shown in figure 1(a). A duct reference cylinder is defined as that cylinder having the same radius as the duct trailing edge. The reference cylinder is used in conjunction with the boundary condition imposed on the duct.

The duct may have both thickness and camber, and the chord-to-diameter ratio may have any value.[1] The fan configuration is specified by the number of blades (N) and by the radial distribution of chord (b), pitch (β), and thickness (h) as shown in figure 2. The effect of blade camber is not directly considered; however, the pitch angle, β, is assumed to be the angle between the plane of rotation and the zero lift line of the local blade section. Each blade section is assumed to have a lift coefficient slope, c_{ℓ_α}, of 2π up to the point of local blade stall. This point is assumed to be a function only of the blade thickness-to-chord ratio as described in reference 1. After the blade section stalls, the section lift coefficient is assumed to be constant and equal to $c_{\ell_{max}}$. Since blade element theory is used to determine the fan performance, use of the program is limited to ducted fans with relatively low blade solidity. The upper limit on solidity has not been estimated because of the lack of suitable data for comparing predicted and measured performance.

The fan annulus is divided into a number ($z \leq 24$) of equal area annuli in each of which blade element theory is used to describe local blade performance. The bound circulation (Γ) is constant within each annulus and a vortex cylinder with strength γ_w is assumed to be shed from each annulus and to extend downstream along the duct axis. The outer vortex cylinder is assumed to lie along the duct reference cylinder and to be shed from the duct trailing edge.

From equation (5) of reference 5, the bound circulation on the portion of the blade in the wth annulus is

$$\frac{\Gamma_w}{RV} = \frac{1}{2} c_\ell \frac{b_w}{R} \frac{u_w}{V} \left[\left(\frac{\bar{r}_w \omega}{u_w} \right)^2 + 1 \right]^{1/2} \tag{1}$$

[1]There is an upper limit on c/D of approximately 2.5 imposed by the absence of $P_{k\ell}$ values and induced camber coefficients for c/D values greater than 2. See p. 7 for further details.

and the strength of the wth internal trailing vortex cylinder is

$$\frac{\gamma_w}{V} = \left[\left(1 + \sum_{m=w+1}^{z} \frac{\gamma_m}{V}\right)^2 + \frac{N}{\pi J'}\left(\frac{\Gamma_w}{RV} - \frac{\Gamma_{w+1}}{RV}\right)\right]^{1/2} - \left(1 + \sum_{m=w+1}^{z} \frac{\gamma_m}{V}\right) \tag{2}$$

where

$$J' = \frac{V}{R\omega} \tag{3}$$

The strength of the outer vortex cylinder is

$$\frac{\gamma_z}{V} = \left[1 + \frac{N}{\pi J'}\left(\frac{\Gamma_z}{RV}\right)\right]^{1/2} - 1 \tag{4}$$

In many of the following equations, γ is used as a normalizing parameter. When γ is used without a subscript it designates the strength of the outer cylinder, γ_z.

Assuming that the inflow to the fan (u/V) is known, the radial distribution of bound circulation may be calculated using equation (1), and the strength of the vortex cylinders can be obtained from equations (2) and (4). However, the inflow to a fan in a specified duct at a given flight condition is not known a priori. The inflow is made up of the free stream plus the axial velocity components induced by all the singularity distributions. Thus, the inflow to the propeller at a given radial station is

$$\frac{u_m}{V} = 1 + \frac{u_{\gamma_D}}{V} + \frac{u_\gamma}{V} + \frac{u_{q_D}}{V} + \frac{u_{CB}}{V} + \frac{1}{2}\sum_{w=m}^{z-1} \frac{\gamma_w}{V} \tag{5}$$

With the exception of the centerbody-induced flow, the components of the inflow velocity are computed in the same manner as is described in Appendix A of reference 5. The velocity (u_{CB}) induced by the centerbody is not considered in reference 5 but is computed using equation (15) of reference 1. The velocities induced by the centerbody must be corrected to account for the fact that the centerbody is submerged in a

free stream greater than V. The details of this correction are presented in reference 1. Note that the inflow profile is dependent on the duct and fan loadings which, in turn, are affected by the inflow profile; therefore, an iterative scheme is used to converge on a solution.

The trailing vortex cylinder, the fan wake vortex cylinders, the centerbody, and the free stream all induce components of flow through the duct camberline. In order to cancel this flow and cause the net flow to be tangent to the camberline, a distribution of bound vorticity (γ_D) is placed on the duct. This bound vorticity is expressed in terms of a Glauert series (eq. (17), ref. 4) as

$$\frac{\gamma_D}{\gamma} = C_o \cot \frac{\theta}{2} + \sum_{n=1}^{5} C_n \sin n\theta \tag{6}$$

and the unknown C_n coefficients are determined from the flow tangency condition on the duct reference cylinder.

The basic relation that is solved to cause the flow to be tangent to the camberline is

$$v_{\gamma_D} + v_\gamma + v_{\gamma_w} + v_{CB} = \frac{dr_e}{dx}\left(V + u_{\gamma_D} + u_\gamma + u_{\gamma_w} + u_{CB}\right) \tag{7}$$

where dr_e/dx is the effective slope of the camberline. The following procedure is used to solve equation (7) for the unknown C_n coefficients.

The radial velocity (v_γ) induced along the duct reference cylinder by the vortex cylinder trailing from the duct trailing edge is given by equation (C-3) of reference 5. This velocity is expressed in nondimensional form by a six-term Fourier cosine series as

$$\frac{v_\gamma}{\gamma} = \sum_{n=o}^{5} B_n \cos n\theta \tag{8}$$

The axial velocity (u_γ) induced by the same vortex cylinder is given by equation (23) of reference 3. This velocity is expressed in non-dimensional form by a similar six-term Fourier cosine series as

$$\frac{u_\gamma}{\gamma} = \sum_{n=o}^{5} B_n^* \cos n\theta \tag{9}$$

The radial and axial velocities induced along the duct reference cylinder by all the vortex cylinders trailing from the fan are computed using equation (13) and (20), respectively, of reference 3. The sum of the radial and axial velocities induced by all the internal vortex cylinders is expressed as

$$\frac{v_{\gamma_w}}{V} = \sum_{n=o}^{5} A_n \cos n\theta \tag{10}$$

$$\frac{u_{\gamma_w}}{V} = \sum_{n=o}^{5} A_n^* \cos n\theta \tag{11}$$

The radial and axial velocities induced along the duct reference cylinder by the centerbody singularity distribution are computed using equations (15) and (16) of reference 1. These velocities are expressed as

$$\frac{v_{CB}}{V} = \sum_{n=o}^{5} D_n \cos n\theta \tag{12}$$

$$\frac{u_{CB}}{V} = \sum_{n=o}^{5} D_n^* \cos n\theta \tag{13}$$

The slope of the effective camberline is specified as

$$\frac{dr_e}{dx} = \sum_{n=o}^{3} R_n^* \cos n\theta \tag{14}$$

where the effective camber is made up of a geometric camber and an induced camber as discussed in detail in section 2.3 of reference 6. The induced camber is due to the velocity induced by the source ring distribution representing the duct thickness, and the method of computing this effect is based on the work described in Chapter 2 of reference 7. The induced camber is described by a Fourier series similar to equation (14) where the first four coefficients are tabulated as a function of c/D in reference 6. These coefficients are included in the program in Subroutine CAMBER and are automatically combined with the geometric camber coefficients. The calculation of the geometric camber coefficients is described in section 4.2 of this report.

The axial velocity induced by the bound vorticity, γ_D, can be written in terms of the C_n coefficients as

$$\frac{4D}{c}\,\frac{u_{\gamma_D}}{\gamma} = \left(\ell n\,\frac{16D}{c} - 1\right)\left(C_o + \frac{C_1}{2}\right) + \left(\frac{2C_o + C_2}{2}\right)\cos\theta + \left(\frac{C_3 - C_1}{4}\right)\cos 2\theta + \left(\frac{C_4 - C_2}{6}\right)\cos 3\theta + \left(\frac{C_5 - C_3}{8}\right)\cos 4\theta \tag{15}$$

from equation (18) of reference 4. The radial velocity component can be found from equation (1.13) of reference 8 as

$$\frac{v_{\gamma_D}}{\gamma} = \frac{C_o}{2} - \sum_{\ell=o}^{5} \frac{C_\ell}{2} P_{o\ell} + \sum_{k=1}^{5} \cos k\theta \left(-\frac{C_k}{2} + \sum_{\ell=o}^{5} \frac{C_\ell}{2} P_{k\ell}\right) \tag{16}$$

where the $P_{k\ell}$ coefficients are given in tables 2.1 through 2.4 of reference 9. These tables have been extended to c/D values of 2.0, and provision has been made in the program to extrapolate beyond 2.0. However, the variation of $P_{k\ell}$ with c/D is not linear, and the extrapolation should not be made much past 2.5.

Substituting equations (8) through (16) into equation (7) results in

$$\sum_{n=o}^{5} \left(\frac{\gamma}{V} B_n + A_n + D_n\right) \cos n\theta + \frac{v_{\gamma_D}}{\gamma}\left(\frac{\gamma}{V}\right)$$

$$= \sum_{m=o}^{3} R_m^* \cos n\theta \left[\sum_{n=o}^{5} \left(\frac{\gamma}{V} B_n^* + A_n^* + D_n^*\right) \cos n\theta + \frac{u_{\gamma_D}}{\gamma}\left(\frac{\gamma}{V}\right) + 1\right] \tag{17}$$

Expanding both sides of equation (17) into Fourier cosine series and equating each of the six harmonics results in six linear algebraic equations in terms of the six unknowns, C_n. With the parameter e defined below,

$$e \equiv \frac{c}{4D} \tag{18}$$

the equation for the zeroth harmonic is

$$\left[(1 - P_{oo}) - 2R_o^* e \left(\ell n \frac{4}{e} - 1\right) - R_1^* e\right] C_o$$

$$+ \left[\frac{R_2^* e}{4} - R_o^* e \left(\ell n \frac{4}{e} - 1\right)\right] C_1 + \left[\frac{R_3^* e}{6} - \frac{R_1^* e}{2} - P_{o2}\right] C_2$$

$$+ \left[\frac{-R_2^* e}{4}\right] C_3 + \left[-\frac{R_3^* e}{6} - P_{o4}\right] C_4 + \left[0\right] C_5$$

$$= 2R_o^* B_o^* + R_1^* B_1^* + R_2^* B_2^* + R_3^* B_3^* - 2B_o$$

$$+ \frac{V}{\gamma}\left[2R_o^*(D_o^* + A_o^* + 1) + R_1^*(D_1^* + A_1^*) + R_2^*(D_2^* + A_2^*)\right.$$

$$\left. + R_3^*(D_3^* + A_3^*) - 2(D_o + A_o)\right] \tag{19}$$

The equation for the first harmonic is

$$\left[P_{1o} - 2R_o^*e - 2R_1^*e(\ell n\,\frac{4}{e} - 1) - R_2^*e\right] C_o$$

$$+ \left[(P_{11} - 1) - R_1^*e(\ell n\,\frac{4}{e} - 1) + \frac{R_1^*e}{4} + \frac{R_3^*e}{4}\right] C_1$$

$$+ \left[-R_o^*e - \frac{R_2^*e}{3}\right] C_2 + \left[P_{13} - \frac{R_1^*e}{4} - \frac{R_3^*e}{8}\right] C_3$$

$$+ \left[-\frac{R_2^*e}{6}\right] C_4 + \left[P_{15} - \frac{R_3^*e}{8}\right] C_5$$

$$= 2R_o^*B_1^* + 2R_1^*B_o^* + R_1^*B_2^* + R_2^*(B_1^* + B_3^*) + R_3^*(B_2^* + B_4^*) - 2B_1$$

$$+ \frac{V}{\gamma}\left[2R_o^*(D_1^* + A_1^*) + 2R_1^*(D_o^* + A_o^* + 1) + R_1^*(D_2^* + A_2^*)\right.$$

$$+ R_2^*(D_1^* + D_3^* + A_1^* + A_3^*) + R_3^*(D_2^* + D_4^* + A_2^* + A_4^*)$$

$$\left. - 2(D_1 + A_1)\right] \tag{20}$$

The equation for the second harmonic is

$$\left[P_{2o} - e(R_1^* + R_3^*) - 2R_2^*e(\ell n\,\frac{4}{e} - 1)\right] C_o$$

$$+ \left[\frac{R_o^*e}{2} - R_2^*e(\ell n\,\frac{4}{e} - 1)\right] C_1 + \left[(P_{22} - 1) - \frac{R_1^*e}{3} - \frac{R_3^*e}{2}\right] C_2$$

$$+ \left[\frac{R_2^*e}{8} - \frac{R_o^*e}{2}\right] C_3 + \left[P_{24} - \frac{R_1^*e}{6} + \frac{R_3^*e}{10}\right] C_4 + \left[-\frac{R_2^*e}{8}\right] C_5$$

$$= 2R_o^*B_2^* + R_1^*(B_1^* + B_3^*) + R_2^*(2B_o^* + B_4^*) + R_3^*(B_1^* + B_5^*) - 2B_2$$

$$+ \frac{V}{\gamma}\left[2R_o^*(D_2^* + A_2^*) + (R_1^* + R_3^*)(D_1^* + A_1^*) + R_1^*(D_3^* + A_3^*)\right.$$

$$\left. + 2R_2^*(D_o^* + A_o^* + 1) + R_2^*(D_4^* + A_4^*) + R_3^*(D_5^* + A_5^*) - 2(D_2 + A_2)\right] \tag{21}$$

The equation for the third harmonic is

$$\left[P_{30} - R_2^*e - 2R_3^*e\left(\ell n\,\frac{4}{e} - 1\right)\right] C_o$$

$$+ \left[P_{31} + \frac{R_1^*e}{4} - R_3^*e\left(\ell n\,\frac{4}{e} - 1\right)\right] C_1 + \left[\frac{R_o^*e}{3} - \frac{R_2^*e}{2}\right] C_2$$

$$+ \left[(P_{33} - 1) - \frac{R_1^*e}{8}\right] C_3 + \left[\frac{R_2^*e}{10} - \frac{R_o^*e}{3}\right] C_4 + \left[P_{35} - \frac{R_1^*e}{8}\right] C_5$$

$$= 2R_o^*B_3^* + R_1^*(B_2^* + B_4^*) + R_2^*(B_1^* + B_5^*) + 2R_3^*B_o^* - 2B_3$$

$$+ \frac{V}{\gamma}\Big[2R_o^*(D_3^* + A_3^*) + R_1^*(D_2^* + A_2^* + D_4^* + A_4^*)$$

$$+ R_2^*(D_1^* + A_1^* + D_5^* + A_5^*) + 2R_3^*(D_o^* + A_o^* + 1) - 2(D_3 + A_3)\Big] \tag{22}$$

The equation for the fourth harmonic is

$$\left[P_{40} - R_3^*e\right] C_o + \left[\frac{R_2^*e}{4}\right] C_1 + \left[P_{42} + \frac{R_1^*e}{6} - \frac{R_3^*e}{2}\right] C_2$$

$$+ \left[\frac{R_o^*e}{4} - \frac{R_2^*e}{4}\right] C_3 + \left[(P_{44} - 1) - \frac{R_1^*e}{15}\right] C_4 + \left[-\frac{R_o^*e}{4}\right] C_5$$

$$= 2R_o^*B_4^* + R_1^*(B_3^* + B_5^*) + R_2^*B_2^* + R_3^*B_1^* - 2B_4$$

$$+ \frac{V}{\gamma}\Big[2R_o^*(D_4^* + A_4^*) + R_1^*(D_3^* + A_3^* + D_5^* + A_5^*)$$

$$+ R_2^*(D_2^* + A_2^*) + R_3^*(D_1^* + A_1^*) - 2(D_4 + A_4)\Big] \tag{23}$$

The equation for the fifth harmonic is

$$\left[P_{50}\right] C_o + \left[P_{51} + \frac{R_3^* e}{4}\right] C_1 + \left[\frac{R_2^* e}{6}\right] C_2 + \left[P_{53} + \frac{R_1^* e}{8} - \frac{R_3^* e}{4}\right] C_3$$

$$+ \left[\frac{R_o^* e}{5} - \frac{R_2^* e}{6}\right] C_4 + \left[(P_{55} - 1) - \frac{R_1^* e}{8}\right] C_5$$

$$= 2R_o^* B_5^* + R_1^* B_4^* + R_2^* B_3^* + R_3^* B_2^* - 2B_5 + \frac{V}{\gamma}\left[2R_o^*(D_5^* + A_5^*)\right.$$

$$\left. + R_1^*(D_4^* + A_4^*) + R_2^*(D_3^* + A_3^*) + R_3^*(D_2^* + A_2^*) - 2(D_5 + A_5)\right] \tag{24}$$

Solution of equations (19) through (24) yields the C_n coefficients defining the duct-bound vorticity, which in turn permit a new inflow profile to be computed from equation (5).

2.2 Angle of Attack

The angle of attack solution is that for a thin, cylindrical duct in a crossflow $V \sin \alpha$. This solution is superimposed on the axial flow solution as follows. The ducted fan is considered to be in a modified axial flow in which the velocity $\overline{V}$ is $V \cos \alpha$. The axial flow analysis discussed in section 2.1 is applied to obtain the axisymmetric portion of the bound and free vorticity and source distributions. The duct is then considered to be in a flow at angle of attack. A nonaxisymmetric vorticity distribution is placed on the duct to cancel the $V \sin \alpha$ crossflow through the duct reference cylinder. The duct-bound vorticity has the form

$$\frac{\gamma_\alpha}{V} = \sin \alpha \cos \phi \left[c_o \cot \frac{\theta}{2} + \sum_{n=1}^{5} c_n \sin n\theta\right] \tag{25}$$

where the c_n coefficients are functions only of c/D and are tabulated in Table I of reference 10. There is in addition a distribution of free trailing filaments caused by the variation of strength around the γ_α rings. The forces and moments on the ducted fan are then computed by considering both the axisymmetric and nonaxisymmetric singularity distributions.

The $V \sin \alpha$ crossflow and the γ_α vorticity induce a nonaxisymmetric inflow into the fan. The resulting circumferentially varying blade loading was examined in reference 5. A solution was obtained, with a number of simplifying assumptions, that indicated two compensating effects occurring to cause the net effect of angle of attack on blade load distribution to be relatively small. On the basis of these results and the complexity of the analysis, the inclusion of angle of attack effects on fan loading in the computer program was not considered justified.

The force and moment equations are derived in references 1 and 5 by considering the force resulting from a velocity acting on a bound vorticity. The viscous drag on the duct, centerbody, and fan blades is not considered in the analysis. The forces and moments on the centerbody and the moment on the fan are small compared to the duct loading and are neglected.

The effective free stream is defined by the variables

$$\begin{aligned} \overline{J}' &= J' \cos \alpha \\ \overline{V} &= V \cos \alpha \end{aligned} \tag{26}$$

Thus, the fan thrust coefficient[2] is given by equation (10) of reference 5 as

$$C_{T_{P(D)}} = \frac{A_p}{A} \frac{N}{\pi \overline{J}' z} \sum_{n=1}^{z} \frac{\Gamma_n}{R\overline{V}} \cos^2 \alpha \tag{27}$$

The duct thrust coefficient due to the duct singularity distribution is computed using equation (36) of reference 1.

---

[2]The equations for the force and moment coefficients given in this section are based on nondimensionalizing the force or moment by q, A, and R. The alternate approach noted in the Symbols List is also provided within the program.

$$C_{T_{D(P)}} = -\pi \frac{c}{D} \frac{\gamma}{\bar{V}} \cos^2 \alpha \left[C_o(4E_o + 2E_1) + 2C_1E_o + \sum_{n=1}^{4} (C_{n+1}E_n - C_nE_{n+1}) \right] \tag{28}$$

where

$$E_n = \frac{\gamma}{\bar{V}} B_n + A_n + D_n \tag{29}$$

In the assumed flow model, there is a discontinuity in the duct surface pressure distribution due to the pressure rise across the fan. The increased pressure acting on the inner duct surface aft of the fan causes the following duct thrust coefficient.

$$C_{T_{D(P)}} = \left[1 - \left(\frac{R_p}{R} \right)^2 \right] \frac{\Delta p_z}{\bar{q}} \cos^2 \alpha \tag{30}$$

One component of the thrust coefficient due to the duct at angle of attack is

$$C_{T_{D(\alpha)}} = \pi \frac{c}{D} \sin^2 \alpha \ (2c_o + c_1) \tag{31}$$

from equation (39) of reference 1. The second part of the thrust coefficient due to the duct at angle of attack is

$$C_{T_{D(\alpha)}} = -\frac{\pi}{2} \frac{c}{D} \sin^2 \alpha \left[c_o(4H_o + 2H_1) + 2c_1H_o + \sum_{n=1}^{4} (c_{n+1}H_n - c_nH_{n+1}) \right] \tag{32}$$

from equation (41) of reference 1. The H_n Fourier series coefficients describe the radial velocity distribution induced at the duct by the trailing vortex filaments associated with γ_α. These Fourier coefficients are defined in equation (40) of the above reference. The total duct thrust coefficient is then the sum of equations (27), (28), (31), and (32).

The duct normal force coefficient is given by equations (48), (51), and (52) of reference 1.

$$C_{N_{DP}} = \frac{\pi}{2}\frac{c}{D} \sin\alpha \cos\alpha \left[(4c_o + 2c_1) + f(c_n, E_n^*) + g(C_n, G_n^*)\right] \tag{33}$$

where

$$E_n^* = \frac{\gamma}{\overline{V}} (B_n^* + F_n^*) + A_n^* + D_n^* \tag{34}$$

and

$$f(c_n, E_n^*) = c_o(4E_o^* + 2E_1^*) + 2c_1E_o^* + \sum_{n=1}^{4} (c_{n+1}E_n^* - c_nE_{n+1}^*) \tag{35}$$

$$g(C_n, G_n^*) = C_o(4G_o^* + 2G_1^*) + 2C_1G_o^* + \sum_{n=1}^{4} (C_{n+1}G_n^* - C_nG_{n+1}^*) \tag{36}$$

The G_n^* are the Fourier coefficients describing the velocity u_{γ_D} which is computed using equation (49) of reference 1.

$$\frac{u_{\gamma_\alpha}}{V} = \sin\alpha \cos\phi \sum_{o}^{5} G_n^* \cos n\theta \tag{37}$$

The F_n^* are the Fourier coefficients describing the velocity u_{γ_D} which is computed using equation (A-9) of reference 5.

$$\frac{u_{\gamma_D}}{\gamma} = \sum_{o}^{5} F_n^* \cos n\theta \tag{38}$$

The duct pitching moment coefficient is given by equations (57), (59), (60), and (62) of reference 1 as

$$C_{M_{DP}} = \frac{\pi}{2} \sin \alpha \cos \alpha \left\{ \frac{1}{2} \frac{\gamma}{\overline{V}} \left(\frac{c}{D}\right)^2 \overline{f}(C_n, G_n^*) + \left(\frac{c}{D}\right)^2 (2c_o + c_2) \right.$$

$$+ \frac{1}{2} \left(\frac{c}{D}\right)^2 \overline{g}(c_n, E_n^*) - \frac{c}{D} \left[c_o(4E_o' + 2E_1') + 2c_1 E_o' \right.$$

$$\left. \left. + \sum_{n=1}^{4} (c_{n+1} E_n' - c_n E_{n+1}') \right] \right\} \tag{39}$$

where

$$E_n' = \frac{\gamma}{\overline{V}} (B_n + F_n) + A_n + D_n \tag{40}$$

$$\overline{f}(C_n, G_n^*) = C_o(4G_o^* + 4G_1^* + 2G_2^*) + C_1(G_1^* - G_3^*) + C_2(2G_o^* - G_4^*)$$

$$+ C_3(G_1^* - G_5^*) + C_4 G_2^* + C_5 G_3 \tag{41}$$

$$\overline{g}(c_n, E_n^*) = c_o(4E_o^* + 4E_1^* + 2E_2^*) + c_1(E_1^* - E_3^*) + c_2(2E_o^* - E_4^*)$$

$$+ c_3(E_1^* - E_5^*) + c_4 E_2^* + c_5 E_3^* \tag{42}$$

The F_n are the Fourier coefficients describing the velocity v_{γ_D} which is computed using equation (16).

$$\frac{v_{\gamma_D}}{\gamma} = \sum_{o}^{5} F_n \cos n\theta \tag{43}$$

The duct surface pressure distribution is obtained from the Bernoulli equation

$$C_p = 1 - \left(\frac{u_s}{V}\right)^2 \tag{44}$$

where u_s is the induced surface velocity distribution. The surface velocity, u_s, is made up of a continuous portion and a discontinuous portion as given by equation (67) of reference 1. The continuous

velocity is corrected for duct thickness and the discontinuous velocity is approximated near the leading edge to remove the singularity. These corrections and approximations are explained in detail in reference 1.

3. PROGRAM DESCRIPTION

3.1 Calculation Procedure

The computation proceeds as follows. An initial knowledge of the fan inflow velocity profile is required to compute blade performance, from which all other computations are made. Since the inflow is affected by the as yet undetermined duct-bound vorticity, an iterative procedure is used. An initial, uniform inflow of $2V$ is assumed, and the blade element calculations are made to determine the fan performance and the fan wake characteristics. The flow tangency condition on the duct reference cylinder is then applied to determine the duct-bound vorticity distribution. With all the singularity distributions known, the fan inflow is calculated. This is compared with the initially assumed inflow. If the two do not agree, a new inflow equal to the average between the initial and computed inflows is determined. The fan and duct-bound vorticity calculations are repeated to obtain a new inflow. The process continues until the inflow velocity in each annulus has converged to within the desired value. When convergence is obtained for all annuli, the program continues to calculate force and moment coefficients and duct surface pressure coefficients if desired.

3.2 Flow of Calculations

This section contains a discussion of the sequence of calculations within the program. The discussion describes the functions that are performed in the main program and each of the subroutines and the basic order in which they are performed. References are given for the various equations or relations used in the parts of the program.

The program consists of a main program and 20 subroutines. The cards in the source deck are identified in Columns 73 to 80 with a four-character identification indicating the number of the subroutine and a three-digit number representing the order of the card within the subroutine.

The main program is relatively short. Its basic functions are to control the flow of the program, and to perform the calculation for the local blade element performance, the calculation for the total fan inflow, the comparison of initial and computed inflows to determine convergence, and the calculation of the new inflow profile if the solution is not converged. The relationship between the main program and the subroutines is shown in figure 3.

The first operation in MAIN is a general initialization of four subroutines. ELLIPS is called to initialize tables of elliptic integrals, LAMBDA is called to initialize tables of the Heuman Lambda Function, PKL is called to initialize tables of $P_{k\ell}$ coefficients at various ratios of duct chord to diameter, and CLALF is called to initialize a table of section $c_{\ell_{max}}$ versus thickness-to-chord ratio. The table of $c_{\ell_{max}}$ versus t/c is determined from figure 2(b) of reference 1.

The program has several subroutines which are necessary for the operation of the program because of the service they perform, but they are not important to the understanding of the sequence of events in the program. These will be discussed here briefly and then omitted from the following program description, although they are shown on figure 3. Subroutine ELLIPS does a table look-up for the complete elliptic integrals of the first and second kind, given the argument of the elliptic integrals. Subroutine LAMBDA does a table look-up for the Heuman Lambda Function, given the two arguments of the function. Subroutine ARCSIN computes the principal value of the angle given the value of the sine of the angle. Subroutine FOURCS does a Fourier analysis of a function, given a table of values of the function. The subroutine computes an n-term cosine series ($n \leq 50$) to fit the given function. The first six terms of the series are used for the calculations in the program.

Subroutine INPUT is called by the main program. The major function of subroutine INPUT is to determine all of the quantities used in the calculation that are functions only of the duct configuration, the centerbody geometry, the fan blade characteristics, or the number of fan annuli. Included in these quantities are the Fourier series coefficients for velocities and vorticities which are functions only of duct chord-to-diameter ratio or duct thickness. This subroutine also

reads in the input data, checks it for certain specific errors, and then prints out all of the input information. Now several subroutines must be called to do more specific initialization of parameters which are only dependent on the geometry of the system. Subroutine HUB is called to compute the strength and location of the point source and point sink which describe the centerbody model. ALFRNG is called to compute the G_n^* Fourier coefficients in equation (37) and the H_n Fourier coefficients in equation (32). PRESS is called to set up tables of the duct thickness correction factor and the leading-edge singularity parameter. These tables are used in the calculation of the duct surface pressure distribution. Subroutine INPUT next calls subroutine PKL to look up a table of the $P_{k\ell}$ influence coefficients. These coefficients, used in computing the radial velocity induced by a distribution of vortex rings, are functions only of c/D and are obtained from reference 9. Subroutine CAMBER is called to compute the induced camber coefficients which are combined with the geometric camber coefficients to obtain the total effective camber of the duct.

Subroutine HUB is called again by INPUT to compute the Fourier coefficients D_n and D_n^*. These coefficients are constants for a given duct and centerbody configuration; therefore, they may be computed at this time assuming a unit free stream and then correcting for the increased free stream as they are used.

Subroutine PROP divides the fan annulus into the required number of annuli (which is input), computes the inner, outer, and mean radii of the annuli and interpolates in the blade β, b/R_p, and h/b input tables to obtain values of β, b/R_p, and h/b at the mean radii of the annuli.

Certain components of the inflow to the fan are constants and can be computed at this time. Subroutine GAMCYL computes the nondimensional axial inflow velocities (in the form u/γ) induced at the mean radii of the fan annuli by a vortex cylinder trailing from the duct trailing edge. These are a function only of c/D. The equation solved is equation (A-10) of reference 5. In this equation, it is necessary to use elliptic integrals, an arcsin relation, and the Heuman Lambda Function. These are obtained, respectively, from subroutines ELLIPS, ARCSIN, and LAMBDA. Subroutine SRCRNG computes the nondimensional axial inflow velocity

(in the form u/V) induced at the mean radii of the fan annuli by the source rings representing the duct thickness distribution. The equation used is equation (A-6) of reference 5. Subroutine HUB computes the nondimensional axial inflow velocity (in the form u/V) induced at the mean radii of the fan annuli by the source-sink distribution representing the centerbody geometry. The equation used is equation (15) of reference 1. The two latter inflow velocities must be corrected for the increased local axial velocity as is discussed in reference 1.

Subroutine BNCOEF computes the Fourier cosine series coefficients (B_n) for the nondimensional radial velocity (in the form v/γ) induced along the duct reference cylinder by a vortex cylinder trailing from the duct trailing edge. The equation used is equation (C-3) of reference 5. The subroutine ANCOEF computes Fourier series coefficients for three sets of velocities on the duct reference cylinder. The coefficients B_n^* are those of the nondimensional axial velocity (u/γ) induced by a vortex cylinder from the duct trailing edge (eqs. (23) and (25) of ref. 3). The coefficients $(A_n)_w$ and $(A_n^*)_w$ are those of the nondimensional radial (v/γ_w) and axial (u/γ_w) velocities, respectively, induced by the wth inner vortex cylinder trailing from the fan. The equations used are equations (13) and (16), and equations (20) and (21), respectively, of reference 3. These Fourier coefficients are obtained by fitting a 50-term Fourier cosine series to the chordwise velocity distribution and truncating after the sixth term. At this point, the coefficients for all of the velocities induced at the duct reference cylinder by the fan wake, duct thickness, and the centerbody are known, and control returns to the main program.

The blade element performance in each of the fan disk annuli is computed using the local blade lift coefficient obtained from subroutine CLALF. The section c_ℓ includes the effect of local blade stall in the manner described in reference 1. The strengths of the internal vortex cylinders are now computed. The main program calls subroutine CNCOEF. The basic purpose of this subroutine is to apply the boundary condition of no flow through the duct camberline to compute the Fourier coefficients, C_n, representing the duct-bound vorticity γ_D. The six C_n coefficients are obtained from the solution of a matrix equation involving the A_n, A_n^*, B_n, B_n^*, D_n, D_n^* coefficients, the camber

coefficients, and the vortex cylinder strengths just computed. The three dependent matrices in this equation are computed and defined in subroutine CNCOEF. The equation is then solved for the C_n through use of the matrix inversion subroutine, MATRIX. If the matrix to be inverted is singular, an error message is printed and the subroutine transfers to a STOP statement.

Now that all the singularity distributions are known, the correction factors which are applied to the duct thickness-induced velocities and the centerbody-induced velocities are computed. Both correction factors need the velocities induced by the vortex cylinder trailing from the trailing edge of the duct and the duct-bound vorticity, γ_D. These induced axial velocities are obtained from subroutines GAMCYL and VTXRNG, respectively.

Subroutine VTXRNG is called again to compute the axial inflow to the fan due to the duct-bound vorticity, γ_D. Equation (A-9) of reference 5 is used with the C_n coefficients just computed.

The main program then sums the inflow velocities in each of the fan annuli obtained from all the singularity distributions and adds to these the free-stream velocity and the discontinuous portion of the velocity difference across each vortex cylinder ($\gamma_w/2$). The resulting total inflow in each annulus is compared with the initially assumed inflow. If all velocities do not agree within the prescribed convergence limit, the new inflow is assumed to be the average between the initial and computed velocities. The program then returns to the computation of new values of the local blade performance. Subroutine CNCOEF is called, new C_n coefficients determined, new corrections for the centerbody-induced velocities and duct-thickness-induced velocities are computed, VTXRNG is called to obtain the fan inflow due to the duct-bound vorticity, and a new total fan inflow obtained. This iterative process is repeated until convergence is obtained for all the fan annuli or until 50 iterations have been completed.

After convergence is obtained, the main program calls OUTPUT which immediately prints out the fan loading and inflow parameters. The force and moment coefficients are computed and output, and if the duct surface pressure coefficients are to be computed, subroutine PRESS is called. In PRESS, the velocity induced on the duct reference cylinder by all the

singularity distributions is computed. This includes the axial velocity induced by the duct-bound vorticity, γ_α, associated with the duct at angle of attack. These induced velocities are obtained from subroutine ALFRNG which uses equation (49) of reference 1. After summing all the continuous and discontinuous velocity components, Bernoulli's equation is used to compute the duct surface pressure coefficients. Control returns to OUTPUT where the pressure coefficients are printed. This completes the series of calculations and control is returned to the main program.

The above sequence of operations is arranged such that the calculations performed by INPUT provide all the parameters dependent only on the duct and propeller configuration. Thus, if performance of a given configuration at a number of advance ratios or angles of attack is desired, an index is read from a card following completion of the calculations in OUTPUT, the next values of J and α read, and control is returned to the part of the main program just after INPUT has been called, which avoids some recomputation. If a new configuration is to be analyzed, control returns to the statement in the main program calling INPUT, where a complete new case is read in.

3.3 Use of Program

The program is written in Fortran IV for the IBM 7094 computer. No tapes other than the standard input and output tapes are required. Typical execution times are approximately two minutes for the first case and one minute for each additional run utilizing the same geometry. A complete description of the input and output is presented in sections 4 and 5 respectively, and a program listing is given in section 7.

4. DESCRIPTION OF INPUT

This section contains a description of the input for the computer program. The information required on the cards is described in section 4.1. The remainder of the subsections below describe the manner in which some of the input quantities are determined for a given ducted fan configuration.

4.1 Input Data

The format of the input cards making up a normal run is shown in figure 4. In this figure the variable is given as well as the card column in which the punching of the value of the variable is begun and the format in which it is punched. In all input the format is set up for four figures to the right of the decimal point. If more significant figures are required, the decimal point may be moved to the left some appropriate amount. As long as the number is punched in the specified field of 10 columns, the decimal point may be punched in any column.

Card No. 1 contains any alphabetic and numeric information that is desired for identification purposes. This information is printed at the top of each page of output.

Card No. 2 contains information about the geometry of the duct. The first item (c/D) is the chord-to-diameter ratio. This value should be greater than zero and less than about 2.5. This upper limit is approximate and is necessary only because some coefficients built into the program must be extrapolated for $c/D > 2$. The next items on this card are the axial location of the fan within the duct (x_p/c), the maximum thickness-to-chord ratio of the airfoil section of the duct (t/c),[3] the ratio of the duct radius at the trailing edge to the fan radius (R/R_p), and the ratio of the centerbody radius at the fan station to the fan tip radius (R_{CB}/R_p) (or the fan hub-tip ratio). The last item is the convergence criterion (ϵ). The iteration will stop when the inflow profiles agree within $\epsilon \times 10^2$ percent. A suggested range for ϵ is $0.001 \leq \epsilon \leq 0.01$.

Card No. 3 contains the four Fourier coefficients (R_n) of a cosine series fit to the duct camberline. If the duct is uncambered, these four values are all zero.[4]

---

[3]The value of t/c must be within the range $0.06 \leq t/c \leq 0.24$ because of correction factors used in the calculation of duct pressure distribution. If t/c is outside this range, the pressure distribution will be slightly in error, but all other calculations will be correct.

[4]A detailed discussion of the manner of computing these four coefficients is given in section 4.2.

Card No. 4 contains the information necessary to define the centerbody. The first item is the centerbody length expressed as a fraction of the duct chord (ℓ_{CB}/c). The second item is the location of the centerbody nose in the duct coordinate system (x_{CB}/c). If the centerbody extends forward of the duct leading edge, $x_{CB}/c < 0$. The next item is the maximum radius of the centerbody expressed as a fraction of the centerbody length (r_{max}/ℓ_{CB}) and the last item on this card is the x location of r_{max} ($x_{r_{max}}$) in the duct coordinate system. Preparation of the input on this card must meet certain specifications which are discussed in detail in section 4.3.

Card No. 5 contains six quantities. The first, NBLD, is the number of fan blades. This number must be greater than zero. The second item, NZ, is the number of equal area annuli into which the fan annulus is divided. The limitation on NZ is $2 \leq NZ \leq 24$. The third item, NZP, is the number of stations in the input table of fan blade characteristics. The limitations on NZP are $2 \leq NZP \leq 24$. The next quantity is IR, the number of x-stations at which the duct surface pressure distribution is to be calculated. At a given x/c, the pressure coefficient is computed on the inside and outside surface of the duct. The value of IR must be in the range $1 \leq IR \leq 25$.[5] The next item, NPRES, is an index which controls the form of the surface pressure coefficient. If NPRES = 1, the surface pressure coefficient is based on free-stream dynamic pressure. If NPRES = 2, the surface pressure coefficient is based on the propeller tip speed. The last quantity, NPRINT, is an output index which controls the quantity of output. For normal runs, NPRINT = 0. If NPRINT = 1, an extra page of optional output is developed which contains a table of the components of the inflow to the propeller. This optional output is described in the output section of this report. Another output option is available, but the authors recommend that it not be used, as it is useful only for diagnostic purposes. If NPRINT = 10, a page listing all of the Fourier cosine series coefficients for the u and v

---

[5]The input controlling the pressure distribution calculation has been set up for ease of repetitive running with the same configuration. Consequently, IR must be 1 or greater, whether or not any pressures are to be computed. An index on the last card indicates the requirement for computing pressures.

velocities induced at the duct reference cylinder is printed. If NPRINT = 11, both of the above optional pages are output. In most cases of interest, NPRINT will be identically zero.

Card No. 6 contains the fan radii (r/R_p) at which the blade characteristics are to be input. There are NZP entries in this table, so if NZP > 8, the other entries in the table must be included on following cards. For example, if NZP = 17, three cards are required. The first two cards will have eight fields each and the third card one field. The values must be put in order of increasing radius ratio. The first entry in the table should be the value of r/R_p at the root or hub, which nominally is equal to R_{CB}/R_p, the value on Card No. 2. The last value in the table should be $r/R_p \approx 1.0$. There cannot be more than 24 entries in the table.

Card No. 7 contains values of the fan blade chord (b/R_p) at the radial stations corresponding to the values on Card No. 6. With eight fields per card, there will be as many cards here as in the r/R_p case (Card No. 6).

Card No. 8 contains the fan blade pitch angle (β) in degrees at the radial stations corresponding to the values on Card No. 6. The pitch angle is the blade twist angle measured from the plane of rotation to the zero lift line of the local blade section. The number of cards here will be the same as the number of r/R_p cards (Card No. 6).

Card No. 9 contains the blade section thickness-to-chord ratio at the radial stations corresponding to those on Card No. 6. The number of cards here will be the same as the number of r/R_p cards (Card No. 6).

Card No. 10 contains the values of x/c at which the duct surface pressure coefficients are to be calculated. This card should contain IR values, and if IR > 8, the ninth and succeeding values should be put on following cards in the same format as shown for Card No. 10. The values should be put in ascending order with the limitation $0 \leq x/c \leq 1.0$. Since the inner duct surface pressure distribution has a discontinuity at the fan due to the pressure jump aft of the fan, it is desirable to include x/c values just upstream and downstream of the fan. No numerical problem occurs, however, if the x/c value exactly at the fan station is input, since the program uses the total

pressure upstream of the fan to compute the inner duct pressure coefficient at the fan station.

Card No. 11 is the last card required for a particular configuration. The first item on this card is a run identification number, NRUN. The only restrictions on NRUN are that NRUN $\leq$ 9999 and NRUN $\neq$ 0. The second quantity is the index NPHI, which is the number of azimuth stations around the duct at which the surface pressure coefficients are to be calculated. The limitation is that $0 \leq$ NPHI ≤ 5. If NPHI = 0, no pressure calculation will be performed for this run. The next quantity is the advance ratio, J. The advance ratio must be greater than zero.[6] The duct angle of attack, α, in degrees is the next item. The only requirement is that $\cos \alpha \neq 0$. The remaining five fields on the card should contain the azimuth angles, ϕ, in degrees, at which pressure distributions are to be calculated. There should be NPHI values of ϕ, and due to the symmetry of the flow, $0 \leq \phi \leq 180^{\circ}$.

If only one run is to be made, the input deck is complete with Card No. 11. If two or more runs are to be made, the card arrangement following Card No. 11 for stacking runs is as follows:

(1) If the same ducted fan configuration is to be investigaged at a different advance ratio or angle of attack or if different values of ϕ are of interest, only one additional card is required to initiate the new run. This card has the same format as Card No. 11. The run number can be changed to identify the new run. Each succeeding run with the same configuration requires the one additional card, and this card can be repeated as many times as desired.

(2) If a different duct and/or fan configuration is to be investigated, the card following Card No. 11 must be blank. The new case is then loaded as a deck consisting of Card Nos. 1 through 11.

A sample set of input data illustrating the program options is shown in figure 6.

---

[6]A value of J = 0 causes numerical problems in the machine. To compute a zero advance ratio (hover) case, set J = 0.01.

4.2 Duct Camber and Thickness

The duct thickness and camber are required on the second and third cards. A brief discussion is given below with regard to the selection of these parameters. In order to give a reasonably wide latitude to the use of the program while at the same time not storing a great quantity of airfoil data in the program, the specifications of duct thickness and camber were separated.

The thickness distribution is taken to be the local profile thickness as measured from the camberline. For purposes of including thickness effects in the performance calculations, the thickness distribution is specified within the program as that of a symmetrical four-digit NACA airfoil which has an analytical expression for the variation of thickness with distance along the chord. This distribution is completely specified by one parameter, the ratio of maximum thickness to chord. In selecting a value for a given duct configuration, it is suggested that the $(t/c)_{max}$ value be chosen which will yield the best fit to the actual duct shape along the inner forward portion of the duct, while still giving a reasonable fit over the other portions of the section. Tables of thickness distribution for various $(t/c)_{max}$ can be obtained from Appendix I of reference 11.

The camber coefficients required in the third card are computed according to the methods given below. Figure 1 indicates the notation and coordinate systems. The axial coordinates are x, measured from the leading edge with the range 0 to c; θ, measured from the leading edge with the range 0 to π; and x_s, measured from $x = c/2$ with the range $-c/2$ to $+c/2$. The relation between θ and x_s is given by

$$\cos\theta = -2x_s/c \tag{45}$$

The local slope of the geometric camberline is

$$\frac{dr_c}{dx_s} = \sum_{n=o}^{3} R_n \cos(n\theta) \tag{46}$$

This can be integrated to give the camberline shape as

$$\frac{r_c - R}{c} = -R_o\left(\frac{1 + \cos\theta}{2}\right) + R_1\left(\frac{1 - \cos^2\theta}{4}\right)$$

$$+ R_2\left(\frac{1}{6} + \frac{1}{2}\cos\theta - \frac{1}{3}\cos^3\theta\right)$$

$$+ R_3\left(-\frac{1}{4} + \frac{3}{4}\cos^2\theta - \frac{1}{2}\cos^4\theta\right) \tag{47}$$

The camberline radius at the trailing edge is identically that of the duct reference cylinder, which passes through the trailing-edge radius; that is, at $\theta = \pi$, $r_c - R = 0$. Four other points along the camberline must be selected and their r_c values put into the above equation to obtain four simultaneous equations for the four R_n coefficients. It is suggested on the basis of past experience that these points be nearly equally spaced for best results; that is, at $x/c = 0$, 1/4, 1/2, and 3/4. If these four points are chosen, the R_n coefficients can be calculated from the following equations.

$$\begin{bmatrix} R_o \\ R_1 \\ R_2 \\ R_3 \end{bmatrix} = \begin{bmatrix} (-1\ \frac{2}{3}) & (1\ \frac{1}{3}) & (0) & (-1\ \frac{1}{3}) \\ (-3\ \frac{1}{3}) & (5\ \frac{1}{3}) & (-4) & (5\ \frac{1}{3}) \\ (-2) & (4) & (0) & (-4) \\ (-1\ \frac{1}{3}) & (5\ \frac{1}{3}) & (-8) & (5\ \frac{1}{3}) \end{bmatrix} \times \begin{bmatrix} \left(\frac{r_c - R}{c}\right)_o \\ \left(\frac{r_c - R}{c}\right)_{1/4} \\ \left(\frac{r_c - R}{c}\right)_{1/2} \\ \left(\frac{r_c - R}{c}\right)_{3/4} \end{bmatrix} \tag{48}$$

If the camberline is not well behaved (for example, if it should have a hook near the leading edge), four other values of x/c may be necessary to give the best overall fit to the actual camberline. Several tries may be necessary to select the right combination of four points.

If the duct has no camber, all the R_n coefficients are input equal to zero.

4.3 Centerbody

The centerbody shape is approximated by a Rankine body, figure 5. Because the centerbody model is so simple, there are certain restrictions on the input. It is necessary that x_{CB}/c, r_{max}/ℓ_{CB}, ℓ_{CB}/c, and $x_{r_{max}}/c$ be input such that the centerbody half-length (distance between the nose and the point of maximum radius) is greater than the maximum radius; that is

$$x_{r_{max}} - x_{CB} > r_{max}$$

or in terms of the nondimensional ratios,

$$\left(\frac{x_{r_{max}}}{c}\right)\left(\frac{c}{\ell_{CB}}\right) - \left(\frac{x_{CB}}{c}\right)\left(\frac{c}{\ell_{CB}}\right) > \left(\frac{r_{max}}{\ell_{CB}}\right)$$

The effect of the centerbody on the ducted fan performance cannot be eliminated entirely from the program, but it can be made negligibly small by inputing the appropriate geometry. Thus, if the user wishes to remove the effect of the centerbody, the centerbody parameters should be input according to the following rules:

$$\frac{x_{CB}}{c} = \frac{x_p}{c} - 0.02$$

$$\frac{\ell_{CB}}{c} = 0.04$$

$$\frac{r_{max}}{\ell_{CB}} = 0.005$$

$$\frac{x_{r_{max}}}{c} = \frac{x_p}{c}$$

If these values are used, the area inside the fan hub radius (πR_{CB}^2) will be unloaded unless R_{CB} is set equal to zero. It should be noted that because of the formulation of the program, the leading edge of the centerbody should be forward of the fan station in order to avoid numerical problems; that is

$$\frac{x_{CB}}{c} < \frac{x_p}{c}$$

Generally, in approximating the centerbody shape, the user should try to fit the portion between the nose and the fan station best. This will give the best results for the inflow to the fan. If possible, the total length should be approximated, but if compromise is necessary, the portion ahead of the fan is more important than that aft of the fan. If the maximum centerbody radius occurs aft of the fan, some judgment must be used to decide on the position and value of the maximum radius. Remembering that the purpose of the centerbody model is to approximate the blockage effect on the inflow to the fan, the best centerbody model is a compromise to give the closest fit to both the maximum radius and the radius at the fan station.

4.4 Fan Blade Characteristics

A simple method to account for local blade stall is described in reference 1. This method involves a table of $c_{\ell_{max}}$ versus t/c derived from figure 2(b) of reference 1. This table is built into Subroutine CLALF. If the user wishes to change this table, he should use the following procedure.

The local section thickness-to-chord ratio is called array TCB with 10 entries ranging from TCB(1) = 0 to TCB(10) = 0.34. The blade section $c_{\ell_{max}}$ is called array CLMX, with 10 entries corresponding to the TCB array. The table is easily changed by changing corresponding entries of TCB and CLMX. It is advised that the total number of entries (10) in the table be unchanged. If the user would like to remove the effect of blade stall and assume that the blade section c_{ℓ_α} is constant and equal to 2π at any angle of attack, every entry in the array CLMX should be set equal to some large number, for example, 10.0.

5. DESCRIPTION OF OUTPUT

The nominal output consists of three pages of data, to which can be added one additional page of optional output. The pages are numbered and each page has the run number at the top plus the identification information which is punched in the first card of the input deck.

A typical set of output including one page of optional output is shown in the sample case (figure 7).

The first page is numbered PAGE 0. It contains a listing of the input data plus a table of definitions of symbols. The input listed on the line entitled DUCT GEOMETRY is the duct chord-to-diameter ratio (C/D), the axial position of the fan station as a fraction of duct chord (XP/C), the duct maximum thickness-to-chord ratio (T/C), the ratio of the duct trailing-edge radius to fan radius (RTE/RP), and the ratio of centerbody radius in the plane of the fan to the fan radius (RCB/RP). The next line lists the geometric camber coefficients, R_n. The next group of data indicates the fan blade geometry input into the program. The number of blades is given, and a table of (nondimensional) blade chord (B/RP), blade pitch angle (BETA), and thickness-to-chord ratio (TH/CHD) versus nondimensional radius (R/RP) is given. This information is followed by the centerbody geometry which consists of the ratio of centerbody length to the duct chord (LCB/C), the axial location of the centerbody nose (XCB/C), the maximum radius of the centerbody in fraction of centerbody length (RMAX/LCB), and the axial location of the maximum radius (X(RMAX)/C). The next line contains the convergence criterion (EPSILON). This is followed by a table of symbols and their definitions.

Page 1 is optional output (NPRINT = 1) and is so noted at the top of the page. This page lists the inflow velocity results obtained after convergence of the iterative process. For convenience, the duct characteristics printed on the previous page are again printed here at the top of the page with the addition of the ratio of the fan disk area to the duct exit area (AP/A). The next line lists the four Fourier coefficients of the effective camber, R_n^*. Following these are the duct angle of attack in degrees (ALPHA), the advance ratios $J = V/nD_p$ and $J' = V/\omega R$, and the values of $J \cos \alpha$ and $J' \cos \alpha$. The following table lists the induced inflow velocity in each of the annuli (N). At the center of each of the annuli, denoted R/RP, the inflow is made up of the velocities induced by the duct thickness (UQD/V), the duct-bound vorticity (UGD/V), the vortex cylinder trailing from the fan tip (UG/V), and the centerbody (UCB/V). The final column indicates the local blade bound vorticity, Γ/RV, (GAMMA/RV). The numbers in parentheses above UQD/V and UCB/V are the correction factors for

the thickness distribution and the centerbody, respectively. The last output on the page is the number of iterations required for convergence, and the convergence criterion. When the duct is at angle of attack, the reference V in the table is actually $V \cos \alpha$ or $\overline{V}$.

The next page, page 2, lists the fan and duct performance. Again, the duct characteristics are listed at the top of the page, together with the angle of attack and advance ratios. The table that follows lists at each of the fan annuli centers (R/RP) the total inflow velocity (U/V), the strength of the vortex cylinder shed from the outer radius of the annulus (GAM/V), the angle of attack of the blade, in degrees, as measured from the line of zero lift of the blade, and the total pressure rise divided by the free-stream dynamic head (DELTA P/Q). When the duct is at angle of attack, the nondimensional inflow results, blade bound vorticity, and fan pressure rise are based on $\overline{V} = V \cos \alpha$, rather than V. Following the table are various force and moment coefficients preceded by note (A) or (B). The thrust and normal force and moment coefficients opposite (A) are defined as

$$C_T = \frac{T}{qA}$$

$$C_N = \frac{N}{qA}$$

$$C_M = \frac{M}{qAR}$$

where the moment center is at the center of the duct ($x = c/2$, $r = 0$). The coefficients opposite (B) are defined using the fan rotational speed and tip diameter as

$$C_T = \frac{T}{\rho n^2 D_p^4}$$

$$C_N = \frac{N}{\rho n^2 D_p^4}$$

$$C_M = \frac{M}{\rho n^2 D_p^5}$$

The propeller thrust coefficient is CTP(D). The duct thrust coefficient based only on the thrust on the duct-bound singularity distributions is given as CTD(P). The sum of these two is CTDP. The duct-thrust coefficient including the pressure thrust due to the fan tip pressure rise acting on the inner duct surface aft of the propeller as well as the thrust on the singularity distributions is noted CTD(P)'. The sum of this duct thrust and the propeller thrust is noted CTDP'. The normal-force coefficient is CNDP and the moment coefficient is CMDP.

The thrust coefficients with and without the pressure thrust added to the inner duct surface are presented in the output. The results in reference 5 show that inclusion of the pressure thrust on the duct gives better agreement with measured duct-thrust coefficients and pressure distributions on the inner duct surface. Therefore, all thrust results presented in section 9, Data Comparisons, include the pressure thrust on the duct. Both thrust results are included in the output so that the user can see the full effect of the pressure rise aft of the fan.

The last items on page 2 are several notes. Notes (A) and (B) are self-explanatory. The note denoted with an asterisk (*) corresponds to any asterisk printed in the table. This note is printed to bring attention to the fact that the blade sections are stalled in the annuli so noted.

The last page of output, page 3, contains the duct surface pressure distribution if it has been requested (NPHI $\neq$ 0). Again, the duct characteristics and flow conditions are printed at the top of the page. The next line lists the azimuth angles, ϕ, in degrees. Directly under the azimuth angles are the corresponding pressure coefficients on the inside (CP(IN)) and outside (CP(OUT)) surfaces of the duct. The pressure coefficients are based on the free-stream dynamic pressure (NPRES = 1)

$$C_p = 1 - \left(\frac{u_s}{V}\right)^2$$

or the propeller tip speed (NPRES = 2)

$$C_p = \frac{V^2 - u_s^2}{2n^2D_p^2}$$

according to the note printed as the last line on this page.

This completes the output for one complete run. The pages that follow depend on how runs are stacked. If the same duct and fan configuration is to be run at new values of advance ratio, angle of attack, or azimuth angles, the additional output will be the same as above starting with page 1. If some change has been made in the configuration, then the complete set of output from page 0 listing the new input data will follow.

6. DESCRIPTION OF ERROR MESSAGES AND STOPS

A number of error messages and stops are built into the program so that if certain conditions occur, the computation will stop and some indication of why it was stopped will be printed on the output.

Immediately after reading in the input data, several checks are made on specific quantities. If NPHI > 5, it is set equal to 5 and execution continues with no error message.

If the number of propeller blades (NBLD) is less than or equal to zero, the following message is printed:

"NUMBER OF BLADES IN ERROR, NBLD = -xx"

If the convergence criterion, ϵ, is less than or equal to zero, the following message is printed:

"CONVERGENCE CRITERION MUST BE GREATER THAN 0.0"

If the angle of attack, α, is greater than or equal to 90°, the following message is printed:

"ANGLE OF ATTACK MUST BE LESS THAN 90.0 DEGREES"

If the advance ratio, J, is less than or equal to zero, the following message is printed:

"ADVANCE RATIO MUST BE GREATER THAN 0.0"

In Subroutine CLALF the propeller blade thickness-to-chord ratios are tested. If any do not fall in the range $0.0 \leq t/c \leq 0.34$, the following message is printed:

"THE BLADE THICKNESS-TO-CHORD RATIO IS OUTSIDE THE RANGE 0.0 TO 0.34"

Two error messages associated with computation of a centerbody shape are built into Subroutine HUB. If the centerbody geometry is input such that the requirements listed in section 4.3 are not met, the following message is printed:

"INPUT CENTERBODY DIMENSIONS IN ERROR"

If Subroutine HUB is unable to converge on the source and sink locations, the following message is printed:

"SUBROUTINE HUB UNABLE TO COMPUTE CENTERBODY GEOMETRY"

If any or all of the above messages are printed, the following message is also printed:

"ERROR - EXECUTION TERMINATED"

and the program terminates execution at a STOP statement in the Main program.

The above errors are due to errors in the input data and should be simple to correct. If the program fails to converge on the inflow profile in 50 iterations, two more iterations are made. The results of iterations number 51 and 52 are output, including the optional page showing the components of the induced inflow velocities. The following messages are then printed:

"PROGRAM DID NOT CONVERGE ON INFLOW PROFILE"

"ERROR - EXECUTION TERMINATED"

and the computation terminates at the STOP statement in the Main program.

The above error is rare and has occurred in the authors' experience only under conditions of small advance ratio, $J \cos \alpha$, and small blade pitch angles. If all the input appears correct, increase $J \cos \alpha$ by increasing J or decreasing α and rerun the same case again. Also check the convergence criterion (ϵ), and consider increasing it to relax the tolerance on convergence. Experience has shown that ϵ

should not be larger than 0.01. There is approximately 10 percent difference between force and moment coefficients computed with $\epsilon = 0.01$ and $\epsilon = 0.10$. An example of a case that consistently did not converge was the Doak ducted fan (ref. 12) with 11° pitch at advance ratios less than 0.5 in axial flow.

If the duct thickness-to-chord ratio is outside the range $0.06 \leq t/c \leq 0.24$, the following warning is printed:

"DUCT PRESSURE DISTRIBUTION CALCULATION ASSUMES
T/C = x.xxx"

7. PROGRAM LISTING

The ducted fan performance analysis program is written in Fortran IV for the IBM 7094 computer. The program consists of the main program and 20 subroutines. Each source deck is identified in columns 73-80 by a four-character identification (NExx) indicating the number of the subroutine and a three-digit number sequencing the cards within the subroutine. The program listing is given in the following pages. The table below will act as a table of contents for the program listing.

Program	Identification	Page No.
MAIN	NE00	37
INPUT	NE01	40
PKL	NE02	44
ELLIPS	NE03	47
LAMBDA	NE04	53
HUB	NE05	61
CAMBER	NE06	63
PROP	NE07	64
CLALF	NE08	65
ARCSIN	NE09	67
MATRIX	NE10	68
FOURCS	NE11	69
SRCRNG	NE12	71
VTXRNG	NE13	73
ALFRNG	NE14	77
GAMCYL	NE15	81

Program	Identification	Page No.
BNCOEF	NE16	83
ANCOEF	NE17	84
CNCOEF	NE18	87
PRESS	NE19	89
OUTPUT	NE20	93

```
C     DUCTED PROPELLER ANALYSIS PROGRAM                                 NE00 001
C                                                                       NE00 002
      DIMENSION B(6),BS(6),SA(6),SAS(6),P(6,6)                          NE00 003
      DIMENSION C(6),A(25,6),AS(25,6),D(6),DS(6),SC(6),GS(6),H(6)       NE00 004
      DIMENSION RB(25),BR(25),BTA(25),TCBLD(25),RA(25),XPRES(25),PHI(5) NE00 005
      DIMENSION UG(25),UQD(25),UGD(25),UV(25),UCB(25),VCB(25),          NE00 006
     1          UGP(25,25),UGA(25),GV(25),GRV(25),CPP(5,25),CPM(5,25)   NE00 007
      DIMENSION ALPHA(25),STALL(25),JSTL(25),TALK(20)                   NE00 008
C                                                                       NE00 009
      COMMON MZZZ,CD,R0,R1,R2,R3,PI,B,BS,SA,SAS,P                       NE00 010
      COMMON/NEAR1/ NRUN,NBLD,NZ,MZ,NPRES,IR,NTIME,NERR,NPAG,NPHI,NPRINTNE00 011
      COMMON/NEAR2/ C,A,AS,D,DS,SC,GS,H                                 NE00 012
      COMMON/NEAR3/ RRP,XP,Z,BLD,RB,BR,BTA,TCBLD,TC,RCBRP,APA,ALF,XPRES,NE00 013
     1              RA,XCB,XR,ELCBC,RMAX,PHI,CORJ,CORCB                 NE00 014
      COMMON/NEAR4/ UG,UQD,UGD,UV,UCB,VCB,UGP,UGA,GV,GAM,GRV,CPP,CPM    NE00 015
      COMMON/NEAR5/ ARJ,ARJP,EPS,RAD,CL,ALPHA,STALL,JSTL,TALK           NE00 016
C                                                                       NE00 017
  120 FORMAT(2I5,7F10.6)                                                NE00 018
  997 FORMAT (///10X,42HPROGRAM DID NOT CONVERGE ON INFLOW PROFILE///)  NE00 019
  998 FORMAT (///10X,28HERROR - EXECUTION TERMINATED///)                NE00 020
C                                                                       NE00 021
C      INITIALIZATION OF SUBROUTINES                                    NE00 022
C                                                                       NE00 023
      DUM=0.0                                                           NE00 024
      MZZZ=0                                                            NE00 025
      CALL ELLIPS (DUM,DUM,DUM)                                         NE00 026
      CALL LAMBDA (DUM,DUM,DUM)                                         NE00 027
      CALL PKL (DUM,P)                                                  NE00 028
      CALL CLALF (0)                                                    NE00 029
      MZZZ=1                                                            NE00 030
C                                                                       NE00 031
      PI=3.1415926                                                      NE00 032
      RAD=180./PI                                                       NE00 033
C                                                                       NE00 034
   29 NERR=0                                                            NE00 035
      CALL INPUT                                                        NE00 036
      IF (NERR) 28,28,999                                               NE00 037
C                                                                       NE00 038
   28 CSALF=COS(ALF/RAD)                                                NE00 039
      ARJV=ARJ                                                          NE00 040
      ARJVP=ARJP                                                        NE00 041
      ARJ=ARJ*CSALF                                                     NE00 042
      ARJP=ARJP*CSALF                                                   NE00 043
      DO 30 K=1,NZ                                                      NE00 044
   30 UV(K)= 2.0                                                        NE00 045
      NTIME=1                                                           NE00 046
      CORCB=2.0                                                         NE00 047
   31 DO 32 K=1,NZ                                                      NE00 048
      BPI=RB(K)/ARJP/UV(K)                                              NE00 049
      ABPI=ATAN (BPI)                                                   NE00 050
      ALPHA(K)=(ABPI-BTA(K))*RAD                                        NE00 051
      BPI=BPI*BPI                                                       NE00 052
      BPI=SQRT (BPI+1.0)                                                NE00 053
      J=K                                                               NE00 054
      CALL CLALF  (J)                                                   NE00 055
      IF (NERR-1) 25,999,999                                            NE00 056
   25 CONTINUE                                                          NE00 057
      GRV(K)=0.5*CL*BR(K)*UV(K)*BPI                                     NE00 058
   32 CONTINUE                                                          NE00 059
```

```
   33 GV(NZ)=GRV(NZ)*BLD/PI/ARJP+1.0                                NE00 060
      AGV= 1.                                                       NE00 061
      IF(GV(NZ))133,233,233                                         NE00 062
  133 GV(NZ)=-GV(NZ)                                                NE00 063
      AGV=-1.                                                       NE00 064
  233 GV(NZ)=AGV*SQRT (GV(NZ))-1.                                   NE00 065
      AGV= 1.                                                       NE00 066
      SGV=1.0                                                       NE00 067
   34 DO 35 J=1,MZ                                                  NE00 068
      K=NZ-J                                                        NE00 069
      L=K+1                                                         NE00 070
      SGV=SGV+GV(L)                                                 NE00 071
      SGV2=SGV*SGV                                                  NE00 072
      GRVD=GRV(K)-GRV(L)                                            NE00 073
      GRVD=GRVD*BLD/PI/ARJP                                         NE00 074
      DUM=SGV2+GRVD                                                 NE00 075
      AGV=1.0                                                       NE00 076
      IF (DUM.LT.0.0) AGV=-1.0                                      NE00 077
      GV(K)=AGV*SQRT(AGV*DUM)-SGV                                   NE00 078
   35 CONTINUE                                                      NE00 079
      DO 38 N=1,6                                                   NE00 080
      SA(N)=0.                                                      NE00 081
   38 SAS(N)=0.                                                     NE00 082
      DO 40 N=1,6                                                   NE00 083
      DO 39 M=1,MZ                                                  NE00 084
      SA(N)=SA(N)+A(M,N)*GV(M)                                      NE00 085
   39 SAS(N)=SAS(N)+AS(M,N)*GV(M)                                   NE00 086
   40 CONTINUE                                                      NE00 087
C                                                                   NE00 088
      DO 41 N=1,6                                                   NE00 089
      SA(N)=SA(N) + D(N)*CORCB                                      NE00 090
   41 SAS(N)=SAS(N) + DS(N)*CORCB                                   NE00 091
      GAM=GV(NZ)                                                    NE00 092
   97 CALL CNCOEF (GAM,C)                                           NE00 093
      DO 141 N=1,6                                                  NE00 094
      SA(N)=SA(N) - D(N)*CORCB                                      NE00 095
  141 SAS(N)=SAS(N) - DS(N)*CORCB                                   NE00 096
C                                                                   NE00 097
C      COMPUTE CORRECTION FOR LOW ADVANCE RATIOS  (CORJ)            NE00 098
C                                                                   NE00 099
      DUM=XPRES(1)                                                  NE00 100
      DUMM=RA(1)                                                    NE00 101
      XPRES(1)=XP                                                   NE00 102
      RA(1)=1.0                                                     NE00 103
      CALL GAMCYL (CD,XP,1,RB,UG,1,XPRES,UGP,RRP,RA)                NE00 104
      IRC=-1                                                        NE00 105
      CALL VTXRNG (CD,XP,IRC,RB,C,UGD,XPRES,P)                      NE00 106
      CORJ=UGD(1)*GAM + UGP(1,1)*GAM + 1.0                          NE00 107
       IF (CORJ.LT.1.0) CORJ=1.0                                    NE00 108
C                                                                   NE00 109
C      COMPUTE CORRECTION FOR CENTERBODY INDUCED VELOCITIES (CORCB) NE00 110
C                                                                   NE00 111
      RA(1)=0.0                                                     NE00 112
      CALL GAMCYL (CD,XP,1,RA,UG,0,XPRES,UGP,RRP,RA)                NE00 113
      IRC=1                                                         NE00 114
      CALL VTXRNG (CD,XP,IRC,RA,C,UGD,XPRES,P)                      NE00 115
      CORCB=UGD(1)*GAM+UGP(1,1)*GAM+1.0                             NE00 116
      DO 142 J=1,MZ                                                 NE00 117
  142 CORCB=CORCB+GV(J)/2.0                                         NE00 118
```

```
      IF (CORCB.LT.1.0) CORCB=1.0                                       NE00 119
      XPRES(1)=DUM                                                      NE00 120
      RA(1)=DUMM                                                        NE00 121
C                                                                       NE00 122
      CDP=CD*RRP                                                        NE00 123
      CALL VTXRNG (CDP,XP,NZ,RB,C,UGD,XPRES,P)                          NE00 124
   98 IRT=0                                                             NE00 125
      SUMG=0.                                                           NE00 126
      DO 42 J=1,MZ                                                      NE00 127
   42 SUMG=SUMG+GV(J)                                                   NE00 128
      DO 45 J=1,MZ                                                      NE00 129
      UNV=1.+(UG(J)*GAM)+(UGD(J)*GAM)+UQD(J)*CORJ+UCB(J)*CORCB+SUMG/2.0 NE00 130
      SUMG=SUMG-GV(J)                                                   NE00 131
      DELV=UV(J)-UNV                                                    NE00 132
      DELV=DELV/UNV                                                     NE00 133
      DELV=ABS (DELV)                                                   NE00 134
      IF(DELV-EPS) 45,45,44                                             NE00 135
   44 IRT=IRT+1                                                         NE00 136
   45  UV(J)=(UV(J)+UNV)/2.                                             NE00 137
      J=NZ                                                              NE00 138
      UNV=1.+(UG(J)*GAM)+(UGD(J)*GAM)+UQD(J)*CORJ+UCB(J)*CORCB          NE00 139
      DELV=UV(NZ)-UNV                                                   NE00 140
      DELV=DELV/UNV                                                     NE00 141
      DELV=ABS (DELV)                                                   NE00 142
       UV(NZ)=(UV(NZ)+UNV)/2.                                           NE00 143
      IF(DELV-EPS) 46,46,47                                             NE00 144
   47 IRT=IRT+1                                                         NE00 145
   46 IF(IRT) 50,60,50                                                  NE00 146
   50 NTIME=NTIME+1                                                     NE00 147
      IF (NTIME-51) 31,60,60                                            NE00 148
   60 CALL OUTPUT                                                       NE00 149
      IF (NTIME-51) 68,69,68                                            NE00 150
   69 NERR=0                                                            NE00 151
      GO TO 31                                                          NE00 152
   68 IF (NERR) 70,70,996                                               NE00 153
   70 READ (5,120) NRUN,NPHI,ARJ,ALF,(PHI(J),J=1,5)                     NE00 154
      ARJP=ARJ/PI/RRP                                                   NE00 155
      NPAG=0                                                            NE00 156
      IF (NPHI.GT.5) NPHI=5                                             NE00 157
      IF (NRUN) 28,29,28                                                NE00 158
C                                                                       NE00 159
C      ERROR STOP                                                       NE00 160
  996 WRITE (6,997)                                                     NE00 161
  999 WRITE (6,998)                                                     NE00 162
      STOP                                                              NE00 163
C                                                                       NE00 164
      END                                                               NE00 165
```

```
      SUBROUTINE INPUT                                                  NE01 001
C                                                                       NE01 002
      DIMENSION B(6),BS(6),SA(6),SAS(6),P(6,6)                          NE01 003
      DIMENSION C(6),A(25,6),AS(25,6),D(6),DS(6),SC(6),GS(6),H(6)       NE01 004
      DIMENSION RB(25),BR(25),BTA(25),TCBLD(25),RA(25),XPRES(25),PHI(5) NE01 005
      DIMENSION UG(25),UQD(25),UGD(25),UV(25),UCB(25),VCB(25),          NE01 006
     1          UGP(25,25),UGA(25),GV(25),GRV(25),CPP(5,25),CPM(5,25)   NE01 007
      DIMENSION ALPHA(25),STALL(25),JSTL(25),TALK(20)                   NE01 008
      DIMENSION RE(4)                                                   NE01 009
C                                                                       NE01 010
      COMMON MZZZ,CD,R0,R1,R2,R3,PI,B,BS,SA,SAS,P                       NE01 011
      COMMON/NEAR1/ NRUN,NBLD,NZ,MZ,NPRES,IR,NTIME,NERR,NPAG,NPHI,NPRINTNE01 012
      COMMON/NEAR2/ C,A,AS,D,DS,SC,GS,H                                 NE01 013
      COMMON/NEAR3/ RRP,XP,Z,BLD,RB,BR,BTA,TCBLD,TC,RCBRP,APA,ALF,XPRES,NE01 014
     1              RA,XCB,XR,ELCBC,RMAX,PHI,CORJ,CORCB                 NE01 015
      COMMON/NEAR4/ UG,UQD,UGD,UV,UCB,VCB,UGP,UGA,GV,GAM,GRV,CPP,CPM    NE01 016
      COMMON/NEAR5/ ARJ,ARJP,EPS,RAD,CL,ALPHA,STALL,JSTL,TALK           NE01 017
C                                                                       NE01 018
  101 FORMAT(15H1    RUN NUMBER,I5,49X,4HPAGE,I3//)                     NE01 019
  102 FORMAT(12H        INPUT/5X,65HDUCT GEOMETRY...    C/D       XP/C  NE01 020
     1   T/C       RTE/RP    RCB/RP)                                    NE01 021
  103 FORMAT(10X,20HCAMBER COEFFICIENTS,,4F10.6//)                      NE01 022
  104 FORMAT(5X,22HPROPELLER GEOMETRY... ,I3,1X,6HBLADES//)             NE01 023
  105 FORMAT(25X,34HR/RP       B/RP       BETA     TH/CHD)              NE01 024
  106 FORMAT (/5X,47HDEFINITION OF SYMBOLS USED IN TABULAR OUTPUT...//) NE01 025
  107 FORMAT(10X,66HR/RP       RADIAL PROPELLER STATION IN FRACTION OF PRNE01 026
     1OPELLER RADIUS)                                                   NE01 027
  108 FORMAT(10X,57HB/RP       PROPELLER CHORD IN FRACTION OF PROPELLER RNE01 028
     1ADIUS)                                                            NE01 029
  109 FORMAT(10X,36HBETA       PROPELLER PITCH IN DEGREES)              NE01 030
  110 FORMAT (10X,50HTH/CHD     PROPELLER BLADE THICKNESS-TO-CHORD RATIO)NE01 031
  111 FORMAT (/5X,22HCENTERBODY GEOMETRY...2X5HLCB/C,5X5HXCB/C,3X8HRMAX/NE01 032
     1LCB,2X9HX(RMAX)/C/25X,4F10.5)                                     NE01 033
  112 FORMAT (/5X,35HCONVERGENCE CRITERION...  EPSILON =,F7.5)          NE01 034
  114 FORMAT (10X1HV9X20HFREE STREAM VELOCITY)                          NE01 035
  122 FORMAT(10X,31HU          TOTAL INFLOW VELOCITY)                   NE01 036
  124 FORMAT(10X,48HGAM/V      STRENGTH OF INTERNAL VORTEX CYLINDER N)  NE01 037
  125 FORMAT(10X,34HALPHA      ANGLE OF ATTACK, DEGREES)                NE01 038
  126 FORMAT(10X,60HDELTA P/Q RISE IN TOTAL PRESSURE ACROSS PROPELLER NONE01 039
     1RMALIZED/25X,31HON FREE STREAM DYNAMIC PRESSURE)                  NE01 040
  127 FORMAT(10X,53HCTP(D)     THRUST COEFFICIENT ON PROPELLER IN THE DUCNE01 041
     1T)                                                                NE01 042
  128 FORMAT(10X,40HCTD(P)     THRUST COEFFICIENT ON THE DUCT)          NE01 043
  129 FORMAT(10X,34HCTDP       TOTAL THRUST COEFFICIENT)                NE01 044
  130 FORMAT(10X,65HCTD(P)'    THRUST COEFFICIENT ON DUCT INCLUDING PRESSNE01 045
     1URE THRUST ON/25X,29HTHE DUCT AFT OF THE PROPELLER)               NE01 046
  131 FORMAT (10X,60HCTDP'      TOTAL THRUST COEFFICIENT INCLUDING PRESSUNE01 047
     1RE THRUST)                                                        NE01 048
  132 FORMAT (10X,40HCNDP       TOTAL NORMAL FORCE COEFFICIENT)         NE01 049
  133 FORMAT (10X,43HCMDP       TOTAL PITCHING MOMENT COEFFICIENT)      NE01 050
  134 FORMAT (10X,23HJ          ADVANCE RATIO)                          NE01 051
  135 FORMAT (10X,43HJ'         RATIO OF V TO PROPELLER TIP SPEED)      NE01 052
  148 FORMAT(20A4)                                                      NE01 053
  149 FORMAT(10X,20A4//)                                                NE01 054
C                                                                       NE01 055
  240 FORMAT (F10.3,F8.3,F10.4,F8.3,F8.4,2(2X,1PE12.5))                 NE01 056
  241 FORMAT (I10,6F10.6)                                               NE01 057
  244 FORMAT (5X,6(1PE13.6))                                            NE01 058
  250 FORMAT(20X,5F10.6//)                                              NE01 059
```

```
  251 FORMAT(20X,2F10.6,F10.3,F10.5)                                    NE01 060
  520 FORMAT (2I5,7F10.4)                                               NE01 061
  521 FORMAT (8F10.4)                                                   NE01 062
  522 FORMAT (10I5)                                                     NE01 063
C                                                                       NE01 064
  750 FORMAT (///10X,33HNUMBER OF BLADES IN ERROR, NBLD =,I5)           NE01 065
  751 FORMAT (///10X,46HCONVERGENCE CRITERION MUST BE GREATER THAN 0.0) NE01 066
  752 FORMAT (///10X,46HANGLE OF ATTACK MUST BE LESS THAN 90.0 DEGREES) NE01 067
  753 FORMAT (///10X,38HADVANCE RATIO MUST BE GREATER THAN 0.0)         NE01 068
C                                                                       NE01 069
   20 READ (5,148) TALK                                                 NE01 070
      READ (5,521) CD,XP,TC,RRP,RCBRP,EPS                               NE01 071
      READ (5,521) R0,R1,R2,R3                                          NE01 072
      READ (5,521) ELCBC,XCB,RMAX,XR                                    NE01 073
      READ (5,522) NBLD,NZ,NZP,IR,NPRES,NPRINT                          NE01 074
      READ (5,521)  (RB(J),J=1,NZP)                                     NE01 075
      READ (5,521)  (BR(J),J=1,NZP)                                     NE01 076
      READ (5,521)  (BTA(J),J=1,NZP)                                    NE01 077
      READ (5,521)  (TCBLD(J),J=1,NZP)                                  NE01 078
      READ (5,521) (XPRES(N),N=1,IR)                                    NE01 079
      READ (5,520) NRUN,NPHI,ARJ,ALF,(PHI(J),J=1,5)                     NE01 080
C                                                                       NE01 081
C      CHECK INPUT DATA                                                 NE01 082
C                                                                       NE01 083
      IF (NPHI.GT.5) NPHI=5                                             NE01 084
      IF (NBLD) 700,700,701                                             NE01 085
  700 WRITE (6,750) NBLD                                                NE01 086
      NERR=1                                                            NE01 087
  701 IF (EPS) 702,702,703                                              NE01 088
  702 WRITE (6,751)                                                     NE01 089
      NERR=1                                                            NE01 090
  703 IF (ALF-90.0) 704,705,705                                         NE01 091
  705 WRITE (6,752)                                                     NE01 092
      NERR=1                                                            NE01 093
  704 IF (ARJ) 706,706,707                                              NE01 094
  706 WRITE (6,753)                                                     NE01 095
      NERR=1                                                            NE01 096
  707 IF (NERR) 708,708,999                                             NE01 097
  708 CONTINUE                                                          NE01 098
      NPAG=0                                                            NE01 099
      WRITE (6,101) NRUN,NPAG                                           NE01 100
      WRITE (6,149) TALK                                                NE01 101
C                                                                       NE01 102
C      INITIALIZATION OF SUBROUTINES                                    NE01 103
C                                                                       NE01 104
      MZZZ=0                                                            NE01 105
      CALL HUB (CD,XR,XCB,ELCBC,RMAX,IR,XPRES,RB,RRP,UCB,VCB)           NE01 106
      IF (NERR.GE.1) GO TO 999                                          NE01 107
      CALL ALFRNG (CD,50,SC,UGA,XPRES)                                  NE01 108
      DO 22 J=1,6                                                       NE01 109
      H(J)=UGA(J+6)                                                     NE01 110
   22 GS(J)=UGA(J)                                                      NE01 111
      CALL PRESS                                                        NE01 112
      MZZZ=1                                                            NE01 113
      Z=NZ                                                              NE01 114
      MZ=NZ-1                                                           NE01 115
      CALL PKL (CD,P)                                                   NE01 116
      ARJP=ARJ/PI/RRP                                                   NE01 117
      BLD=NBLD                                                          NE01 118
```

```
      APA=1./(RRP*RRP)-(RCBRP*RCBRP/RRP/RRP)                            NE01 119
      WRITE (6,102)                                                     NE01 120
      WRITE (6,250) CD,XP,TC,RRP,RCBRP                                  NE01 121
      WRITE (6,103) R0,R1,R2,R3                                         NE01 122
      WRITE (6,104) NBLD                                                NE01 123
      WRITE (6,105)                                                     NE01 124
      DO 21 J=1,NZP                                                     NE01 125
   21 WRITE (6,251) RB(J),BR(J),BTA(J),TCBLD(J)                         NE01 126
      WRITE (6,111) ELCBC,XCB,RMAX,XR                                   NE01 127
      WRITE (6,112) EPS                                                 NE01 128
C                                                                       NE01 129
C      COMPUTE INDUCED CAMBER COEFFICIENTS                              NE01 130
C                                                                       NE01 131
      CALL CAMBER (CD,TC,RE)                                            NE01 132
      R0=R0-RE(1)                                                       NE01 133
      R1=R1-RE(2)                                                       NE01 134
      R2=R2-RE(3)                                                       NE01 135
      R3=R3-RE(4)                                                       NE01 136
C                                                                       NE01 137
      WRITE (6,106)                                                     NE01 138
      WRITE (6,107)                                                     NE01 139
      WRITE (6,108)                                                     NE01 140
      WRITE (6,109)                                                     NE01 141
      WRITE (6,110)                                                     NE01 142
      WRITE (6,114)                                                     NE01 143
      WRITE (6,122)                                                     NE01 144
      WRITE (6,134)                                                     NE01 145
      WRITE (6,135)                                                     NE01 146
      WRITE (6,124)                                                     NE01 147
      WRITE (6,125)                                                     NE01 148
      WRITE (6,126)                                                     NE01 149
      WRITE (6,127)                                                     NE01 150
      WRITE (6,128)                                                     NE01 151
      WRITE (6,129)                                                     NE01 152
      WRITE (6,130)                                                     NE01 153
      WRITE (6,131)                                                     NE01 154
      WRITE (6,132)                                                     NE01 155
      WRITE (6,133)                                                     NE01 156
C                                                                       NE01 157
C      COMPUTE THE FOURIER COEFFICIENTS DUE TO THE CENTERBODY           NE01 158
C                                                                       NE01 159
      MZZZ=-1                                                           NE01 160
      N=50                                                              NE01 161
      CALL HUB (CD,XP,XCB,ELCBC,RMAX,N,XPRES,RB,RRP,UCB,VCB)            NE01 162
      MZZZ=1                                                            NE01 163
      DO 40 K=1,6                                                       NE01 164
      D(K)=VCB(K)                                                       NE01 165
   40 DS(K)=UCB(K)                                                      NE01 166
C                                                                       NE01 167
      CALL PROP (NZP,RB,BR,BTA,TCBLD,RRP,RCBRP,NZ,RA)                   NE01 168
C                                                                       NE01 169
C      COMPUTE THE CONSTANT PORTION OF THE INFLOW PROFILE               NE01 170
C                                                                       NE01 171
      CDP=CD*RRP                                                        NE01 172
      CALL GAMCYL (CDP,XP,NZ,RB,UG,0,XPRES,UGP,RRP,RA)                  NE01 173
      CALL SRCRNG  (CD,XP,TC,NZ,RB,UQD)                                 NE01 174
      CALL HUB (CD,XP,XCB,ELCBC,RMAX,NZ,XPRES,RB,RRP,UCB,VCB)           NE01 175
C                                                                       NE01 176
C      COMPUTE THE FOURIER COEFFICIENTS DUE TO THE TRAILING VORTICITY   NE01 177
```

```
C
      CRBN=CD*2.                                                        NE01 178
      CALL BNCOEF (CRBN,B)                                              NE01 179
      NOUT=6                                                            NE01 180
      N=50                                                              NE01 181
      NCYL=NZ-1                                                         NE01 182
      CALL ANCOEF (NCYL,N,RA,XP,CD,RRP,NRUN,O,BS,A,AS)                  NE01 183
      DO 30 K=1,NZ                                                      NE01 184
      BR(K)=BR(K)/RRP                                                   NE01 185
      RB(K)=RB(K)/RRP                                                   NE01 186
      BTA(K)=90.0-BTA(K)                                                NE01 187
   30 BTA(K)=BTA(K)/RAD                                                 NE01 188
  999 RETURN                                                            NE01 189
      END                                                               NE01 190
                                                                        NE01 191
```

```
      SUBROUTINE PKL (CD,P)                                             NE02 001
C                                                                       NE02 002
      DIMENSION P(6,6),A(6,6,7),C(7)                                    NE02 003
C                                                                       NE02 004
      COMMON MZZZ                                                       NE02 005
C                                                                       NE02 006
      IF (MZZZ) 1,2,1                                                   NE02 007
    2 DO 10 K=1,6                                                       NE02 008
      DO 10 L=1,6                                                       NE02 009
      DO 10 M=1,7                                                       NE02 010
   10 A(K,L,M)=0.0                                                      NE02 011
C                                                                       NE02 012
      A(1,1,2) = .02683                                                 NE02 013
      A(1,3,2) = .01343                                                 NE02 014
      A(1,5,2) =-.00001                                                 NE02 015
      A(2,1,2) = .05366                                                 NE02 016
      A(2,2,2) = .02987                                                 NE02 017
      A(2,4,2) =-.00304                                                 NE02 018
      A(3,1,2) = .00608                                                 NE02 019
      A(3,3,2) = .00403                                                 NE02 020
      A(3,5,2) =-.00099                                                 NE02 021
      A(4,1,2) =-.00005                                                 NE02 022
      A(4,2,2) =-.00101                                                 NE02 023
      A(4,4,2) = .00148                                                 NE02 024
      A(4,6,2) =-.00049                                                 NE02 025
      A(5,1,2) =-.00001                                                 NE02 026
      A(5,3,2) =-.00049                                                 NE02 027
      A(5,5,2) = .00079                                                 NE02 028
      A(6,4,2) =-.00029                                                 NE02 029
      A(6,6,2) = .00049                                                 NE02 030
C                                                                       NE02 031
      A(1,1,3) = .07281                                                 NE02 032
      A(1,3,3) = .03644                                                 NE02 033
      A(1,5,3) =-.00004                                                 NE02 034
      A(2,1,3) = .14561                                                 NE02 035
      A(2,2,3) = .08526                                                 NE02 036
      A(2,4,3) =-.01252                                                 NE02 037
      A(2,6,3) = .00006                                                 NE02 038
      A(3,1,3) = .02491                                                 NE02 039
      A(3,3,3) = .01655                                                 NE02 040
      A(3,5,3) =-.00411                                                 NE02 041
      A(4,1,3) =-.00016                                                 NE02 042
      A(4,2,3) =-.00417                                                 NE02 043
      A(4,4,3) = .00609                                                 NE02 044
      A(4,6,3) =-.00200                                                 NE02 045
      A(5,1,3) =-.00013                                                 NE02 046
      A(5,3,3) =-.00206                                                 NE02 047
      A(5,5,3) = .00318                                                 NE02 048
      A(6,2,3) = .00002                                                 NE02 049
      A(6,4,3) =-.00120                                                 NE02 050
      A(6,6,3) = .00197                                                 NE02 051
C                                                                       NE02 052
      A(1,1,4) = .11925                                                 NE02 053
      A(1,3,4) = .05945                                                 NE02 054
      A(1,5,4) = .00019                                                 NE02 055
      A(2,1,4) = .23849                                                 NE02 056
      A(2,2,4) = .14668                                                 NE02 057
      A(2,4,4) =-.02765                                                 NE02 058
      A(2,6,4) = .00021                                                 NE02 059
```

```
      A(3,1,4) = .05488                                                 NE02 060
      A(3,3,4) = .03702                                                 NE02 061
      A(3,5,4) =-.00965                                                 NE02 062
      A(4,1,4) = .00071                                                 NE02 063
      A(4,2,4) =-.00922                                                 NE02 064
      A(4,4,4) = .01418                                                 NE02 065
      A(4,6,4) =-.00463                                                 NE02 066
      A(5,1,4) =-.00042                                                 NE02 067
      A(5,3,4) =-.00482                                                 NE02 068
      A(5,5,4) = .00732                                                 NE02 069
      A(6,1,4) =-.00005                                                 NE02 070
      A(6,2,4) = .00005                                                 NE02 071
      A(6,4,4) =-.00278                                                 NE02 072
      A(6,6,4) = .00450                                                 NE02 073
C                                                                       NE02 074
      A(1,1,5) = .16016                                                 NE02 075
      A(1,3,5) = .07907                                                 NE02 076
      A(1,5,5) = .00107                                                 NE02 077
      A(2,1,5) = .32032                                                 NE02 078
      A(2,2,5) = .20609                                                 NE02 079
      A(2,4,5) =-.04629                                                 NE02 080
      A(2,6,5) = .00035                                                 NE02 081
      A(3,1,5) = .09186                                                 NE02 082
      A(3,3,5) = .06338                                                 NE02 083
      A(3,5,5) =-.01766                                                 NE02 084
      A(4,1,5) = .00402                                                 NE02 085
      A(4,2,5) =-.01544                                                 NE02 086
      A(4,4,5) = .02592                                                 NE02 087
      A(4,6,5) =-.00855                                                 NE02 088
      A(5,1,5) =-.00072                                                 NE02 089
      A(5,3,5) =-.00883                                                 NE02 090
      A(5,5,5) = .01338                                                 NE02 091
      A(6,1,5) =-.00025                                                 NE02 092
      A(6,2,5) = .00008                                                 NE02 093
      A(6,4,5) =-.00512                                                 NE02 094
      A(6,6,5) = .00814                                                 NE02 095
C                                                                       NE02 096
      A(1,1,6) = .22278                                                 NE02 097
      A(1,3,6) = .10634                                                 NE02 098
      A(1,5,6) = .00536                                                 NE02 099
      A(2,1,6) = .44556                                                 NE02 100
      A(2,2,6) = .30830                                                 NE02 101
      A(2,4,6) =-.08513                                                 NE02 102
      A(2,6,6) =-.00059                                                 NE02 103
      A(3,1,6) = .17105                                                 NE02 104
      A(3,3,6) = .12346                                                 NE02 105
      A(3,5,6) =-.03845                                                 NE02 106
      A(4,1,6) = .02020                                                 NE02 107
      A(4,2,6) =-.02784                                                 NE02 108
      A(4,4,6) = .05692                                                 NE02 109
      A(4,6,6) =-.01932                                                 NE02 110
      A(5,1,6) = .00079                                                 NE02 111
      A(5,3,6) =-.01858                                                 NE02 112
      A(5,5,6) = .02935                                                 NE02 113
      A(6,1,6) =-.00123                                                 NE02 114
      A(6,2,6) =-.00011                                                 NE02 115
      A(6,4,6) =-.01087                                                 NE02 116
      A(6,6,6) = .01620                                                 NE02 117
C                                                                       NE02 118
```

```
      A(1,1,7) = .26624                                                 NE02 119
      A(1,3,7) = .12146                                                 NE02 120
      A(1,5,7) = .01214                                                 NE02 121
      A(2,1,7) = .53248                                                 NE02 122
      A(2,2,7) = .38891                                                 NE02 123
      A(2,4,7) =-.11898                                                 NE02 124
      A(2,6,7) =-.00429                                                 NE02 125
      A(3,1,7) = .24533                                                 NE02 126
      A(3,3,7) = .18468                                                 NE02 127
      A(3,5,7) =-.06210                                                 NE02 128
      A(4,1,7) = .04662                                                 NE02 129
      A(4,2,7) =-.03871                                                 NE02 130
      A(4,4,7) = .09563                                                 NE02 131
      A(4,6,7) =-.03416                                                 NE02 132
      A(5,1,7) = .00738                                                 NE02 133
      A(5,3,7) =-.02992                                                 NE02 134
      A(5,5,7) = .05270                                                 NE02 135
      A(6,1,7) =-.00194                                                 NE02 136
      A(6,2,7) =-.00088                                                 NE02 137
      A(6,4,7) =-.01918                                                 NE02 138
      A(6,6,7) = .02998                                                 NE02 139
C                                                                       NE02 140
      C(1)=0.0                                                          NE02 141
      C(2)=0.25                                                         NE02 142
      C(3)=0.50                                                         NE02 143
      C(4)=0.75                                                         NE02 144
      C(5)=1.00                                                         NE02 145
      C(6)=1.50                                                         NE02 146
      C(7)=2.00                                                         NE02 147
      GO TO 71                                                          NE02 148
C                                                                       NE02 149
    1 DO 20 J=1,7                                                       NE02 150
      IF(C(J)-CD) 20,19,21                                              NE02 151
   20 CONTINUE                                                          NE02 152
      GO TO 21                                                          NE02 153
   19 M=J                                                               NE02 154
      GO TO 100                                                         NE02 155
   21 M=J-1                                                             NE02 156
      N=J                                                               NE02 157
      DELT=C(N)-C(M)                                                    NE02 158
      DIFF=CD-C(M)                                                      NE02 159
      DELTA=DIFF/DELT                                                   NE02 160
      DO 30 K=1,6                                                       NE02 161
      DO 30 L=1,6                                                       NE02 162
      P(K,L)=A(K,L,M)+(DELTA*(A(K,L,N)-A(K,L,M)))                       NE02 163
   30 CONTINUE                                                          NE02 164
      GO TO 71                                                          NE02 165
  100 DO 40 K=1,6                                                       NE02 166
      DO 40 L=1,6                                                       NE02 167
      P(K,L)=A(K,L,M)                                                   NE02 168
   40 CONTINUE                                                          NE02 169
   71 RETURN                                                            NE02 170
      END                                                               NE02 171
```

```
      SUBROUTINE ELLIPS (AKSQ,TK,TE)                                    NE03 001
C                                                                       NE03 002
C     SUB. ELLIPS -- TABLE LOOK-UP OF ELLIPTIC INTEGRALS                NE03 003
C                                                                       NE03 004
      DIMENSION CKK(100),CK(100),CE(100)                                NE03 005
      COMMON MZZZ                                                       NE03 006
      IF (MZZZ) 73,10,3                                                 NE03 007
   10 CONTINUE                                                          NE03 008
C                                                                       NE03 009
C        CKK = ARGUMENT OF ELLIPTIC INTEGRALS                           NE03 010
C                                                                       NE03 011
      CKK(  1) = 0.00                                                   NE03 012
      CKK(  2) =  .01                                                   NE03 013
      CKK(  3) =  .02                                                   NE03 014
      CKK(  4) =  .03                                                   NE03 015
      CKK(  5) =  .04                                                   NE03 016
      CKK(  6) =  .05                                                   NE03 017
      CKK(  7) =  .06                                                   NE03 018
      CKK(  8) =  .07                                                   NE03 019
      CKK(  9) =  .08                                                   NE03 020
      CKK( 10) =  .09                                                   NE03 021
      CKK( 11) =  .10                                                   NE03 022
      CKK( 12) =  .11                                                   NE03 023
      CKK( 13) =  .12                                                   NE03 024
      CKK( 14) =  .13                                                   NE03 025
      CKK( 15) =  .14                                                   NE03 026
      CKK( 16) =  .15                                                   NE03 027
      CKK( 17) =  .16                                                   NE03 028
      CKK( 18) =  .17                                                   NE03 029
      CKK( 19) =  .18                                                   NE03 030
      CKK( 20) =  .19                                                   NE03 031
      CKK( 21) =  .20                                                   NE03 032
      CKK( 22) =  .21                                                   NE03 033
      CKK( 23) =  .22                                                   NE03 034
      CKK( 24) =  .23                                                   NE03 035
      CKK( 25) =  .24                                                   NE03 036
      CKK( 26) =  .25                                                   NE03 037
      CKK( 27) =  .26                                                   NE03 038
      CKK( 28) =  .27                                                   NE03 039
      CKK( 29) =  .28                                                   NE03 040
      CKK( 30) =  .29                                                   NE03 041
      CKK( 31) =  .30                                                   NE03 042
      CKK( 32) =  .31                                                   NE03 043
      CKK( 33) =  .32                                                   NE03 044
      CKK( 34) =  .33                                                   NE03 045
      CKK( 35) =  .34                                                   NE03 046
      CKK( 36) =  .35                                                   NE03 047
      CKK( 37) =  .36                                                   NE03 048
      CKK( 38) =  .37                                                   NE03 049
      CKK( 39) =  .38                                                   NE03 050
      CKK( 40) =  .39                                                   NE03 051
      CKK( 41) =  .40                                                   NE03 052
      CKK( 42) =  .41                                                   NE03 053
      CKK( 43) =  .42                                                   NE03 054
      CKK( 44) =  .43                                                   NE03 055
      CKK( 45) =  .44                                                   NE03 056
      CKK( 46) =  .45                                                   NE03 057
      CKK( 47) =  .46                                                   NE03 058
      CKK( 48) =  .47                                                   NE03 059
```

```
      CKK( 49) =  .48                                                   NE03 060
      CKK( 50) =  .49                                                   NE03 061
      CKK( 51) =  .50                                                   NE03 062
      CKK( 52) =  .51                                                   NE03 063
      CKK( 53) =  .52                                                   NE03 064
      CKK( 54) =  .53                                                   NE03 065
      CKK( 55) =  .54                                                   NE03 066
      CKK( 56) =  .55                                                   NE03 067
      CKK( 57) =  .56                                                   NE03 068
      CKK( 58) =  .57                                                   NE03 069
      CKK( 59) =  .58                                                   NE03 070
      CKK( 60) =  .59                                                   NE03 071
      CKK( 61) =  .60                                                   NE03 072
      CKK( 62) =  .61                                                   NE03 073
      CKK( 63) =  .62                                                   NE03 074
      CKK( 64) =  .63                                                   NE03 075
      CKK( 65) =  .64                                                   NE03 076
      CKK( 66) =  .65                                                   NE03 077
      CKK( 67) =  .66                                                   NE03 078
      CKK( 68) =  .67                                                   NE03 079
      CKK( 69) =  .68                                                   NE03 080
      CKK( 70) =  .69                                                   NE03 081
      CKK( 71) =  .70                                                   NE03 082
      CKK( 72) =  .71                                                   NE03 083
      CKK( 73) =  .72                                                   NE03 084
      CKK( 74) =  .73                                                   NE03 085
      CKK( 75) =  .74                                                   NE03 086
      CKK( 76) =  .75                                                   NE03 087
      CKK( 77) =  .76                                                   NE03 088
      CKK( 78) =  .77                                                   NE03 089
      CKK( 79) =  .78                                                   NE03 090
      CKK( 80) =  .79                                                   NE03 091
      CKK( 81) =  .80                                                   NE03 092
      CKK( 82) =  .81                                                   NE03 093
      CKK( 83) =  .82                                                   NE03 094
      CKK( 84) =  .83                                                   NE03 095
      CKK( 85) =  .84                                                   NE03 096
      CKK( 86) =  .85                                                   NE03 097
      CKK( 87) =  .86                                                   NE03 098
      CKK( 88) =  .87                                                   NE03 099
      CKK( 89) =  .88                                                   NE03 100
      CKK( 90) =  .89                                                   NE03 101
      CKK( 91) =  .90                                                   NE03 102
      CKK( 92) =  .91                                                   NE03 103
      CKK( 93) =  .92                                                   NE03 104
      CKK( 94) =  .93                                                   NE03 105
      CKK( 95) =  .94                                                   NE03 106
      CKK( 96) =  .95                                                   NE03 107
      CKK( 97) =  .96                                                   NE03 108
      CKK( 98) =  .97                                                   NE03 109
      CKK( 99) =  .98                                                   NE03 110
      CKK(100) =  .99                                                   NE03 111
C                                                                       NE03 112
C        CK = COMPLETE ELLIPTIC INTEGRALS OF FIRST KIND                 NE03 113
C                                                                       NE03 114
      CK(  1) = 1.570796                                                NE03 115
      CK(  2) = 1.574746                                                NE03 116
      CK(  3) = 1.578740                                                NE03 117
      CK(  4) = 1.582780                                                NE03 118
```

```
CK(  5) = 1.586868                                          NE03 119
CK(  6) = 1.591003                                          NE03 120
CK(  7) = 1.595188                                          NE03 121
CK(  8) = 1.599423                                          NE03 122
CK(  9) = 1.603710                                          NE03 123
CK( 10) = 1.608049                                          NE03 124
CK( 11) = 1.612441                                          NE03 125
CK( 12) = 1.616889                                          NE03 126
CK( 13) = 1.621393                                          NE03 127
CK( 14) = 1.625955                                          NE03 128
CK( 15) = 1.630576                                          NE03 129
CK( 16) = 1.635257                                          NE03 130
CK( 17) = 1.640000                                          NE03 131
CK( 18) = 1.644806                                          NE03 132
CK( 19) = 1.649678                                          NE03 133
CK( 20) = 1.654617                                          NE03 134
CK( 21) = 1.659624                                          NE03 135
CK( 22) = 1.664701                                          NE03 136
CK( 23) = 1.669850                                          NE03 137
CK( 24) = 1.675073                                          NE03 138
CK( 25) = 1.680373                                          NE03 139
CK( 26) = 1.685750                                          NE03 140
CK( 27) = 1.691208                                          NE03 141
CK( 28) = 1.696749                                          NE03 142
CK( 29) = 1.702374                                          NE03 143
CK( 30) = 1.708087                                          NE03 144
CK( 31) = 1.713889                                          NE03 145
CK( 32) = 1.719785                                          NE03 146
CK( 33) = 1.725776                                          NE03 147
CK( 34) = 1.731865                                          NE03 148
CK( 35) = 1.738055                                          NE03 149
CK( 36) = 1.744351                                          NE03 150
CK( 37) = 1.750754                                          NE03 151
CK( 38) = 1.757269                                          NE03 152
CK( 39) = 1.763898                                          NE03 153
CK( 40) = 1.770647                                          NE03 154
CK( 41) = 1.777519                                          NE03 155
CK( 42) = 1.784519                                          NE03 156
CK( 43) = 1.791650                                          NE03 157
CK( 44) = 1.798918                                          NE03 158
CK( 45) = 1.806328                                          NE03 159
CK( 46) = 1.813884                                          NE03 160
CK( 47) = 1.821593                                          NE03 161
CK( 48) = 1.829460                                          NE03 162
CK( 49) = 1.837491                                          NE03 163
CK( 50) = 1.845694                                          NE03 164
CK( 51) = 1.854075                                          NE03 165
CK( 52) = 1.862641                                          NE03 166
CK( 53) = 1.871400                                          NE03 167
CK( 54) = 1.880361                                          NE03 168
CK( 55) = 1.889533                                          NE03 169
CK( 56) = 1.898925                                          NE03 170
CK( 57) = 1.908547                                          NE03 171
CK( 58) = 1.918410                                          NE03 172
CK( 59) = 1.928526                                          NE03 173
CK( 60) = 1.938908                                          NE03 174
CK( 61) = 1.949568                                          NE03 175
CK( 62) = 1.960521                                          NE03 176
CK( 63) = 1.971783                                          NE03 177
```

```
      CK( 64) = 1.983371                                                NE03 178
      CK( 65) = 1.995303                                                NE03 179
      CK( 66) = 2.007598                                                NE03 180
      CK( 67) = 2.020279                                                NE03 181
      CK( 68) = 2.033369                                                NE03 182
      CK( 69) = 2.046894                                                NE03 183
      CK( 70) = 2.060882                                                NE03 184
      CK( 71) = 2.075363                                                NE03 185
      CK( 72) = 2.090373                                                NE03 186
      CK( 73) = 2.105948                                                NE03 187
      CK( 74) = 2.122132                                                NE03 188
      CK( 75) = 2.138970                                                NE03 189
      CK( 76) = 2.156516                                                NE03 190
      CK( 77) = 2.174827                                                NE03 191
      CK( 78) = 2.193971                                                NE03 192
      CK( 79) = 2.214022                                                NE03 193
      CK( 80) = 2.235068                                                NE03 194
      CK( 81) = 2.257205                                                NE03 195
      CK( 82) = 2.280549                                                NE03 196
      CK( 83) = 2.305232                                                NE03 197
      CK( 84) = 2.331409                                                NE03 198
      CK( 85) = 2.359264                                                NE03 199
      CK( 86) = 2.389016                                                NE03 200
      CK( 87) = 2.420933                                                NE03 201
      CK( 88) = 2.455338                                                NE03 202
      CK( 89) = 2.492635                                                NE03 203
      CK( 90) = 2.533335                                                NE03 204
      CK( 91) = 2.578092                                                NE03 205
      CK( 92) = 2.627773                                                NE03 206
      CK( 93) = 2.683551                                                NE03 207
      CK( 94) = 2.747073                                                NE03 208
      CK( 95) = 2.820752                                                NE03 209
      CK( 96) = 2.908337                                                NE03 210
      CK( 97) = 3.016112                                                NE03 211
      CK( 98) = 3.155875                                                NE03 212
      CK( 99) = 3.354141                                                NE03 213
      CK(100) = 3.695637                                                NE03 214
C                                                                       NE03 215
C        CE = COMPLETE ELLIPTIC INTEGRALS OF SECOND KIND                NE03 216
C                                                                       NE03 217
      CE(  1) = 1.570796                                                NE03 218
      CE(  2) = 1.566862                                                NE03 219
      CE(  3) = 1.562913                                                NE03 220
      CE(  4) = 1.558948                                                NE03 221
      CE(  5) = 1.554969                                                NE03 222
      CE(  6) = 1.550973                                                NE03 223
      CE(  7) = 1.546963                                                NE03 224
      CE(  8) = 1.542936                                                NE03 225
      CE(  9) = 1.538893                                                NE03 226
      CE( 10) = 1.534833                                                NE03 227
      CE( 11) = 1.530758                                                NE03 228
      CE( 12) = 1.526665                                                NE03 229
      CE( 13) = 1.522555                                                NE03 230
      CE( 14) = 1.518428                                                NE03 231
      CE( 15) = 1.514284                                                NE03 232
      CE( 16) = 1.510122                                                NE03 233
      CE( 17) = 1.505942                                                NE03 234
      CE( 18) = 1.501743                                                NE03 235
      CE( 19) = 1.497526                                                NE03 236
```

```
CE( 20) = 1.493290
CE( 21) = 1.489035
CE( 22) = 1.484761
CE( 23) = 1.480466
CE( 24) = 1.476152
CE( 25) = 1.471818
CE( 26) = 1.467462
CE( 27) = 1.463086
CE( 28) = 1.458688
CE( 29) = 1.454269
CE( 30) = 1.449827
CE( 31) = 1.445363
CE( 32) = 1.440876
CE( 33) = 1.436366
CE( 34) = 1.431832
CE( 35) = 1.427274
CE( 36) = 1.422691
CE( 37) = 1.418083
CE( 38) = 1.413450
CE( 39) = 1.408791
CE( 40) = 1.404105
CE( 41) = 1.399392
CE( 42) = 1.394652
CE( 43) = 1.389883
CE( 44) = 1.385086
CE( 45) = 1.380259
CE( 46) = 1.375402
CE( 47) = 1.370515
CE( 48) = 1.365596
CE( 49) = 1.360645
CE( 50) = 1.355661
CE( 51) = 1.350644
CE( 52) = 1.345592
CE( 53) = 1.340505
CE( 54) = 1.335382
CE( 55) = 1.330223
CE( 56) = 1.325024
CE( 57) = 1.319788
CE( 58) = 1.314511
CE( 59) = 1.309192
CE( 60) = 1.303832
CE( 61) = 1.298428
CE( 62) = 1.292979
CE( 63) = 1.287484
CE( 64) = 1.281942
CE( 65) = 1.276350
CE( 66) = 1.270707
CE( 67) = 1.265013
CE( 68) = 1.259263
CE( 69) = 1.253458
CE( 70) = 1.247595
CE( 71) = 1.241671
CE( 72) = 1.235684
CE( 73) = 1.229632
CE( 74) = 1.223512
CE( 75) = 1.217321
CE( 76) = 1.211056
CE( 77) = 1.204714
CE( 78) = 1.198290
```

```
NE03 237
NE03 238
NE03 239
NE03 240
NE03 241
NE03 242
NE03 243
NE03 244
NE03 245
NE03 246
NE03 247
NE03 248
NE03 249
NE03 250
NE03 251
NE03 252
NE03 253
NE03 254
NE03 255
NE03 256
NE03 257
NE03 258
NE03 259
NE03 260
NE03 261
NE03 262
NE03 263
NE03 264
NE03 265
NE03 266
NE03 267
NE03 268
NE03 269
NE03 270
NE03 271
NE03 272
NE03 273
NE03 274
NE03 275
NE03 276
NE03 277
NE03 278
NE03 279
NE03 280
NE03 281
NE03 282
NE03 283
NE03 284
NE03 285
NE03 286
NE03 287
NE03 288
NE03 289
NE03 290
NE03 291
NE03 292
NE03 293
NE03 294
NE03 295
```

```
      CE( 79) = 1.191781                                                NE03 296
      CE( 80) = 1.185183                                                NE03 297
      CE( 81) = 1.178490                                                NE03 298
      CE( 82) = 1.171697                                                NE03 299
      CE( 83) = 1.164798                                                NE03 300
      CE( 84) = 1.157787                                                NE03 301
      CE( 85) = 1.150656                                                NE03 302
      CE( 86) = 1.143396                                                NE03 303
      CE( 87) = 1.135998                                                NE03 304
      CE( 88) = 1.128451                                                NE03 305
      CE( 89) = 1.120742                                                NE03 306
      CE( 90) = 1.112856                                                NE03 307
      CE( 91) = 1.104775                                                NE03 308
      CE( 92) = 1.096478                                                NE03 309
      CE( 93) = 1.087938                                                NE03 310
      CE( 94) = 1.079121                                                NE03 311
      CE( 95) = 1.069986                                                NE03 312
      CE( 96) = 1.060474                                                NE03 313
      CE( 97) = 1.050502                                                NE03 314
      CE( 98) = 1.039947                                                NE03 315
      CE( 99) = 1.028595                                                NE03 316
      CE(100) = 1.015994                                                NE03 317
C                                                                       NE03 318
      GO TO 30                                                          NE03 319
    3 IF(AKSQ-.99)20,20,21                                              NE03 320
   21 PARA=0.25*(1.0-AKSQ)                                              NE03 321
  700 TEST = 1.00E-07                                                   NE03 322
      IF(PARA-TEST)701,702,702                                          NE03 323
  701 PARA=TEST                                                         NE03 324
  702 ZLP=ALOG(4./PARA)                                                 NE03 325
      TK=ZLP*0.5*(1.+PARA)-PARA                                         NE03 326
      TE=1.0+(ZLP*PARA)-PARA                                            NE03 327
      GO TO 30                                                          NE03 328
   20 JA=100.0*AKSQ                                                     NE03 329
      JA=1+JA                                                           NE03 330
      IF(CKK(JA)-AKSQ)22,23,22                                          NE03 331
   23 TK=CK(JA)                                                         NE03 332
      TE=CE(JA)                                                         NE03 333
      GO TO 30                                                          NE03 334
   22 CON=(AKSQ-CKK(JA))/(CKK(JA+1)-CKK(JA))                            NE03 335
      TK=CK(JA)+CON*(CK(JA+1)-CK(JA))                                   NE03 336
      TE=CE(JA)+CON*(CE(JA+1)-CE(JA))                                   NE03 337
      GO TO 30                                                          NE03 338
   73 IF(AKSQ-.01)721,721,720                                           NE03 339
  721 PARA=.25*AKSQ                                                     NE03 340
      GO TO 700                                                         NE03 341
  720 AKSQ=1.-AKSQ                                                      NE03 342
      GO TO 20                                                          NE03 343
   30 CONTINUE                                                          NE03 344
      RETURN                                                            NE03 345
      END                                                               NE03 346
```

```
      SUBROUTINE LAMBDA (XP,ZP,YP)                                      NE04 001
C                                                                       NE04 002
C        TABLE LOOK-UP OF HEUMAN LAMBDA FUNCTION                        NE04 003
C                                                                       NE04 004
      DIMENSION Y(19,19),X(19),Z(19)                                    NE04 005
      COMMON MZZZ                                                       NE04 006
      IF (MZZZ) 20,10,20                                                NE04 007
   10 CONTINUE                                                          NE04 008
C                                                                       NE04 009
C        X = ARCSIN K  (DEGREES)                                        NE04 010
C                                                                       NE04 011
      X( 1)=  0.000000                                                  NE04 012
      X( 2)=  5.000000                                                  NE04 013
      X( 3)= 10.000000                                                  NE04 014
      X( 4)= 15.000000                                                  NE04 015
      X( 5)= 20.000000                                                  NE04 016
      X( 6)= 25.000000                                                  NE04 017
      X( 7)= 30.000000                                                  NE04 018
      X( 8)= 35.000000                                                  NE04 019
      X( 9)= 40.000000                                                  NE04 020
      X(10)= 45.000000                                                  NE04 021
      X(11)= 50.000000                                                  NE04 022
      X(12)= 55.000000                                                  NE04 023
      X(13)= 60.000000                                                  NE04 024
      X(14)= 65.000000                                                  NE04 025
      X(15)= 70.000000                                                  NE04 026
      X(16)= 75.000000                                                  NE04 027
      X(17)= 80.000000                                                  NE04 028
      X(18)= 85.000000                                                  NE04 029
      X(19)= 90.000000                                                  NE04 030
C                                                                       NE04 031
C        Z = BETA  (DEGREES)                                            NE04 032
C                                                                       NE04 033
      Z( 1)=  0.000000                                                  NE04 034
      Z( 2)=  5.000000                                                  NE04 035
      Z( 3)= 10.000000                                                  NE04 036
      Z( 4)= 15.000000                                                  NE04 037
      Z( 5)= 20.000000                                                  NE04 038
      Z( 6)= 25.000000                                                  NE04 039
      Z( 7)= 30.000000                                                  NE04 040
      Z( 8)= 35.000000                                                  NE04 041
      Z( 9)= 40.000000                                                  NE04 042
      Z(10)= 45.000000                                                  NE04 043
      Z(11)= 50.000000                                                  NE04 044
      Z(12)= 55.000000                                                  NE04 045
      Z(13)= 60.000000                                                  NE04 046
      Z(14)= 65.000000                                                  NE04 047
      Z(15)= 70.000000                                                  NE04 048
      Z(16)= 75.000000                                                  NE04 049
      Z(17)= 80.000000                                                  NE04 050
      Z(18)= 85.000000                                                  NE04 051
      Z(19)= 90.000000                                                  NE04 052
C                                                                       NE04 053
C        Y = HEUMAN LAMBDA FUNCTION                                     NE04 054
C                                                                       NE04 055
      Y( 1, 1)=  0.000000                                               NE04 056
      Y( 1, 2)=   .087156                                               NE04 057
      Y( 1, 3)=   .173648                                               NE04 058
      Y( 1, 4)=   .258819                                               NE04 059
```

```
Y( 1, 5)=   .342020                                                    NE04 060
Y( 1, 6)=   .422618                                                    NE04 061
Y( 1, 7)=   .500000                                                    NE04 062
Y( 1, 8)=   .573576                                                    NE04 063
Y( 1, 9)=   .642788                                                    NE04 064
Y( 1,10)=   .707107                                                    NE04 065
Y( 1,11)=   .766044                                                    NE04 066
Y( 1,12)=   .819152                                                    NE04 067
Y( 1,13)=   .866025                                                    NE04 068
Y( 1,14)=   .906308                                                    NE04 069
Y( 1,15)=   .939693                                                    NE04 070
Y( 1,16)=   .965926                                                    NE04 071
Y( 1,17)=   .984808                                                    NE04 072
Y( 1,18)=   .996195                                                    NE04 073
Y( 1,19)=  1.000000                                                    NE04 074
Y( 2, 1)=  0.000000                                                    NE04 075
Y( 2, 2)=   .086990                                                    NE04 076
Y( 2, 3)=   .173318                                                    NE04 077
Y( 2, 4)=   .258327                                                    NE04 078
Y( 2, 5)=   .341370                                                    NE04 079
Y( 2, 6)=   .421815                                                    NE04 080
Y( 2, 7)=   .499050                                                    NE04 081
Y( 2, 8)=   .572487                                                    NE04 082
Y( 2, 9)=   .641567                                                    NE04 083
Y( 2,10)=   .705765                                                    NE04 084
Y( 2,11)=   .764592                                                    NE04 085
Y( 2,12)=   .817600                                                    NE04 086
Y( 2,13)=   .864388                                                    NE04 087
Y( 2,14)=   .904599                                                    NE04 088
Y( 2,15)=   .937930                                                    NE04 089
Y( 2,16)=   .964135                                                    NE04 090
Y( 2,17)=   .983037                                                    NE04 091
Y( 2,18)=   .994624                                                    NE04 092
Y( 2,19)=  1.000000                                                    NE04 093
Y( 3, 1)=  0.000000                                                    NE04 094
Y( 3, 2)=   .086495                                                    NE04 095
Y( 3, 3)=   .172332                                                    NE04 096
Y( 3, 4)=   .256858                                                    NE04 097
Y( 3, 5)=   .339430                                                    NE04 098
Y( 3, 6)=   .419419                                                    NE04 099
Y( 3, 7)=   .496219                                                    NE04 100
Y( 3, 8)=   .569244                                                    NE04 101
Y( 3, 9)=   .637940                                                    NE04 102
Y( 3,10)=   .701786                                                    NE04 103
Y( 3,11)=   .760298                                                    NE04 104
Y( 3,12)=   .813034                                                    NE04 105
Y( 3,13)=   .859602                                                    NE04 106
Y( 3,14)=   .899660                                                    NE04 107
Y( 3,15)=   .932934                                                    NE04 108
Y( 3,16)=   .959244                                                    NE04 109
Y( 3,17)=   .978597                                                    NE04 110
Y( 3,18)=   .991511                                                    NE04 111
Y( 3,19)=  1.000000                                                    NE04 112
Y( 4, 1)=  0.000000                                                    NE04 113
Y( 4, 2)=   .085677                                                    NE04 114
Y( 4, 3)=   .170704                                                    NE04 115
Y( 4, 4)=   .254434                                                    NE04 116
Y( 4, 5)=   .336231                                                    NE04 117
Y( 4, 6)=   .415475                                                    NE04 118
```

```
Y( 4, 7)=    .491565
Y( 4, 8)=    .563926
Y( 4, 9)=    .632010
Y( 4,10)=    .695307
Y( 4,11)=    .753346
Y( 4,12)=    .805703
Y( 4,13)=    .852010
Y( 4,14)=    .891969
Y( 4,15)=    .925384
Y( 4,16)=    .952226
Y( 4,17)=    .972787
Y( 4,18)=    .988015
Y( 4,19)=   1.000000
Y( 5, 1)=   0.000000
Y( 5, 2)=    .084549
Y( 5, 3)=    .168458
Y( 5, 4)=    .251092
Y( 5, 5)=    .331827
Y( 5, 6)=    .410054
Y( 5, 7)=    .485184
Y( 5, 8)=    .556657
Y( 5, 9)=    .623939
Y( 5,10)=    .686540
Y( 5,11)=    .744012
Y( 5,12)=    .795963
Y( 5,13)=    .842073
Y( 5,14)=    .882119
Y( 5,15)=    .916018
Y( 5,16)=    .943918
Y( 5,17)=    .966343
Y( 5,18)=    .984410
Y( 5,19)=   1.000000
Y( 6, 1)=   0.000000
Y( 6, 2)=    .083124
Y( 6, 3)=    .165625
Y( 6, 4)=    .246882
Y( 6, 5)=    .326288
Y( 6, 6)=    .403252
Y( 6, 7)=    .477203
Y( 6, 8)=    .547600
Y( 6, 9)=    .613936
Y( 6,10)=    .675748
Y( 6,11)=    .732623
Y( 6,12)=    .784220
Y( 6,13)=    .830282
Y( 6,14)=    .870676
Y( 6,15)=    .905441
Y( 6,16)=    .934867
Y( 6,17)=    .959607
Y( 6,18)=    .980779
Y( 6,19)=   1.000000
Y( 7, 1)=   0.000000
Y( 7, 2)=    .081425
Y( 7, 3)=    .162247
Y( 7, 4)=    .241870
Y( 7, 5)=    .319707
Y( 7, 6)=    .395191
Y( 7, 7)=    .467777
Y( 7, 8)=    .536953
```

```
NE04 119
NE04 120
NE04 121
NE04 122
NE04 123
NE04 124
NE04 125
NE04 126
NE04 127
NE04 128
NE04 129
NE04 130
NE04 131
NE04 132
NE04 133
NE04 134
NE04 135
NE04 136
NE04 137
NE04 138
NE04 139
NE04 140
NE04 141
NE04 142
NE04 143
NE04 144
NE04 145
NE04 146
NE04 147
NE04 148
NE04 149
NE04 150
NE04 151
NE04 152
NE04 153
NE04 154
NE04 155
NE04 156
NE04 157
NE04 158
NE04 159
NE04 160
NE04 161
NE04 162
NE04 163
NE04 164
NE04 165
NE04 166
NE04 167
NE04 168
NE04 169
NE04 170
NE04 171
NE04 172
NE04 173
NE04 174
NE04 175
NE04 176
NE04 177
```

```
Y( 7, 9)=    .602244                                                    NE04 178
Y( 7,10)=    .663225                                                    NE04 179
Y( 7,11)=    .719533                                                    NE04 180
Y( 7,12)=    .770883                                                    NE04 181
Y( 7,13)=    .817093                                                    NE04 182
Y( 7,14)=    .858117                                                    NE04 183
Y( 7,15)=    .894095                                                    NE04 184
Y( 7,16)=    .925409                                                    NE04 185
Y( 7,17)=    .952751                                                    NE04 186
Y( 7,18)=    .977159                                                    NE04 187
Y( 7,19)=   1.000000                                                    NE04 188
Y( 8, 1)=   0.000000                                                    NE04 189
Y( 8, 2)=    .079476                                                    NE04 190
Y( 8, 3)=    .158377                                                    NE04 191
Y( 8, 4)=    .236134                                                    NE04 192
Y( 8, 5)=    .312192                                                    NE04 193
Y( 8, 6)=    .386013                                                    NE04 194
Y( 8, 7)=    .457086                                                    NE04 195
Y( 8, 8)=    .524935                                                    NE04 196
Y( 8, 9)=    .589127                                                    NE04 197
Y( 8,10)=    .649283                                                    NE04 198
Y( 8,11)=    .705094                                                    NE04 199
Y( 8,12)=    .756337                                                    NE04 200
Y( 8,13)=    .802903                                                    NE04 201
Y( 8,14)=    .844820                                                    NE04 202
Y( 8,15)=    .882297                                                    NE04 203
Y( 8,16)=    .915757                                                    NE04 204
Y( 8,17)=    .945873                                                    NE04 205
Y( 8,18)=    .973573                                                    NE04 206
Y( 8,19)=   1.000000                                                    NE04 207
Y( 9, 1)=   0.000000                                                    NE04 208
Y( 9, 2)=    .077307                                                    NE04 209
Y( 9, 3)=    .154073                                                    NE04 210
Y( 9, 4)=    .229767                                                    NE04 211
Y( 9, 5)=    .303869                                                    NE04 212
Y( 9, 6)=    .375880                                                    NE04 213
Y( 9, 7)=    .445330                                                    NE04 214
Y( 9, 8)=    .511786                                                    NE04 215
Y( 9, 9)=    .574862                                                    NE04 216
Y( 9,10)=    .634231                                                    NE04 217
Y( 9,11)=    .689642                                                    NE04 218
Y( 9,12)=    .740932                                                    NE04 219
Y( 9,13)=    .788051                                                    NE04 220
Y( 9,14)=    .831085                                                    NE04 221
Y( 9,15)=    .870277                                                    NE04 222
Y( 9,16)=    .906056                                                    NE04 223
Y( 9,17)=    .939042                                                    NE04 224
Y( 9,18)=    .970039                                                    NE04 225
Y( 9,19)=   1.000000                                                    NE04 226
Y(10, 1)=   0.000000                                                    NE04 227
Y(10, 2)=    .074953                                                    NE04 228
Y(10, 3)=    .149408                                                    NE04 229
Y(10, 4)=    .222878                                                    NE04 230
Y(10, 5)=    .294884                                                    NE04 231
Y(10, 6)=    .364976                                                    NE04 232
Y(10, 7)=    .432729                                                    NE04 233
Y(10, 8)=    .497760                                                    NE04 234
Y(10, 9)=    .559735                                                    NE04 235
Y(10,10)=    .618381                                                    NE04 236
```

```
Y(10,11)=    .673501                                                    NE04 237
Y(10,12)=    .724985                                                    NE04 238
Y(10,13)=    .772830                                                    NE04 239
Y(10,14)=    .817155                                                    NE04 240
Y(10,15)=    .858217                                                    NE04 241
Y(10,16)=    .896419                                                    NE04 242
Y(10,17)=    .932311                                                    NE04 243
Y(10,18)=    .966576                                                    NE04 244
Y(10,19)=   1.000000                                                    NE04 245
Y(11, 1)=   0.000000                                                    NE04 246
Y(11, 2)=    .072455                                                    NE04 247
Y(11, 3)=    .144464                                                    NE04 248
Y(11, 4)=    .215587                                                    NE04 249
Y(11, 5)=    .285399                                                    NE04 250
Y(11, 6)=    .353500                                                    NE04 251
Y(11, 7)=    .419519                                                    NE04 252
Y(11, 8)=    .483125                                                    NE04 253
Y(11, 9)=    .544038                                                    NE04 254
Y(11,10)=    .602038                                                    NE04 255
Y(11,11)=    .656976                                                    NE04 256
Y(11,12)=    .708785                                                    NE04 257
Y(11,13)=    .757496                                                    NE04 258
Y(11,14)=    .803241                                                    NE04 259
Y(11,15)=    .846269                                                    NE04 260
Y(11,16)=    .886942                                                    NE04 261
Y(11,17)=    .925731                                                    NE04 262
Y(11,18)=    .963204                                                    NE04 263
Y(11,19)=   1.000000                                                    NE04 264
Y(12, 1)=   0.000000                                                    NE04 265
Y(12, 2)=    .069861                                                    NE04 266
Y(12, 3)=    .139334                                                    NE04 267
Y(12, 4)=    .208034                                                    NE04 268
Y(12, 5)=    .275597                                                    NE04 269
Y(12, 6)=    .341676                                                    NE04 270
Y(12, 7)=    .405958                                                    NE04 271
Y(12, 8)=    .468167                                                    NE04 272
Y(12, 9)=    .528076                                                    NE04 273
Y(12,10)=    .585512                                                    NE04 274
Y(12,11)=    .640369                                                    NE04 275
Y(12,12)=    .692612                                                    NE04 276
Y(12,13)=    .742291                                                    NE04 277
Y(12,14)=    .789537                                                    NE04 278
Y(12,15)=    .834576                                                    NE04 279
Y(12,16)=    .877717                                                    NE04 280
Y(12,17)=    .919353                                                    NE04 281
Y(12,18)=    .959944                                                    NE04 282
Y(12,19)=   1.000000                                                    NE04 283
Y(13, 1)=   0.000000                                                    NE04 284
Y(13, 2)=    .067226                                                    NE04 285
Y(13, 3)=    .134126                                                    NE04 286
Y(13, 4)=    .200380                                                    NE04 287
Y(13, 5)=    .265684                                                    NE04 288
Y(13, 6)=    .329751                                                    NE04 289
Y(13, 7)=    .392328                                                    NE04 290
Y(13, 8)=    .453192                                                    NE04 291
Y(13, 9)=    .512167                                                    NE04 292
Y(13,10)=    .569122                                                    NE04 293
Y(13,11)=    .623985                                                    NE04 294
Y(13,12)=    .676745                                                    NE04 295
```

```
Y(13,13)=   .727455
Y(13,14)=   .776237
Y(13,15)=   .823283
Y(13,16)=   .868846
Y(13,17)=   .913240
Y(13,18)=   .956826
Y(13,19)=  1.000000
Y(14, 1)=  0.000000
Y(14, 2)=   .064614
Y(14, 3)=   .128968
Y(14, 4)=   .192809
Y(14, 5)=   .255897
Y(14, 6)=   .318009
Y(14, 7)=   .378946
Y(14, 8)=   .438541
Y(14, 9)=   .496661
Y(14,10)=   .553214
Y(14,11)=   .608153
Y(14,12)=   .661480
Y(14,13)=   .713246
Y(14,14)=   .763552
Y(14,15)=   .812552
Y(14,16)=   .860443
Y(14,17)=   .907464
Y(14,18)=   .953885
Y(14,19)=  1.000000
Y(15, 1)=  0.000000
Y(15, 2)=   .062100
Y(15, 3)=   .124009
Y(15, 4)=   .185540
Y(15, 5)=   .246517
Y(15, 6)=   .306778
Y(15, 7)=   .366180
Y(15, 8)=   .424604
Y(15, 9)=   .481959
Y(15,10)=   .538183
Y(15,11)=   .593247
Y(15,12)=   .647159
Y(15,13)=   .699961
Y(15,14)=   .751731
Y(15,15)=   .802581
Y(15,16)=   .852654
Y(15,17)=   .902119
Y(15,18)=   .951166
Y(15,19)=  1.000000
Y(16, 1)=  0.000000
Y(16, 2)=   .059779
Y(16, 3)=   .119433
Y(16, 4)=   .178839
Y(16, 5)=   .237883
Y(16, 6)=   .296459
Y(16, 7)=   .354475
Y(16, 8)=   .411857
Y(16, 9)=   .468546
Y(16,10)=   .524506
Y(16,11)=   .579721
Y(16,12)=   .634200
Y(16,13)=   .687972
Y(16,14)=   .741089
```

```
NE04 296
NE04 297
NE04 298
NE04 299
NE04 300
NE04 301
NE04 302
NE04 303
NE04 304
NE04 305
NE04 306
NE04 307
NE04 308
NE04 309
NE04 310
NE04 311
NE04 312
NE04 313
NE04 314
NE04 315
NE04 316
NE04 317
NE04 318
NE04 319
NE04 320
NE04 321
NE04 322
NE04 323
NE04 324
NE04 325
NE04 326
NE04 327
NE04 328
NE04 329
NE04 330
NE04 331
NE04 332
NE04 333
NE04 334
NE04 335
NE04 336
NE04 337
NE04 338
NE04 339
NE04 340
NE04 341
NE04 342
NE04 343
NE04 344
NE04 345
NE04 346
NE04 347
NE04 348
NE04 349
NE04 350
NE04 351
NE04 352
NE04 353
NE04 354
```

```
Y(16,15)=   .793624                                                    NE04 355
Y(16,16)=   .845669                                                    NE04 356
Y(16,17)=   .897332                                                    NE04 357
Y(16,18)=   .948733                                                    NE04 358
Y(16,19)=  1.000000                                                    NE04 359
Y(17, 1)=  0.000000                                                    NE04 360
Y(17, 2)=   .057773                                                    NE04 361
Y(17, 3)=   .115479                                                    NE04 362
Y(17, 4)=   .173054                                                    NE04 363
Y(17, 5)=   .230436                                                    NE04 364
Y(17, 6)=   .287571                                                    NE04 365
Y(17, 7)=   .344410                                                    NE04 366
Y(17, 8)=   .400915                                                    NE04 367
Y(17, 9)=   .457055                                                    NE04 368
Y(17,10)=   .512813                                                    NE04 369
Y(17,11)=   .568181                                                    NE04 370
Y(17,12)=   .623166                                                    NE04 371
Y(17,13)=   .677782                                                    NE04 372
Y(17,14)=   .732059                                                    NE04 373
Y(17,15)=   .786036                                                    NE04 374
Y(17,16)=   .839759                                                    NE04 375
Y(17,17)=   .893286                                                    NE04 376
Y(17,18)=   .946677                                                    NE04 377
Y(17,19)=  1.000000                                                    NE04 378
Y(18, 1)=  0.000000                                                    NE04 379
Y(18, 2)=   .056256                                                    NE04 380
Y(18, 3)=   .112490                                                    NE04 381
Y(18, 4)=   .168682                                                    NE04 382
Y(18, 5)=   .224814                                                    NE04 383
Y(18, 6)=   .280867                                                    NE04 384
Y(18, 7)=   .336826                                                    NE04 385
Y(18, 8)=   .392679                                                    NE04 386
Y(18, 9)=   .448417                                                    NE04 387
Y(18,10)=   .504034                                                    NE04 388
Y(18,11)=   .559529                                                    NE04 389
Y(18,12)=   .614903                                                    NE04 390
Y(18,13)=   .670162                                                    NE04 391
Y(18,14)=   .725315                                                    NE04 392
Y(18,15)=   .780373                                                    NE04 393
Y(18,16)=   .835352                                                    NE04 394
Y(18,17)=   .890270                                                    NE04 395
Y(18,18)=   .945145                                                    NE04 396
Y(18,19)=  1.000000                                                    NE04 397
Y(19, 1)=  0.000000                                                    NE04 398
Y(19, 2)=   .055556                                                    NE04 399
Y(19, 3)=   .111111                                                    NE04 400
Y(19, 4)=   .166667                                                    NE04 401
Y(19, 5)=   .222222                                                    NE04 402
Y(19, 6)=   .277778                                                    NE04 403
Y(19, 7)=   .333333                                                    NE04 404
Y(19, 8)=   .388889                                                    NE04 405
Y(19, 9)=   .444444                                                    NE04 406
Y(19,10)=   .500000                                                    NE04 407
Y(19,11)=   .555556                                                    NE04 408
Y(19,12)=   .611111                                                    NE04 409
Y(19,13)=   .666667                                                    NE04 410
Y(19,14)=   .722222                                                    NE04 411
Y(19,15)=   .777778                                                    NE04 412
Y(19,16)=   .833333                                                    NE04 413
```

```
      Y(19,17)=    .888889                                          NE04 414
      Y(19,18)=    .944444                                          NE04 415
      Y(19,19)=   1.000000                                          NE04 416
C                                                                   NE04 417
      GO TO 90                                                      NE04 418
   20 DX = 5.0                                                      NE04 419
      DZ = 5.0                                                      NE04 420
      FNX=XP/DX                                                     NE04 421
      N=FNX                                                         NE04 422
      N=N+1                                                         NE04 423
      FNZ=ZP/DZ                                                     NE04 424
      M=FNZ                                                         NE04 425
      M=M+1                                                         NE04 426
      C1=(ZP-Z(M))/DZ                                               NE04 427
      C2=(XP-X(N))/DX                                               NE04 428
      A=(Y(N,M+1)-Y(N,M))*C1                                        NE04 429
      B=(Y(N+1,M)-Y(N,M))*C2                                        NE04 430
      D=C1*C2*(Y(N+1,M+1)-Y(N+1,M)+Y(N,M)-Y(N,M+1))                 NE04 431
      YP=Y(N,M)+A+B+D                                               NE04 432
   90 RETURN                                                        NE04 433
      END                                                           NE04 434
```

```
      SUBROUTINE HUB (CD,XR,XCB,ELCBC,H,IR,X,RB,RRP,U,V)
C
C      CALCULATION OF VELOCITIES INDUCED BY THE CENTERBODY
C         **  CENTERBODY IS REPRESENTED AS A RANKINE BODY  **
C
      DIMENSION X(25),RB(25),U(25),V(25),FU(50),FV(50),D(6),DS(6)
      COMMON MZZZ
C
  700 FORMAT (///10X,36HINPUT CENTERBODY DIMENSIONS IN ERROR///)
  701 FORMAT (///10X,52HSUBROUTINE HUB UNABLE TO COMPUTE CENTERBODY GEOM
     1ETRY///)
C
      IF (MZZZ) 3,1,2
    1 XIZ=(XR-XCB)/ELCBC
C
C      COMPUTE LOCATION OF POINT SOURCE
C
      IF (XIZ-H) 10,10,11
   10 NERR=1
C
C      ERROR MESSAGE
      WRITE (6,700)
      RETURN
   11 H2=H*H
      XIZ2=XIZ*XIZ
      A=XIZ-H
      DO 20 J=1,20
      AA=XIZ*H2*SQRT(A*A + H2)
      AA=XIZ2-SQRT(AA)
      AA=SQRT(AA)
      DEL=ABS(AA-A)/AA
      IF (DEL-.001) 30,30,19
   19 A=(AA+A)/2.
   20 CONTINUE
C
C      ERROR MESSAGE
C
      WRITE (6,701)
      NERR=1
      RETURN
   30 A=AA
      EMV=((XIZ2-A*A)**2)/(4.*XIZ*A)
      RETURN
    2 IF (IR) 100,100,200
C
C      COMPUTE VELOCITIES INDUCED AT THE DUCT REFERENCE CYLINDER
C
  100 W=0.5/CD/ELCBC
      NX=-IR
      DO 40 J=1,NX
      XI=X(J)-XCB-XIZ*ELCBC
      XI=XI/ELCBC
   35 XPA=XI+A
      XMA=XI-A
   34 RXPA=SQRT(XPA*XPA + W*W)
      RXMA=SQRT(XMA*XMA + W*W)
      RXPA3=RXPA**3
      RXMA3=RXMA**3
      U(J)=EMV*(XPA/RXPA3 - XMA/RXMA3)
```

```
      V(J)=EMV*W*(1./RXPA3 - 1./RXMA3)                                  NE05 060
   40 CONTINUE                                                          NE05 061
      RETURN                                                            NE05 062
C                                                                       NE05 063
C      COMPUTE INFLOW VELOCITIES                                        NE05 064
C                                                                       NE05 065
  200 XI=XR-XCB-XIZ*ELCBC                                               NE05 066
      XI=XI/ELCBC                                                       NE05 067
      DO 60 J=1,IR                                                      NE05 068
      W=RB(J)*.5/CD/ELCBC/RRP                                           NE05 069
   65 XPA=XI+A                                                          NE05 070
      XMA=XI-A                                                          NE05 071
   64 RXPA=SQRT(XPA*XPA + W*W)                                          NE05 072
      RXMA=SQRT(XMA*XMA + W*W)                                          NE05 073
      RXPA3=RXPA**3                                                     NE05 074
      RXMA3=RXMA**3                                                     NE05 075
      U(J)=EMV*(XPA/RXPA3 - XMA/RXMA3)                                  NE05 076
      V(J)=EMV*W*(1./RXPA3 - 1./RXMA3)                                  NE05 077
      PSI=W*W/2. - EMV*(XPA/RXPA - XMA/RXMA)                            NE05 078
   60 CONTINUE                                                          NE05 079
      RETURN                                                            NE05 080
C                                                                       NE05 081
C      COMPUTE D(N) AND D-STAR(N) FOURIER COEFFICIENTS                  NE05 082
C                                                                       NE05 083
    3 W=0.5/CD/ELCBC                                                    NE05 084
      N=IR                                                              NE05 085
      CN=N                                                              NE05 086
      PI=3.1415926                                                      NE05 087
      DTH=PI/(CN-1.)                                                    NE05 088
      TH=-DTH                                                           NE05 089
      DO 80 J=1,N                                                       NE05 090
      TH=TH+DTH                                                         NE05 091
      CSTH=COS(TH)                                                      NE05 092
      XG=0.5*(1.-CSTH)                                                  NE05 093
      XI=XG-XCB-XIZ*ELCBC                                               NE05 094
      XI=XI/ELCBC                                                       NE05 095
      XPA=XI+A                                                          NE05 096
      XMA=XI-A                                                          NE05 097
      RXPA=SQRT(XPA*XPA+W*W)                                            NE05 098
      RXMA=SQRT(XMA*XMA+W*W)                                            NE05 099
      RXPA3=RXPA**3                                                     NE05 100
      RXMA3=RXMA**3                                                     NE05 101
      FU(J)=EMV*(XPA/RXPA3-XMA/RXMA3)                                   NE05 102
      FV(J)=EMV*W*(1./RXPA3-1./RXMA3)                                   NE05 103
   80 CONTINUE                                                          NE05 104
      NOUT=6                                                            NE05 105
      CALL FOURCS (FU,FU,N,NOUT,0)                                      NE05 106
      CALL FOURCS (FV,FV,N,NOUT,0)                                      NE05 107
      DO 81 J=1,NOUT                                                    NE05 108
      D(J)=FV(J)                                                        NE05 109
      DS(J)=FU(J)                                                       NE05 110
      U(J)=DS(J)                                                        NE05 111
   81 V(J)=D(J)                                                         NE05 112
      RETURN                                                            NE05 113
      END                                                               NE05 114
```

```
      SUBROUTINE CAMBER (CD,TC,RP)                                      NE06 001
C                                                                       NE06 002
C      SUBROUTINE TO COMPUTE INDUCED CAMBER COEFFICIENTS                NE06 003
C                                                                       NE06 004
      DIMENSION CDRAT(5),DCD(4,5),RP(4)                                 NE06 005
C                                                                       NE06 006
      DATA CDRAT/0.0,0.25,0.50,0.75,1.0/                                NE06 007
      DATA (DCD(1,J),J=1,5)/0.0,0.00149,0.00316,0.00505,0.00696/        NE06 008
      DATA (DCD(2,J),J=1,5)/0.0,0.10897,0.22236,0.33414,0.43940/        NE06 009
      DATA (DCD(3,J),J=1,5)/0.0,0.03558,0.07223,0.11022,0.14928/        NE06 010
      DATA (DCD(4,J),J=1,5)/0.0,-0.00203,-0.00539,-0.00948,-0.01375/    NE06 011
C                                                                       NE06 012
      DO 2 J=1,5                                                        NE06 013
      N=J                                                               NE06 014
      IF (CDRAT(J)-CD) 2,3,4                                            NE06 015
    2 CONTINUE                                                          NE06 016
    4 M=N-1                                                             NE06 017
      DEL=CDRAT(N)-CDRAT(M)                                             NE06 018
      DIF=CD-CDRAT(M)                                                   NE06 019
      DELTA=DIF/DEL                                                     NE06 020
      DO 10 K=1,4                                                       NE06 021
      RP(K)=DCD(K,M) + DELTA*(DCD(K,N)-DCD(K,M))                        NE06 022
   10 CONTINUE                                                          NE06 023
      GO TO 20                                                          NE06 024
    3 M=N                                                               NE06 025
      DO 6 K=1,4                                                        NE06 026
    6 RP(K)=DCD(K,M)                                                    NE06 027
   20 DO 21 K=1,4                                                       NE06 028
   21 RP(K)=RP(K)*TC                                                    NE06 029
      RETURN                                                            NE06 030
      END                                                               NE06 031
```

```
      SUBROUTINE PROP (NZP,RB,BR,BTA,TCBLD,RRP,RCBRP,NZ,RA)
C
C       SUBROUTINE TO COMPUTE PROPELLER GEOMETRY PARAMETERS
C
      DIMENSION RB(25),BR(25),TCBLD(25),X(25),Y(25),Z(25),ZZ(25),BTA(25)
     1          ,RA(25)
C
      P=RCBRP*RCBRP
      D=1.-P
      X(1)=RCBRP
      ZN=NZ
      MZ=NZ+1
      DO 20 J=2,MZ
      K=J-1
      AK=K
      E=AK/ZN*D+P
   20 X(J)=SQRT (E)
      DO 21 J=1,NZ
   21 RA(J)=X(J+1)
      X(1)=(RCBRP+RA(1))/2.0
      DO 22 J=2,NZ
   22 X(J)=(RA(J)+RA(J-1))/2.0
      K=1
      RB(NZP+1)=RB(NZP)
      BR(NZP+1)=BR(NZP)
      BTA(NZP+1)=BTA(NZP)
      TCBLD(NZP+1)=TCBLD(NZP)
      DO 39 J=1,NZ
   30 IF (RB(K)-X(J)) 31,32,33
   32 Y(J)=BR(K)
      Z(J)=BTA(K)
      ZZ(J)=TCBLD(K)
      GO TO 39
   31 K=K+1
      GO TO 30
   33 DEL=X(J)-RB(K-1)
      DEL=DEL/(RB(K)-RB(K-1))
      Y(J)=DEL*(BR(K)-BR(K-1))
      Y(J)=Y(J)+BR(K-1)
      Z(J)=DEL*(BTA(K)-BTA(K-1))
      Z(J)=Z(J)+BTA(K-1)
      ZZ(J)=DEL*(TCBLD(K)-TCBLD(K-1))
      ZZ(J)=ZZ(J)+TCBLD(K-1)
   39 CONTINUE
      DO 40 J=1,NZ
      RB(J)=X(J)
      BR(J)=Y(J)
      BTA(J)=Z(J)
      TCBLD(J)=ZZ(J)
   40 CONTINUE
      RETURN
      END
```

```
      SUBROUTINE CLALF  (J)                                             NE08 001
C                                                                       NE08 002
C     COMPUTATION OF BLADE SECTION LIFT COEFFICIENT                     NE08 003
C                                                                       NE08 004
      DIMENSION TCB(10),CLMX(10)                                        NE08 005
C                                                                       NE08 006
      DIMENSION B(6),BS(6),SA(6),SAS(6),P(6,6)                          NE08 007
      DIMENSION RB(25),BR(25),BTA(25),TCBLD(25),RA(25),XPRES(25),PHI(5) NE08 008
      DIMENSION ALPHA(25),STALL(25),JSTL(25),TALK(20)                   NE08 009
C                                                                       NE08 010
      COMMON MZZZ,CD,RO,R1,R2,R3,PI,B,BS,SA,SAS,P                       NE08 011
      COMMON/NEAR1/ NRUN,NBLD,NZ,MZ,NPRES,IR,NTIME,NERR,NPAG,NPHI,NPRINTNE08 012
      COMMON/NEAR3/ RRP,XP,Z,BLD,RB,BR,BTA,TCBLD,TC,RCBRP,APA,ALF,XPRES,NE08 013
     1              RA,XCB,XR,ELCBC,RMAX,PHI,CORJ,CORCB                 NE08 014
      COMMON/NEAR5/ ARJ,ARJP,EPS,RAD,CL,ALPHA,STALL,JSTL,TALK           NE08 015
C                                                                       NE08 016
  101 FORMAT (//////////70H    THE BLADE THICKNESS-TO-CHORD RATIO IS OUTNE08 017
     1SIDE THE RANGE 0.0 TO .34)                                        NE08 018
      IF (MZZZ) 2,1,2                                                   NE08 019
    1 CONTINUE                                                          NE08 020
C                                                                       NE08 021
C     TABLE OF VALUES OF CLMAX VERSUS BLADE THICKNESS-TO-CHORD RATIO    NE08 022
C                                                                       NE08 023
      TCB(1)=0.0                                                        NE08 024
      TCB(2)=.06                                                        NE08 025
      TCB(3)=.08                                                        NE08 026
      TCB(4)=.10                                                        NE08 027
      TCB(5)=.12                                                        NE08 028
      TCB(6)=.15                                                        NE08 029
      TCB(7)=.18                                                        NE08 030
      TCB(8)=.21                                                        NE08 031
      TCB(9)=.24                                                        NE08 032
      TCB(10)=.34                                                       NE08 033
C                                                                       NE08 034
      CLMX(1)=0.9                                                       NE08 035
      CLMX(2)=0.9                                                       NE08 036
      CLMX(3)=1.2                                                       NE08 037
      CLMX(4)=1.45                                                      NE08 038
      CLMX(5)=1.6                                                       NE08 039
      CLMX(6)=1.5                                                       NE08 040
      CLMX(7)=1.35                                                      NE08 041
      CLMX(8)=1.3                                                       NE08 042
      CLMX(9)=1.25                                                      NE08 043
      CLMX(10)=1.1                                                      NE08 044
      RETURN                                                            NE08 045
C                                                                       NE08 046
    2 CONTINUE                                                          NE08 047
   19 IF (TCB(10)-TCBLD(J)) 21,20,20                                    NE08 048
   20 IF (TCB(1)-TCBLD(J)) 22,22,21                                     NE08 049
   21 WRITE (6,101)                                                     NE08 050
      NERR=1                                                            NE08 051
      RETURN                                                            NE08 052
   22 N=1                                                               NE08 053
   23 IF (TCB(N)-TCBLD(J)) 24,25,26                                     NE08 054
   24 N=N+1                                                             NE08 055
      GO TO 23                                                          NE08 056
   25 CLMAX=CLMX(N)                                                     NE08 057
      GO TO 27                                                          NE08 058
   26 DEL=(TCBLD(J)-TCB(N-1))/(TCB(N)-TCB(N-1))                         NE08 059
```

```
      CLMAX=CLMX(N-1)+DEL*(CLMX(N)-CLMX(N-1))                           NE08 060
   27 CONTINUE                                                          NE08 061
      CL=2.*PI*ALPHA(J)/RAD                                             NE08 062
      STALL(J)=0.0                                                      NE08 063
   28 IF (CL-CLMAX) 29,30,30                                            NE08 064
   30 CL=CLMAX                                                          NE08 065
      STALL(J)=1.0                                                      NE08 066
   29 CONTINUE                                                          NE08 067
      RETURN                                                            NE08 068
      END                                                               NE08 069
```

```
      SUBROUTINE ARCSIN(ARG,PHI,INDEX)                                  NE09 001
C                                                                       NE09 002
C     SUBROUTINE FOR COMPUTING ARC SINE                                 NE09 003
C                                                                       NE09 004
C                                                                       NE09 005
C     ARG IS THE SINE OF THE ANGLE.                                     NE09 006
C     PHI IS THE ANGLE (PRINCIPAL VALUE,  -PI/2 TO PI/2)                NE09 007
C         OUTPUT FROM SUBROUTINE.                                       NE09 008
C     INDEX IS 1 IF ANGLE IS TO BE IN RADIANS.                          NE09 009
C     INDEX IS 0 IF ANGLE IS TO BE IN DEGREES.                          NE09 010
C                                                                       NE09 011
      HPI=1.5707963                                                     NE09 012
      A=1.0-ARG*ARG                                                     NE09 013
      IF (A) 5,2,1                                                      NE09 014
    2 IF (ARG) 4,3,3                                                    NE09 015
    3 PHI=HPI                                                           NE09 016
      GO TO 6                                                           NE09 017
    4 PHI=-HPI                                                          NE09 018
      GO TO 6                                                           NE09 019
    1 PHI=ATAN (ARG/SQRT (A))                                           NE09 020
      GO TO 6                                                           NE09 021
    5 WRITE (6,100)                                                     NE09 022
  100 FORMAT(/5X30HERROR...SIN X GREATER THAN 1.0//)                    NE09 023
      GO TO 2                                                           NE09 024
    6 IF(INDEX) 7,7,8                                                   NE09 025
    7 PHI=90.*PHI/HPI                                                   NE09 026
    8 RETURN                                                            NE09 027
      END                                                               NE09 028
```

```
      SUBROUTINE MATRIX (A,NR)                                          NE10 001
      DIMENSION A( 6, 7),B(19,19),N(12)                                 NE10 002
      NC=NR+1                                                           NE10 003
      DO 1 J=1,NR                                                       NE10 004
    1 N(J)=0                                                            NE10 005
      DO 2 I=1,NR                                                       NE10 006
      CON=0.0                                                           NE10 007
      II=I-1                                                            NE10 008
      DO 3 J=1,NR                                                       NE10 009
      JJ=J-1                                                            NE10 010
      IF (II) 4,4,5                                                     NE10 011
    5 DO 6 K=1,II                                                       NE10 012
      IF (J-N(K)) 6,3,6                                                 NE10 013
    6 CONTINUE                                                          NE10 014
    4 CONA=A(J,1)                                                       NE10 015
      IF (CONA) 8,9,9                                                   NE10 016
    8 CONA=-CONA                                                        NE10 017
    9 IF (CONA-CON) 3,3,11                                              NE10 018
   11 CON=CONA                                                          NE10 019
      N(I)=J                                                            NE10 020
    3 CONTINUE                                                          NE10 021
      IF(CON) 500,600,500                                               NE10 022
  600 WRITE (6,601) I                                                   NE10 023
  601 FORMAT(13H SINGULAR, I=,I3)                                       NE10 024
      STOP                                                              NE10 025
  500 NN=N(I)                                                           NE10 026
      DO 12 J=1,NR                                                      NE10 027
   12 A(J,NC)=0.0                                                       NE10 028
      A(NN,NC)=1.0                                                      NE10 029
      DIV=A(NN,1)                                                       NE10 030
      DO 13 L=1,NC                                                      NE10 031
   13 A(NN,L)=A(NN,L)/DIV                                               NE10 032
      DO 14 L=1,NR                                                      NE10 033
      IF (L-NN) 15,14,15                                                NE10 034
   15 CMULT=A(L,1)                                                      NE10 035
      DO 16 J=1,NC                                                      NE10 036
   16 A(L,J)=A(L,J)-CMULT*A(NN,J)                                       NE10 037
   14 CONTINUE                                                          NE10 038
      DO 17 L=1,NR                                                      NE10 039
      DO 18 J=1,NR                                                      NE10 040
   18 A(L,J)=A(L,J+1)                                                   NE10 041
   17 CONTINUE                                                          NE10 042
    2 CONTINUE                                                          NE10 043
      DO 19 J=1,NR                                                      NE10 044
      DO 20 L=1,NR                                                      NE10 045
      NN=N(J)                                                           NE10 046
   20 B(J,L)=A(NN,L)                                                    NE10 047
   19 CONTINUE                                                          NE10 048
      DO 21 J=1,NR                                                      NE10 049
      DO 22 L=1,NR                                                      NE10 050
      NN=N(J)                                                           NE10 051
   22 A(L,NN)=B(L,J)                                                    NE10 052
   21 CONTINUE                                                          NE10 053
      RETURN                                                            NE10 054
      END                                                               NE10 055
```

```
      SUBROUTINE FOURCS  (F,B,N,NOUT,NPRINT)                            NE11 001
C                                                                       NE11 002
C     SUB. FOURCS -- FOURIER COSINE SERIES DETERMINATION                NE11 003
C     FROM RALSTON AND WILF -- MATH. METHODS FOR DIGITAL COMPUTERS      NE11 004
C     CHAPT. 24 BY G. GOERTZEL                                          NE11 005
C                                                                       NE11 006
      DIMENSION F(50),FF(50),B(50)                                      NE11 007
      COMMON MZZZ                                                       NE11 008
  700 FORMAT (1H /)                                                     NE11 009
  701 FORMAT (4E15.7)                                                   NE11 010
  702 FORMAT(5X5HTHETA6X10HFOURIER FN6X11HORIGINAL FN4X12HFOURIER COEF/)NE11 011
      PI=3.1415927                                                      NE11 012
      IF(NOUT-N)10,10,11                                                NE11 013
   11 NOUT=N                                                            NE11 014
   10 ZRO=0.                                                            NE11 015
      ONE=1.0                                                           NE11 016
      TWO=2.0                                                           NE11 017
      IZRO=0                                                            NE11 018
      IONE=1                                                            NE11 019
      ITWO=2                                                            NE11 020
      HPI=1.5707963                                                     NE11 021
      NH=N                                                              NE11 022
      NS=ITWO*(NH-IONE)                                                 NE11 023
      FNS=NS                                                            NE11 024
      FR=TWO/FNS                                                        NE11 025
      PIN=PI*FR                                                         NE11 026
      DO 201 I=1,NH                                                     NE11 027
      CJ=I-IONE                                                         NE11 028
      CSI=COS (PIN*CJ)                                                  NE11 029
      CCSI=CSI+CSI                                                      NE11 030
      CA=ZRO                                                            NE11 031
      CB=ZRO                                                            NE11 032
      DO 202 J=2,NS                                                     NE11 033
      JK=NS-J+ITWO                                                      NE11 034
      IF(JK-NH) 220,220,221                                             NE11 035
  221 JK=ITWO*NH-JK                                                     NE11 036
  220 CC=F(JK)+CA*CCSI-CB                                               NE11 037
      CB=CA                                                             NE11 038
  202 CA=CC                                                             NE11 039
      FF(I)=FR*(F(1)+CA*CSI-CB)                                         NE11 040
      IF(I-IONE) 290,291,290                                            NE11 041
  291 FF(I)=FF(I)/TWO                                                   NE11 042
  290 JN=NS-I-I+IONE                                                    NE11 043
      IF(JN) 203,204,204                                                NE11 044
  203 FF(I)=FF(I)/TWO                                                   NE11 045
  204 CONTINUE                                                          NE11 046
  201 CONTINUE                                                          NE11 047
      IF (NPRINT-1)2,6,7                                                NE11 048
    6 M=N                                                               NE11 049
      GO TO 1                                                           NE11 050
    7 M=NOUT                                                            NE11 051
    1 CN=N                                                              NE11 052
      WRITE (6,700)                                                     NE11 053
      WRITE (6,702)                                                     NE11 054
      DTH=PI/(CN-1.0)                                                   NE11 055
      TH=-DTH                                                           NE11 056
      DO 3 I=1,N                                                        NE11 057
      TH=TH+DTH                                                         NE11 058
      SUM=0.0                                                           NE11 059
```

```
      DO 4 J=1,M                                                        NE11 060
      CJ=J-1                                                            NE11 061
    4 SUM=SUM+ FF(J)*COS (CJ*TH)                                        NE11 062
    3 WRITE (6,701) TH, SUM,F(I), FF(I)                                 NE11 063
    2 DO 8 K=1,NOUT                                                     NE11 064
    8 B(K)=FF(K)                                                        NE11 065
      RETURN                                                            NE11 066
      END                                                               NE11 067
```

```
      SUBROUTINE SRCRNG (CD,XSC,TC,NRP,RP,UQD)                          NE12 001
C                                                                       NE12 002
C        VELOCITY INDUCED BY DISTRIBUTION OF SOURCE RINGS               NE12 003
C                                                                       NE12 004
      DIMENSION TH(205),QD(205),DI(3),A(6),RP(25),UQD(25)               NE12 005
      COMMON MZ                                                         NE12 006
      PI=3.1415926                                                      NE12 007
      A(1)=TC* 2.969                                                    NE12 008
      A(2)=-TC*1.26                                                     NE12 009
      A(3)=-TC*3.516                                                    NE12 010
      A(4)=TC* 2.843                                                    NE12 011
      A(5)=-TC*1.015                                                    NE12 012
      DQ =200.                                                          NE12 013
      DTI=200.                                                          NE12 014
   14 DT=PI/DQ                                                          NE12 015
      XS=XSC-.5                                                         NE12 016
      N=DQ                                                              NE12 017
      NM=N                                                              NE12 018
      N=N+1                                                             NE12 019
      K=N+4                                                             NE12 020
      DO 15 J=1,K                                                       NE12 021
      TH(J)=0.                                                          NE12 022
   15 QD(J)=0.                                                          NE12 023
      DO 19 J=2,N                                                       NE12 024
      TH(J)=TH(J-1)+DT                                                  NE12 025
  120 T=TH(J)                                                           NE12 026
      ST=SIN (T)                                                        NE12 027
      SN2=SIN (T/2.)                                                    NE12 028
      QD(J)=A(1)/2./SN2                                                 NE12 029
      DO 18 I=2,5                                                       NE12 030
      IN=I-1                                                            NE12 031
      EN=IN                                                             NE12 032
      INX=IN+IN-2                                                       NE12 033
      ENX=INX                                                           NE12 034
      QD(J)=QD(J)+EN*A(I)*(SN2**ENX)                                    NE12 035
   18 CONTINUE                                                          NE12 036
      QD(J)=QD(J)*ST                                                    NE12 037
   19 CONTINUE                                                          NE12 038
      TH(N+1)=PI+1.                                                     NE12 039
      QD(N+1)=QD(N)                                                     NE12 040
   22 QD(1)=A(1)                                                        NE12 041
      TH(1)=0.                                                          NE12 042
   31 DTP=PI/DTI                                                        NE12 043
      TP=0.                                                             NE12 044
      H=DTP/3.                                                          NE12 045
      UI=0.                                                             NE12 046
      CST=-2.*XS                                                        NE12 047
      CST2=CST*CST                                                      NE12 048
   40 DO 69 JR=1,NRP                                                    NE12 049
      R=RP(JR)                                                          NE12 050
   50 K=1                                                               NE12 051
      NT=1                                                              NE12 052
   51 DO 60 J=K,3                                                       NE12 053
      CTP=COS (TP)                                                      NE12 054
      ZWP=CD*(CTP-CST)                                                  NE12 055
      PP=(ZWP*ZWP)+((R+1.)*(R+1.))                                      NE12 056
      PM=(ZWP*ZWP)+((R-1.)*(R-1.))                                      NE12 057
      AK2=4.*R/PP                                                       NE12 058
      CALL ELLIPS (AK2,ZK,ZE)                                           NE12 059
```

```
      PP=SQRT (PP)                                                      NE12 060
      U=ZWP*ZE/PP/PM                                                    NE12 061
   52 IF(TP-TH(NT))55,54,53                                             NE12 062
   53 NT=NT+1                                                           NE12 063
      GO TO 52                                                          NE12 064
   54 Q=QD(NT)                                                          NE12 065
      GO TO 56                                                          NE12 066
   55 Q=QD(NT-1)+(TP-TH(NT-1))*(QD(NT)-QD(NT-1))/(TH(NT)-TH(NT-1))      NE12 067
   56 DI(J)=Q*U                                                         NE12 068
   60 TP=TP+DTP                                                         NE12 069
      K=2                                                               NE12 070
      UI=UI+H*(DI(1)+4.*DI(2)+DI(3))                                    NE12 071
      DI(1)=DI(3)                                                       NE12 072
      IF(TP-PI)51,51,61                                                 NE12 073
   61 UV=UI*CD/PI                                                       NE12 074
      UQD(JR)=UV                                                        NE12 075
      TP=0.                                                             NE12 076
      UI=0.                                                             NE12 077
   69 CONTINUE                                                          NE12 078
      RETURN                                                            NE12 079
      END                                                               NE12 080
```

```
      SUBROUTINE VTXRNG (CD,XSC,IR,RP,CN,UG,XPRES,P)                    NE13 001
C        VELOCITY INDUCED BY DISTRIBUTION OF VORTEX RINGS               NE13 002
C                                                                       NE13 003
      DIMENSION TH(205),GD(205),DI(3),RP(25),UG(25),CN(6),XPRES(25)     NE13 004
      DIMENSION FU(50),FV(50),CP(6),P(6,6)                              NE13 005
C                                                                       NE13 006
      COMMON MZZZ                                                       NE13 007
C                                                                       NE13 008
      C0=CN(1)                                                          NE13 009
      C1=CN(2)                                                          NE13 010
      C2=CN(3)                                                          NE13 011
      C3=CN(4)                                                          NE13 012
      C4=CN(5)                                                          NE13 013
      C5=CN(6)                                                          NE13 014
C                                                                       NE13 015
C      SET UP A TABLE OF GAMMA D/GAMMA * SIN(THETA) VERSUS THETA        NE13 016
C                                                                       NE13 017
      DG=100.                                                           NE13 018
      DTI=200.                                                          NE13 019
      PI=3.1415926                                                      NE13 020
   13 DT=PI/DG                                                          NE13 021
      N=DG                                                              NE13 022
      NM=N                                                              NE13 023
      N=N+1                                                             NE13 024
      K=N+4                                                             NE13 025
      DO 12 J=1,K                                                       NE13 026
      TH(J)=0.                                                          NE13 027
      ST=0.0                                                            NE13 028
   12 GD(J)=0.                                                          NE13 029
      DO 19 J=2,N                                                       NE13 030
      TH(J)=TH(J-1)+DT                                                  NE13 031
  120 T=TH(J)                                                           NE13 032
      CT=COS (T/2.)                                                     NE13 033
      CT=CT/SIN (T/2.)                                                  NE13 034
      A=C0*CT                                                           NE13 035
      ST=SIN (T)                                                        NE13 036
      B=C1*ST                                                           NE13 037
      C=C2*SIN (2.*T)                                                   NE13 038
      D=C3*SIN (3.*T)                                                   NE13 039
      E=C4*SIN (4.*T)                                                   NE13 040
      F=C5*SIN (5.*T)                                                   NE13 041
      GD(J)=A+B+C+D+E+F                                                 NE13 042
      GD(J)=GD(J)*ST                                                    NE13 043
   19 CONTINUE                                                          NE13 044
      TH(N+1)=PI+1.                                                     NE13 045
      GD(N+1)=GD(N)                                                     NE13 046
   22 GD(1)=2.*C0                                                       NE13 047
      TH(1)=0.                                                          NE13 048
   31 DTP=PI/DTI                                                        NE13 049
      TP=0.                                                             NE13 050
      H=DTP/3.                                                          NE13 051
      UI=0.                                                             NE13 052
C                                                                       NE13 053
      IF (MZZZ) 200,10,10                                               NE13 054
C                                                                       NE13 055
   10 IF (IR) 70,11,11                                                  NE13 056
C                                                                       NE13 057
   11 XS=XSC-.5                                                         NE13 058
      CST=-2.*XS                                                        NE13 059
```

```
      CST2=CST*CST                                                      NE13 060
C                                                                       NE13 061
C      COMPUTE INFLOW VELOCITIES                                        NE13 062
C                                                                       NE13 063
   40 DO 69 JR=1,IR                                                     NE13 064
      R=RP(JR)                                                          NE13 065
   50 K=1                                                               NE13 066
      NT=1                                                              NE13 067
   51 DO 60 J=K,3                                                       NE13 068
      STP=SIN (TP)                                                      NE13 069
      CTP=COS (TP)                                                      NE13 070
      CTP2=CTP*CTP                                                      NE13 071
      X2=CST2-(2.*CST*CTP)+CTP2                                         NE13 072
      X2=X2*CD*CD                                                       NE13 073
      PP=X2+((R+1.)*(R+1.))                                             NE13 074
      PM=X2+((R-1.)*(R-1.))                                             NE13 075
      AK2=4.*R/PP                                                       NE13 076
      CALL ELLIPS (AK2,ZK,ZE)                                           NE13 077
      PM=2.*(R-1.)/PM                                                   NE13 078
      PP=1./SQRT (PP)                                                   NE13 079
      U=ZK-ZE*(1.+PM)                                                   NE13 080
      U=U*PP                                                            NE13 081
   52 IF(TP-TH(NT))55,54,53                                             NE13 082
   53 NT=NT+1                                                           NE13 083
      GO TO 52                                                          NE13 084
   54 G=GD(NT)                                                          NE13 085
      GO TO 56                                                          NE13 086
   55 G=GD(NT-1)+(TP-TH(NT-1))*(GD(NT)-GD(NT-1))/(TH(NT)-TH(NT-1))      NE13 087
   56 DI(J)=G*U                                                         NE13 088
   60 TP=TP+DTP                                                         NE13 089
      K=2                                                               NE13 090
      UI=UI+H*(DI(1)+4.*DI(2)+DI(3))                                    NE13 091
      DI(1)=DI(3)                                                       NE13 092
      IF(TP-PI)51,51,61                                                 NE13 093
   61 UG(JR)=CD/2./PI*UI                                                NE13 094
      TP=0.                                                             NE13 095
      UI=0.                                                             NE13 096
   69 CONTINUE                                                          NE13 097
      GO TO 999                                                         NE13 098
C                                                                       NE13 099
C      COMPUTE VELOCITIES INDUCED AT THE DUCT REFERENCE CYLINDER        NE13 100
C                                                                       NE13 101
   70 IR=-IR                                                            NE13 102
      DO 99 JR=1,IR                                                     NE13 103
      X=XPRES(JR)                                                       NE13 104
      K=1                                                               NE13 105
      NT=1                                                              NE13 106
      XS=X-.5                                                           NE13 107
      CST=-2.*XS                                                        NE13 108
      CST2=CST*CST                                                      NE13 109
   77 DO 71 J=K,3                                                       NE13 110
      CTP=COS (TP)                                                      NE13 111
      CTP2=CTP*CTP                                                      NE13 112
      X2=CST2-(2.*CST*CTP)+CTP2                                         NE13 113
      X2=X2*CD*CD                                                       NE13 114
      PP=X2+4.                                                          NE13 115
      AK2=4./PP                                                         NE13 116
      CALL ELLIPS (AK2,ZK,ZE)                                           NE13 117
      PP=1./SQRT(PP)                                                    NE13 118
```

```
      U=(ZK-ZE)*PP                                                      NE13 119
   72 IF (TP-TH(NT)) 75,74,73                                           NE13 120
   73 NT=NT+1                                                           NE13 121
      GO TO 72                                                          NE13 122
   74 G=GD(NT)                                                          NE13 123
      GO TO 76                                                          NE13 124
   75 G=GD(NT-1)+(TP-TH(NT-1))*(GD(NT)-GD(NT-1))/(TH(NT)-TH(NT-1))      NE13 125
   76 DI(J)=G*U                                                         NE13 126
   71 TP=TP+DTP                                                         NE13 127
      K=2                                                               NE13 128
      UI=UI+H*(DI(1)+4.*DI(2)+DI(3))                                    NE13 129
      DI(1)=DI(3)                                                       NE13 130
      IF (TP-PI) 77,77,78                                               NE13 131
   78 UG(JR)=CD/2./PI*UI                                                NE13 132
      TP=0.                                                             NE13 133
      UI=0.                                                             NE13 134
   99 CONTINUE                                                          NE13 135
      GO TO 999                                                         NE13 136
C                                                                       NE13 137
C      COMPUTE F(N) AND F-STAR(N) FOURIER COEFFICIENTS                  NE13 138
C                                                                       NE13 139
  200 MZZ=MZZZ                                                          NE13 140
      MZZZ=1                                                            NE13 141
      DO 210 J=1,6                                                      NE13 142
  210 CP(J)=0.0                                                         NE13 143
      DUM=0.0                                                           NE13 144
      DO 211 L=1,6                                                      NE13 145
  211 DUM=DUM + CN(L)*P(1,L)                                            NE13 146
      CP(1)=(CN(1)-DUM)/2.0                                             NE13 147
      DO 212 K=2,6                                                      NE13 148
      DO 213 L=1,6                                                      NE13 149
  213 CP(K)=CP(K) + CN(L)*P(K,L)                                        NE13 150
  212 CP(K)=(CP(K)-CN(K))/2.0                                           NE13 151
      N=IR                                                              NE13 152
      EN=N                                                              NE13 153
      DTA=PI/(EN-1.)                                                    NE13 154
      TA=-DTA                                                           NE13 155
      DO 220 JR=1,N                                                     NE13 156
      TA=TA+DTA                                                         NE13 157
      CSTA=COS(TA)                                                      NE13 158
      CSTA2=CSTA*CSTA                                                   NE13 159
      DUM=0.0                                                           NE13 160
      DO 215 K=2,6                                                      NE13 161
      J=K-1                                                             NE13 162
      TJ=J                                                              NE13 163
  215 DUM=DUM+CP(K)*COS(TJ*TA)                                          NE13 164
      FV(JR)=CP(1)+DUM                                                  NE13 165
      K=1                                                               NE13 166
      NT=1                                                              NE13 167
  207 DO 201 J=K,3                                                      NE13 168
      CTP=COS(TP)                                                       NE13 169
      CTP2=CTP*CTP                                                      NE13 170
      X2=CSTA2-(2.*CSTA*CTP)+CTP2                                       NE13 171
      X2=X2*CD*CD                                                       NE13 172
      PP=X2+4.0                                                         NE13 173
      AK2=4./PP                                                         NE13 174
      CALL ELLIPS (AK2,ZK,ZE)                                           NE13 175
      PP=1./SQRT(PP)                                                    NE13 176
      U=(ZK-ZE)*PP                                                      NE13 177
```

```
  202 IF (TP-TH(NT)) 205,204,203                                        NE13 178
  203 NT=NT+1                                                           NE13 179
      GO TO 202                                                         NE13 180
  204 G=GD(NT)                                                          NE13 181
      GO TO 206                                                         NE13 182
  205 G=GD(NT-1)+(TP-TH(NT-1))*(GD(NT)-GD(NT-1))/(TH(NT)-TH(NT-1))      NE13 183
  206 DI(J)=G*U                                                         NE13 184
  201 TP=TP+DTP                                                         NE13 185
      K=2                                                               NE13 186
      UI=UI+H*(DI(1)+4.*DI(2)+DI(3))                                    NE13 187
      DI(1)=DI(3)                                                       NE13 188
      IF (TP-PI) 207,207,208                                            NE13 189
  208 FU(JR)=CD/2./PI*UI                                                NE13 190
      TP=0.0                                                            NE13 191
      UI=0.0                                                            NE13 192
  220 CONTINUE                                                          NE13 193
      NOUT=6                                                            NE13 194
      NPR=0                                                             NE13 195
      CALL FOURCS (FU,FU,N,NOUT,NPR)                                    NE13 196
      DO 216 J=1,6                                                      NE13 197
      UG(J)=FU(J)                                                       NE13 198
  216 UG(J+6)=CP(J)                                                     NE13 199
      MZZZ=MZZ                                                          NE13 200
C                                                                       NE13 201
  999 RETURN                                                            NE13 202
      END                                                               NE13 203
```

```
      SUBROUTINE ALFRNG (CD,IR,SC,UGA,XPRES)                            NE14 001
C     AXIAL VELOCITY INDUCED BY A DISTRIBUTION OF ALPHA VORTEX RINGS    NE14 002
C                                                                       NE14 003
      DIMENSION TH(205),GA(205),DI(3),XPRES(25),SC(6),UGA(25),ST(6)     NE14 004
      DIMENSION TCD(7),TSC(6,7)                                         NE14 005
      DIMENSION GS(6),F(50),HF(6),FH(50),DVT(3)                         NE14 006
C                                                                       NE14 007
      COMMON MZZZ                                                       NE14 008
C                                                                       NE14 009
      DATA TCD/ 0.,0.5,0.75,1.0,1.5,2.0,5.0/                            NE14 010
      DATA (TSC(I,1),I=1,6)/1.7,0.,0.,0.,0.,0./                         NE14 011
      DATA (TSC(I,2),I=1,6)/1.0978,-0.2382,-0.0175,0.,0.,0./            NE14 012
      DATA (TSC(I,3),I=1,6)/0.92,-0.345,-0.042,0.,0.,0./                NE14 013
      DATA (TSC(I,4),I=1,6)/0.7955,-0.4151,-0.0680,0.,0.,0./            NE14 014
      DATA (TSC(I,5),I=1,6)/0.5611,-0.4834,-0.1230,-0.0121,0.,0./       NE14 015
      DATA (TSC(I,6),I=1,6)/0.5640,-0.5045,-0.1666,-0.0317,0.0035,0./   NE14 016
      DATA (TSC(I,7),I=1,6)/0.3566,-0.4590,-0.2607,-0.1246,-0.0494,0./  NE14 017
C                                                                       NE14 018
      IF (MZZZ) 2,1,2                                                   NE14 019
    1 CONTINUE                                                          NE14 020
C                                                                       NE14 021
C      COMPUTE SC(N) COEFFICIENTS                                       NE14 022
C                                                                       NE14 023
      DO 11 J=1,7                                                       NE14 024
      JSC=J                                                             NE14 025
      IF (CD-TCD(J)) 4,3,11                                             NE14 026
   11 CONTINUE                                                          NE14 027
    3 DO 5 N=1,6                                                        NE14 028
    5 SC(N)=TSC(N,JSC)                                                  NE14 029
      GO TO 10                                                          NE14 030
    4 IF (JSC-1) 6,6,7                                                  NE14 031
    6 RETURN                                                            NE14 032
    7 DELSC=(TCD(JSC)-TCD(JSC-1))/(TCD(JSC)-CD)                         NE14 033
      J=JSC                                                             NE14 034
      DO 8 N=1,6                                                        NE14 035
    8 SC(N)=(TSC(N,J-1)-TSC(N,J))/DELSC + TSC(N,J)                      NE14 036
C                                                                       NE14 037
C     SET UP A TABLE OF GAMMA ALPHA/V*SIN(THETA) VERSUS THETA           NE14 038
C                                                                       NE14 039
   10 PI=3.1415926                                                      NE14 040
      DG=200.                                                           NE14 041
      DT=PI/DG                                                          NE14 042
      K=201                                                             NE14 043
      DO 12 J=1,K                                                       NE14 044
      TH(J)=0.0                                                         NE14 045
   12 GA(J)=0.0                                                         NE14 046
      DO 20 J=2,K                                                       NE14 047
      TH(J)=TH(J-1)+DT                                                  NE14 048
      T=TH(J)                                                           NE14 049
      CTN=COS(T/2.)/SIN(T/2.)                                           NE14 050
      CT=COS(T)                                                         NE14 051
      ST(1)=SIN(T)                                                      NE14 052
      ST(2)=2.*ST(1)*CT                                                 NE14 053
      DO 13 N=3,5                                                       NE14 054
      NM=N-1                                                            NE14 055
      NMM=N-2                                                           NE14 056
   13 ST(N)=2.*ST(NM)*CT-ST(NMM)                                        NE14 057
      GA(J)=SC(1)*CTN                                                   NE14 058
      DO 14 N=2,6                                                       NE14 059
```

```
   14 GA(J)=GA(J)+SC(N)*ST(N-1)                                          NE14 060
      GA(J)=GA(J)*ST(1)                                                  NE14 061
   20 CONTINUE                                                           NE14 062
      GA(1)=2.*SC(1)                                                     NE14 063
      TH(K+1)=PI+1.                                                      NE14 064
      GA(K+1)=GA(K)                                                      NE14 065
C                                                                        NE14 066
C      COMPUTE G-STAR(N) AND H(N) FOURIER COEFFICIENTS                   NE14 067
C                                                                        NE14 068
      MZZZ=1                                                             NE14 069
      DTI=200.                                                           NE14 070
      DTP=PI/DTI                                                         NE14 071
      H=DTP/3.                                                           NE14 072
      TP=0.0                                                             NE14 073
      UI=0.0                                                             NE14 074
      VIT=0.0                                                            NE14 075
      R=1.0                                                              NE14 076
      R32=R**1.5                                                         NE14 077
      RP2=(R+1.)**2                                                      NE14 078
      N=IR                                                               NE14 079
      CN=N                                                               NE14 080
      DTA=PI/(CN-1.)                                                     NE14 081
      TA=-DTA                                                            NE14 082
      DO 50 JR=1,N                                                       NE14 083
      TA=TA+DTA                                                          NE14 084
      CSTA=COS(TA)                                                       NE14 085
      K=1                                                                NE14 086
      NT=1                                                               NE14 087
   47 DO 41 J=K,3                                                        NE14 088
      CTP=COS(TP)                                                        NE14 089
      XI=(CTP-CSTA)*CD                                                   NE14 090
      X2=XI*XI                                                           NE14 091
      DEN=X2+RP2                                                         NE14 092
      AK2=4.*R/DEN                                                       NE14 093
C                                                                        NE14 094
      CALL ELLIPS (AK2,ZK,ZE)                                            NE14 095
C                                                                        NE14 096
      AKP=1.0-AK2                                                        NE14 097
      AKQ=2.0-AK2                                                        NE14 098
      AK4=AK2*AK2                                                        NE14 099
      AYE=((8.0*R*AKQ/AK4) + (2.*R) + 2.0 - 4./AK2*(2.*R+1.))*ZE         NE14 100
      AYE=AYE + AKP/AK2*(8.*R + 4. - 16.*R/AK2)*ZK                       NE14 101
      U=AYE/SQRT(DEN)/(X2+(R-1.)*(R-1.))                                 NE14 102
      AK=SQRT(AK2)                                                       NE14 103
      AKZ=4.*R/RP2                                                       NE14 104
      SBETA=SQRT((1.-AKZ)/(1.-AK2))                                      NE14 105
C                                                                        NE14 106
      CALL ARCSIN (SBETA,BETA,0)                                         NE14 107
      CALL ARCSIN (AK,ASK,0)                                             NE14 108
      CALL LAMBDA (ASK,BETA,HLMB)                                        NE14 109
C                                                                        NE14 110
      EPSR=1.                                                            NE14 111
      AVT=4.*(ZK-ZE)/AK+2.*PI*AK/SQRT(AKZ)*(1.-HLMB)*SQRT((1.-AKZ)/(AKZ NE14 112
     1   -AK2))                                                          NE14 113
      AVT=AVT*XI/(8.*PI*R32) + EPSR/4.                                   NE14 114
   42 IF (TP-TH(NT)) 45,44,43                                            NE14 115
   43 NT=NT+1                                                            NE14 116
      GO TO 42                                                           NE14 117
   44 G=GA(NT)                                                           NE14 118
```

```
      GO TO 46                                                          NE14 119
   45 G=GA(NT-1)+(TP-TH(NT-1))*(GA(NT)-GA(NT-1))/(TH(NT)-TH(NT-1))      NE14 120
   46 DI(J)=G*U                                                         NE14 121
      DVT(J)=G*AVT                                                      NE14 122
   41 TP=TP+DTP                                                         NE14 123
      K=2                                                               NE14 124
      UI=UI+H*(DI(1)+4.*DI(2)+DI(3))                                    NE14 125
      DI(1)=DI(3)                                                       NE14 126
      VIT=VIT+H*(DVT(1)+4.*DVT(2)+DVT(3))                               NE14 127
      DVT(1)=DVT(3)                                                     NE14 128
      IF (TP-PI) 47,47,48                                               NE14 129
   48 F(JR)=-CD*UI/2./PI                                                NE14 130
      FH(JR)=CD*VIT                                                     NE14 131
      TP=0.0                                                            NE14 132
      UI=0.0                                                            NE14 133
      VIT=0.0                                                           NE14 134
   50 CONTINUE                                                          NE14 135
      NOUT=6                                                            NE14 136
      NPR=0                                                             NE14 137
      CALL FOURCS (F,F,N,NOUT,NPR)                                      NE14 138
      CALL FOURCS (FH,FH,N,NOUT,NPR)                                    NE14 139
      DO 51 J=1,NOUT                                                    NE14 140
      GS(J)=F(J)                                                        NE14 141
      HF(J)=FH(J)                                                       NE14 142
      UGA(J+6)=HF(J)                                                    NE14 143
   51 UGA(J)=GS(J)                                                      NE14 144
      MZZZ=0                                                            NE14 145
      RETURN                                                            NE14 146
    2 CONTINUE                                                          NE14 147
      TP=0.0                                                            NE14 148
      UI=0.0                                                            NE14 149
C                                                                       NE14 150
C     CALCULATE THE AXIAL VELOCITY INDUCED BY THE ABOVE VORTEX DISTRIBUTNE14 151
C                                                                       NE14 152
   70 DO 99 JR=1,IR                                                     NE14 153
      X=XPRES(JR)                                                       NE14 154
      K=1                                                               NE14 155
      NT=1                                                              NE14 156
      XS=X-.5                                                           NE14 157
      CST=-2.*XS                                                        NE14 158
      R=1.0                                                             NE14 159
   77 DO 71 J=K,3                                                       NE14 160
      CTP=COS(TP)                                                       NE14 161
      X2=(CTP-CST)*CD                                                   NE14 162
      X2=X2*X2                                                          NE14 163
      DEN=X2+(R+1.)*(R+1.)                                              NE14 164
      AK2=4.*R/DEN                                                      NE14 165
      CALL ELLIPS (AK2,ZK,ZE)                                           NE14 166
      AKP=1.0-AK2                                                       NE14 167
      AKQ=2.0-AK2                                                       NE14 168
      AK4=AK2*AK2                                                       NE14 169
      AYE=((8.0*R*AKQ/AK4) + (2.*R) + 2.0 - 4./AK2*(2.*R+1.))*ZE        NE14 170
      AYE=AYE + AKP/AK2*(8.*R + 4. - 16.*R/AK2)*ZK                      NE14 171
      U=AYE/SQRT(DEN)/(X2+(R-1.)*(R-1.))                                NE14 172
   72 IF (TP-TH(NT)) 75,74,73                                           NE14 173
   73 NT=NT+1                                                           NE14 174
      GO TO 72                                                          NE14 175
   74 G=GA(NT)                                                          NE14 176
      GO TO 76                                                          NE14 177
```

```
 75 G=GA(NT-1)+(TP-TH(NT-1))*(GA(NT)-GA(NT-1))/(TH(NT)-TH(NT-1))      NE14 178
 76 DI(J)=G*U                                                         NE14 179
 71 TP=TP+DTP                                                         NE14 180
    K=2                                                               NE14 181
    UI=UI+H*(DI(1)+4.*DI(2)+DI(3))                                    NE14 182
    DI(1)=DI(3)                                                       NE14 183
    IF (TP-PI) 77,77,78                                               NE14 184
 78 UGA(JR)=-CD*UI/2./PI                                              NE14 185
    TP=0.0                                                            NE14 186
    UI=0.0                                                            NE14 187
 99 CONTINUE                                                          NE14 188
999 RETURN                                                            NE14 189
    END                                                               NE14 190
```

```
      SUBROUTINE GAMCYL (CD,XC,N,RP,UG,IR,XPRES,UGP,RRP,RA)
C
C     SUBROUTINE TO COMPUTE THE AXIAL VELOCITIES INDUCED BY CONSTANT
C       STRENGTH VORTEX CYLINDERS
C
      DIMENSION RP(25),UG(25),XPRES(25),UGP(25,25),RA(25)
      COMMON MZ
C
      PI=3.1415926
      NR=N
      CR=CD*2.
      IF (IR) 2,1,2
    1 XG=(XC-1.)*CR
C
C      COMPUTE THE VELOCITY INDUCED AT THE PROPELLER STATION
C
   20 DO 30 J=1,NR
      R=RP(J)
      IF(R) 22,21,22
   21 U=SQRT ((XG*XG)+1.)
      U=XG/U+1.0
      U=0.5*U
      GO TO 30
   22 XG2=XG*XG
      RP1=(R+1.)*(R+1.)
      RM1=(R-1.)*(R-1.)
      SNB=SQRT (XG2+RM1)
      SNB=XG/SNB
      SKG2=4.*R/(XG2+RP1)
      CALL ELLIPS(SKG2,ZK,ZE)
      SKG=SQRT (SKG2)
      CALL ARCSIN(SKG,ASKG,0)
      CALL ARCSIN(SNB,BETA,0)
      NDEX=0
      IF (BETA) 23,24,24
   23 BETA=-BETA
      NDEX=1
   24 CALL LAMBDA(ASKG,BETA,HLMB)
      IF(NDEX) 25,26,25
   25 HLMB=-HLMB
      NDEX=0
   26 CONTINUE
      U=.25*HLMB+.5
      TM=SKG*XG*ZK/(4.*PI)
      TM=TM/SQRT (R)
      U=U+TM
   30 UG(J)=U
      GO TO 99
    2 NCYL=N
C
C      COMPUTE THE VELOCITY INDUCED AT THE REFERENCE CYLINDER BY
C       THE TRAILING VORTEX CYLINDERS
C
      DO 60 J=1,NCYL
      RGR=RA(J)/RRP
      RGR2=(RGR+1.)*(RGR+1.)
      RGRM=(RGR-1.)*(RGR-1.)
      RTRGR=SQRT(RGR)
      IF (J-NCYL) 31,32,32
```

```
 32 XP=1.0                                                          NE15 060
    RGR=1.0                                                         NE15 061
    RGR2=4.0                                                        NE15 062
    RGRM=0.0                                                        NE15 063
    GO TO 33                                                        NE15 064
 31 XP=XC                                                           NE15 065
 33 DO 60 JR=1,IR                                                   NE15 066
    X=XPRES(JR)                                                     NE15 067
    XG=X-XP                                                         NE15 068
    XGR=XG*CR                                                       NE15 069
    XGR2=XGR*XGR                                                    NE15 070
    IF (XGR) 38,42,38                                               NE15 071
 42 IF (RGR-1.0) 142,242,342                                        NE15 072
142 UG=0.0                                                          NE15 073
    GO TO 60                                                        NE15 074
242 UG=0.25                                                         NE15 075
    GO TO 60                                                        NE15 076
342 UG=0.50                                                         NE15 077
    GO TO 60                                                        NE15 078
 38 CONTINUE                                                        NE15 079
    GKSQ=4.*RGR/(XGR2+RGR2)                                         NE15 080
    GK=SQRT(GKSQ)                                                   NE15 081
    CALL ELLIPS (GKSQ,ZK,ZE)                                        NE15 082
    NDEX=0                                                          NE15 083
    SNB=XGR/SQRT(XGR2+RGRM)                                         NE15 084
    CALL ARCSIN (SNB,BETA,0)                                        NE15 085
    CALL ARCSIN (GK,ASK,0)                                          NE15 086
    IF (BETA) 34,35,35                                              NE15 087
 34 BETA=-BETA                                                      NE15 088
    NDEX=-1                                                         NE15 089
 35 CALL LAMBDA (ASK,BETA,HLMB)                                     NE15 090
    IF (NDEX) 36,37,37                                              NE15 091
 36 HLMB=-HLMB                                                      NE15 092
    BETA=-BETA                                                      NE15 093
    NDEX=0                                                          NE15 094
 37 CONTINUE                                                        NE15 095
    IF (XGR) 41,42,43                                               NE15 096
 43 NDEX=-1                                                         NE15 097
    HLMB=-HLMB                                                      NE15 098
    XGR=-XGR                                                        NE15 099
 41 IF (RGR-1.0) 141,241,241                                        NE15 100
141 UG=GK*XGR*ZK/(4.*PI*RTRGR)-.25*HLMB                             NE15 101
    GO TO 45                                                        NE15 102
241 UG=GK*XGR*ZK/(4.*PI*RTRGR)+0.50+.25*HLMB                        NE15 103
 45 IF (NDEX) 46,60,60                                              NE15 104
 46 XGR=-XGR                                                        NE15 105
    NDEX=0                                                          NE15 106
    HLMB=-HLMB                                                      NE15 107
 47 IF (RGR-1.0) 147,247,347                                        NE15 108
147 UG=-UG                                                          NE15 109
    GO TO 60                                                        NE15 110
247 UG=-UG+0.5                                                      NE15 111
    GO TO 60                                                        NE15 112
347 UG=-UG+1.0                                                      NE15 113
 60 UGP(J,JR)=UG                                                    NE15 114
 99 RETURN                                                          NE15 115
    END                                                             NE15 116
```

```
      SUBROUTINE BNCOEF (C,BGI)                                         NE16 001
C                                                                       NE16 002
C        FOURIER ANALYSIS OF RADIAL VELOCITY INDUCED BY AN              NE16 003
C             ACTUATOR DISK IN THE EXIT PLANE  --  B(N)                 NE16 004
C                                                                       NE16 005
      DIMENSION BG( 6,2),BGI(6),BGO( 6)                                 NE16 006
      COMMON MZZZ                                                       NE16 007
      PI=3.1415927                                                      NE16 008
      MZZZ=-10                                                          NE16 009
      N=100                                                             NE16 010
      KMAX=6                                                            NE16 011
      DO 10 K=1,KMAX                                                    NE16 012
   10 BGI(K)=0.0                                                        NE16 013
      EPS=PI/180.                                                       NE16 014
      PIM=PI-EPS                                                        NE16 015
      CN=N                                                              NE16 016
      DELTH=.5*PIM/CN                                                   NE16 017
      NP=N+1                                                            NE16 018
      DO 6 I=1,NP                                                       NE16 019
      DO 3 J=1,2                                                        NE16 020
      FI=I-2                                                            NE16 021
      FJ=J                                                              NE16 022
      TH=FI*PIM/CN+FJ*DELTH                                             NE16 023
      STH=SIN (TH)                                                      NE16 024
      CTH=COS (TH)                                                      NE16 025
   72 XG=-.5*C*(1.+CTH)                                                 NE16 026
   73 XGSQ=XG*XG                                                        NE16 027
      GKSQ=XGSQ/(4.+XGSQ)                                               NE16 028
      GK=SQRT (4./(4.+XGSQ))                                            NE16 029
      CALL ELLIPS (GKSQ,ZKG,ZCG)                                        NE16 030
      BGC=.5/PI*((GK-2./GK)*ZKG+2./GK*ZCG)                              NE16 031
      STHK=0.                                                           NE16 032
      CTHK=1.                                                           NE16 033
      DO 2 K=1,KMAX                                                     NE16 034
      BG(K,J)=BGC*CTHK                                                  NE16 035
      CON=STHK*CTH+CTHK*STH                                             NE16 036
      CTHK=CTHK*CTH-STHK*STH                                            NE16 037
    2 STHK=CON                                                          NE16 038
    3 CONTINUE                                                          NE16 039
      DO 5 K=1,KMAX                                                     NE16 040
      IF(I-1)4,5,4                                                      NE16 041
    4 BGI(K)=BGI(K)+DELTH*(BG(K,1)+(BGO(K)+BG(K,1)+BG(K,2))/3.)         NE16 042
    5 BGO(K)=BG(K,2)                                                    NE16 043
    6 CONTINUE                                                          NE16 044
      EXTRA=-EPS/PI*ALOG(4./EPS*SQRT (2./C))                            NE16 045
      SI=-1                                                             NE16 046
      DO 7 K=1,KMAX                                                     NE16 047
      SI=-SI                                                            NE16 048
    7 BGI(K)=2.*(BGI(K)+SI*EXTRA)/PI                                    NE16 049
      BGI(1)=.5*BGI(1)                                                  NE16 050
      MZZZ=1                                                            NE16 051
      RETURN                                                            NE16 052
      END                                                               NE16 053
```

```
      SUBROUTINE ANCOEF(NCYL,N,RA,XP,CD,RRP,NRUN,NPRINT,BS,A,AS)          NE17 001
      DIMENSION F(50),BS(6),A(25,6),AS(25,6),RA(25)                      NE17 002
      COMMON MZZZ                                                        NE17 003
  142 FORMAT (1H1,4X10HRUN NUMBER,I5,49X4HPAGE,I3,2H-F,//)               NE17 004
  242 FORMAT (10X55HFOURIER COSINE SERIES COEFFICIENTS  ---  OUTPUT INDENE17 005
     1X =,I3)                                                            NE17 006
      NPAGE = 0                                                          NE17 007
      NOUT = 6                                                           NE17 008
   20 CR=CD*2.0                                                          NE17 009
      PI=3.1415927                                                       NE17 010
   21 CN=N                                                               NE17 011
      DTH=PI/(CN-1.)                                                     NE17 012
      TH=-DTH                                                            NE17 013
C                                                                        NE17 014
C       COMPUTE B-STAR(N) FOURIER COEFFICIENTS                           NE17 015
C                                                                        NE17 016
   22 DO 30 J=1,N                                                        NE17 017
      TH=TH+DTH                                                          NE17 018
      CSTH=COS (TH)                                                      NE17 019
      XG=-.5*CR*(1.+CSTH)                                                NE17 020
      GKSQ=XG*XG                                                         NE17 021
      GKSQ=4.0+GKSQ                                                      NE17 022
      GKSQ=4.0/GKSQ                                                      NE17 023
      CALL ELLIPS (GKSQ,ZK,ZE)                                           NE17 024
      GK=SQRT (GKSQ)                                                     NE17 025
   30 F(J)=0.25+(GK*XG/4.*ZK/PI)                                         NE17 026
      IF(NPRINT) 171,171,170                                             NE17 027
  170 NPAGE = NPAGE + 1                                                  NE17 028
      WRITE (6,142) NRUN,NPAGE                                           NE17 029
      WRITE (6,242) NPRINT                                               NE17 030
  171 CALL FOURCS (F,F ,N,NOUT,NPRINT)                                   NE17 031
      DO 31 J=1,NOUT                                                     NE17 032
   31 BS(J)=F(J)                                                         NE17 033
C                                                                        NE17 034
C       COMPUTE A(N) FOURIER COEFFICIENTS                                NE17 035
C                                                                        NE17 036
   32 DO 40 J=1,NCYL                                                     NE17 037
      RRA=RRP/RA(J)                                                      NE17 038
      RRAP=RRA+1.0                                                       NE17 039
      RRAP=RRAP*RRAP                                                     NE17 040
      RRA4=4.0*RRA                                                       NE17 041
      RASQT=SQRT (RRA)                                                   NE17 042
      TH=-DTH                                                            NE17 043
   33 DO 38 K=1,N                                                        NE17 044
      TH=TH+DTH                                                          NE17 045
      CSTH=COS (TH)                                                      NE17 046
      XR=CR*(1.-CSTH)*.5                                                 NE17 047
      XG=XR-(XP*CR)                                                      NE17 048
      XG=XG*RRA                                                          NE17 049
      XGSQ=XG*XG                                                         NE17 050
      GKSQ=RRAP+XGSQ                                                     NE17 051
      GKSQ=RRA4/GKSQ                                                     NE17 052
      GK=SQRT (GKSQ)                                                     NE17 053
      CALL ELLIPS(GKSQ,ZK,ZE)                                            NE17 054
      F(K)=((ZE-ZK)/GK+(GK*ZK/2.))/PI/RASQT                              NE17 055
   38 CONTINUE                                                           NE17 056
      IF(NPRINT) 173,173,172                                             NE17 057
  172 NPAGE = NPAGE + 1                                                  NE17 058
      WRITE (6,142) NRUN,NPAGE                                           NE17 059
```

```
      WRITE (6,242) NPRINT                                              NE17 060
  173 CALL FOURCS (F,F,N,NOUT,NPRINT)                                   NE17 061
      DO 39 K=1,NOUT                                                    NE17 062
   39 A(J,K)=F(K)                                                       NE17 063
   40 CONTINUE                                                          NE17 064
C                                                                       NE17 065
C        COMPUTE A-STAR(N) FOURIER COEFFICIENTS                         NE17 066
C                                                                       NE17 067
   42 DO 50 J=1,NCYL                                                    NE17 068
      RRA=RRP/RA(J)                                                     NE17 069
      RPRIM=1.0/RRA                                                     NE17 070
      RRAP=RRA+1.0                                                      NE17 071
      RRAP=RRAP*RRAP                                                    NE17 072
      RRA4=4.0*RRA                                                      NE17 073
      RASQT=SQRT (RRA)                                                  NE17 074
      TH=-DTH                                                           NE17 075
   43 DO 48 K=1,N                                                       NE17 076
      TH=TH+DTH                                                         NE17 077
      CSTH=COS (TH)                                                     NE17 078
      XR=CR*(1.0-CSTH)*.5                                               NE17 079
      XG=XR-(XP*CR)                                                     NE17 080
      XG=XG*RRA                                                         NE17 081
      XGSQ=XG*XG                                                        NE17 082
      GKSQ=RRAP+XGSQ                                                    NE17 083
      GKSQ=RRA4/GKSQ                                                    NE17 084
      GK=SQRT (GKSQ)                                                    NE17 085
      CALL ELLIPS (GKSQ,ZK,ZE)                                          NE17 086
      NDEX=0                                                            NE17 087
      SNB=RRA-1.0                                                       NE17 088
      SNB=SNB*SNB                                                       NE17 089
      SNB=XGSQ+SNB                                                      NE17 090
      SNB=1.0/SQRT (SNB)                                                NE17 091
      SNB=XG*SNB                                                        NE17 092
      CALL ARCSIN (SNB,BETA,0)                                          NE17 093
      CALL ARCSIN (GK,ASK,0)                                            NE17 094
      XG=XG*RPRIM                                                       NE17 095
      IF(BETA) 62,63,63                                                 NE17 096
   62 BETA=-BETA                                                        NE17 097
      NDEX=-1                                                           NE17 098
   63 CALL LAMBDA (ASK,BETA,HLMB)                                       NE17 099
      IF(NDEX) 64,65,65                                                 NE17 100
   64 HLMB=-HLMB                                                        NE17 101
      NDEX=0                                                            NE17 102
      BETA=-BETA                                                        NE17 103
   65 CONTINUE                                                          NE17 104
      IF(XG) 71,72,73                                                   NE17 105
   72 IF(RPRIM-1.0) 74,75,76                                            NE17 106
   74 F(K)=0.0                                                          NE17 107
      GO TO 48                                                          NE17 108
   75 F(K)=-.25                                                         NE17 109
      GO TO 48                                                          NE17 110
   76 F(K)=-.50                                                         NE17 111
      GO TO 48                                                          NE17 112
   73 NDEX=-1                                                           NE17 113
      HLMB=-HLMB                                                        NE17 114
      XG=-XG                                                            NE17 115
   71 IF(RPRIM-1.0) 77,78,78                                            NE17 116
   77 F(K)=-GK*XG*ZK/4.0/PI*RASQT                                       NE17 117
      F(K)=F(K)+(.25*HLMB)                                              NE17 118
```

```
      GO TO 79                                                          NE17 119
   78 F(K)=-GK*XG*ZK/4.0/PI*RASQT                                       NE17 120
      F(K)=F(K)-.5-(.25*HLMB)                                           NE17 121
   79 IF(NDEX) 80,48,48                                                 NE17 122
   80 XG=-XG                                                            NE17 123
      NDEX=0                                                            NE17 124
      IF(RPRIM-1.) 81,82,83                                             NE17 125
   81 F(K)=-F(K)                                                        NE17 126
      GO TO 48                                                          NE17 127
   82 F(K)=-F(K)-0.5                                                    NE17 128
      GO TO 48                                                          NE17 129
   83 F(K)=-F(K)-1.0                                                    NE17 130
   48 F(K)=-F(K)                                                        NE17 131
      IF(NPRINT) 175,175,174                                            NE17 132
  174 NPAGE = NPAGE + 1                                                 NE17 133
      WRITE (6,142) NRUN,NPAGE                                          NE17 134
      WRITE (6,242) NPRINT                                              NE17 135
  175 CALL FOURCS (F,F,N,NOUT,NPRINT)                                   NE17 136
      DO 49 K=1,NOUT                                                    NE17 137
   49 AS(J,K)=F(K)                                                      NE17 138
   50 CONTINUE                                                          NE17 139
      RETURN                                                            NE17 140
      END                                                               NE17 141
```

```
      SUBROUTINE CNCOEF (GV,XC)                                         NE18 001
      DIMENSION A(6),B(6),AS(6),BS(6),CN1(6),CN2(6),Q(6,7),P(6,6),XC(6) NE18 002
      DIMENSION CVG(6)                                                  NE18 003
      COMMON MZZZ,CD,R0,R1,R2,R3,PI,B,BS,A,AS,P                         NE18 004
      VG=1.0/GV                                                         NE18 005
      C=2.*CD                                                           NE18 006
C                                                                       NE18 007
C        CALCULATE COEFFICIENT MATRIX                                   NE18 008
C                                                                       NE18 009
      TR0=2.*R0                                                         NE18 010
   35 C4D=C/8.0                                                         NE18 011
   36 CLN=ALOG(32.0/C)-1.0                                              NE18 012
      Q(1,1)=1.0-P(1,1)-TR0*C4D*CLN-R1*C4D                              NE18 013
      Q(1,2)=R2/4.0*C4D-TR0*C4D*0.5*CLN                                 NE18 014
      Q(1,3)=-P(1,3)-R1*0.5*C4D+R3*C4D/6.0                              NE18 015
      Q(1,4)=-R2*C4D/4.0                                                NE18 016
      Q(1,5)=-P(1,5)-R3*C4D/6.0                                         NE18 017
      Q(1,6)=0.0                                                        NE18 018
      Q(2,1)=P(2,1)-TR0*C4D-2.*R1*C4D*CLN-R2*C4D                        NE18 019
      Q(2,2)=P(2,2)-1.0-R1*C4D*CLN+(R1+R3)*C4D/4.0                      NE18 020
      Q(2,3)=C4D*(-R0-R2/3.)                                            NE18 021
      Q(2,4)=P(2,4)-C4D*(R3+R1+R1)/8.0                                  NE18 022
      Q(2,5)=-R2*C4D/6.0                                                NE18 023
      Q(2,6)=P(2,6)-R3*C4D/8.0                                          NE18 024
      Q(3,1)=P(3,1)-C4D*(R1+R3)-2.*R2*C4D*CLN                           NE18 025
      Q(3,2)=R0*C4D/2.0-R2*C4D*CLN                                      NE18 026
      Q(3,3)=P(3,3)-1.0-C4D*(R1/3.+R3/2.)                               NE18 027
      Q(3,4)=C4D*(R2/8.-R0/2.)                                          NE18 028
      Q(3,5)=P(3,5)+C4D*(R3/10.-R1/6.)                                  NE18 029
      Q(3,6)=-R2*C4D/8.0                                                NE18 030
      Q(4,1)=P(4,1)-C4D*(R2+2.*R3*CLN)                                  NE18 031
      Q(4,2)=P(4,2)+C4D*(R1/4.-R3*CLN)                                  NE18 032
      Q(4,3)=C4D*(R0/3.-R2/2.)                                          NE18 033
      Q(4,4)=P(4,4)-1.0-R1*C4D/8.0                                      NE18 034
      Q(4,5)=C4D*(R2/10.-R0/3.)                                         NE18 035
      Q(4,6)=P(4,6)-R1*C4D/8.0                                          NE18 036
      Q(5,1)=P(5,1)-R3*C4D                                              NE18 037
      Q(5,2)=R2*C4D/4.0                                                 NE18 038
      Q(5,3)=P(5,3)+C4D*(R1/6.-R3/2.)                                   NE18 039
      Q(5,4)=C4D*(R0/4.-R2/4.)                                          NE18 040
      Q(5,5)=P(5,5)-1.0-C4D*R1/15.                                      NE18 041
      Q(5,6)=-R0*C4D/4.0                                                NE18 042
      Q(6,1)=P(6,1)                                                     NE18 043
      Q(6,2)=P(6,2)+R3*C4D/4.                                           NE18 044
      Q(6,3)=C4D*R2/6.0                                                 NE18 045
      Q(6,4)=P(6,4)+C4D*(R1/8.-R3/4.)                                   NE18 046
      Q(6,5)=C4D*(R0/5.-R2/6.)                                          NE18 047
      Q(6,6)=P(6,6)-1.0-C4D*R1/8.                                       NE18 048
C                                                                       NE18 049
C        CALCULATE CONSTANTS                                            NE18 050
C                                                                       NE18 051
      DO 40 I=1,6                                                       NE18 052
      CN1(I)=TR0*BS(I)-(2.*B(I))                                        NE18 053
      GO TO (41,42,43,44,45,46),I                                       NE18 054
   41 CN1(I)=CN1(I)+(R1*BS(2))+(R2*BS(3))+(R3*BS(4))                    NE18 055
      GO TO 40                                                          NE18 056
   42 CN1(I)=CN1(I)+R1*(BS(3)+(2.*BS(1)))+R2*(BS(2)+BS(4))+R3*(BS(3)+BS NE18 057
     1(5))                                                              NE18 058
      GO TO 40                                                          NE18 059
```

```
43 CN1(I)=CN1(I)+R1*(BS(2)+BS(4))+R2*(BS(5)+(2.*BS(1)))+R3*(BS(2)+BS
  1(6))
   GO TO 40
44 CN1(I)=CN1(I)+R1*(BS(3)+BS(5))+R2*(BS(2)+BS(6))+2.*R3*BS(1)
   GO TO 40
45 CN1(I)=CN1(I)+R1*(BS(4)+BS(6))+R2*BS(3)+R3*BS(2)
   GO TO 40
46 CN1(I)=CN1(I)+R1*BS(5)+R2*BS(4)+R3*BS(3)
40 CONTINUE
   AS(1)=AS(1)+1.0
   DO 50 I=1,6
   CN2(I)=-2.*(A(I))+(TR0*(AS(I)))
   GO TO (51,52,53,54,55,56),I
51 CN2(I)=CN2(I)+R1*(AS(2))+R2*(AS(3))+R3*(AS(4))
   GO TO 50
52 CN2(I)=CN2(I)+R1*(2.*(AS(1))+AS(3))+R2*(AS(2)+AS(4))+R3*(AS(3)+AS(
  15))
   GO TO 50
53 CN2(I)=CN2(I)+R1*(AS(2)+AS(4))+R2*(2.*(AS(1))+AS(5))+R3*(AS(2)+AS(
  16))
   GO TO 50
54 CN2(I)=CN2(I)+R1*(AS(3)+AS(5))+R2*(AS(2)+AS(6))+R3*2.*(AS(1))
   GO TO 50
55 CN2(I)=CN2(I)+R1*(AS(4)+AS(6))+R2*(AS(3))+R3*(AS(2))
   GO TO 50
56 CN2(I)=CN2(I)+R1*(AS(5))+R2*(AS(4))+R3*(AS(3))
50 CONTINUE
   AS(1)=AS(1)-1.0
C
   CALL MATRIX(Q,6)
59 DO 60 I=1,6
   XC(I)=0.0
60 CVG(I)=CN1(I)+CN2(I)/GV
   DO 61 I=1,6
   DO 61 J=1,6
61 XC(I)=XC(I)+Q(I,J)*CVG(J)
   RETURN
   END
```

```
      SUBROUTINE PRESS                                                  NE19 001
C                                                                       NE19 002
      DIMENSION TCRAT(7),XV(19),DVA(8,7),F(8,19),UP(25),UM(25),SUMU(25) NE19 003
      DIMENSION ST(5),UCBP(25),VCBP(25),CST(5),SAVU(25),FX(25)          NE19 004
C                                                                       NE19 005
      DIMENSION B(6),BS(6),SA(6),SAS(6),P(6,6)                          NE19 006
      DIMENSION C(6),A(25,6),AS(25,6),D(6),DS(6),SC(6),GS(6),H(6)       NE19 007
      DIMENSION RB(25),BR(25),BTA(25),TCBLD(25),RA(25),XPRES(25),PHI(5) NE19 008
      DIMENSION UG(25),UQD(25),UGD(25),UV(25),UCB(25),VCB(25),          NE19 009
     1          UGP(25,25),UGA(25),GV(25),GRV(25),CPP(5,25),CPM(5,25)   NE19 010
      DIMENSION ALPHA(25),STALL(25),JSTL(25),TALK(20)                   NE19 011
C                                                                       NE19 012
      COMMON MZZZ,CD,R0,R1,R2,R3,PI,B,BS,SA,SAS,P                       NE19 013
      COMMON/NEAR1/ NRUN,NBLD,NZ,MZ,NPRES,IR,NTIME,NERR,NPAG,NPHI,NPRINTNE19 014
      COMMON/NEAR2/ C,A,AS,D,DS,SC,GS,H                                 NE19 015
      COMMON/NEAR3/ RRP,XP,Z,BLD,RB,BR,BTA,TCBLD,TC,RCBRP,APA,ALF,XPRES,NE19 016
     1              RA,XCB,XR,ELCBC,RMAX,PHI,CORJ,CORCB                 NE19 017
      COMMON/NEAR4/ UG,UQD,UGD,UV,UCB,VCB,UGP,UGA,GV,GAM,GRV,CPP,CPM    NE19 018
      COMMON/NEAR5/ ARJ,ARJP,EPS,RAD,CL,ALPHA,STALL,JSTL,TALK           NE19 019
C                                                                       NE19 020
      DATA TCRAT/0.06,0.08,0.12,0.15,0.18,0.21,0.24/                    NE19 021
      DATA XV/0.0,0.005,0.0125,0.025,0.05,0.075,0.1,0.15,0.2,0.25,0.3,  NE19 022
     1        0.4,0.5,0.6,0.7,0.8,0.9,0.95,1.0/                         NE19 023
      DATA (DVA(1,I),I=1,7)/3.992,2.015,1.364,0.984,0.696,0.462,0.478/  NE19 024
      DATA (DVA(2,I),I=1,7)/2.90,1.795,1.31,0.971,0.694,0.561,0.478/    NE19 025
      DATA (DVA(3,I),I=1,7)/1.988,1.475,1.199,0.934,0.685,0.558,0.478/  NE19 026
      DATA (DVA(4,I),I=1,7)/1.60,1.312,1.112,0.90,0.675,0.557,0.478/    NE19 027
      DATA (DVA(5,I),I=1,7)/1.342,1.178,1.028,0.861,0.662,0.555,0.478/  NE19 028
      DATA (DVA(6,I),I=1,7)/1.167,1.065,0.946,0.818,0.648,0.550,0.478/  NE19 029
      DATA (DVA(7,I),I=1,7)/1.050,0.964,0.870,0.771,0.632,0.542,0.478/  NE19 030
      DATA (F(1,I),I=1,19)/0.,0.938,1.057,1.089,1.103,1.107,1.101,1.098,NE19 031
     1   1.091,1.086,1.078,1.066,1.053,1.042,1.028,1.013,0.990,0.974,0./NE19 032
      DATA (F(2,I),I=1,19)/0.,0.890,1.050,1.105,1.128,1.133,1.130,1.128,NE19 033
     1   1.122,1.114,1.106,1.089,1.072,1.054,1.039,1.017,0.984,0.969,0./NE19 034
      DATA (F(3,I),I=1,19)/0.,0.800,1.005,1.114,1.174,1.184,1.188,1.188,NE19 035
     1   1.183,1.174,1.162,1.135,1.108,1.080,1.053,1.022,0.978,0.952,0./NE19 036
      DATA (F(4,I),I=1,19)/0.,0.739,0.966,1.112,1.204,1.224,1.233,1.233,NE19 037
     1   1.229,1.218,1.204,1.170,1.131,1.098,1.064,1.024,0.972,0.934,0./NE19 038
      DATA (F(5,I),I=1,19)/0.,0.682,0.926,1.103,1.228,1.264,1.276,1.278,NE19 039
     1   1.275,1.262,1.247,1.205,1.154,1.116,1.074,1.025,0.966,0.914,0./NE19 040
      DATA (F(6,I),I=1,19)/0.,0.630,0.887,1.087,1.242,1.297,1.317,1.325,NE19 041
     1   1.320,1.306,1.290,1.240,1.178,1.133,1.085,1.027,0.957,0.895,0./NE19 042
      DATA (F(7,I),I=1,19)/0.,0.579,0.848,1.063,1.244,1.322,1.354,1.374,NE19 043
     1   1.368,1.350,1.333,1.277,1.204,1.151,1.097,1.032,0.944,0.879,0./NE19 044
C                                                                       NE19 045
  700 FORMAT (///10X,53HDUCT PRESSURE DISTRIBUTION CALCULATION ASSUMES TNE19 046
     1/C = ,F5.3//)                                                     NE19 047
C                                                                       NE19 048
      IF (MZZZ) 2,1,2                                                   NE19 049
    1 CONTINUE                                                          NE19 050
C                                                                       NE19 051
C      SET UP A TABLE OF CONTINUOUS VELOCITY CORRECTION FACTORS         NE19 052
C                                                                       NE19 053
      DO 31 J=1,7                                                       NE19 054
      TCP=TCRAT(J)                                                      NE19 055
      JTC=J                                                             NE19 056
      IF (TC-TCRAT(J)) 32,33,31                                         NE19 057
   32 IF (J-1) 132,132,34                                               NE19 058
   31 CONTINUE                                                          NE19 059
```

```
  132 WRITE (6,700) TCP                                                 NE19 060
   33 DO 38 N=1,19                                                      NE19 061
      IF (N-7) 37,37,38                                                 NE19 062
   37 DVA(8,N)=DVA(JTC,N)                                               NE19 063
   38 F(8,N)=F(JTC,N)                                                   NE19 064
      GO TO 39                                                          NE19 065
   34 DELTC=(TCRAT(JTC)-TCRAT(JTC-1))/(TCRAT(JTC)-TC)                   NE19 066
      J=JTC                                                             NE19 067
      DO 35 N=1,19                                                      NE19 068
   35 F(8,N)=(F(J-1,N)-F(J,N))/DELTC + F(J,N)                           NE19 069
C                                                                       NE19 070
C      SET UP A TABLE OF THE DISCONTINUOUS VELOCITY CORRECTION FACTORS  NE19 071
C                                                                       NE19 072
      DO 36 N=1,7                                                       NE19 073
   36 DVA(8,N)=(DVA(J-1,N)-DVA(J,N))/DELTC + DVA(J,N)                   NE19 074
   39 CONTINUE                                                          NE19 075
      RETURN                                                            NE19 076
C                                                                       NE19 077
    2 CONTINUE                                                          NE19 078
C                                                                       NE19 079
C      LOOK UP CONTINUOUS VELOCITY CORRECTION FACTOR                    NE19 080
C                                                                       NE19 081
      DO 49 N=1,IR                                                      NE19 082
      DO 42 J=1,19                                                      NE19 083
      JK=J                                                              NE19 084
      IF (XPRES(N)-XV(J)) 41,47,42                                      NE19 085
   42 CONTINUE                                                          NE19 086
   41 DELX=(XV(JK)-XV(JK-1))/(XV(JK)-XPRES(N))                          NE19 087
      FX(N)=(F(8,JK-1)-F(8,JK))/DELX + F(8,JK)                          NE19 088
      GO TO 49                                                          NE19 089
   47 FX(N)=F(8,JK)                                                     NE19 090
   49 CONTINUE                                                          NE19 091
      SNALF=SIN(ALF/RAD)                                                NE19 092
      CSALF=COS(ALF/RAD)                                                NE19 093
C                                                                       NE19 094
C      COMPUTE VELOCITY INDUCED BY TRAILING VORTEX CYLINDERS            NE19 095
C                                                                       NE19 096
      CALL GAMCYL (CD,XP,NZ,RB,UG,IR,XPRES,UGP,RRP,RA)                  NE19 097
      DO 10 J=1,IR                                                      NE19 098
   10 SUMU(J)=1.0                                                       NE19 099
      DO 12 J=1,IR                                                      NE19 100
      DO 12 N=1,NZ                                                      NE19 101
   12 SUMU(J)=SUMU(J) + UGP(N,J)*GV(N)                                  NE19 102
C                                                                       NE19 103
C      COMPUTE VELOCITY INDUCED BY DUCT-BOUND VORTICITY                 NE19 104
C                                                                       NE19 105
      IRC=-IR                                                           NE19 106
      CALL VTXRNG (CD,XP,IRC,RB,C,UGD,XPRES,P)                          NE19 107
      DO 14 J=1,IR                                                      NE19 108
   14 SUMU(J)=SUMU(J) + UGD(J)*GV(NZ)                                   NE19 109
C                                                                       NE19 110
C      COMPUTE VELOCITY INDUCED BY THE CENTERBODY                       NE19 111
C                                                                       NE19 112
      IRC=-IR                                                           NE19 113
      CALL HUB (CD,XR,XCB,ELCBC,RMAX,IRC,XPRES,RB,RRP,UCBP,VCBP)        NE19 114
      DO 16 J=1,IR                                                      NE19 115
      SUMU(J)=SUMU(J) + UCBP(J)*CORCB                                   NE19 116
      SUMU(J)=SUMU(J)*CSALF                                             NE19 117
   16 SAVU(J)=SUMU(J)                                                   NE19 118
```

```
      IF (SNALF) 20,21,20                                               NE19 119
C                                                                       NE19 120
C      COMPUTE VELOCITY INDUCED BY ALPHA VORTEX RINGS                   NE19 121
C                                                                       NE19 122
   20 CALL ALFRNG (CD,IR,SC,UGA,XPRES)                                  NE19 123
      GO TO 23                                                          NE19 124
C                                                                       NE19 125
   21 DO 22 J=1,IR                                                      NE19 126
   22 UGA(J)=0.0                                                        NE19 127
   23 DO 99 M=1,NPHI                                                    NE19 128
      CSPHI=COS(PHI(M)/RAD)                                             NE19 129
      SNPHI=SIN(PHI(M)/RAD)                                             NE19 130
      DO 90 J=1,IR                                                      NE19 131
   90 SUMU(J)=SAVU(J)                                                   NE19 132
      DO 25 J=1,IR                                                      NE19 133
   25 SUMU(J)=SUMU(J) + UGA(J)*SNALF*CSPHI                              NE19 134
   30 CONTINUE                                                          NE19 135
C                                                                       NE19 136
C      CORRECT CONTINUOUS INDUCED VELOCITY                              NE19 137
C                                                                       NE19 138
      DO 48 N=1,IR                                                      NE19 139
   48 SUMU(N)=SUMU(N)*FX(N)                                             NE19 140
C                                                                       NE19 141
C      COMPUTE DISCONTINUOUS PORTION OF SURFACE VELOCITY                NE19 142
C                                                                       NE19 143
      DO 59 N=1,IR                                                      NE19 144
      CT=1.-2.*XPRES(N)                                                 NE19 145
      ST(1)=SQRT(1.-CT*CT)                                              NE19 146
      ST(2)=2.*ST(1)*CT                                                 NE19 147
      DO 50 K=3,5                                                       NE19 148
      KM=K-1                                                            NE19 149
      KMM=K-2                                                           NE19 150
   50 ST(K)=2.*ST(KM)*CT-ST(KMM)                                        NE19 151
      IF (XPRES(N)-0.10) 51,57,57                                       NE19 152
   51 DO 52 J=1,7                                                       NE19 153
      JK=J                                                              NE19 154
      IF (XPRES(N)-XV(J)) 54,53,52                                      NE19 155
   52 CONTINUE                                                          NE19 156
   53 DVAX=DVA(8,JK)                                                    NE19 157
      GO TO 55                                                          NE19 158
   54 DELX=(XV(JK)-XV(JK-1))/(XV(JK)-XPRES(N))                          NE19 159
      DVAX=(DVA(8,JK-1)-DVA(8,JK))/DELX + DVA(8,JK)                     NE19 160
   55 CTN=DVAX*2.0*PI                                                   NE19 161
      GO TO 56                                                          NE19 162
   57 CT2=SQRT((1.+CT)/2.)                                              NE19 163
      CTN=CT2/SQRT(1.-CT2*CT2)                                          NE19 164
   56 GD=C(1)*CTN                                                       NE19 165
      GA=SC(1)*CTN                                                      NE19 166
      DO 58 J=1,5                                                       NE19 167
      GD=GD+C(J+1)*ST(J)                                                NE19 168
   58 GA=GA+SC(J+1)*ST(J)                                               NE19 169
      GD=GD*GV(NZ)*CSALF                                                NE19 170
      GA=GA*SNALF*CSPHI                                                 NE19 171
      UM(N)=SUMU(N)-GD/2.-GA/2.                                         NE19 172
   59 UP(N)=SUMU(N)+GD/2.+GA/2.                                         NE19 173
      UT=SNALF*SNPHI                                                    NE19 174
C                                                                       NE19 175
C      COMPUTE PRESSURE COEFFICIENT INSIDE AND OUTSIDE DUCT SURFACE     NE19 176
C                                                                       NE19 177
```

```
      DO 60 N=1,IR                                                      NE19 178
      UTT=UT*FX(N)                                                      NE19 179
      UTT=UTT*UTT                                                       NE19 180
      CPP(M,N)=1.-UP(N)*UP(N) + UTT                                     NE19 181
   60 CPM(M,N)=1.-UM(N)*UM(N) + UTT                                     NE19 182
   99 CONTINUE                                                          NE19 183
      RETURN                                                            NE19 184
      END                                                               NE19 185
```

```
      SUBROUTINE OUTPUT                                                 NE20 001
C                                                                       NE20 002
      DIMENSION B(6),BS(6),SA(6),SAS(6),P(6,6)                          NE20 003
      DIMENSION C(6),A(25,6),AS(25,6),D(6),DS(6),SC(6),GS(6),H(6)       NE20 004
      DIMENSION RB(25),BR(25),BTA(25),TCBLD(25),RA(25),XPRES(25),PHI(5) NE20 005
      DIMENSION UG(25),UQD(25),UGD(25),UV(25),UCB(25),VCB(25),          NE20 006
     1          UGP(25,25),UGA(25),GV(25),GRV(25),CPP(5,25),CPM(5,25)   NE20 007
      DIMENSION ALPHA(25),STALL(25),JSTL(25),TALK(20)                   NE20 008
      DIMENSION CTDP(10),CNDP(5),CMDP(5),E(6),ES(6),F(6),FS(6)          NE20 009
C                                                                       NE20 010
      COMMON MZZZ,CD,RO,R1,R2,R3,PI,B,BS,SA,SAS,P                       NE20 011
      COMMON/NEAR1/ NRUN,NBLD,NZ,MZ,NPRES,IR,NTIME,NERR,NPAG,NPHI,NPRINTNE20 012
      COMMON/NEAR2/ C,A,AS,D,DS,SC,GS,H                                 NE20 013
      COMMON/NEAR3/ RRP,XP,Z,BLD,RB,BR,BTA,TCBLD,TC,RCBRP,APA,ALF,XPRES,NE20 014
     1              RA,XCB,XR,ELCBC,RMAX,PHI,CORJ,CORCB                 NE20 015
      COMMON/NEAR4/ UG,UQD,UGD,UV,UCB,VCB,UGP,UGA,GV,GAM,GRV,CPP,CPM    NE20 016
      COMMON/NEAR5/ ARJ,ARJP,EPS,RAD,CL,ALPHA,STALL,JSTL,TALK           NE20 017
C                                                                       NE20 018
  101 FORMAT(15H1     RUN NUMBER,I5,49X,4HPAGE,I3//)                    NE20 019
  701 FORMAT(15H1     RUN NUMBER,I5,17X15HOPTIONAL OUTPUT,17X,4HPAGEI3//)NE20 020
  702 FORMAT (/17X1H(,F5.2,1H),29X1H(,F5.2,1H))                         NE20 021
  703 FORMAT (1H1,5X,10HRUN NUMBER,I5,10X34HDUCT SURFACE PRESSURE DISTRINE20 022
     1BUTION,10X,4HPAGE,I3//)                                           NE20 023
  102 FORMAT ( 5X,20A4//)                                               NE20 024
  113 FORMAT (9X4HH(N))                                                 NE20 025
  114 FORMAT (9X5HSC(N))                                                NE20 026
  115 FORMAT (9X4HC(N))                                                 NE20 027
  116 FORMAT (9X4HB(N))                                                 NE20 028
  117 FORMAT (9X5HB(N)*)                                                NE20 029
  118 FORMAT (9X8HSUM A(N))                                             NE20 030
  119 FORMAT (9X9HSUM A(N)*)                                            NE20 031
  120 FORMAT (9X4HD(N))                                                 NE20 032
  121 FORMAT (9X5HD(N)*)                                                NE20 033
  122 FORMAT (9X6HA(M,N))                                               NE20 034
  123 FORMAT (9X7HA(M,N)*)                                              NE20 035
  124 FORMAT (14X,16HEFFECTIVE CAMBER,4F10.6//)                         NE20 036
  143 FORMAT(/10X34HFOURIER COSINE SERIES COEFFICIENTS/15X5HN=1,65X4HM=1NE20 037
     1,I2//)                                                            NE20 038
  148 FORMAT (7X12HDUCT...  C/D6X4HXP/C6X3HT/C6X6HRTE/RP4X6HRCB/RP5X4HAPNE20 039
     1/A/10X6F10.6//)                                                   NE20 040
  149 FORMAT (15X5HALPHA,5X1HJ,9X2HJ',6X8HJ COS(A),2X8HJ'COS(A)/        NE20 041
     110X,F10.3,4F10.5)                                                 NE20 042
  150 FORMAT(5X1HN4X4HR/RP4X5HUQD/V7X5HUGD/V7X4HUG/V8X5HUCB/V6X8HGAMMA/RNE20 043
     1V)                                                                NE20 044
  151 FORMAT(///15XI5,2X,24HITERATIONS,    EPSILON =,F9.6)              NE20 045
  152 FORMAT (/17X6HINFLOW,19X5HBLADE/5X1HN4X4HR/RP5X3HU/V8X5HGAM/V7X5HANE20 046
     1LPHA6X9HDELTA P/Q)                                                NE20 047
  153 FORMAT (/9X6HCTP(D)5X6HCTD(P)4X7HCTD(P)'5X4HCTDP7X5HCTDP'6X4HCNDP,NE20 048
     1 7X4HCMDP)                                                        NE20 049
  154 FORMAT (2X4H(A) ,7(1PE11.4))                                      NE20 050
  155 FORMAT (2X4H(B) ,7(1PE11.4))                                      NE20 051
  156 FORMAT (///5X8HNOTES...//10X55H(A)  COEFFICIENTS BASED ON FREE STRNE20 052
     1EAM DYNAMIC PRESSURE//10X46H(B)  COEFFICIENTS BASED ON PROPELLER TNE20 053
     1IP SPEED)                                                         NE20 054
  157 FORMAT (/11X,53H*   BLADE SECTION LIFT COEFFICIENT HAS EXCEEDED CLNE20 055
     1MAX/20X,14HIN ANNULI NOS.,25I3)                                   NE20 056
  244 FORMAT (5X,6(1PE13.6))                                            NE20 057
  245 FORMAT (F9.4,5(1X2(1PE10.3)))                                     NE20 058
  250 FORMAT (//2X7HAZIMUTH/3X8HPHI =  /,5(3H---3X,F7.2,4X4H---/))      NE20 059
```

```
  251 FORMAT (/5X4HX/C ,1(3X6HCP(IN),4X7HCP(OUT),1X))                    NE20 060
  252 FORMAT (/5X4HX/C ,2(3X6HCP(IN),4X7HCP(OUT),1X))                    NE20 061
  253 FORMAT (/5X4HX/C ,3(3X6HCP(IN),4X7HCP(OUT),1X))                    NE20 062
  254 FORMAT (/5X4HX/C ,4(3X6HCP(IN),4X7HCP(OUT),1X))                    NE20 063
  255 FORMAT (/5X4HX/C ,5(3X6HCP(IN),4X7HCP(OUT),1X))                    NE20 064
  256 FORMAT(///9X50HPRESSURE COEFFICIENTS BASED ON PROPELLER TIP SPEED)NE20 065
  257 FORMAT(//9X51HPRESSURE COEFFICIENTS BASED ON FREE STREAM VELOCITY)NE20 066
  260 FORMAT (I6,F9.5,5(1PE12.5))                                        NE20 067
  261 FORMAT (2X1H*I3,F9.5,5(1PE12.5))                                   NE20 068
C                                                                        NE20 069
      IF (NTIME-50) 930,930,931                                          NE20 070
  931 NERR=1                                                             NE20 071
      NPRINT=NPRINT+1                                                    NE20 072
  930 SNALF=SIN(ALF/RAD)                                                 NE20 073
      CSALF=COS(ALF/RAD)                                                 NE20 074
      ARJV=ARJ/CSALF                                                     NE20 075
      ARJVP=ARJP/CSALF                                                   NE20 076
      NCYL=MZ                                                            NE20 077
C                                                                        NE20 078
      IF (NPRINT.EQ.1.OR.NPRINT.GE.11) GO TO 900                         NE20 079
      GO TO 901                                                          NE20 080
  900 NPAG=NPAG+1                                                        NE20 081
      WRITE (6,701) NRUN,NPAG                                            NE20 082
      WRITE (6,102) TALK                                                 NE20 083
      WRITE (6,148) CD,XP,TC,RRP,RCBRP,APA                               NE20 084
      WRITE (6,124) R0,R1,R2,R3                                          NE20 085
      WRITE (6,149) ALF,ARJV,ARJVP,ARJ,ARJP                              NE20 086
      WRITE (6,702) CORJ,CORCB                                           NE20 087
      WRITE (6,150)                                                      NE20 088
      DO 61 J=1,NZ                                                       NE20 089
      X=UG(J)*GAM                                                        NE20 090
      Y=UGD(J)*GAM                                                       NE20 091
      R=RB(J)*RRP                                                        NE20 092
      XQ=UQD(J)*CORJ                                                     NE20 093
      XY=UCB(J)*CORCB                                                    NE20 094
   61 WRITE (6,260) J,R,XQ,Y,X,XY,GRV(J)                                 NE20 095
      WRITE (6,151) NTIME,EPS                                            NE20 096
  901 IF (NPRINT.GE.10) GO TO 902                                        NE20 097
      GO TO 903                                                          NE20 098
  902 NPAG=NPAG+1                                                        NE20 099
      WRITE (6,701) NRUN,NPAG                                            NE20 100
      WRITE (6,102) TALK                                                 NE20 101
      WRITE (6,148) CD,XP,TC,RRP,RCBRP,APA                               NE20 102
      WRITE (6,149) ALF,ARJV,ARJVP,ARJ,ARJP                              NE20 103
      WRITE (6,143) NCYL                                                 NE20 104
      WRITE (6,115)                                                      NE20 105
      WRITE (6,244) (C(J),J=1,6)                                         NE20 106
      IF (ALF) 904,905,904                                               NE20 107
  904 WRITE (6,114)                                                      NE20 108
      WRITE (6,244) (SC(J),J=1,6)                                        NE20 109
  905 CONTINUE                                                           NE20 110
      WRITE (6,116)                                                      NE20 111
      WRITE (6,244) (B(K),K=1,6)                                         NE20 112
      WRITE (6,117)                                                      NE20 113
      WRITE (6,244) (BS(K),K=1,6)                                        NE20 114
      WRITE (6,118)                                                      NE20 115
      WRITE (6,244) (SA(J),J=1,6)                                        NE20 116
      WRITE (6,119)                                                      NE20 117
      WRITE (6,244) (SAS(J),J=1,6)                                       NE20 118
```

```
      WRITE (6,120)
      WRITE (6,244) (D(N),N=1,6)
      WRITE (6,121)
      WRITE (6,244) (DS(N),N=1,6)
      WRITE (6,113)
      WRITE (6,244) (H(N),N=1,6)
      WRITE (6,122)
      DO 924 M=1,NCYL
  924 WRITE (6,244) (A(M,N),N=1,6)
      WRITE (6,123)
      DO 925 M=1,NCYL
  925 WRITE (6,244) (AS(M,N),N=1,6)
C
  903 NPAG=NPAG+1
      WRITE (6,101) NRUN,NPAG
      WRITE (6,102) TALK
      WRITE (6,148) CD,XP,TC,RRP,RCBRP,APA
      WRITE (6,149) ALF,ARJV,ARJVP,ARJ,ARJP
      WRITE (6,152)
      X=0.
      Y=0.
      DO 63 J=1,NZ
      X=GRV(J)/PI/ARJP*BLD/Z
      Y=Y+X
      R=RB(J)*RRP
      DELP=GRV(J)*BLD/PI/ARJP
      IF (STALL(J)) 62,64,62
   64 WRITE (6,260) J,R,UV(J),GV(J),ALPHA(J),DELP
      GO TO 63
   62 WRITE (6,261) J,R,UV(J),GV(J),ALPHA(J),DELP
   63 CONTINUE
      X=0.0
C
C      COMPUTE DUCTED PROPELLER THRUST COEFFICIENTS
C
      CTCF=ARJ*ARJ*PI/APA/8.0/CSALF/CSALF
      CTDP(1)=Y*APA*CSALF*CSALF
      DO 20 J=1,6
   20 E(J)=SA(J) + D(J)*CORCB + B(J)*GAM
      CON=-CD*PI*GAM*CSALF*CSALF
      CTDP(2)=C(1)*(4.*E(1)+2.*E(2)) + 2.*C(2)*E(1)
      CTALF=SC(1)*(4.*H(1)+2.*H(2)) + 2.*SC(2)*H(1)
      DO 21 N=2,5
      CTALF=CTALF + SC(N+1)*H(N) - SC(N)*H(N+1)
   21 CTDP(2)=CTDP(2) + C(N+1)*E(N) - C(N)*E(N+1)
      CTDP(2)=CTDP(2)*CON + PI*CD*(2.*SC(1)+SC(2))*SNALF*SNALF
      CTALF=-PI*CD/2.*SNALF*SNALF*CTALF
      CTDP(2)=CTDP(2) + CTALF
      X=RRP*RRP
      X=1.0-(1.0/X)
      X=X*DELP*CSALF*CSALF
      CTDP(3)=CTDP(2) + X
      CTDP(4)=CTDP(1) + CTDP(2)
      CTDP(5)=CTDP(1) + CTDP(3)
      DO 22 J=1,5
   22 CTDP(J+5)=CTDP(J)*CTCF
C
C      COMPUTE DUCT NORMAL FORCE COEFFICIENTS
C
```

```
      DO 30 J=1,5                                                       NE20 178
      CMDP(J)=0.0                                                       NE20 179
   30 CNDP(J)=0.0                                                       NE20 180
      SACA=SNALF*CSALF                                                  NE20 181
      IF (SACA) 31,23,31                                                NE20 182
   31 MZZZ=-1                                                           NE20 183
C                                                                       NE20 184
C      COMPUTE F(N) AND F-STAR(N) FOURIER COEFFICIENTS                  NE20 185
C                                                                       NE20 186
      NF=50                                                             NE20 187
      CALL VTXRNG (CD,XP,NF,RB,C,UGD,XPRES,P)                           NE20 188
      MZZZ=1                                                            NE20 189
      DO 32 J=1,6                                                       NE20 190
      FS(J)=UGD(J)                                                      NE20 191
   32 F(J)=UGD(J+6)                                                     NE20 192
      DO 33 J=1,6                                                       NE20 193
   33 ES(J)=SAS(J) + DS(J)*CORCB + (BS(J)+FS(J))*GAM                    NE20 194
      CNDP(2)=SC(1)*(4.*ES(1)+2.*ES(2)) + 2.*SC(2)*ES(1)                NE20 195
      DUM=0.0                                                           NE20 196
      DO 34 J=2,5                                                       NE20 197
   34 DUM=DUM + SC(J+1)*ES(J) - SC(J)*ES(J+1)                           NE20 198
      CNDP(2)=(CNDP(2)+DUM)*PI*CD*SACA/2.                               NE20 199
      CNDP(3)=C(1)*(4.*GS(1)+2.*GS(2)) + 2.*C(2)*GS(1)                  NE20 200
      DUM=0.0                                                           NE20 201
      DO 35 J=2,5                                                       NE20 202
   35 DUM=DUM + C(J+1)*GS(J) - C(J)*GS(J+1)                             NE20 203
      CNDP(3)=(CNDP(3)+DUM)*PI*CD*SACA/2.*GAM                           NE20 204
      CNDP(4)=PI*CD*SACA*(2.*SC(1)+SC(2))                               NE20 205
      CNDP(1)=CNDP(2) + CNDP(3) + CNDP(4)                               NE20 206
C                                                                       NE20 207
C      COMPUTE DUCT MOMENT COEFFICIENTS                                 NE20 208
C                                                                       NE20 209
      CMDP(2)=C(1)*(4.*GS(1)+4.*GS(2)+2.*GS(3)) + C(2)*(GS(2)-GS(4))    NE20 210
     1        + C(3)*(2.*GS(1)-GS(5)) + C(4)*(GS(2)-GS(6)) + C(5)*GS(3) NE20 211
     2        + C(6)*GS(4)                                              NE20 212
      CMDP(2)=CMDP(2)*PI/4.*GAM*SACA*CD*CD                              NE20 213
      CMDP(3)=PI/2.*CD*CD*SACA*(2.*SC(1)+SC(3))                         NE20 214
      CMDP(4)=SC(1)*(4.*ES(1)+4.*ES(2)+2.*ES(3)) + SC(2)*(ES(2)-ES(4))  NE20 215
     1        + SC(3)*(2.*ES(1)-ES(5)) + SC(4)*(ES(2)-ES(6))            NE20 216
     2        + SC(5)*ES(3) + SC(6)*ES(4)                               NE20 217
      CMDP(4)=CMDP(4)*PI/4.*SACA*CD*CD                                  NE20 218
      DO 36 J=1,6                                                       NE20 219
   36 E(J)=E(J) + F(J)*GAM                                              NE20 220
      CMDP(5)=SC(1)*(4.*E(1)+2.*E(2)) + 2.*SC(2)*E(1)                   NE20 221
      DUM=0.0                                                           NE20 222
      DO 37 J=2,5                                                       NE20 223
   37 DUM=DUM + SC(J+1)*E(J) - SC(J)*E(J+1)                             NE20 224
      CMDP(5)=-(CMDP(5)+DUM)*PI/2.*SACA*CD                              NE20 225
      DO 38 J=2,5                                                       NE20 226
   38 CMDP(1)=CMDP(1) + CMDP(J)                                         NE20 227
   23 CONTINUE                                                          NE20 228
      WRITE (6,153)                                                     NE20 229
      WRITE (6,154) (CTDP(N),N=1,5) ,CNDP(1),CMDP(1)                    NE20 230
      CNDP(1)=CNDP(1)*CTCF                                              NE20 231
      CMDP(1)=CMDP(1)*CTCF*RRP/2.0                                      NE20 232
      WRITE (6,155) (CTDP(N),N=6,10),CNDP(1),CMDP(1)                    NE20 233
      WRITE (6,156)                                                     NE20 234
      N=0                                                               NE20 235
      NTOT=0                                                            NE20 236
```

```
   70 DO 71 J=1,NZ                                                      NE20 237
      IF (STALL(J)) 71, 71, 72                                          NE20 238
   72 N=N+1                                                             NE20 239
      JSTL(N)=J                                                         NE20 240
      NTOT=N                                                            NE20 241
   71 CONTINUE                                                          NE20 242
   73 IF (NTOT) 75, 75, 74                                              NE20 243
   74 WRITE (6,157) (JSTL(N),N=1,NTOT)                                  NE20 244
   75 CONTINUE                                                          NE20 245
      IF (NPHI) 99,99,80                                                NE20 246
C                                                                       NE20 247
C      COMPUTE DUCT SURFACE PRESSURE COEFFICIENTS                       NE20 248
C                                                                       NE20 249
   80 CALL PRESS                                                        NE20 250
      DO 81 I=1,NPHI                                                    NE20 251
      DO 81 J=1,IR                                                      NE20 252
      IF (XPRES(J)-XP) 81,82,82                                         NE20 253
   82 CPP(I,J)=CPP(I,J) + DELP*CSALF*CSALF                              NE20 254
   81 CONTINUE                                                          NE20 255
      IF (NPRES.LE.1) GO TO 85                                          NE20 256
      DO 83 I=1,NPHI                                                    NE20 257
      DO 83 J=1,IR                                                      NE20 258
      CPP(I,J)=CPP(I,J)*ARJV*ARJV/2.0                                   NE20 259
   83 CPM(I,J)=CPM(I,J)*ARJV*ARJV/2.0                                   NE20 260
   85 NPAG=NPAG+1                                                       NE20 261
      WRITE (6,703) NRUN,NPAG                                           NE20 262
      WRITE (6,102) TALK                                                NE20 263
      WRITE (6,148) CD,XP,TC,RRP,RCBRP,APA                              NE20 264
      WRITE (6,149) ALF,ARJV,ARJVP,ARJ,ARJP                             NE20 265
      WRITE (6,250) (PHI(J),J=1,NPHI)                                   NE20 266
      GO TO (1,2,3,4,5),NPHI                                            NE20 267
    1 WRITE (6,251)                                                     NE20 268
      GO TO 6                                                           NE20 269
    2 WRITE (6,252)                                                     NE20 270
      GO TO 6                                                           NE20 271
    3 WRITE (6,253)                                                     NE20 272
      GO TO 6                                                           NE20 273
    4 WRITE (6,254)                                                     NE20 274
      GO TO 6                                                           NE20 275
    5 WRITE (6,255)                                                     NE20 276
    6 CONTINUE                                                          NE20 277
      DO 86 J=1,IR                                                      NE20 278
   86 WRITE (6,245) XPRES(J), (CPP(I,J),CPM(I,J) ,I=1,NPHI)             NE20 279
      IF (NPRES.LE.1) GO TO 8                                           NE20 280
      WRITE (6,256)                                                     NE20 281
      GO TO 99                                                          NE20 282
    8 WRITE (6,257)                                                     NE20 283
   99 RETURN                                                            NE20 284
      END                                                               NE20 285
```

8. SAMPLE CASES

In this section, the input and output for several sample cases are described. The input decks are shown in figure 6 and illustrate both methods of stacking runs discussed in section 4.1. The first case considers the ducted propeller on the Bell X-22A aircraft (ref. 13). This input deck for this case is followed by a blank card, since a different configuration follows. The second and succeeding cases consider the ducted fan used on the Doak VZ-4DA aircraft (refs. 12 and 14). There are four cases illustrated in figure 6. The first of these four, which follows the blank card, has a complete input deck. The remaining three cases, which have run numbers of 2010, 2020, and 2030, use only a single card, since only the advance ratio or the angle of attack is changed. The quantities required as input were obtained from references 12-14. The only areas in which questions might arise are the geometric camber coefficients and the centerbody configuration, both of which are discussed below.

The Bell duct has an unusual camberline shape, and the coefficients resulting from equation (48) do not yield a shape that matches the actual camberline well. A better fit to the camberline was obtained by solving equation (47) at $x/c = 0$, 0.15, 0.45, and 0.7. These are the coefficients shown on the third card of the input deck. The centerbody model is determined by placing the maximum centerbody radius at its true location aft of the fan. The Rankine body results in a centerbody which is larger and more blunt than the true centerbody. The shapes are compared in figure 3 of reference 1.

The camberline of the Doak duct was best fit by solving equation (47) at $x/c = 0$, 0.25, 0.55, and 0.8; and these are the coefficients on the third card of the input deck for the second case. The centerbody model is determined by assuming the maximum centerbody radius to be at the propeller station. The resulting shape fits the centerbody nose very well but it is shorter in length than the true centerbody as is shown in figure 4 of reference 1.

Two runs making up the sample case output are shown in figure 7. They are the first two runs obtained from the stacked input decks shown in figure 6. Since the output was described in detail in section 5, no further comments will be given here.

9. DATA COMPARISONS

In order to give the program user some indication of the nature of the results obtained from the computer program, some comparisons with experimental data are presented. The comparisons included herein are brief because of the similarity between the current results and those included in reference 4.

Comparison between the measured and predicted total thrust coefficient on the Bell X-22A ducted propeller in axial flow (ref. 13) is shown in figure 8. These results illustrate the effect of advance ratio and fan blade pitch angle. The agreement is good until comparisons are made in regions of possible blade stall; that is, low advance ratio and high blade pitch angles. Note that the program predicts the correct trend due to blade stall when $\beta_{3/4} = 49^{\circ}$ even though the total thrust is overpredicted.

The total thrust coefficients presented in this report include the pressure thrust due to the increased pressure aft of the fan acting on the duct. The pressure thrust is included to give better agreement between measured and predicted duct thrust as is shown in reference 5. Thus the overprediction of the total thrust coefficient is due primarily to the predicted fan thrust as discussed in the above reference. The fan thrust is very dependent on the fan blade characteristics, and an error of 2° in the blade pitch angle can cause large differences in fan thrust.

In figure 9, the effect of angle of attack and advance ratio on the thrust, normal force, and pitching moment on the Doak ducted fan (ref. 14) are shown. The thrust and normal force agree generally with the results in reference 5; that is, the thrust is well predicted at high advance ratios and at low angles of attack, and the normal force is well predicted at high advance ratios. The major difference in results occurs with pitching moments. Reference 5 showed good prediction of pitching moments, but figure 9(c) shows poor agreement with experiment. In the early work described in references 2 and 4, some simplifying assumptions were necessary in order to compute duct pitching moments. The analysis of reference 1 removed these assumptions and showed some of them to be incorrect. Unexplainably, the more exact analysis results in poor agreement with experiment.

Comparison of predicted and measured duct surface pressure coefficients on the Doak ducted fan are shown in figures 10, 11, and 12. The present results are nearly the same as those shown in reference 4 where a larger range of conditions was investigated. Although $\alpha = 20^{\circ}$ is the highest angle of attack shown in figures 11 and 12, the nature of the agreement on duct pressure coefficients is the same for angles of attack as large as $\alpha = 80^{\circ}$.

Nielsen Engineering & Research, Inc.
Palo Alto, Calif.
June 1969

REFERENCES

1. Mendenhall, M. R. and Spangler, S. B.: Theoretical Study of Ducted Fan Performance. NASA CR- 1494

2. Kriebel, A. R.: Theoretical Investigation of Static Coefficients, Stability Derivatives, and Interference for Ducted Propellers. Vidya Rep. No. 112, Mar. 31, 1964, AD 602 269 (published in part in Jour. of Aircraft, AIAA, vol. 1, no. 4, July-Aug. 1964).

3. Kriebel, A. R. and Mendenhall, M. R.: Interference Between a Hull and a Stern-Mounted Ducted Propeller. Vidya Rep. No. 204, Oct. 30, 1965, AD 626 035.

4. Kriebel, A. R. and Mendenhall, M. R.: Predicted and Measured Performance of Two Full-Scale Ducted Propellers. NASA CR 578, May 17, 1966.

5. Mendenhall, M. R., Kriebel, A. R., and Spangler, S. B.: Theoretical Study of Ducted Propeller Blade Loading, Duct Stall and Interference. Vidya Rep. No. 229, Sept. 1966.

6. Mendenhall, M. R. and Spangler, S. B.: Computer Programs for the Prediction of Ducted Propeller Performance. Vidya Rep. No. 230, Sept. 1966.

7. Hough, Gary R.: The Aerodynamic Loading on Streamlined Ducted Bodies. Therm, Inc. TAR-TR 625, Dec. 1962.

8. Ordway, D. E., Sluyter, M. M., and Sonnerup, B. O. U.: Three-Dimensional Theory of Ducted Propellers. Therm, Inc. TAR-TR 602, Aug. 1960.

9. Ordway, D. E. and Greenberg, M. D.: General Harmonic Solutions for the Ducted Propeller. Therm, Inc. TAR-TR 613, Aug. 1961.

10. Weissinger, J.: On the Aerodynamics of Ring Wings. I. The Pressure Distribution on a Thin, Almost Axially Symmetric Wing in Subsonic Flow. Deutshen Versuchsanstalt für Luftfahrt E. V.-Mülheim (Ruhr), Sept. 1955. Translated by S. de Los Santos, David Taylor Model Basin Aero. Rep. No. 899, June 1956, AD 102 118.

11. Abbott, I. H. and von Doenhoff, A. E.: Theory of Wing Sections. Dover Publications Inc., 1959.

12. Mort, K. W.: Performance Characteristics of a 4-Foot-Diameter Ducted Fan at Zero Angle of Attack for Several Fan Blade Angles. NASA TN D-3122, Dec. 1965.

13. Mort, K. W. and Gamse, B.: A Wind-Tunnel Investigation of a 7-Foot-Diameter Ducted Propeller. NASA TN D-4142, Aug. 1967.

14. Mort, K. W. and Yaggy, P. F.: Aerodynamic Characteristics of a 4-Foot-Diameter Ducted Fan Mounted on the Tip of a Semispan Wing. NASA TN D-1301, Apr. 1962.

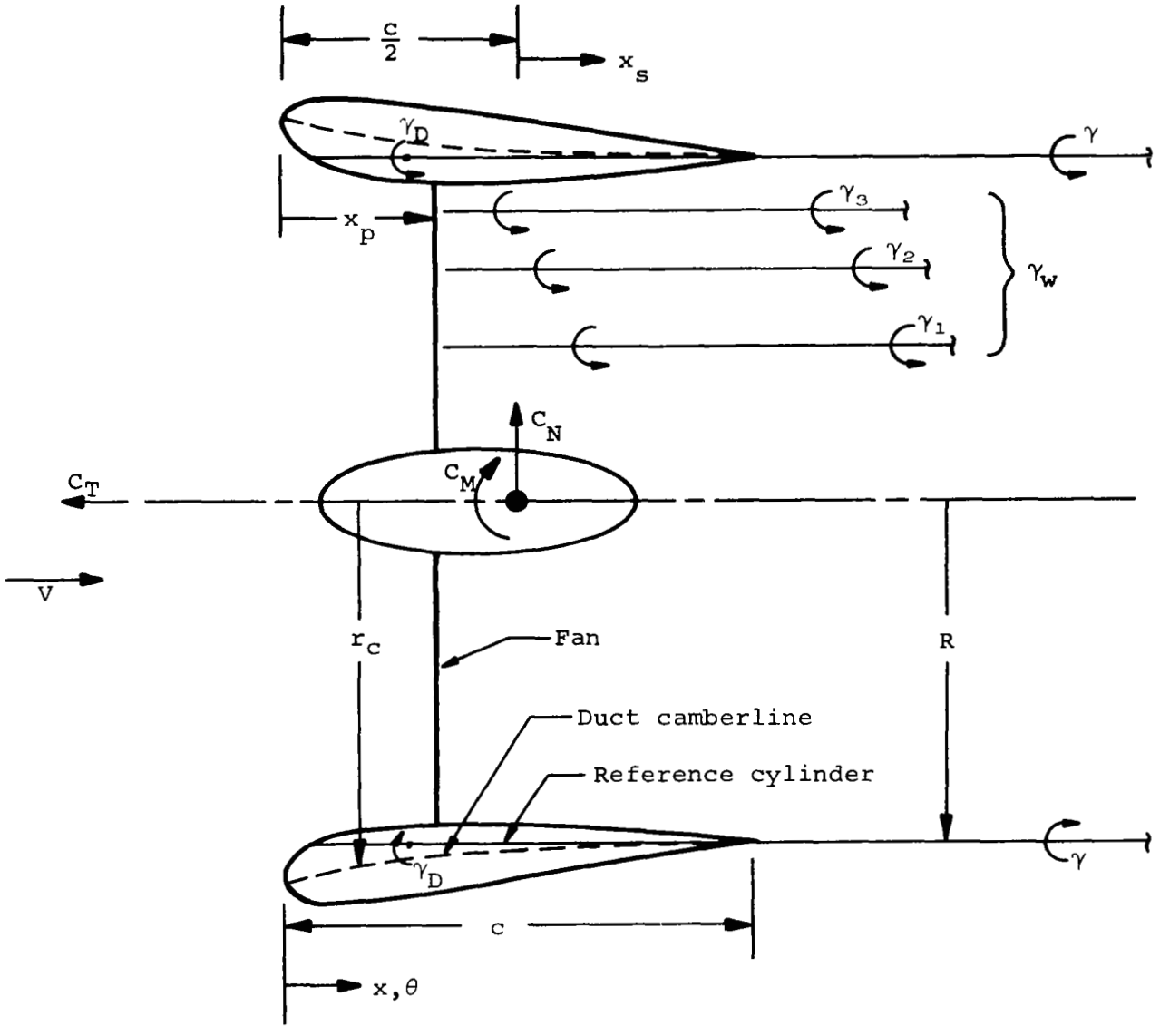

Figure 1.- Theoretical model of ducted fan in axial flow.

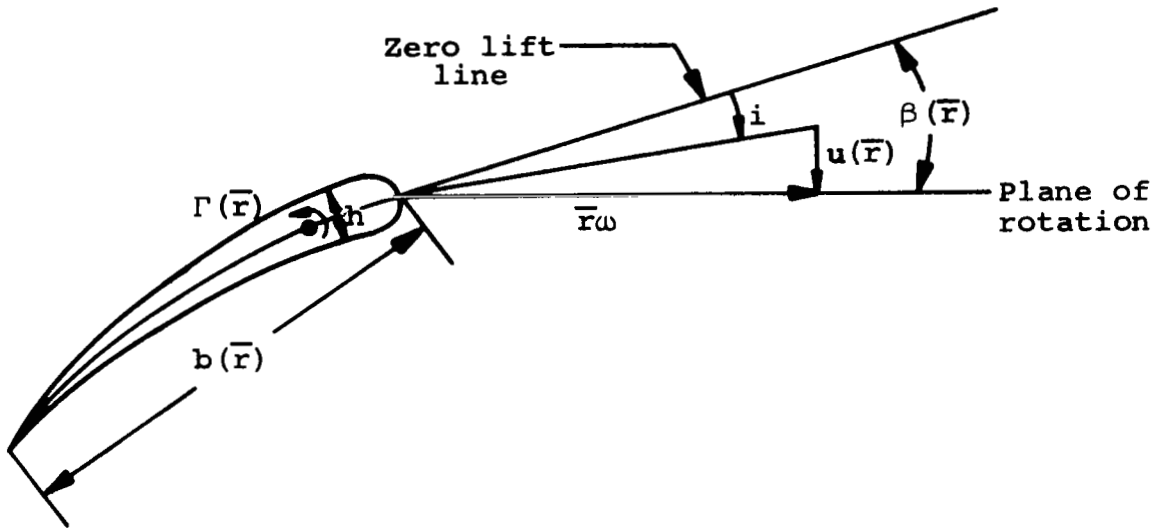

Figure 2.- Blade section flow characteristics.

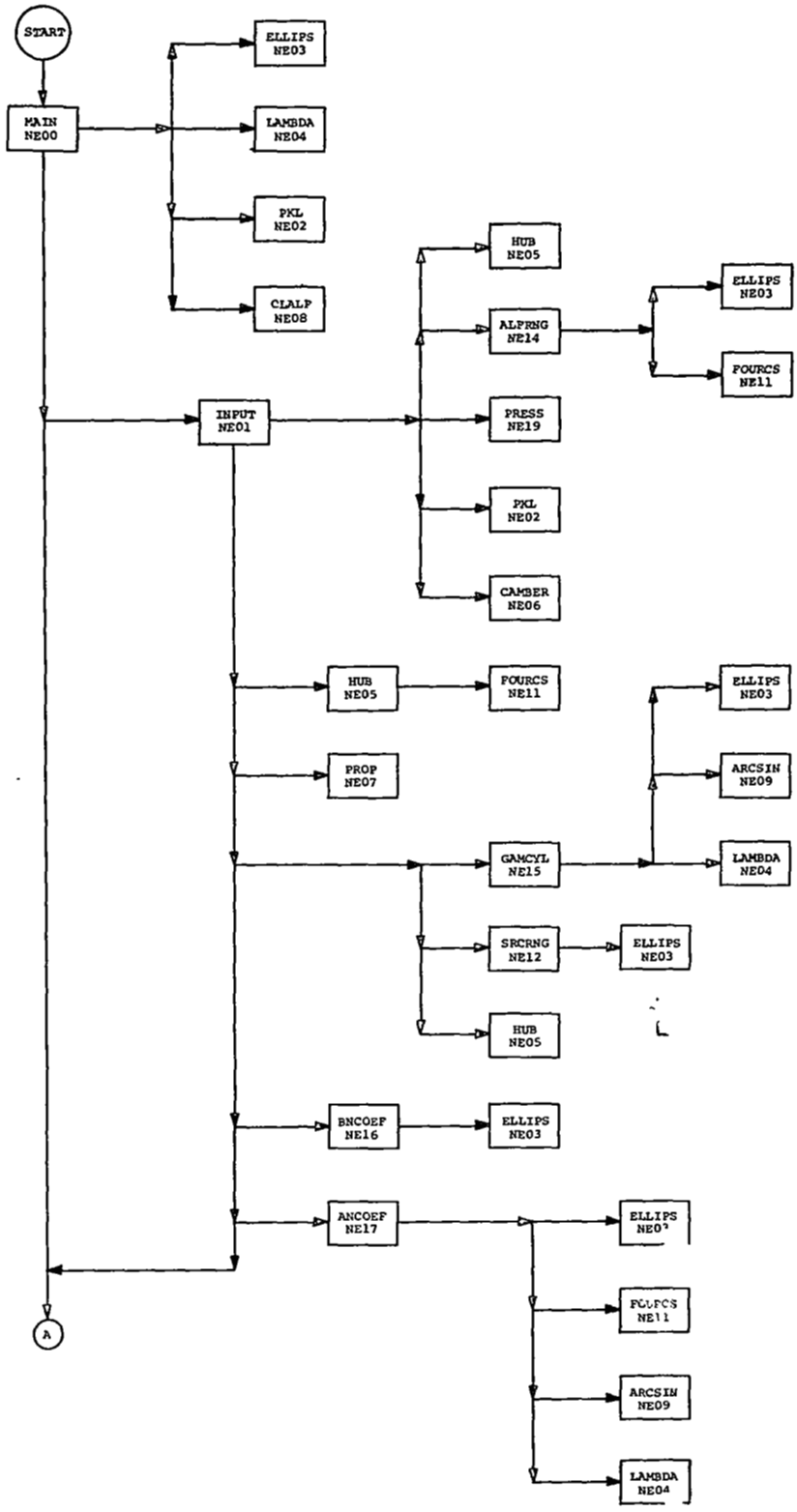

(a) Initialization section. (d,

Figure 3.- Relationship between subprograms

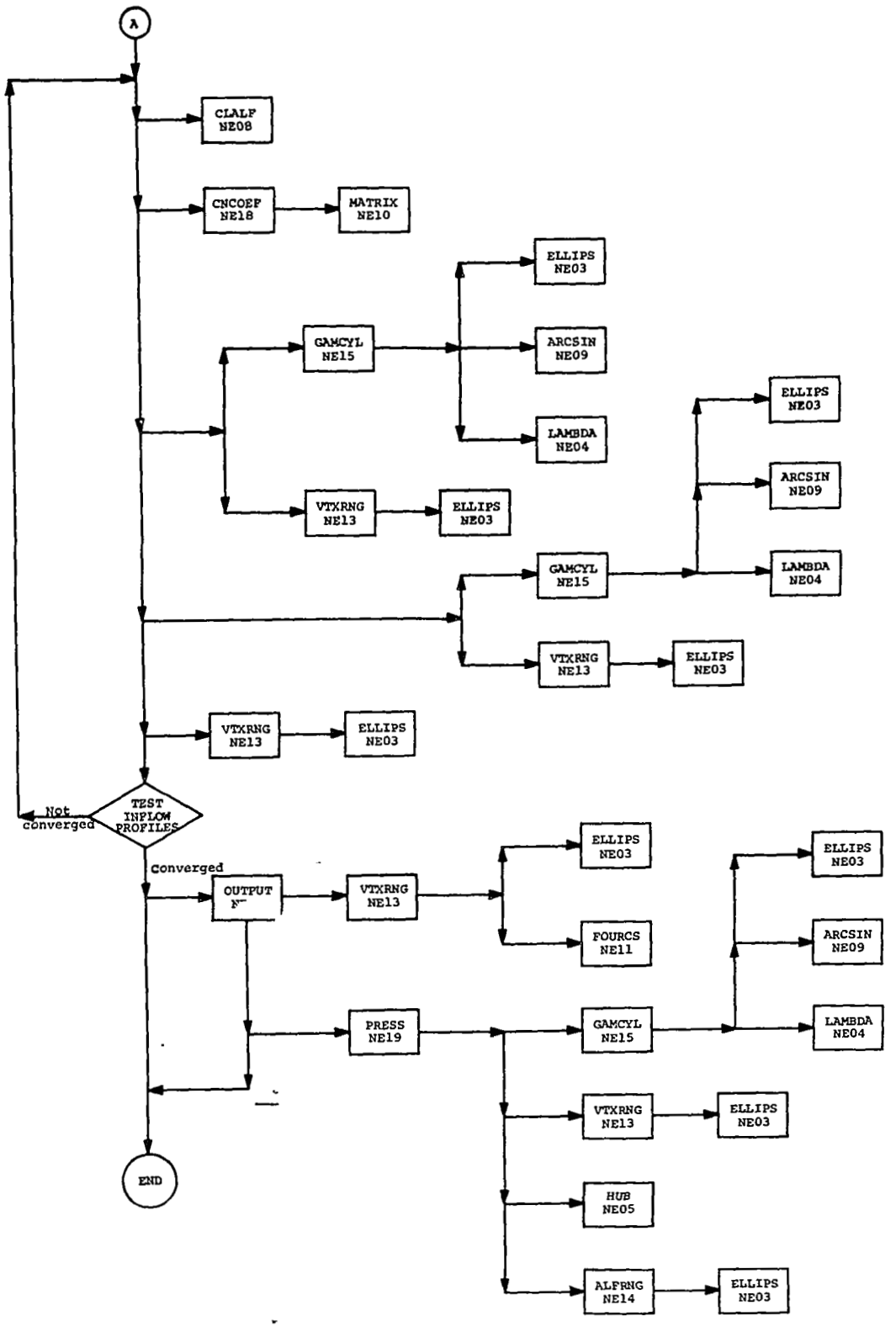

(Iteration and conclusion section.

Figure 3.- Concluded.

Card No. 1

Variable	Title
Description	Any alphabetic or numeric identification information
Units	None
Card Column	1-80
Format	None
Value	

Card No. 2

Variable	c/D	x_p/c	t/c	R/R_p	R_{CB}/R_p	ϵ
Description	Duct chord-to-diameter ratio	Propeller location in fraction of duct chord	Duct maximum thickness-to-chord ratio	Ratio of duct trailing edge radius to propeller radius	Ratio of centerbody radius to propeller radius	Convergence criterion
Units	None	None	None	None	None	None
Card Column	5	15	25	35	45	55
Format	x.xxxx	x.xxxx	x.xxxx	x.xxxx	x.xxxx	x.xxxx
Value						

Card No. 3

Variable	R_0	R_1	R_2	R_3
Description	Fourier coefficients of the duct geometric camberline			
Units	None	None	None	None
Card Column	5	15	25	35
Format	±x.xxxx	±x.xxxx	±x.xxxx	±x.xxxx
Value				

Figure 4.- Format of input data.

Card No. 4

Variable	ℓ_{CB}/c	x_{CB}/c	r_{max}/ℓ_{CB}	$(x/c)_{r_{max}}$
Description	Ratio of centerbody length to duct chord	Location of centerbody nose in fraction of duct chord	Ratio of maximum radius to length of centerbody	Location of maximum centerbody radius
Units	None	None	None	None
Card Column	5	15	25	35
Format	±x.xxxx	±x.xxxx	±x.xxxx	±x.xxxx
Value				

Card No. 5

Variable	NBLD	NZ	NZP	IR	NPRES	NPRINT
Description	Number of propeller blades	Number of equal area annuli on propeller	Number of stations in propeller table	Number of x-stations on duct surface	Output option for pressure coefficient	Output index
Units	None	None	None	None	None	None
Card Column	4	9	14	19	25	29
Format	xx	xx	xx	xx	x	xx
Value						

Card No. 6[a]

Variable	r/R_p							
Description	Propeller radii at which blade characteristics are to be input, specified as a fraction of propeller radius							
Units	None	None	None	None	None	None	None	None
Card Column	5	15	25	35	45	55	65	75
Format	x.xxxx	x.xxxx	x.xxxx	x.xxxx	x.xxxx	x.xxxx	x.xxxx	x.xxxx
Value								

[a] The number of 10 column fields will be equal to NZP (Card No. 5). Each card will accomodate 8 fields; therefore, if NZP > 8, the remaining fields are included on following cards having the same format as Card No. 6.

Figure 4.- Continued.

Card No. 7[b]

Variable	b/R_p							
Description	The propeller blade chord at stations corresponding to radii on Card No. 6, specified as a fraction of propeller radius.							
Units	None	None	None	None	None	None	None	None
Card Column	5	15	25	35	45	55	65	75
Format	x.xxxx	x.xxxx	x.xxxx	x.xxxx	x.xxxx	x.xxxx	x.xxxx	x.xxxx
Value								

Card No. 8[b]

Variable	β							
Description	Propeller blade pitch angle at stations corresponding to radii on Card No. 6.							
Units	Degrees	Degrees	Degrees	Degrees	Degrees	Degrees	Degrees	Degrees
Card Column	5	15	25	35	45	55	65	75
Format	x.xxxx	x.xxxx	x.xxxx	x.xxxx	x.xxxx	x.xxxx	x.xxxx	x.xxxx
Value								

Card No. 9[b]

Variable	t/b							
Description	Propeller thickness-to-chord ratio at stations corresponding to radii on Card No. 6.							
Units	None	None	None	None	None	None	None	None
Card Column	5	15	25	35	45	55	65	75
Format	x.xxxx	x.xxxx	x.xxxx	x.xxxx	x.xxxx	x.xxxx	x.xxxx	x.xxxx
Value								

[b] The same number of cards are required for b/R_p, β, and t/b as are required for r/R_p.

Figure 4.- Continued.

Card No. 10[c]

Variable	x/c							
Description	Location on duct at which pressure coefficients will be calculated, specified as a fraction of duct chord.							
Units	None	None	None	None	None	None	None	None
Card Column	5	15	25	35	45	55	65	75
Format	x.xxxx	x.xxxx	x.xxxx	x.xxxx	x.xxxx	x.xxxx	x.xxxx	x.xxxx
Value								

Card No. 11

Variable	NRUN	NPHI	J	α	φ				
Description	Run number ≠ 0	Number of azimuth angles ≤ 5	Advance ratio (J ≠ 0)	Angle of attack (|α| < 90°)	Azimuth angles at which duct pressure distributions will be calculated.				
Units	None	None	None	Degrees	Degrees	Degrees	Degrees	Degrees	Degrees
Card Column	2	10	15	25	35	45	55	65	75
Format	xxxx	x	x.xxx	x.xxx	xxx.xx	xxx.xx	xxx.xx	xxx.xx	xxx.xx
Value									

[c] The number of 10 column fields will be equal to IR (Card No. 5).

Figure 4.- Concluded.

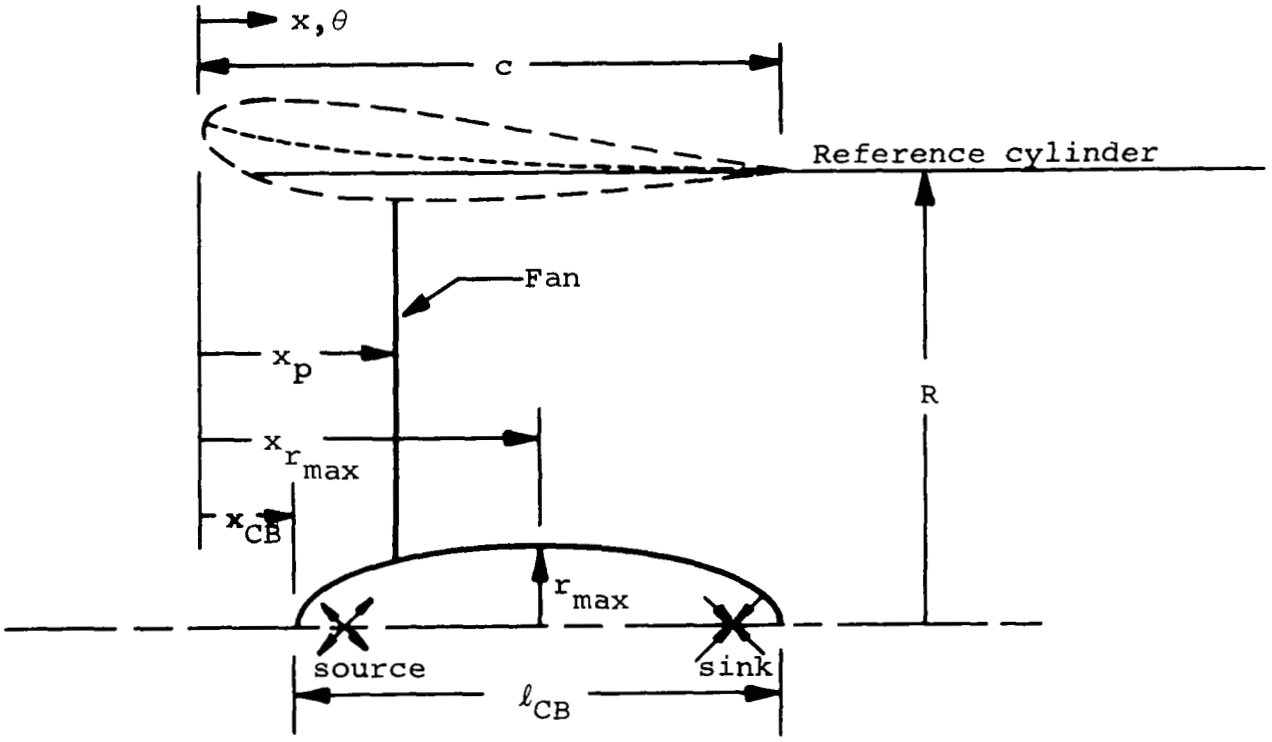

Figure 5.- Centerbody geometry.

```
SAMPLE CASE I ... BELL X-22A DUCTED PROPELLER ... BETA(3/4)=29 DEGREES
    0.525      0.286      0.170      1.102      0.175      0.01
  -.039985  -.083845  -.062813  -.027351
    0.890     -0.067      0.202      0.467
    3   20    12   23    1    1
    0.175      0.250      0.30       0.40       0.45       0.50       0.55       0.60
    0.65       0.75       0.85       1.00
    0.333      0.309      0.293      0.260      0.246      0.235      0.228      0.224
    0.222      0.217      0.212      0.204
   64.0       58.5       55.0       48.0       44.4       41.0       37.7       34.8
   32.5       29.0       26.5       23.5
    0.320      0.280      0.255      0.210      0.190      0.180      0.160      0.145
    0.130      0.100      0.070      0.030
    0.0        0.0025     0.0050     0.010      0.020      0.030      0.040      0.050
    0.10       0.15       0.20       0.25       0.285      0.287      0.30       0.40
    0.50       0.60       0.70       0.80       0.90       0.95       1.00
 1000    1     0.10       0.0        0.0

SAMPLE CASE II ... DOAK VZ-4DA DUCTED FAN ... BETA(TIP)= 15 DEGREES
    0.608      0.293      0.160      1.131      0.332      0.01
  -.002748  -.029679  -.032916   .006403
    2.16      -0.561      0.115      0.293
    8   20    8   23    1
    0.332      0.40       0.50       0.60       0.70       0.80       0.90       1.00
    0.156      0.155      0.152      0.144      0.131      0.117      0.104      0.091
   48.0       43.0       36.0       30.0       25.0       20.8       17.5       15.0
    0.190      0.154      0.120      0.100      0.084      0.072      0.062      0.054
    0.0        0.0025     0.0050     0.01       0.02       0.03       0.04       0.05
    0.10       0.15       0.20       0.25       0.292      0.294      0.30       0.40
    0.50       0.60       0.70       0.80       0.90       0.95       1.00
 2000    5     0.178     20.0        0.0       45.0       90.0      135.0      180.0
 2010    5     0.178     10.0        0.0       45.0       90.0      135.0      180.0
 2020    1     0.178      0.0        0.0
 2030    5     0.342     20.0        0.0       45.0       90.0      135.0      180.0
```

Figure 6.- Sample input data.

RUN NUMBER 1000 PAGE 0

SAMPLE CASE I ... BELL X-22A DUCTED PROPELLER ... BETA(3/4)=29 DEGREES

INPUT

DUCT GEOMETRY...	C/D	XP/C	T/C	RTE/RP	RCB/RP
	0.525000	0.286000	0.170000	1.102000	0.175000

CAMBER COEFFICIENTS, -0.039985 -0.083845 -0.062813 -0.027351

PROPELLER GEOMETRY... 3 BLADES

R/RP	B/RP	BETA	TH/CHD
0.175000	0.333000	64.000	0.32000
0.250000	0.309000	58.500	0.28000
0.300000	0.293000	55.000	0.25500
0.400000	0.260000	48.000	0.21000
0.450000	0.246000	44.40	0.19000
0.500000	0.235000	41.00	0.18000
0.550000	0.228000	37.700	0.16000
0.600000	0.224000	34.800	0.14500
0.650000	0.222000	32.500	0.13000
0.750000	0.217000	29.000	0.10000
0.850000	0.212000	26.50	0.07000
1.000000	0.204000	23.500	0.03000

CENTERBODY GEOMETRY...	LCB/C	XCB/C	RMAX/LCB	X(RMAX)/C
	0.89000	-0.06700	0.20200	0.46700

CONVERGENCE CRITERION... EPSILON =0.01000

DEFINITION OF SYMBOLS USED IN TABULAR OUTPUT...

R/RP	RADIAL PROPELLER STATION IN FRACTION OF PROPELLER RADIUS
B/RP	PROPELLER CHORD IN FRACTION OF PROPELLER RADIUS
BETA	PROPELLER PITCH IN DEGREES
TH/CHD	PROPELLER BLADE THICKNESS-TO-CHORD RATIO
V	FREE STREAM VELOCITY
U	TOTAL INFLOW VELOCITY
J	ADVANCE RATIO
J'	RATIO OF V TO PROPELLER TIP SPEED
GAM/V	STRENGTH OF INTERNAL VORTEX CYLINDER N
ALPHA	ANGLE OF ATTACK, DEGREES
DELTA P/Q	RISE IN TOTAL PRESSURE ACROSS PROPELLER NORMALIZED ON FREE STREAM DYNAMIC PRESSURE
CTP(D)	THRUST COEFFICIENT ON PROPELLER IN THE DUCT
CTD(P)	THRUST COEFFICIENT ON THE DUCT
CTDP	TOTAL THRUST COEFFICIENT
CTD(P)'	THRUST COEFFICIENT ON DUCT INCLUDING PRESSURE THRUST ON THE DUCT AFT OF THE PROPELLER
CTDP'	TOTAL THRUST COEFFICIENT INCLUDING PRESSURE THRUST
CNDP	TOTAL NORMAL FORCE COEFFICIENT
CMDP	TOTAL PITCHING MOMENT COEFFICIENT

(a) Bell X-22A ducted propeller.

Figure 7.- Sample output.

RUN NUMBER 1000 OPTIONAL OUTPUT PAGE 1

SAMPLE CASE I ... BELL X-22A DUCTED PROPELLER ... BETA(3/4)=29 DEGREES

DUCT...	C/D	XP/C	T/C	RTE/RP	RCB/RP	AP/A
	0.525000	0.286000	0.170000	1.102000	0.175000	0.798231
EFFECTIVE CAMBER			-0.040554	-0.123546	-0.075738	-0.026365

ALPHA	J	J'	J COS(A)	J'COS(A)
0.000	0.10000	0.02888	0.10000	0.02888

N	R/RP	(4.08) UQD/V	UGD/V	UG/V	(6.37) UCB/V	GAMMA/RV
1	0.22812	2.08706E-01	5.23663E 00	1.42872E 00	5.40376E-01	1.82966E 00
2	0.31920	2.24891E-01	5.33044E 00	1.23518E 00	3.75017E-01	2.09227E 00
3	0.38836	2.42306E-01	5.42540E 00	1.20587E 00	2.86758E-01	2.29096E 00
4	0.44669	2.61317E-01	5.52278E 00	1.17636E 00	2.31453E-01	2.45454E 00
5	0.49814	2.82151E-01	5.62282E 00	1.14719E 00	1.93476E-01	2.50681E 00
6	0.54471	3.05032E-01	5.72554E 00	1.11808E 00	1.65756E-01	2.40893E 00
7	0.58758	3.30190E-01	5.83089E 00	1.08937E 00	1.44616E-01	2.32899E 00
8	0.62751	3.57869E-01	5.93876E 00	1.06077E 00	1.27958E-01	2.27892E 00
9	0.66504	3.88313E-01	6.04889E 00	1.03272E 00	1.14493E-01	2.24979E 00
10	0.70056	4.21754E-01	6.16098E 00	1.00454E 00	1.03385E-01	2.23391E 00
11	0.73435	4.58395E-01	6.27481E 00	9.77391E-01	9.40685E-02	2.19695E 00
12	0.76666	4.98375E-01	6.39017E 00	9.50348E-01	8.61464E-02	2.17241E 00
13	0.79766	5.41744E-01	6.50594E 00	9.23912E-01	7.93312E-02	2.16097E 00
14	0.82749	5.88411E-01	6.62078E 00	8.97986E-01	7.34095E-02	2.13735E 00
15	0.85628	6.38125E-01	6.73757E 00	8.72429E-01	6.82195E-02	2.10810E 00
16	0.88414	6.90406E-01	6.85087E 00	8.47518E-01	6.36364E-02	2.09190E 00
17	0.91114	7.44598E-01	6.95638E 00	8.23243E-01	5.95621E-02	2.07000E 00
18	0.93737	7.99848E-01	7.05912E 00	7.99407E-01	5.59186E-02	2.04197E 00
19	0.96288	8.55179E-01	7.15662E 00	7.76403E-01	5.26428E-02	2.00963E 00
20	0.98773	9.09743E-01	7.24777E 00	7.53845E-01	4.96836E-02	1.97441E 00

8 ITERATIONS, EPSILON = 0.010000

(a) Continued.

Figure 7.- Continued.

RUN NUMBER 1000 PAGE 2

SAMPLE CASE I ... BELL X-22A DUCTED PROPELLER ... BETA(3/4)=29 DEGREES

DUCT...	C/D	XP/C	T/C	RTE/RP	RCB/RP	AP/A
	0.525000	0.286000	0.170000	1.102000	0.175000	0.798231

ALPHA	J	J'	J COS(A)	J'COS(A)
0.000	0.10000	0.02888	0.10000	0.02888

	N	R/RP	INFLOW U/V	GAM/V	BLADE ALPHA	DELTA P/Q
•	1	0.22812	8.22806E 00	-5.35298E-01	1.12870E 01	6.04887E 01
•	2	0.31920	8.25299E 00	-3.83307E-01	1.43056E 01	6.91703E 01
•	3	0.38836	8.44199E 00	-3.03430E-01	1.42232E 01	7.57390E 01
•	4	0.44669	8.62658E 00	-9.48361E-02	1.31372E 01	8.11472E 01
	5	0.49814	8.74799E 00	1.78412E-01	1.19394E 01	8.28753E 01
	6	0.54471	8.73259E 00	1.48369E-01	1.10174E 01	7.96392E 01
	7	0.58758	8.73975E 00	9.42183E-02	1.01865E 01	7.69965E 01
	8	0.62751	8.78313E 00	5.52901E-02	9.52116E 00	7.53412E 01
	9	0.66504	8.85469E 00	3.02945E-02	9.00640E 00	7.43781E 01
	10	0.70056	8.94585E 00	7.09063E-02	8.61084E 00	7.38530E 01
	11	0.73435	9.02441E 00	4.74073E-02	8.18429E 00	7.26311E 01
	12	0.76666	9.12106E 00	2.21891E-02	7.84249E 00	7.18197E 01
	13	0.79766	9.23580E 00	4.59868E-02	7.57733E 00	7.14415E 01
	14	0.82749	9.34240E 00	5.73186E-02	7.29640E 00	7.06608E 01
	15	0.85628	9.44943E 00	3.18934E-02	7.02046E 00	6.96937E 01
	16	0.88414	9.56927E 00	4.33428E-02	6.80902E 00	6.91584E 01
	17	0.91114	9.67902E 00	5.57921E-02	6.59597E 00	6.84342E 01
	18	0.93737	9.78178E 00	6.48346E-02	6.37873E 00	6.75075E 01
	19	0.96288	9.87603E 00	7.12116E-02	6.16215E 00	6.64384E 01
	20	0.98773	9.96066E 00	7.14088E 00	5.94959E 00	6.52739E 01

	CTP(D)	CTD(P)	CTD(P)'	CTDP	CTDP'	CNDP	CMDP
(A)	5.7580E 01	5.1231E 01	6.2755E 01	1.0881E 02	1.2034E 02	0.0000E-39	0.0000E-39
(B)	2.8327E-01	2.5204E-01	3.0873E-01	5.3531E-01	5.9200E-01	0.0000E-39	0.0000E-39

NOTES...

(A) COEFFICIENTS BASED ON FREE STREAM DYNAMIC PRESSURE

(B) COEFFICIENTS BASED ON PROPELLER TIP SPEED

• BLADE SECTION LIFT COEFFICIENT HAS EXCEEDED CLMAX IN ANNULI NOS. 1 2 3 4

(a) Continued.

Figure 7.- Continued.

RUN NUMBER 1000 DUCT SURFACE PRESSURE DISTRIBUTION PAGE 3

SAMPLE CASE I ... BELL X-22A DUCTED PROPELLER ... BETA(3/4)=29 DEGREES

DUCT...	C/D	XP/C	T/C	RTE/RP	RCB/RP	AP/A
	0.525000	0.286000	0.170000	1.102000	0.175000	0.798231

ALPHA	J	J'	J COS(A)	J'COS(A)
0.000	0.10000	0.02888	0.10000	0.02888

AZIMUTH
PHI = /--- 0.00 ---/---

X/C	CP(IN)	CP(OUT)
0.0000	-2.536E 02	-2.536E 02
0.0025	-2.735E 02	-1.905E 02
0.0050	-2.861E 02	-1.307E 02
0.0100	-2.724E 02	-9.522E 01
0.0200	-2.444E 02	-5.532E 01
0.0300	-2.214E 02	-3.528E 01
0.0400	-2.033E 02	-2.414E 01
0.0500	-1.851E 02	-1.480E 01
0.1000	-1.425E 02	-2.476E 00
0.1500	-1.218E 02	2.554E-01
0.2000	-1.117E 02	8.872E-01
0.2500	-1.059E 02	9.914E-01
0.2850	-1.031E 02	9.998E-01
0.2870	-3.768E 01	9.999E-01
0.3000	-3.685E 01	9.998E-01
0.4000	-2.998E 01	9.861E-01
0.5000	-1.931E 01	9.005E-01
0.6000	-7.510E 00	5.112E-01
0.7000	1.453E 00	1.531E-01
0.8000	2.062E 00	5.952E-01
0.9000	-2.995E 00	9.926E-01
0.9500	3.679E 00	9.944E-01
1.0000	6.627E 01	1.000E 00

PRESSURE COEFFICIENTS BASED ON FREE STREAM VELOCITY

(a) Concluded.

Figure 7.- Continued.

RUN NUMBER 2000 PAGE 0

SAMPLE CASE II ... DOAK VZ-4DA DUCTED FAN ... BETA(TIP)= 15 DEGREES

INPUT

DUCT GEOMETRY...	C/D	XP/C	T/C	RTE/RP	RCB/RP
	0.608000	0.293000	0.160000	1.131000	0.332000

CAMBER COEFFICIENTS, -0.002748 -0.029679 -0.032916 0.006403

PROPELLER GEOMETRY... 8 BLADES

R/RP	B/RP	BETA	TH/CHD
0.332000	0.156000	48.000	0.19000
0.400000	0.155000	43.000	0.15400
0.500000	0.152000	36.000	0.12000
0.600000	0.144000	30.000	0.10000
0.700000	0.131000	25.000	0.08400
0.800000	0.117000	20.800	0.07200
0.900000	0.104000	17.500	0.06200
1.000000	0.091000	15.000	0.05400

CENTERBODY GEOMETRY...	LCB/C	XCB/C	RMAX/LCB	X(RMAX)/C
	2.16000	-0.56100	0.11500	0.29300

CONVERGENCE CRITERION... EPSILON =0.01000

DEFINITION OF SYMBOLS USED IN TABULAR OUTPUT...

R/RP	RADIAL PROPELLER STATION IN FRACTION OF PROPELLER RADIUS
B/RP	PROPELLER CHORD IN FRACTION OF PROPELLER RADIUS
BETA	PROPELLER PITCH IN DEGREES
TH/CHD	PROPELLER BLADE THICKNESS-TO-CHORD RATIO
V	FREE STREAM VELOCITY
U	TOTAL INFLOW VELOCITY
J	ADVANCE RATIO
J'	RATIO OF V TO PROPELLER TIP SPEED
GAM/V	STRENGTH OF INTERNAL VORTEX CYLINDER N
ALPHA	ANGLE OF ATTACK, DEGREES
DELTA P/Q	RISE IN TOTAL PRESSURE ACROSS PROPELLER NORMALIZED ON FREE STREAM DYNAMIC PRESSURE
CTP(D)	THRUST COEFFICIENT ON PROPELLER IN THE DUCT
CTD(P)	THRUST COEFFICIENT ON THE DUCT
CTDP	TOTAL THRUST COEFFICIENT
CTD(P)'	THRUST COEFFICIENT ON DUCT INCLUDING PRESSURE THRUST ON THE DUCT AFT OF THE PROPELLER
CTDP'	TOTAL THRUST COEFFICIENT INCLUDING PRESSURE THRUST
CNDP	TOTAL NORMAL FORCE COEFFICIENT
CMDP	TOTAL PITCHING MOMENT COEFFICIENT

(b) Doak VZ-4DA ducted fan.

Figure 7.- Continued.

RUN NUMBER 2000 PAGE 1

SAMPLE CASE II ... DOAK VZ-4DA DUCTED FAN ... BETA(TIP)= 15 DEGREES

DUCT...	C/D	XP/C	T/C	RTE/RP	RCB/RP	AP/A
	0.608000	0.293000	0.160000	1.131000	0.332000	0.695593

ALPHA	J	J'	J COS(A)	J'COS(A)
20.000	0.17800	0.05010	0.16727	0.04708

N	R/RP	INFLOW U/V	GAM/V	BLADE ALPHA	DELTA P/Q
1	0.36267	5.23679E 00	-1.35218E-01	8.25662E 00	2.89134E 01
2	0.41983	5.26777E 00	3.17357E-02	7.92511E 00	3.04108E 01
3	0.46999	5.27579E 00	9.98359E-02	7.29327E 00	3.00561E 01
4	0.51524	5.25198E 00	1.19916E-01	6.65377E 00	2.89533E 01
5	0.55680	5.22034E 00	1.72383E-01	6.12156E 00	2.76551E 01
6	0.59545	5.16455E 00	1.52069E-01	5.54300E 00	2.58393E 01
7	0.63174	5.12088E 00	1.76659E-01	5.12549E 00	2.42868E 01
8	0.66604	5.06680E 00	2.05082E-01	4.70483E 00	2.25413E 01
9	0.69866	5.00018E 00	1.67460E-01	4.26461E 00	2.05933E 01
10	0.72982	4.95392E 00	1.84996E-01	3.93421E 00	1.90650E 01
11	0.75970	4.90020E 00	2.03283E-01	3.59579E 00	1.74419E 01
12	0.78845	4.83857E 00	1.74513E-01	3.24839E 00	1.57372E 01
13	0.81618	4.79220E 00	1.56123E-01	2.96404E 00	1.43398E 01
14	0.84300	4.75555E 00	1.68195E-01	2.72148E 00	1.31412E 01
15	0.86899	4.71342E 00	1.79273E-01	2.47416E 00	1.19045E 01
16	0.89423	4.66602E 00	1.36541E-01	2.22443E 00	1.06487E 01
17	0.91877	4.63838E 00	1.27250E-01	2.04616E 00	9.73527E 00
18	0.94268	4.61378E 00	1.33504E-01	1.88825E 00	8.91761E 00
19	0.96599	4.58513E 00	1.38477E-01	1.72899E 00	8.09456E 00
20	0.98875	4.55222E 00	1.87724E 00	1.57029E 00	7.27852E 00

	CTP(D)	CTD(P)	CTD(P)'	CTDP	CTDP'	CNDP	CMDP
(A)	1.1534E 01	8.9945E 00	1.0397E 01	2.0528E 01	2.1931E 01	2.7529E 00	1.1474E 00
(B)	2.0631E-01	1.6089E-01	1.8598E-01	3.6719E-01	3.9228E-01	4.9241E-02	1.1606E-02

NOTES...

(A) COEFFICIENTS BASED ON FREE STREAM DYNAMIC PRESSURE

(B) COEFFICIENTS BASED ON PROPELLER TIP SPEED

(b) Continued.

Figure 7.- Continued.

RUN NUMBER 2000 DUCT SURFACE PRESSURE DISTRIBUTION PAGE 2

SAMPLE CASE II ... DOAK VZ-4DA DUCTED FAN ... BETA(TIP)= 15 DEGREES

DUCT...	C/D	XP/C	T/C	RTE/RP	RCB/RP	AP/A
	0.608000	0.293000	0.160000	1.131000	0.332000	0.695593

ALPHA	J	J'	J COS(A)	J'COS(A)
20.000	0.17800	0.05010	0.16727	0.04708

AZIMUTH PHI = /--- 0.00 ---/--- 45.00 ---/--- 90.00 ---/--- 135.00 ---/--- 180.00 ---/

X/C	CP(IN)	CP(OUT)	CP(IN)	CP(OUT)	CP(IN)	CP(OUT)	CP(IN)	CP(OUT)	CP(IN)	CP(OUT)
0.0000	-7.151E 01	-7.151E 01	-6.346E 01	-6.346E 01	-4.598E 01	-4.598E 01	-3.126E 01	-3.126E 01	-2.597E 01	-2.597E 01
0.0025	-7.547E 01	-4.980E 01	-6.775E 01	-4.375E 01	-5.081E 01	-3.072E 01	-3.628E 01	-1.994E 01	-3.096E 01	-1.613E 01
0.0050	-7.831E 01	-3.116E 01	-7.098E 01	-2.685E 01	-5.479E 01	-1.776E 01	-4.071E 01	-1.051E 01	-3.550E 01	-8.037E 00
0.0100	-7.351E 01	-2.101E 01	-6.700E 01	-1.784E 01	-5.256E 01	-1.123E 01	-3.991E 01	-6.107E 00	-3.520E 01	-4.420E 00
0.0200	-6.440E 01	-1.039E 01	-5.916E 01	-8.491E 00	-4.747E 01	-4.655E 00	-3.715E 01	-1.889E 00	-3.328E 01	-1.057E 00
0.0300	-5.740E 01	-5.510E 00	-5.300E 01	-4.257E 00	-4.317E 01	-1.823E 00	-3.446E 01	-2.230E-01	-3.118E 01	1.957E-01
0.0400	-5.210E 01	-3.038E 00	-4.830E 01	-2.146E 00	-3.978E 01	-4.817E-01	-3.222E 01	4.923E-01	-2.936E 01	6.936E-01
0.0500	-4.693E 01	-1.128E 00	-4.369E 01	-5.382E-01	-3.642E 01	4.839E-01	-2.995E 01	9.381E-01	-2.750E 01	9.600E-01
0.1000	-3.484E 01	8.448E-01	-3.281E 01	1.017E 00	-2.826E 01	1.181E 00	-2.421E 01	9.874E-01	-2.267E 01	8.022E-01
0.1500	-2.883E 01	9.920E-01	-2.734E 01	1.059E 00	-2.401E 01	1.023E 00	-2.106E 01	7.083E-01	-1.995E 01	4.967E-01
0.2000	-2.525E 01	8.816E-01	-2.408E 01	9.170E-01	-2.147E 01	8.311E-01	-1.918E 01	5.029E-01	-1.832E 01	2.96[illegible]E-01
0.2500	-2.247E 01	7.867E-01	-2.152E 01	8.165E-01	-1.941E 01	7.329E-01	-1.758E 01	4.296E-01	-1.690E 01	2.396E-01
0.2920	-2.053E 01	7.407E-01	-1.972E 01	7.718E-01	-1.793E 01	7.008E-01	-1.639E 01	4.236E-01	-1.582E 01	2.484E-01
0.2940	-1.403E 01	7.372E-01	-1.323E 01	7.679E-01	-1.146E 01	6.962E-01	-9.936E 00	4.185E-01	-9.377E 00	2.431E-01
0.3000	-1.375E 01	7.353E-01	-1.297E 01	7.668E-01	-1.123E 01	6.987E-01	-9.742E 00	4.264E-01	-9.196E 00	2.538E-01
0.4000	-9.965E 00	6.813E-01	-9.407E 00	7.177E-01	-8.203E 00	6.777E-01	-7.200E 00	4.569E-01	-6.844E 00	3.124E-01
0.5000	-6.710E 00	5.929E-01	-6.312E 00	6.286E-01	-5.474E 00	5.996E-01	-4.810E 00	4.080E-01	-4.585E 00	2.809E-01
0.6000	-4.091E 00	4.139E-01	-3.800E 00	4.476E-01	-3.207E 00	4.232E-01	-2.769E 00	2.493E-01	-2.633E 00	1.336E-01
0.7000	-2.156E 00	2.850E-01	-1.943E 00	3.189E-01	-1.527E 00	3.034E-01	-1.252E 00	1.503E-01	-1.178E 00	4.663E-02
0.8000	-1.196E 00	3.668E-01	-1.039E 00	4.046E-01	-7.485E-01	4.072E-01	-5.840E-01	2.845E-01	-5.527E-01	1.970E-01
0.9000	-7.532E-01	5.950E-01	-6.440E-01	6.370E-01	-4.589E-01	6.595E-01	-3.849E-01	5.707E-01	-3.867E-01	5.014E-01
0.9500	2.597E-01	5.884E-01	3.413E-01	6.292E-01	4.671E-01	6.560E-01	4.920E-01	5.816E-01	4.727E-01	5.211E-01
1.0000	7.427E 00	1.000E 00	7.427E 00	1.000E 00	7.427E 00	1.000E 00	7.427E 00	1.000E 00	7.427E 00	1.000E 00

PRESSURE COEFFICIENTS BASED ON FREE STREAM VELOCITY

(b) Concluded.

Figure 7.- Concluded.

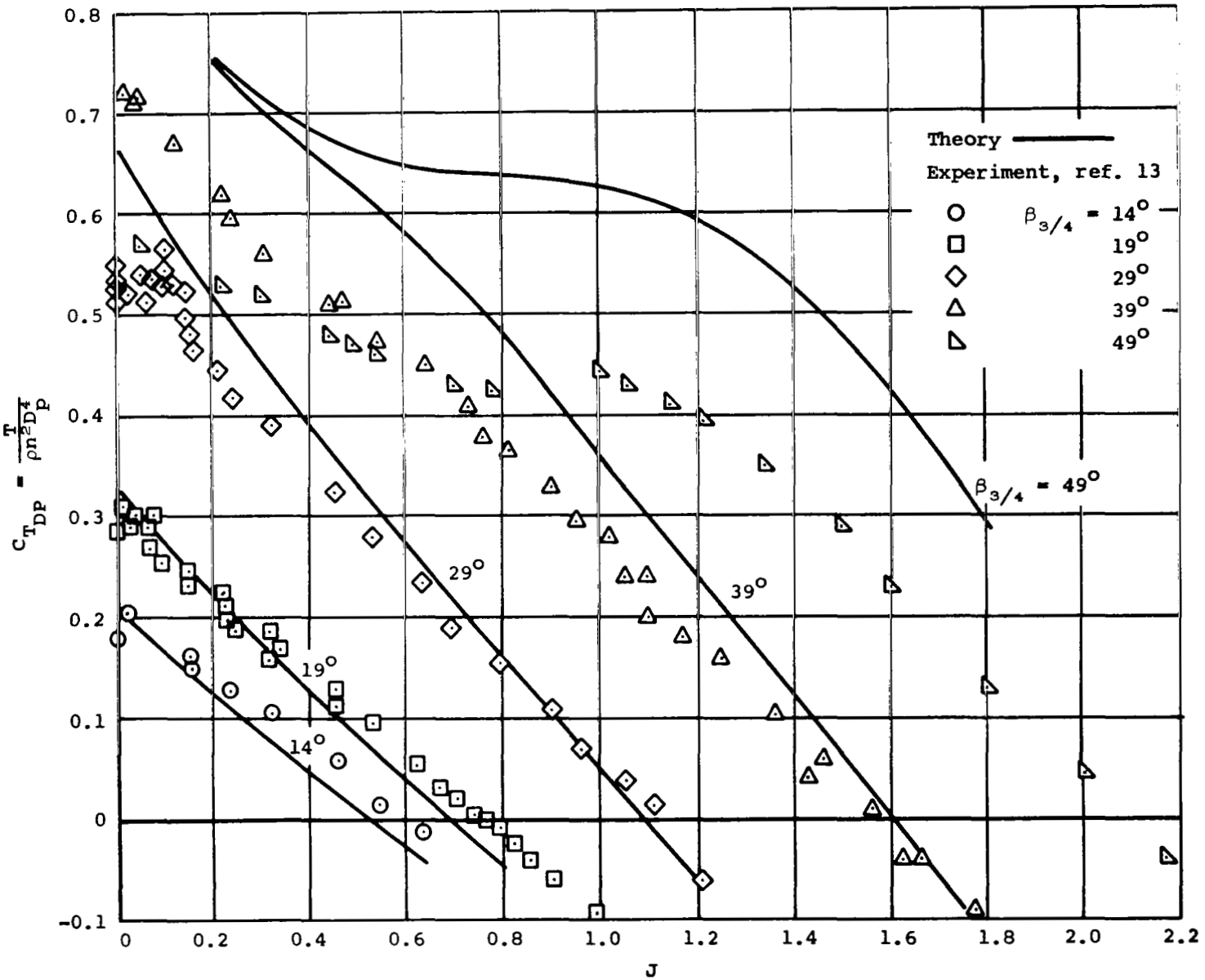

Figure 8.- Measured and predicted total thrust coefficient on the Bell X-22A ducted propeller in axial flow.

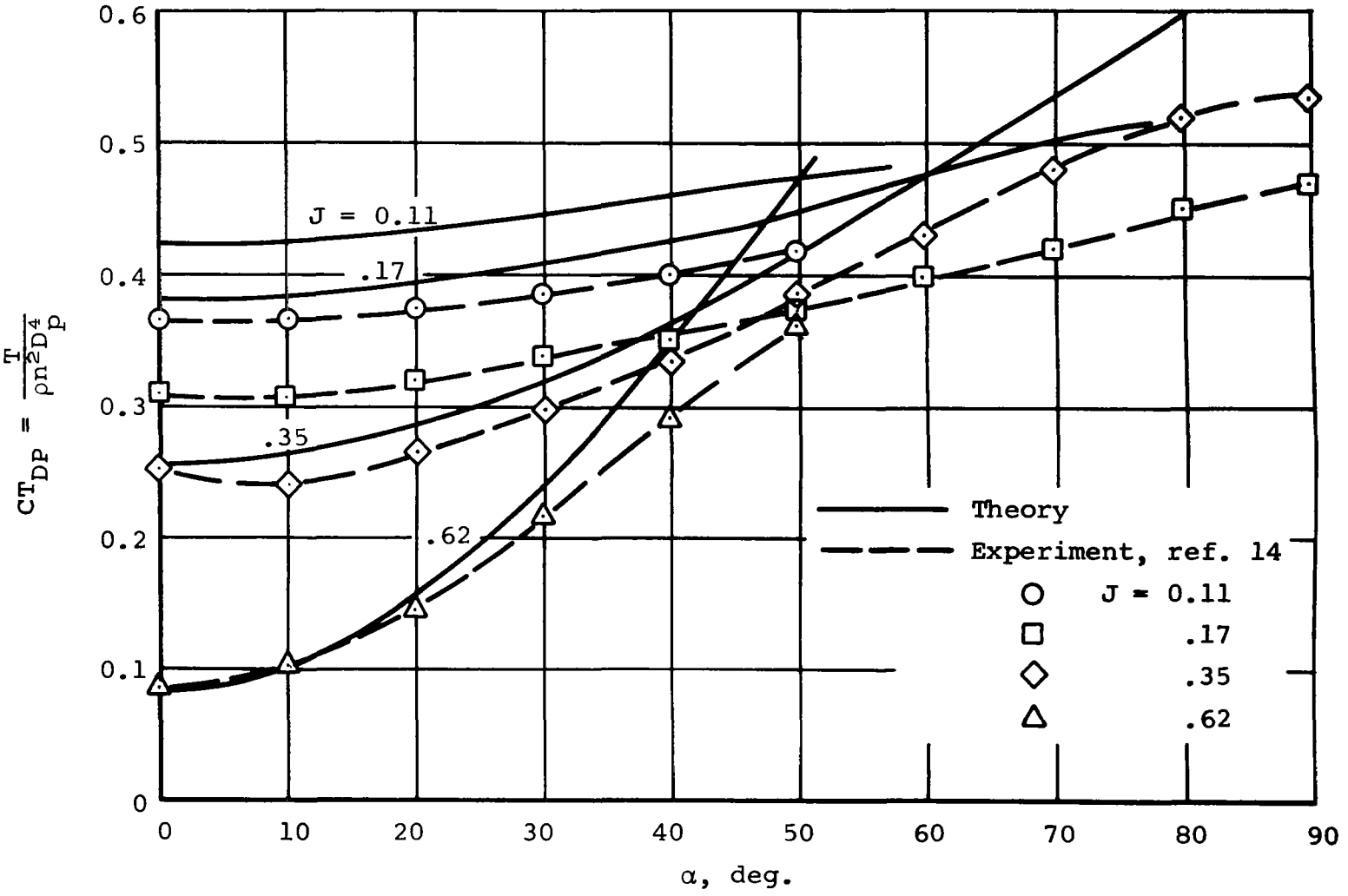

(a) Total thrust coefficient.

Figure 9.- Measured and predicted aerodynamic coefficients on the Doak VZ-4DA ducted fan, $\beta_{tip} = 15^{\circ}$.

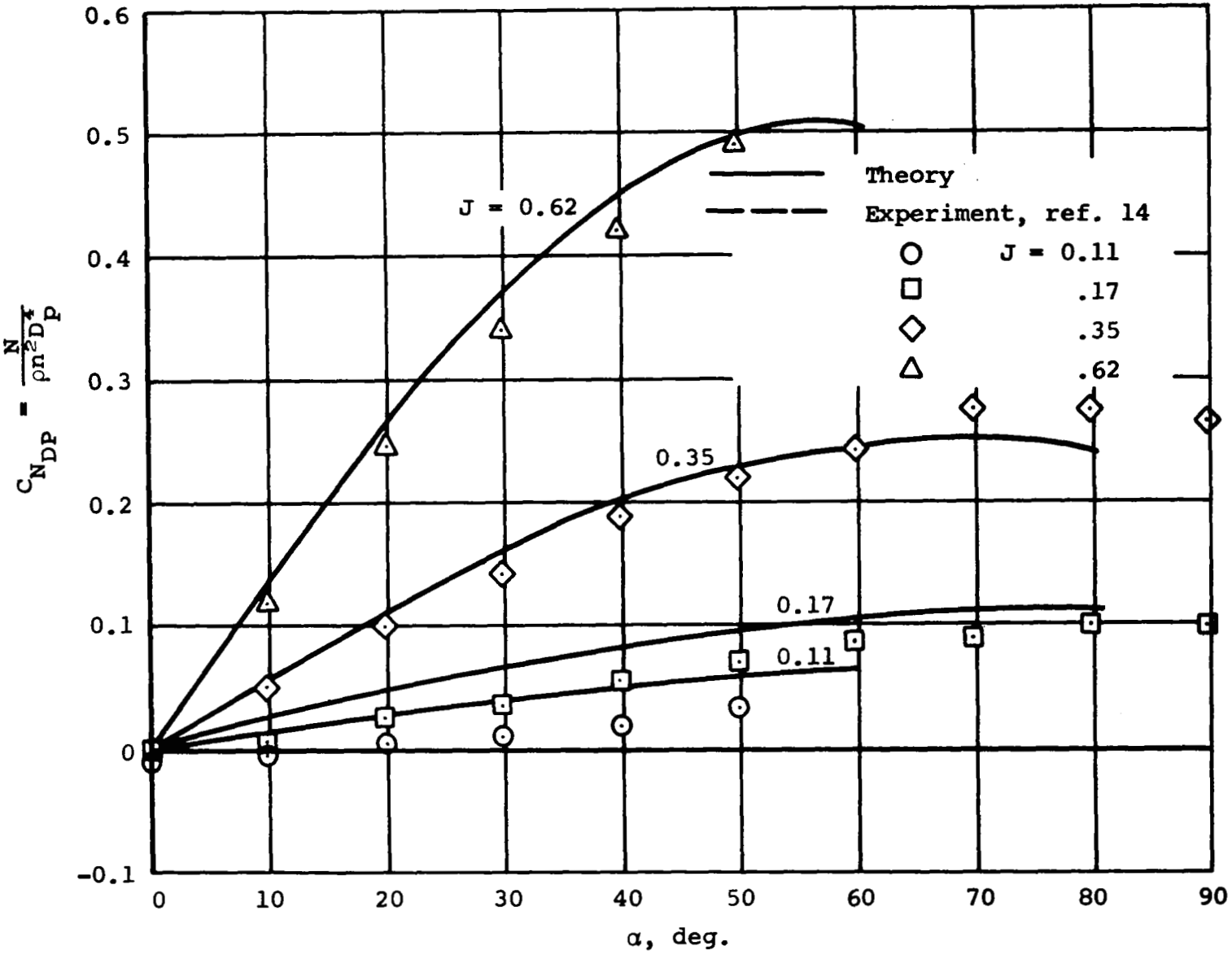

(b) Normal force coefficient.

Figure 9.- Continued.

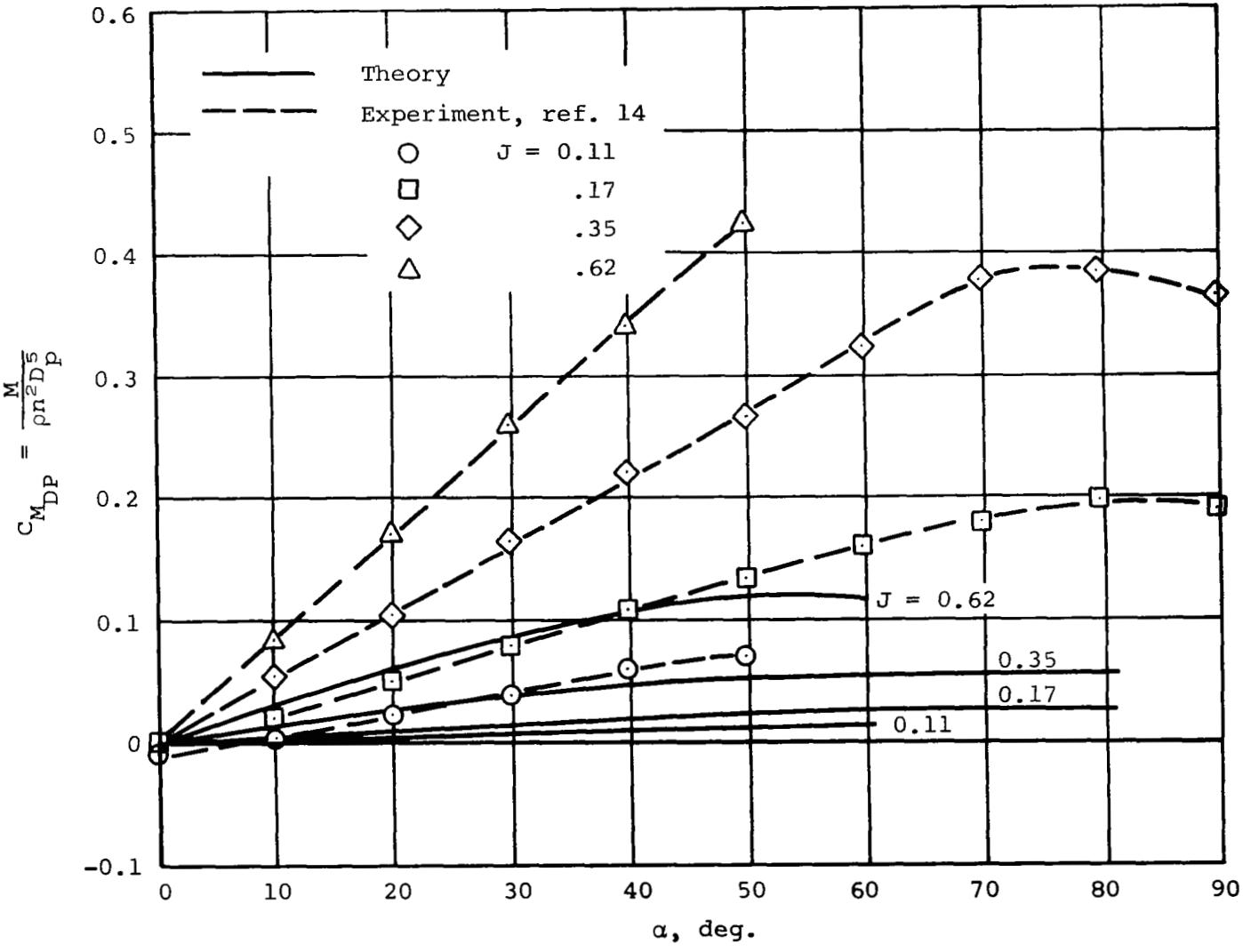

(c) Pitching moment coefficient.

Figure 9.- Concluded.

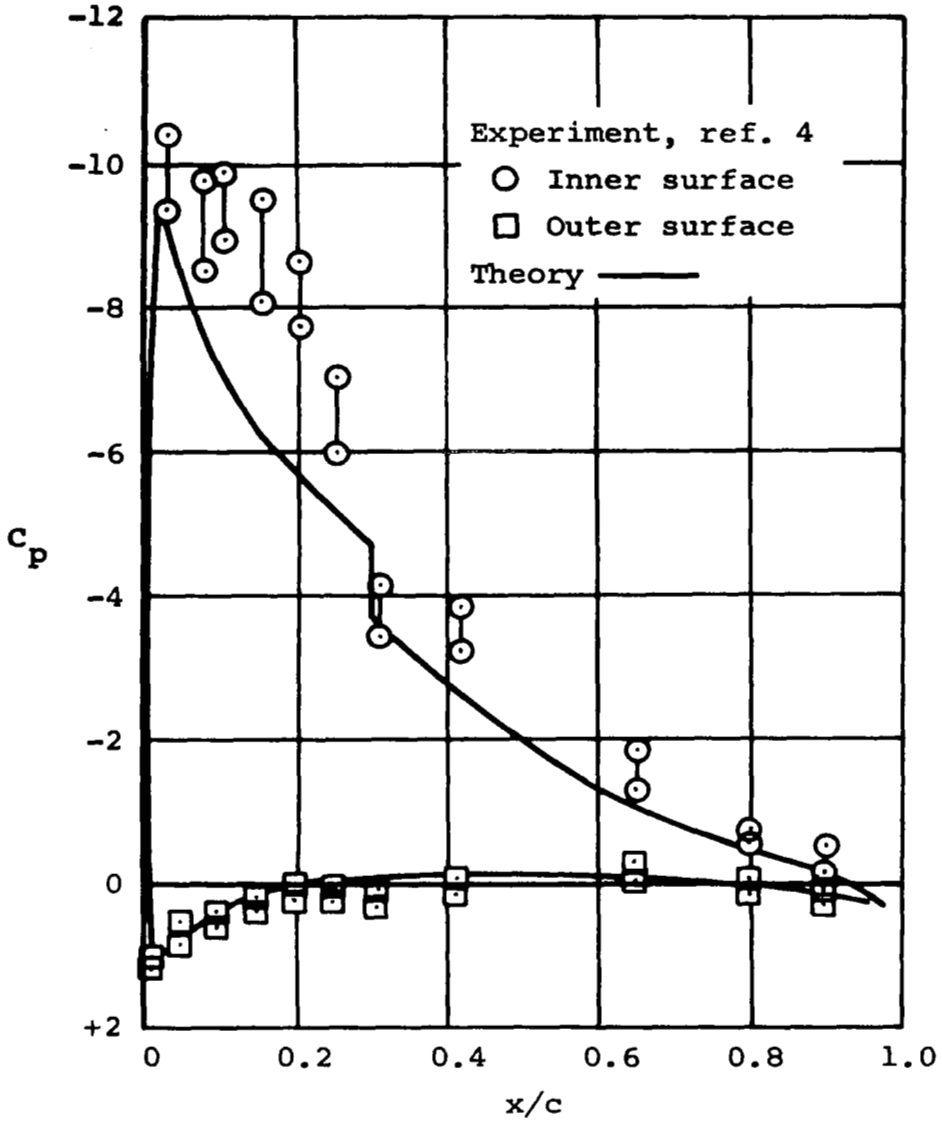

Figure 10.- Measured and predicted pressure distribution on the Doak duct at $\alpha = 0^{\circ}$, $J = 0.342$.

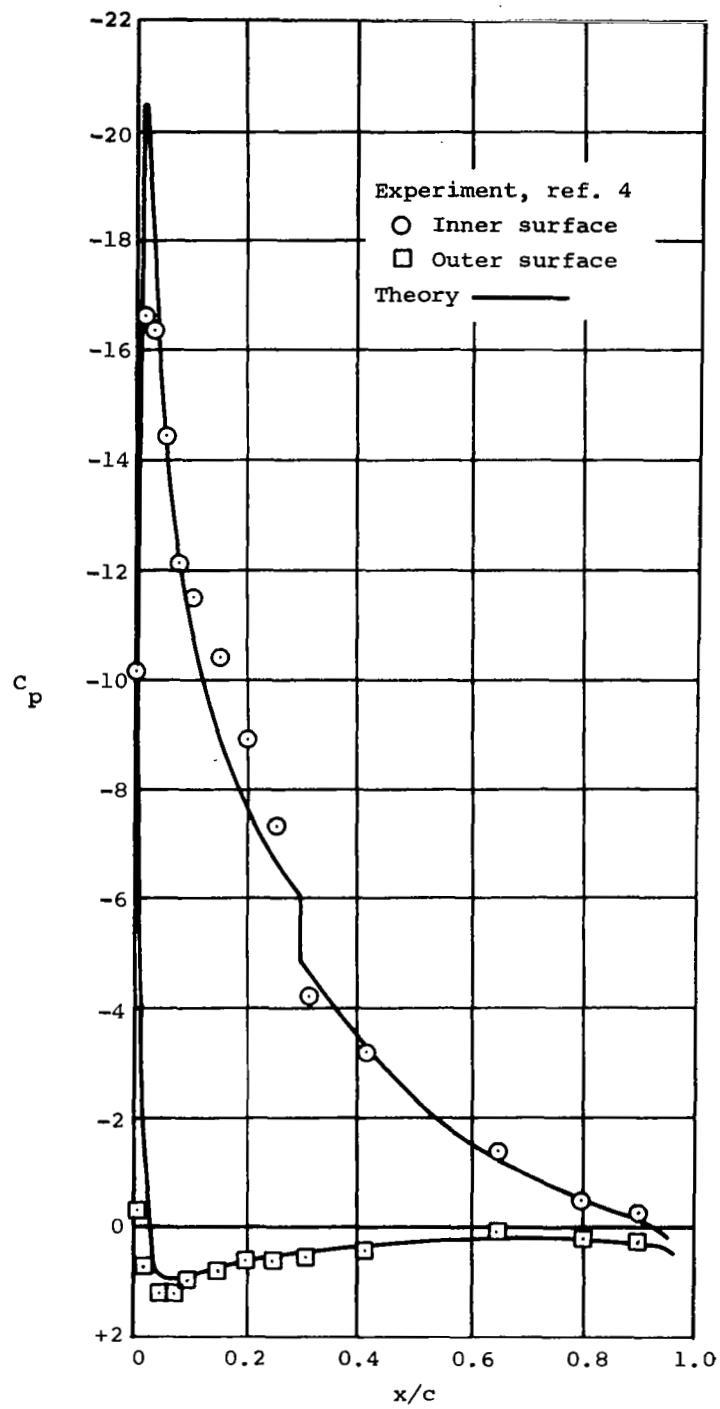

(a) $\phi = 0^{\circ}$.

Figure 11.- Measured and predicted pressure distribution on the Doak duct at $\alpha = 20^{\circ}$, $J = 0.342$.

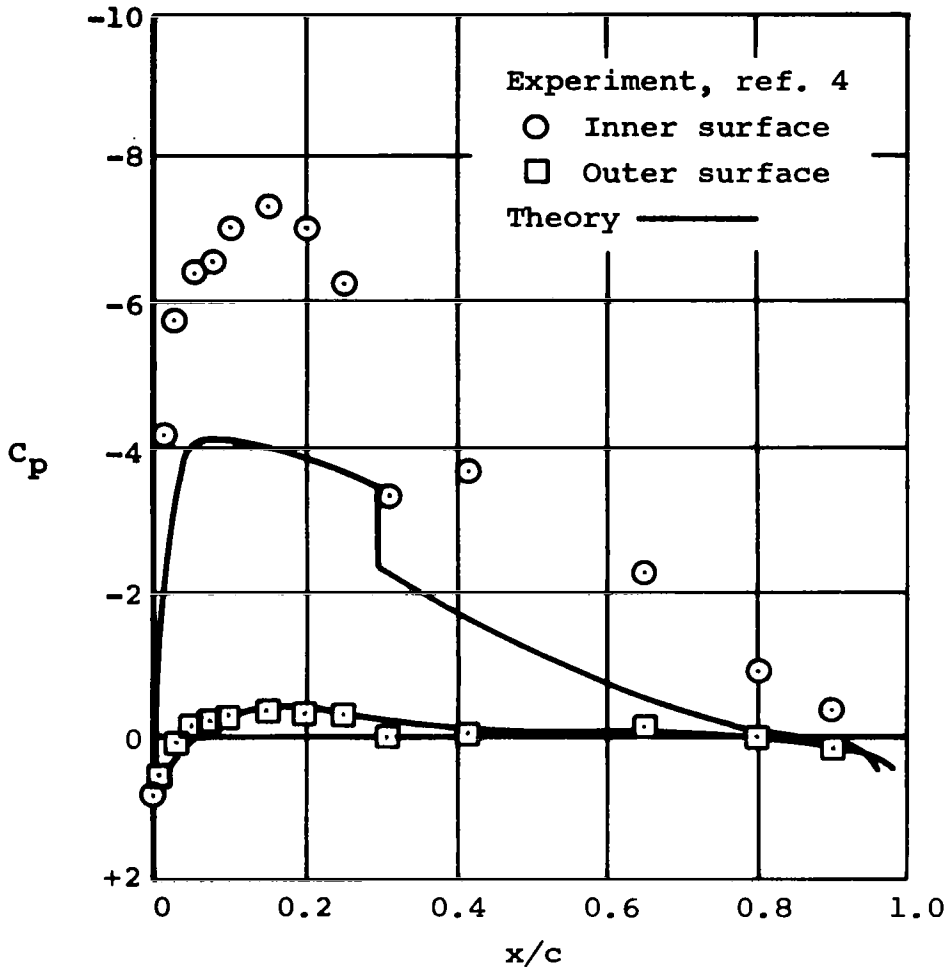

(b) $\phi = 180^{\circ}$.

Figure 11.- Concluded.

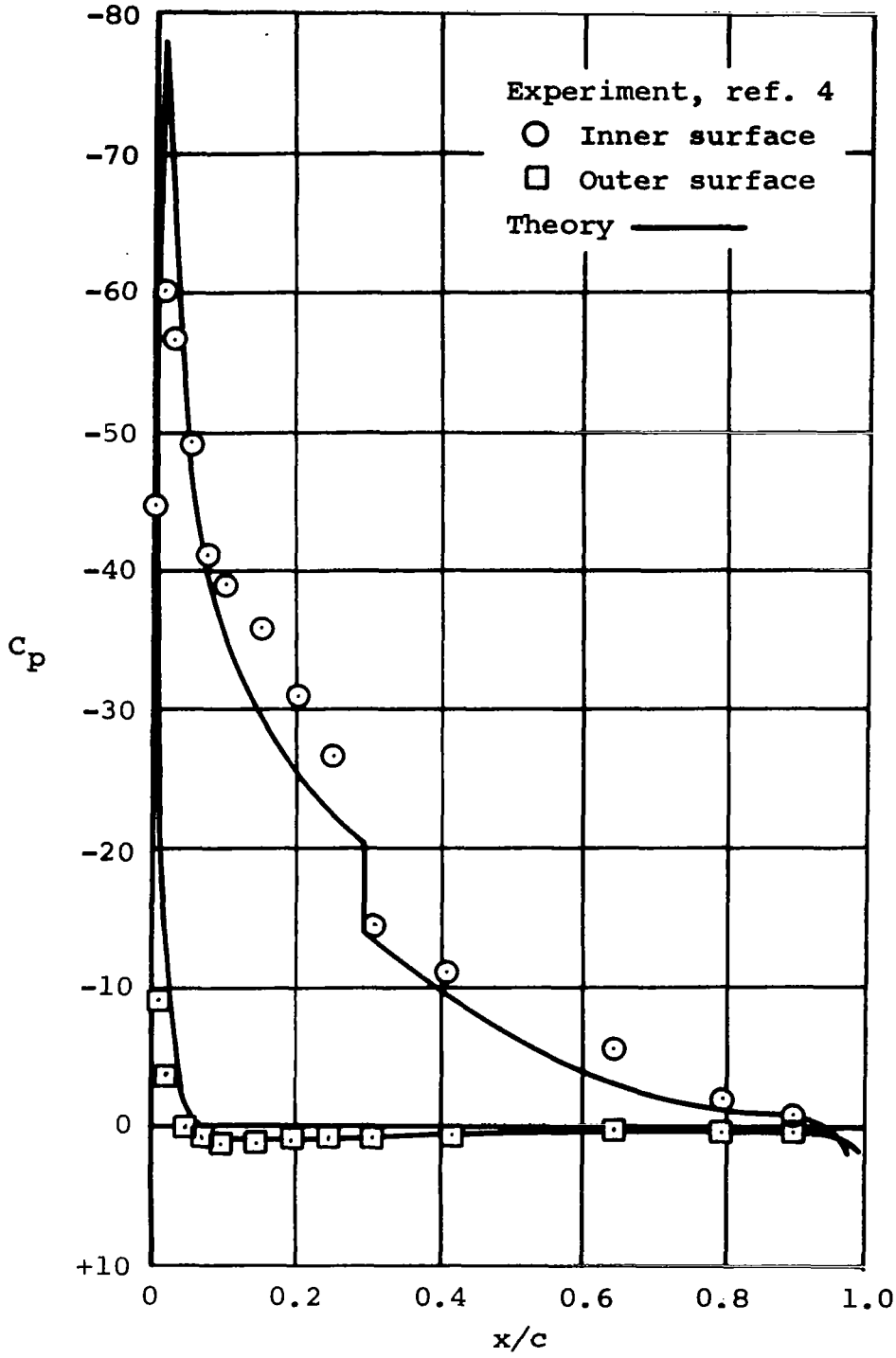

(a) $\phi = 0^{\circ}$.

Figure 12.- Measured and predicted pressure distribution on the Doak duct at $\alpha = 20^{\circ}$, $J = 0.178$.

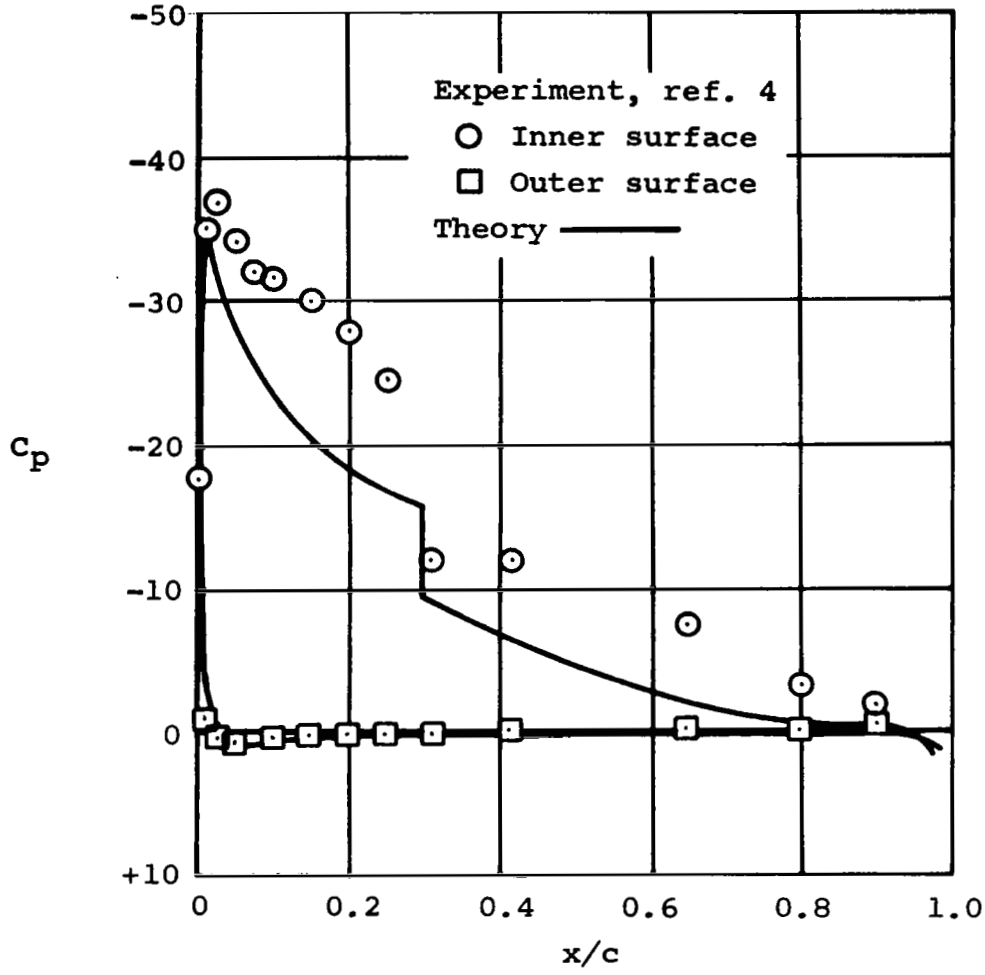

(b) $\phi = 180^{\circ}$.

Figure 12.- Concluded.