N 70 23655
NASA CR 109355

SEA WATER CONVERSION LABORATORY

UNIVERSITY OF CALIFORNIA

BERKELEY, CALIFORNIA

CASE FILE
COPY

"Study of Permeability Characteristics of Membranes"

Quarterly Report No. 7

Covering Period May 9 - August 9, 1969

K. S. Spiegler, Principal Investigator
J. C. T. Kwak
D. A. Zelman
J. Leibovitz (part time)

Contract No. 952109
Jet Propulsion Laboratory
Pasadena, California

SEA WATER CONVERSION LABORATORY

UNIVERSITY OF CALIFORNIA

BERKELEY, CALIFORNIA

"Study of Permeability Characteristics of Membranes"

Quarterly Report No. 7

Covering Period May 9 - August 9, 1969

K. S. Spiegler, Principal Investigator
J. C. T. Kwak
D. A. Zelman
J. Leibovitz (part time)

Contract No. 952109
Jet Propulsion Laboratory
Pasadena, California

This work was performed for the Jet Propulsion Laboratory, California Institute of Technology, as sponsored by the National Aeronautics and Space Administration under Contract NAS 7-100.

"This report contains information prepared by the University of California, Sea Water Conversion Laboratory, Berkeley, under JPL subcontract. Its content is not necessarily endorsed by the Jet Propulsion Laboratory, California Institute of Technology, or the National Aeronautics and Space Administration."

TABLE OF CONTENTS

	Page
ABSTRACT	iv
I. INTRODUCTION	1
II. EXPERIMENTAL	1
II.A. Transport Cell and Concentration Feedback Mechanism	1
Figure 1	3
II.B. Experimental Procedure	5
III. CALCULATION OF VOLUME AND SALT TRANSPORT	8
III.A. Notation and Symbols	8
III.B. Calculation of the Volume Transport	9
III.B.1. Volume Transport Calculation for the Salt-donor Half-cell	10
III.B.2. Volume Transport Calculation for the Salt-acceptor Half-cell	12
III.C. Calculation of the Salt Transport	14
IV. FUTURE WORK	17
APPENDIX	18

Abstract

This report describes some improvements in the experimental system, including the use of a sealed, magnetically driven gear pump, and insertion of several mixed bed ion exchange columns in the demineralizing system. A detailed account of a transport experiment is given. All factors necessary for calculating the salt and volume transport through the membrane are considered and the final equations relating salt and volume flow to the data recorded for each half-cell are given.

I. Introduction

This is the seventh quarterly report of a research program designed to (a) construct one apparatus in which transport of salt, ions and water across membranes can be determined with differences in concentration, electric potential and pressure as driving forces, together with the measurement of membrane and streaming potential, and (b) perform a variety of transport measurements in it to determine the range in which linear relationships between fluxes and forces exist. This will permit us to study the performance of separators and membranes from a minimum number of basic characterization measurements.

The experimental system has been described in the first annual report (November, 1968). Minor alterations in this system have been reported in the fifth (February, 1969) and sixth (May, 1969) quarterly reports. In this report a full description of the experimental procedure is given and the calculations necessary for obtaining the salt and water flows are outlined.

II. Experimental

II.A. Transport Cell and Concentration Feedback Mechanism

A description of the experimental system, consisting of a transport measurement cell, a concentration feedback mechanism and some auxiliary equipment, was presented in the first annual report (November, 1969). Some improvements in the concentration feedback mechanism were reported in the sixth quarterly report (May, 1969).

In this system, the salt concentrations of the two solutions bounding the membrane are kept constant while salt and water transport is taking place. This was achieved by introducing concentration-feedback

mechanisms in the enriched and depleted cell compartments. The system diagram is shown in Figure 1. Small conductance probes (cell constant about 6) are introduced into the two half-cells separated by the tested membrane. The resistance of each probe is compared to a reference resistance, and the difference is monitored continuously by means of a 1605-AH impedance comparator (General Radio Co., West Concord, Mass.) Large capacitors are inserted between one of the conductance probes and the respective comparator to block the DC loop via ground between the two half-cells. In order to reduce the AC loop current, one oscillator only is used to energize the measuring bridges of both comparators.

The output voltage of each impedance comparator is amplified and when the monitored resistance difference (between the reference resistance and the conductance probe) reaches a preset value, a feedback mechanism is set in motion by means of a relay system. At the depleted side of the membrane the relay actuates an automatic microburet (American Instrument Company, Silver Springs, Md.) which injects concentrated salt solution into the cell compartment, until the resistance of the conductance probe again falls below the value of the reference resistance*. At the enriched side the relay actuates a small, magnetically coupled gear pump made of stainless steel (Catalogue No. 7004-8, Cole Parmer Co., Chicago, Ill.). This pump replaces the plastic centrifugal pump (Cole Parmer No. 7004-1) used in earlier experiments. It has "Teflon" gears in a

---

*The amount of concentrated solution, injected into the cell by the automatic buret each time the concentration falls below the preset valve, has to be very small to minimize a concentration overshoot. This was achieved by inserting a mechanical recycling contact, which closes only 3% of the cycle time (2 seconds), between the relay and the variable transformer used to slow down the buret motor. This eliminates problems caused by the necessity to use a fairly high voltage to run the buret motor, while maintaining a low injection rate.

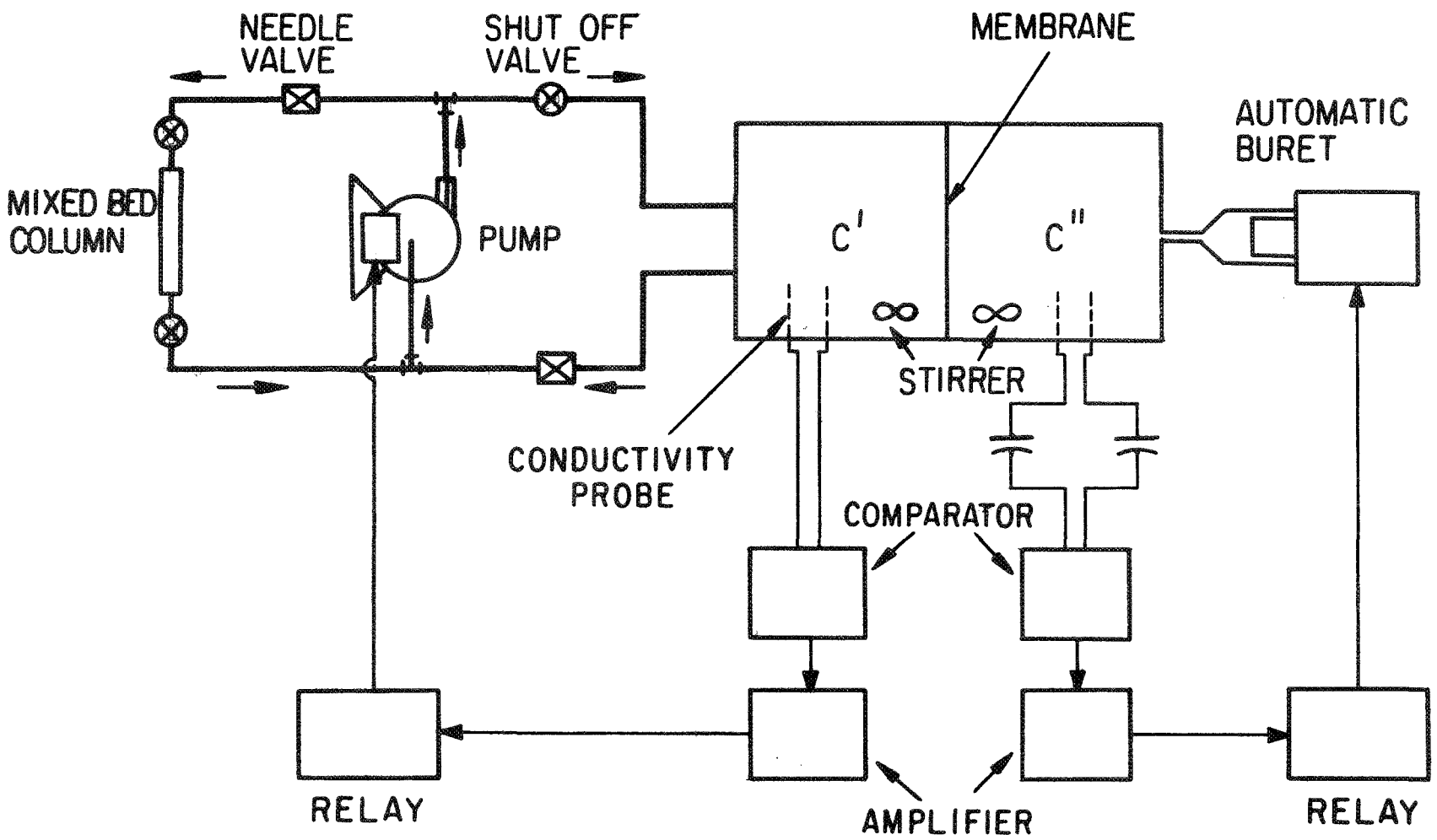

FIGURE I. SCHEMATIC REPRESENTATION OF THE CONCENTRATION FEEDBACK MECHANISM

body made of 316-stainless steel. The internal volume is very low (a few cc) and even at high flow rates there is virtually no heat transferred to the liquid. The pump is driven by a universal motor and can be operated at very low flow rates. It circulates a small part of the cell solution through a mixed-bed ion-exchange column to remove salt from the solution and stops when the column has taken up enough salt to increase the probe resistance to that of the reference resistance. Thus the amount of salt and water transported is not calculated from the change in solution concentrations, but rather from the amount of salt added by the buret or removed by the column, together with the volume changes in the two compartments measured in capillaries connected to each half-cell. The salt transport and the water transport rate are measured at each side of the membrane in order to verify the mass balance. Normally the system is able to keep the half-cell concentrations constant within 0.03% over long periods. The maintenance of constant concentration depends on the temperature stability, the rate of solution agitation inside the half-cells, solution concentration, and the concentration of the solution in the microburet. At the enriched side several demineralizing columns are inserted in parallel. In this way different experiments can be performed successively by switching the cell solution circulation from one column to the other using shut-off valves made of 316 stainless steel (RS-4, Whitey Research Tool Company, Emeryville, Calif.). By regulating the two stainless steel metering needle valves, Fig. 1, (4L, Nupro Company, Cleveland, Ohio) only a small amount of solution is taken up from the cell although a fairly rapid circulation rate through the ion exchange column is maintained. This arrangement ensures that at any time the solution in the resin column is very dilute, even in those regions where the resin is already exhausted.

II.B. Experimental Procedure

The procedure described in this section is essentially the same in dialysis-osmosis, electromigration-electroosmosis or hyperfiltration experiments. In each of these experiments the transport of salt and water through the membrane causes concentration changes of the cell solutions; these changes are compensated by the feedback systems.

The transport cell, described in the previous reports, is assembled and filled with deaerated and distilled water. The autoburet, filled with a deaerated 3M NaCl solution, and the demineralizing system are connected to the cell. The demineralizing system has four columns in parallel which can be used one at a time. The columns are filled with cation exchange resin (H^+ form) and anion exchange resin (OH^- form) (Amberlite IR-120 and Amberlite IRA-410 respectively, C. P. Mallinckrodt Chemical Works, New York) in the volume ratio of two parts anion exchange resin to one part cation exchange resin. The anion exchange resin was purified by very slow elution with a 0.5M NaOH solution (40 liter of NaOH solution for 500 g resin during one week) followed by rinsing with deionized water. To test the elution procedure used after each experiment, a 0.1M NaCl solution containing 3 m moles NaCl was passed through 8 ml of mixed bed resin and then eluted again with 100 ml 0.5M $NaNO_3$ solution. The amount of chloride present in the eluant was determined by argentometric titration and agreed within analytical error (0.2%) with the amount of NaCl originally passed through the column.

At the start the cell is filled with deaerated and distilled water only, and initial volume changes are allowed to read a steady, low rate. Calibrated capillaries (0.2 ml total volume) are connected to each half-

cell to register volume losses caused by leakage, water absorption of the "Lexan" plastic, slowly dissolving air bubbles and other error sources. These losses can be as high as 10 to 20 x 10^{-3} cm^3/hr from each half-cell during the first hours. After several days this rate decreases to less than 10^{-3} cm^3/hr on the autoburet side and about 2 x 10^{-3} cm^3/hr at the side of the demineralizing system. When this constant, low leak rate is reached, solid NaCl is added to each half-cell until the solution concentrations are close to the desired values. This is checked by measuring the resistance of the conductivity cells inserted in each half-cell. Then additional small amounts of deaerated 3M NaCl solution or deaerated distilled water are added to reach the desired concentration within 0.2%. The final correction is made by operating the feedback mechanism.

This rather elaborate starting procedure is necessary in order to be able to measure the leak rate for each half-cell in the absence of osmotic flow. In order to ensure the attainment of steady state the system can now be left for long periods under the desired concentration gradient, which is maintained by the feedback mechanism. During this time the largest of the four demineralizing columns, designated as "clean up column", is used. When steady state is reached, a switch-over is made to a smaller column and from that moment on, the transport properties are measured.

Volume changes during an experiment can be measured by either of two methods. The first is to attach long capillaries to each half-cell and register the displacement of the liquid meniscus. Disadvantages of this method are the low capacity of capillaries of reasonable length and diameter, and in our case, the necessity of opening the constant temperature box every time a measurement has to be made. (It

should be possible, however, to modify our apparatus for cathetometric observation of the meniscus from the outside of the constant-temperature box). The second method is to collect the overflow of one cell compartment in a calibrated graduated cylinder and weigh the total amount of solution collected during an experiment. At the same time a capillary connected to the other half-cell dips into a weighing bottle filled with a pre-weighed quantity of solution and sucks this solution into the half-cell. With this method the total volume transported during an experiment can be determined very accurately; the rate of volume transport can be followed only for the volume accepting cell where the solution is collected in a calibrated cylinder which permits volume readings of moderate accuracy. In general the first method is believed to be more accurate in experiments with low volume transport, the second in experiments with moderate and high volume transport. The second method was used in most experiments reported here.

Before and after each experiment, solution samples are taken to check the correct operation of the feedback system and the resistance measurements. To start the measurements after the system has reached steady state, the "clean up column" is closed and one of the other three columns is opened. Temperature, resistance of the conductivity cells and the volume reading of the autoburet are recorded, together with either the position of the meniscus in the capillaries or the weight of the empty graduated cylinder and the filled weighing bottle (depending on which method is used for the measurement of volume transport). During an experiment the same readings are made at regular time intervals, except the weights of the graduated cylinder and the weighing bottle which are determined only at the beginning and the end of each experiment.

When enough salt and water are transported the experiment is terminated by measuring solution temperatures, conductances and autoburet volume, isolating the demineralizing column and weighing the filled graduated cylinder and the weighing bottle, which now contains less solution than before the experiment. In the next section the method for obtaining the actual salt and volume transport from these data is presented.

Between different experiments the feedback system keeps operating, using the "clean up column". In this way three experiments in a row can be performed without disassembling any part of the system. When all columns have been used they are disconnected and their salt content is eluted with a deaerated 0.5M $NaNO_3$ solution. (When the $NaNO_3$ solution is not deaerated bubbles form in the column during the elution process). The amount of chloride in the eluant of each column is determined by titration. After certain corrections described in the next section are applied, the amount of salt transported through the membrane can be calculated from the data of each half-cell separately, permitting an internal check on the reliability of each experiment by mass balance.

III. Calculation of Volume and Salt Transport

III.A. Notation and Symbols

c	concentration, mole cm^{-3}
I	total electrical current, Amp
n_{Bu}	moles of salt injected by autoburet, mole
n_c	salt correction for concentration change of solution, mole
n_{col}	salt uptake of demineralizing column, mole
n_e	salt correction for change of volume of electrode, mole
n_t	salt transport in time t, mole*
n_V	salt correction for change of volume of solution, mole
t	time, sec.

v	partial molar volume, cm^3 $mole^{-1}$
V_{Bu}	volume ejectected by autoburet, cm^3
V''_{Bu}	volume change of solution due to injection of V_{Bu}, cm^3
V_{col}	volume change due to salt-water exchange of demineralizing column, cm^3
V_e	volume change of electrode caused by current passage, cm^3
V_{hc}	volume of half-cell, cm^3
V_L	volume loss from half-cell (leakage), cm^3
$\dot{V}_L$	rate of volume loss, cm^3 sec^{-1}
V_{meas}	total apparent volume change measured in capillary or by weighing, cm^3
V_t	volume transport* through membrane in time t, cm^3
ρ	density, g cm^{-3}
ρ_{Bu}	density of autoburet solution, g cm^{-3}
$\mathfrak{F}$	Faraday, Coulomb $mole^{-1}$

Superscripts ' and " refer to salt-enriched and salt-depleted half-cells respectively.

*Transport into a half-cell is taken positive, out of a half-cell negative.

III.B. Calculation of the Volume Transport

The total apparent volume change of the solution in a half-cell (V_{meas}), is calculated from the position change of the liquid meniscus in the capillary, or from the weight change of the solution in the weighing bottle (decreased volume side) and the amount of solution collected in the graduated cylinder (increased volume side). V_{meas} is the difference between initial and final volume, and can be positive or negative. For each half-cell certain corrections have to be applied to V_{meas} to obtain the volume transported through the membrane during the experiment. Different

corrections are necessary for the autoburet (salt-depleted) side and the demineralizing (salt-enriched) side.

III.B.1. Volume Transport Calculation for the Salt-donor Half-cell

To calculate the volume transported through the membrane, V''_t, from the data for the half-cell containing the depleted salt solution, the following three corrections have to be made.

a) During the experiment the autoburet injects a volume V_{Bu} of a solution, with NaCl concentration c_{Bu}, into the half-cell. This concentrated salt solution expands when it is diluted to the lower salt concentration of the solution in the half-cell. This dilution process takes place at constant cell solution concentration because of the simultaneous salt and water transport through the membrane. Conservation of mass yields:

$$\rho_{Bu} V_{Bu} = \rho'' V''_{Bu}$$

where V''_{Bu} is the volume increase of the cell solution after injection of V_{Bu}. Hence:

$$V''_{Bu} = \rho V_{Bu} / \rho''_{Bu} \qquad (1)$$

V''_{Bu} has to be subtracted from V''_{meas}.

b) In an experiment in which an electric current is passed between the two Ag/AgCl electrodes the volume of each electrode

changes because of the electrode reaction:

$$AgCl\ (solid) + e^- \underset{anodic}{\overset{cathodic}{\rightleftharpoons}} Ag\ (solid) + Cl^-\ (solution)$$

The volume change of the electrode, V_e, caused by this reaction is given by:

$$V_e'' = \pm(v_{AgCl} - v_{Ag}) \cdot I.t.\mathfrak{F}^{-1} \qquad (2)$$

where + stands for the anodic reaction and - for the cathodic reaction. V_e'' has to be subtracted from V_{meas}''. In most cases the anodic reaction will take place at the electrode in the salt-donor half-cell, but this is not always so (e.g. when the decrease in salt concentration caused by the electrode reaction and Na^+ transport through the membrane is smaller than the increase in salt concentration caused by diffusion from the other half-cell).

c) The apparent leakage from the half-cell, V_L'', measured prior to an experiment has to be added to V_{meas}'':

$$V_L'' = \dot{V}_L''.t \qquad (3)$$

where $\dot{V}_L''$ is the leak rate in cm^3/sec and t the time of the experiment.

Taking these factors into account the corrected volume transport through the membrane, as calculated from the data for the salt-donor half-cell, then becomes:

$$V''_t = V''_{meas} - \rho.V_{Bu} / \rho''_{Bu} - (\pm(v_{AgCl} - v_{Ag}).I.t.\mathcal{F}^{-1}) + \dot{V}''_L.t \qquad (4)$$

III.B.2. Volume Transport Calculation for the Salt-acceptor Half-cell.

The following corrections have to be made to V'_{meas} of the salt-accepting (demineralizing system) half-cell.

a) The demineralizing process in the mixed-bed ion exchange column is caused by the reactions:

$$R^+\text{-}OH^- + Cl^- \longrightarrow R^+\text{-}Cl^- + OH^-$$

$$R^-\text{-}H^+ + Na^+ \longrightarrow R^-\text{-}Na^+ + H^+ \qquad (5)$$

$$H^+ + OH^- \longrightarrow H_2O$$

where R stands for the ion exchange resin. Because of the experimental set-up (Fig. 1) the resin is in contact with a NaCl solution of very low concentration; during the period necessary to demineralize 0.05 ml of cell solution the water inside the demineralizing system (more than 20 ml) is circulated through the column several times. It may be assumed that under these circumstances the volume change of the whole system, caused by the demineralizing process is small compared to the volume transport through the membrane.

b) As in the case of the salt-accepting half-cell, the correction for the volume change of the electrode in an experiment with an electric current has to be subtracted from V'_{meas}:

$$V'_e = \pm(v_{AgCl} - v_{Ag}) \cdot I.t.\mathcal{F}^{-1} \qquad (2)$$

Again + stands for the anodic reaction and - for the cathodic reaction.

c) The leak rate $\dot{V}'_L$ (normally around 2 µl/hr) has to be added to V'_{meas}:

$$V'_L = \dot{V}'_L.t \qquad (3)$$

Taking these three factors into account, the expression for the volume transport through the membrane, as calculated from the data for the salt-enriched half cell becomes:

$$V'_t = V'_{meas} - (\pm(v_{AgCl} - v_{Ag}).I.t.\mathcal{F}^{-1}) + \dot{V}'_L.t \qquad (6)$$

The following total mass balance should hold within experimental error:

$$V'_t = - \rho'' V''_t / \rho' \qquad (7)$$

In most experiments the deviations from this relation were less than 50 microliter. This deviation is not dependent on the total volume transport during an experiment and is believed to be caused by experimental errors.

III.C. Calculation of the Salt Transport

The concentration feedback mechanism keeps the salt concentrations in each half-cell constant within narrow limits. Thus the main factors in calculating the salt transport are the quantity of salt injected by the autoburet for the salt-donor half-cell, and the salt uptake by the demineralizing column for the salt-acceptor half-cell. The expressions for the corrections necessary to obtain the actual salt transport from these numbers are the same for the two half-cells.

The amount of salt (in moles) injected by the autoburet is given by:

$$n_{Bu} = c_{Bu} V_{Bu} \tag{8}$$

c_{Bu} is determined analytically with about 0.1% accuracy. The autoburet was calibrated with water. V_{Bu}, as read from the digital dial, was found to be accurate to ±0.1% in our experiments. The NaCl uptake by the column, n_{col} is determined analytically by eluting the column with 0.5M $NaNO_3$ and determining the chloride content in the eluant. The repeatability of this process is ±0.2%.

The following corrections have to be applied to n_{Bu} and n_{col} to obtain n_t'' and n_t', the salt transport calculated from the salt-donating and accepting half-cells respectively.

a) Although the concentration feedback system keeps the concentrations of the solutions accurately constant, small deviations (normally less than ±0.03%) do occur. The temperature constancy is ±0.01°C, approximately equivalent to a change

in solution conductance of ±0.02%. Another factor is the overshoot of the feedback system, which is normally 0.01% to either side, although larger overshoots sometimes occur. Even these small differences between initial and final concentrations, or between any two times of measurement, do constitute a small correction factor in the salt transport. This correction, n_c, has to be subtracted from n_{Bu} or n_{col}:

$$n_c = V_{hc} (c_f - c_i) \tag{9}$$

where V_{hc} is the total volume of the half-cell; c_f and c_i are the final and initial concentrations respectively. Since the total salt transport, n_t, is normally of the order of 2-5 mmole and $V_{hc} \approx 200$ ml, in a 0.5M solution n_c can be as much as 2% of n_t. Although V_{hc} is only known approximately, due to the various connections, tubing and capillaries, even an error of 20 ml in V_{hc} would change the salt transport by only 0.2% at maximum. n_c has to be subtracted from n_{Bu} or n_{col}. The method for calculating the solution concentrations from the temperature and resistance readings is given in the appendix.

b) The volumes of the solutions in the two half-cells change during an experiment because of the salt and water transport. This volume change causes a correction in the salt transport, n_v. The registered volume change in the capillaries or weighing bottles, V_{meas} is not the actual change in volume of the

solution. A correction to V_{meas} has to be made for the volume change of the electrodes when an electric current is passed:

$$n_V = c_{solution} \cdot [V_{meas} - (\pm c(v_{AgCl} - v_{Ag}).I.t.\mathcal{F}^{-1})] \qquad (10)$$

n_V includes the salt "lost" from each half-cell by virtue of the small volume leakage term. In dialysis-osmosis, and especially in hyperfiltration experiments n_V is a sizeable correction factor. For a 0.5M solution, as used for the high-concentration solution, it may be as much as 40% of n_t. Since V_{meas} and c' or c" are known accurately, the possible error in n_V is less than 0.5%.

Taking these factors into account, the equations for the salt transport become:

at the salt-depleted (autoburet) side

$$-n''_t = V_{Bu}c_{Bu} - V'_{hc}\,(c''_f - c''_i) - c''[V''_{meas} - (\pm(v_{AgCl} - v_{Ag}).I.t.\mathcal{F}^{-1})] \qquad (11)$$

and at the salt-enriched (demineralizing system) side

$$n'_t = n_{col} - V''_{hc}\,(c'_f - c'_i) - c'[V''_{meas} - (\pm(v_{AgCl} - v_{Ag}).I.t.\mathcal{F}^{-1})] \qquad (12)$$

As for the volume change, the last terms of the right hand side of equations (11) and (12) are positive for an anodic reaction and negative for a cathodic reaction. In each experiment n'_t should be equal to $-n''_t$ within experimental error.

Equations (4), (6), (11) and (12) enable us to calculate the salt and volume transport through the membrane for each half-cell separately. They hold for all transport experiments. Normally one of the two half-cells gives a more accurate result than the other, dependent on the amount transported, the solution concentrations and the various experimental errors. Even so, the system always enables us to make an internal check on the reliability of the results.

IV. Future Work

A set of measurements, including dialysis-osmosis, electromigration-electroosmosis, hydraulic flow, membrane potential and streaming potential, for a AMF-C-103 cation exchange membrane bounded by 0.5N and 0.1N NaCl solutions is now under way. The results will be presented in one of the next reports. Following these measurements the additivity of the different forces will be tested by comparing experiments where the electroosmotic flow or the hydraulic flow are either in the same direction as the osmotic flow or in the opposite direction. These measurements will indicate the influence of a possible change in concentration profile inside the membrane on the various transport coefficients.

APPENDIX

The Measurement of Concentration Changes During an Experiment

Before and after each experiment a sample of each solution is taken to determine the NaCl concentration. At the same times, and at regular intervals during the experiment, the electrical resistance and temperature of the two solutions are measured.

The estimated error of the chloride titration is less than 0.2%. This is not accurate enough to detect the small variations in concentration, usually less than 0.05%, of the cell solutions between two measurement times. Therefore the resistance measurements are used to calculate the correction for these concentration differences (Section III.C., a). Since only concentration changes appear in this correction factor all changes are measured relative to the initial concentration which is determined by titration. Temperature and concentration vary during an experiment and both variations influence the measured resistance of the solution. To calculate the concentration of the solution relative to the initial concentration, first the measured electrical resistance of the conductivity cell is corrected for the temperature variation. In this way all resistances are reduced to a standard temperature (25.00°C for experiments at, or close to, this temperature). Then the changes in resistance, at 25°C, are converted into concentration changes using literature data for the concentration-conductance relationship. Differences in temperature of as little as 0.002°C can be detected, using a thermistor (70,000 Ohm, at 25°C, 4.4% resistance change per °C) and a d.c. resistance bridge. The resistance of the conductance cell is measured relative to a fixed standard resistance, with a repeatability of ±0.005%. For each temperature T, the resistance of the con-

ductance cell, R_T, and the resistance of the thermistor at this temperature, r_T are recorded. The resistance of the conductivity cell at 25°C is calculated from:

$$R_{25} = R_T \; [1 + \frac{1}{R_T} \cdot (\frac{\partial R}{\partial T})_c \cdot \frac{\partial T}{\partial r} (r_T - r_{25})] \qquad (A.1)$$

where R_{25} and r_{25} are the resistance of the conductance cell and of the thermistor at 25°C respectively. $\partial T/\partial r$ and r_{25} of each thermistor are determined by calibration against a standard thermometer. $\frac{1}{R_T} \cdot (\frac{\partial R_T}{\partial T})_c$ between 18 and 25°C is 0.0206 $°C^{-1}$ for a 0.5M NaCl solution and 0.0214$°C^{-1}$ for a 0.1M NaCl solution. For a 0.5M NaCl solution R_{25} is around 120 Ohm. The temperature control mechanisms reduce the difference between R_T and R_{25} generally to less than 0.02%.

Once this temperature correction is made the concentration differences are obtained from R_{25} and literature data for the specific conductance, κ. The <u>specific</u> conductance, κ_f, of the final solution with unknown concentration c_f, is calculated from the measured resistance of the final solution, at 25°C, R_f, the resistance of the initial solution, R_i and the known specific conductance of this solution, κ_i by:

$$\kappa_f = R_i \kappa_i \; / \; R_f \qquad (A.2)$$

Finally the concentration of the final solution, c_f, is obtained from κ_f, using conductance tables.

This procedure is followed for each measurement point of an experiment. At the end of the experiment a concentration sample is taken

also. Titration of the initial and final samples should yield results in agreement with the calculation from resistance measurements.