N 70 25874

NASA CONTRACTOR REPORT

NASA CR-66914

NASA CR-66914

CASE FILE COPY

MASTER AGREEMENT TASK ORDER TWO

Analyses and Limited Evaluations of Payload and Landing System Structures For The Survivable Soft Landing of Instrument Payloads

By O.R. Otto, D.J. Dorr, R.M. Laurenson, D.J. Burton, and R.L. Moore

Prepared by

MCDONNELL DOUGLAS ASTRONAUTICS COMPANY
EASTERN DIVISION
Saint Louis, Missouri 63166 (314) 232-0232

for Langley Research Center

NATIONAL AERONAUTICS AND SPACE ADMINISTRATION — WASHINGTON, D.C. — APRIL 1970

NASA CR–66914

MASTER AGREEMENT
TASK ORDER TWO

Analyses and Limited Evaluations of Payload and Landing System Structures For The Survivable Soft Landing of Instrument Payloads

By O.R. Otto, D.J. Dorr, R.M. Laurenson, D.J. Burton, and R.L. Moore

Distribution of this report is provided in the interest of information exchange. Responsibility for the contents resides in the author or organization that prepared it.

Prepared Under Contract No. NAS 1–8137 by

MCDONNELL DOUGLAS ASTRONAUTICS COMPANY
EASTERN DIVISION
Saint Louis, Missouri

for

NATIONAL AERONAUTICS AND SPACE ADMINISTRATION

ABSTRACT

ANALYSES AND LIMITED EVALUATIONS OF PAYLOAD AND LANDING SYSTEM STRUCTURES FOR THE SURVIVABLE SOFT LANDING OF INSTRUMENT PAYLOADS

This report presents a complete description of structural design and six degrees of freedom loads and motions computer programs developed for the investigation of planetary landers in the soft landing load factor range (10 to 30 earth g-units). The programs may be employed for determining internal loads distribution, overall landing loads, and six degrees of freedom motions for a platform lander (attenuator mounted between a platform structure for supporting payload and a single landing footpad). The computer programs were used to perform limited evaluations of two concepts of a platform-type lander, one concept has the majority of auxiliary equipment mounted on the platform and the other has the auxiliary equipment on the footpad. These limited analyses were sufficient to show that the programs are working properly and demonstrate primary program capabilities.

TABLE OF CONTENTS

		PAGE
1.	SUMMARY	1
2.	INTRODUCTION	3
3.	STRUCTURAL DESIGN CRITERIA	5
	3.1 LANDER DESCRIPTIONS	5
	3.2 DESIGN CONSTRAINTS	5
	3.3 FACTORS OF SAFETY	9
4.	PLATFORM LANDER EVALUATION	10
	4.1 PLATFORM LANDER DESCRIPTION - CONCEPT I	10
	4.2 PLATFORM LANDER DESCRIPTION - CONCEPT II	13
	4.3 CONCEPT SELECTION	18
5.	SELECTED PLATFORM LANDER	19
	5.1 PAYLOAD	19
	5.1.1 Equipment	19
	5.1.2 Structure	19
	5.2 AUXILIARY EQUIPMENT	22
	5.3 LANDING SYSTEM	23
	5.3.1 Platform	23
	5.3.2 Attenuation System	23
	5.3.3 Footpad	27
	5.4 AEROSHELL COMPATIBILITY	27
	5.5 EXPERIMENT DEPLOYMENT	27
6.	STRUCTURAL ANALYSIS PROGRAM	31
	6.1 ANALYTICAL METHODS	31

6.1.1 Coordinate Systems 32

6.1.2 Structural Idealization 34

6.1.3 Stiffness Matrices 41

6.1.4 Elastic Analysis 57

6.1.5 Plastic Support 62

6.1.6 Modal Analysis 64

6.2 PROGRAM DESCRIPTION 66

6.2.1 Program Capabilities 66

6.2.2 Subroutines 69

6.2.3 Flow Diagram 69

6.3 PROGRAM OPERATION 69

6.3.1 Input Data 69

6.3.2 Output Data 85

6.3.3 Example of Program Operation 86

7. LANDING LOADS AND MOTIONS PROGRAM 90

7.1 ANALYTICAL METHODS 90

7.1.1 Coordinate Systems 91

7.1.2 Equations of Motion 95

7.1.3 Structural Idealization 115

7.1.4 Soil Mechanics 120

7.1.5 Footpad Attenuation 136

7.2 PROGRAM DESCRIPTION 140

7.2.1 Program Capabilities 140

7.2.2 Subroutines 141

7.2.3 Flow Diagram 143

7.3 PROGRAM OPERATION 147

7.3.1 Input Data 147

7.3.2 Output Data 160

7.3.3 Example of Program Operation 162

8. ANALYSIS OF SELECTED PLATFORM LANDER 166

8.1 LANDING LOADS AND MOTIONS 166

8.2 STRUCTURAL ANALYSIS 175

9. CONCLUSIONS 183

10. REFERENCES 185

APPENDIX A
EXAMPLE INPUT AND OUTPUT, STRUCTURAL ANALYSIS PROGRAM 187

APPENDIX B
EXAMPLE INPUT AND OUTPUT, MODAL ANALYSIS ROUTINE, STRUCTURAL ANALYSIS PROGRAM 215

APPENDIX C
PROGRAM VARIABLES LOCATED IN COMMON, LANDING LOADS AND MOTIONS PROGRAM 227

APPENDIX D
OPERATING INSTRUCTIONS, FOOTPAD LANDING LOADS PROGRAM 247

APPENDIX E
EXAMPLE INPUT AND OUTPUT, LANDING LOADS AND MOTIONS PROGRAM 255

APPENDIX F
PROGRAM LISTING, STRUCTURAL ANALYSIS PROGRAM 271

APPENDIX G
PROGRAM LISTING, LANDING LOADS AND MOTIONS PROGRAM 327

LIST OF FIGURES

FIGURE	TITLE	PAGE
3.3-1	Platform Lander	6
3.3-2	Platform Lander Components	7
4.1-1	Platform Lander - Concept I	11
4.1-2	Landing System	12
4.1-3	Base Platform Assembly	12
4.1-4	Landing Attitude Capability	14
4.1-5	Platform Lander Weight Comparisons	15
4.2-1	Platform Lander - Concept II	16
5.1-1	Payload Hexagonal Canister	20
5.1-2	Equipment Mounted on Cold Plate	21
5.3-1	Platform Structure	24
5.3-2	Attenuator and Diagonal Cables	25
5.3-3	Footpad Structure	28
5.4-1	Aeroshell Installation	29
5.5-1	Deployed Experiments	30
6.1-1	Displacements of General Bar in Local Coordinate System	33
6.1-2	Displacements of General Bar in Global Coordinate System	35
6.1-3	Footpad Idealization	37
6.1-4	Idealization of Footpad, Attenuator, and Vertical Cables, Employing Symmetry	38
6.1-5	Base Platform Idealization	42
6.1-6	Cold Plate - Stand-Off Beam Grid Idealization	43
6.1-7	Shear Web Idealization Using Diagonals	44

6.1-8	Shear Web Idealization Using Cruciform Members	45
6.1-9	Force - Displacement Relations for General Bar	47
6.1-10	Element Stiffness Matrix for General Bar	48
6.1-11	Stiffness Factors Applied to Original Matrix to Account for Elemental Bar Shear Strain	49
6.1-12	Shear Form Factor Example Calculation	50
6.1-13	Substitute Factors in K_s Matrix to Allow Elimination of Rotational Restraint in Z Direction at Point P	52
6.1-14	Substitute Factors in K_s Matrix to Allow Elimination of Rotational Restraint in Z Direction at Point Q	53
6.1-15	Substitute Factors in K_s Matrix Allowing Elimination of Rotational Restraint in Y Direction at Point P	54
6.1-16	Substitute Factors in K_s Matrix Allowing Elimination of Rotational Restraint in Y Direction at Point Q	55
6.1-17	Direction Cosines of Local Coordinate System Relative to Global Coordinate System	58
6.1-18	Assembled Stiffness Matrix Format	59
6.2-1	Structural Analysis Program Subroutines	70
6.2-2	Structural Analysis Program	71
6.3-1	Input Data Format (Card Codes 1 thru 5)	73
6.3-2	Input Data Format, Card Codes 6, 0, 7, and Data Option Cards ($INDATA)	77
6.3-3	NAMELIST ($INDATA) Data Option Indicators	80
6.3-4	Footpad Idealization for Modal Analysis	88
7.1-1	Platform Lander Coordinate Systems	92
7.1-2	Position of Point on Footpad in Surface Coordinate System	100

7.1-3	Position of Point on Footpad in Footpad Coordinate System	103
7.1-4	Footpad Shortening Deformation	109
7.1-5	Footpad Equations of Motion	114
7.1-6	Basic Load-Stroke Relationship	116
7.1-7	Strut Load-Stroke Relationship	118
7.1-8	Effect of Friction and Damping Forces on Strut Load-Stroke Relationship	119
7.1-9	Elemental Control Area Representation of Footpad	121
7.1-10	Diagramatic Representation of Total Soil Forces	125
7.1-11	List of Symbols, Primary Soil Mechanics Routines	126
7.1-12	Soil Forces Acting on Elemental Control Area	127
7.1-13	Diagramatic Representation of Elemental Soil Forces	128
7.1-14	Derivation of Elemental Soil Mass	129
7.1-15	Properties of Soils	133
7.1-16	Semi-Empirical Soil Relationships	134
7.1-17	Soil Pressure as a Function of Depth of Penetration	135
7.1-18	Crushing Characteristics of Footpad Attenuation System	137
7.1-19	Interaction Between Soil and Footpad Attenuation Material	139
7.2-1	Landing Loads and Motions Program Subroutines and Subprograms	142
7.2-2	Flow Diagram Landing Loads and Motions Program	144
7.3-1	Input Data Format Landing Loads and Motions Program	148

7.3-2	Input Data Control Indicators Landing Loads and Motions Program	151
7.3-3	Input Data-Landing Loads and Motions Program	153
7.3-4	Printed Output Data-Landing Loads and Motions Program	161
7.3-5	Typical Upslope Landing Condition	163
7.3-6	Footpad Free-Free Mode Shapes	164
8.1-1	Translational Velocity at Center of Gravity	168
8.1-2	Lander Center of Gravity Displacements	169
8.1-3	Lander Center of Gravity Velocities	170
8.1-4	Lander Center of Gravity Accelerations	171
8.1-5	Comparison of Translational Velocities for Rigid and Flexible Footpads	172
8.1-6	Comparison of Resultant Soil Force for Rigid and Flexible Footpads	173
8.1-7	Comparison of Resultant Soil Force for Loose and Dense Silica Sand	174
8.2-1	External Load Distribution on Platform Lander	176
8.2-2	External Load Distribution on Payload, Base Platform, and Auxiliary Equipment	178
8.2-3	External Load Distribution on Footpad (Employing Symmetry)	179
8.2-4	Typical Internal Load Distribution - Member 16	180
8.2-5	Landing System Load Stroke Characteristics for Edge Loading	182
C-1	Location of Labeled COMMON Blocks in Landing Loads and Motions Program	229
C-2	Variables Located in COMMON Landing Loads and Motions Program	230

LIST OF PAGES

i thru xii

1 thru 413

1. SUMMARY

This report describes two computer programs developed by McDonnell Douglas Astronautics Company - Eastern Division under NASA contract NAS-1-8137(U) for investigation of a platform type of planetary lander in the soft landing load factor range (10 to 30 earth g's). The internal loads distribution, overall landing loads, and six degrees of freedom motions may be determined by these programs. The platform lander is identified by its platform structure for supporting the payload and its single landing footpad. Limited evaluations conducted on two platform lander concepts are reported. One concept has the majority of auxiliary equipment mounted on the platform and the other has the auxiliary equipment on the footpad. Analyses of the lander concept with equipment on the platform are included.

One program developed is the Structural Analysis Program. It is a finite element program capable of determining internal and external loads and deflections of a structure with up to 74 members and 74 joints. Six degrees of freedom are permitted at each joint. The program allows simulation of the plastic behavior of a crushable attenuation system and of structural members with restricted load carrying capability in certain directions, such as cables. Mode shapes and natural frequencies may also be obtained using this program. A reduction routine is included to decrease the size of the stiffness matrix, thereby minimizing computer time required for modal analysis.

The other computer program developed is the Landing Loads and Motions Program. It allows determination of soil loads, inertia loads, attenuator loads, and the six-degrees-of-freedom motions of three separate components connected by a finite number of struts. These components are the footpad, the

combined payload and platform, and a secondary equipment item. The elastic-plastic, load-stroke characteristics of the axial struts are simulated. A unique feature of this program is that effects of a flexible footpad structure using the normal mode method of analysis are included. Two soil mechanics methods are also available. One method determines soil force on an elemental area based on selected elastic-plastic, load-stroke characteristics of the soil. The second method is a modification of the footpad-soil interaction method developed during the Lunar Module Soil Mechanics Study.

Footpad mounting of equipment not required to function after landing (auxiliary equipment) was considered. Other than the landing radar, which is located on the footpad to provide an unobstructed view of the planetary surface, it was determined that it is preferable to mount the auxiliary equipment on the platform. In addition to being slightly lighter, this concept minimizes the possibility of surface contamination due to damage of a propellant line or tank. Limited analyses of this concept were conducted using the computer programs developed for this study, thus demonstrating their capabilities.

2. INTRODUCTION

Landing systems considered for unmanned planetary landers are generally categorized by landing load factor range. Landers experiencing load factors greater than 300 earth g's are considered hard landers while those experiencing less than 50 earth g's are considered soft landers. Load factors between 50 and 300 earth g's are associated with intermediate landers.

Payloads can be soft landed on planets with little atmosphere by using parachutes, retro rockets, or a combination of both. One type of landing system appropriate for soft landings is the platform lander using a crushable load attenuator. This report discusses the methods of analysis, computer programs, and results of limited analyses of a platform lander experiencing a landing load factor less than 30 earth g's.

The primary goal of this study is to develop methods of analysis and computer programs employing these methods. A secondary goal is to conduct structural analysis and landing loads and motion analysis of one platform lander. Performing these limited analyses provides the opportunity to exercise the programs and demonstrate their capability.

Two types of platform landers can be studied using the programs. In one type, the majority of equipment not required to function after landing (auxiliary equipment) and the payload package are mounted on the platform. With this approach, both the payload and auxiliary equipment experience low accelerations during landing. As a result, structural weight for equipment and supporting brackets is minimized. In the other type, the majority of auxiliary equipment is mounted on the lander footpad. This approach provides a lower center of gravity thereby increasing landing stability.

Limited evaluations of both lander types were conducted and the concept with majority of equipment located on the platform was selected for analysis using the computer programs developed for this study.

3. STRUCTURAL DESIGN CRITERIA

The following factors were considered in landing system and payload structure design: simplicity, reliability, stowability, structural compatibility, environmental compatibility, weight, and sterilizability. Methods were provided for accomplishing postlanding payload exposure to permit operation of experiments such as bioscience and imagery; measurements of wind velocity and direction, ambient pressure, temperature, and humidity; determination of soil composition; and operation of systems such as power, communication, and thermal control.

3.1 LANDER DESCRIPTION - The general arrangement of a typical platform lander with the majority of auxiliary equipment mounted on the platform is shown in Figure 3.3-1. The lander consists of three basic components: (1) landing system, (2) payload, and (3) auxiliary equipment. Items included in each component are shown in Figure 3.3-2.

3.2 DESIGN CONSTRAINTS - The following specified design constraints were used in analysis of soft lander concepts, but do not necessarily represent computer program constraints:

(1) Mass of the landed vehicle is 40 slugs (1288 lbs.) or less.

(2) The landed vehicle (payload, auxiliary equipment, and landing system) is compatible with an 11-foot base diameter, 120° blunted cone entry vehicle.

(3) Touchdown occurs at a vertical velocity = 20 fps (parallel to the gravity vector), and a maximum horizontal velocity = 12 fps.

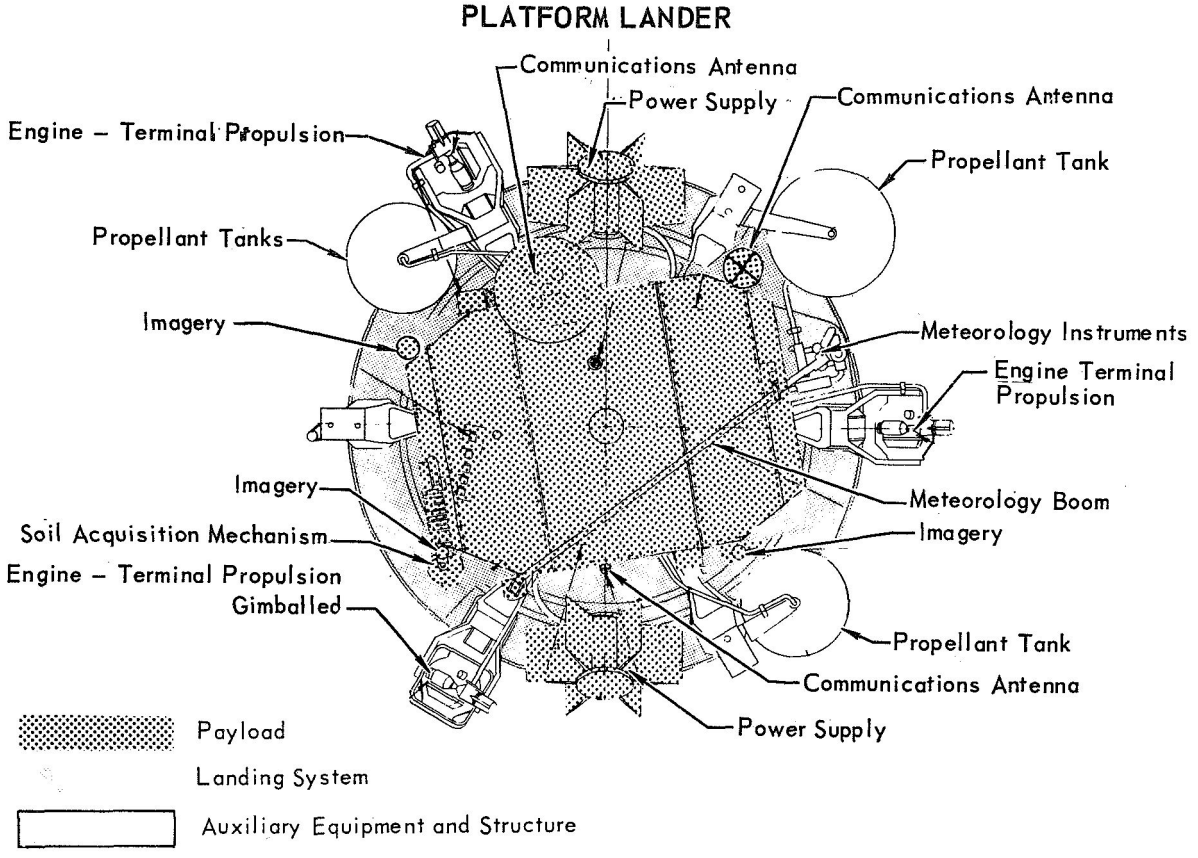
PLATFORM LANDER
Communications Antenna
Power Supply
Communications Antenna
Engine – Terminal Propulsion
Propellant Tank
Propellant Tanks
Imagery
Meteorology Instruments
Engine Terminal Propulsion
Imagery
Meteorology Boom
Soil Acquisition Mechanism
Imagery
Engine – Terminal Propulsion Gimballed
Propellant Tank
Communications Antenna
Power Supply
Payload
Landing System
Auxiliary Equipment and Structure

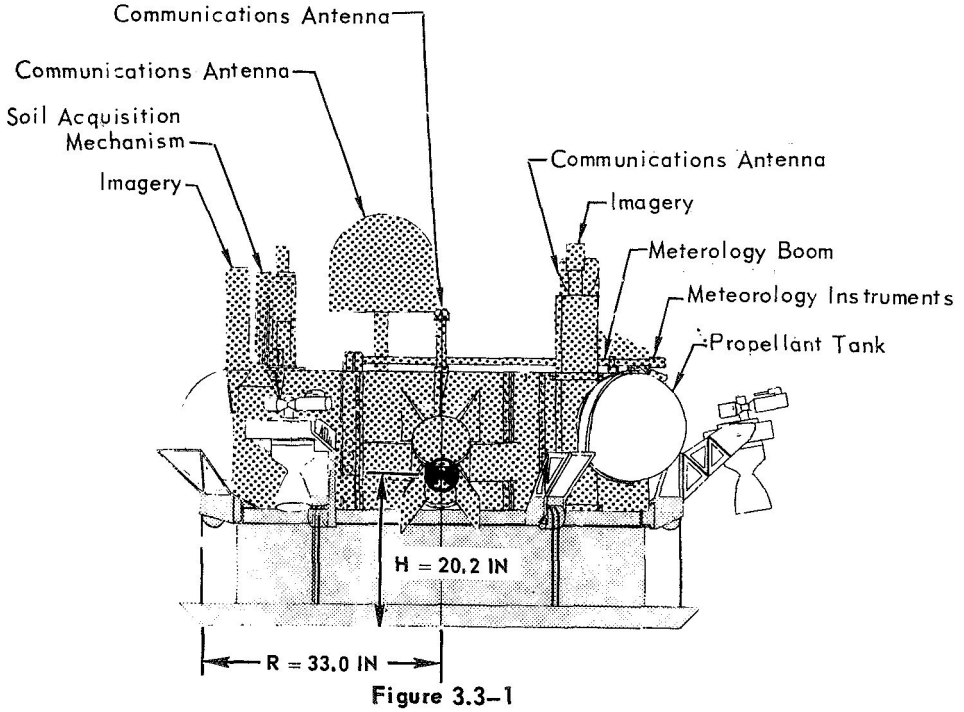
Communications Antenna
Communications Antenna
Soil Acquisition Mechanism
Imagery
Communications Antenna
Imagery
Meterology Boom
Meteorology Instruments
Propellant Tank
H = 20.2 IN
R = 33.0 IN

Figure 3.3–1

PLATFORM LANDER COMPONENTS

LANDING SYSTEM

- PLATFORM
- FOOTPAD
- ATTENUATOR

PAYLOAD

- FACSIMILE CAMERAS
- ATMOSPHERIC SENSORS
- SOIL ACQUISITION MECHANISM
- SCIENCE INSTRUMENTS
- COMMUNICATIONS EQUIPMENT
- ELECTRONIC EQUIPMENT
- POWER SUPPLY
- THERMAL CONTROL PANELS
- PAYLOAD STRUCTURE

AUXILIARY EQUIPMENT

- PROPELLANT TANKS
- TERMINAL PROPULSION ENGINES
- EQUIPMENT SUPPORTING STRUCTURE
- LANDING RADAR

Figure 3.3–2

(4) The total mass of the payload including science instruments is a minimum of 12 slugs and the payload packing density does not exceed a maximum of 60 lb/ft^3.

(5) The landing vehicle is not restricted in orientation about the roll (cylindrical) axis.

(6) Pitch and yaw attitudes at touchdown vary as much as $\pm$ 10 degrees from a plane normal to the gravity vector.

(7) The landing vehicle has the capability of successfully landing on slopes of 30° to the local horizontal.

(8) The landing system has the capability of performing satisfactorily when landing on surfaces containing particles varying in size from that of sand to five-inch diameter rocks. Rocks are allowed to penetrate the footpad as long as they do not degrade its performance or reduce energy absorption capability of landing system.

(9) The atmospheric pressure at the surface is assumed to be nine mb.

(10) The drag force on the footpad varies with penetration and with applied normal forces.

(11) The landing surface is assumed to approximate the following properties: an average crushing stress of 6.0 psi for penetrations to depths of six inches, a constant density of 90 lb/ft^3 for penetrations to depths of six inches, and an angle of internal friction of 39 degrees.

(12) The coefficient of sliding friction between the surface and the footpad is assumed to be 0.3.

(13) Payload deceleration at any point in the payload is a maximum of 20 earth g-units and footpad deceleration is a maximum of 250 earth g-units.

(14) Post landing orientation requires positive axis alignment of the payload within $\pm$ 5 degrees to an axis perpendicular to the local surface slope.

(15) Materials considered for use in the structures are compatible with space environment and a maximum temperature of 500°K. Organic materials are not used in areas which may be subject to abrasion with the landing surface or to fragmentation with subsequent scattering of fragments on the landing surface.

(16) Surface gravitational acceleration is assumed to be 12.3 ft/sec^2.

3.3 FACTORS OF SAFETY - The following factors were applied to the maximum loads (limit loads) encountered in planetary landing within the constraints specified above.

(1)	Energy Absorbing Material for Attenuator	1.00
(2)	All Other Structure	1.25

The load obtained by multiplying limit load by the appropriate factor of safety is the ultimate load used in sizing the structure.

The landing system has capability for stroke greater than that required for landings within constraints defined herein. This additional stroke is determined from either of the following conditions, whichever is more critical:

(1) If rocks do not penetrate footpad, 15 percent additional stroke is provided.

(2) If rocks penetrate footpad, a one-inch clearance is provided between bottom of platform and a rock lying on the surface.

4. PLATFORM LANDER EVALUATION

Two types of platform landers are compared in the following discussion and weight summaries of both concepts are presented. In Concept I, all equipment except the landing radar is mounted on the platform. Both the payload and auxiliary equipment experience low accelerations during landing. As a result, structural weight for equipment and supporting brackets is minimized. In Concept II, auxiliary equipment not required to function after landing is mounted on the footpad. This approach provides a lower center of gravity with an increase in landing stability.

General arrangement drawings of the two concepts were prepared to aid in defining capability required of computer programs developed during this study. Limited comparisons of the two concepts were made to select the most promising concept for further analysis using the computer programs.

4.1 PLATFORM LANDER DESCRIPTION - CONCEPT I - The platform lander consists of the landing system, payload, and auxiliary equipment as shown in Figure 4.1-1. Major elements of the landing system are: platform, footpad, and attenuation system as shown in Figure 4.1-2. The payload includes all scientific and experimental equipment required after landing, and associated electronics, power supply, and thermal control equipment. Auxiliary equipment consists of terminal descent tankage, terminal propulsion engines, and landing radar.

The platform consists of a perimeter ring and six radial beams as shown in Figure 4.1-3. Fittings at the ends of the radial beams house the cable assemblies for the attenuation system; provide the interface with the bioshield adapter, parachute canister, and deorbit motor support structure; and are used

PLATFORM LANDER – CONCEPT I
AUXILIARY EQUIPMENT IN PLATFROM

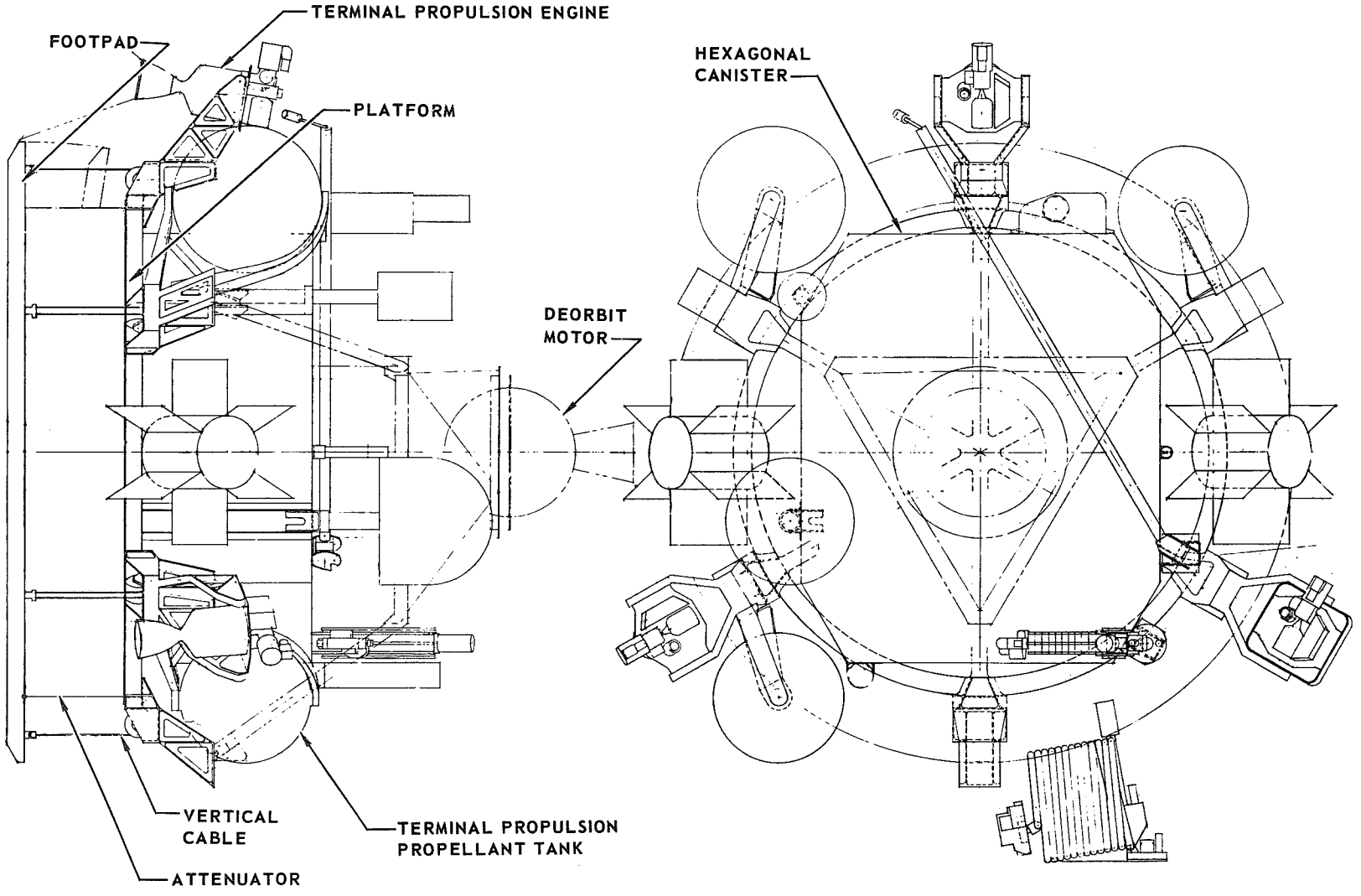

Figure 4.1-1

LANDING SYSTEM

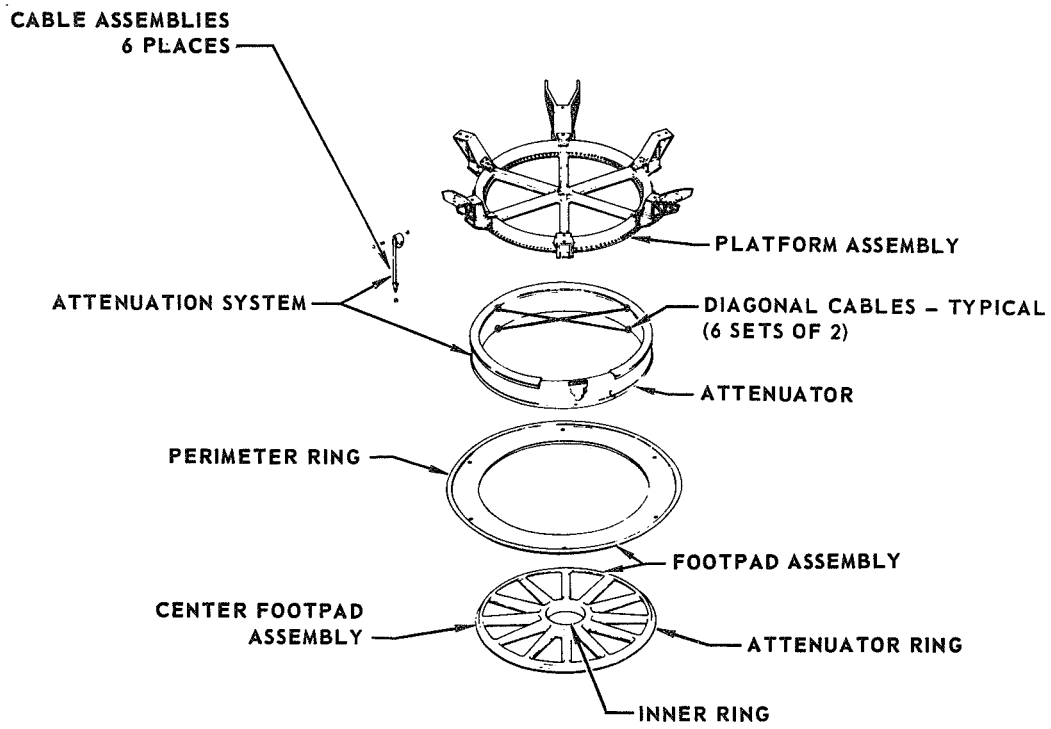

Figure 4.1–2

BASE PLATFORM ASSEMBLY

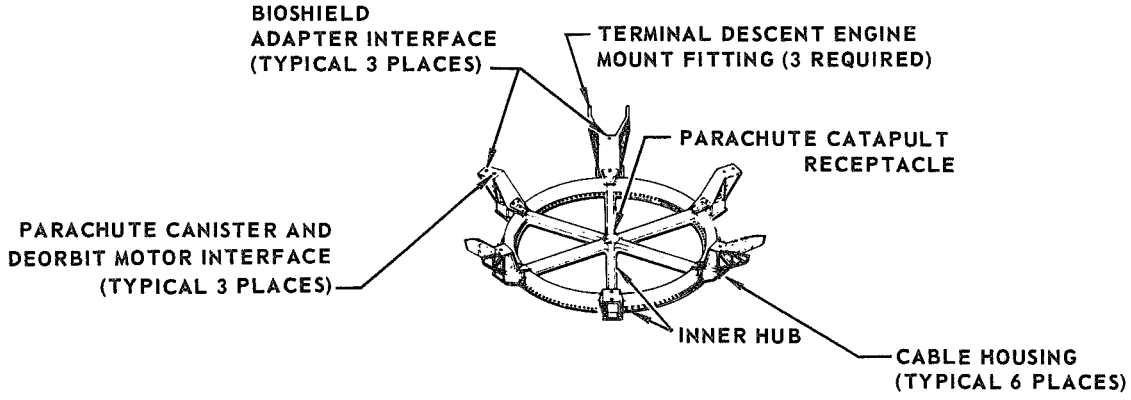

Figure 4.1–3

to mount the terminal descent engines. Secondary structure supports the terminal descent tankage and the radioisotope thermoelectric generators.

Below the base platform is the attenuation system consisting of a crushable ring of material (attenuator) to absorb energy and cable assemblies to ensure uniform loading of attenuator as shown in Figure 4.1-2. The attenuation system limits the platform deceleration to 20 g's for landing flat on an unyielding surface.

Landing attitude capability is shown in Figure 4.1-4. Clearance between the surface and equipment items is provided for landing on slopes of 30° to the local horizontal with touchdown velocities of 20 fps vertical and 12 fps horizontal.

A weight summary for Concept I is presented in Figure 4.1-5. Structural weight of the footpad (69 lb) is based on a radius of 33 inches as shown in Figure 4.1-1. An estimated 18.5 lb weight increase results if the radius is increased four inches to achieve equal stability with Concept II. Preliminary estimates of Concept I stability indicate that this footpad radius increase is not required to achieve stable landings within the defined constraints.

4.2 PLATFORM LANDER DESCRIPTION - CONCEPT II - This concept is identical to Concept I except that the terminal descent engines and tanks are mounted on the footpad instead of the platform as shown in Figure 4.2-1. Relocation of this equipment results in a lander center of gravity 2.5 inches closer to the footpad.

Weights for Concept II are compared to Concept I in Figure 4.1-5. Weights of five items are slightly different for the two concepts. These items are the attenuator, footpad structure, tank structure, engine support structure, and tank support structure.

LANDING ATTITUDE CAPABILITY

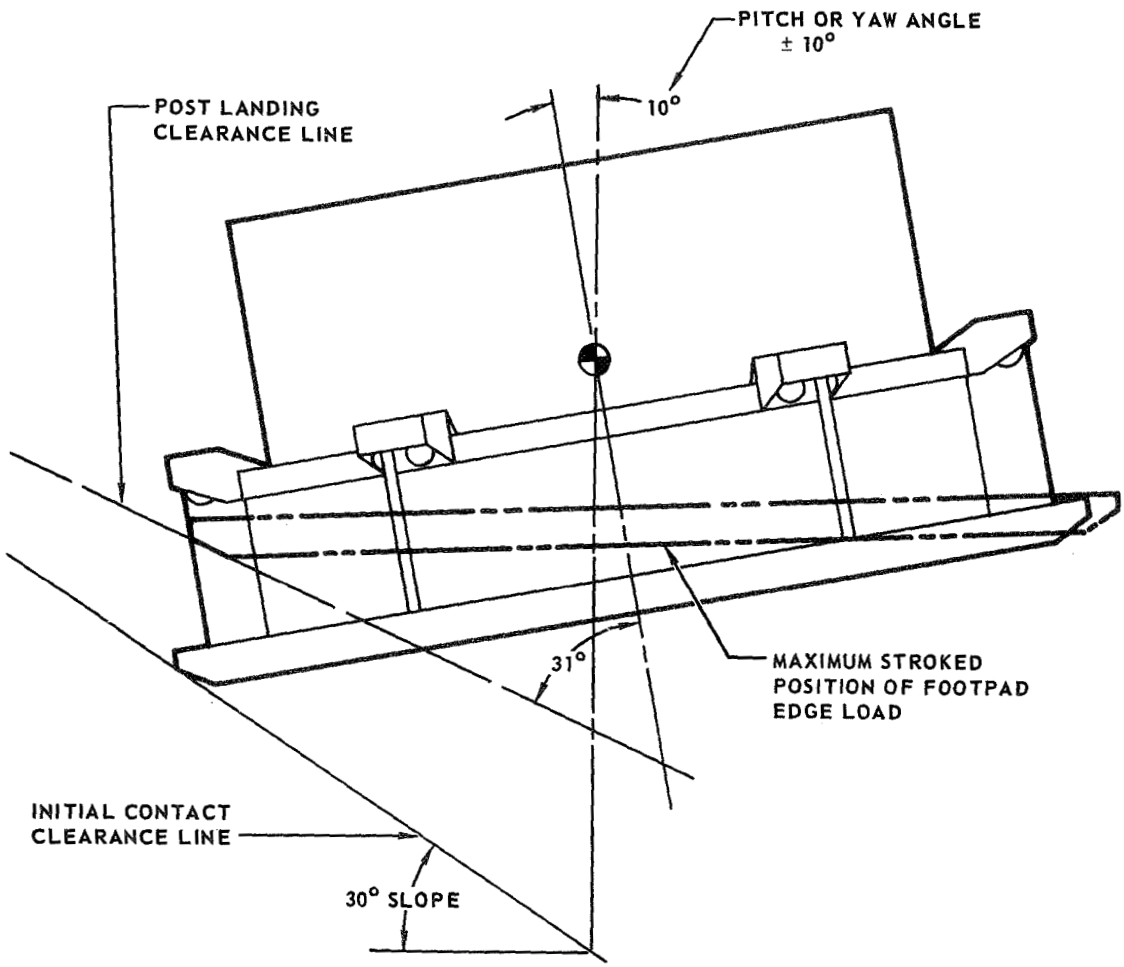

Figure 4.1-4

PLATFORM LANDER WEIGHT COMPARISONS

COMPONENT	ELEMENT	ITEM	WEIGHT (POUNDS)		WEIGHT DIFFERENCE CONCEPT II MINUS CONCEPT I
			CONCEPT I	CONCEPT II	
PAYLOAD		SCIENCE	63.7	–	
		COMMUNICATIONS, TELEMETRY, ANTENNAE	79.6	–	
		POWER (RTG AND BATTERIES)	166.8	–	
		WIRING	90.0	–	
		FLIGHT CONTROL	59.5	–	
		THERMAL PROTECTION	81.5	–	
		EQUIPMENT PACKAGING AND MOUNTING	58.5 (599.6)	– (599.6)	
LANDING SYSTEM	PLATFORM	STRUCTURE	40.0	40.0	
	ATTENUATION SYSTEM	ATTENUATOR	15.0	12.6	–2.4
		CABLE ASSEMBLY	14.7	14.7	
	FOOTPAD	RADAR	42.7	42.7	
		WIRING	15.0	15.0	
		STRUCTURE	69.0	82.2	+13.2
		MISC	7.1 (203.5)	7.1 (214.3)	
AUXILIARY EQUIPMENT	TERMINAL PROPULSION	ENGINES	72.5	72.5	
		TANKS AND DISTRIBUTION	73.2	77.0	+3.8
		UNUSED PROPELLANT AND PRESSURANT	40.3	40.3	
		ENGINE SUPPORT STRUCTURE	12.9	16.5	+3.6
		TANK SUPPORT STRUCTURE	8.1 (207.0)	22.5 (228.8)	+14.4
TOTAL WEIGHT (LB)			1010.1	1042.7	+32.6

Figure 4.1–5

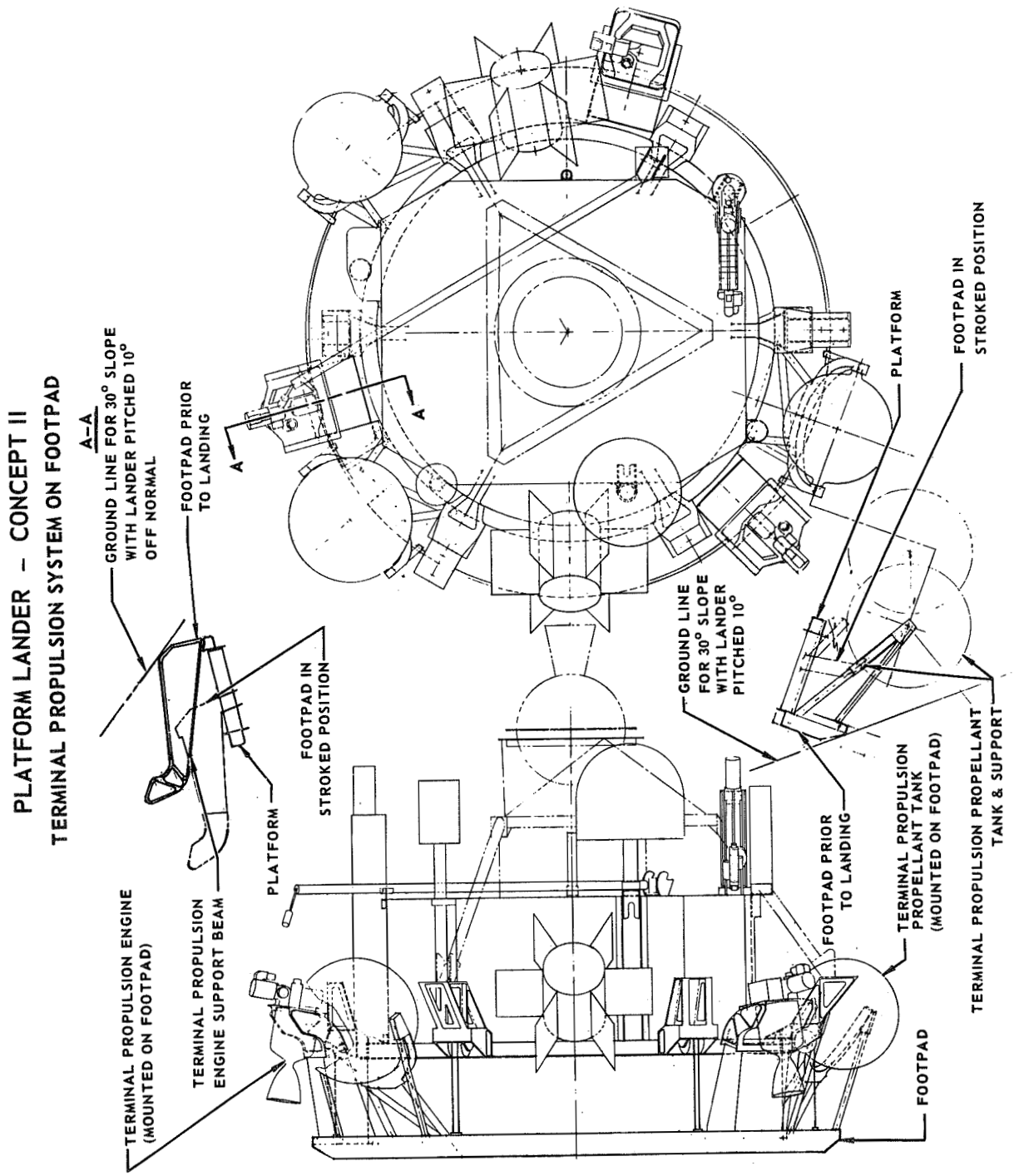
PLATFORM LANDER – CONCEPT II
TERMINAL PROPULSION SYSTEM ON FOOTPAD
A–A
GROUND LINE FOR 30° SLOPE WITH LANDER PITCHED 10° OFF NORMAL
FOOTPAD PRIOR TO LANDING
A
A
TERMINAL PROPULSION ENGINE (MOUNTED ON FOOTPAD)
TERMINAL PROPULSION ENGINE SUPPORT BEAM
PLATFORM
FOOTPAD IN STROKED POSITION
GROUND LINE FOR 30° SLOPE WITH LANDER PITCHED 10°
FOOTPAD PRIOR TO LANDING
TERMINAL PROPULSION PROPELLANT TANK (MOUNTED ON FOOTPAD)
FOOTPAD
PLATFORM
FOOTPAD IN STROKED POSITION
TERMINAL PROPULSION PROPELLANT TANK & SUPPORT

Figure 4.2–1

The attenuator for Concept II is slightly lighter (2.4 lb) because less weight is located on the platform. Therefore, a lower crushing force in the attenuator is required to maintain a payload deceleration below 20 g's. The lower crushing force for Concept II (14750 lb compared to 17570 lb for Concept I) is obtained by using a lower crush stress attenuator material (50 psi instead of 60 psi) and maintaining overall attenuator dimensions.

Structural weight of the footpad increases 13.2 pounds for Concept II because it supports 293.6 pounds of equipment (radar, wiring, miscellaneous, and terminal propulsion) compared with 64.8 pounds (radar, wiring and miscellaneous) for Concept I.

Structural weight of the tanks increases 3.8 pounds for Concept II due to higher inertia loads experienced on the footpad.

Box beam structure was assumed as supports for each of the three terminal propulsion engines on the footpad (Figure 4.2-1). Their location is dictated by the requirements that the exhaust plume not impinge on the footpad and that the engine nozzle not contact the planetary surface when landing on a 30 degree slope. Support beams weigh 16.5 pounds compared with 12.9 pounds for Concept I. This weight increase of 3.6 pounds is due to the increased inertia loads experienced on items mounted on the footpad.

The two 15-inch diameter spherical hydrazine propellant tanks and the 17-inch diameter spherical nitrogen pressurant tank were assumed to be supported by structural members as shown in Figure 4.2-1. Location is dictated by clearance of the tanks with the platform after stroking of the attenuator, and clearance of the tanks with the surface for landing on a 30 degree slope.

Weight of tank support structure is 22.5 pounds compared with 8.1 pounds for Concept I. This weight increase of 14.4 pounds is due to high inertia loads on footpad and increased length of the support structure.

4.3 CONCEPT SELECTION - It is shown in Figure 4.1-5 that Concept II is 32.6 pounds heavier than Concept I. Concept II also possesses a greater possibility of propellant leakage because of higher deceleration and increased potential for contact between the terminal propulsion engines or tanks and the planetary surface.

The parameter H/R, center of gravity height divided by footpad radius, is a major factor determining lander stability. For Concept I, H/R is .610 and for Concept II, it is .535. By increasing the footpad radius for Concept I from 33 inches to 37 inches, H/R may be made equal for both concepts. Increasing the footpad radius, however, increases the structural weight 18.5 pounds (footpad, 16.2 pounds and platform, 2.3 pounds). Thus, Concept I would still be 14.1 pounds lighter than Concept II when based on comparable values of the stability parameter, H/R. Therefore, Concept I is selected for further analysis using the computer programs developed for this task order.

5. SELECTED PLATFORM LANDER

This section describes in detail the platform lander (Concept I) selected for analysis using the computer programs discussed in Sections 6 and 7. Primarily this discussion provides the information needed to understand structural idealization of the lander when using the computer programs.

5.1 PAYLOAD - The payload consists of all scientific and experimental equipment required after landing, and associated electronics, power supply, and thermal control equipment. Payload structure includes the hexagonally shaped canister, cold plate, and stand-off beam grid.

5.1.1 Equipment - The soil acquisition and processing devices; wind sensor; payload temperature sensor; atmospheric temperature, pressure, and humidity sensors; accelerometers; high and low resolution facsimile cameras; radiators; ultraviolet photometer; and S-band and UHF antennas are attached externally to the canister as shown in Figure 5.1-1. Equipment mounted on the cold plate, Figure 5.1-2, and contained within the canister includes the bound-water detector; active biology detector; pyrolysis gas chromatograph mass spectrometer; science, communications, and flight control electronics; batteries, and battery chargers. Two radioisotope thermoelectric generators (RTG), mounted on the platform, provide regenerative power source and heat supply to the heat pipes beneath the cold plate. A seismometer is attached directly to the platform structure.

5.1.2 Structure - The canister consists of an enclosed six-sided container of aluminum sheet metal construction (Figure 5.1-1). Angle stiffening members are provided at all corners and wherever equipment items are attached.

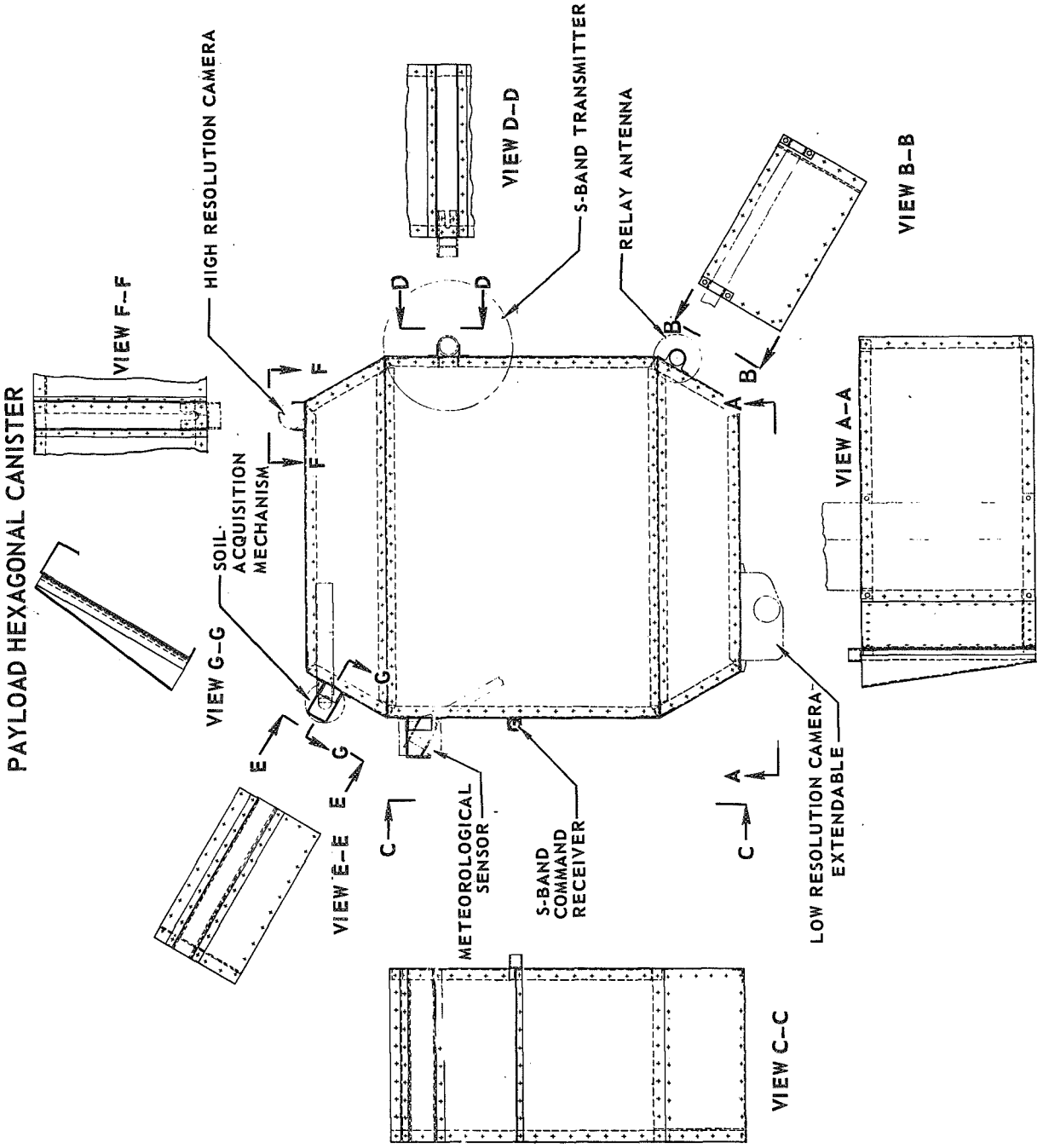
PAYLOAD HEXAGONAL CANISTER
VIEW F-F
HIGH RESOLUTION CAMERA
VIEW D-D
S-BAND TRANSMITTER
RELAY ANTENNA
VIEW B-B
VIEW A-A
SOIL ACQUISITION MECHANISM
VIEW G-G
VIEW E-E
METEOROLOGICAL SENSOR
S-BAND COMMAND RECEIVER
LOW RESOLUTION CAMERA EXTENDABLE
VIEW C-C
A
B
C
D
E
F
G

Figure 5.1-1

EQUIPMENT MOUNTED ON COLD PLATE

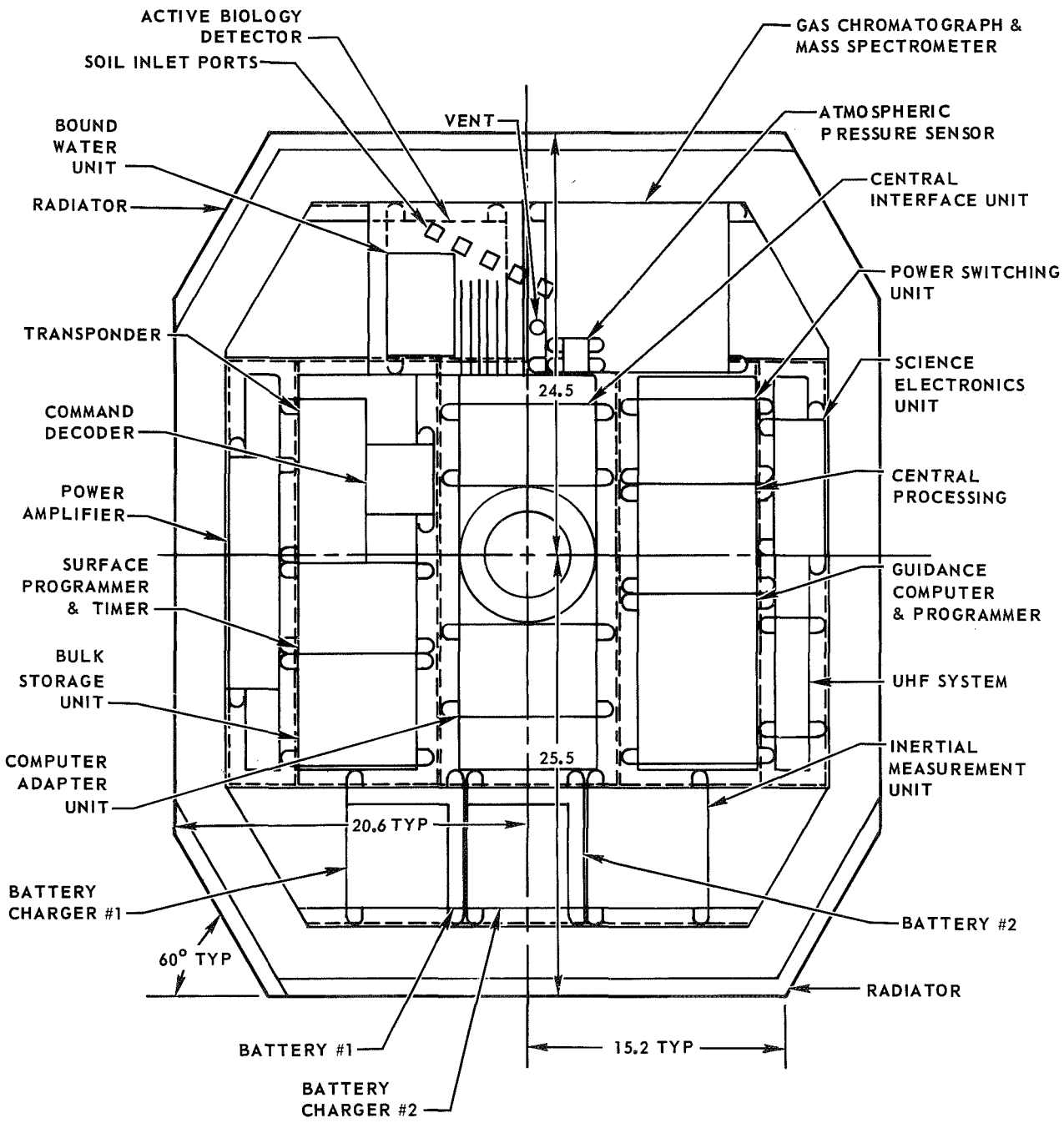

Figure 5.1–2

Inertia loads of attached equipment are carried by the angle cap and shear web assembly to the stand-off beam grid.

The cold plate, Figure 5.1-2, a machined aluminum plate with heat pipes attached to its lower surface, supports attached equipment and acts as a heat sink for thermal control. Equipment items are mounted to an integral beam network formed by machining the plate. The cold plate is attached to the stand-off beam grid, but thermally separated from it by insulation.

The stand-off beam grid provides thermal separation and transfers inertia loads from the payload to the platform. It consists of a six-sided welded titanium beam grid attached to the platform at the six radial beams. Methods for idealization of the canister cold plate and stand-off beam grid structure to make them compatible with computer programs are discussed in Sections 6.1 and 7.1.

5.2 AUXILIARY EQUIPMENT - Auxiliary equipment consists of terminal propulsion tankage, engines, and landing radar. The landing radar is mounted in the center of the footpad, providing an unobstructed view of the planetary surface.

Three terminal propulsion engines each with 450-pound thrust, are used for terminal braking of the lander. They are differentially throttled for pitch and yaw control and one engine is hinge mounted for roll control. Machined titanium beams, cantilevered from the ends of three of the radial beams on the platform, support the engines.

A nitrogen blowdown system provides pressure required for the propellant feed system. Nitrogen is stored at 1350 psia in a 17-inch diameter tank which is cantilevered from a beam extension of a radial platform beam. Hydrazine propellant from two 15 inch diameter titanium tanks is fed to the engines when squib valves in the pressurant lines are activated. These tanks are mounted in a manner similar to the pressurant tank.

5.3 LANDING SYSTEM - The landing system consists of three major components: platform, attenuation system, and footpad.

5.3.1 Platform - A perimeter ring and six radial beams comprise the platform structure as shown in Figure 5.3-1. Beam extensions support terminal propulsion engines and tanks and house the racheting mechanism for the vertical cables described in Section 5.3.2. The payload assembly is bolted to the platform at the six radial beams. A machined titanium perimeter ring aligns with the upper attenuator cap ring to support the attenuator assembly.
Bolting these two machined rings together creates a closed box section, greatly increasing the torsional stiffness of the outer ring. Methods for idealizing the platform structure to make it compatible with computer programs are discussed in Sections 6.1 and 7.1.

5.3.2 Attenuation System - A cylindrical ring of crushable attenuator material, vertical cable assemblies, and diagonal cable assemblies make up the attenuation system, as shown in Figure 5.3-2. Brazed commercially pure titanium honeycomb was selected for the crushable attenuator material to satisfy the requirement for no contamination such as might occur if aluminum honeycomb employing an organic bond were used. A hexcel honeycomb configuration with a 3/8-inch cell size and 0.001-inch-thick foil will provide the required

PLATFORM STRUCTURE

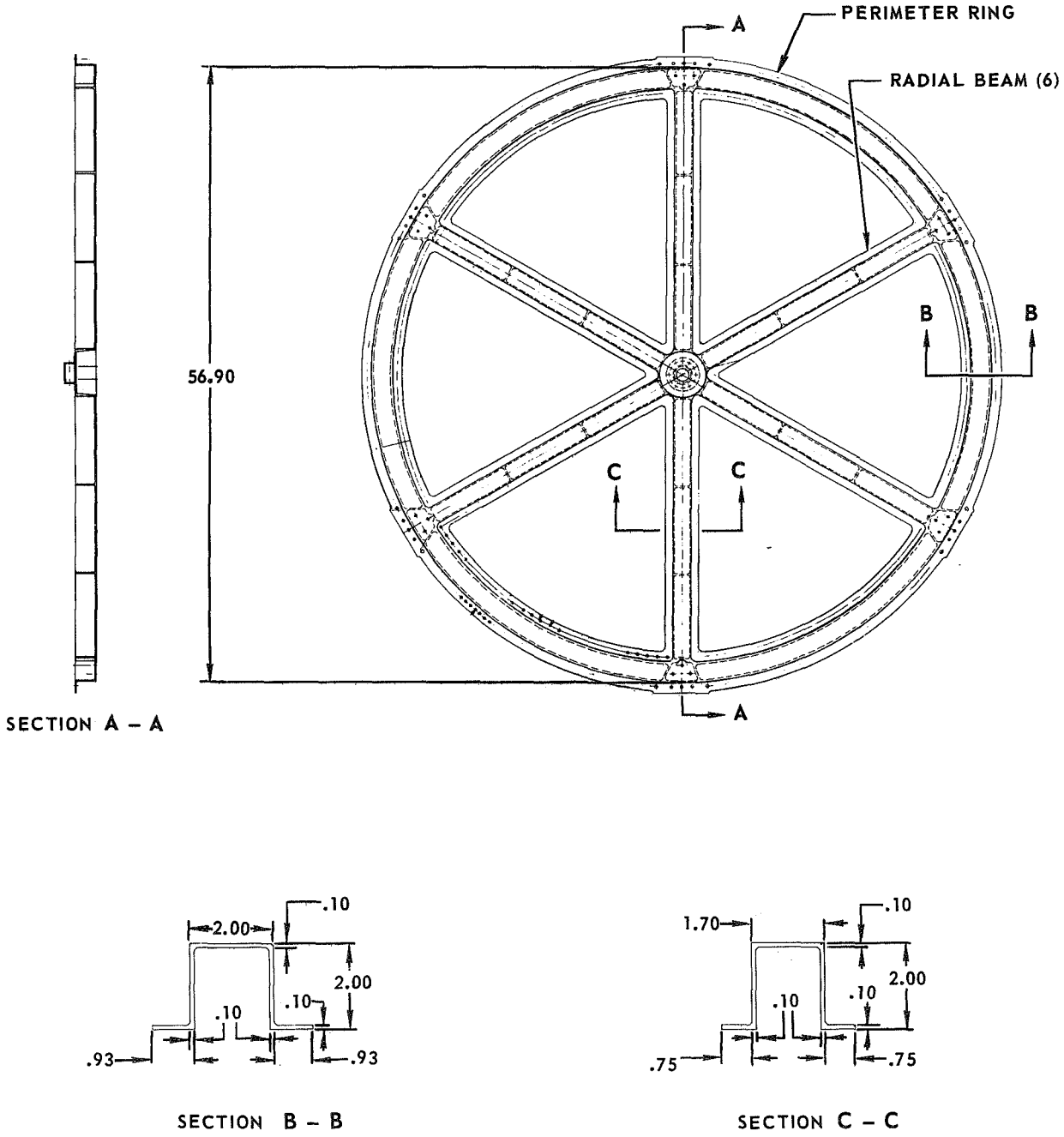

Figure 5.3–1

ATTENUATOR AND DIAGONAL CABLES

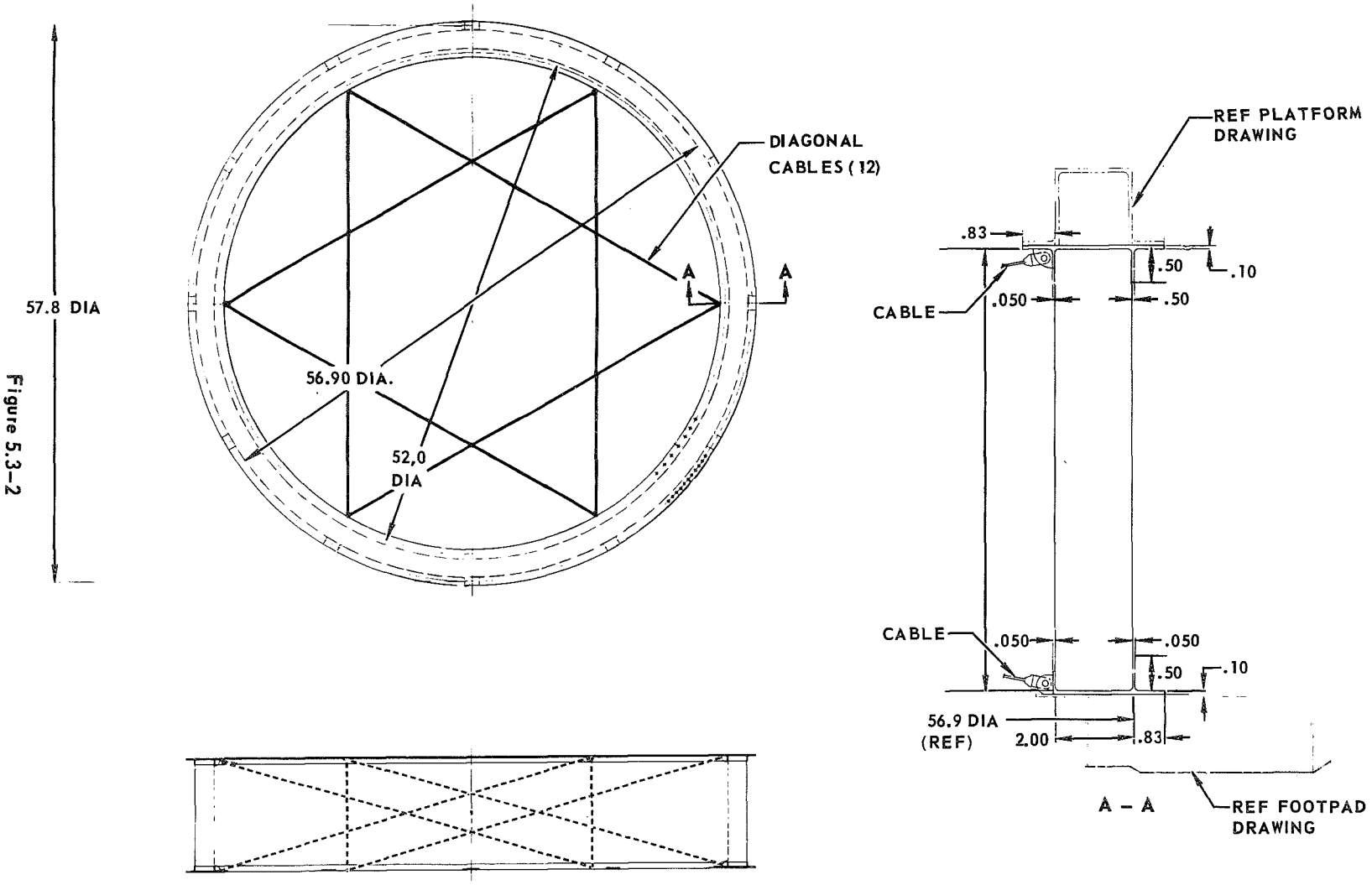

Figure 5.3-2

crushing strength of 60 psi. Machined titanium cap rings are brazed to the honeycomb cylinder, providing the means for mechanically attaching the attenuator to the platform and footpad.

Since the attenuator material is not capable of carrying shear loads from the footpad to the platform while crushing, diagonal cables were added between the footpad and platform. Six sets of two diagonal steel cables, 7/32-inch diameter, provide the shear carrying capability (Figure 5.3-2). The diagonal cables are attached to integral fittings on the attenuator cap rings allowing the honeycomb cylinder, cap rings, and diagonal cables to be assembled as a unit.

A spring-loaded vertical cable system is incorporated to provide positive assurance against attenuator separation from the cap rings. These cables are attached to a rachet mechanism at the platform to take up slack, and to remove a portion of the energy stored in the footpad due to elastic deformation during landing. Methods for idealizing the attenuation system to make it compatible with computer programs are discussed in Sections 6.1 and 7.1.

5.3.3 Footpad - The footpad is a titanium structure consisting of a machined perimeter ring, attenuator ring, inner ring, and twelve radial beams as shown in Figure 5.3-3. A thin sheet of titanium covers the entire lower surface of the footpad, except in the area bounded by the inner ring where the landing radar is located. The footpad is mechanically attached to the attenuator at the footpad attenuator ring. Integral fittings on six of the radial beams provide for attachment of vertical cable assemblies. Methods for idealizing the footpad structure to make it compatible with the computer programs are presented in Sections 6.1 and 7.1.

5.4 AEROSHELL COMPATIBILITY - An aeroshell installation drawing, Figure 5.4-1, shows compatibility of the selected platform lander with an 11 foot base diameter, 120-degree blunted cone aeroshell. Major components of the assembly are the aeroshell, platform lander, deorbit motor, parachute, adapter, and bioshield.

The lander footpad is attached to the aeroshell attach ring. A tripod truss supports the parachute system and deorbit motor assembly. The aeroshell and lander are joined to the internal bioshield attach ring by the adapter. The assembly is attached to the launch vehicle adapter at the external bioshield attach ring. Pyrotechnic devices are used at all separation joints.

5.5 EXPERIMENT DEPLOYMENT - The selected platform lander is shown in Figure 5.5-1. The lander is shown with the surface sampler, facsimile camera, and atmospheric science arm deployed following landing.

FOOTPAD STRUCTURE

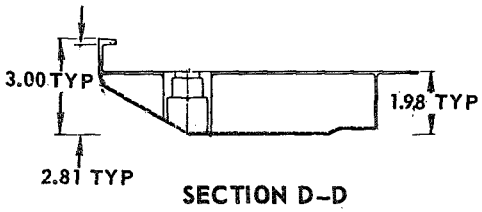

SECTION D–D

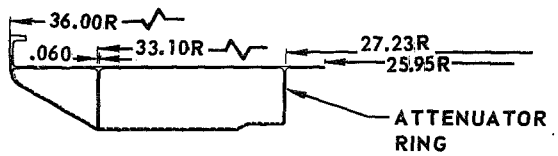

SECTION E–E

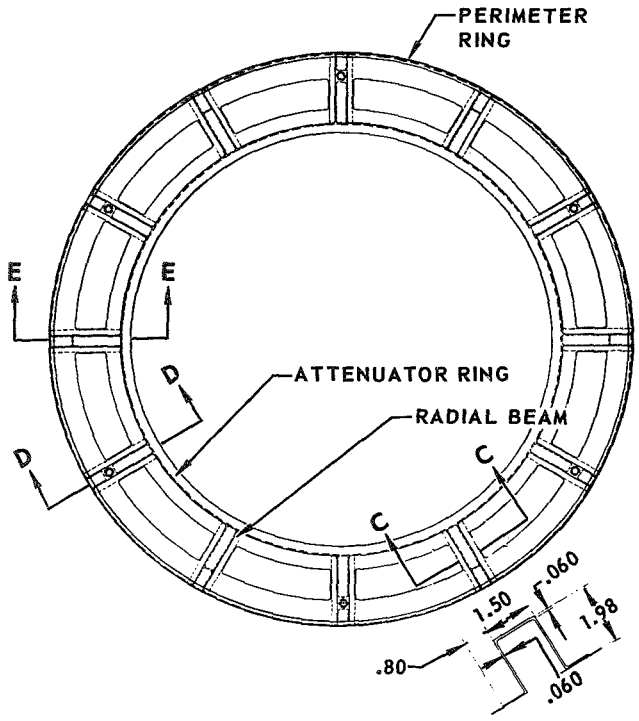

SECTION C–C

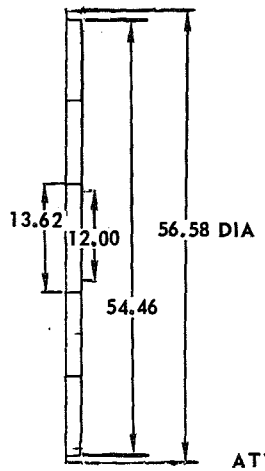

SECTION A–A

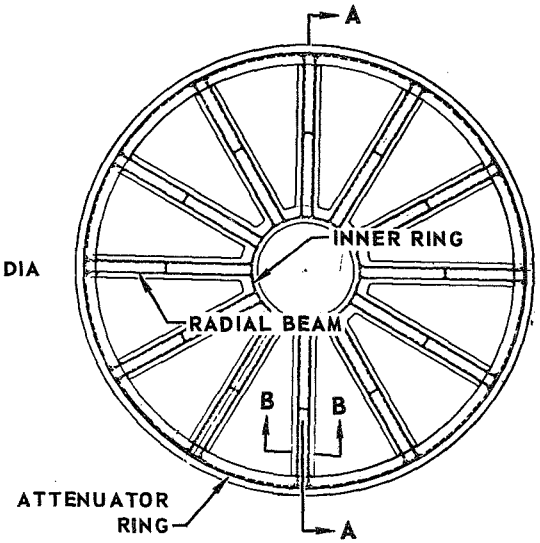

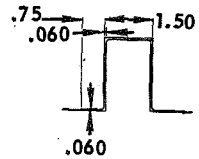

SECTION B–B

Figure 5.3–3

AEROSHELL INSTALLATION

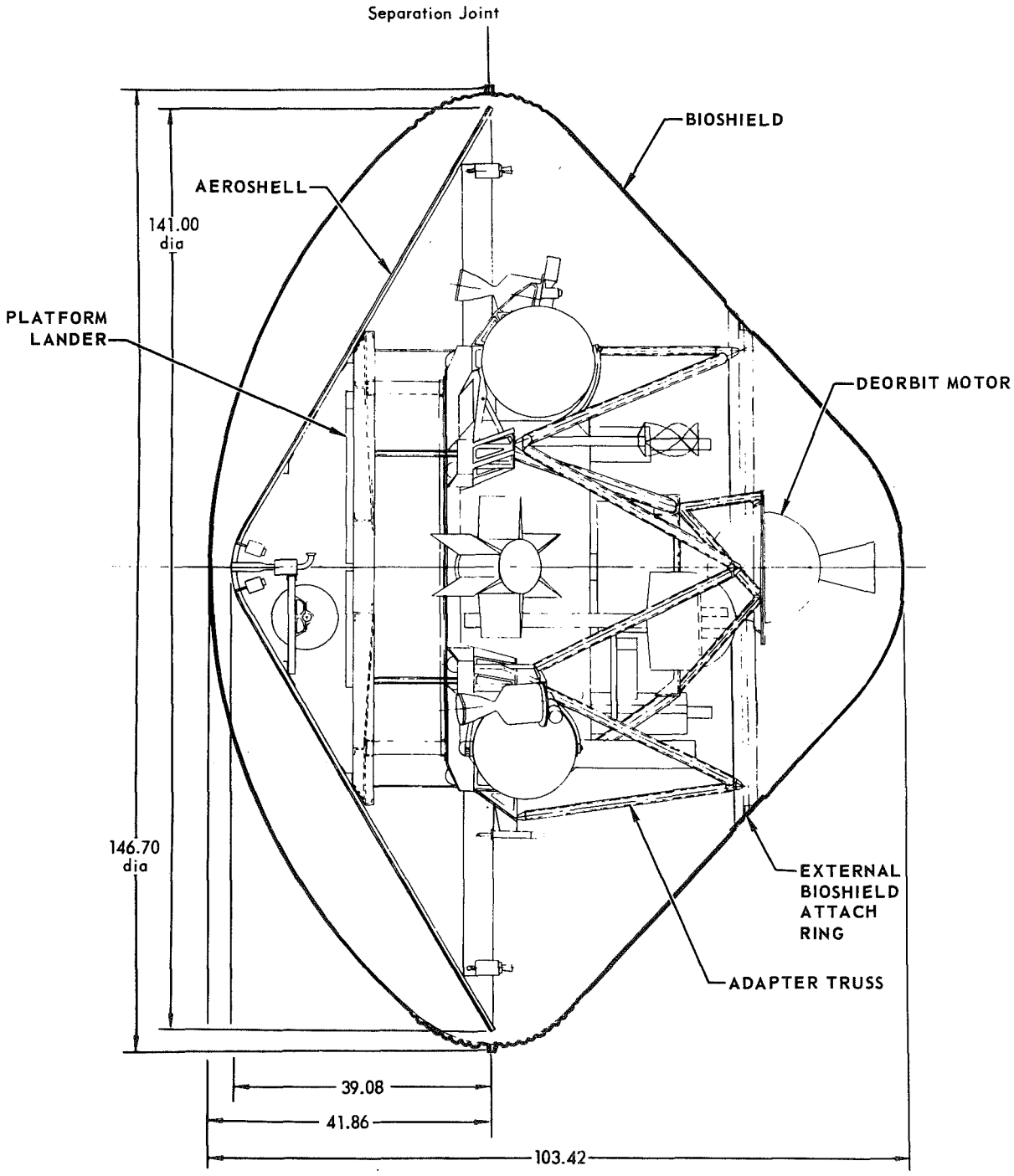

Figure 5.4–1

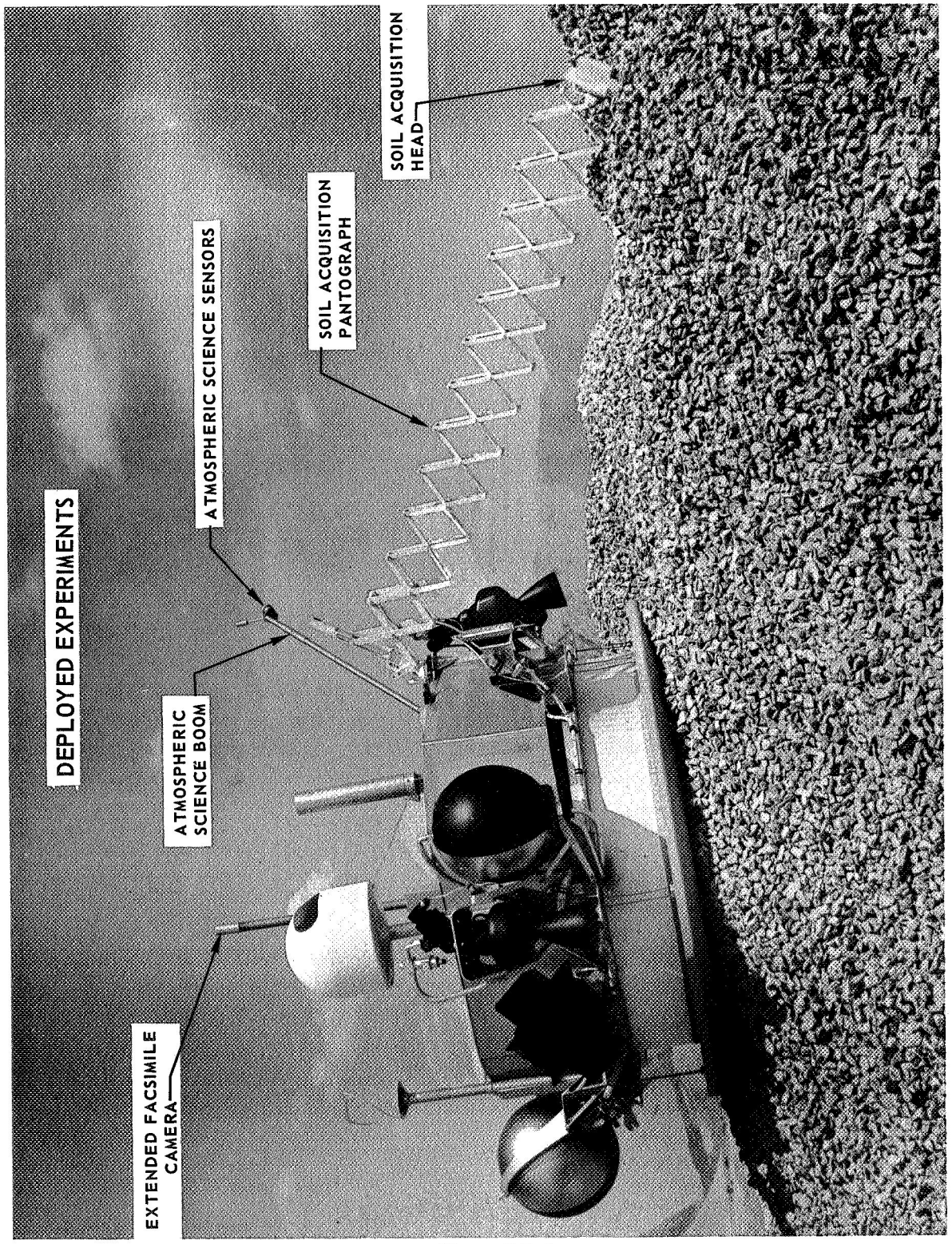
DEPLOYED EXPERIMENTS
EXTENDED FACSIMILE CAMERA
ATMOSPHERIC SCIENCE BOOM
ATMOSPHERIC SCIENCE SENSORS
SOIL ACQUISITION PANTOGRAPH
SOIL ACQUISITION HEAD

Figure 5.5–1

6. STRUCTURAL ANALYSIS PROGRAM

The Structural Analysis Program is used to determine internal load distributions in landing system and payload structures and to generate footpad stiffness data for use in the Landing Loads and Motions Program. Internal and external load distributions and deflection patterns are determined for any system of forces or deflections impressed on an elastic network of structural bar members. Additionally, the program solves problems wherein the support structure behaves plastically. Mode shapes and natural frequencies are determined using the Structural Analysis Program.

Development of the finite element stiffness method as it is employed in the Structural Analysis Program is presented in Section 6.1. Included in this section are recommended methods for idealizing the lander structure and discussions of the normal mode method. Organization and capabilities of the program are presented in Section 6.2 and operating instructions are presented in Section 6.3. A program listing is given in Appendix F.

6.1 ANALYTICAL METHODS - The landing system and payload structures are highly redundant space frames, consisting of a network of members possessing extensional, flexural, and torsional stiffness. Several methods for solving complex structural problems are in use today that effectively utilize the computer. Two methods considered for the Structural Analysis Program were the finite difference method and the finite element method. The finite element method was selected because of simplicity in dealing with non-homogeneous, anisotropic structural applications. In addition, the elements can be changed easily in shape and size to follow complex boundary conditions or to allow for regions of rapid changes in stress or deflection.

A fundamental part of the finite element method is the technique used to obtain displacements at junctions of elements. Two approaches considered for the Structural Analysis Program were the force (flexibility) method and the stiffness (displacement) method. The stiffness method was selected primarily because it is more compatible with the requirement for plastic load-stroke characteristics of the supports (attenuators) at the boundary. In addition, the stiffness matrix developed with this method may be used directly to generate the footpad normal modes required for the footpad flexibility analysis in the Landing Loads and Motions Program.

6.1.1 Coordinate Systems - Two coordinate systems employed in the Structural Analysis Program are the local coordinate system and the global coordinate system. Each bar member has its set of local coordinates as shown in Figure 6.1-1. Displacement notation of a general bar element capable of carrying axial load, shear in two directions, bending in two directions, and torsion is also indicated in Figure 6.1-1 for the local coordinate system. Subscript 1 refers to a displacement due to axial load, subscripts 2 and 3 are for displacements due to shear loads, subscript 4 is for a rotation due to torque, and subscripts 5 and 6 are for rotations due to moments. The local coordinate system origin for each bar is located at joint "p", with the x_ℓ axis aligned along the member axis. Positive x_ℓ is on the side of joint "p" towards joint "q". The y_ℓ axis is perpendicular to x_ℓ and is located in the "pqr" plane. Positive y_ℓ is on the side of x_ℓ towards point "r". The z_ℓ axis is then established using the right hand rule. Local coordinate systems are established by identifying each bar's origin (joint "p"), end (joint "q"), and orientation of the bending axis y_ℓ (defined by joint "r"). Moment of

DISPLACEMENTS OF GENERAL BAR IN LOCAL COORDINATE SYSTEM

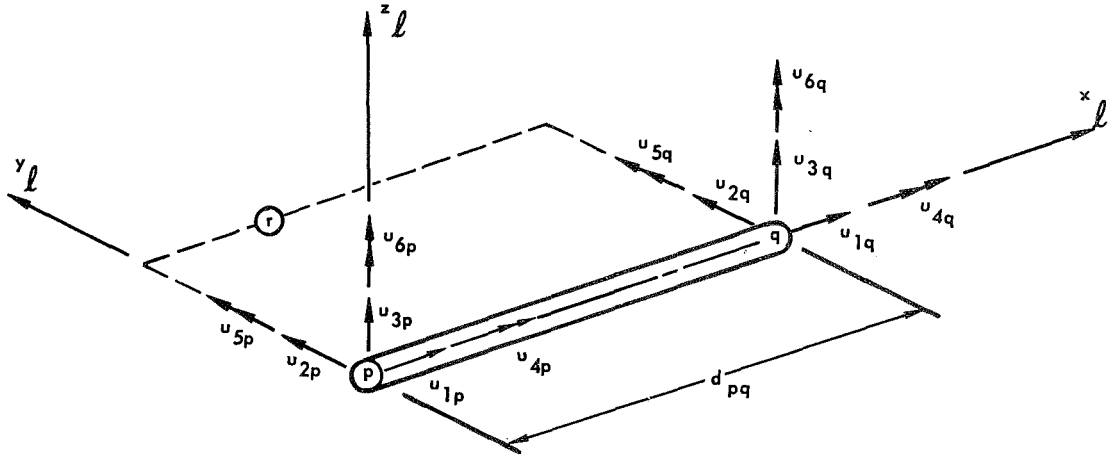

Figure 6.1–1

inertia I_T about the y_ℓ axis, moment of inertia I_N about the z_ℓ axis, cross-sectional area A, torsional constant J, modulus of elasticity E, and shear modulus G are specified for each bar relative to its local coordinate system.

A common coordinate system (global) for all structural elements must be established so that element forces and displacements may be related to a common frame of reference. This global coordinate system may be any convenient orthogonal right hand system. Displacement notation of the bar element in the global coordinate system is shown in Figure 6.1-2. Joint locations, external load distributions, and joint deflections are all specified in the global coordinate system.

6.1.2 Structural Idealization - Structural analysis of the platform lander is accomplished by separating the lander into its major structural components; footpad, footpad and attenuator, platform, and payload. The footpad structure is analyzed separately when determining modal data for use in the Landing Loads and Motions Program. Soil, attenuator, cable, and footpad inertia forces are determined in the Landing Loads and Motions Program as a function of time. These forces at times of interest are used in the Structureal Aanlysis Program to determine the internal loads in the footpad. The attenuator-platform interface is assumed to be undeformed in both programs.

The footpad, including attenuator and both cable systems, can be analyzed using the Structural Analysis Program. This configuration is useful for preliminary structural analysis (prior to obtaining data from the Landing Loads and Motions Program) or for analysis of special conditions specified for structural design, such as landing on a rock. It is possible to analyze any

DISPLACEMENTS OF GENERAL BAR IN GLOBAL COORDINATE SYSTEM

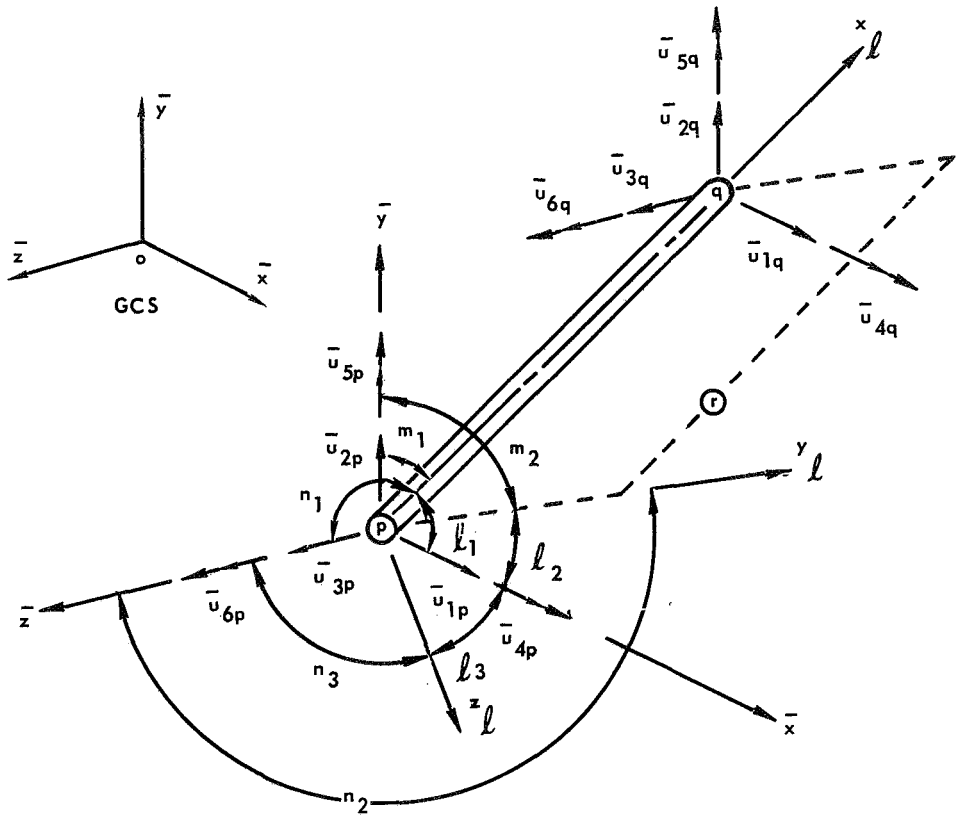

Figure 6.1–2

portion or combination of these structures using the Structural Analysis Program. The only requirements are that the deflection of support points be known, and that sufficient supports be provided for stability.

The footpad structure (Figure 5.3-3) consists of an outer ring, attenuator ring, inner ring, and twelve radial beams. These rings and beams are idealized as straight bar elements connecting the system of joints formed by the intersection of rings and beams as shown in Figure 6.1-3. Additional joints could be introduced if desired, thus subdividing the structure into a finer grid system (program will accommodate up to 74 joints). While it is possible to determine mode shapes and frequencies using one-half the structure (when symmetrical), caution must be used to avoid creating undesired constraints and incorrect modal data. The effective width of thin sheet covering the footpad is considered to be acting with the beams and rings in determining their section properties.

When idealizing the combined footpad, attenuator, and cable systems, it is possible to take advantage of symmetry and analyze one-half this system as shown in Figure 6.1-4. Loads are applied to the idealized structure as follows: one-half the total load is used if the load is applied in the plane of symmetry (plane defined by $\bar{X}$-$\bar{Z}$ axes, Figure 6.1-4). The full load is used when applied at any other point. Structural members whose longitudinal axis lies in the plane of symmetry are idealized using one-half the values for A, I_N, I_T, and J. Attenuator supports lying in the plane of symmetry are idealized using one-half the cross sectional area, A, and one-half the plastic force constraint. Calculated internal and external loads for members and supports whose properties were halved must be doubled, when determining load distributions

FOOTPAD IDEALIZATION

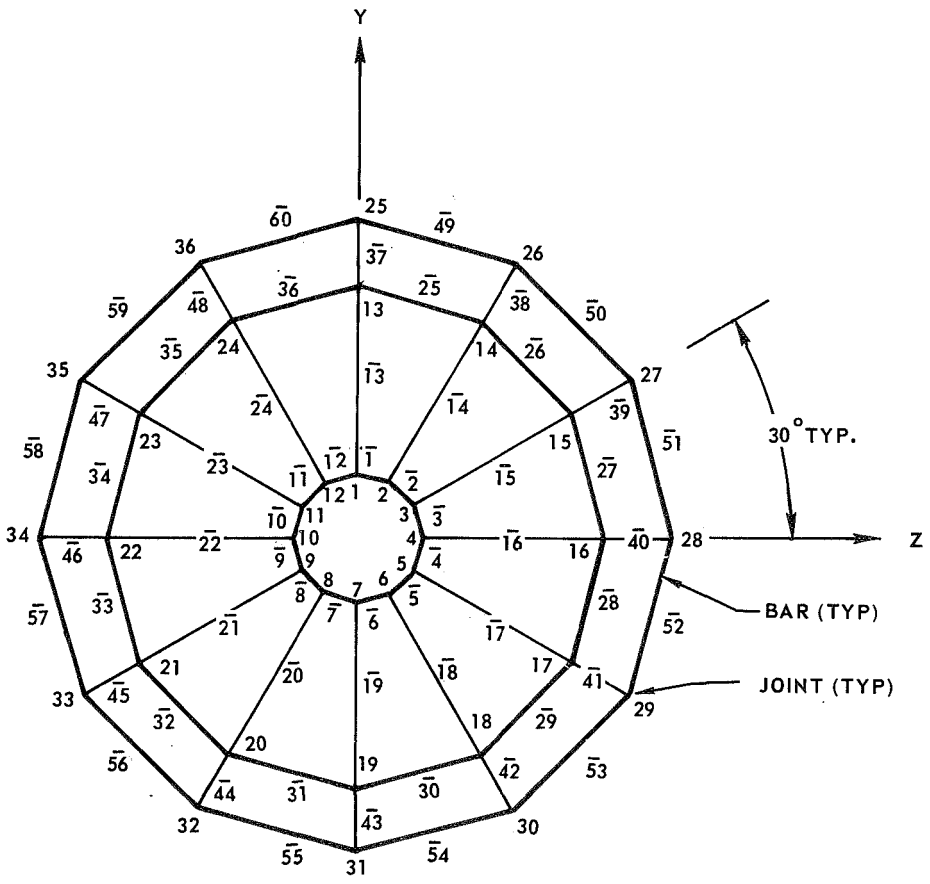

OUTER RING RADIUS = 34.5"
ATTENUATOR RING RADIUS = 27.35"
INNER RING RADIUS 6.8"

Figure 6.1–3

IDEALIZATION OF FOOTPAD, ATTENUATOR, AND VERTICAL CABLES EMPLOYING SYMMETRY

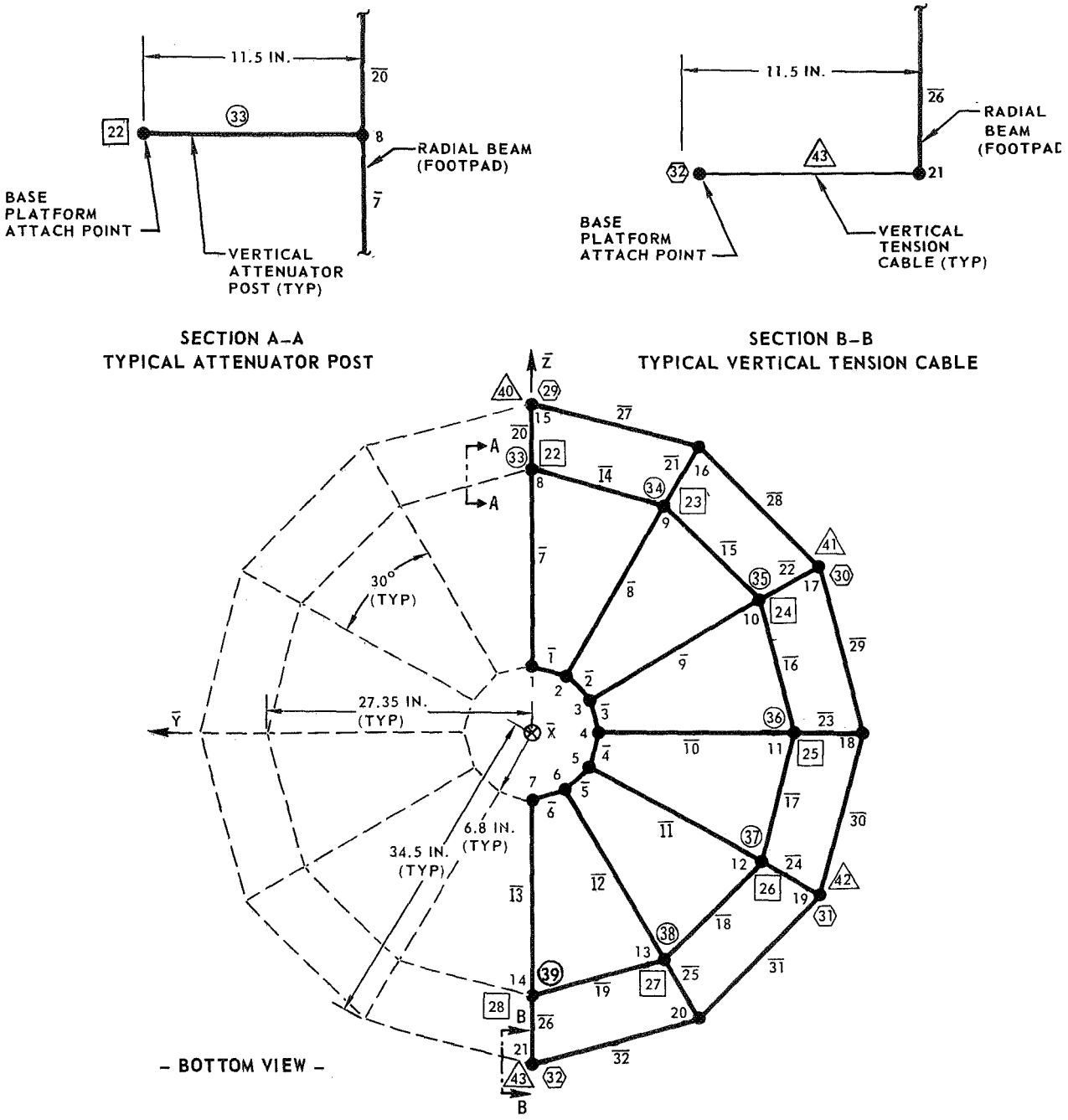

NOMENCLATURE:
N = JOINT NO. (FOR BAR IN FOOTPAD $\bar{Y}$–$\bar{Z}$ PLANE), N = 1–21
$\bar{N}$ = BAR NO. (FOR BAR IN FOOTPAD $\bar{Y}$–$\bar{Z}$ PLANE), $\bar{N}$ = $\bar{1}$ –$\overline{32}$
[N] = JOINT NO. (BASE PLATFORM ATTACH POINT, VERTICAL ATTENUATOR POST), [N] = [22] – [28]
(N) = BAR NO. (VERTICAL ATTENUATOR POST), (N) = (33) – (39)
⟨N⟩ = JOINT NO. (BASE PLATFORM ATTACH POINT, VERTICAL TENSION CABLE), ⟨N⟩ = ⟨29⟩ – ⟨32⟩
△N = BAR NO. (VERTICAL TENSION CABLE), △N = △40 – △43

Figure 6.1–4

IDEALIZATION OF DIAGONAL CABLES EMPLOYING SYMMETRY

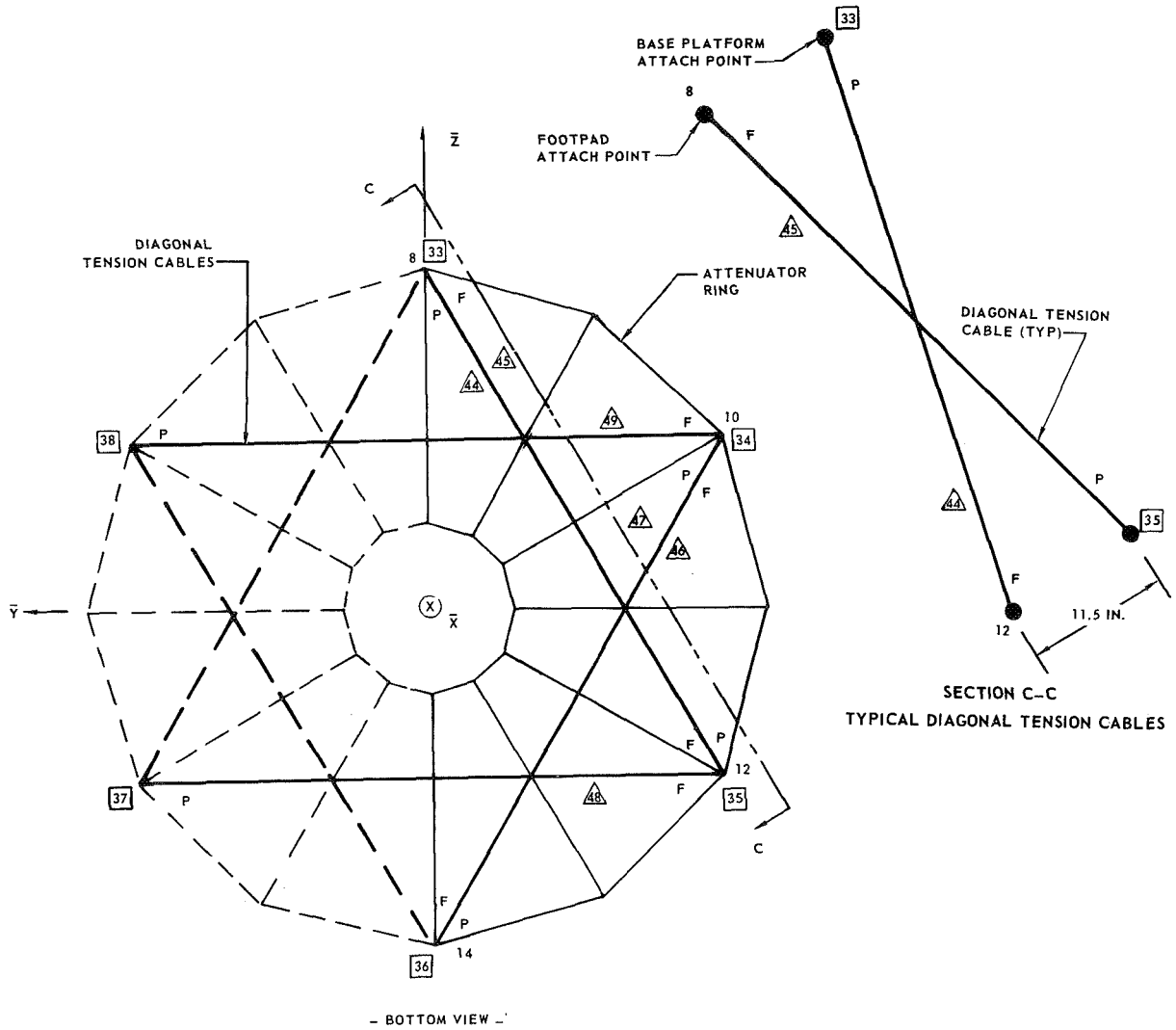

NOMENCLATURE:
F – CABLE END ATTACHED TO FOOTPAD
P – CABLE END ATTACHED TO BASE PLATFORM
N = FOOTPAD ATTACH POINT (DIAGONAL TENSION CABLE), N = 8, 10, 12, 14
[N] = BASE PLATFORM ATTACH POINT (DIAGONAL TENSION CABLE), [N] = [33] – [38]
△N = BAR NO. (DIAGONAL TENSION CABLE), △N = △44 – △48

Figure 6.1–4 (Cont'd)

for entire structure. All other loads and all deflections are correct as calculated.

A crushable ring of brazed titanium honeycomb absorbs landing impact energy (Figure 5.3-2). This ring is idealized as 12 discrete vertical bars capable of carrying axial load only. These bars are assumed to have pinned joints where they attach to the platform and to the footpad. The area of each of these bars is 1/12 the total ring crush area (292 square inches ÷ 12 = 24.38 square inches) and the modulus of elasticity is 27200 psi. Each of the 12 bars crushes when a compressive load of 1462 pounds (60 psi crush stress times 24.38 square inches) is applied. It is assumed that the tension strength of the brazed joint between the honeycomb and closure ring is 60 psi also. Therefore, these bars have equal tension and compression strength.

Honeycomb has very little capability for carrying shear loads normal to the cell axis while crushing. Therefore, six sets of diagonal cables shown in Figure 6.1-4 are used to transmit shear loads from the footpad to the platform. Since these cables cannot carry compression loads, a lower plastic force limit of zero is placed on these members. The area of each 7/32-inch diameter (1 x 7 strand) stainless steel cable is 0.0376 square inches and the modulus of elasticity is 16,330,000 psi (product of A and E is 614,000 pounds). Other properties are set equal to zero, so that these members only carry tension.

The vertical cables are modeled similar to the diagonal cables. Four 5/32-inch diameter (1 x 7 strand) stainless steel cables make up each vertical cable. Total area and modulus of elasticity of each vertical cable are 0.0765 square inches and 16,330,000 psi, respectively. All bar members idealizing cables and attenuators are assumed to be supported at the platform.

The platform structure (Figure 5.3-1) consists of a perimeter ring and six radial beams. Terminal propulsion engines and tanks are attached to beams cantilevered from the primary platform structure. These rings and beams are idealized as straight bar elements connecting the system of joints shown in Figure 6.1-5.

Payload structure (Figures 5.1-1 and 5.1-2) consists of a stand-off beam grid, cold plate, and canister. Cold plate and stand-off beam grids are idealized as straight bar elements connecting joints as shown in Figure 6.1-6. The canister is idealized as a network of shear panels and pinned bar caps capable of carrying only axial load.

Shear panels may be idealized as either two diagonal bars capable of carrying only axial load as shown in Figure 6.1-7, or four bars in a cruciform pattern capable of transmitting only shear to the cap members as shown in Figure 6.1-8. The latter method is preferred since the web carries no axial load, which is the normal idealization of a shear panel. This method requires the introduction of five extra joints and six additional bar members.

6.1.3 Stiffness Matrices - In the finite element stiffness method selected for the Structural Analysis Program, the actual structure is idealized as an assembly of discrete structural bar elements joined together at the ends (nodal points). A stiffness matrix for each element is generated in its local coordinate system based on small deflection theory. This is done by applying a unit displacement or rotation to one end of the bar (while restraining all other rotations and displacements) and determining the induced forces and moments. Displacements and rotations are applied sequentially until all degrees of freedom at each end of the element have been included. Displacement

BASE PLATFORM IDEALIZATION

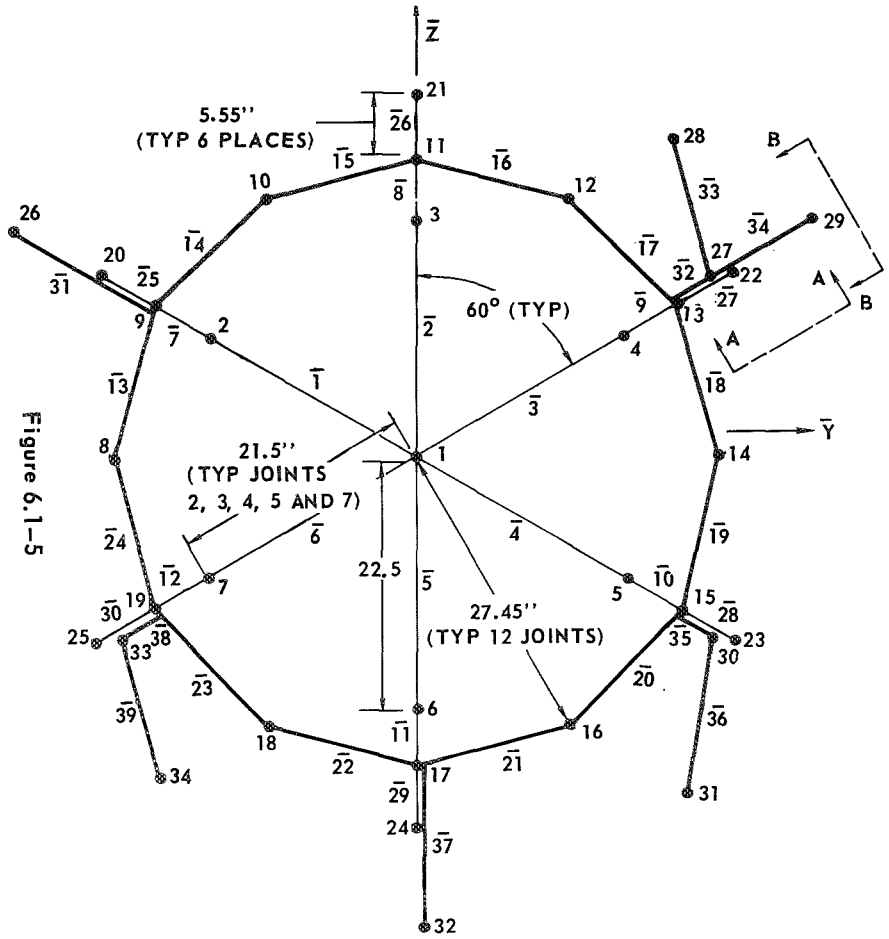

TOP VIEW

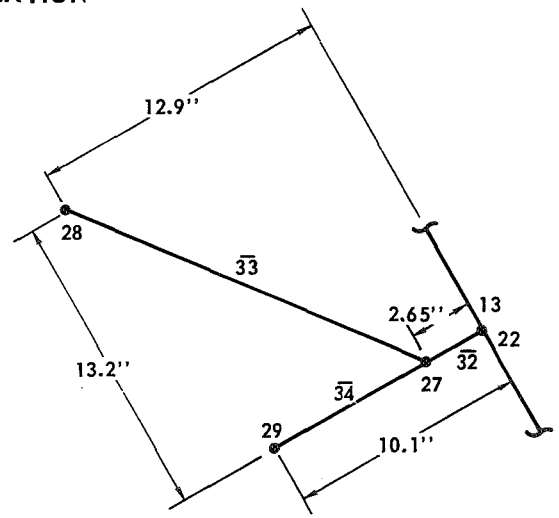

SECTION B – B

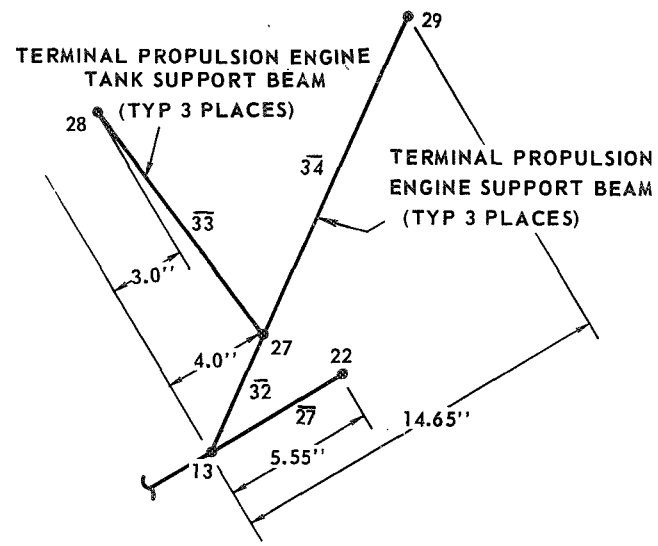

SECTION A – A

Figure 6.1–5

COLD PLATE – STAND-OFF BEAM GRID IDEALIZATION

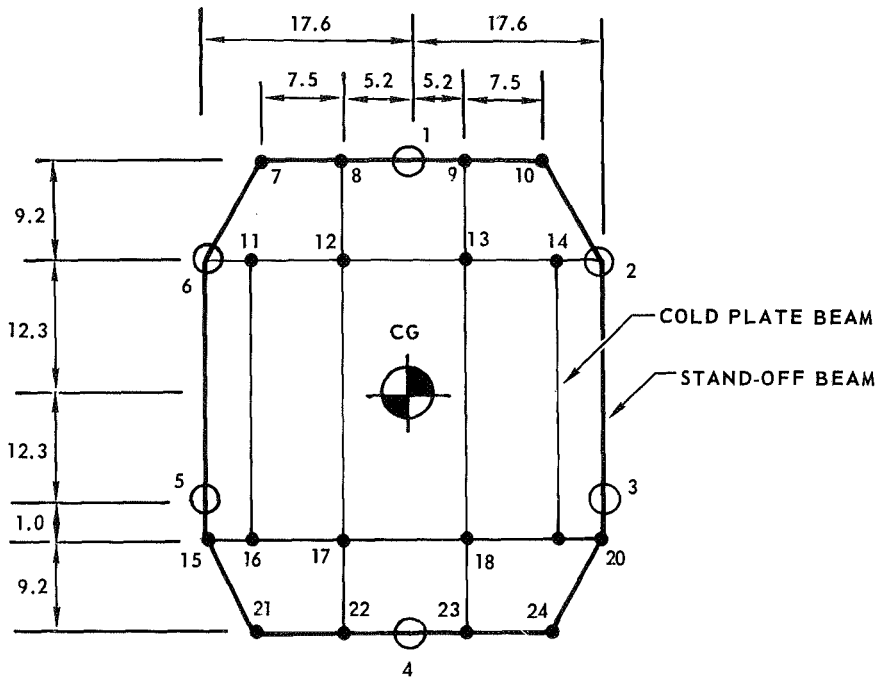

PLATFORM ATTACHES AT JOINTS 1, 2, 3, 4, 5, AND 6
COLD PLATE BEAMS ARE INTERIOR BEAMS
STAND-OFF BEAMS ARE PERIMETER BEAMS
TOTAL WEIGHT OF SUPPORTED EQUIPMENT AND STRUCTURE = 606.9 LB

Figure 6.1–6

SHEAR WEB IDEALIZATION USING DIAGONALS

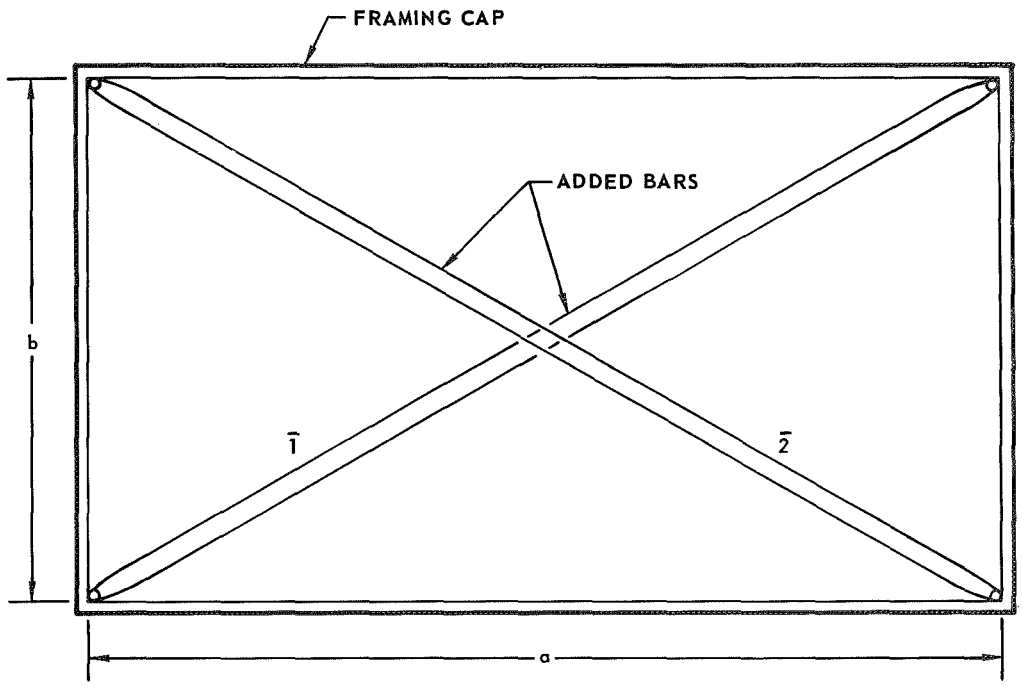

BAR PROPERTIES:
BARS $\bar{1}$ AND $\bar{2}$

$$A = \frac{(a^2 + b^2)^{3/2}\, t}{4\, a\, b\, (1 + \nu)}$$

$E = E_{WEB}$

OTHER PROPERTIES = 0

GIVEN SHEAR WEB: SIZE $a \times b$, THICKNESS t, MODULUS OF ELASTICITY E, POISSON'S RATIO ν

DIAGONAL IDEALIZATION: ADD 2 BARS AS SHOWN. BARS ARE PINNED AT BOTH ENDS AND ARE NOT ATTACHED TO EACH OTHER.

INTERPRETATION OF OUTPUT: DIAGONALS TRANSMIT AXIAL LOAD BETWEEN JOINTS, SIMULATING A WEB CARRYING SHEAR.

Figure 6.1–7

SHEAR WEB IDEALIZATION USING CRUCIFORM MEMBERS

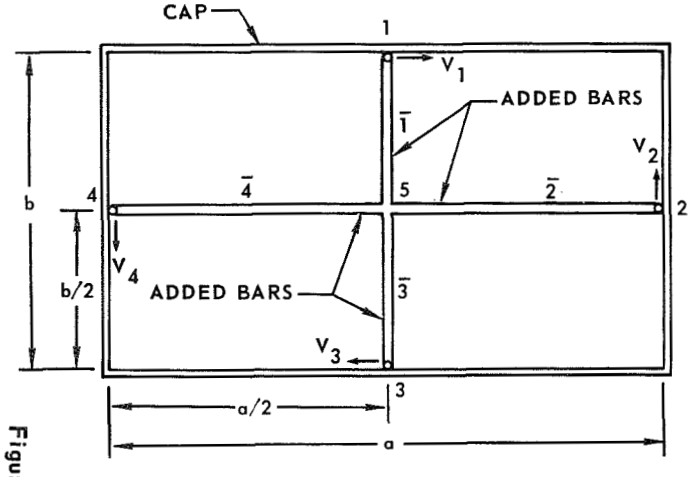

Figure 6.1-8

GIVEN SHEAR WEB: SIZE a × b, THICKNESS t,
MODULUS OF ELASTICITY E, SHEAR MODULUS G

CRUCIFORM IDEALIZATION: ADD 5 JOINTS AND 4 BARS AS SHOWN. DIVIDE EACH OF 4 CAPS FRAMING WEB INTO TWO PARTS, FORMING 8 MEMBERS. BARS $\bar{1}$, $\bar{2}$, $\bar{3}$, AND $\bar{4}$ ARE PINNED AT POINTS 1,2,3 AND 4 AND FIXED AT POINT 5.

INTERPRETATION OF OUTPUT: EQUIVALENT SHEAR FLOW IN ACTUAL WEB, q, IS;

$$q = \frac{V_1}{a} = \frac{V_3}{a} = \frac{V_2}{b} = \frac{V_4}{b}$$

BAR PROPERTIES:

BARS $\bar{1}$ AND $\bar{3}$ $\quad I = \dfrac{ab^2\, t\, G}{12\, E}\left(\dfrac{\theta_1 + \theta_2}{\theta_1}\right)$ BENDING AXIS PERPENDICULAR TO WEB

BARS $\bar{2}$ AND $\bar{4}$ $\quad I = \dfrac{a^2 b\, t\, G}{12\, E}\left(\dfrac{\theta_1 + \theta_2}{\theta_2}\right)$ BENDING AXIS PERPENDICULAR TO WEB

$E = E_{web}$ OTHER PROPERTIES = 0

$$\theta_2 = \tan^{-1}\left(\frac{b}{2}\right) \qquad \theta_1 = 90^\circ - \theta_2$$

I = MOMENT OF INERTIA

notation of a general bar element capable of carrying axial load, shear in two directions, bending in two directions, and torsion was shown in Figure 6.1-1.

Force-displacement relationships for the three unit displacements and three unit rotations possible at each end of the bar are shown in Figure 6.1-9. Forces and displacements in the local coordinate systems are related in matrix form by:

$$\{F\} = [K]\{\delta_L\} \tag{6-1}$$

In Equation (6-1), [K] is the matrix of stiffness coefficients; $\{F\}$ is a column matrix of applied forces at the joints, and $\{\delta_L\}$ is the column matrix of joint displacements. Application of Maxwell's Reciprocal Law allows formulation of a symmetric stiffness matrix when an orthogonal coordinate system is employed. The element stiffness matrix for a general bar is given in Figure 6.1-10. Terms in this matrix are the stiffness coefficients given in Figure 6.1-9.

If it is desired to include the effects of shearing strain on elemental beam deflection, the program utilizes the elemental stiffness matrix given in Figure 6.1-11. Input shear form factors K_N and K_T are determined by dividing the total cross sectional area of the bar by the effective shear web area. The shear web area used in determining K_N should be the web area effective in carrying shear in the local y_ℓ direction (bending about the z_ℓ axis), while K_T is determined based on effective web area for shear in the z_ℓ direction. An example calculation of shear form factors K_N and K_T is given in Figure 6.1-12.

Both ends of a member may be pinned (allowed to freely rotate) in a given direction by setting the appropriate moment of inertia equal to zero. If it

FORCE – DISPLACEMENT RELATIONS FOR GENERAL BAR

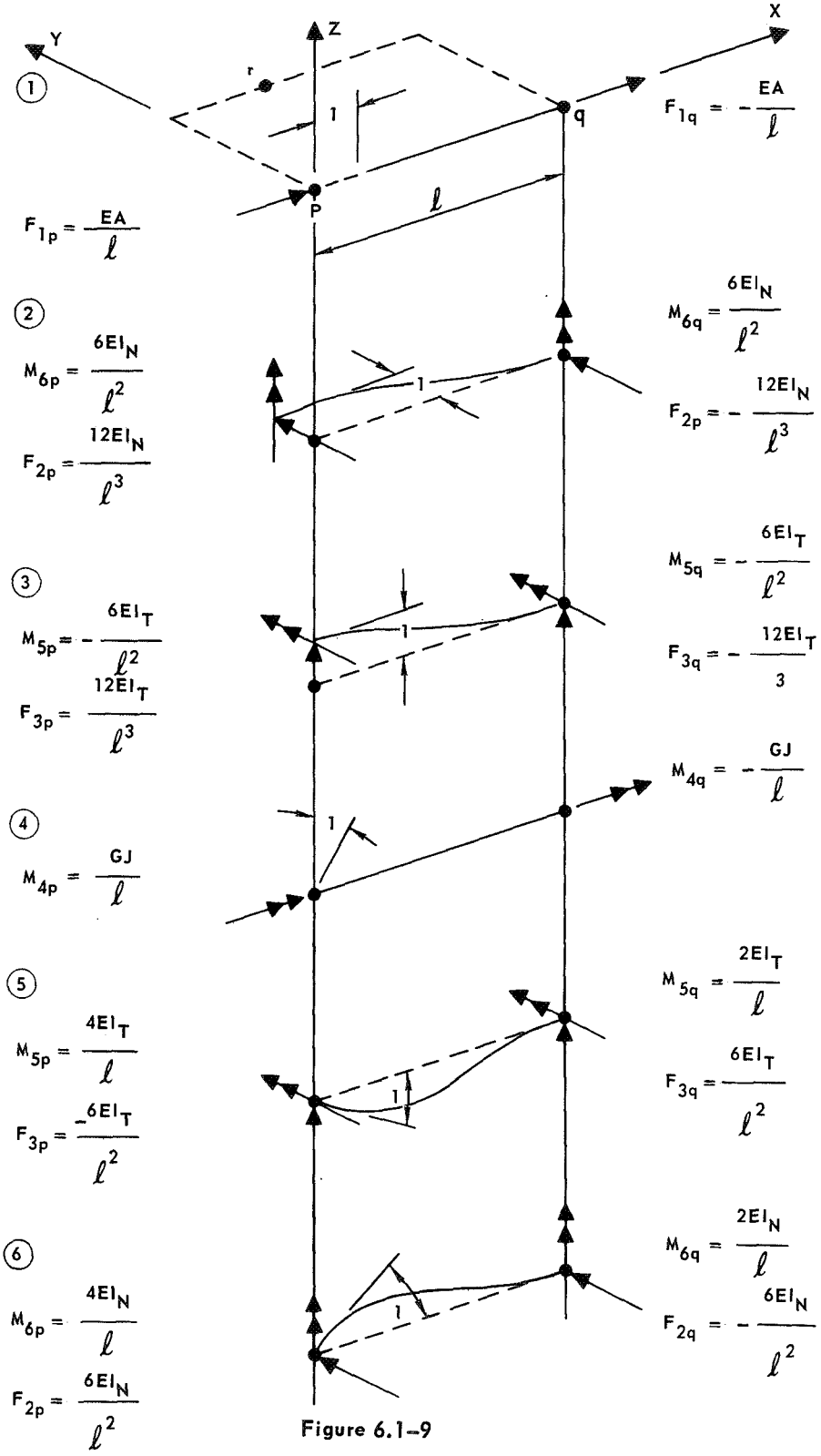

Figure 6.1–9

ELEMENT STIFFNESS MATRIX FOR GENERAL BAR

$$
K = \begin{array}{c}
 \\ F_{1p} \\ F_{2p} \\ F_{3p} \\ F_{1q} \\ F_{2q} \\ F_{3q} \\ M_{4p} \\ M_{5p} \\ M_{6p} \\ M_{4q} \\ M_{5q} \\ M_{6q}
\end{array}
\begin{array}{c}
\begin{array}{cccccccccccc}
u_{1p} & u_{2p} & u_{3p} & u_{1q} & u_{2q} & u_{3q} & u_{4p} & u_{5p} & u_{6p} & u_{4q} & u_{5q} & u_{6q}
\end{array} \\
\begin{bmatrix}
\frac{EA}{\ell} & & & -\frac{EA}{\ell} & & & & & & & & \\
 & \frac{12EI_N}{\ell^3} & & & -\frac{12EI_N}{\ell^3} & & & & \frac{6EI_N}{\ell^2} & & & \frac{6EI_N}{\ell^2} \\
 & & \frac{12EI_T}{\ell^3} & & & -\frac{12EI_T}{\ell^3} & & -\frac{6EI_T}{\ell^2} & & & -\frac{6EI_T}{\ell^2} & \\
-\frac{EA}{\ell} & & & \frac{EA}{\ell} & & & & & & & & \\
 & -\frac{12EI_N}{\ell^3} & & & \frac{12EI_N}{\ell^3} & & & & -\frac{6EI_N}{\ell^2} & & & -\frac{6EI_N}{\ell^2} \\
 & & -\frac{12EI_T}{\ell^3} & & & \frac{12EI_T}{\ell^3} & & \frac{6EI_T}{\ell^2} & & & \frac{6EI_T}{\ell^2} & \\
 & & & & & & \frac{GJ}{\ell} & & & -\frac{GJ}{\ell} & & \\
 & & -\frac{6EI_T}{\ell^2} & & & \frac{6EI_T}{\ell^2} & & \frac{4EI_T}{\ell} & & & \frac{2EI_T}{\ell} & \\
 & \frac{6EI_N}{\ell^2} & & & -\frac{6EI_N}{\ell^2} & & & & \frac{4EI_N}{\ell} & & & \frac{2EI_N}{\ell} \\
 & & & & & -\frac{GJ}{\ell} & & & & \frac{GJ}{\ell} & & \\
 & & -\frac{6EI_T}{\ell^2} & & & \frac{6EI_T}{\ell^2} & & \frac{2EI_T}{\ell} & & & \frac{4EI_T}{\ell} & \\
 & \frac{6EI_N}{\ell^2} & & & -\frac{6EI_N}{\ell^2} & & & & \frac{2EI_N}{\ell} & & & \frac{4EI_N}{\ell}
\end{bmatrix}
\end{array}
$$

Figure 6.1–10

STIFFNESS FACTORS APPLIED TO ORIGINAL MATRIX TO ACCOUNT FOR ELEMENTAL BAR SHEAR STRAIN

$$
K_S = \begin{array}{c}
 \\ F_{1q} \\ F_{2p} \\ F_{3p} \\ F_{1q} \\ F_{2q} \\ F_{3q} \\ M_{4p} \\ M_{5p} \\ M_{6p} \\ M_{4q} \\ M_{5q} \\ M_{6q}
\end{array}
\begin{array}{c}
\begin{array}{ccccccccccccc} u_{1p} & u_{2p} & u_{3p} & u_{1q} & u_{2q} & u_{3q} & u_{4p} & u_{5p} & u_{6F} & u_{4q} & u_{5q} & u_{6q} \end{array} \\
\begin{bmatrix}
1 & & & 1 & & & & & & & & \\
 & C_{1N} & & & C_{1N} & & & & C_{1N} & & & C_{1N} \\
 & & C_{1T} & & & C_{1T} & & C_{1T} & & & C_{1T} & \\
1 & & & 1 & & & & & & & & \\
 & C_{1N} & & & C_{1N} & & & & C_{1N} & & & C_{1N} \\
 & & C_{1T} & & & C_{1T} & & C_{1T} & & & C_{1T} & \\
 & & & & & & 1 & & & 1 & & \\
 & & C_{1T} & & & C_{1T} & & C_{2T} & & & C_{3T} & \\
 & C_{1N} & & & C_{1N} & & & & C_{2N} & & & C_{3N} \\
 & & & & & & 1 & & & 1 & & \\
 & & C_{1T} & & & C_{1T} & & C_{3T} & & & C_{2T} & \\
 & C_{1N} & & & C_{1N} & & & & C_{3N} & & & C_{2N}
\end{bmatrix}
\end{array}
$$

$$C_{1N} = \frac{1}{1 + \alpha_N} \qquad C_{1T} = \frac{1}{1 + \alpha_T}$$

$$C_{2N} = 1 - \frac{3}{4(1 + 1/\alpha_N)} \qquad C_{2T} = 1 - \frac{3}{4(1 + 1/\alpha_T)}$$

$$C_{3N} = 1 - \frac{3}{2\,(1 + 1/\alpha_N)} \qquad C_{3T} = 1 - \frac{3}{2(1 + 1/\alpha_T)}$$

$$\alpha_N = \frac{12EI_N/\ell^3}{GA/\ell} \cdot K_N \qquad \alpha_T = \frac{12EI_T/\ell^3}{GA/\ell} \cdot K_T$$

Figure 6.1–11

SHEAR FORM FACTOR EXAMPLE CALCULATION

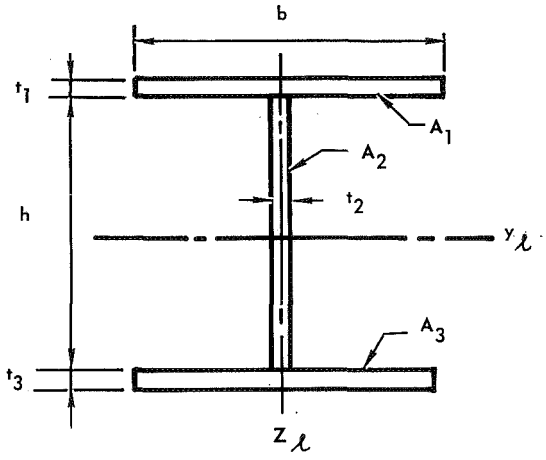

$A_1 = bt_1$

$A_2 = ht_2$

$A_3 = bt_3$

$A_{TOTAL} = A_1 + A_2 + A_3$

$$K_N = \frac{A_{TOTAL}}{A_1 + A_3}$$

$$K_T = \frac{A_{TOTAL}}{A_2}$$

Figure 6.1–12

is desired to pin one end of a member, while the other end remains fixed, the program utilizes the terms shown in Figures 6.1-13 through 6.1-16 in place of the corresponding terms in Figure 6.1-11. Figure used depends on the joint (p or q) pinned and the bending axis (y_ℓ or z_ℓ) about which the end is allowed to rotate. For example, if it is desired to pin the q end of a member with respect to bending about the y_ℓ axis, terms in Figure 6.1-16 would be used in place of the corresponding terms in Figure 6.1-11.

To determine the stiffness matrix for the completely assembled structure, a common (global) coordinate system for all structural elements must be established so that element forces and displacements may be related to a common frame of reference. Displacement notation of the bar element in global coordinate system is defined in Figure 6.1-2.

Transformation matrices are needed to change the frame of reference of each element from the local to the global coordinate system. This transformation is expressed by the linear matrix equation:

$$\{\delta_L\} = [\lambda]\{\delta_G\} \tag{6-2}$$

SUBSTITUTE FACTORS IN K_S MATRIX TO ALLOW ELIMINATION OF ROTATIONAL RESTRAINT IN Z DIRECTION AT POINT P

$$
K_{6p} = \begin{array}{c} \\ F_{1p} \\ F_{2p} \\ F_{3p} \\ F_{1q} \\ F_{2q} \\ F_{3q} \\ M_{4p} \\ M_{5p} \\ M_{6p} \\ M_{4q} \\ M_{5q} \\ M_{6q} \end{array}
\begin{array}{c}
\begin{array}{cccccccccccc} u_{1p} & u_{2p} & u_{3p} & u_{1q} & u_{2q} & u_{3q} & u_{4p} & u_{5p} & u_{6p} & u_{4q} & u_{5q} & u_{6q} \end{array} \\
\begin{bmatrix}
 & & & & & & & & & & & \\
 & C_{6p} & & & C_{6p} & & & & 0 & & & 2C_{6p} \\
 & & & & & & & & & & & \\
 & & & & & & & & & & & \\
 & C_{6p} & & & C_{6p} & & & & 0 & & & 2C_{6p} \\
 & & & & & & & & & & & \\
 & & & & & & & & & & & \\
 & & & & & & & & & & & \\
 & 0 & & & 0 & & & & 0 & & & 0 \\
 & & & & & & & & & & & \\
 & & & & & & & & & & & \\
 & 2C_{6p} & & & 2C_{6p} & & & & 0 & & & 3C_{6p}
\end{bmatrix}
\end{array}
$$

$$C_{6p} = \frac{1}{4 + \alpha_N}$$

$$\alpha_N = \frac{12\, E\, I_N / \ell^3}{GA/\ell} K_N$$

Figure 6.1–13

SUBSTITUTE FACTORS IN K_S MATRIX TO ALLOW ELIMINATION OF ROTATIONAL RESTRAINT IN Z DIRECTION AT POINT Q

$$
K_{6q} = \begin{array}{c} \\ F_{1p} \\ F_{2p} \\ F_{3p} \\ F_{1q} \\ F_{2q} \\ F_{3q} \\ M_{4p} \\ M_{5p} \\ M_{6p} \\ M_{4q} \\ M_{5q} \\ M_{6q} \end{array}
\begin{array}{c}
\begin{array}{ccccccccccc} u_{1p} & u_{2p} & u_{3p} & u_{1q} & u_{2q} & u_{3q} & u_{4p} & u_{5p} & u_{6p} & u_{4q} & u_{5q} & u_{6q} \end{array} \\
\begin{bmatrix}
 & & & & & & & & & & & \\
 & C_{6q} & & & C_{6q} & & & & 2C_{6q} & & & 0 \\
 & & & & & & & & & & & \\
 & & & & & & & & & & & \\
 & C_{6q} & & & C_{6q} & & & & 2C_{6q} & & & 0 \\
 & & & & & & & & & & & \\
 & & & & & & & & & & & \\
 & & & & & & & & & & & \\
 & 2C_{6q} & & & 2C_{6q} & & & & 3C_{6q} & & & 0 \\
 & & & & & & & & & & & \\
 & & & & & & & & & & & \\
 0 & & & 0 & & & & 0 & & & 0 &
\end{bmatrix}
\end{array}
$$

$$C_{6q} = \frac{1}{4 + a_N}$$

$$a_N = \frac{12\, E\, I_N / \ell^{\,3}}{GA/\ell}\, K_N$$

Figure 6.1–14

SUBSTITUTE FACTORS IN K_S MATRIX ALLOWING ELIMINATION OF ROTATIONAL RESTRAINT IN Y DIRECTION AT POINT P

$$K_{5_p} = \begin{array}{c} \\ F_{1p} \\ F_{2p} \\ F_{3p} \\ F_{1q} \\ F_{2q} \\ F_{3q} \\ M_{4p} \\ M_{5p} \\ M_{6p} \\ M_{4q} \\ M_{5q} \\ M_{6q} \end{array} \begin{array}{c} \begin{array}{ccccccccccc} u_{1p} & u_{2p} & u_{3p} & u_{1q} & u_{2q} & u_{3q} & u_{4p} & u_{5p} & u_{6p} & u_{4q} & u_{5q} & u_{6q} \end{array} \\ \begin{bmatrix} & & & & & & & & & & & \\ & & & & & & & & & & & \\ & & C_{5p} & & & C_{5p} & & 0 & & & 2C_{5p} & \\ & & & & & & & & & & & \\ & & & & & & & & & & & \\ & & C_{5p} & & & C_{5p} & & 0 & & & 2C_{5p} & \\ & & & & & & & & & & & \\ & & 0 & & & 0 & & 0 & & & 0 & \\ & & & & & & & & & & & \\ & & & & & & & & & & & \\ & & 2C_{5p} & & & 2C_{5p} & & 0 & & & 3C_{5p} & \\ & & & & & & & & & & & \end{bmatrix} \end{array}$$

$$C_{5p} = \frac{1}{4 + a_T}$$

$$a_T = \frac{12\, E\, I_T / \ell^3}{GA/\ell}\, K_T$$

Figure 6.1–15

SUBSTITUTE FACTORS IN K_S MATRIX ALLOWING ELIMINATION OF ROTATIONAL RESTRAINT IN Y DIRECTION AT POINT Q

$$
K_{5q} = \begin{array}{c} \\ F_{1p} \\ F_{2p} \\ F_{3p} \\ F_{1q} \\ F_{2q} \\ F_{3q} \\ M_{4p} \\ M_{5p} \\ M_{6p} \\ M_{4q} \\ M_{5q} \\ M_{6q} \end{array}
\begin{array}{c}
\begin{array}{cccccccccccc} u_{1p} & u_{2p} & u_{3p} & u_{1q} & u_{2q} & u_{3q} & u_{4p} & u_{5p} & u_{6p} & u_{4q} & u_{5q} & u_{6q} \end{array} \\
\begin{bmatrix}
 & & & & & & & & & & & \\
 & & & & & & & & & & & \\
 & & C_{5q} & & & C_{5q} & & 2C_{5q} & & & 0 & \\
 & & & & & & & & & & & \\
 & & & & & & & & & & & \\
 & & C_{5q} & & & C_{5q} & & 2C_{5q} & & & 0 & \\
 & & & & & & & & & & & \\
 & & 2C_{5q} & & & 2C_{5q} & & 3C_{5q} & & & 0 & \\
 & & & & & & & & & & & \\
 & & & & & & & & & & & \\
 & & 0 & & & 0 & & 0 & & & 0 & \\
 & & & & & & & & & & &
\end{bmatrix}
\end{array}
$$

$$C_{5q} = \frac{1}{4 + \alpha_T}$$

$$\alpha_T = \frac{12E\, I_T / \ell^3}{GA/\ell} K_T$$

Figure 6.1–16

Where [λ] is a matrix of direction cosines (cosines of angles between local and global coordinate systems) obtained by resolving global displacements in the direction of local coordinates. For the general bar [λ] is given in Equation (6-3).

$$\lambda = \begin{bmatrix} \bar{\lambda} & 0 & 0 & 0 \\ 0 & \bar{\lambda} & 0 & 0 \\ 0 & 0 & \bar{\lambda} & 0 \\ 0 & 0 & 0 & \bar{\lambda} \end{bmatrix} \qquad (6\text{-}3)$$

In Equation (6-3), $\bar{\lambda}$ is a 3 x 3 matrix of the direction cosines of the local coordinate axes relative to the global system, as shown in Equation (6-4).

$$\bar{\lambda} = \begin{bmatrix} \ell_1 & m_1 & n_1 \\ \ell_2 & m_2 & n_2 \\ \ell_3 & m_3 & n_3 \end{bmatrix} \qquad (6\text{-}4)$$

The row format of λ corresponds to the sequence of displacements in the local coordinate system specified for the stiffness matrix in Figure 6.1-10. The column format of λ corresponds to a similar sequence in the global coordinate system (i.e., $\bar{u}_{1_p}$, $\bar{u}_{2_p}$, ... $\bar{u}_{6_p}$). Values of the direction cosines relating the local coordinate system to the global coordinate system are determined as

indicated in Figure 6.1-17.

Each element stiffness matrix is transformed from the local to the global coordinate system by Equation (6-5)

$$[\bar{K}] = [\lambda]^T [K] [\lambda] \tag{6-5}$$

where $[\bar{K}]$ is the element stiffness matrix transformed to global coordinate system and $[\lambda]^T$ is the transpose of transformation matrix $[\lambda]$.

The total stiffness matrix (K_A) for the assembled structure (in the global coordinate system) as shown in Figure 6.1-18, is generated by systematically adding the transformed element stiffness matrices. Nodal points on the idealized structure are numbered consecutively from 1 to n_J. The stiffness matrix K_A is assembled with a row and column format corresponding to the three translational followed by the three rotational degrees of freedom in the global system at each node in sequence. In this general case the size of the stiffness matrix is $6n_J \times 6n_J$.

6.1.4 Elastic Analysis - The assembled stiffness matrix $[K_A]$ is related to the column matrices of global forces and displacements at each node by Equation (6-6) which represents a combination of Equation (6-1) through (6-5). The word "forces" in this discussion implies both forces and moments, and the word "displacements" implies both deflections and rotations.

$$\{F\} = [K_A] \{\delta_G\} \tag{6-6}$$

The stiffness matrix is singular - that is its determinant vanishes and

DIRECTION COSINES OF LOCAL COORDINATE SYSTEM RELATIVE TO GLOBAL COORDINATE SYSTEM

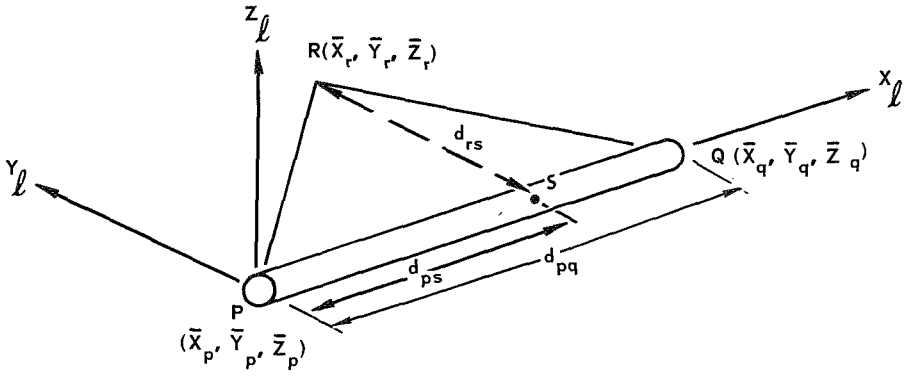

$$d_{pq} = \sqrt{(\bar{X}_q - \bar{X}_p)^2 + (\bar{Y}_q - \bar{Y}_p)^2 + (\bar{Z}_q - \bar{Z}_p)^2}$$

$$d_{rs} = \sqrt{(\bar{X}_r - \bar{X}_p)^2 + (\bar{Y}_r - \bar{Y}_p)^2 + \bar{Z}_r - \bar{Z}_p)^2 - d_{ps}^2}$$

$$d_{ps} = \ell_1 (\bar{X}_r - \bar{X}_p) + m_1 (\bar{Y}_r - \bar{Y}_p) + n_1 (\bar{Z}_r - \bar{Z}_p)$$

DIRECTION COSINE	COSINE OF ANGLE BETWEEN		EQUATION FOR DIRECTION COSINE
	LOCAL AXIS	GLOBAL AXIS	
ℓ_1	X_ℓ	$\bar{X}$	$(\bar{X}_q - \bar{X}_p)/d_{pq}$
m_1	X_ℓ	$\bar{Y}$	$(\bar{Y}_q - \bar{Y}_p)\, d_{pq}$
n_1	X_ℓ	$\bar{Z}$	$(\bar{Z}_q - \bar{Z}_p)\, d_{pq}$
ℓ_2	Y_ℓ	$\bar{X}$	$[(\bar{X}_r - \bar{X}_p) - \ell_1 d_{ps}]/d_{rs}$
m_2	Y_ℓ	$\bar{Y}$	$[(\bar{Y}_r - \bar{Y}_p) - m_1 d_{ps}]/d_{rs}$
n_2	Y_ℓ	$\bar{Z}$	$[(\bar{Z}_r - \bar{Z}_p) - n_1 d_{ps}]/d_{rs}$
ℓ_3	Z_ℓ	$\bar{X}$	$m_1 n_2 - m_2 n_1$
m_3	Z_ℓ	$\bar{Y}$	$-\ell_1 n_2 + \ell_2 n_1$
n_3	Z_ℓ	$\bar{Z}$	$\ell_1 m_2 - \ell_2 m_1$

NOTE: POINT r IS AN ARBITRARILY SELECTED POINT LYING IN THE $X_\ell - Y_\ell$ PLANE. IT IS USED TO IDENTIFY THE ORIENTATION OF MEMBER BENDING AXES Z_ℓ AND Y_ℓ RELATIVE TO THE GLOBAL COORDINATE SYSTEM. (I_N IS THE MOMENT OF INERTIA ABOUT THE Z_ℓ AXIS AND I_T IS THE MOMENT OF INERTIA ABOUT THE Y_ℓ AXIS.)

Figure 6.1–17

ASSEMBLED STIFFNESS MATRIX FORMAT

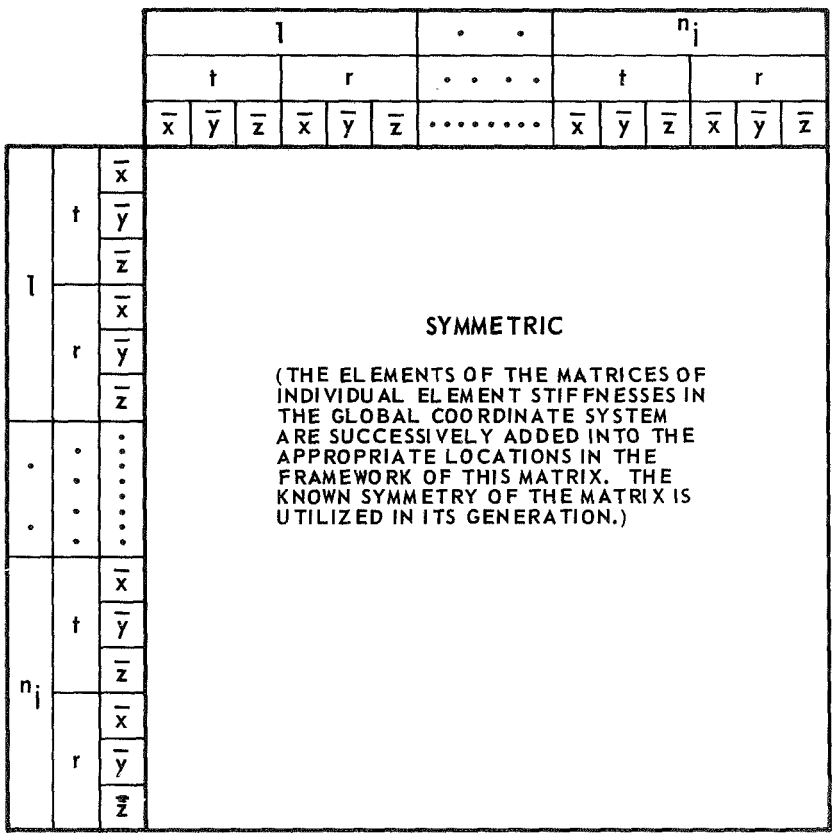

SYMBOLS t AND r INDICATE TRANSLATIONAL AND ROTATIONAL DISPLACEMENTS RESPECTIVELY.

Figure 6.1–18

its inverse does not exist. Boundary conditions (supports) must be defined to prevent rigid body motion. Once $[K_A]$ has been determined a solution can be obtained for any set of support conditions.

The unknown nodal displacements and support reactions are normally obtained by partitioning Equation (6-6) according to the location and orientation of supports as indicated in Equation (6-7). (Reference 1)

$$\begin{Bmatrix} F_{(m-n)} \\ \hdashline F_n \end{Bmatrix} = \left[\begin{array}{c:c} A_{(m-n)\,x\,(m-n)} & B_{(m-n)\ x\ n} \\ \hdashline B'_{n\ x\ (m-n)} & D_{n\ x\ n} \end{array}\right] \begin{Bmatrix} \delta_{(m-n)} \\ \hdashline \delta_n \end{Bmatrix} \tag{6-7}$$

Subscripts n and m are:

n = number of support boundary conditions (i.e. $\delta_n = 0$)

m = order of stiffness matrix

This partitioning results in two sets of equations: Equation (6-8) relates unknown nodal displacements to known applied forces, and Equation (6-9) relates unknown support reactions to unknown nodal displacements.

$$\left\{ F_{(m-n)} \right\} = \left[A \right] \left\{ \delta_{(m-n)} \right\} \tag{6-8}$$

$$\left\{ F_n \right\} = \left[B' \right] \left\{ \delta_{(m-n)} \right\} \tag{6-9}$$

The inverse of matrix [A] in Equation (6-8) is the flexibility matrix of the structure. Equation (6-8) may be rewritten to give unknown nodal displacements in terms of the flexibility matrix and known applied forces as shown in Equation (6-10).

$$\left\{ \delta_{(m-n)} \right\} = \left[A \right]^{-1} \left\{ F_{(m-n)} \right\} \tag{6-10}$$

The unknown reactions may be obtained by combining Equations (6-9) and (6-10) as shown in Equation (6-11).

$$\left\{ F_n \right\} = \left[B' \right] \left[A \right]^{-1} \left\{ F_{m-n} \right\} \tag{6-11}$$

The preceding discussion outlines the method normally used to obtain nodal displacements and reactions. Due to computer core limitations and the desire to minimize program running time, an iterative method of determining nodal deflections and reactions, once the stiffness matrix was established, was programmed. An iterative method eliminates the need for matrix inversion. Selection of this method was based on the need to include the effects of plastic attenuator deformation, as discussed in Section 6.1.5.

The requirement for plastic attenuator deformation calls for multiple solutions of sets of equations very nearly the same. These sets of simultaneous equations are represented by matrix Equation (6-8), relating unknown nodal deflections to known applied forces. This type of problem is best handled by an iterative solution, since the answers (nodal deflections) are approximately known after the initial elastic solution is determined, thus

minimizing computing time. Three iterative techniques were programmed; Gauss-Siedel, Gauss-Siedel with Aitkens Delta Squared improvements, and the Overrelaxation method. Reference 2 describes these methods.

6.1.5 Plastic Support - When analyzing a footpad-attenuator space frame an additional input will be the force causing plastic deformation of each attenuator post. Initial solution of the space frame redundancy assumes only elastic deformation, but the magnitude of the attenuator forces are compared with the input force cut-offs to ascertain if plastic deformation has occurred. Those attenuator posts for which the initial force (reaction) exceeds the cut-off are then allowed to crush and the forces at these posts are set equal to the input cut-off values. The new set of boundary conditions (new column matrix of deflections and forces) are then employed with the stiffness matrix to obtain a new solution. The attenuator forces at the remaining posts are again compared and if they exceed the limits, the process is repeated until equilibrium is achieved.

An upper (positive) and lower (negative) limit can be set on the magnitude of any force or moment. Cables can be idealized by making one of the limits zero, allowing the cable to carry only tension and no compression. Determination of the proper limit (positive or negative) to use on a particular force depends on whether the desired limit is in the positive or negative global coordinate direction. If a desired tension force in a cable results in a force in the positive global direction, the lower (negative) limit is set equal to zero. If the desired tension force is in the negative global direction, the upper (positive) limit is set equal to zero.

After the nodal displacements have been determined using the iteration

procedure, the unknown support reactions are obtained by substitution of these nodal displacements into matrix Equation (6-9). Forces on elements in the local coordinate system are found by transforming the nodal displacements into the local coordinate system using Equation (6-2) and applying the appropriate force-displacement relationships using Equation (6-1).

The program also has the capability of solving problems wherein the nodal displacements are known, such as in problems where some supports settle. Combinations of known applied forces and known nodal displacements may be input, and all forces and displacements will be determined. The boundary conditions imposed on the problem must be sufficient to prevent rigid body motion. Partitioning of Equation (6-7) for this case results in Equation (6-12) relating unknown nodal displacements to known applied forces and known nodal displacements; and in Equation (6-13) which relates unknown forces and reactions to the now known (determined in Equation (6-12)) nodal displacements. Subscript n for this case implies either zero or non-zero known boundary conditions.

$$\left\{ F_{(m-n)} \right\} = \left\lfloor A \right\rfloor \left\{ \delta_{(m-n)} \right\} + \left\lfloor B \right\rfloor \left\{ \delta_n \right\} \tag{6-12}$$

$$\left\{ F_n \right\} = \left\lfloor B' \right\rfloor \left\{ \delta_{(m-n)} \right\} + \left\lfloor D \right\rfloor \left\{ \delta_n \right\} \tag{6-13}$$

This solution is simply a more general case of the initial partitioning (Equation (6-8) and (6-9)), where the only known nodal displacements were zero and terms involving δ_n were therefore not included.

6.1.6 Modal Analysis - The frequencies and mode shapes for the free-free footpad structure are determined once the footpad's unrestrained stiffness matrix (Section 6.1-3) has been obtained. This modal analysis is performed in the optional Modal Analysis Routine of the Structural Analysis Program.

Free vibrations of the footpad structure are defined by Equation (6-14)

$$[M]\{\ddot{q}(s,t)\} + [K]\{q(s,t)\} = 0 \qquad (6\text{-}14)$$

where

$[M]$ = mass matrix of the footpad.

$[K]$ = stiffness matrix of the footpad.

$\{\ddot{q}\}, \{q\}$ = accelerations and displacements describing the motion of the control points throughout the footpad.

s = space coordinates in the footpad.

t = time

The above representation of the footpad's stiffness and inertia characteristics are input data for the Modal Analysis Routine portion of the Structural Analysis Program. This program applies an eigenvalue routine to the system and obtains the vibratory free-free mode shapes and corresponding frequencies.

The large order footpad stiffness matrix results in an eigenvalue problem which is too large to solve practically. The computer run time required to obtain the frequencies and mode shapes would be quite large. In addition,

the eigenvalue problem would be too large to handle within the allotted computer core storage requirements. For these reasons, the size of the footpad's structural stiffness matrix is reduced before solving the eigenvalue problem. This reduction technique is discussed in Reference (3).

In the reduction procedure, a number of degrees of freedom, corresponding to various displacements and rotations at the footpad joints, are removed. To remove these, it is assumed that the forces and moments associated with these degrees of freedom are zero. This results in the following:

$$\begin{Bmatrix} P \\ \cdots \\ O \end{Bmatrix} = \left[\begin{array}{c:c} K_{11} & K_{12} \\ \hdashline K_{21} & K_{22} \end{array}\right] \begin{Bmatrix} q_1 \\ \cdots \\ q_2 \end{Bmatrix} \tag{6-15}$$

where

$K_{11}, K_{12}, K_{21}, K_{22}$ = segments of total footpad stiffness matrix.

q_1 = degrees of freedom on which forces and moments (P's) exist.

q_2 = degrees of freedom on which no forces and moments exist.

In the above, the total stiffness matrix has been reordered such that the elements associated with the degrees of freedom to be retained appear first.

Equation (6-15) is equivalent to the two following expressions

$$\{P\} = [K_{11}]\{q_1\} + [K_{12}]\{q_2\} \tag{6-16}$$

$$\{O\} = [K_{21}]\{q_1\} + [K_{22}]\{q_2\} \tag{6-17}$$

Solving the second of these for $\{q_2\}$ gives

$$\{q_2\} = -[K_{22}]^{-1}[K_{21}]\{q_1\} \tag{6-18}$$

Substituting this into Equation (6-16) results in the reduced form

$$\{P\} = \left[[K_{11}] - [K_{12}][K_{22}]^{-1}[K_{21}] \right] \{q_1\} \tag{6-19}$$

from which the reduced stiffness matrix, [K*], is defined as

$$[K^*] = [K_{11}] - [K_{12}] [K_{22}]^{-1}[K_{21}] \tag{6-20}$$

The eigenvalue problem associated with the reduced system is

$$[M^*]\{\ddot{q}_1\} + [K^*]\{q_1\} = 0 \tag{6-21}$$

where [M*] is a diagonal mass matrix whose elements are associated with the footpad degrees of freedom that are retained. Frequencies and mode shapes of the total elastic footpad structure are obtained using Equations (6-18) and (6-21). Reference (4) summarizes the Householder-Ortega-Wilkinson Method used to determine mode shapes and natural frequencies. An example of the use of this routine is given in Section 6.3.3.

6.2 PROGRAM DESCRIPTION - Capabilities and organization of the Structural Analysis Program are described in this section.

6.2.1 Program Capabilities - The Structural Analysis Program is a general purpose computer program for solution of redundant structures based on the finite element stiffness method and utilizing iterative methods of solution. The program can determine internal and external load distributions and deflection patterns for any system of forces or deflections impressed on an elastic network of structural bar members. Plastic behavior of support structure can be simulated with the program, allowing analysis of the platform lander crushable attenuation system. The program also allows simulation

of cables, or any structural member with restricted load carrying capability in certain directions. Mode shapes and natural frequencies may be obtained using this program. Footpad mode shapes and natural frequencies are needed in the Landing Loads and Motions Program to permit simulation of the effects of a flexible footpad in that program. A routine is incorporated in the Structural Analysis Program, allowing reduction in the size of the stiffness matrix for large structures, and thus permitting a reduction in the required computer time.

The iterative method programmed for solution of nodal deflections was selected to minimize computer time when utilizing the plastic support option of the program. It also permits minimization of computer time for a preliminary design problem, since accuracy requirements can be specified.

The structure is idealized as a network of straight bar members, each of which is capable of carrying axial load, shear in two directions, bending in two directions, and torsion. Bar properties are assumed to be constant between nodes (symmetry about one of the principal axes is assumed). The bar x_ℓ axis is assumed to pass through the centroidal axis and the bending neutral axes are assumed to align with centroidal axes. Torsional shear center of the bar is assumed to be on the bar x_ℓ axis.

Structural idealization of shear webs are accomplished using either two diagonal bars capable of carrying only axial load or four bars capable of transmitting only shear to the adjoining caps. (Figures 6.1-7 and 6.1-8).

Cables may be idealized by placing a lower restraint of zero on the axial load carrying capability, thus exercising the plastic analysis program logic to prevent the cable from carrying compression loads.

Plastic behavior of support structure, such as crushable attenuators, may be simulated by inputting the force causing plastic deformation of each support member. An upper and lower limit must be input on the particular force or moment being constrained. These idealizations are discussed in Section 6.1.2 also.

The program is based on small deflection theory with Hooke's Law applying, except with regard to the plastic support option of the program. Buckling of members is not considered, and coupling effects, such as occur with beam columns, are neglected. Bars are assumed to be rigidly connected to each other, unless otherwise specified. Bars pinned at both ends may be simulated by setting the appropriate moment of inertia equal to zero. Bars pinned at one end and fixed at the other require use of special indicators discussed in Section 6.3.1. Loads are applied to the joints as concentrated forces in global coordinates.

Computer core limitations necessitated the following program restrictions: 74 joints maximum with six degrees of freedom at each joint, or a maximum assembled stiffness matrix 444 by 444; 74 bars maximum; 26 reference points maximum; 300 maximum support contraints; 88 maximum plastic force constraints (88 upper and 88 lower limits); and 88 maximum nonzero input deflections. Mode shapes and natural frequencies can be determined for a maximum assembled stiffness matrix size of 102 by 102 (17 joints with 6 degrees of freedom or a greater number of joints with fewer degrees of freedom). A reduction routine allows consideration of the effects of a larger, more complex structure, since this large stiffness matrix (444 x 444 maximum) may be reduced to the allowable size (102 by 102) by selectively eliminating degrees of freedom. The

program utilizes the mode shapes of the reduced system to generate mode shapes for all degrees of freedom of the original large stiffness matrix. The five lowest natural frequencies and associated mode shapes can be obtained for any structure with free-free support.

6.2.2 Subroutines - The Structural Analysis Program is divided into five OVERLAY segments. Each segment consists of an executive routine which calls a number of subroutines. OVERLAY organization and description of the function of each subroutine are shown in Figure 6.2-1. This organization is required to stay within the allotted core storage requirements.

6.2.3 Flow Diagram - The Structural Analysis Program is shown schematically in Figure 6.2-2. While detail steps, such as those required in the iteration loop, are not presented, the basic sequence of events is shown for elastic, plastic, and modal analyses. A listing of the program is given in Appendix F.

6.3 PROGRAM OPERATION - Information necessary to operate the Structural Analysis Program is contained in this section. This includes definition of input requirements and format, and output interpretation. Examples of input and output data for a typical problem are contained in Appendix A and B.

6.3.1 Input Data - Input data format utilizes a code system, located in column 1 on the data cards, to identify the type of data being read. The eight code numbers and corresponding type of information being input are:

(1) Joint information cards
(2) Reference point information cards
(3) Force and moment limits or specified displacement and rotation cards
(4) Specified force vector cards
(5) Specified moment vector cards
(6) Bar information cards
(7) Data terminator card
(0) Comment cards

STRUCTURAL ANALYSIS PROGRAM SUBROUTINES

OVERLAY	SUBROUTINE	FUNCTION
0 (MAIN)	MAIN	PROGRAM EXECUTIVE ROUTINE
	ERPNT1	ERROR PROCESSING ROUTINE FOR ALL OVERLAYS
	ERPNT2	SECOND ENTRY POINT TO ERPNT1
	WRSTRK	SPARSE MATRIX PRINT ROUTINE
1	INITIAL	OVERLAY 1 EXECUTIVE ROUTINE
	DATSET	INITIAL DATA READ, SORT, AND TEST
	RDDATA	READ DATA FROM INPUT FILES TO CENTRAL STORAGE
2	STIFF	OVERLAY 2 EXECUTIVE ROUTINE
	SETSTF	INITIALIZE STRUCTURAL STIFFNESS MATRIX STORAGE ARRAY IN A SPARSE BLOCKED FORMAT.
	STFTRN	CALCULATE ELEMENT STIFFNESS AND TRANSFORMATION MATRICES
	TRASMK	TRANSFORM ELEMENT STIFFNESS MATRICES FROM LOCAL TO GLOBAL COORDINATE SYSTEM
	STORSM	CONSTRUCT ASSEMBLED STIFFNESS MATRIX
	WRBDAT	PRINT ELEMENT STIFFNESS AND TRANSFORMATION MATRICES.
	BRSTRA	SECOND ENTRY POINT TO WRBDAT, PRINTS TRANSFORMED ELEMENT STIFFNESS MATRICES
	WRSTDK	WRITE ELEMENT STIFFNESS AND TRANSFORMATION MATRICES ON FILE 9
3	FINIAL	OVERLAY 3 EXECUTIVE ROUTINE
	PANDTK	PRINT AND STORE ON FILE 9 THE ASSEMBLED STIFFNESS MATRIX. SET-UP FOR SOLUTION.
	SOLVE	DISPLACEMENTS AND ROTATIONS DETERMINED USING ITERATIVE METHOD. GLOBAL FORCES' MOMENTS ON JOINTS CALCULATED
	PNTFMV	PRINT DISPLACEMENTS, ROTATIONS, AND GLOBAL FORCES AND MOMENTS.
	FMBARS	ELEMENT BAR FORCES AND MOMENTS CALCULATED USING RESULTS OF SOLVE
4	NLMDAL	OVERLAY 4 EXECUTIVE ROUTINE.
	REDUCE	PRINT ASSEMBLED STIFFNESS MATRIX AND REDUCE TO DESIRED SIZE (REDUCED MATRIX 102 X 102 OR LESS)
	STFMAS	CREATES MATRIX SYSTEM, USING INPUT DIAGONAL MASS MATRIX AND REDUCED STIFFNESS MATRIX, FOR WHICH EIGENVALUES CAN BE FOUND
	TRIDIA	MATRIX SYSTEM IS TRI-DIAGONALIZED USING HOUSEHOLDER'S METHOD.
	EIGVAL	FIVE SMALLEST EIGENVALUES OF MATRIX SYSTEM ARE CALCULATED USING ORETEGA'S METHOD. (PLUS SIX RIGID BODY NATURAL FREQUENCIES OF ZERO)
	EIGVEC	CALCULATES EIGENVECTORS ASSOCIATED WITH FIVE LOWEST EIGENVALUES USING WILKINSON'S METHOD
	FNALEV	EIGENVECTORS OF REDUCED SYSTEM TRANSFORMED INTO EIGENVECTORS OF FULL SYSTEM.
	PRNT1	MODAL DATA OUTPUT ROUTINE FOR REDUCED SYSTEM
	PRNT2	SECOND ENTRY POINT OF PRNT1 TO OUTPUT MODAL DATA OF FULL SYSTEM
	P1A721	PRINT SUPPORT ROUTINE FOR PRNT1 AND PRNT2

Figure 6.2–1

STRUCTURAL ANALYSIS PROGRAM

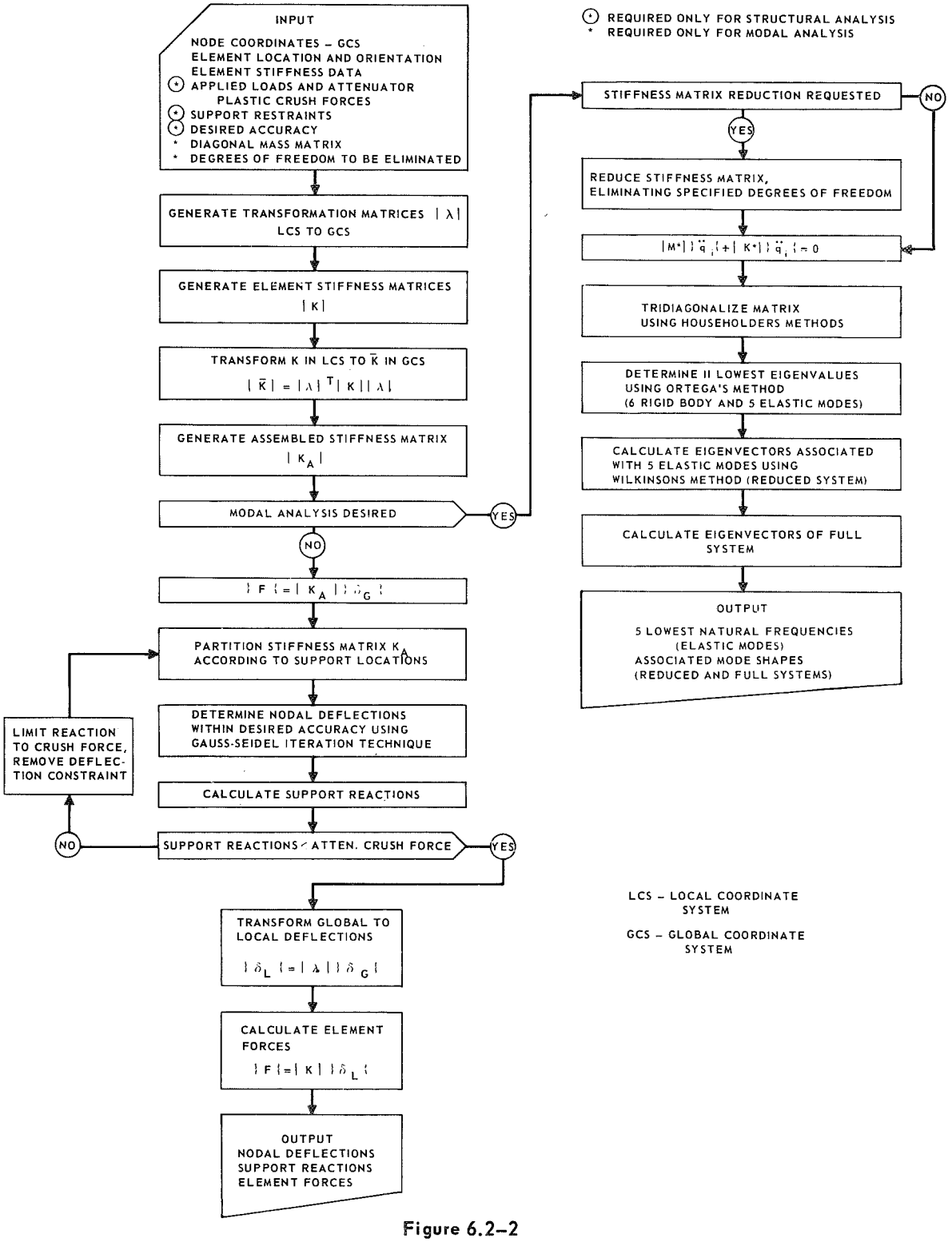

Figure 6.2–2

A NAMELIST system of input is used to control output options, iteration method used, modal analysis, program termination, and tape options.

6.3.1.1 Joint Information Cards - Joint information is input on data cards in which a 1 is placed in column 1. Location of joint data in the fields of the card is indicated in Figure 6.3-1. Joints must be numbered sequentially (right justified in columns 2 through 5) from 1 through the total number of joints (maximum of 74). The global coordinates, $\bar{X}$, $\bar{Y}$, and $\bar{Z}$, may be any right hand orthogonal coordinate system (See Figure 6.1-2). If the structure is planar, it will be simpler to choose a global coordinate system such that two of the axes lie in the plane of the structure. Advantage should be taken of any structural symmetry which may exist in selecting global axes.

Six data fields located between columns 36 and 53 are used to indicate various constraints at a particular joint. These constraints may be combinations of specified displacements (global deflections and/or rotations) and plastic loads (global forces and/or moments) at a joint. Leaving these columns blank causes the program to assume that there are no displacement constraints at a joint; however, there are applied loads at the joint. These applied loads are discussed in the next paragraph. Constraints are defined by inserting nonzero integer identifying indicators (right justified) in the fields of this region. The absolute value of these identifying indicators corresponds to the limit number on the code 3 data card (columns 2 through 5) defining the magnitudes of the particular constraint. When positive identifying indicators are used, the program assumes upper and lower limits on the appropriate plastic loads and displacements as defined on the related code 3 data card. For negative identifying indicators, the program

INPUT DATA FORMAT
(CARD CODES 1 THRU 5)

(1) JOINT INFORMATION CARDS

1	JOINT NO.	$\bar{X}$	$\bar{Y}$	$\bar{Z}$	$\bar{X}$	$\bar{Y}$	$\bar{Z}$	$\bar{X}$	$\bar{Y}$	$\bar{Z}$	FORCE NO.	MOMENT NO.
		JOINT COORDINATES			DISP./FORCE CONSTRAINTS			ROT./MOMENT CONSTRAINTS			SPECIFIED LOAD VECTORS	
					SUPPORT CONSTRAINTS							

(2) REFERENCE POINT INFORMATION CARDS

2	REF. POINT NO.	$\bar{X}$	$\bar{Y}$	$\bar{Z}$
		REFERENCE POINT COORDINATES		

(3) FORCE/MOMENT LIMITS AND SPECIFIED DISPLACEMENT/ROTATION CARDS

3	LIMIT NO.	UPPER LIMIT	LOWER LIMIT	SPECIFIED DISP./ROT. VALUE
		LIMITS ON FORCE/MOMENT		

(4) SPECIFIED FORCE VECTOR CARDS

4	FORCE NO.	$F_{\bar{X}}$	$F_{\bar{Y}}$	$F_{\bar{Z}}$
		SPECIFIED FORCE COMPONENTS		

(5) SPECIFIED MOMENT VECTOR CARDS

5	MOMENT NO.	$M_{\bar{X}}$	$M_{\bar{Y}}$	$M_{\bar{Z}}$
		SPECIFIED MOMENT COMPONENTS		

Figure 6.3-1

assumes that no restraints are placed on the loads, but the displacements are specified on the related code 3 data card. The same code 3 data card may be used to define identical constraints at a number of joints. The maximum number of plastic loads and displacements is 88.

Applied forces are indicated by placing a separate set of integer identifying indicators in columns 54 through 57 (right justified). The program looks for the three global components of force on cards with code number 4 in column 1, and the corresponding identifying indicator in columns 2 through 5. Identifying indicators must be sequential with a maximum of 74. Applied moments are numbered separately, with this set of identifying indicators being placed in columns 58 through 61, and the corresponding moment magnitude (three global components) being located on cards with a 5 in column 1. A total of 74 identifying indicators may be used. If either of these identifying indicators is zero (or blank), the appropriate applied load is zero and no corresponding code 4 or 5 data card is required. If displacements and/or rotations have already been restrained in specific directions, forces and/or moments may not be applied in these same directions.

6.3.1.2 Reference Point Information Cards - A code number 2 in column 1 indicates the data represents global coordinates and identifying joint number of a reference point. Reference points are provided to permit orientation of bar local coordinate (bending) axes, where structural joints will not suffice. Numbering of these reference points begins with one greater than the number of joints and is sequential through the total number of reference points. For example if there are 36 structural joints, the first reference point must be number 37.

6.3.1.3 Force and Moment Limit Cards - A 3 in column 1 indicates data on the card is either a known displacement or rotation (columns 26 through 35), or upper and lower plastic force or moment constraints (columns 6 through 15 for an upper bound and 16 through 25 for a lower bound). The integer identifying number (limit number) in columns 2 through 5 corresponds to an identifying indicator or indicators on code 1 data cards, previously discussed. These limit numbers must be sequential in order. The sign of the identifying indicator on the code 1 data card determines what data are being read: a plastic force constraint and known displacement (positive sign) or known displacement (negative sign). The known displacement may be nonzero or zero, simulating a conventional support. If the force is to be limited in the positive global direction, use the upper limit. A lower limit indicates a constraint on the force in the negative global direction.

6.3.1.4 Specified Force Vector Cards - Applied forces at a joint are input as three or less global force components on cards with a 4 in column 1. The identifying number (force number), right justified in columns 2 through 5, corresponds to an identifying indicator on code 1 data cards thereby defining the joint or joints where forces will be applied.

6.3.1.5 Specified Moment Vector Cards - Applied moments at a joint are input as three or less global moment components on cards with a 5 in column 1. The identifying number (moment number), right justified in columns 2 through 5, corresponds to an identifying indicator on code 1 data cards to define the joint or joints where the moments will be applied.

6.3.1.6 Bar Information Cards - A card with a 6 in column 1 indicates bar data are being input. Bar number is entered in columns 2 through 5,

right justified, with numbering being sequential from one through the total number of bars (74 maximum). Bar origin (point "P"), end (point "Q"), and direction of the y bending axis (point "R"), locating the bar local coordinate system (Figure 6.1-1), are determined by specifying joint numbers in the appropriate locations in columns 6 through 14 (all right justified). A reference point may be used for point "R", but points "P" and "Q" must be nodes (joints) on the structure. Point "R" must not be on the line "PQ" or its extension.

Bar cross sectional area perpendicular to the "PQ" (x_ℓ) axis, A; moment of inertia about the z_ℓ axis, I_N; moment of inertia about the y_ℓ axis, I_T; and torsional constant, J, are entered in the appropriate columns as indicated in Figure 6.3-2. Members pinned at both ends for bending about the z_ℓ axis can be simulated by making the moment of inertia I_N equal to zero. Similarly making I_T equal to zero simulates a member pinned at both ends for bending about the y_ℓ axis. If A is set equal to zero, no axial load will be carried by the member, and setting J = 0 prevents the member from carrying torsion. Any combination of these may be utilized. Modulus of elasticity, E, and shear modulus, G, for the bar material are entered in columns 53 through 61 and 62 through 70 respectively. If E-format is used it must be right justified.

Caution must be exercised when using pinned members or members with A, I_T, I_N, or J equal to zero, because a joint may be left with no load carrying capability in one of the three global directions or with no rotational restraint about one of the three global axes. An example of this would be two

INPUT DATA FORMAT

CARD CODES 6, 0, 7, AND DATA OPTION CARDS ($ INDATA)

(6) BAR INFORMATION CARDS

1–5	6–14	15–17	18–25	26–34	35–43	44–52	53–61	62–70	71–75	76–80
6 BAR NO.	P Q R	K I_T I_N	AREA	I_N	I_T	J	E	G	K_N	K_T
	BAR LOCAL AXES LOCATORS	OPTION INDICIES	BAR CROSS-SECTIONAL AREA	BAR MOMENTS OF INERTIA			BAR MATERIAL MODULI		SHEAR FORM FACTORS	

(0) COMMENT CARDS

1–80
BLANK COMMENTS

(7) DATA TERMINATOR CARD

1–80
7 COMMENTS

($ INDATA) DATA OPTION INDICATOR CARDS

1–8	9–68	69–72
BLANK $INDATA	BLANK NAME 1 = XX, NAME 2 = yy, . . .	$END
	DATA OPTION. INDICATORS (SEE FIGURE 6.3–3)	

Figure 6.3–2

bars in the same plane pinned together. An artificial restraint (support) must be placed on the joint in the global direction in which there is no load carrying capability, even though there will be no force induced in this support direction. This instruction is input on code 1 data cards. The program will automatically reject any problem in which load carrying capability (translational or rotational) does not exist at any joint.

The program has the ability to account for the effect of bar shear strain on bending deflections. If a zero (blank) is placed in column 15, shear strain is not accounted for. A 1 in column 15 causes the program to read the values of shear web area factors, K_N and K_T, and account for the effect of shear strain. The factor K_N is the total cross sectional area divided by the shear web area effective in carrying shear in the y_ℓ direction, while K_T is the total area divided by the shear web area effective in carrying shear in the z_ℓ direction (see Figure 6.1-12).

The program can also model a bar pinned at one end and rigidly attached at the other. To exercise this option a zero must be placed in column 15. If the rotational release is to be for bending about the y_ℓ axis (I_T), a 1 or 2 is placed in column 16. A 1 indicates the "P" end is pinned while a 2 indicates the "Q" end is pinned. The same number code (1 - "P" end pinned, 2 - "Q" end pinned) is used in column 17 if the rotational release is for bending about the z_ℓ axis (I_N). Values inserted for K_N and K_T for these cases will be automatically utilized.

6.3.1.7 Comment and Data Terminator Cards - After all data needed on code 1 through 6 data cards are complete, comment cards may be added.

Comment cards may be used to specify information such as case number, problem name, etc. for ease in identifying the computer run. A zero in column 1 indicates the card is a comment card. A data terminator card, identified by a number 7 in column 1, must be added following the comment cards. The data terminator card may also carry any desired comments.

Following the previously described input data, a NAMELIST system of input indicated by $INDATA is used to define option indicator cards for selection of output options, iteration method, modal analysis routine, program termination, and tape options. Figure 6.3-2 presents the card format to be used. Data option indicators and their nominal and optional values are defined in Figure 6.3-3. If nominal values are acceptable for all NAMELIST items, $INDATA is entered in columns 2 through 8, and the rest of the card left blank. By listing one of the option data indicators, such as INDRLX = 1, the nominal control is overridden, as in this case where the Overrelaxation Method would be utilized.

The ERRTOL control is important, since it affects computer time. The value specified, multiplied by 100, is the maximum acceptable error for any of the deflections. The program will run until it achieves this accuracy or exceeds the maximum number of iterations (INDITR). An accuracy of 0.1 percent (ERRTOL = .001) should be acceptable for many problems, with as much as 5 percent (ERRTOL = .05) acceptable for preliminary design. Error for nodal deflection and rotation solutions is determined by taking the difference in given solution values for two successive iterations and dividing by the last value of the solution. This process is continuous for all deflection

NAME LIST ($INDATA)
DATA OPTION INDICATORS

INDICATOR	NOMINAL VALUE	OPTIONAL VALUE	CONTROL FUNCTION
INDSFL	1		DO NOT — WRITE BAR LOCAL STIFFNESS AND TRANSFORMATION MATRICES.
		0	DO — WRITE BAR LOCAL STIFFNESS AND TRANSFORMATION MATRICES.
INDSFG	1		DO NOT — WRITE BAR TRANSFORMED STIFFNESS MATRICES
		0	DO — WRITE BAR TRANSFORMED STIFFNESS MATRICES
IND1SL	0		WILL NOT — INPUT AN INITIAL SOLUTION OF DISPLACEMENTS AND ROTATIONS IN "SOLVEC",
		1	WILL — INPUT AN INITIAL SOLUTION OF DISPLACEMENTS AND ROTATIONS IN "SOLVEC",
INDITR	3X(NO. OF ROWS IN STRUCTURAL STIFFNESS MATRIX)	K (ANY INTEGER)	THE ITERATIVE SOLUTION OF THE SIMULTANEOUS EQUATIONS WILL BE STOPPED AFTER ("INDITR" + 1) ITERATIONS
ERRTOL	.0001	A (ANY REAL NUMBER)	THE ITERATIVE SOLUTION IS STOPPED WHEN THE LARGEST RELATIVE DIFFERENCE BETWEEN CONSECUTIVE DISPLACEMENT/ROTATION SOLUTIONS IS LESS THAN "ERRTOL".
SOLVEC	$0_{(i)}$		THE INITIAL SOLUTION OF DISPLACEMENTS AND ROTATIONS IS ZERO.
		$A_{(i)}$	THE A i's (i = 1, 6X(NO. JOINTS)) ARE INPUT VALUES (SEPARATED BY COMMAS) DEFINING AN INITIAL SOLUTION OF DISPLACEMENTS AND ROTATIONS. ie. $A_{(1)} = \bar{X}$ DISPLACEMENT OF JOINT 1 . . $A_{(4)} = \bar{X}$ ROTATION OF JOINT 1 . . $A((j-1)X6+1) = \bar{X}$ DISPLACEMENT OF JOINT j . . $A(Kj-1)X6+4) = \bar{X}$ ROTATION OF JOINT j.

Figure 6.3-3

NAME LIST ($INDATA)
DATA OPTION INDICATORS

INDICATOR	NOMINAL VALUE	OPTIONAL VALUE	CONTROL FUNCTION
RELAXF	1	A ($1.0 \leq A \leq 2.0$)	THE RELAXATION FACTOR USED IF THE OVERRELAXATION METHOD OF SOLUTION IS EMPLOYED; RECOMMENDED OPTIONAL VALUE = 1.2.
INDRLX	0		EMPLOY GAUSS – SIEDEL SOLUTION METHOD WITH AITKEN'S Δ^2 IMPROVEMENTS.
		1	EMPLOY OVERRELAXATION SOLUTION METHOD WITH OVERRELAXATION FACTOR DEFINED IN "RELAXF."
INDRKT	0		DO NOT — READ STRUCTURAL STIFFNESS MATRIX, AND BAR LOCAL STIFFNESS AND TRANSFORMATION MATRICES FROM PHYSICAL TAPE 9.
		1	DO — READ STRUCTURAL STIFFNESS MATRIX, AND BAR LOCAL STIFFNESS AND TRANSFORMATION MATRICES FROM PHYSICAL TAPE 9.
INDWKT	0		DO NOT — WRITE STRUCTURAL STIFFNESS MATRIX AND BAR LOCAL STIFFNESS AND TRANSFORMATION MATRICES ON PHYSICAL TAPE 9.
		1	DO — WRITE STRUCTURAL STIFFNESS MATRIX AND BAR LOCAL STIFFNESS AND TRANSFORMATION MATRICES ON PHYSICAL TAPE 9.
INDPLS	0		DO NOT — CONSIDER PLASTICITY THROUGH USE OF LIMITS ON FORCES/MOMENTS.
		1	DO — CONSIDER PLASTICITY THROUGH USE OF LIMITS ON FORCES/MOMENTS.
MINRST	6	K (ANY INTEGER)	LESS THAN "MINRST" RESTRAINTS WILL CAUSE PROGRAM TERMINATION DURING SOLUTION OF SIMULTANEOUS EQUATIONS.
INDNMA	0		DO NOT — RUN NORMAL MODE ANALYSIS.
		1	DO — RUN NORMAL MODE ANALYSIS.

Figure 6.3–3 (Cont'd)

NAME LIST ($INDATA)
DATA OPTION INDICATORS

INDICATOR	NOMINAL VALUE	OPTIONAL VALUE	CONTROL FUNCTION
IRWKP	$0_{(i)}$	K(i) (INTEGERS)	ROW NUMBERS IN ASCENDING ORDER (SEPARATED BY COMMA'S) TO BE KEPT IN REDUCED MASS MATRIX WHEN RUNNING NORMAL MODE ANALYSIS. ($i = 1, 2 \ldots, n$ WHERE $n \leq 102$).
AMASS	0(i)	A_i	DIAGONAL MASS MATRIX ELEMENTS (SEPARATED BY COMMAS) IN ASCENDING ORDER, INPUT WHEN RUNNING NORMAL MODE ANALYSIS ($i = 1, 2, \ldots, n$ WHERE $n \leq 102$).
IREDTO	102	K ($K \leq 102$)	THE REQUIRED ORDER OF REDUCED STIFFNESS MATRIX WHEN RUNNING NORMAL MODE ANALYSIS.
INDWNM	0		DO — WRITE NORMAL MODE DATA ON TAPE FOR USE IN LANDING LOADS AND MOTIONS PROGRAM
		1	DO NOT — WRITE NORMAL MODE DATA ON TAPE FOR USE IN LANDING LOADS AND MOTIONS PROGRAM
TMAX	9999.	A (ANY REAL NUMBER	NUMBER OF SECONDS AFTER WHICH MACHINE WILL PRINT PRESENT SOLUTION AND STOP, IF CONVERGENCE TO PRESCRIBED TOLERANCE HAS NOT BEEN REACHED (RECOMMENDED OPTIONAL VALUE = .9X(CP TIME)).

Figure 6.3-3 (Cont'd)

and rotation solutions, with program termination occuring when desired accuracy is reached or when the specified maximum number of iterations is exceeded. It should be noted that the maximum error may occur at different points (deflections) on succeeding iterations. Also the program conservatively uses maximum rather than average error. It has been found that small oscillations about zero values often gives the indication of a large error, while in actuality the solutions are acceptable even at this point. However, program iteration will continue until the acceptable error is achieved.

An initial set of nodal deflections may be input using the indicator SOLVEC. This option allows the program to start with these values for deflections and achieve convergence more rapidly. This option is also useful if minor changes are made in a structure after an initial solution has been obtained.

The maximum number of iterations allowed, nominally three times the number of rows in the stiffness matrix, should be selected based on the size and sparsity of the stiffness matrix and desired length of computer run time. The nominal iteration method used is the Gauss-Siedel with Aitkens Delta Squared Improvements. If INDRLX is set equal to 1, the Overrelaxation Method is employed and a value of RELAXF (the relaxation factor) between 1 and 2 should then be input. A nominal value of 1.0 is set in the program, which is equivalent to a standard Gauss-Siedel solution (without Aitkens Delta Squared Improvements). A RELAXF equal to 1.25 has been found to result in minimum machine time and rapid convergence for some problems.

The MINRST option is selected based on the minimum number of restraints

(supports) which must exist for stability (nominally six). If at any time less than this number of supports exist, the program will automatically terminate with an error message.

If it is desired to perform a normal mode analysis, INDNMA is set equal to 1. The row numbers to be retained in the reduced stiffness matrix are listed in ascending order in IRWKP. Values for the diagonal mass matrix terms associated with the degrees of freedom retained in the reduced stiffness matrix, are input in AMASS. If all six degrees of freedom at a particular joint are retained, the first three numbers in AMASS would represent the mass associated with this joint. The next three numbers would represent the mass moment of inertia about the global $\bar{X}$, $\bar{Y}$, and $\bar{Z}$ axes associated with this joint. If degrees of freedom at a joint are removed in the reduced stiffness matrix, the corresponding mass or inertia items should not be input in AMASS.

6.3.2 Output Data - Structural analysis output includes all input data, NAMELIST indicator values used, assembled stiffness matrix, nodal deflections and rotations, maximum error, nodal forces and moments, and member forces and moments. Modal analysis output includes all input data, NAMELIST indicator values used, assembled stiffness matrix, natural frequencies, mode shapes, and generalized inertia properties.

All input data is printed out in a block format. Classification of input data is by code number in column 1, as described in Section 6.3.1. Nonzero terms in the assembled stiffness matrix are output, with row and column number identification for each term.

Nodal deflections and rotations are printed out for the last two iteration steps to permit determination of where maximum error is occuring (usually in terms approaching zero). Global forces and moments acting on the joints are then printed out. When plastic force constraints are violated, the program prints out the elastic solution, which constraints were violated, and the plastic solution (nodal deflections and rotations, and nodal forces and moments). Forces and moments acting on both ends of all bars are printed out for the final solution. The P, Q, and R joint numbers used for each bar are also listed to aid in interpretation of the direction of these forces and moments (positive local sign convention is indicated in Figure 6.1-1).

When employing the modal analysis option, output data include: input data, stiffness matrix, the five lowest natural frequencies (excluding rigid body modes), corresponding mode shapes (normalized) for both the reduced and complete systems, and generalized inertia properties (See Section 7.1.2.2).

6.3.3 Example of Program Operation - To illustrate interpreting instructions for input and output data, typical structural and modal analyses are presented. Ouput listings for these analyses are in Appendices A and B, respectively.

The example problem used for structural analysis models the footpad-attenuator system and exemplifies using structural symmetry and the plastic support option. Structural idealization of the footpad-attenuator system was discussed in Section 6.1.2. The assembled stiffness matrix was of order 228, representing 49 members.

In Section 8.2, the combined footpad and attenuation system structure is analyzed to illustrate the effects of plastic supports. Five loads, ranging from 1414 pounds to 7070 pounds, were applied to the footpad and the resulting deflections were computed. An intermediate value of applied load (4240 pounds) is selected here to illustrate input and output data. One-half of this load (2120 pounds) is actually applied to the footpad because structural symmetry is utilized. Vertical and horizontal components of this load are each 1500 pounds.

Three sets of solutions for nodal displacements were obtained: the initial elastic solution and two plastic solutions. Examination of the elastic solution shows that the plastic load limit was violated at one attenuator post (joint 22) and at two cables (joints 31 and 32). Joint 22 was then allowed to deflect plastically and cable loads at joints 31 and 32 were made equal to zero. The program automatically made these adjustments and the first plastic solution was obtained for nodal deflections. Joint loads for these deflections were then calculated, determining that the plastic load limit at a second attenuator

post (joint 23) had been exceeded. This joint was then allowed to deflect plastically (the joint load constrained to the input limit), and the final plastic solution was obtained for nodal deflections. Joint loads for this final solution were acceptable (no new constraints violated). The program then calculated the internal member loads.

To obtain the final solution, the program required 173 seconds of Central Processor time and 47 seconds of Peripheral Processor time. A solution for the same problem with no plastic constraints could be obtained in less than one-third of this Central Processor time.

The footpad's five lowest free-free mode shapes and frequencies were used to represent the flexible footpad structure for the analytical studies discussed in Section 8.1. For the modal analysis routine, the structure was idealized as shown in Figure 6.3-4. The footpad's center ring was removed and all the radial beams were joined at the center. This idealization, which differs from that given in Section 6.1 for the combined footpad and attenuation system, significantly reduces computer time.

The complete footpad structure (excluding attenuation system) described in Section 6.1 contains 36 joints and 216 degrees of freedom. Reducing the order of the associated stiffness matrix (216 by 216) to the size permitted in the eigenvalue routine (102 by 102) and determining the mode shapes and frequencies requires over 300 seconds of Central Processor (CP) time and over 2400 seconds of Peripheral Processor (PP) time. The structure shown in Figure 6.3-4 contains 150 degrees of freedom. Performing the same operations as described above requires 137 seconds of CP time and 800 seconds of PP time.

FOOTPAD IDEALIZATION FOR MODAL ANALYSIS

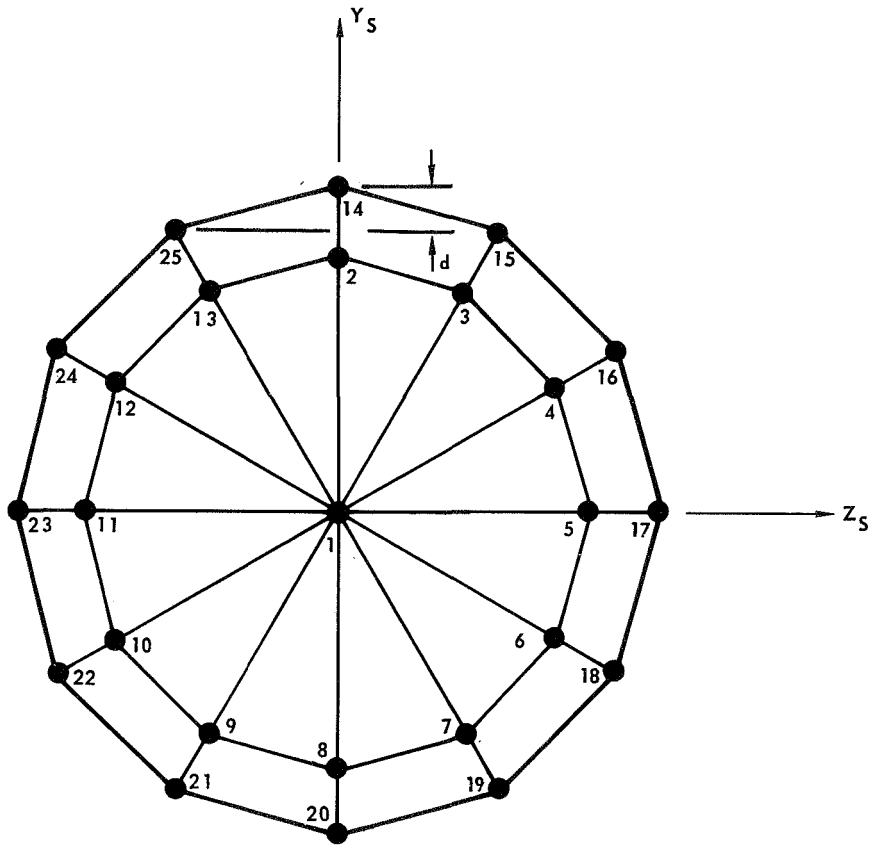

MODAL ANALYSIS REDUCTION ROUTINE ELIMINATED ROTATION AT JOINTS:

3, 4, 6, 7, 9, 10, 12, 13, 15, 16, 18, 19, 21, 22, 24, AND 25

TYPICAL ELEMENTS IN MASS MATRIX

MASS AT JOINT 14 INCLUDES 1/12 THE MASS OF THE OUTER RING AND 1/2 THE MASS OF THE RADIAL BEAM BETWEEN JOINTS 2 AND 14.

MASS MOMENT OF INERTIA AT JOINT 14 (I_z) IS THE SUM OF THE MASSES AT JOINTS 15 AND 25 TIMES THE SQUARE OF THE DISTANCE d

Figure 6.3–4

The stiffness matrix was reduced by removing the rotational degrees of freedom at 16 joints shown in Figure 6.3-4. Since there are three rotational degrees of freedom associated with each joint, this reduces the number of elements from 150 to 102.

The elements of the mass matrix associated with the translational degrees of freedom were obtained by distributing the footpad mass, one-half the attenuator mass, and one-half the cable mass to the appropriate footpad joints as shown in Figure 6.3-4. If translational degrees of freedom had been removed in the reduction routine, their mass terms would have been distributed between adjacent joints. Rotational elements in the mass matrix are associated with the retained rotational degrees of freedom. These elements were obtained by transforming the inertia properties at joints whose rotational degrees of freedom were eliminated, to adjacent joints having rotational degrees of freedom (Figure 6.3-4).

7. LANDING LOADS AND MOTIONS PROGRAM

The Landing Loads and Motions Program determines time histories of the spatial positions, velocities, and accelerations of three separate components idealizing a platform lander. In addition, options are available for determining landing loads and acceleration patterns on the footpad to be used in conjunction with the Structural Analysis Program.

The lander consists of three components connected by a finite number of spatial struts having both elastic and plastic load-stroke characteristics. Spatial motions are determined for the footpad, a combined payload package and platform structure, and a secondary equipment item elastically connected to the payload package. Auxiliary equipment may be included with either the platform or footpad. The payload and secondary equipment item are idealized as rigid bodies. The footpad may be considered as either a rigid body or the effects of a flexible footpad structure may be included. Two soil mechanics routines are available for studying the footpad-soil interaction phenomenon.

Analytical methods developed for this program are presented in Section 7.1. Organization and capabilities of the program are presented in Section 7.2 and operating instructions are discussed in Section 7.3. A program listing is given in Appendix G. All of the program variables located in COMMON are described in Appendix C.

7.1 ANALYTICAL METHODS - Analytical methods associated with the Landing Loads and Motions Program are presented here. Included are discussions of coordinate systems, equations of motion, structural idealization, soil mechanics routines, and footpad attenuation system.

7.1.1 Coordinate Systems - Four coordinate systems, shown in Figure 7.1-1, are used to locate the lander as a function of time. These consist of one axis system fixed on the planet's surface and three systems moving with the lander.

Angular positions of the three systems moving with the lander (lander coordinate systems), relative to the system fixed on the planet are defined in terms of three Euler angles as discussed in the following paragraphs. The coordinate systems are all right-handed and each has three orthogonal axes. The four systems are defined as follows:

- Surface Coordinate System (X,Y,Z) - A coordinate system fixed in the planet and oriented with respect to the slope of the local surface. The X axis of this system is perpendicular to the ground surface. The Z axis corresponds to the principal direction down the ground slope and the Y axis is 90 degrees across the slope.
- Payload Coordinate System (x,y,z) - A coordinate system moving with the payload and fixed at its center of gravity. The payload's angular positions are defined in terms of the three Euler angles ϕ, θ, and ψ.
- Footpad Coordinate System (x_s,y_s,z_s) - A coordinate system moving with the footpad and fixed at its center of gravity. The x_s axis is the axis of symmetry of the footpad. The footpad's angular positions are defined in terms of the quantities ϕ_s, θ_s, and ψ_s.
- Secondary Equipment Coordinate System (x_c,y_c,z_c)- A coordinate system moving with the secondary equipment item and fixed at its

PLATFORM LANDER COORDINATE SYSTEMS

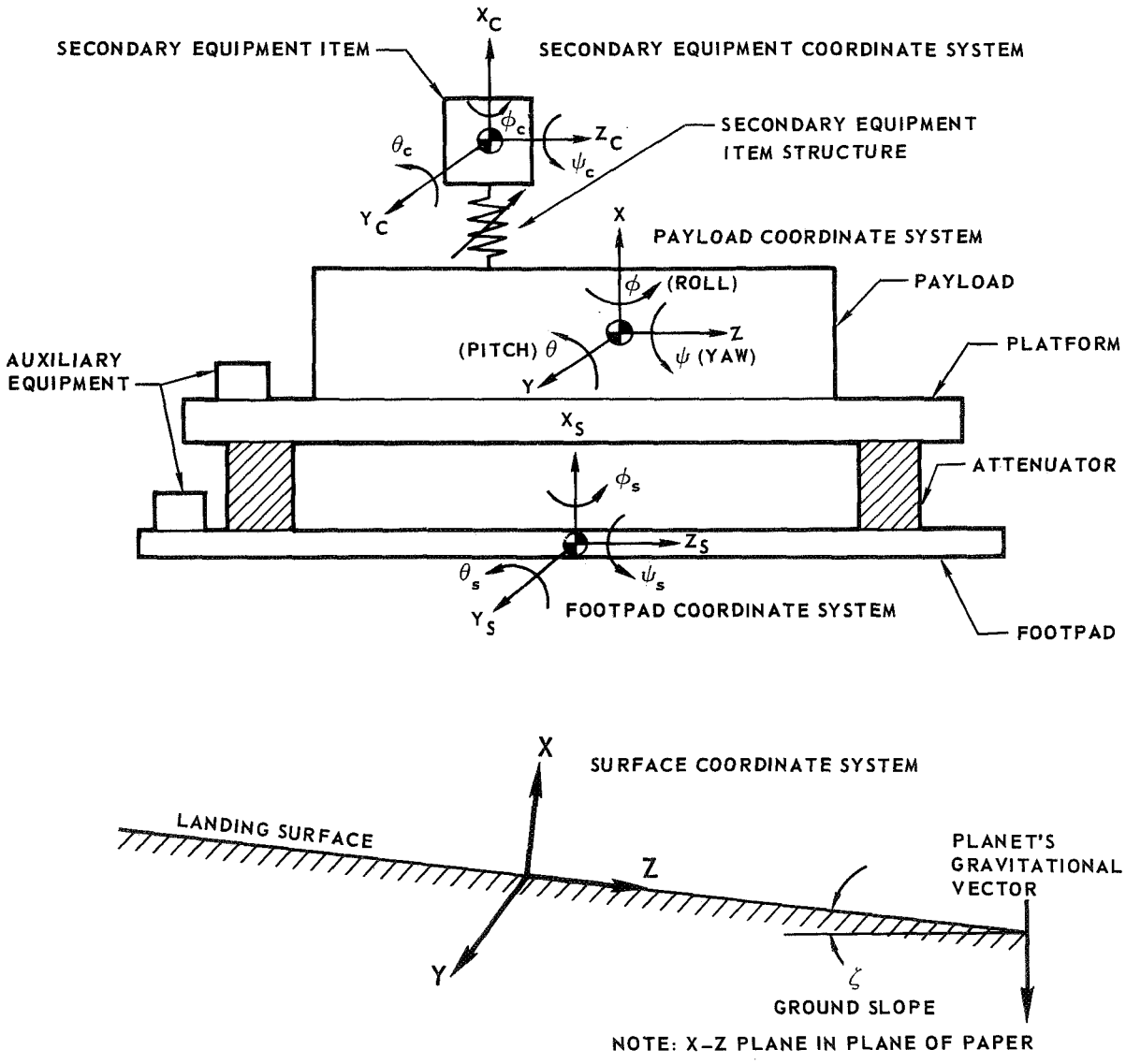

Figure 7.1–1

center of gravity. The secondary equipment item's angular positions are defined in terms of the quantities ϕ_c, θ_c, and ψ_c.

Definition of the lander's angular position is based on a specific order in the Euler angle rotations. These must be carried out in the order of yaw (ψ), pitch (θ), and roll (ϕ). To establish the angular position of the three lander coordinate systems relative to the Surface Coordinate System, this order must be followed. Initially, the x, y, and z axes of the three lander coordinate systems are assumed to be parallel with each other, but they may be displaced relative to each other.

The three lander coordinate systems are related to the Surface Coordinate System by the following expressions:

$$\begin{Bmatrix} X \\ Y \\ Z \end{Bmatrix} = \begin{bmatrix} D11 & D12 & D13 \\ D21 & D22 & D23 \\ D31 & D32 & D33 \end{bmatrix} \begin{Bmatrix} x \\ y \\ z \end{Bmatrix} \tag{7-1}$$

$$= \left\lfloor D\,(I, J) \right\rfloor \begin{Bmatrix} x \\ y \\ z \end{Bmatrix}$$

$$\begin{Bmatrix} X \\ Y \\ Z \end{Bmatrix} = \left\lfloor DS\,(I, J) \right\rfloor \begin{Bmatrix} x_S \\ y_S \\ z_S \end{Bmatrix}$$

$$\begin{Bmatrix} X \\ Y \\ Z \end{Bmatrix} = \left[DC\ (I, J) \right] \begin{Bmatrix} x_c \\ y_c \\ z_c \end{Bmatrix} \qquad \text{(7-1) Continued}$$

In these expressions, [D (I, J)], [DS (I, J)], and [DC (I, J)] are the direction cosine matrices relating the Surface Coordinate System to the payload, footpad, and secondary equipment item systems, respectively.

The elements in the payload's direction cosine matrix are given as follows:

$$\begin{aligned}
D_{11} &= \text{Cos}\ \theta\ \text{Cos}\ \psi \\
D_{12} &= \text{Sin}\ \phi\ \text{Sin}\ \theta\ \text{Cos}\ \psi - \text{Cos}\ \phi\ \text{Sin}\ \psi \\
D_{13} &= \text{Cos}\ \phi\ \text{Sin}\ \theta\ \text{Cos}\ \psi + \text{Sin}\ \phi\ \text{Sin}\ \psi \\
D_{21} &= \text{Cos}\ \theta\ \text{Sin}\ \psi \\
D_{22} &= \text{Sin}\ \phi\ \text{Sin}\ \theta\ \text{Sin}\ \psi + \text{Cos}\ \phi\ \text{Cos}\ \psi \\
D_{23} &= \text{Cos}\ \phi\ \text{Sin}\ \theta\ \text{Sin}\ \psi - \text{Sin}\ \phi\ \text{Cos}\ \psi \\
D_{31} &= -\text{Sin}\ \theta \\
D_{32} &= \text{Sin}\ \phi\ \text{Cos}\ \theta \\
D_{33} &= \text{Cos}\ \phi\ \text{Cos}\ \theta
\end{aligned} \qquad \text{(7-2)}$$

The direction cosine matrices for the footpad and secondary equipment item follow the above form with the proper angular positions being employed.

In addition to the above transformations, relationships between the time derivatives of the Euler angles and the angular velocity components about the lander coordinate axes are required. Integration of these defines the

lander's angular position as a function of time. The required relationships are expressed as

$$\begin{aligned} \dot{\phi} &= \dot{\Omega}_x + \mathrm{Tan}\,\theta\,(\dot{\Omega}_y \mathrm{Sin}\,\phi + \dot{\Omega}_z \mathrm{Cos}\,\phi) \\ \dot{\theta} &= \dot{\Omega}_y \mathrm{Cos}\,\phi - \dot{\Omega}_z \mathrm{Sin}\,\phi \\ \dot{\psi} &= (\dot{\Omega}_z \mathrm{Cos}\,\phi + \dot{\Omega}_y \mathrm{Sin}\,\phi)/\mathrm{Cos}\,\theta \end{aligned} \tag{7-3}$$

where $\dot{\Omega}_x$, $\dot{\Omega}_y$, and $\dot{\Omega}_z$ are the components of the lander's angular velocity in the respective lander coordinate system.

7.1.2 Equations of Motion - The lander's equations of motion are discussed in two parts. The first presents rigid body equations of motion which apply to the payload and secondary equipment item. The second part presents the development of footpad equations of motion, including the effects of a flexible footpad structure.

7.1.2.1 Payload and Secondary Equipment Item - Motions of both the payload and the secondary equipment item are described by six rigid body degrees of freedom. Equations of motion for these two components are written in the following form.

$$\begin{bmatrix} M & O & O \\ O & M & O \\ O & O & M \end{bmatrix} \begin{Bmatrix} \ddot{X} \\ \ddot{Y} \\ \ddot{Z} \end{Bmatrix} = \begin{Bmatrix} F_x \\ F_y \\ F_z \end{Bmatrix} + \begin{Bmatrix} -Mg\,\mathrm{Cos}\,\zeta \\ O \\ Mg\,\mathrm{Sin}\,\zeta \end{Bmatrix} \tag{7-4}$$

and

$$\begin{bmatrix} I_{xx} & -I_{xy} & -I_{xz} \\ -I_{xy} & I_{yy} & -I_{yz} \\ -I_{xz} & -I_{yz} & I_{zz} \end{bmatrix} \begin{Bmatrix} \ddot{\Omega}_x \\ \ddot{\Omega}_y \\ \ddot{\Omega}_z \end{Bmatrix} +$$

$$+ \begin{Bmatrix} \dot{\Omega}_x(\dot{\Omega}_z I_{xy} - \dot{\Omega}_y I_{xz}) + (\dot{\Omega}_z^2 - \dot{\Omega}_y^2) I_{yz} + \dot{\Omega}_y \dot{\Omega}_z(I_{zz} - I_{yy}) \\ \dot{\Omega}_y(\dot{\Omega}_x I_{yz} - \dot{\Omega}_z I_{xy}) + (\dot{\Omega}_x^2 - \dot{\Omega}_z^2) I_{xz} + \dot{\Omega}_x \dot{\Omega}_z(I_{xx} - I_{zz}) \\ \dot{\Omega}_z(\dot{\Omega}_y I_{xz} - \dot{\Omega}_x I_{yz}) + (\dot{\Omega}_y^2 - \dot{\Omega}_x^2) I_{xy} + \dot{\Omega}_x \dot{\Omega}_y(I_{yy} - I_{xx}) \end{Bmatrix} = \begin{Bmatrix} T_x \\ T_y \\ T_z \end{Bmatrix} \tag{7-5}$$

It should be noted, that a consistent set of the quantities must be used, depending on whether the payload or secondary equipment item's motion is being considered. Terms in the above expressions are defined as follows:

M = mass (either payload or secondary equipment item).

I_{xx}, I_{yy}, I_{zz} = moments of inertia.

I_{xy}, I_{xz}, I_{yz} = products of inertia.

$\ddot{X}, \ddot{Y}, \ddot{Z}$ = center of gravity translational accelerations in Surface Coordinate System.

$\dot{\Omega}_x, \dot{\Omega}_y, \dot{\Omega}_z$ = angular velocities about body axes.

$\ddot{\Omega}_x, \ddot{\Omega}_y, \ddot{\Omega}_z$ = angular accelerations about body axes.

F_x, F_y, F_z = sum of forces acting at center of gravity in Surface Coordinate System.

T_x, T_y, T_z = sum of moments about center of gravity in vehicle coordinate systems.

g = local acceleration of gravity.

ζ = local surface slope.

Translational motions of the lander are referenced to the Surface Coordinate System to eliminate coupling between the equations of motion for the angular and translational motions. Angular motions were referenced to the various lander coordinate systems because this is the axis system in which the lander's moments and products of inertia are expressed. Therefore, these inertia properties are constant with time and the angular equations of motion are simplified.

When these equations of motion apply to the payload, two sets of loads are acting on the payload. These are the loads due to stroking of the attenuator and loads in the secondary equipment item structure. For the secondary equipment item, only the loads in the secondary equipment item structure are acting.

The equations of motion for the payload and the secondary equipment item reflect the following assumptions:

- Component coordinate systems located at component center of gravity.
- Rigid body motions.
- Six degrees of freedom considered.
- Applied loads resolved into forces and moments at the component's center of gravity.
- Aerodynamic forces are negligible.
- Changes in moments of inertia are negligible.

7.1.2.2 Footpad - The effects of a flexible footpad structure on the footpad's motion have been included in the analysis. This is an optional feature of the Landing Loads and Motions Program and may be suppressed through input data. In this latter case, the footpad is treated as a rigid body with six degrees of freedom similar to the payload and secondary equipment item.

To completely describe the dynamic motion of the elastic footpad, a continuous elastic body must be considered. However, for the analysis of complex structures, the structure is often idealized as a network of finite elements. Motions of the idealized structure are determined at a finite number of arbitrarily selected control points distributed throughout the body. The motion of each control point on this body is expressed in terms of three translational and three rotational displacements. This idealization results in a total number of equations of motion equal to six times the number of control points selected.

In order to reduce the number of equations to be solved in the Landing Loads and Motions Program, it was assumed that the motion of the footpad could be approximated by the linear combination of a number of time dependent quantities and assumed deflection shapes. The technique which has been employed, defines the motion of the elastic system as the superposition of a limited number of vibratory modes plus six rigid body modes (References 6 and 7). This approach is often referred to as the normal mode method.

For the analysis of the platform lander, the footpad's free-free (unrestrained) modes were chosen as the vibratory modes. The rigid body

modes were assumed to be the three translational displacements defining the position of the footpad center of gravity in the Surface Coordinate System and three angular displacements defined in the Footpad Coordinate System.

The angular rigid body motions were expressed in terms of the moving Footpad Coordinate System to take advantage of the assumed footpad symmetry. In addition, this results in footpad inertia properties which are constant with time. The translational rigid body motions were referenced to the Surface Coordinate System to eliminate coupling between the translational and angular motions.

In developing the footpad equations of motion, expressions defining the motion of a point on the footpad were obtained. These were used to evaluate the kinetic and potential energy of the footpad. The final form of the footpad's equations of motion were obtained by applying the Lagrangean equations to these energy expressions.

The total displacement of a point on the footpad, point j in Figure 7.1-2, is defined as

$$\bar{r}_j = \bar{R} + \bar{\rho}_j \tag{7-6}$$

$\bar{r}_j$ = position vector of point j relative to the Surface Coordinate System.

POSITION OF POINT ON FOOTPAD IN SURFACE COORDINATE SYSTEM

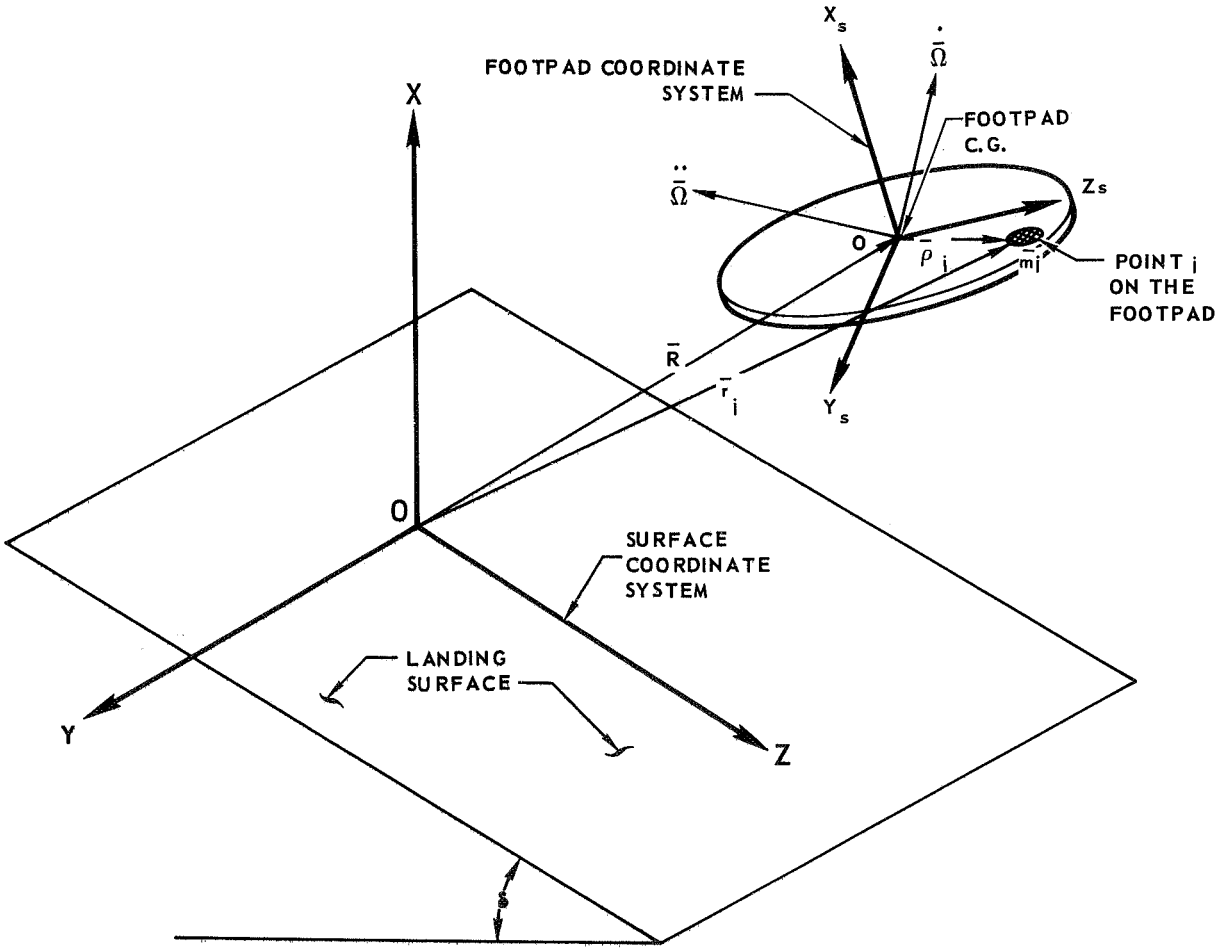

Figure 7.1–2

$\bar{R}$ = position vector of footpad center of gravity relative to Surface Coordinate System.

$\bar{\rho}_j$ = position vector of point j relative to the Footpad Coordinate System

Because the footpad is experiencing angular velocities and accelerations, the velocity and acceleration of point j are expressed as

$$\dot{\bar{r}}_j = \dot{\bar{R}} + \dot{\bar{\rho}}_j + (\dot{\bar{\Omega}} \times \bar{\rho}_j) \tag{7-7}$$

$$\ddot{\bar{r}}_j = \ddot{\bar{R}} + \ddot{\bar{\rho}}_j + (\ddot{\bar{\Omega}} \times \bar{\rho}_j) + \dot{\bar{\Omega}} \times (\dot{\bar{\Omega}} \times \bar{\rho}_j) + 2\,(\dot{\bar{\Omega}} \times \dot{\bar{\rho}}_j)$$

In the above, the following definitions apply

$\dot{\bar{\Omega}}$ = angular velocity of footpad in the Footpad Coordinate System.

$\ddot{\bar{\Omega}}$ = angular acceleration of footpad in the Footpad Coordinate System.

$\dot{\bar{r}}_j$ = velocity vector of point j relative to the Surface Coordinate System.

$\ddot{\bar{r}}_j$ = acceleration vector of point j relative to the Surface Coordinate System.

$\dot{\bar{R}}$ = velocity vector of footpad center of gravity relative to the Surface Coordinate System.

$\ddot{\bar{R}}$ = acceleration vector of footpad center of gravity relative to the Surface Coordinate System.

$\dot{\bar{\rho}}_j$ = velocity vector of point j relative to the Footpad Coordinate System.

$\ddot{\bar{\rho}}_j$ = acceleration vector of point j relative to the Footpad Coordinate System.

It is assumed that the position vector locating the point on the footpad can be separated into a term which varies with time and a term which remains constant with time. Thus, the location of point j relative to the Footpad Coordinate System is

$$\bar{\rho}_j (s_j, t) = \bar{\rho}_{oj} (s_j) + \bar{\rho}_{ej} (s_j, t) \tag{7-8}$$

where

s_j = coordinates of point j in Footpad Coordinate System ($s_j = x_{sj}$, y_{sj}, and z_{sj}).

$\bar{\rho}_{oj}$ = undeformed position of point j in Footpad Coordinate System.

$\bar{\rho}_{ej}$ = deformed position of point j in Footpad Coordinate System measured from the undeformed position of that point.

These position vectors are shown in Figure 7.1-3.

Employing the assumption that the elastic deformation is represented by the superposition of a limited number of vibratory modes, the deformed position of point j is

$$\bar{\rho}_{ej} = \sum_{n}^{N} \bar{\phi}_{nj} \, q_n(t) \tag{7-9}$$

where

N = number of modes included.

$\bar{\phi}_{nj}$ = magnitude of nth elastic mode shape at point j. These are a function of the coordinates s_j.

POSITION OF POINT ON FOOTPAD IN FOOTPAD COORDINATE SYSTEM

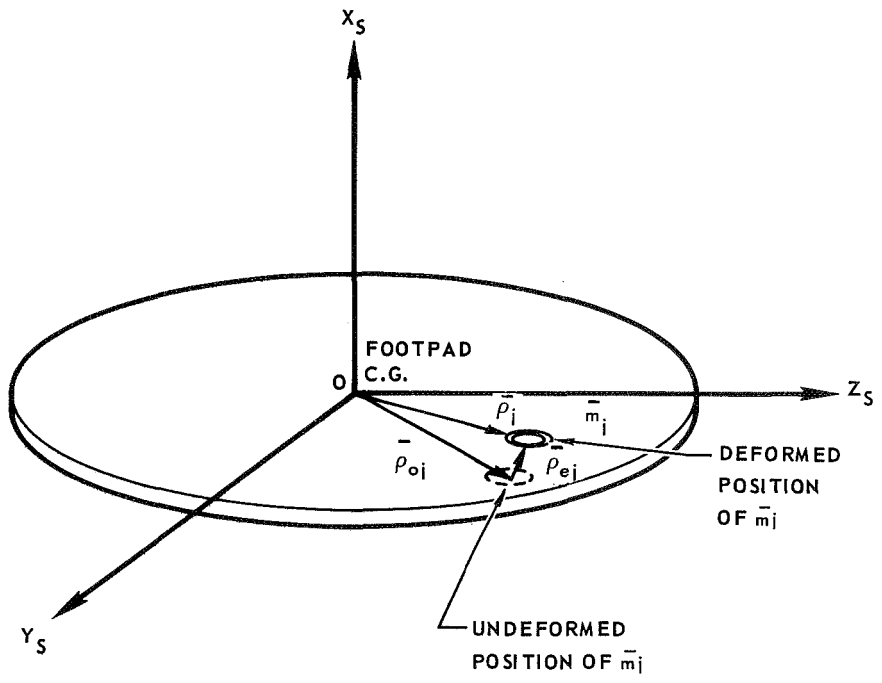

Figure 7.1–3

q_n = generalized coordinate associated with nth mode. These are a function of time.

Expressing the deformed position of point j as components in the three axes of the Footpad Coordinate System results in the following

$$\bar{\rho}_{ej} = \rho^j_{ex}\,\bar{i} + \rho^j_{ey}\,\bar{j} + \rho^j_{ez}\,\bar{k} \tag{7-10}$$

In the above, $\bar{i}$, $\bar{j}$, and $\bar{k}$ are the unit normal vectors in the Footpad Coordinate System. Combining Equations (7-9) and (7-10) results in the following expression for the deformed position of point j.

$$\bar{\rho}_{ej} = \sum_{n}^{N} (\phi^j_{nx}\,\bar{i} + \phi^j_{ny}\,\bar{j} + \phi^j_{nz}\,\bar{k})q_n \tag{7-11}$$

The terms, ϕ^j_{nx} , ϕ^j_{ny} , and ϕ^j_{nz} are the components of the nth mode shape at point j in the three footpad axes directions.

The total velocity of point j is obtained by combining Equations (7-7) and (7-8).

$$\dot{\bar{r}}_j = \dot{\bar{R}} + \dot{\bar{\rho}}_{ej} + \dot{\bar{\Omega}} \times (\bar{\rho}_{oj} + \bar{\rho}_{ej}) \tag{7-12}$$

The total kinetic energy of the footpad, T, is obtained by summing the kinetic energy of all control points on the footpad having mass $\bar{m}_j$

$$T = \frac{1}{2} \sum_{j}^{J} \bar{m}_j \dot{\bar{r}}_j \cdot \dot{\bar{r}}_j \tag{7-13}$$

where J equals the total number of mass points on the footpad. Combining equation (7-13) with the definitions given in equations (7-12) and (7-10), results in the following kinetic energy expression

$$\begin{aligned} T = & \frac{1}{2} M (\dot{q}_x^2 + \dot{q}_y^2 + \dot{q}_z^2) + \frac{1}{2} (I_{xx} \dot{q}_{rx}^2 + I_{yy} \dot{q}_{ry}^2 + I_{zz} \dot{q}_{rz}^2) + \\ & + \frac{1}{2} \dot{q}_{rx}^2 \sum_{n}^{N} [(P_{yn} + P_{zn}) q_n + \frac{1}{2} N_{xn} q_n^2] + \\ & + \frac{1}{2} \dot{q}_{ry}^2 \sum_{n}^{N} [(P_{xn} + P_{zn}) q_n + \frac{1}{2} N_{yn} q_n^2] + \\ & + \frac{1}{2} \dot{q}_{rz}^2 \sum_{n}^{N} [(P_{xn} + P_{yn}) q_n + \frac{1}{2} N_{zn} q_n^2] + \\ & + \frac{1}{2} \sum_{n}^{N} m_n \dot{q}_n^2 \end{aligned} \tag{7-14}$$

Terms in Equation (7-14) are defined as follows, where the q_k's and q_{rk}'s are the generalized coordinates of the footpad's rigid body modes.

M = footpad mass.

I_{xx}, I_{yy}, I_{zz} = footpad moments of inertia.

$q_k, \dot{q}_k, \ddot{q}_k$ = rigid body translational displacement, velocity, and acceleration of footpad center of gravity in the Surface Coordinate System (for k = x, y, or z axes).

$q_{rk}, \dot{q}_{rk}, \ddot{q}_{rk}$ = rigid body angular displacement, velocity, and acceleration of footpad Coordinate System axes (for k = x, z, or z axes).

m_n = generalized mass of nth elastic mode

$$= \sum_j^J \bar{m}_j \; \bar{\phi}_{nj} \; \bar{\phi}_{nj}$$

$$P_{xn} = \sum_j^J x_j \, \bar{m}_j \, \phi^j_{xn}$$

$$P_{yn} = \sum_j^J y_j \, \bar{m}_j \, \phi^j_{yn}$$

$$P_{zn} = \sum_j^J z_j \, \bar{m}_j \, \phi^j_{zn}$$

$$N_{xn} = \sum_{j}^{J} \bar{m}_j \, (\phi^j_{yn}{}^2 + \phi^j_{zn}{}^2)$$

$$N_{yn} = \sum_{j}^{J} \bar{m}_j \, (\phi^j_{xn}{}^2 + \phi^j_{zn}{}^2)$$

$$N_{zn} = \sum_{j}^{J} \bar{m}_j \, (\phi^j_{xn}{}^2 + \phi^j_{yn}{}^2)$$

Equation (7-14) is based on the assumption that the footpad is symmetric about the x_s axis , i.e.

$$I_{yy} = I_{zz}$$

and (7-15)

$$I_{xy} = I_{xz} = I_{yz} = 0$$

where Ixy, Ixz, and Iyz are the footpad's products of inertia.

The potential energy of the footpad consists of the potential due to the planet's gravity field, the strain energy due to the footpad's elastic deformation, and the potential due to the centrifugal force field.

The potential due to the gravity field is

$$U_g = gM(\text{Cos}\, \zeta \, q_x - \text{Sin}\, \zeta \, q_z) \tag{7-16}$$

and the footpad's strain energy is

$$U_s = \frac{1}{2} \sum_{n}^{N} m_n \, \omega_n{}^2 \, q_n{}^2 \tag{7-17}$$

where ω_n is the natural freguency at the nth free-free mode.

The centripetal acceleration at a general point j on the footpad is

$$\bar{a}_{cj} = \dot{\bar{\Omega}} \times (\dot{\bar{\Omega}} \times \bar{\rho}_j) \tag{7-18}$$

This results in a centrifugal force due to the mass at point j of

$$\bar{F}_{cj} = \bar{m}_j \dot{\bar{\Omega}} \times (\dot{\bar{\Omega}} \times \bar{\rho}_j) \tag{7-19}$$

The total potential due to centrifugal forces is equal to the negative of the total work done by the centrifugal forces acting through their displacements. These displacements are due to the shortening of the structure resulting from elastic deformations. As an example, consider a member of the footpad structure as shown in Figure 7.1-4. Not only does point A experience elastic deformations in the three axis directions, but it also displaces a distance λ in the plane of the footpad. This deformation, λ, is the shortening deformation of the structure and is due to the elastic deformations ρ_{ex} and ρ_{ey}. The potential energy associated with the three elastic deformations are included in the footpads strain energy, Equation (7-17).

In the analysis of the platform lander, the only shortening deformations of significance were a result of elastic bending deformations normal to the plane of the footpad (ρ_{ex}). The shortening deformations due to elastic bending deformations in the plane of the footpad (ρ_{ey}) were neglected because the in-plane elastic deformations were several orders of magnitude smaller

FOOTPAD SHORTENING DEFORMATION

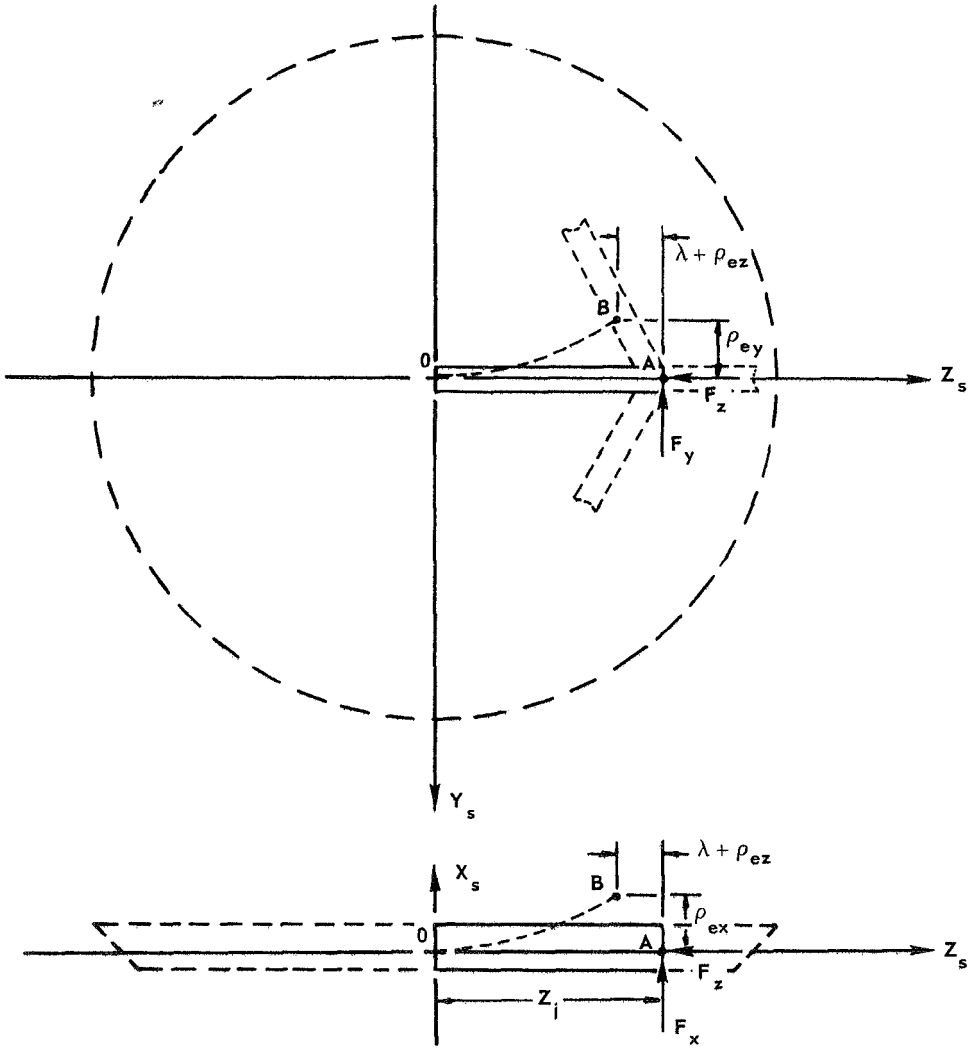

ρ_{ex} = ELASTIC DEFORMATION DUE TO F_x

ρ_{ey} = ELASTIC DEFORMATION DUE TO F_y

ρ_{ez} = ELASTIC DEFORMATION DUE TO F_z

λ = SHORTENING DEFORMATION DUE TO ρ_{ex} AND ρ_{ey}

Figure 7.1-4

than the elastic deformations normal to the footpad.

For the structural member shown in Figure 7.1-4, the shortening deformation is evaluated as follows. The length OB, along the deflected member, is given by

$$OB = \int_0^z \sqrt{1 + \left(\frac{d\rho_{ex}}{d\xi}\right)^2}\, d\xi \tag{7-20}$$

where ξ is a dummy variable along z_s. This results in an expression for λ of the form

$$\lambda = \int_0^z \sqrt{1 + \left(\frac{\rho_e}{d\xi}\right)^2}\, d\xi - z \tag{7-21}$$

Assuming small deformation gives

$$\sqrt{1 + \left(\frac{d\rho_{ex}}{d\xi}\right)^2} \approx 1 + \frac{1}{2}\left(\frac{d\rho_{ex}}{d\xi}\right)^2 \tag{7-22}$$

which results in

$$\lambda = \frac{1}{2}\int_0^z \left(\frac{d\rho_{ex}}{d\xi}\right)^2 d\xi \tag{7-23}$$

Considering the definition of the footpad's elastic deformation in Equation (7-11), the shortening deformation at a general point j on the footpad is expressed in the following form

$$\bar{\lambda}_j = \lambda_{yj}\,\bar{j} + \lambda_{zj}\,\bar{k} \tag{7-24}$$

where

$$\lambda_{yj} = \frac{1}{2}\sum_{n}^{N}\sum_{m}^{N}\int_{o}^{y_j}\left(\frac{d\phi^j_{nx}}{d\xi}\right)\left(\frac{d\phi^j_{mx}}{d\xi}\right) d\xi\; q_n q_m$$

and

$$\lambda_{zj} = \frac{1}{2}\sum_{n}^{N}\sum_{m}^{N}\int_{o}^{z_j}\left(\frac{d\phi^j_{nx}}{d\eta}\right)\left(\frac{d\phi^j_{mx}}{d\eta}\right) d\eta\; q_n q_m$$

Here, λ_{yj} and λ_{zj} refer to the shortening deformation and ξ and η are dummy variables in the footpad y_s and z_s directions, respectively.

The jth centrifugal force, $\bar{F}_{c_j}$, moves through a displacement defined by Equation (7-24). Therefore, the total potential of all centrifugal forces is expressed as

$$U_c = -\sum_j^J \bar{F}_{c_j} \cdot \bar{\lambda}_j \tag{7-25}$$

Equation (7-25) is evaluated with the terms as defined in Equations (7-19) and (7-24). Combining Equations (7-16), (7-17) and (7-25) results in the following equation for the total potential energy of the footpad.

$$\begin{aligned} U = gM\ (\mathrm{Cos}\ \zeta\ q_x - \mathrm{Sin}\ \zeta\ q_z) + \frac{1}{2}\sum_n^N m_n \omega_n^2 q_n^2 + \\ \frac{1}{2}\sum_n^N\sum_m^N [\dot{q}_{rx}^2 M_{xnm} + \dot{q}_{ry}^2 M_{ynm} + \dot{q}_{rz}^2 M_{znm}]\ q_n q_m \end{aligned} \tag{7-26}$$

where

$$M_{xnm} = \sum_j^J \bar{m}_j\ [y_j \int_o^{y_j} \frac{d\phi_{nx}}{dy}\ \frac{d\phi_{mx}}{dy}\ dy + z_j \int_o^{z_j} \frac{d\phi_{mx}}{dz}\ \frac{d\phi_{nx}}{dz}\ dz]$$

$$M_{ynm} = \sum_j^J \bar{m}_j\ z_j \int_o^{z_j} \frac{d\phi_{nx}}{dz}\ \frac{d\phi_{mx}}{dz}\ dz$$

$$M_{znm} = \sum_j^J \bar{m}_j\ y_j \int_o^{y_j} \frac{d\phi_{nx}}{dy}\ \frac{d\phi_{mx}}{dy}\ dy$$

The final form of the footpad's equations of motion were obtained by applying the Lagrangean equations to the energy terms of Equations (7-14) and (7-26). The Lagrangean equations are expressed as

$$\frac{d}{dt}\left(\frac{\partial T}{\partial \dot{q}_c}\right) - \frac{\partial T}{\partial q_c} + \frac{\partial U}{\partial q_c} = Q_c \qquad (7\text{-}27)$$

where

$q_c, \dot{q}_c$ = cth generalized coordinate and generalized velocity (either rigid body or elastic modes).

T = footpad's kinetic energy.

U = footpad's potential energy

Q_c = generalized force or moment in cth mode.

The generalized forces of the rigid body translational modes are the sum of the applied forces in the respective axis directions. The generalized moments of the rigid body rotational modes are the sum, at the footpad center of gravity, of the applied moments about the footpad's axes. For the elastic modes, the generalized force in the nth mode is

$$Q_n = \sum_{p}^{P} (F_x{}^p \, \phi^p{}_{nx} + F_y{}^p \, \phi^p{}_{ny} + F_z{}^p \, \phi^p{}_{nz}) \qquad (7\text{-}28)$$

In the above, p refers to the pth point on the footpad where a force is applied. There are a total of P forces, each of which has been resolved into components in the three Footpad Coordinate System axes.

Using the footpad's energy expressions in conjunction with the Lagrangean equations leads to the footpad equations of motion given in Figure 7.1-5.

FOOTPAD EQUATIONS OF MOTION

$$
\left[\begin{array}{ccc:ccc:c}
M & 0 & 0 & & & & \\
0 & M & 0 & & 0 & & 0 \\
0 & 0 & M & & & & \\
\hdashline
 & & & I_{xx} & 0 & 0 & \\
 & 0 & & 0 & I_{yy} & 0 & 0 \\
 & & & 0 & 0 & I_{zz} & \\
\hdashline
 & & & & & & m_1 \cdots 0 \\
 & 0 & & & 0 & & \vdots \quad \ddots \quad \vdots \\
 & & & & & & 0 \cdots m_N
\end{array}\right]
\left\{\begin{array}{c}
\ddot{q}_x \\ \ddot{q}_y \\ \ddot{q}_z \\ \hdashline \ddot{q}_{rx} \\ \ddot{q}_{ry} \\ \ddot{q}_{rz} \\ \hdashline \ddot{q}_1 \\ \vdots \\ \ddot{q}_N
\end{array}\right\}
+
\left[\begin{array}{c:c:c}
0 & 0 & 0 \\
\hdashline
0 & 0 & 0 \\
\hdashline
0 & 0 & \begin{array}{ccc} \omega_1^2 m_1 & \cdots & 0 \\ \vdots & \ddots & \vdots \\ 0 & \cdots & \omega_N^2 m_N \end{array}
\end{array}\right]
\left\{\begin{array}{c}
q_x \\ q_y \\ q_z \\ \hdashline q_{rx} \\ q_{ry} \\ q_{rz} \\ \hdashline q_1 \\ \vdots \\ q_N
\end{array}\right\}
+
$$

$$
\left\{\begin{array}{c}
0 \\ 0 \\ 0 \\ \hdashline
\ddot{q}_{rx}\sum_n [2(P_{yn}+P_{zn})+N_{xn}q_n]q_n + 2\dot{q}_{rx}\sum_n [(P_{yn}+P_{zn})+N_{xn}q_n]\dot{q}_n + \dot{q}_{ry}\dot{q}_{rz}\{ \quad + \sum_n [2(P_{yn}-P_{zn}) + (N_{zn}-N_{yn})q_n - \sum_m (M_{znm}-M_{ynm})q_m]q_n\} \\
\ddot{q}_{ry}\sum_n [2(P_{xn}+P_{zn})+N_{yn}q_n]q_n + 2\dot{q}_{ry}\sum_n [(P_{xn}+P_{zn})+N_{yn}q_n]\dot{q}_n + \dot{q}_{rx}\dot{q}_{rz}\{(I_{xx}-I_{zz}) + \sum_n [2(P_{zn}-P_{xn})+(N_{xn}-N_{zn})q_n - \sum_m (M_{xnm}-M_{znm})q_m]q_n\} \\
\ddot{q}_{rz}\sum_n [2(P_{xn}+P_{yn})+N_{zn}q_n]q_n + 2\dot{q}_{rz}\sum_n [(P_{xn}+P_{yn})+N_{zn}q_n]\dot{q}_n + \dot{q}_{rx}\dot{q}_{ry}\{(I_{yy}-I_{xx}) + \sum_n [2(P_{xn}-P_{yn})+(N_{yn}-N_{zn})q_n - \sum_m (M_{ynm}-M_{xnm})q_m]q_n\} \\
\hdashline
-\dot{q}_{xr}^2[(P_{y1}+P_{z1}) + N_{x1}q_1 - \sum_m M_{x1m}q_m] - \dot{q}_{ry}^2[(P_{x1}+P_{z1}) + N_{y1}q_1 - \sum_m M_{y1m}q_m] - \dot{q}_{rz}^2[(P_{x1}+P_{y1}) + N_{z1}q_1 - \sum_m M_{z1m}q_m] \\
\vdots \qquad\qquad \vdots \\
-\dot{q}_{rx}^2[(P_{yN}+P_{zN}) + N_{xN}q_N - \sum_m M_{xNm}q_m] - \dot{q}_{ry}^2[(P_{xN}+P_{zN}) + N_{yN}q_N - \sum_m M_{yNm}q_m] - \dot{q}_{rz}[(P_{xN}+P_{yN}) + N_{zN}q_N - \sum_m M_{zNm}q_m]
\end{array}\right\}
=
\left\{\begin{array}{c}
F_x \\ F_y \\ F_z \\ \hdashline T_x \\ T_y \\ T_z \\ \hdashline Q_1 \\ \vdots \\ Q_N
\end{array}\right\}
+
\left\{\begin{array}{c}
-gM\cos\zeta \\ 0 \\ gM\sin\zeta \\ \hdashline 0 \\ 0 \\ 0 \\ \hdashline 0 \\ \vdots \\ 0
\end{array}\right\}
$$

Figure 7.1–5

7.1.3 Structural Idealization - The platform lander is idealized as three components, representing the footpad, payload, and secondary equipment item. The payload and secondary equipment item are assumed to be rigid bodies, while the effects of a flexible footpad structure can be included in the dynamics of the footpad mass. The attenuator and the secondary equipment item structure are represented as a number of spatial struts having pinned ends.

The flexible footpad structure is idealized in the same manner as in the Structural Analysis Program. It is idealized as a network of bar members, each capable of carrying axial load, shear in two directions, bending in two directions, and torsion, From this representation, the footpad's free-free mode shapes and frequencies are obtained for inclusion in the footpad's equation of motion.

The characteristics of the struts are defined in terms of a basic load-stroke relationship as shown in Figure 7.1-6. Three of these basic load-stroke relationships are input to the program. One is associated with the attenuator struts and two with the secondary equipment item support structure struts.

The load-stroke curve for a particular strut is obtained from this basic load-stroke relationship in conjunction with a number of modification coefficients. These coefficients allow for a different load-stroke curve for each strut and different load levels in tension and compression. The force terms of the basic load-stroke relationship are multiplied by these coefficients which are defined as follows:

COEF (I,J) = Variation of basic load-stroke relationship on compressive side for Jth strut.

COEFT (I,J) = Variation of basic load-stroke relationship on tensile side for Jth strut.

BASIC STRUT LOAD-STROKE RELATIONSHIP

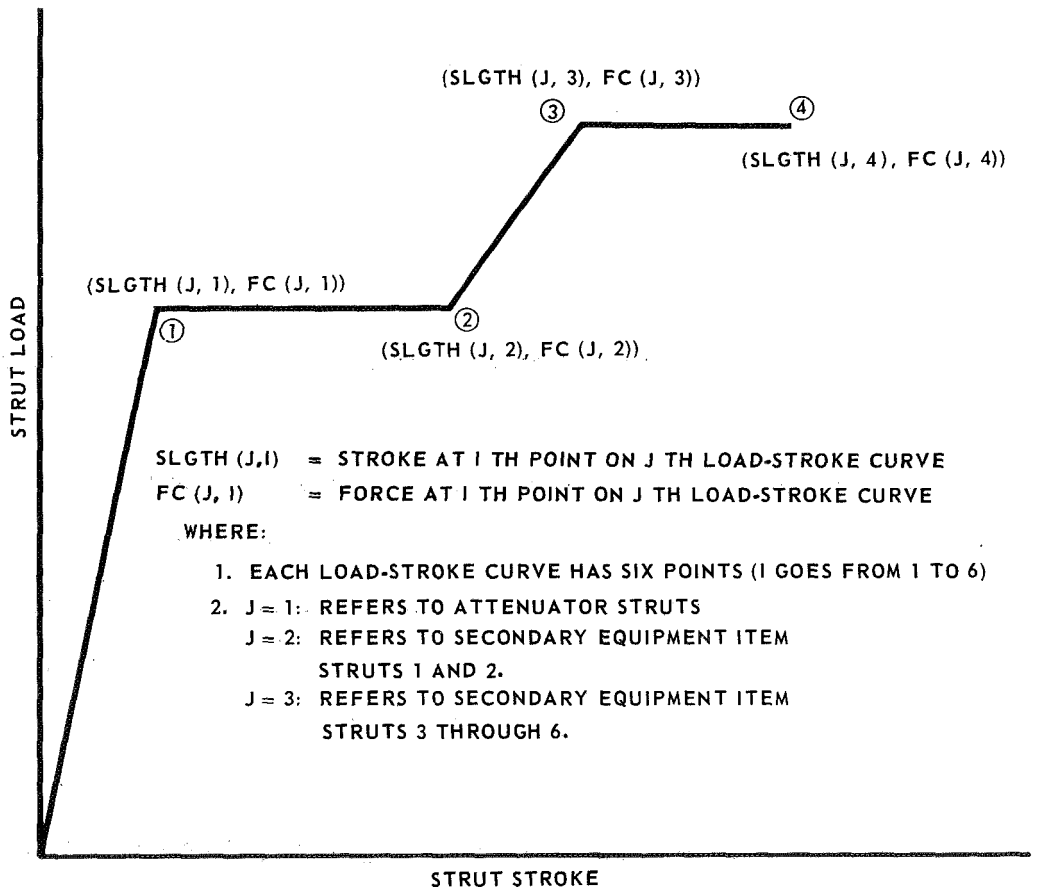

Figure 7.1–6

where I = 1 refers to attenuator struts

I = 2 refers to secondary equipment item structure struts

The load in a given strut increases with stroke until the crush force is reached, as shown in Figure 7.1-7. Then the load will remain constant with stroke until either the stroke reverses direction, a second elastic portion is reached, or the strut is completely crushed. When the first of these happens, an elastic unloading will take place in the strut. The spring rate (K) of this elastic unloading is defined by the empirical equation (Reference 10).

$$K = \frac{K_o}{1 + 6\,P_c} \tag{7-29}$$

where K_o is the spring constant of the uncrushed strut material and P_c is the ratio of the crushed strut length to the original length.

When a second elastic portion of the strut is reached, the load again increases with stroke at a new slope. Following the complete crush of a strut, the strut load will be governed by a spring constant representing the elasticity of the strut backup structure. These relationships apply for both compressive and tensile loading conditions.

In addition, provisions are available for the inclusion of a constant friction force and a velocity squared damping force in each strut. Both of these are applied in a direction opposite to the velocity of the stroking motion in the strut. The friction forces are superimposed on the load-stroke curve as indicated in Figure 7.1-8. These forces are governed by the following parameters:

STRUT LOAD–STROKE RELATIONSHIP

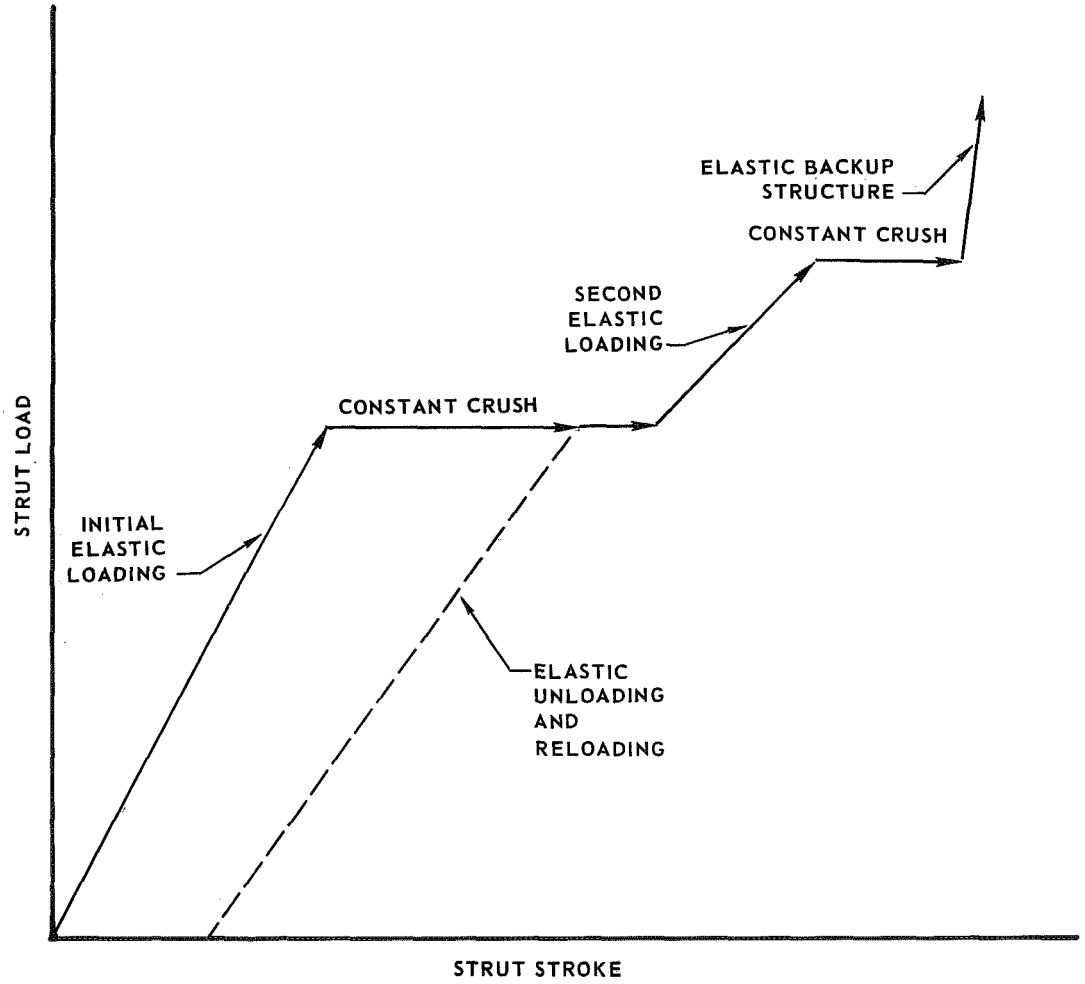

Figure 7.1–7

EFFECT OF FRICTION AND DAMPING FORCES ON
STRUT LOAD–STROKE RELATIONSHIP

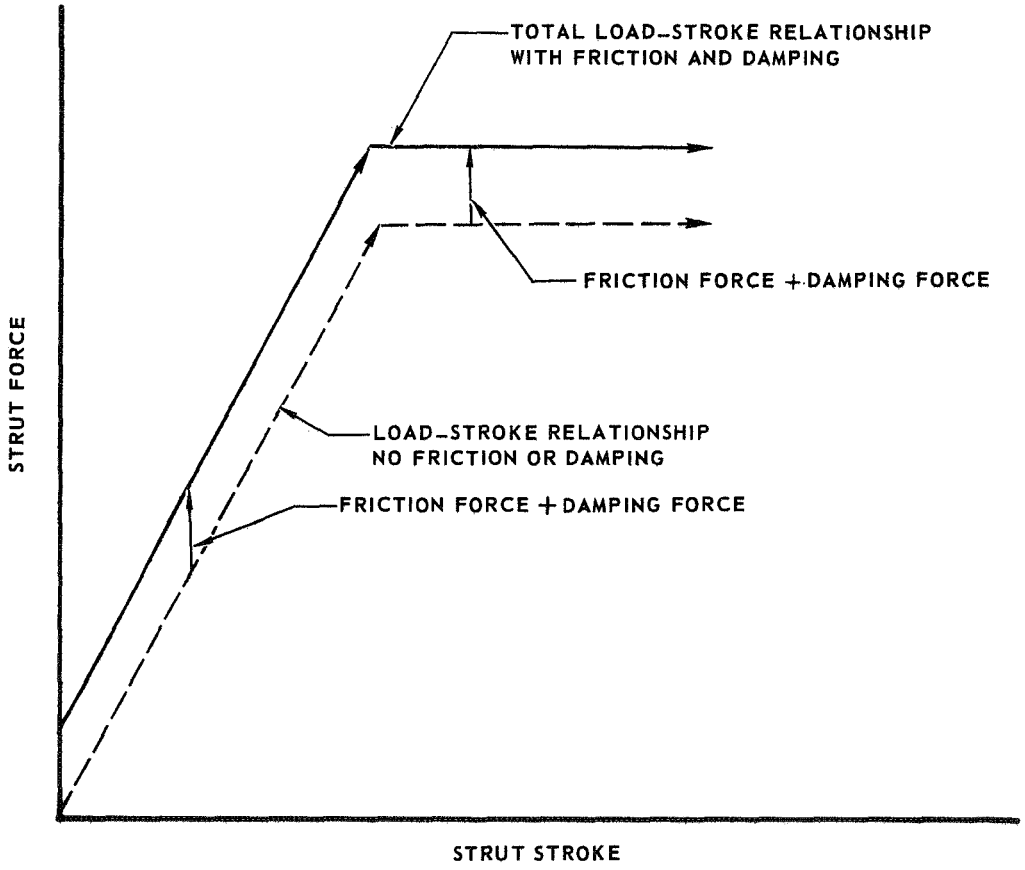

Figure 7.1–8

VISLM = Velocity squared damping coefficient for attenuator struts

VISJK = Velocity squared damping coefficient for secondary equipment item struts

FFLM (I) = Ith attenuator strut compressive friction force

FFLMT (I) = Ith attenuator strut tensile friction force

FFJK (I) = Ith secondary equipment item strut compressive friction force

FFJKT (I) = Ith secondary equipment item strut tensile friction force

7.1.4 Soil Mechanics - Two methods of representing the footpad-soil interaction have been incorporated in the Landing Loads and Motions Program. The first of these, referred to as the Primary Soil Mechanics Method, is a modification of the footpad-soil interaction method developed during the Lunar Module (LM) Soil Mechanics Study summarized in Reference (8). This modification is similar to the version reported in Reference (9) for the Surveyor simulation. It is assumed that the semiempirical relationships given in Reference (9) are directly applicable to platform landers. An alternate soil mechanics method, referred to as the Secondary Soil Mechanics Method, determines the soil force through a simple elastic-plastic relationship between soil pressure and depth of soil penetration.

In both of these routines, it is assumed that the surface of the footpad is represented by a number of concentric conical segments as shown in Figure 7.1-9. Each of these segments is divided into a number of elemental control areas. The center of each elemental control area is used as the control point in determining the amount of soil penetration associated with that area. Soil forces acting on this area are determined employing the appropriate soil mechanics routine. The total soil force acting on the footpad is the sum of the forces on all the elemental control areas in contact with the soil.

ELEMENTAL CONTROL AREA REPRESENTATION OF FOOTPAD

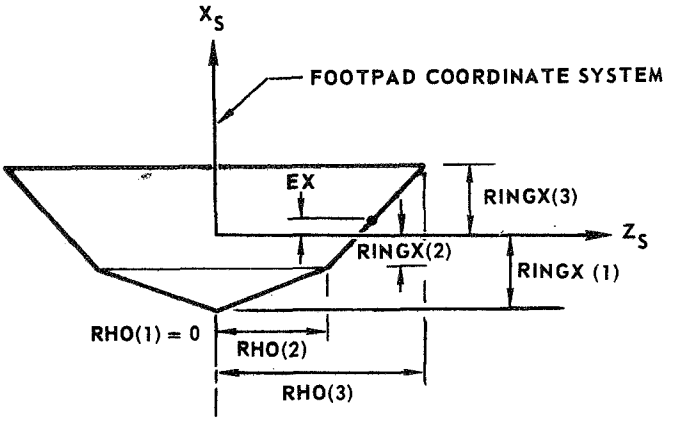

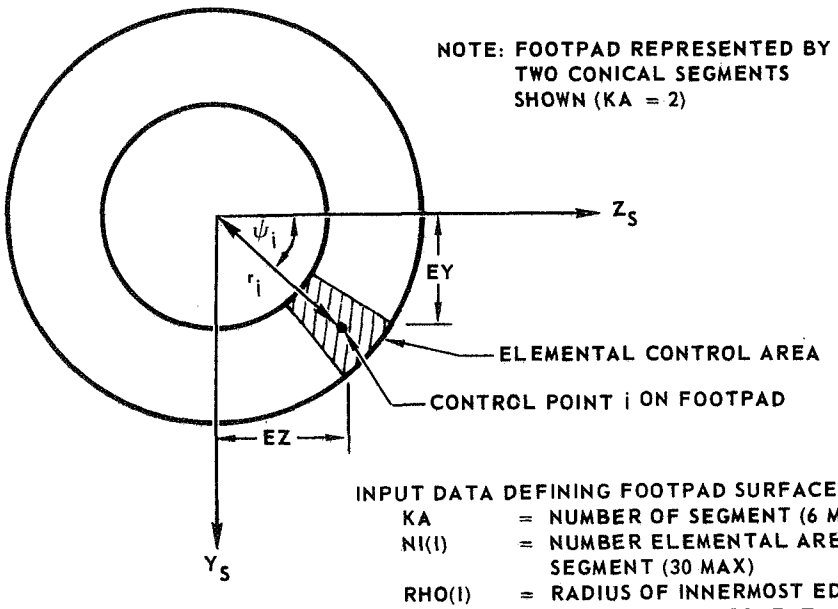

INPUT DATA DEFINING FOOTPAD SURFACE

KA	=	NUMBER OF SEGMENT (6 MAX)
NI(I)	=	NUMBER ELEMENTAL AREAS IN I TH SEGMENT (30 MAX)
RHO(I)	=	RADIUS OF INNERMOST EDGE OF I TH CONICAL SEGMENT
RINGX(I)	=	X_S LOCATION OF INNERMOST EDGE OF I TH CONICAL SEGMENT

COORDINATES OF EACH CONTROL POINT

$$EX = \frac{RINGX(I) + RINGX(I+1)}{2}$$

$$EY = \frac{RHO(I) + RHO(I+1)}{2} \sin \psi_i$$

$$EZ = \frac{RHO(I) + RHO(I+1)}{2} \cos \psi_i$$

Figure 7.1–9

When including the effects of a flexible footpad in either of the soil routines, the magnitudes of the free-free mode shapes at the control points of the elemental control areas must be determined. These are needed to determine the deflected footpad shape and thus the amount of soil penetration associated with each of the elemental control areas. In general, these points do not coincide with the points on the footpad at which the input mode shapes are defined. To obtain the magnitudes of the mode shapes at the required points, a least squares curve fit has been employed. It was assumed that the mode shape of the nth mode at point j could be represented as a second order polynomial

$$\phi^{j}_{nk} = \sum_{i=0}^{2} A_{nki}\, r_j^{(i)}\, \epsilon_{nk}(\psi_j) \tag{7-30}$$

Terms in the above are defined below and illustrated in Figure 7.1-9.

ϕ^{j}_{nk} = magnitude of nth mode shape at point j in kth direction (k = x,y,z).

r_j = radius of point j in the $y_s - z_s$ plane of the Footpad Coordinate System.

A_{nki} = ith coefficient of least squares representation.

$\epsilon_{nk}(\psi_j) = \text{Cos}\,(NDIAM_{nk}\,\psi_j)$ or $\text{Sin}\,(NDIAM_{nk}\,\psi_j)$

The term ϵ_{nk}, locates the nodal diameters of the nth mode shape in the kth axis direction at the proper angular position on the footpad. This term is governed by the input parameter $NDIAM_{nk}$, which defines the number of nodal diameters. When $NDIAM_{nk} \geq 0$, the cosine terms are used, while the sine terms are used for $NDIAM_{nk} < 0$. If $NDIAM_{nk}$ is set equal to 100, the nth mode shape in the kth axis direction is set equal to zero. Further discussion on the use of this indicator is given in Section 7.3.3.

The coefficients, A's, of Equation (7-30) are determined through a least squares routine from the input mode shapes and their corresponding y_s and z_s coordinates. Equation (7-30) is then used to obtain the magnitudes of the mode shapes at the elemental control area locations as defined by the EY's and EZ's (Figure 7.1-9).

7.1.4.1 Primary Soil Mechanics Method - Although the footpad-soil interaction method of Reference (8) was developed specifically for the LM-shaped footpad, the technique utilizes principles which are fundamental to the interaction phenomenon occuring during soil penetration. Applicability of this basic method to a different footpad shape was demonstrated by the good agreement obtained between telemetered Surveyor lunar impact data and predicted landing dynamics as reported in Reference (9). While experimental data for a platform lander footpad shape are desirable, adequate approximation of footpad-soil interaction can be made using the method presented herein.

In Reference (8), a theory of soil elasto-plastic deformation is used to define the force between the footpad and the deformed soil surface. The soil mass, displaced by the moving footpad, is considered as a degree of freedom independent of the lander system. A spring, representing the soil elasticity, is placed between the footpad and the soil mass. Additional external forces applied to the soil mass represent a momentum transfer force and a force due to the soil strength.

It was shown in the Surveyor simulation that sufficient accuracy can be obtained by neglecting soil elasticity and assuming that the moving soil mass is attached rigidly to the footpad. This simplification results in the removal of the soil mass differential equation from the analysis. Therefore, the soil

force acting on the footpad is considered to be the sum of a soil strength term, a soil drag term, and a term approximating the effect of the changing soil mass. Figure 7.1-10 presents a diagramatic representation of these terms.

The extension of the method of analysis discussed above is applied to the platform lander as follows where, the symbols are defined in Figure 7.1-11. Forces acting on each elemental control area, as shown in Figure 7.1-12, consist of an axial force, F_{ae}, parallel to the velocity vector of the area and a force, F_{ne}, normal to the velocity vector. The axial force is the sum of the forces due to the soil strength, soil drag, and effect of the changing soil mass. This axial force applied to an elemental footpad area is derived in a manner analogous to that employed to determine the total axial force on the footpad in Reference (9). Applying the equation of motion to the elemental soil stagnation mass, M_e, as shown in Figure 7.1-13, results in Equation (7-31). The elemental soil mass is that portion of the total soil mass moving with the footpad. The derivation of this mass term is shown in Figure 7.1-14.

$$F_{ae} = F_s + \frac{d}{dt}(M_e V_e) \tag{7-31}$$

The force F_s, opposing the motion of the elemental soil mass is obtained by adding soil strength and soil drag terms of Reference (9) on an elemental area basis:

$$F_s = C_{ms}\,\rho\, g\, d\, A_{e\theta} + C_d\,\rho\, A_{e\theta}\, V^2_e \tag{7-32}$$

DIAGRAMATIC REPRESENTATION OF TOTAL SOIL FORCES

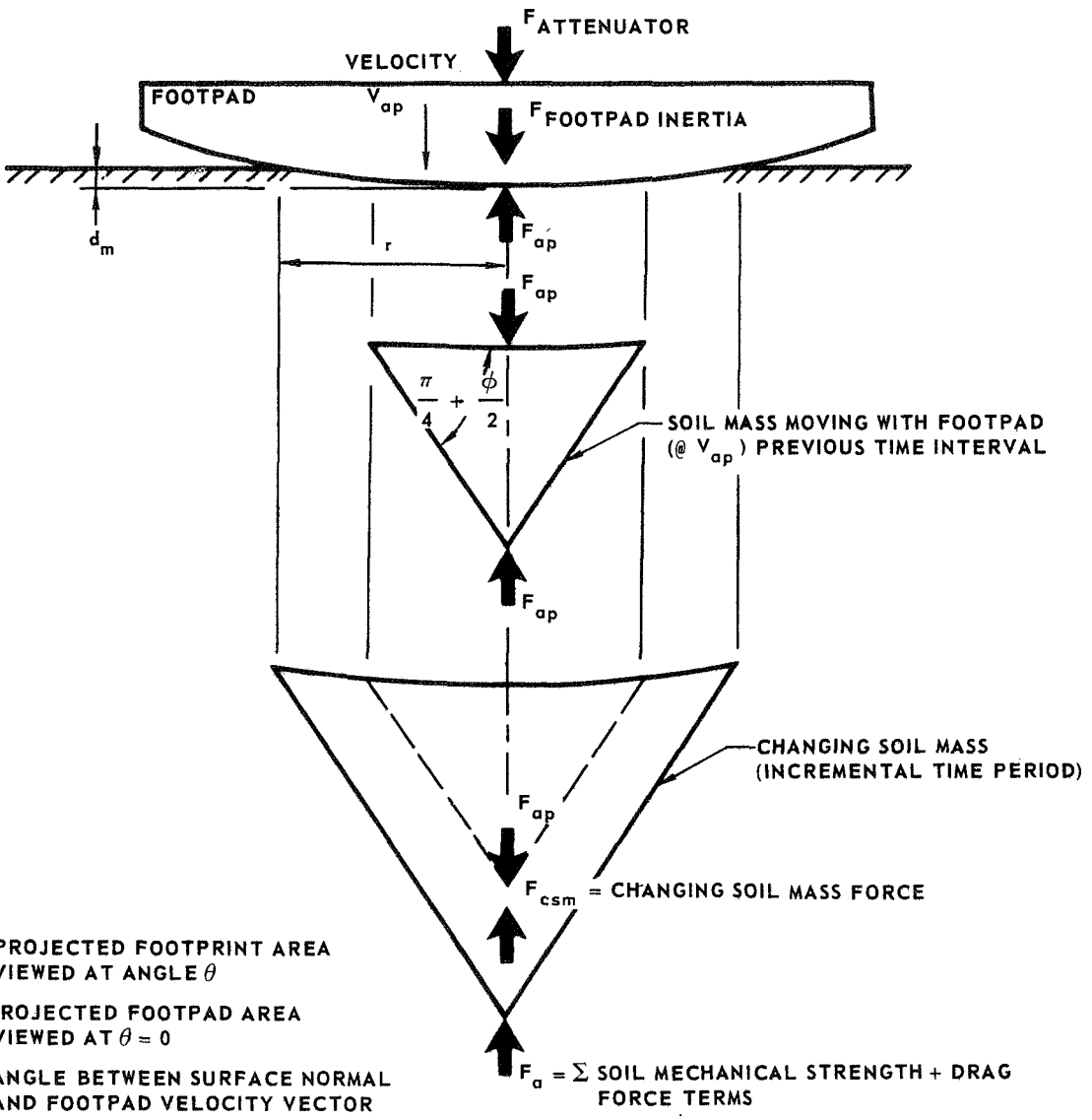

A_{ft} = PROJECTED FOOTPRINT AREA VIEWED AT ANGLE θ

A_{ftm} = PROJECTED FOOTPAD AREA VIEWED AT $\theta = 0$

θ = ANGLE BETWEEN SURFACE NORMAL AND FOOTPAD VELOCITY VECTOR

FOR CLARITY, $\theta = 0$ ON FIGURE SHOWN

$$\left.\begin{aligned} F_a &= C_{ms}\,\rho\, g\, d_m\, A_{ft} + C_d\,\rho\, A_{ft}\, V_{ap}^2 \\ F_{csm} &= \frac{dM_s}{dt}(V_{as}) = 3\,\eta\rho\, r^2 \left(\frac{A_{ft}}{A_{ftm}}\right)^{3/2} V_{ap}^{\;2} \cos\theta \\ F_{ap} &= F_{csm} + F_a \end{aligned}\right\} \text{REFERENCE (9)}$$

Figure 7.1–10

LIST OF SYMBOLS
PRIMARY SOIL MECHANICS ROUTINE

SYMBOL	DESCRIPTION	UNITS (ANGLE, A) (FORCE, F) (LENGTH, L) (TIME, T)
ρ	BULK MASS DENSITY OF SOIL (γ – SOIL UNIT WEIGHT – F/L^3)	FT^2/L^4
η	WEDGE SHAPE FACTOR FOR MOVING SOIL MASS	– – –
θ	ANGLE BETWEEN SURFACE NORMAL AND FOOTPAD ELEMENTAL AREA VELOCITY VECTOR SEE FIGURE 7.1–12.	A
ϕ	INTERNAL FRICTION ANGLE OF SOIL	A
λ	RATIO OF AXIAL TO NORMAL FORCE ON FOOTPAD	– – –
$A_{e\theta}$	ELEMENTAL FOOTPAD AREA (VIEWED AT ANGLE θ) PROJECTED ON PLANE NORMAL TO VELOCITY VECTOR. SEE FIGURE 7.1–12.	L^2
A_{ef}	ELEMENTAL FOOTPAD AREA (VIEWED AT 90° FROM $A_{e\theta}$ IN SAME DIRECTION AS F_{ne}) PROJECTED ON PLANE NORMAL TO VIEWING ANGLE. SEE FIGURE 7.1–12.	L^2
A_{efm}	ELEMENTAL FOOTPAD AREA (VIEWED IN DIRECTION DEFINED BY THE LINE RESULTING FROM INTERSECTION OF 2 PLANES: $\theta = \pi/2$ PLANE AND PLANE DEFINED BY INTERSECTION OF SURFACE NORMAL AND VELOCITY VECTOR) PROJECTED ON PLANE NORMAL TO VIEWING ANGLE. SEE FIGURE 7.1–12.	L^2
A_{eg}	ELEMENTAL FOOTPAD AREA (VIEWED AT ANGLE $\theta = 0$) PROJECTED ON PLANE NORMAL TO VIEWING ANGLE. SEE FIGURE 7.1–12.	L^2
A_{em}	ELEMENTAL FOOTPAD AREA (VIEWED PERPENDICULAR TO THE LOCAL FOOTPAD SURFACE) PROJECTED ON PLANE NORMAL TO VIEWING ANGLE. SEE FIGURE 7.1–12.	L^2
C_D	DRAG COEFFICIENT	– – –
C_{ms}	SOIL DYNAMIC MECHANICAL STRENGTH COEFFICIENT	– – –
d	PENETRATION OF ELEMENTAL FOOTPAD AREA PERPENDICULAR TO GROUND PLANE. SEE FIGURE 7.1–12.	L
d_m, d_m'	DEEPEST FOOTPAD PENETRATION PERPENDICULAR TO GROUND PLANE SEE FIGURE 7.1–12.	L
dd/dt	CHANGE IN ELEMENT SOIL PENETRATION WITH RESPECT TO TIME EQUAL TO $V_e \cos\theta$	L/T
dr/dd	CHANGE IN FOOTPRINT RADIUS WITH RESPECT TO PENETRATION (AT POINT ON FOOTPAD AT HEIGHT D_m ABOVE CENTER OF FOOTPAD)	– – –
dM_e/dr	CHANGE IN ELEMENTAL SOIL MASS WITH RESPECT TO FOOTPRINT RADIUS	FT^2/L^2
dV_e/dt	CHANGE IN ELEMENT VELOCITY WITH RESPECT TO TIME = ACCELERATION	L/T^2
D_r	RELATIVE DENSITY OF SOIL (NO COMPACTION, $D_r = 0$; MAXIMUM COMPACTION, $D_r = 1$)	– – –
$f(\theta)$	FUNCTION DEFINING EFFECT OF θ ON C_D	– – –
F_{ae}	ELEMENTAL AXIAL FORCE ON FOOTPAD (OPPOSING VELOCITY VECTOR)	F
F_{ne}	ELEMENTAL NORMAL FORCE ON FOOTPAD (NORMAL TO VELOCITY VECTOR) IN PLANE DEFINED BY SURFACE NORMAL AND VELOCITY VECTOR, ALWAYS DIRECTED OUT OF SOIL	F
F_s	SOIL FORCE OPPOSING THE MOTION OF THE ELEMENTAL SOIL MASS	F
g	LOCAL GRAVITATIONAL ACCELERATION	L/T^2
g_e	EARTH GRAVITATIONAL ACCELERATION	L/T^2
^1M_e	ELEMENTAL SOIL STAGNATION MASS ASSOCIATED WITH ELEMENTAL AREA	FT^2/L
r	RADIUS OF FOOTPRINT (FOOTPAD-GROUND PLANE INTERSECTION)	L
r_c	DISTANCE TO ELEMENTAL AREA FROM FOOTPRINT CENTER. SEE FIGURE 7.1–12	L
r_d	RADIUS AT POINT ON FOOTPAD AT HEIGHT d_m ABOVE FOOTPAD CENTER. SEE FIGURE 7.1–12.	L
r_m	MAXIMUM RADIUS OF FOOTPAD	L
V_e	PATH VELOCITY OF ELEMENTAL FOOTPAD AREA	L/T

Figure 7.1–11

SOIL FORCES ACTING ON ELEMENTAL CONTROL AREA

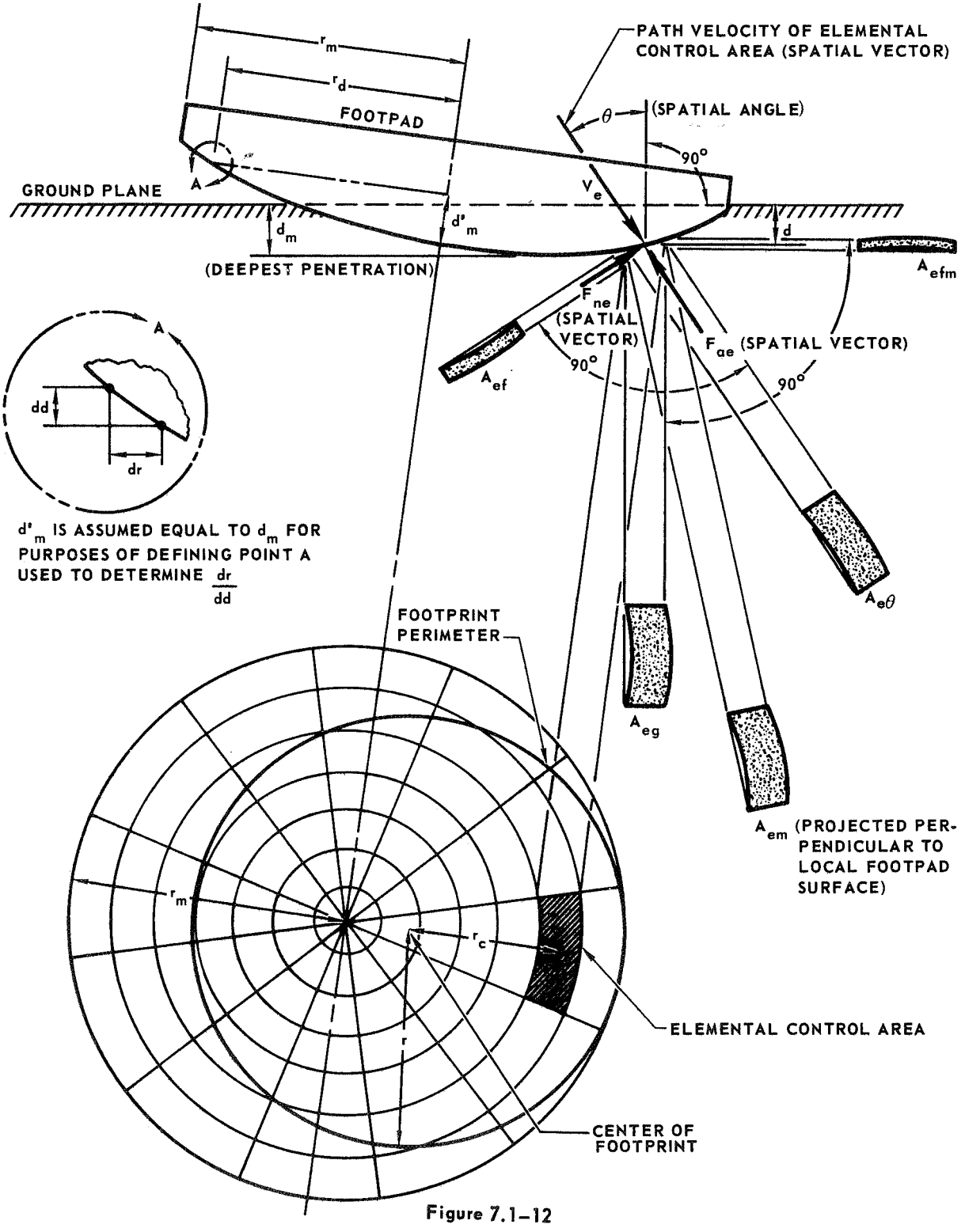

Figure 7.1–12

DIAGRAMATIC REPRESENTATION OF ELEMENTAL SOIL FORCES

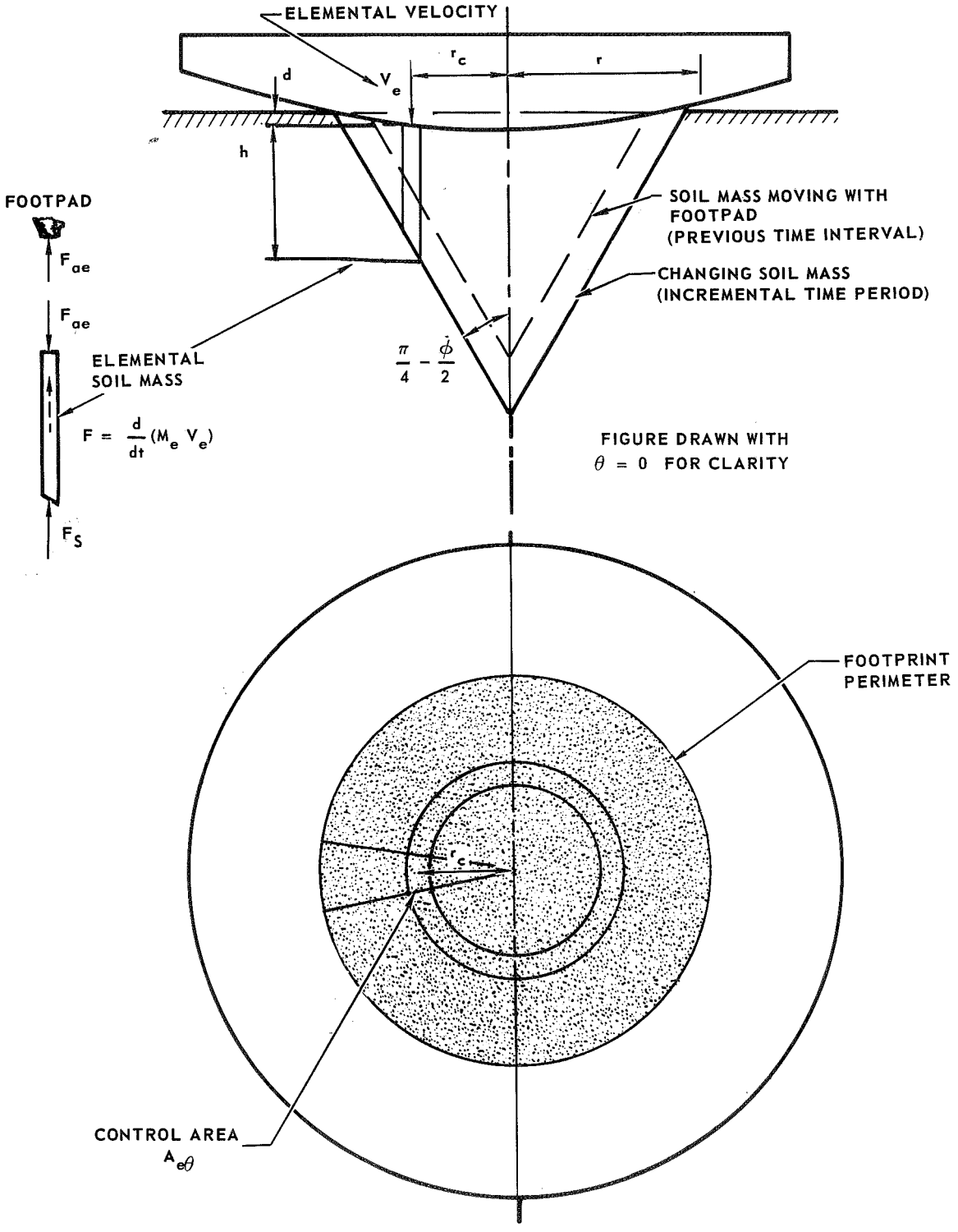

Figure 7.1–13

DERIVATION OF ELEMENTAL SOIL MASS

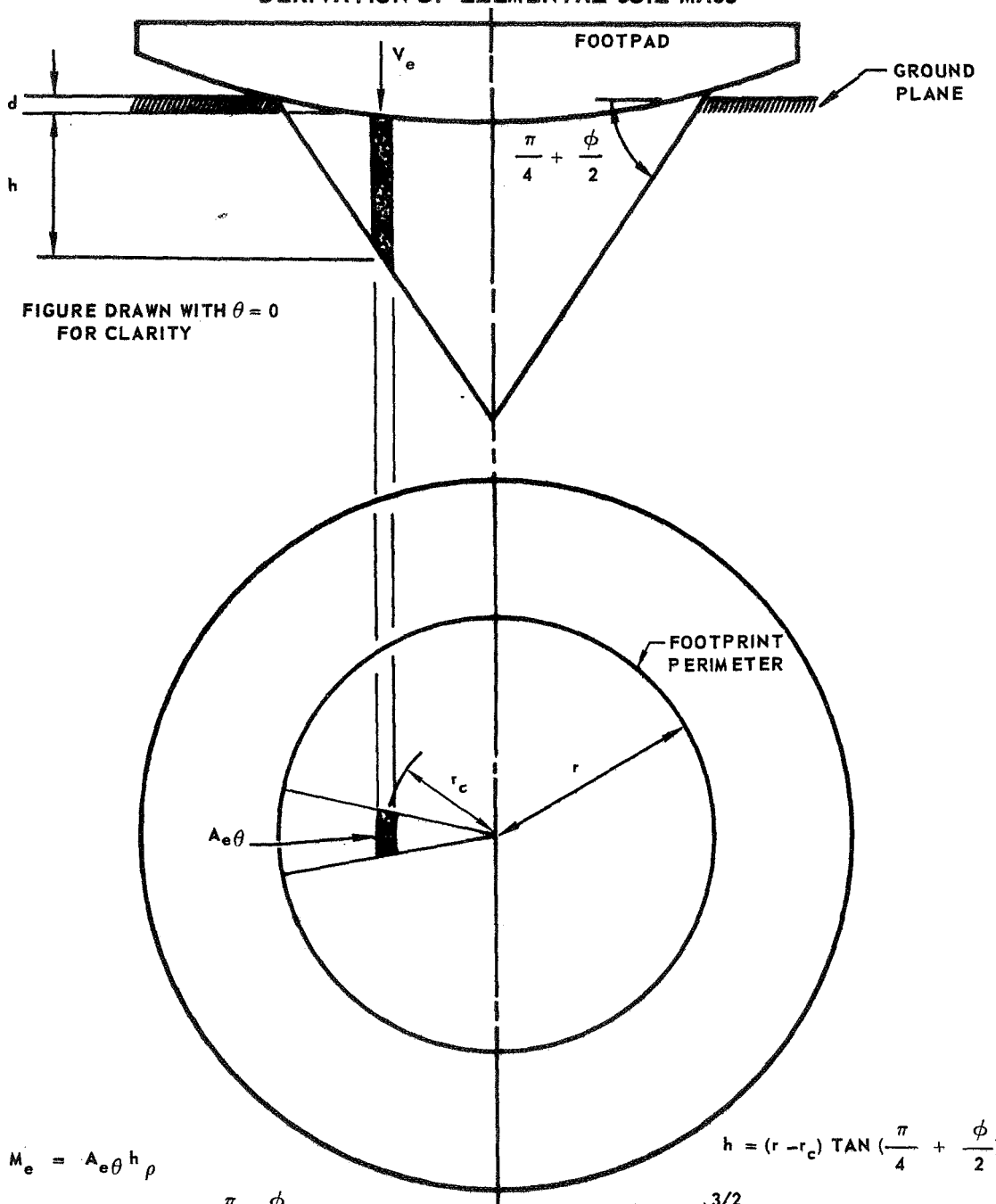

$$M_e = A_{e\theta}\, h\, \rho$$

$$h = (r - r_c)\ \mathrm{TAN}\left(\frac{\pi}{4} + \frac{\phi}{2}\right) - d$$

$$M_e = (r - r_c)\ \mathrm{TAN}\left(\frac{\pi}{4} + \frac{\phi}{2}\right) A_{e\theta}\ \rho - d\, A_{e\theta}\, \rho$$

THE TERM $\left(\frac{A_{e\theta}}{A_{em}}\right)^{3/2}$ ACCOUNTS FOR THE EFFECT OF THE ANGLE θ

$$\eta = \frac{\pi}{3}\left(1 + \mathrm{TAN}\,\frac{\phi}{2}\right) \div \left(1 - \mathrm{TAN}\,\frac{\phi}{2}\right)$$

$$M_e = \frac{3}{\pi}\, \eta \rho\, A_{e\theta} (r - r_c) \left(\frac{A_{e\theta}}{A_{em}}\right)^{3/2} - A_{e\theta}\, \rho\, d$$

Figure 7.1–14

Coefficients C_{ms} and C_D, representing the soil dynamic mechanical strength and drag coefficients respectively, are semi-empirical factors determined from test and discussed further in later paragraphs.

Change in elemental momentum with respect to time, $\frac{d}{dt}(M_eV_e)$, is evaluated through differentiation by parts:

$$\frac{d}{dt}(M_eV_e) = (\frac{dM_e}{dt})V_e + M_e(\frac{dV_e}{dt}) \tag{7-33}$$

As in Reference (9) analysis, the term $M_e(\frac{dV_e}{dt})$ is assumed to be zero. The term $\frac{dM_e}{dt}V_e$ represents the force due to changing soil mass and may be re-written in the following form.

$$\frac{dM_e}{dt}(V_e) = \frac{dM_e}{dr}(\frac{dr}{dd})(\frac{dd}{dt})V_e \tag{7-34}$$

The change in mass with respect to footprint radius, $\frac{dM_e}{dr}$, is obtained by differentiating the following expression for the elemental mass.

$$M_e = \frac{3}{\pi}\eta\rho A_{e\theta}(r-r_c)\left(\frac{A_{e\theta}}{A_{em}}\right)^{3/2} - A_{e\theta}\rho d \tag{7-35}$$

$$\frac{dM_e}{dr} = \frac{3}{\pi}\eta\rho A_{e\theta}\left(\frac{A_{e\theta}}{A_{em}}\right)^{3/2} - A_{e\theta}\rho\frac{dd}{dr} \tag{7-36}$$

Soil mass dimensionless wedge shape factor, η, is a function of angle of internal friction of the soil, and is discussed further in the section on semi-empirical relationships. The term $(A_{e\theta}/A_{em})^{3/2}$ accounts for the effect

of angle θ. Change in footprint radius with respect to depth of the footpad, dr/dd, is defined by footpad geometry at height d_m above the center of the footpad (where d_m is the deepest footpad penetration perpendicular to the ground plane) as shown in Figure 7.1-12. The term dd/dt is equal to the component of the elemental velocity, $V_e \cos \theta$. Equation (7-34) may now be rewritten as follows.

$$\frac{dM_e}{dt}(V_e) = \frac{3}{\pi} \eta \rho A_{e\theta} \left(\frac{dr}{dd}\right) V_e^2 \operatorname{Cos} \theta \left(\frac{A_{e\theta}}{A_{em}}\right)^{3/2} - \rho A_{e\theta} V_e^2 \operatorname{Cos} \theta \qquad (7\text{-}37)$$

Axial force on an elemental footpad area is therefore determined by substitution of Equations (7-32) and (7-37) into Equation (7-31).

$$\left\{ C_{ms}\, gd + V_e^2 \left[C_d + \frac{3}{\pi} \eta \left(\frac{dr}{dd}\right) \left(\frac{A_{e\theta}}{A_{em}}\right)^{3/2} \operatorname{Cos} \theta - \operatorname{Cos} \theta \right] \right\} \qquad (7\text{-}38)$$

Footpad flexibility effects are included in determining values of d, V_e, and θ in this equation.

The force acting on a footpad elemental area normal to the velocity vector is:

$$F_{ne} = \lambda F_{ae} \qquad (7\text{-}39)$$

This force is always directed out of the soil and is in the plane defined by the surface normal and the velocity vector. The semi-empirical relationship λ is discussed in the paragraphs defining semi-empirical relationships.

When the spatial angle (angle θ in Figure 7.1-12) defining the direction of velocity of an elemental area is 135 degrees or greater, the soil forces acting on that area are assumed to be zero.

Forces F_{ae} and F_{ne} on each elemental footpad area are resolved into the Footpad Coordinate System for use in determining the dynamic motion of the footpad.

Semiempirical relationships are determined in terms of the soil properties from impact and drag tests conducted during the LM study. Properties of eleven soils are described in Figure 7.1-15. The most significant of these properties are: unit weight, γ (bulk mass density, ρ times g); relative density, D_r; the angle of internal friction, ϕ; and, to a lesser degree, the elastic modulus of the soil, E. Based on results reported in Reference (9), the properties γ, D_r, and ϕ are adequate to describe the soil for landing dynamics and are used in the present study. In this study, the semiempirical relationships for C_{ms}, C_D, λ, and η used for the Surveyor footpad, are applied to each elemental control area to allow determination of elemental soil forces. These relationships are presented in Figure 7.1-16.

7.1.4.2 Secondary Soil Mechanics Method - An alternate soil mechanics routine is available in the Landing Loads and Motions Program. An input value of NTYPE equal to 1 requests this routine. This method determines the pressure acting on an elemental control area in terms of the depth of penetration of the area. The pressure-penetration relationship is defined as shown in Figure 7.1-17. Initially the soil pressure increases linearly from zero at zero penetration to a selected pressure at a specified cutoff depth. Beyond this depth, the pressure remains constant.

PROPERTIES OF SOILS

NO.	BENDIX DESIGNATION	DESCRIPTION	RELATIVE DENSITY D_r	UNIT WEIGHT γpcf ⊛	FRICTION ANGLE ϕ deg.	ELASTIC MODULUS E,PSI *	GRAIN SIZE PARAMETERS			
							MEAN SIZE $\mu_w$mm	UNIFORM COEFF C_μ	%** −200	*** D_{95} mm
1	RS LOOSE	RED CRUSHED VOLCANIC SCORIA (NARROWLY GRADED)	0	41.4	40	5,500	1.8	1.7	<3	2.7
2	PS LOOSE	WHITE CRUSHED PUMICE (NARROWLY GRADED)	0	23.8	43	4,500	1.8	1.7	<3	2.7
3	RS INTER	RED CRUSHED VOLCANIC SCORIA (NARROWLY GRADED)	.45	45.9	44.5	8,600	1.8	1.7	<3	2.7
4	RS DENSE	RED CRUSHED VOLCANIC SCORIA(NARROWLY GRADED)	.80	50.6	47.3	10,900	1.8	1.7	<3	2.7
5	RSM-a LOOSE	MIXTURE OF RS AND CRUSHED MARBLE (MS) (NARROWLY GRADED)	0	58.2	37	7,800	2.4	1.6	<3	2.7
6	RC2 LOOSE	RED CRUSHED VOLCANIC SCORIA(BROADLY GRADED)	0	61.4	43	8,000	1.1	17.0	11	4.7
7	SS LOOSE	WHITE SILICA SAND (WEDRON 40 40– NARROWLY GRADED)	0	94.7	29	10,000	0.4	1.3	0	0.52
8	SS INTER.	WHITE SILICA SAND (WEDRON 40 40– NARROWLY GRADED)	.53	104	36.8	18,000	0.4	1.3	0	0.52
9	SS DENSE	WHITE SILICA SAND (WEDRON 40 40– NARROWLY GRADED)	.69	107	39	24,000	0.4	1.3	0	0.52
10	LSM INTER.	MIXTURE OF RC AND AIR-FLOATED CLAY	.50	77.5	42	4,000	.07	LARGE	51	4
11	LSM DENSE	MIXTURE OF RC AND AIR-FLOATED CLAY	.70	82	42	6,000	.07	LARGE	51	4
12	RSM–b DENSE	MIXTURE OF RS AND CRUSHED MARBLE (MS) (NARROWLY GRADED)	.75	85	48	20,000	2.15	1.87	<1	2.9

* MEASURED BY SONIC MEANS AT 4 PSI CONFINING PRESSURE.
** PERCENT OF MATERIAL (BY WEIGHT) PASSING THRU A NO. 200 SIEVE (ACS).
*** DIAMETER AT 95% "SMALLER THAN" POINT IN STANDARD SIEVE ANALYSIS.

⊛ TO OBTAIN BULK MASS DENSITY OF SOIL, ρ, DIVIDE γ BY EARTH ACCELERATION OF GRAVITY.
THIS INFORMATION OBTAINED FROM REFERENCE (8).

Figure 7.1–15

SEMI-EMPIRICAL SOIL RELATIONSHIPS

$$C_{ms} = 29\, e^{1.4\, D_r} \text{ TAN } \phi$$

$$C_D = .8 + \left(\frac{g}{g_e}\right)(4 + 80\, D_r)\left(\frac{r_d}{r_m}\right)^2 f(\theta) \text{ TAN } \phi \qquad \text{FOR } D_r < .5$$

$$C_D = .8 + 4\left(\frac{g}{g_e}\right) e^{4.83\, D_r} \left(\frac{r_d}{r_m}\right)^2 f(\theta) \text{ TAN } \phi \qquad \text{FOR } D_r \geq .5$$

$$f(\theta) = 1 - \frac{2\theta}{\pi} \qquad \text{FOR } 0 \leq \theta < \frac{\pi}{2}$$

$$f(\theta) = 0 \qquad \text{FOR } \theta \geq \frac{\pi}{2}$$

$$\lambda = .25 \left(\frac{A_{ef}}{A_{e\theta}}\right)(1 - e^{-50\,\theta})(1 + \text{SIN}\,\theta) \qquad \text{FOR } 0 \leq \theta < \frac{\pi}{2}$$

$$\lambda = .50 \left(\frac{A_{eg}}{A_{efm}}\right) \qquad \text{FOR } \frac{3\pi}{4} > \theta \geq \frac{\pi}{2}$$

$$\lambda = 0 \qquad \text{FOR } \theta \geq \frac{3\pi}{4}$$

$$\eta = \frac{\pi}{3}\,\frac{(1 + \text{TAN } \phi/2)}{(1 - \text{TAN } \phi/2)}$$

Figure 7.1–16

SOIL PRESSURE AS A FUNCTION
OF DEPTH OF PENETRATION
(SECONDARY SOIL MECHANICS)

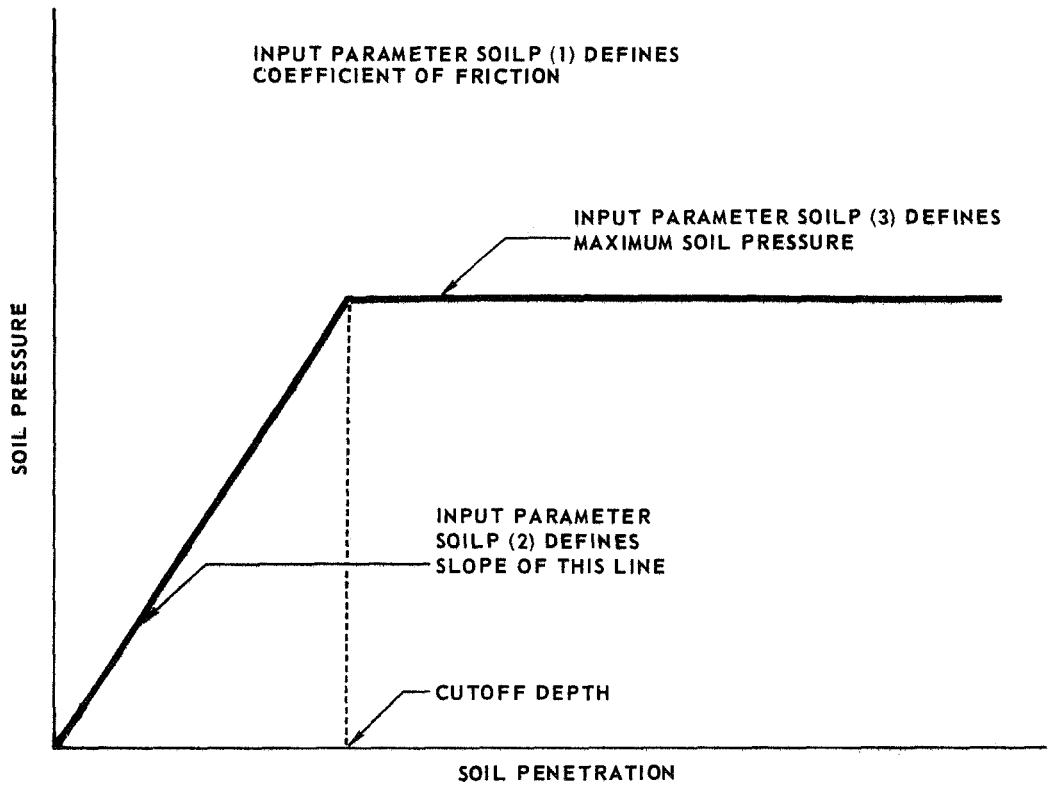

Figure 7.1–17

The soil force acting on the elemental control area normal to the landing surface, is the product of pressure determined from the relationship shown in Figure 7.1-17 and the respective area. A friction force, acting in the plane of the landing surface, is obtained by multiplying the normal force by the selected value for the coefficient of friction. This force is applied in a direction opposite to the component of the elemental control area's velocity in the plane of the landing surface.

7.1.5 Footpad Attenuation - An additional attenuation system may be located on the bottom of the footpad to limit the landing loads of the footpad. Provisions have been made for including crushable material on any or all of the conical segments used to represent the footpad shape. The amount of attenuation material crushing for each elemental control area is determined by the balance of the attenuator force and the soil force. The footpad attenuation system may be included with either the Primary or Secondary Soil Mechanics Methods.

Forces associated with the footpad attenuation system are determined in the soil mechanics subroutine. Control points used in the soil mechanics routine, are also used in determining the footpad attenuation system forces. Coordinates of each elemental control area, EX, EY, and EZ, are modified to account for the thickness of the footpad attenuation material.

The load-stroke relationship for the footpad attenuator is shown in Figure 7.1-18. The attenuator is crushed, either elastically or plastically, in a direction normal to the elemental control area. Unloadings, or additional loadings due to second impact, occur along lines such as BE in Figure 7.1-18. When the attenuator material is fully crushed, point C Figure 7.1-18, the load

CRUSHING CHARACTERISTICS OF FOOTPAD ATTENUATION SYSTEM

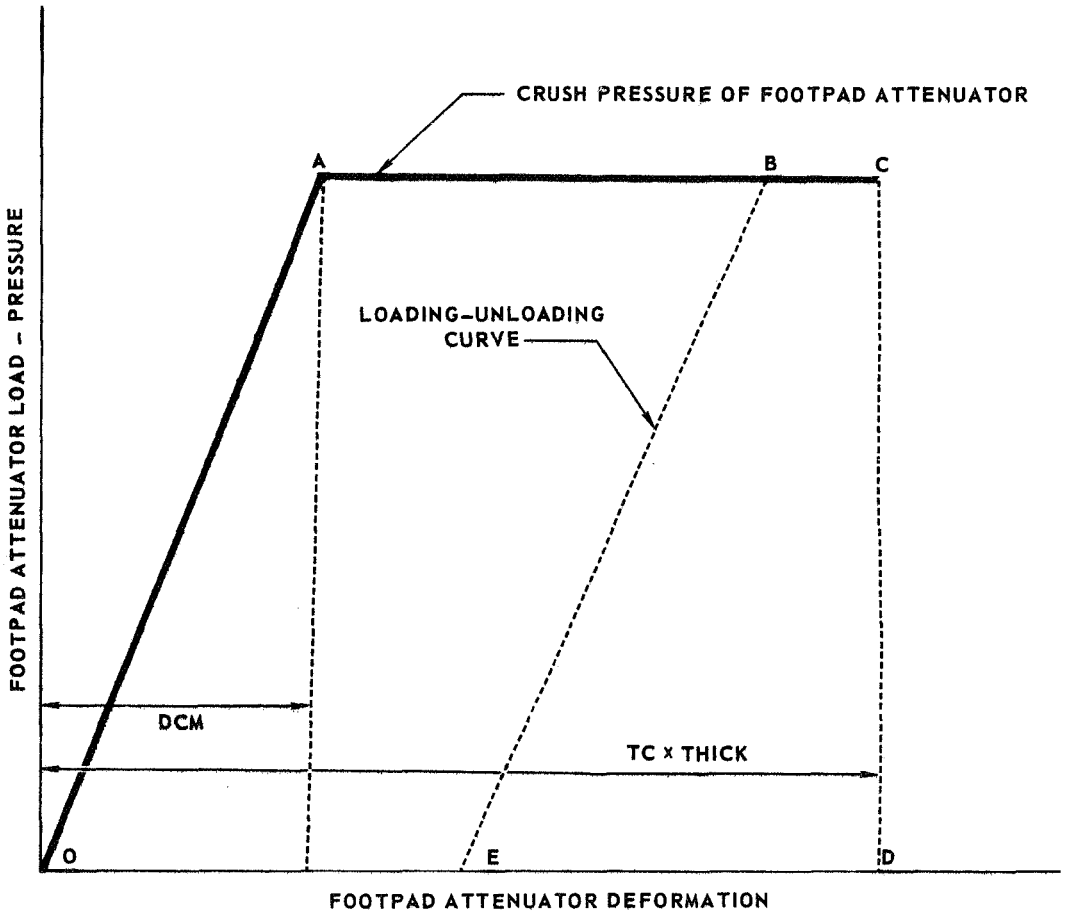

DCM = DISTANCE DEFINING ELASTIC PORTION OF FOOTPAD ATTENUATOR PRESSURE - DEFORMATION RELATIONSHIP

THICK = THICKNESS OF FOOTPAD ATTENUATION MATERIAL

TC = PERCENTAGE OF THICKNESS WHICH MAY BE CRUSHED

Figure 7.1-18

in the attenuator goes to zero along CD and the soil forces are applied directly to the footpad.

An elemental control area in contact with the landing surface is shown in Figure 7.1-19. The depth of soil penetration and amount of attenuator crushing, are determined by comparing the crush force with the soil force. With a soft soil and a hard footpad attenuation material, most of the deformation will take place in the soil. For a very hard soil, a majority of the deformation will occur in the attenuator material, until complete crushing. Intermediate values result in deformation of both the soil and attenuator materials.

The footpad attenuation portion of the analysis is bypassed when complete crushing of the attenuator for a given elemental area occurs. At the end of a time interval, the attenuator thickness and control point positions of each elemental control area which experiences crushing are adjusted to reflect these deformations. This is done by subtracting the appropriate portion of the crush distance from each of the coordinates locating the elemental control area. Thus, if the lander rebounds, the crushed shape of the footpad attenuator is retained for the next impact.

INTERACTION BETWEEN SOIL AND
FOOTPAD ATTENUATION MATERIAL

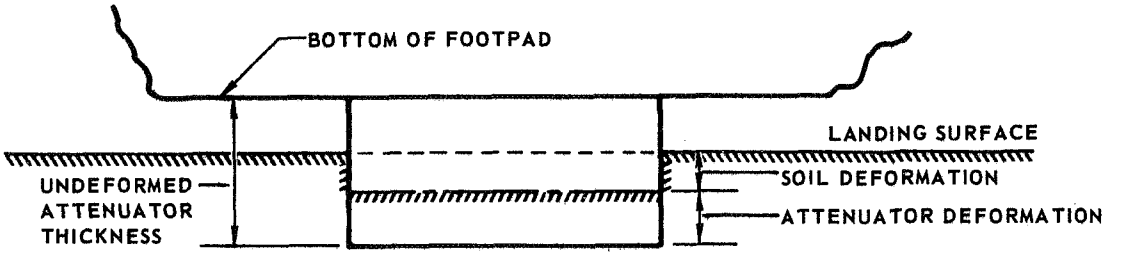

Figure 7.1–19

7.2 PROGRAM DESCRIPTION - The Landing Loads and Motions Program is best described by discussing program capabilities, defining functions of subroutines, and examining program organization as presented in a flow diagram. A listing of the program is given in Appendix G. All programming is in FORTRAN 2.0 for machine computation on CDC 6600 computers.

7.2.1 Program Capabilities - A maximum of 48 axial struts with pinned ends are available for representation of the attenuator located between the footpad and platform structure. Six struts simulate the structure supporting the secondary equipment item. All struts have elastic-plastic load-stroke characteristics which are initialized through program input data.

The footpad may be considered as either a rigid body or the effects of a flexible footpad structure may be included. The flexible footpad is represented as the superposition of a number of free-free vibratory modes. From one to five modes may be included in the analysis. Flexible footpad information can be input to program either on magnetic tape when obtained from the Structural Analysis Program or in punched card form.

Two soil mechanics routines are available for studying the footpad-soil interaction phenomenon. The first of these represents the soil in terms of a number of semiempirical relationships. The second determines the soil force through a simple elastic-plastic relationship between soil pressure and depth of soil penetration.

Optional output is available for defining the stroke of the attenuator and secondary equipment item struts. Accelerations at as many as six points on the footpad, payload, and secondary equipment item can be determined. These are in addition to those determined at the centers of gravity. Optional output

for defining the landing loads and acceleration patterns on the footpad is also available.

Two numerical integration methods are incorporated in the program. These are the constant step Predictor-Corrector and the Runge-Kutta method.

7.2.2 Subroutines - The Landing Loads and Motions Program is divided into three OVERLAY segments. Each segment consists of an executive subprogram and a number of subroutines as shown in Figure 7.2-1. This organization is required to stay within the allotted core storage requirements. Three subroutines have two entry points, as indicated in Figure 7.2-1. The function of the subroutine, depending on the point of entry, is also defined.

OVERLAY(0) consists of the executive subprogram LLMP and the two subroutines RETRO and PARA. LLMP calls the other two overlays in the proper order and contains all of the COMMON blocks. RETRO and PARA are not used in the current program makeup. They are skeleton routines which have been provided for the possible inclusion of retro rocket or parachute considerations.

INITIAL is the executive subprogram in OVERLAY(1). This segment of the program reads and prints the input data, determines the initial position of the lander, and initializes all the routines before integration of the equations of motion.

INTLOP is the executive subprogram in OVERLAY(2). It controls the solution of the equations of motion. Subroutines in this segment of the program determine the forces in the attenuator, secondary equipment item struts, footpad attenuation system, and determines the soil forces. These forces are summed on the various components, resulting accelerations determined, equations of motion integrated, and time history quantities

LANDING LOADS AND MOTIONS PROGRAM SUBROUTINES AND SUBPROGRAMS

SUBPROGRAM NAME	SUBROUTINE NAME	ENTRY POINT	SUBPROGRAM LOCATION	SUBROUTINE OR SUBPROGRAM OPERATIONS
LLMP			OVERLAY (0)	MAIN EXECUTIVE SUBPROGRAM. CONTAINS THE COMPLETE SET OF COMMON.
	RETRO	RETRO		DETERMINES FORCES DUE TO RETRO ROCKETS (PRESENTLY THIS IS A DUMMY ROUTINE).
		RETRO1		INITIALIZES RETRO ROCKET ROUTINE.
	PARA	PARA		DETERMINES FORCES DUE TO PARACHUTE (PRESENTLY THIS IS A DUMMY ROUTINE).
		PARA1		INITIALIZES PARACHUTE ROUTINE.
INITIAL			OVERLAY (1)	EXECUTIVE PROGRAM IN OVERLAY (1).
	INPUT	INPUT		READS INPUT DATA. DETERMINES IF AMOUNT OF INPUT DATA IS CONSISTENT WITH INPUT CONTROL INDICATORS. IF NOT, THE PROGRAM IS TERMINATED.
	XTRA	XTRA		PRINTS INPUT DATA.
		XTRCAL		PRINTS LANDER INITIAL CONDITIONS.
	INIT	INIT		INITIALIZES PROGRAM FOR SOLUTION OF EQUATIONS OF MOTION
	FPAREA	FPAREA		SETS UP FOOTPAD GROUND CONTROL POINTS AND CORRESPONDING ELEMENTAL AREAS.
	TRAMOD	TRAMOD		DETERMINE MAGNITUDES OF FOOTPAD MODE SHAPES AT GROUND CONTROL POINTS. (ONLY CALLED IF FLEXIBLE FOOTPAD.)
	SOLVE	SOLVE		CALLED BY TRAMOD TO SOLVE SIMULTANEOUS EQUATIONS.
INTLOP			OVERLAY (2)	EXECUTIVE PROGRAM IN OVERLAY (2).
	MASTER	MASTER		INTEGRATES EQUATIONS OF MOTION.
	ACCEL	ACCEL		SUMS FORCES AND MOMENTS ACTING ON LANDER. DETERMINES ACCELERATIONS FOR INTEGRATION ROUTINE.
	STROKE	STROKE		DETERMINES FORCES DUE TO STROKING OF STRUTS.
	FPSOIL	FPSOIL		DETERMINES FORCES DUE TO FOOTPAD-SOIL INTERACTION AND FOOTPAD ATTENUATION SYSTEM.
	OUTPUT	OUTPUT		PRINTS TIME HISTORY INFORMATION AND SUMMARY AT END OF DATA SET.

Figure 7.2-1

printed. At the completion of a time history, program control is returned to OVERLAY(1) for the possible consideration of an additional data set.

7.2.3 Flow Diagram - A flow diagram showing the general operation of the Landing Loads and Motions Program is presented in Figure 7.2-2. The three OVERLAY segments are shown in addition to the various subprograms and subroutines which are located in each OVERLAY. This diagram is not intended to be a comprehensive programming chart, but shows the general flow of the program logic and indicates the order of operations within each subroutine. A complete listing of the Landing Loads and Motions Program is given in Appendix G.

FLOW DIAGRAM
LANDING LOADS AND MOTIONS PROGRAM
(OVERLAY (0))

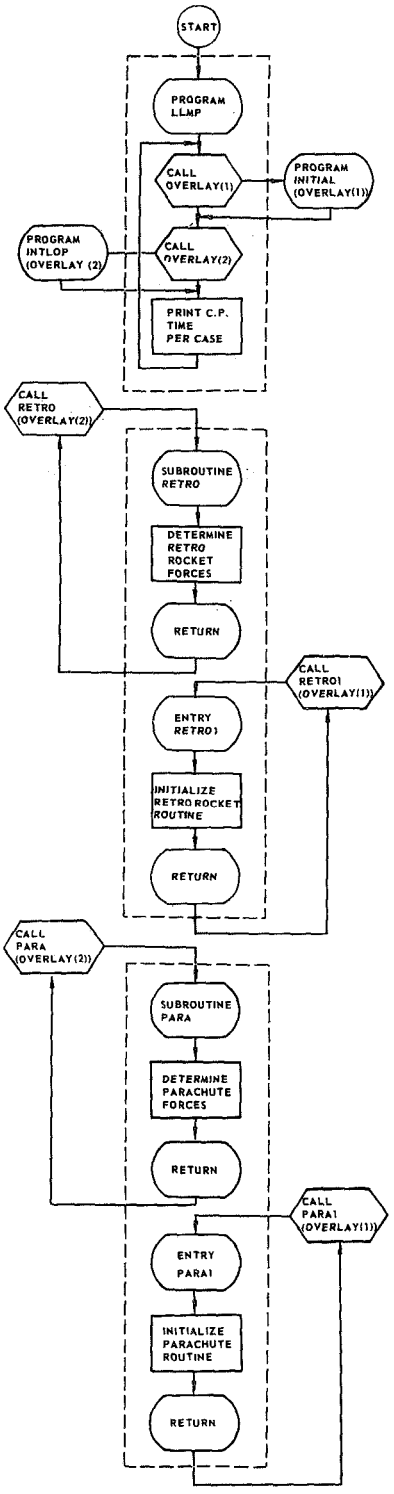

Figure 7.2–2

FLOW DIAGRAM
LANDING LOADS AND MOTIONS PROGRAM
(OVERLAY (1))

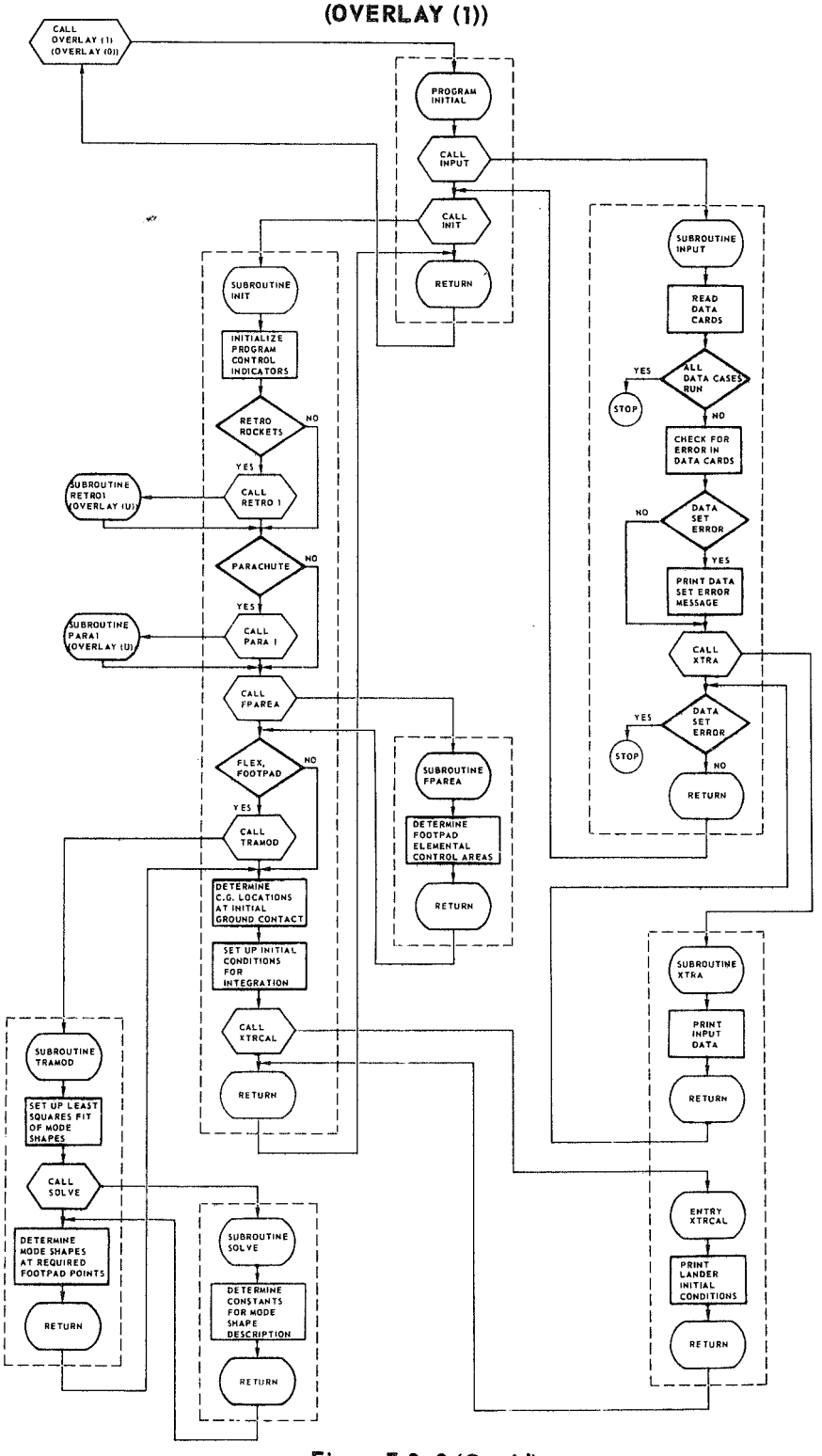

Figure 7.2–2 (Cont'd)

FLOW DIAGRAM
LANDING LOADS AND MOTIONS PROGRAM
(OVERLAY (2)

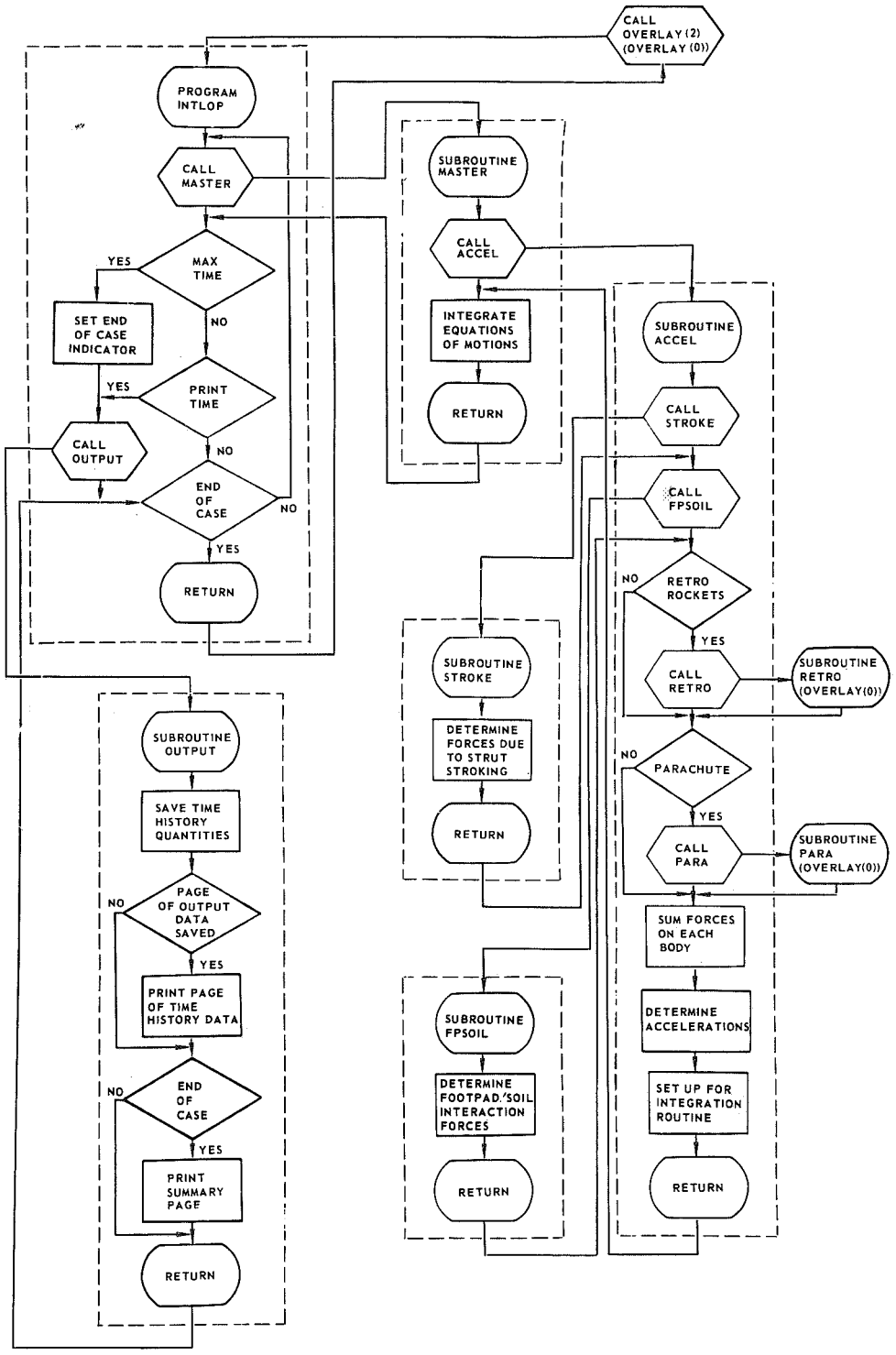

Figure 7.2–2 (Cont'd)

7.3 PROGRAM OPERATION - Successful operation of the Landing Loads and Motions Program depends on proper input of data and correct interpretation of output data. These considerations are discussed in the following paragraphs. Examples of required input data and resulting output data for a typical landing condition are given in Appendix E.

7.3.1 Input Data - Information describing the geometric and inertia properties of the specific lander to be studied; initial lander attitudes; linear and rotational velocities; surface conditions such as ground slope and soil properties; and the indicators needed to control the program's operation are required as input data. This section defines the format of the input data cards and contains instructions for properly supplying input data to the program.

Figure 7.3-1 shows the required format for the input data cards. Columns 6 through 8 contain a card number, which must be right justified. Input data is placed in floating point form in columns 11-20, 21-30, 31-40, 41-50, 51-60, and 61-70. The data need not be right justified, but must be contained entirely within the field of 10 columns provided. Columns 71-80 may be used for sequence numbers, identification statements, or comments. Following the last card of a data set, a card with NEXT in columns 1 through 4, must appear. Multiple cases may be run by stacking the data sets. The data cards for any additional data sets follow the first data set, and each of these are terminated with a NEXT in columns 1 through 4. A card with STOP in columns 1 through 4 signals the end of all the data sets.

There are a number of indicators and counters which check the input data as it is read to ensure that the correct amount of information has been input. If the number of data cards is incorrect, the run will be terminated

INPUT DATA FORMAT LANDING LOADS AND MOTIONS PROGRAM

1	ISERNO					
2	RXVELO	RYVELO	RZVELO	WXO	WYO	WZO
3	ZETAO	PSIO	THTAO	PHIO	G	GE
4	HSX1	HSY1	HSZ1	HCX1	HCY1	HCZ1
5	PLM	SEQM	FPM			
6	UXX	UYY	UZZ	UXY	UXZ	UYZ
7	UCXX	UCYY	UCZZ	UCXY	UCXZ	UCYZ
8	USXX	USYY	USZZ			
9	DT	TMAX	NPRINT	NOFOR		
10	NSPC	NCPC	NORUN	IINP		
110	NSPS(I)	NSPS(I)	NSPS(I)	NSPS(I)	NSPS(I)	NSPS(I)
11	KA1					
12	KA					
112	RINGX(I)	RHO(I)	NI(I)			
13	NTYPE					
14	SOILP(1)	SOILP(2)	SOILP(3)			
114	SLGTH(1,I)	FC(1,I)	SLGTH(2,I)	FC(2,I)	SLGTH(3,I)	FC(3,I)
15	LM	LMDAMP	VISLM	CTLM	SHCLM	SHCLMT
16	IRET					
116	XL1(I)	YL1(I)	ZL1(I)	XM2(2)	YM2(2)	ZM2(2)
216	COEF(1,I)	COEFT(1,I)	FFLM(I)	FFLMT(I)		
17	JK	JKDAMP	VISJK	CTJK	SHCJK	SHCJKT
117	XK1(I)	YK1(I)	ZK1(I)	XJ3(I)	YJ3(I)	ZJ3(I)
217	COEF(2,I)	COEF(2,I)	FFJK(I)	FFJKT(I)	FFJKT(I)	
18	NPAR					

Figure 7.3-1

INPUT DATA FORMAT LANDING LOADS AND MOTIONS PROGRAM (Continued)

Cols 1-6	7-10	11-20	21-30	31-40	41-50	51-60	61-72
1	18	PLGNOF	PK	FPX	FPY	FDZ	PHITE
2	18	PXVEL	PYVEL	PZVEL	APX1	APY1	APZ1
	19	NRR					
1	19	RRRX1(1)	RRY1(1)	RRZ1(1)	RRX2(1)	RRY2(1)	RRZ2(1)
2	19	TYM(1,1)	TYM(1,2)	TYM(1,3)	TYM(1,4)	TYM(1,5)	TYM(1,6)
3	19	THRR(1,1)	THR(1,2)	THRR(1,3)	THRR(1,4)	THRR(1,5)	THRR(1,6)
	20	IACCEL	NOACAP	NOACCH	NOACHS		
1	20	CAP(1,1)	CAP(2,1)	CAP(3,1)			
2	20	CCH(1,1)	CCH(2,1)	CCH(3,1)			
3	20	CHS(1,1)	CHS(2,1)	CHS(3,1)			
	21	NOMODE	NTCOR	MORDER			
1	21	NATT(1)	NATT(1)	NATT(1)	NATT(1)	NATT(1)	NATT(1)
2	21	COORD(1,1)	COORD(1,2)				
3	21	FPPHI(1,1)	FPPHI(1,2)	FPPHI(1,4)	FPPHI(1,5)		
4	21	OMEGA(1)	GM(1)				
5	21	WNX(1)	WNY(1)	WNZ(1)	PX(1)	PY(1)	PZ(1)
6	21	NDIAM(1,1)	NDIAM(2,1)	NDIAM(3,1)			
7	21	AMASS(1)	AMASS(1)	AMASS(1)	AMASS(1)	AMASS(1)	AMASS(1)
	22	INATT	TC	DCM	CFM		
	23	THICK(1)	THICK(2)	THICK(3)	THICK(4)	THICK(5)	THICK(6)
NEXT							
STOP							

Figure 7.3–1 (Cont'd)

and error messages printed to indicate where the data error occurred. In addition, the information required for studying an elastic footpad may be input either through punched cards or on magnetic tape. All of the indicators governing these input options are discussed in Figure 7.3-2.

Data cards for the first data set must contain all of the information required to initialize the first case as defined by data cards 1 through 23. The additional data, as determined by the input values of the indicators on these cards, appear on the higher numbered data cards. For following data sets, only the information which is to be different from the preceding case must be changed on the appropriate cards.

All input parameters and their associated data card number are shown in Figure 7.3-3. Many of these parameters are adequately explained in this figure, but a number require additional comments.

There is no specific system of units associated with the input information, except for the angular quantities which are expressed in degrees. All other parameters may be expressed in any consistent set of units, either English or Metric (inches or centimeters, pounds or grams).

The program is written in a manner which requires the angular positions of the lander coordinate systems relative to the Surface Coordinate System, be determined in the order of yaw (ψ), pitch (θ), and roll (ϕ). This order is important in determining the correct orientation of the lander at any point in time.

When including the effects of an elastic footpad structure, the indicator NOMODE (card 21) governs the number of footpad modes which are input. NORUN (card 10) governs the number of modes actually included in the analysis and may be less then NOMODE. Input data defining the footpad's mode shapes

INPUT DATA CONTROL INDICATORS
LANDING LOADS AND MOTIONS PROGRAM

CARD 9:

NPRINT	OUTPUT INDICATOR WHICH GOVERNS THE NUMBER OF INTEGRATION STEPS BETWEEN PRINT TIMES
NOFOR = 0	NO FOOTPAD LANDING LOADS OUTPUT FROM THE PROGRAM
NOFOR = 1	THE SOIL FORCES, ATTENUATOR FORCES, AND ACCELERATIONS AT THE STRUCTURAL ANALYSIS CONTROL POINTS OUTPUT FROM THE PROGRAM. THIS OUTPUT IS ON MAGNETIC TAPE.

CARD 10:

NSPC = 0	NO ATTENUATOR STRUT STROKE TIME HISTORIES TO BE PRINTED – NO DATA CARDS 110
NSPC > 0	NSPC IS THE NUMBER OF ATTENUATOR STRUT STROKE TIME HISTORIES TO BE PRINTED – ENOUGH DATA CARDS 110 MUST BE INPUT TO PROVIDE A TOTAL NUMBER OF NSPS (I)'S EQUAL TO NSPC. (48 MAXIMUM)
NCPC = 0	NO SECONDARY EQUIPMENT ITEM STRUT STROKE TIME HISTORIES TO BE PRINTED.
NCPC = 1	SIX SECONDARY EQUIPMENT ITEM STRUT STROKE TIME HISTORIES TO BE PRINTED.
NORUN = 0	RIGID FOOTPAD ASSUMED
NORUN > 0	NUMBER OF FOOTPAD MODES TO BE INCLUDED IN ANALYSIS (5 MAXIMUM)
IINP = 0	ELASTIC FOOTPAD ON CARDS 21,121,221,321,421,521, AND 721 ON PUNCHED CARDS
IINP = 1	ELASTIC FOOTPAD ON CARDS 21,121,221,321,421,521, AND 721 ON MAGNETIC TAPE

CARD 12:

KA IS NUMBER OF CONCIAL SEGMENTS USED TO REPRESENT FOOTPAD SHAPE (1 TO 6).
NUMBER OF 112 DATA CARDS MUST EQUAL KA + 1. NOTE THAT THE VALUE OF NI (I) ON THE LAST 112 DATA CARD IS NOT USED.

CARD 13:

NTYPE = 1	SECONDARY SOIL MECHANICS DATA ON CARD 14
NTYPE = 0	PRIMARY SOIL MECHANIC DATA ON CARD 14

CARD 114:

SIX OF THESE CARDS MUST BE INPUT.

CARD 15:

LM > 0	LM EQUALS THE NUMBER OF ATTENUATOR STRUTS INCLUDED IN THE ANALYSIS (48 MAXIMUM). THE NUMBER OF DATA CARDS 116 AND 216 MUST EQUAL LM.

CARD 17:

JK > 0	JK EQUALS THE NUMBER OF SECONDARY EQUIPMENT ITEM STRUCTURE STRUTS INCLUDED IN THE ANALYSIS (6 MAXIMUM). THE NUMBER OF DATA CARDS 117 AND 217 MUST EQUAL JK.

CARD 18:

NPAR = 0	THIS INDICATOR MUST BE ZERO. THERE IS NO PARACHUTE ROUTINE IN THE CURRENT VERSION OF THE PROGRAM. INCLUDE NO DATA CARDS 118 AND 218.

Figure 7.3-2

INPUT DATA CONTROL INDICATORS
LANDING LOADS AND MOTIONS PROGRAM (Continued)

CARD 19:

NRR = 0	THIS INDICATOR MUST BE ZERO. THERE IS NO RETROROCKET ROUTINE IN THE CURRENT VERSION OF THE PROGRAM. INCLUDE NO DATA CARDS 119,219, AND 319.

CARD 20:

IACCEL = 0	NO ACCELEROMETERS LOCATED ON THE FOOTPAD, PAYLOAD, OR SECONDARY EQUIPMENT ITEM. NO DATA CARDS 120,220, OR 320.
IACCEL = 1	ACCELEROMETER LOCATIONS TO BE INPUT. FOLLOWING INDICATORS GOVERN LOCATION AND NUMBER
NOACAP = 0	NO ACCELEROMETERS ON THE PAYLOAD. NO DATA CARDS 120 INPUT.
NOACAP > 0	NUMBER OF ACCELEROMETERS ON PAYLOAD (6 MAXIMUM). NUMBER OF DATA CARDS 120 MUST EQUAL NOCAP
NOACCH = 0	NO ACCELEROMETERS ON SECONDARY EQUIPMENT ITEM. NO DATA CARD 220 INPUT.
NOACCH > 0	NUMBER OF ACCELEROMETERS ON SECONDARY EQUIPMENT ITEM (6 MAXIMUM). NUMBER OF DATA CARD 220 MUST EQUAL NOACCH.
NOACHS = 0	NO ACCELEROMETERS ON FOOTPAD. NO DATA CARDS 320 INPUT
NOACHS > 0	NUMBER OF ACCELEROMETERS ON FOOTPAD (6 MAXIMUM). NUMBER OF DATA CARDS 320 MUST EQUAL NOACHS.

CARD 21:

NOMODE = 0	NO DATA CARDS 121, 221, 321, 421, 521, 621, 721 INPUT
NOMODE > 1	NUMBER OF FOOTPAD MODES TO BE INCLUDED IN INPUT DATA (5 MAXIMUM). NOTE THAT NOMODE MAY BE GREATER THAN OR EQUAL TO NORUN (CARD 10). NOMODE GOVERNS THE AMOUNT OF ELASTIC DATA TO BE INPUT WHILE NORUN GOVERNS THE NUMBER OF MODES TO BE INCLUDED IN THE ANALYSIS. THE NUMBER OF DATA CARDS 421, 521, AND 621 MUST EQUAL NOMODE.
NTCOR	NUMBER OF CONTROL POINTS USED TO DEFINE FOOTPAD MODE SHAPES NUMBER OF 221 DATA CARDS MUST EQUAL NTCOR AND THE NUMBER OF 321 DATA CARDS MUST EQUAL THREE TIMES NTCOR.
MORDER = 0	NO DATA CARDS 121 AND 721 READ IN.
MORDER > 0	NUMBER OF NATT (I)'S ON 121 DATA CARDS AND THE NUMBER OF AMASS (I)'S ON 721 DATA CARDS MUST EQUAL MORDER

CARD 22:

INATT = 0	NO FOOTPAD ATTENUATION
INATT = 1	FOOTPAD ATTENUATION (NOTE: IN BOTH OF THESE CASES, A CARD 23 MUST BE INPUT)

Figure 7.3-2 (Cont'd)

INPUT DATA – LANDING LOADS AND MOTIONS PROGRAM

CARD NO.	INPUT VARIABLE	COORDINATE SYSTEM*	VARIABLE DEFINITION
1	ISERNO		SERIES NUMBER OF RUN
2	RXVELO	S.C.S.	INITIAL VELOCITY OF PAYLOAD C.G., X DIRECTION
2	RYVELO	S.C.S.	INITIAL VELOCITY OF PAYLOAD C.G., Y DIRECTION
2	RZVELO	S.C.S.	INITIAL VELOCITY OF PAYLOAD C.G., Z DIRECTION
2	WXO	P.C.S.	INITIAL LANDER ANGULAR VELOCITY ABOUT X AXIS
2	WYO	P.C.S.	INITIAL LANDER ANGULAR VELOCITY ABOUT Y AXIS
2	WZO	P.C.S.	INITIAL LANDER ANGULAR VELOCITY ABOUT Z AXIS.
3	ZETAO		GROUND SLOPE-DEGREES
3	PSIO		INITIAL ANGULAR ROTATION OF P.C.S. ABOUT Z AXIS OF S.C.S. – DEGREES
3	THTAO		INITIAL ANGULAR ROTATION OF P.C.S. ABOUT Y AXIS OF S.C.S. – DEGREES
3	PHIO		INITIAL ANGULAR ROTATION OF P.C.S. ABOUT X AXIS OF S.C.S. – DEGREES
3	G		ACCELERATION OF GRAVITY ON PLANET
3	GE		ACCELERATION OF GRAVITY ON EARTH
4	HSX1	P.C.S.	INITIAL X LOCATION OF FOOTPAD C.G. RELATIVE TO PAYLOAD C.G.
4	HSY1	P.C.S.	INITIAL Y LOCATION OF FOOTPAD C.G. RELATIVE TO PAYLOAD C.G.
4	HSZ1	P.C.S.	INITIAL Z LOCATION OF FOOTPAD C.G. RELATIVE TO PAYLOAD C.G.
4	HCX1	P.C.S.	INITIAL X LOCATION OF SECONDARY EQUIPMENT ITEM C.G. RELATIVE TO PAYLOAD C.G.
4	HCY1	P.C.S.	INITIAL Y LOCATION OF SECONDARY EQUIPMENT ITEM C.G. RELATIVE TO PAYLOAD C.G.
4	HCZ1	P.C.S.	INITIAL Z LOCATION OF SECONDARY EQUIPMENT ITEM C.G. RELATIVE TO PAYLOAD C.G.
5	PLM		MASS OF PAYLOAD
5	SEQM		MASS OF SECONDARY EQUIPMENT ITEM
5	FPM		MASS OF FOOTPAD
6	UXX		PAYLOAD MASS MOMENT OF INERTIA – I_{xx}
6	UYY		PAYLOAD MASS MOMENT OF INERTIA – I_{yy}
6	UZZ		PAYLOAD MASS MOMENT OF INERTIA – I_{zz}
6	UXY		PAYLOAD PRODUCT OF INERTIA –I_{xy}
6	UXZ		PAYLOAD PRODUCT OF INERTIA – I_{xz}
6	UYZ		PAYLOAD PRODUCT OF INERTIA – I_{yz}
7	UCXX		SECONDARY EQUIPMENT ITEM MASS MOMENT OF INERTIA – I_{xx}
7	UCYY		SECONDARY EQUIPMENT ITEM MASS MOMENT OF INERTIA – I_{yy}
7	UCZZ		SECONDARY EQUIPMENT ITEM MASS MOMENT OF INERTIA – I_{zz}
7	UCXY		SECONDARY EQUIPMENT ITEM PRODUCT OF INERTIA – I_{xy}
7	UCXZ		SECONDARY EQUIPMENT ITEM PRODUCT OF INERTIA – I_{xz}
7	UCYZ		SECONDARY EQUIPMENT ITEM PRODUCT OF INERTIA – I_{yz}
8	USXX		FOOTPAD MASS MOMENT OF INERTIA – I_{xx}
8	USYY		FOOTPAD MASS MOMENT OF INERTIA – I_{yy}
8	USZZ		FOOTPAD MASS MOMENT OF INERTIA – I_{zz}
9	DT		INTEGRATION TIME INTERVAL
9	TMAX		MAXIMUM RUN TIME
9	NPRINT		NUMBER OF INTEGRATION STEPS BETWEEN PRINTS TIMES

* SEE NOTE AT END OF FIGURE

Figure 7.3–3

INPUT DATA – LANDING LOADS AND MOTIONS PROGRAM (Continued)

CARD NO.	INPUT VARIABLE	COORDINATE SYSTEM*	VARIABLE DEFINITION
9	NOFOR		FOOTPAD LOADS OUTPUT INDICATOR (= 0, NO LOADS OUTPUT; = 1 LOADS, OUTPUT)
10	NSPC		NUMBER OF ATTENUATOR STRUT STROKE TIME HISTORIES TO BE PRINTED (0 TO 48)
	NCPC		SECONDARY EQUIPMENT ITEM STRUT STROKE TIME HISTORY INDICATOR (= 0, NO TIME HISTORIES WILL BE PRINTED; = 1, TIME HISTORIES WILL BE PRINTED)
	NORUN		NUMBER OF ELASTIC MODES TO BE INCLUDED IN FOOTPAD EQUATIONS OF MOTION (0 TO 5)
	IINP		ELASTIC FOOTPAD INPUT DATA INDICATOR (= 1, ELASTIC DATA ON CARDS 21,121,221, 321 421, 521 AND 721 EXPECTED ON TAPE; = 0, ELASTIC DATA ON PUNCHED CARDS)
110	NSPS(I)		SEQUENCE OF NUMBERS DEFINING WHICH ATTENUATOR STRUT STROKE TIME HISTORIES ARE TO BE PRINTED.
11	KA1		INTEGRATION METHOD INDICATOR (= –1, RUNGE KUTTA; = + 1, FIXED STEP PREDICTOR CORRECTOR
12	KA		NUMBER OF CONCENTRIC CONICAL SEGMENTS FOOTPAD IS DIVIDED INTO (6 MAX)
112	RINGX(I)	F.C.S.	X LOCATION OF INNERMOST EDGE OF I TH CONICAL SEGMENT (NOT INCLUDING FOOTPAD ATTENUATION)
112	RHO(I)		RADIUS OF INNERMOST EDGE OF I TH CONICAL SEGMENT (NOT INCLUDING FOOTPAD ATTENUATION)
112	NI (I)		NUMBER OF ELEMENTAL CONTROL AREAS IN I TH CONICAL SEGMENT
13	NTYPE		SOIL MECHANICS INDICATOR (= 1, SECONDAY SOIL MECHANICS; = 0, PRIMARY SOIL MECHANICS)
14	SOILP(1)		NTYPE = 1: COEFFICIENT OF FRICTION NTYPE = 0: SOIL INTERNAL FRICTION ANGLE
14	SOILP(2)		NTYPE = 1: SLOPE OF ELASTIC SOIL PRESSURE-PENETRATION RELATIONSHIP NTYPE = 0: SOIL UNIT WEIGHT
14	SOILP(3)		NTYPE = 1: MAXIMUM SOIL PRESSURE NTYPE = 0: SOIL RELATIVE DENSITY
114	SLGTH(1, I)		STROKE AT I TH POINT ON BASIC LOAD-STROKE CURVE FOR ATTENUATOR STRUTS
114	FC (1, I)		FORCE AT I TH POINT ON BASIC LOAD-STROKE CURVE FOR ATTENUATOR STRUTS
114	SLGTH (2, I)		STROKE AT I TH POINT ON BASIC LOAD-STROKE CURVE FOR SECONDARY EQUIPMENT ITEM STRUT (STRUTS 1 AND 2)
114	FC(2, I)		FORCE AT I TH POINT ON BASIC LOAD-STROKE CURVE FOR SECONDARY EQUIPMENT ITEM STRUTS (STRUTS 1 AND 2)
114	SLGTH (3, I)		STROKE AT I TH POINT ON BASIC LOAD-STROKE CURVE FOR SECONDARY EQUIPMENT ITEM STRUTS (STRUTS 3 THROUGH 6)
114	FC (3, I)		FORCE AT I TH POINT ON BASIC LOAD-STROKE CURVE FOR SECONDARY EQUIPMENT ITEM STRUTS (STRUTS 3 THROUGH 6)
15	LM		NUMBER OF ATTENUATOR STRUTS (1 TO 48)
15	LMDAMP		VELOCITY SQUARED DAMPING INDICATOR FOR ATTENUATOR STRUTS (= 0, NO DAMPING; = 1 DAMPING)
15	VISLM		VELOCITY SQUARED DAMPING COEFFICIENT FOR ATTENUATOR STRUTS
15	CTLM		ATTENUATOR STRUTS SPRING RATE AT COMPLETION OF PLASTIC STROKE

*SEE NOTE AT END OF FIGURE

Figure 7.3–3 (Cont'd)

INPUT DATA – LANDING LOADS AND MOTIONS PROGRAM (Continued)

CARD NO.	INPUT VARIABLE	COORDINATE SYSTEM*	VARIABLE DEFINITION
15	SHCLM		TOTAL ALLOWABLE COMPRESSIVE STROKE OF ATTENUATOR STRUTS
15	SHCLMT		TOTAL ALLOWABLE TENSILE STROKE OF ATTENUATOR STRUTS
16	IRET		STRUT TYPE INDICATOR(= 1, ELASTIC RETURN DURING STRUT UNLOADING = 0 FREE RETURN WITH ONLY FRICTION ACTING DURING UNLOADING)
116	XL1 (I)	P.C.S.	X COORDINATE OF I TH ATTENUATOR STRUT AT PAYLOAD
116	YL1 (I)	P.C.S.	Y COORDINATE OF I TH ATTENUATOR STRUT AT PAYLOAD
116	ZL1 (I)	P.C.S.	Z COORDINATE OF I TH ATTENUATOR STRUT AT PAYLOAD
116	XM2 (I)	F.C.S.	X COORDINATE OF I TH ATTENUATOR STRUT AT FOOTPAD
116	YM2 (I)	F.C.S.	Y COORDINATE OF I TH ATTENUATOR STRUT AT FOOTPAD
116	ZM2 (I)	F.C.S.	Z COORDINATE OF I TH ATTENUATOR STRUT AT FOOTPAD
216	COEF(1, I)		VARIATION OF BASIC LOAD-STROKE CURVE ON COMPRESSIVE SIDE FOR I TH ATTENUATOR STRUT
216	COEFT (1, I)		VARIATION OF BASIC LOAD STROKE CURVE ON TENSILE SIDE FOR I TH ATTENUATOR STRUT
216	FFLM (I)		COMPRESSIVE FRICTION FORCE, I TH ATTENUATOR STRUT
216	FFLMT(I)		TENSILE FRICTION FORCE, I TH ATTENUATOR STRUT
17	JK		NUMBER OF SECONDARY EQUIPMENT ITEM STRUTS (1 TO 6)
17	JKDAMP		VELOCITY SQUARED DAMPING INDICATOR FOR SECONDARY EQUIPMENT ITEM STRUTS (= 0, NO DAMPING, = 1, DAMPING)
17	VISJK		VELOCITY SQUARED DAMPING COEFFICIENT FOR SECONDARY EQUIPMENT ITEM STRUTS
17	CTJK		SECONDARY EQUIPMENT ITEM STRUT BOTTOMING SPRING RATE AT COMPLETION OF PLASTIC STROKE
17	SHCJK		TOTAL ALLOWABLE COMPRESSIVE STROKE OF SECONDARY EQUIPMENT ITEM STRUTS
17	SHCJKT		TOTAL ALLOWABLE TENSILE STROKE OF SECONDARY EQUIPMENT ITEM STRUTS
117	XK1(I)	P.C.S.	X COORDINATE OF I TH SECONDARY EQUIPMENT ITEM STRUT AT PAYLOAD
117	YK1(I)	P.C.S.	Y COORDINATE OF I TH SECONDARY EQUIPMENT ITEM STRUT AT PAYLOAD
117	ZK1(I)	P.C.S.	Z COORDINATE OF I TH SECONDARY EQUIPMENT ITEM STRUT AT PAYLOAD
117	XJ3(I)	E.C.S.	X COORDINATE OF I TH SECONDARY EQUIPMENT ITEM STRUT AT SECONDARY EQUIPMENT ITEM
117	YJ3(I)	E.C.S.	Y COORDINATE OF I TH SECONDARY EQUIPMENT ITEM STRUT AT SECONDARY EQUIPMENT ITEM
117	ZJ3(I)	E.C.S.	Z COORDINATE OF I TH SECONDARY EQUIPMENT ITEM STRUT AT SECONDARY EQUIPMENT ITEM
217	COEF(2, I)		VARIATION OF BASIC LOAD-STROKE CURVE ON COMPRESSIVE SIDE FOR I TH SECONDARY EQUIPMENT ITEM STRUT
217	COEFT(2, I)		VARIATION OF BASIC LOAD-STROKE CURVE ON TENSILE SIDE FOR I TH SECONDARY EQUIPMENT ITEM STRUT
217	FFJK(I)		COMPRESSIVE FRICTION FORCE, I TH SECONDARY EQUIPMENT ITEM STRUT
217	FFJKT(I)		TENSILE FRICTION FORCE, I TH SECONDARY EQUIPMENT ITEM STRUT
18	NPAR		PARACHUTE INDICATOR (= 0, NO PARACHUTE; = 1 PARACHUTE) (INPUT 0)
118	PLGNOF		UNSTRAINED PARACHUTE LINE LENGTH (VARIABLE NOT USED)
118	PK		PARACHUTE CORD SPRING RATE (VARIABLE NOT USED)
118	FPX	S.C.S.	X COMPONENT OF PARACHUTE FORCE (VARIABLE NOT USED)

* SEE NOTE AT END OF FIGURE

Figure 7.3–3 (Cont'd).

INPUT DATA – LANDING LOADS AND MOTIONS PROGRAM (Continued)

CARD NO.	INPUT VARIABLE	COORDINATE SYSTEM*	VARIABLE DEFINITION
118	FPY	S.C.S.	Y COMPONENT OF PARACHUTE FORCE (VARIABLE NOT USED)
118	FPZ	S.C.S.	Z COMPONENT OF PARACHUTE FORCE (VARIABLE NOT USED)
118	PHITE	S.C.S.	PARACHUTE CUT-OFF HEIGHT (VARIABLE NOT USED)
218	PXVEL	S.C.S.	X COMPONENT OF PARACHUTE VELOCITY (VARIABLE NOT USED)
218	PYVEL	S.C.S.	Y COMPONENT OF PARACHUTE VELOCITY (VARIABLE NOT USED)
218	PZVEL	S.C.S.	Z COMPONENT OF PARACHUTE VELOCITY (VARIABLE NOT USED)
218	APX1	P.C.S.	X COORDINATE OF PARACHUTE ATTACH POINT (VARIABLE NOT USED)
218	APY1	P.C.S.	Y COORDINATE OF PARACHUTE ATTACH POINT (VARIABLE NOT USED)
218	APZ1	P.C.S.	Z COORDINATE OF PARACHUTE ATTACH POINT (VARIABLE NOT USED)
19	NRR		NUMBER OF RETROROCKETS (0 TO 6) (INPUT 0)
119	RRX1(I)	P.C.S.	X COORDINATE OF I TH RETROROCKET ATTACH POINT (VARIABLE NOT USED)
119	RRY1(I)	P.C.S.	Y COORDINATE OF I TH RETROROCKET ATTACH POINT (VARIABLE NOT USED)
119	RRZ1(I)	P.C.S.	Z COORDINATE OF I TH RETROROCKET ATTACH POINT (VARIABLE NOT USED)
119	RRX2(I)	P.C.S.	X COORDINATE OF I TH RETROROCKET DIRECTION POINT (VARIABLE NOT USED)
119	RRY2(I)	P.C.S.	Y COORDINATE OF I TH RETROROCKET DIRECTION POINT (VARIABLE NOT USED)
119	RRZ2(I)	P.C.S.	Z COORDINATE OF I TH RETROROCKET DIRECTION POINT (VARIABLE NOT USED)
219	TYM (I, J)		TIME FOR I TH RETROROCKET AT J TH POINT IN THRUST VS TIME TABLE
319	THRR(I, J)		THRUST FOR I TH RETROROCKET AT J TH POINT IN THRUST VS TIME TABLE
20	IACCEL		ACCELEROMETER INDICATOR (= 0, NO ACCELEROMETERS; = 1, ACCELEROMETERS)
20	NOACAP		NUMBER OF ACCELEROMETERS ON PAYLOAD (0 TO 6)
20	NOACCH		NUMBER OF ACCELEROMETERS ON SECONDARY EQUIPMENT ITEM (0 TO 6)
20	NOACHS		NUMBER OF ACCELEROMETERS ON FOOTPAD (0 TO 6)
120	CAP (1, I)	P.C.S.	X COORDINATE OF I TH PAYLOAD ACCELEROMETER
120	CAP (2, I)	P.C.S.	Y COORDINATE OF I TH PAYLOAD ACCELEROMETER
120	CAP (3, I)	P.C.S.	Z COORDINATE OF I TH PAYLOAD ACCELEROMETER
220	CCH (1, I)	E.C.S.	X COORDINATE OF I TH SECONDARY EQUIPMENT ITEM ACCELEROMETER
220	CCH (2,I)	E.C.S.	Y COORDINATE OF I TH SECONDARY EQUIPMENT ITEM ACCELEROMETER
220	CCH (3, I)	E.C.S.	Z COORDINATE OF I TH SECONDARY EQUIPMENT ITEM ACCELEROMETER
320	CHS (1, I)	F.C.S.	X COORDINATE OF I TH FOOTPAD ACCELEROMETER
320	CHS (2, I)	F.C.S.	Y COORDINATE OF I TH FOOTPAD ACCELEROMETER
320	CHS (3, I)	F.C.S.	Z COORDINATE OF I TH FOOTPAD ACCELEROMETER
21	NOMODE		NUMBER OF FOOTPAD MODE SHAPES INPUT (0 TO 5)
21	NTCOR		NUMBER OF CONTROL POINTS USED TO DEFINE FOOTPAD MODE SHAPES (0 TO 74)
21	MORDER		ORDER OF EIGENVALUE PROBLEM USED TO OBTAIN FOOTPAD MODE SHAPES (0 TO 102)
121	NATT (I)		INDICATOR DEFINING ROWS OF ORIGINAL FOOTPAD STIFFNESS MATRIC RETAINED IN REDUCED SYSTEM FOR DETERMINING FOOTPAD MODES
221	COORD(I, 1)	F.C.S.	Y COORDINATE OF I TH POINT DEFINING FOOTPAD MODE SHAPES
221	COORD(I, 2)	F.C.S.	Z COORDINATE OF I TH POINT DEFINING FOOTPAD MODE SHAPES
321	FPHI (I, J)		I TH FOOTPAD MODE SHAPE FOR J TH MODE
421	OMEGA (I)		NATURAL FREQUENCY OF I TH FOOTPAD MODE

*SEE NOTE AT END OF FIGURE

Figure 7.3–3 (Cont'd)

INPUT DATA – LANDING LOADS AND MOTIONS PROGRAM (Continued)

CARD NO.	INPUT VARIABLE	COORDINATE SYSTEM*	VARIABLE DEFINITION
421	GM (I)		GENERALIZED MASS OF I TH FOOTPAD MODE
521	WNX(I)		GENERALIZED INERTIA PROPERTY N_{xn} FOR I TH FOOTPAD MODE (SEE EQUATION 7–14)
521	WNY (I)		GENERALIZED INERTIA PROPERTY N_{yn} FOR I TH FOOTPAD MODE (SEE EQUATION 7–14)
521	WNZ (I)		GENERALIZED INERTIA PROPERTY N_{zn} FOR I TH FOOTPAD MODE (SEE EQUATION 7–14)
521	PX (I)		GENERALIZED INERTIA PROPERTY P_{xn} FOR I TH FOOTPAD MODE (SEE EQUATION 7–14)
521	PY (I)		GENERALIZED INERTIA PROPERTY P_{yn} FOR I TH FOOTPAD MODE (SEE EQUATION 7–14)
521	PZ (I)		GENERALIZED INERTIA PROPERTY P_{zn} FOR I TH FOOTPAD MODE (SEE EQUATION 7–14)
621	NDIAM (1, I)		NUMBER OF NODAL DIAMETERS IN ϕ_{xn} FOR I TH FOOTPAD MODE (–1, SINE TERM; + 1, COSINE TERM)
621	NDIAM (2, I)		NUMBER OF NODAL DIAMETERS IN ϕ_{yn} FOR I TH FOOTPAD MODE (–1, SINE TERM; + 1, COSINE TERM)
621	NDIAM (3, I)		NUMBER OF NODAL DIAMETERS IN ϕ_{zn} FOR I TH FOOTPAD MODE (–1, SINE TERM; + 1, COSINE TERM)
721	AMASS (I)		ELEMENTS OF DIAGONAL MASS MATRIX USED TO OBTAIN FOOTPAD MODES.
22	INATT		INDICATOR FOR ATTENUATION (= 0, NO ATTENUATION; = 1, ATTENUATION)
22	TC		PERCENTAGE OF ATTENUATION THICKNESS WHICH MAY BE CRUSHED
22	DCM		ALLOWABLE ELASTIC STROKE OF FOOTPAD ATTENUATOR
22	CFM		CRUSH PRESSURE OF FOOTPAD ATTENUATION
23	THICK (I)		THICKNESS OF FOOTPAD ATTENUATION ON I TH FOOTPAD CONICAL SEGMENT

NOTE: THE FOLLOWING ABBREVIATIONS ARE USED TO DEFINE THE COORDINATE SYSTEMS
S.C.S. – SURFACE COORDINATE SYSTEM
F.C.S. – FOOTPAD COORDINATE SYSTEM
P.C.S. – PAYLOAD COORDINATE SYSTEM
E.C.S. – SECONDARY EQUIPMENT COORDINATE SYSTEM

Figure 7.3–3 (Cont'd)

and frequencies is placed on cards 21, 121, 221, 321, 421, 521, and 721. However, when this input data is obtained from the Structural Analysis Program it can be input to the Landing Loads and Motions Program on magnetic tape. This procedure simplifies data handling between the two programs. Setting IINP (card 10) equal to 1 provides the instruction to read this data from magnetic tape. If the modal data is obtained in some other manner and input through punched cards, IINP is set equal to zero. With a flexible footpad analysis, the data on card 621 must always appear in punched card form.

The y_s and z_s coordinates of each point on the footpad defining the mode shapes appear on data cards 221. Data cards 321 contain the magnitudes of the mode shapes in the three coordinate directions at each of the points on the footpad. This mode shape information is input in the following order. The first data card 321 contains the mode shapes in the x_s direction at the first point on the footpad. The second card contains the y_s values and the third the z_s values at the first point on the footpad. This sequence of information is repeated on subsequent cards for the remaining points on the footpad. For example, the fourth, fifth and sixth 321 cards would contain the mode shapes in the x_s, y_s, and z_s directions for the second point on the footpad, respectively. Thus, the number of 321 cards equals three times the number of points on the footpad used to define the mode shapes.

The total footpad stiffness matrix obtained from the Structural Analysis Program results in an eigenvalue problem which is too large for the allotted core storage space. Therfore, a routine is used to reduce the order of this

of this matrix. Rows of the original stiffness matrix retained in this reduced system are input on data cards 121.

The parameters NDIAM (I, J), on data cards 621, define the number of nodal diameters of the J mode shape in the I direction. Here, I equals 1 refers to the x_s direction, I equals 2 the y_s direction, and I equals 3 the z_s direction. If any one of these is set equal to 100, the mode shape in the corresponding coordinate direction is set equal to zero. See Section 7.3.3 for an example of the use of this indicator.

7.3.2 Output Data - At specified times during the integration of the equations of motion, various time varying quantities defining the lander's position, velocities, and accelerations are printed. In addition, optional output data, as requested through input indicators, may be obtained. These consist of the instantaneous stroke in the attenuator and secondary equipment item struts and accelerations at points other than the the centers of gravity of the three components. In this latter case, the coordinates of the points at which the accelerations are desired are included as input data.

The output data is grouped by pages of information. Each output page is related to a specific type of information. For instance, one page presents the time histories of the payload positions and velocities. Another page contains the translational accelerations for the three lander components. The order of these pages of output data and the output variables on each are presented in Figure 7.3-4.

Each page of time history data contains a maximum of 25 lines of information. The data for this output, starting at time zero, is stored in the subroutine OUTPUT. When either 25 lines of data are stored, or the run is complete, the pages of time history information indicated in Figure 7.3-4 are printed. Storage of data then continues, at the next successive print time, until enough information has been stored to again print. Examples of the output data obtained from the Landing Loads and Motions Program are described in Section 7.3.3. and Appendix E.

The units of the output data are consistent with the system of units used in the input data. Only the angular quantities are output in the specific units of degrees.

PRINTED OUTPUT DATA – LANDING LOADS AND MOTIONS PROGRAM

THE FOLLOWING IS AN OUTLINE OF THE PAGES OF OUTPUT DATA PRINTED BY THE LANDING LOADS AND MOTIONS PROGRAM.

I. INPUT DATA – ALL INPUT DATA, BOTH FROM CARDS AND TAPE.

II. LANDER INITIAL CONDITIONS – SUMMARY OF THE LANDER'S INITIAL CONDITIONS.

III. TIME HISTORY QUANTITIES

1. STANDARD OUTPUT

A. PAYLOAD ORIENTATION INFORMATION – TRANSLATIONAL DISPLACEMENTS AND VELOCITIES OF THE PAYLOAD CENTER OF GRAVITY IN SURFACE COORDINATE SYSTEM. ANGULAR ORIENTATION OF PAYLOAD COORDINATE SYSTEM RELATIVE TO SURFACE COORDINATE SYSTEM AND ANGULAR VELOCITIES RELATIVE TO PAYLOAD COORDINATE SYSTEM.

B. EQUIPMENT ORIENTATION INFORMATION – TRANSLATIONAL DISPLACEMENTS AND VELOCITIES OF THE SECONDARY EQUIPMENT ITEM CENTER OF GRAVITY IN SURFACE COORDINATE SYSTEM. ANGULAR ORIENTATION OF SECONDARY EQUIPMENT COORDINATE SYSTEM RELATIVE TO SURFACE COORDINATE SYSTEM AND ANGULAR VELOCITIES RELATIVE TO SECONDARY EQUIPMENT COORDINATE SYSTEM.

C. FOOTPAD ORIENTATION INFORMATION – TRANSLATIONAL DISPLACEMENTS AND VELOCITIES OF FOOTPAD CENTER OF GRAVITY IN SURFACE COORDINATE SYSTEM. ANGULAR ORIENTATION OF FOOTPAD COORDINATE SYSTEM RELATIVE TO SURFACE COORDINATE SYSTEM AND ANGULAR VELOCITIES RELATIVE TO FOOTPAD COORDINATE SYSTEMS.

D. ACCELERATIONS OF COMPONENT CENTER OF GRAVITY–CENTER OF GRAVITY TRANSLATIONAL ACCELERATIONS FOR ALL THREE BODIES. THESE ARE IN THE SURFACE COORDINATE SYSTEM.

E. ANGULAR ACCELERATIONS ABOUT LANDER AXES – ANGULAR ACCELERATIONS OF EACH BODY RELATIVE TO RESPECTIVE BODY AXIS SYSTEM.

F. GENERALIZED COORDINATE TIME HISTORIES – WITH FLEXIBLE FOOTPAD, GENERALIZED COORDINATES ASSOCIATED WITH VIBRATORY MODES. (WILL HAVE NO OUTPUT FOR A RIGID FOOTPAD, NORUN = 0)

2. OPTIONAL OUTPUT

A. STROKE OF EQUIPMENT STRUTS – STROKING MOTION IN EACH OF THE SECONDARY EQUIPMENT ITEM STRUTS.

B. STROKE OF ATTENUATOR STRUTS – STROKING MOTION IN ATTENUATOR STRUTS AS DESIGNATED BY INPUT DATA.

C. ACCELEROMETER READING – ACCELERATIONS AT POINTS ON LANDER AS DEFINED BY INPUT DATA. THESE QUANTITIES ARE IN THE LANDER COORDINATE SYSTEMS.

IV SUMMARY PAGE – SUMMARY OF LANDER INITIAL CONDITIONS, MAXIMUM ACCELERATIONS, MAXIMUM STROKES AND FORCES IN EACH STRUT, AND RUN TIME.

Figure 7.3–4

An additional output option is available in the Landing Loads and Motions Program. This option allow the output of the attenuator forces and soil forces acting on the footpad, accelerations at the locations on the footpad corresponding to the joints of the Structural Analysis Program, and the translational and rotational acceleration of each of the lander components. All of this information is referenced to the Footpad Coordinate System. This information is placed on magnetic tape when input indicator NOFOR is equal to 1 . The Footpad Landing Loads Program, which is used to retrieve this information from the tape at requested points in the time history, is discussed in Appendix D.

7.3.3 Example of Program Operation - To illustrate proper interpretation of instructions regarding input and output data, a typical landing condition was selected as shown in Figure 7.3-5. Input data required for this case are shown in Appendix E. Following the listing of input data is the output data defining the landers position, velocities, and accelerations as a function of time.

For this example problem, the fixed step, Predictor-Corrector integration routine was used with output printed every 10 integration steps. The footpad accelerations and loads are output on magnetic tape and the retrieval of this information from the tape is discussed in Appendix D.

Flexible footpad input data, determined by the Structural Analysis Program, are read from the magnetic tape. Figure 7.3-6 presents the mode shapes of the five free-free modes obtained from the Structural Analysis Program. Mode shapes in the x_s direction are indicated by a plus and minus sign convention.

TYPICAL UPSLOPE LANDING CONDITION

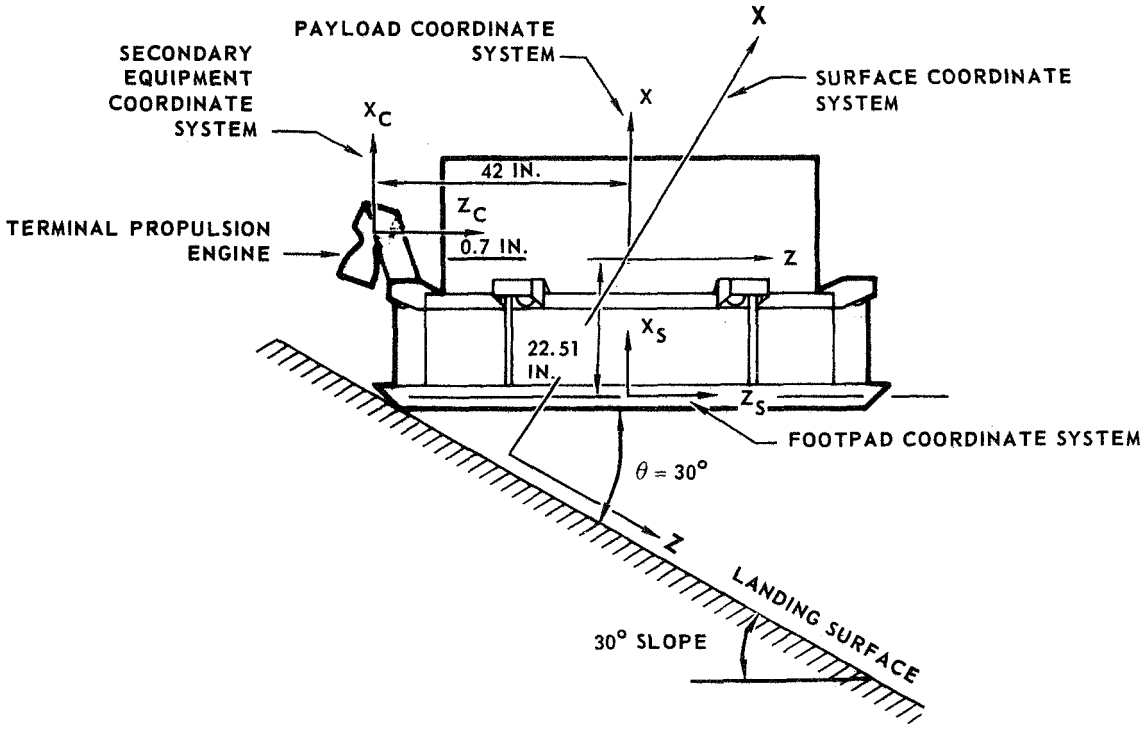

LANDER INITIAL VELOCITIES

$\dot{X} = -240$ IN/SEC, $\dot{Z} = -144$ IN/SEC } PAYLOAD COORDINATE SYSTEM

LANDER WEIGHT DATA

FOOTPAD WEIGHT = 148.6 LB

PAYLOAD WEIGHT = 837.3 LB

TERMINAL PROPULSION ENGINE WEIGHT = 24.2 LB

Figure 7.3–5

FOOTPAD FREE-FREE MODE SHAPES

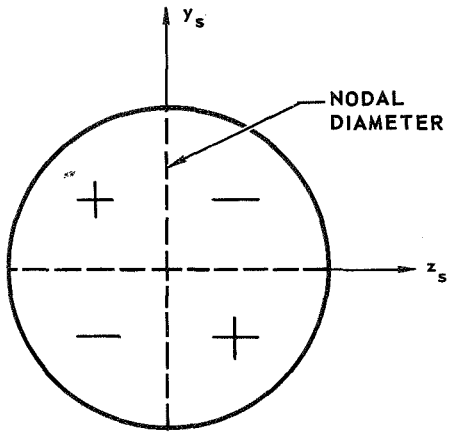

MODE 1
ω_n = 182.8 RAD/SEC
SINE TERMS – NDIAM = –2

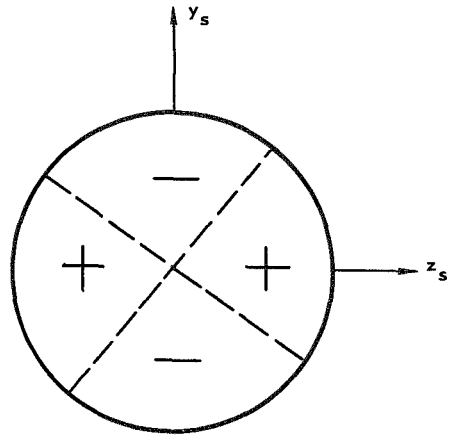

MODE 2
ω_n = 210.6 RAD/SEC
COSINE TERMS – NDIAM = +2

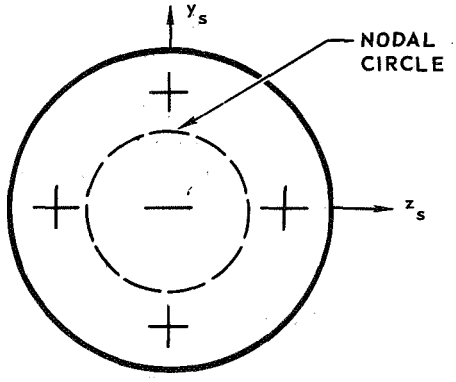

MODE 3
ω_n = 275.2 RAD/SEC
COSINE TERMS – NDIAM = 0

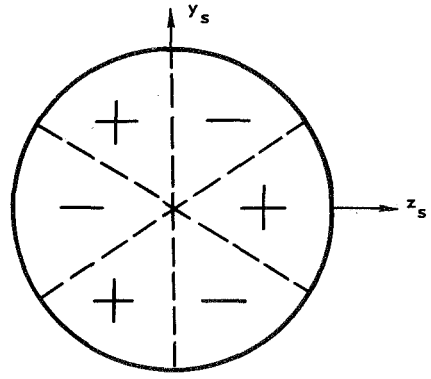

MODE 4
ω_n = 323.2 RAD/SEC
COSINE TERMS – NDIAM = 3

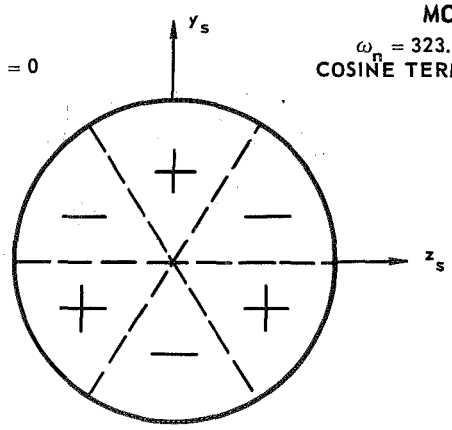

MODE 5
ω_n = 334.2 RAD/SEC
SINE TERMS – NDIAM = –3

Figure 7.3–6

Zero deflections of modes 1, 2, 4, amd 5 appear as nodal diameters and as a nodal circle in mode 3. Since a nodal diameter for modes 1 and 5 lies along the z_s axis, sine terms are used to represent these mode shapes in the x_s directions (Equation (7-30)). Cosine terms are used for modes 2 and 4. The modal deflections in the y_s and z_s directions are negligible for all the modes (See Modal Analysis Output in Appendix B). Therefore, the input parameter NDIAM associated with the y_s and z_s mode shapes are all input as 100.

The total real time requested for this run is 0.025 seconds. This required 115 seconds of CP time for program execution. Longer runs, used to obtain the data for the curves shown in Section 8.1, required much more computer time. For requested real time of 0.21 seconds, approximately 1500 seconds of CP time were required to run a case with a flexible footpad represented with five free-free modes. A rigid footpad, for the same length of real time, required 625 seconds of CP time.

8. ANALYSIS OF SELECTED PLATFORM LANDER

The selected platform lander, described in Section 5, was analyzed using the two computer programs developed for this study. This analysis was primarily intended to demonstrate the capabilities and compatibility of these programs. Footpad mode shapes and natural frequencies were generated using the Structural Analysis Program. These data were utilized in the Landing Loads and Motions Program when including the effects of a flexible footpad. Soil, inertia, and attenuator forces calculated in the Landing Loads and Motions Program were then input to the Structural Analysis Program and internal loads in the footpad determined. Plastic analysis of a footpad and attenuator system using the Structural Analysis Program was also demonstrated.

8.1 LANDING LOADS AND MOTIONS - Three landing conditions were investigated for the selected platform lander to demonstrate the capability of the Landing Loads and Motions Program. All three cases had the same initial conditions except for the heading of the initial horizontal velocity vector. Initial horizontal velocity components were: (1) downslope (along the direction of the positive surface Z axis), (2) 45-degree downslope (45 degrees from the surface Z axis), and (3) upslope (along the negative surface Z axis). All three horizontal and vertical initial velocities were 12 ft/sec and 20 ft/sec, respectively, and landing occurred on a surface having a 30-degree slope.

Initially, the Y axes of all coordinate systems were parallel (surface, footpad, payload, and secondary equipment coordinate systems) and the platform lander's X axes were oriented parallel to the gravity vector.

Soil properties used for the above cases were:

Soil #9, Figure 7.1-15	ϕ = 39 degrees
Dense Silica Sand	D_r = .69
	γ = .0619 pounds/in^3

Footpad mode shapes and frequencies input to the Landing Loads and Motions Program were obtained from the Structural Analysis Program as discussed in Section 6.3.3.

Translational velocities of the payload and footpad centers of gravity for the 45-degree downslope landing condition (case 2) are presented in Figure 8.1-1. The presence of the flexible footpad is apparent in the X component of footpad velocity.

Displacement, velocity, and acceleration time histories for the upslope landing condition (case 3) are presented in Figures 8.1-2, 8.1-3 and 8.1-4. Acceleration time histories are shown as an envelope of the maximum accelerations due to their highly oscillatory nature.

A rigid and a flexible footpad structure are compared in Figures 8.1-5 and 8.1-6 for a downslope landing. The initial conditions were the same as those for case (1). In Figure 8.1-5, the center of gravity velocities are presented for the payload and footpad in the X direction (Surface Coordinate System). Effects of footpad flexibility are most pronounced in the center of gravity velocity of the footpad. Resultant soil forces are significantly higher when footpad flexibility is not included (FIgure 8.1-6). These higher soil forces lead to inaccurate predictions of payload accelerations and overall lander motions.

Time histories of the resultant soil force acting on the footpad for the downslope case with loose and dense silica sand are shown in Figure 8.1-7. Initial conditions for this comparison were the same as those for case (1). Properties of the dense silica sand (Soil #9) were previously given.

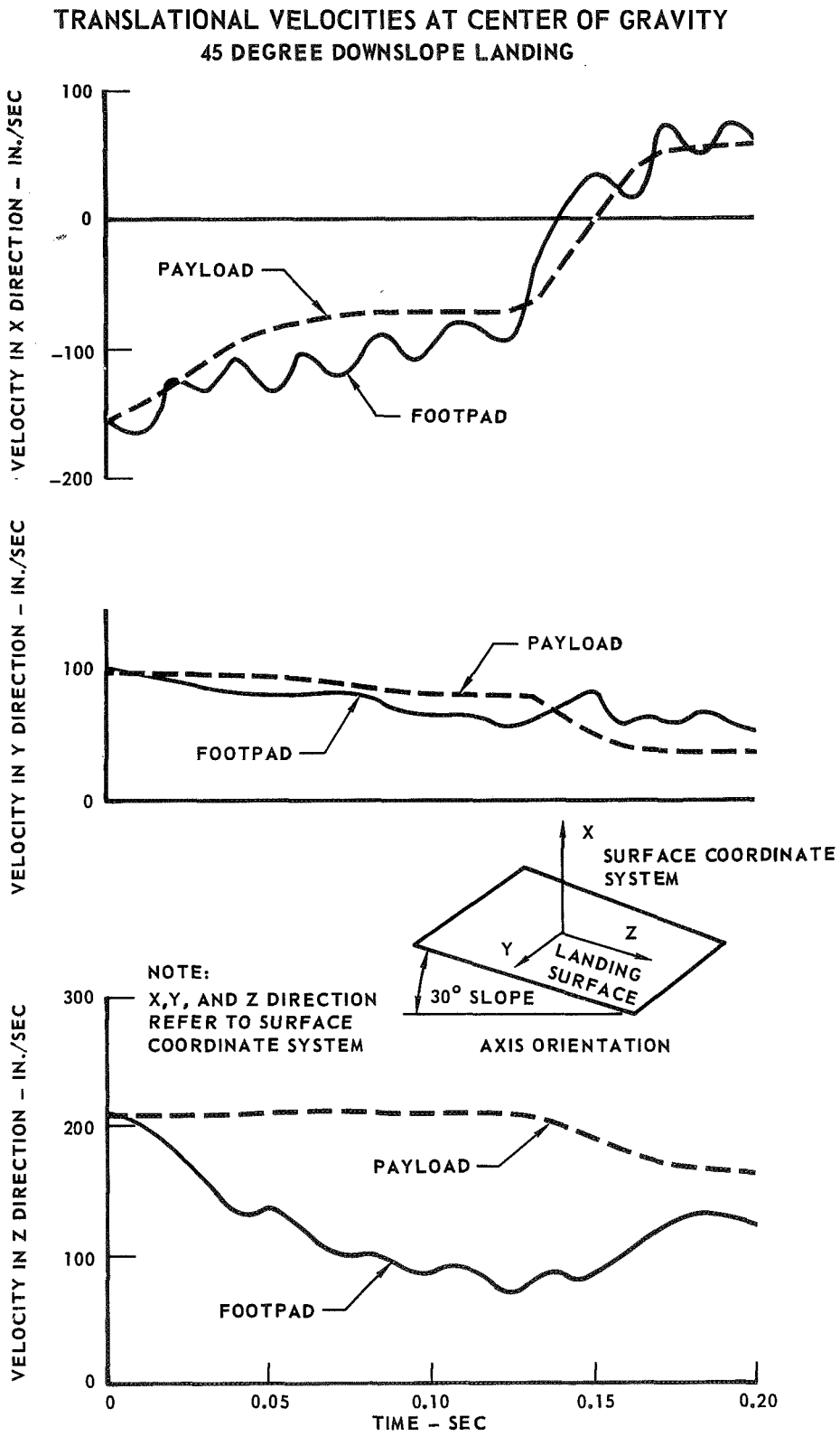
TRANSLATIONAL VELOCITIES AT CENTER OF GRAVITY
45 DEGREE DOWNSLOPE LANDING
VELOCITY IN X DIRECTION – IN./SEC
100
0
-100
-200
PAYLOAD
FOOTPAD
VELOCITY IN Y DIRECTION – IN./SEC
100
0
PAYLOAD
FOOTPAD
X
SURFACE COORDINATE SYSTEM
Z
Y
LANDING SURFACE
30° SLOPE
AXIS ORIENTATION
NOTE:
X,Y, AND Z DIRECTION REFER TO SURFACE COORDINATE SYSTEM
VELOCITY IN Z DIRECTION – IN./SEC
300
200
100
0
PAYLOAD
FOOTPAD
0
0.05
0.10
0.15
0.20
TIME – SEC

Figure 8.1–1

LANDER CENTER OF GRAVITY DISPLACEMENTS
UPSLOPE LANDING

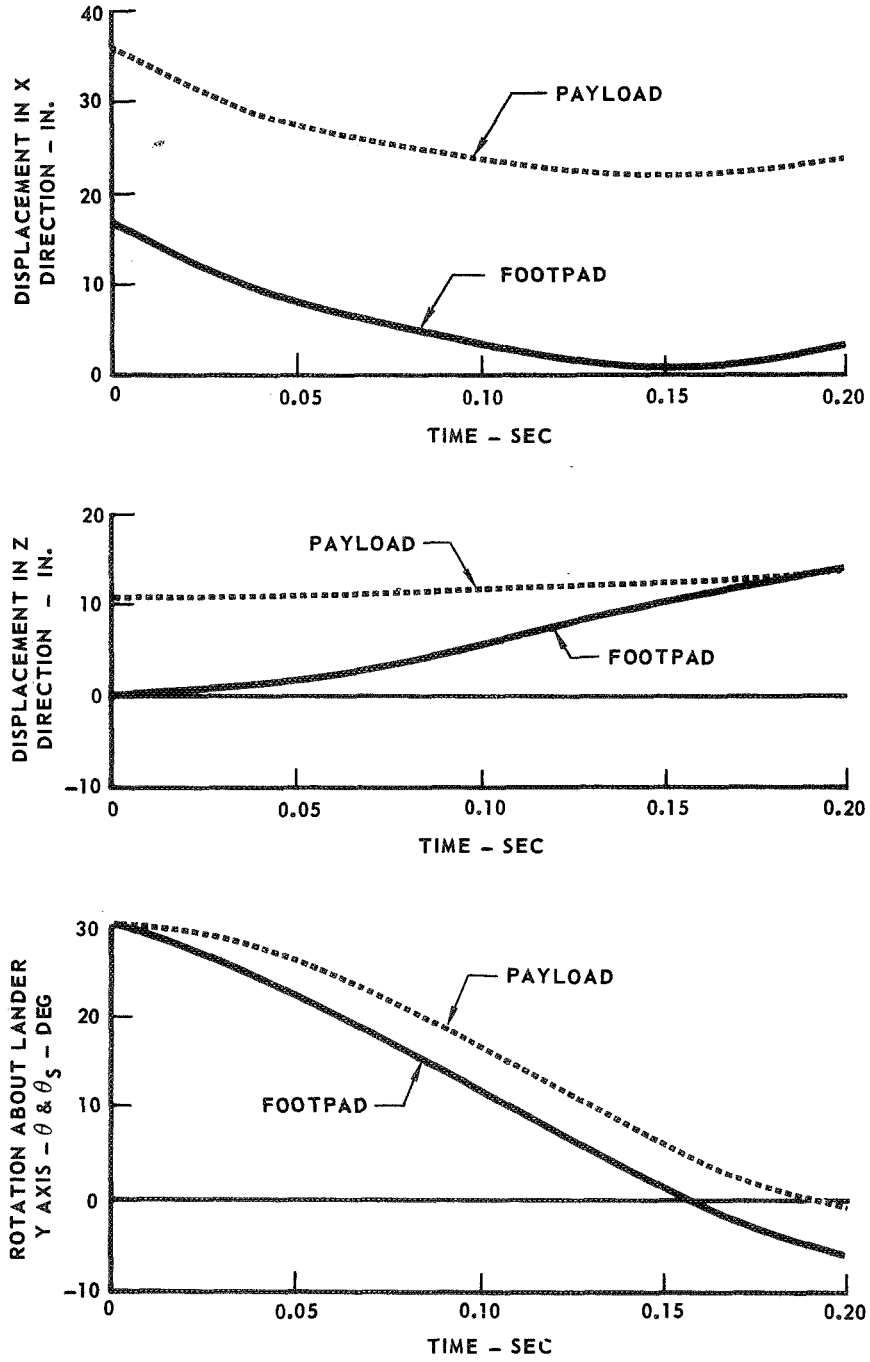

NOTE: X AND Z DIRECTIONS
REFER TO SURFACE COORDINATE SYSTEM

Figure 8.1-2

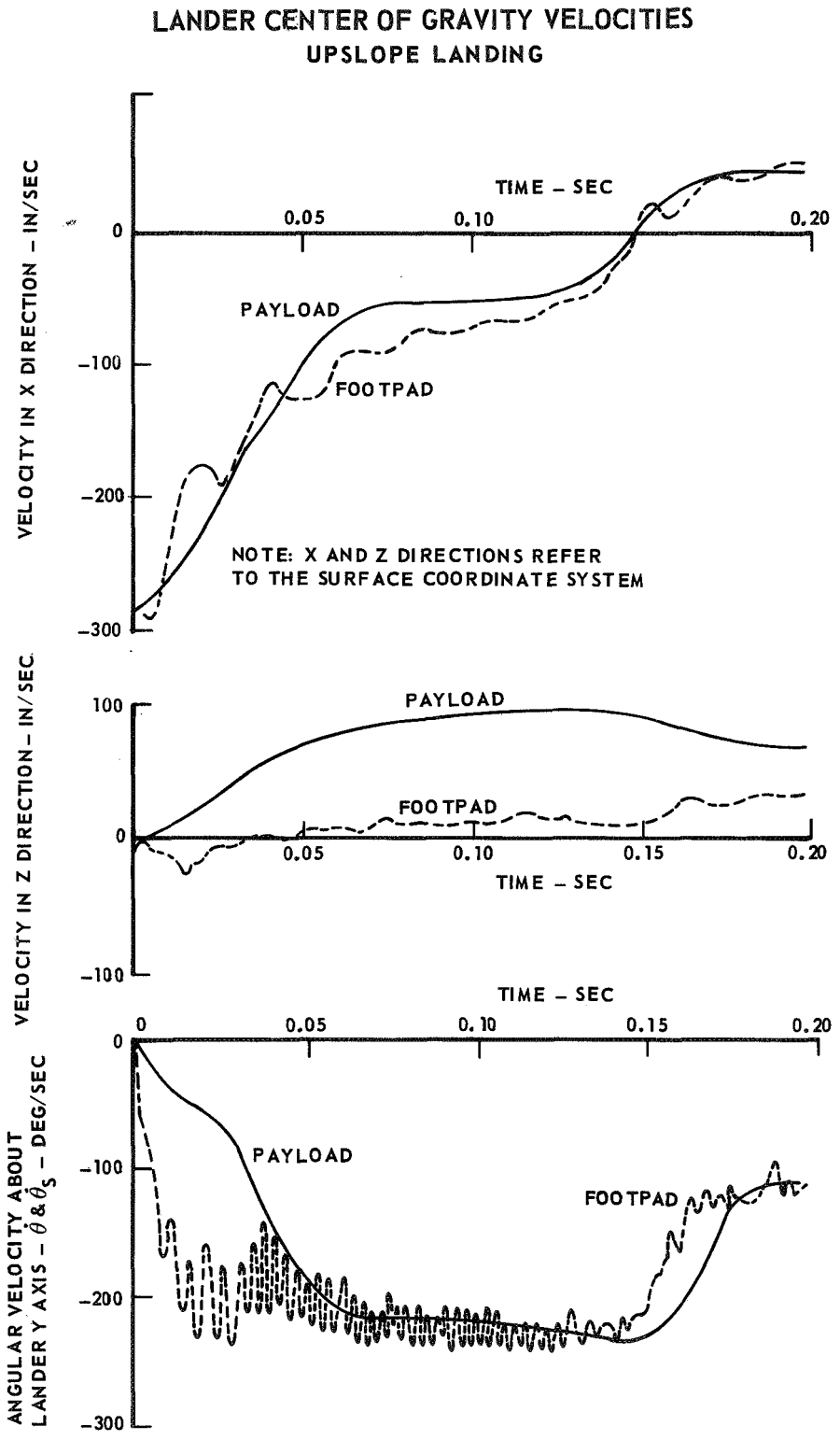
LANDER CENTER OF GRAVITY VELOCITIES
UPSLOPE LANDING
VELOCITY IN X DIRECTION – IN/SEC
TIME – SEC
0
0.05
0.10
0.20
PAYLOAD
FOOTPAD
–100
–200
–300
NOTE: X AND Z DIRECTIONS REFER
TO THE SURFACE COORDINATE SYSTEM
VELOCITY IN Z DIRECTION – IN/SEC
100
PAYLOAD
FOOTPAD
0
0.05
0.10
0.15
0.20
TIME – SEC
–100
TIME – SEC
0
0.05
0.10
0.15
0.20
ANGULAR VELOCITY ABOUT
LANDER Y AXIS – $\dot{\theta}$ & $\dot{\theta}_S$ – DEG/SEC
0
PAYLOAD
FOOTPAD
–100
–200
–300

Figure 8.1–3

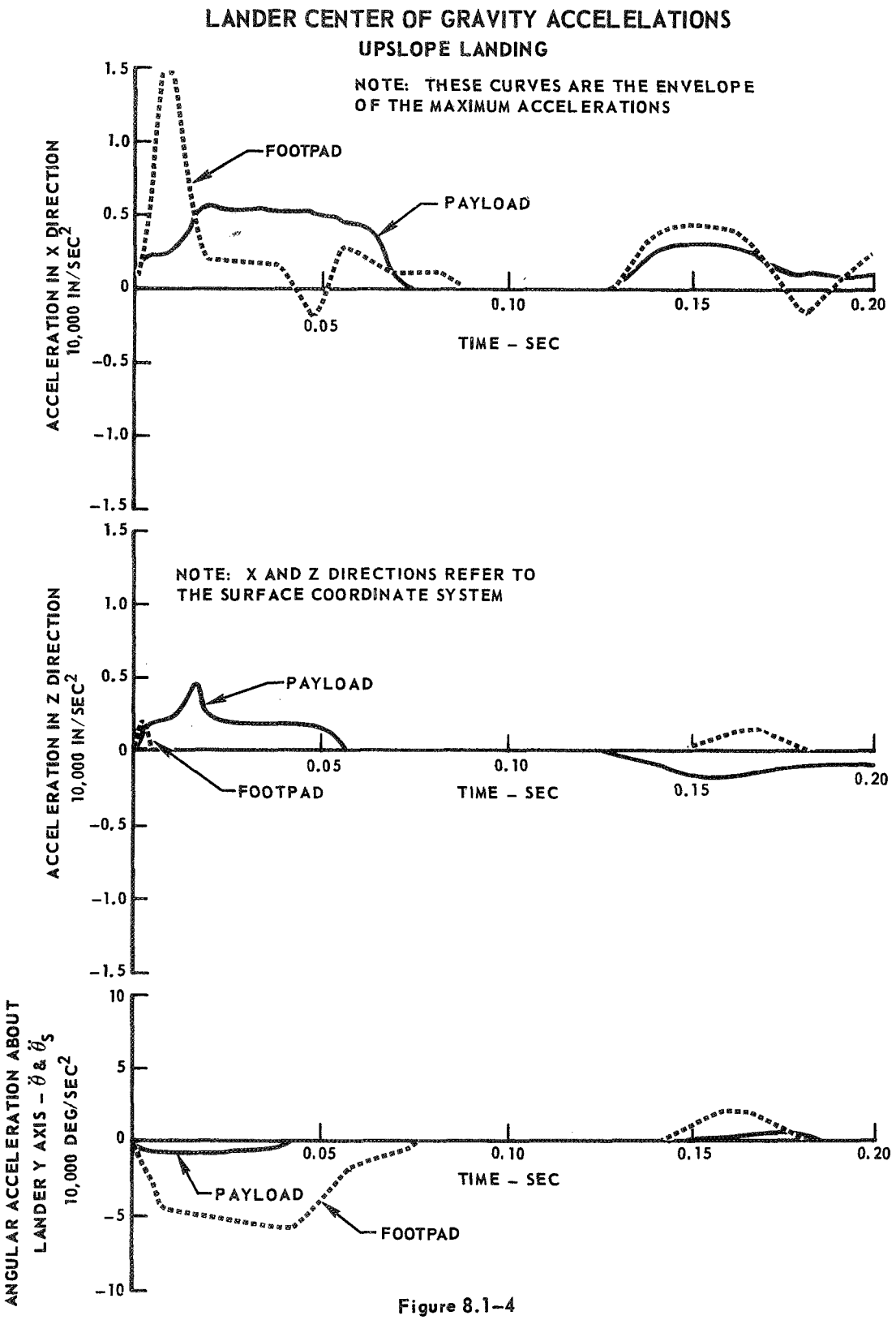
LANDER CENTER OF GRAVITY ACCELELATIONS
UPSLOPE LANDING
NOTE: THESE CURVES ARE THE ENVELOPE OF THE MAXIMUM ACCELERATIONS
FOOTPAD
PAYLOAD
ACCELERATION IN X DIRECTION 10,000 IN/SEC²
1.5
1.0
0.5
0
-0.5
-1.0
-1.5
0.05
0.10
0.15
0.20
TIME - SEC
NOTE: X AND Z DIRECTIONS REFER TO THE SURFACE COORDINATE SYSTEM
PAYLOAD
FOOTPAD
ACCELERATION IN Z DIRECTION 10,000 IN/SEC²
TIME - SEC
ANGULAR ACCELERATION ABOUT LANDER Y AXIS - $\ddot{\theta}$ & $\ddot{\theta}_S$ 10,000 DEG/SEC²
10
5
0
-5
-10
PAYLOAD
FOOTPAD
TIME - SEC

Figure 8.1-4

COMPARISON OF TRANSLATIONAL VELOCITIES FOR RIGID AND FLEXIBLE FOOTPADS
DOWNSLOPE LANDING

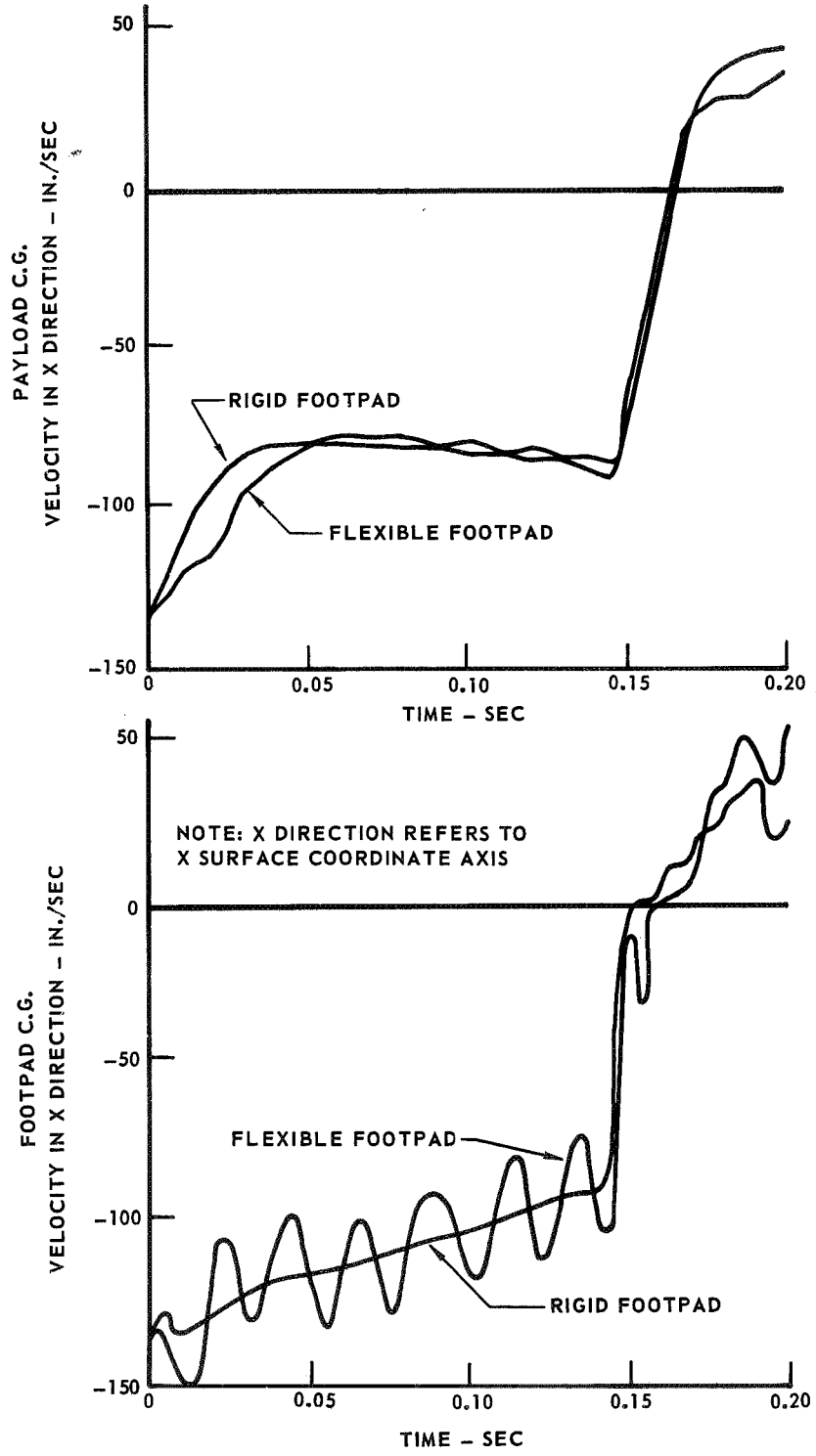

Figure 8.1–5

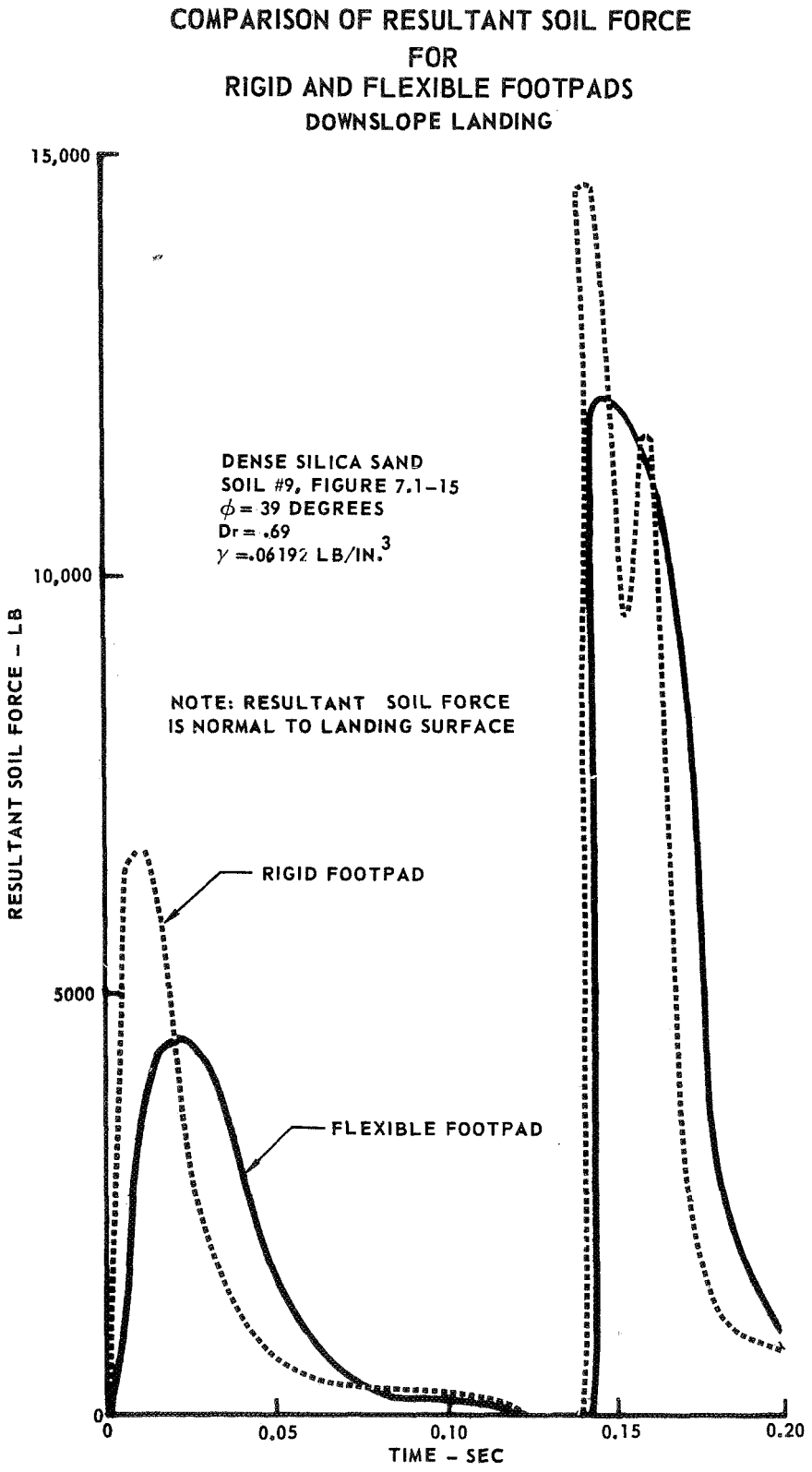
COMPARISON OF RESULTANT SOIL FORCE
FOR
RIGID AND FLEXIBLE FOOTPADS
DOWNSLOPE LANDING
15,000
10,000
5000
0
RESULTANT SOIL FORCE - LB
DENSE SILICA SAND
SOIL #9, FIGURE 7.1-15
ϕ = 39 DEGREES
Dr = .69
γ = .06192 LB/IN.^{3}
NOTE: RESULTANT SOIL FORCE
IS NORMAL TO LANDING SURFACE
RIGID FOOTPAD
FLEXIBLE FOOTPAD
0
0.05
0.10
0.15
0.20
TIME - SEC

Figure 8.1-6

COMPARISON OF RESULTANT SOIL FORCE
FOR
LOOSE AND DENSE SILICA SAND
DOWNSLOPE LANDING

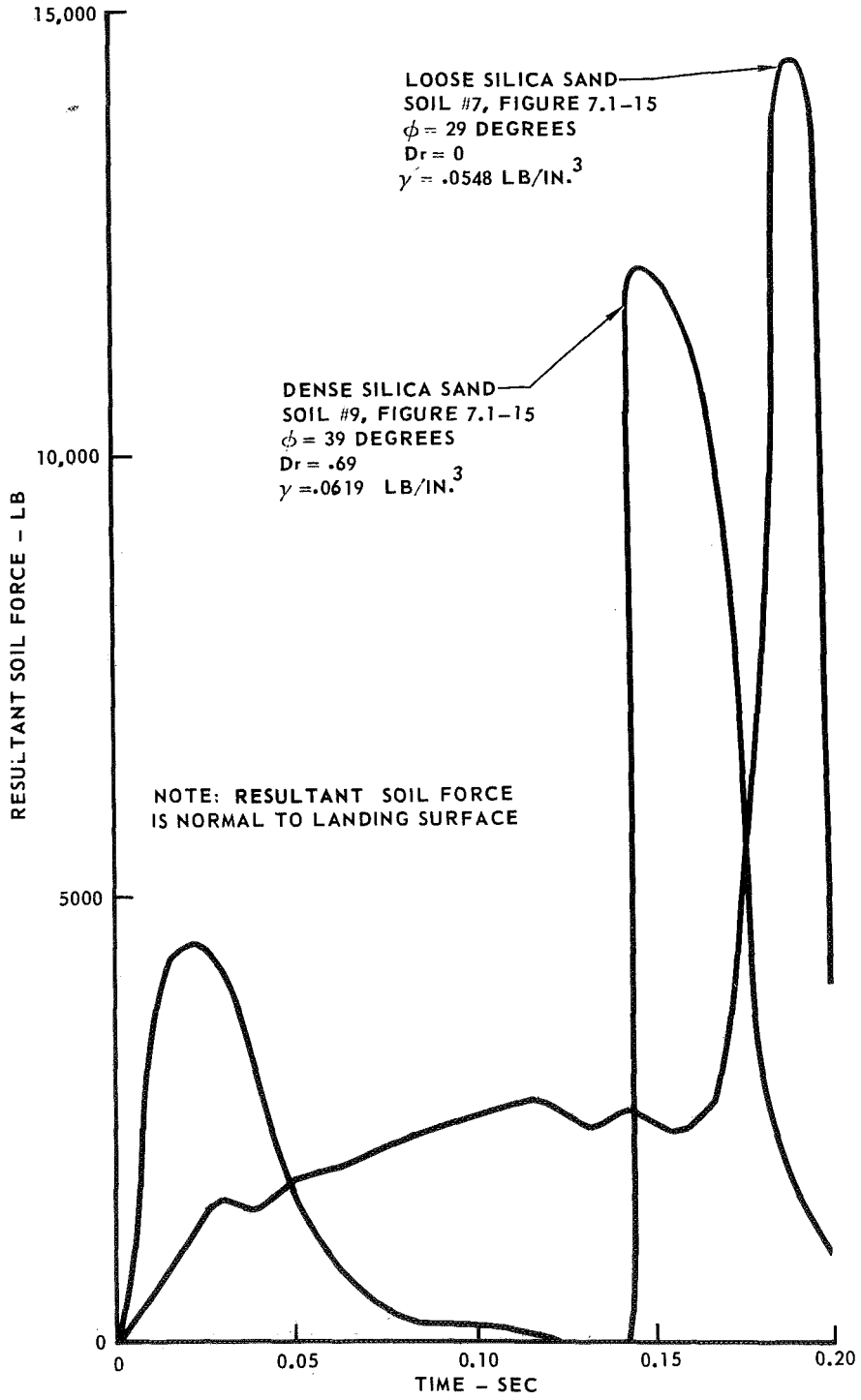

Figure 8.1-7

Properties of the loose silica sand are:

Soil #7, Figure 7.1-15	ϕ = 29 degrees
Loose Silica Sand	D_r = 0
	γ = .0548 pounds/in^3

Although the dense sand resulted in a higher initial soil force, it reduced to zero in about 0.12 seconds. With the loose sand, the soil force increased slowly until the leading edge of the footpad came in contact with the landing surface, causing an abrupt and large change in force. Slight rebound with the dense silica occurred as indicated by the period of time when the force was zero. No rebound for the loose sand was observed.

Soil, inertia, and attenuator forces may be continuously stored on tape as they are generated by the Landing Loads and Motions Program and all may be subsequently printed out. Thus complete external load balances of the footpad, payload, or total lander may be shown for any specific point in time. The point of peak resultant soil force for the upslope landing condition was selected to demonstrate that consistent loads are obtained from the Landing Loads and Motions Program. When these loads are applied to the lander, external equilibrium is achieved, as shown in Section 8.2. Actual footpad loads and accelerations for the time point are presented in Appendix D.

8.2 STRUCTURAL ANALYSIS - External equilibrium of loads on the platform lander for the upslope landing case at the time of maximum resultant soil force is shown in Figure 8.2-1. The external loads (inertia, gravity, and soil) acting on the lander are resolved into components at points A and C. Point A is the combined center of gravity of the payload, platform, and one-half the attenuation system, while point C is the combined center of gravity of the footpad and one-half the attenuation system. Inertia loads are obtained from

EXTERNAL LOAD DISTRIBUTION ON PLATFORM LANDER

UPSLOPE LANDING, MAXIMUM RESULTANT SOIL FORCE CONDITION

LOCATION	INERTIA LOADS (RESULTANT)						SOIL LOADS (RESULTANT)						GRAVITY LOADS (RESULTANT)			TOTAL LOAD COMPONENTS					
	FORCES (LB)			MOMENTS (IN.-LB)			FORCES (LB)			MOMENTS (IN.-LB)			FORCES (LB)			FORCES (LB)			MOMENTS(IN.-LB)		
	$F_{\bar{X}}$	$F_{\bar{Y}}$	$F_{\bar{Z}}$	$M_{\bar{X}}$	$M_{\bar{Y}}$	$M_{\bar{Z}}$	$F_{\bar{X}}$	$F_{\bar{Y}}$	$F_{\bar{Z}}$	$M_{\bar{X}}$	$M_{\bar{Y}}$	$M_{\bar{Z}}$	$F_{\bar{X}}$	$F_{\bar{Y}}$	$F_{\bar{Z}}$	$F_{\bar{X}}$	$F_{\bar{Y}}$	$F_{\bar{Z}}$	$M_{\bar{X}}$	$M_{\bar{Y}}$	$M_{\bar{Z}}$
A	-4681	0	-6047	0	21167	0							-329	0	3	-5010	0	-6044	0	21167	0
C	-3163	0	-3344	0	103856	0	8230	0	9387	0	-260734	0	- 57	0	1	5010	0	6044	0	-156878	0

NOTE: ALL FORCES AND MOMENTS ARE RESOLVED INTO FOOTPAD COORDINATE SYSTEM.

Figure 8.2-1

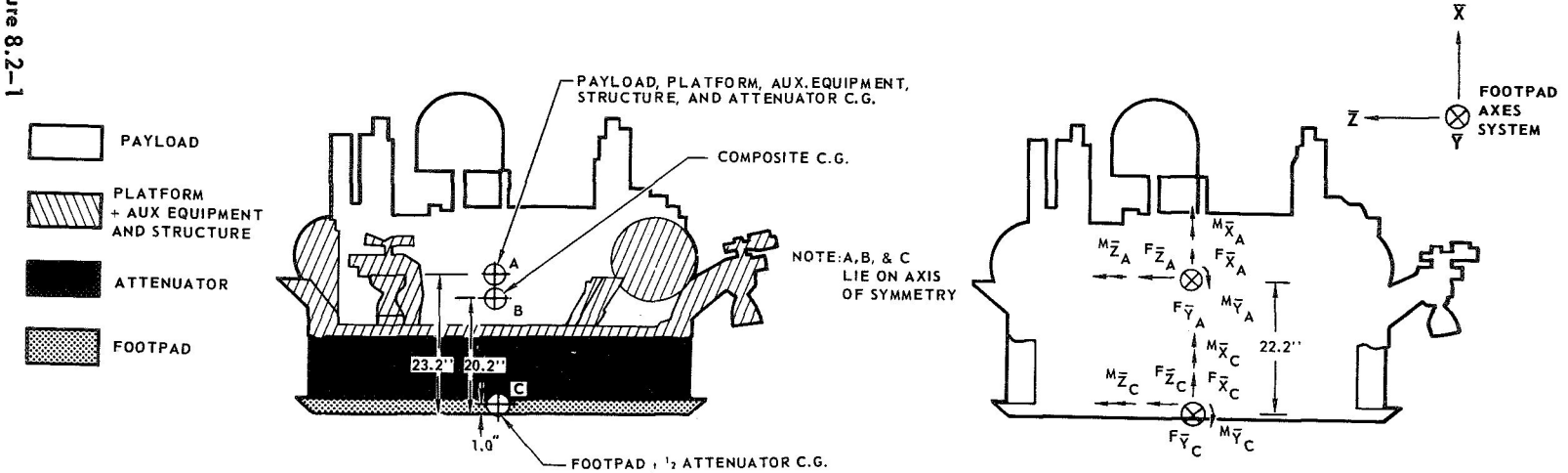

(A) DISTRIBUTION OF LANDER COMPONENTS FOR DETERMINING EXTERNAL LOADS.

(B) FORCES AND MOMENTS ACTING ON LANDER

the products of appropriate concentrated masses and corresponding accelerations as obtained from the Landing Loads and Motions Programs. Gravity loads, resulting from an acceleration of gravity of 12.3 ft/sec^2, are shown at points A and C. Soil forces, whose components are given at control points, are resolved into resultant forces and moments at point C. The appropriate output information from the Landing Loads and Motions Program for this loading case is shown in Appendices D and E.

An external load distribution for the combined platform-payload system is shown in Figure 8.2-2. The attenuator and cable loads, applied as external loads to the platform, are obtained from the Landing Loads and Motions Program output listing shown in Appendix D.

The external load distribution on the footpad is shown in Figure 8.2-3. These data are necessary as input to the Structural Analysis Program to obtain member loads. Symmetry of both the structure and the loading has been utilized.

Soil loads, having components at control points not coincident with footpad joints, are beamed to the immediately adjacent joints. Attenuator and cable loads are obtained directly from the Landing Loads and Motions Program. Inertia loads are obtained as products of the assigned joint masses with the corresponding accelerations. Gravity loads, which are weights of the assigned joint masses, result from an acceleration of gravity of 12.3 ft/sec^2.

Internal loads in a typical footpad member obtained from the Structural Analysis Program are presented in Figure 8.2-4. These loads result from the external footpad loading case defined in Figure 8.2-3. Local axes directions, defined by the locations of the P-Q-R joints of the member, illustrate the

EXTERNAL LOAD DISTRIBUTION ON PAYLOAD, BASE PLATFORM, AND AUXILIARY EQUIPMENT
UPSLOPE LANDING, MAXIMUM RESULTANT SOIL FORCE CONDITION

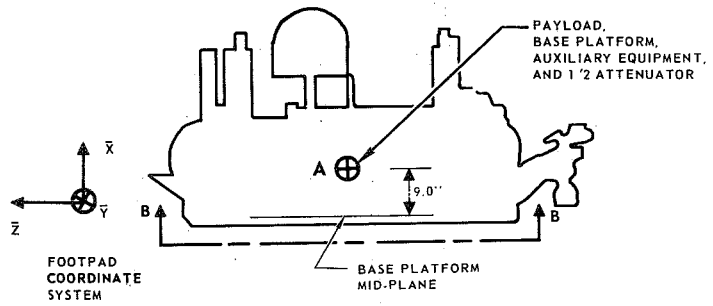

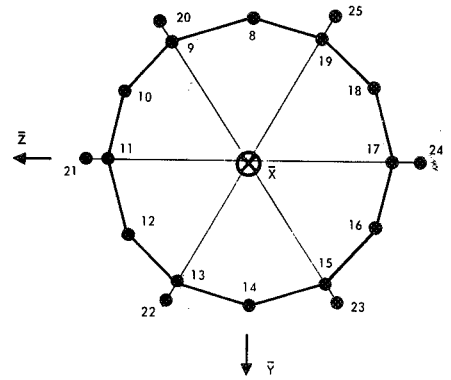

LOCATION	INERTIA FORCES (LB)			INERTIA MOMENTS (IN.-LB)			ATTENUATOR FORCES (LB)			VERTICAL CABLE FORCES (LB)			DIAGONAL CABLE FORCES (LB)			GRAVITY FORCES (LB)			TOTAL LOADS FORCES (LB)			TOTAL LOADS MOMENTS (IN.-LB)		
	$F_{\bar{X}}$	$F_{\bar{Y}}$	$F_{\bar{Z}}$	$M_{\bar{X}}$	$M_{\bar{Y}}$	$M_{\bar{Z}}$	$F_{\bar{X}}$	$F_{\bar{Y}}$	$F_{\bar{Z}}$	$F_{\bar{X}}$	$F_{\bar{Y}}$	$F_{\bar{Z}}$	$F_{\bar{X}}$	$F_{\bar{Y}}$	$F_{\bar{Z}}$	$F_{\bar{X}}$	$F_{\bar{Y}}$	$F_{\bar{Z}}$	$F_{\bar{X}}$	$F_{\bar{Y}}$	$F_{\bar{Z}}$	$M_{\bar{X}}$	$M_{\bar{Y}}$	$M_{\bar{Z}}$
A	-4681	0	-6047	0	21167	0										-329	0	3	-5010	0	-6044	0	21167	0
8							-898	0	13										-898	0	13	0	0	0
9							-186	0	3				0	0	0				-186	0	3	0	0	0
10							526	0	-8										526	0	-8	0	0	0
11							534	0	-8				0	0	0				534	0	-8	0	0	0
12							525	0	-8										525	0	-8	0	0	0
13							-186	0	3				0	0	0				-186	0	3	0	0	0
14							-898	0	13										-898	0	13	0	0	0
15							1462	0	-21				-509	-1157	1758				953	-1157	1737	0	0	0
16							1462	0	-21										1462	0	-21	0	0	0
17							1462	0	-22				-703	0	2622				759	0	2600	0	0	0
18							1462	0	-21										1462	0	-21	0	0	0
19							1462	0	-21				-509	1157	1758				953	1157	1737	0	0	0
20										0	0	0							0	0	0	0	0	0
21										0	0	0							0	0	0	0	0	0
22										0	0	0							0	0	0	0	0	0
23										0	0	0							0	0	0	0	0	0
24										0	0	0							0	0	0	0	0	0
25										0	0	0							0	0	0	0	0	0

NOTE: ALL FORCES AND MOMENTS ARE RESOLVED INTO FOOTPAD COORDINATE SYSTEM

Figure 8.2-2

EXTERNAL LOAD DISTRIBUTION ON FOOTPAD (EMPLOYING SYMMETRY)
UPSLOPE LANDING, MAXIMUM RESULTANT SOIL FORCE CONDITION

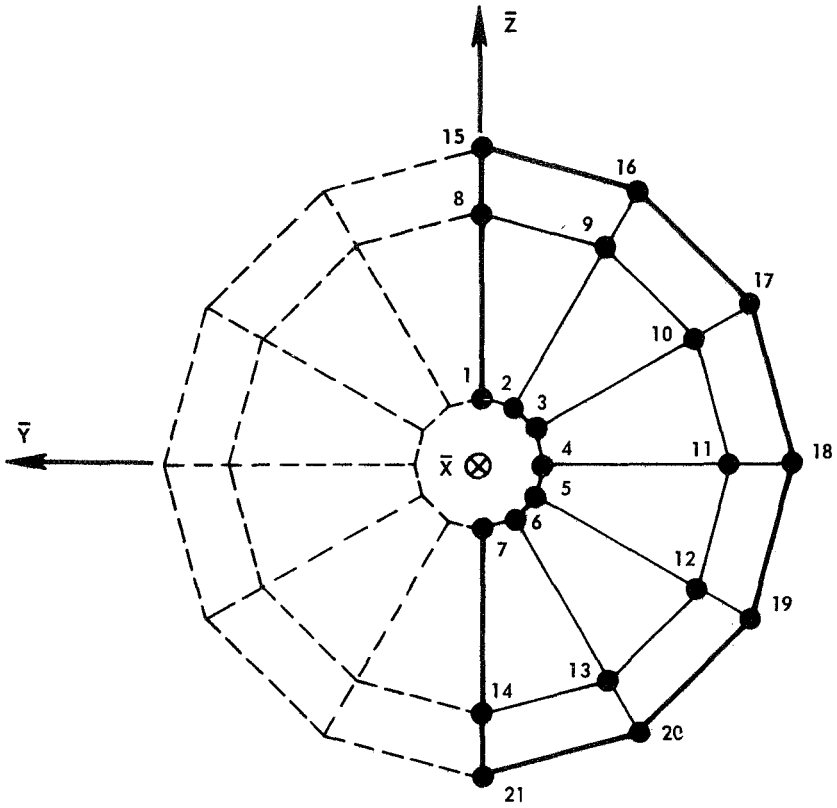

BOTTOM VIEW – FOOTPAD

JOINT NO.	LOAD DISTRIBUTION																		TOTAL FORCE COMPONENTS(LB)		
	SOIL FORCES(LB)			ATTENUATOR FORCES (LB)			VERTICAL CABLE FORCES (LB)			DIAGONAL CABLE FORCES (LB)			INERTIA FORCES (LB)			GRAVITY FORCES(LB)					
	$F_{\bar{X}}$	$F_{\bar{Y}}$	$F_{\bar{Z}}$	$F_{\bar{X}}$	$F_{\bar{Y}}$	$F_{\bar{Z}}$	$F_{\bar{X}}$	$F_{\bar{Y}}$	$F_{\bar{Z}}$	$F_{\bar{X}}$	$F_{\bar{Y}}$	$F_{\bar{Z}}$	$F_{\bar{X}}$	$F_{\bar{Y}}$	$F_{\bar{Z}}$	$F_{\bar{X}}$	$F_{\bar{Y}}$	$F_{\bar{Z}}$	$F_{\bar{X}}$	$F_{\bar{Y}}$	$F_{\bar{Z}}$
1													-58	0	-63	-1	0	0	-59	0	-63
2													-117	0	-126	-2	0	0	-119	0	-126
3													-117	0	-126	-2	0	0	-119	0	-126
4													-117	0	-126	-2	0	0	-119	0	-126
5													-117	0	-126	-2	0	0	-119	0	-126
6													-117	0	-126	-2	0	0	-119	0	-126
7													-58	0	-63	-1	0	0	-59	0	-63
8				-269	0	4				352	-754	-1311	52	0	-40	-1	0	0	134	-754	-1347
9				-526	0	8							102	0	-79	-1	0	0	-425	0	-71
10				186	0	-3				509	1157	-1758	83	0	-77	-1	0	0	777	1157	-1838
11				898	0	-13							14	0	-75	-1	0	0	911	0	-88
12				-1462	0	21				0	0	0	-143	0	-76	-1	0	0	-1606	0	-55
13	385	0	418	-1462	0	21							-339	0	-82	-1	0	0	-1417	0	357
14	999	0	1108	-731	0	11				0	0	0	-216	0	-43	-1	0	0	51	0	1076
15							0	0	0				71	0	-45	-1	0	0	70	0	-45
16													100	0	-61	-1	0	0	99	0	-61
17							0	0	0				141	0	-87	-2	0	0	139	0	-87
18													58	0	-56	-1	0	0	57	0	-56
19							0	0	0				-141	0	-84	-2	0	0	-143	0	-84
20	772	0	889										-329	0	-65	-1	0	0	442	0	824
21	1960	0	2278				0	0	0				-331	0	-51	-1	0	0	1628	0	2227

NOTE: ALL FORCES ARE RESOLVED INTO FOOTPAD COORDINATE SYSTEM

Figure 8.2–3

TYPICAL INTERNAL LOAD DISTRIBUTION – MEMBER 16

UPSLOPE LANDING, MAXIMUM RESULTANT SOIL FORCE CONDITION

BAR FORCES AND MOMENTS
LOCAL COORDINATE SYSTEMS

BAR NUMBER	NODAL POINT NUMBERS P	Q	R		FORCE X	FORCE Y	FORCE Z	MOMENT X	MOMENT Y	MOMENT Z
16	10	11	18	POINT P	1184	–147	–352	–5	1052	–1027
				POINT Q	–1184	147	352	5	3932	–1049

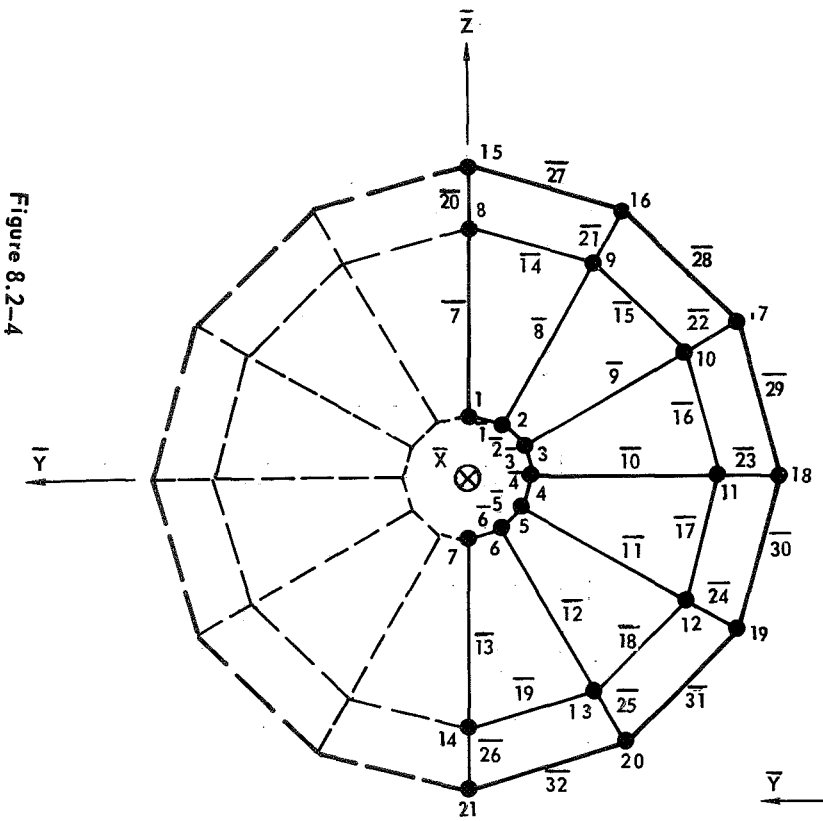

BOTTOM VIEW – FOOTPAD

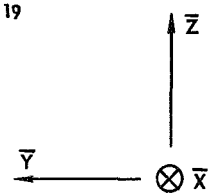

FOOTPAD
COORDINATE SYSTEM

APPROPRIATE SEGMENTS OF OUTPUT
LISTING – STRUCTURAL ANALYSIS PROGRAM

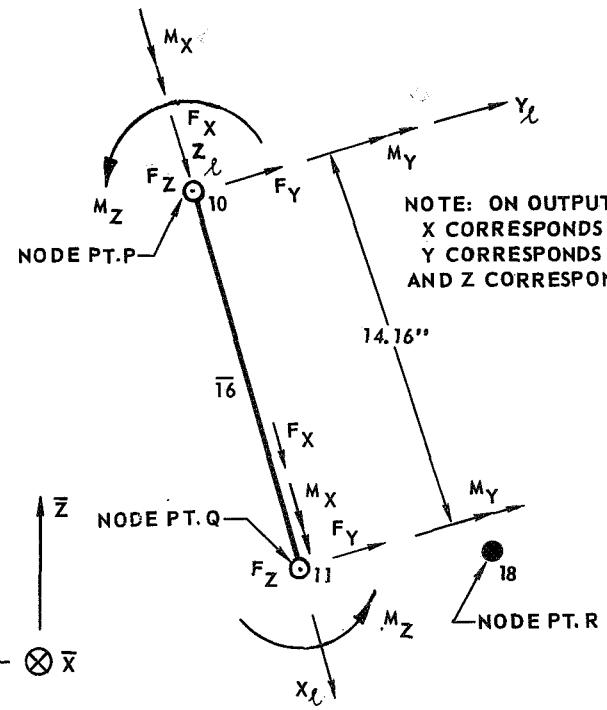

NOTE: ON OUTPUT LISTING,
X CORRESPONDS TO X_ℓ,
Y CORRESPONDS TO Y_ℓ,
AND Z CORRESPONDS TO Z_ℓ.

Figure 8.2–4

interpretation of internal loads output from the Structural Analysis Program.

The Structural Analysis Program was used to analyze the combined footpad and attenuation system thereby demonstrating program capability to account for plastic support deformation. Footpad symmetry was employed using the idealization discussed in Section 6.1.2. The program was exercised five times using five loads (1414, 2830, 4240, 5660, and 7070 pounds) applied to the edge of the footpad, as shown in Figure 8.2-5. Output data for the 4240 pound load condition are given in Appendix A. Side and vertical deflections of the footpad at the point of load application were calculated both with and without plastic attenuator deformation. Side deflections were not affected by attenuator deformation because in both cases diagonal tension cables were used to carry the side component of loads. In addition, the Structural Analysis Program does not include secondary effects such as shortening deformations resulting from elastic bending as discussed in Section 7.1.2.2.

Figure 8.2-5 demonstrates the capability of the program to account for plasticity of support structure, however, landing dynamics were not considered because the lander was not allowed to rotate as the footpad stroked.

LANDING SYSTEM LOAD STROKE CHARACTERISTICS FOR EDGE LOADING

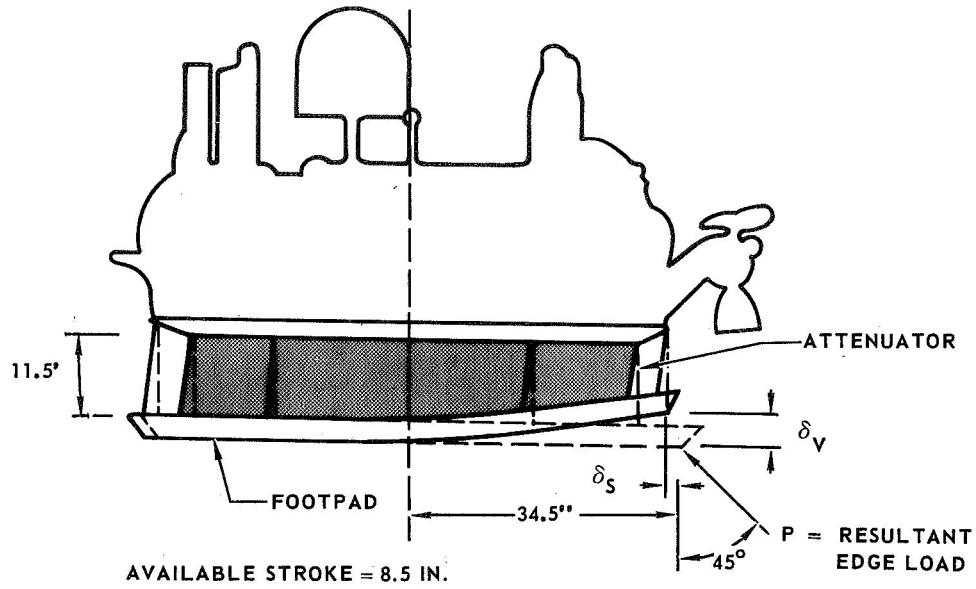

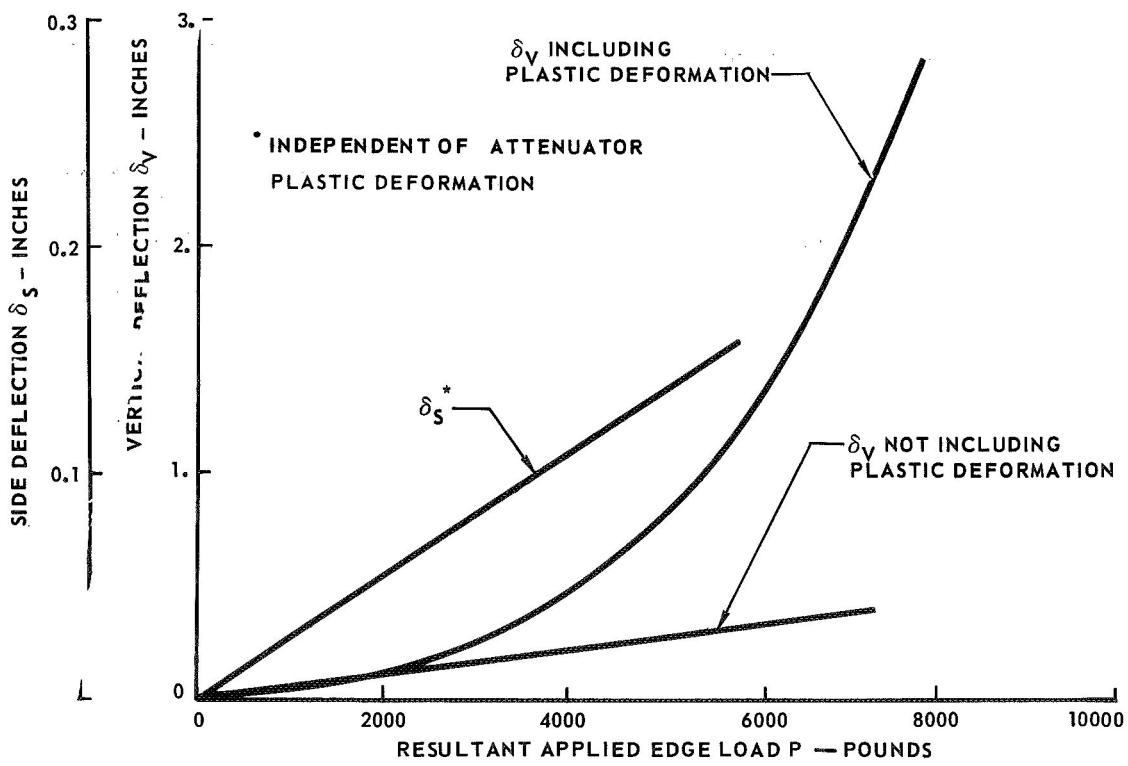

Figure 8.2–5

9. CONCLUSIONS

Two methods of analysis and associated computer programs were developed for analysis of platform landers. One program is used to predict landing loads and spatial motions, and the other program determines internal loads distribution in landing system structure. Each program incorporates certain features which were shown to be important. For example, in the Landing Loads and Motions Program, footpad flexibility and a comprehensive soil mechanics routine were included. Effects of plastic supports, representing the crushable attenuation system, were incorporated in the Structural Analysis Program.

Although only limited analyses were possible within constraints of this task order, they were sufficient to show that the programs are working properly and to demonstrate primary program capabilities. As a result of these analyses, the following conclusions are possible:

1) Footpad flexibility significantly affects landing loads. As shown in Figure 8.1-6, soil forces applied to the footpad during the initial landing portion are about 50 percent greater for a rigid footpad than a flexible footpad. These higher forces are reflected in higher accelerations at payload center of gravity and lead to inaccurate predictions of lander motions.

2) Soil properties significantly affect landing loads. In Figure 8.1-7, it is shown that soil forces increase rapidly with time when landing in dense sand and that some rebound is present. When landing in loose sand, soil forces increase gradually with time and no rebound occurs. Overall lander motions are highly dependent upon soil properties. Therefore, it is important that programs for studying landing motions, include the capability for properly representing soil properties.

3) Plastic support deformations must be included for accurate determination of internal loads and displacements in landing system structure. As shown in Figure 8.2-5, the vertical deflection at the edge of the footpad resulting from a 6000 pound load is over three times greater when plastic supports are included.

4) Many loading conditions on the footpad can be studied using the Structural Analysis Program only because plastic supports are included. This program requires less than 3 minutes of machine time. A complete set of balanced, external loads acting on the footpad at any point in time can be obtained from the Landing Loads and Motions Program. These loads can be used in the Structural Analysis Program to obtain internal loads. In this case, the plastic support option is not needed because all external loads are known. However, typical landing conditions studied using the Landing Loads and Motions Program required about 25 minutes of machine time.

5) Mounting of auxiliary equipment, other than the landing radar, on the platform is prefered to mounting on the footpad. This approach is slightly lighter and minimizes the possibility of surface contamination due to damage of a propellant line or tank.

When using the two programs in series, some calculations are usually required after operation of the Landing Loads and Motions Program before soil and inertia loads are in the form required by the Structural Analysis Program. These calculations are necessary when the structural joints used in the Structural Analysis Program do not coincide with the control points used in the Landing Loads and Motions Program. Automation of these calculations could improve the programs, but was considered beyond the scope of this task order.

10. REFERENCES

1. Serpanos, J. E.: "A User-Coded Matrix Generator for the Displacement Method - Format II Second Version of Fortran Matrix Abstraction Technique", Air Force Flight Dynamics Laboratory Technical Report 66-207 Volume IV, March 1967.

2. Varga, R. S.: Matrix Iterative Analysis, Prentice Hall, Inc., Englewood Cliffs, N.J., 1962.

3. Hurty, Walter C. and Robinstein, Moshe F.: Dynamics of Structures, Prentice-Hall, Inc., Englewood Cliffs, N.J., 1964, pp 43-45.

4. Young, Ronald and McCallum, Helen: "The Determination of Frequencies and Modes of Undamped Structures Using Finite-Element Stiffness and Consistent-Mass Matrices", Aeroelastic and Structures Research Laboratory, Massachusetts Institute of Technology, Cambridge, Massachusetts, June 1965.

5. Logcher, R. D.; Flachsbart, B. F.; Hall, E.J.; Power, C. M.; Wells, R. A.: ICES-STRUDL-I, The Structural Design Language Engineering User's Manual, Massachusetts, September 1967.

6. Thomson, William T.: Vibration Theory and Applications, Prentice-Hall Inc., Englewood Cliffs, N.J., 1965, pp 294-299.

7. Bisplinghoff, Raymond L.; Ashley, Holt; and Halfman, Robert L.: Aeroelasticity, Addison-Wesley Publishing Company, Inc., Cambridge, Mass., 1955, pp 632-635.

8. "Summary Report - Lunar Module (LM) Soil Mechanics Study", Report #AM-68-4, Bendix Energy Controls Division, South Bend, Indiana, November 1968.

9. Anderson, R. G.: "Application of LM Soil-Footpad Interaction Model to Surveyor Landing Dynamics Simulation, Paper 68K11, Bendix Energy Controls Division, South Bend, Indiana, November 1968.

10. "Final Report - Development of a Mathematical Analysis for Predicting the Dynamic Behavior of the APOLLO Command Module During Earth Landing", Bendix Report MM-66-15, Bendix Products Aerospace Division, May 1966.

APPENDIX A

EXAMPLE INPUT AND OUTPUT

STRUCTURAL ANALYSIS PROGRAM

STRUCTURAL ANALYSIS PROGRAM - PLATFORM LANDER
MASTER AGREEMENT, CONTRACT NAS1-8137, TASK ORDER NUMBER TWO
MCDONNELL DOUGLAS ASTRONAUTICS COMPANY, EASTERN DIVISION

STRUCTURAL ANALYSIS DATA - CARD CODE

BLANK = 0	COMMENTS
1	NODAL POINT DEFINITIONS
2	REFERENCE POINTS
3	NODAL POINT RESTRAINT DEFINITIONS
4	FORCE VECTORS
5	MOMENT VECTORS
6	BAR DEFINITIONS
7	FORMATED-DATA TERMINATOR

1	1				6.8		-1		-1		-1			
1	2			-3.4	5.89									
1	3			-5.89	3.4									
1	4			-6.8										
1	5			-5.89	-3.4									
1	6			-3.4	-5.89									
1	7				-6.8		-1		-1		-1			
1	8				27.35		-1		-1		-1			
1	9			-13.68	23.69									
1	10			-23.69	13.68									
1	11			-27.35										
1	12			-23.69	-13.68									
1	13			-13.68	-23.69									
1	14				-27.35		-1		-1		-1			
1	15				34.5		-1		-1		-1		1	
1	16			-17.25	29.88									
1	17			-29.88	17.25									
1	18			-34.5										
1	19			-29.88	-17.25									
1	20			-17.25	-29.88									
1	21				-34.5		-1		-1		-1			
1	22		11.5		27.35	2	-1	-1	-1	-1	-1			
1	23		11.5	-13.68	23.69	3	-1	-1	-1	-1	-1			
1	24		11.5	-23.69	13.68	3	-1	-1	-1	-1	-1			
1	25		11.5	-27.35		3	-1	-1	-1	-1	-1			
1	26		11.5	-23.69	-13.68	3	-1	-1	-1	-1	-1			
1	27		11.5	-13.68	-23.69	3	-1	-1	-1	-1	-1			
1	28		11.5		-27.35	2	-1	-1	-1	-1	-1			
1	29		11.5		34.5	4	-1	-1	-1	-1	-1			
1	30		11.5	-29.88	17.25	5	-1	-1	-1	-1	-1			
1	31		11.5	-29.88	-17.25	5	-1	-1	-1	-1	-1			
1	32		11.5		-34.5	4	-1	-1	-1	-1	-1			
1	33		11.5		27.35	5	-1	-1	-1	-1	-1			
1	34		11.5	-23.69	13.68	5	-1	-1	-1	-1	-1			
1	35		11.5	-23.69	-13.68	5	-1	-1	-1	-1	-1			
1	36		11.5		-27.35	5	-1	-1	-1	-1	-1			
1	37		11.5	23.69	-13.68	5	-1	-1	-1	-1	-1			
1	38		11.5	23.69	13.68	5	-1	-1	-1	-1	-1			
3	1													
3	2		731.	-731.										
3	3		1462.	-1462.										
3	4		7500.											
3	5		15000.											
4	1		1500.		-1500.									
6	1	1	2 161	.625	.1414		.4583		.00303		1.6E07	6.2E06	1.67	2.5
6	2	2	3 171	.625	.1414		.4583		.00303		1.6E07	6.2E06	1.67	2.5

6	3	3	4	181	.625	.1414	.4583	.00303	1.6E07	6.2E06	1.67	2.5
6	4	4	5	191	.625	.1414	.4583	.00303	1.6E07	6.2E06	1.67	2.5
6	5	5	6	201	.625	.1414	.4583	.00303	1.6E07	6.2E06	1.67	2.5
6	6	6	7	211	.625	.1414	.4583	.00303	1.6E07	6.2E06	1.67	2.5
6	7	1	8	161	.441	.284	.273	.00054	8.0E06	3.1E06	2.33	1.75
6	8	2	9	171	.441	.284	.273	.00054	1.6E07	6.2E06	2.33	1.75
6	9	3	10	181	.441	.284	.273	.00054	1.6E07	6.2E06	2.33	1.75
6	10	4	11	191	.441	.284	.273	.00054	1.6E07	6.2E06	2.33	1.75
6	11	5	12	201	.441	.284	.273	.00054	1.6E07	6.2E06	2.33	1.75
6	12	6	13	211	.441	.284	.273	.00054	1.6E07	6.2E06	2.33	1.75
6	13	7	14	201	.441	.284	.273	.00054	8.0E06	3.1E06	2.33	1.75
6	14	8	9	161	.56	.1958	.4777	.00111	1.6E07	6.2E06	2.0	2.0
6	15	9	10	171	.56	.1958	.4777	.00111	1.6E07	6.2E06	2.0	2.0
6	16	10	11	181	.56	.1958	.4777	.00111	1.6E07	6.2E06	2.0	2.0
6	17	11	12	191	.56	.1958	.4777	.00111	1.6E07	6.2E06	2.0	2.0
6	18	12	13	201	.56	.1958	.4777	.00111	1.6E07	6.2E06	2.0	2.0
6	19	13	14	211	.56	.1958	.4777	.00111	1.6E07	6.2E06	2.0	2.0
6	20	8	15	161	.441	.284	.273	.00054	8.0E06	3.1E06	2.33	1.75
6	21	9	16	171	.441	.284	.273	.00054	1.6E07	6.2E06	2.33	1.75
6	22	10	17	181	.441	.284	.273	.00054	1.6E07	6.2E06	2.33	1.75
6	23	11	18	191	.441	.284	.273	.00054	1.6E07	6.2E06	2.33	1.75
6	24	12	19	201	.441	.284	.273	.00054	1.6E07	6.2E06	2.33	1.75
6	25	13	20	211	.441	.284	.273	.00054	1.6E07	6.2E06	2.33	1.75
6	26	14	21	201	.441	.284	.273	.00054	8.0E06	3.1E06	2.33	1.75
6	27	15	16	91	.53	.839	.2933	.00105	1.6E07	6.2E06	2.2	1.82
6	28	16	17	101	.53	.839	.2933	.00105	1.6E07	6.2E06	2.2	1.82
6	29	17	18	111	.53	.839	.2933	.00105	1.6E07	6.2E06	2.2	1.82
6	30	18	19	121	.53	.839	.2933	.00105	1.6E07	6.2E06	2.2	1.82
6	31	19	20	131	.53	.839	.2933	.00105	1.6E07	6.2E06	2.2	1.82
6	32	20	21	141	.53	.839	.2933	.00105	1.6E07	6.2E06	2.2	1.82
6	33	8	22	1	24.38				13600.			
6	34	9	23	2	24.38				27200.			
6	35	10	24	3	24.38				27200.			
6	36	11	25	4	24.38				27200.			
6	37	12	26	5	24.38				27200.			
6	38	13	27	6	24.38				27200.			
6	39	14	28	7	24.38				13600.			
6	40	15	29	8					.8165E07			
6	41	17	30	10	.0765				1.633E07			
6	42	19	31	12	.0765				1.633E07			
6	43	21	32	14	.0765				.8165E07			
6	44	12	33	38	.0376				1.633E07			
6	45	8	35	10					1.633E07			
6	46	10	36	37					1.633E07			
6	47	14	34	12	.0376				1.633E07			
6	48	12	37	38	.0376				1.633E07			
6	49	10	38	8	.0376				1.633E07			

* * * * * * * *

FOOTPAD IDEALIZATION --INCLUDING DIAGONAL CABLES

7 * * * * * * * *

```
$INDATA
INDSFL  =  1,
INDSFG  =  1,
INDISL  =  0,
INDITR  =  3000,
ERRTOL  =  0.1E-02,
SOLVEC  =  0.0,  0.0,  0.0,  0.0,  0.0,  0.0,  0.0,  0.0,  0.0,  0.0,  0.0,  0.0,  0.0,  0.0,  0.0,  0.0,  0.0,  0.0,
           0.0,  0.0,  0.0,  0.0,  0.0,  0.0,  0.0,  0.0,  0.0,  0.0,  0.0,  0.0,  0.0,  0.0,  0.0,  0.0,  0.0,  0.0,
           0.0,  0.0,  0.0,  0.0,  0.0,  0.0,  0.0,  0.0,  0.0,  0.0,  0.0,  0.0,  0.0,  0.0,  0.0,  0.0,  0.0,  0.0,
           0.0,  0.0,  0.0,  0.0,  0.0,  0.0,  0.0,  0.0,  0.0,  0.0,  0.0,  0.0,  0.0,  0.0,  0.0,  0.0,  0.0,  0.0,
           0.0,  0.0,  0.0,  0.0,  0.0,  0.0,  0.0,  0.0,  0.0,  0.0,  0.0,  0.0,  0.0,  0.0,  0.0,  0.0,  0.0,  0.0,
           0.0,  0.0,  0.0,  0.0,  0.0,  0.0,  0.0,  0.0,  0.0,  0.0,  0.0,  0.0,  0.0,  0.0,  0.0,  0.0,  0.0,  0.0,
           0.0,  0.0,  0.0,  0.0,  0.0,  0.0,  0.0,  0.0,  0.0,  0.0,  0.0,  0.0,  0.0,  0.0,  0.0,  0.0,  0.0,  0.0,
           0.0,  0.0,  0.0,  0.0,  0.0,  0.0,  0.0,  0.0,  0.0,  0.0,  0.0,  0.0,  0.0,  0.0,  0.0,  0.0,  0.0,  0.0,
           0.0,  0.0,  0.0,  0.0,  0.0,  0.0,  0.0,  0.0,  0.0,  0.0,  0.0,  0.0,  0.0,  0.0,  0.0,  0.0,  0.0,  0.0,
           0.0,  0.0,  0.0,  0.0,  0.0,  0.0,  0.0,  0.0,  0.0,  0.0,  0.0,  0.0,  0.0,  0.0,  0.0,  0.0,  0.0,  0.0,
           0.0,  0.0,  0.0,  0.0,  0.0,  0.0,  0.0,  0.0,  0.0,  0.0,  0.0,  0.0,  0.0,  0.0,  0.0,  0.0,  0.0,  0.0,
           0.0,  0.0,  0.0,  0.0,  0.0,  0.0,  0.0,  0.0,  0.0,  0.0,  0.0,  0.0,  0.0,  0.0,  0.0,  0.0,  0.0,  0.0,
           0.0,  0.0,  0.0,  0.0,  0.0,  0.0,  0.0,  0.0,  0.0,  0.0,  0.0,  0.0,  0.0,  0.0,  0.0,  0.0,  0.0,  0.0,
           0.0,  0.0,  0.0,  0.0,  0.0,  0.0,  0.0,  0.0,  0.0,  0.0,  0.0,  0.0,  0.0,  0.0,  0.0,  0.0,  0.0,  0.0,
           0.0,  0.0,  0.0,  0.0,  0.0,  0.0,  0.0,  0.0,  0.0,  0.0,  0.0,  0.0,  0.0,  0.0,  0.0,  0.0,  0.0,  0.0,
           0.0,  0.0,  0.0,  0.0,  0.0,  0.0,  0.0,  0.0,  0.0,  0.0,  0.0,  0.0,  0.0,  0.0,  0.0,  0.0,  0.0,  0.0,
           0.0,  0.0,  0.0,  0.0,  0.0,  0.0,  0.0,  0.0,  0.0,  0.0,  0.0,  0.0,  0.0,  0.0,  0.0,  0.0,  0.0,  0.0,
           0.0,  0.0,  0.0,  0.0,  0.0,  0.0,  0.0,  0.0,  0.0,  0.0,  0.0,  0.0,  0.0,  0.0,  0.0,  0.0,  0.0,  0.0,
           0.0,  0.0,  0.0,  0.0,  0.0,  0.0,  0.0,  0.0,  0.0,  0.0,  0.0,  0.0,  0.0,  0.0,  0.0,  0.0,  0.0,  0.0,
           0.0,  0.0,  0.0,  0.0,  0.0,  0.0,  0.0,  0.0,  0.0,  0.0,  0.0,  0.0,  0.0,  0.0,  0.0,  0.0,  0.0,  0.0,
           0.0,  0.0,  0.0,  0.0,  0.0,  0.0,  0.0,  0.0,  0.0,  0.0,  0.0,  0.0,  0.0,  0.0,  0.0,  0.0,  0.0,  0.0,
           0.0,  0.0,  0.0,  0.0,  0.0,  0.0,  0.0,  0.0,  0.0,  0.0,  0.0,  0.0,  0.0,  0.0,  0.0,  0.0,  0.0,  0.0,
           0.0,  0.0,  0.0,  0.0,  0.0,  0.0,  0.0,  0.0,  0.0,  0.0,  0.0,  0.0,  0.0,  0.0,  0.0,  0.0,  0.0,  0.0,
           0.0,  0.0,  0.0,  0.0,  0.0,  0.0,  0.0,  0.0,  0.0,  0.0,  0.0,  0.0,  0.0,  0.0,  0.0,  0.0,  0.0,  0.0,
           0.0,  0.0,  0.0,  0.0,  0.0,  0.0,  0.0,  0.0,  0.0,  0.0,  0.0,  0.0,
RELAXF  =  0.1E+01,
INDRLX  =  0,
INDRKT  =  0,
INDWKT  =  0,
INDPLS  =  1,
MINRST  =  6,
INDNMA  =  0,
IRWKP   =  0,  0,  0,  0,  0,  0,  0,  0,  0,  0,  0,  0,  0,  0,  0,  0,  0,  0,  0,  0,  0,  0,  0,  0,  0,  0,  0,
           0,  0,  0,  0,  0,  0,  0,  0,  0,  0,  0,  0,  0,  0,  0,  0,  0,  0,  0,  0,  0,  0,  0,  0,  0,  0,  0,
           0,  0,  0,  0,  0,  0,  0,  0,  0,  0,  0,  0,  0,  0,  0,  0,  0,  0,  0,  0, -0, -0, -0, -0, -0,  0,  0,
           0,  0,  0,  0,  0,  0,  0,  0,  0,  0,  0,  0,  0,  0,  0,  0,  0,  0,  0,  0,  0,  0,
AMASS   = -0.0,  0.731E+03,  0.1462E+04,  0./5E+04,  0.15E+05,  0.0,  0.0,  0.0,  0.0,  0.0,  0.0,  0.0,  0.0,  0.0,
           0.0,  0.0,  0.0,  0.0,  0.0,  0.0,  0.0,  0.0,  0.0,  0.0,  0.0,  0.0,  0.0,  0.0,  0.0,  0.0,  0.0,  0.0,
           0.0,  0.0,  0.0,  0.0,  0.0,  0.0,  0.0,  0.0,  0.0,  0.0,  0.0,  0.0,  0.0,  0.0,  0.0,  0.0,  0.0,  0.0,
           0.0,  0.0,  0.0,  0.0,  0.0,  0.0,  0.0,  0.0,  0.0,  0.0,  0.0,  0.0,  0.0,  0.0,  0.0,  0.0,  0.0,  0.0,
           0.0,  0.0,  0.0,  0.0,  0.0,  0.0,  0.0,  0.0,  0.0,  0.0,  0.0,  0.0,  0.0,  0.0,  0.0,  0.0,  0.0,  0.0,
```

```
          0.0,  0.0, -0.0, -0.731E+03, -0.1462E+04, -0.0, -0.0,  0.0,  0.0,  0.0,  0.0,  0.0,  0.0,  0.0,  0.0,  0.0,
IREDTO  =  228,
IND#NM  =  0,
TMAX    =  0.29E+03,
$END
```

APPENDIX A

STRUCTURAL STIFFNESS MATRIX

ROW 1	COL. 1= 3.643E+05	COL. 5=-1.357E+05	COL. 6= 6.145E+05	COL. 7=-3.615E+05	COL. 11=-1.645E+05	COL. 12= 6.145E+05	
	COL. 43=-2.796E+03	COL. 47= 2.875E+04					
ROW 2	COL. 2= 2.675E+06	COL. 3= 6.296E+05	COL. 4= 1.166E+05	COL. 8=-2.673E+06	COL. 9=-6.296E+05	COL. 10= 1.457E+05	
	COL. 44=-2.830E+03	COL. 46=-2.908E+04					
ROW 3	COL. 2= 6.296E+05	COL. 3= 6.604E+05	COL. 4=-5.444E+05	COL. 8=-6.296E+05	COL. 9=-4.887E+05	COL. 10=-5.444E+05	
	COL. 45=-1.717E+05						
ROW 4	COL. 2= 1.166E+05	COL. 3=-5.444E+05	COL. 4= 2.044E+06	COL. 8=-1.457E+05	COL. 9= 5.444E+05	COL. 10= 3.489E+05	
	COL. 44= 2.908E+04	COL. 46= 1.882E+05					
ROW 5	COL. 1=-1.357E+05	COL. 5= 6.207E+05	COL. 6=-7.986E+05	COL. 7= 1.645E+05	COL. 11=-6.941E+04	COL. 12= 2.394E+05	
	COL. 43=-2.875E+04	COL. 47= 1.891E+05					
ROW 6	COL. 1= 6.145E+05	COL. 5=-7.986E+05	COL. 6= 2.989E+06	COL. 7=-6.145E+05	COL. 11= 2.394E+05	COL. 12=-8.997E+05	
	COL. 48=-8.146E+01						
ROW 7	COL. 1=-3.615E+05	COL. 5= 1.645E+05	COL. 6=-6.145E+05	COL. 7= 7.283E+05	COL. 11=-2.355E+05	COL. 12=-1.360E+05	
	COL. 13=-3.613E+05	COL. 17=-4.498E+05	COL. 18= 4.498E+05	COL. 49=-5.591E+03	COL. 53= 4.976E+04	COL. 54= 2.874E+04	
ROW 8	COL. 2=-2.673E+06	COL. 3=-6.296E+05	COL. 4=-1.457E+05	COL. 8= 4.343E+06	COL. 9= 1.743E+06	COL. 10= 2.022E+05	
	COL. 14=-1.580E+06	COL. 15=-1.260E+06	COL. 16= 3.983E+05	COL. 50=-9.010E+04	COL. 51= 1.462E+05	COL. 52=-5.034E+04	
ROW 9	COL. 2=-6.296E+05	COL. 3=-4.887E+05	COL. 4= 5.444E+05	COL. 8= 1.743E+06	COL. 9= 2.327E+06	COL. 10= 1.170E+05	
	COL. 14=-1.260E+06	COL. 15=-1.580E+06	COL. 16=-3.983E+05	COL. 50= 1.462E+05	COL. 51=-2.588E+05	COL. 52=-2.907E+04	
ROW 10	COL. 2= 1.457E+05	COL. 3=-5.444E+05	COL. 4= 3.489E+05	COL. 8= 2.022E+05	COL. 9= 1.170E+05	COL. 10= 4.087E+06	
	COL. 14=-3.983E+05	COL. 15= 3.983E+05	COL. 16= 3.492E+05	COL. 50= 5.034E+04	COL. 51= 2.907E+04	COL. 52= 3.764E+05	
ROW 11	COL. 1=-1.645E+05	COL. 5=-6.941E+04	COL. 6= 2.394E+05	COL. 7=-2.355E+05	COL. 11= 2.425E+06	COL. 12=-2.049E+06	
	COL. 13= 4.498E+05	COL. 17=-4.839E+05	COL. 18= 4.786E+05	COL. 49=-4.976E+04	COL. 53= 2.835E+05	COL. 54= 1.638E+05	
ROW 12	COL. 1= 6.145E+05	COL. 5= 2.394E+05	COL. 6=-8.997E+05	COL. 7=-1.360E+05	COL. 11=-2.049E+06	COL. 12= 4.794E+06	
	COL. 13=-4.498E+05	COL. 17= 4.786E+05	COL. 18=-4.839E+05	COL. 49=-2.874E+04	COL. 53= 1.638E+05	COL. 54= 9.445E+04	
ROW 13	COL. 7=-3.613E+05	COL. 11= 4.498E+05	COL. 12=-4.498E+05	COL. 13= 7.283E+05	COL. 17=-1.390E+05	COL. 18=-2.355E+05	
	COL. 19=-3.615E+05	COL. 23=-6.145E+05	COL. 24= 1.645E+05	COL. 55=-5.591E+03	COL. 59= 2.874E+04	COL. 60= 4.976E+04	
ROW 14	COL. 8=-1.580E+06	COL. 9=-1.260E+06	COL. 10=-3.983E+05	COL. 14= 2.327E+06	COL. 15= 1.743E+06	COL. 16= 1.170E+05	
	COL. 20=-4.887E+05	COL. 21=-6.296E+05	COL. 22= 5.444E+05	COL. 56=-2.588E+05	COL. 57= 1.462E+05	COL. 58=-2.907E+04	
ROW 15	COL. 8=-1.260E+06	COL. 9=-1.580E+06	COL. 10= 3.983E+05	COL. 14= 1.743E+06	COL. 15= 4.343E+06	COL. 16= 2.022E+05	
	COL. 20=-6.296E+05	COL. 21=-2.673E+06	COL. 22=-1.457E+05	COL. 56= 1.462E+05	COL. 57=-9.010E+04	COL. 58=-5.034E+04	
ROW 16	COL. 8= 3.983E+05	COL. 9=-3.983E+05	COL. 10= 3.492E+05	COL. 14= 1.170E+05	COL. 15= 2.022E+05	COL. 16= 4.087E+06	
	COL. 20=-5.444E+05	COL. 21= 1.457E+05	COL. 22= 3.489E+05	COL. 56= 2.907E+04	COL. 57= 5.034E+04	COL. 58= 3.764E+05	
ROW 17	COL. 7=-4.498E+05	COL. 11=-4.839E+05	COL. 12= 4.786E+05	COL. 13=-1.360E+05	COL. 17= 4.794E+06	COL. 18=-2.049E+06	
	COL. 19= 6.145E+05	COL. 23=-8.997E+05	COL. 24= 2.394E+05	COL. 55=-2.874E+04	COL. 59= 9.445E+04	COL. 60= 1.638E+05	
ROW 18	COL. 7= 4.498E+05	COL. 11= 4.786E+05	COL. 12=-4.839E+05	COL. 13=-2.355E+05	COL. 17=-2.049E+06	COL. 18= 2.425E+06	
	COL. 19=-1.645E+05	COL. 23= 2.394E+05	COL. 24=-6.941E+04	COL. 55=-4.976E+04	COL. 59= 1.638E+05	COL. 60= 2.835E+05	

STRUCTURAL STIFFNESS MATRIX

ROW 19	COL. 13=-3.615E+05	COL. 17= 6.145E+05	COL. 18=-1.645E+05	COL. 19= 7.286E+05	COL. 23= 7.451E-09	COL. 24=-2.715E+05	
	COL. 25=-3.615E+05	COL. 29=-6.145E+05	COL. 30=-1.645E+05	COL. 61=-5.595E+03	COL. 66= 5.749E+04		
ROW 20	COL. 14=-4.887E+05	COL. 15=-6.296E+05	COL. 16=-5.444E+05	COL. 20= 1.321E+06	COL. 21= 3.725E-09	COL. 22=-3.725E-09	
	COL. 26=-4.887E+05	COL. 27= 6.296E+05	COL. 28= 5.444E+05	COL. 62=-3.434E+05			
ROW 21	COL. 14=-6.296E+05	COL. 15=-2.673E+06	COL. 16= 1.457E+05	COL. 20= 3.725E-09	COL. 21= 5.351E+06	COL. 22= 2.332E+05	
	COL. 26= 6.296E+05	COL. 27=-2.673E+06	COL. 28= 1.457E+05	COL. 63=-5.660E+03	COL. 64=-5.816E+04		
ROW 22	COL. 14= 5.444E+05	COL. 15=-1.457E+05	COL. 16= 3.489E+05	COL. 20=-3.725E-09	COL. 21= 2.332E+05	COL. 22= 4.088E+06	
	COL. 26=-5.444E+05	COL. 27=-1.457E+05	COL. 28= 3.489E+05	COL. 63= 5.816E+04	COL. 64= 3.765E+05		
ROW 23	COL. 13=-6.145E+05	COL. 17=-8.997E+05	COL. 18= 2.394E+05	COL. 19= 7.451E-09	COL. 23= 5.979E+06	COL. 24= 1.863E-08	
	COL. 25= 6.145E+05	COL. 29=-8.997E+05	COL. 30=-2.394E+05	COL. 65=-1.629E+02			
ROW 24	COL. 13= 1.645E+05	COL. 17= 2.394E+05	COL. 18=-6.941E+04	COL. 19=-2.715E+05	COL. 23= 1.863E-08	COL. 24= 1.241E+06	
	COL. 25= 1.645E+05	COL. 29=-2.394E+05	COL. 30=-6.941E+04	COL. 61=-5.749E+04	COL. 66= 3.752E+05		
ROW 25	COL. 19=-3.615E+05	COL. 23= 6.145E+05	COL. 24= 1.645E+05	COL. 25= 7.283E+05	COL. 29= 1.390E+05	COL. 30=-2.355E+05	
	COL. 31=-3.613E+05	COL. 35=-4.498E+05	COL. 36=-4.498E+05	COL. 67=-5.591E+03	COL. 71=-2.874E+04	COL. 72= 4.976E+04	
ROW 26	COL. 20=-4.887E+05	COL. 21= 6.296E+05	COL. 22=-5.444E+05	COL. 26= 2.327E+06	COL. 27=-1.743E+06	COL. 28=-1.170E+05	
	COL. 32=-1.580E+06	COL. 33= 1.260E+06	COL. 34= 3.983E+05	COL. 68=-2.588E+05	COL. 69=-1.462E+05	COL. 70= 2.907E+04	
ROW 27	COL. 20= 6.296E+05	COL. 21=-2.673E+06	COL. 22=-1.457E+05	COL. 26=-1.743E+06	COL. 27= 4.343E+06	COL. 28= 2.022E+05	
	COL. 32= 1.260E+06	COL. 33=-1.580E+06	COL. 34= 3.983E+05	COL. 68=-1.462E+05	COL. 69=-9.010E+04	COL. 70=-5.034E+04	
ROW 28	COL. 20= 5.444E+05	COL. 21= 1.457E+05	COL. 22= 3.489E+05	COL. 26=-1.170E+05	COL. 27= 2.022E+05	COL. 28= 4.087E+06	
	COL. 32=-3.983E+05	COL. 33=-3.983E+05	COL. 34= 3.492E+05	COL. 68=-2.907E+04	COL. 69= 5.034E+04	COL. 70= 3.764E+05	
ROW 29	COL. 19=-6.145E+05	COL. 23=-8.997E+05	COL. 24=-2.394E+05	COL. 25= 1.360E+05	COL. 29= 4.794E+06	COL. 30= 2.049E+06	
	COL. 31= 4.498E+05	COL. 35=-4.839E+05	COL. 36=-4.786E+05	COL. 67= 2.874E+04	COL. 71= 9.445E+04	COL. 72=-1.638E+05	
ROW 30	COL. 19=-1.645E+05	COL. 23=-2.394E+05	COL. 24=-6.941E+04	COL. 25=-2.355E+05	COL. 29= 2.049E+06	COL. 30= 2.425E+06	
	COL. 31= 4.498E+05	COL. 35=-4.786E+05	COL. 36=-4.839E+05	COL. 67=-4.976E+04	COL. 71=-1.638E+05	COL. 72= 2.835E+05	
ROW 31	COL. 25=-3.613E+05	COL. 29= 4.498E+05	COL. 30= 4.498E+05	COL. 31= 7.283E+05	COL. 35= 2.355E+05	COL. 36=-1.360E+05	
	COL. 37=-3.615E+05	COL. 41=-1.645E+05	COL. 42=-6.145E+05	COL. 73=-5.591E+03	COL. 77=-4.976E+04	COL. 78= 2.874E+04	
ROW 32	COL. 26=-1.580E+06	COL. 27= 1.260E+06	COL. 28=-3.983E+05	COL. 32= 4.343E+06	COL. 33=-1.743E+06	COL. 34=-2.022E+05	
	COL. 38=-2.673E+06	COL. 39= 6.296E+05	COL. 40= 1.457E+05	COL. 74=-9.010E+04	COL. 75=-1.462E+05	COL. 76= 5.034E+04	
ROW 33	COL. 26= 1.260E+06	COL. 27=-1.580E+06	COL. 28=-3.983E+05	COL. 32=-1.743E+06	COL. 33= 2.327E+06	COL. 34= 1.170E+05	
	COL. 38= 6.296E+05	COL. 39=-4.887E+05	COL. 40= 5.444E+05	COL. 74=-1.462E+05	COL. 75=-2.588E+05	COL. 76=-2.907E+04	
ROW 34	COL. 26= 3.983E+05	COL. 27= 3.983E+05	COL. 28= 3.492E+05	COL. 32=-2.022E+05	COL. 33= 1.170E+05	COL. 34= 4.087E+06	
	COL. 38=-1.457E+05	COL. 39=-5.444E+05	COL. 40= 3.489E+05	COL. 74=-5.034E+04	COL. 75= 2.907E+04	COL. 76= 3.764E+05	
ROW 35	COL. 25=-4.498E+05	COL. 29=-4.839E+05	COL. 30=-4.786E+05	COL. 31= 2.355E+05	COL. 35= 2.425E+06	COL. 36= 2.049E+06	
	COL. 37= 1.615E+05	COL. 41=-6.941E+04	COL. 42=-2.394E+05	COL. 73= 4.976E+04	COL. 77= 2.835E+05	COL. 78=-1.638E+05	
ROW 36	COL. 25=-4.498E+05	COL. 29=-4.786E+05	COL. 30=-4.839E+05	COL. 31=-1.360E+05	COL. 35= 2.049E+06	COL. 36= 4.794E+06	
	COL. 37= 6.145E+05	COL. 41=-2.394E+05	COL. 42=-8.997E+05	COL. 73=-2.874E+04	COL. 77=-1.638E+05	COL. 78= 9.445E+04	

STRUCTURAL STIFFNESS MATRIX

```
ROW  37 COL.  31=-3.615E+05 COL.  35= 1.645E+05 COL.  36= 6.145E+05 COL.  37= 3.643E+05 COL.  41= 1.357E+05 COL.  42= 6.145E+05
        COL.  79=-2.798E+03 COL.  83=-2.875E+04

ROW  38 COL.  32=-2.673E+06 COL.  33= 6.296E+05 COL.  34=-1.457E+05 COL.  38= 2.675E+06 COL.  39=-6.296E+05 COL.  40=-1.166E+05
        COL.  80=-2.830E+03 COL.  82= 2.908E+04

ROW  39 COL.  32= 6.296E+05 COL.  33=-4.887E+05 COL.  34=-5.444E+05 COL.  38=-6.296E+05 COL.  39= 6.604E+05 COL.  40=-5.444E+05
        COL.  81=-1.717E+05

ROW  40 COL.  32= 1.457E+05 COL.  33= 5.444E+05 COL.  34= 3.489E+05 COL.  38=-1.166E+05 COL.  39=-5.444E+05 COL.  40= 2.044E+06
        COL.  80=-2.908E+04 COL.  82= 1.882E+05

ROW  41 COL.  31=-1.645E+05 COL.  35=-6.941E+04 COL.  36=-2.394E+05 COL.  37= 1.357E+05 COL.  41= 6.297E+05 COL.  42= 7.986E+05
        COL.  79= 2.875E+04 COL.  83= 1.891E+05

ROW  42 COL.  31=-6.145E+05 COL.  35=-2.394E+05 COL.  36=-8.997E+05 COL.  37= 6.145E+05 COL.  41= 7.986E+05 COL.  42= 2.989E+06
        COL.  84=-8.146E+01

ROW  43 COL.   1=-2.798E+03 COL.   5=-2.875E+04 COL.  43= 1.005E+05 COL.  47= 7.924E+04 COL.  48= 1.748E+05 COL.  49=-2.556E+04
        COL.  53=-4.678E+04 COL.  54= 1.748E+05 COL.  85=-4.329E+04 COL.  89= 1.548E+05 COL. 127=-2.883E+04

ROW  44 COL.   2=-2.830E+03 COL.   4= 2.908E+04 COL.  44= 6.332E+05 COL.  45= 1.550E+05 COL.  46=-8.874E+04 COL.  50=-5.913E+05
        COL.  51=-1.550E+05 COL.  52= 2.186E+04 COL.  86=-3.907E+04 COL.  88=-1.397E+05

ROW  45 COL.   3=-1.717E+05 COL.  44= 1.550E+05 COL.  45= 7.185E+05 COL.  46=-8.172E+04 COL.  50=-1.550E+05 COL.  51=-5.341E+04
        COL.  52=-8.172E+04 COL.  87=-4.934E+05

ROW  46 COL.   2=-2.908E+04 COL.   4= 1.882E+05 COL.  44=-8.874E+04 COL.  45=-8.172E+04 COL.  46= 2.047E+06 COL.  50=-2.186E+04
        COL.  51= 8.172E+04 COL.  52= 3.778E+05 COL.  86= 1.397E+05 COL.  88= 1.816E+05

ROW  47 COL.   1= 2.875E+04 COL.   5= 1.891E+05 COL.  43= 7.924E+04 COL.  47= 1.382E+06 COL.  48=-4.546E+05 COL.  49= 4.678E+04
        COL.  53= 4.910E+04 COL.  54=-1.853E+05 COL.  85=-1.548E+05 COL.  89= 2.478E+05

ROW  48 COL.   6=-8.146E+01 COL.  43= 1.748E+05 COL.  47=-4.546E+05 COL.  48= 1.700E+06 COL.  49=-1.748E+05 COL.  53=-1.853E+05
        COL.  54= 6.922E+05 COL.  90=-2.341E+02

ROW  49 COL.   7=-5.591E+03 COL.  11=-4.976E+04 COL.  12=-2.874E+04 COL.  43=-2.556E+04 COL.  47= 4.678E+04 COL.  48=-1.748E+05
        COL.  49= 2.011E+05 COL.  53= 1.373E+05 COL.  54= 7.922E+04 COL.  55=-2.559E+04 COL.  59=-1.281E+05 COL.  60= 1.281E+05
        COL.  91=-8.670E+04 COL.  95= 2.683E+05 COL.  96= 1.548E+05 COL. 133=-5.766E+04

ROW  50 COL.   8=-9.010E+04 COL.   9= 1.462E+05 COL.  10= 5.034E+04 COL.  44=-5.913E+05 COL.  45=-1.550E+05 COL.  46=-2.186E+04
        COL.  50= 1.309E+06 COL.  51=-7.422E+04 COL.  52=-1.538E+05 COL.  56=-3.224E+05 COL.  57=-3.105E+05 COL.  58= 5.986E+04
        COL.  92=-3.052E+05 COL.  93= 3.935E+05 COL.  94=-2.422E+05

ROW  51 COL.   8= 1.462E+05 COL.   9=-2.588E+05 COL.  10= 2.907E+04 COL.  44=-1.550E+05 COL.  45=-5.341E+04 COL.  46= 8.172E+04
        COL.  50=-7.422E+04 COL.  51= 1.395E+06 COL.  52=-8.872E+04 COL.  56=-3.105E+05 COL.  57=-3.264E+05 COL.  58=-5.986E+04
        COL.  92= 3.935E+05 COL.  93=-7.605E+05 COL.  94=-1.397E+05

ROW  52 COL.   8=-5.034E+04 COL.   9=-2.907E+04 COL.  10= 3.764E+05 COL.  44= 2.186E+04 COL.  45=-8.172E+04 COL.  46= 3.778E+05
        COL.  50=-1.538E+05 COL.  51=-8.872E+04 COL.  52= 4.094E+06 COL.  56=-5.986E+04 COL.  57= 5.986E+04 COL.  58= 3.779E+05
        COL.  92= 2.422E+05 COL.  93= 1.397E+05 COL.  94= 3.629E+05

ROW  53 COL.   7= 4.976E+04 COL.  11= 2.835E+05 COL.  12= 1.638E+05 COL.  43=-4.678E+04 COL.  47= 4.910E+04 COL.  48=-1.853E+05
```

STRUCTURAL STIFFNESS MATRIX

```
        COL.  49= 1.373E+05 COL.  53= 2.925E+06 COL.  54=-2.742E+05 COL.  55= 1.281E+05 COL.  59= 3.707E+05 COL.  60=-3.712E+05
        COL.  91=-2.683E+05 COL.  95= 3.716E+05 COL.  96= 2.146E+05

ROW  54 COL.   7= 2.874E+04 COL.  11= 1.638E+05 COL.  12= 9.445E+04 COL.  43= 1.748E+05 COL.  47=-1.853E+05 COL.  48= 6.922E+05
        COL.  49= 7.922E+04 COL.  53=-2.742E+05 COL.  54= 3.241E+06 COL.  55=-1.281E+05 COL.  59=-3.712E+05 COL.  60= 3.707E+05
        COL.  91=-1.548E+05 COL.  95= 2.146E+05 COL.  96= 1.233E+05

ROW  55 COL.  13=-5.591E+03 COL.  17=-2.874E+04 COL.  18=-4.976E+04 COL.  49=-2.559E+04 COL.  53= 1.281E+05 COL.  54=-1.281E+05
        COL.  55= 2.018E+05 COL.  56= 2.887E+03 COL.  59= 7.922E+04 COL.  60= 1.373E+05 COL.  61=-2.556E+04 COL.  65=-1.748E+05
        COL.  66= 4.678E+04 COL.  97=-8.670E+04 COL. 101= 1.548E+05 COL. 102= 2.683E+05 COL. 139=-5.766E+04 COL. 223=-7.006E+02
        COL. 224=-2.887E+03

ROW  56 COL.  14=-2.588E+05 COL.  15= 1.462E+05 COL.  16= 2.907E+04 COL.  50=-3.224E+05 COL.  51=-3.195E+05 COL.  52=-5.986E+04
        COL.  55= 2.887E+03 COL.  56= 1.407E+06 COL.  57=-7.422E+04 COL.  58=-8.872E+04 COL.  62=-5.341E+04 COL.  63=-1.550E+05
        COL.  64= 8.172E+04 COL.  98=-7.605E+05 COL.  99= 3.935E+05 COL. 100=-1.397E+05 COL. 223=-2.887E+03 COL. 224=-1.189E+04

ROW  57 COL.  14= 1.462E+05 COL.  15=-9.010E+04 COL.  16= 5.034E+04 COL.  50=-3.105E+05 COL.  51=-3.224E+05 COL.  52= 5.986E+04
        COL.  56=-7.422E+04 COL.  57= 1.309E+06 COL.  58=-1.538E+05 COL.  62=-1.550E+05 COL.  63=-5.913E+05 COL.  64=-2.186E+04
        COL.  98= 3.935E+05 COL.  99=-3.052E+05 COL. 100=-2.422E+05

ROW  58 COL.  14=-2.907E+04 COL.  15=-5.034E+04 COL.  16= 3.764E+05 COL.  50= 5.986E+04 COL.  51=-5.986E+04 COL.  52= 3.779E+05
        COL.  56=-8.872E+04 COL.  57=-1.538E+05 COL.  58= 4.094E+06 COL.  62=-8.172E+04 COL.  63= 2.186E+04 COL.  64= 3.778E+05
        COL.  98= 1.397E+05 COL.  99= 2.422E+05 COL. 100= 3.629E+05

ROW  59 COL.  13= 2.874E+04 COL.  17= 9.445E+04 COL.  18= 1.638E+05 COL.  49=-1.281E+05 COL.  53= 3.707E+05 COL.  54=-3.712E+05
        COL.  55= 7.922E+04 COL.  59= 3.241E+06 COL.  60=-2.742E+05 COL.  61= 1.748E+05 COL.  65= 6.922E+05 COL.  66=-1.853E+05
        COL.  97=-1.548E+05 COL. 101= 1.233E+05 COL. 102= 2.146E+05

ROW  60 COL.  13= 4.976E+04 COL.  17= 1.638E+05 COL.  18= 2.835E+05 COL.  49= 1.281E+05 COL.  53=-3.712E+05 COL.  54= 3.707E+05
        COL.  55= 1.373E+05 COL.  59=-2.742E+05 COL.  60= 2.925E+06 COL.  61=-4.678E+04 COL.  65=-1.853E+05 COL.  66= 4.910E+04
        COL.  97=-2.683E+05 COL. 101= 2.146E+05 COL. 102= 3.716E+05

ROW  61 COL.  19=-5.595E+03 COL.  24=-5.749E+04 COL.  55=-2.556E+04 COL.  59= 1.748E+05 COL.  60=-4.678E+04 COL.  61= 2.010E+05
        COL.  65= 9.313E-09 COL.  66= 1.585E+05 COL.  67=-2.556E+04 COL.  71=-1.748E+05 COL.  72=-4.678E+04 COL. 103=-8.658E+04
        COL. 108= 3.095E+05 COL. 145=-5.766E+04

ROW  62 COL.  20=-3.434E+05 COL.  56=-5.341E+04 COL.  57=-1.550E+05 COL.  58=-8.172E+04 COL.  62= 1.437E+06 COL.  64=-4.191E-09
        COL.  68=-5.341E+04 COL.  69= 1.550E+05 COL.  70= 8.172E+04 COL. 104=-9.869E+05

ROW  63 COL.  21=-5.660E+03 COL.  22= 5.816E+04 COL.  56=-1.550E+05 COL.  57=-5.913E+05 COL.  58= 2.186E+04 COL.  63= 1.266E+06
        COL.  64=-1.775E+05 COL.  68= 1.550E+05 COL.  69=-5.913E+05 COL.  70= 2.186E+04 COL. 105=-7.815E+04 COL. 106=-2.794E+05

ROW  64 COL.  21=-5.816E+04 COL.  22= 3.765E+05 COL.  56= 8.172E+04 COL.  57=-2.186E+04 COL.  58= 3.778E+05 COL.  62=-4.191E-09
        COL.  63=-1.775E+05 COL.  64= 4.093E+06 COL.  68=-8.172E+04 COL.  69=-2.186E+04 COL.  70= 3.778E+05 COL. 105= 2.794E+05
        COL. 106= 3.632E+05

ROW  65 COL.  23=-1.629E+02 COL.  55=-1.748E+05 COL.  59= 6.922E+05 COL.  60=-1.853E+05 COL.  61= 9.313E-09 COL.  65= 3.400E+06
        COL.  66= 4.098E-08 COL.  67= 1.748E+05 COL.  71= 6.922E+05 COL.  72= 1.853E+05 COL. 107=-4.683E+02

ROW  66 COL.  19= 5.749E+04 COL.  24= 3.782E+05 COL.  55= 4.678E+04 COL.  59=-1.853E+05 COL.  60= 4.910E+04 COL.  61= 1.585E+05
        COL.  65= 4.098E-08 COL.  66= 2.765E+06 COL.  67= 4.678E+04 COL.  71= 1.853E+05 COL.  72= 4.910E+04 COL. 103=-3.095E+05
        COL. 108= 4.957E+05

ROW  67 COL.  25=-5.591E+03 COL.  29= 2.874E+04 COL.  30=-4.976E+04 COL.  61=-2.556E+04 COL.  65= 1.748E+05 COL.  66= 4.678E+04
```

STRUCTURAL STIFFNESS MATRIX

```
        COL.  67= 2.025E+05 COL.  68= 4.330E+03 COL.  69= 2.500E+03 COL.  71=-7.922E+04 COL.  72= 1.373E+05 COL.  73=-2.559E+04
        COL.  77=-1.291E+05 COL.  78=-1.281E+05 COL. 109=-8.670E+04 COL. 113=-1.548E+05 COL. 114= 2.683E+05 COL. 151=-5.766E+04
        COL. 193=-7.007E+02 COL. 194=-1.443E+03 COL. 195=-2.500E+03 COL. 217=-7.006E+02 COL. 218=-2.887E+03

ROW  68 COL.  26=-2.588E+05 COL.  27=-1.462E+05 COL.  28=-2.907E+04 COL.  62=-5.341E+04 COL.  63= 1.550E+05 COL.  64=-8.172E+04
        COL.  67= 4.330E+03 COL.  68= 1.410E+06 COL.  69= 7.937E+04 COL.  70= 8.872E+04 COL.  74=-3.264E+05 COL.  75= 3.105E+05
        COL.  76= 5.986E+04 COL. 110=-7.605E+05 COL. 111=-3.935E+05 COL. 112= 1.397E+05 COL. 193=-1.443E+03 COL. 194=-2.974E+03
        COL. 195=-5.150E+03 COL. 217=-2.887E+03 COL. 218=-1.189E+04

ROW  69 COL.  26=-1.462E+05 COL.  27=-9.010E+04 COL.  28= 5.034E+04 COL.  62= 1.550E+05 COL.  63=-5.913E+05 COL.  64=-2.186E+04
        COL.  67= 2.500E+03 COL.  68= 7.937E+04 COL.  69= 1.318E+06 COL.  70=-1.538E+05 COL.  74= 3.105E+05 COL.  75=-3.224E+05
        COL.  76= 5.986E+04 COL. 110=-3.935E+05 COL. 111=-3.052E+05 COL. 112=-2.422E+05 COL. 193=-2.500E+03 COL. 194=-5.150E+03
        COL. 195=-8.920E+03

ROW  70 COL.  26= 2.907E+04 COL.  27=-5.034E+04 COL.  28= 3.764E+05 COL.  62= 8.172E+04 COL.  63= 2.186E+04 COL.  64= 3.778E+05
        COL.  68= 8.872E+04 COL.  69=-1.538E+05 COL.  70= 4.094E+06 COL.  74=-5.986E+04 COL.  75=-5.986E+04 COL.  76= 3.779E+05
        COL. 110=-1.397E+05 COL. 111= 2.422E+05 COL. 112= 3.629E+05

ROW  71 COL.  25=-2.874E+04 COL.  29= 9.445E+04 COL.  30=-1.638E+05 COL.  61=-1.748E+05 COL.  65= 6.922E+05 COL.  66= 1.853E+05
        COL.  67=-7.922E+04 COL.  71= 3.241E+06 COL.  72= 2.742E+05 COL.  73= 1.281E+05 COL.  77= 3.707E+05 COL.  78= 3.712E+05
        COL. 109= 1.548E+05 COL. 113= 1.233E+05 COL. 114=-2.146E+05

ROW  72 COL.  25= 4.976E+04 COL.  29=-1.638E+05 COL.  30= 2.835E+05 COL.  61=-4.678E+04 COL.  65= 1.853E+05 COL.  66= 4.910E+04
        COL.  67= 1.373E+05 COL.  71= 2.742E+05 COL.  72= 2.925E+06 COL.  73= 1.281E+05 COL.  77= 3.712E+05 COL.  78= 3.707E+05
        COL. 109=-2.683E+05 COL. 113=-2.146E+05 COL. 114= 3.716E+05

ROW  73 COL.  31=-5.591E+03 COL.  35= 4.976E+04 COL.  36=-2.874E+04 COL.  67=-2.559E+04 COL.  71= 1.281E+05 COL.  72= 1.281E+05
        COL.  73= 2.011E+05 COL.  77=-1.373E+05 COL.  78= 7.922E+04 COL.  79=-2.556E+04 COL.  83=-4.678E+04 COL.  84=-1.748E+05
        COL. 115=-8.570E+04 COL. 119=-2.683E+05 COL. 120= 1.548E+05 COL. 157=-5.766E+04

ROW  74 COL.  32=-9.010E+04 COL.  33=-1.462E+05 COL.  34=-5.034E+04 COL.  68=-3.224E+05 COL.  69= 3.105E+05 COL.  70=-5.986E+04
        COL.  74= 1.309E+06 COL.  75= 7.422E+04 COL.  76= 1.538E+05 COL.  80=-5.913E+05 COL.  81= 1.550E+05 COL.  82= 2.186E+04
        COL. 116=-3.052E+05 COL. 117=-3.935E+05 COL. 118= 2.422E+05

ROW  75 COL.  32=-1.462E+05 COL.  33=-2.588E+05 COL.  34= 2.907E+04 COL.  68= 3.105E+05 COL.  69=-3.264E+05 COL.  70=-5.986E+04
        COL.  74= 7.422E+04 COL.  75= 1.395E+06 COL.  76=-8.872E+04 COL.  80= 1.550E+05 COL.  81=-5.341E+04 COL.  82= 8.172E+04
        COL. 116=-3.935E+05 COL. 117=-7.605E+05 COL. 118=-1.397E+05

ROW  76 COL.  32= 5.034E+04 COL.  33=-2.907E+04 COL.  34= 3.764E+05 COL.  68= 5.986E+04 COL.  69= 5.986E+04 COL.  70= 3.779E+05
        COL.  74= 1.538E+05 COL.  75=-8.872E+04 COL.  76= 4.094E+06 COL.  80=-2.186E+04 COL.  81=-8.172E+04 COL.  82= 3.778E+05
        COL. 116=-2.422E+05 COL. 117= 1.397E+05 COL. 118= 3.629E+05

ROW  77 COL.  31=-4.976E+04 COL.  35= 2.835E+05 COL.  36=-1.638E+05 COL.  67=-1.281E+05 COL.  71= 3.707E+05 COL.  72= 3.712E+05
        COL.  73=-1.373E+05 COL.  77= 2.925E+06 COL.  78= 2.742E+05 COL.  79= 4.678E+04 COL.  83= 4.910E+04 COL.  84= 1.853E+05
        COL. 115= 2.683E+05 COL. 119= 3.716E+05 COL. 120=-2.146E+05

ROW  78 COL.  31= 2.874E+04 COL.  35=-1.638E+05 COL.  36= 9.445E+04 COL.  67=-1.281E+05 COL.  71= 3.712E+05 COL.  72= 3.707E+05
        COL.  73= 7.922E+04 COL.  77= 2.742E+05 COL.  78= 3.241E+06 COL.  79= 1.748E+05 COL.  83= 1.853E+05 COL.  84= 6.922E+05
        COL. 115=-1.548E+05 COL. 119=-2.146E+05 COL. 120= 1.233E+05

ROW  79 COL.  37=-2.798E+03 COL.  41= 2.875E+04 COL.  73=-2.556E+04 COL.  77= 4.678E+04 COL.  78= 1.748E+05 COL.  79= 1.012E+05
        COL.  80=-1.443E+03 COL.  81= 2.500E+03 COL.  83=-7.924E+04 COL.  84= 1.748E+05 COL. 121=-4.369E+04 COL. 125=-1.548E+05
        COL. 163=-2.883E+04 COL. 199=-7.007E+02 COL. 200= 1.443E+03 COL. 201=-2.500E+03

ROW  80 COL.  38=-2.830E+03 COL.  40=-2.908E+04 COL.  74=-5.913E+05 COL.  75= 1.550E+05 COL.  76=-2.186E+04 COL.  79=-1.443E+03
```

STRUCTURAL STIFFNESS MATRIX

```
        COL.  80= 6.361E+05 COL.  81=-1.601E+05 COL.  82= 8.874E+04 COL. 122=-3.907E+04 COL. 124= 1.397E+05 COL. 199= 1.443E+03
        COL. 200=-2.974E+03 COL. 201= 5.150E+03

ROW  81 COL.  39=-1.717E+05 COL.  74= 1.550E+05 COL.  75=-5.341E+04 COL.  76=-8.172E+04 COL.  79= 2.500E+03 COL.  80=-1.601E+05
        COL.  81= 7.274E+05 COL.  82=-8.172E+04 COL. 123=-4.934E+05 COL. 199=-2.500E+03 COL. 200= 5.150E+03 COL. 201=-8.920E+03

ROW  82 COL.  38= 2.908E+04 COL.  40= 1.882E+05 COL.  74= 2.186E+04 COL.  75= 8.172E+04 COL.  76= 3.778E+05 COL.  80= 8.874E+04
        COL.  81=-8.172E+04 COL.  82= 2.047E+06 COL. 122=-1.397E+05 COL. 124= 1.814E+05

ROW  83 COL.  37=-2.875E+04 COL.  41= 1.891E+05 COL.  73=-4.678E+04 COL.  77= 4.910E+04 COL.  78= 1.853E+05 COL.  79=-7.924E+04
        COL.  83= 1.382E+06 COL.  84= 4.546E+05 COL. 121= 1.548E+05 COL. 125= 2.478E+05

ROW  84 COL.  42=-8.146E+01 COL.  73=-1.748E+05 COL.  77= 1.853E+05 COL.  78= 6.922E+05 COL.  79= 1.748E+05 COL.  83= 4.546E+05
        COL.  84= 1.700E+06 COL. 126=-2.341E+02

ROW  85 COL.  43=-4.329E+04 COL.  47=-1.548E+05 COL.  85= 5.230E+04 COL.  89=-1.756E+05 COL.  90= 7.769E+04 COL.  91=-9.007E+03
        COL.  95=-2.081E+04 COL.  96= 7.769E+04

ROW  86 COL.  44=-3.907E+04 COL.  46= 1.397E+05 COL.  86= 4.836E+05 COL.  87= 1.134E+05 COL.  88= 1.885E+05 COL.  92=-4.445E+05
        COL.  93=-1.134E+05 COL.  94= 4.883E+04

ROW  87 COL.  45=-4.934E+05 COL.  86= 1.134E+05 COL.  87= 5.449E+05 COL.  88=-1.823E+05 COL.  92=-1.134E+05 COL.  93=-5.150E+04
        COL.  94=-1.823E+05

ROW  88 COL.  44=-1.397E+05 COL.  46= 1.816E+05 COL.  86= 1.885E+05 COL.  87=-1.823E+05 COL.  88= 3.254E+06 COL.  92=-4.883E+04
        COL.  93= 1.823E+05 COL.  94= 9.335E+05

ROW  89 COL.  43= 1.548E+05 COL.  47= 2.478E+05 COL.  85=-1.756E+05 COL.  89= 9.247E+05 COL.  90=-2.450E+05 COL.  91= 2.081E+04
        COL.  95= 3.014E+04 COL.  96=-1.139E+05

ROW  90 COL.  48=-2.341E+02 COL.  85= 7.769E+04 COL.  89=-2.450E+05 COL.  90= 9.155E+05 COL.  91=-7.769E+04 COL.  95=-1.139E+05
        COL.  96= 4.248E+05

ROW  91 COL.  49=-8.670E+04 COL.  53=-2.683E+05 COL.  54=-1.548E+05 COL.  85=-9.007E+03 COL.  89= 2.081E+04 COL.  90=-7.769E+04
        COL.  91= 1.047E+05 COL.  95=-3.044E+05 COL.  96=-1.756E+05 COL.  97=-9.002E+03 COL. 101=-5.685E+04 COL. 102= 5.685E+04

ROW  92 COL.  50=-3.052E+05 COL.  51= 3.935E+05 COL.  52= 2.422E+05 COL.  86=-4.445E+05 COL.  87=-1.134E+05 COL.  88=-4.883E+04
        COL.  92= 9.976E+05 COL.  93=-5.328E+04 COL.  94= 3.268E+05 COL.  98=-2.479E+05 COL.  99=-2.298E+05 COL. 100= 1.334E+05

ROW  93 COL.  50= 3.935E+05 COL.  51=-7.605E+05 COL.  52= 1.397E+05 COL.  86=-1.134E+05 COL.  87=-5.150E+04 COL.  88= 1.823E+05
        COL.  92=-5.328E+04 COL.  93= 1.060E+06 COL.  94= 1.886E+05 COL.  98=-2.268E+05 COL.  99=-2.479E+05 COL. 100=-1.334E+05

ROW  94 COL.  50=-2.422E+05 COL.  51=-1.397E+05 COL.  52= 3.629E+05 COL.  86= 4.883E+04 COL.  87=-1.823E+05 COL.  88= 9.335E+05
        COL.  92= 3.268E+05 COL.  93= 1.886E+05 COL.  94= 6.508E+06 COL.  98=-1.334E+05 COL.  99= 1.334E+05 COL. 100= 9.335E+05

ROW  95 COL.  49= 2.683E+05 COL.  53= 3.716E+05 COL.  54= 2.146E+05 COL.  85=-2.081E+04 COL.  89= 3.014E+04 COL.  90=-1.139E+05
        COL.  91=-3.044E+05 COL.  95= 1.846E+06 COL.  96= 8.085E+03 COL.  97= 5.685E+04 COL. 101= 2.275E+05 COL. 102=-2.278E+05

ROW  96 COL.  49= 1.548E+05 COL.  53= 2.146E+05 COL.  54= 1.233E+05 COL.  85= 7.769E+04 COL.  89=-1.139E+05 COL.  90= 4.248E+05
        COL.  91=-1.756E+05 COL.  95= 8.085E+03 COL.  96= 1.835E+06 COL.  97=-5.685E+04 COL. 101=-2.278E+05 COL. 102= 2.275E+05

ROW  97 COL.  55=-8.670E+04 COL.  59=-1.548E+05 COL.  60=-2.683E+05 COL.  91=-9.002E+03 COL.  95= 5.685E+04 COL.  96=-5.685E+04
        COL.  97= 2.133E+05 COL. 101=-1.756E+05 COL. 102=-3.044E+05 COL. 103=-9.007E+03 COL. 107=-7.769E+04 COL. 108= 2.081E+04
        COL. 175=-1.086E+05
```

STRUCTURAL STIFFNESS MATRIX

```
ROW  98 COL.  56=-7.605E+05 COL.  57= 3.935E+05 COL.  58= 1.397E+05 COL.  92=-2.479E+05 COL.  93=-2.268E+05 COL.  94=-1.334E+05
        COL.  98= 1.060E+06 COL.  99=-5.328E+04 COL. 100= 1.886E+05 COL. 104=-5.150E+04 COL. 105=-1.134E+05 COL. 106= 1.823E+05

ROW  99 COL.  56= 3.935E+05 COL.  57=-3.052E+05 COL.  58= 2.422E+05 COL.  92=-2.268E+05 COL.  93=-2.479E+05 COL.  94= 1.334E+05
        COL.  98=-5.328E+04 COL.  99= 9.976E+05 COL. 100= 3.268E+05 COL. 104=-1.134E+05 COL. 105=-4.445E+05 COL. 106=-4.883E+04

ROW 100 COL.  56=-1.397E+05 COL.  57=-2.422E+05 COL.  58= 3.629E+05 COL.  92= 1.334E+05 COL.  93=-1.334E+05 COL.  94= 9.335E+05
        COL.  98= 1.886E+05 COL.  99= 3.268E+05 COL. 100= 6.508E+06 COL. 104=-1.823E+05 COL. 105= 4.883E+04 COL. 106= 9.335E+05

ROW 101 COL.  55= 1.548E+05 COL.  59= 1.233E+05 COL.  60= 2.146E+05 COL.  91=-5.685E+04 COL.  95= 2.275E+05 COL.  96=-2.278E+05
        COL.  97=-1.756E+05 COL. 101= 1.835E+06 COL. 102= 8.085E+03 COL. 103= 7.769E+04 COL. 107= 4.248E+05 COL. 108=-1.139E+05

ROW 102 COL.  55= 2.683E+05 COL.  59= 2.146E+05 COL.  60= 3.716E+05 COL.  91= 5.685E+04 COL.  95=-2.278E+05 COL.  96= 2.275E+05
        COL.  97=-3.044E+05 COL. 101= 8.085E+03 COL. 102= 1.846E+06 COL. 103=-2.081E+04 COL. 107=-1.139E+05 COL. 108= 3.014E+04

ROW 103 COL.  61=-8.658E+04 COL.  66=-3.095E+05 COL.  97=-9.007E+03 COL. 101= 7.769E+04 COL. 102=-2.081E+04 COL. 103= 1.046E+05
        COL. 107= 1.863E-09 COL. 108=-3.511E+05 COL. 109=-9.007E+03 COL. 113=-7.769E+04 COL. 114=-2.081E+04

ROW 104 COL.  62=-9.869E+05 COL.  98=-5.150E+04 COL.  99=-1.134E+05 COL. 100=-1.823E+05 COL. 104= 1.090E+06 COL. 106=-3.725E-09
        COL. 110=-5.150E+04 COL. 111= 1.134E+05 COL. 112= 1.823E+05

ROW 105 COL.  63=-7.815E+04 COL.  64= 2.794E+05 COL.  98=-1.134E+05 COL.  99=-4.445E+05 COL. 100= 4.883E+04 COL. 105= 9.671E+05
        COL. 106= 3.770E+05 COL. 110= 1.134E+05 COL. 111=-4.445E+05 COL. 112= 4.883E+04

ROW 106 COL.  63=-2.794E+05 COL.  64= 3.632E+05 COL.  98= 1.823E+05 COL.  99=-4.883E+04 COL. 100= 9.335E+05 COL. 104=-3.725E-09
        COL. 105= 3.770E+05 COL. 106= 6.508E+06 COL. 110=-1.823E+05 COL. 111=-4.883E+04 COL. 112= 9.335E+05

ROW 107 COL.  65=-4.683E+02 COL.  97=-7.769E+04 COL. 101= 4.248E+05 COL. 102=-1.139E+05 COL. 103= 1.863E-09 COL. 107= 1.831E+06
        COL. 108=-4.098E-08 COL. 109= 7.769E+04 COL. 113= 4.248E+05 COL. 114= 1.139E+05

ROW 108 COL.  61= 3.095E+05 COL.  66= 4.957E+05 COL.  97= 2.081E+04 COL. 101=-1.139E+05 COL. 102= 3.014E+04 COL. 103=-3.511E+05
        COL. 107=-4.098E-08 COL. 108= 1.849E+06 COL. 109= 2.081E+04 COL. 113= 1.139E+05 COL. 114= 3.014E+04

ROW 109 COL.  67=-8.670E+04 COL.  71= 1.548E+05 COL.  72=-2.683E+05 COL. 103=-9.007E+03 COL. 107= 7.769E+04 COL. 108= 2.081E+04
        COL. 109= 2.133E+05 COL. 113= 1.756E+05 COL. 114=-3.044E+05 COL. 115=-9.002E+03 COL. 119=-5.685E+04 COL. 120=-5.685E+04
        COL. 181=-1.086E+05

ROW 110 COL.  68=-7.605E+05 COL.  69=-3.935E+05 COL.  70=-1.397E+05 COL. 104=-5.150E+04 COL. 105= 1.134E+05 COL. 106=-1.823E+05
        COL. 110= 1.060E+06 COL. 111= 5.328E+04 COL. 112=-1.886E+05 COL. 116=-2.479E+05 COL. 117= 2.268E+05 COL. 118= 1.334E+05

ROW 111 COL.  68=-3.935E+05 COL.  69=-3.052E+05 COL.  70= 2.422E+05 COL. 104= 1.134E+05 COL. 105=-4.445E+05 COL. 106=-4.883E+04
        COL. 110= 5.328E+04 COL. 111= 9.976E+05 COL. 112= 3.268E+05 COL. 116= 2.268E+05 COL. 117=-2.479E+05 COL. 118= 1.334E+05

ROW 112 COL.  68= 1.397E+05 COL.  69=-2.422E+05 COL.  70= 3.629E+05 COL. 104= 1.823E+05 COL. 105= 4.883E+04 COL. 106= 9.335E+05
        COL. 110=-1.886E+05 COL. 111= 3.268E+05 COL. 112= 6.508E+06 COL. 116=-1.334E+05 COL. 117=-1.334E+05 COL. 118= 9.335E+05

ROW 113 COL.  67=-1.548E+05 COL.  71= 1.233E+05 COL.  72=-2.146E+05 COL. 103=-7.769E+04 COL. 107= 4.248E+05 COL. 108= 1.139E+05
        COL. 109= 1.756E+05 COL. 113= 1.835E+06 COL. 114=-8.085E+03 COL. 115= 5.685E+04 COL. 119= 2.275E+05 COL. 120= 2.278E+05

ROW 114 COL.  67= 2.683E+05 COL.  71=-2.146E+05 COL.  72= 3.716E+05 COL. 103=-2.081E+04 COL. 107= 1.139E+05 COL. 108= 3.014E+04
        COL. 109=-3.044E+05 COL. 113=-8.085E+03 COL. 114= 1.846E+06 COL. 115= 5.685E+04 COL. 119= 2.278E+05 COL. 120= 2.275E+05

ROW 115 COL.  73=-8.670E+04 COL.  77= 2.683E+05 COL.  78=-1.548E+05 COL. 109=-9.002E+03 COL. 113= 5.685E+04 COL. 114= 5.685E+04
```

STRUCTURAL STIFFNESS MATRIX

```
        COL. 115= 1.047E+05 COL. 119= 3.044E+05 COL. 120=-1.756E+05 COL. 121=-9.007E+03 COL. 125=-2.081E+04 COL. 126=-7.769E+04

ROW 116 COL.  74=-3.052E+05 COL.  75=-3.935E+05 COL.  76=-2.422E+05 COL. 110=-2.479E+05 COL. 111= 2.298E+05 COL. 112=-1.334E+05
        COL. 116= 9.976E+05 COL. 117= 5.328E+04 COL. 118=-3.268E+05 COL. 122=-4.445E+05 COL. 123= 1.134E+05 COL. 124= 4.883E+04

ROW 117 COL.  74=-3.935E+05 COL.  75=-7.605E+05 COL.  76= 1.397E+05 COL. 110= 2.268E+05 COL. 111=-2.479E+05 COL. 112=-1.334E+05
        COL. 116= 5.328E+04 COL. 117= 1.060E+06 COL. 118= 1.886E+05 COL. 122= 1.134E+05 COL. 123=-5.150E+04 COL. 124= 1.823E+05

ROW 118 COL.  74= 2.422E+05 COL.  75=-1.397E+05 COL.  76= 3.629E+05 COL. 110= 1.334E+05 COL. 111= 1.334E+05 COL. 112= 9.335E+05
        COL. 116=-3.268E+05 COL. 117= 1.886E+05 COL. 118= 6.508E+06 COL. 122=-4.883E+04 COL. 123=-1.823E+05 COL. 124= 9.335E+05

ROW 119 COL.  73=-2.683E+05 COL.  77= 3.716E+05 COL.  78=-2.146E+05 COL. 109=-5.685E+04 COL. 113= 2.275E+05 COL. 114= 2.278E+05
        COL. 115= 3.044E+05 COL. 119= 1.846E+06 COL. 120=-8.085E+03 COL. 121= 2.081E+04 COL. 125= 3.014E+04 COL. 126= 1.139E+05

ROW 120 COL.  73= 1.548E+05 COL.  77=-2.146E+05 COL.  78= 1.233E+05 COL. 109=-5.685E+04 COL. 113= 2.278E+05 COL. 114= 2.275E+05
        COL. 115=-1.756E+05 COL. 119=-8.085E+03 COL. 120= 1.835E+06 COL. 121= 7.769E+04 COL. 125= 1.139E+05 COL. 126= 4.248E+05

ROW 121 COL.  79=-4.329E+04 COL.  83= 1.548E+05 COL. 115=-9.007E+03 COL. 119= 2.081E+04 COL. 120= 7.769E+04 COL. 121= 1.066E+05
        COL. 125= 1.756E+05 COL. 126= 7.769E+04 COL. 187=-5.431E+04

ROW 122 COL.  80=-3.907E+04 COL.  82=-1.397E+05 COL. 116=-4.445E+05 COL. 117= 1.134E+05 COL. 118=-4.883E+04 COL. 122= 4.836E+05
        COL. 123=-1.134E+05 COL. 124=-1.885E+05

ROW 123 COL.  81=-4.934E+05 COL. 116= 1.134E+05 COL. 117=-5.150E+04 COL. 118=-1.823E+05 COL. 122=-1.134E+05 COL. 123= 5.449E+05
        COL. 124=-1.823E+05

ROW 124 COL.  80= 1.397E+05 COL.  82= 1.616E+05 COL. 116= 4.883E+04 COL. 117= 1.823E+05 COL. 118= 9.335E+05 COL. 122=-1.885E+05
        COL. 123=-1.823E+05 COL. 124= 3.254E+06

ROW 125 COL.  79=-1.548E+05 COL.  83= 2.478E+05 COL. 115=-2.081E+04 COL. 119= 3.014E+04 COL. 120= 1.139E+05 COL. 121= 1.756E+05
        COL. 125= 9.247E+05 COL. 126= 2.450E+05

ROW 126 COL.  84=-2.341E+02 COL. 115=-7.769E+04 COL. 119= 1.139E+05 COL. 120= 4.248E+05 COL. 121= 7.769E+04 COL. 125= 2.450E+05
        COL. 126= 9.155E+05

ROW 127 COL.  43=-2.883E+04 COL. 127= 2.883E+04

ROW 133 COL.  49=-5.766E+04 COL. 133= 5.766E+04

ROW 139 COL.  55=-5.766E+04 COL. 139= 5.766E+04

ROW 145 COL.  61=-5.766E+04 COL. 145= 5.766E+04

ROW 151 COL.  67=-5.766E+04 COL. 151= 5.766E+04

ROW 157 COL.  73=-5.766E+04 COL. 157= 5.766E+04

ROW 163 COL.  79=-2.883E+04 COL. 163= 2.883E+04

ROW 175 COL.  97=-1.086E+05 COL. 175= 1.086E+05

ROW 181 COL. 109=-1.086E+05 COL. 181= 1.086E+05

ROW 187 COL. 121=-5.431E+04 COL. 187= 5.431E+04
```

STRUCTURAL STIFFNESS MATRIX

```
ROW 193 COL.  67=-7.007E+02 COL.  68=-1.443E+03 COL.  69=-2.500E+03 COL. 193= 7.007E+02 COL. 194= 1.443E+03 COL. 195= 2.500E+03
ROW 194 COL.  67=-1.443E+03 COL.  68=-2.974E+03 COL.  69=-5.150E+03 COL. 193= 1.443E+03 COL. 194= 2.974E+03 COL. 195= 5.150E+03
ROW 195 COL.  67=-2.500E+03 COL.  68=-5.150E+03 COL.  69=-8.920E+03 COL. 193= 2.500E+03 COL. 194= 5.150E+03 COL. 195= 8.920E+03
ROW 199 COL.  79=-7.007E+02 COL.  80= 1.443E+03 COL.  81=-2.500E+03 COL. 199= 7.007E+02 COL. 200=-1.443E+03 COL. 201= 2.500E+03
ROW 200 COL.  79= 1.443E+03 COL.  80=-2.974E+03 COL.  81= 5.150E+03 COL. 199=-1.443E+03 COL. 200= 2.974E+03 COL. 201=-5.150E+03
ROW 201 COL.  79=-2.500E+03 COL.  80= 5.150E+03 COL.  81=-8.920E+03 COL. 199= 2.500E+03 COL. 200=-5.150E+03 COL. 201= 8.920E+03
ROW 217 COL.  67=-7.006E+02 COL.  68=-2.887E+03 COL. 217= 7.006E+02 COL. 218= 2.887E+03
ROW 218 COL.  67=-2.887E+03 COL.  68=-1.189E+04 COL. 217= 2.887E+03 COL. 218= 1.189E+04
ROW 223 COL.  55=-7.006E+02 COL.  56=-2.887E+03 COL. 223= 7.006E+02 COL. 224= 2.887E+03
ROW 224 COL.  55=-2.887E+03 COL.  56=-1.189E+04 COL. 223= 2.887E+03 COL. 224= 1.189E+04
```

NODAL POINT DISPLACEMENTS AND ROTATIONS
GLOBAL COORDINATE SYSTEM

NODAL POINT NUMBER.	DISPLACEMENT X	DISPLACEMENT Y	DISPLACEMENT Z	ROTATION X	ROTATION Y	ROTATION Z
1	-7.976263E-02	0.	-1.022261E-01	0.	-5.874203E-03	0.
2	-7.114575E-02	-1.632100E-03	-9.615380E-02	-1.744944E-03	-9.400662E-04	2.826894E-03
3	-5.925278E-02	-6.614805E-03	-9.088710E-02	-1.092491E-03	-1.530388E-03	3.633892E-03
4	-4.919219E-02	-8.055229E-03	-9.019045E-02	3.487650E-04	-2.591993E-03	2.014423E-03
5	-4.125210E-02	-4.034979E-03	-8.885877E-02	1.094301E-03	-2.697410E-03	1.003020E-03
6	-3.640751E-02	-8.019890E-04	-8.543259E-02	9.843557E-04	-2.134334E-03	1.334867E-04
7	-3.497506E-02	0.	-8.229763E-02	0.	-2.205150E-03	0.
8	4.880097E-02	0.	-1.079946E-01	0.	2.741359E-02	0.
9	1.371659E-02	-2.640746E-03	-9.621011E-02	-1.580948E-04	7.594523E-03	2.934982E-03
10	-4.520051E-03	-7.241430E-03	-9.054255E-02	-3.703540E-05	7.832655E-04	7.982155E-04
11	-2.442221E-03	-8.641136E-03	-8.939980E-02	6.538281E-05	-2.889501E-04	1.528383E-03
12	1.353266E-05	-3.376329E-03	-8.720441E-02	8.773605E-05	-4.712852E-04	6.538781E-04
13	1.816785E-04	-1.428843E-03	-8.511662E-02	8.591061E-05	-9.556700E-04	4.306407E-04
14	2.096542E-03	0.	-7.943479E-02	0.	-5.430812E-04	0.
15	3.101482E-01	0.	-1.104217E-01	0.	4.198435E-02	0.
16	8.176983E-02	-2.808027E-03	-9.629505E-02	-5.858645E-04	1.254214E-02	-5.339479E-03
17	-1.429744E-03	-7.526320E-03	-9.076785E-02	-1.679688E-04	2.629591E-04	-1.038382E-04
18	6.532740E-03	-8.671304E-03	-9.003820E-02	1.462817E-04	-2.014177E-04	1.254003E-03
19	1.491782E-03	-3.060309E-03	-8.810771E-02	2.487690E-04	5.413502E-05	-3.569855E-05
20	6.563933E-03	-9.815057E-04	-8.540447E-02	2.471886E-04	-7.904208E-04	4.285703E-04
21	1.463924E-03	0.	-7.971212E-02	0.	3.353564E-04	0.
22	0.	0.	0.	0.	0.	0.
23	0.	0.	0.	0.	0.	0.
24	0.	0.	0.	0.	0.	0.
25	0.	0.	0.	0.	0.	0.
26	0.	0.	0.	0.	0.	0.
27	0.	0.	0.	0.	0.	0.
28	0.	0.	0.	0.	0.	0.
29	0.	0.	0.	0.	0.	0.
30	0.	0.	0.	0.	0.	0.
31	0.	0.	0.	0.	0.	0.
32	0.	0.	0.	0.	0.	0.
33	0.	0.	0.	0.	0.	0.
34	0.	0.	0.	0.	0.	0.
35	0.	0.	0.	0.	0.	0.
36	0.	0.	0.	0.	0.	0.
37	0.	0.	0.	0.	0.	0.
38	0.	0.	0.	0.	0.	0.

1362 ITERATIONS WERE REQUIRED TO REACH A MAXIMUM RELATIVE DIFFERENCE OF 7.877241 7E-04

NODAL POINT DISPLACEMENTS AND ROTATIONS
GLOBAL COORDINATE SYSTEM

NODAL POINT NUMBER.	DISPLACEMENT X	DISPLACEMENT Y	DISPLACEMENT Z	ROTATION X	ROTATION Y	ROTATION Z
1	-7.976300E-02	0.	-1.022262E-01	0.	-5.874189E-03	0.
2	-7.114626E-02	-1.632119E-03	-9.615387E-02	-1.744956E-03	-9.399593E-04	2.822881E-03
3	-5.945293E-02	-6.614779E-03	-9.088717E-02	-1.092474E-03	-1.530395E-03	3.633898E-03
4	-4.919293E-02	-8.055142E-03	-9.019056E-02	3.487657E-04	-2.591947E-03	2.014438E-03
5	-4.125195E-02	-4.034871E-03	-8.885909E-02	1.094168E-03	-2.697455E-03	1.003006E-03
6	-3.648841E-02	-8.020859E-04	-8.543251E-02	9.836620E-04	-2.134265E-03	1.339469E-04
7	-3.467496E-02	0.	-8.229785E-02	0.	-2.205134E-03	0.
8	4.880109E-02	0.	-1.079947E-01	0.	2.741364E-02	0.
9	1.371653E-02	-2.640759E-03	-9.621023E-02	-1.580926E-04	7.594534E-03	2.934980E-03
10	-4.520072E-03	-7.241408E-03	-9.054268E-02	-3.702568E-05	7.832686E-04	7.982311E-04
11	-2.442272E-03	-8.641259E-03	-8.939983E-02	6.538136E-05	-2.889499E-04	1.528394E-03
12	1.352202E-05	-3.376313E-03	-8.720445E-02	8.774492E-05	-4.712934E-04	6.538899E-04
13	1.815877E-04	-1.429067E-03	-8.511713E-02	8.592503E-05	-9.556902E-04	4.306501E-04
14	2.096486E-03	0.	-7.943490E-02	0.	-5.431112E-04	0.
15	3.181483E-01	0.	-1.104218E-01	0.	4.198438E-02	0.
16	8.176999E-02	-2.808059E-03	-9.629518E-02	-5.858607E-04	1.254214E-02	-5.339472E-03
17	-1.429751E-03	-7.526300E-03	-9.076787E-02	-1.679721E-04	2.629616E-04	-1.038368E-04
18	6.532780E-03	-8.671285E-03	-9.003830E-02	1.462844E-04	-2.014188E-04	1.254007E-03
19	1.481781E-03	-3.060179E-03	-8.810796E-02	2.487673E-04	5.413566E-05	-3.569687E-05
20	6.583990E-03	-9.816149E-04	-8.540441E-02	2.471914E-04	-7.904334E-04	4.285742E-04
21	1.483953E-03	0.	-7.971217E-02	0.	3.353515E-04	0.
22	0.	0.	0.	0.	0.	0.
23	0.	0.	0.	0.	0.	0.
24	0.	0.	0.	0.	0.	0.
25	0.	0.	0.	0.	0.	0.
26	0.	0.	0.	0.	0.	0.
27	0.	0.	0.	0.	0.	0.
28	0.	0.	0.	0.	0.	0.
29	0.	0.	0.	0.	0.	0.
30	0.	0.	0.	0.	0.	0.
31	0.	0.	0.	0.	0.	0.
32	0.	0.	0.	0.	0.	0.
33	0.	0.	0.	0.	0.	0.
34	0.	0.	0.	0.	0.	0.
35	0.	0.	0.	0.	0.	0.
36	0.	0.	0.	0.	0.	0.
37	0.	0.	0.	0.	0.	0.
38	0.	0.	0.	0.	0.	0.

1363 ITERATIONS WERE REQUIRED TO REACH A MAXIMUM RELATIVE DIFFERENCE OF 7.8703078E-04

NODAL POINT FORCES AND MOMENTS
GLOBAL COORDINATE SYSTEM

NODAL POINT NUMBER	FORCE X	FORCE Y	FORCE Z	MOMENT X	MOMENT Y	MOMENT Z
1	0.	2.845365E+02	0.	2.934522E+03	0.	-3.369000E+03
2	0.	0.	0.	0.	0.	0.
3	0.	0.	0.	0.	0.	0.
4	0.	0.	0.	0.	0.	0.
5	0.	0.	0.	0.	0.	0.
6	0.	0.	0.	0.	0.	0.
7	0.	2.672175E+01	0.	-1.480038E+03	0.	-2.558690E+02
8	0.	-2.685679E+02	0.	9.610677E+02	0.	-5.703744E+03
9	0.	0.	0.	0.	0.	0.
10	0.	0.	0.	0.	0.	0.
11	0.	0.	0.	0.	0.	0.
12	0.	0.	0.	0.	0.	0.
13	0.	0.	0.	0.	0.	0.
14	0.	3.684479E+02	0.	-4.631513E+02	0.	2.089039E+02
15	1.500000E+03	-3.821984E+02	-1.500000E+03	2.165626E+03	0.	4.380941E+03
16	0.	0.	0.	0.	0.	0.
17	0.	0.	0.	0.	0.	0.
18	0.	0.	0.	0.	0.	0.
19	0.	0.	0.	0.	0.	0.
20	0.	0.	0.	0.	0.	0.
21	0.	-2.211668E+02	0.	-8.549284E+02	0.	-2.209234E+02
22	-1.407033E+03	0.	0.	0.	0.	0.
23	-7.909500E+02	0.	0.	0.	0.	0.
24	2.606454E+02	0.	0.	0.	0.	0.
25	1.498312E+02	0.	0.	0.	0.	0.
26	-7.797337E-01	0.	0.	0.	0.	0.
27	1.047107E+01	0.	0.	0.	0.	0.
28	-6.044588E+01	0.	0.	0.	0.	0.
29	0.	0.	0.	0.	0.	0.
30	1.553139E+02	0.	0.	0.	0.	0.
31	-1.609658E+02	0.	0.	0.	0.	0.
32	-8.060049E+01	0.	0.	0.	0.	0.
33	2.228801E+02	4.591331E+02	7.951976E+02	0.	0.	0.
34	1.971226E+02	-4.060725E+02	7.032991E+02	0.	0.	0.
35	0.	0.	0.	0.	0.	0.
36	0.	0.	0.	0.	0.	0.
37	9.736708E+00	4.011524E+01	0.	0.	0.	0.
38	2.407024E+01	9.916939E+01	0.	0.	0.	0.
TOTAL	-6.493866E-01	1.181711E-01	-1.503315E+00			

THE X-FORCE RESTRAINT WAS VIOLATED FOR JOINT NO. 22
THE X-FORCE RESTRAINT WAS VIOLATED FOR JOINT NO. 31
THE X-FORCE RESTRAINT WAS VIOLATED FOR JOINT NO. 32

NODAL POINT DISPLACEMENTS AND ROTATIONS
GLOBAL COORDINATE SYSTEM

NODAL POINT NUMBER.	DISPLACEMENT X	DISPLACEMENT Y	DISPLACEMENT Z	ROTATION X	ROTATION Y	ROTATION Z
1	-7.949165E-02	0.	-1.027645E-01	0.	-3.608862E-03	0.
2	-7.270375E-02	-1.630391E-03	-9.669642E-02	-1.743550E-03	1.355443E-05	2.595874E-03
3	-6.355178E-02	-6.609445E-03	-9.143434E-02	-1.093107E-03	-8.757466E-04	3.272851E-03
4	-5.585549E-02	-8.059829E-03	-9.073504E-02	3.461568E-04	-1.965095E-03	2.057104E-03
5	-4.986048E-02	-4.047933E-03	-8.940548E-02	1.095143E-03	-2.234870E-03	1.037731E-03
6	-4.602505E-02	-8.047879E-04	-8.596880E-02	9.866678E-04	-2.108565E-03	3.481947E-04
7	-4.464787E-02	0.	-8.282577E-02	0.	-2.109072E-03	0.
8	1.090496E-01	0.	-1.085313E-01	0.	3.117214E-02	0.
9	2.874664E-02	-2.637391E-03	-9.674905E-02	-1.578500E-04	9.666627E-03	8.040487E-04
10	-6.131885E-03	-7.226895E-03	-9.108867E-02	-3.691266E-05	1.008740E-03	7.221611E-04
11	-2.853368E-03	-8.646101E-03	-8.994120E-02	6.500038E-05	-4.431038E-04	1.978324E-03
12	2.206946E-03	-3.402279E-03	-8.775109E-02	8.795140E-05	-1.260098E-03	1.993411E-03
13	1.438076E-03	-1.434645E-03	-8.564817E-02	8.632887E-05	-1.748314E-03	9.093211E-04
14	3.929653E-03	0.	-7.995867E-02	0.	-1.992374E-03	0.
15	3.980214E-01	0.	-1.109583E-01	0.	4.531500E-02	0.
16	1.057412E-01	-2.806506E-03	-9.683501E-02	-5.852983E-04	1.510821E-02	-7.491967E-03
17	-2.323027E-03	-7.514275E-03	-9.131731E-02	-1.678423E-04	5.508874E-04	-2.303460E-04
18	9.447162E-03	-8.676096E-03	-9.058300E-02	1.453188E-04	-8.709841E-04	1.634395E-03
19	1.836610E-02	-3.083239E-03	-8.865819E-02	2.491569E-04	-1.147798E-03	1.884863E-03
20	1.544287E-02	-9.849740E-04	-8.593812E-02	2.482645E-04	-1.561620E-03	9.596135E-04
21	1.672071E-02	0.	-8.023621E-02	0.	-1.702884E-03	0.
22	8.269580E-02	0.	0.	0.	0.	0.
23	0.	0.	0.	0.	0.	0.
24	0.	0.	0.	0.	0.	0.
25	0.	0.	0.	0.	0.	0.
26	0.	0.	0.	0.	0.	0.
27	0.	0.	0.	0.	0.	0.
28	0.	0.	0.	0.	0.	0.
29	0.	0.	0.	0.	0.	0.
30	0.	0.	0.	0.	0.	0.
31	1.836610E-02	0.	0.	0.	0.	0.
32	1.672071E-02	0.	0.	0.	0.	0.
33	0.	0.	0.	0.	0.	0.
34	0.	0.	0.	0.	0.	0.
35	0.	0.	0.	0.	0.	0.
36	0.	0.	0.	0.	0.	0.
37	0.	0.	0.	0.	0.	0.
38	0.	0.	0.	0.	0.	0.

586 ITERATIONS WERE REQUIRED TO REACH A MAXIMUM RELATIVE DIFFERENCE OF 5.139649 7E-04

NODAL POINT DISPLACEMENTS AND ROTATIONS
GLOBAL COORDINATE SYSTEM

NODAL POINT NUMBER.	DISPLACEMENT X	DISPLACEMENT Y	DISPLACEMENT Z	ROTATION X	ROTATION Y	ROTATION Z
1	-7.949301E-02	0.	-1.027646E-01	0.	-3.609261E-03	0.
2	-7.270344E-02	-1.630941E-03	-9.669666E-02	-1.743503E-03	1.348334E-05	2.595924E-03
3	-6.355261E-02	-6.609394E-03	-9.143430E-02	-1.093052E-03	-8.757539E-04	3.272897E-03
4	-5.585569E-02	-8.060025E-03	-9.073522E-02	3.461274E-04	-1.965079E-03	2.051221E-03
5	-4.986129E-02	-4.047894E-03	-8.940563E-02	1.094938E-03	-2.234908E-03	1.037767E-03
6	-4.602542E-02	-8.047835E-04	-8.596884E-02	9.866729E-04	-2.108680E-03	3.481761E-04
7	-4.404843E-02	0.	-8.282589E-02	0.	-2.109124E-03	0.
8	1.080497E-01	0.	-1.085311E-01	0.	3.117216E-02	0.
9	2.894659E-02	-2.637329E-03	-9.674910E-02	-1.578571E-04	9.666633E-03	8.040565E-04
10	-6.131863E-03	-7.226779E-03	-9.108886E-02	-3.691100E-05	1.008746E-03	7.221803E-04
11	-2.832407E-03	-8.646989E-03	-8.994133E-02	6.499659E-05	-4.430953E-04	1.976561E-03
12	2.206809E-03	-3.402344E-03	-8.775119E-02	8.794092E-05	-1.280053E-03	1.993426E-03
13	1.438167E-03	-1.435069E-03	-8.564899E-02	8.637498E-05	-1.748369E-03	9.093495E-04
14	3.929535E-03	0.	-7.995903E-02	0.	-1.992377E-03	0.
15	3.980216E-01	0.	-1.109580E-01	0.	4.531501E-02	0.
16	1.097413E-01	-2.806439E-03	-9.683512E-02	-5.852761E-04	1.510822E-02	-7.491953E-03
17	-2.322955E-03	-7.514143E-03	-9.131738E-02	-1.678451E-04	5.507795E-04	-2.302876E-04
18	9.446493E-03	-8.676115E-03	-9.058304E-02	1.453089E-04	-8.709504E-04	1.634454E-03
19	1.836627E-02	-3.082934E-03	-8.865863E-02	2.491563E-04	-1.147766E-03	1.884883E-03
20	1.544284E-02	-9.851059E-04	-8.593769E-02	2.482693E-04	-1.561650E-03	9.599182E-04
21	1.672089E-02	0.	-8.023608E-02	0.	-1.702868E-03	0.
22	8.209590E-02	0.	0.	0.	0.	0.
23	0.	0.	0.	0.	0.	0.
24	0.	0.	0.	0.	0.	0.
25	0.	0.	0.	0.	0.	0.
26	0.	0.	0.	0.	0.	0.
27	0.	0.	0.	0.	0.	0.
28	0.	0.	0.	0.	0.	0.
29	0.	0.	0.	0.	0.	0.
30	0.	0.	0.	0.	0.	0.
31	1.836627E-02	0.	0.	0.	0.	0.
32	1.672089E-02	0.	0.	0.	0.	0.
33	0.	0.	0.	0.	0.	0.
34	0.	0.	0.	0.	0.	0.
35	0.	0.	0.	0.	0.	0.
36	0.	0.	0.	0.	0.	0.
37	0.	0.	0.	0.	0.	0.
38	0.	0.	0.	0.	0.	0.

587 ITERATIONS WERE REQUIRED TO REACH A MAXIMUM RELATIVE DIFFERENCE OF 5.2726236E-03

NODAL POINT FORCES AND MOMENTS
GLOBAL COORDINATE SYSTEM

NODAL POINT NUMBER	FORCE X	FORCE Y	FORCE Z	MOMENT X	MOMENT Y	MOMENT Z
1	0.	2.844287E+02	0.	2.932420E+03	0.	-3.626498E+03
2	0.	0.	0.	0.	0.	0.
3	0.	0.	0.	0.	0.	0.
4	0.	0.	0.	0.	0.	0.
5	0.	0.	0.	0.	0.	0.
6	0.	0.	0.	0.	0.	0.
7	0.	2.827367E+01	0.	-1.483894E+03	0.	-6.465529E+02
8	0.	-2.702036E+02	0.	9.608797E+02	0.	-1.575039E+03
9	0.	0.	0.	0.	0.	0.
10	0.	0.	0.	0.	0.	0.
11	0.	0.	0.	0.	0.	0.
12	0.	0.	0.	0.	0.	0.
13	0.	0.	0.	0.	0.	0.
14	0.	3.708411E+02	0.	-4.637443E+04	0.	-1.649796E+02
15	1.500000E+03	-3.824653E+02	-1.500000E+03	2.165415E+03	0.	6.621644E+03
16	0.	0.	0.	0.	0.	0.
17	0.	0.	0.	0.	0.	0.
18	0.	0.	0.	0.	0.	0.
19	0.	0.	0.	0.	0.	0.
20	0.	0.	0.	0.	0.	0.
21	0.	-2.207293E+02	0.	-8.557992E+04	0.	-8.813808E+01
22	-7.310000E+02	0.	0.	0.	0.	0.
23	-1.699176E+03	0.	0.	0.	0.	0.
24	3.535878E+02	0.	0.	0.	0.	0.
25	1.633279E+02	0.	0.	0.	0.	0.
26	-1.272535E+02	0.	0.	0.	0.	0.
27	-8.293048E+01	0.	0.	0.	0.	0.
28	-1.132964E+02	0.	0.	0.	0.	0.
29	0.	0.	0.	0.	0.	0.
30	2.523426E+02	0.	0.	0.	0.	0.
31	-0.	0.	0.	0.	0.	0.
32	-0.	0.	0.	0.	0.	0.
33	2.227477E+02	4.588603E+02	7.947251E+02	0.	0.	0.
34	1.971485E+02	-4.061259E+02	7.033915E+02	0.	0.	0.
35	0.	0.	0.	0.	0.	0.
36	0.	0.	0.	0.	0.	0.
37	8.275146E+00	3.409360E+01	0.	0.	0.	0.
38	2.515729E+01	1.036480E+02	0.	0.	0.	0.
TOTAL	-1.099754E+00	6.216243E-01	-1.883423E+00			

THE X-FORCE RESTRAINT WAS VIOLATED FOR JOINT NO. 23

NODAL POINT DISPLACEMENTS AND ROTATIONS
GLOBAL COORDINATE SYSTEM

NODAL POINT NUMBER.	DISPLACEMENT X	DISPLACEMENT Y	DISPLACEMENT Z	ROTATION X	ROTATION Y	ROTATION Z
1	-5.807824E-02	0.	-1.028947E-01	0.	-1.756795E-03	0.
2	-5.289416E-02	-1.640188E-03	-9.679886E-02	-1.754261E-03	1.480866E-03	2.521964E-03
3	-4.752295E-02	-6.657539E-03	-9.149834E-02	-1.098961E-03	-3.179055E-05	2.584588E-03
4	-4.333622E-02	-8.102427E-03	-9.080036E-02	3.509768E-04	-1.077533E-03	1.509282E-03
5	-3.987778E-02	-4.062169E-03	-8.946335E-02	1.100638E-03	-1.442103E-03	8.347998E-04
6	-3.750519E-02	-8.068029E-04	-8.601524E-02	9.891879E-04	-1.525042E-03	3.369819E-04
7	-3.659181E-02	0.	-8.286772E-02	0.	-1.638814E-03	0.
8	1.761279E-01	0.	-1.086706E-01	0.	3.421469E-02	0.
9	7.698188E-02	-2.654039E-03	-9.686477E-02	-1.591035E-04	1.233874E-02	-6.073139E-04
10	2.142130E-04	-7.309374E-03	-9.115224E-02	-3.773639E-05	2.152107E-03	-1.171348E-03
11	-5.490785E-03	-8.691061E-03	-9.001098E-02	6.575945E-05	-4.267296E-04	8.807732E-04
12	1.688887E-03	-3.409215E-03	-8.780854E-02	8.821751E-05	-1.169448E-03	1.592098E-03
13	1.708037E-03	-1.434819E-03	-8.569729E-02	8.635518E-05	-1.561196E-03	7.936904E-04
14	4.117741E-03	0.	-8.000269E-02	0.	-1.736673E-03	0.
15	4.887505E-01	0.	-1.110982E-01	0.	4.868437E-02	0.
16	1.654908E-01	-2.816766E-03	-9.694709E-02	-5.886238E-04	1.800370E-02	-9.370212E-03
17	-2.359332E-03	-7.588315E-03	-9.137080E-02	-1.697417E-04	1.862389E-03	-2.261891E-03
18	-2.295427E-03	-8.720954E-03	-9.064751E-02	1.471773E-04	-1.102784E-03	3.115453E-04
19	1.492796E-02	-3.091210E-03	-8.871396E-02	2.501424E-04	-1.256430E-03	1.413554E-03
20	1.445342E-02	-9.858385E-04	-8.598542E-02	2.485053E-04	-1.432268E-03	8.858874E-04
21	1.525889E-02	0.	-8.028007E-02	0.	-1.479719E-03	0.
22	1.507742E-01	0.	0.	0.	0.	0.
23	5.162810E-02	0.	0.	0.	0.	0.
24	0.	0.	0.	0.	0.	0.
25	0.	0.	0.	0.	0.	0.
26	0.	0.	0.	0.	0.	0.
27	0.	0.	0.	0.	0.	0.
28	0.	0.	0.	0.	0.	0.
29	0.	0.	0.	0.	0.	0.
30	0.	0.	0.	0.	0.	0.
31	1.492796E-02	0.	0.	0.	0.	0.
32	1.525889E-02	0.	0.	0.	0.	0.
33	0.	0.	0.	0.	0.	0.
34	0.	0.	0.	0.	0.	0.
35	0.	0.	0.	0.	0.	0.
36	0.	0.	0.	0.	0.	0.
37	0.	0.	0.	0.	0.	0.
38	0.	0.	0.	0.	0.	0.

637 ITERATIONS WERE REQUIRED TO REACH A MAXIMUM RELATIVE DIFFERENCE OF 4.7424186E-04

NODAL POINT DISPLACEMENTS AND ROTATIONS
GLOBAL COORDINATE SYSTEM

NODAL POINT NUMBER.	DISPLACEMENT X	DISPLACEMENT Y	DISPLACEMENT Z	ROTATION X	ROTATION Y	ROTATION Z
1	-5.807556E-02	0.	-1.028947E-01	0.	-1.756594E-03	0.
2	-5.289281E-02	-1.640181E-03	-9.679886E-02	-1.754263E-03	1.480719E-03	2.521828E-03
3	-4.752208E-02	-6.657528E-03	-9.149835E-02	-1.098956E-03	-3.122079E-05	2.584905E-03
4	-4.333503E-02	-8.102431E-03	-9.080036E-02	3.509725E-04	-1.077584E-03	1.500102E-03
5	-3.987662E-02	-4.062154E-03	-8.946336E-02	1.100640E-03	-1.442046E-03	8.348747E-04
6	-3.750409E-02	-8.068019E-04	-8.601525E-02	9.891879E-04	-1.525041E-03	3.369758E-04
7	-3.659076E-02	0.	-8.286773E-02	0.	-1.638773E-03	0.
8	1.701296E-01	0.	-1.086706E-01	0.	3.421464E-02	0.
9	7.698262E-02	-2.654036E-03	-9.686479E-02	-1.591029E-04	1.233882E-02	-6.073637E-04
10	2.142979E-04	-7.309372E-03	-9.115224E-02	-3.773764E-05	2.152110E-03	-1.171440E-03
11	-5.490606E-03	-8.691057E-03	-9.001098E-02	6.576031E-05	-4.267522E-04	8.807509E-04
12	1.608863E-03	-3.409213E-03	-8.780854E-02	8.821745E-05	-1.169392E-03	1.592073E-03
13	1.707884E-03	-1.434817E-03	-8.569729E-02	8.635485E-05	-1.561187E-03	7.933092E-04
14	4.118068E-03	0.	-8.000291E-02	0.	-1.736685E-03	0.
15	4.807515E-01	0.	-1.110982E-01	0.	4.868429E-02	0.
16	1.654914E-01	-2.816759E-03	-9.694710E-02	-5.886242E-04	1.800368E-02	-9.370252E-03
17	-2.359426E-03	-7.588316E-03	-9.137081E-02	-1.697415E-04	1.862408E-03	-2.261920E-03
18	-2.295569E-03	-8.720950E-03	-9.064751E-02	1.471774E-04	-1.102782E-03	3.114967E-04
19	1.492776E-02	-3.091208E-03	-8.871397E-02	2.501423E-04	-1.256440E-03	1.413520E-03
20	1.445322E-02	-9.858364E-04	-8.598543E-02	2.485050E-04	-1.432259E-03	8.858653E-04
21	1.525890E-02	0.	-8.028009E-02	0.	-1.479665E-03	0.
22	1.507758E-01	0.	0.	0.	0.	0.
23	5.162885E-02	0.	0.	0.	0.	0.
24	0.	0.	0.	0.	0.	0.
25	0.	0.	0.	0.	0.	0.
26	0.	0.	0.	0.	0.	0.
27	0.	0.	0.	0.	0.	0.
28	0.	0.	0.	0.	0.	0.
29	0.	0.	0.	0.	0.	0.
30	0.	0.	0.	0.	0.	0.
31	1.492776E-02	0.	0.	0.	0.	0.
32	1.525890E-02	0.	0.	0.	0.	0.
33	0.	0.	0.	0.	0.	0.
34	0.	0.	0.	0.	0.	0.
35	0.	0.	0.	0.	0.	0.
36	0.	0.	0.	0.	0.	0.
37	0.	0.	0.	0.	0.	0.
38	0.	0.	0.	0.	0.	0.

638 ITERATIONS WERE REQUIRED TO REACH A MAXIMUM RELATIVE DIFFERENCE OF 1.8249663E-02

NODAL POINT FORCES AND MOMENTS
GLOBAL COORDINATE SYSTEM

NODAL POINT NUMBER	FORCE X	FORCE Y	FORCE Z	MOMENT X	MOMENT Y	MOMENT Z
1	0.	2.899361E+02	0.	2.945244E+03	0.	-3.699709E+03
2	0.	0.	0.	0.	0.	0.
3	0.	0.	0.	0.	0.	0.
4	0.	0.	0.	0.	0.	0.
5	0.	0.	0.	0.	0.	0.
6	0.	0.	0.	0.	0.	0.
7	0.	3.042654E+01	0.	-1.485795E+03	0.	-6.859962E+02
8	0.	-2.640450E+02	0.	9.627218E+02	0.	-9.258520E+02
9	0.	0.	0.	0.	0.	0.
10	0.	0.	0.	0.	0.	0.
11	0.	0.	0.	0.	0.	0.
12	0.	0.	0.	0.	0.	0.
13	0.	0.	0.	0.	0.	0.
14	0.	3.699617E+02	0.	-4.641076E+02	0.	-1.086723E+02
15	1.500000E+03	-3.812403E+02	-1.500000E+03	2.167934E+03	0.	7.154784E+03
16	0.	0.	0.	0.	0.	0.
17	0.	0.	0.	0.	0.	0.
18	0.	0.	0.	0.	0.	0.
19	0.	0.	0.	0.	0.	0.
20	0.	0.	0.	0.	0.	0.
21	0.	-2.208389E+02	0.	-8.562950E+02	0.	-8.673964E+01
22	-7.310000E+02	0.	0.	0.	0.	0.
23	-1.462000E+03	0.	0.	0.	0.	0.
24	-1.235728E+01	0.	0.	0.	0.	0.
25	3.106103E+02	0.	0.	0.	0.	0.
26	-9.738660E+01	0.	0.	0.	0.	0.
27	-9.848341E+01	0.	0.	0.	0.	0.
28	-1.187321E+02	0.	0.	0.	0.	0.
29	0.	0.	0.	0.	0.	0.
30	2.563044E+02	0.	0.	0.	0.	0.
31	-0.	0.	0.	0.	0.	0.
32	-0.	0.	0.	0.	0.	0.
33	2.232639E+02	4.599237E+02	7.965669E+02	0.	0.	0.
34	1.971261E+02	-4.060797E+02	7.033116E+02	0.	0.	0.
35	0.	0.	0.	0.	0.	0.
36	0.	0.	0.	0.	0.	0.
37	8.657868E+00	3.567042E+01	0.	0.	0.	0.
38	2.094934E+01	8.631129E+01	0.	0.	0.	0.
TOTAL	2.952507E+00	2.576618E-02	-1.215101E-01			

BAR FORCES AND MOMENTS
LOCAL COORDINATE SYSTEMS

BAR NUMBER	NODAL POINT NUMBERS P	Q	K		FORCE X	FORCE Y	FORCE Z	MOMENT X	MOMENT Y	MOMENT Z
1	1	2	16	POINT P	-2.370517E+01	-1.032838E+03	2.783961E+02	2.017147E+01	-3.821427E+03	-2.945244E+03
				POINT Q	2.370517E+01	1.032838E+03	-2.783961E+02	-2.017147E+01	2.841564E+03	-6.900092E+02
2	2	3	17	POINT P	5.886115E+02	-7.268647E+02	2.953196E+02	-5.465528E+00	-2.839101E+03	-8.587707E+02
				POINT Q	-5.886115E+02	7.268647E+02	-2.953196E+02	5.465528E+00	1.799165E+03	-1.700805E+03
3	3	4	18	POINT P	8.542749E+02	-8.322615E+01	1.602893E+02	-7.037140E+00	-1.803600E+03	7.855308E+02
				POINT Q	-8.542749E+02	8.322615E+01	-1.602893E+02	7.037140E+00	1.239434E+03	-1.078460E+03
4	4	5	19	POINT P	7.916219E+02	5.424379E+02	8.583551E+01	-2.926929E+00	-1.242875E+03	1.436478E+03
				POINT Q	-7.916219E+02	-5.424379E+02	-8.583551E+01	2.926929E+00	9.407623E+02	4.727258E+02
5	5	6	20	POINT P	3.870581E+02	3.392548E+02	4.966130E+01	-1.565139E+00	-9.427752E+02	5.257198E+02
				POINT Q	-3.870581E+02	-3.392548E+02	-4.966130E+01	1.565139E+00	7.678983E+02	6.689293E+02
6	6	7	21	POINT P	9.776954E+01	4.829757E+02	1.686392E+01	1.213776E-01	-7.691158E+02	2.141213E+02
				POINT Q	-9.776954E+01	-4.829757E+02	-1.686392E+01	-1.213776E-01	7.097604E+02	1.485795E+03
7	1	8	16	POINT P	9.915896E+02	0.	2.778140E+02	0.	9.683891E+02	0.
				POINT Q	-9.915896E+02	0.	-2.778140E+02	0.	-6.677467E+03	0.
8	2	9	17	POINT P	-1.944575E+02	-1.163841E+02	1.654355E+01	1.325836E+00	1.495488E+03	-1.548783E+03
				POINT Q	1.944575E+02	1.163841E+02	-1.654355E+01	-1.325836E+00	-1.835545E+03	-8.435223E+02
9	3	10	18	POINT P	-2.931836E+02	-6.622923E+01	-1.356179E+02	6.139331E-01	9.346330E+02	-9.152752E+02
				POINT Q	2.931836E+02	6.622923E+01	1.356179E+02	-6.139331E-01	1.853027E+03	-4.460834E+02
10	4	11	19	POINT P	-2.921091E+02	2.870576E+01	-7.487259E+01	1.060334E-01	6.376698E+02	3.580175E+02
				POINT Q	2.921091E+02	-2.870576E+01	7.487259E+01	-1.060334E-01	9.009619E+02	2.318858E+02
11	5	12	20	POINT P	4.781809E+02	7.537152E+01	-3.658306E+01	1.001365E-01	4.863478E+02	9.984491E+02
				POINT Q	-4.781809E+02	-7.537152E+01	3.658306E+01	-1.001365E-01	2.656262E+02	5.508315E+02
12	6	13	21	POINT P	-1.929942E+01	6.650118E+01	-3.318363E+01	6.141948E-02	3.961971E+02	8.830570E+02
				POINT Q	1.929942E+01	-6.650118E+01	3.318363E+01	-6.141948E-02	2.859007E+02	4.838915E+02
13	7	14	20	POINT P	4.918290E+02	0.	1.685885E+01	0.	-1.836305E+02	0.
				POINT Q	-4.918290E+02	0.	-1.685885E+01	0.	-1.628189E+02	0.
14	8	9	16	POINT P	3.983789E+02	-1.309957E+02	-2.505046E+02	-1.034624E+01	-9.611835E+02	-9.627218E+02
				POINT Q	-3.983789E+02	1.309957E+02	2.505046E+02	1.034624E+01	4.508616E+03	-8.923267E+02
15	9	10	17	POINT P	4.731568E+02	-7.101312E+01	1.192696E+02	-3.695650E+00	-4.517918E+03	-4.757825E+02
				POINT Q	-4.731568E+02	7.101312E+01	-1.192696E+02	3.695650E+00	2.829505E+03	-5.294990E+02
16	10	11	18	POINT P	4.716192E+02	-2.184185E+01	1.694402E+02	6.395217E-01	-2.830603E+03	-1.317564E+02
				POINT Q	-4.716192E+02	2.184185E+01	-1.694402E+02	-6.395217E-01	4.311366E+02	-1.775491E+02
17	11	12	19	POINT P	4.824418E+02	5.473679E+01	2.012038E+01	4.272192E-01	-4.304445E+02	3.925358E+02
				POINT Q	-4.824418E+02	-5.473679E+01	-2.012038E+01	-4.272192E-01	1.455168E+02	3.825997E+02

BAR FORCES AND MOMENTS
LOCAL COORDINATE SYSTEMS

BAR NUMBER	NODAL POINT NUMBERS P	Q	K		FORCE X	FORCE Y	FORCE Z	MOMENT X	MOMENT Y	MOMENT Z
18	12	13	20	POINT P	6.124961E+01	1.977269E+01	-4.371696E+01	-1.398980E-01	-1.450949E+02	1.395416E+02
				POINT Q	-6.124961E+01	-1.977269E+01	4.371696E+01	1.398980E-01	7.639643E+02	1.403660E+02
19	13	14	21	POINT P	5.420305E+01	6.284855E+01	4.604580E+01	-1.725159E-02	-7.641371E+02	4.258998E+02
				POINT Q	-5.420305E+01	-6.284855E+01	-4.604580E+01	1.725159E-02	1.120758E+02	4.641076E+02
20	8	15	16	POINT P	1.197841E+03	0.	-7.038322E+02	0.	6.936020E+03	0.
				POINT Q	-1.197841E+03	0.	7.038322E+02	0.	-1.903620E+03	0.
21	9	16	17	POINT P	-9.867518E+00	-2.232737E+02	-1.075799E+03	4.882624E+00	4.167197E+03	-5.245875E+02
				POINT Q	9.867518E+00	2.232737E+02	1.075799E+03	-4.882624E+00	3.520136E+03	-1.070859E+03
22	10	17	18	POINT P	-1.307743E+02	-8.371873E+01	-7.686587E+01	1.376785E-01	-3.912761E+02	-2.151722E+02
				POINT Q	1.307743E+02	8.371873E+01	7.686587E+01	-1.376785E-01	9.405364E+02	-3.830565E+02
23	11	18	19	POINT P	-2.950027E+01	9.746102E+00	9.240542E+01	-3.165521E-01	-6.781119E+02	-1.690027E+01
				POINT Q	2.950027E+01	-9.746102E+00	-9.240542E+01	3.165521E-01	1.741316E+01	8.658490E+01
24	12	19	20	POINT P	-1.746568E+02	2.078946E+01	3.411674E+01	-7.712598E-02	-1.898577E+02	-2.869152E+01
				POINT Q	1.746568E+02	-2.078946E+01	-3.411674E+01	7.712598E-02	-5.393016E+01	1.772467E+02
25	13	20	21	POINT P	-2.497087E+01	5.191563E+01	-4.189939E+01	6.774526E-02	1.096960E+02	8.237427E+01
				POINT Q	2.497087E+01	-5.191563E+01	4.189939E+01	-6.774526E-02	1.897044E+02	2.885991E+02
26	14	21	20	POINT P	-1.367686E+02	0.	-1.548140E+01	0.	1.338539E+02	0.
				POINT Q	1.367686E+02	0.	1.548140E+01	0.	-2.316193E+01	0.
27	15	16	9	POINT P	4.464323E+02	1.932425E+02	7.961742E+02	-1.168735E+01	-7.401748E+03	2.167934E+03
				POINT Q	-4.464323E+02	-1.932425E+02	-7.961742E+02	1.168735E+01	-6.816303E+03	1.282985E+03
28	16	17	10	POINT P	2.701557E+02	1.149831E+01	-2.796147E+02	-2.327968E+00	6.816480E+03	-2.121268E+02
				POINT Q	-2.701557E+02	-1.149831E+01	2.796147E+02	2.327968E+00	-1.822138E+03	4.175041E+02
29	17	18	11	POINT P	1.926247E+02	2.282259E+01	-1.001706E+02	6.265358E-01	1.822053E+03	-3.444845E+01
				POINT Q	-1.926247E+02	-2.282259E+01	1.001706E+02	-6.265358E-01	-3.320989E+01	4.420134E+02
30	18	19	12	POINT P	1.952907E+02	-5.053196E+01	-7.744900E+00	4.025498E-01	3.323793E+01	-5.285986E+02
				POINT Q	-1.952907E+02	5.053196E+01	7.744900E+00	-4.025498E-01	1.050702E+02	-3.737994E+02
31	19	20	13	POINT P	2.092024E+02	2.187074E+01	2.640409E+01	-9.067503E-02	-1.051173E+02	1.965528E+02
				POINT Q	-2.092024E+02	-2.187074E+01	-2.640409E+01	9.067503E-02	-3.664998E+02	1.940918E+02
32	20	21	14	POINT P	2.487037E+02	-7.497959E+01	-1.549008E+01	-6.685301E-02	3.664001E+02	-4.826879E+02
				POINT Q	-2.487037E+02	7.497959E+01	1.549008E+01	6.685301E-02	-8.977882E+01	-8.562950E+02
33	8	22	1	POINT P	7.910000E+02	0.	0.	0.	0.	0.
				POINT Q	-7.910000E+02	0.	0.	0.	0.	0.
34	9	23	2	POINT P	1.462000E+03	0.	0.	0.	0.	0.
				POINT Q	-1.462000E+03	0.	0.	0.	0.	0.

BAR FORCES AND MOMENTS
LOCAL COORDINATE SYSTEMS

BAR NUMBER	NODAL POINT NUMBERS P	Q	K		FORCE X	FORCE Y	FORCE Z	MOMENT X	MOMENT Y	MOMENT Z
35	10	24	3	POINT P	1.635728E+01	0.	0.	0.	0.	0.
				POINT Q	-1.635728E+01	0.	0.	0.	0.	0.
36	11	25	4	POINT P	-3.166103E+02	0.	0.	0.	0.	0.
				POINT Q	3.166103E+02	0.	0.	0.	0.	0.
37	12	26	5	POINT P	9.738660E+01	0.	0.	0.	0.	0.
				POINT Q	-9.738660E+01	0.	0.	0.	0.	0.
38	13	27	6	POINT P	9.848341E+01	0.	0.	0.	0.	0.
				POINT Q	-9.848341E+01	0.	0.	0.	0.	0.
39	14	28	7	POINT P	1.187321E+02	0.	0.	0.	0.	0.
				POINT Q	-1.187321E+02	0.	0.	0.	0.	0.
40	15	29	8	POINT P	0.	0.	0.	0.	0.	0.
				POINT Q	0.	0.	0.	0.	0.	0.
41	17	30	10	POINT P	-2.963044E+02	0.	0.	0.	0.	0.
				POINT Q	2.963044E+02	0.	0.	0.	0.	0.
42	19	31	12	POINT P	7.675958E-12	0.	0.	0.	0.	0.
				POINT Q	-7.675958E-12	0.	0.	0.	0.	0.
43	21	32	14	POINT P	3.937979E-12	0.	0.	0.	0.	0.
				POINT Q	-3.937979E-12	0.	0.	0.	0.	0.
44	12	33	38	POINT P	-9.465176E+02	0.	0.	0.	0.	0.
				POINT Q	9.465176E+02	0.	0.	0.	0.	0.
45	8	35	10	POINT P	0.	0.	0.	0.	0.	0.
				POINT Q	0.	0.	0.	0.	0.	0.
46	10	36	37	POINT P	0.	0.	0.	0.	0.	0.
				POINT Q	0.	0.	0.	0.	0.	0.
47	14	34	12	POINT P	-8.957072E+02	0.	0.	0.	0.	0.
				POINT Q	8.957072E+02	0.	0.	0.	0.	0.
48	12	37	38	POINT P	-3.970609E+01	0.	0.	0.	0.	0.
				POINT Q	3.970609E+01	0.	0.	0.	0.	0.
49	10	38	8	POINT P	-8.881730E+01	0.	0.	0.	0.	0.
				POINT Q	8.881730E+01	0.	0.	0.	0.	0.

CPU TIME USAGE TABLE (SEC)

	TIME IN	TIME OUT	TOTAL
INPUT AND INITIALIZATION OVERLAY	2.280	4.643	2.36
STRUCTURAL STIFFNESS MATRIX GENERATION OVERLAY	4.643	6.941	2.30
DISPLACEMENT, ROTATION, FORCE, AND MOMENT SOLUTION OVERLAY	6.941	172.958	166.02

APPENDIX B

EXAMPLE INPUT AND OUTPUT

MODAL ANALYSIS ROUTINE

STRUCTURAL ANALYSIS PROGRAM

STRUCTURAL ANALYSIS PROGRAM - PLATFORM LANDER
MASTER AGREEMENT, CONTRACT NAS1-8137, TASK ORDER NUMBER TWO
MCDONNELL DOUGLAS ASTRONAUTICS COMPANY, EASTERN DIVISION

STRUCTURAL ANALYSIS DATA - CARD CODE

BLANK = 0	COMMENTS
1	NODAL POINT DEFINITIONS
2	REFERENCE POINTS
3	NODAL POINT RESTRAINT DEFINITIONS
4	FORCE VECTORS
5	MOMENT VECTORS
6	BAR DEFINITIONS
7	FORMATED_DATA TERMINATOR

1	1			0.0	0.0	0.0					
1	2				27.35	0.0					
1	3				23.69	13.68					
1	4				13.68	23.69					
1	5				0.0	27.35					
1	6				-13.68	23.69					
1	7				-23.69	13.68					
1	8				-27.35	0.0					
1	9				-23.69	-13.68					
1	10				-13.68	-23.69					
1	11				0.0	-27.35					
1	12				13.68	-23.69					
1	13				23.69	-13.69					
1	14				34.5	0.0					
1	15				29.88	17.25					
1	16				17.25	29.88					
1	17				0.0	34.5					
1	18				-17.25	29.88					
1	19				-29.88	17.25					
1	20				-34.5	0.0					
1	21				-29.88	-17.25					
1	22				-17.25	-29.88					
1	23				0.0	-34.5					
1	24				17.25	-29.88					
1	25				29.88	-17.25					
6	1	1	2	131	0.441	0.284	0.273	0.00054	16000000.	6200000.	2.33 1.75
6	2	1	3	21	0.441	0.284	0.273	0.00054	16000000.	6200000.	2.33 1.75
6	3	1	4	31	0.441	0.284	0.273	0.00054	16000000.	6200000.	2.33 1.75
6	4	1	5	41	0.441	0.284	0.273	0.00054	16000000.	6200000.	2.33 1.75
6	5	1	6	51	0.441	0.284	0.273	0.00054	16000000.	6200000.	2.33 1.75
6	6	1	7	61	0.441	0.284	0.273	0.00054	16000000.	6200000.	2.33 1.75
6	7	1	8	71	0.441	0.284	0.273	0.00054	16000000.	6200000.	2.33 1.75
6	8	1	9	81	0.441	0.284	0.273	0.00054	16000000.	6200000.	2.33 1.75
6	9	1	10	91	0.441	0.284	0.273	0.00054	16000000.	6200000.	2.33 1.75
6	10	1	11	101	0.441	0.284	0.273	0.00054	16000000.	6200000.	2.33 1.75
6	11	1	12	111	0.441	0.284	0.273	0.00054	16000000.	6200000.	2.33 1.75
6	12	1	13	121	0.441	0.284	0.273	0.00054	16000000.	6200000.	2.33 1.75
6	13	2	3	141	0.56	0.1958	0.4777	0.00111	16000000.	6200000.	2.0 2.0
6	14	3	4	151	0.56	0.1958	0.4777	0.00111	16000000.	6200000.	2.0 2.0
6	15	4	5	161	0.56	0.1958	0.4777	0.00111	16000000.	6200000.	2.0 2.0
6	16	5	6	171	0.56	0.1958	0.4777	0.00111	16000000.	6200000.	2.0 2.0
6	17	6	7	181	0.56	0.1958	0.4777	0.00111	16000000.	6200000.	2.0 2.0
6	18	7	8	191	0.56	0.1958	0.4777	0.00111	16000000.	6200000.	2.0 2.0
6	19	8	9	201	0.56	0.1958	0.4777	0.00111	16000000.	6200000.	2.0 2.0
6	20	9	10	211	0.56	0.1958	0.4777	0.00111	16000000.	6200000.	2.0 2.0
6	21	10	11	221	0.56	0.1958	0.4777	0.00111	16000000.	6200000.	2.0 2.0

6	22	11	12	231	0.56	0.195	0.4777	0.00111	16000000.	6200000.	2.0	2.0
6	23	12	13	241	0.56	0.195	0.4777	0.00111	16000000.	6200000.	2.0	2.0
6	24	13	2	141	0.56	0.195	0.4777	0.00111	16000000.	6200000.	2.0	2.0
6	25	2	14	251	0.441	0.284	0.273	0.00054	16000000.	6200000.	2.33	1.75
6	26	3	15	141	0.441	0.284	0.273	0.00054	16000000.	6200000.	2.33	1.75
6	27	4	16	151	0.441	0.284	0.273	0.00054	16000000.	6200000.	2.33	1.75
6	28	5	17	161	0.441	0.284	0.273	0.00054	16000000.	6200000.	2.33	1.75
6	29	6	18	171	0.441	0.284	0.273	0.00054	16000000.	6200000.	2.33	1.75
6	30	7	19	181	0.441	0.284	0.273	0.00054	16000000.	6200000.	2.33	1.75
6	31	8	20	191	0.441	0.284	0.273	0.00054	16000000.	6200000.	2.33	1.75
6	32	9	21	201	0.441	0.284	0.273	0.00054	16000000.	6200000.	2.33	1.75
6	33	10	22	211	0.441	0.284	0.273	0.00054	16000000.	6200000.	2.33	1.75
6	34	11	23	221	0.441	0.284	0.273	0.00054	16000000.	6200000.	2.33	1.75
6	35	12	24	231	0.441	0.284	0.273	0.00054	16000000.	6200000.	2.33	1.75
6	36	13	25	241	0.441	0.284	0.273	0.00054	16000000.	6200000.	2.33	1.75
6	37	14	15	11	0.53	0.839	0.2933	0.00105	16000000.	6200000.	2.2	1.82
6	38	15	16	11	0.53	0.839	0.2933	0.00105	16000000.	6200000.	2.2	1.82
6	39	16	17	11	0.53	0.839	0.2933	0.00105	16000000.	6200000.	2.2	1.82
6	40	17	18	11	0.53	0.839	0.2933	0.00105	16000000.	6200000.	2.2	1.82
6	41	18	19	11	0.53	0.839	0.2933	0.00105	16000000.	6200000.	2.2	1.82
6	42	19	20	11	0.53	0.839	0.2933	0.00105	16000000.	6200000.	2.2	1.82
6	43	20	21	11	0.53	0.839	0.2933	0.00105	16000000.	6200000.	2.2	1.82
6	44	21	22	11	0.53	0.839	0.2933	0.00105	16000000.	6200000.	2.2	1.82
6	45	22	23	11	0.53	0.839	0.2933	0.00105	16000000.	6200000.	2.2	1.82
6	46	23	24	11	0.53	0.839	0.2933	0.00105	16000000.	6200000.	2.2	1.82
6	47	24	25	11	0.53	0.839	0.2933	0.00105	16000000.	6200000.	2.2	1.82
6	48	25	14	11	0.53	0.839	0.2933	0.00105	16000000.	6200000.	2.2	1.82
7												

APPENDIX B

```
$INDATA
INDSFL  =  1,
INDSFG  =  1,
INDISL  =  0,
INDITR  =  450,
ERRTOL  =  0.1E-03,
SOLVEC  =  0.0, 0.0, 0.0, 0.0, 0.0, 0.0, 0.0, 0.0, 0.0, 0.0, 0.0, 0.0, 0.0, 0.0, 0.0, 0.0, 0.0, 0.0,
           0.0, 0.0, 0.0, 0.0, 0.0, 0.0, 0.0, 0.0, 0.0, 0.0, 0.0, 0.0, 0.0, 0.0, 0.0, 0.0, 0.0, 0.0,
           0.0, 0.0, 0.0, 0.0, 0.0, 0.0, 0.0, 0.0, 0.0, 0.0, 0.0, 0.0, 0.0, 0.0, 0.0, 0.0, 0.0, 0.0,
           0.0, 0.0, 0.0, 0.0, 0.0, 0.0, 0.0, 0.0, 0.0, 0.0, 0.0, 0.0, 0.0, 0.0, 0.0, 0.0, 0.0, 0.0,
           0.0, 0.0, 0.0, 0.0, 0.0, 0.0, 0.0, 0.0, 0.0, 0.0, 0.0, 0.0, 0.0, 0.0, 0.0, 0.0, 0.0, 0.0,
           0.0, 0.0, 0.0, 0.0, 0.0, 0.0, 0.0, 0.0, 0.0, 0.0, 0.0, 0.0, 0.0, 0.0, 0.0, 0.0, 0.0, 0.0,
           0.0, 0.0, 0.0, 0.0, 0.0, 0.0, 0.0, 0.0, 0.0, 0.0, 0.0, 0.0, 0.0, 0.0, 0.0, 0.0, 0.0, 0.0,
           0.0, 0.0, 0.0, 0.0, 0.0, 0.0, 0.0, 0.0, 0.0, 0.0, 0.0, 0.0, 0.0, 0.0, 0.0, 0.0, 0.0, 0.0,
           0.0, 0.0, 0.0, 0.0, 0.0, 0.0, 0.0, 0.0, 0.0, 0.0, 0.0, 0.0, 0.0, 0.0, 0.0, 0.0, 0.0, 0.0,
           0.0, 0.0, 0.0, 0.0, 0.0, 0.0, 0.0, 0.0, 0.0, 0.0, 0.0, 0.0, 0.0, 0.0, 0.0, 0.0, 0.0, 0.0,
           0.0, 0.0, 0.0, 0.0, 0.0, 0.0, 0.0, 0.0, 0.0, 0.0, 0.0, 0.0, 0.0, 0.0, 0.0, 0.0, 0.0, 0.0,
           0.0, 0.0, 0.0, 0.0, 0.0, 0.0, 0.0, 0.0, 0.0, 0.0, 0.0, 0.0, 0.0, 0.0, 0.0, 0.0, 0.0, 0.0,
           0.0, 0.0, 0.0, 0.0, 0.0, 0.0, 0.0, 0.0, 0.0, 0.0, 0.0, 0.0, 0.0, 0.0, 0.0, 0.0, 0.0, 0.0,
           0.0, 0.0, 0.0, 0.0, 0.0, 0.0, 0.0, 0.0, 0.0, 0.0, 0.0, 0.0, 0.0, 0.0, 0.0, 0.0, 0.0, 0.0,
           0.0, 0.0, 0.0, 0.0, 0.0, 0.0, 0.0, 0.0, 0.0, 0.0, 0.0, 0.0, 0.0, 0.0, 0.0, 0.0, 0.0, 0.0,
           0.0, 0.0, 0.0, 0.0, 0.0, 0.0, 0.0, 0.0, 0.0, 0.0, 0.0, 0.0, 0.0, 0.0, 0.0, 0.0, 0.0, 0.0,
           0.0, 0.0, 0.0, 0.0, 0.0, 0.0, 0.0, 0.0, 0.0, 0.0, 0.0, 0.0, 0.0, 0.0, 0.0, 0.0, 0.0, 0.0,
           0.0, 0.0, 0.0, 0.0, 0.0, 0.0, 0.0, 0.0, 0.0, 0.0, 0.0, 0.0, 0.0, 0.0, 0.0, 0.0, 0.0, 0.0,
           0.0, 0.0, 0.0, 0.0, 0.0, 0.0, 0.0, 0.0, 0.0, 0.0, 0.0, 0.0, 0.0, 0.0, 0.0, 0.0, 0.0, 0.0,
           0.0, 0.0, 0.0, 0.0, 0.0, 0.0, 0.0, 0.0, 0.0, 0.0, 0.0, 0.0, 0.0, 0.0, 0.0, 0.0, 0.0, 0.0,
           0.0, 0.0, 0.0, 0.0, 0.0, 0.0, 0.0, 0.0, 0.0, 0.0, 0.0, 0.0, 0.0, 0.0, 0.0, 0.0, 0.0, 0.0,
           0.0, 0.0, 0.0, 0.0, 0.0, 0.0, 0.0, 0.0, 0.0, 0.0, 0.0, 0.0, 0.0, 0.0, 0.0, 0.0, 0.0, 0.0,
           0.0, 0.0, 0.0, 0.0, 0.0, 0.0, 0.0, 0.0, 0.0, 0.0, 0.0, 0.0, 0.0, 0.0, 0.0, 0.0, 0.0, 0.0,
           0.0, 0.0, 0.0, 0.0, 0.0, 0.0, 0.0, 0.0, 0.0, 0.0, 0.0, 0.0, 0.0, 0.0, 0.0, 0.0, 0.0, 0.0,
           0.0, 0.0, 0.0, 0.0, 0.0, 0.0, 0.0, 0.0, 0.0, 0.0, 0.0, 0.0,
RELAXF  =  0.1E+01,
INDRLX  =  0,
INDRKT  =  0,
INDWKT  =  0,
INDPLS  =  0,
MINRST  =  6,
INDNMA  =  1,
IRWKP   =  1, 2, 3, 4, 5, 6, 7, 8, 9, 10, 11, 12, 13, 14, 15, 19, 20, 21, 25, 26, 27, 28, 29,
           30, 31, 32, 33, 37, 38, 39, 43, 44, 45, 46, 47, 48, 49, 50, 51, 55, 56, 57, 61, 62, 63,
           64, 65, 66, 67, 68, 69, 73, 74, 75, 79, 80, 81, 82, 83, 84, 85, 86, 87, 91, 92, 93, 97,
           98, 99, 100, 101, 102, 103, 104, 105, 109, 110, 111, 115, 116, 117, 118, 119, 120, 121,
           122, 123, 127, 128, 129, 133, 134, 135, 136, 137, 138, 139, 140, 141, 145, 146, 147, 0,
AMASS   =  0.17794E+00, 0.17794E+00, 0.17794E+00, 0.1168E+01, 0.389E+00, 0.389E+00, 0.889E-02, 0.889E-02,
           0.889E-02, 0.3564E+01, 0.238E+00, 0.3326E+01, 0.889E-02, 0.889E-02, 0.889E-02, 0.889E-02, 0.889E-02,
           0.889E-02, 0.889E-02, 0.889E-02, 0.889E-02, 0.3564E+01, 0.3326E+01, 0.238E+00, 0.889E-02, 0.889E-02,
           0.889E-02, 0.889E-02, 0.889E-02, 0.889E-02, 0.889E-02, 0.889E-02, 0.889E-02, 0.3564E+01, 0.238E+00,
```

```
0.3326E+01,  0.889E-02,  0.889E-02,  0.889E-02,  0.889E-02,  0.889E-02,  0.889E-02,  0.889E-02,  0.889E-02,
0.889E-02,  0.3564E+01,  0.3326E+01,  0.238E+00,  0.889E-02,  0.889E-02,  0.889E-02,  0.889E-02,  0.889E-02,
0.889E-02,  0.679E- 2,  0.679E-02,  0.679E-02,  0.6353E+01,  0.5928E+01,  0.425E+00,  0.996E-02,  0.996E-02,
0.996E-02,  0.679E- 2,  0.679E-02,  0.679E-02,  0.996E-02,  0.996E-02,  0.996E-02,  0.6353E+01,  0.425E+00,
0.5928E+01,  0.679E-02,  0.679E-02,  0.679E-02,  0.996E-02,  0.996E-02,  0.996E-02,  0.679E-02,  0.679E-02,
0.679E-02,  0.6353E+01,  0.5928E+01,  0.425E+00,  0.996E-02,  0.996E-02,  0.996E-02,  0.679E-02,  0.679E-02,
0.679E-02,  0.996E- 2,  0.996E-02,  0.996E-02,  0.6353E+01,  0.425E+00,  0.5928E+01,  0.679E-02,  0.679E-02,
0.679E-02,  0.996E- 2,  0.996E-02,  0.996E-02,

IREDTO  =  102,

INDWNM  =  0,

TMAX  =  0.9999E+04,

SEND
```

NATURAL FREQUENCIES

1	2	3	4	5
1.82804001E+02	2.10562437E+02	2.75208364E+02	3.53248585E+02	3.34225238E+02

CORRESPONDING MODE SHAPES FOR REDUCED SYSTEM

NODAL POINT NUMBER	ELEMENT REFERENCE	1	2	3	4	5
1	X-TRANS.	1.31982716E-05	-3.89522371E-03	-7.22999625E-01	-6.62027489E-05	1.83395627E-05
1	Y-TRANS.	1.28789749E-11	1.91873484E-10	-1.74875972E-11	2.14363338E-13	-1.39424099E-12
1	Z-TRANS.	-9.10091126E-11	-5.44006324E-10	-1.22870961E-10	-1.31180452E-10	-7.19704346E-11
1	X-ROTAT.	1.40305314E-13	2.19841204E-12	-4.91605197E-13	-7.14122171E-13	-3.86932665E-13
1	Y-ROTAT.	-5.48181381E-07	-3.59515368E-07	-1.54455654E-06	-3.04280621E-03	-1.77893794E-06
1	Z-ROTAT.	-6.44085637E-07	-1.24009496E-06	2.64659934E-06	-3.17553141E-06	3.33742072E-03
2	X-TRANS.	6.68995670E-05	-5.67766710E-01	4.60457996E-01	-1.77191685E-04	4.05960919E-01
2	Y-TRANS.	1.26387316E-11	1.88964141E-10	-1.85219306E-11	-7.61544794E-13	-1.68996361E-12
2	Z-TRANS.	-9.90501323E-11	-4.68566903E-10	-1.30333432E-10	-1.44955882E-10	-7.81965408E-11
2	X-ROTAT.	1.61975401E-13	3.10295577E-12	-2.10876955E-13	-2.85285224E-13	1.05428558E-14
2	Y-ROTAT.	-4.71894486E-02	-5.66493051E-06	3.93056653E-06	-2.55159353E-02	-4.62404037E-06
2	Z-ROTAT.	-9.48937594E-06	5.42865103E-02	-7.63603535E-02	3.73548777E-05	-7.86832672E-02
3	X-TRANS.	-6.04117266E-01	-2.83297797E-01	4.14180447E-01	-2.87087299E-01	8.45483351E-02
3	Y-TRANS.	1.19030135E-11	1.54911653E-10	-1.33684139E-11	7.63942911E-12	2.13798571E-12
3	Z-TRANS.	-9.91616954E-11	-4.77087115E-10	-1.28736004E-10	-1.42233756E-10	-7.68740552E-11
4	X-TRANS.	-6.60866453E-01	2.83144202E-01	3.93345893E-01	7.90429226E-02	-2.82922498E-01
4	Y-TRANS.	1.12500[illegible]E-11	1.26502076E-10	-1.08993997E-11	1.27681166E-11	4.32411638E-12
4	Z-TRANS.	-9.00118[illegible]7E-11	-5.65086949E-10	-1.26603800E-10	-1.37623707E-10	-7.49713635E-11
5	X-TRANS.	-1.07355[illegible]2E-04	5.74314084E-01	4.23002664E-01	4.05168150E-01	1.69902547E-04
5	Y-TRANS.	1.11449[illegible]5E-11	1.18541625E-10	-9.90605966E-12	1.45352693E-11	5.15320032E-12
5	Z-TRANS.	-9.09988[illegible]4E-11	-5.46139105E-10	-1.23669187E-10	-1.32102582E-10	-7.29019029E-11
5	X-ROTAT.	3.69679027E-13	6.19080691E-12	1.35164396E-12	7.45516929E-13	6.19456909E-13
5	Y-ROTAT.	-9.41159794E-06	5.42945213E-02	7.32362846E-02	7.79147657E-02	3.54312566E-05
5	Z-ROTAT.	-9.68907805E-02	6.26916659E-06	3.08699389E-06	-1.50508418E-05	2.52519950E-02
6	X-TRANS.	-6.00740801E-01	2.83303004E-01	3.93421760E-01	7.87006484E-02	2.82963745E-01
6	Y-TRANS.	1.13116442E-11	1.27386403E-10	-1.12927455E-11	1.23329454E-11	4.14182535E-12
6	Z-TRANS.	-9.13721309E-11	-5.79502072E-10	-1.18383820E-10	-1.23154974E-10	-6.83135311E-11
7	X-TRANS.	6.04179674E-01	-2.83089760E-01	4.14239505E-01	-2.87046565E-01	-8.48171526E-02
7	Y-TRANS.	1.14287272E-11	1.50569809E-10	-1.53389876E-11	5.40675280E-12	5.15771899E-13
7	Z-TRANS.	-9.12029575E-11	-6.00708726E-10	-1.13683093E-10	-1.15528494E-10	-6.41614383E-11
8	X-TRANS.	1.07758547E-04	-5.67868240E-01	4.60482760E-01	2.60751132E-04	-4.05935944E-01
8	Y-TRANS.	1.31288064E-11	1.91379787E-10	-1.76458477E-11	5.25765970E-13	-1.55428808E-12
8	Z-TRANS.	-9.17788397E-11	-6.12777152E-10	-1.13426261E-10	-1.14625533E-10	-6.39476038E-11
8	X-ROTAT.	-2.91104652E-13	-1.49003720E-13	-1.68072619E-12	-1.93768277E-12	-1.01140814E-12
8	Y-ROTAT.	4.71857949E-02	5.12221000E-06	4.26660381E-06	-2.55172618E-02	-1.48917566E-05
8	Z-ROTAT.	9.69525141E-06	-5.42886949E-02	7.63517042E-02	4.96635499E-05	-7.86720036E-02
9	X-TRANS.	-6.04079571E-01	-2.83220267E-01	4.14136782E-01	2.87209526E-01	-8.44831512E-02

CORRESPONDING MODE SHAPES FOR REDUCED SYSTEM

NODAL POINT NUMBER	ELEMENT REFERENCE	1	2	3	4	5
9	Y-TRANS.	1.34674022E-11	2.26941391E-10	-2.20473130E-11	-7.81691412E-12	-5.55410013E-12
9	Z-TRANS.	-9.18315335E-11	-6.04910453E-10	-1.14804547E-10	-1.17209153E-10	-6.52766853E-11
10	X-TRANS.	-6.00863.5E-01	2.83179790E-01	3.93386220E-01	-7.89607705E-02	2.82858377E-01
10	Y-TRANS.	1.48975843E-11	2.58446267E-10	-2.35323932E-11	-1.07909949E-11	-6.32566890E-12
10	Z-TRANS.	-4.06877634E-11	-5.73883306E-10	-1.16823913E-10	-1.30748701E-10	-4.63731741E-11
11	X-TRANS.	-1.96051903E-04	5.74317189E-01	4.23090746E-01	-4.85152931E-01	-2.44901941E-04
11	Y-TRANS.	1.51112797E-11	2.65349309E-10	-2.47064495E-11	-1.30070675E-11	-7.26801633E-12
11	Z-TRANS.	-9.11424849E-11	-5.45373493E-10	-1.23396333E-10	-1.31970173E-10	-7.19061385E-11
11	X-ROTAT.	-1.35019773E-13	1.36066105E-12	-3.03310651E-13	-9.28534652E-13	-4.91303256E-13
11	Y-ROTAT.	1.69536548E-05	-5.62931806E-02	-7.32515690E-02	7.79057996E-02	4.55693636E-05
11	Z-ROTAT.	-4.68864676E-02	-3.06516938E-06	-5.09092438E-07	-1.22786371E-05	2.52482622E-02
12	X-TRANS.	7.00655434E-01	2.83237542E-01	3.93409738E-01	-7.86539363E-02	-2.82901827E-01
12	Y-TRANS.	1.43971105E-11	2.54677032E-10	-2.49012233E-11	-1.31133860E-11	-7.59925778E-12
12	Z-TRANS.	-9.93666475E-11	-5.01695954E-10	-1.24471007E-10	-1.35832115E-10	-7.35052072E-11
13	X-TRANS.	9.04627 .6E-01	-2.82917051E-01	4.14361882E-01	2.87290045E-01	8.45966798E-02
13	Y-TRANS.	1.40651272E-11	2.29387919E-10	-2.12904511E-11	-6.78740845E-12	-4.31471275E-12
13	Z-TRANS.	-1.92274958E-11	-4.77818091E-10	-1.28951132E-10	-1.42898760E-10	-7.73050287E-11
14	X-TRANS.	1.38245439E-04	-9.76367482E-01	1.00000000E+00	-4.61842295E-04	1.00000000E+00
14	Y-TRANS.	1.26596735E-11	1.85790111E-10	-1.84219816E-11	-5.11485190E-13	-1.53330135E-12
14	Z-TRANS.	-9.77720458E-11	-4.42006078E-10	-1.29511814E-10	-1.45575932E-10	-7.78317069E-11
14	X-ROTAT.	5.42208672E-13	6.56760601E-12	1.04890983E-12	1.17760213E-12	8.32939133E-13
14	Y-ROTAT.	-7.22571009E-02	-1.06923397E-05	1.20509672E-05	-8.79502699E-02	-3.54224061E-05
14	Z-ROTAT.	-7.65824498E-06	6.11184292E-02	-7.62278503E-02	4.46027303E-05	-9.21949414E-02
15	X-TRANS.	-7.99648838E-01	-4.75380521E-01	7.91289184E-01	-7.12554491E-01	1.87172955E-01
15	Y-TRANS.	1.14641347E-11	1.43165070E-10	-1.33205315E-11	8.68958668E-12	2.56998708E-12
15	Z-TRANS.	-9.84314870E-11	-4.56932233E-10	-1.28961081E-10	-1.44197310E-10	-7.73307895E-11
16	X-TRANS.	-7.67282972E-01	4.72874598E-01	7.49489856E-01	1.71006226E-01	-7.03030723E-01
16	Y-TRANS.	1.04708 .6E-11	1.07539608E-10	-1.08629884E-11	1.42705668E-11	4.72441799E-12
16	Z-TRANS.	-8.96720376E-11	-4.93703224E-10	-1.27011592E-10	-1.39127559E-10	-7.56426904E-11
17	X-TRANS.	-1.77676436E-04	1.00000000E+00	9.41819605E-01	1.00000000E+00	4.41378347E-04
17	Y-TRANS.	1.04898661E-11	9.61377165E-11	-8.91353334E-12	1.76899860E-11	6.45218365E-12
17	Z-TRANS.	-9.08870053E-11	-5.45303126E-10	-1.23563546E-10	-1.31888264E-10	-7.27632562E-11
17	X-ROTAT.	-5.21914891E-13	-3.31591524E-13	-1.86801433E-12	-2.48555945E-12	-1.44187389E-12
17	Y-ROTAT.	-1.03707575E-05	6.38887651E-02	7.34475908E-02	9.26312529E-02	4.25687018E-05
17	Z-ROTAT.	7.09527019E-02	1.06145553E-05	6.48631937E-06	-4.86471674E-05	9.12476586E-02
18	X-TRANS.	9.87079508E-01	4.73150867E-01	7.49623895E-01	1.70205325E-01	7.03127608E-01
18	Y-TRANS.	1.10838313E-11	1.10884294E-10	-9.48506357E-12	1.60482113E-11	5.73926049E-12
18	Z-TRANS.	-9.13374735E-11	-5.88641017E-10	-1.16870354E-10	-1.20549921E-10	-6.70936241E-11
19	X-TRANS.	9.99944275E-01	-4.75141287E-01	7.91347427E-01	-7.12457788E-01	-1.87871205E-01
19	Y-TRANS.	1.13184190E-11	1.41123730E-10	-1.42668855E-11	7.87353091E-12	1.45001458E-12
19	Z-TRANS.	-9.10042878E-11	-6.14495495E-10	-1.10853932E-10	-1.10449026E-10	-6.17080601E-11

CORRESPONDING MODE SHAPES FOR REDUCED SYSTEM

NODAL POINT NUMBER	ELEMENT REFERENCE	1	2	3	4	5
20	X-TRANS.	1.81165000E-04	-9.76431323E-01	9.99965343E-01	6.32023618E-04	-9.99884869E-01
20	Y-TRANS.	1.30271462E-11	1.90275073E-10	-1.80534536E-11	2.76157430E-14	-1.87842693E-12
20	Z-TRANS.	-7.09862942E-11	-6.23642495E-10	-1.08666611E-10	-1.06539053E-10	-5.97788806E-11
20	X-ROTAT.	-2.05458967E-13	6.73020458E-13	-6.52913858E-13	-1.31680080E-12	-7.56612448E-13
20	Y-ROTAT.	7.22516379E-02	8.50862805E-06	1.03982276E-05	-8.80032631E-02	-5.58395802E-05
20	Z-ROTAT.	1.09924718E-05	-6.11220296E-02	7.62184594E-02	5.68136898E-05	-9.21809136E-02
21	X-TRANS.	-9.99772654E-01	-4.75362910E-01	7.91130741E-01	7.12812512E-01	-1.87020313E-01
21	Y-TRANS.	1.29073552E-11	2.31015334E-10	-2.46912439E-11	-1.22065265E-11	-8.12779777E-12
21	Z-TRANS.	-9.09367192E-11	-6.11089827E-10	-1.10300927E-10	-1.09669483E-10	-6.12250878E-11
22	X-TRANS.	-9.87305691E-01	4.72945767E-01	7.49547419E-01	-1.70837450E-01	7.02862160E-01
22	Y-TRANS.	1.42518916E-11	2.67975823E-10	-2.72838949E-11	-1.69912526E-11	-9.50409200E-12
22	Z-TRANS.	-9.01700175E-11	-5.78434313E-10	-1.14333124E-10	-1.16628859E-10	-6.41388760E-11
23	X-TRANS.	-3.41212446E-04	9.99988945E-01	9.42030756E-01	-9.99919293E-01	-5.82348444E-04
23	Y-TRANS.	1.40328287E-11	2.76305383E-10	-2.97329956E-11	-2.12632259E-11	-1.18897685E-11
23	Z-TRANS.	-9.10673303E-11	-5.44780932E-10	-1.23190442E-10	-1.31635244E-10	-7.16743275E-11
23	X-ROTAT.	-9.21042067E-13	-5.19964598E-12	-2.60480807E-12	-3.84619368E-12	-2.33178801E-12
23	Y-ROTAT.	2.14384891E-05	-6.38868880E-02	-7.34666978E-02	9.26225420E-02	5.29792942E-05
23	Z-ROTAT.	-7.09474141E-02	-2.83670295E-06	-5.19568966E-06	-4.35504987E-05	9.12269249E-02
24	X-TRANS.	9.86941304E-01	4.73052212E-01	7.49618526E-01	-1.70151019E-01	-7.03037866E-01
24	Y-TRANS.	1.42549156E-11	2.67787484E-10	-2.75752654E-11	-1.74435492E-11	-9.63575617E-12
24	Z-TRANS.	-8.93409258E-11	-4.93302448E-10	-1.25836116E-10	-1.38064788E-10	-7.44438617E-11
25	X-TRANS.	1.00000000E+00	-4.75101318E-01	7.91031751E-01	7.12504102E-01	1.87692357E-01
25	Y-TRANS.	1.41734565E-11	2.38360319E-10	-2.22830237E-11	-8.71143288E-12	-4.98946423E-12
25	Z-TRANS.	-8.64788789E-11	-4.57627329E-10	-1.29246375E-10	-1.44294287E-10	-7.73465096E-11

GENERALIZED INERTIA PROPERTIES

VARIABLES	1	2	3	4	5
WNX	3.225499[illegible]E-21	1.26377724E-19	5.88017568E-21	6.57806517E-21	1.97040812E-21
WNY	9.21168157E-02	6.52429794E-02	1.83023773E-01	4.70100899E-02	3.44322416E-02
WNZ	9.21168157E-02	6.52429794E-02	1.83023773E-01	4.70100899E-02	3.44322416E-02
PX	0.	0.	0.	0.	0.
PY	3.00845543E-13	2.58406500E-12	9.59250790E-13	9.97939193E-13	1.65081043E-12
PZ	-3.98248591E-13	-4.25411256E-12	-1.55879732E-12	-1.82677201E-12	-2.07036701E-12
GM(5,5) BY ROWS	2.15801803E-01	3.68590714E-11	-3.35629302E-11	6.69631017E-13	6.62287586E-12
	3.68590991E-11	1.12571933E-01	-3.71014192E-10	3.52327304E-11	4.01713419E-11
	-3.35629857E-11	-3.71014039E-10	2.67017389E-01	-9.73857106E-11	1.01828684E-11
	6.69361217E-13	3.22328414E-11	-9.73856273E-11	1.86800273E-01	1.39168357E-10
	6.62287586E-12	4.01715328E-11	1.01828546E-11	1.39168357E-10	1.81833162E-01

NATURAL FREQUENCIES

1	2	3	4	5
1.82804001E+02	2.10562437E+02	2.75208364E+02	3.23246585E+02	3.34225238E+02

CORRESPONDING MODE SHAPES FOR COMPLETE SYSTEM

NODAL POINT NUMBER	ELEMENT REFERENCE	1	2	3	4	5
1	X-TRANS.	1.31982716E-05	-3.89522371E-03	-7.22999625E-01	-6.62027489E-05	1.83395627E-05
1	Y-TRANS.	1.28789799E-11	1.91873484E-10	-1.74875972E-11	2.14363338E-13	-1.39424099E-12
1	Z-TRANS.	-9.10091126E-11	-5.44006324E-10	-1.22870961E-10	-1.31180452E-10	-7.19704346E-11
2	X-TRANS.	8.68995670E-05	-5.67766710E-01	4.60457996E-01	-1.77191585E-04	4.05960919E-01
2	Y-TRANS.	1.26387316E-11	1.86944141E-10	-1.85219306E-11	-7.61546794E-13	-1.68996361E-12
2	Z-TRANS.	-8.90501323E-11	-4.68566903E-10	-1.30333432E-10	-1.44955882E-10	-7.81965408E-11
3	X-TRANS.	-1.04117216E-01	-2.83227797E-01	4.14180447E-01	-2.87087299E-01	8.45483351E-02
3	Y-TRANS.	1.19030135E-11	1.54911653E-10	-1.33684139E-11	7.63942911E-12	2.13798571E-12
3	Z-TRANS.	-9.91610404E-11	-4.77087115E-10	-1.28736004E-10	-1.42233756E-10	-7.68740552E-11
4	X-TRANS.	-1.00866423E-01	2.83144202E-01	3.93345893E-01	7.90429226E-02	-2.82922498E-01
4	Y-TRANS.	1.12500788E-11	1.28502076E-10	-1.08993997E-11	1.27681168E-11	4.32411638E-12
4	Z-TRANS.	-9.00118937E-11	-5.05086949E-10	-1.26603600E-10	-1.37623707E-10	-7.49713635E-11
5	X-TRANS.	-1.07355622E-04	5.74314064E-01	4.23002664E-01	4.05168150E-01	1.69902547E-04
5	Y-TRANS.	1.11449355E-11	1.18541625E-10	-9.90605968E-12	1.45352693E-11	5.15320092E-12
5	Z-TRANS.	-9.09988344E-11	-5.46139105E-10	-1.23669187E-10	-1.32102582E-10	-7.29019029E-11
6	X-TRANS.	6.00740801E-01	2.83343004E-01	3.93421760E-01	7.87006484E-02	2.82963745E-01
6	Y-TRANS.	1.13116442E-11	1.27386403E-10	-1.12927455E-11	1.23329454E-11	4.14182535E-12
6	Z-TRANS.	-9.13721319E-11	-5.79502072E-10	-1.18383820E-10	-1.23154974E-10	-6.83135311E-11
7	X-TRANS.	8.04179674E-01	-2.83089760E-01	4.14239505E-01	-2.87046565E-01	-8.48171526E-02
7	Y-TRANS.	1.14287272E-11	1.50549809E-10	-1.53389878E-11	5.46675280E-12	5.15771899E-13
7	Z-TRANS.	-9.12029575E-11	-6.00708728E-10	-1.13683093E-10	-1.15528494E-10	-6.41614383E-11
8	X-TRANS.	1.07758547E-04	-5.67608240E-01	4.60482760E-01	2.46751132E-04	-4.05935944E-01
8	Y-TRANS.	1.31288084E-11	1.91379787E-10	-1.76458477E-11	5.25765970E-13	-1.55428808E-12
8	Z-TRANS.	-9.17788397E-11	-6.12777152E-10	-1.13426261E-10	-1.14625533E-10	-6.39476038E-11
9	X-TRANS.	-6.04079571E-01	-2.83220267E-01	4.14136782E-01	2.87209526E-01	-8.44831512E-02
9	Y-TRANS.	1.34674022E-11	2.26941391E-10	-2.20473130E-11	-7.81691412E-12	-5.55410013E-12
9	Z-TRANS.	-9.18315335E-11	-6.04010453E-10	-1.14804547E-10	-1.17209153E-10	-6.52766853E-11
10	X-TRANS.	-6.00866315E-01	2.83179790E-01	3.93386220E-01	-7.89607705E-02	2.82858377E-01
10	Y-TRANS.	1.48975843E-11	2.58446267E-10	-2.35323932E-11	-1.07909949E-11	-6.32566890E-12
10	Z-TRANS.	-9.06877634E-11	-5.73883306E-10	-1.16823913E-10	-1.20748701E-10	-6.63731741E-11
11	X-TRANS.	-1.96051903E-04	5.74317189E-01	4.23090746E-01	-4.05152931E-01	-2.44901941E-04
11	Y-TRANS.	1.51112797E-11	2.68349309E-10	-2.47064495E-11	-1.30070675E-11	-7.26801633E-12
11	Z-TRANS.	-9.11424849E-11	-5.45373493E-10	-1.23396333E-10	-1.31970173E-10	-7.19061385E-11
12	X-TRANS.	6.00655434E-01	2.83237542E-01	3.93409738E-01	-7.86539383E-02	-2.82901827E-01

CORRESPONDING MODE SHAPES FOR COMPLETE SYSTEM

NODAL POINT NUMBER	ELEMENT REFERENCE	1	2	3	4	5
12	Y-TRANS.	1.43971185E-11	2.54677032E-10	-2.49012233E-11	-1.31133860E-11	-7.59925778E-12
12	Z-TRANS.	-6.93666475E-11	-5.01685954E-10	-1.24671007E-10	-1.35832115E-10	-7.35052072E-11
13	X-TRANS.	6.04627[illegible]8E-01	-2.82917051E-01	4.14361882E-01	2.87290045E-01	8.45966798E-02
13	Y-TRANS.	1.40651292E-11	2.29357919E-10	-2.12904511E-11	-6.78740845E-12	-4.31471275E-12
13	Z-TRANS.	-8.92274958E-11	-4.77818091E-10	-1.28951132E-10	-1.42898760E-10	-7.73050287E-11
14	X-TRANS.	1.38245439E-04	-9.76367682E-01	1.00000000E+00	-4.61842298E-04	1.00000000E+00
14	Y-TRANS.	1.26596735E-11	1.88900111E-10	-1.84219816E-11	-5.11485190E-13	-1.53330135E-12
14	Z-TRANS.	-6.77720498E-11	-4.42096078E-10	-1.29511814E-10	-1.45575932E-10	-7.78317069E-11
15	X-TRANS.	-9.99848[illegible]8E-01	-4.75380521E-01	7.91289184E-01	-7.12554491E-01	1.87172955E-01
15	Y-TRANS.	1.14641[illegible]7E-11	1.43165070E-10	-1.33205315E-11	8.68958868E-12	2.56998708E-12
15	Z-TRANS.	-8.64314[illegible]0E-11	-4.56932233E-10	-1.28981081E-10	-1.44197310E-10	-7.73807895E-11
16	X-TRANS.	-9.87282972E-01	4.72874598E-01	7.49489856E-01	1.71006226E-01	-7.03030723E-01
16	Y-TRANS.	1.04708[illegible]8E-11	1.07539608E-10	-1.08629884E-11	1.42705668E-11	4.72441799E-12
16	Z-TRANS.	-8.96720376E-11	-4.93793224E-10	-1.27011592E-10	-1.39127559E-10	-7.56426904E-11
17	X-TRANS.	-1.77676423E-04	1.00000000E+00	9.41819605E-01	1.00000000E+00	4.41378347E-04
17	Y-TRANS.	1.04898601E-11	9.61377165E-11	-8.91353334E-12	1.74899860E-11	6.45218365E-12
17	Z-TRANS.	-9.08870013E-11	-5.45503126E-10	-1.23563546E-10	-1.31888264E-10	-7.27632562E-11
18	X-TRANS.	9.87079508E-01	4.73150867E-01	7.49623895E-01	1.70205325E-01	7.03127608E-01
18	Y-TRANS.	1.10838313E-11	1.10884294E-10	-9.48506357E-12	1.40482113E-11	5.73926049E-12
18	Z-TRANS.	-9.13374[illegible]5E-11	-5.88041017E-10	-1.16870354E-10	-1.20549921E-10	-6.70936241E-11
19	X-TRANS.	9.99944[illegible]5E-01	-4.75141287E-01	7.91347427E-01	-7.12457788E-01	-1.87871205E-01
19	Y-TRANS.	1.13164[illegible]0E-11	1.41123730E-10	-1.42668655E-11	7.87353091E-12	1.45001458E-12
19	Z-TRANS.	-9.10042[illegible]6E-11	-6.14405495E-10	-1.10853932E-10	-1.10449026E-10	-6.17080601E-11
20	X-TRANS.	1.81165000E-04	-9.76431323E-01	9.99965343E-01	6.32023618E-04	-9.99884869E-01
20	Y-TRANS.	1.30271462E-11	1.90275073E-10	-1.80534536E-11	2.76157430E-14	-1.87842693E-12
20	Z-TRANS.	-9.09862942E-11	-6.23642495E-10	-1.08666611E-10	-1.06539053E-10	-5.97788806E-11
21	X-TRANS.	-9.99772[illegible]4E-01	-4.75342910E-01	7.91130741E-01	7.12812512E-01	-1.87020313E-01
21	Y-TRANS.	1.29073[illegible]2E-11	2.31015334E-10	-2.46912439E-11	-1.22065265E-11	-8.12779777E-12
21	Z-TRANS.	-9.09367[illegible]2E-11	-6.11689627E-10	-1.10300927E-10	-1.09669483E-10	-6.12250878E-11
22	X-TRANS.	-9.87305641E-01	4.72945767E-01	7.49547419E-01	-1.70837450E-01	7.02862160E-01
22	Y-TRANS.	1.42518916E-11	2.67975823E-10	-2.72838949E-11	-1.49912528E-11	-9.50409200E-12
22	Z-TRANS.	-9.01700175E-11	-5.78434313E-10	-1.14333124E-10	-1.16662859E-10	-6.41388760E-11
23	X-TRANS.	-3.41212446E-04	9.99988945E-01	9.42030756E-01	-9.99919293E-01	-5.82348444E-04
23	Y-TRANS.	1.40328267E-11	2.76305383E-10	-2.97329956E-11	-2.12632259E-11	-1.18897685E-11
23	Z-TRANS.	-9.10673[illegible]3E-11	-5.44780932E-10	-1.23190442E-10	-1.31635244E-10	-7.16743275E-11
24	X-TRANS.	9.86941[illegible]4E-01	4.73062212E-01	7.49618526E-01	-1.70151019E-01	-7.03037866E-01
24	Y-TRANS.	1.42549156E-11	2.67787484E-10	-2.75752654E-11	-1.74435492E-11	-9.63575617E-12
24	Z-TRANS.	-8.93409258E-11	-4.93302448E-10	-1.25836116E-10	-1.38064786E-10	-7.44438617E-11
25	X-TRANS.	1.00000000E+00	-4.75101318E-01	7.91031751E-01	7.12504102E-01	1.87692357E-01

CORRESPONDING MODE SHAPES FOR COMPLETE SYSTEM

NODAL POINT NUMBER	ELEMENT REFERENCE	1	2	3	4	5
25	Y-TRANS.	1.41734515E-11	2.38340319E-10	-2.22830237E-11	-8.71143288E-12	-4.98946423E-12
25	Z-TRANS.	-1.64786796E-11	-4.57627329E-10	-1.29246375E-10	-1.44294287E-10	-7.73465096E-11

APPENDIX C

PROGRAM VARIABLES LOCATED

IN COMMON

LANDING LOADS AND MOTIONS PROGRAM

APPENDIX C

COMMON statements are used to define the storage areas of many of the variables in the Landing Loads and Motions Program. There are names (labels) associated with the COMMON statements. Each COMMON statement contains a block (several) of program variables. These labeled COMMON blocks are used for the transfer of information between the program subroutines.

The location of each of the labled COMMON blocks in the various subroutines is given in Figure C-1. In addition, a brief definition of all program variables located in COMMON and their program names are presented in Figure C-2. These quantities are grouped by the name of the COMMON statement in which they appear. The size of all dimensioned variables is also given in this figure.

LOCATION OF LABELED COMMON BLOCKS IN LANDING LOADS AND MOTIONS PROGRAM

ROUTINE	LABELED COMMON BLOCK																								
	L1A	L2	L3	L3B	L5A	L5B	L5C	L5D	L6A	L6B	L7A	L7B	L9A	L9B	L10	L11	L12	L13	L14	L19	L22	L24	L25	LIST8	MO
LLMP	X	X	X	X	X	X	X	X	X	X	X	X	X		X	X	X	X	X	X	X	X	X	X	X
RETRO																									
PARA																									
INITAL																									
INPUT	X	X	X		X	X	X			X				X	X	X	X	X		X	X	X	X		X
XTRA	X	X	X		X		X			X				X	X	X	X	X		X	X	X	X		X
INIT	X	X	X	X	X	X	X	X	X	X	X			X	X	X	X	X	X	X	X		X	X	X
FPAREA															X										
TRAMOD		X								X					X	X							X		
SOLVE																									
INTLOP					X												X							X	
MASTER													X				X								
ACCEL		X		X	X	X	X		X	X	X	X	X	X	X	X	X	X	X	X	X		X	X	X
STROKE					X			X			X	X	X				X	X	X				X	X	X
FPSOIL					X		X				X	X	X		X		X						X	X	
OUTPUT	X	X			X	X	X	X	X		X			X	X	X	X				X		X	X	X
GEOM																	X							X	

Figure C-1

VARIABLES LOCATED IN COMMON
LANDING LOADS AND MOTIONS PROGRAM

VARIABLE	COORDINATE SYSTEMS *	VARIABLE NAME
		COMMON L1A
RXO(1)	S.C.S.	INITIAL X COORDINATE OF PAYLOAD C.G.
RYO	S.C.S.	INITIAL Y COORDINATE OF PAYLOAD C.G.
RZO	S.C.S.	INITIAL Z COORDINATE OF PAYLOAD C.G.
RXVELO	S.C.S.	INITIAL X VELOCITY OF PAYLOAD C.G.
RYVELO	S.C.S.	INITIAL Y VELOCITY OF PAYLOAD C.G.
RZVELO	S.C.S.	INITIAL Z VELOCITY OF PAYLOAD C.G.
PSIO	S.C.S.	INITIAL PAYLOAD YAW ANGLE
THATO	S.C.S.	INITIAL PAYLOAD PITCH ANGLE
PHIO	S.C.S.	INITIAL PAYLOAD ROLL ANGLE
WXO	P.C.S.	INITIAL PAYLOAD ANGULAR VELOCITY ABOUT X AXIS
WYO	P.C.S.	INITIAL PAYLOAD ANGULAR VELOCITY ABOUT Y AXIS
WZO	P.C.S.	INITIAL PAYLOAD ANGULAR VELOCITY ABOUT Z AXIS
RCXO	S.C.S.	INITIAL X COORDINATE OF SECONDARY EQUIPMENT ITEM C.G.
RCYO	S.C.S.	INITIAL Y COORDINATE OF SECONDARY EQUIPMENT ITEM C.G.
RCZO	S.C.S.	INITIAL Z COORDINATE OF SECONDARY EQUIPMENT ITEM C.G.
CXVELO	S.C.S.	INITIAL X VELOCITY OF SECONDARY EQUIPMENT ITEM C.G.
CYVELO	S.C.S.	INITIAL Y VELOCITY OF SECONDARY EQUIPMENT ITEM C.G.
CZVELO	S.C.S.	INITIAL Z VELOCITY OF SECONDARY EQUIPMENT ITEM C.G.
DUM1 (6)		DUMMY VARIABLE
RSXO	S.C.S.	INITIAL X COORDINATE OF FOOTPAD C.G.
RSYO	S.C.S.	INITIAL Y COORDINATE OF FOOTPAD C.G.
RSZO	S.C.S.	INITIAL Z COORDINATE OF FOOTPAD C.G.
SXVELO	S.C.S.	INITIAL X VELOCITY OF FOOTPAD C.G.
SYVELO	S.C.S.	INITIAL Y VELOCITY OF FOOTPAD C.G.
SZVELO	S.C.S.	INITIAL Z VELOCITY OF FOOTPAD C.G.
ZETAO	S.C.S.	GROUND SLOPE
		COMMON L2
UXX		PAYLOAD I_{xx}
UYY		PAYLOAD I_{yy}
UZZ		PAYLOAD I_{zz}
UCXX		SECONDARY EQUIPMENT ITEM I_{xx}

*NOTE: THE FOLLOWING ABBREVIATIONS ARE USED TO DEFINE THE COORDINATE SYSTEMS

S.C.S. – SURFACE COORDINATE SYSTEM
F.C.S – FOOTPAD COORDINATE SYSTEM
P.C.S. – PAYLOAD COORDINATE SYSTEM
E.C.S. – SECONDARY EQUIPMENT COORDINATE SYSTEM

Figure C–2

VARIABLES LOCATED IN COMMON
LANDING LOADS AND MOTIONS PROGRAM

VARIABLE	COORDINATE SYSTEMS *	VARIABLE NAME
		COMMON L2 (Continued)
UCYY		SECONDARY EQUIPMENT ITEM I_{yy}
UCZZ		SECONDARY EQUIPMENT ITEM I_{zz}
USXX		FOOTPAD I_{xx}
USYY		FOOTPAD I_{yy}
USZZ		FOOTPAD I_{zz}
FCJK		FORCE – SECONDARY EQUIPMENT ITEM STRUT
FCLM		FORCE – ATTENUATOR STRUT
UXY		PAYLOAD I_{xy}
UYZ		PAYLOAD I_{yz}
UXZ		PAYLOAD I_{xz}
UCXY		SECONDARY EQUIPMENT ITEM I_{xy}
UCXZ		SECONDARY EQUIPMENT ITEM I_{xz}
UCYZ		SECONDARY EQUIPMENT ITEM I_{yz}
PLGNOF		UNSTRAINED PARACHUTE LINE LENGTH (VARIABLE NOT USED)
PK		PARACHUTE CORD SPRING RATE (VARIABLE NOT USED)
HSX1	P.C.S.	INITIAL X COORDINATE OF FOOTPAD C.G.
HCX1	P.C.S.	INITIAL X COORDINATE OF SECONDARY EQUIPMENT ITEM C.G.
VISJK		V^2 DAMPING COEFFICIENT FOR SECONDARY EQUIPMENT ITEM STRUTS
VISLM		V^2 DAMPING COEFFICIENT FOR ATTENUATOR STRUTS
IP		OUTPUT INDICATOR (=-6)
IT		OUTPUT INDICATOR (=6)
JK		NUMBER OF SECONDARY EQUIPMENT ITEM STRUTS (MAXIMUM =6)
LM		NUMBER OF ATTENUATOR STRUTS (MAXIMUM =48)
JKDAMP		V^2 DAMPING INDICATOR – SECONDARY EQUIPMENT ITEM STRUTS (= 1, DAMPING; = 0, NO DAMPING)
LMDAMP		V^2 DAMPING INDICATOR – ATTENUATOR STRUTS (= 1, DAMPING; = 0, NO DAMPING)
NSPC		NUMBER OF ATTENUATOR STRUT STROKE TIME HISTORIES TO BE PRINTED
NSPS (48)		INDICATOR DEFINING ATTENUATOR STRUTS WHOSE STROKES ARE PRINTED
NCPC		OUTPUT INDICATOR, EQUIPMENT ITEM STRUT STROKE TIME HISTORIES (= 1 PRINT, = 0 DO NOT PRINT)

*NOTE: THE FOLLOWING ABBREVIATIONS ARE USED TO DEFINE THE COORDINATE SYSTEMS

S.C.S. – SURFACE COORDINATE SYSTEM
F.C.S – FOOTPAD COORDINATE SYSTEM
P.C.S. – PAYLOAD COORDINATE SYSTEM
E.C.S. – SECONDARY EQUIPMENT COORDINATE SYSTEM

Figure C–2 (Cont'd)

VARIABLES LOCATED IN COMMON
LANDING LOADS AND MOTIONS PROGRAM

VARIABLE	COORDINATE SYSTEMS *	VARIABLE NAME
		COMMON L3
RX(1)	S.C.S.	X COORDINATE OF PAYLOAD C.G.
RY	S.C.S.	Y COORDINATE OF PAYLOAD C.G.
RZ	S.C.S.	Z COORDINATE OF PAYLOAD C.G.
RXVEL	S.C.S.	X VELOCITY OF PAYLOAD C.G.
RYVEL	S.C.S.	Y VELOCITY OF PAYLOAD C.G.
RZVEL	S.C.S.	Z VELOCITY OF PAYLOAD C.G.
PSI	S.C.S.	PAYLOAD YAW ANGLE
THTA	S.C.S.	PAYLOAD PITCH ANGLE
PHI	S.C.S.	PAYLOAD ROLL ANGLE
WX	P.C.S.	PAYLOAD ANGULAR VELOCITY ABOUT X AXIS
WY	P.C.S.	PAYLOAD ANGULAR VELOCITY ABOUT Y AXIS
WZ	P.C.S.	PAYLOAD ANGULAR VELOCITY ABOUT Z AXIS
RCX	S.C.S.	X COORDINATE OF SECONDARY EQUIPMENT ITEM C.G.
RCY	S.C.S.	Y COORDINATE OF SECONDARY EQUIPMENT ITEM C.G.
RCZ	S.C.S.	Z COORDINATE OF SECONDARY EQUIPMENT ITEM C.G.
RCXVEL	S.C.S.	X VELOCITY OF SECONDARY EQUIPMENT ITEM C.G.
RCYVEL	S.C.S.	Y VELOCITY OF SECONDARY EQUIPMENT ITEM C.G.
RCZVEL	S.C.S.	Z VELOCITY OF SECONDARY EQUIPMENT ITEM C.G.
PSIC	S.C.S.	SECONDARY EQUIPMENT ITEM YAW ANGLE
THTAC	S.C.S.	SECONDARY EQUIPMENT ITEM PITCH ANGLE
PHIC	S.C.S.	SECONDARY EQUIPMENT ITEM ROLL ANGLE
WCX	E.C.S.	SECONDARY EQUIPMENT ITEM ANGULAR VELOCITY ABOUT X AXIS
WCY	E.C.S.	SECONDARY EQUIPMENT ITEM ANGULAR VELOCITY ABOUT Y AXIS
WCZ	E.C.S.	SECONDARY EQUIPMENT ITEM ANGULAR VELOCITY ABOUT Z AXIS
RSZ	S.C.S.	X COORDINATE OF FOOTPAD C.G.
RSY	S.C.S.	Y COORDINATE OF FOOTPAD C.G.
RSZ	S.C.S.	Z COORDINATE OF FOOTPAD C.G.
RSXVEL	S.C.S.	X VELOCITY OF FOOTPAD C.G.
RSYVEL	S.C.S.	Y VELOCITY OF FOOTPAD C.G.
RSZVEL	S.C.S.	Z VELOCITY OF FOOTPAD C.G.
PSIS	S.C.S.	FOOTPAD YAW ANGLE
THTAS	S.C.S.	FOOTPAD PITCH ANGLE

*NOTE: THE FOLLOWING ABBREVIATIONS ARE USED TO DEFINE THE COORDINATE SYSTEMS

S.C.S. – SURFACE COORDINATE SYSTEM
F.C.S – FOOTPAD COORDINATE SYSTEM
P.C.S. – PAYLOAD COORDINATE SYSTEM
E.C.S. – SECONDARY EQUIPMENT COORDINATE SYSTEM

Figure C–2 (Cont'd)

VARIABLES LOCATED IN COMMON
LANDING LOADS AND MOTIONS PROGRAM

VARIABLE	COORDINATE SYSTEMS *	VARIABLE NAME
		COMMON L3 (Continued)
PHIS	S.C.S.	FOOTPAD ROLL ANGLE
WSX	F.C.S.	FOOTPAD ANGULAR VELOCITY ABOUT X AXIS
WSY	F.C.S.	FOOTPAD ANGULAR VELOCITY ABOUT Y AXIS
WSZ	F.C.S.	FOOTPAD ANGULAR VELOCITY ABOUT Z AXIS
		COMMON L3B
AX	S.C.S.	X ACCELERATION OF PAYLOAD C.G.
AY	S.C.S.	Y ACCELERATION OF PAYLOAD C.G.
AZ	S.C.S.	Z ACCELERATION OF PAYLOAD C.G.
WDX	P.C.S.	PAYLOAD ANGULAR ACCELERATION ABOUT X AXIS
WDY	P.C.S.	PAYLOAD ANGULAR ACCELERATION ABOUT Y AXIS
WDZ	P.C.S.	PAYLOAD ANGULAR ACCELERATION ABOUT Z AXIS
ACX	S.C.S.	X ACCELERATION OF SECONDARY EQUIPMENT ITEM C.G.
ACY	S.C.S.	Y ACCELERATION OF SECONDARY EQUIPMENT ITEM C.G.
ACZ	S.C.S.	Z ACCELERATION OF SECONDARY EQUIPMENT ITEM C.G.
WDCX	E.C.S.	SECONDARY EQUIPMENT ITEM ANGULAR ACCELERATION ABOUT X AXIS
WDCY	E.C.S.	SECONDARY EQUIPMENT ITEM ANGULAR ACCELERATION ABOUT Y AXIS
WDCZ	E.C.S.	SECONDARY EQUIPMENT ITEM ANGULAR ACCELERATION ABOUT Z AXIS
ASX	S.C.S.	X ACCELERATION OF FOOTPAD C.G.
ASY	S.C.S.	Y ACCELERATION OF FOOTPAD C.G.
ASZ	S.C.S.	Z ACCELERATION OF FOOTPAD C.G.
WDSX	F.C.S.	FOOTPAD ANGULAR ACCELERATION ABOUT X AXIS
WDSY	F.C.S.	FOOTPAD ANGULAR ACCELERATION ABOUT Y AXIS
WDSZ	F.C.S.	FOOTPAD ANGULAR ACCELERATION ABOUT Z AXIS
		COMMON L5A
DT		FIXED TIME INTERVAL FOR RUNGE-KUTTA AND PREDICTOR-CORRECTOR INTEGRATION
TMAX		MAXIMUM PROBLEM TIME
IPRINT		OUTPUT PRINT FLAG: = 1, PRINT FINAL SUMMARY; = 0, STORE DATA AND CONTINUE
ISTOP		RUN STOP FLAG: = 1, MAXIMUM TIME; = 2, EXCESSIVE ACCELERATION; = 3, SECONDARY EQUIPMENT ITEM STRUT BOTTOMED; = 4, ATTENUATOR STRUT BOTTOMED; = 5, FOOTPAD STRUCK PAYLOAD

*NOTE: THE FOLLOWING ABBREVIATIONS ARE USED TO DEFINE THE COORDINATE SYSTEMS

S.C.S. – SURFACE COORDINATE SYSTEM
F.C.S – FOOTPAD COORDINATE SYSTEM
P.C.S. – PAYLOAD COORDINATE SYSTEM
E.C.S. – SECONDARY EQUIPMENT COORDINATE SYSTEM

Figure C–2 (Cont'd)

VARIABLES LOCATED IN COMMON
LANDING LOADS AND MOTIONS PROGRAM

VARIABLE	COORDINATE SYSTEMS *	VARIABLE NAME
		COMMON L5A (Continued)
IRUNNO		STACKED RUN NUMBER FLAG, FIRST RUN = 0
ISERNO		SERIES NUMBER OF RUN
JPRINT		PRINT TIME INDICATOR
NPRINT		NUMBER OF INTEGRATION TIME STEPS BETWEEN PRINTS
NOFOR		FOOTPAD LANDING LOADS OUTPUT INDICATOR (= 0, NO LOADS OUTPUT; = 1; LOADS OUTPUT)
		COMMON L5B
OLCMAX (6)		MAXIMUM SECONDARY EQUIPMENT ITEM STRUT TENSILE STROKE
OLCMIN (6)		MAXIMUM SECONDARY EQUIPMENT ITEM STRUT COMPRESSIVE STROKE
OLSMAX (48)		MAXIMUM ATTENUATOR STRUT TENSILE STROKE
OLSMIN (48)		MAXIMUM ATTENUATOR STRUT COMPRESSIVE STROKE
JC		STRUT INDICATOR – STROKE SUBROUTINE
JS		STRUT INDICATOR – STROKE SUBROUTINE
OLCB (6)		MAXIMUM SECONDARY EQUIPMENT ITEM STRUT TENSILE STROKE RELATIVE TO INITIAL LENGTH
OLCL (6)		MAXIMUM SECONDARY EQUIPMENT ITEM STRUT COMPRESSIVE STROKE RELATIVE TO INITIAL LENGTH
OLSB (48)		MAXIMUM ATTENUATOR STRUT TENSILE STROKE RELATIVE TO INITIAL LENGTH
OLSL (48)		MAXIMUM ATTENUATOR STRUT COMPRESSIVE STROKE RELATIVE TO INITIAL LENGTH
OMACX (7)	E.C.S.	MAXIMUM ACCELERATION IN X DIRECTION OF SECONDARY EQUIPMENT ITEM ACCELEROMETERS
OMACY (7)	E.C.S.	MAXIMUM ACCELERATION IN Y DIRECTION OF SECONDARY EQUIPMENT ITEM ACCELEROMETERS
OMACZ (7)	E.C.S.	MAXIMUM ACCELERATION IN Z DIRECTION OF SECONDARY EQUIPMENT ITEM ACCELEROMETERS
OMAX (7)	P.C.S.	MAXIMUM ACCELERATION IN X DIRECTION OF PAYLOAD ACCELEROMETERS
OMAY (7)	P.C.S.	MAXIMUM ACCELERATION IN Y DIRECTION OF PAYLOAD ACCELEROMETERS
OMAZ (7)	P.C.S.	MAXIMUM ACCELERATION IN Z DIRECTION OF PAYLOAD ACCELEROMETERS
OMASX (7)	F.C.S.	MAXIMUM ACCELERATION IN X DIRECTION OF FOOTPAD ACCELEROMETERS
OMASY (7)	F.C.S.	MAXIMUM ACCELERATION IN Y DIRECTION OF FOOTPAD ACCELEROMETERS
OMASZ (7)	F.C.S.	MAXIMUM ACCELERATION IN Z DIRECTION OF FOOTPAD ACCELEROMETERS
ENGKE		VARIABLE NOT USED
OECS		VARIABLE NOT USED
ENGPE		VARIABLE NOT USED
OESS		VARIABLE NOT USED

*NOTE: THE FOLLOWING ABBREVIATIONS ARE USED TO DEFINE THE COORDINATE SYSTEMS

S.C.S. – SURFACE COORDINATE SYSTEM
F.C.S – FOOTPAD COORDINATE SYSTEM
P.C.S. – PAYLOAD COORDINATE SYSTEM
E.C.S. – SECONDARY EQUIPMENT COORDINATE SYSTEM

Figure C-2 (Cont'd)

VARIABLES LOCATED IN COMMON
LANDING LOADS AND MOTIONS PROGRAM

VARIABLE	COORDINATE SYSTEMS *	VARIABLE NAME
		COMMON L5B (Continued)
OFFACT		VARIABLE NOT USED
ENGKEF		VARIABLE NOT USED
ENGTOT		VARIABLE NOT USED
AX1	P.C.S.	X ACCELERATION OF PAYLOAD C.G.
AY1	P.C.S.	Y ACCELERATION OF PAYLOAD C.G.
AZ1	P.C.S.	Z ACCELERATION OF PAYLOAD C.G.
ACX3	E.C.S.	X ACCELERATION OF SECONDARY EQUIPMENT ITEM C.G.
ACY3	E.C.S.	Y ACCELERATION OF SECONDARY EQUIPMENT ITEM C.G.
ACZ3	E.C.S.	Z ACCELERATION OF SECONDARY EQUIPMENT ITEM C.G.
ASX2	F.C.S.	X ACCELERATION OF FOOTPAD C.G.
ASY2	F.C.S.	Y ACCELERATION OF FOOTPAD C.G.
ASZ2	F.C.S.	Z ACCELERATION OF FOOTPAD C.G.
L1		DATA STORAGE FLAG: PRINT FOR L1 $\geq$ 25
ICRKT2		VARIABLE NOT USED
		COMMON L5C
ZETA		GROUND SLOPE
PLM		PAYLOAD MASS
SEQM		SECONDARY EQUIPMENT ITEM MASS
FPM		FOOTPAD MASS
G		LOCAL ACCELERATION OF GRAVITY
		COMMON L5D
IC		NUMBER OF BOTTOMED OUT SECONDARY EQUIPMENT ITEM STRUT
ISS		NUMBER OF BOTTOMED OUT ATTENUATOR STRUT
OFCMAX (6)		MAXIMUM SECONDARY EQUIPMENT ITEM STRUT COMPRESSIVE LOAD
OFCMIN (6)		MAXIMUM SECONDARY EQUIPMENT ITEM STRUT TENSILE LOAD
OFSMAX (48)		MAXIMUM ATTENUATOR STRUT COMPRESSIVE LOAD
OFSMIN (48)		MAXIMUM ATTENUATOR STRUT TENSILE LOAD
TSSQ (48)		VARIABLE NOT USED
TCSQ(6)		VARIABLE NOT USED
TOTSCR (48)		VARIABLE NOT USED
TOTCCR (6)		VARIABLE NOT USED

* NOTE: THE FOLLOWING ABBREVIATIONS ARE USED TO DEFINE THE COORDINATE SYSTEMS

S.C.S. – SURFACE COORDINATE SYSTEM
F.C.S – FOOTPAD COORDINATE SYSTEM
P.C.S. – PAYLOAD COORDINATE SYSTEM
E.C.S. – SECONDARY EQUIPMENT COORDINATE SYSTEM

Figure C-2 (Cont'd)

VARIABLES LOCATED IN COMMON
LANDING LOADS AND MOTIONS PROGRAM

VARIABLE	COORDINATE SYSTEMS *	VARIABLE NAME
		COMMON L6A
SLJKO (6)		INITIAL SECONDARY EQUIPMENT ITEM STRUT LENGTH
SLLMO (48)		INITIAL ATTENUATOR STRUT LENGTH
		COMMON L6B
XL1(48)	P.C.S.	X COORDINATE OF ATTENUATOR STRUT – PAYLOAD END
YL1 (48)	P.C.S.	Y COORDINATE OF ATTENUATOR STRUT – PAYLOAD END
ZL1 (48)	P.C.S.	Z COORDINATE OF ATTENUATOR STRUT – PAYLOAD END
XM2(48)	F.C.S.	X COORDINATE OF ATTENUATOR STRUT – FOOTPAD END
YM2 (48)	F.C.S.	Y COORDINATE OF ATTENUATOR STRUT – FOOTPAD END
ZM2 (48)	F.C.S.	Z COORDINATE OF ATTENUATOR STRUT – FOOTPAD END
XJ3(6)	E.C.S.	X COORDINATE OF SECONDARY EQUIPMENT ITEM STRUT – SECONDARY EQUIPMENT ITEM END
YJ3(6)	E.C.S.	Y COORDINATE OF SECONDARY EQUIPMENT ITEM STRUT – SECONDARY EQUIPMENT ITEM END
ZJ3 (6)	E.C.S.	Z COORDINATE OF SECONDARY EQUIPMENT ITEM STRUT – SECONDARY EQUIPMENT ITEM END
XK1 (6)	P.C.S.	X COORDINATE OF SECONDARY EQUIPMENT ITEM STRUT – PAYLOAD END
YK1(6)	P.C.S.	Y COORDINATE OF SECONDARY EQUIPMENT ITEM STRUT – PAYLOAD END
ZK1(6)	P.C.S.	Z COORDINATE OF SECONDARY EQUIPMENT ITEM STRUT – PAYLOAD END
CXX		COEFFICIENT IN PAYLOAD ANGULAR ACCELERATION EQUATION
CXY		COEFFICIENT IN PAYLOAD ANGULAR ACCELERATION EQUATION
CXZ		COEFFICIENT IN PAYLOAD ANGULAR ACCELERATION EQUATION
CYX		COEFFICIENT IN PAYLOAD ANGULAR ACCELERATION EQUATION
CYY		COEFFICIENT IN PAYLOAD ANGULAR ACCELERATION EQUATION
CYZ		COEFFICIENT IN PAYLOAD ANGULAR ACCELERATION EQUATION
CZX		COEFFICIENT IN PAYLOAD ANGULAR ACCELERATION EQUATION
CZY		COEFFICIENT IN PAYLOAD ANGULAR ACCELERATION EQUATION
CZZ		COEFFICIENT IN PAYLOAD ANGULAR ACCELERATION EQUATION
CCXX		COEFFICIENT IN SECONDARY EQUIPMENT ITEM ANGULAR ACCELERATION EQUATION
CCXY		COEFFICIENT IN SECONDARY EQUIPMENT ITEM ANGULAR ACCELERATION EQUATION
CCXZ		COEFFICIENT IN SECONDARY EQUIPMENT ITEM ANGULAR ACCELERATION EQUATION
CCYX		COEFFICIENT IN SECONDARY EQUIPMENT ITEM ANGULAR ACCELERATION EQUATION
CCYY		COEFFICIENT IN SECONDARY EQUIPMENT ITEM ANGULAR ACCELERATION EQUATION
CCYZ		COEFFICIENT IN SECONDARY EQUIPMENT ITEM ANGULAR ACCELERATION EQUATION

* NOTE: THE FOLLOWING ABBREVIATIONS ARE USED TO DEFINE THE COORDINATE SYSTEMS

S.C.S. – SURFACE COORDINATE SYSTEM
F.C.S – FOOTPAD COORDINATE SYSTEM
P.C.S. – PAYLOAD COORDINATE SYSTEM
E.C.S. – SECONDARY EQUIPMENT COORDINATE SYSTEM

Figure C-2 (Cont'd)

VARIABLES LOCATED IN COMMON
LANDING LOADS AND MOTIONS PROGRAM

VARIABLE	COORDINATE SYSTEMS *	VARIABLE NAME
		COMMON L6B (Continued)
CCZX		COEFFICIENT IN SECONDARY EQUIPMENT ITEM ANGULAR ACCELERATION EQUATION
CCZY		COEFFICIENT IN SECONDARY EQUIPMENT ITEM ANGULAR ACCELERATION EQUATION
CCZZ		COEFFICIENT IN SECONDARY EQUIPMENT ITEM ANGULAR ACCELERATION EQUATION
		COMMON L7A
FSGX	S.C.S.	TOTAL FORCE DUE TO FOOTPAD/SOIL INTERACTION – X DIRECTION
FSGY	S.C.S.	TOTAL FORCE DUE TO FOOTPAD/SOIL INTERACTION – Y DIRECTION
FSGZ	S.C.S.	TOTAL FORCE DUE TO FOOTPAD/SOIL INTERACTION – Z DIRECTION
TSGX	F.C.S.	MOMENT ON FOOTPAD DUE TO FOOTPAD/SOIL INTERACTION – ABOUT X AXIS
TSGY	F.C.S.	MOMENT ON FOOTPAD DUE TO FOOTPAD/SOIL INTERACTION – ABOUT Y AXIS
TSGZ	F.C.S.	MOMENT ON FOOTPAD DUE TO FOOTPAD/SOIL INTERACTION – ABOUT Z AXIS
GFS(5)		GENERALIZED FORCE DUE TO FOOTPAD/SOIL INTERACTION
AREA		FOOTPAD SOIL CONTACT AREA
AREAM		MAXIMUM FOOTPAD SOIL CONTACT AREA
		COMMON L7B
QX (48)	P.C.S.	X COORDINATE OF STRUT-PAYLOAD END
QY (48)	P.C.S.	Y COORDINATE OF STRUT-PAYLOAD END
QZ (48)	P.C.S.	Z COORDINATE OF STRUT-PAYLOAD END
QSQP (48)		STRUT LENGTH DURING PREVIOUS TIME INTERVAL
QSHT		ALLOWABLE TENSILE STROKE OF STRUT
QFC (48)		STRUT FORCE DUE TO HONEYCOMB
QCH (48)		STRUT SPRING RATE – COMPRESSIVE SIDE
QSH		ALLOWABLE COMPRESSIVE STRUT STROKE
QSR (48)		STRUT LOAD-STROKE PROFILE POSITIONING PARAMETER
QFF		STRUT FRICTION FORCE COEFFICIENT
QVIS		V^2 DAMPING COEFFICIENT FOR ATTENUATOR STRUTS (VISLM) OR SECONDARY EQUIPMENT ITEM STRUTS (VISJK)
QDAMP		V^2 DAMPING FLAG (= 1, V^2 DAMPING; = 0, NO V^2 DAMPING)
QFX	S.C.S.	STRUT FORCE ON PAYLOAD IN X DIRECTION
QFY	S.C.S.	STRUT FORCE ON PAYLOAD IN Y DIRECTION
QFZ	S.C.S.	STRUT FORCE ON PAYLOAD IN Z DIRECTION

*NOTE: THE FOLLOWING ABBREVIATIONS ARE USED TO DEFINE THE COORDINATE SYSTEMS

S.C.S. – SURFACE COORDINATE SYSTEM
F.C.S – FOOTPAD COORDINATE SYSTEM
P.C.S. – PAYLOAD COORDINATE SYSTEM
E.C.S. – SECONDARY EQUIPMENT COORDINATE SYSTEM

Figure C–2 (Cont'd)

VARIABLES LOCATED IN COMMON
LANDING LOADS AND MOTIONS PROGRAM

VARIABLE	COORDINATE SYSTEMS *	VARIABLE NAME
		COMMON L7B (Continued)
QTX1	P.C.S.	MOMENT ON PAYLOAD ABOUT X AXIS DUE TO STRUTS
QTY1	P.C.S.	MOMENT ON PAYLOAD ABOUT Y AXIS DUE TO STRUTS
QTZ1	P.C.S.	MOMENT ON PAYLOAD ABOUT Z AXIS DUE TO STRUTS
JKLM		STROKE ROUTINE FLAG (= 0, SECONDARY EQUIPMENT ITEM STRUTS; = 1, ATTENUATOR STRUTS)
N		NUMBER OF STRUTS (FLAG FOR STROKE ROUTINE)
QTSX2	F.C.S.	MOMENT ON FOOTPAD ABOUT X AXIS DUE TO ATTENUATOR STRUTS
QTSY2	F.C.S.	MOMENT ON FOOTPAD ABOUT Y AXIS DUE TO ATTENUATOR STRUTS
QTSZ2	F.C.S.	MOMENT ON FOOTPAD ABOUT Z AXIS DUE TO ATTENUATOR STRUTS
QTCX3	E.C.S.	MOMENT ON SECONDARY EQUIPMENT ITEM ABOUT X AXIS DUE TO SECONDARY EQUIPMENT ITEM STRUTS
QTCY3	E.C.S.	MOMENT ON SECONDARY EQUIPMENT ITEM ABOUT Y AXIS DUE TO SECONDARY EQUIPMENT ITEM STRUTS
QTCZ3	E.C.S.	MOMENT ON SECONDARY EQUIPMENT ITEM ABOUT Z AXIS DUE TO SECONDARY EQUIPMENT ITEM STRUTS
FORP (48)		STRUT FORCE DURING PREVIOUS TIME INTERVAL
FHCQ (48)		STRUT FORCE DUE TO HONEYCOMB
SO (48)		INITIAL STRUT LENGTH
QCHT (48)		STRUT TENSILE SPRING RATE
QSRT (48)		STRUT LOAD-STROKE PROFILE POSITIONING PARAMETER
QSD (48)		STRUT LOAD-STROKE PROFILE POSITIONING PARAMETER
SQ(48)		STRUT LENGTH
QRGX	S.C.S.	X COORDINATE OF FOOTPAD OR SECONDARY EQUIPMENT ITEM C.G. FOR STRUT LENGTH CALCULATION
QRGY	S.C.S.	Y COORDINATE OF FOOTPAD OR SECONDARY EQUIPMENT ITEM C.G. FOR STRUT LENGTH CALCULATION
QRGZ	S.C.S.	Z COORDINATE OF FOOTPAD OR SECONDARY EQUIPMENT ITEM C.G. FOR STRUT LENGTH CALCULATION
QVGX	S.C.S.	X VELOCITY OF FOOTPAD OR SECONDARY EQUIPMENT ITEM C.G.
QVGY	S.C.S.	Y VELOCITY OF FOOTPAD OR SECONDARY EQUIPMENT ITEM C.G.
QVGZ	S.C.S.	Z VELOCITY OF FOOTPAD OR SECONDARY EQUIPMENT ITEM C.G.
QWGX	F.C.S. OR E.C.S.	ANGULAR VELOCITY OF FOOTPAD OR SECONDARY EQUIPMENT ITEM ABOUT X AXIS

*NOTE: THE FOLLOWING ABBREVIATIONS ARE USED TO DEFINE THE COORDINATE SYSTEMS

S.C.S. – SURFACE COORDINATE SYSTEM
F.C.S – FOOTPAD COORDINATE SYSTEM
P.C.S. – PAYLOAD COORDINATE SYSTEM
E.C.S. – SECONDARY EQUIPMENT COORDINATE SYSTEM

Figure C–2 (Cont'd)

VARIABLES LOCATED IN COMMON
LANDING LOADS AND MOTIONS PROGRAM

VARIABLE	COORDINATE SYSTEMS *	VARIABLE NAME
		COMMON L7B (Continued)
QWGY	F.C.S. OR E.C.S.	ANGULAR VELOCITY OF FOOTPAD OR SECONDARY EQUIPMENT ITEM ABOUT Y AXIS
QWGZ	F.C.S. OR E.C.S.	ANGULAR VELOCITY OF FOOTPAD OR SECONDARY EQUIPMENT ITEM ABOUT Z AXIS
QSX (48)	F.C.S. OR E.C.S.	X COORDINATE OF ATTENUATOR STRUT-FOOTPAD END OR STRUCTURAL STRUT – SECONDARY EQUIPMENT ITEM END
QSY(48)	F.C.S. OR E.C.S.	Y COORDINATE OF ATTENUATOR STRUT-FOOTPAD END OR STRUCTURAL STRUT – SECONDARY EQUIPMENT ITEM END
QSZ (48)	F.C.S. OR E.C.S.	Z COORDINATE OF ATTENUATOR STRUT-FOOTPAD END OR STRUCTURAL STRUT – SECONDARY EQUIPMENT ITEM END
GFA (5)		ATTENUATOR GENERALIZED FORCES
		COMMON L9A
IREAL		INTEGRATION TRIAL FLAG NUMBER (= 0, INTERMEDIATE STEPS; = 1, FINAL STEP)
ICRKT3		VARIABLE NOT USED
		COMMON L9B
SHCJK		ALLOWABLE COMPRESSIVE STROKE OF SECONDARY EQUIPMENT ITEM STRUTS
SHCJKT		ALLOWABLE TENSILE STROKE OF SECONDARY EQUIPMENT ITEM STRUTS
SHCLM		ALLOWABLE COMPRESSIVE STROKE OF ATTENUATOR STRUTS
SHCLMT		ALLOWABLE TENSILE STROKE OF ATTENUATOR STRUTS
CTJK		SECONDARY EQUIPMENT ITEM STRUT BOTTOMED SPRING RATE
CTLM		ATTENUATOR STRUT BOTTOMED SPRING RATE
QKT		STRUT BOTTOMED SPRING RATE
		COMMON L10
RINGX (7)	F.C.S.	DEPTH OF FOOTPAD CONICAL SEGMENTS–X DIRECTION
RHO(7)		RADIUS OF FOOTPAD CONICAL SEGMENTS
AEL (6)		AREA OF FOOTPAD ELEMENTAL AREAS
UNX(6)	F.C.S.	DIRECTION VECTORS OF FOOTPAD ELEMENTAL AREAS – X DIRECTION
UNY(6,30)	F.C.S.	DIRECTION VECTORS OF FOOTPAD ELEMENTAL AREAS – Y DIRECTION
UNZ(6,30)	F.C.S.	DIRECTION VECTORS OF FOOTPAD ELEMENTAL AREAS – Z DIRECTION
SOILP(3)		SOIL PROPERTIES
NTYPE		SOIL MECHANIC INDICATOR (= 0, PRIMARY ; = 1, SECONDARY)
TC		PERCENTAGE FOOTPAD ATTENUATION MATERIAL MAY BE CRUSHED

*NOTE: THE FOLLOWING ABBREVIATIONS ARE USED TO DEFINE THE COORDINATE SYSTEMS

S.C.S. – SURFACE COORDINATE SYSTEM
F.C.S – FOOTPAD COORDINATE SYSTEM
P.C.S. – PAYLOAD COORDINATE SYSTEM
E.C.S. – SECONDARY EQUIPMENT COORDINATE SYSTEM

Figure C–2 (Cont'd)

VARIABLES LOCATED IN COMMON
LANDING LOADS AND MOTIONS PROGRAM

VARIABLE	COORDINATE SYSTEMS *	VARIABLE NAME
		COMMON L10 (Continued)
DCM		DISTANCE DEFINING ELASTIC DEFORMATION OF FOOTPAD ATTENUATION MATERIAL
CFM		CRUSH PRESSURE OF FOOTPAD ATTENUATION MATERIAL
THICK (6)		THICKNESS OF FOOTPAD ATTENUATION MATERIAL
INATT		FOOTPAD ATTENUATION INDICATOR (= 0, NO ATTENUATOR; = 1 ATTENUATOR)
GE		ACCELERATION OF GRAVITY ON EARTH
RNGENG		VARIABLE NOT USED
EX(6, 30)	F.C.S.	X COORDINATES OF FOOTPAD ELEMENTAL AREAS
EY(6,30)	F.C.S.	Y COORDINATES OF FOOTPAD ELEMENTAL AREAS
EZ(6,30)	F.C.S.	Z COORDINATES OF FOOTPAD ELEMENTAL AREAS
NI (7)		NUMBER OF ELEMENTAL AREAS IN EACH FOOTPAD CONCIAL SEGMENT (30 MAX)
KA		NUMBER OF FOOTPAD CONCIAL SEGMENTS (6 MAX)
IABCDI		VARIABLE NOT USED
EFRICI		VARIABLE NOT USED
		COMMON L11
AA1 (3,6)	P.C.S.	ACCELERATION AT PAYLOAD ACCELEROMETER LOCATIONS
AA2 (3,6)	F.C.S.	ACCELERATION AT FOOTPAD ACCELEROMETER LOCATIONS
AA3 (3,6)	E.C.S.	ACCELERATION AT SECONDARY EQUIPMENT ITEM ACCELEROMETER LOCATIONS
CAP (3,6)	P.C.S.	COORDINATES OF PAYLOAD ACCELEROMETERS
CCH (3,6)	F.C.S.	COORDINATES OF FOOTPAD ACCELEROMETERS
CHS (3,6)	E.C.S.	COORDINATES OF SECONDARY EQUIPMENT ITEM ACCELEROMETERS
IACCEL		ACCELEROMETER OUTPUT INDICATOR (= 1, PRINT; = 0, DONT'T PRINT)
NOACAP		NUMBER OF PAYLOAD ACCELEROMETERS (6 MAX)
NOACCH		NUMBER OF SECONDARY EQUIPMENT ITEM ACCELEROMETERS (6 MAX)
NOACHS		NUMBER OF FOOTPAD ACCELEROMETERS (6 MAX)
		COMMON L12
T(1000)		VARIABLES FOR INTEGRATION
SPACE		TIME INTERVAL SET BY SUBROUTINE MASTER
NN		NUMBER OF VARIABLES INDICATOR FOR INTEGRATION
KA1		INTEGRATION METHOD INDICATOR (FIXED STEP RUNGE-KUTTA: + 1, FIXED STEP PREDICTOR-CORRECTOR: – 1)

*NOTE: THE FOLLOWING ABBREVIATIONS ARE USED TO DEFINE THE COORDINATE SYSTEMS

S.C.S. – SURFACE COORDINATE SYSTEM
F.C.S – FOOTPAD COORDINATE SYSTEM
P.C.S. – PAYLOAD COORDINATE SYSTEM
E.C.S. – SECONDARY EQUIPMENT COORDINATE SYSTEM

Figure C–2 (Cont'd)

VARIABLES LOCATED IN COMMON
LANDING LOADS AND MOTIONS PROGRAM

VARIABLE	COORDINATE SYSTEMS *	VARIABLE NAME
		COMMON L12 (Continued)
MAP		INTEGRATION ROUTINE INTERNAL FLAG
IDUM		DUMMY VARIABLE – INTEGRATION ROUTINE
		COMMON L13
SLGTH(3,6)		STROKE IN BASIC LOAD – STROKE CURVE
FC(3,6)		FORCE IN BASIC LOAD – STROKE CURVE
COEF (2,48)		COMPRESSIVE SIDE VARIATION OF STRUT FROM BASIC LOAD – STROKE CURVE
COEFT (2,48)		TENSILE SIDE VARIATION OF STRUT FROM BASIC LOAD – STROKE CURVE
FFLM (48)		ATTENUATOR STRUT COMPRESSIVE FRICTION FORCE
FFLMT (48)		ATTENUATOR STRUT TENSILE FRICTION FORCE
FFJK (6)		SECONDARY EQUIPMENT ITEM STRUT COMPRESSIVE FRICTION FORCE
FFJKT (6)		SECONDARY EQUIPMENT ITEM STRUT TENSILE FRICTION FORCE
FFC(48)		STRUT COMPRESSIVE FRICTION FORCE
F FT(48)		STRUT TENSILE FRICTION FORCE
IRET		STRUT TYPE INDICATOR (= 1, ELASTIC RETURN; = 0, FREE RETURN)
NS		STRUT STROKE-LOAD TABLE INDICATOR (= 1, ATTENUATOR STRUTS; = 0, SECONDARY EQUIPMENT ITEM STRUTS)
		COMMON 14
PVEL(48)		STRUT VELOCITY DURING PREVIOUS TIME INTERVAL
		COMMON L19
HSY1	P.C.S.	INITIAL Y COORDINATE OF FOOTPAD C.G.
HSZ1	P.C.S.	INITIAL Z COORDINATE OF FOOTPAD C.G.
ALTX	P.C.S.	X COORDINATE OF RETROROCKET ALTITUDE SENSOR (NOT USED)
ALTY	P.C.S.	Y COORDINATE OF RETROROCKET ALTITUDE SENSOR (NOT USED)
ALTZ	P.C.S.	Z COORDINATE OF RETROROCKET ALTITUDE SENSOR (NOT USED)
R RX1(6)	P.C.S.	X COORDINATE OF RETROROCKET ATTACH POINT (NOT USED)
R RY1(6)	P.C.S.	Y COORDINATE OF RETROROCKET ATTACH POINT (NOT USED)
R RZ1(6)	P.C.S.	Z COORDINATE OF RETROROCKET ATTACH POINT (NOT USED)
R RX2(6)	P.C.S.	X COORDINATE OF RETROROCKET DIRECTION POINT (NOT USED)
RRY2(6)	P.C.S.	Y COORDINATE OF RETROROCKET DIRECTION POINT (NOT USED)
RRZ2(6)	P.C.S.	Z COORDINATE OF RETROROCKET DIRECTION POINT (NOT USED)
THRR (6,6)		THRUST IN RETROROCKET THRUST VS TIME TABLE (NOT USED)

* NOTE: THE FOLLOWING ABBREVIATIONS ARE USED TO DEFINE THE COORDINATE SYSTEMS

S.C.S. – SURFACE COORDINATE SYSTEM
F.C.S – FOOTPAD COORDINATE SYSTEM
P.C.S. – PAYLOAD COORDINATE SYSTEM
E.C.S. – SECONDARY EQUIPMENT COORDINATE SYSTEM

Figure C–2 (Cont'd)

VARIABLES LOCATED IN COMMON
LANDING LOADS AND MOTIONS PROGRAM

VARIABLE	COORDINATE SYSTEMS *	VARIABLE NAME
		COMMON L19 (Continued)
TYM (6, 6)		TIME IN RETROROCKET THRUST VS TIME TABLE (NOT USED)
CRRX(6)		CONSTANT IN RETROROCKET MOMENT EQUATION (NOT USED)
CRRY(6)		CONSTANT IN RETROROCKET MOMENT EQUATION (NOT USED)
CRRZ(6)		CONSTANT IN RETROROCKET MOMENT EQUATION (NOT USED)
HCY1	P.C.S.	INITIAL Y COORDINATE OF SECONDARY EQUIPMENT ITEM C.G.
HCZ1	P.C.S.	INITIAL Z COORDINATE OF SECONDARY EQUIPMENT ITEM C.G.
NRR		NUMBER OF RETROROCKETS USED
IRR		RETROROCKET INDICATOR (NOT USED)
FRRX	S.C.S.	FORCE ON PAYLOAD DUE TO RETROROCKETS – X DIRECTION (SET EQUAL TO 0)
FRRY	S.C.S.	FORCE ON PAYLOAD DUE TO RETROROCKETS – Y DIRECTION (SET EQUAL TO 0)
FRRZ	S.C.S.	FORCE ON PAYLOAD DUE TO RETROROCKETS – Z DIRECTION (SET EQUAL TO 0)
TRRX	P.C.S.	MOMENT ON PAYLOAD DUE TO RETROROCKETS – ABOUT X AXIS (SET EQUAL TO 0)
TRRY	P.C.S.	MOMENT ON PAYLOAD DUE TO RETROROCKETS – ABOUT Y AXIS (SET EQUAL TO 0)
TRRZ	P.C.S.	MOMENT ON PAYLOAD DUE TO RETROROCKETS – ABOUT Z ANIS (SET EQUAL TO 0)
		COMMON L22
PXVEL	S.C.S.	PARACHUTE VELOCITY – X DIRECTION (NOT USED)
PYVEL	S.C.S.	PARACHUTE VELOCITY – Y DIRECTION (NOT USED)
PZVEL	S.C.S.	PARACHUTE VELOCITY – Z DIRECTION(NOT USED)
APX1	P.C.S.	X COORDINATE OF PARACHUTE ATTACH POINT (NOT USED)
APY1	P.C.S.	Y COORDINATE OF PARACHUTE ATTACH POINT (NOT USED)
APZ1	P.C.S.	Z COORDINATE OF PARACHUTE ATTACH POINT (NOT USED)
RPX	S.C.S.	X COORDINATE OF PARACHUTE ATTACH POINT (NOT USED)
RPY	S.C.S.	Y COORDINATE OF PARACHUTE ATTACH POINT (NOT USED)
RPZ	S.C.S.	Z COORDINATE OF PARACHUTE ATTACH POINT (NOT USED)
FPPX	S.C.S.	FORCE ON PAYLOAD DUE TO PARACHUTE – X DIRECTION (SET EQUAL TO 0)
FPPY	S.C.S.	FORCE ON PAYLOAD DUE TO PARACHUTE – Y DIRECTION (SET EQUAL TO 0)
FPPZ	S.C.S.	FORCE ON PAYLOAD DUE TO PARACHUTE – Z DIRECTION (SET EQUAL TO 0)
TPPX1	P.C.S.	MOMENT ABOUT PAYLOAD X AXIS DUE TO PARACHUTE (SET EQUAL TO 0)
TPPY1	P.C.S.	MOMENT ABOUT PAYLOAD Y AXIS DUE TO PARACHUTE (SET EQUAL TO 0)
TPPZ1	P.C.S.	MOMENT ABOUT PAYLOAD Z AXIS DUE TO PARACHUTE (SET EQUAL TO 0)
FPX	P.C.S.	FORCE ON PAYLOAD DUE TO PARACHUTE – X DIRECTION (NOT USED)

* NOTE: THE FOLLOWING ABBREVIATIONS ARE USED TO DEFINE THE COORDINATE SYSTEMS

S.C.S. – SURFACE COORDINATE SYSTEM
F.C.S – FOOTPAD COORDINATE SYSTEM
P.C.S. – PAYLOAD COORDINATE SYSTEM
E.C.S. – SECONDARY EQUIPMENT COORDINATE SYSTEM

Figure C–2 (Cont'd)

VARIABLES LOCATED IN COMMON
LANDING LOADS AND MOTIONS PROGRAM

VARIABLE	COORDINATE SYSTEMS *	VARIABLE NAME
		COMMON L22 (Continued)
FPY	P.C.S.	FORCE ON PAYLOAD DUE TO PARACHUTE – Y DIRECTION (NOT USED)
FPZ	P.C.S.	FORCE ON PAYLOAD DUE TO PARACHUTE – Z DIRECTION (NOT USED)
PHITE		PARACHUTE CUT-OFF HEIGHT (NOT USED)
IPARA		PARACHUTE INDICATOR (= 0, CONNECTED; = 1 PARACHUTE CUT) (NOT USED)
NPAR		PARACHUTE INDICATOR (= 0, NO PARACHUTE; = 1, PARACHUTE INCLUDED)
ICRKT9		VARIABLE NOT USED
PNRG		VARIABLE NOT USED
		COMMON L24
IDM(1)		DUMMY VARIABLE IN COMMON L24
ICHK1		INDICATOR EMPLOYED TO DETERMINE NUMBER OF DATA CARDS 112 READ
ICHK2		INDICATOR EMPLOYED TO DETERMINE NUMBER OF DATA CARDS 114 READ
ICHK3		INDICATOR EMPLOYED TO DETERMINE NUMBER OF DATA CARDS 116 READ
ICHK4		INDICATOR EMPLOYED TO DETERMINE NUMBER OF DATA CARDS 117 READ
ICHK5		INDICATOR EMPLOYED TO DETERMINE NUMBER OF DATA CARDS 219 READ
ICHK6		INDICATOR EMPLOYED TO DETERMINE NUMBER OF DATA CARDS 319 READ
ICHK7		INDICATOR EMPLOYED TO DETERMINE NUMBER OF DATA CARDS 120 READ
ICHK8		INDICATOR EMPLOYED TO DETERMINE NUMBER OF DATA CARDS 216 READ
ICHK9		INDICATOR EMPLOYED TO DETERMINE NUMBER OF DATA CARDS 217 READ
ICHK10		INDICATOR EMPLOYED TO DETERMINE NUMBER OF DATA CARDS 220 READ
ICHK11		INDICATOR EMPLOYED TO DETERMINE NUMBER OF DATA CARDS 320 READ
ICHK12		INDICATOR EMPLOYED TO DETERMINE NUMBER OF DATA CARDS 119 READ
ICHK13		INDICATOR EMPLOYED TO DETERMINE NUMBER OF DATA CARDS 118 READ
ICHK14		INDICATOR EMPLOYED TO DETERMINE NUMBER OF DATA CARDS 218 READ
ICHK15		INDICATOR EMPLOYED TO DETERMINE NUMBER OF DATA CARDS 110 READ
ICHK16		INDICATOR EMPLOYED TO DETERMINE NUMBER OF DATA CARDS 121 READ
ICHK17		INDICATOR EMPLOYED TO DETERMINE NUMBER OF DATA CARDS 221 READ
ICHK18		INDICATOR EMPLOYED TO DETERMINE NUMBER OF DATA CARDS 321 READ
ICHK19		INDICATOR EMPLOYED TO DETERMINE NUMBER OF DATA CARDS 421 READ
ICHK20		INDICATOR EMPLOYED TO DETERMINE NUMBER OF DATA CARDS 521 READ
ICHK21		INDICATOR EMPLOYED TO DETERMINE NUMBER OF DATA CARDS 621 READ
KS		DUMMY VARIABLE USED TO SAVE CURRENT VALUE OF KA

*NOTE: THE FOLLOWING ABBREVIATIONS ARE USED TO DEFINE THE COORDINATE SYSTEMS

S.C.S. – SURFACE COORDINATE SYSTEM
F.C.S – FOOTPAD COORDINATE SYSTEM
P.C.S. – PAYLOAD COORDINATE SYSTEM
E.C.S. – SECONDARY EQUIPMENT COORDINATE SYSTEM

Figure C–2 (Cont'd)

VARIABLES LOCATED IN COMMON
LANDING LOADS AND MOTIONS PROGRAM

VARIABLE	COORDINATE SYSTEMS *	VARIABLE NAME
		COMMON L24 (Continued)
LS		DUMMY VARIABLE USED TO SAVE CURRENT VALUE OF LM
JJ		DUMMY VARIABLE USED TO SAVE CURRENT VALUE OF JK
NPAS		DUMMY VARIABLE USED TO SAVE CURRENT VALUE OF NPAR
NRS		DUMMY VARIABLE USED TO SAVE CURRENT VALUE OF NRR
NOACAS		DUMMY VARIABLE USED TO SAVE CURRENT VALUE OF NOACAP
NOACCS		DUMMY VARIABLE USED TO SAVE CURRENT VALUE OF NOACCH
NOASS		DUMMY VARIABLE USED TO SAVE CURRENT VALUE OF NOACHS
ISIX		INDICATOR FOR CHECKING AMOUNT OF INPUT DATA
NSSC		DUMMY VARIABLE USED TO SAVE CURRENT VALUE OF NSPC
NCSC		DUMMY VARIABLE USED TO SAVE CURRENT VALUE OF NCPC
NOMDS		DUMMY VARIABLE USED TO SAVE CURRENT VALUE OF NOMODE
NTCORS		DUMMY VARIABLE USED TO SAVE CURRENT VALUE OF NTCOR
ITEST(21)		INDICATOR FOR CHECKING AMOUNT OF INPUT DATA
MM		INDICATOR FOR CHECKING AMOUNT OF INPUT DATA
JTEST		INDICATOR FOR CHECKING AMOUNT OF INPUT DATA
		COMMON L25
NOMODE		NUMBER OF FREE-FREE FOOTPAD MODES INPUT
OMEGA(5)		FREQUENCIES ASSOCIATED WITH FOOTPAD MODES
SPHI (540,5)		MODE SHAPES AT FOOTPAD ELEMENTAL AREAS
APHI (144,5)		MODE SHAPES AT ATTENUATOR STRUT ATTACH POINTS – FOOTPAD END
WNX(5)		FOOTPAD GENERALIZED INERTIA PROPERTY
WNY(5)		FOOTPAD GENERALIZED INERTIA PROPERTY
WNZ(5)		FOOTPAD GENERALIZED INERTIA PROPERTY
PX(5)		FOOTPAD GENERALIZED INERTIA PROPERTY
PY(5)		FOOTPAD GENERALIZED INERTIA PROPERTY
PZ(5)		FOOTPAD GENERALIZED INERTIA PROPERTY
GF(5)		TOTAL GENERALIZED FORCE
GM(5)		GENERALIZED MASS
COORD(74,2)	F.C.S.	LOCATION OF CONTROL POINTS USED TO DEFINE INPUT FOOTPAD MODE SHAPES
FPPHI(222,5)		INPUT VALUES OF FOOTPAD MODE SHAPES AT COORD (I,J)
NTCOR		NUMBER OF CONTROL POINTS USED TO DEFINE FOOTPAD MODE SHAPES

*NOTE: THE FOLLOWING ABBREVIATIONS ARE USED TO DEFINE THE COORDINATE SYSTEMS

S.C.S. – SURFACE COORDINATE SYSTEM
F.C.S – FOOTPAD COORDINATE SYSTEM
P.C.S. – PAYLOAD COORDINATE SYSTEM
E.C.S. – SECONDARY EQUIPMENT COORDINATE SYSTEM

Figure C–2 (Cont'd)

VARIABLES LOCATED IN COMMON
LANDING LOADS AND MOTIONS PROGRAM

VARIABLE	COORDINATE SYSTEMS *	VARIABLE NAME
		COMMON L25 (Continued)
IINP		ELASTIC FOOTPAD INPUT DATA INDICATOR (= 1, TAPE INPUT; = 0, CARD INPUT)
NORUN		NUMBER OF FOOTPAD MODES INCLUDED IN ANALYSIS
MORDER		ORDER OF MASS MATRIX AMASS (I)
NATT(102)		INDICATOR DEFINING ROWS OF STIFFNESS MATRIX RETAINED IN MODAL ANALYSIS
ASPHI (18,5)		MODE SHAPES AT FOOTPAD ACCELEROMETER LOCATIONS
CGPHI(3,5)		MODE SHAPES AT FOOTPAD CENTER OF GRAVITY
NDIAM(3,5)		NUMBER OF NODAL DIAMETERS IN FREE-FREE MODES
WMX(5,5)		FOOTPAD GENERALIZED INERTIA PROPERTY
WMY (5,5)		FOOTPAD GENERALIZED INERTIA PROPERTY
WMZ (5,5)		FOOTPAD GENERALIZED INERTIA PROPERTY
AMASS(102)		FOOTPAD MASS MATRIX
		COMMON LIST 8
D11		DIRECTION COSINE RELATING SURFACE AND PAYLOAD COORDINATE SYSTEMS
D12		DIRECTION COSINE RELATING SURFACE AND PAYLOAD COORDINATE SYSTEMS
D13		DIRECTION COSINE RELATING SURFACE AND PAYLOAD COORDINATE SYSTEMS
D21		DIRECTION COSINE RELATING SURFACE AND PAYLOAD COORDINATE SYSTEMS
D22		DIRECTION COSINE RELATING SURFACE AND PAYLOAD COORDINATE SYSTEMS
D23		DIRECTION COSINE RELATING SURFACE AND PAYLOAD COORDINATE SYSTEMS
D31		DIRECTION COSINE RELATING SURFACE AND PAYLOAD COORDINATE SYSTEMS
D32		DIRECTION COSINE RELATING SURFACE AND PAYLOAD COORDINATE SYSTEMS
D33		DIRECTION COSINE RELATING SURFACE AND PAYLOAD COORDINATE SYSTEMS
DS11		DIRECTION COSINE RELATING SURFACE AND FOOTPAD COORDINATE SYSTEMS
DS12		DIRECTION COSINE RELATING SURFACE AND FOOTPAD COORDINATE SYSTEMS
DS13		DIRECTION COSINE RELATING SURFACE AND FOOTPAD COORDINATE SYSTEMS
DS21		DIRECTION COSINE RELATING SURFACE AND FOOTPAD COORDINATE SYSTEMS
DS22		DIRECTION COSINE RELATING SURFACE AND FOOTPAD COORDINATE SYSTEMS
DS23		DIRECTION COSINE RELATING SURFACE AND FOOTPAD COORDINATE SYSTEMS
DS31		DIRECTION COSINE RELATING SURFACE AND FOOTPAD COORDINATE SYSTEMS
DS32		DIRECTION COSINE RELATING SURFACE AND FOOTPAD COORDINATE SYSTEMS
DS33		DIRECTION COSINE RELATING SURFACE AND FOOTPAD COORDINATE SYSTEMS
DC11		DIRECTION COSINE RELATING SURFACE AND SECONDARY EQUIPMENT ITEM COORDINATE SYSTEMS

* NOTE: THE FOLLOWING ABBREVIATIONS ARE USED TO DEFINE THE COORDINATE SYSTEMS

S.C.S. – SURFACE COORDINATE SYSTEM
F.C.S – FOOTPAD COORDINATE SYSTEM
P.C.S. – PAYLOAD COORDINATE SYSTEM
E.C.S. – SECONDARY EQUIPMENT COORDINATE SYSTEM

Figure C–2 (Cont'd)

VARIABLES LOCATED IN COMMON
LANDING LOADS AND MOTIONS PROGRAM

VARIABLE	COORDINATE SYSTEMS *	VARIABLE NAME
		COMMON LIST 8 (Continued)
DC12		DIRECTION COSINE RELATING SURFACE AND SECONDARY EQUIPMENT COORDINATE SYSTEMS
DC13		DIRECTION COSINE RELATING SURFACE AND SECONDARY EQUIPMENT COORDINATE SYSTEMS
DC21		DIRECTION COSINE RELATING SURFACE AND SECONDARY EQUIPMENT COORDINATE SYSTEMS
DC22		DIRECTION COSINE RELATING SURFACE AND SECONDARY EQUIPMENT COORDINATE SYSTEMS
DC23		DIRECTION COSINE RELATING SURFACE AND SECONDARY EQUIPMENT COORDINATE SYSTEMS
DC31		DIRECTION COSINE RELATING SURFACE AND SECONDARY EQUIPMENT COORDINATE SYSTEMS
DC32		DIRECTION COSINE RELATING SURFACE AND SECONDARY EQUIPMENT COORDINATE SYSTEMS
DC33		DIRECTION COSINE RELATING SURFACE AND SECONDARY EQUIPMENT COORDINATE SYSTEMS
		COMMON MO
FORJK(6)		CURRENT SECONDARY EQUIPMENT ITEM STRUT FORCE
SLJK(6)		SECONDARY EQUIPMENT ITEM STRUT LENGTH
CHJKT(6)		TENSILE SPRING RATE OF SECONDARY EQUIPMENT ITEM STRUTS
CHJK(6)		COMPRESSIVE STRING RATE OF SECONDARY EQUIPMENT ITEM STRUTS
SRJKT(6)		QSRT(48) FOR SECONDARY EQUIPMENT ITEM STRUTS
SRJK(6)		QSR(48) FOR SECONDARY EQUIPMENT ITEM STRUTS
SDJK(6)		QSD(48) FOR SECONDARY EQUIPMENT ITEM STRUTS
VELJK(6)		CURRENT SECONDARY EQUIPMENT ITEM STRUT STROKING VELOCITY
FORLM(48)		CURRENT ATTENUATOR STRUT FORCE
SLLM(48)		ATTENUATOR STRUT LENGTH
CHLMT(48)		TENSILE SPRING RATE OF ATTENUATOR STRUTS
CHLM(48)		COMPRESSIVE SPRING RATE OF ATTENUATOR STRUTS
SRLMT(48)		QSRT(48) FOR ATTENUATOR STRUTS
SRLM(48)		QSR(48) FOR ATTENUATOR STRUTS
SDLM(48)		QSD(48) FOR ATTENUATOR STRUTS
VELLM(48)		CURRENT ATTENUATOR STRUT STROKING VELOCITY

*NOTE: THE FOLLOWING ABBREVIATIONS ARE USED TO DEFINE THE COORDINATE SYSTEMS

S.C.S. – SURFACE COORDINATE SYSTEM
F.C.S – FOOTPAD COORDINATE SYSTEM
P.C.S. – PAYLOAD COORDINATE SYSTEM
E.C.S. – SECONDARY EQUIPMENT COORDINATE SYSTEM

Figure C–2 (Cont'd)

APPENDIX D

OPERATING INSTRUCTIONS

FOOTPAD LANDING LOADS PROGRAM

APPENDIX D

The Footpad Landing Loads Program retrieves and lists for specific points in time, the information placed on magnetic tape by the Landing Loads and Motions Program. Information continuously stored on tape consists of attenuator forces and soil forces acting on the footpad; angular and translational accelerations at the footpad, payload, and secondary equipment centers of gravity; and accelerations at footpad locations corresponding to joints of the Structural Analysis Program.

The input data required by this program defines the points in time when the forces and accelerations are to be printed. These time points are placed on the data cards, anywhere in columns 1 thru 16 in floating point form, one time point to a card. Stacking these data cards, in ascending times, allows any number time history points to be printed. The time points selected must correspond to the output times from the Landing Loads and Motions Program.

An example of output from the Footpad Landing Loads Program is given on the following pages. This information was obtained during the upslope landing analysis, at a time of 0.007 seconds. This time was selected for determining internal loads distribution in the lander using the Structural Analysis Program (Section 8.2).

Output from this program appears in the following form.

Time - Time read from tape corresponding to input data value.

Attenuator Forces - Attenuator forces acting on footpad in Footpad Coordinate System. The order of these corresponds to the order of the struts in the Landing Loads and Motions Program.

APPENDIX D

Soil Forces - Soil forces acting on footpad in Footpad Coordinate System. Two indicators locate these forces in terms of the elemental areas on the footpad. The indicator I refers to the conical segment and J, the control point in that segment.

Footpad Accelerations - Accelerations of joints used in the Structural Analysis Program. Accelerations defined in Footpad Coordinate System.

Center of Gravity Accelerations - Angular and translational accelerations of center of gravity at each component. These quantities are all with reference to the respective lander coordinate systems.

A listing of the Footpad Landing Loads Program follows the example output.

FOOTPAD LANDING LOADS PROGRAM
ASTEK AGREEMENT, CONTRACT NAS1-8137, TASK ORDER NUMBER TWO
MCDONNELL DOUGLAS ASTRONAUTICS COMPANY, EASTERN DIVISION

TIME / SEC 7.0000000E-03

ATTENUATOR FORCES

FX	FY	FZ
8.975139734E+02	1.308078016E-04	-1.255151267E+01
1.860552364E+02	2.452037146E-05	-2.624244862E+00
-5.253866778E+02	-6.390769105E-05	7.465367886E+00
-5.336032184E+02	-6.281804730E-05	7.591195053E+00
-5.255313972E+02	-6.392510591E-05	7.467417916E+00
1.859671266E+02	2.450877262E-05	-2.623013082E+00
8.975828236E+02	1.308177874E-04	-1.255252371E+01
-1.461853877E+03	-2.378869149E-04	2.066983978E+01
-1.461844024E+03	-2.629020956E-04	2.135531456E+01
-1.461837842E+03	-2.744806900E-04	2.177440540E+01
-1.461844025E+03	-2.629022058E-04	2.135527852E+01
-1.461853878E+03	-2.378870859E-04	2.066977922E+01
-5.434767481E-01	-6.996312976E-08	7.719196142E-03
-8.658446874E-01	-9.572497918E-08	1.239957972E-02
-5.435633498E-01	-6.997666398E-08	7.720724512E-03
-3.323906902E-01	-5.497853247E-08	4.661298797E-03
-9.998805461E-01	-2.037575180E-07	1.545618398E-02
-3.325348670E-01	-5.500145218E-08	4.663220361E-03
3.517142030E+02	-7.540848924E-02	-1.311226853E+03
-1.567246333E-01	-3.186260876E-01	-5.496781744E-01
-8.282022175E-02	-2.614043876E-01	8.882414967E-04
-8.283190395E-02	2.614531172E-01	8.884104270E-04
-1.567320500E-01	3.186411383E-01	-5.497[illegible]42018E-01
3.517254516E+02	7.541092180E+02	-1.311268927E+03
4.735894899E+02	1.010883663E+03	-1.757726593E+03
-2.302369519E-01	4.880180729E-01	-8.419194650E-01
-2.302369167E-01	-4.880181185E-01	-8.419194482E-01
4.735865327E+02	-1.010876508E+03	-1.757714452E+03
3.545369199E+01	-1.458975840E+02	-5.000638561E-01
3.546424884E+01	1.459411465E+02	-5.002113033E-01

SOIL FORCES

I	J	FX	FY	FZ
5	14	2.119214037E+03	4.795335926E-03	2.301396074E+03
5	15	1.850216747E+03	4.519444611E-03	2.112766554E+03
5	16	2.119249163E+03	4.795386231E-03	2.301418686E+03
6	14	7.739555785E+02	2.759483701E-03	9.682178252E+02
6	15	5.940704143E+02	2.008893421E-03	7.353343717E+02
6	16	7.739755748E+02	2.759572140E-03	9.682420630E+02

FOOTPAD ACCERATIONS

X	Y	
7.879149840E+03	2.544537349E-01	8.464764381E+03
-1.601190452E+03	2.562765344E-01	8.414[illegible]99280E+03
-9.309544537E+03	3.022264160E-01	8.643991846E+03
-1.142468159E+04	3.350172358E-01	8.838[illegible]13506E+03
-1.163077927E+04	3.471904423E-01	8.901948330E+03
-1.141774020E+04	3.350074067E-01	8.838454945E+03

-9.307018310E+03	3.022252185E-01	8.644208889E+03
-1.604305706E+03	2.562828182E-01	8.414[illegible]96602E+03
1.608608573E+04	1.992[illegible]55655E-01	8.569[illegible]06722E+03
3.812311210E+04	1.430648524E-01	9.184[illegible]80461E+03
4.860327789E+04	1.182[illegible]52464E-01	9.560607857E+03
3.812374766E+04	1.430673337E-01	9.183876668E+03
1.610393924E+04	1.991561617E-01	8.569197512E+03
-8.569041350E+03	2.602754928E-01	8.281190419E+03
-1.417211386E+04	3.123931936E-01	8.773318330E+03
-1.476834104E+04	3.539597425E-01	9.008919362E+03
-1.417758367E+04	3.695866537E-01	9.079917479E+03
-1.475600614E+04	3.539416410E-01	9.009673886E+03
-1.416502465E+04	3.123874806E-01	8.773736953E+03
-8.595890920E+03	2.602901466E-01	8.280951876E+03
1.446390848E+04	1.907281485E-01	8.389164932E+03
4.841217380E+04	1.101804958E-01	9.504141918E+03
6.652520496E+04	6.924996770E-02	1.031451154E+04
4.841604633E+04	1.101810379E-01	9.503975236E+03
1.447475611E+04	1.907167305E-01	8.389316880E+03

	TRANSLATIONAL ACCELERATIONS			ANGULAR ACCELERATIONS		
	X	Y	Z	X	Y	Z
PODTPAD CG,	7.947388E+03	2.543697E-01	8.686538E+03	-3.723434E-03	-1.029613E+03	-1.360801E-02
PAYLOAD CG,	2.[illegible]73640E+03	-3.011949E-02	2.729897E+03	5.701243E-04	-1.440105E+01	3.982742E-03
SECONDARY EQUIPMENT CG	1.926282E+03	6.925520E-02	2.757404E+03	9.447484E-03	0.	1.051950E-02

APPENDIX D

```
      PROGRAM FLLP (INPUT,OUTPUT,TAPE5=INPUT,TAPE6=OUTPUT,TAPE3)
C
C     FOOTPAD LANDING LOADS PROGRAM
C     MASTER AGREEMENT, CONTRACT NAS1-8137, TASK ORDER NUMBER TWO
C     MCDONNELL DOUGLAS ASTRONAUTICS COMPANY, EASTERN DIVISION
C
C     THIS PROGRAM READS THE TAPE GENERATED BY THE LANDING LOADS AND
C     MOTIONS PROGRAM WHICH CONTAINS THE SOIL FORCES AND ATTENUATOR
C     FORCES ACTING ON THE FOOTPAD.  THESE ARE THEN PRINTED AT
C     THE POINTS IN TIME REQUESTED BY INPUT TO THIS PROGRAM.  NOTE
C     THAT THESE TIMES MUST CORRESPOND TO PRINT TIMES IN THE LANDING
C     LOADS AND MOTIONS PROGRAM.
C
      DIMENSION AXYZ(18)
      DATA ITAPE / 3 /
      DATA TSAVE / -1. /
C         READ INITIAL TAPE DEFINITION VARIABLES
C              LM = NO. OF ATTENUATOR RECORDS
C              NTCOR = NO. OF FOOTPAD ACCELERATIONS
C              DT    = INTEGRATION STEP SIZE
      REWIND ITAPE
      TSAVE=-100.
      READ (ITAPE) LM,NTCOR,DT
      DT=DT/2.
10    READ (5,170) TIME
      IF (EOF,5) 20,30
20    WRITE (6,180)
      STOP
30    IF (TSAVE.LT.TIME) GO TO 40
      WRITE (6,190)
      WRITE (6,200) TIME
      GO TO 10
40    TSAVE=TIME
      TIME=TIME-DT
C
C         READ TIME FROM TIME HISTORY TAPE
C
50    READ (ITAPE) TIMER
      IF (TIME.LT.TIMER) GO TO 100
C         SKIP THROUGH TO NEXT (TIME) RECORD )
      IF (LM.LE.0) GO TO 70
      DO 60 I=1,LM
60    READ (ITAPE)
70    READ (ITAPE) I
      IF (I.GE.0) GO TO 70
      IF (NTCOR.LE.0) GO TO 90
      DO 80 I=1,NTCOR
80    READ (ITAPE)
90    READ (ITAPE)
      GO TO 50
C
C         THE RIGHT TIME HAS BEEN FOUND, SO PRINT IT OUT.
C
100   WRITE (6,190)
      WRITE (6,220) TIMER
      WRITE (6,240)
```

APPENDIX D

```
      IF (LM.LE.0) GO TO 120                                            FLL 570
      DO 110 I=1,LM                                                     FLL 580
      READ (ITAPE) FX,FY,FZ                                             FLL 590
110   WRITE (6,230) FX,FY,FZ                                            FLL 600
120   CONTINUE                                                          FLL 610
C          SOIL FORCES                                                  FLL 620
      WRITE (6,250)                                                     FLL 630
130   READ (ITAPE) I,J,FX,FY,FZ                                         FLL 640
      IF (I.LT.0) GO TO 140                                             FLL 650
      WRITE (6,260) I,J,FX,FY,FZ                                        FLL 660
      GO TO 130                                                         FLL 670
140   CONTINUE                                                          FLL 680
C          FOOTPAD ACCELERATIONS                                        FLL 690
      WRITE (6,270)                                                     FLL 700
      IF (NTCOR.LE.0) GO TO 160                                         FLL 710
      DO 150 I=1,NTCOR                                                  FLL 720
      READ (ITAPE) FX,FY,FZ                                             FLL 730
150   WRITE (6,280) FX,FY,FZ                                            FLL 740
C             C. G.                                                     FLL 750
160   READ (ITAPE) (AXYZ(I),I=1,18)                                     FLL 760
      WRITE (6,290) (AXYZ(I),I=1,18)                                    FLL 770
C                                                                       FLL 780
C          RETURN AND READ MORE DATA                                    FLL 790
C                                                                       FLL 800
      GO TO 10                                                          FLL 810
C                                                                       FLL 820
170   FORMAT (E16.9)                                                    FLL 830
180   FORMAT (12H1END OF DATA)                                          FLL 840
190   FORMAT (1H1,53X,29HFOOTPAD LANDING LOADS PROGRAM/39X,59HMASTER AGRFLL 850
     1EEMENT, CONTRACT NAS1-8137, TASK ORDER NUMBER TWO/40X,56HMCDONNELLFLL 860
     2 DOUGLAS ASTRONAUTICS COMPANY, EASTERN DIVISION////)              FLL 870
200   FORMAT (8H TIME = E14.7,19H IS OUT OF SEQUENCE)                   FLL 880
210   FORMAT (1H1)                                                      FLL 890
220   FORMAT (10X10HTIME / SEC,E16.7)                                   FLL 900
230   FORMAT (49X3(4X,E16.9))                                           FLL 910
240   FORMAT (1H0,10X17HATTENUATOR FORCES/59X2HFX,18X2HFY,18X2HFZ/)     FLL 920
250   FORMAT (1H0,10X11HSOIL FORCES/20X1HI,19X1HJ,18X2HFX,18X2HFY,18X2HFFLL 930
     1Z/)                                                               FLL 940
260   FORMAT (19XI5,15XI5,5X3(4XE16.9))                                 FLL 950
270   FORMAT (1H0,10X19HFOOTPAD ACCERATIONS/59X1HX,19X1HY,19X1HZ/)      FLL 960
280   FORMAT (49X3(4XE16.9))                                            FLL 970
290   FORMAT (1H0,41X27HTRANSLATIONAL ACCELERATIONS21X2HANGULAR ACCELERFLL 980
     1ATIONS//27X2(14X1HX,14X1HY,14X1HZ)/11X11HFOOTPAD CG,12X6(2XE13.6)/FLL 990
     211X11HPAYLOAD CG,12X6(2XE13.6)/11X23HSECONDARY EQUIPMENT CG ,6(2XEFLL1000
     313.6))                                                            FLL1010
      END                                                               FLL1020-
```

APPENDIX E

EXAMPLE INPUT AND OUTPUT

LANDING LOADS AND MOTIONS PROGRAM

APPENDIX E

LANDING LOADS AND MOTIONS PROGRAM - PLATFORM LANDER
MASTER AGREEMENT, CONTRACT NAS1-8137, TASK ORDER NUMBER TWO
MCDONNELL DOUGLAS ASTRONAUTICS COMPANY, EASTERN DIVISION

INPUT DATA

```
NEW CARDS READ THIS RUN --   1   2   3   4   5   6   7   8   9  10  11  12 112 112 112 112 112 112 112  13  14 114 114 114 114 114
                            114  15  16 116 116 116 116 116 116 116 116 116 116 116 116 116 116 116 116 116 116 116 116 116 116 116
                            116 116 116 116 116 116 116 216 216 216 216 216 216 216 216 216 216 216 216 216 216 216 216 216 216 216
                            216 216 216 216 216 216 216 216 216 216 216  17 117 117 117 117 117 117 217 217 217 217 217 217  18  19
                             20 621 621 621 621 621  22  23  21 121 121 121 121 121 121 121 121 121 121 121 121 121 121 121 121 121
                            221 221 221 221 221 221 221 221 221 221 221 221 221 221 221 221 221 221 221 221 221 221 221 221 221 221
                            321 321 321 321 321 321 321 321 321 321 321 321 321 321 321 321 321 321 321 321 321 321 321 321 321 321
                            321 321 321 321 321 321 321 321 321 321 321 321 321 321 321 321 321 321 321 321 321 321 321 321 321 321
                            321 321 321 321 321 321 321 321 321 321 321 321 321 321 321 321 321 321 321 321 321 321 321 321 321 321
                            421 521 521 521 521 521 721 721 721 721 721 721 721 721 721 721 721 721 721 721 721 721 721 721 721
```

```
                                                                                                                                  CARD
                                                                                                                                NUMBER

ISERNO=          8                                                                                                                $  1

LANDER INITIAL CONDITIONS

RXVELO=-2.799E+02 RYVELO= 0.        RZVELO=-4.710E+00 WXO    = 0.        WYO    = 0.        WZO    = 0.                      $  2
ZETAO = 3.000E+01 PSI   = 0.        THTA  = 3.000E+01 PHI    = 0.        G      = 1.476E+02 GE     = 3.860E+02                $  3
HSX1  =-2.251E+01 HSY1  = 0.        HSZ1  = 0.        HCX1   = 7.000E-01 HCY1   = 0.        HCZ1   =-4.200E+01                $  4

MASS PROPERTIES

PLM   = 2.169E+00 SEQM  = 6.260E-02 FPM   = 3.850E-01                                                                          $  5
UXX   = 1.589E+03 UYY   = 8.572E+02 UZZ   = 8.572E+02 UXY    = 0.        UXZ    = 0.        UYZ    = 0.                      $  6
UCXX  = 6.500E-01 UCYY  = 6.500E-01 UCZZ  = 6.500E-01 UCXY   = 0.        UCXZ   = 0.        UCYZ   = 0.                      $  7
USXX  = 2.017E+02 USYY  = 1.009E+02 USZZ  = 1.009E+02                                                                          $  8

PROGRAM LOGIC INFORMATION

DT    = 1.000E-04 TMAX  = 2.500E-02 NPRINT=        10 NOFOR =         1                                                       $  9
NSPC  =          0 NCPC  =         0 NORUN =         5 IINP   =         1                                                       $ 10

NO ATTENUATOR STRUT TIME HISTORIES WILL BE PRINTED.

KA1   =          1                                                                                                              $ 11

FOOTPAD GEOMETRY

KA    =          6                                                                                                              $112
RINGX( 1)=-1.000E+00 RHO( 1)= 0.         NI( 1)=        30                                                                     $112
RINGX( 2)=-1.000E+00 RHO( 2)= 1.480E+01 NI( 2)=        30                                                                     $112
RINGX( 3)=-1.000E+00 RHO( 3)= 2.090E+01 NI( 3)=        30                                                                     $112
RINGX( 4)=-1.000E+00 RHO( 4)= 2.560E+01 NI( 4)=        30                                                                     $112
```

```
RINGA( 5)=1.000E+00 RHO( 5)= 2.950E+01 NI( 5)=        30                                                          $112
RINGA( 6)=1.000E+00 RHO( 6)= 3.300E+01 NI( 6)=        30                                                          $112
RINGA( 7)= 1.000E+00 RHO( 7)= 3.600E+01 NI( 7)=        30                                                          $112

SOIL PROPERTIES

NTYPE = 0  (PRIMARY SOIL MECHANICS)                                                                                 $ 13
SOILP(1)= 3.900E+01 SOILP(2)= 6.192E-02 SOILP(3)= 6.900E-01                                                         $ 14

LOAD-STRAIN INFORMATION

SLGTH(1,1)= 1.500E-01 FC(1,1)= 1.000E+03 SLGTH(2,1)= 6.000E+00 FC(2,1)= 1.000E+05 SLGTH(3,1)= 6.000E+00 FC(3,1)= 1.000E+05   $114
SLGTH(1,2)= 1.500E-01 FC(1,2)= 1.000E+03 SLGTH(2,2)= 6.500E+00 FC(2,2)= 1.000E+05 SLGTH(3,2)= 6.500E+00 FC(3,2)= 1.000E+05   $114
SLGTH(1,3)= 3.000E-01 FC(1,3)= 1.000E+03 SLGTH(2,3)= 7.000E+00 FC(2,3)= 1.000E+05 SLGTH(3,3)= 7.000E+00 FC(3,3)= 1.000E+05   $114
SLGTH(1,4)= 4.500E-01 FC(1,4)= 1.000E+03 SLGTH(2,4)= 8.000E+00 FC(2,4)= 1.000E+05 SLGTH(3,4)= 8.000E+00 FC(3,4)= 1.000E+05   $114
SLGTH(1,5)= 6.000E-01 FC(1,5)= 1.000E+03 SLGTH(2,5)= 9.000E+00 FC(2,5)= 1.000E+05 SLGTH(3,5)= 9.000E+00 FC(3,5)= 1.000E+05   $114
SLGTH(1,6)= 7.500E-01 FC(1,6)= 1.000E+03 SLGTH(2,6)= 1.000E+01 FC(2,6)= 1.000E+05 SLGTH(3,6)= 1.000E+01 FC(3,6)= 1.000E+05   $114

ATTENUATOR STRUT INFORMATION

LM    =        30 LMDAMP=        0 VISLM = 0.        CTLM  = 1.500E+05 SMCLM = 7.500E+00 SMCLMT= 7.500E+00                $ 15
IRET  =        1                                                                                                      $ 16
XL1( 1)=-1.001E+01 YL1( 1)= 2.735E+01 ZL1( 1)= 0.        XM2( 1)= 1.000E+00 YM2( 1)= 2.735E+01 ZM2( 1)= 0.                $116
XL1( 2)=-1.001E+01 YL1( 2)= 2.369E+01 ZL1( 2)= 1.368E+01 XM2( 2)= 1.000E+00 YM2( 2)= 2.369E+01 ZM2( 2)= 1.368E+01          $116
XL1( 3)=-1.001E+01 YL1( 3)= 1.368E+01 ZL1( 3)= 2.369E+01 XM2( 3)= 1.000E+00 YM2( 3)= 1.368E+01 ZM2( 3)= 2.369E+01          $116
XL1( 4)=-1.001E+01 YL1( 4)= 0.        ZL1( 4)= 2.735E+01 XM2( 4)= 1.000E+00 YM2( 4)= 0.        ZM2( 4)= 2.735E+01          $116
XL1( 5)=-1.001E+01 YL1( 5)=-1.368E+01 ZL1( 5)= 2.369E+01 XM2( 5)= 1.000E+00 YM2( 5)=-1.368E+01 ZM2( 5)= 2.369E+01          $116
XL1( 6)=-1.001E+01 YL1( 6)=-2.369E+01 ZL1( 6)= 1.368E+01 XM2( 6)= 1.000E+00 YM2( 6)=-2.369E+01 ZM2( 6)= 1.368E+01          $116
XL1( 7)=-1.001E+01 YL1( 7)=-2.735E+01 ZL1( 7)= 0.        XM2( 7)= 1.000E+00 YM2( 7)=-2.735E+01 ZM2( 7)= 0.                $116
XL1( 8)=-1.001E+01 YL1( 8)=-2.369E+01 ZL1( 8)=-1.368E+01 XM2( 8)= 1.000E+00 YM2( 8)=-2.369E+01 ZM2( 8)=-1.368E+01          $116
XL1( 9)=-1.001E+01 YL1( 9)=-1.368E+01 ZL1( 9)=-2.369E+01 XM2( 9)= 1.000E+00 YM2( 9)=-1.368E+01 ZM2( 9)=-2.369E+01          $116
XL1(10)=-1.001E+01 YL1(10)= 0.        ZL1(10)=-2.735E+01 XM2(10)= 1.000E+00 YM2(10)= 0.        ZM2(10)=-2.735E+01          $116
XL1(11)=-1.001E+01 YL1(11)= 1.368E+01 ZL1(11)=-2.369E+01 XM2(11)= 1.000E+00 YM2(11)= 1.368E+01 ZM2(11)=-2.369E+01          $116
XL1(12)=-1.001E+01 YL1(12)= 2.369E+01 ZL1(12)=-1.368E+01 XM2(12)= 1.000E+00 YM2(12)= 2.369E+01 ZM2(12)=-1.368E+01          $116
XL1(13)=-1.001E+01 YL1(13)= 2.988E+01 ZL1(13)= 1.725E+01 XM2(13)= 1.000E+00 YM2(13)= 2.988E+01 ZM2(13)= 1.725E+01          $116
XL1(14)=-1.001E+01 YL1(14)= 0.        ZL1(14)= 3.450E+01 XM2(14)= 1.000E+00 YM2(14)= 0.        ZM2(14)= 3.450E+01          $116
XL1(15)=-1.001E+01 YL1(15)=-2.988E+01 ZL1(15)= 1.725E+01 XM2(15)= 1.000E+00 YM2(15)=-2.988E+01 ZM2(15)= 1.725E+01          $116
XL1(16)=-1.001E+01 YL1(16)=-2.988E+01 ZL1(16)=-1.725E+01 XM2(16)= 1.000E+00 YM2(16)=-2.988E+01 ZM2(16)=-1.725E+01          $116
XL1(17)=-1.001E+01 YL1(17)= 0.        ZL1(17)=-3.450E+01 XM2(17)= 1.000E+00 YM2(17)= 0.        ZM2(17)=-3.450E+01          $116
XL1(18)=-1.001E+01 YL1(18)= 2.988E+01 ZL1(18)=-1.725E+01 XM2(18)= 1.000E+00 YM2(18)= 2.988E+01 ZM2(18)=-1.725E+01          $116
XL1(19)=-1.001E+01 YL1(19)=-2.369E+01 ZL1(19)=-1.368E+01 XM2(19)= 1.000E+00 YM2(19)= 0.        ZM2(19)= 2.735E+01          $116
XL1(20)=-1.001E+01 YL1(20)= 0.        ZL1(20)= 2.735E+01 XM2(20)= 1.000E+00 YM2(20)=-2.369E+01 ZM2(20)=-1.368E+01          $116
XL1(21)=-1.001E+01 YL1(21)= 2.369E+01 ZL1(21)=-1.368E+01 XM2(21)= 1.000E+00 YM2(21)=-2.369E+01 ZM2(21)=-1.368E+01          $116
XL1(22)=-1.001E+01 YL1(22)=-2.369E+01 ZL1(22)=-1.368E+01 XM2(22)= 1.000E+00 YM2(22)= 2.369E+01 ZM2(22)=-1.368E+01          $116
XL1(23)=-1.001E+01 YL1(23)= 0.        ZL1(23)= 2.735E+01 XM2(23)= 1.000E+00 YM2(23)= 2.369E+01 ZM2(23)=-1.368E+01          $116
XL1(24)=-1.001E+01 YL1(24)= 2.369E+01 ZL1(24)=-1.368E+01 XM2(24)= 1.000E+00 YM2(24)= 0.        ZM2(24)= 2.735E+01          $116
XL1(25)=-1.001E+01 YL1(25)= 0.        ZL1(25)=-2.735E+01 XM2(25)= 1.000E+00 YM2(25)=-2.369E+01 ZM2(25)= 1.368E+01          $116
XL1(26)=-1.001E+01 YL1(26)=-2.369E+01 ZL1(26)= 1.368E+01 XM2(26)= 1.000E+00 YM2(26)= 0.        ZM2(26)=-2.735E+01          $116
XL1(27)=-1.001E+01 YL1(27)= 2.369E+01 ZL1(27)= 1.368E+01 XM2(27)= 1.000E+00 YM2(27)= 0.        ZM2(27)=-2.735E+01          $116
XL1(28)=-1.001E+01 YL1(28)= 0.        ZL1(28)=-2.735E+01 XM2(28)= 1.000E+00 YM2(28)= 2.369E+01 ZM2(28)= 1.368E+01          $116
XL1(29)=-1.001E+01 YL1(29)=-2.369E+01 ZL1(29)= 1.368E+01 XM2(29)= 1.000E+00 YM2(29)= 2.369E+01 ZM2(29)= 1.368E+01          $116
XL1(30)=-1.001E+01 YL1(30)= 2.369E+01 ZL1(30)= 1.368E+01 XM2(30)= 1.000E+00 YM2(30)=-2.369E+01 ZM2(30)= 1.368E+01          $116
COEF(1, 1) = 1.462E+00 COEFT(1, 1)= 1.462E+00 FFLM( 1)= 0.        FFLMT( 1)= 0.                                    $216
COEF(1, 2)= 1.462E+00 COEFT(1, 2)= 1.462E+00 FFLM( 2)= 0.        FFLMT( 2)= 0.                                    $216
COEF(1, 3)= 1.462E+00 COEFT(1, 3)= 1.462E+00 FFLM( 3)= 0.        FFLMT( 3)= 0.                                    $216
COEF(1, 4)= 1.462E+00 COEFT(1, 4)= 1.462E+00 FFLM( 4)= 0.        FFLMT( 4)= 0.                                    $216
COEF(1, 5)= 1.462E+00 COEFT(1, 5)= 1.462E+00 FFLM( 5)= 0.        FFLMT( 5)= 0.                                    $216
COEF(1, 6)= 1.462E+00 COEFT(1, 6)= 1.462E+00 FFLM( 6)= 0.        FFLMT( 6)= 0.                                    $216
COEF(1, 7)= 1.462E+00 COEFT(1, 7)= 1.462E+00 FFLM( 7)= 0.        FFLMT( 7)= 0.                                    $216
```

```
COEF(1, 8)= 1.462E+00 COEFT(1, 8)= 1.462E+00 FFLM( 8)= 0.        FFLMT( 8)= 0.                                    $216
COEF(1, 9)= 1.462E+00 COEFT(1, 9)= 1.462E+00 FFLM( 9)= 0.        FFLMT( 9)= 0.                                    $216
COEF(1,10)= 1.462E+00 COEFT(1,10)= 1.462E+00 FFLM(10)= 0.        FFLMT(10)= 0.                                    $216
COEF(1,11)= 1.462E+00 COEFT(1,11)= 1.462E+00 FFLM(11)= 0.        FFLMT(11)= 0.                                    $216
COEF(1,12)= 1.462E+00 COEFT(1,12)= 1.462E+00 FFLM(12)= 0.        FFLMT(12)= 0.                                    $216
COEF(1,13)= 1.000E+03 COEFT(1,13)= 1.087E+01 FFLM(13)= 0.        FFLMT(13)= 0.                                    $216
COEF(1,14)= 1.000E+03 COEFT(1,14)= 1.087E+01 FFLM(14)= 0.        FFLMT(14)= 0.                                    $216
COEF(1,15)= 1.000E+03 COEFT(1,15)= 1.087E+01 FFLM(15)= 0.        FFLMT(15)= 0.                                    $216
COEF(1,16)= 1.000E+03 COEFT(1,16)= 1.087E+01 FFLM(16)= 0.        FFLMT(16)= 0.                                    $216
COEF(1,17)= 1.000E+03 COEFT(1,17)= 1.087E+01 FFLM(17)= 0.        FFLMT(17)= 0.                                    $216
COEF(1,18)= 1.000E+03 COEFT(1,18)= 1.087E+01 FFLM(18)= 0.        FFLMT(18)= 0.                                    $216
COEF(1,19)= 1.000E+03 COEFT(1,19)= 5.000E+00 FFLM(19)= 0.        FFLMT(19)= 0.                                    $216
COEF(1,20)= 1.000E+03 COEFT(1,20)= 5.000E+00 FFLM(20)= 0.        FFLMT(20)= 0.                                    $216
COEF(1,21)= 1.000E+03 COEFT(1,21)= 5.000E+00 FFLM(21)= 0.        FFLMT(21)= 0.                                    $216
COEF(1,22)= 1.000E+03 COEFT(1,22)= 5.000E+00 FFLM(22)= 0.        FFLMT(22)= 0.                                    $216
COEF(1,23)= 1.000E+03 COEFT(1,23)= 5.000E+00 FFLM(23)= 0.        FFLMT(23)= 0.                                    $216
COEF(1,24)= 1.000E+03 COEFT(1,24)= 5.000E+00 FFLM(24)= 0.        FFLMT(24)= 0.                                    $216
COEF(1,25)= 1.000E+03 COEFT(1,25)= 5.000E+00 FFLM(25)= 0.        FFLMT(25)= 0.                                    $216
COEF(1,26)= 1.000E+03 COEFT(1,26)= 5.000E+00 FFLM(26)= 0.        FFLMT(26)= 0.                                    $216
COEF(1,27)= 1.000E+03 COEFT(1,27)= 5.000E+00 FFLM(27)= 0.        FFLMT(27)= 0.                                    $216
COEF(1,28)= 1.000E+03 COEFT(1,28)= 5.000E+00 FFLM(28)= 0.        FFLMT(28)= 0.                                    $216
COEF(1,29)= 1.000E+03 COEFT(1,29)= 5.000E+00 FFLM(29)= 0.        FFLMT(29)= 0.                                    $216
COEF(1,30)= 1.000E+03 COEFT(1,30)= 5.000E+00 FFLM(30)= 0.        FFLMT(30)= 0.                                    $216

EQUIPMENT STRUT INFORMATION

JK    =          6 JKDAMP=          6 VISJK = 0.        CTJK  = 2.000E+06 SMCJK = 1.000E+01 SMCJKT= 1.000E+01      $ 17
XK1(1)=-9.400E+00 YK1(1)= 4.000E+00 ZK1(1)=-2.445E+01 XJ3(1)= 0.        YJ3(1)= 0.        ZJ3(1)= 0.                $117
XK1(2)=-9.400E+00 YK1(2)=-4.000E+00 ZK1(2)=-2.445E+01 XJ3(2)= 0.        YJ3(2)= 0.        ZJ3(2)= 0.                $117
XK1(3)=-9.400E+00 YK1(3)= 4.000E+00 ZK1(3)=-2.445E+01 XJ3(3)= 0.        YJ3(3)= 4.000E+00 ZJ3(3)= 0.                $117
XK1(4)=-9.400E+00 YK1(4)=-4.000E+00 ZK1(4)=-2.445E+01 XJ3(4)= 0.        YJ3(4)=-4.000E+00 ZJ3(4)= 0.                $117
XK1(5)=-9.400E+00 YK1(5)= 4.000E+00 ZK1(5)=-3.045E+01 XJ3(5)= 0.        YJ3(5)= 4.000E+00 ZJ3(5)= 0.                $117
XK1(6)=-9.400E+00 YK1(6)=-4.000E+00 ZK1(6)=-3.045E+01 XJ3(6)= 0.        YJ3(6)=-4.000E+00 ZJ3(6)= 0.                $117
COEF(2,1)= 2.400E+01 COEFT(2,1)= 2.400E+01 FFJK(1)= 0.        FFJKT(1)= 0.                                        $217
COEF(2,2)= 2.400E+01 COEFT(2,2)= 2.400E+01 FFJK(2)= 0.        FFJKT(2)= 0.                                        $217
COEF(2,3)= 2.400E+01 COEFT(2,3)= 2.400E+01 FFJK(3)= 0.        FFJKT(3)= 0.                                        $217
COEF(2,4)= 2.400E+01 COEFT(2,4)= 2.400E+01 FFJK(4)= 0.        FFJKT(4)= 0.                                        $217
COEF(2,5)= 2.400E+01 COEFT(2,5)= 2.400E+01 FFJK(5)= 0.        FFJKT(5)= 0.                                        $217
COEF(2,6)= 2.400E+01 COEFT(2,6)= 2.400E+01 FFJK(6)= 0.        FFJKT(6)= 0.                                        $217

PARACHUTE DATA

NPAR  =          0                                                                                                  $ 18
NO PARACHUTE

RETROROCKET DATA

NRR   =          0                                                                                                  $ 19
NO RETROROCKETS

ACCELEROMETER LOCATIONS

IACCEL=          0 NOACAP=          0 NOACCM=          0 NOACHS=          0                                      $ 20
NO ACCELEROMETERS

ELASTIC FOOTPAD DATA
```

```
NOMODE=5 NTCOR =25 MORDER=102                                                                                                  $ 21
NATT(  1)=  1 NATT(  2)=  2 NATT(  3)=  3 NATT(  4)=  4 NATT(  5)=  5 NATT(  6)=  6                                            $121
NATT(  7)=  7 NATT(  8)=  8 NATT(  9)=  9 NATT( 10)= 10 NATT( 11)= 11 NATT( 12)= 12                                            $121
NATT( 13)= 13 NATT( 14)= 14 NATT( 15)= 15 NATT( 16)= 19 NATT( 17)= 20 NATT( 18)= 21                                            $121
NATT( 19)= 25 NATT( 20)= 26 NATT( 21)= 27 NATT( 22)= 28 NATT( 23)= 29 NATT( 24)= 30                                            $121
NATT( 25)= 31 NATT( 26)= 32 NATT( 27)= 33 NATT( 28)= 37 NATT( 29)= 38 NATT( 30)= 39                                            $121
NATT( 31)= 43 NATT( 32)= 44 NATT( 33)= 45 NATT( 34)= 46 NATT( 35)= 47 NATT( 36)= 48                                            $121
NATT( 37)= 49 NATT( 38)= 50 NATT( 39)= 51 NATT( 40)= 55 NATT( 41)= 56 NATT( 42)= 57                                            $121
NATT( 43)= 61 NATT( 44)= 62 NATT( 45)= 63 NATT( 46)= 64 NATT( 47)= 65 NATT( 48)= 66                                            $121
NATT( 49)= 67 NATT( 50)= 68 NATT( 51)= 69 NATT( 52)= 73 NATT( 53)= 74 NATT( 54)= 75                                            $121
NATT( 55)= 79 NATT( 56)= 80 NATT( 57)= 81 NATT( 58)= 82 NATT( 59)= 83 NATT( 60)= 84                                            $121
NATT( 61)= 85 NATT( 62)= 86 NATT( 63)= 87 NATT( 64)= 91 NATT( 65)= 92 NATT( 66)= 93                                            $121
NATT( 67)= 97 NATT( 68)= 98 NATT( 69)= 99 NATT( 70)=100 NATT( 71)=101 NATT( 72)=102                                            $121
NATT( 73)=103 NATT( 74)=104 NATT( 75)=105 NATT( 76)=109 NATT( 77)=110 NATT( 78)=111                                            $121
NATT( 79)=115 NATT( 80)=116 NATT( 81)=117 NATT( 82)=118 NATT( 83)=119 NATT( 84)=120                                            $121
NATT( 85)=121 NATT( 86)=122 NATT( 87)=123 NATT( 88)=127 NATT( 89)=128 NATT( 90)=129                                            $121
NATT( 91)=133 NATT( 92)=134 NATT( 93)=135 NATT( 94)=136 NATT( 95)=137 NATT( 96)=138                                            $121
NATT( 97)=139 NATT( 98)=140 NATT( 99)=141 NATT(100)=145 NATT(101)=146 NATT(102)=147                                            $121
COORD( 1,1)= 0.          COORD( 1,2)= 0.                                                                                       $221
COORD( 2,1)= 2.735E+01 COORD( 2,2)= 0.                                                                                         $221
COORD( 3,1)= 2.369E+01 COORD( 3,2)= 1.368E+01                                                                                  $221
COORD( 4,1)= 1.368E+01 COORD( 4,2)= 2.369E+01                                                                                  $221
COORD( 5,1)= 0.          COORD( 5,2)= 2.735E+01                                                                                $221
COORD( 6,1)=-1.368E+01 COORD( 6,2)= 2.369E+01                                                                                  $221
COORD( 7,1)=-2.369E+01 COORD( 7,2)= 1.368E+01                                                                                  $221
COORD( 8,1)=-2.735E+01 COORD( 8,2)= 0.                                                                                         $221
COORD( 9,1)=-2.369E+01 COORD( 9,2)=-1.368E+01                                                                                  $221
COORD(10,1)=-1.368E+01 COORD(10,2)=-2.369E+01                                                                                  $221
COORD(11,1)= 0.          COORD(11,2)=-2.735E+01                                                                                $221
COORD(12,1)= 1.368E+01 COORD(12,2)=-2.369E+01                                                                                  $221
COORD(13,1)= 2.369E+01 COORD(13,2)=-1.369E+01                                                                                  $221
COORD(14,1)= 3.450E+01 COORD(14,2)= 0.                                                                                         $221
COORD(15,1)= 2.988E+01 COORD(15,2)= 1.725E+01                                                                                  $221
COORD(16,1)= 1.725E+01 COORD(16,2)= 2.988E+01                                                                                  $221
COORD(17,1)= 0.          COORD(17,2)= 3.450E+01                                                                                $221
COORD(18,1)=-1.725E+01 COORD(18,2)= 2.988E+01                                                                                  $221
COORD(19,1)=-2.988E+01 COORD(19,2)= 1.725E+01                                                                                  $221
COORD(20,1)=-3.450E+01 COORD(20,2)= 0.                                                                                         $221
COORD(21,1)=-2.988E+01 COORD(21,2)=-1.725E+01                                                                                  $221
COORD(22,1)=-1.725E+01 COORD(22,2)=-2.988E+01                                                                                  $221
COORD(23,1)= 0.          COORD(23,2)=-3.450E+01                                                                                $221
COORD(24,1)= 1.725E+01 COORD(24,2)=-2.988E+01                                                                                  $221
COORD(25,1)= 2.988E+01 COORD(25,2)=-1.725E+01                                                                                  $221
I=  1 FPPHI(I,1)= 1.320E-05 FPPHI(I,2)=-3.895E-03 FPPHI(I,3)=-7.230E-01 FPPHI(I,4)=-6.620E-05 FPPHI(I,5)= 1.834E-05            $321
I=  2 FPPHI(I,1)= 1.288E-11 FPPHI(I,2)= 1.919E-10 FPPHI(I,3)=-1.749E-11 FPPHI(I,4)= 2.144E-13 FPPHI(I,5)=-1.394E-12            $321
I=  3 FPPHI(I,1)=-9.101E-11 FPPHI(I,2)=-5.440E-10 FPPHI(I,3)=-1.229E-10 FPPHI(I,4)=-1.312E-10 FPPHI(I,5)=-7.197E-11            $321
I=  4 FPPHI(I,1)= 8.690E-05 FPPHI(I,2)=-5.678E-01 FPPHI(I,3)= 4.605E-01 FPPHI(I,4)=-1.772E-04 FPPHI(I,5)= 4.060E-01            $321
I=  5 FPPHI(I,1)= 1.264E-11 FPPHI(I,2)= 1.890E-10 FPPHI(I,3)=-1.852E-11 FPPHI(I,4)=-7.615E-13 FPPHI(I,5)=-1.690E-12            $321
I=  6 FPPHI(I,1)=-8.905E-11 FPPHI(I,2)=-4.686E-10 FPPHI(I,3)=-1.303E-10 FPPHI(I,4)=-1.450E-10 FPPHI(I,5)=-7.820E-11            $321
I=  7 FPPHI(I,1)=-6.041E-01 FPPHI(I,2)=-2.832E-01 FPPHI(I,3)= 4.142E-01 FPPHI(I,4)=-2.871E-01 FPPHI(I,5)= 8.455E-02            $321
I=  8 FPPHI(I,1)= 1.190E-11 FPPHI(I,2)= 1.549E-10 FPPHI(I,3)=-1.337E-11 FPPHI(I,4)= 7.639E-12 FPPHI(I,5)= 2.138E-12            $321
I=  9 FPPHI(I,1)=-8.916E-11 FPPHI(I,2)=-4.771E-10 FPPHI(I,3)=-1.287E-10 FPPHI(I,4)=-1.422E-10 FPPHI(I,5)=-7.687E-11            $321
I= 10 FPPHI(I,1)=-6.009E-01 FPPHI(I,2)= 2.831E-01 FPPHI(I,3)= 3.933E-01 FPPHI(I,4)= 7.904E-02 FPPHI(I,5)=-2.829E-01            $321
I= 11 FPPHI(I,1)= 1.125E-11 FPPHI(I,2)= 1.286E-10 FPPHI(I,3)=-1.090E-11 FPPHI(I,4)= 1.277E-11 FPPHI(I,5)= 4.324E-12            $321
I= 12 FPPHI(I,1)=-9.001E-11 FPPHI(I,2)=-5.051E-10 FPPHI(I,3)=-1.266E-10 FPPHI(I,4)=-1.376E-10 FPPHI(I,5)=-7.497E-11            $321
I= 13 FPPHI(I,1)=-1.074E-04 FPPHI(I,2)= 5.743E-01 FPPHI(I,3)= 4.230E-01 FPPHI(I,4)= 4.052E-01 FPPHI(I,5)= 1.699E-04            $321
I= 14 FPPHI(I,1)= 1.114E-11 FPPHI(I,2)= 1.185E-10 FPPHI(I,3)=-9.906E-12 FPPHI(I,4)= 1.454E-11 FPPHI(I,5)= 5.153E-12            $321
I= 15 FPPHI(I,1)=-9.100E-11 FPPHI(I,2)=-5.461E-10 FPPHI(I,3)=-1.237E-10 FPPHI(I,4)=-1.321E-10 FPPHI(I,5)=-7.290E-11            $321
I= 16 FPPHI(I,1)= 6.007E-01 FPPHI(I,2)= 2.833E-01 FPPHI(I,3)= 3.934E-01 FPPHI(I,4)= 7.870E-02 FPPHI(I,5)= 2.830E-01            $321
I= 17 FPPHI(I,1)= 1.131E-11 FPPHI(I,2)= 1.274E-10 FPPHI(I,3)=-1.129E-11 FPPHI(I,4)= 1.233E-11 FPPHI(I,5)= 4.142E-12            $321
I= 18 FPPHI(I,1)=-9.137E-11 FPPHI(I,2)=-5.795E-10 FPPHI(I,3)=-1.184E-10 FPPHI(I,4)=-1.232E-10 FPPHI(I,5)=-6.831E-11            $321
I= 19 FPPHI(I,1)= 6.042E-01 FPPHI(I,2)=-2.831E-01 FPPHI(I,3)= 4.142E-01 FPPHI(I,4)=-2.870E-01 FPPHI(I,5)=-8.482E-02            $321
```

```
I= 20 FPPHI(I,1)= 1.143E-11 FPPHI(I,2)= 1.506E-10 FPPHI(I,3)=-1.534E-11 FPPHI(I,4)= 5.607E-12 FPPHI(I,5)= 5.158E-13   $321
I= 21 FPPHI(I,1)=-9.120E-11 FPPHI(I,2)=-6.008E-10 FPPHI(I,3)=-1.137E-10 FPPHI(I,4)=-1.155E-10 FPPHI(I,5)=-6.416E-11   $321
I= 22 FPPHI(I,1)= 1.078E-04 FPPHI(I,2)=-5.678E-01 FPPHI(I,3)= 4.605E-01 FPPHI(I,4)= 2.408E-04 FPPHI(I,5)=-4.059E-01   $321
I= 23 FPPHI(I,1)= 1.313E-11 FPPHI(I,2)= 1.914E-10 FPPHI(I,3)=-1.765E-11 FPPHI(I,4)= 5.258E-13 FPPHI(I,5)=-1.554E-12   $321
I= 24 FPPHI(I,1)=-9.178E-11 FPPHI(I,2)=-6.128E-10 FPPHI(I,3)=-1.134E-10 FPPHI(I,4)=-1.146E-10 FPPHI(I,5)=-6.395E-11   $321
I= 25 FPPHI(I,1)=-6.041E-01 FPPHI(I,2)=-2.832E-01 FPPHI(I,3)= 4.141E-01 FPPHI(I,4)= 2.872E-01 FPPHI(I,5)=-8.448E-02   $321
I= 26 FPPHI(I,1)= 1.347E-11 FPPHI(I,2)= 2.269E-10 FPPHI(I,3)=-2.205E-11 FPPHI(I,4)=-7.817E-12 FPPHI(I,5)=-5.554E-12   $321
I= 27 FPPHI(I,1)=-9.183E-11 FPPHI(I,2)=-6.040E-10 FPPHI(I,3)=-1.148E-10 FPPHI(I,4)=-1.172E-10 FPPHI(I,5)=-6.528E-11   $321
I= 28 FPPHI(I,1)=-6.009E-01 FPPHI(I,2)= 2.832E-01 FPPHI(I,3)= 3.934E-01 FPPHI(I,4)=-7.896E-02 FPPHI(I,5)= 2.829E-01   $321
I= 29 FPPHI(I,1)= 1.490E-11 FPPHI(I,2)= 2.584E-10 FPPHI(I,3)=-2.353E-11 FPPHI(I,4)=-1.079E-11 FPPHI(I,5)=-6.326E-12   $321
I= 30 FPPHI(I,1)=-9.069E-11 FPPHI(I,2)=-5.739E-10 FPPHI(I,3)=-1.168E-10 FPPHI(I,4)=-1.207E-10 FPPHI(I,5)=-6.637E-11   $321
I= 31 FPPHI(I,1)=-1.961E-04 FPPHI(I,2)= 5.743E-01 FPPHI(I,3)= 4.231E-01 FPPHI(I,4)=-4.652E-01 FPPHI(I,5)=-2.449E-04   $321
I= 32 FPPHI(I,1)= 1.511E-11 FPPHI(I,2)= 2.683E-10 FPPHI(I,3)=-2.471E-11 FPPHI(I,4)=-1.301E-11 FPPHI(I,5)=-7.268E-12   $321
I= 33 FPPHI(I,1)=-9.114E-11 FPPHI(I,2)=-5.454E-10 FPPHI(I,3)=-1.234E-10 FPPHI(I,4)=-1.320E-10 FPPHI(I,5)=-7.191E-11   $321
I= 34 FPPHI(I,1)= 6.007E-01 FPPHI(I,2)= 2.832E-01 FPPHI(I,3)= 3.934E-01 FPPHI(I,4)=-7.865E-02 FPPHI(I,5)=-2.829E-01   $321
I= 35 FPPHI(I,1)= 1.440E-11 FPPHI(I,2)= 2.547E-10 FPPHI(I,3)=-2.490E-11 FPPHI(I,4)=-1.311E-11 FPPHI(I,5)=-7.599E-12   $321
I= 36 FPPHI(I,1)=-8.937E-11 FPPHI(I,2)=-5.017E-10 FPPHI(I,3)=-1.297E-10 FPPHI(I,4)=-1.358E-10 FPPHI(I,5)=-7.351E-11   $321
I= 37 FPPHI(I,1)= 6.046E-01 FPPHI(I,2)=-2.829E-01 FPPHI(I,3)= 4.144E-01 FPPHI(I,4)= 2.873E-01 FPPHI(I,5)= 8.460E-02   $321
I= 38 FPPHI(I,1)= 1.407E-11 FPPHI(I,2)= 2.294E-10 FPPHI(I,3)=-2.129E-11 FPPHI(I,4)=-6.787E-12 FPPHI(I,5)=-4.315E-12   $321
I= 39 FPPHI(I,1)=-8.923E-11 FPPHI(I,2)=-4.778E-10 FPPHI(I,3)=-1.290E-10 FPPHI(I,4)=-1.429E-10 FPPHI(I,5)=-7.731E-11   $321
I= 40 FPPHI(I,1)= 1.382E-04 FPPHI(I,2)=-9.764E-01 FPPHI(I,3)= 1.000E+00 FPPHI(I,4)=-4.418E-04 FPPHI(I,5)= 1.000E+00   $321
I= 41 FPPHI(I,1)= 1.266E-11 FPPHI(I,2)= 1.890E-10 FPPHI(I,3)=-1.842E-11 FPPHI(I,4)=-5.115E-13 FPPHI(I,5)=-1.533E-12   $321
I= 42 FPPHI(I,1)=-8.777E-11 FPPHI(I,2)=-4.421E-10 FPPHI(I,3)=-1.295E-10 FPPHI(I,4)=-1.456E-10 FPPHI(I,5)=-7.783E-11   $321
I= 43 FPPHI(I,1)=-9.998E-01 FPPHI(I,2)=-4.754E-01 FPPHI(I,3)= 7.913E-01 FPPHI(I,4)=-7.126E-01 FPPHI(I,5)= 1.872E-01   $321
I= 44 FPPHI(I,1)= 1.146E-11 FPPHI(I,2)= 1.431E-10 FPPHI(I,3)=-1.332E-11 FPPHI(I,4)= 8.690E-12 FPPHI(I,5)= 2.570E-12   $321
I= 45 FPPHI(I,1)=-8.843E-11 FPPHI(I,2)=-4.569E-10 FPPHI(I,3)=-1.290E-10 FPPHI(I,4)=-1.442E-10 FPPHI(I,5)=-7.738E-11   $321
I= 46 FPPHI(I,1)=-9.873E-01 FPPHI(I,2)= 4.729E-01 FPPHI(I,3)= 7.495E-01 FPPHI(I,4)= 1.710E-01 FPPHI(I,5)=-7.030E-01   $321
I= 47 FPPHI(I,1)= 1.047E-11 FPPHI(I,2)= 1.075E-10 FPPHI(I,3)=-1.086E-11 FPPHI(I,4)= 1.427E-11 FPPHI(I,5)= 4.724E-12   $321
I= 48 FPPHI(I,1)=-8.967E-11 FPPHI(I,2)=-4.938E-10 FPPHI(I,3)=-1.270E-10 FPPHI(I,4)=-1.391E-10 FPPHI(I,5)=-7.564E-11   $321
I= 49 FPPHI(I,1)=-1.777E-04 FPPHI(I,2)= 1.000E+00 FPPHI(I,3)= 9.418E-01 FPPHI(I,4)= 1.000E+00 FPPHI(I,5)= 4.414E-04   $321
I= 50 FPPHI(I,1)= 1.049E-11 FPPHI(I,2)= 9.614E-11 FPPHI(I,3)=-8.914E-12 FPPHI(I,4)= 1.769E-11 FPPHI(I,5)= 6.452E-12   $321
I= 51 FPPHI(I,1)=-9.089E-11 FPPHI(I,2)=-5.456E-10 FPPHI(I,3)=-1.236E-10 FPPHI(I,4)=-1.319E-10 FPPHI(I,5)=-7.278E-11   $321
I= 52 FPPHI(I,1)= 9.871E-01 FPPHI(I,2)= 4.732E-01 FPPHI(I,3)= 7.496E-01 FPPHI(I,4)= 1.702E-01 FPPHI(I,5)= 7.031E-01   $321
I= 53 FPPHI(I,1)= 1.108E-11 FPPHI(I,2)= 1.109E-10 FPPHI(I,3)=-9.485E-12 FPPHI(I,4)= 1.605E-11 FPPHI(I,5)= 5.739E-12   $321
I= 54 FPPHI(I,1)=-9.134E-11 FPPHI(I,2)=-5.880E-10 FPPHI(I,3)=-1.169E-10 FPPHI(I,4)=-1.205E-10 FPPHI(I,5)=-6.709E-11   $321
I= 55 FPPHI(I,1)= 9.999E-01 FPPHI(I,2)=-4.751E-01 FPPHI(I,3)= 7.913E-01 FPPHI(I,4)=-7.125E-01 FPPHI(I,5)=-1.879E-01   $321
I= 56 FPPHI(I,1)= 1.132E-11 FPPHI(I,2)= 1.411E-10 FPPHI(I,3)=-1.427E-11 FPPHI(I,4)= 7.874E-12 FPPHI(I,5)= 1.450E-12   $321
I= 57 FPPHI(I,1)=-9.100E-11 FPPHI(I,2)=-6.145E-10 FPPHI(I,3)=-1.109E-10 FPPHI(I,4)=-1.104E-10 FPPHI(I,5)=-6.171E-11   $321
I= 58 FPPHI(I,1)= 1.812E-04 FPPHI(I,2)=-9.764E-01 FPPHI(I,3)= 1.000E+00 FPPHI(I,4)= 6.320E-04 FPPHI(I,5)=-9.999E-01   $321
I= 59 FPPHI(I,1)= 1.303E-11 FPPHI(I,2)= 1.903E-10 FPPHI(I,3)=-1.805E-11 FPPHI(I,4)= 2.762E-14 FPPHI(I,5)=-1.878E-12   $321
I= 60 FPPHI(I,1)=-9.099E-11 FPPHI(I,2)=-6.238E-10 FPPHI(I,3)=-1.087E-10 FPPHI(I,4)=-1.065E-10 FPPHI(I,5)=-5.978E-11   $321
I= 61 FPPHI(I,1)=-9.998E-01 FPPHI(I,2)=-4.754E-01 FPPHI(I,3)= 7.911E-01 FPPHI(I,4)= 7.128E-01 FPPHI(I,5)=-1.870E-01   $321
I= 62 FPPHI(I,1)= 1.291E-11 FPPHI(I,2)= 2.310E-10 FPPHI(I,3)=-2.469E-11 FPPHI(I,4)=-1.221E-11 FPPHI(I,5)=-8.128E-12   $321
I= 63 FPPHI(I,1)=-9.094E-11 FPPHI(I,2)=-6.117E-10 FPPHI(I,3)=-1.103E-10 FPPHI(I,4)=-1.097E-10 FPPHI(I,5)=-6.123E-11   $321
I= 64 FPPHI(I,1)=-9.873E-01 FPPHI(I,2)= 4.729E-01 FPPHI(I,3)= 7.495E-01 FPPHI(I,4)=-1.708E-01 FPPHI(I,5)= 7.029E-01   $321
I= 65 FPPHI(I,1)= 1.425E-11 FPPHI(I,2)= 2.680E-10 FPPHI(I,3)=-2.728E-11 FPPHI(I,4)=-1.699E-11 FPPHI(I,5)=-9.504E-12   $321
I= 66 FPPHI(I,1)=-9.017E-11 FPPHI(I,2)=-5.784E-10 FPPHI(I,3)=-1.143E-10 FPPHI(I,4)=-1.167E-10 FPPHI(I,5)=-6.414E-11   $321
I= 67 FPPHI(I,1)=-3.412E-04 FPPHI(I,2)= 1.000E+00 FPPHI(I,3)= 9.420E-01 FPPHI(I,4)=-9.999E-01 FPPHI(I,5)=-5.823E-04   $321
I= 68 FPPHI(I,1)= 1.403E-11 FPPHI(I,2)= 2.763E-10 FPPHI(I,3)=-2.973E-11 FPPHI(I,4)=-2.126E-11 FPPHI(I,5)=-1.189E-11   $321
I= 69 FPPHI(I,1)=-9.107E-11 FPPHI(I,2)=-5.448E-10 FPPHI(I,3)=-1.232E-10 FPPHI(I,4)=-1.316E-10 FPPHI(I,5)=-7.167E-11   $321
I= 70 FPPHI(I,1)= 9.869E-01 FPPHI(I,2)= 4.731E-01 FPPHI(I,3)= 7.496E-01 FPPHI(I,4)=-1.702E-01 FPPHI(I,5)=-7.030E-01   $321
I= 71 FPPHI(I,1)= 1.425E-11 FPPHI(I,2)= 2.678E-10 FPPHI(I,3)=-2.758E-11 FPPHI(I,4)=-1.744E-11 FPPHI(I,5)=-9.636E-12   $321
I= 72 FPPHI(I,1)=-8.934E-11 FPPHI(I,2)=-4.933E-10 FPPHI(I,3)=-1.258E-10 FPPHI(I,4)=-1.381E-10 FPPHI(I,5)=-7.444E-11   $321
I= 73 FPPHI(I,1)= 1.000E+00 FPPHI(I,2)=-4.751E-01 FPPHI(I,3)= 7.910E-01 FPPHI(I,4)= 7.125E-01 FPPHI(I,5)= 1.877E-01   $321
I= 74 FPPHI(I,1)= 1.417E-11 FPPHI(I,2)= 2.384E-10 FPPHI(I,3)=-2.228E-11 FPPHI(I,4)=-8.711E-12 FPPHI(I,5)=-4.989E-12   $321
I= 75 FPPHI(I,1)=-8.848E-11 FPPHI(I,2)=-4.576E-10 FPPHI(I,3)=-1.292E-10 FPPHI(I,4)=-1.443E-10 FPPHI(I,5)=-7.735E-11   $321
OMEGA(1)= 1.828E+02 GM(1)= 2.158E-01                                                                                   $421
OMEGA(2)= 2.106E+02 GM(2)= 1.126E-01                                                                                   $421
OMEGA(3)= 2.752E+02 GM(3)= 2.670E-01                                                                                   $421
OMEGA(4)= 3.232E+02 GM(4)= 1.868E-01                                                                                   $421
OMEGA(5)= 3.342E+02 GM(5)= 1.818E-01                                                                                   $421
WNX(1)= 3.225E-21 WNY(1)= 9.212E-02 WNZ(1)= 9.212E-02 PX(1)= 0.        PY(1)= 3.009E-13 PZ(1)=-3.982E-13              $521
```

```
WNX(2)= 1.284E-19 WNY(2)= 6.524E-02 WNZ(2)= 6.524E-02 PX(2)= 0.        PY(2)= 2.585E-12 PZ(2)=-4.254E-12                    $521
WNX(3)= 5.880E-21 WNY(3)= 1.830E-01 WNZ(3)= 1.830E-01 PX(3)= 0.        PY(3)= 9.593E-13 PZ(3)=-1.559E-12                    $521
WNX(4)= 6.570E-21 WNY(4)= 4.701E-02 WNZ(4)= 4.701E-02 PX(4)= 0.        PY(4)= 9.979E-13 PZ(4)=-1.827E-12                    $521
WNX(5)= 1.970E-21 WNY(5)= 3.443E-02 WNZ(5)= 3.443E-02 PX(5)= 0.        PY(5)= 1.651E-12 PZ(5)=-2.070E-12                    $521
NDIAM(1,1)=   -2 NDIAM(2,1)=  100 NDIAM(3,1)=  100                                                                          $621
NDIAM(1,2)=    2 NDIAM(2,2)=  100 NDIAM(3,2)=  100                                                                          $621
NDIAM(1,3)=    0 NDIAM(2,3)=  100 NDIAM(3,3)=  100                                                                          $621
NDIAM(1,4)=    3 NDIAM(2,4)=  100 NDIAM(3,4)=  100                                                                          $621
NDIAM(1,5)=   -3 NDIAM(2,5)=  100 NDIAM(3,5)=  100                                                                          $621
AMASS(  1)= 1.78E-01 AMASS(  2)= 1.78E-01 AMASS(  3)= 1.78E-01 AMASS(  4)= 1.17E+00 AMASS(  5)= 3.89E-01 AMASS(  6)= 3.89E-01 $721
AMASS(  7)= 8.89E-03 AMASS(  8)= 8.89E-03 AMASS(  9)= 8.89E-03 AMASS( 10)= 3.56E+00 AMASS( 11)= 2.38E-01 AMASS( 12)= 3.33E+00 $721
AMASS( 13)= 8.89E-03 AMASS( 14)= 8.89E-03 AMASS( 15)= 8.89E-03 AMASS( 16)= 8.89E-03 AMASS( 17)= 8.89E-03 AMASS( 18)= 8.89E-03 $721
AMASS( 19)= 8.89E-03 AMASS( 20)= 8.89E-03 AMASS( 21)= 8.89E-03 AMASS( 22)= 3.56E+00 AMASS( 23)= 3.33E+00 AMASS( 24)= 2.38E-01 $721
AMASS( 25)= 8.89E-03 AMASS( 26)= 8.89E-03 AMASS( 27)= 8.89E-03 AMASS( 28)= 8.89E-03 AMASS( 29)= 8.89E-03 AMASS( 30)= 8.89E-03 $721
AMASS( 31)= 8.89E-03 AMASS( 32)= 8.89E-03 AMASS( 33)= 8.89E-03 AMASS( 34)= 3.56E+00 AMASS( 35)= 2.38E-01 AMASS( 36)= 3.33E+00 $721
AMASS( 37)= 8.89E-03 AMASS( 38)= 8.89E-03 AMASS( 39)= 8.89E-03 AMASS( 40)= 8.89E-03 AMASS( 41)= 8.89E-03 AMASS( 42)= 8.89E-03 $721
AMASS( 43)= 8.89E-03 AMASS( 44)= 8.89E-03 AMASS( 45)= 8.89E-03 AMASS( 46)= 3.56E+00 AMASS( 47)= 3.33E+00 AMASS( 48)= 2.38E-01 $721
AMASS( 49)= 8.89E-03 AMASS( 50)= 8.89E-03 AMASS( 51)= 8.89E-03 AMASS( 52)= 8.89E-03 AMASS( 53)= 8.89E-03 AMASS( 54)= 8.89E-03 $721
AMASS( 55)= 6.79E-03 AMASS( 56)= 6.79E-03 AMASS( 57)= 6.79E-03 AMASS( 58)= 6.35E+00 AMASS( 59)= 5.93E+00 AMASS( 60)= 4.25E-01 $721
AMASS( 61)= 9.96E-03 AMASS( 62)= 9.96E-03 AMASS( 63)= 9.96E-03 AMASS( 64)= 6.79E-03 AMASS( 65)= 6.79E-03 AMASS( 66)= 6.79E-03 $721
AMASS( 67)= 9.96E-03 AMASS( 68)= 9.96E-03 AMASS( 69)= 9.96E-03 AMASS( 70)= 6.35E+00 AMASS( 71)= 4.25E-01 AMASS( 72)= 5.93E+00 $721
AMASS( 73)= 6.79E-03 AMASS( 74)= 6.79E-03 AMASS( 75)= 6.79E-03 AMASS( 76)= 9.96E-03 AMASS( 77)= 9.96E-03 AMASS( 78)= 9.96E-03 $721
AMASS( 79)= 6.79E-03 AMASS( 80)= 6.79E-03 AMASS( 81)= 6.79E-03 AMASS( 82)= 6.35E+00 AMASS( 83)= 5.93E+00 AMASS( 84)= 4.25E-01 $721
AMASS( 85)= 9.96E-03 AMASS( 86)= 9.96E-03 AMASS( 87)= 9.96E-03 AMASS( 88)= 6.79E-03 AMASS( 89)= 6.79E-03 AMASS( 90)= 6.79E-03 $721
AMASS( 91)= 9.96E-03 AMASS( 92)= 9.96E-03 AMASS( 93)= 9.96E-03 AMASS( 94)= 6.35E+00 AMASS( 95)= 4.25E-01 AMASS( 96)= 5.93E+00 $721
AMASS( 97)= 6.79E-03 AMASS( 98)= 6.79E-03 AMASS( 99)= 6.79E-03 AMASS(100)= 9.96E-03 AMASS(101)= 9.96E-03 AMASS(102)= 9.96E-03 $721

SECONDARY ATTENUATION SYSTEM DATA

INATT    =          0 TC       = 0.        DCM      = 0.        CFM      = 0.        (NO SECONDARY ATTENUATION SYSTEM)        $ 22
THICK(1)= 0.         THICK(2)= 0.         THICK(3)= 0.         THICK(4)= 0.         THICK(5)= 0.         THICK(6)= 0.         $ 23
```

LANDER INITIAL POSITION

INITIAL PAYLOAD C.G. LOCATION				X = 3.674E+01	Y = 0.		Z = 0.	
INITIAL EQUIPMENT C.G. LOCATION				X = 1.635E+01	Y = 0.		Z =-3.672E+01	
INITIAL FOOTPAD C.G. LOCATION				X = 1.725E+01	Y = 0.		Z = 1.125E+01	
INITIAL PAYLOAD VELOCITY				X =-2.799E+02	Y = 0.		Z =-4.710E+00	
INITIAL EQUIPMENT VELOCITY				X =-2.799E+02	Y = 0.		Z =-4.710E+00	
INITIAL FOOTPAD VELOCITY				X =-2.799E+02	Y = 0.		Z =-4.710E+00	
EQUIP. - PAYLOAD STRUT NO	1	2	3	4	5	6		
STRUT LENGTH	2.064E+01	2.064E+01	2.025E+01	2.025E+01	1.534E+01	1.534E+01		
FT.PAD - PAYLOAD STRUT NO.	1	2	3	4	5	6	7	8
STRUT LENGTH	1.150E+01	1.150E+01	1.150E+01	1.150E+01	1.150E+01	1.150E+01	1.150E+01	1.150E+01
STRUT LENGTH	1.150E+01	1.150E+01	1.150E+01	1.150E+01	1.150E+01	1.150E+01	1.150E+01	1.150E+01
STRUT LENGTH	1.150E+01	1.150E+01	4.875E+01	4.875E+01	4.875E+01	4.875E+01	4.875E+01	4.875E+01
STRUT LENGTH	4.875E+01	4.875E+01	4.875E+01	4.875E+01	4.875E+01	4.875E+01		

PAYLOAD ORIENTATION INFORMATION

TIME	X AXIS		Y AXIS		Z AXIS		PSI AXIS		THTA AXIS		PHI AXIS	
	POS.	VEL.	POS.	VEL.	POS.	VEL.	POS.	VEL.	POS.	VEL.	POS.	VEL.
0.000000	3.674E+01	-2.799E+02	0.	0.	0.	-4.710E+00	0.	0.	3.000E+01	0.	0.	0.
.001000	3.646E+01	-2.798E+02	6.623E-11	3.391E-07	-4.638E-03	-4.514E+00	3.293E-09	1.456E-05	3.000E+01	-1.811E+00	1.647E-09	-2.251E-10
.002000	3.619E+01	-2.783E+02	1.623E-09	3.241E-06	-9.018E-03	-4.255E+00	6.592E-08	6.675E-05	3.000E+01	-6.640E+00	3.293E-08	-9.469E-08
.003000	3.591E+01	-2.761E+02	7.604E-09	9.516E-06	-1.298E-02	-3.533E+00	1.121E-07	7.503E-06	2.999E+01	-9.997E+00	5.593E-08	3.514E-08
.004000	3.563E+01	-2.741E+02	2.335E-08	2.463E-05	-1.573E-02	-1.759E+00	-3.780E-07	-8.583E-04	2.998E+01	-8.766E+00	-1.885E-07	2.324E-06
.005000	3.536E+01	-2.719E+02	6.283E-08	5.539E-05	-1.635E-02	4.109E-01	-1.135E-06	-1.826E-04	2.997E+01	-4.715E+00	-5.564E-07	2.167E-05
.006000	3.509E+01	-2.686E+02	1.289E-07	7.149E-05	-1.514E-02	1.950E+00	-1.024E-06	3.217E-04	2.997E+01	-2.788E+00	-4.638E-07	5.493E-05
.007000	3.482E+01	-2.652E+02	1.934E-07	5.149E-05	-1.252E-02	3.284E+00	-4.629E-07	6.299E-04	2.996E+01	-2.511E+00	-1.109E-07	9.063E-05
.008000	3.456E+01	-2.623E+02	2.245E-07	1.052E-05	-8.500E-03	4.821E+00	3.524E-07	7.448E-04	2.996E+01	-4.389E+00	4.001E-07	1.131E-04
.009000	3.430E+01	-2.602E+02	2.223E-07	-7.153E-06	-2.707E-03	6.822E+00	1.174E-06	6.494E-04	2.995E+01	-8.197E+00	9.213E-07	1.053E-04
.010000	3.404E+01	-2.584E+02	2.306E-07	3.488E-05	5.212E-03	9.000E+00	1.804E-06	4.329E-04	2.994E+01	-1.304E+01	1.316E-06	5.259E-05
.011000	3.378E+01	-2.565E+02	3.105E-07	1.311E-04	1.520E-02	1.089E+01	2.176E-06	2.256E-04	2.993E+01	-1.764E+01	1.519E-06	-1.975E-05
.012000	3.353E+01	-2.541E+02	4.962E-07	2.370E-04	2.685E-02	1.232E+01	2.371E-06	1.406E-04	2.991E+01	-2.099E+01	1.562E-06	-8.426E-05
.013000	3.327E+01	-2.513E+02	7.675E-07	2.858E-04	3.981E-02	1.366E+01	3.756E-06	4.576E-03	2.989E+01	-2.336E+01	2.151E-06	-1.056E-04
.014000	3.302E+01	-2.492E+02	9.603E-07	3.488E-05	5.453E-02	1.584E+01	9.944E-06	3.159E-03	2.986E+01	-2.814E+01	5.123E-06	-1.101E-04
.015000	3.278E+01	-2.457E+02	8.086E-07	-2.738E-04	7.131E-02	1.752E+01	8.464E-06	-4.149E-03	2.983E+01	-3.002E+01	4.249E-06	-1.758E-04
.016000	3.253E+01	-2.410E+02	5.366E-07	-2.484E-04	8.946E-02	1.890E+01	7.294E-06	3.964E-03	2.980E+01	-2.950E+01	3.485E-06	-1.648E-04
.017000	3.229E+01	-2.375E+02	3.197E-07	-1.930E-04	1.095E-01	2.134E+01	1.521E-05	6.796E-03	2.977E+01	-3.243E+01	7.220E-06	-2.974E-04
.018000	3.206E+01	-2.336E+02	1.392E-07	-1.605E-04	1.321E-01	2.351E+01	1.779E-05	-2.239E-03	2.974E+01	-3.543E+01	8.025E-06	-6.563E-04
.019000	3.183E+01	-2.290E+02	3.753E-08	-2.153E-05	1.562E-01	2.480E+01	1.533E-05	8.552E-04	2.970E+01	-3.857E+01	6.070E-06	-7.677E-04
.020000	3.160E+01	-2.255E+02	1.095E-07	1.540E-04	1.818E-01	2.623E+01	2.163E-05	8.248E-03	2.966E+01	-4.673E+01	8.414E-06	-8.250E-04
.021000	3.137E+01	-2.217E+02	3.065E-07	2.251E-04	2.084E-01	2.690E+01	2.770E-05	5.042E-04	2.961E+01	-5.194E+01	1.045E-05	-1.148E-03
.022000	3.116E+01	-2.175E+02	5.592E-07	2.908E-04	2.355E-01	2.725E+01	2.511E-05	-2.425E-03	2.956E+01	-5.525E+01	7.913E-06	-1.369E-03
.023000	3.094E+01	-2.136E+02	9.031E-07	3.924E-04	2.631E-01	2.831E+01	2.710E-05	6.253E-03	2.950E+01	-5.959E+01	7.636E-06	-1.164E-03
.024000	3.073E+01	-2.099E+02	1.308E-06	3.948E-04	2.924E-01	3.026E+01	3.535E-05	5.390E-03	2.944E+01	-6.576E+01	1.051E-05	-1.268E-03

EQUIPMENT ORIENTATION INFORMATION

TIME	X AXIS		Y AXIS		Z AXIS		PSI AXIS		THTA AXIS		PHI AXIS	
	POS.	VEL.	POS.	VEL.	POS.	VEL.	POS.	VEL.	POS.	VEL.	POS.	VEL.
0.000000	1.635E+01	-2.799E+02	0.	0.	-3.672E+01	-4.710E+00	0.	0.	3.000E+01	0.	0.	0.
.001000	1.607E+01	-2.799E+02	1.021E-12	7.647E-09	-3.673E+01	-5.210E+00	6.217E-10	3.503E-06	3.000E+01	0.	1.032E-09	4.642E-06
.002000	1.579E+01	-2.794E+02	1.311E-10	4.195E-07	-3.673E+01	-6.992E+00	2.580E-08	3.783E-05	3.000E+01	0.	4.013E-08	4.032E-05
.003000	1.551E+01	-2.773E+02	1.414E-09	2.552E-06	-3.674E+01	-7.625E+00	5.823E-08	3.537E-05	3.000E+01	0.	6.520E-08	-4.070E-07
.004000	1.524E+01	-2.730E+02	6.249E-09	7.577E-06	-3.675E+01	-5.172E+00	-8.236E-08	-3.585E-04	3.000E+01	0.	-2.268E-07	-5.134E-04
.005000	1.497E+01	-2.675E+02	1.834E-08	1.872E-05	-3.675E+01	-1.023E+00	-4.357E-07	-2.861E-04	3.000E+01	0.	-6.723E-07	-1.934E-05
.006000	1.470E+01	-2.622E+02	5.135E-08	5.228E-05	-3.675E+01	1.415E+00	-7.039E-07	-3.029E-04	3.000E+01	0.	-5.304E-07	3.553E-04
.007000	1.444E+01	-2.583E+02	1.324E-07	1.133E-04	-3.675E+01	2.883E+00	-9.148E-07	-1.750E-04	3.000E+01	0.	-8.219E-08	5.079E-04
.008000	1.418E+01	-2.560E+02	2.796E-07	1.786E-04	-3.675E+01	3.634E+00	-8.558E-07	1.425E-04	3.000E+01	0.	5.263E-07	3.731E-04
.009000	1.393E+01	-2.548E+02	4.777E-07	2.086E-04	-3.674E+01	4.063E+00	-3.526E-07	5.595E-04	3.000E+01	0.	1.093E-06	-1.818E-05
.010000	1.368E+01	-2.536E+02	6.764E-07	1.786E-04	-3.674E+01	4.281E+00	6.206E-07	9.156E-04	3.000E+01	0.	1.451E-06	-4.940E-04
.011000	1.342E+01	-2.513E+02	8.197E-07	1.042E-04	-3.673E+01	4.366E+00	1.898E-06	1.055E-03	3.000E+01	0.	1.548E-06	-8.253E-04
.012000	1.317E+01	-2.471E+02	8.874E-07	3.777E-05	-3.673E+01	4.573E+00	3.175E-06	9.022E-04	3.000E+01	0.	1.462E-06	-8.540E-04
.013000	1.293E+01	-2.409E+02	9.176E-07	3.585E-05	-3.672E+01	5.246E+00	4.346E-06	1.946E-03	3.000E+01	0.	1.720E-06	1.349E-03
.014000	1.269E+01	-2.331E+02	9.908E-07	1.211E-04	-3.672E+01	5.873E+00	7.388E-06	1.661E-03	3.000E+01	0.	5.430E-06	2.778E-04
.015000	1.246E+01	-2.249E+02	1.137E-06	1.372E-04	-3.671E+01	7.133E+00	8.276E-06	-5.299E-04	3.000E+01	0.	4.104E-06	-4.062E-03
.016000	1.224E+01	-2.171E+02	1.180E-06	-8.904E-05	-3.671E+01	8.982E+00	9.270E-06	1.972E-03	3.000E+01	0.	2.883E-06	5.304E-04
.017000	1.203E+01	-2.109E+02	9.216E-07	-4.277E-04	-3.670E+01	1.045E+01	1.308E-05	2.840E-03	3.000E+01	0.	7.491E-06	1.860E-03
.018000	1.182E+01	-2.065E+02	3.375E-07	-7.333E-04	-3.668E+01	1.149E+01	1.538E-05	2.168E-04	3.000E+01	0.	8.341E-06	-3.892E-03
.019000	1.162E+01	-2.034E+02	-5.289E-07	-9.837E-04	-3.667E+01	1.153E+01	1.642E-05	1.401E-03	3.000E+01	0.	5.624E-06	-2.466E-03
.020000	1.141E+01	-2.003E+02	-1.563E-06	-1.035E-03	-3.666E+01	9.596E+00	2.049E-05	3.917E-03	3.000E+01	0.	8.492E-06	1.455E-03
.021000	1.121E+01	-1.959E+02	-2.494E-06	-7.875E-04	-3.665E+01	8.270E+00	2.479E-05	1.691E-03	3.000E+01	0.	1.100E-05	-3.500E-03
.022000	1.102E+01	-1.891E+02	-3.105E-06	-4.406E-04	-3.665E+01	7.492E+00	2.660E-05	8.062E-04	3.000E+01	0.	7.613E-06	-5.455E-03
.023000	1.084E+01	-1.801E+02	-3.416E-06	-1.878E-04	-3.664E+01	7.264E+00	2.968E-05	3.181E-03	3.000E+01	0.	7.179E-06	-2.732E-04
.024000	1.066E+01	-1.695E+02	-3.515E-06	-4.240E-05	-3.663E+01	7.183E+00	3.435E-05	2.618E-03	3.000E+01	0.	1.088E-05	-5.903E-04

FOOTPAD ORIENTATION INFORMATION

TIME	X AXIS		Y AXIS		Z AXIS		PSI AXIS		THTA AXIS		PHI AXIS	
	POS.	VEL.	POS.	VEL.	POS.	VEL.	POS.	VEL.	POS.	VEL.	POS.	VEL.
0.000000	1.725E+01	-2.799E+02	0.	0.	1.125E+01	-4.710E+00	0.	0.	3.000E+01	0.	0.	0.
.001000	1.697E+01	-2.744E+02	-3.681E-10	-1.892E-06	1.125E+01	2.899E+00	-3.035E-08	-1.336E-04	2.994E+01	-8.062E+01	-1.508E-08	1.273E-07
.002000	1.670E+01	-2.762E+02	-8.839E-09	-1.784E-05	1.126E+01	5.429E+00	-6.124E-07	-6.582E-04	2.987E+01	-6.117E+01	-3.048E-07	1.428E-06
.003000	1.642E+01	-2.760E+02	-4.065E-08	-5.048E-05	1.127E+01	9.983E+00	-1.166E-06	-2.741E-04	2.980E+01	-7.770E+01	-5.834E-07	-1.279E-05
.004000	1.615E+01	-2.782E+02	-1.276E-07	-1.334E-04	1.128E+01	6.819E+00	2.554E-06	6.641E-03	2.972E+01	-8.176E+01	1.256E-06	7.352E-06
.005000	1.587E+01	-2.790E+02	-3.476E-07	-2.974E-04	1.128E+01	2.164E+00	7.677E-06	-3.989E-05	2.962E+01	-1.079E+02	3.769E-06	-8.768E-05
.006000	1.559E+01	-2.790E+02	-6.879E-07	-3.623E-04	1.128E+01	-1.585E+00	4.554E-06	-4.776E-03	2.951E+01	-1.201E+02	2.045E-06	-2.863E-04
.007000	1.531E+01	-2.755E+02	-9.818E-07	-2.153E-04	1.128E+01	-3.309E+00	-2.298E-06	-6.797E-03	2.938E+01	-1.394E+02	-1.730E-06	-5.109E-04
.008000	1.504E+01	-2.657E+02	-1.048E-06	4.644E-05	1.127E+01	-3.716E+00	-1.007E-05	-6.420E-03	2.923E+01	-1.608E+02	-6.165E-06	-7.372E-04
.009000	1.478E+01	-2.537E+02	-9.013E-07	1.704E-04	1.127E+01	-7.435E+00	-1.645E-05	-4.684E-03	2.907E+01	-1.560E+02	-1.005E-05	-7.845E-04
.010000	1.453E+01	-2.397E+02	-7.885E-07	-2.987E-05	1.126E+01	-1.196E+01	-2.088E-05	-3.329E-03	2.892E+01	-1.464E+02	-1.290E-05	-5.767E-04
.011000	1.430E+01	-2.259E+02	-1.030E-06	-4.978E-04	1.124E+01	-1.530E+01	-2.405E-05	-2.414E-03	2.878E+01	-1.458E+02	-1.497E-05	-5.376E-04
.012000	1.408E+01	-2.132E+02	-1.768E-06	-9.715E-04	1.123E+01	-1.686E+01	-2.690E-05	-2.849E-03	2.862E+01	-1.604E+02	-1.679E-05	-3.467E-04
.013000	1.387E+01	-2.026E+02	-2.818E-06	-1.088E-03	1.121E+01	-1.853E+01	-4.063E-05	-4.104E-02	2.845E+01	-1.778E+02	-2.369E-05	-4.228E-04
.014000	1.367E+01	-1.923E+02	-3.167E-06	4.167E-04	1.119E+01	-2.056E+01	-9.309E-05	-2.392E-02	2.828E+01	-1.756E+02	-4.842E-05	9.026E-04
.015000	1.348E+01	-1.858E+02	-1.863E-06	1.936E-03	1.117E+01	-2.178E+01	-6.947E-05	5.119E-02	2.810E+01	-1.878E+02	-3.671E-05	-2.967E-04
.016000	1.330E+01	-1.833E+02	-8.584E-08	1.695E-03	1.114E+01	-2.368E+01	-3.912E-05	-1.552E-02	2.790E+01	-2.068E+02	-2.416E-05	-2.858E-03
.017000	1.312E+01	-1.807E+02	1.590E-06	1.429E-03	1.112E+01	-2.743E+01	-8.740E-05	-4.464E-02	2.770E+01	-1.935E+02	-4.876E-05	-4.763E-04
.018000	1.294E+01	-1.788E+02	2.894E-06	1.076E-03	1.109E+01	-2.971E+01	-9.382E-05	3.370E-02	2.751E+01	-1.866E+02	-5.051E-05	2.172E-03
.019000	1.276E+01	-1.773E+02	3.454E-06	1.573E-04	1.106E+01	-2.857E+01	-5.500E-05	9.030E-03	2.732E+01	-1.905E+02	-3.139E-05	-1.092E-04
.020000	1.258E+01	-1.752E+02	3.214E-06	-7.214E-04	1.103E+01	-2.526E+01	-9.243E-05	-6.086E-02	2.714E+01	-1.616E+02	-4.896E-05	2.652E-04
.021000	1.241E+01	-1.741E+02	2.344E-06	-1.155E-03	1.101E+01	-1.837E+01	-1.351E-04	1.834E-03	2.698E+01	-1.713E+02	-6.599E-05	4.279E-03
.022000	1.223E+01	-1.739E+02	8.752E-07	-1.679E-03	1.099E+01	-1.098E+01	-1.046E-04	3.044E-02	2.680E+01	-1.929E+02	-4.796E-05	3.214E-03
.023000	1.206E+01	-1.748E+02	-1.056E-06	-2.088E-03	1.098E+01	-6.944E+00	-1.100E-04	-4.489E-02	2.660E+01	-1.904E+02	-4.887E-05	4.285E-04
.024000	1.188E+01	-1.763E+02	-2.933E-06	-1.818E-03	1.098E+01	-5.480E+00	-1.719E-04	-4.123E-02	2.643E+01	-1.616E+02	-7.513E-05	2.752E-03

TIME	SOIL IMPACT AREA	GROUND REACTION FORCE	ACCELERATIONS ON COMPONENT CENTERS OF GRAVITY PAYLOAD X DIR.	PAYLOAD Y DIR.	PAYLOAD Z DIR.	EQUIPMENT ITEM X DIR.	EQUIPMENT ITEM Y DIR.	EQUIPMENT ITEM Z DIR.	FOOTPAD X DIR.	FOOTPAD Y DIR.	FOOTPAD Z DIR.
0.00000	0.	0.	-1.278E+02	1.192E-26	7.380E+01	-1.278E+02	0.	7.380E+01	1.101E+02	-6.714E-26	3.377E+02
.00100	2.61E+01	3.674E+03	5.545E+02	1.324E-03	3.250E+02	9.900E+01	4.819E-05	-1.586E+03	9.599E+02	-7.268E-03	3.951E+03
.00200	2.61E+01	3.537E+03	2.077E+03	4.217E-03	3.434E+02	1.175E+03	1.043E-03	-1.884E+03	-3.479E+03	-2.296E-02	1.181E+03
.00300	7.82E+01	5.553E+03	2.372E+03	8.984E-03	1.155E+03	3.238E+03	3.497E-03	2.962E+02	-1.870E+03	-4.730E-02	-1.589E+02
.00400	7.82E+01	5.166E+03	1.633E+03	2.451E-02	2.305E+03	5.125E+03	6.436E-03	4.517E+03	-2.318E+03	-1.415E-01	-5.612E+03
.00500	1.01E+02	7.072E+03	3.095E+03	3.010E-02	1.718E+03	5.655E+03	1.934E-02	3.102E+03	-2.923E+01	-1.335E-01	-3.708E+03
.00600	1.01E+02	6.930E+03	3.503E+03	-1.405E-03	1.393E+03	4.661E+03	4.882E-02	2.365E+03	5.966E+02	4.619E-02	-3.509E+03
.00700	1.47E+02	1.178E+04	3.160E+03	-3.614E-02	1.329E+03	3.047E+03	6.921E-02	1.425E+03	1.108E+04	2.542E-01	3.479E+03
.00800	1.47E+02	8.692E+03	2.451E+03	-3.740E-02	1.769E+03	1.579E+03	5.416E-02	1.006E+03	1.043E+04	2.348E-01	-2.747E+03
.00900	1.47E+02	8.812E+03	1.889E+03	8.966E-03	2.150E+03	9.571E+02	1.275E-03	7.712E+02	1.332E+04	-2.670E-02	-4.378E+03
.01000	1.47E+02	6.318E+03	1.776E+03	7.410E-02	2.101E+03	1.527E+03	-5.861E-02	6.276E+02	1.073E+04	-3.827E-01	-8.314E+03
.01100	1.99E+02	9.167E+03	2.140E+03	1.106E-01	1.634E+03	3.153E+03	-8.092E-02	5.781E+02	1.360E+04	-5.214E-01	-2.099E+03
.01200	1.99E+02	9.049E+03	2.735E+03	9.107E-02	1.241E+03	5.247E+03	-4.197E-02	9.195E+02	1.163E+04	-3.711E-01	-1.337E+03
.01300	1.99E+02	9.114E+03	2.358E+03	-4.677E-02	1.780E+03	7.061E+03	4.557E-02	1.257E+03	1.003E+04	6.569E-01	-2.518E+03
.01400	2.45E+02	1.079E+04	2.328E+03	-4.117E-01	2.175E+03	8.129E+03	9.550E-02	1.419E+03	9.987E+03	1.937E+00	-1.053E+03
.01500	2.45E+02	9.758E+03	4.641E+03	-5.062E-02	1.159E+03	8.159E+03	-1.014E-01	2.337E+03	3.451E+03	2.001E-02	-1.108E+03
.01600	2.45E+02	9.736E+03	4.196E+03	7.301E-02	1.892E+03	7.036E+03	-3.210E-01	2.502E+03	2.296E+03	-8.844E-02	-3.071E+03
.01700	2.45E+02	1.010E+04	3.282E+03	2.637E-02	2.639E+03	5.251E+03	-3.290E-01	1.918E+03	2.688E+03	-3.513E-01	-3.632E+03
.01800	2.45E+02	9.849E+03	4.628E+03	7.084E-02	1.477E+03	3.586E+03	-2.864E-01	1.670E+03	1.024E+03	-7.839E-01	-5.417E+02
.01900	2.67E+02	1.007E+04	3.903E+03	1.921E-01	1.459E+03	2.800E+03	-1.864E-01	-1.041E+03	2.326E+03	-8.210E-01	2.252E+03
.02000	2.67E+02	9.793E+03	3.576E+03	1.266E-01	1.048E+03	3.482E+03	1.077E-01	-1.175E+03	1.401E+03	-6.039E-01	5.041E+03
.02100	3.12E+02	1.068E+04	3.974E+03	4.128E-02	4.021E+02	5.564E+03	3.455E-01	-1.123E+03	1.937E+03	-6.034E-01	8.607E+03
.02200	3.12E+02	9.670E+03	4.416E+03	9.971E-02	4.119E+02	7.955E+03	3.122E-01	-3.406E+01	-9.565E+02	-5.002E-01	5.955E+03
.02300	3.64E+02	1.125E+04	3.288E+03	7.205E-02	1.880E+03	9.947E+03	1.981E-01	-1.174E+03	1.470E+02	1.017E-01	3.485E+03
.02400	3.64E+02	1.036E+04	4.552E+03	-6.282E-02	1.609E+03	1.100E+04	7.987E-02	1.222E+03	-2.990E+03	3.281E-01	7.812E+02

ANGULAR ACCELERATIONS ABOUT LANDER AXES

TIME	PAYLOAD PSI	PAYLOAD THETA	PAYLOAD PHI	EQUIPMENT ITEM PSI	EQUIPMENT ITEM THETA	EQUIPMENT ITEM PHI	FOOTPAD PSI	FOOTPAD THETA	FOOTPAD PHI
0.00000	9.906E-23	1.276E-06	-1.492E-26	0.	0.	0.	-1.577E-05	-4.393E+03	4.706E-06
.00100	5.660E-02	-4.134E+03	-4.695E-06	1.790E-02	0.	2.356E-02	-5.180E-01	-2.258E+03	4.366E-05
.00200	-4.016E-02	-4.764E+03	-1.837E-04	-3.133E-02	0.	-7.252E-02	2.237E-01	2.850E+04	3.818E-03
.00300	-7.365E-02	-1.748E+03	7.720E-04	-3.525E-02	0.	-8.764E-02	4.369E-01	6.378E+03	-2.063E-02
.00400	-3.172E-01	4.071E+03	8.574E-03	-3.532E-02	0.	1.553E-01	1.903E+00	-1.708E+04	-1.519E-04
.00500	1.204E+00	2.490E+03	2.861E-02	3.767E-01	0.	1.021E+00	-1.108E+01	-1.849E+04	-1.901E-01
.00600	3.854E-01	1.261E+03	3.634E-02	4.183E-01	0.	8.170E-01	-3.234E+00	-1.008E+04	-2.287E-01
.00700	2.282E-01	-8.251E+02	3.267E-02	6.027E-01	0.	5.413E-01	-7.797E-01	-5.899E+04	-2.133E-01
.00800	9.447E-04	-2.976E+03	8.388E-03	7.245E-01	0.	1.852E-01	1.342E+00	-2.172E+03	-1.622E-01
.00900	-1.766E-01	-4.572E+03	-3.153E-02	7.087E-01	0.	-6.082E-02	1.817E+00	8.899E+03	7.436E-02
.01000	-2.337E-01	-4.965E+03	-6.541E-02	5.160E-01	0.	-9.437E-02	4.862E-01	3.953E+04	4.040E-01
.01100	-1.614E-01	-4.151E+03	-7.350E-02	1.921E-01	0.	7.755E-02	2.122E-01	-8.915E+03	1.184E-01
.01200	6.715E-04	-2.603E+03	-5.157E-02	-1.469E-01	0.	3.474E-01	-5.723E-01	-1.970E+04	1.834E-01
.01300	7.590E+00	-3.729E+03	-2.540E-03	6.456E+00	0.	9.560E+00	-6.478E+01	-1.965E+03	5.252E-01
.01400	-9.274E+00	-4.493E+03	-2.763E-02	9.797E-01	0.	-3.881E-01	9.067E+01	-2.948E+03	7.508E-01
.01500	-4.372E-01	5.039E+02	-1.216E-01	3.297E+00	0.	4.528E+00	1.144E+01	-2.464E+04	-2.325E+00
.01600	1.051E+01	-9.660E+02	3.141E-02	6.149E+00	0.	1.005E+01	-9.303E+01	-3.247E+03	-6.939E-01
.01700	-6.366E+00	-4.160E+03	-3.166E-01	9.213E-01	0.	-2.037E-01	5.098E+01	2.055E+04	4.299E+00
.01800	-5.967E+00	-1.525E+03	-2.862E-01	9.596E-01	0.	-3.496E-01	5.526E+01	-1.064E+04	-2.310E-01
.01900	1.029E+01	-7.072E+03	8.370E-03	5.743E+00	0.	8.810E+00	-9.087E+01	2.399E+04	-2.532E+00
.02000	-1.910E-01	-6.759E+03	-2.017E-01	2.228E+00	0.	2.303E+00	-6.240E+00	1.070E+04	3.578E+00
.02100	-9.415E+00	-4.429E+03	-3.340E-01	-1.445E+00	0.	-4.091E+00	8.233E+01	-2.435E+04	2.110E+00
.02200	5.245E+00	-2.183E+03	2.217E-02	2.373E+00	0.	4.307E+00	-4.201E+01	-2.191E+04	-3.598E+00
.02300	7.181E+00	-7.818E+03	1.098E-01	2.416E+00	0.	5.100E+00	-6.751E+01	2.809E+04	1.860E-01
.02400	-8.374E+00	-1.512E+03	-1.222E-01	-2.648E+00	0.	-4.467E+00	7.432E+01	-2.247E+03	2.513E+00

TIME HISTORIES OF GENERALIZED COORDINATES

TIME	MODE (1)	MODE (2)	MODE (3)	MODE (4)	MODE (5)
0.000000	0.	0.	0.	0.	0.
.001000	1.579E-07	2.710E-02	1.011E-02	-1.386E-02	7.323E-08
.002000	6.405E-07	7.403E-02	2.818E-02	-4.047E-02	4.468E-07
.003000	1.921E-06	1.371E-01	5.102E-02	-7.805E-02	1.035E-06
.004000	2.436E-06	2.084E-01	7.823E-02	-1.212E-01	1.765E-06
.005000	2.394E-06	2.708E-01	1.117E-01	-1.578E-01	2.551E-06
.006000	3.759E-06	3.322E-01	1.454E-01	-1.933E-01	3.594E-06
.007000	6.111E-06	3.944E-01	1.731E-01	-2.289E-01	4.902E-06
.008000	1.009E-05	4.634E-01	1.972E-01	-2.652E-01	6.505E-06
.009000	1.617E-05	5.312E-01	2.172E-01	-2.968E-01	8.377E-06
.010000	2.357E-05	5.942E-01	2.338E-01	-3.211E-01	1.004E-05
.011000	3.077E-05	6.493E-01	2.462E-01	-3.350E-01	1.113E-05
.012000	3.660E-05	6.968E-01	2.534E-01	-3.369E-01	1.157E-05
.013000	3.882E-05	7.369E-01	2.527E-01	-3.269E-01	1.118E-05
.014000	3.186E-05	7.644E-01	2.494E-01	-3.157E-01	8.735E-06
.015000	3.917E-05	7.802E-01	2.482E-01	-3.110E-01	5.302E-06
.016000	4.420E-05	7.959E-01	2.389E-01	-3.035E-01	3.961E-06
.017000	3.509E-05	8.096E-01	2.259E-01	-2.984E-01	3.122E-06
.018000	4.038E-05	8.175E-01	2.161E-01	-3.030E-01	3.261E-06
.019000	5.558E-05	8.316E-01	2.034E-01	-3.054E-01	7.370E-06
.020000	5.389E-05	8.669E-01	1.911E-01	-2.965E-01	1.241E-05
.021000	5.441E-05	9.027E-01	1.826E-01	-2.901E-01	1.563E-05
.022000	7.182E-05	9.243E-01	1.759E-01	-2.941E-01	2.001E-05
.023000	7.933E-05	9.345E-01	1.693E-01	-3.026E-01	2.528E-05
.024000	7.655E-05	9.593E-01	1.713E-01	-2.993E-01	2.741E-05

SUMMARY PAGE

SERIES NO. 8 RUN NO. 1 INITIAL CONDITIONS -- LINEAR X VEL.=-279.85 Y VEL.= 0.00 Z VEL.= -4.71
ANGULAR WX VEL.= 0.00 WY VEL.= 0.00 WZ VEL.= 0.00

GROUND SLOPE = 30.000

TOTAL RUN TIME = .025 SEC. STOPPED BECAUSE OF MAX. TIME

PEAK STRUT FORCES

EQUIPMENT STRUTS									
TENSION	-9.281E+02	-9.281E+02	-9.460E+02	-9.461E+02	0.	0.			
COMPRESSION	9.142E+00	9.142E+00	9.319E+00	9.319E+00	1.808E+03	1.808E+03			
ATTENUATOR STRUTS									
TENSION	-1.248E+03	-7.728E+02	-4.870E+01	-5.521E+01	-4.870E+01	-7.727E+02	-1.248E+03	0.	0.
TENSION	0.	0.	0.	-3.283E+03	-3.642E+03	-3.288E+03	-1.338E+03	0.	-1.337E+03
TENSION	-3.515E+03	0.	0.	0.	0.	-3.515E+03	-2.527E+03	0.	0.
TENSION	-2.527E+03	-6.249E+02	-6.247E+02						
COMPRESSION	1.462E+03	1.462E+03	1.206E+03	1.052E+03	1.207E+03	1.462E+03	1.462E+03	1.462E+03	1.462E+03
COMPRESSION	1.462E+03	1.462E+03	1.462E+03	5.740E-01	1.000E+00	5.741E-01	1.000E+00	1.000E+00	1.000E+00
COMPRESSION	2.274E-12	1.000E+00	1.000E+00	1.000E+00	1.000E+00	2.274E-12	2.274E-12	1.000E+00	1.000E+00
COMPRESSION	2.274E-12	3.679E-01	3.678E-01						

MAXIMUM STRUT STROKES

EQUIPMENT STRUTS									
TENSION	2.320E-03	2.320E-03	2.365E-03	2.365E-03	0.	0.			
COMPRESSION	2.286E-05	2.286E-05	2.330E-05	2.330E-05	4.520E-03	4.520E-03			
ATTENUATOR STRUTS									
TENSION	8.535E-02	5.286E-02	3.331E-03	3.776E-03	3.331E-03	5.285E-02	8.537E-02	0.	0.
TENSION	0.	0.	0.	3.020E-02	2.265E-02	3.025E-02	1.230E-02	0.	1.230E-02
TENSION	7.030E-02	0.	0.	0.	0.	7.030E-02	5.054E-02	0.	0.
TENSION	5.054E-02	1.250E-02	1.249E-02						
COMPRESSION	5.289E-01	1.569E-01	8.249E-02	7.198E-02	8.253E-02	1.569E-01	5.287E-01	1.464E+00	2.666E+00
COMPRESSION	3.240E+00	2.667E+00	1.465E+00	5.740E-02	1.109E-01	5.741E-02	1.397E+00	4.241E+00	1.397E+00
COMPRESSION	2.274E-13	4.251E-01	3.246E-01	3.246E-01	4.252E-01	2.274E-13	2.274E-13	8.281E-01	8.281E-01
COMPRESSION	2.274E-13	3.679E-02	3.678E-02						

MAXIMUM ACCELERATIONS	C.G.	1	2	3	4	5	6
EQUIPMENT							
X DIR.	9.96990E+03	0.	0.	0.	0.	0.	0.
Y DIR.	3.57792E-01	0.	0.	0.	0.	0.	0.
Z DIR.	9.37338E+03	0.	0.	0.	0.	0.	0.
PAYLOAD							
X DIR.	4.06105E+03	0.	0.	0.	0.	0.	0.
Y DIR.	-4.19231E-01	0.	0.	0.	0.	0.	0.
Z DIR.	3.92670E+03	0.	0.	0.	0.	0.	0.
FOOTPAD							
X DIR.	1.36023E+04	0.	0.	0.	0.	0.	0.
Y DIR.	1.93725E+00	0.	0.	0.	0.	0.	0.
Z DIR.	8.60706E+03	0.	0.	0.	0.	0.	0.

MAXIMUM FOOTPAD CONTACT AREA = 4.10229E-02

CASE 1 RAN FROM 9.012 TO 129.777 FOR A TOTAL OF 120.765 SEC.

APPENDIX F

PROGRAM LISTING

STRUCTURAL ANALYSIS PROGRAM

APPENDIX F

```
      OVERLAY ( SASLP, 0, 0 )
      PROGRAM MAIN (INPUT,OUTPUT,TAPE5=INPUT,TAPE6=OUTPUT,TAPE1,TAPE2,
     1     TAPE3,TAPE4,TAPE7,TAPE8,TAPE9)
      COMMON / LDATA /  KS(74), RKN(74), RKT(74)
      COMMON COM(30)
      EQUIVALENCE ( COM( 17), INDRKT )
      EQUIVALENCE ( COM( 24), INDNMA )
      COMMON / CMAIN / COMAIN(13560)
C
C         DATA AND VARIABLE SET-UP
C
      CALL SECOND (TIME0)
      CALL OVERLAY (5LSASLP,1,0,6HRECALL)
      CALL SECOND (TIME1)
C
C         LOCAL STIFFNESS AND TRANSFORMATION MATRICES AND STRUCTURAL
C               STIFFNESS MATRIX GENERATION
C
      IF (INDRKT.EQ.0) CALL OVERLAY (5LSASLP,2,0,6HRECALL)
      CALL SECOND (TIME2)
C     ***************************************************
C     *  OVERLAYS THREE AND FOUR ARE MUTUALLY EXCLUSIVE  *
C     ***************************************************
      IF (INDNMA.NE.0) GO TO 10
C
C         DISPLACEMENT, ROTATION, FORCE, AND MOMENT SOLUTION
C
      CALL OVERLAY (5LSASLP,3,0,6HRECALL)
      CALL SECOND (TIME3)
      GO TO 20
C
C         NORMAL MODE ANALYSIS SECTION
C
10    CALL OVERLAY (5LSASLP,4,0,6HRECALL)
      CALL SECOND (TIME4)
20    CONTINUE
      T01=TIME1-TIME0
      T12=TIME2-TIME1
      WRITE (6,40) TIME0,TIME1,T01,TIME1,TIME2,T12
      IF (INDNMA.EQ.0) GO TO 30
      T23OR4=TIME4-TIME2
      WRITE (6,50) TIME2,TIME4,T23OR4
      RETURN
30    CONTINUE
      T23OR4=TIME3-TIME2
      WRITE (6,60) TIME2,TIME3,T23OR4
      RETURN
C
40    FORMAT (1H138X,26HCPU TIME USAGE TABLE (SEC)///63X32H TIME IN
     1TIME OUT       TOTAL,/33H INPUT AND INITIALIZATION OVERLAY,26X2(2XF
     210.3),1XF10.2/47HOSTRUCTURAL STIFFNESS MATRIX GENERATION OVERLAY,1
     34XF10.3,2XF10.3,1XF10.2/)
50    FORMAT (29HONORMAL MODE ANALYSIS OVERLAY,32XF10.3,2XF10.3,1XF10.2)
60    FORMAT (59HODISPLACEMENT, ROTATION, FORCE, AND MOMENT SOLUTION OVE
     1RLAY,2XF10.3,2XF10.3,1XF10.2//)
      END
```

APPENDIX F

```
      SUBROUTINE ERPNT1 (ALPHA,LNGTH,ICODE)                              ERP  10
C        PRINT ERROR MESSAGES                                            ERP  20
C              ICODE = 0,  NON-FATAL ERROR, CONTINUE                     ERP  30
C              ICODE = 1,  FATAL ERROR, STOP                             ERP  40
C              ICODE =-1,  FATAL ERROR, SET FATAL ERROR INDICATOR AND    ERP  50
C                                                          CONTINUE     ERP  60
      DATA IFATAL / 0 /                                                  ERP  70
      DIMENSION ALPHA(10)                                                ERP  80
      WRITE (6,40) (ALPHA(I),I=1,LNGTH)                                  ERP  90
      IF (ICODE) 10,30,20                                                ERP 100
10    IFATAL=1                                                           ERP 110
      GO TO 30                                                           ERP 120
20    STOP                                                               ERP 130
30    RETURN                                                             ERP 140
C        CHECH ENTRY FOR FATAL INDICATOR CHECK                           ERP 150
      ENTRY ERPNT2                                                       ERP 160
      IF (IFATAL.EQ.1) STOP                                              ERP 170
      RETURN                                                             ERP 180
C                                                                        ERP 190
40    FORMAT (20H ***ERROR***          ,10A10)                           ERP 200
      END                                                                ERP 210-
```

APPENDIX F

```
      SUBROUTINE WRSTRK (IROW,JCOL,STFNZ)
C
C         IROW = ROW NO.       JCOL = COLUMN NO.
C         STFNZ  = VARIABLE
C
      DIMENSION JCOLD(6),  STFNZD(6), COL(6)
      DATA LINET / 59 /
      DATA ICOUNT , INDLIN, INDRNS, IRSAVE, COL / 0, 1, 0, 1, 6*4HCOL. /
C
C              THE NON  ZERO ELEMENTS OF THE STRUCTURAL STIFFNESS
C         MATRIX ARE PASSED ONE AT A TIME AND PRINTED BY ROWS SIX
C         VALUES PER LINE
      IF (IRSAVE.EQ.IROW) GO TO 10
C
C         IF NEW ROW, PRINT ANY VARIABLES OF THE LAST ROW BEING HELD IN
C                                   A LINE AND START A NEW LINE
      INDRNS=1
      GO TO 20
10    IF (ICOUNT.NE.6) GO TO 40
C
C         IF SIX VARIABLES HAVE BEEN STORED IN A LINE, PRINT IT AND
C                                   START A NEW LINE.
20    CONTINUE
      IF (INDLIN.NE.1) GO TO 50
      WRITE (6,80) IRSAVE,(COL(I),JCOLD(I),STFNZD(I),I=1,ICOUNT)
      LINET=LINET+2
      INDLIN=2
30    ICOUNT=0
      IF (INDRNS.EQ.0) GO TO 40
      INDRNS=0
      INDLIN=1
      IRSAVE=IROW
40    ICOUNT=ICOUNT+1
      JCOLD(ICOUNT)=JCOL
      STFNZD(ICOUNT)=STFNZ
      IF (LINET.GT.56) GO TO 60
      RETURN
50    WRITE (6,90) (COL(I),JCOLD(I),STFNZD(I),I=1,ICOUNT)
      LINET=LINET+1
      GO TO 30
60    IF (IROW.LT.0) RETURN
      WRITE (6,70)
      LINET=3
      RETURN
C
C         FORMAT 100 IS USED TO PRINT THE FIRST LINE FOR EACH ROW
C         FORMAT 200 IS USED FOR ALL OTHER LINES ( INDLIN .NE. 1)
C
C
70    FORMAT (28H1STRUCTURAL STIFFNESS MATRIX//)
80    FORMAT (5HOROW I3,6(1XA4,I4,1H=E10.3))
90    FORMAT (8X,6(1XA4,I4,1H=E10.3))
      END
```

APPENDIX F

```
      OVERLAY ( SASLP, 1, 0 )
      PROGRAM INITAL                                                    INI  10
C                                                                       INI  20
C         READ DATA CARDS AND SORT INTO PROPER ORDER                    INI  30
C                                                                       INI  40
      CALL DATSET                                                       INI  50
C                                                                       INI  60
C         READ VARIABLE INPUT VALUES ARRANGED BY (DATSET)               INI  70
C                                                                       INI  80
      CALL RDDATA                                                       INI  90
      RETURN                                                            INI 100
      END                                                               INI 110-
```

APPENDIX F

```
      SUBROUTINE DATSET                                                 DAT  10
      DIMENSION CARD(8), IDATA(7)                                       DAT  20
      COMMON COM(30)                                                    DAT  30
      EQUIVALENCE ( COM( 1), NJOINT )                                   DAT  40
      EQUIVALENCE ( COM( 2), NFORCE )                                   DAT  50
      EQUIVALENCE ( COM( 3), NMOMNT )                                   DAT  60
      EQUIVALENCE ( COM( 4), NBAR   )                                   DAT  70
      EQUIVALENCE ( COM( 5), NJPNT  )                                   DAT  80
      EQUIVALENCE ( COM(20), NLIMIT )                                   DAT  90
      DIMENSION ERL(5)                                                  DAT 100
      DIMENSION ERJ( 5), ERF( 5), ERM( 5), ERB( 5)                      DAT 110
      DATA ERL / 10H THE LIMIT, 10HS  ARE NOT, 10H NUMBERED ,           DAT 120
     1           10HSEQUENTIAL, 10HLY        /                         DAT 130
      DATA ERJ / 10H THE NODAL, 10H POINTS AR, 10HE NOT NUMB,           DAT 140
     1           10HERED SEQUE,  10HNTIALLY       /                    DAT 150
      DATA ERF / 10H THE FORCE, 10H VECTORS A, 10HRE NOT NUM,           DAT 160
     1            10HBERED SEQU, 10HENTIALLY  /                        DAT 170
      DATA ERM / 10H THE MOMEN, 10HT VECTORS , 10HARE NOT NU,           DAT 180
     1           10HMBERED SEQ, 10HUENTIALLY /                         DAT 190
      DATA ERB / 10H THE BAR D, 10HEFINITIONS, 10H ARE NOT N,           DAT 200
     1           10HUMBERED SE, 10HQUENTIALLY/                         DAT 210
      WRITE (6,190)                                                     DAT 220
      NJOINT=0                                                          DAT 230
      NLIMIT=0                                                          DAT 240
      NFORCE=0                                                          DAT 250
      NMOMNT=0                                                          DAT 260
      NBAR=0                                                            DAT 270
      NJPNT=0                                                           DAT 280
      REWIND 1                                                          DAT 290
      REWIND 2                                                          DAT 300
      REWIND 3                                                          DAT 310
      REWIND 4                                                          DAT 320
      REWIND 7                                                          DAT 330
      REWIND 8                                                          DAT 340
10    READ (5,200) CARD                                                 DAT 350
      WRITE (6,230) CARD                                                DAT 360
C                                                                       DAT 370
C         CONVERT CODE TO INTEGER                                       DAT 380
C                                                                       DAT 390
      DECODE (1,210,CARD(1) )ICODE                                      DAT 400
C                                                                       DAT 410
C         ANY CODE NO. .GT. 6 IS CONSIDERED AN END OF RECORD            DAT 420
      IF (ICODE.GT.6) GO TO 110                                         DAT 430
C                                                                       DAT 440
C         IF COLUMN ONE IS BLANK OR ZERO CONSIDER IT A COMMENT          DAT 450
      IF (ICODE.EQ.0) GO TO 10                                          DAT 460
C                                                                       DAT 470
      GO TO (20,40,50,60,70,80), ICODE                                  DAT 480
20    NJOINT=NJOINT+1                                                   DAT 490
30    ITAPE=1                                                           DAT 500
      GO TO 100                                                         DAT 510
40    NJPNT=NJPNT+1                                                     DAT 520
      GO TO 30                                                          DAT 530
50    NLIMIT=NLIMIT+1                                                   DAT 540
      GO TO 90                                                          DAT 550
60    NFORCE=NFORCE+1                                                   DAT 560
```

```
      GO TO 90                                                          DAT 570
70    NMOMNT=NMOMNT+1                                                   DAT 580
      GO TO 90                                                          DAT 590
80    NBAR=NBAR+1                                                       DAT 600
      ITAPE=7                                                           DAT 610
      GO TO 100                                                         DAT 620
90    ITAPE=ICODE-1                                                     DAT 630
C                                                                       DAT 640
C         WRITE RECORD ON SCRATCH FILES                                 DAT 650
C                                                                       DAT 660
100   WRITE (ITAPE,200) CARD                                            DAT 670
C                                                                       DAT 680
      GO TO 10                                                          DAT 690
110   NJPNT=NJOINT+NJPNT                                                DAT 700
      END FILE 1                                                        DAT 710
      END FILE 2                                                        DAT 720
      END FILE 3                                                        DAT 730
      END FILE 4                                                        DAT 740
      END FILE 7                                                        DAT 750
C                                                                       DAT 760
C         SORT SCRATCH DATA FILES AND WRITE DATA FILE (TAPE8)           DAT 770
C                                                                       DAT 780
      DO 160 I=1,5                                                      DAT 790
      IF (I.GT.4) I=7                                                   DAT 800
      IDATA(I)=0                                                        DAT 810
      NOCNT=1                                                           DAT 820
120   IRCHG=0                                                           DAT 830
      REWIND I                                                          DAT 840
130   READ (I,200) CARD                                                 DAT 850
      IF (EOF,I) 140,150                                                DAT 860
140   IF (IRCHG.NE.0) GO TO 120                                         DAT 870
      GO TO 160                                                         DAT 880
150   DECODE (5,220,CARD(1) )NO                                         DAT 890
      IF (NO.NE.NOCNT) GO TO 130                                        DAT 900
      NOCNT=NOCNT+1                                                     DAT 910
      IRCHG=1                                                           DAT 920
      WRITE (8,200) CARD                                                DAT 930
      IDATA(I)=IDATA(I)+1                                               DAT 940
      GO TO 130                                                         DAT 950
160   CONTINUE                                                          DAT 960
      END FILE 8                                                        DAT 970
      REWIND 8                                                          DAT 980
170   READ (8,200) CARD                                                 DAT 990
      IF (EOF,8) 180,170                                                DAT1000
180   REWIND 8                                                          DAT1010
      IF (IDATA(1).NE.NJPNT) CALL ERPNT1 (ERJ,5,-1)                     DAT1020
      IF (IDATA(2).NE.NLIMIT) CALL ERPNT1 (ERL,5,-1)                    DAT1030
      IF (IDATA(3).NE.NFORCE) CALL ERPNT1 (ERF,5,-1)                    DAT1040
      IF (IDATA(4).NE.NMOMNT) CALL ERPNT1 (ERM,5,-1)                    DAT1050
      IF (IDATA(7).NE.NBAR) CALL ERPNT1 (ERB,5,-1)                      DAT1060
C                                                                       DAT1070
C         IF A FATAL ERROR AS OCCURED, STOP                             DAT1080
C                                                                       DAT1090
      CALL ERPNT2                                                       DAT1100
C                                                                       DAT1110
      RETURN                                                            DAT1120
```

APPENDIX F

```
C                                                                       DAT1130
190   FORMAT (1H1,36X52H        STRUCTURAL ANALYSIS PROGRAM - PLATFORM LADAT1140
     1NDER/37X59HMASTER AGREEMENT, CONTRACT NAS1-8137, TASK ORDER NUMBERDAT1150
     2 TWO/37X57H MCDONNELL DOUGLAS ASTRONAUTICS COMPANY, EASTERN DIVISIDAT1160
     3ON///37H STRUCTURAL ANALYSIS DATA - CARD CODE,//28X27HBLANK - 0   DAT1170
     4       COMMENTS ,/32X1H1,13X,23HNODAL POINT DEFINITIONS,/32X1H2,13XDAT1180
     5,16HREFERENCE POINTS,/32X1H3,13X,33HNODAL POINT RESTRAINT DEFINITIDAT1190
     6ONS,/32X1H4,13X,13HFORCE VECTORS,/32X1H5,13X,15HMOMENT VECTORS ,/3DAT1200
     72X1H6,13X,15HBAR DEFINITIONS,/32X1H7,13X,24HFORMATED-DATA TERMINATDAT1210
     8OR,/)                                                             DAT1220
200   FORMAT (8A10)                                                     DAT1230
210   FORMAT (I1)                                                       DAT1240
220   FORMAT (1XI4)                                                     DAT1250
230   FORMAT (1X8A10)                                                   DAT1260
      END                                                               DAT1270-
```

APPENDIX F

```
      SUBROUTINE RDDATA                                                 RDD  10
      COMMON / LDATA /  KS(74), RKN(74), RKT(74)                        RDD  20
      COMMON   NJOINT, NFORCE, NMOMNT, NBAR  , NJPNT , ITINJO, IBAR     RDD  30
     1       , NROW  , INDSFL, INDSFG, IND1SL, INDITR, ERRTOL, RELAXF   RDD  40
     2       , INDRLX, INDWKT, INDRKT, INDPLS, MINRST, NLIMIT, NRWTOR   RDD  50
     3       , IREDTO, NEIGVL, INDNMA, INDWNM, TMAX                     RDD  60
      DIMENSION RJXYZ(100,3), IJRFM(74,6), IJALFM(74,2), FRCVCT(74,3),  RDD  70
     1 RMTVCT(74,3), IBARP(1), IBARQ(1), IBARR(1), BAREA(1), BARIN(1),  RDD  80
     2 BARIT(1), BARJ(1), BARYM(1), BARSM(1), STIFML(12,12),            RDD  90
     3 TRANSM(3,3), STRSTF(1), IROWL(1), SOLVEC(444), RLIMTU(88),       RDD 100
     4 RLIMTL(1), DPRTIT(1), AMASS(102), IRWKP(103)                     RDD 110
      COMMON / CMAIN / COMAIN(1)                                        RDD 120
      EQUIVALENCE ( COMAIN(  1 ), RJXYZ  )                              RDD 130
      EQUIVALENCE ( COMAIN( 301), IJRFM  )                              RDD 140
      EQUIVALENCE ( COMAIN( 745), IJALFM )                              RDD 150
      EQUIVALENCE ( COMAIN( 893), FRCVCT )                              RDD 160
      EQUIVALENCE ( COMAIN(1115), RMTVCT )                              RDD 170
      EQUIVALENCE ( COMAIN(1337), IBARP  )                              RDD 180
      EQUIVALENCE ( COMAIN(1411), IBARQ  )                              RDD 190
      EQUIVALENCE ( COMAIN(1485), IBARR  )                              RDD 200
      EQUIVALENCE ( COMAIN(1559), BAREA , STIFML )                      RDD 210
      EQUIVALENCE ( COMAIN(1633), BARIN  )                              RDD 220
      EQUIVALENCE ( COMAIN(1707), BARIT , TRANSM )                      RDD 230
      EQUIVALENCE ( COMAIN(1781), BARJ   )                              RDD 240
      EQUIVALENCE ( COMAIN(1855), BARYM  )                              RDD 250
      EQUIVALENCE ( COMAIN(1929), BARSM  )                              RDD 260
      EQUIVALENCE ( COMAIN(2003), SOLVEC )                              RDD 270
      EQUIVALENCE ( COMAIN(2447), RLIMTU, AMASS  )                      RDD 280
      EQUIVALENCE ( COMAIN(2535), RLIMTL )                              RDD 290
      EQUIVALENCE ( COMAIN(2549),         IRWKP  )                      RDD 300
      EQUIVALENCE ( COMAIN(2623), DPRTIT )                              RDD 310
      EQUIVALENCE ( COMAIN(2711), IROWL  )                              RDD 320
      EQUIVALENCE ( COMAIN(3156), STRSTF )                              RDD 330
      DIMENSION ERORD(4), ERRWKP(5)                                     RDD 340
      DIMENSION ERLT(5)                                                 RDD 350
      DIMENSION ERRED(4)                                                RDD 360
      DIMENSION ERFROW(5)                                               RDD 370
      DIMENSION ERLN(5)                                                 RDD 380
      DIMENSION ERPQ(4)                                                 RDD 390
      DIMENSION ERBN(4), ERJNL(4)                                       RDD 400
      DIMENSION ERJN( 5), ERJR( 7), ERFR( 6), ERMT(6)                   RDD 410
      DATA ERRED / 40H IREDTO CAN NOT BE GREATER THAN NROW       /      RDD 420
      DATA ERORD /40H IREDTO CAN NOT BE LARGER THAN 102       /         RDD 430
      DATA ERRWKP/50H THE IRWKP ARRAY IS NOT FILLED IN ASCENDING ORDER /RDD 440
      DATA ERPQ / 35H A ZERO LENGTH BAR IS NOT PERMITTED   /            RDD 450
      DATA ERBN/ 10H THERE MUS, 10HT BE AT LE, 10HAST ONE BA,           RDD 460
     1           10HR          /                                        RDD 470
      DATA ERJNL/10H THERE MUS, 10HT BE AT LE, 10HAST TWO NO,           RDD 480
     1           10HDAL POINTS/                                         RDD 490
      DATA ERLN /50H A RESTRAINT INDICATOR IS OUT OF BOUNDS            /RDD 500
      DATA ERFROW /45H INPUT DATA DISAGREES WITH MATRICES ON TAPE9     /RDD 510
      DATA ERLT /50H LOWER REACTION LIMIT CONFLICTS WITH UPPER LIMIT   /RDD 520
      DATA ERJN /10H A BAR DEF,10HINITION US,10HES AN UNDE,10HFINED NODARDD 530
     1          ,10HL  POINT  /                                         RDD 540
      DATA ERJR /10H A BAR DEF,10HINITION US,10HES AN UNDE,10HFINED POINRDD 550
     1          ,10HT TO DEFIN,10HE THE BEND,10HING PLANES /            RDD 560
```

APPENDIX F

```
      DATA ERFR /10H A NODAL P,10HOINT IS AS,10HSOCIATED W,10HITH AN UNDRDD 570
     1          ,10HEFINED FOR,10HCE VECTOR /                            RDD 580
      DATA ERMT /10H A NODAL P,10HOINT IS AS,10HSOCIATED W,10HITH AN UNDRDD 590
     1          ,10HEFINED MOM,10HENT VECTOR/                            RDD 600
      NAMELIST / INDATA / INDSFL, INDSFG, IND1SL, INDITR, ERRTOL,SOLVEC RDD 610
     1       , RELAXF, INDRLX                                           RDD 620
     2   , INDRKT, INDWKT, INDPLS, MINRST                               RDD 630
     3   , INDNMA, IRWKP, AMASS, IREDTO, INDWNM, TMAX                   RDD 640
C         READ  CODE 1  DATA                                            RDD 650
      READ (8,140) ((RJXYZ(INDX,J),J=1,3),(IJRFM(INDX,J),J=1,6),(IJALFM(RDD 660
     1INDX,J),J=1,2),INDX=1,NJOINT)                                     RDD 670
C                                                                        RDD 680
      IF (NJPNT.EQ.NJOINT) GO TO 10                                      RDD 690
C                                                                        RDD 700
C         READ  CODE 2  DATA                                            RDD 710
      NJ1=NJOINT+1                                                       RDD 720
      READ (8,150) ((RJXYZ(INDX,J),J=1,3),INDX=NJ1,NJPNT)                RDD 730
10    CONTINUE                                                           RDD 740
C                                                                        RDD 750
C         READ  CODE 3  DATA                                            RDD 760
C                                                                        RDD 770
      IF (NLIMIT.EQ.0) GO TO 30                                          RDD 780
      DO 20 I=1,NLIMIT                                                   RDD 790
      READ (8,150) RLIMTU(I),RLIMTL(I),DPRTIT(I)                         RDD 800
20    CONTINUE                                                           RDD 810
30    CONTINUE                                                           RDD 820
C                                                                        RDD 830
C         READ  CODE 4  DATA                                            RDD 840
      IF (NFORCE.EQ.0) GO TO 40                                          RDD 850
      READ (8,150) ((FRCVCT(INDX,J),J=1,3),INDX=1,NFORCE)                RDD 860
C                                                                        RDD 870
40    IF (NMOMNT.EQ.0) GO TO 50                                          RDD 880
C                                                                        RDD 890
C         READ CODE 5 DATA                                              RDD 900
      READ (8,150) ((RMTVCT(INDX,J),J=1,3),INDX=1,NMOMNT)                RDD 910
C                                                                        RDD 920
C         READ CODE 6 DATA                                              RDD 930
50    READ (8,150) (IBARP(INDX),IBARQ(INDX),IBARR(INDX),KS(INDX),BAREA(IRDD 940
     1NDX),BARIN(INDX),BARIT(INDX),BARJ(INDX),BARYM(INDX),BARSM(INDX),RKRDD 950
     2N(INDX),EKT(INDX),INDX=1,NBAR)                                     RDD 960
C                                                                        RDD 970
C         CHECK BAR DEFINITION                                          RDD 980
C                                                                        RDD 990
      DO 60 I=1,NBAR                                                     RDD1000
      IF (IBARP(I).GT.NJOINT.OR.IBARP(I).LT.1) CALL ERPNT1 (ERJN,5,-1)   RDD1010
      IF (IBARQ(I).GT.NJOINT.OR.IBARQ(I).LT.1) CALL ERPNT1 (ERJN,5,-1)   RDD1020
      IF (IBARP(I).EQ.IBARQ(I)) CALL ERPNT1 (ERPQ,4,-1)                  RDD1030
60    IF (IBARR(I).GT.NJPNT) CALL ERPNT1 (ERJR,7,-1)                     RDD1040
C                                                                        RDD1050
C         CHECK JOINT DEFINITIONS FOR MISSING FORCE, MOMENT VECTORS,     RDD1060
C                          AND RESTRAINT INFORMATION                     RDD1070
      DO 80 I=1,NJOINT                                                   RDD1080
      DO 70 J=1,6                                                        RDD1090
      K=IJRFM(I,J)                                                       RDD1100
      IF (IABS(K).GT.NLIMIT) CALL ERPNT1 (ERLN,5,-1)                     RDD1110
      IF (K.LE.0) GO TO 70                                               RDD1120
```

```
      IF (RLIMTU(K).LE.RLIMTL(K)) CALL ERPNT1 (ERLT,5,-1)                RDD1130
70    CONTINUE                                                          RDD1140
      IF (IJALFM(I,1).GT.NFORCE.OR.IJALFM(I,1).LT.0) CALL ERPNT1 (ERFR,6RDD1150
     1,-1)                                                              RDD1160
      IF (IJALFM(I,2).GT.NMOMNT.OR.IJALFM(I,2).LT.0) CALL ERPNT1 (ERMT,6RDD1170
     1,-1)                                                              RDD1180
80    CONTINUE                                                          RDD1190
      CALL ERPNT2                                                       RDD1200
C                                                                       RDD1210
C         INITIALIZE DATA                                               RDD1220
C                                                                       RDD1230
      NROW=6*NJOINT                                                     RDD1240
      INDITR=NROW*3                                                     RDD1250
      INDPLS=0                                                          RDD1260
      INDWKT=0                                                          RDD1270
      INDRKT=0                                                          RDD1280
      MINRST=6                                                          RDD1290
      IND1SL=0                                                          RDD1300
      ERRTOL=.0001                                                      RDD1310
      INDSFG=1                                                          RDD1320
      INDSFL=1                                                          RDD1330
      RELAXF=1.                                                         RDD1340
      INDRLX=0                                                          RDD1350
      INDNMA=0                                                          RDD1360
      IREDTO=NROW                                                       RDD1370
      INDWNM=0                                                          RDD1380
      NEIGVL=11                                                         RDD1390
      TMAX=9999.                                                        RDD1400
C                                                                       RDD1410
C         READ INDICATORS AND CONTROL DATA IN BY NAMELIST               RDD1420
C                                                                       RDD1430
      READ (5,INDATA)                                                   RDD1440
      WRITE (6,INDATA)                                                  RDD1450
      IF (INDNMA.EQ.0) GO TO 100                                        RDD1460
C         CHECK NORMAL MODE ANALYSIS DATA                               RDD1470
      IF (IREDTO.EQ.NROW) GO TO 100                                     RDD1480
      IF (IREDTO.GT.102) CALL ERPNT1 (ERORD,4,-1)                       RDD1490
      IF (IREDTO.GT.NROW) CALL ERPNT1 (ERRED,4,-1)                      RDD1500
      J=IREDTO-1                                                        RDD1510
      DO 90 I=1,J                                                       RDD1520
90    IF (IRWKP(I).GE.IRWKP(I+1)) CALL ERPNT1 (ERRWKP,5,-1)             RDD1530
100   CONTINUE                                                          RDD1540
      IF (INDRKT.EQ.0) GO TO 130                                        RDD1550
C                                                                       RDD1560
C         READ STRUCTURAL STIFFNESS MATRIX DATA AND LOCAL STIFFNESS     RDD1570
C                              AND TRANSFORMATION MATRICES              RDD1580
      REWIND 9                                                          RDD1590
      READ (9) NROW1                                                    RDD1600
      IF (NROW.NE.NROW1) CALL ERPNT1 (ERFROW,5,1)                       RDD1610
      NROW1=NROW1+1                                                     RDD1620
      READ (9) (IROWL(I),I=1,NROW1)                                     RDD1630
      JJ=1                                                              RDD1640
      DO 110 I=1,NROW                                                   RDD1650
      II=IROWL(I+1)-1                                                   RDD1660
      READ (9) (STRSTF(J),J=JJ,II)                                      RDD1670
110   JJ=II+1                                                           RDD1680
```

```
      READ (9) STRSTF(JJ)                                               RDD1690
      IF (INDNMA.NE.0) GO TO 130                                        RDD1700
C                                                                       RDD1710
C         FILE 2 IS NOT NEEDED IF OVERLAY 3 IS NOT CALLED               RDD1720
C                                                                       RDD1730
      REWIND 2                                                          RDD1740
      DO 120 I=1,NBAR                                                   RDD1750
      READ (9) (TRANSM(J,1),J=1,9)                                      RDD1760
      WRITE (2) (TRANSM(J,1),J=1,9)                                     RDD1770
      READ (9) (STIFML(J,1),J=1,144)                                    RDD1780
120   WRITE (2) (STIFML(J,1),J=1,144)                                   RDD1790
      IF (IND1SL.NE.0) READ (9) (SOLVEC(I),I=1,NROW)                    RDD1800
130   IF (NJOINT.LT.2) CALL ERPNT1 (ERJNL,4,-1)                         RDD1810
      IF (NBAR.LT.1) CALL ERPNT1 (ERBN,4,-1)                            RDD1820
      CALL ERPNT2                                                       RDD1830
      RETURN                                                            RDD1840
C                                                                       RDD1850
140   FORMAT (5X3E10.3,6I3,2I4)                                         RDD1860
150   FORMAT (5X3E10.3)                                                 RDD1870
160   FORMAT (5X3I3,A3,E8.3,5E9.3,2F5.2)                                RDD1880
      END                                                               RDD1890-
```

APPENDIX F

```
      OVERLAY ( SASLP, 2, 0 )
      PROGRAM STIFF                                                     STI  10
      COMMON COM(30)                                                    STI  20
      EQUIVALENCE ( COM(  7 ), IBAR  )                                  STI  30
      EQUIVALENCE ( COM(  4 ), NBAR  )                                  STI  40
      EQUIVALENCE ( COM(  9 ), INDSFL )                                 STI  50
      EQUIVALENCE ( COM( 10 ), INDSFG )                                 STI  60
C                                                                       STI  70
C         SET UP STRUCTURAL STIFFNESS MATRIX                            STI  80
C                                                                       STI  90
      CALL SETSTF                                                       STI 100
C                                                                       STI 110
C         BUILD STRUCTURE STIFFNESS MATRIX BY SUMMING BAR STIFFNESS     STI 120
C                                                            MATRICES   STI 130
      CALL WRSTD1                                                       STI 140
      DO 30 IBAR=1,NBAR                                                 STI 150
C         COMPUTE STIFFNESS MATRIX AND TRANSFORMATION MATRIX FOR BAR    STI 160
C              NUMBER IBAR                                              STI 170
      CALL STFTRN                                                       STI 180
C                                                                       STI 190
C         SAVE LOCAL STIFFNESS M AND TRANSFORMATION M ON FILE TAPE2     STI 200
C                                                                       STI 210
      CALL WRSTDK                                                       STI 220
      IF (INDSFL.NE.0) GO TO 10                                         STI 230
      CALL WRBDAT                                                       STI 240
10    CONTINUE                                                          STI 250
C         TRANSFORM BAR STIFFNESS MATRIX TO GLOBAL COORDINATE SYSTEM    STI 260
      CALL TRASMK                                                       STI 270
      IF (INDSFG.NE.0) GO TO 20                                         STI 280
      CALL BRSTRA                                                       STI 290
20    CONTINUE                                                          STI 300
C         PLACE TRANSFORMED BAR STIFFNESS MATRIX IN STRUCTURAL          STI 310
C              STIFFNESS MATRIX                                         STI 320
      CALL STORSM                                                       STI 330
30    CONTINUE                                                          STI 340
      RETURN                                                            STI 350
      END                                                               STI 360-
```

APPENDIX F

```
      SUBROUTINE SETSTF                                                 SET  10
      COMMON COM(30)                                                    SET  20
      EQUIVALENCE ( COM( 1), NJOINT )                                   SET  30
      EQUIVALENCE ( COM( 4), NBAR   )                                   SET  40
      EQUIVALENCE ( COM( 8), NROW   )                                   SET  50
      DIMENSION IBARP(1), IBARQ(1), STRSTF(1), ISTSTF(1), ILSET(74,74)  SET  60
     1        , IROWL(1)                                                SET  70
      COMMON / CMAIN / COMAIN(1)                                        SET  80
      EQUIVALENCE ( COMAIN(1337), IBARP )                               SET  90
      EQUIVALENCE ( COMAIN(1411), IBARQ )                               SET 100
      EQUIVALENCE ( COMAIN(2711), IROWL )                               SET 110
      EQUIVALENCE ( COMAIN(3156), STRSTF, ISTSTF, ILSET  )              SET 120
      DIMENSION ILSETN(74)                                              SET 130
      DIMENSION  NZPRW(74)                                              SET 140
      DATA NZPRW / 74*0 /                                               SET 150
      NULL=NJOINT/2                                                     SET 160
C                                                                       SET 170
C         COMPILE AN ARRAY OF RELATED NODAL POINTS TO SET-UP STIFFNESS MSET 180
C                                                                       SET 190
      DO 10 I=1,NULL                                                    SET 200
      ILSET(I,1)=I                                                      SET 210
10    NZPRW(I)=NZPRW(I)+1                                               SET 220
C                                                                       SET 230
      DO 20 I=1,NBAR                                                    SET 240
      IP=IBARP(I)                                                       SET 250
      IQ=IBARQ(I)                                                       SET 260
      NRP=NZPRW(IP)+1                                                   SET 270
      NRQ=NZPRW(IQ)+1                                                   SET 280
      NZPRW(IP)=NRP                                                     SET 290
      NZPRW(IQ)=NRQ                                                     SET 300
      ILSET(IP,NRP)=IQ                                                  SET 310
20    ILSET(IQ,NRQ)=IP                                                  SET 320
C                                                                       SET 330
      NULL=NULL+1                                                       SET 340
      DO 30 I=NULL,NJOINT                                               SET 350
      NRP=NZPRW(I)+1                                                    SET 360
      NZPRW(I)=NRP                                                      SET 370
30    ILSET(I,NRP)=I                                                    SET 380
C                                                                       SET 390
C         SORT ABOVE ARRAY BY NODAL POINT                               SET 400
C                                                                       SET 410
      DO 90 I=1,NJOINT                                                  SET 420
      NRQ=NZPRW(I)                                                      SET 430
      IF (NRQ.EQ.1) GO TO 90                                            SET 440
40    NRP=0                                                             SET 450
      DO 80 J=2,NRQ                                                     SET 460
      IF (ILSET(I,J-1)-ILSET(I,J)) 80,50,70                             SET 470
50    NRQ=NRQ-1                                                         SET 480
      NZPRW(I)=NRQ                                                      SET 490
      DO 60 L=J,NRQ                                                     SET 500
60    ILSET(I,L)=ILSET(I,L+1)                                           SET 510
      GO TO 40                                                          SET 520
70    NULL=ILSET(I,J)                                                   SET 530
      ILSET(I,J)=ILSET(I,J-1)                                           SET 540
      ILSET(I,J-1)=NULL                                                 SET 550
      NRP=1                                                             SET 560
```

```
80    CONTINUE                                                          SET 570
      IF (NRP.NE.0) GO TO 40                                            SET 580
90    CONTINUE                                                          SET 590
C                                                                       SET 600
C         WRITE ARRAY ON FILE 1                                         SET 610
C                                                                       SET 620
      REWIND 1                                                          SET 630
      DO 100 I=1,NJOINT                                                 SET 640
      NRQ=NZPRW(I)                                                      SET 650
100   WRITE (1) (ILSET(I,J),J=1,NRQ)                                    SET 660
C                                                                       SET 670
C         BUILD  STIFFNESS MATRIX STORAGE ARRAY                         SET 680
C                                                                       SET 690
      REWIND 1                                                          SET 700
      NULL=1                                                            SET 710
      NROW=0                                                            SET 720
      DO 140 I=1,NJOINT                                                 SET 730
      NRP=NZPRW(I)                                                      SET 740
      NRQ=7*NRP+1                                                       SET 750
      READ (1) (ILSETN(J),J=1,NRP)                                      SET 760
      NFIRST=NULL+1                                                     SET 770
      NROW=NROW+1                                                       SET 780
C                                                                       SET 790
      DO 110 J=NULL,NRQ                                                 SET 800
110   STRSTF(J)=0.0                                                     SET 810
      ISTSTF(NULL)=-NROW                                                SET 820
      IROWL(NROW)=NULL                                                  SET 830
      NULL=NFIRST                                                       SET 840
C                                                                       SET 850
      DO 120 J=1,NRP                                                    SET 860
      ISTSTF(NULL)=(6*(ILSETN(J)-1)+1)                                  SET 870
120   NULL=NULL+7                                                       SET 880
      NLAST=NULL-1                                                      SET 890
C                                                                       SET 900
      DO 130 L=1,5                                                      SET 910
      NROW=NROW+1                                                       SET 920
      ISTSTF(NULL)=-NROW                                                SET 930
      IROWL(NROW)=NULL                                                  SET 940
      NULL=NULL+1                                                       SET 950
      DO 130 J=NFIRST,NLAST                                             SET 960
      STRSTF(NULL)=STRSTF(J)                                            SET 970
130   NULL=NULL+1                                                       SET 980
140   CONTINUE                                                          SET 990
      ISTSTF(NULL)=-1                                                   SET1000
      IROWL(NROW+1)=NULL                                                SET1010
      RETURN                                                            SET1020
      END                                                               SET1030-
```

APPENDIX F

```
      SUBROUTINE STFTRN                                                 STF  10
      COMMON COM(30)                                                    STF  20
      EQUIVALENCE ( COM( 6), ITINJO )                                   STF  30
      EQUIVALENCE ( COM( 7), IBAR   )                                   STF  40
      DIMENSION S1DEM(144)                                              STF  50
      EQUIVALENCE ( STIFML, S1DEM )                                     STF  60
      DIMENSION IBARP(1), IBARQ(1), IBARR(1), BAREA(1), BARIN(1),       STF  70
     1 BARIT(1), BARJ(1), BARYM(1), BARSM(1), RJXYZ(100,3)              STF  80
      COMMON / CMAIN / COMAIN(1)                                        STF  90
      EQUIVALENCE ( COMAIN(1337), IBARP  )                              STF 100
      EQUIVALENCE ( COMAIN(1411), IBARQ  )                              STF 110
      EQUIVALENCE ( COMAIN(1485), IBARR  )                              STF 120
      EQUIVALENCE ( COMAIN(  1 ), RJXYZ  )                              STF 130
      EQUIVALENCE ( COMAIN(1559), BAREA  )                              STF 140
      EQUIVALENCE ( COMAIN(1633), BARIN  )                              STF 150
      EQUIVALENCE ( COMAIN(1707), BARIT  )                              STF 160
      EQUIVALENCE ( COMAIN(1781), BARJ   )                              STF 170
      EQUIVALENCE ( COMAIN(1855), BARYM  )                              STF 180
      EQUIVALENCE ( COMAIN(1929), BARSM  )                              STF 190
      COMMON / OVER2 / STIFML(12,12), TRANSM(3,3)                       STF 200
      COMMON / LDATA /  KS(74), RKN(74), RKT(74)                        STF 210
      DATA I3BLK / 3H    /                                              STF 220
      ITINJO=1                                                          STF 230
      IF (ABS(BARIT(IBAR))+ABS(BARIN(IBAR))+ABS(BARJ(IBAR)).EQ.0) ITINJOSTF 240
     1=0                                                                STF 250
      IP=IBARP(IBAR)                                                    STF 260
      IQ=IBARQ(IBAR)                                                    STF 270
      IR=IBARR(IBAR)                                                    STF 280
C                                                                       STF 290
C         COMPUTE UNIT VECTORS ALONG  LOCAL AXIS FOR GLOBAL COORDINATE  STF 300
C                                TRANSFORMATION MATRIX                  STF 310
      X=RJXYZ(IQ,1)-RJXYZ(IP,1)                                         STF 320
      Y=RJXYZ(IQ,2)-RJXYZ(IP,2)                                         STF 330
      Z=RJXYZ(IQ,3)-RJXYZ(IP,3)                                         STF 340
      BARLGT=SQRT(X*X+Y*Y+Z*Z)                                          STF 350
      TRANSM(1,1)=X/BARLGT                                              STF 360
      TRANSM(1,2)=Y/BARLGT                                              STF 370
      TRANSM(1,3)=Z/BARLGT                                              STF 380
      IF (ITINJO.NE.0) GO TO 20                                         STF 390
      DO 10 I=2,3                                                       STF 400
      DO 10 J=1,3                                                       STF 410
10    TRANSM(I,J)=0.0                                                   STF 420
      GO TO 30                                                          STF 430
20    CONTINUE                                                          STF 440
      X=RJXYZ(IR,1)-RJXYZ(IP,1)                                         STF 450
      Y=RJXYZ(IR,2)-RJXYZ(IP,2)                                         STF 460
      Z=RJXYZ(IR,3)-RJXYZ(IP,3)                                         STF 470
      DPD=TRANSM(1,1)*X+TRANSM(1,2)*Y+TRANSM(1,3)*Z                     STF 480
      DDR=SQRT(X*X+Y*Y+Z*Z-DPD*DPD)                                     STF 490
      TRANSM(2,1)=(X-TRANSM(1,1)*DPD)/DDR                               STF 500
      TRANSM(2,2)=(Y-TRANSM(1,2)*DPD)/DDR                               STF 510
      TRANSM(2,3)=(Z-TRANSM(1,3)*DPD)/DDR                               STF 520
      TRANSM(3,1)=TRANSM(1,2)*TRANSM(2,3)-TRANSM(2,2)*TRANSM(1,3)       STF 530
      TRANSM(3,2)=-TRANSM(1,1)*TRANSM(2,3)+TRANSM(2,1)*TRANSM(1,3)      STF 540
      TRANSM(3,3)=TRANSM(1,1)*TRANSM(2,2)-TRANSM(2,1)*TRANSM(1,2)       STF 550
C                                                                       STF 560
```

APPENDIX F

```
C          COMPUTE STIFFNESS MATRIX                                    STF 570
C                                                                      STF 580
30     CONTINUE                                                        STF 590
C                                                                      STF 600
C          ZERO RIGHT HALF OF STIFFNESS MATRIX                         STF 610
C                                                                      STF 620
       DO 40 I=1,12                                                    STF 630
       DO 40 J=I,12                                                    STF 640
40     STIFML(I,J)=0.0                                                 STF 650
C                                                                      STF 660
C          FILL LEFT HALF OF STIFFNESS MATRIX AND THE DIAGONAL         STF 670
C                                                                      STF 680
       S1DEM(1)=BARYM(IBAR)*BAREA(IBAR)/BARLGT                         STF 690
       S1DEM(37)=-S1DEM(1)                                             STF 700
       S1DEM(40)=S1DEM(1)                                              STF 710
       IF (ITINJO.EQ.0) GO TO 160                                      STF 720
       S1DEM(14)=12.*BARYM(IBAR)*BARIN(IBAR)/BARLGT**3                 STF 730
       S1DEM(27)=12.*BARYM(IBAR)*BARIT(IBAR)/BARLGT**3                 STF 740
       S1DEM(50)=-S1DEM(14)                                            STF 750
       S1DEM(53)=S1DEM(14)                                             STF 760
       S1DEM(63)=-S1DEM(27)                                            STF 770
       S1DEM(66)=S1DEM(27)                                             STF 780
       S1DEM(79)=BARSM(IBAR)*BARJ(IBAR)/BARLGT                         STF 790
       S1DEM(87)=-6.*BARYM(IBAR)*BARIT(IBAR)/BARLGT**2                 STF 800
       S1DEM(90)=-S1DEM(87)                                            STF 810
       S1DEM(92)=4.*BARYM(IBAR)*BARIT(IBAR)/BARLGT                     STF 820
       S1DEM(98)=6.*BARYM(IBAR)*BARIN(IBAR)/BARLGT**2                  STF 830
       S1DEM(101)=-S1DEM(98)                                           STF 840
       S1DEM(105)=4.*BARYM(IBAR)*BARIN(IBAR)/BARLGT                    STF 850
       S1DEM(115)=-S1DEM(79)                                           STF 860
       S1DEM(118)=S1DEM(79)                                            STF 870
       S1DEM(123)=S1DEM(87)                                            STF 880
       S1DEM(126)=-S1DEM(87)                                           STF 890
       S1DEM(128)=2.*BARYM(IBAR)*BARIT(IBAR)/BARLGT                    STF 900
       S1DEM(131)=S1DEM(92)                                            STF 910
       S1DEM(134)=S1DEM(98)                                            STF 920
       S1DEM(137)=-S1DEM(98)                                           STF 930
       S1DEM(141)=2.*BARYM(IBAR)*BARIN(IBAR)/BARLGT                    STF 940
       S1DEM(144)=S1DEM(105)                                           STF 950
       IF (KS(IBAR).EQ.13BLK) GO TO 160                                STF 960
C          DECODE KS(IBAR)                                             STF 970
C               IR = 1 IMPLIES SHEAR STRAINT IS INCLUDED               STF 980
C               IP = 1 FREE 5P.      IP = 2 FREE 5Q                    STF 990
C               IQ = 1 FREE 6P.      IQ = 2 FREE 6Q                    STF1000
       DECODE (3,180,KS(IBAR) )IR,IP,IQ                                STF1010
       X=BARSM(IBAR)*BAREA(IBAR)/BARLGT                                STF1020
       IF (RKN(IBAR).EQ.0.0) GO TO 50                                  STF1030
       AN=STIFML(2,2)*RKN(IBAR)/X                                      STF1040
       GO TO 60                                                        STF1050
50     AN=0.0                                                          STF1060
60     CONTINUE                                                        STF1070
       IF (RKT(IBAR).EQ.0.0) GO TO 70                                  STF1080
       AT=STIFML(3,3)*RKT(IBAR)/X                                      STF1090
       GO TO 80                                                        STF1100
70     AT=0.0                                                          STF1110
80     CONTINUE                                                        STF1120
```

```
      IF (IR.EQ.1) GO TO 120                                            STF1130
      IF (IP.EQ.0) GO TO 120                                            STF1140
C                                                                       STF1150
C         Y       MOMENT FREE                                           STF1160
C                                                                       STF1170
      X=1./(4.+AT)                                                      STF1180
      STIFML(3,3)=X*STIFML(3,3)                                         STF1190
      STIFML(3,6)=X*STIFML(3,6)                                         STF1200
      STIFML(6,6)=X*STIFML(6,6)                                         STF1210
      STIFML(8,11)=0.0                                                  STF1220
      IF (IP.EQ.2) GO TO 90                                             STF1230
      I=11                                                              STF1240
      J=8                                                               STF1250
      GO TO 100                                                         STF1260
90    I=8                                                               STF1270
      J=11                                                              STF1280
100   CONTINUE                                                          STF1290
      Y=X+X                                                             STF1300
      STIFML(3,I)=Y*STIFML(3,I)                                         STF1310
      STIFML(6,I)=Y*STIFML(6,I)                                         STF1320
      Y=Y+X                                                             STF1330
      STIFML(I,I)=Y*STIFML(6,I)                                         STF1340
      STIFML(3,J)=0.0                                                   STF1350
      STIFML(6,J)=0.0                                                   STF1360
      STIFML(J,J)=0.0                                                   STF1370
110   IF (IQ.NE.0) GO TO 130                                            STF1380
C                                                                       STF1390
C         Z MOMENT NOT FREE                                             STF1400
C                                                                       STF1410
      IF (RKN(IBAR).EQ.0.0) GO TO 160                                   STF1420
      X=1./(1.+AN)                                                      STF1430
      STIFML(2,2)=X*STIFML(2,2)                                         STF1440
      STIFML(2,5)=X*STIFML(2,5)                                         STF1450
      STIFML(2,9)=X*STIFML(2,9)                                         STF1460
      STIFML(2,12)=X*STIFML(2,12)                                       STF1470
      STIFML(5,5)=X*STIFML(5,5)                                         STF1480
      STIFML(5,9)=X*STIFML(5,9)                                         STF1490
      STIFML(5,12)=X*STIFML(5,12)                                       STF1500
      X=1.-3./(4.*(1.+1./AN))                                           STF1510
      STIFML(9,9)=X*STIFML(9,9)                                         STF1520
      STIFML(9,12)=(1.-3./(2.*(1.+1./AN)))*STIFML(9,12)                 STF1530
      STIFML(12,12)=X*STIFML(12,12)                                     STF1540
      GO TO 160                                                         STF1550
C                                                                       STF1560
C         Y MOMENT NOT FREE                                             STF1570
C                                                                       STF1580
120   IF (RKT(IBAR).EQ.0.0) GO TO 110                                   STF1590
      X=1./(1.+AT)                                                      STF1600
      STIFML(3,3)=X*STIFML(3,3)                                         STF1610
      STIFML(3,6)=X*STIFML(3,6)                                         STF1620
      STIFML(3,8)=X*STIFML(3,8)                                         STF1630
      STIFML(3,11)=X*STIFML(3,11)                                       STF1640
      STIFML(6,6)=X*STIFML(6,6)                                         STF1650
      STIFML(6,8)=X*STIFML(6,8)                                         STF1660
      STIFML(6,11)=X*STIFML(6,11)                                       STF1670
      X=1.-3./(4.*(1.+1./AT))                                           STF1680
```

```
      STIFML(8,8)=X*STIFML(8,8)                                         STF1690
      STIFML(8,11)=(1.-3./(2.*(1.+1./AT)))*STIFML(8,11)                 STF1700
      STIFML(11,11)=X*STIFML(11,11)                                     STF1710
      GO TO 110                                                         STF1720
C                                                                       STF1730
C         Z MOMENT FREE                                                 STF1740
C                                                                       STF1750
130   X=1./(4.+AN)                                                      STF1760
      STIFML(2,2)=X*STIFML(2,2)                                         STF1770
      STIFML(2,5)=X*STIFML(2,5)                                         STF1780
      STIFML(5,5)=X*STIFML(5,5)                                         STF1790
      STIFML(9,12)=0.0                                                  STF1800
      IF (IQ.EQ.2) GO TO 140                                            STF1810
      I=12                                                              STF1820
      J=9                                                               STF1830
      GO TO 150                                                         STF1840
140   I=9                                                               STF1850
      J=12                                                              STF1860
150   CONTINUE                                                          STF1870
      Y=X+X                                                             STF1880
      STIFML(2,I)=Y*STIFML(2,I)                                         STF1890
      STIFML(5,I)=Y*STIFML(5,I)                                         STF1900
      Y=Y+X                                                             STF1910
      STIFML(I,I)=Y*STIFML(12,12)                                       STF1920
      STIFML(2,J)=0.0                                                   STF1930
      STIFML(5,J)=0.0                                                   STF1940
      STIFML(J,J)=0.0                                                   STF1950
C                                                                       STF1960
C         FILL LEFT  HALF OF STIFFNESS MATRIX                           STF1970
C                                                                       STF1980
160   CONTINUE                                                          STF1990
      DO 170 I=1,11                                                     STF2000
      II=I+1                                                            STF2010
      DO 170 J=II,12                                                    STF2020
170   STIFML(J,I)=STIFML(I,J)                                           STF2030
      RETURN                                                            STF2040
C                                                                       STF2050
180   FORMAT (3I1)                                                      STF2060
      END                                                               STF2070
```

APPENDIX F

```
      SUBROUTINE TRASMK                                                 TRA  10
      COMMON COM(30)                                                    TRA  20
      EQUIVALENCE ( COM( 6), ITINJO )                                   TRA  30
      COMMON / OVER2 / STIFML(12,12), TRANSM(3,3)                       TRA  40
      DIMENSION A(12), IJ(4), IJC(12)                                   TRA  50
      DIMENSION IRC(12)                                                 TRA  60
      EQUIVALENCE(AXF, STIFML(1,1))                                     TRA  70
      DATA IJ / 0,3,6,9 /                                               TRA  80
      DATA IJC / 3*0, 3*3, 3*6, 3*9 /                                   TRA  90
      DATA IRC / 1,2,3,1,2,3,1,2,3,1,2,3 /                              TRA 100
      ITINJO=1                                                          TRA 110
C                                                                       TRA 120
C         IF THERE IS BENDING GO TO 8                                   TRA 130
C                                                                       TRA 140
      IF (ITINJO.NE.0) GO TO 20                                         TRA 150
      DO 10 I=1,3                                                       TRA 160
      DO 10 J=1,3                                                       TRA 170
      AHOLD=AXF*TRANSM(1,J)*TRANSM(1,I)                                 TRA 180
      STIFML(I,J)=AHOLD                                                 TRA 190
      STIFML(I,J+3)=-AHOLD                                              TRA 200
      STIFML(I+3,J)=-AHOLD                                              TRA 210
10    STIFML(I+3,J+3)=AHOLD                                             TRA 220
      RETURN                                                            TRA 230
20    CONTINUE                                                          TRA 240
C                                                                       TRA 250
C         MULTIPLY TRANSFORMATION MATRIX TIMES STIFFNESS MATRIX         TRA 260
C                   STORE RESULT IN STIFFNESS MATRIX                    TRA 270
C                                                                       TRA 280
      DO 40 K=1,12                                                      TRA 290
      ICR=0                                                             TRA 300
      DO 30 IC=1,4                                                      TRA 310
      DO 30 I=1,3                                                       TRA 320
      ICR=ICR+1                                                         TRA 330
      A(ICR)=0.0                                                        TRA 340
      DO 30 J=1,3                                                       TRA 350
      JJ=J+IJ(IC)                                                       TRA 360
      IF (STIFML(K,JJ).EQ.0.) GO TO 30                                  TRA 370
      A(ICR)=A(ICR)+STIFML(K,JJ)*TRANSM(J,I)                            TRA 380
30    CONTINUE                                                          TRA 390
      DO 40 J=1,12                                                      TRA 400
40    STIFML(K,J)=A(J)                                                  TRA 410
C                                                                       TRA 420
C                                                                       TRA 430
C         MULTIPLY THE RESULT OF THE ABOVE TIMES THE TRANSPOSE OF THE   TRA 440
C                   TRANSFORMATION MATRIX                               TRA 450
C                                                                       TRA 460
      DO 60 K=1,12                                                      TRA 470
      DO 50 ICR=K,12                                                    TRA 480
      A(ICR)=0.0                                                        TRA 490
      I=IRC(ICR)                                                        TRA 500
      DO 50 J=1,3                                                       TRA 510
      JJ=J+IJC(ICR)                                                     TRA 520
50    A(ICR)=A(ICR)+STIFML(JJ,K)*TRANSM(J,I)                            TRA 530
      DO 60 J=K,12                                                      TRA 540
60    STIFML(J,K)=A(J)                                                  TRA 550
      DO 70 I=1,11                                                      TRA 560
```

```
      IC=I+1                                                            TRA 570
      DO 70 J=IC,12                                                     TRA 580
70    STIFML(I,J)=STIFML(J,I)                                           TRA 590
C                                                                       TRA 600
C         AS A RESULT OF THE ABOVE, STIFML CONTAINS THE STIFFNESS       TRA 610
C              MATRIX TRANSFORMED TO THE GLOBAL  COORDINATE SYSTEM      TRA 620
C                                                                       TRA 630
      RETURN                                                            TRA 640
      END                                                               TRA 650
```

```
      SUBROUTINE STORSM                                                 STO  10
      COMMON COM(30)                                                    STO  20
      EQUIVALENCE ( COM( 6), ITINJO )                                   STO  30
      EQUIVALENCE ( COM( 7), IBAR   )                                   STO  40
      DIMENSION IBARP(1), IBARQ(1), IROWL(1), STRSTF(1), ISTSTF(1)      STO  50
      COMMON / CMAIN / COMAIN(1)                                        STO  60
      EQUIVALENCE ( COMAIN(1337), IBARP  )                              STO  70
      EQUIVALENCE ( COMAIN(1411), IBARQ  )                              STO  80
      EQUIVALENCE ( COMAIN(2711), IROWL  )                              STO  90
      EQUIVALENCE ( COMAIN(3156), STRSTF, ISTSTF )                      STO 100
      COMMON / OVER2 / STIFML(12,12), TRANSM(3,3)                       STO 110
      DIMENSION IRC13(6), IRC24(6)                                      STO 120
      DATA IRC13 / 1, 2, 3, 7, 8, 9 /                                   STO 130
      DATA IRC24 / 4, 5, 6, 10, 11, 12 /                                STO 140
      ISP=(IBARP(IBAR)-1)*6+1                                           STO 150
      ISQ=(IBARQ(IBAR)-1)*6+1                                           STO 160
C                                                                       STO 170
C         FIND INCREMENT FROM START OF ROW P TO COLUMNS P AND Q         STO 180
C                              CALL  IPP AND IPQ                        STO 190
      J1=0                                                              STO 200
      II=IROWL(ISP)                                                     STO 210
      I1=II+1                                                           STO 220
10    IF (ISTSTF(I1).NE.ISP) GO TO 20                                   STO 230
      IPP=I1-II                                                         STO 240
      J1=J1+1                                                           STO 250
      GO TO 30                                                          STO 260
20    IF (ISTSTF(I1).NE.ISQ) GO TO 30                                   STO 270
      IPQ=I1-II                                                         STO 280
      J1=J1+1                                                           STO 290
30    I1=I1+7                                                           STO 300
      IF (J1.NE.2) GO TO 10                                             STO 310
C                                                                       STO 320
C         ADD  TO  THE 6 P ROWS                                         STO 330
C                                                                       STO 340
      IF (ITINJO.NE.0) GO TO 40                                         STO 350
      I1=II+IPP+1                                                       STO 360
      STRSTF(I1)=STRSTF(I1)+STIFML(1,1)                                 STO 370
      I1=II+IPQ+1                                                       STO 380
      STRSTF(I1)=STRSTF(I1)+STIFML(1,4)                                 STO 390
      GO TO 70                                                          STO 400
40    CONTINUE                                                          STO 410
      DO 60 I=1,6                                                       STO 420
      IP=II+IPP                                                         STO 430
      IQ=II+IPQ                                                         STO 440
      I1=IRC13(I)                                                       STO 450
      DO 50 J=1,6                                                       STO 460
      J1=IRC13(J)                                                       STO 470
      JJ=IP+J                                                           STO 480
      STRSTF(JJ)=STRSTF(JJ)+STIFML(I1,J1)                               STO 490
      J1=IRC24(J)                                                       STO 500
      JJ=IQ+J                                                           STO 510
50    STRSTF(JJ)=STRSTF(JJ)+STIFML(I1,J1)                               STO 520
      J1=ISP+I                                                          STO 530
60    II=IROWL(J1)                                                      STO 540
C                                                                       STO 550
C         FIND INCREMENT FROM START OF ROW Q TO COUMNS P AND Q          STO 560
```

APPENDIX F

```
C                                CALL IPP
70    CONTINUE
      J1=0
      II=IROWL(ISQ)
      I1=II+1
80    IF (ISTSTF(I1).NE.ISQ) GO TO 90
      IQQ=I1-II
      J1=J1+1
      GO TO 100
90    IF (ISTSTF(I1).NE.ISP) GO TO 100
      IQP=I1-II
      J1=J1+1
100   I1=I1+7
      IF (J1.NE.2) GO TO 80
C
C         ADD  TO THE 6 Q ROWS
C
      IF (ITINJO.NE.0) GO TO 110
      I1=II+IQQ+1
      STRSTF(I1)=STRSTF(I1)+STIFML(4,1)
      I1=II+IQP+1
      STRSTF(I1)=STRSTF(I1)+STIFML(4,4)
      RETURN
110   CONTINUE
      DO 130 I=1,6
      IQ=II+IQQ
      IP=II+IQP
      I1=IRC24(I)
      DO 120 J=1,6
      J1=IRC13(J)
      JJ=IP+J
      STRSTF(JJ)=STRSTF(JJ)+STIFML(I1,J1)
      J1=IRC24(J)
      JJ=IQ+J
120   STRSTF(JJ)=STRSTF(JJ)+STIFML(I1,J1)
      J1=ISQ+I
130   II=IROWL(J1)
      RETURN
      END
```

APPENDIX F

```
      SUBROUTINE WRBDAT                                                 WRB  10
      COMMON COM(30)                                                    WRB  20
      EQUIVALENCE ( COM( 7), IBAR    )                                  WRB  30
      COMMON / OVER2 / STIFML(12,12), TRANSM(3,3)                       WRB  40
      DIMENSION IBARP(1), IBARQ(1)                                      WRB  50
      COMMON / CMAIN / COMAIN(1)                                        WRB  60
      EQUIVALENCE ( COMAIN(1337), IBARP  )                              WRB  70
      EQUIVALENCE ( COMAIN(1411), IBARQ  )                              WRB  80
C                                                                       WRB  90
C         IF INDSFL .NE. 0, PRINT LOCAL STIFFNESS MATRIX AND            WRB 100
C               TRANSFORMATION MATRIX FOR BAR(I)                        WRB 110
C                                                                       WRB 120
      WRITE (6,10) IBAR,IBARP(IBAR),IBARQ(IBAR),((STIFML(I,J),J=1,12),I=WRB 130
     11,12),((TRANSM(I,J),J=1,3),I=1,3)                                 WRB 140
      RETURN                                                            WRB 150
C                                                                       WRB 160
C         IF INDSFG .NE. 0, PRINT THE TRANSFORMED LOCAL STIFFNES MATRIX WRB 170
C                                                                       WRB 180
      ENTRY BRSTRA                                                      WRB 190
      WRITE (6,20) ((STIFML(I,J),J=1,12),I=1,12)                        WRB 200
      RETURN                                                            WRB 210
C                                                                       WRB 220
10    FORMAT (13H1 BAR NUMBER I4/,25H0 POINT P IS NODAL POINT I4/,25H  PWRB 230
     1OINT Q IS NODAL POINT I4/,18H0 STIFFNESS MATRIX//,12(12E11.3,/),23WRB 240
     2H0 TRANSFORMATION MATRIX//,3(3E11.3,/))                           WRB 250
20    FORMAT (30H0 TRANSFORMED STIFFNESS MATRIX//,,12(12E11.3,/))       WRB 260
      END                                                               WRB 270-
```

APPENDIX F

```
      SUBROUTINE WRSTDK                                                 WRD  10
      COMMON / OVER2 / STIFML(12,12), TRANSM(3,3)                       WRD  20
C                                                                       WRD  30
C         WRITE LOCAL STIFFNESS        AN ASSOCIATED TRANSFORMATION     WRD  40
C               MATRICES ON FILE 2 FOR LATER USE IN FMBARS (AND, IF     WRD  50
C               INDWKT .NE. 0, IN PANDTK)                               WRD  60
C                                                                       WRD  70
      WRITE (2) ((TRANSM(I,J),J=1,3),I=1,3)                             WRD  80
      WRITE (2) ((STIFML(I,J),J=1,12),I=1,12)                           WRD  90
      RETURN                                                            WRD 100
      ENTRY WRSTD1                                                      WRD 110
      REWIND 2                                                          WRD 120
      RETURN                                                            WRD 130
      END                                                               WRD 140-
```

```
      OVERLAY ( SASLP, 3, 0 )
      PROGRAM FINIAL                                                    FIN  10
      DIMENSION SOLVEC(1)                                               FIN  20
      COMMON COM(30)                                                    FIN  30
      EQUIVALENCE ( COM(16), INDWKT )                                   FIN  40
      EQUIVALENCE ( COM( 8), NROW   )                                   FIN  50
      COMMON / CMAIN / COMAIN(1)                                        FIN  60
      EQUIVALENCE ( COMAIN(2003), SOLVEC )                              FIN  70
C                                                                       FIN  80
C         PANDTK, PRINTS THE NON ZERO ELEMENTS OF THE STRUCTURAL        FIN  90
C              STIFFNESS MATRIX AND CONDENSE THE BLOCK STORAGE WHERE    FIN 100
C                                                          POSSIBLE     FIN 110
      CALL PANDTK                                                       FIN 120
C                                                                       FIN 130
C         SOLVE                                                         FIN 140
C                                                                       FIN 150
      CALL SOLVE                                                        FIN 160
      IF (INDWKT.EQ.0) GO TO 10                                         FIN 170
      WRITE (9) (SOLVEC(I),I=1,NROW)                                    FIN 180
      END FILE 9                                                        FIN 190
10    CONTINUE                                                          FIN 200
C                                                                       FIN 210
C         CALCULATE LOCAL FORCE-MOMENT VECTORS FOR EACH BAR             FIN 220
C                                                                       FIN 230
      CALL FMBARS                                                       FIN 240
      RETURN                                                            FIN 250
      END                                                               FIN 260
```

APPENDIX F

```
      SUBROUTINE PANDTK                                                 PAN  10
      COMMON COM(30)                                                    PAN  20
      EQUIVALENCE ( COM( 8), NROW    )                                  PAN  30
      EQUIVALENCE ( COM(16), INDWKT )                                   PAN  40
      EQUIVALENCE ( COM(  4 ), NBAR    )                                PAN  50
      DIMENSION IROWL(1), STRSTF(1), ISTSTF(1), STFDIA(1),              PAN  60
     1          STIFML(12,12), TRANSM(3,3), STF(1), ISTF(1)             PAN  70
      COMMON / CMAIN / COMAIN(1)                                        PAN  80
      EQUIVALENCE ( COMAIN(2711), IROWL  )                              PAN  90
      EQUIVALENCE ( COMAIN(3156), STRSTF, ISTSTF )                      PAN 100
      EQUIVALENCE ( COMAIN(1559), STFDIA )                              PAN 110
      EQUIVALENCE ( COMAIN(  1 ), STIFML )                              PAN 120
      EQUIVALENCE ( COMAIN( 145), TRANSM )                              PAN 130
      COMMON / OVER3 / COM3(519)                                        PAN 140
      EQUIVALENCE ( COM3( 1 ), STF, ISTF )                              PAN 150
      DATA LDIA, SLDIA / 0 , 0 /                                        PAN 160
      IF (INDWKT.EQ.0) GO TO 10                                         PAN 170
C                                                                       PAN 180
C         WRITE THE NO. OF ROWS AND THERE LOCATED  IN STIFFNESS MATRIX  PAN 190
C                   ON FILE 9                                           PAN 200
C                                                                       PAN 210
      REWIND 9                                                          PAN 220
      WRITE (9) NROW                                                    PAN 230
      J=NROW+1                                                          PAN 240
      WRITE (9) (IROWL(I),I=1,J)                                        PAN 250
10    CONTINUE                                                          PAN 260
C                                                                       PAN 270
C         PRINT NON ZERO ROW ELEMENTS AND DECIDE WHETHER THE ROW        PAN 280
C              SHOULD BE STORED IN BLOCK OR ELEMENT FORMAT              PAN 290
C                                                                       PAN 300
      LOCSTF=1                                                          PAN 310
      DO 110 I=1,NROW                                                   PAN 320
      ISUMNZ=0                                                          PAN 330
      ISUMGP=0                                                          PAN 340
20    LOCSTF=LOCSTF+1                                                   PAN 350
      IF (ISTSTF(LOCSTF).LT.0) GO TO 50                                 PAN 360
      IC=ISTSTF(LOCSTF)-1                                               PAN 370
      ISUMGP=ISUMGP+1                                                   PAN 380
      DO 40 J=1,6                                                       PAN 390
      LOCSTF=LOCSTF+1                                                   PAN 400
      IF (ABS(STRSTF(LOCSTF)).LT.1.E-9) GO TO 40                        PAN 410
      ICC=IC+J                                                          PAN 420
      CALL WRSTRK (I,ICC,STRSTF(LOCSTF))                                PAN 430
      IF (I.NE.ICC) GO TO 30                                            PAN 440
      LDIA=LOCSTF                                                       PAN 450
      GO TO 40                                                          PAN 460
30    ISUMNZ=ISUMNZ+1                                                   PAN 470
40    CONTINUE                                                          PAN 480
      GO TO 20                                                          PAN 490
50    CONTINUE                                                          PAN 500
C                                                                       PAN 510
C         IF INDWKT .NE. 0, WRITE STIFFNESS MATRIX IN BLOCK FORMAT      PAN 520
C                   ON FILE 9 TO SAVE FOR FUTURE RUNS OF THE PROGRAM    PAN 530
C                   WHEN INDWKT .NE. 0                                  PAN 540
C                                                                       PAN 550
      LCSTF1=IROWL(I)                                                   PAN 560
```

```
      IF (INDWKT.EQ.0) GO TO 60                                         PAN 570
      NULL=LOCSTF-1                                                     PAN 580
      WRITE (9) (STRSTF(J),J=LCSTF1,NULL)                               PAN 590
60    CONTINUE                                                          PAN 600
C                                                                       PAN 610
C         REMOVE THE DIAGONAL ELEMENTS OF THE STRUCTURAL STIFFNESS      PAN 620
C                  MATRIX, AND SAVE THEM IN THE STFDIA ARRAY            PAN 630
C                                                                       PAN 640
      IF (LDIA.EQ.SLDIA) GO TO 70                                       PAN 650
      SLDIA=LDIA                                                        PAN 660
      STFDIA(I)=STRSTF(LDIA)                                            PAN 670
      STRSTF(LDIA)=0.0                                                  PAN 680
      GO TO 80                                                          PAN 690
70    STFDIA(I)=0.0                                                     PAN 700
80    CONTINUE                                                          PAN 710
      IF (ISUMNZ/ISUMGP.GT.3) GO TO 110                                 PAN 720
C                                                                       PAN 730
C         IF HALF OR MORE OF THE ROW ELEMENTS ARE ZERO, REMOVE THEM     PAN 740
C                  AND PLACE THAT ROW IN ELEMENT FORMAT                 PAN 750
C                                                                       PAN 760
      NULL=1                                                            PAN 770
      DO 90 J=1,ISUMGP                                                  PAN 780
      LCSTF1=LCSTF1+1                                                   PAN 790
      IC=ISTSTF(LCSTF1)-1                                               PAN 800
      DO 90 K=1,6                                                       PAN 810
      LCSTF1=LCSTF1+1                                                   PAN 820
      IF (ABS(STRSTF(LCSTF1)).LT.1.E-9) GO TO 90                        PAN 830
      NULL=NULL+1                                                       PAN 840
      ISTF(NULL)=IC+K                                                   PAN 850
      NULL=NULL+1                                                       PAN 860
      STF(NULL)=STRSTF(LCSTF1)                                          PAN 870
90    CONTINUE                                                          PAN 880
      ISTF(1)=-NULL/2                                                   PAN 890
      LCSTF1=IROWL(I)                                                   PAN 900
      DO 100 J=1,NULL                                                   PAN 910
      LCSTF1=LCSTF1+1                                                   PAN 920
100   STRSTF(LCSTF1)=STF(J)                                             PAN 930
110   CONTINUE                                                          PAN 940
C                                                                       PAN 950
C         PRINT LAST LINE IN WRSTRK                                     PAN 960
C                                                                       PAN 970
      CALL WRSTRK (-1,1,1.)                                             PAN 980
C                                                                       PAN 990
C         IF INDWKT .NE. 0, THEN THE LOCAL STIFFNESS AND TRANSFORMATION PAN1000
C                  MATRICES MUST BE SAVED ON FILE 9                     PAN1010
C                                                                       PAN1020
      IF (INDWKT.EQ.0) GO TO 130                                        PAN1030
      REWIND 2                                                          PAN1040
      DO 120 I=1,NBAR                                                   PAN1050
      READ (2) (TRANSM(J,1),J=1,9)                                      PAN1060
      WRITE (9) (TRANSM(J,1),J=1,9)                                     PAN1070
      READ (2) (STIFML(J,1),J=1,144)                                    PAN1080
120   WRITE (9) (STIFML(J,1),J=1,144)                                   PAN1090
130   RETURN                                                            PAN1100
      END                                                               PAN1110-
```

APPENDIX F

```
      SUBROUTINE SOLVE                                                  SOL  10
      COMMON COM(30)                                                    SOL  20
      EQUIVALENCE ( COM( 1), NJOINT )                                   SOL  30
      EQUIVALENCE ( COM( 8), NROW   )                                   SOL  40
      EQUIVALENCE ( COM(11), INDISL )                                   SOL  50
      EQUIVALENCE ( COM(12), INDITR )                                   SOL  60
      EQUIVALENCE ( COM(13), ERRTOL )                                   SOL  70
      EQUIVALENCE ( COM(14), RELAXF )                                   SOL  80
      EQUIVALENCE ( COM(15), INDRLX )                                   SOL  90
      EQUIVALENCE ( COM(18), INDPLS )                                   SOL 100
      EQUIVALENCE ( COM(19), MINRST )                                   SOL 110
      EQUIVALENCE ( COM(26), TMAX )                                     SOL 120
      DIMENSION  IJRFM(74,6), IJALFM(74,2), FRCVCT(74,3), SOLVC2(1),    SOL 130
     1       RMTVCT(74,3), STFDIA(1), SOLVEC(1), RLIMTU(1), RLIMTL(1),  SOL 140
     2           DPRTIT(1), STRSTF(1), ISTSTF(1), IROWL(1)              SOL 150
      COMMON / CMAIN / COMAIN(1)                                        SOL 160
      EQUIVALENCE ( COMAIN( 1 ), RJXYZ , NONROW )                       SOL 170
      EQUIVALENCE ( COMAIN( 745), IJALFM )                              SOL 180
      EQUIVALENCE ( COMAIN( 893), FRCVCT, SOLVC2 )                      SOL 190
      EQUIVALENCE ( COMAIN(1115), RMTVCT )                              SOL 200
      EQUIVALENCE ( COMAIN( 301), IJRFM  )                              SOL 210
      EQUIVALENCE ( COMAIN(2623), DPRTIT )                              SOL 220
      EQUIVALENCE ( COMAIN(2003), SOLVEC )                              SOL 230
      EQUIVALENCE ( COMAIN(1559), STFDIA )                              SOL 240
      EQUIVALENCE ( COMAIN(2711), IROWL  )                              SOL 250
      EQUIVALENCE ( COMAIN(3156), STRSTF, ISTSTF )                      SOL 260
      EQUIVALENCE ( COMAIN(2447), RLIMTU )                              SOL 270
      EQUIVALENCE ( COMAIN(2535), RLIMTL )                              SOL 280
      COMMON / OVER3 / FORCMG(1)                                        SOL 290
      DIMENSION ALP(6), NONROW(300)                                     SOL 300
      DIMENSION ERRFMN(6)                                               SOL 310
      DIMENSION ERMRST(5)                                               SOL 320
      DIMENSION ERDIA(5)                                                SOL 330
      DIMENSION ERRL(6)                                                 SOL 340
      DATA ERRL /50H THE VARIABLE ASSOCIATED WITH THIS ROW HAS A CONST, SOL 350
     1            10HANT VALUE      /                                   SOL 360
      DATA ERDIA /10H THE DIAGO, 10HNAL ELEMEN, 10HT FOR THIS,          SOL 370
     1             10H ROW CAN N, 10HOT BE ZERO  /                      SOL 380
      DATA ERMRST /10H THE NUMBE, 10HR OF RESTR, 10HAINTS IS L,         SOL 390
     1              10HESS THAN M, 10HINRST     /                       SOL 400
      DATA ALP /10HX--FORCE  , 10HY--FORCE  , 10HZ--FORGE  ,            SOL 410
     1           10HX--MOMENT , 10HY--MOMENT , 10HZ--MOMENT /           SOL 420
      DATA ERRFMN / 10H TOO MANY , 10HROWS ARE B, 10HEING REMOV,        SOL 430
     1               10HED FOR THE, 10H SIZE OF N, 10HONROW            /SOL 440
      WRITE (6,420)                                                     SOL 450
C                                                                       SOL 460
C          SET-UP MINIMUM ERROR FOR THE AITKEN DELTA SQUARED PROCESS    SOL 470
C                                                                       SOL 480
      IF (INDRLX.EQ.0) ERRTL2=AMIN1(ERRTOL*ERRTOL,1.E-10)               SOL 490
C                                                                       SOL 500
C         CALCULATE FORCE AND MOMENT VECTOR                             SOL 510
C                                                                       SOL 520
      DO 10 I=1,300                                                     SOL 530
10    NONROW(I)=0                                                       SOL 540
      DO 20 I=1,NROW                                                    SOL 550
20    FORCMG(I)=0.0                                                     SOL 560
```

```
      NULL=0                                                            SOL 570
      DO 80 I=1,NJOINT                                                  SOL 580
      IC=IJALFM(I,1)                                                    SOL 590
      IF (IC.NE.0) GO TO 30                                             SOL 600
      NULL=NULL+3                                                       SOL 610
      GO TO 50                                                          SOL 620
30    DO 40 J=1,3                                                       SOL 630
      NULL=NULL+1                                                       SOL 640
40    FORCMG(NULL)=FRCVCT(IC,J)                                         SOL 650
50    IC=IJALFM(I,2)                                                    SOL 660
      IF (IC.NE.0) GO TO 60                                             SOL 670
      NULL=NULL+3                                                       SOL 680
      GO TO 80                                                          SOL 690
60    DO 70 J=1,3                                                       SOL 700
      NULL=NULL+1                                                       SOL 710
70    FORCMG(NULL)=RMTVCT(IC,J)                                         SOL 720
80    CONTINUE                                                          SOL 730
C                                                                       SOL 740
C         STORE ROW NUMBERS NOT REQUIRED IN THE SOLUTION IN NONROW      SOL 750
C         IND1SL = 0 IMPLIES NO INITIAL SOLUTION IS AVAILABLE           SOL 760
C                                                                       SOL 770
      NULL=0                                                            SOL 780
      J=0                                                               SOL 790
      I=0                                                               SOL 800
      DO 130 K=1,NJOINT                                                 SOL 810
      DO 130 L=1,6                                                      SOL 820
      I=I+1                                                             SOL 830
      SOLVC2(I)=0.0                                                     SOL 840
      IF (IJRFM(K,L).EQ.0) GO TO 100                                    SOL 850
      NULL=NULL+1                                                       SOL 860
      IF (NULL.GT.300) CALL ERPNT1 (ERRFMN,6,1)                         SOL 870
      NONROW(NULL)=I                                                    SOL 880
      IC=IABS(IJRFM(K,L))                                               SOL 890
      IF (DPRTIT(IC).EQ..0) GO TO 90                                    SOL 900
      SOLVEC(I)=DPRTIT(IC)                                              SOL 910
      SOLVC2(I)=DPRTIT(IC)                                              SOL 920
      GO TO 130                                                         SOL 930
90    SOLVEC(I)=0.0                                                     SOL 940
      SOLVEC(I)=0.0                                                     SOL 950
      GO TO 130                                                         SOL 960
100   IF (STFDIA(I).EQ.0.0) GO TO 110                                   SOL 970
      IF (IND1SL.NE.0) GO TO 130                                        SOL 980
      GO TO 120                                                         SOL 990
110   CONTINUE                                                          SOL1000
      J=1                                                               SOL1010
      WRITE (6,430) I                                                   SOL1020
      GO TO 130                                                         SOL1030
120   CONTINUE                                                          SOL1040
      SOLVEC(I)=FORCMG(I)/STFDIA(I)                                     SOL1050
      SOLVC2(I)=SOLVEC(I)                                               SOL1060
130   CONTINUE                                                          SOL1070
      IF (J.NE.0) STOP                                                  SOL1080
      NNONRW=NULL                                                       SOL1090
C                                                                       SOL1100
C                                                                       SOL1110
C         ITERATION LOOP                                                SOL1120
```

APPENDIX F

```
C
140   IF (NNONRW.LT.MINRST) CALL ERPNT1 (ERMRST,5,1)
      ITRNO=0
      IUPDAT=4
      INDUPD=0
      INDOPT=0
150   ERRMAX=0.0
      NULL=1
      ITRNO=ITRNO+1
      DO 270 I=1,NROW
      IF (I.NE.NONROW(NULL)) GO TO 160
      NULL=NULL+1
      GO TO 270
160   SAVE=0.0
      LOCSTF=IROWL(I)+1
      IF (ISTSTF(LOCSTF).LT.0) GO TO 190
C
C         ROW IN BLOCK FORMAT, ONE COLUMN INDICATOR FOR 6 NON-ZERO
C                                                          ELEMENTS
170   ICOL=ISTSTF(LOCSTF)-1
      DO 180 J=1,6
      ICOL=ICOL+1
      LOCSTF=LOCSTF+1
180   SAVE=SAVE+STRSTF(LOCSTF)*SOLVEC(ICOL)
      LOCSTF=LOCSTF+1
      IF (ISTSTF(LOCSTF).LT.0) GO TO 210
      GO TO 170
C
C         ROW IN ELEMENT FORMAT, ONE COLUMN INDICATOR FOR EACH NON-ZERO
C                                                          ELEMENT
190   NONELE=-ISTSTF(LOCSTF)
      DO 200 J=1,NONELE
      LOCSTF=LOCSTF+1
      ICOL=ISTSTF(LOCSTF)
      LOCSTF=LOCSTF+1
200   SAVE=SAVE+STRSTF(LOCSTF)*SOLVEC(ICOL)
C
C         SUBTRACT SAVE FROW FORCMG(I) AND DIVIDE BY THE DIAGONAL
C              ELEMENT (WHICH IS NOT CONSIDERED IN THE ABOVE CALULATION)
C              TO GET X(N+1)
210   IF (INDRLX.EQ.0) GO TO 220
C
C         USE OVERRELAXATION METHOD
C
      SAVE=RELAXF*(FORCMG(I)-SAVE)/STFDIA(I)+(1.-RELAXF)*SOLVEC(I)
      ERR1=ABS(SOLVEC(I)-SAVE)
      GO TO 250
220   SAVE=(FORCMG(I)-SAVE)/STFDIA(I)
      ERR1=ABS(SOLVEC(I)-SAVE)
      IF (ITRNO.LT.IUPDAT) GO TO 250
C
C         USE THE AITKEN DELTA SQUARED PROCESS TO IMPROVE THE CONVERGENT
C                                                          PROCESS
      IF (ABS(ERR1/SAVE).LT.ERRTL2) GO TO 230
      ERR2=ABS(SOLVC2(I)-SOLVEC(I))
      IF (ERR1.GE.ERR2) GO TO 230
```

```
      SAVE1=SAVE-(SAVE-SOLVEC(I))**2/(SAVE-2.*SOLVEC(I)+SOLVC2(I))
      INDUPD=1
      ERR1=ABS(SOLVEC(I)-SAVE1)
      SOLVC2(I)=SAVE1
      GO TO 240
230   SOLVC2(I)=SAVE
240   SOLVEC(I)=SAVE
      ERR=ERR1/(ABS(SOLVC2(I))+1.E-12)
      GO TO 260
250   CONTINUE
      SOLVC2(I)=SOLVEC(I)
      SOLVEC(I)=SAVE
      ERR=ERR1/(ABS(SAVE)+1.E-12)
260   CONTINUE
C
      IF (ERR.GT.ERRMAX) ERRMAX=ERR
270   CONTINUE
      IF (INDUPD.EQ.0) GO TO 290
      DO 280 K=1,NROW
280   SOLVEC(K)=SOLVC2(K)
      IUPDAT=IUPDAT+2
      INDUPD=0
290   CONTINUE
C
C         CHECK LOOP TERMINATION CONDITIONS
C
      IF (INDITR.EQ.ITRNO) GO TO 320
      IF (INDITR.LT.ITRNO) GO TO 310
      IF (INDOPT.GT.0) GO TO 320
      CALL SECOND (TIME)
      IF (TIME.GT.TMAX-5.) GO TO 300
      IF (ERRMAX.GT.ERRTOL) GO TO 150
      GO TO 320
300   WRITE (6,440)
      INDPLS=0
      GO TO 320
310   CONTINUE
      WRITE (6,450) INDITR,ERRMAX
320   CONTINUE
      CALL PNTFMV (SOLVEC,NJOINT,1)
      WRITE (6,460) ITRNO,ERRMAX
      IUPDAT=IUPDAT+IUPDAT
      INDOPT=INDOPT+1
      IF (INDOPT.LT.2) GO TO 150
C
C         FIND THE COMPLETE FORCE-MOMENT VECTOR
C
      DO 370 K=1,NNONRW
      SAVE=0.0
      I=NONROW(K)
      IF (SOLVEC(I).NE.0.0) SAVE=STFDIA(I)*SOLVEC(I)
      LOCSTF=IROWL(I)+1
      IF (ISTSTF(LOCSTF).LT.0) GO TO 350
330   ICOL=ISTSTF(LOCSTF)-1
      DO 340 J=1,6
      ICOL=ICOL+1
```

APPENDIX F

```
      LOCSTF=LOCSTF+1                                                   SOL2250
340   SAVE=SAVE+STRSTF(LOCSTF)*SOLVEC(ICOL)                             SOL2260
      LOCSTF=LOCSTF+1                                                   SOL2270
      IF (ISTSTF(LOCSTF).LT.0) GO TO 370                                SOL2280
      GO TO 330                                                         SOL2290
350   NONELE=-ISTSTF(LOCSTF)                                            SOL2300
      DO 360 J=1,NONELE                                                 SOL2310
      LOCSTF=LOCSTF+1                                                   SOL2320
      ICOL=ISTSTF(LOCSTF)                                               SOL2330
      LOCSTF=LOCSTF+1                                                   SOL2340
360   SAVE=SAVE+STRSTF(LOCSTF)*SOLVEC(ICOL)                             SOL2350
370   FORCMG(I)=SAVE                                                    SOL2360
      CALL PNTFMV (FORCMG,NJOINT,-1)                                    SOL2370
C                                                                       SOL2380
C         INDPLS = 0 IMPLIES NO PLASTICITY                              SOL2390
C                                                                       SOL2400
      IF (INDPLS.EQ.0) RETURN                                           SOL2410
      NULL=0                                                            SOL2420
      INDBDL=NNONRW                                                     SOL2430
      LOCSTF=0                                                          SOL2440
      DO 410 I=1,NJOINT                                                 SOL2450
      DO 410 J=1,6                                                      SOL2460
      NULL=NULL+1                                                       SOL2470
      IF (IJRFM(I,J).EQ.0) GO TO 410                                    SOL2480
      LOCSTF=LOCSTF+1                                                   SOL2490
      IF (IJRFM(I,J).LT.0) GO TO 410                                    SOL2500
      ICOL=IJRFM(I,J)                                                   SOL2510
      IF (RLIMTU(ICOL).GE.FORCMG(NULL)) GO TO 380                       SOL2520
      FORCMG(NULL)=RLIMTU(ICOL)                                         SOL2530
      GO TO 390                                                         SOL2540
380   IF (RLIMTL(ICOL).LE.FORCMG(NULL)) GO TO 410                       SOL2550
      FORCMG(NULL)=RLIMTL(ICOL)                                         SOL2560
390   NNONRW=NNONRW-1                                                   SOL2570
      IJRFM(I,J)=0                                                      SOL2580
      DO 400 K=LOCSTF,NNONRW                                            SOL2590
400   NONROW(K)=NONROW(K+1)                                             SOL2600
      LOCSTF=LOCSTF-1                                                   SOL2610
      IF (STFDIA(NULL).EQ.0.0) CALL ERPNT1 (ERDIA,5,-1)                 SOL2620
      IF (SOLVEC(NULL).NE.0.0) CALL ERPNT1 (ERRL,6,-1)                  SOL2630
      WRITE (6,470) ALP(J),I                                            SOL2640
410   CONTINUE                                                          SOL2650
      CALL ERPNT2                                                       SOL2660
      IF (INDBDL.EQ.NNONRW) RETURN                                      SOL2670
      GO TO 140                                                         SOL2680
C                                                                       SOL2690
420   FORMAT (1H1)                                                      SOL2700
430   FORMAT (29H THE DIAGONAL ELEMENT FOR ROW,I4,16H CAN NOT BE ZERO)  SOL2710
440   FORMAT (66H SOLUTION ITERATIONS STOPPED BECAUSE JOB IS APPROACHINGSOL2720
     1 TIME LIMIT)                                                      SOL2730
450   FORMAT (10HOMORE THANI5,28H ITERATIONS, MAXIMUM ERROR =E16.8)     SOL2740
460   FORMAT (1XI4,68H ITERATIONS WERE REQUIRED TO REACH A MAXIMUM RELATSOL2750
     1IVE DIFFERENCE OF E14.7)                                          SOL2760
470   FORMAT (5H THE A10,37HRESTRAINT WAS VIOLATED FOR JOINT NO. I4)    SOL2770
      END                                                               SOL2780-
```

APPENDIX F

```
      SUBROUTINE PNTFMV (ARRAY,NJOINT,IND)                              PNT  10
      DIMENSION ARRAY(1)                                                PNT  20
      LCOUNT=70                                                         PNT  30
      I1=1                                                              PNT  40
      I2=6                                                              PNT  50
      DO 30 I=1,NJOINT                                                  PNT  60
      IF (LCOUNT.LT.56) GO TO 20                                        PNT  70
C                                                                       PNT  80
C         WRITE PAGE TITLE AT TOP OF NEXT PAGE                          PNT  90
C                                                                       PNT 100
      LCOUNT=7                                                          PNT 110
      IF (IND.LT.0) GO TO 10                                            PNT 120
      WRITE (6,50)                                                      PNT 130
      GO TO 20                                                          PNT 140
10    CONTINUE                                                          PNT 150
      WRITE (6,60)                                                      PNT 160
20    CONTINUE                                                          PNT 170
      WRITE (6,70) I,(ARRAY(K),K=I1,I2)                                 PNT 180
      I1=I1+6                                                           PNT 190
      I2=I2+6                                                           PNT 200
      LCOUNT=LCOUNT+1                                                   PNT 210
30    CONTINUE                                                          PNT 220
      IF (IND.GT.0) RETURN                                              PNT 230
      K=0                                                               PNT 240
      XF=0.0                                                            PNT 250
      YF=0.0                                                            PNT 260
      ZF=0.0                                                            PNT 270
      DO 40 I=1,NJOINT                                                  PNT 280
      K=K+1                                                             PNT 290
      XF=XF+ARRAY(K)                                                    PNT 300
      YF=YF+ARRAY(K+1)                                                  PNT 310
      ZF=ZF+ARRAY(K+2)                                                  PNT 320
40    K=K+5                                                             PNT 330
      WRITE (6,80) XF,YF,ZF                                             PNT 340
      RETURN                                                            PNT 350
C                                                                       PNT 360
50    FORMAT (1H1,36X39HNODAL POINT DISPLACEMENTS AND ROTATIONS/44X24HGLPNT 370
     1OBAL COORDINATE SYSTEM/1H0,4X11HNODAL POINT,5X3(2X12HDISPLACEMENT1PNT 380
     2X),3(4X8HROTATION3X)/7X7HNUMBER,2(14X1HX,14X1HY,14X1HZ)///)       PNT 390
60    FORMAT (1H1,40X30HNODAL POINT FORCES AND MOMENTS/44X24HGLOBAL COORPNT 400
     1DINATE SYSTEM/1H0,4X11HNODAL POINT,5X3(5X5HFORCE5X),3(5X6HMOMENT4XPNT 410
     2)/7X7HNUMBER 2(14X1HX,14X1HY,14X1HZ)///)                          PNT 420
70    FORMAT (8XI3,9X6(E15.6))                                          PNT 430
80    FORMAT (1H0,6X5HTOTAL,8X3E15.6)                                   PNT 440
      END                                                               PNT 450-
```

APPENDIX F

```
      SUBROUTINE FMBARS                                                 FMB  10
      COMMON COM(30)                                                    FMB  20
      EQUIVALENCE ( COM( 4), NBAR    )                                  FMB  30
      DIMENSION IBARP(1), IBARQ(1), IBARR(1), STIFML(12,12),            FMB  40
     1          TRANSM(3,3), SOLVEC(1)                                  FMB  50
      COMMON / CMAIN / COMAIN(1)                                        FMB  60
      EQUIVALENCE ( COMAIN(1337), IBARP  )                              FMB  70
      EQUIVALENCE ( COMAIN(1411), IBARQ  )                              FMB  80
      EQUIVALENCE ( COMAIN(1485), IBARR  )                              FMB  90
      EQUIVALENCE ( COMAIN(  1 ), STIFML )                              FMB 100
      EQUIVALENCE ( COMAIN( 145), TRANSM )                              FMB 110
      EQUIVALENCE ( COMAIN(2003), SOLVEC )                              FMB 120
      DIMENSION IPR(6), DISPL(12), DISPL2(12), FMLSTF(12)               FMB 130
      DATA IPR / 1, 2, 3, 7, 8, 9 /                                     FMB 140
      DATA LCOUNT / 70 /                                                FMB 150
      REWIND 2                                                          FMB 160
      DO 50 I=1,NBAR                                                    FMB 170
      IF (LCOUNT.LT.56) GO TO 10                                        FMB 180
C                                                                       FMB 190
C         WRITE PAGE TITLE AT TOP OF NEXT PAGE                          FMB 200
C                                                                       FMB 210
      LCOUNT=7                                                          FMB 220
      WRITE (6,60)                                                      FMB 230
10    CONTINUE                                                          FMB 240
      IR=IBARR(I)                                                       FMB 250
      IP=IBARP(I)                                                       FMB 260
      IQ=IBARQ(I)                                                       FMB 270
      READ (2) ((TRANSM(K,J),J=1,3),K=1,3)                              FMB 280
      READ (2) ((STIFML(K,J),J=1,12),K=1,12)                            FMB 290
C                                                                       FMB 300
C         SET UP DISPLACEMENT VECTOR                                    FMB 310
C                                                                       FMB 320
      JJ=(IQ-1)*6                                                       FMB 330
      II=(IP-1)*6                                                       FMB 340
      DO 20 K=1,6                                                       FMB 350
      II=II+1                                                           FMB 360
      I1=IPR(K)                                                         FMB 370
      DISPL(I1)=SOLVEC(II)                                              FMB 380
      JJ=JJ+1                                                           FMB 390
      I1=I1+3                                                           FMB 400
20    DISPL(I1)=SOLVEC(JJ)                                              FMB 410
C                                                                       FMB 420
C         TRANSFORM DISPLACEMENT VECTOR                                 FMB 430
C                                                                       FMB 440
      II=-3                                                             FMB 450
      IROW=0                                                            FMB 460
      DO 30 K=1,4                                                       FMB 470
      II=II+3                                                           FMB 480
      DO 30 J=1,3                                                       FMB 490
      IROW=IROW+1                                                       FMB 500
      DISPL2(IROW)=0.0                                                  FMB 510
      DO 30 JJ=1,3                                                      FMB 520
      I1=II+JJ                                                          FMB 530
30    DISPL2(IROW)=DISPL2(IROW)+TRANSM(J,JJ)*DISPL(I1)                  FMB 540
C                                                                       FMB 550
C         CALCULATE LOCAL FORCE-MOMENT VECTOR                           FMB 560
```

```
C                                                                       FMB 570
      DO 40 K=1,12                                                      FMB 580
      FMLSTF(K)=.0                                                      FMB 590
      DO 40 J=1,12                                                      FMB 600
40    FMLSTF(K)=FMLSTF(K)+STIFML(K,J)*DISPL2(J)                         FMB 610
      WRITE (6,70) I,IP,IQ,IR,(FMLSTF(K),K=1,3),(FMLSTF(K),K=7,9),(FMLSTFMB 620
     1F(K),K=4,6),(FMLSTF(K),K=10,12)                                   FMB 630
      LCOUNT=LCOUNT+3                                                   FMB 640
50    CONTINUE                                                          FMB 650
      RETURN                                                            FMB 660
C                                                                       FMB 670
60    FORMAT (1H1,49X22HBAR FORCES AND MOMENTS/49X24HLOCAL COORDINATE SYFMB 680
     1STEMS/1H0,29H  BAR     NODAL POINT NUMBERS,11X3(5X5HFORCE5X),3(5X6FMB 690
     2HMOMENT4X)/30H  NUMBER     P      Q      R  ,4X2(14X1HX,14X1HY,14X1FMB 700
     3HZ)///)                                                           FMB 710
70    FORMAT (3XI3,6XI3,4XI3,4XI3,11H   POINT P ,6E15.6/29X,11H   POINT FMB 720
     1Q ,6E15.6/)                                                       FMB 730
      END                                                               FMB 740-
```

APPENDIX F

```
      OVERLAY ( SASLP, 4, 0 )
      PROGRAM NLMDAL                                                    NLM  10
      DIMENSION SM(444)                                                 NLM  20
      DIMENSION AMASSV(102)                                             NLM  30
      DIMENSION RJX(1), RJY(1), RJZ(1)                                  NLM  40
      DIMENSION STRSTF(10404)                                           NLM  50
      DIMENSION AMASS(102), IRWKP(103)                                  NLM  60
      DIMENSION EGVALU(444), EGVECT(2220), WORK1(444),                  NLM  70
     1            WORK2(444), ADIA(444), BOFDIA(444)                    NLM  80
      DIMENSION ROWNXT(444), IRWTOR(444), T(444)                        NLM  90
      COMMON COM(30)                                                    NLM 100
      EQUIVALENCE ( COM( 8), NROW    )                                  NLM 110
      EQUIVALENCE ( COM(21), NRWTOR )                                   NLM 120
      EQUIVALENCE ( COM(22), IREDTO , MORDER )                          NLM 130
      EQUIVALENCE ( COM(23), NEIGVL )                                   NLM 140
      COMMON / CMAIN / COMAIN(1)                                        NLM 150
      EQUIVALENCE ( COMAIN( 1 ), RJX     )                              NLM 160
      EQUIVALENCE ( COMAIN(101), RJY     )                              NLM 170
      EQUIVALENCE ( COMAIN(201), RJZ     )                              NLM 180
      EQUIVALENCE ( COMAIN( 893 ), SM   ,  ADIA   )                     NLM 190
      EQUIVALENCE ( COMAIN( 1559 ), ROWNXT )                            NLM 200
      EQUIVALENCE ( COMAIN( 2003 ), IRWTOR )                            NLM 210
      EQUIVALENCE ( COMAIN( 2447 ), AMASS  )                            NLM 220
      EQUIVALENCE ( COMAIN( 2549 ), IRWKP  )                            NLM 230
      EQUIVALENCE ( COMAIN( 2711), BOFDIA )                             NLM 240
      EQUIVALENCE ( COMAIN( 3156 ), STRSTF )                            NLM 250
      EQUIVALENCE ( STRSTF(1), ISTSTF )                                 NLM 260
      EQUIVALENCE ( STRSTF( 5400), EGVALU )                             NLM 270
      EQUIVALENCE ( STRSTF( 5500), EGVECT )                             NLM 280
      EQUIVALENCE ( STRSTF(7964), WORK1 )                               NLM 290
      EQUIVALENCE ( STRSTF(8408), WORK2  )                              NLM 300
      EQUIVALENCE ( STRSTF(9740), T      )                              NLM 310
      DO 10 I=1,MORDER                                                  NLM 320
10    AMASSV(I)=AMASS(I)                                                NLM 330
C                                                                       NLM 340
C         REDUCE STIFFNESS MATRIX                                       NLM 350
C                                                                       NLM 360
      CALL REDUCE (STRSTF,ISTSTF,IRWKP,ROWNXT,WORK1,T,SM,IRWTOR)        NLM 370
C                          T                                            NLM 380
C         MATRIX = ((M)**-.5) *(K)*(M)**-.5                             NLM 390
C                                                                       NLM 400
      CALL STFMAS (STRSTF,AMASS,MORDER)                                 NLM 410
C                                                                       NLM 420
C         HOUSEHOLDER METHOD TO OBTAIN MATRIX IN TRIPLE-DIAGONAL FORM   NLM 430
C                                                                       NLM 440
      CALL TRIDIA (MORDER,STRSTF,ADIA,BOFDIA)                           NLM 450
C                                                                       NLM 460
C         FIND THE ELEVEN SMALLEST EIGENVALUES                          NLM 470
C                                                                       NLM 480
      CALL EIGVAL (MORDER,EGVALU,ADIA,BOFDIA,WORK1,WORK2,NEIGVL)        NLM 490
C                                                                       NLM 500
C         FIND THE EIGENVECTORS FOR THE LAST FIVE EIGENVALUES ABOVE     NLM 510
C              FOR MATRIX                                               NLM 520
      J=1                                                               NLM 530
      DO 20 I=7,NEIGVL                                                  NLM 540
      CALL EIGVEC (MORDER,EGVALU(I),STRSTF,ADIA,BOFDIA,EGVECT(J),WORK1,WNLM 550
```

```
     1ORK2)                                                            NLM 560
20    J=J+NROW                                                         NLM 570
C                                                                      NLM 580
C          CALCULATE EIGENVECTOR FOR REDUCED MATRIX FORM               NLM 590
C                                                                      NLM 600
      K=0                                                              NLM 610
      DO 50 M=1,5                                                      NLM 620
      SAVE=EGVECT(K+1)                                                 NLM 630
      DO 30 J=1,MORDER                                                 NLM 640
      I=K+J                                                            NLM 650
      EGVECT(I)=AMASS(J)*EGVECT(I)                                     NLM 660
      IF (ABS(SAVE).LT.ABS(EGVECT(I))) SAVE=EGVECT(I)                  NLM 670
30    CONTINUE                                                         NLM 680
      DO 40 J=1,MORDER                                                 NLM 690
      I=K+J                                                            NLM 700
40    EGVECT(I)=EGVECT(I)/SAVE                                         NLM 710
50    K=K+NROW                                                         NLM 720
      CALL PRNT1 (EGVALU,EGVECT,AMASSV,IRWKP,NROW,MORDER,IRWTOR,WORK1) NLM 730
C                                                                      NLM 740
C          TAKE ABOVE EIGENVECTORS AND USE THE TRANSFORMATION MATRICES NLM 750
C               TO GET FINAL EIGENVECTORS                              NLM 760
      IF (IREDTO.EQ.NROW) GO TO 60                                     NLM 770
      CALL FNALEV (EGVECT,AMASS,MORDER,NEIGVL,NROW,NRWTOR,T,WORK1,IRWKP,NLM 780
     1IRWTOR)                                                          NLM 790
60    CONTINUE                                                         NLM 800
      CALL PRNT2 (EGVALU,EGVECT,AMASSV,IRWKP,NROW,MORDER,IRWTOR,WORK1) NLM 810
C                                                                      NLM 820
C          PRINT                                                       NLM 830
C                                                                      NLM 840
      RETURN                                                           NLM 850
      END                                                              NLM 860-
```

APPENDIX F

```
      SUBROUTINE REDUCE (STRSTF,ISTSTF,IRWKP,ROWNXT,IRCPST,T,SM,IRWTOR) RED  10
      DIMENSION ISTSTF(1)                                               RED  20
      DIMENSION STRSTF(1), IRWKP(1),            ROWNXT(1),              RED  30
     1          IRCPST(1),     T(1),     SM(1), IRWTOR(1)               RED  40
      INTEGER TAPEA, TAPEB                                              RED  50
      COMMON COM(30)                                                    RED  60
      EQUIVALENCE ( COM (  8), NROW  )                                  RED  70
      EQUIVALENCE ( COM ( 22), IREDTO)                                  RED  80
      EQUIVALENCE ( COM ( 21), NRWTOR)                                  RED  90
C                                                                       RED 100
      DIMENSION ERZD(7)                                                 RED 110
      DATA TAPEA, TAPEB / 1, 2 /                                        RED 120
      DATA ERZD   /50H THE DIAGONAL ELEMENT CAN NOT BE ZERO IN THE ROW BRED 130
     1            ,20HEING REMOVED        /                            RED 140
C                                                                       RED 150
C         SET UP IRWTOR WITH THE ROWS TO BE REDUCED IN DESCENDING ORDER RED 160
C                                                                       RED 170
      IRWKP(IREDTO+1)=0                                                 RED 180
      J=1                                                               RED 190
      IRWTOR(1)=0                                                       RED 200
      IF (IREDTO.EQ.NROW) GO TO 30                                      RED 210
      NRWTOR=NROW-IREDTO                                                RED 220
      LAST=NRWTOR+1                                                     RED 230
      DO 20 I=1,NROW                                                    RED 240
      IF (I.EQ.IRWKP(J)) GO TO 10                                       RED 250
      LAST=LAST-1                                                       RED 260
      IRWTOR(LAST)=I                                                    RED 270
      GO TO 20                                                          RED 280
10    J=J+1                                                             RED 290
20    CONTINUE                                                          RED 300
30    CONTINUE                                                          RED 310
C                                                                       RED 320
C         WRITE STIFFNESS MATRIX ON TAPEA BY ROWS, WITH THE EXCEPTION   RED 330
C              THAT THE FIRST ROW TO BE REMOVED IS STORED IN ROWNXT     RED 340
C                                                                       RED 350
      REWIND TAPEA                                                      RED 360
      L=1                                                               RED 370
      DO 160 I=1,NROW                                                   RED 380
      IF=1                                                              RED 390
40    L=L+1                                                             RED 400
      IF (ISTSTF(L).LT.0) GO TO 110                                     RED 410
      IC=ISTSTF(L)                                                      RED 420
      IF (IC.GT.IF) GO TO 70                                            RED 430
50    IL=IC+5                                                           RED 440
      DO 60 J=IF,IL                                                     RED 450
      L=L+1                                                             RED 460
      IF (STRSTF(L).EQ.0.0) GO TO 60                                    RED 470
      IF (ABS(STRSTF(L)).LT.1.E-8) STRSTF(L)=0.0                        RED 480
      IF (STRSTF(L).NE.0.0) CALL WRSTRK (I,J,STRSTF(L))                 RED 490
60    SM(J)=STRSTF(L)                                                   RED 500
      IF=IL+1                                                           RED 510
      GO TO 40                                                          RED 520
70    IL=IC-1                                                           RED 530
      IF (IF.EQ.0.OR.IL.EQ.0) GO TO 80                                  RED 540
      IF (IABS(IF).LT.444.AND.IABS(IL).LT.444) GO TO 90                 RED 550
80    CONTINUE                                                          RED 560
```

```
      WRITE (6,340) IF,IL                                               RED 570
      IF=L-200                                                          RED 580
      IL=L+200                                                          RED 590
      WRITE (6,350) (STRSTF(J),J=IF,IL)                                 RED 600
      WRITE (6,360) (ISTSTF(J),J=IF,IL)                                 RED 610
      STOP                                                              RED 620
90    CONTINUE                                                          RED 630
      DO 100 J=IF,IL                                                    RED 640
100   SM(J)=0.0                                                         RED 650
      IF=IC                                                             RED 660
      GO TO 50                                                          RED 670
110   CONTINUE                                                          RED 680
      IF (IF.GT.NROW) GO TO 130                                         RED 690
      DO 120 J=IF,NROW                                                  RED 700
120   SM(J)=0.0                                                         RED 710
130   CONTINUE                                                          RED 720
      IF (I.NE.IRWTOR(1)) GO TO 150                                     RED 730
      DO 140 J=1,NROW                                                   RED 740
140   ROWNXT(J)=SM(J)                                                   RED 750
      GO TO 160                                                         RED 760
150   WRITE (TAPEA) (SM(J),J=1,NROW)                                    RED 770
160   CONTINUE                                                          RED 780
C         PRINT LAST LINE                                               RED 790
      CALL WRSTRK (-1,-1,1.)                                            RED 800
      DO 170 J=1,NROW                                                   RED 810
170   IRCPST(J)=J                                                       RED 820
C                                                                       RED 830
C         SET NUMBER OF ACTIVE ROWS                                     RED 840
C                                                                       RED 850
      NACTRW=NROW                                                       RED 860
      IF (IREDTO.EQ.NROW) GO TO 320                                     RED 870
C                                                                       RED 880
C         START OF LOOPS TO REDUCE STRUCTURAL STIFFNESS MATRIX          RED 890
C                                                                       RED 900
      REWIND 3                                                          RED 910
      IRWTOR(NRWTOR+1)=0                                                RED 920
      DO 310 IRWR=1,NRWTOR                                              RED 930
      REWIND TAPEA                                                      RED 940
      REWIND TAPEB                                                      RED 950
      IROW=IRWTOR(IRWR)                                                 RED 960
      IR1=IRCPST(IROW)                                                  RED 970
      IF (IRWR.NE.NRWTOR) GO TO 180                                     RED 980
      IR2=0                                                             RED 990
C             IR1  CURRENT POSITION (ROW + COl. NO.) OF ROW BEING       RED1000
C                                                          REMOVEDRED1010
C             IR2  CURRENT POSITION OF NEXT ROW TO BE REMOVED           RED1020
C                                                                       RED1030
      GO TO 190                                                         RED1040
180   IR2=IRWTOR(IRWR+1)                                                RED1050
      IR2=IRCPST(IR2)                                                   RED1060
190   CONTINUE                                                          RED1070
      IRR=IR1-1                                                         RED1080
C                                                                       RED1090
C         BUILD TRANSFORMATION MATRIX OF ORDER (NACTRW)*(NACTRW-1)      RED1100
C             SAVE ONLY LAST ROW, SINCE FIRST NACTRW-1 ROWS ARE THE     RED1110
C             IDENTITY                                                  RED1120
```

```
      NACTR2=NACTRW-1                                                   RED1130
      SAVE=ROWNXT(IR1)                                                  RED1140
      IF (SAVE.EQ.0.) CALL ERPNT1 (ERZD,7,1)                            RED1150
      DO 200 I=1,IRR                                                    RED1160
200   T(I)=-ROWNXT(I)/SAVE                                              RED1170
      DO 210 I=IR1,NACTR2                                               RED1180
210   T(I)=-ROWNXT(I+1)/SAVE                                            RED1190
C         **********                                                    RED1200
C                                                                       RED1210
C         SAVE LAST ROW OF TRANSFORMATION MATRIX ON FILE UNIT 3         RED1220
C                                                                       RED1230
      WRITE (3) (T(K),K=1,NACTR2)                                       RED1240
C                                                                       RED1250
C                                                                       RED1260
C         START LOOP TO PROCESS ACTIVE ROW IN COORDINATE REDUCTION      RED1270
C                                                                       RED1280
      DO 290 ICRNTR=1,NACTR2                                            RED1290
C         READ STIFFNESS MATRIX ROW, ICRNTR                             RED1300
      READ (TAPEA) (SM(K),K=1,NACTRW)                                   RED1310
C                                                                       RED1320
      SAVE=SM(IR1)                                                      RED1330
      IF (SAVE.NE.0.) GO TO 230                                         RED1340
      DO 220 I=IR1,NACTR2                                               RED1350
220   SM(I)=SM(I+1)                                                     RED1360
      GO TO 260                                                         RED1370
230   DO 240 I=1,IRR                                                    RED1380
240   SM(I)=SM(I)+SAVE*T(I)                                             RED1390
      DO 250 I=IR1,NACTR2                                               RED1400
250   SM(I)=SM(I+1)+SAVE*T(I)                                           RED1410
260   CONTINUE                                                          RED1420
C                                                                       RED1430
C         IF THIS ROW IS THE NEXT TO BE REMOVED, SAVE THE ROW IN ROWNXT RED1440
C                                                                       RED1450
      IF (ICRNTR.NE.IR2) GO TO 280                                      RED1460
      DO 270 I=1,NACTR2                                                 RED1470
270   ROWNXT(I)=SM(I)                                                   RED1480
      GO TO 290                                                         RED1490
C                                                                       RED1500
C         WRITE THE  REDUCED ROW ON TO TAPEB                            RED1510
C                                                                       RED1520
280   WRITE (TAPEB) (SM(K),K=1,NACTR2)                                  RED1530
290   CONTINUE                                                          RED1540
C                                                                       RED1550
C         REVERSE READ/WRITE TAPE VALUES                                RED1560
C                                                                       RED1570
      I=TAPEA                                                           RED1580
      TAPEA=TAPEB                                                       RED1590
      TAPEB=I                                                           RED1600
C         **********                                                    RED1610
C                                                                       RED1620
C         UPDATE IRCPST ARRAY TO ADJUST FOR THE ROW + COLUMN REMOVED    RED1630
C                                                                       RED1640
      IRCPST(IROW)=-IRCPST(IROW)                                        RED1650
      K=IROW+1                                                          RED1660
      DO 300 I=K,NROW                                                   RED1670
      IF (IRCPST(I).LT.0) GO TO 300                                     RED1680
```

```
      IRCPST(I)=IRCPST(I)-1                                             RED1690
300   CONTINUE                                                          RED1700
C                                                                       RED1710
C         UPDATE NO. OF ACTIVE ROWS                                     RED1720
C                                                                       RED1730
      NACTRW=NACTR2                                                     RED1740
310   CONTINUE                                                          RED1750
C                                                                       RED1760
C         COPY STIFFNESS MATRIX TO CORE                                 RED1770
C                                                                       RED1780
320   CONTINUE                                                          RED1790
      IRR=0                                                             RED1800
      REWIND TAPEA                                                      RED1810
      DO 330 I=1,NACTRW                                                 RED1820
      READ (TAPEA) (SM(K),K=1,NACTRW)                                   RED1830
      DO 330 J=1,NACTRW                                                 RED1840
      IRR=IRR+1                                                         RED1850
330   STRSTF(IRR)=SM(J)                                                 RED1860
C                                                                       RED1870
      RETURN                                                            RED1880
C                                                                       RED1890
340   FORMAT (7H IF IL ,2I10)                                           RED1900
350   FORMAT (10E12.5)                                                  RED1910
360   FORMAT (10I12)                                                    RED1920
      END                                                               RED1930-
```

APPENDIX F

```
      SUBROUTINE STFMAS (STRSTF,AMASS,MORDER)                           STM  10
      DIMENSION STRSTF(MORDER,MORDER), AMASS(1)                         STM  20
C                                                                       STM  30
C         COMPUTE  (M)**-1/2  = ((M)**-1/2)T  FOR DIAGONAL MATRIX       STM  40
C                                                                       STM  50
      DO 10 I=1,MORDER                                                  STM  60
10    AMASS(I)=1/SQRT(AMASS(I))                                         STM  70
C                                                                       STM  80
C         COMPUTE ((M)**-1/2)T * (K) * (M)**-1/2                        STM  90
C              STORE THE RESULT IN LOWER TRIANGLAR INCLUDING DIAGONAL   STM 100
C                   FORMAT IN K                                         STM 110
      DO 20 I=1,MORDER                                                  STM 120
      DO 20 J=I,MORDER                                                  STM 130
20    STRSTF(I,J)=STRSTF(I,J)*AMASS(J)                                  STM 140
      LOCSTF=0                                                          STM 150
      DO 30 I=1,MORDER                                                  STM 160
      DO 30 J=1,I                                                       STM 170
      LOCSTF=LOCSTF+1                                                   STM 180
30    STRSTF(LOCSTF,1)=STRSTF(J,I)*AMASS(J)                             STM 190
      RETURN                                                            STM 200
      END                                                               STM 210-
```

APPENDIX F

```
      SUBROUTINE FNALEV (EGVECT,AMASS,MORDER,NEIGVL,NROW,NRWTOR,T,T2,IRWFNA  10
     1KP,IRWTOR)                                                       FNA  20
      DIMENSION T2(1), IRWKP(1), IRWTOR(1)                             FNA  30
      DIMENSION AMASS(1), EGVECT(1), T(1)                              FNA  40
C                                                                      FNA  50
C         CALCULATE EIGENUECTORS FOR THE NON-REDUCED MATRIX FORM       FNA  60
C              TRANSFORMATION MATRICES STORED IN FILE 3 BY SUBROUTINE  FNA  70
C              REDUCE                                                  FNA  80
C                                                                      FNA  90
      NACTRW=MORDER                                                    FNA 100
      DO 90 I=1,NRWTOR                                                 FNA 110
      BACKSPACE 3                                                      FNA 120
      READ (3) (T(L),L=1,NACTRW)                                       FNA 130
      IF (I.EQ.1) GO TO 40                                             FNA 140
      I4=1                                                             FNA 150
      I1=1                                                             FNA 160
      I2=NRWTOR                                                        FNA 170
      I3=MORDER+1                                                      FNA 180
      DO 30 J=1,NACTRW                                                 FNA 190
      IF (I4.EQ.I) GO TO 10                                            FNA 200
      IF (IRWKP(I1).GT.IRWTOR(I2)) GO TO 20                            FNA 210
10    T2(I1)=T(J)                                                      FNA 220
      I1=I1+1                                                          FNA 230
      GO TO 30                                                         FNA 240
20    T2(I3)=T(J)                                                      FNA 250
      I2=I2-1                                                          FNA 260
      I3=I3+1                                                          FNA 270
      I4=I4+1                                                          FNA 280
30    CONTINUE                                                         FNA 290
      GO TO 60                                                         FNA 300
40    CONTINUE                                                         FNA 310
      DO 50 J=1,NACTRW                                                 FNA 320
50    T2(J)=T(J)                                                       FNA 330
60    CONTINUE                                                         FNA 340
      K=0                                                              FNA 350
      DO 80 J=1,5                                                      FNA 360
      SAVE=0.0                                                         FNA 370
      DO 70 M=1,NACTRW                                                 FNA 380
      L=K+M                                                            FNA 390
70    SAVE=SAVE+T2(M)*EGVECT(L)                                        FNA 400
      EGVECT(L+1)=SAVE                                                 FNA 410
80    K=K+NROW                                                         FNA 420
      NACTRW=NACTRW+1                                                  FNA 430
      BACKSPACE 3                                                      FNA 440
90    CONTINUE                                                         FNA 450
      RETURN                                                           FNA 460
      END                                                              FNA 470-
```

APPENDIX F

```
      SUBROUTINE EEPNT (EGVALU,EGVECT,NEIGVL,NROW)                      EEP  10
      DIMENSION EGVALU(1), EGVECT(1)                                    EEP  20
C                                                                       EEP  30
      K1=1                                                              EEP  40
      K2=NROW                                                           EEP  50
      DO 10 I=1,NEIGVL                                                  EEP  60
      WRITE (6,20) I,EGVALU(I)                                          EEP  70
C     IF ( I. .LT. 7 ) GO TO 40                                         EEP  80
      WRITE (6,30) (EGVECT(K),K=K1,K2)                                  EEP  90
      K1=K1+NROW                                                        EEP 100
      K2=K2+NROW                                                        EEP 110
10    CONTINUE                                                          EEP 120
      RETURN                                                            EEP 130
C                                                                       EEP 140
20    FORMAT (13H0 EIGENVALUE(,I2,3H) =,E14.7)                          EEP 150
30    FORMAT (10X30H THE CORRESPONDING EIGENVECTOR/(10X10E12.4))        EEP 160
      END                                                               EEP 170-
```

APPENDIX F

```
      SUBROUTINE TRIDIA (NR,R,A,PQ)                                     TRI  10
C     TRI-DIAGONALIZES SYMMETRIC MATRIX BY HOUSEHOLDER  METHOD          TRI  20
C         NR = ORDER OF MATRIX                                          TRI  30
C         R  = 1-DIMENSIONAL ARRY OF NR/2*(NR+1) ELEMENTS               TRI  40
C           1. CONTAINS LOWER TRIANGULAR PART PLUS DIAGONAL OF MATRIX   TRI  50
C           2. AFTER TRIPLE-DIAGONALIZATION CONTAINS THE DIAGONAL PLUS  TRI  60
C                                                          W VECTORS    TRI  70
C         A  = 1-DIMENSIONAL ARRAY OF NR ELEMENTS, CONTAINS DIAGONAL    TRI  80
C           ELEMENTS OF TRIPLE-DIAGONAL MATRIX                          TRI  90
C         PQ = 1-DIMENSIONAL ARRAY OF NR ELEMENTS,                      TRI 100
C           1. CONTAINS ELEMENTS OF P VECTOR                            TRI 110
C           2. CONTAINS ELEMENTS OF Q VECTOR                            TRI 120
C           3. CONTAINS THE OFF-DIAGONAL TERM OF TRIPLE-DIAGONAL MATRIX TRI 130
C              (END RESULT =(3))                                        TRI 140
      DIMENSION R(1),PQ(1),A(1)                                         TRI 150
      IA=0                                                              TRI 160
      NR1=NR-1                                                          TRI 170
      DO 180 I=2,NR1                                                    TRI 180
      IA=IA+I                                                           TRI 190
C     CALCULATE ELEMENTS OF W VECTOR                                    TRI 200
      S=0.                                                              TRI 210
      JA=IA                                                             TRI 220
      DO 10 J=I,NR                                                      TRI 230
      S=S+R(JA)**2                                                      TRI 240
      JA=JA+J                                                           TRI 250
10    CONTINUE                                                          TRI 260
      SS=SQRT(S)                                                        TRI 270
      PQ(I-1)=-SIGN(SS,R(IA))                                           TRI 280
      IF (S) 20,190,20                                                  TRI 290
20    X=-PQ(I-1)/S                                                      TRI 300
30    R(IA)=SQRT(.500*(1.00+R(IA)*X))                                   TRI 310
      IF (S) 50,40,50                                                   TRI 320
40    R(IA)=0.                                                          TRI 330
50    IF (R(IA)) 60,200,60                                              TRI 340
60    X=.500*X/R(IA)                                                    TRI 350
70    JA=IA                                                             TRI 360
      DO 80 J=I,NR1                                                     TRI 370
      JA=JA+J                                                           TRI 380
      R(JA)=X*R(JA)                                                     TRI 390
80    CONTINUE                                                          TRI 400
C     CALCULATE ELEMENTS OF P VECTOR                                    TRI 410
      JAI=IA+1                                                          TRI 420
      DO 130 J=I,NR                                                     TRI 430
      JA=JAI                                                            TRI 440
      KA=IA                                                             TRI 450
      PQ(J)=0.                                                          TRI 460
      DO 120 K=I,NR                                                     TRI 470
      PQ(J)=PQ(J)+R(KA)*R(JA)                                           TRI 480
      IF (K-J) 90,100,100                                               TRI 490
90    JA=JA+1                                                           TRI 500
      GO TO 110                                                         TRI 510
100   JA=JA+K                                                           TRI 520
110   KA=KA+K                                                           TRI 530
120   CONTINUE                                                          TRI 540
      JAI=JAI+J                                                         TRI 550
130   CONTINUE                                                          TRI 560
```

```
C       CALCULATE ELEMENTS OF Q VECTOR                                  TRI 570
        AK=0.                                                           TRI 580
        JA=IA                                                           TRI 590
        DO 140 J=I,NR                                                   TRI 600
        AK=AK+R(JA)*PQ(J)                                               TRI 610
        JA=JA+J                                                         TRI 620
140     CONTINUE                                                        TRI 630
        AK=2.00*AK                                                      TRI 640
        JA=IA                                                           TRI 650
        DO 150 J=I,NR                                                   TRI 660
        PQ(J)=2.00*PQ(J)-AK*R(JA)                                       TRI 670
        JA=JA+J                                                         TRI 680
150     CONTINUE                                                        TRI 690
C       CALCULATE ELEMENTS OF NEW R MATRIX                              TRI 700
        KK=IA                                                           TRI 710
        JA=IA                                                           TRI 720
        DO 170 J=I,NR                                                   TRI 730
        KA=IA                                                           TRI 740
        DO 160 K=I,J                                                    TRI 750
        KK=KK+1                                                         TRI 760
        R(KK)=R(KK)-PQ(K)*R(JA)-R(KA)*PQ(J)                             TRI 770
        KA=KA+K                                                         TRI 780
160     CONTINUE                                                        TRI 790
        KK=KK+I-1                                                       TRI 800
        JA=JA+J                                                         TRI 810
170     CONTINUE                                                        TRI 820
180     CONTINUE                                                        TRI 830
        GO TO 210                                                       TRI 840
190     X=0.                                                            TRI 850
        GO TO 30                                                        TRI 860
200     X=0.                                                            TRI 870
        GO TO 70                                                        TRI 880
C       SORT ALPHAS AND BETAS                                           TRI 890
210     IA=0                                                            TRI 900
        DO 220 I=1,NR                                                   TRI 910
        IA=IA+I                                                         TRI 920
        A(I)=R(IA)                                                      TRI 930
220     CONTINUE                                                        TRI 940
        PQ(NR)=R(IA-1)                                                  TRI 950
        N=NR                                                            TRI 960
230     N=N-1                                                           TRI 970
        PQ(N)=PQ(N-1)                                                   TRI 980
        IF (2-N) 230,240,240                                            TRI 990
240     PQ(1)=0.                                                        TRI1000
        RETURN                                                          TRI1010
        END                                                             TRI1020-
```

APPENDIX F

```
      SUBROUTINE EIGVAL (LP,E,A,B,F,W,MVAL)                              EVA  10
C     FINDS EIGENVALUES OF TRI-DIAGONAL MATRICES BY ORTEGA METHOD        EVA  20
C         LP = ORDER OF MATRIX                                           EVA  30
C         E  = 1-DIMENSIONAL ARRAY OF LP ELEMENTS. THE EIGENVALUES ARE   EVA  40
C              STORED IN THIS ARRAY IN ASCENDING ORDER                   EVA  50
C         A  = 1-DIMENSIONAL ARRAY OF LP ELEMENTS. CONTAINS DIAGONAL     EVA  60
C              ELEMENTS OF TRIPLE-DIAGONAL MATRIX                        EVA  70
C         B  = 1-DIMENSIONAL ARRAY OF LP ELEMENTS. CONTAINS OFF-DIAGONALEVA  80
C              ELEMENTS OF TRIPLE-DIAGONAL MATRIX                        EVA  90
C         F AND W = 1-DIMENSION ARRAY OF LP ELEMENTS EACH USED AS        EVA 100
C              WORK AREAS                                                EVA 110
C         MVAL = NUMBER OR EIGENVALUES TO BE CALCULATED.                 EVA 120
      DIMENSION E(1),A(1),B(1),F(1),W(1)                                 EVA 130
C     FIND UPPER AND LOWER BOUNDS AND NORMALIZE INPUT                    EVA 140
      BD=ABS(A(1))                                                       EVA 150
      DO 10 I=2,LP                                                       EVA 160
10    BD=AMAX1(BD,ABS(A(I))+B(I)**2,0.00)                                EVA 170
      BD=BD+1.                                                           EVA 180
      DO 20 I=1,LP                                                       EVA 190
      A(I)=A(I)/BD                                                       EVA 200
      B(I)=B(I)/BD                                                       EVA 210
      W(I)=1.                                                            EVA 220
20    E(I)=-1.                                                           EVA 230
      DO 230 K=1,MVAL                                                    EVA 240
30    IF ((W(K)-E(K))/AMAX1(ABS(W(K)),ABS(E(K)),1.0E-9)-1.0E-12) 230,230EVA 250
     1,40                                                                EVA 260
40    X=(W(K)+E(K))*.5                                                   EVA 270
C     FIND NUMBER OF EIGEN VALUES ,N, GREATER THAN OR EQUAL TO X         EVA 280
      S2=1.                                                              EVA 290
      IS2=1                                                              EVA 300
      F(1)=A(1)-X                                                        EVA 310
      IF (F(1)) 50,60,60                                                 EVA 320
50    IS1=-1                                                             EVA 330
      S1=-1.                                                             EVA 340
      N=0                                                                EVA 350
      GO TO 70                                                           EVA 360
60    IS1=1                                                              EVA 370
      S1=1.                                                              EVA 380
      N=1                                                                EVA 390
70    DO 170 I=2,LP                                                      EVA 400
      IF (B(I)) 80,120,80                                                EVA 410
80    IF (B(I-1)) 90,130,90                                              EVA 420
90    IF (ABS(F(I-1))+ABS(F(I-2))-1.0E-15) 100,110,110                   EVA 430
100   F(I-1)=F(I-1)*1.0E15                                               EVA 440
      F(I-2)=F(I-2)*1.0E15                                               EVA 450
110   F(I)=(A(I)-X)*F(I-1)-B(I)**2*F(I-2)                                EVA 460
      GO TO 140                                                          EVA 470
120   F(I)=(A(I)-X)*SIGN(1.00,S1)                                        EVA 480
      GO TO 140                                                          EVA 490
130   F(I)=(A(I)-X)*F(I-1)-SIGN(B(I)**2,S2)                              EVA 500
140   S2=S1                                                              EVA 510
      IS2=IS1                                                            EVA 520
      IF (F(I)) 150,160,150                                              EVA 530
150   S1=SIGN(ABS(S1),F(I))                                              EVA 540
      IS1=S1                                                             EVA 550
      IF (IS2+IS1) 160,170,160                                           EVA 560
```

```
160   N=N+1                                                    EVA 570
170   CONTINUE                                                 EVA 580
C     TRAP EIGEN VALUES IN SMALLER AND SMALLER BOUNDS          EVA 590
      N=LP-N                                                   EVA 600
      IF (N-K) 200,180,180                                     EVA 610
180   DO 190 J=K,N                                             EVA 620
190   W(J)=X                                                   EVA 630
200   N=N+1                                                    EVA 640
      IF (LP-N) 30,210,210                                     EVA 650
210   DO 220 J=N,LP                                            EVA 660
      IF (X-E(J)) 30,30,220                                    EVA 670
220   E(J)=X                                                   EVA 680
      GO TO 30                                                 EVA 690
230   CONTINUE                                                 EVA 700
C     RESTORE INPUT AND ORDER EIGEN VALUES                     EVA 710
      DO 240 I=1,LP                                            EVA 720
      A(I)=A(I)*BD                                             EVA 730
240   B(I)=B(I)*BD                                             EVA 740
      DO 250 I=1,MVAL                                          EVA 750
250   E(I)=(W(I)+E(I))*BD*.5                                   EVA 760
      RETURN                                                   EVA 770
      END                                                      EVA 780-
```

APPENDIX F

```
      SUBROUTINE EIGVEC (NR,E,R,A,B,V,P,Q)                              EVE  10
C     GIVEN AN EIGENVALUE, FIND THE CORRESPONDING EIGENVECTOR USING     EVE  20
C                                                 WILKINSON METHOD      EVE  30
C         NR = ORDER OF MATRIX                                          EVE  40
C         R  = 1-DIMENSION ARRAY OF NR/2*(NR+1) ELEMENTS CONTAINING     EVE  50
C              THE W VECTOR                                             EVE  60
C         E  = EIGENVALUE                                               EVE  70
C         A  = 1-DIMENSION ARRAY OF NR ELEMENTS CONTAINING DIAGONAL     EVE  80
C              TERMS OF TRIPLE-DIAGONAL MATRIX                          EVE  90
C         B  = 1-DIMENSION ARRAY OF NR ELEMENTS CONTAINING OFF-DIAGONAL EVE 100
C              TERMS OF TRIPLE-DIAGONAL MATRIX                          EVE 110
C         V  = 1-DIMENSION ARRAY OF NR ELEMENTS CONTAINING THE          EVE 120
C              EIGENVECTOR OF THE ORIGINAL SYMMETRIC MATRIX             EVE 130
C         P AND Q = 1-DIMENSIONAL ARRAYS OF NR ELEMENTS EACH USED AS    EVE 140
C              WORK AREAS                                               EVE 150
      DIMENSION  R(1),A(1),B(1),V(1),P(1),Q(1)                          EVE 160
      NR1=NR-1                                                          EVE 170
C     SET UP SIMULTANEOUS EQUATIONS  I.E. COMPUTE P, Q, R               EVE 180
      X=A(1)-E                                                          EVE 190
      Y=B(2)                                                            EVE 200
      DO 70 I=1,NR1                                                     EVE 210
      IF (ABS(B(I+1))-ABS(X)) 30,10,50                                  EVE 220
10    IF (X) 30,20,30                                                   EVE 230
20    X=1.0E-10                                                         EVE 240
30    P(I)=X                                                            EVE 250
      Q(I)=Y                                                            EVE 260
      V(I)=0.                                                           EVE 270
      X=A(I+1)-E-B(I+1)*Y/X                                             EVE 280
      IF (NR1-I) 40,70,40                                               EVE 290
40    Y=B(I+2)                                                          EVE 300
      GO TO 70                                                          EVE 310
50    P(I)=B(I+1)                                                       EVE 320
      Q(I)=A(I+1)-E                                                     EVE 330
      Z=X/P(I)                                                          EVE 340
      X=Y-Z*Q(I)                                                        EVE 350
      IF (NR1-I) 60,70,60                                               EVE 360
60    V(I)=B(I+2)                                                       EVE 370
      Y=-Z*V(I)                                                         EVE 380
70    CONTINUE                                                          EVE 390
C     SOLVE FOR EIGENVECTOR OF TRI-DIAGONAL MATRIX                      EVE 400
      IF (X) 90,80,90                                                   EVE 410
80    V(NR)=1.E10                                                       EVE 420
      GO TO 100                                                         EVE 430
90    V(NR)=1.00/X                                                      EVE 440
100   I=NR1                                                             EVE 450
      V(I)=(1.00-Q(I)*V(NR))/P(I)                                       EVE 460
      X=V(NR)**2+V(I)**2                                                EVE 470
110   I=I-1                                                             EVE 480
      IF (I) 120,130,120                                                EVE 490
120   V(I)=(1.00-Q(I)*V(I+1)-V(I)*V(I+2))/P(I)                          EVE 500
      X=X+V(I)**2                                                       EVE 510
      GO TO 110                                                         EVE 520
C     NORMALIZE VECTOR                                                  EVE 530
130   X=SQRT(X)                                                         EVE 540
      DO 140 I=1,NR                                                     EVE 550
      V(I)=V(I)/X                                                       EVE 560
```

APPENDIX F

```
140   CONTINUE                                                    EVE 570
C     COMPUTE EIGENVECTOR OF ORIGINAL MATRIX                      EVE 580
      I=NR                                                        EVE 590
150   I=I-1                                                       EVE 600
      J=0                                                         EVE 610
      K=1                                                         EVE 620
160   K=K+1                                                       EVE 630
      J=J+K                                                       EVE 640
      IF (K-I) 160,170,160                                        EVE 650
170   Y=0.                                                        EVE 660
      JA=J                                                        EVE 670
      DO 180 K=I,NR                                               EVE 680
      Y=Y+R(JA)*V(K)                                              EVE 690
      JA=JA+K                                                     EVE 700
180   CONTINUE                                                    EVE 710
      Y=2.00*Y                                                    EVE 720
      JA=J                                                        EVE 730
      DO 190 K=I,NR                                               EVE 740
      V(K)=V(K)-Y*R(JA)                                           EVE 750
      JA=JA+K                                                     EVE 760
190   CONTINUE                                                    EVE 770
      IF (I-2) 150,200,150                                        EVE 780
200   RETURN                                                      EVE 790
      END                                                         EVE 800-
```

APPENDIX F

```
      SUBROUTINE PRNT1 (EGVALU,EGVECT,AMASS,IRWKP,NROW,MORDER,IRWTOR,WORPRN  10
     1KA)                                                               PRN  20
      DIMENSION WORKA(1)                                                PRN  30
      DIMENSION EGVALU(1), EGVECT(NROW,5), AMASS(1), IRWKP(1), IRWTOR(1)PRN  40
      COMMON COM(30)                                                    PRN  50
      EQUIVALENCE ( COM( 1 ), NJOINT )                                  PRN  60
      EQUIVALENCE ( COM(25), INDWNM )                                   PRN  70
      COMMON / CMAIN / COMAIN(1)                                        PRN  80
      EQUIVALENCE ( COMAIN(   1), RJX     )                             PRN  90
      EQUIVALENCE ( COMAIN( 101), RJY     )                             PRN 100
      EQUIVALENCE ( COMAIN( 201), RJZ     )                             PRN 110
      DIMENSION WNX(5), WNY(5), WNZ(5), PX(5), PY(5), PZ(5), GM(5,5)    PRN 120
     1     , RJX(1), RJY(1), RJZ(1)                                     PRN 130
      DIMENSION ALPHA(6)                                                PRN 140
      DATA ALPHA / 8HX-TRANS., 8HY-TRANS., 8HZ-TRANS. ,                 PRN 150
     1             8HX-ROTAT., 8HY-ROTAT., 8HZ-ROTAT. /                PRN 160
      DATA ITAPE / 7 /                                                  PRN 170
      WRITE (6,280) (EGVALU(I),I=1,6)                                   PRN 180
      DO 10 J=7,11                                                      PRN 190
10    EGVALU(J)=SQRT(EGVALU(J))                                         PRN 200
      WRITE (6,290) (EGVALU(I),I=7,11)                                  PRN 210
      IF (NROW.EQ.MORDER) GO TO 20                                      PRN 220
      WRITE (6,300)                                                     PRN 230
      GO TO 40                                                          PRN 240
20    DO 30 I=1,NROW                                                    PRN 250
30    IRWKP(I)=I                                                        PRN 260
      WRITE (6,400)                                                     PRN 270
40    CONTINUE                                                          PRN 280
      WRITE (6,310)                                                     PRN 290
      LCOUNT=11                                                         PRN 300
C                                                                       PRN 310
C         ZERO OUT SUMING FIELDS                                        PRN 320
C                                                                       PRN 330
      DO 50 I=1,5                                                       PRN 340
      WNX(I)=0.0                                                        PRN 350
      WNY(I)=0.0                                                        PRN 360
      WNZ(I)=0.0                                                        PRN 370
      PX(I)=0.0                                                         PRN 380
      PY(I)=0.0                                                         PRN 390
      PZ(I)=0.0                                                         PRN 400
      DO 50 J=1,5                                                       PRN 410
50    GM(I,J)=0.0                                                       PRN 420
C                                                                       PRN 430
C         CALCULATE ABOVE VARIABLES                                     PRN 440
C                                                                       PRN 450
      N=IRWKP(I)/6+1                                                    PRN 460
      DO 140 I=1,MORDER                                                 PRN 470
      M=IRWKP(I)                                                        PRN 480
      K=M-(M-1)/6*6                                                     PRN 490
      M=(M-1)/6+1                                                       PRN 500
      IF (LCOUNT.LT.56) GO TO 60                                        PRN 510
      WRITE (6,320)                                                     PRN 520
      WRITE (6,300)                                                     PRN 530
      WRITE (6,310)                                                     PRN 540
      LCOUNT=5                                                          PRN 550
      N=M                                                               PRN 560
```

```
      GO TO 70                                                          PRN 570
60    CONTINUE                                                          PRN 580
      IF (N.EQ.M) GO TO 70                                              PRN 590
      WRITE (6,330)                                                     PRN 600
      LCOUNT=LCOUNT+1                                                   PRN 610
      N=M                                                               PRN 620
70    CONTINUE                                                          PRN 630
C                                                                       PRN 640
C         WRITE MODE SHAPES OF REDUCED SYSTEM                           PRN 650
C                                                                       PRN 660
      WRITE (6,340) M,ALPHA(K),(EGVECT(I,J),J=1,5)                      PRN 670
      LCOUNT=LCOUNT+1                                                   PRN 680
      IF (K.GT.3) GO TO 140                                             PRN 690
      IF (K-2) 80,100,120                                               PRN 700
C         X TRANSLATION MODE SHAPE ELEMENT                              PRN 710
80    DO 90 J=1,5                                                       PRN 720
      SAVE=EGVECT(I,J)*AMASS(I)                                         PRN 730
      PX(J)=PX(J)+RJX(M)*SAVE                                           PRN 740
      SAVE=SAVE*EGVECT(I,J)                                             PRN 750
      WNY(J)=WNY(J)+SAVE                                                PRN 760
90    WNZ(J)=WNZ(J)+SAVE                                                PRN 770
      GO TO 140                                                         PRN 780
C         Y TRANSLATION MODE SHAPE ELEMENT                              PRN 790
100   DO 110 J=1,5                                                      PRN 800
      SAVE=EGVECT(I,J)*AMASS(I)                                         PRN 810
      PY(J)=PY(J)+RJY(M)*SAVE                                           PRN 820
      SAVE=SAVE*EGVECT(I,J)                                             PRN 830
      WNX(J)=WNX(J)+SAVE                                                PRN 840
110   WNZ(J)=WNZ(J)+SAVE                                                PRN 850
      GO TO 140                                                         PRN 860
C         Z TRANSLATION MODE SHAPE ELEMENT                              PRN 870
120   DO 130 J=1,5                                                      PRN 880
      SAVE=EGVECT(I,J)*AMASS(I)                                         PRN 890
      PZ(J)=PZ(J)+RJZ(M)*SAVE                                           PRN 900
      SAVE=SAVE*EGVECT(I,J)                                             PRN 910
      WNX(J)=WNX(J)+SAVE                                                PRN 920
130   WNY(J)=WNY(J)+SAVE                                                PRN 930
140   CONTINUE                                                          PRN 940
      DO 150 I=1,5                                                      PRN 950
      DO 150 K=1,MORDER                                                 PRN 960
      SAVE=EGVECT(K,I)*AMASS(K)                                         PRN 970
      DO 150 J=1,5                                                      PRN 980
150   GM(J,I)=GM(J,I)+SAVE*EGVECT(K,J)                                  PRN 990
      WRITE (6,350)                                                     PRN1000
      WRITE (6,360)                                                     PRN1010
      WRITE (6,370) (WNX(I),I=1,5),(WNY(I),I=1,5),(WNZ(I),I=1,5),(PX(I),PRN1020
     1I=1,5),(PY(I),I=1,5),(PZ(I),I=1,5),((GM(I,J),I=1,5),J=1,5)        PRN1030
      RETURN                                                            PRN1040
C                                                                       PRN1050
C         PRINT MODE  SHAPES FOR COMPLETE SYSTEM                        PRN1060
C                                                                       PRN1070
      ENTRY PRNT2                                                       PRN1080
      IF ((NROW.EQ.MORDER).AND.(INDWNM.EQ.0)) RETURN                    PRN1090
      IF (INDWNM.EQ.0) GO TO 170                                        PRN1100
      REWIND ITAPE                                                      PRN1110
      SAVE=NJOINT                                                       PRN1120
```

```
      SAVE1=MORDER                                                      PRN1130
      WRITE (ITAPE,380) SAVE,SAVE1                                      PRN1140
      DO 160 I=1,MORDER                                                 PRN1150
160   WORKA(I)=IRWKP(I)                                                 PRN1160
      CALL P1A721 (121,WORKA,MORDER,ITAPE)                              PRN1170
      WRITE (ITAPE,390) (RJY(I),RJZ(I),I,I=1,NJOINT)                    PRN1180
      LC=0                                                              PRN1190
170   CONTINUE                                                          PRN1200
      IF (NROW.EQ.MORDER) GO TO 180                                     PRN1210
      WRITE (6,290) (EGVALU(I),I=7,11)                                  PRN1220
      WRITE (6,400)                                                     PRN1230
      WRITE (6,310)                                                     PRN1240
      LCOUNT=11                                                         PRN1250
180   CONTINUE                                                          PRN1260
      M=NROW-MORDER                                                     PRN1270
      K=1                                                               PRN1280
      N=0                                                               PRN1290
      DO 260 I=1,NJOINT                                                 PRN1300
      DO 250 J=1,3                                                      PRN1310
      N=N+1                                                             PRN1320
190   IF (N.NE.IRWKP(K)) GO TO 200                                      PRN1330
      N1=K                                                              PRN1340
      K=K+1                                                             PRN1350
      GO TO 220                                                         PRN1360
200   IF (N.NE.IRWTOR(M)) GO TO 210                                     PRN1370
      N1=NROW-M+1                                                       PRN1380
      M=M-1                                                             PRN1390
      GO TO 220                                                         PRN1400
210   CONTINUE                                                          PRN1410
      IF (N.GT.IRWKP(K)) K=K+1                                          PRN1420
      IF (N.GT.IRWTOR(M)) M=M-1                                         PRN1430
      GO TO 190                                                         PRN1440
220   CONTINUE                                                          PRN1450
      IF (INDWNM.EQ.0) GO TO 230                                        PRN1460
      LC=LC+1                                                           PRN1470
      WRITE (ITAPE,410) (EGVECT(N1,L),L=1,5),LC                         PRN1480
230   CONTINUE                                                          PRN1490
      IF (NROW.EQ.MORDER) GO TO 250                                     PRN1500
      WRITE (6,340) I,ALPHA(J),(EGVECT(N1,L),L=1,5)                     PRN1510
      LCOUNT=LCOUNT+1                                                   PRN1520
      IF (LCOUNT.LT.56) GO TO 240                                       PRN1530
      WRITE (6,320)                                                     PRN1540
      WRITE (6,400)                                                     PRN1550
      WRITE (6,310)                                                     PRN1560
      LCOUNT=5                                                          PRN1570
      GO TO 250                                                         PRN1580
240   CONTINUE                                                          PRN1590
      IF (J.NE.3) GO TO 250                                             PRN1600
      WRITE (6,330)                                                     PRN1610
      LCOUNT=LCOUNT+1                                                   PRN1620
250   CONTINUE                                                          PRN1630
      N=N+3                                                             PRN1640
260   CONTINUE                                                          PRN1650
      IF (INDWNM.EQ.0) GO TO 270                                        PRN1660
      WRITE (ITAPE,420) (EGVALU(I+6),GM(I,I),I,I=1,5)                   PRN1670
      WRITE (ITAPE,430) (WNX(I),WNY(I),WNZ(I),PX(I),PY(I),PZ(I),I,I=1,5)PRN1680
```

```
      CALL P1A721 (721,AMASS,MORDER,ITAPE)                              PRN1690
      END FILE ITAPE                                                    PRN1700
270   CONTINUE                                                          PRN1710
      RETURN                                                            PRN1720
C                                                                       PRN1730
280   FORMAT (45H1EIGENVALUES ASSOCIATED WITH RIGID BODY MODES//(5XE14.7PRN1740
     1))                                                                PRN1750
290   FORMAT (1H1,41X33HNATURAL FREQUENCIES (RADIANS/SEC)//37X1H1,17X1H2PRN1760
     1,17X1H3,17X1H4,17X1H5//27X5E18.8//)                               PRN1770
300   FORMAT (36X44HCORRESPONDING MODE SHAPES FOR REDUCED SYSTEM)       PRN1780
310   FORMAT (24H0  NODAL POINT   ELEMENT/25H     NUMBER     REFERENCE,1PRN1790
     12X1H1,17X1H2,17X1H3,17X1H4,17X1H5/)                               PRN1800
320   FORMAT (1H1)                                                      PRN1810
330   FORMAT (1H )                                                      PRN1820
340   FORMAT (6XI3,8XA6,2X5E18.8)                                       PRN1830
350   FORMAT (1H1,42X30HGENERALIZED INERTIA PROPERTIES/)                PRN1840
360   FORMAT (11H  VARIABLES,26X1H1,17X1H2,17X1H3,17X1H4,17X1H5/)       PRN1850
370   FORMAT (1H04X,3HWNX,19X5E18.8/1H04X,3HWNY,19X5E18.8/1H04X,3HWNZ,19PRN1860
     1X5E18.8/1H04X,3H PX,19X5E18.8/1H04X,3H PY,19X5E18.8/1H04X,3H PZ,19PRN1870
     2X5E18.8/1H05X,15HGM(5,5) BY ROWS,6X5E18.8/(27X5E18.8))            PRN1880
380   FORMAT (6X2H21,2X10H  5.0    ,2F10.3,37X3H  1)                    PRN1890
390   FORMAT (5X3H221,2X2E10.3,47XI3)                                   PRN1900
400   FORMAT (36X45HCORRESPONDING MODE SHAPES FOR COMPLETE SYSTEM)      PRN1910
410   FORMAT (5X3H3212X,5E10.3,17XI3)                                   PRN1920
420   FORMAT (5X3H4212X,2E10.3,47XI3)                                   PRN1930
430   FORMAT (5X3H5212X,6E10.3,7XI3)                                    PRN1940
      END                                                               PRN1950-
```

APPENDIX F

```
      SUBROUTINE P1A721 (NO,ARRAY,LNGTH,I6)                          PIA  10
      DIMENSION ARRAY(1)                                             PIA  20
      K=1                                                            PIA  30
      I=1                                                            PIA  40
      DO 10 J=6,LNGTH,6                                              PIA  50
      WRITE (I6,20) NO,(ARRAY(L),L=I,J),K                            PIA  60
      K=K+1                                                          PIA  70
      I=I+6                                                          PIA  80
10    CONTINUE                                                       PIA  90
      IF (I.GT.LNGTH) RETURN                                         PIA 100
      WRITE (I6,20) NO,(ARRAY(L),L=I,LNGTH),K                        PIA 110
      RETURN                                                         PIA 120
C                                                                    PIA 130
20    FORMAT (5X,I3,2X,6E10.3,7XI3)                                  PIA 140
      END                                                            PIA 150
```

APPENDIX G

PROGRAM LISTING

LANDING LOADS AND MOTIONS PROGRAM

APPENDIX G

```
      OVERLAY ( SOFTLP, 0, 0 )
      PROGRAM LLMP(INPUT,OUTPUT,TAPE5=INPUT,TAPE6=OUTPUT,TAPE3,TAPE4)
C
C     LANDING LOADS AND MOTIONS PROGRAM
C     MASTER AGREEMENT, CONTRACT NAS1-8137, TASK ORDER NUMBER TWO
C     MCDONNELL DOUGLAS ASTRONAUTICS COMPANY, EASTERN DIVISION
C
C     THIS PROGRAM DESCRIBES THE MOTION OF A PLATFORM LANDER, SECONDARY
C     EQUIPMENT ITEM AND FOOTPAD DURING A LANDING ON SOIL
C
C     NOTE THE FOLLOWING FILE DESIGNATIONS
C            TAPE3 = SECONDARY OUTPUT RECORD. TIME, ATTENUATOR FORCES,
C                    SOIL FORCES, AND FOOTPAD ACCELERATIONS (NOFOR=0,
C                    NO OUTPUT - NOFOR=1,OUTPUT).
C            TAPE4 = ELASTIC FOOTPAD MODAL DATA(IINP=0,DATA ON CARDS -
C                    IINP=1,DATA ON TAPE4).
C
C
      COMMON/L1A/RXO(1),RYO,RZO,RXVELO,RYVELO,RZVELO,PSIO,THTAO,PHIO,
     1WXO,WYO,WZO,RCXO,RCYO,RCZO,CXVELO,CYVELO,CZVELO,DUM1(6),RSXO,
     2RSYO,RSZO,SXVELO,SYVELO,SZVELO,ZETAO
C
      COMMON/L2/UXX,UYY,UZZ,UCXX,UCYY,UCZZ,USXX,USYY,USZZ,FCJK,FCLM,
     1UXY,UYZ,UXZ,UCXY,UCXZ,UCYZ,PLGNOF,PK,HSX1,HCX1,VISJK,VISLM,IP,
     2IT,JK,LM,JKDAMP,LMDAMP,NSPC,NSPS(48),NCPC
C
      COMMON/L3/RX(1),RY,RZ,RXVEL,RYVEL,RZVEL,PSI,THTA,PHI,WX,WY,WZ,RCX,
     1RCY,RCZ,RCXVEL,RCYVEL,RCZVEL,PSIC,THTAC,PHIC,WCX,WCY,WCZ,RSX,RSY,
     2RSZ,RSXVEL,RSYVEL,RSZVEL,PSIS,THTAS,PHIS,WSX,WSY,WSZ
C
      COMMON/L3B/AX,AY,AZ,WDX,WDY,WDZ,ACX,ACY,ACZ,WDCX,WDCY,WDCZ,
     1ASX,ASY,ASZ,WDSX,WDSY,WDSZ
C
      COMMON/L5A/DT,TMAX,IPRINT,ISTOP,IRUNNO,ISERNO,JPRINT,NPRINT,NOFOR
C
      COMMON/L5B/OLCMAX(6),OLCMIN(6),OLSMAX(48),OLSMIN(48),JC,JS,OLCB(6)
     1,OLCL(6),OLSB(48),OLSL(48),OMACX(7),OMACY(7),OMACZ(7),OMAX(7),
     2OMAY(7),OMAZ(7),OMASX(7),OMASY(7),OMASZ(7),ENGKE,OECS,ENGPE,OESS,
     3OFFACT,ENGKEF,ENGTOT,AX1,AY1,AZ1,ACX3,ACY3,ACZ3,
     4ASX2,ASY2,ASZ2,L1,ICRKT2
C
      COMMON/L5C/ZETA,PLM,SEQM,FPM,G
C
      COMMON/L5D/IC,ISS,OFCMAX(6),OFCMIN(6),OFSMAX(48),OFSMIN(48),
     1TSSQ(48),TCSQ(6),TOTSCR(48),TOTCCR(6)
C
      COMMON/L6A/SLJKO(6),SLLMO(48)
C
      COMMON/L6B/XL1(48),YL1(48),ZL1(48),XM2(48),YM2(48),ZM2(48),XJ3(6),
     1YJ3(6),ZJ3(6),XK1(6),YK1(6),ZK1(6),CXX,CXY,CXZ,CYX,CYY,CYZ,
     2CZX,CZY,CZZ,CCXX,CCXY,CCXZ,CCYX,CCYY,CCYZ,CCZX,CCZY,CCZZ
C
      COMMON/L7A/FSGX,FSGY,FSGZ,TSGX,TSGY,TSGZ,GFS(5), AREA, AREAM
C
      COMMON/L7B/QX(48),QY(48),QZ(48),QSQP(48),QSHT,QFC(48),QCH(48),QSH,
     1QSR(48),QFF,QVIS,QDAMP,QFX,QFY,QFZ,QTX1,QTY1,QTZ1,JKLM,N,QTSX2,
```

```
     2QTSY2,QTSZ2,QTCX3,QTCY3,QTCZ3,FORP(48),FHCQ(48),SQ(48),QCHT(48),  LLM 560
     3QSRT(48),QSD(48),SQ(48),QRGX,QRGY,QRGZ,QVGX,QVGY,QVGZ,QWGX,QWGY,  LLM 570
     4QWGZ,QSX(48),QSY(48),QSZ(48),GFA(5)                               LLM 580
C                                                                       LLM 590
      COMMON/L9A/IREAL,ICRKT3                                           LLM 600
C                                                                       LLM 610
      COMMON/L9B/SHCJK,SHCJKT,SHCLM,SHCLMT,CTJK,CTLM,QKT                LLM 620
C                                                                       LLM 630
      COMMON/L10/RINGX(7),RHO(7),AEL(6),UNX(6),UNY(6,30),UNZ(6,30),     LLM 640
     1SOILP(3),NTYPE,TC,DCM,CFM,THICK(6),INATT,GE,RNGENG,EX(6,30),      LLM 650
     2EY(6,30),EZ(6,30),NI(7),KA,IABCD1,EFRICT                          LLM 660
C                                                                       LLM 670
      COMMON/L11/AA1(3,6),AA2(3,6),AA3(3,6),CAP(3,6),CCH(3,6),CHS(3,6); LLM 680
     1IACCEL,NOACAP,NOACCH,NOACHS                                       LLM 690
C                                                                       LLM 700
      COMMON/L12/T(1000),SPACE,NN,KA1,MAP,IDUM                          LLM 710
C                                                                       LLM 720
      COMMON/L13/SLGTH(3,6),FC(3,6),COEF(2,48),COEFT(2,48),             LLM 730
     1FFLM(48),FFLMT(48),FFJK(6),FFJKT(6),FFC(48),FFT(48),IRET,NS       LLM 740
C                                                                       LLM 750
      COMMON/L14/PVEL(48)                                               LLM 760
C                                                                       LLM 770
C                                                                       LLM 780
      COMMON/L19/      HSY1,HSZ1,ALTX,ALTY,ALTZ,RRX1(6),RRY1(6),RRZ1(6), LLM 790
     1RRX2(6),RRY2(6),RRZ2(6),THRR(6,6),TYM(6,6),CRRX(6),CRRY(6),       LLM 800
     2CRRZ(6),HCY1,HCZ1,NRR,IRR,FRRX,FRRY,FRRZ,TRRX,TRRY,TRRZ           LLM 810
C                                                                       LLM 820
C                                                                       LLM 830
      COMMON/L22/PXVEL,PYVEL,PZVEL,APX1,APY1,APZ1,RPX,RPY,RPZ,FPPX,FPPY,LLM 840
     1FPPZ,TPPX1,TPPY1,TPPZ1,FPX,FPY,FPZ,PHITE,IPARA,NPAR,ICRKT9,PNRG  LLM 850
C                                                                       LLM 860
      COMMON/L24/IDM(1),ICHK1,ICHK2,ICHK3,ICHK4,ICHK5,ICHK6,ICHK7,ICHK8,LLM 870
     1ICHK9,ICHK10,ICHK11,ICHK12,ICHK13,ICHK14,ICHK15,ICHK16,ICHK17,    LLM 880
     2ICHK18,ICHK19,ICHK20,ICHK21,ICHK22,                               LLM 890
     3KS,LS,JJ,NPAS,NKS,NOACAS,NOACCS,NOASS,ISIX,NSSC,NCSC,             LLM 900
     4NOMDS,MOSAV,NTCORS,                                               LLM 910
     5ITEST(23),MM,JTEST                                                LLM 920
C                                                                       LLM 930
      COMMON/L25/NOMODE,OMEGA(5),SPHI(540,5),APHI(144,5),WNX(5),WNY(5), LLM 940
     1WNZ(5),PX(5),PY(5),PZ(5),GF(5),GM(5),CCORD(74,2),FPPHI(222,5),    LLM 950
     2NTCOR,IINP,NORUN,MORDER,NATT(102),NDIAM(3,5),ASPHI(16,5),         LLM 960
     3CGPHI(3,5),WMX(5,5),WMY(5,5),WMZ(5,5)     ,AMASS(102)             LLM 970
C                                                                       LLM 980
      COMMON/LIST8/D11,D12,D13,D21,D22,D23,D31,D32,D33,DS11,DS12,DS13,  LLM 990
     1DS21,DS22,DS23,DS31,DS32,DS33,DC11,DC12,DC13,DC21,DC22,DC23,      LLM1000
     2DC31,DC32,DC33                                                    LLM1010
C                                                                       LLM1020
      COMMON/M0/FORJK(6),SLJK(6),CHJKT(6),CHJK(6),SRJKT(6),SRJK(6),     LLM1030
     1SDJK(6),VELJK(6),FORLM(48),SLLM(48),CHLMT(48),CHLM(48),SRLMT(48), LLM1040
     2SRLM(48),SDLM(48),VELLM(48)                                       LLM1050
C                                                                       LLM1060
C     THE MAIN PROGRAM (LLMP) MUST BE THE FIRST ROUTINE IN THE DECK SET LLM1070
C     UP IN ORDER TO INSURE THAT  IT  WILL ZERO INITIALIZE ALL OF THE   LLM1080
C     LABELED COMMON BLOCKS. .                                          LLM1090
C                                                                       LLM1100
C                                                                       LLM1110
```

```
      CALL PPCALL (3LRFL,70000B)                                        LLM1120
      ICAST=0                                                           LLM1130
10    CONTINUE                                                          LLM1140
      CALL SECOND (CASTIM)                                              LLM1150
C                                                                       LLM1160
      CALL OVERLAY (6LSOFTLP,1,0,6HRECALL)                              LLM1170
C                                                                       LLM1180
      CALL OVERLAY (6LSOFTLP,2,0,6HRECALL)                              LLM1190
C                                                                       LLM1200
      CALL SECOND (CASTM)                                               LLM1210
      TTIME=CASTM-CASTIM                                                LLM1220
      ICAST=ICAST+1                                                     LLM1230
      WRITE (6,20) ICAST,CASTIM,CASTM,TTIME                             LLM1240
      GO TO 10                                                          LLM1250
C                                                                       LLM1260
20    FORMAT (//6H CASE I2,10H RAN FROM F10.3,4H TO F10.3,16H FOR A TOTALLM1270
     1L OF F10.3,5H SEC.//)                                             LLM1280
      END                                                               LLM1290-
```

APPENDIX G

```
      SUBROUTINE PARA                                                   PAR  10
C                                                                       PAR  20
C     THIS IS A DUMMY PARACHUTE ROUTINE                                 PAR  30
C                                                                       PAR  40
      RETURN                                                            PAR  50
      ENTRY PARA1                                                       PAR  60
      RETURN                                                            PAR  70
      END                                                               PAR  80-
```

APPENDIX G

```
      SUBROUTINE RETRO                                                  RET  10
C                                                                       RET  20
C     THIS IS A DUMMY RETRO ROCKET ROUTINE                              RET  30
C                                                                       RET  40
      RETURN                                                            RET  50
      ENTRY RETRO1                                                      RET  60
      RETURN                                                            RET  70
      END                                                               RET  80-
```

APPENDIX G

```
OVERLAY ( SOFTLP, 1, 0 )
PROGRAM INITAL                                          INI  10
CALL INPUT                                              INI  20
CALL INIT                                               INI  30
RETURN                                                  INI  40
END                                                     INI  50-
```

APPENDIX G

```
      SUBROUTINE INPUT                                                  INP0010
C                                                                       INP0020
C                                                                       INP0030
C     THIS SUBROUTINE READS THE INPUT DATA FROM SEQUENCED DATA CARDS.   INP0040
C     THE CARDS MUST BE PREPARED IN THE FOLLOWING FORMAT.               INP0050
C                                                                       INP0060
C                                                                       INP0070
C                 DATA CARD FORMAT                                      INP0080
C                                                                       INP0090
C                                                                       INP0100
C COLUMN 1-4      6-8          11-20  21-30  31-40  41-50  51-60  61-70 INP0110
C       ICNTRL    CARD          DATA   DATA   DATA   DATA   DATA   DATA INP0120
C                 SEQUENCE                                              INP0130
C                 RT. JUST.                                             INP0140
C                                                                       INP0150
C                                                                       INP0160
      COMMON/L1A/RXO(1),RYO,RZO,RXVELO,RYVELO,RZVELO,PSIO,THTAO,PHIO,   INP0170
     1WXO,WYO,WZO,RCXO,RCYO,RCZO,CXVELO,CYVELO,CZVELO,DUM1(6),RSXO,     INP0180
     2RSYO,RSZO,SXVELO,SYVELO,SZVELO,ZETAO                              INP0190
C                                                                       INP0200
      COMMON/L2/UXX,UYY,UZZ,UCXX,UCYY,UCZZ,USXX,USYY,USZZ,FCJK,FCLM,    INP0210
     1UXY,UYZ,UXZ,UCXY,UCXZ,UCYZ,PLGNOF,PK,HSX1,HCX1,VISJK,VISLM,IP,   INP0220
     2IT,JK,LM,JKDAMP,LMDAMP,NSPC,NSPS(48),NCPC                         INP0230
C                                                                       INP0240
      COMMON/L3/RX(1),RY,RZ,RXVEL,RYVEL,RZVEL,PSI,THTA,PHI,WX,WY,WZ,RCX,INP0250
     1RCY,RCZ,RCXVEL,RCYVEL,RCZVEL,PSIC,THTAC,PHIC,WCX,WCY,WCZ,RSX,RSY, INP0260
     2RSZ,RSXVEL,RSYVEL,RSZVEL,PSIS,THTAS,PHIS,WSX,WSY,WSZ              INP0270
C                                                                       INP0280
      COMMON/L5A/DT,TMAX,IPRINT,ISTOP,IRUNNO,ISERNO,JPRINT,NPRINT,NOFOR INP0290
C                                                                       INP0300
      COMMON/L5B/OLCMAX(6),OLCMIN(6),OLSMAX(48),OLSMIN(48),JC,JS,OLCB(6)INP0310
     1,OLCL(6),OLSB(48),OLSL(48),OMACX(7),OMACY(7),OMACZ(7),OMAX(7),    INP0320
     2OMAY(7),OMAZ(7),ENGKE,OECS,ENGPE,OESS,                            INP0330
     3OFFACT,ENGKEF,ENGTOT,AX1,AY1,AZ1,ACX3,ACY3,ACZ3,                  INP0340
     4ASX2,ASY2,ASZ2,L1,ICRKT2                                          INP0350
C                                                                       INP0360
      COMMON/L5C/ZETA,PLM,SEQM,FPM,G                                    INP0370
C                                                                       INP0380
      COMMON/L6B/XL1(48),YL1(48),ZL1(48),XM2(48),YM2(48),ZM2(48),XJ3(6),INP0390
     1YJ3(6),ZJ3(6),XK1(6),YK1(6),ZK1(6),CXX,CXY,CXZ,CYX,CYY,CYZ,       INP0400
     2CZX,CZY,CZZ,CCXX,CCXY,CCXZ,CCYX,CCYY,CCYZ,CCZX,CCZY,CCZZ          INP0410
C                                                                       INP0420
      COMMON/L9B/SHCJK,SHCJKT,SHCLM,SHCLMT,CTJK,CTLM,QKT                INP0430
C                                                                       INP0440
      COMMON/L10/RINGX(7),RHO(7),AEL(6),UNX(6),UNY(6,30),UNZ(6,30),     INP0450
     1SOILP(3),NTYPE,TC,DCM,CFM,THICK(6),INATT,GE,RNGENG,EX(6,30),      INP0460
     2EY(6,30),EZ(6,30),NI(7),KA,IABCD1,EFRICT                          INP0470
C                                                                       INP0480
      COMMON/L11/AA1(3,6),AA2(3,6),AA3(3,6),CAP(3,6),CCH(3,6),CHS(3,6), INP0490
     1IACCEL,NOACAP,NOACCH,NOACHS                                       INP0500
C                                                                       INP0510
      COMMON/L12/T(1000),SPACE,NN,KA1,MAP,IDUM                          INP0520
C                                                                       INP0530
      COMMON/L13/SLGTH(3,6),FC(3,6),COEF(2,48),COEFT(2,48),             INP0540
     1FFLM(48),FFLMT(48),FFJK(6),FFJKT(6),FFC(48),FFT(48),IRET,NS       INP0550
C                                                                       INP0560
```

APPENDIX G

```
      COMMON/L19/      HSY1,HSZ1,ALTX,ALTY,ALTZ,RRX1(6),RRY1(6),RRZ1(6),
     1RRX2(6),RRY2(6),RRZ2(6),THRR(6,6),TYM(6,6),CRRX(6),CRRY(6),
     2CRRZ(6),HCY1,HCZ1,NRR,IRR,FRRX,FRRY,FRRZ,TRRX,TRRY,TRRZ
C
      COMMON/L22/PXVEL,PYVEL,PZVEL,APX1,APY1,APZ1,RPX,RPY,RPZ,FPPX,FPPY,
     1FPPZ,TPPX1,TPPY1,TPPZ1,FPX,FPY,FPZ,PHITE,IPARA,NPAR,ICRKTY,PNRG
C
      COMMON/L24/IDM(1),ICHK1,ICHK2,ICHK3,ICHK4,ICHK5,ICHK6,ICHK7,ICHK8,
     1ICHK9,ICHK10,ICHK11,ICHK12,ICHK13,ICHK14,ICHK15,ICHK16,ICHK17,
     2ICHK18,ICHK19,ICHK20,ICHK21,ICHK22,
     3KS,LS,JJ,NPAS,NRS,NOACAS,NOACCS,NOASS,ISIX,NSSC,NCSC,
     4NOMDS,MOSAV,NTCORS,
     5ITEST(23),MM,JTEST
C
      COMMON/L25/NOMODE,OMEGA(5),SPHI(540,5),APHI(144,5),WNX(5),WNY(5),
     1WNZ(5),PX(5),PY(5),PZ(5),GF(5),GM(5),COORD(74,2),FPPHI(222,5),
     2NTCOR,IINP,NORUN,MORDER,NATT(102),NDIAM(3,5),ASPHI(16,5),
     3CGPHI(3,5),WMX(5,5),WMY(5,5),WMZ(5,5)     ,AMASS(102)
C
      COMMON/MO/FORJK(6),SLJK(6),CHJKT(6),CHJK(6),SRJKT(6),SRJK(6),
     1SDJK(6),VELJK(6),FORLM(48),SLLM(48),CHLMT(48),CHLM(48),SRLMT(48),
     2SRLM(48),SDLM(48),VELLM(48)
C
C     THE FOLLOWING QUANTITIES ARE CONTROL VARIABLES READ TO GIVE
C     INFORMATION ABOUT THE SIZE OF ARRAYS. THEY ALSO ARE USED TO
C     SIGNAL WHETHER CARDS ARE TO BE READ.
C         KA,LM,JK,NPAR,NRR,NOCAP,NOACCH,NOACH,NSPC,NOMODE,NTCOR,NCPC
C         MORDER
C     THE FOLLOWING ARE SUBROUTINE VARIABLES TO SAVE, RESPECTIVELY, THE
C     ABOVE CONTROL VARIABLES FOR CHECKING AGAINST THE COUNTERS, ICHKS.
C         KS,LS,JJ,NPAS,NRS,NOACAS,NOACCS,NOACSS,ISIX,NSSC,NOMDS,
C         NTCORS,NCSC,MOSAV
C     NOGO IS A FLAG TO SIGNAL THAT AN ERROR HAS BEEN FOUND IN A DATA
C     SET AND THE RUN IS TO BE STOPPED.
C
      DIMENSION DUMMY(6),MMMM(400)
      INTEGER STOP
C
      DATA NEXT/4HNEXT/,STOP/4HSTOP/,JTEST/0/,NOGO/0/
      DO 5823 I=1,61
 5823 IDM(I)=0
C
      WRITE(6,9000)
 9000 FORMAT(1H1,42X,                                          51H
     1LANDING LOADS AND MOTIONS PROGRAM - PLATFORM LANDER   /39X,   59H
     2MASTER AGREEMENT, CONTRACT NAS1-8137, TASK ORDER NUMBER TWO
     3/40X,                                                        56H
     4MCDONNELL DOUGLAS ASTRONAUTICS COMPANY, EASTERN DIVISION    /////
     563X,10HINPUT DATA ///)
C
 1000 READ(5,99999) ICNTRL,MMM,(DUMMY(I),I=1,6)
99999 FORMAT(A4,1X,I3,2X,6F10.1)
C
      IF(ICNTRL.EQ.NEXT) GO TO 885
      IF(ICNTRL.EQ.STOP) STOP
C
```

```
C     ICNTRL= *NEXT* SIGNALS THE END OF A DATA SET AND THE START OF
C     CHECKING AND A RETURN TO THE MAIN PROGRAM.
C     ICNTRL= *STOP* SIGNALS THE END OF A RUN AND A STOP.
C
      MM=MM+1
C
      IF(MMM.LT.1.OR.MMM.GT.23) GO TO 1001
      ITEST(MMM)=ITEST(MMM)+1
C
 1001 MMMM(MM)=MMM
C
      IF(MMM.LT.1.OR.MMM.GT.21)GO TO 1002
C
C     STATEMENT NUMBERS ARE IDENTIFICATION NUMBERS FOUND ON DATA CARDS
C     IN COLUMNS 6 TO 8 (MMM)
C
      GO TO(1,2,3,4,5,6,7,8,9,10,11,12,13,14,15,16,17,18,19,20,21),MMM
C
 1002 CONTINUE
      IF(MMM.EQ.22) GO TO 22
      IF(MMM.EQ.23) GO TO 23
      IF(MMM.LT.110.OR.MMM.GT.121)GO TO 1003
      M1=MMM-109
      GO TO(110,5555,112,5555,114,5555,116,117,118,119,120,121),M1
C
 1003 CONTINUE
      IF(MMM.LT.216.OR.MMM.GT.221) GO TO 1004
      M1=MMM-215
      GO TO(216,217,218,219,220,221),M1
C
 1004 CONTINUE
      IF(MMM.EQ.319)GO TO 319
      IF(MMM.EQ.320)GO TO 320
      IF(MMM.EQ.321)GO TO 321
      IF(MMM.EQ.421)GO TO 421
      IF(MMM.EQ.521)GO TO 521
      IF(MMM.EQ.621) GO TO 621
      IF(MMM.EQ.721) GO TO 721
C
 5555 WRITE(6,5556) MMM
 5556 FORMAT(24H INVALID CARD NUMBER -- I4)
C
      NOGO=1
      GO TO 1000
C
    1 ISERNO            =DUMMY(1)
      GO TO 1000
C
    2 RXVELO            =DUMMY(1)
      RYVELO            =DUMMY(2)
      RZVELO            =DUMMY(3)
      WXO               =DUMMY(4)
      WYO               =DUMMY(5)
      WZO               =DUMMY(6)
      GO TO 1000
C
```

```
    3 ZETAO              =DUMMY(1)
      PSIO               =DUMMY(2)
      THTAO              =DUMMY(3)
      PHIO               =DUMMY(4)
      G                  =DUMMY(5)
      GE            =DUMMY(6)
      GO TO 1000
C
    4 HSX1               =DUMMY(1)
      HSY1               =DUMMY(2)
      HSZ1               =DUMMY(3)
      HCX1               =DUMMY(4)
      HCY1               =DUMMY(5)
      HCZ1               =DUMMY(6)
      GO TO 1000
C
    5 PLM                =DUMMY(1)
      SEQM               =DUMMY(2)
      FPM                =DUMMY(3)
      GO TO 1000
C
    6 UXX                =DUMMY(1)
      UYY                =DUMMY(2)
      UZZ                =DUMMY(3)
      UXY                =DUMMY(4)
      UXZ                =DUMMY(5)
      UYZ                =DUMMY(6)
      GO TO 1000
C
    7 UCXX               =DUMMY(1)
      UCYY               =DUMMY(2)
      UCZZ               =DUMMY(3)
      UCXY               =DUMMY(4)
      UCXZ               =DUMMY(5)
      UCYZ               =DUMMY(6)
      GO TO 1000
C
    8 USXX               =DUMMY(1)
      USYY               =DUMMY(2)
      USZZ               =DUMMY(3)
      GO TO 1000
C
    9 DT                 =DUMMY(1)
      TMAX               =DUMMY(2)
      NPRINT             =DUMMY(3)
      NOFOR              =DUMMY(4)
      GO TO 1000
C
   10 NSPC               =DUMMY(1)
      NCPC               =DUMMY(2)
      NORUN              =DUMMY(3)
      IINP               =DUMMY(4)
      NSSC=NSPC
      NCSC=NCPC
      GO TO 1000
C
```

```
   11 KA1                =DUMMY(1)
      GO TO 1000
C
   12 KA                 =DUMMY(1)
      KS=KA
      GO TO 1000
C
   13 NTYPE              =DUMMY(1)
      GO TO 1000
C
   14 SOILP(1)           =DUMMY(1)
      SOILP(2)           =DUMMY(2)
      SOILP(3)           =DUMMY(3)
      GO TO 1000
C
   15 LM                 =DUMMY(1)
      LMDAMP             =DUMMY(2)
      VISLM              =DUMMY(3)
      CTLM               =DUMMY(4)
      SHCLM              =DUMMY(5)
      SHCLMT             =DUMMY(6)
      LS=LM
      GO TO 1000
C
   16 IRET               =DUMMY(1)
      GO TO 1000
C
   17 JK                 =DUMMY(1)
      JKDAMP             =DUMMY(2)
      VISJK              =DUMMY(3)
      CTJK               =DUMMY(4)
      SHCJK              =DUMMY(5)
      SHCJKT             =DUMMY(6)
      JJ=JK
      GO TO 1000
C
   18 NPAR               =DUMMY(1)
      NPAS=NPAR
      GO TO 1000
C
   19 NRR                =DUMMY(1)
      NRS=NRR
      GO TO 1000
C
   20 IACCEL             =DUMMY(1)
      NOACAP             =DUMMY(2)
      NOACCH             =DUMMY(3)
      NOACHS             =DUMMY(4)
      NOACAS=NOACAP
      NOACCS=NOACCH
      NOACSS=NOACHS
      GO TO 1000
C
   21 NOMODE             =DUMMY(1)
      NTCOR              =DUMMY(2)
      MORDER             =DUMMY(3)
```

```
      NOMDS=NOMODE                                                      INP2810
      NTCORS=NTCOR                                                      INP2820
      MOSAV = MORDER                                                    INP2830
      IF(ICNTRL.EQ.NEXT) GO TO 885                                      INP2840
      GO TO 1000                                                        INP2850
C                                                                       INP2860
   22 INATT              =DUMMY(1)                                      INP2870
      TC                 =DUMMY(2)                                      INP2880
      DCM                =DUMMY(3)                                      INP2890
      CFM                =DUMMY(4)                                      INP2900
      GO TO 1000                                                        INP2910
C                                                                       INP2920
   23 THICK(1)           =DUMMY(1)                                      INP2930
      THICK(2)           =DUMMY(2)                                      INP2940
      THICK(3)           =DUMMY(3)                                      INP2950
      THICK(4)           =DUMMY(4)                                      INP2960
      THICK(5)           =DUMMY(5)                                      INP2970
      THICK(6)           =DUMMY(6)                                      INP2980
      GO TO 1000                                                        INP2990
C                                                                       INP3000
  110 NSPS(ICHK15+1)     =DUMMY(1)                                      INP3010
      NSPS(ICHK15+2)     =DUMMY(2)                                      INP3020
      NSPS(ICHK15+3)     =DUMMY(3)                                      INP3030
      NSPS(ICHK15+4)     =DUMMY(4)                                      INP3040
      NSPS(ICHK15+5)     =DUMMY(5)                                      INP3050
      NSPS(ICHK15+6)     =DUMMY(6)                                      INP3060
      ICHK15=ICHK15+6                                                   INP3070
      GO TO 1000                                                        INP3080
C                                                                       INP3090
  112 ICHK1=ICHK1+1                                                     INP3100
      RINGX(ICHK1)       =DUMMY(1)                                      INP3110
      RHO(ICHK1)         =DUMMY(2)                                      INP3120
      NI(ICHK1)          =DUMMY(3)                                      INP3130
      GO TO 1000                                                        INP3140
C                                                                       INP3150
  114 ICHK2=ICHK2+1                                                     INP3160
      SLGTH(1,ICHK2)     =DUMMY(1)                                      INP3170
      FC(1,ICHK2)        =DUMMY(2)                                      INP3180
      SLGTH(2,ICHK2)     =DUMMY(3)                                      INP3190
      FC(2,ICHK2)        =DUMMY(4)                                      INP3200
      SLGTH(3,ICHK2)     =DUMMY(5)                                      INP3210
      FC(3,ICHK2)        =DUMMY(6)                                      INP3220
      ISIX=6                                                            INP3230
      GO TO 1000                                                        INP3240
C                                                                       INP3250
  116 ICHK3=ICHK3+1                                                     INP3260
      XL1(ICHK3)         =DUMMY(1)                                      INP3270
      YL1(ICHK3)         =DUMMY(2)                                      INP3280
      ZL1(ICHK3)         =DUMMY(3)                                      INP3290
      XM2(ICHK3)         =DUMMY(4)                                      INP3300
      YM2(ICHK3)         =DUMMY(5)                                      INP3310
      ZM2(ICHK3)         =DUMMY(6)                                      INP3320
      GO TO 1000                                                        INP3330
C                                                                       INP3340
  117 ICHK4=ICHK4+1                                                     INP3350
      XK1(ICHK4)         =DUMMY(1)                                      INP3360
```

```
      YK1(ICHK4)          =DUMMY(2)                                   INP3370
      ZK1(ICHK4)          =DUMMY(3)                                   INP3380
      XJ3(ICHK4)          =DUMMY(4)                                   INP3390
      YJ3(ICHK4)          =DUMMY(5)                                   INP3400
      ZJ3(ICHK4)          =DUMMY(6)                                   INP3410
      GO TO 1000                                                      INP3420
C                                                                     INP3430
  118 ICHK13=ICHK13+1                                                 INP3440
      PLGNOF              =DUMMY(1)                                   INP3450
      PK                  =DUMMY(2)                                   INP3460
      FPX                 =DUMMY(3)                                   INP3470
      FPY                 =DUMMY(4)                                   INP3480
      FPZ                 =DUMMY(5)                                   INP3490
      PHITE               =DUMMY(6)                                   INP3500
      GO TO 1000                                                      INP3510
C                                                                     INP3520
  119 ICHK12=ICHK12+1                                                 INP3530
      RRX1(ICHK12)        =DUMMY(1)                                   INP3540
      RRY1(ICHK12)        =DUMMY(2)                                   INP3550
      RRZ1(ICHK12)        =DUMMY(3)                                   INP3560
      RRX2(ICHK12)        =DUMMY(4)                                   INP3570
      RRY2(ICHK12)        =DUMMY(5)                                   INP3580
      RRZ2(ICHK12)        =DUMMY(6)                                   INP3590
      GO TO 1000                                                      INP3600
C                                                                     INP3610
  120 ICHK7=ICHK7+1                                                   INP3620
      CAP(1,ICHK7)        =DUMMY(1)                                   INP3630
      CAP(2,ICHK7)        =DUMMY(2)                                   INP3640
      CAP(3,ICHK7)        =DUMMY(3)                                   INP3650
      GO TO 1000                                                      INP3660
C                                                                     INP3670
  121 ICHK16=ICHK16+1                                                 INP3680
      NATT(ICHK16)        =DUMMY(1)                                   INP3690
      NATT(ICHK16+1)      =DUMMY(2)                                   INP3700
      NATT(ICHK16+2)      =DUMMY(3)                                   INP3710
      NATT(ICHK16+3)      =DUMMY(4)                                   INP3720
      NATT(ICHK16+4)      =DUMMY(5)                                   INP3730
      NATT(ICHK16+5)      =DUMMY(6)                                   INP3740
      ICHK16=ICHK16+5                                                 INP3750
      IF(ICNTRL.EQ.NEXT) GO TO 885                                    INP3760
      GO TO 1000                                                      INP3770
C                                                                     INP3780
  216 ICHK8=ICHK8+1                                                   INP3790
      COEF(1,ICHK8)       =DUMMY(1)                                   INP3800
      COEFT(1,ICHK8)      =DUMMY(2)                                   INP3810
      FFLM(ICHK8)         =DUMMY(3)                                   INP3820
      FFLMT(ICHK8)        =DUMMY(4)                                   INP3830
      GO TO 1000                                                      INP3840
C                                                                     INP3850
  217 ICHK9=ICHK9+1                                                   INP3860
      COEF(2,ICHK9)       =DUMMY(1)                                   INP3870
      COEFT(2,ICHK9)      =DUMMY(2)                                   INP3880
      FFJK(ICHK9)         =DUMMY(3)                                   INP3890
      FFJKT(ICHK9)        =DUMMY(4)                                   INP3900
      GO TO 1000                                                      INP3910
C                                                                     INP3920
```

```
  218 ICHK14=ICHK14+1                                                   INP3930
      PXVEL              =DUMMY(1)                                      INP3940
      PYVEL              =DUMMY(2)                                      INP3950
      PZVEL              =DUMMY(3)                                      INP3960
      APX1               =DUMMY(4)                                      INP3970
      APY1               =DUMMY(5)                                      INP3980
      APZ1               =DUMMY(6)                                      INP3990
      GO TO 1000                                                        INP4000
C                                                                       INP4010
  219 ICHK5=ICHK5+1                                                     INP4020
      TYM(ICHK5,1)       =DUMMY(1)                                      INP4030
      TYM(ICHK5,2)       =DUMMY(2)                                      INP4040
      TYM(ICHK5,3)       =DUMMY(3)                                      INP4050
      TYM(ICHK5,4)       =DUMMY(4)                                      INP4060
      TYM(ICHK5,5)       =DUMMY(5)                                      INP4070
      TYM(ICHK5,6)       =DUMMY(6)                                      INP4080
      GO TO 1000                                                        INP4090
C                                                                       INP4100
  221 ICHK17=ICHK17+1                                                   INP4110
      COORD(ICHK17,1)    =DUMMY(1)                                      INP4120
      COORD(ICHK17,2)    =DUMMY(2)                                      INP4130
      IF(ICNTRL.EQ.NEXT) GO TO 885                                      INP4140
      GO TO 1000                                                        INP4150
C                                                                       INP4160
  220 ICHK10=ICHK10+1                                                   INP4170
      CCH(1,ICHK10)      =DUMMY(1)                                      INP4180
      CCH(2,ICHK10)      =DUMMY(2)                                      INP4190
      CCH(3,ICHK10)      =DUMMY(3)                                      INP4200
      GO TO 1000                                                        INP4210
C                                                                       INP4220
  319 ICHK6=ICHK6+1                                                     INP4230
      THRR(ICHK6,1)      =DUMMY(1)                                      INP4240
      THRR(ICHK6,2)      =DUMMY(2)                                      INP4250
      THRR(ICHK6,3)      =DUMMY(3)                                      INP4260
      THRR(ICHK6,4)      =DUMMY(4)                                      INP4270
      THRR(ICHK6,5)      =DUMMY(5)                                      INP4280
      THRR(ICHK6,6)      =DUMMY(6)                                      INP4290
      GO TO 1000                                                        INP4300
C                                                                       INP4310
  320 ICHK11=ICHK11+1                                                   INP4320
      CHS(1,ICHK11)      =DUMMY(1)                                      INP4330
      CHS(2,ICHK11)      =DUMMY(2)                                      INP4340
      CHS(3,ICHK11)      =DUMMY(3)                                      INP4350
      GO TO 1000                                                        INP4360
C                                                                       INP4370
  321 ICHK18=ICHK18+1                                                   INP4380
      FPPHI(ICHK18,1)    =DUMMY(1)                                      INP4390
      FPPHI(ICHK18,2)    =DUMMY(2)                                      INP4400
      FPPHI(ICHK18,3)    =DUMMY(3)                                      INP4410
      FPPHI(ICHK18,4)    =DUMMY(4)                                      INP4420
      FPPHI(ICHK18,5)    =DUMMY(5)                                      INP4430
      IF(ICNTRL.EQ.NEXT) GO TO 885                                      INP4440
      GO TO 1000                                                        INP4450
C                                                                       INP4460
  421 ICHK19=ICHK19+1                                                   INP4470
      OMEGA(ICHK19)      =DUMMY(1)                                      INP4480
```

```
      GM(ICHK19)          =DUMMY(2)                                INP4490
      IF(ICNTRL.EQ.NEXT) GO TO 885                                 INP4500
      GO TO 1000                                                   INP4510
C                                                                  INP4520
  521 ICHK20=ICHK20+1                                              INP4530
      WNX(ICHK20)         =DUMMY(1)                                INP4540
      WNY(ICHK20)         =DUMMY(2)                                INP4550
      WNZ(ICHK20)         =DUMMY(3)                                INP4560
      PX(ICHK20)          =DUMMY(4)                                INP4570
      PY(ICHK20)          =DUMMY(5)                                INP4580
      PZ(ICHK20)          =DUMMY(6)                                INP4590
      IF(ICNTRL.EQ.NEXT) GO TO 885                                 INP4600
      GO TO 1000                                                   INP4610
C                                                                  INP4620
  621 ICHK21=ICHK21+1                                              INP4630
      NDIAM(1,ICHK21)     =DUMMY(1)                                INP4640
      NDIAM(2,ICHK21)     =DUMMY(2)                                INP4650
      NDIAM(3,ICHK21)     =DUMMY(3)                                INP4660
      GO TO 1000                                                   INP4670
C                                                                  INP4680
  721 ICHK22=ICHK22+1                                              INP4690
      AMASS(ICHK22)       =DUMMY(1)                                INP4700
      AMASS(ICHK22+1)     =DUMMY(2)                                INP4710
      AMASS(ICHK22+2)     =DUMMY(3)                                INP4720
      AMASS(ICHK22+3)     =DUMMY(4)                                INP4730
      AMASS(ICHK22+4)     =DUMMY(5)                                INP4740
      AMASS(ICHK22+5)     =DUMMY(6)                                INP4750
      ICHK22=ICHK22+5                                              INP4760
      IF(ICNTRL.EQ.NEXT) GO TO 885                                 INP4770
      GO TO 1000                                                   INP4780
C                                                                  INP4790
C     CHECK FOR INPUT DATA ON TAPE                                 INP4800
C         IINP=1-TAPE DATA EXPECTED                                INP4810
C                                                                  INP4820
  885 CONTINUE                                                     INP4830
      IF(IINP.NE.1) GO TO 3000                                     INP4840
      READ(4,88888)MMM,(DUMMY(I),I=1,6)                            INP4850
88888 FORMAT(5X,I3,2X,7E10.3)                                      INP4860
      IF(EOF,4) 3000,3500                                          INP4870
 3500 CONTINUE                                                     INP4880
      MM=MM+1                                                      INP4890
      IF(MMM.EQ.21) ITEST(MMM)=ITEST(MMM)+1                        INP4900
      MMMM(MM)=MMM                                                 INP4910
      IF(MMM.EQ.21) GO TO 21                                       INP4920
      IF(MMM.EQ.121) GO TO 121                                     INP4930
      IF(MMM.EQ.221) GO TO 221                                     INP4940
      IF(MMM.EQ.321) GO TO 321                                     INP4950
      IF(MMM.EQ.421) GO TO 421                                     INP4960
      IF(MMM.EQ.521) GO TO 521                                     INP4970
      IF(MMM.EQ.721) GO TO 721                                     INP4980
C                                                                  INP4990
C     CHECK DATA DECK AGAINST CONTROL INFORMATION                  INP5000
C                                                                  INP5010
 3000 CONTINUE                                                     INP5020
      IF(MM.GT.0) GO TO 886                                        INP5030
      WRITE(6,8889)                                                INP5040
```

```
 8889 FORMAT(26HONO NEW CARDS READ.  STOP.  )                          INP5050
      STOP                                                             INP5060
  886 CONTINUE                                                         INP5070
C                                                                      INP5080
C     CHECK FOR CARD 110                                               INP5090
      DO 499 I=1,NSPC                                                  INP5100
      IF(NSPS(I).LT.1) NSPS(I)=1                                       INP5110
  499 CONTINUE                                                         INP5120
      IF((JTEST.EQ.1.AND.((NSSC.EQ.0.AND.ICHK15.EQ.0).OR.((NSSC+6)/6.EQ.INP5130
     1ICHK15/6.AND.NSSC.GT.0))).OR.(JTEST.EQ.0.AND.(NSSC.EQ.ICHK15.OR.(NINP5140
     2SSC+6)/6.EQ.ICHK15/6))) GO TO 500                                INP5150
      NCARD=110                                                        INP5160
      NOGO=1                                                           INP5170
      WRITE(6,6666) NCARD                                              INP5180
  500 CONTINUE                                                         INP5190
C                                                                      INP5200
C     CHECK FOR CARD 112                                               INP5210
      IF ((ICHK1 .EQ. 0) .AND. (JTEST .EQ. 1 )) GO TO 502              INP5220
      IF(ICHK1-KS-1)501,502,501                                        INP5230
  501 NCARD=112                                                        INP5240
      NOGO=1                                                           INP5250
      WRITE(6,6666) NCARD                                              INP5260
C                                                                      INP5270
C     CHECK FOR CARD 114                                               INP5280
  502 IF((JTEST.EQ.0.AND.ICHK2.EQ.6).OR.(JTEST.EQ.1.AND.ICHK2.EQ.ISIX)) INP5290
     1GO TO 504                                                        INP5300
      NCARD=114                                                        INP5310
      NOGO=1                                                           INP5320
      WRITE(6,6666) NCARD                                              INP5330
C                                                                      INP5340
C     CHECK FOR CARD 116                                               INP5350
  504 IF(ICHK3-LS)505,506,505                                          INP5360
  505 NCARD=116                                                        INP5370
      NOGO=1                                                           INP5380
      WRITE(6,6666) NCARD                                              INP5390
C                                                                      INP5400
C     CHECK FOR CARD 117                                               INP5410
  506 IF(ICHK4-JJ)507,508,507                                          INP5420
  507 NCARD=117                                                        INP5430
      NOGO=1                                                           INP5440
      WRITE(6,6666) NCARD                                              INP5450
C                                                                      INP5460
C     CHECK FOR CARD 118                                               INP5470
  508 IF((ICHK13.EQ.0.AND.NPAS.EQ.0).OR.(ICHK13.EQ.1.AND.NPAS.EQ.1))   INP5480
     1GO TO 510                                                        INP5490
      NCARD=118                                                        INP5500
      NOGO=1                                                           INP5510
      WRITE(6,6666) NCARD                                              INP5520
C                                                                      INP5530
C     CHECK FOR CARD 119                                               INP5540
  510 IF(ICHK12-NRS)511,512,511                                        INP5550
  511 NCARD=119                                                        INP5560
      NOGO=1                                                           INP5570
      WRITE(6,6666) NCARD                                              INP5580
C                                                                      INP5590
C     CHECK FOR CARD 120                                               INP5600
```

```
  512 IF(ICHK7-NOACAS)513,600,513                                   INP5610
  513 NCARD=120                                                     INP5620
      NOGO=1                                                        INP5630
      WRITE(6,6666) NCARD                                           INP5640
C                                                                   INP5650
C     CHECK FOR CARD 121                                            INP5660
  600 IF(ICHK16.EQ.0.AND.MOSAV.EQ.0)GO TO 514                       INP5670
      IF((ICHK16.EQ.0.AND.MOSAV.NE.0).OR.(ICHK16.NE.0.AND.MOSAV.EQ.0))  INP5680
     1GO TO 602                                                     INP5690
      NNK = ICHK16                                                  INP5700
      DO 601 I = 1,NNK                                              INP5710
  601 IF(NATT(I).EQ.0)ICHK16=ICHK16-1                               INP5720
      IF(ICHK16-MOSAV)602,514,602                                   INP5730
  602 NCARD=121                                                     INP5740
      NOGO=1                                                        INP5750
      WRITE(6,6666)NCARD                                            INP5760
C                                                                   INP5770
C     CHECK FOR CARD 216                                            INP5780
  514 IF(ICHK8-LS)515,516,515                                       INP5790
  515 NCARD=216                                                     INP5800
      NOGO=1                                                        INP5810
      WRITE(6,6666) NCARD                                           INP5820
C                                                                   INP5830
C     CHECK FOR CARD 217                                            INP5840
  516 IF(ICHK9-JJ)517,518,517                                       INP5850
  517 NCARD=217                                                     INP5860
      NOGO=1                                                        INP5870
      WRITE(6,6666) NCARD                                           INP5880
C                                                                   INP5890
C     CHECK FOR CARD 218                                            INP5900
  518 IF((ICHK14.EQ.0.AND.NPAS.EQ.0).OR.(ICHK14.EQ.1.AND.NPAS.EQ.1))  INP5910
     1GO TO 519                                                     INP5920
      NCARD=218                                                     INP5930
      NOGO=1                                                        INP5940
      WRITE(6,6666) NCARD                                           INP5950
C                                                                   INP5960
C     CHECK FOR CARD 219                                            INP5970
  519 IF(ICHK5-NRS)520,528,520                                      INP5980
  520 NCARD=219                                                     INP5990
      NOGO=1                                                        INP6000
      WRITE(6,6666) NCARD                                           INP6010
C                                                                   INP6020
C     CHECK FOR CARD 220                                            INP6030
  528 IF(ICHK10-NOACCS)522,603,522                                  INP6040
  522 NCARD=220                                                     INP6050
      NOGO=1                                                        INP6060
      WRITE(6,6666) NCARD                                           INP6070
C                                                                   INP6080
C     CHECK FOR CARD 221                                            INP6090
  603 IF(ICHK17.EQ.0.AND.NOMDS.EQ.0)GO TO 523                       INP6100
      IF(ICHK17-NTCORS)604,523,604                                  INP6110
  604 NCARD=221                                                     INP6120
      NOGO=1.                                                       INP6130
      WRITE(6,6666)NCARD                                            INP6140
C                                                                   INP6150
C     CHECK FOR CARD 319                                            INP6160
```

```
  523 IF(ICHK6-NRS)524,525,524                                          INP6170
  524 NCARD=319                                                         INP6180
      NOGO=1                                                            INP6190
      WRITE(6,6666) NCARD                                               INP6200
C                                                                       INP6210
C     CHECK FOR CARD 320                                                INP6220
  525 IF(ICHK11-NOACSS)526,527,526                                      INP6230
  526 NCARD=320                                                         INP6240
      NOGO=1                                                            INP6250
      WRITE(6,6666) NCARD                                               INP6260
C                                                                       INP6270
C     CHECK FOR CARD 321                                                INP6280
  527 IF(ICHK18.EQ.0.AND.NOMDS.EQ.0)GO TO 606                           INP6290
      IF(ICHK18-(3*NTCORS))605,606,605                                  INP6300
  605 NCARD=321                                                         INP6310
      NOGO=1                                                            INP6320
      WRITE(6,6666)NCARD                                                INP6330
C                                                                       INP6340
C     CHECK CARD 421                                                    INP6350
  606 IF(ICHK19-NOMDS)607,608,607                                       INP6360
  607 NCARD=421                                                         INP6370
      NOGO=1                                                            INP6380
      WRITE(6,6666)NCARD                                                INP6390
C                                                                       INP6400
C     CHECK CARD 521                                                    INP6410
  608 IF(ICHK20-NOMDS)609,610,609                                       INP6420
  609 NCARD=521                                                         INP6430
      NOGO=1                                                            INP6440
      WRITE(6,6666)NCARD                                                INP6450
C                                                                       INP6460
C     CHECK CARD 621                                                    INP6470
  610 IF(ICHK21-NOMDS)611,612,611                                       INP6480
  611 NCARD=621                                                         INP6490
      NOGO=1                                                            INP6500
      WRITE(6,6666)NCARD                                                INP6510
C                                                                       INP6520
C     CHECK FOR CARD 721                                                INP6530
  612 IF(ICHK22.EQ.0.AND.MOSAV.EQ.0)GO TO 615                           INP6540
      IF((ICHK22.EQ.0.AND.MOSAV.NE.0).OR.(ICHK16.NE.0.AND.MOSAV.EQ.0))  INP6550
     1GO TO 614                                                         INP6560
      NNK = ICHK22                                                      INP6570
      DO 613 I = 1,NNK                                                  INP6580
  613 IF(AMASS(I).EQ.0.0)ICHK22 = ICHK22-1                              INP6590
      IF(ICHK22-MOSAV)614,615,614                                       INP6600
  614 NCARD=721                                                         INP6610
      NOGO = 1                                                          INP6620
      WRITE(6,6666)NCARD                                                INP6630
  615 CONTINUE                                                          INP6640
C                                                                       INP6650
 6666 FORMAT(58H DATA DECK DOES NOT AGREE WITH CONTROL INFORMATION.  CARINP6660
     1D I4,1H.)                                                         INP6670
C                                                                       INP6680
C     JTEST IS A FLAG TO SIGNAL THAT THE FIRST DATA SET IS READ.  JTEST INP6690
C     IS ZERO ONLY DURING THE FIRST DATA SET.                           INP6700
C     IF (JTEST.EQ.1)GO TO 778                                          INP6720
C                                                                       INP6730
```

```
C     CARDS 1 THROUGH 23 MUST BE READ ONCE AND ONLY ONCE FOR THE        INP6740
C     FIRST DATA SET.  THIS LOOP CHECKS THIS FOR THE FIRST DATA SET.    INP6750
C                                                                       INP6760
      DO 777 I = 1,23                                                   INP6770
      IF(ITEST(I)-1)441,777,442                                         INP6780
  441 WRITE(6,4441)I                                                    INP6790
 4441 FORMAT(6H CARD I2,26H WAS NOT INCLUDED IN DECK.)                  INP6800
      GO TO 776                                                         INP6810
  442 WRITE(6,4442)I,ITEST(I)                                           INP6820
 4442 FORMAT(6H CARD I2,15H HAS BEEN USED I4,7H TIMES.)                 INP6830
  776 NOGO=1                                                            INP6840
  777 CONTINUE                                                          INP6850
      GO TO 780                                                         INP6860
C                                                                       INP6870
C     CARDS 1 THROUGH 23 MAY OR MAY NOT BE READ ON SUCCEEDING DATA SETS.INP6880
C     THIS LOOP CHECKS TO SEE THAT ALL CARDS 1 TO 23 HAVE NOT BEEN READ INP6890
C     MORE THAN ONCE FOR ALL DATA SETS EXCEPT THE FIRST.                INP6900
C                                                                       INP6910
  778 DO 779 I = 1,23                                                   INP6920
      IF(ITEST(I).LE.1) GO TO 779                                       INP6930
      WRITE(6,4442)I,ITEST(I)                                           INP6940
      NOGO=1                                                            INP6950
  779 CONTINUE                                                          INP6960
C                                                                       INP6970
  780 WRITE(6,9003)(MMMMM(I),I=1,MM)                                    INP6980
 9003 FORMAT(28H NEW CARDS READ THIS RUN -- 26I4/(28X,26I4))            INP6990
      CALL XTRA                                                         INP7000
      IF(NOGO.EQ.1) STOP                                                INP7010
      JTEST=1                                                           INP7020
      RETURN                                                            INP7030
      END                                                               INP7040
```

APPENDIX G

```
      SUBROUTINE INIT                                                   INT  10
C                                                                       INT  20
C     THIS SUBROUTINE INITIALIZES THE PROGRAM BEFORE EACH RUN -- SETS   INT  30
C     THE LANDER ON THE SURFACE IN THE PROPER ORIENTATION AT TIME T=0   INT  40
C     AND PRINTS A SUMMARY OF THE INPUT DATA                            INT  50
C                                                                       INT  60
      DIMENSION Q(5), QD(5), QDD(5)                                     INT  70
C                                                                       INT  80
      COMMON/L1A/RXO(1),RYO,RZO,RXVELO,RYVELO,RZVELO,PSIO,THTAO,PHIO,   INT  90
     1WXO,WYO,WZO,RCXO,RCYO,RCZO,CXVELO,CYVELO,CZVELO,DUM1(6),RSXO,     INT 100
     2RSYO,RSZO,SXVELO,SYVELO,SZVELO,ZETAO                              INT 110
C                                                                       INT 120
      COMMON/L2/UXX,UYY,UZZ,UCXX,UCYY,UCZZ,USXX,USYY,USZZ,FCJK,FCLM,    INT 130
     1UXY,UYZ,UXZ,UCXY,UCXZ,UCYZ,PLGNOF,PK,HSX1,HCX1,VISJK,VISLM,IP,    INT 140
     2IT,JK,LM,JKDAMP,LMDAMP,NSPC,NSPS(48),NCPC                         INT 150
C                                                                       INT 160
      COMMON/L3/RX(1),RY,RZ,RXVEL,RYVEL,RZVEL,PSI,THTA,PHI,WX,WY,WZ,RCX,INT 170
     1RCY,RCZ,RCXVEL,RCYVEL,RCZVEL,PSIC,THTAC,PHIC,WCX,WCY,WCZ,RSX,RSY, INT 180
     2RSZ,RSXVEL,RSYVEL,RSZVEL,PSIS,THTAS,PHIS,WSX,WSY,WSZ              INT 190
C                                                                       INT 200
      COMMON/L3B/AX,AY,AZ,WDX,WDY,WDZ,ACX,ACY,ACZ,WDCX,WDCY,WDCZ,       INT 210
     1ASX,ASY,ASZ,WDSX,WDSY,WDSZ                                        INT 220
C                                                                       INT 230
      COMMON/L5A/DT,TMAX,IPRINT,ISTOP,IRUNNO,ISERNO,JPRINT,NPRINT,NOFOR INT 240
C                                                                       INT 250
      COMMON/L5B/OLCMAX(6),OLCMIN(6),OLSMAX(48),OLSMIN(48),JC,JS,OLCB(6)INT 260
     1,OLCL(6),OLSB(48),OLSL(48),OMACX(7),OMACY(7),OMACZ(7),OMAX(7),    INT 270
     2OMAY(7),OMAZ(7),OMASX(7),OMASY(7),OMASZ(7),ENGKE,OECS,ENGPE,OESS, INT 280
     3OFFACT,ENGKEF,ENGTOT,AX1,AY1,AZ1,ACX3,ACY3,ACZ3,                  INT 290
     4ASX2,ASY2,ASZ2,L1,ICRKT2                                          INT 300
C                                                                       INT 310
      COMMON/L5C/ZETA,PLM,SEQM,FPM,G                                    INT 320
C                                                                       INT 330
      COMMON/L5D/IC,ISS,OFCMAX(6),OFCMIN(6),OFSMAX(48),OFSMIN(48),      INT 340
     1TSSQ(48),TCSQ(6),TOTSCR(48),TOTCCR(6)                             INT 350
C                                                                       INT 360
      COMMON/L6A/SLJKO(6),SLLMO(48)                                     INT 370
C                                                                       INT 380
      COMMON/L6B/XL1(48),YL1(48),ZL1(48),XM2(48),YM2(48),ZM2(48),XJ3(6),INT 390
     1YJ3(6),ZJ3(6),XK1(6),YK1(6),ZK1(6),CXX,CXY,CXZ,CYX,CYY,CYZ,       INT 400
     2CZX,CZY,CZZ,CCXX,CCXY,CCXZ,CCYX,CCYY,CCYZ,CCZX,CCZY,CCZZ          INT 410
C                                                                       INT 420
      COMMON/L7A/FSGX,FSGY,FSGZ,TSGX,TSGY,TSGZ,GFS(5), AREA, AREAM      INT 430
C                                                                       INT 440
      COMMON/L9B/SHCJK,SHCJKT,SHCLM,SHCLMT,CTJK,CTLM,QKT                INT 450
C                                                                       INT 460
      COMMON/L10/RINGX(7),RHO(7),AEL(6),UNX(6),UNY(6,30),UNZ(6,30),     INT 470
     1SOILP(3),NTYPE,TC,DCM,CFM,THICK(6),INATT,GE,RNGENG,EX(6,30),      INT 480
     2EY(6,30),EZ(6,30),NI(7),KA,IABCD1,EFRICT                          INT 490
C                                                                       INT 500
      COMMON/L11/AA1(3,6),AA2(3,6),AA3(3,6),CAP(3,6),CCH(3,6),CHS(3,6), INT 510
     1IACCEL,NOACAP,NOACCH,NOACHS                                       INT 520
C                                                                       INT 530
      COMMON/L12/T(1000),SPACE,NN,KA1,MAP,IDUM                          INT 540
C                                                                       INT 550
      COMMON/L13/SLGTH(3,6),FC(3,6),COEF(2,48),COEFT(2,48),             INT 560
```

APPENDIX G

```
     1FFLM(48),FFLMT(48),FFJK(6),FFJKT(6),FFC(48),FFT(48),IRET,KS
C
      COMMON/L14/PVEL(48)
C
      COMMON/L19/      HSY1,HSZ1,ALTX,ALTY,ALTZ,RRX1(6),RRY1(6),RRZ1(6),
     1RRX2(6),RRY2(6),RRZ2(6),THRR(6,6),TYM(6,6),CRRX(6),CRRY(6),
     2CRRZ(6),HCY1,HCZ1,NRR,IRR
C
      COMMON/L22/PXVEL,PYVEL,PZVEL,APX1,APY1,APZ1,RPX,RPY,RPZ,FPPX,FPPY,
     1FPPZ,TPPX1,TPPY1,TPPZ1,FPX,FPY,FPZ,PHITE,IPARA,NPAR,ICRKT9,PNRG
C
      COMMON/L25/NOMODE,OMEGA(5),SPHI(540,5),APHI(144,5),WNX(5),WNY(5),
     1WNZ(5),PX(5),PY(5),PZ(5),GF(5),GM(5),COORD(74,2),FPPHI(222,5),
     2NTCOR,IINP,NORUN,MORDER,NATT(102),NDIAM(3,5),ASPHI(16,5),
     3CGPHI(3,5),WMX(5,5),WMY(5,5),WMZ(5,5)     ,AMASS(102)
C
      COMMON/LIST8/D11,D12,D13,D21,D22,D23,D31,D32,D33,DS11,DS12,DS13,
     1DS21,DS22,DS23,DS31,DS32,DS33,DC11,DC12,DC13,DC21,DC22,DC23,
     2DC31,DC32,DC33
C
      COMMON/MO/FORJK(6),SLJK(6),CHJKT(6),CHJK(6),SRJKT(6),SRJK(6),
     1SDJK(6),VELJK(6),FORLM(48),SLLM(48),CHLMT(48),CHLM(48),SRLMT(48),
     2SRLM(48),SDLM(48),VELLM(48)
C
      DIMENSION RNGXP(6), RRAD(6)
C
C     SET UP FOR TAPE OUTPUT OF FOOTPAD FORCES
C
      REWIND 3
      IF (NOFOR.EQ.1) WRITE (3) LM,NTCOR,DT
C
C     INITIALIZING THE PROGRAM INPUTS
C
      NOMODE=NORUN
      NN=36+2*NOMODE
      IP=6
      IT=6
      PIE=3.14159265
      TIME=0.0
      L1=1
      IPRINT=0
      JPRINT=NPRINT
      KPF=0
      IF (DTP.LT.DT) DTP=DT
      PSI=PSIO
      THTA=THTAO
      PHI=PHIO
      ZETA=(ZETAO*PIE)/180.
      PHI=(PHI*PIE)/180.
      PSI=(PSI*PIE)/180.
      THTA=(THTA*PIE)/180.
      PHIS=PHI
      PHIC=PHI
      PSIS=PSI
      PSIC=PSI
      THTAS=THTA
```

```
      THTAC=THTA                                                        INT1130
      RXVEL=RXVELO                                                      INT1140
      RYVEL=RYVELO                                                      INT1150
      RZVEL=RZVELO                                                      INT1160
      WX=WXO*PIE/180.                                                   INT1170
      WY=WYO*PIE/180.                                                   INT1180
      WZ=WZO*PIE/180.                                                   INT1190
C                                                                       INT1200
C     INITIALIZE RETRO ROCKET ROUTINE                                   INT1210
C                                                                       INT1220
      IF (NRR.LE.0) GO TO 10                                            INT1230
      CALL RETRO1                                                       INT1240
      GO TO 20                                                          INT1250
10    FRRX=0.0                                                          INT1260
      FRRY=0.0                                                          INT1270
      FRRZ=0.0                                                          INT1280
      TRRX=0.0                                                          INT1290
      TRRY=0.0                                                          INT1300
      TRRZ=0.0                                                          INT1310
20    CONTINUE                                                          INT1320
C                                                                       INT1330
C     INITIALIZE PARACHUTE ROUTINE                                      INT1340
C                                                                       INT1350
      IF (NPAR.EQ.0) GO TO 30                                           INT1360
      CALL PARA1                                                        INT1370
      GO TO 40                                                          INT1380
30    FPPX=0.0                                                          INT1390
      FPPY=0.0                                                          INT1400
      FPPZ=0.0                                                          INT1410
      TPPX1=0.0                                                         INT1420
      TPPY1=0.0                                                         INT1430
      TPPZ1=0.0                                                         INT1440
40    CONTINUE                                                          INT1450
C                                                                       INT1460
C     DETERMINE TRIG. CONSTANTS                                         INT1470
C                                                                       INT1480
      COSPSI=COS(PSI)                                                   INT1490
      COSTH=COS(THTA)                                                   INT1500
      COSPHI=COS(PHI)                                                   INT1510
      SINPSI=SIN(PSI)                                                   INT1520
      SINTH=SIN(THTA)                                                   INT1530
      SINPHI=SIN(PHI)                                                   INT1540
C                                                                       INT1550
C     DIRECTION COSINES                                                 INT1560
C                                                                       INT1570
      D11=COSPSI*COSTH                                                  INT1580
      D12=COSPSI*SINTH*SINPHI-SINPSI*COSPHI                             INT1590
      D13=SINPSI*SINPHI+COSPSI*SINTH*COSPHI                             INT1600
      D21=SINPSI*COSTH                                                  INT1610
      D22=COSPSI*COSPHI+SINPSI*SINTH*SINPHI                             INT1620
      D23=SINPSI*SINTH*COSPHI-COSPSI*SINPHI                             INT1630
      D31=-SINTH                                                        INT1640
      D32=COSTH*SINPHI                                                  INT1650
      D33=COSTH*COSPHI                                                  INT1660
C                                                                       INT1670
C     INITIALIZE FOR STRUT FORCE CALCULATIONS                           INT1680
```

```
C
      DO 70 I=1,JK
      TOTCCR(I)=0.0
      L=1
      IF (I.GT.2) GO TO 50
      IF (SLGTH(2,L).LT.0.1E-04) L=2
      IF (SLGTH(2,L).LT.0.1E-04) GO TO 210
      CHJK(I)=FC(2,L)/SLGTH(2,L)*COEF(2,I)
      CHJKT(I)=FC(2,L)/SLGTH(2,L)*COEFT(2,I)
      GO TO 60
50    IF (SLGTH(3,L).LT.0.1E-04) L=2
      IF (SLGTH(3,L).LT.0.1E-04) GO TO 210
      CHJK(I)=FC(3,L)/SLGTH(3,L)*COEF(2,I)
      CHJKT(I)=FC(3,L)/SLGTH(3,L)*COEFT(2,I)
60    SRJK(I)=0.0
      VELJK(I)=0.0
      SDJK(I)=0.0
      SRJKT(I)=0.0
70    FORJK(I)=0.0
      DO 80 I=1,LM
      TOTSCR(I)=0.0
      L=1
      IF (SLGTH(1,L).LT.0.1E-04) L=2
      IF (SLGTH(1,L).LT.0.1E-04) GO TO 210
      CHLM(I)=FC(1,L)/SLGTH(1,L)*COEF(1,I)
      CHLMT(I)=FC(1,L)/SLGTH(1,L)*COEFT(1,I)
      SRLM(I)=0.0
      VELLM(I)=0.0
      SDLM(I)=0.0
      SRLMT(I)=0.0
80    FORLM(I)=0.0
C
C     CALL SUBROUTINE TO COMPUTE INCREMENTAL AREA INFORMATION ABOUT
C     FOOTPAD SURFACE
C
      CALL FPAREA
C
C
C     DETERMINE MODAL PATTERNS AT REQUIRED POINTS ON THE FOOTPAD
C
      IF (NOMODE.GT.0) CALL TRAMOD
C
C     ADJUST COORDINATES OF GROUND CONTROL POINTS TO ACCOUNT FOR
C     SECONDARY ATTENUATOR ON BOTTOM OF FOOTPAD
C
      DO 90 II1=1,KA
      IIS=NI(II1)
      DO 90 II2=1,IIS
      EX(II1,II2)=EX(II1,II2)+THICK(II1)*UNX(II1)
      EY(II1,II2)=EY(II1,II2)+THICK(II1)*UNY(II1,II2)
      EZ(II1,II2)=EZ(II1,II2)+THICK(II1)*UNZ(II1,II2)
90    CONTINUE
C     DETERMINE INITIAL LOCATION OF LANDER
C
      DO 100 I=1,KA
      RRAD(I)=SQRT(EY(I,1)**2+EZ(I,1)**2)
```

```
100   RNGXP(I)=D11*EX(I,1)-SQRT(D12*D12+D13*D13)*RRAD(I)
C
C     FIND LOWEST RING
C
      LOWEST=1
      IF (KA.EQ.1) GO TO 120
      RNGMIN=RNGXP(1)
      DO 110 I=2,KA
      IF (RNGXP(I).GE.RNGMIN) GO TO 110
      LOWEST=I
      RNGMIN=RNGXP(I)
110   CONTINUE
120   CONTINUE
      CENTHS=-D11*EX(LOWEST,1)+SQRT(D12*D12+D13*D13)*RRAD(LOWEST)
C
C     LOCATIN OF FOODPAD C.G. AT INITIAL GROUND CONTACT
C
      RSX=CENTHS
      RSY=D21*HSX1+D22*HSY1+D23*HSZ1
      RSZ=D31*HSX1+D32*HSY1+D33*HSZ1
C
C     LOCATION OF PAYLOAD C.G. AT INITIAL GROUND CONTACT
C
      RX(1)=RSX-D11*HSX1-D12*HSY1-D13*HSZ1
      RY=0.0
      RZ=0.0
C
C
C     INITIAL LOCATION OF EQUIP. C.G. AT INITIAL GROUND CONTACT
C
      RCX=D11*HCX1+D12*HCY1+D13*HCZ1+RX(1)
      RCY=D21*HCX1+D22*HCY1+D23*HCZ1
      RCZ=D31*HCX1+D32*HCY1+D33*HCZ1
C
C
C     CONTACT POINT IN FIXED COORD. SYSTEM
C
C     INITIAL EQUIP. VELOCITIES
C
      QCX=HCY1*WZ-HCZ1*WY
      QCY=HCZ1*WX-HCX1*WZ
      QCZ=HCX1*WY-HCY1*WX
      RCXVEL=RXVEL+D11*QCX+D12*QCY+D13*QCZ
      RCYVEL=RYVEL+D21*QCX+D22*QCY+D23*QCZ
      RCZVEL=RZVEL+D31*QCX+D32*QCY+D33*QCZ
C
      WCX=WX
      WCY=WY
      WCZ=WZ
C
C     INITIAL FOOTPAD VELOCITIES
C
      QSXDUM=HSY1*WZ-HSZ1*WY
      QSYDUM=HSZ1*WX-HSX1*WZ
      QSZDUM=HSX1*WY-HSY1*WX
      RSXVEL=RXVEL+D11*QSXDUM+D12*QSYDUM+D13*QSZDUM
```

```
      RSYVEL=RYVEL+D21*QSXDUM+D22*QSYDUM+D23*QSZDUM
      RSZVEL=RZVEL+D31*QSXDUM+D32*QSYDUM+D33*QSZDUM
C
      WSX=WX
      WSY=WY
      WSZ=WZ
C
C     NORMAL COORDINATE INITIAL CONDITIONS
C
      DO 130 JJ=1,NOMODE
      Q(JJ)=0.0
      QD(JJ)=0.0
130   QDD(JJ)=0.0
C
C     SET UP INITIAL VALUES FOR INTEGRATION ROUTINE
C
      T(1)=RX(1)
      T(2)=RY
      T(3)=RZ
      T(4)=RXVEL
      T(5)=RYVEL
      T(6)=RZVEL
      T(7)=WX
      T(8)=WY
      T(9)=WZ
      T(10)=RCX
      T(11)=RCY
      T(12)=RCZ
      T(13)=RCXVEL
      T(14)=RCYVEL
      T(15)=RCZVEL
      T(16)=WCX
      T(17)=WCY
      T(18)=WCZ
      T(19)=RSX
      T(20)=RSY
      T(21)=RSZ
      T(22)=RSXVEL
      T(23)=RSYVEL
      T(24)=RSZVEL
      T(25)=WSX
      T(26)=WSY
      T(27)=WSZ
      T(28)=PSI
      T(29)=THTA
      T(30)=PHI
      T(31)=PSIC
      T(32)=THTAC
      T(33)=PHIC
      T(34)=PSIS
      T(35)=THTAS
      T(36)=PHIS
      IF (NOMODE.EQ.0) GO TO 150
      NQD=36+NOMODE
      DO 140 I=1,NOMODE
      T(36+I)=Q(I)
```

```
      NQD=NQD+I                                                         INT3370
140   T(NQD)=QD(I)                                                      INT3380
150   CONTINUE                                                          INT3390
      T(1+NN)=TIME                                                      INT3400
      SPACE=DT                                                          INT3410
C                                                                       INT3420
C     INITIAL PAYLOAD ACCELERATIONS                                     INT3430
C                                                                       INT3440
      AX=0.0                                                            INT3450
      AY=0.0                                                            INT3460
      AZ=0.0                                                            INT3470
      WDX=0.0                                                           INT3480
      WDY=0.0                                                           INT3490
      WDZ=0.0                                                           INT3500
C                                                                       INT3510
C     INITIAL EQUIP. ACCELERATIONS                                      INT3520
C                                                                       INT3530
      ACX=0.0                                                           INT3540
      ACY=0.0                                                           INT3550
      ACZ=0.0                                                           INT3560
      WDCX=0.0                                                          INT3570
      WDCY=0.0                                                          INT3580
      WDCZ=0.0                                                          INT3590
C                                                                       INT3600
C     INITIAL FOOTPAD ACCELERATIONS                                     INT3610
C                                                                       INT3620
      ASX=0.0                                                           INT3630
      ASY=0.0                                                           INT3640
      ASZ=0.0                                                           INT3650
      WDSX=0.0                                                          INT3660
      WDSY=0.0                                                          INT3670
      WDSZ=0.0                                                          INT3680
C                                                                       INT3690
C     PAYLOAD ANGULAR ACCEL. CONSTANTS                                  INT3700
C                                                                       INT3710
      D=UXX*UYY*UZZ-2.0*UXY*UYZ*UXZ-UXX*UYZ*UYZ-UYY*UXZ*UXZ-UZZ*UXY*UXY INT3720
      E=1.0/D                                                           INT3730
      CXX=(UYY*UZZ-UYZ*UYZ)*E                                           INT3740
      CXY=(UYZ*UXZ+UXY*UZZ)*E                                           INT3750
      CXZ=(UXY*UYZ+UXZ*UYY)*E                                           INT3760
      CYX=(UXZ*UYZ+UXY*UZZ)*E                                           INT3770
      CYY=(UXX*UZZ-UXZ*UXZ)*E                                           INT3780
      CYZ=(UXY*UXZ+UYZ*UXX)*E                                           INT3790
      CZX=(UXY*UYZ+UXZ*UYY)*E                                           INT3800
      CZY=(UXZ*UXY+UYZ*UXX)*E                                           INT3810
      CZZ=(UXX*UYY-UXY*UXY)*E                                           INT3820
C                                                                       INT3830
C     EQUIP. ANGULAR ACCEL. CONSTANTS                                   INT3840
C                                                                       INT3850
      D=UCXX*UCYY*UCZZ-2.0*UCXY*UCYZ*UCXZ-UCXX*UCYZ*UCYZ-UCYY*UCXZ*UCXZ-INT3860
     1UCZZ*UCXY*UCXY                                                    INT3870
      E=1.0/D                                                           INT3880
      CCXX=(UCYY*UCZZ-UCYZ*UCYZ)*E                                      INT3890
      CCXY=(UCYZ*UCXZ+UCXY*UCZZ)*E                                      INT3900
      CCXZ=(UCXY*UCYZ+UCXZ*UCYY)*E                                      INT3910
      CCYX=(UCXZ*UCYZ+UCXY*UCZZ)*E                                      INT3920
```

```
      CCYY=(UCXX*UCZZ-UCXZ*UCXZ)*E                                      INT3930
      CCYZ=(UCXY*UCXZ+UCYZ*UCXX)*E                                      INT3940
      CCZX=(UCXY*UCYZ+UCXZ*UCYY)*E                                      INT3950
      CCZY=(UCXZ*UCXY+UCYZ*UCXX)*E                                      INT3960
      CCZZ=(UCXX*UCYY-UCXY*UCXY)*E                                      INT3970
C                                                                       INT3980
C     INITIAL ATTENUATOR LENGTHS                                        INT3990
C                                                                       INT4000
      DO 160 I=1,LM                                                     INT4010
      SLLM(I)=SQRT((XM2(I)+HSX1-XL1(I))*(XM2(I)+HSX1-XL1(I))+(YM2(I)+HSYINT4020
     11-YL1(I))*(YM2(I)+HSY1-YL1(I))+(ZM2(I)+HSZ1-ZL1(I))*(ZM2(I)+HSZ1-ZINT4030
     2L1(I)))                                                           INT4040
      SLLMO(I)=SLLM(I)                                                  INT4050
160   CONTINUE                                                          INT4060
      DO 170 I=1,JK                                                     INT4070
      SLJK(I)=SQRT((XJ3(I)+HCX1-XK1(I))*(XJ3(I)+HCX1-XK1(I))+(YJ3(I)+HCYINT4080
     11-YK1(I))*(YJ3(I)+HCY1-YK1(I))+(ZJ3(I)+HCZ1-ZK1(I))*(ZJ3(I)+HCZ1-ZINT4090
     2K1(I)))                                                           INT4100
      SLJKO(I)=SLJK(I)                                                  INT4110
170   CONTINUE                                                          INT4120
      QKT=CTLM                                                          INT4130
C                                                                       INT4140
C     INITIALIZE FOR FOOTPAD - SOIL CALCULATIONS                        INT4150
C                                                                       INT4160
      FSGX=0.0                                                          INT4170
      FSGY=0.0                                                          INT4180
      FSGZ=0.0                                                          INT4190
      TSGX=0.0                                                          INT4200
      TSGY=0.0                                                          INT4210
      TSGZ=0.0                                                          INT4220
C                                                                       INT4230
C     INITIALIZE FOR PRINTING                                           INT4240
C                                                                       INT4250
      DO 180 I=1,6                                                      INT4260
      TCSQ(I)=0.0                                                       INT4270
      OFCMAX(I)=0.0                                                     INT4280
      OFCMIN(I)=0.0                                                     INT4290
      OLCMAX(I)=SLJKO(I)                                                INT4300
      OLCMIN(I)=SLJKO(I)                                                INT4310
      OLCB(I)=0.0                                                       INT4320
180   OLCL(I)=0.0                                                       INT4330
      DO 190 I=1,7                                                      INT4340
      OMACX(I)=0.0                                                      INT4350
      OMACY(I)=0.0                                                      INT4360
      OMACZ(I)=0.0                                                      INT4370
      OMAX(I)=0.0                                                       INT4380
      OMAY(I)=0.0                                                       INT4390
      OMAZ(I)=0.0                                                       INT4400
      OMASX(I)=0.0                                                      INT4410
      OMASY(I)=0.0                                                      INT4420
190   OMASZ(I)=0.0                                                      INT4430
      DO 200 I=1,48                                                     INT4440
      TSSQ(I)=0.0                                                       INT4450
      OLSB(I)=0.0                                                       INT4460
      OLSL(I)=0.0                                                       INT4470
      OFSMIN(I)=0.0                                                     INT4480
```

```
      OFSMAX(I)=0.0                                                     INT4490
      OLSMAX(I)=SLLMO(I)                                                INT4500
200   OLSMIN(I)=SLLMO(I)                                                INT4510
      ENGTOT=0.0                                                        INT4520
      PNRG=0.0                                                          INT4530
      IC=0                                                              INT4540
      JC=0                                                              INT4550
      ISS=0                                                             INT4560
      JS=0                                                              INT4570
      AREA=0.0                                                          INT4580
      AREAM=0.0                                                         INT4590
      FSGX=0.0                                                          INT4600
      ENGKE=0.0                                                         INT4610
      OECS=0.0                                                          INT4620
      ENGPE=0.0                                                         INT4630
      OESS=0.0                                                          INT4640
      OFFACT=0.0                                                        INT4650
      ENGKEF=0.0                                                        INT4660
      ENGTOT=0.0                                                        INT4670
      RXO(1)=RX(1)                                                      INT4680
      RYO=RY                                                            INT4690
      RZO=RZ                                                            INT4700
      RSXO=RSX                                                          INT4710
      RSYO=RSY                                                          INT4720
      RSZO=RSZ                                                          INT4730
      RCXO=RCX                                                          INT4740
      RCYO=RCY                                                          INT4750
      RCZO=RCZ                                                          INT4760
      CXVELO=RCXVEL                                                     INT4770
      CYVELO=RCYVEL                                                     INT4780
      CZVELO=RCZVEL                                                     INT4790
      SXVELO=RSXVEL                                                     INT4800
      SYVELO=RSYVEL                                                     INT4810
      SZVELO=RSZVEL                                                     INT4820
      CALL XTRCAL                                                       INT4830
C                                                                       INT4840
      RETURN                                                            INT4850
210   WRITE (IP,220)                                                    INT4860
      STOP                                                              INT4870
C                                                                       INT4880
220   FORMAT (52H STRUT CRUSH FORCE VS DEFLECTION TABLE IS INCORRECT.)  INT4890
      END                                                               INT4900-
```

APPENDIX G

```
      SUBROUTINE TRAMOD                                                 TRA  10
C                                                                       TRA  20
C     THIS SUBROUTINE OBTAINS THE  MAGNITUDE OF THE MODE SHAPES AT THE  TRA  30
C     C.G., GROUND CONTROL POINTS, ACCELEOMETER LOCATIONS, AND          TRA  40
C     ATTENUATOR END POINTS ON THE FOOTPAD.  IN ADDITION, THE           TRA  50
C     GENERALIZED INERTIA PARAMETERS WMX, WMY, AND WMZ ARE DETERMINED.  TRA  60
C                                                                       TRA  70
      DIMENSION S(5,6),G(5,1),ASA(4,5),C(5,5),D(5,5),E(5,5)             TRA  80
      DIMENSION ST(3,4),GT(3,1)                                         TRA  90
C                                                                       TRA 100
      COMMON/L2/OXX,OYY,OZZ,OCXX,OCYY,OCZZ,OSXX,OSYY,OSZZ,FCOK,FCLM,    TRA 110
     1OXY,OYZ,OXZ,OCXY,OCXZ,OCYZ,PLGNOF,PK,HSX1,HCX1,VISOK,VISLM,IP,    TRA 120
     2IT,JK,LM,JKDAMP,LMDAMP,NSPC,NSPS(48),NCPC                         TRA 130
C                                                                       TRA 140
      COMMON/L6B/XL1(48),YL1(48),ZL1(48),XM2(48),YM2(48),ZM2(48),XJ3(6),TRA 150
     1YJ3(6),ZJ3(6),XK1(6),YK1(6),ZK1(6),CXX,CXY,CXZ,CYX,CYY,CYZ,       TRA 160
     2CZX,CZY,CZZ,CCXX,CCXY,CCXZ,CCYX,CCYY,CCYZ,CCZX,CCZY,CCZZ          TRA 170
C                                                                       TRA 180
      COMMON/L10/RINGX(7),RHO(7),AEL(6),UNX(6),UNY(6,30),UNZ(6,30),     TRA 190
     1SOILP(3),NTYPE,TC,DCM,CFM,THICK(6),INATT,GE,RNGENG,EX(6,30),      TRA 200
     2EY(6,30),EZ(6,30),N1(7),KA,IABCD1,EFRICT                          TRA 210
C                                                                       TRA 220
      COMMON/L11/AA1(3,6),AA2(3,6),AA3(3,6),CAP(3,6),CCH(3,6),CHS(3,6), TRA 230
     1IACCEL,NOACAP,NOACCH,NOACHS                                       TRA 240
C                                                                       TRA 250
      COMMON/L25/NOMODE,OMEGA(5),SPHI(540,5),APHI(144,5),WNX(5),WNY(5), TRA 260
     1WNZ(5),PX(5),PY(5),PZ(5),GF(5),GM(5),COORD(74,2),FPPHI(222,5),    TRA 270
     2NTCOR,IINP,NORUN,MORDER,KATT(102),NDIAM(3,5),ASPHI(18,5),         TRA 280
     3CGPHI(3,5),WMX(5,5),WMY(5,5),WMZ(5,5)     ,AMASS(102)             TRA 290
C                                                                       TRA 300
      RMAX=SQRT(EY(KA,1)**2+EZ(KA,1)**2)                                TRA 310
      DO 550 J=1,3                                                      TRA 320
      DO 550 M=1,NOMODE                                                 TRA 330
C                                                                       TRA 340
      IF (NDIAM(J,M).GT.99) GO TO 500                                   TRA 350
C                                                                       TRA 360
      NPHI=0                                                            TRA 370
      NPHIA=0                                                           TRA 380
      IPOW=0                                                            TRA 390
      ICS=1                                                             TRA 400
      IRS=1                                                             TRA 410
C                                                                       TRA 420
10    SUM=0.                                                            TRA 430
      SUM2=0.                                                           TRA 440
      DO 120 I=1,NTCOR                                                  TRA 450
C                                                                       TRA 460
C     CALCULATE PSI                                                     TRA 470
C                                                                       TRA 480
      IF (COORD(I,2).NE.0.) GO TO 40                                    TRA 490
      IF (COORD(I,1).EQ.0.) GO TO 30                                    TRA 500
      IF (COORD(I,1).GT.0.) GO TO 20                                    TRA 510
      PSI=4.712388980                                                   TRA 520
      GO TO 50                                                          TRA 530
20    PSI=1.570796327                                                   TRA 540
      GO TO 50                                                          TRA 550
30    EMPSI=1.0                                                         TRA 560
```

```
      GO TO 70                                                          TRA 570
40    PSI=ATAN2(COORD(I,1),COORD(I,2))                                  TRA 580
50    CONTINUE                                                          TRA 590
C                                                                       TRA 600
C     CALCULATE EMPSI                                                   TRA 610
C                                                                       TRA 620
      MN=NDIAM(J,M)                                                     TRA 630
      IF (MN.LT.0) GO TO 60                                             TRA 640
      PSIM=MN*PSI                                                       TRA 650
      EMPSI=COS(PSIM)                                                   TRA 660
      GO TO 70                                                          TRA 670
60    MN=-MN                                                            TRA 680
      PSIM=MN*PSI                                                       TRA 690
      EMPSI=SIN(PSIM)                                                   TRA 700
70    CONTINUE                                                          TRA 710
C                                                                       TRA 720
C     CALCULATE 5X5 MATRIX ELEMENT                                      TRA 730
C                                                                       TRA 740
      R=SQRT(COORD(I,1)**2+COORD(I,2)**2)/RMAX                          TRA 750
      IF (IPOW.GT.0) GO TO 80                                           TRA 760
      RPOW1=1.0                                                         TRA 770
      GO TO 90                                                          TRA 780
80    RPOW1=R**IPOW                                                     TRA 790
90    SUBEL=(EMPSI**2)*RPOW1                                            TRA 800
      SUM=SUM+SUBEL                                                     TRA 810
C                                                                       TRA 820
      IF (IPOW.GT.4) GO TO 120                                          TRA 830
C                                                                       TRA 840
C     CALCULATE 1X5 MATRIX ELEMENT                                      TRA 850
C                                                                       TRA 860
      IF (IPOW.GT.0) GO TO 100                                          TRA 870
      RPOW=1.0                                                          TRA 880
      GO TO 110                                                         TRA 890
100   RPOW=R**IPOW                                                      TRA 900
110   SUBEL2=EMPSI*FPPNI(((I-1)*3+J),M)*RPOW                            TRA 910
      SUM2=SUM2+SUBEL2                                                  TRA 920
120   CONTINUE                                                          TRA 930
C                                                                       TRA 940
C     ASSIGN MATRIX ELEMENTS TO MATRIX LOCATION                         TRA 950
C                                                                       TRA 960
      IF (IPOW.GT.4) GO TO 150                                          TRA 970
C                                                                       TRA 980
      G(IPOW+1,1)=SUM2                                                  TRA 990
      ICS1=ICS                                                          TRA1000
130   S(IRS,ICS)=SUM                                                    TRA1010
      ICS=ICS-1                                                         TRA1020
      IF (ICS.LE.0) GO TO 140                                           TRA1030
      IRS=IRS+1                                                         TRA1040
      GO TO 130                                                         TRA1050
140   ICS=ICS1+1                                                        TRA1060
      IRS=1                                                             TRA1070
      GO TO 130                                                         TRA1080
C                                                                       TRA1090
150   ICS1=ICS                                                          TRA1100
      IRS=1+(ICS-5)                                                     TRA1110
      ICS=5                                                             TRA1120
```

```
160   S(IRS,ICS)=SUM                                                    TRA1130
      IRS=IRS+1                                                         TRA1140
      IF (IRS.GT.5) GO TO 170                                           TRA1150
      ICS=ICS-1                                                         TRA1160
      GO TO 160                                                         TRA1170
170   ICS=ICS1+1                                                        TRA1180
180   IPOW=IPOW+1                                                       TRA1190
C                                                                       TRA1200
      IF (IPOW.LT.9) GO TO 10                                           TRA1210
C                                                                       TRA1220
      DO 190 ITP=1,3                                                    TRA1230
      DO 190 JTP=1,3                                                    TRA1240
190   ST(ITP,JTP)=S(ITP,JTP)                                            TRA1250
      IF (NDIAM(J,M).EQ.0) GO TO 210                                    TRA1260
      DO 200 ITP=2,3                                                    TRA1270
      ST(ITP,1)=0.0                                                     TRA1280
200   ST(1,ITP)=0.0                                                     TRA1290
      G(1,1)=0.0                                                        TRA1300
210   CONTINUE                                                          TRA1310
      CALL SOLVE (ST,G,AAA,3,1)                                         TRA1320
      G(4,1)=0.0                                                        TRA1330
      G(5,1)=0.0                                                        TRA1340
      IF (J.NE.1) GO TO 230                                             TRA1350
      DO 220 IJ=2,5                                                     TRA1360
      IJMI=IJ-1                                                         TRA1370
220   ASA(IJMI,M)=G(IJ,1)                                               TRA1380
230   CONTINUE                                                          TRA1390
C                                                                       TRA1400
C     FIND MODE SHAPE AT EACH GROUND CONTROL POINT                      TRA1410
C                                                                       TRA1420
      DO 320 NRING=1,KA                                                 TRA1430
      NN2=NI(NRING)                                                     TRA1440
      DO 320 NELE=1,NN2                                                 TRA1450
C                                                                       TRA1460
      NPHI=NPHI+1                                                       TRA1470
      IND=(NPHI-1)*3+J                                                  TRA1480
C                                                                       TRA1490
      R=SQRT(EY(NRING,NELE)**2+EZ(NRING,NELE)**2)/RMAX                  TRA1500
C                                                                       TRA1510
      IF (EZ(NRING,NELE).EQ.0.) GO TO 240                               TRA1520
      PSI=ATAN2(EY(NRING,NELE),EZ(NRING,NELE))                          TRA1530
      GO TO 260                                                         TRA1540
240   IF (EY(NRING,NELE).GT.0.) GO TO 250                               TRA1550
      PSI=4.712388960                                                   TRA1560
      GO TO 260                                                         TRA1570
250   PSI=1.570796327                                                   TRA1580
260   CONTINUE                                                          TRA1590
C                                                                       TRA1600
      FSUM=0.                                                           TRA1610
      DO 290 K=1,5                                                      TRA1620
      IF (K.EQ.1) GO TO 270                                             TRA1630
      RPOW2=R**(K-1)                                                    TRA1640
      GO TO 280                                                         TRA1650
270   RPOW2=1.                                                          TRA1660
280   EL=G(K,1)*RPOW2                                                   TRA1670
290   FSUM=FSUM+EL                                                      TRA1680
```

```
C
      MN=NDIAM(J,M)
      IF (MN.LT.0) GO TO 300
      PSIM=MN*PSI
      EMPSI=COS(PSIM)
      GO TO 310
300   MN=-MN
      PSIM=MN*PSI
      EMPSI=SIN(PSIM)
310   CONTINUE
C
      SPHI(IND,M)=FSUM*EMPSI
320   CONTINUE
C
C     FIND MODE SHAPE AT ATTENUATOR LOCATIONS
C
      DO 410 NOA=1,LM
      NPHIA=NPHIA+1
      INDA=(NPHIA-1)*3+J
      R=SQRT(YM2(NOA)**2+ZM2(NOA)**2)/RMAX
      IF (ZM2(NOA).EQ.0.0) GO TO 330
      PSI=ATAN2(YM2(NOA),ZM2(NOA))
      GO TO 350
330   IF (YM2(NOA).GT.0.0) GO TO 340
      PSI=4.71238898
      GO TO 350
340   PSI=1.570796327
350   CONTINUE
      FSUM=0.0
      DO 380 K=1,5
      IF (K.EQ.1) GO TO 360
      RPOW2=R**(K-1)
      GO TO 370
360   RPOW2=1.
370   EL=C(K,1)*RPOW2
380   FSUM=FSUM+EL
      MN=NDIAM(J,M)
      IF (MN.LT.0) GO TO 390
      PSIM=MN*PSI
      EMPSI=COS(PSIM)
      GO TO 400
390   MN=-MN
      PSIM=MN*PSI
      EMPSI=SIN(PSIM)
400   CONTINUE
      APHI(INDA,M)=FSUM*EMPSI
410   CONTINUE
C
C     FIND MODE SHAPE FOR ACCELLEROMETER LOCATIONS
C
      IF (NOACHS.LE.0) GO TO 490
      IAC=0
      DO 480 NAC=1,NOACHS
      IAC=IAC+1
C
      IF (CHS(3,NAC).NE.0.) GO TO 430
```

```
      IF (CHS(2,NAC).LT.0.) GO TO 420                                   TRA2250
      PSI=1.570796327                                                   TRA2260
      GO TO 440                                                         TRA2270
420   PSI=4.712388980                                                   TRA2280
      GO TO 440                                                         TRA2290
430   PSI=ATAN2(CHS(2,NAC),CHS(3,NAC))                                  TRA2300
440   CONTINUE                                                          TRA2310
C                                                                       TRA2320
      MN=NDIAM(J,M)                                                     TRA2330
      IF (MN.LT.0) GO TO 450                                            TRA2340
      PSIM=MN*PSI                                                       TRA2350
      EMPSI=COS(PSIM)                                                   TRA2360
      GO TO 460                                                         TRA2370
450   MN=-MN                                                            TRA2380
      PSIM=MN*PSI                                                       TRA2390
      EMPSI=SIN(PSIM)                                                   TRA2400
460   CONTINUE                                                          TRA2410
C                                                                       TRA2420
      R=SQRT(CHS(2,NAC)**2+CHS(3,NAC)**2)/RMAX                          TRA2430
      FSUM=G(1,1)                                                       TRA2440
      DO 470 K=2,5                                                      TRA2450
      RPOW2=R**(K-1)                                                    TRA2460
      EL=G(K,1)*RPOW2                                                   TRA2470
      FSUM=FSUM+EL                                                      TRA2480
470   CONTINUE                                                          TRA2490
      INW=((IAC-1)*3)+J                                                 TRA2500
      ASPHI(INW,M)=FSUM*EMPSI                                           TRA2510
480   CONTINUE                                                          TRA2520
490   CONTINUE                                                          TRA2530
C                                                                       TRA2540
C     FIND MODE SHAPE FOR C.G. LOCATION                                 TRA2550
C                                                                       TRA2560
      CGPHI(J,M)=G(1,1)                                                 TRA2570
C                                                                       TRA2580
      GO TO 550                                                         TRA2590
C                                                                       TRA2600
C     SET MODE SHAPES IN REQUESTED DIRECTIONS EQUAL TO ZERO             TRA2610
C                                                                       TRA2620
500   NPST=0                                                            TRA2630
      DO 510 L=1,KA                                                     TRA2640
      NPST=NPST+NI(L)                                                   TRA2650
510   CONTINUE                                                          TRA2660
      DO 520 INI=1,NPST                                                 TRA2670
      NPO=((INI-1)*3)+J                                                 TRA2680
      SPHI(NPO,M)=0.0                                                   TRA2690
520   CONTINUE                                                          TRA2700
      CGPHI(J,M)=0.0                                                    TRA2710
      DO 530 INI=1,NOACHS                                               TRA2720
      NPO=((INI-1)*3)+J                                                 TRA2730
      ASPHI(NPO,M)=0.0                                                  TRA2740
530   CONTINUE                                                          TRA2750
      DO 540 NOA=1,LM                                                   TRA2760
      NPO=((NOA-1)*3)+J                                                 TRA2770
      APHI(NPO,M)=0.0                                                   TRA2780
540   CONTINUE                                                          TRA2790
550   CONTINUE                                                          TRA2800
```

APPENDIX G

```
C
C     DETERMINE GENERALIZED INERTIA PROPERTIES
C
      IF (MORDER.EQ.0) GO TO 730
C
C     CALCULATE COEFFICIENTS C,D, AND E
C
      DO 560 II1=1,NOMODE
      DO 560 II2=1,NOMODE
      WMX(II1,II2)=0.0
      WMY(II1,II2)=0.0
      WMZ(II1,II2)=0.0
560   CONTINUE
      DO 570 II1=1,NOMODE
      DO 570 II2=1,NOMODE
      C(II1,II2)=ASA(1,II1)*ASA(1,II2)/(RMAX**2)
      D(II1,II2)=(ASA(1,II1)*ASA(2,II2)+ASA(2,II1)*ASA(1,II2))/(RMAX**3)
      E(II1,II2)=4.*ASA(2,II1)*ASA(2,II2)/(3.*(RMAX**4))
570   CONTINUE
C
C     DETERMINE POINTS TO BE INCLUDED IN CALCULATIONS
C
      DO 720 II3=1,MORDER
      ICK=NATT(II3)
      DO 590 ICKC=1,222,6
      IF (ICK.EQ.ICKC) GO TO 600
590   CONTINUE
      GO TO 720
600   CONTINUE
      IF (ICK.NE.1) GO TO 610
      IPT=1
      GO TO 620
610   IPT=1+((ICK-1)/6)
620   CONTINUE
C
C     CALCULATE RADIUS AND PSI
C
      R=SQRT(COORD(IPT,1)**2+COORD(IPT,2)**2)
      IF (COORD(IPT,2).NE.0.) GO TO 640
      IF (COORD(IPT,1).GE.0.) GO TO 630
      PSI=4.71238898
      GO TO 650
630   PSI=1.570796327
      GO TO 650
640   PSI=ATAN2(COORD(IPT,1),COORD(IPT,2))
650   CONTINUE
C
C     CALCULATE WMX, WMY, AND WMZ
C
      AINTG=0.0
      DO 710 III=1,NOMODE
      MN=NDIAM(1,III)
      IF (MN.LT.0) GO TO 660
      EMPSI1=COS(MN*PSI)
      GO TO 670
660   MN=-MN
```

```
      EMPSI1=SIN(MN*PSI)                                                TRA3430
670   CONTINUE                                                          TRA3440
      DO 710 II2=1,NOMODE                                               TRA3450
      MN=NDIAM(1,II2)                                                   TRA3460
      IF (MN.LT.0) GO TO 680                                            TRA3470
      EMPSI2=COS(MN*PSI)                                                TRA3480
      GO TO 690                                                         TRA3490
680   MN=-MN                                                            TRA3500
      EMPSI2=SIN(MN*PSI)                                                TRA3510
690   CONTINUE                                                          TRA3520
      AINTG=AMASS(II3)*R*R*(C(II1,II2)+D(II1,II2)*R+E(II1,II2)*R*R)*EMPSTRA3530
     1I1*EMPSI2                                                         TRA3540
      WMY(II1,II2)=WMY(II1,II2)+(COS(PSI)**2)*AINTG                     TRA3550
      WMZ(II1,II2)=WMZ(II1,II2)+(SIN(PSI)**2)*AINTG                     TRA3560
710   CONTINUE                                                          TRA3570
720   CONTINUE                                                          TRA3580
      DO 725 II1=1,NOMODE                                               TRA3590
      DO 725 II2=1,NOMODE                                               TRA3600
725   WMX(II1,II2)=WMY(II1,II2)+WMZ(II1,II2)                            TRA3610
730   CONTINUE                                                          TRA3620
      RETURN                                                            TRA3630
      END                                                               TRA3640-
```

APPENDIX G

```
      SUBROUTINE FPAREA                                                 FPA  10
C                                                                       FPA  20
C     THIS SUBROUTINE COMPUTES THE ELEMENTAL CONTROL AREA               FPA  30
C     INFORMATION FOR THE FOOTPAD SURFACE                               FPA  40
C                                                                       FPA  50
      COMMON/L10/RINGX(7),RHO(7),AEL(6),UNX(6),UNY(6,30),UNZ(6,30),     FPA  60
     1SOILP(3),NTYPE,TC,DCM,CFM,THICK(6),INATT,GE,RNGENG,EX(6,30),      FPA  70
     2EY(6,30),EZ(6,30),NI(7),KA,IABCD1,EFRICT                          FPA  80
C                                                                       FPA  90
      PI=3.14159265                                                     FPA 100
      KP1=KA+1                                                          FPA 110
      DO 20 I=2,KP1                                                     FPA 120
      IM1=I-1                                                           FPA 130
      M=NI(IM1)                                                         FPA 140
      IF (M.EQ.1) GO TO 30                                              FPA 150
      Z=M                                                               FPA 160
      PSID=2.*PI/Z                                                      FPA 170
      PSI=PSID                                                          FPA 180
      RP=RHO(I)+RHO(IM1)                                                FPA 190
      RP2=RP/2.                                                         FPA 200
      DR=RHO(I)-RHO(IM1)                                                FPA 210
      DX=RINGX(I)-RINGX(IM1)                                            FPA 220
      H=SQRT(DX*DX+DR*DR)                                               FPA 230
      XH=DX/H                                                           FPA 240
      A=PI*RP*H                                                         FPA 250
      AEL(IM1)=A/Z                                                      FPA 260
      EX(IM1,1)=(RINGX(I)+RINGX(IM1))/2.                                FPA 270
      UNX(IM1)=-DR/H                                                    FPA 280
      DO 10 J=1,M                                                       FPA 290
      SP=SIN(PSI)                                                       FPA 300
      CP=COS(PSI)                                                       FPA 310
      EX(IM1,J)=EX(IM1,1)                                               FPA 320
      EY(IM1,J)=RP2*SP                                                  FPA 330
      EZ(IM1,J)=RP2*CP                                                  FPA 340
      UNY(IM1,J)=XH*SP                                                  FPA 350
      UNZ(IM1,J)=XH*CP                                                  FPA 360
      PSI=PSI+PSID                                                      FPA 370
10    CONTINUE                                                          FPA 380
20    CONTINUE                                                          FPA 390
      RETURN                                                            FPA 400
30    WRITE (6,40) IM1,IM1                                              FPA 410
      STOP                                                              FPA 420
C                                                                       FPA 430
40    FORMAT (1X*ERRORFORSUBROUTINEFPAREA.RING(*I2*)ISNOTSEGMENTEDANDMUSFPA 440
     1TBE.*/1X*CHECKINPUTDATAFORNI(*I2*).*)                             FPA 450
      END                                                               FPA 460
```

APPENDIX G

```
      SUBROUTINE SOLVE (A,G,SUM,N,M)                                    SOL  10
C                                                                       SOL  20
      DIMENSION A(N,1),G(N,1),H(5,1)                                    SOL  30
C                                                                       SOL  40
C     THIS IS A SUBROUTINE FOR DETERMINING THE VALUE OF C IN THE        SOL  50
C     MATRIX EQUATION A*C=G.  THE VALUES OF A AND G ARE PROVIDED        SOL  60
C     AT THE TIME OF CALLING.  N IS THE ORDER OF A (MUST BE             SOL  70
C     A SQUARE MATRIX) AND M IS THE NUMBER OF COLUMNS IN                SOL  80
C     G(A AND G MUST HAVE SAME NUMBER OF ROWS).  THE VALUE              SOL  90
C     OF C IS STORED IN G LOCATION AT RETURN.  IF THE INVERSE           SOL 100
C     OF A IS REQUIRED, MAKE M NEGATIVE.  IF ONLY THE INVERSE           SOL 110
C     OF A IS REQUIRED(G MATRIX DOES NOT EXIST), ENTER M=0.             SOL 120
C     DETERMINANT OF A IS STORED IN LOCATION SUM AT RETURN.             SOL 130
C     IF THE INVERSE OF A IS COMPUTED, IT IS STORED                     SOL 140
C     IN LOCATION A AT RETURN TO THE CALLING PROGRAM.                   SOL 150
C     IF IT IS DESIRED TO MAKE THIS A DOUBLE PRECISION                  SOL 160
C     SUBROUTINE, THE FOLLOWING VARIABLES MUST BE TYPED                 SOL 170
C     DOUBLE PRECISION  A,G,H, AND SUM.                                 SOL 180
C     WHEN PROVIDING DIMENSIONING INFORMATION FOR                       SOL 190
C     THE VARIABLE A ,( A(I,J) ), THE VALUE OF J MUST                   SOL 200
C     BE ONE GREATER TNAN I, IE., J=I+1.                                SOL 210
C                                                                       SOL 220
      NGO=1                                                             SOL 230
      NST=1                                                             SOL 240
      IF (M) 10,20,50                                                   SOL 250
10    M=-M                                                              SOL 260
      NST=2                                                             SOL 270
20    NGO=2                                                             SOL 280
      DO 40 I=1,N                                                       SOL 290
      DO 40 J=1,N                                                       SOL 300
      H(I,J)=0.                                                         SOL 310
      IF (I-J) 40,30,40                                                 SOL 320
30    H(I,J)=1.                                                         SOL 330
40    CONTINUE                                                          SOL 340
50    N1=N+1                                                            SOL 350
      N2=N-1                                                            SOL 360
      KPT=2                                                             SOL 370
      DO 300 IP=1,NST                                                   SOL 380
      IF (M) 70,60,70                                                   SOL 390
60    IP=2                                                              SOL 400
70    GO TO (80,90), IP                                                 SOL 410
80    NSP=M                                                             SOL 420
      GO TO 100                                                         SOL 430
90    NSP=N                                                             SOL 440
100   DO 300 JP=1,NSP                                                   SOL 450
      DO 130 I=1,N                                                      SOL 460
      GO TO (110,120), IP                                               SOL 470
110   A(I,N1)=G(I,JP)                                                   SOL 480
      GO TO 130                                                         SOL 490
120   A(I,N1)=H(I,JP)                                                   SOL 500
130   CONTINUE                                                          SOL 510
      DO 140 I=KPT,N1                                                   SOL 520
140   A(1,I)=A(1,I)/A(1,1)                                              SOL 530
      DO 200 I=2,N                                                      SOL 540
      NN=I-1                                                            SOL 550
      DO 200 J=KPT,N1                                                   SOL 560
```

APPENDIX G

```
      NM=J-1                                                            SOL 570
      SUM=0.                                                            SOL 580
      IF (NM-NN) 150,150,160                                            SOL 590
150   KK=NM                                                             SOL 600
      GO TO 170                                                         SOL 610
160   KK=NN                                                             SOL 620
170   DO 180 L=1,KK                                                     SOL 630
180   SUM=SUM+A(L,J)*A(I,L)                                             SOL 640
      A(I,J)=A(I,J)-SUM                                                 SOL 650
      IF (J-I) 200,200,190                                              SOL 660
190   A(I,J)=A(I,J)/A(I,I)                                              SOL 670
200   CONTINUE                                                          SOL 680
      GO TO (210,220), IP                                               SOL 690
210   G(N,JP)=A(N,N1)                                                   SOL 700
      GO TO 230                                                         SOL 710
220   H(N,JP)=A(N,N1)                                                   SOL 720
230   DO 290 I=1,N2                                                     SOL 730
      NI=N-I                                                            SOL 740
      GO TO (240,250), IP                                               SOL 750
240   G(NI,JP)=A(NI,N1)                                                 SOL 760
      GO TO 260                                                         SOL 770
250   H(NI,JP)=A(NI,N1)                                                 SOL 780
260   DO 290 J=1,I                                                      SOL 790
      NJ=N1-J                                                           SOL 800
      GO TO (270,280), IP                                               SOL 810
270   G(NI,JP)=G(NI,JP)-A(NI,NJ)*G(NJ,JP)                               SOL 820
      GO TO 290                                                         SOL 830
280   H(NI,JP)=H(NI,JP)-A(NI,NJ)*H(NJ,JP)                               SOL 840
290   CONTINUE                                                          SOL 850
      KPT=N1                                                            SOL 860
300   CONTINUE                                                          SOL 870
      SUM=1.                                                            SOL 880
      DO 310 I=1,N                                                      SOL 890
310   SUM=SUM*A(I,I)                                                    SOL 900
      GO TO (340,320), NGO                                              SOL 910
320   DO 330 I=1,N                                                      SOL 920
      DO 330 J=1,N                                                      SOL 930
330   A(I,J)=H(I,J)                                                     SOL 940
340   RETURN                                                            SOL 950
      END                                                               SOL 960
```

APPENDIX G

```
      SUBROUTINE XTRA                                                   XTR  10
C                                                                       XTR  20
C     THIS ROUTINE CONTAINS MOST OF THE *WRITE* AND *FORMAT* STATEMENTS XTR  30
C     FOR  SUBRB *INIT*. IT WAS CONSTRUCTED SO THAT *INIT* WOULD COMPILEXTR  40
C                                                                       XTR  50
      COMMON/L1A/RXO(1),RYO,RZO,RXVELO,RYVELO,RZVELO,PSIO,THTAO,PHIO,   XTR  60
     1WXO,WYO,WZO,RCXO,RCYO,RCZO,CXVELO,CYVELO,CZVELO,DUM1(6),RSXO,     XTR  70
     2RSYO,RSZO,SXVELO,SYVELO,SZVELO,ZETAO                              XTR  80
C                                                                       XTR  90
      COMMON/L2/UXX,UYY,UZZ,UCXX,UCYY,UCZZ,USXX,USYY,USZZ,FCJK,FCLM,    XTR 100
     1UXY,UYZ,UXZ,UCXY,UCXZ,UCYZ,PLGNOF,PK,HSX1,HCX1,VISJK,VISLM,IP,    XTR 110
     2IT,JK,LM,JKDAMP,LMDAMP,NSPC,NSPS(48),NCPC                         XTR 120
C                                                                       XTR 130
      COMMON/L3/RX(1),RY,RZ,RXVEL,RYVEL,RZVEL,PSI,THTA,PHI,WX,WY,WZ,RCX,XTR 140
     1RCY,RCZ,RCXVEL,RCYVEL,RCZVEL,PSIC,THTAC,PHIC,WCX,WCY,WCZ,RSX,RSY, XTR 150
     2RSZ,RSXVEL,RSYVEL,RSZVEL,PSIS,THTAS,PHIS,WSX,WSY,WSZ              XTR 160
C                                                                       XTR 170
      COMMON/L5A/DT,TMAX,IPRINT,ISTOP,IRUNNO,ISERNO,JPRINT,NPRINT,NOFOR XTR 180
C                                                                       XTR 190
      COMMON/L5C/ZETA,PLM,SEQM,FPM,G                                    XTR 200
C                                                                       XTR 210
      COMMON/L6B/XL1(48),YL1(48),ZL1(48),XM2(48),YM2(48),ZM2(48),XJ3(6),XTR 220
     1YJ3(6),ZJ3(6),XK1(6),YK1(6),ZK1(6),CXX,CXY,CXZ,CYX,CYY,CYZ,       XTR 230
     2CZX,CZY,CZZ,CCXX,CCXY,CCXZ,CCYX,CCYY,CCYZ,CCZX,CCZY,CCZZ          XTR 240
C                                                                       XTR 250
      COMMON/L9B/SHCJK,SHCJKT,SHCLM,SHCLMT,CTJK,CTLM,QKT                XTR 260
C                                                                       XTR 270
      COMMON/L10/RINGX(7),RHO(7),AEL(6),UNX(6),UNY(6,30),UNZ(6,30),     XTR 280
     1SOILP(3),NTYPE,TC,DCM,CFM,THICK(6),INATT,GE,RNGENG,EX(6,30),      XTR 290
     2EY(6,30),EZ(6,30),NI(7),KA,IABCD1,EFRICT                          XTR 300
C                                                                       XTR 310
      COMMON/L11/AA1(3,6),AA2(3,6),AA3(3,6),CAP(3,6),CCH(3,6),CHS(3,6), XTR 320
     1IACCEL,NOACAP,NOACCH,NOACHS                                       XTR 330
C                                                                       XTR 340
      COMMON/L12/T(1000),SPACE,NN,KA1,MAP,IDUM                          XTR 350
C                                                                       XTR 360
      COMMON/L13/SLGTH(3,6),FC(3,6),COEF(2,48),COEFT(2,48),             XTR 370
     1FFLM(48),FFLMT(48),FFJK(6),FFJKT(6),FFC(48),FFT(48),IRET,NS       XTR 380
C                                                                       XTR 390
      COMMON/L19/     HSY1,HSZ1,ALTX,ALTY,ALTZ,RRX1(6),RRY1(6),RRZ1(6), XTR 400
     1RRX2(6),RRY2(6),RRZ2(6),THRR(6,6),TYM(6,6),CRRX(6),CRRY(6),       XTR 410
     2CRRZ(6),HCY1,HCZ1,NRR,IRR                                         XTR 420
C                                                                       XTR 430
C                                                                       XTR 440
      COMMON/L22/PXVEL,PYVEL,PZVEL,APX1,APY1,APZ1,RPX,RPY,RPZ,FPPX,FPPY,XTR 450
     1FPPZ,TPPX1,TPPY1,TPPZ1,FPX,FPY,FPZ,PHITE,IPARA,NPAR,ICRKT9,PNRG   XTR 460
C                                                                       XTR 470
      COMMON/L24/IDM(1),ICHK1,ICHK2,ICHK3,ICHK4,ICHK5,ICHK6,ICHK7,ICHK8,XTR 480
     1ICHK9,ICHK10,ICHK11,ICHK12,ICHK13,ICHK14,ICHK15,ICHK16,ICHK17,    XTR 490
     2ICHK18,ICHK19,ICHK20,ICHK21,ICHK22,                               XTR 500
     3KS,LS,JJ,NPAS,NRS,NOACAS,NOACCS,NOASS,ISIX,NSSC,NCSC,             XTR 510
     4NOMDS,MOSAV,NTCORS,                                               XTR 520
     5ITEST(23),MM,JTEST                                                XTR 530
C                                                                       XTR 540
      COMMON/L25/NOMODE,OMEGA(5),SPHI(540,5),APHI(144,5),WNX(5),WNY(5), XTR 550
     1WNZ(5),PX(5),PY(5),PZ(5),GF(5),GM(5),COORD(74,2),FPPHI(222,5),    XTR 560
```

APPENDIX G

```
     2NTCOR,IINP,NORUN,MORDER,NATT(102),NDIAM(3,5),ASPHI(18,5),
     3CGPHI(3,5),WMX(5,5),WMY(5,5),WMZ(5,5)     ,AMASS(102)
C
      COMMON/MO/FORJK(6),SLJK(6),CHJKT(6),CHJK(6),SRJKT(6),SRJK(6),
     1SDJK(6),VELJK(6),FORLM(48),SLLM(48),CHLMT(48),CHLM(48),SRLMT(48),
     2SRLM(48),SDLM(48),VELLM(48)
C
      DIMENSION NUMBER(120)
C
      DO 10 I=1,120
10    NUMBER(I)=I
C
      WRITE (6,160)
C
      WRITE (6,170) ISERNO
C
      WRITE (6,180)
      WRITE (6,190) RXVELO,RYVELO,RZVELO,WXO,WYO,WZO
      WRITE (6,200) ZETAO,PSIO,THTAO,PHIO,G,GE
      WRITE (6,210) HSX1,HSY1,HSZ1,HCX1,HCY1,HCZ1
C
      WRITE (6,220)
      WRITE (6,230) PLM,SEQM,FPM
      WRITE (6,240) UXX,UYY,UZZ,UXY,UXZ,UYZ
      WRITE (6,250) UCXX,UCYY,UCZZ,UCXY,UCXZ,UCYZ
      WRITE (6,260) USXX,USYY,USZZ
C
      WRITE (6,270)
      WRITE (6,280) DT,TMAX,NPRINT,NOFOR
      WRITE (6,290) NSPC,NCPC,NORUN,IINP
      IF (NSPC.LT.1) GO TO 20
      WRITE (6,300) (NSPS(I),I=1,NSPC)
      GO TO 30
20    WRITE (6,310)
30    CONTINUE
      WRITE (6,320) KA1
C
      WRITE (6,330)
      WRITE (6,340) KA
      KAP1=KA+1
      WRITE (6,350) (NUMBER(I),RINGX(I),NUMBER(I),RHO(I),NUMBER(I),NI(I)
     1,I=1,KAP1)
C
      WRITE (6,360)
      IF (NTYPE.EQ.1) WRITE (6,370)
      IF (NTYPE.NE.1) WRITE (6,380)
      WRITE (6,390) (NUMBER(I),SOILP(I),I=1,3)
C
      WRITE (6,400)
      WRITE (6,410) ((NUMBER(I),NUMBER(J),SLGTH(I,J),NUMBER(I),NUMBER(J)
     1,FC(I,J),I=1,3),J=1,6)
C
      WRITE (6,420)
      WRITE (6,430) LM,LMDAMP,VISLM,CTLM,SHCLM,SHCLMT
      WRITE (6,440) IRET
      WRITE (6,450) (NUMBER(I),XL1(I),NUMBER(I),YL1(I),NUMBER(I),ZL1(I),
```

APPENDIX G

```
     1NUMBER(I),XM2(I),NUMBER(I),YM2(I),NUMBER(I),ZM2(I),I=1,LM)          XTR1130
      WRITE (6,460) (NUMBER(I),COEF(1,I),NUMBER(I),COEFT(1,I),NUMBER(I),XTR1140
     1FFLM(I),NUMBER(I),FFLMT(I),I=1,LM)                                  XTR1150
C                                                                         XTR1160
      WRITE (6,470)                                                       XTR1170
      WRITE (6,480) JK,JKDAMP,VISSK,CTJK,SHCJK,SHCJKT                     XTR1180
      WRITE (6,490) (NUMBER(I),XK1(I),NUMBER(I),YK1(I),NUMBER(I),ZK1(I),XTR1190
     1NUMBER(I),XJ3(I),NUMBER(I),YJ3(I),NUMBER(I),ZJ3(I),I=1,JK)          XTR1200
      WRITE (6,500) (NUMBER(I),COEF(2,I),NUMBER(I),COEFT(2,I),NUMBER(I),XTR1210
     1FFJK(I),NUMBER(I),FFJKT(I),I=1,JK)                                  XTR1220
C                                                                         XTR1230
      WRITE (6,510)                                                       XTR1240
      WRITE (6,520) NPAR                                                  XTR1250
      IF (NPAR.GT.0) GO TO 40                                             XTR1260
      WRITE (6,530)                                                       XTR1270
      GO TO 50                                                            XTR1280
40    CONTINUE                                                            XTR1290
      WRITE (6,540) PLGNOF,PK,FPX,FPY,FPZ,PHITE                           XTR1300
      WRITE (6,550) PXVEL,PYVEL,PZVEL,APX1,APY1,APZ1                      XTR1310
C                                                                         XTR1320
50    CONTINUE                                                            XTR1330
      WRITE (6,560)                                                       XTR1340
      WRITE (6,570) NRR                                                   XTR1350
      IF (NRR.GT.0) GO TO 60                                              XTR1360
      WRITE (6,580)                                                       XTR1370
      GO TO 70                                                            XTR1380
60    CONTINUE                                                            XTR1390
      WRITE (6,590) (NUMBER(I),RRX1(I),NUMBER(I),RRY1(I),NUMBER(I),RRZ1(XTR1400
     1I),NUMBER(I),RRX2(I),NUMBER(I),RRY2(I),NUMBER(I),RRZ2(I),I=1,NRR) XTR1410
      WRITE (6,600) ((NUMBER(I),NUMBER(J),TYM(I,J),I=1,NRR),J=1,6)        XTR1420
      WRITE (6,610) ((NUMBER(I),NUMBER(J),THRR(I,J),I=1,NRR),J=1,6)       XTR1430
C                                                                         XTR1440
70    CONTINUE                                                            XTR1450
      WRITE (6,620)                                                       XTR1460
      WRITE (6,630) IACCEL,NOACAP,NOACCH,NOACHS                           XTR1470
      IF (IACCEL.NE.0) GO TO 80                                           XTR1480
      WRITE (6,640)                                                       XTR1490
80    IF (NOACAP.EQ.0) GO TO 90                                           XTR1500
      WRITE (6,650) ((NUMBER(I),NUMBER(J),CAP(I,J),I=1,3),J=1,NOACAP)     XTR1510
90    IF (NOACCH.EQ.0) GO TO 100                                          XTR1520
      WRITE (6,660) ((NUMBER(I),NUMBER(J),CCH(I,J),I=1,3),J=1,NOACCH)     XTR1530
100   IF (NOACHS.EQ.0) GO TO 110                                          XTR1540
      WRITE (6,670) ((NUMBER(I),NUMBER(J),CHS(I,J),I=1,3),J=1,NOACHS)     XTR1550
C                                                                         XTR1560
110   CONTINUE                                                            XTR1570
      WRITE (6,680)                                                       XTR1580
      IF (NOMDS.NE.0) GO TO 120                                           XTR1590
      WRITE (6,690) NOMDS                                                 XTR1600
      GO TO 140                                                           XTR1610
120   WRITE (6,700) NOMDS,NTCOR,MORDER                                    XTR1620
      IF (MORDER.NE.0) WRITE (6,710) (NUMBER(I),NATT(I),I=1,MORDER)       XTR1630
      WRITE (6,720) (NUMBER(I),COORD(I,1),NUMBER(I),COORD(I,2),I=1,NTCORXTR1640
     1)                                                                   XTR1650
      N3PT=3*NTCOR                                                        XTR1660
      DO 130 I=1,N3PT                                                     XTR1670
130   WRITE (6,730) I,(J,FPPHI(I,J),J=1,5)                                XTR1680
```

```
      WRITE (6,740) (I,OMEGA(I),I,GM(I),I=1,NOMODE)                     XTR1690
      WRITE (6,750) (I,WNX(I),I,WNY(I),I,WNZ(I),I,PX(I),I,PY(I),I,PZ(I),XTR1700
     1I=1,NOMODE)                                                       XTR1710
      WRITE (6,760) (I,NDIAM(1,I),I,NDIAM(2,I),I,NDIAM(3,I),I=1,NOMODE) XTR1720
      IF (MORDER.NE.0) WRITE (6,770) (NUMBER(I),AMASS(I),I=1,MORDER)    XTR1730
140   CONTINUE                                                          XTR1740
      WRITE (6,780)                                                     XTR1750
      IF (INATT.EQ.0) WRITE (6,790) INATT,TC,DCM,CFM                    XTR1760
      IF (INATT.NE.0) WRITE (6,800) INATT,TC,DCM,CFM                    XTR1770
      WRITE (6,810) (NUMBER(I),THICK(I),I=1,6)                          XTR1780
      RETURN                                                            XTR1790
C                                                                       XTR1800
      ENTRY XTRCAL                                                      XTR1810
      WRITE (6,820)                                                     XTR1820
      WRITE (6,830) RX,RY,RZ                                            XTR1830
C                                                                       XTR1840
      WRITE (6,840) RCX,RCY,RCZ                                         XTR1850
C                                                                       XTR1860
      WRITE (6,850) RSX,RSY,RSZ                                         XTR1870
C                                                                       XTR1880
      WRITE (6,860) RXVEL,RYVEL,RZVEL                                   XTR1890
C                                                                       XTR1900
      WRITE (6,870) RCXVEL,RCYVEL,RCZVEL                                XTR1910
C                                                                       XTR1920
      WRITE (6,880) RSXVEL,RSYVEL,RSZVEL                                XTR1930
C                                                                       XTR1940
      IF (NPAR.EQ.0) GO TO 150                                          XTR1950
      WRITE (6,890) RPX,RPY,RPZ                                         XTR1960
      WRITE (IP,900) FP,PL                                              XTR1970
C                                                                       XTR1980
150   CONTINUE                                                          XTR1990
C                                                                       XTR2000
      WRITE (6,910)                                                     XTR2010
C                                                                       XTR2020
      WRITE (6,920) (SLJK(I),I=1,JK)                                    XTR2030
C                                                                       XTR2040
      WRITE (6,930)                                                     XTR2050
C                                                                       XTR2060
      WRITE (6,940) (SLLM(I),I=1,LM)                                    XTR2070
C                                                                       XTR2080
      WRITE (6,950)                                                     XTR2090
C                                                                       XTR2100
      RETURN                                                            XTR2110
C                                                                       XTR2120
160   FORMAT (///128X4HCARD/126X6HNUMBER/)                              XTR2130
170   FORMAT (8H ISERNO=I10,110X4H$  1)                                 XTR2140
180   FORMAT (//26H LANDER INITIAL CONDITIONS/)                         XTR2150
190   FORMAT (8H RXVELO=E10.3,8H RYVELO=E10.3,8H RZVELO=E10.3,8H WXO   =XTR2160
     1E10.3,8H WYO   =E10.3,8H WZO   =E10.3,20X,4H$  2)                 XTR2170
200   FORMAT (8H ZETAO =E10.3,8H PSI   =E10.3,8H THTA  =E10.3,8H PHI   =XTR2180
     1E10.3,8H G     =E10.3,8H GE    =E10.3,20X,4H$  3)                 XTR2190
210   FORMAT (8H HSX1  =E10.3,8H HSY1  =E10.3,8H HSZ1  =E10.3,8H HCX1  =XTR2200
     1E10.3,8H HCY1  =E10.3,8H HCZ1  =E10.3,20X,4H$  4)                 XTR2210
220   FORMAT (//16H MASS PROPERTIES/)                                   XTR2220
230   FORMAT (8H PLM   =E10.3,8H SEQM  =E10.3,8H FPM   =E10.3,74X,4H$  5XTR2230
     1)                                                                 XTR2240
```

```
240   FORMAT (8H UXX    =E10.3,8H UYY    =E10.3,8H UZZ    =E10.3,8H UXY    =XTR2250
     1E10.3,8H UXZ    =E10.3,8H UYZ    =E10.3,20X,4H$  6)                   XTR2260
250   FORMAT (8H UCXX   =E10.3,8H UCYY   =E10.3,8H UCZZ   =E10.3,8H UCXY   =XTR2270
     1E10.3,8H UCXZ   =E10.3,8H UCYZ   =E10.3,20X,4H$  7)                   XTR2280
260   FORMAT (8H USXX   =E10.3,8H USYY   =E10.3,8H USZZ   =E10.3,74X,4H$  8XTR2290
     1)                                                                     XTR2300
270   FORMAT (//26H PROGRAM LOGIC INFORMATION/)                              XTR2310
280   FORMAT (8H DT     =E10.3,8H TMAX   =E10.3,8H NPRINT=I10,8H NOFOR =I1XTR2320
     10,56X,4H$  9)                                                         XTR2330
290   FORMAT (8H NSPC   =I10,8H NCPC   =I10,8H NORUN =I10,8H IINP   =I10,56XTR2340
     1X,4H$ 10)                                                             XTR2350
300   FORMAT (56H ATTENUATOR STRUT TIME HISTORIES TO BE PRINTED - STRUT=XTR2360
     1 72X4H$110,/(58X16I3))                                                XTR2370
310   FORMAT (/52H NO ATTENUATOR STRUT TIME HISTORIES WILL BE PRINTED./)XTR2380
320   FORMAT (8H KA1    =I10,110X,4H$ 11)                                    XTR2390
330   FORMAT (//17H FOOTPAD GEOMETRY/)                                       XTR2400
340   FORMAT (8H KA     =I10,110X,4H$112)                                    XTR2410
350   FORMAT (7H RINGX(I2,2H)=E10.3,5H RHO(I2,2H)=E10.3,4H NI(I2,2H)=I10XTR2420
     1,70X,4H$112)                                                          XTR2430
360   FORMAT (//16H SOIL PROPERTIES/)                                        XTR2440
370   FORMAT (38H NTYPE = 1  (SECONDARY SOIL MECHANICS),90X,4H$ 13)          XTR2450
380   FORMAT (36H NTYPE = 0  (PRIMARY SOIL MECHANICS),92X,4H$ 13)            XTR2460
390   FORMAT (3(7H SOILP(I1,2H)=E10.3),68X,4H$ 14)                           XTR2470
400   FORMAT (//24H LOAD-STROKE INFORMATION/)                                XTR2480
410   FORMAT (3(7H SLGTH(I1,1H,I1,2H)=E10.3,4H FC(I1,1H,I1,2H)=E10.3),5XXTR2490
     1,4H$114)                                                              XTR2500
420   FORMAT (//29H ATTENUATOR STRUT INFORMATION/)                           XTR2510
430   FORMAT (8H LM     =I10,8H LMDAMP=I10,8H VISLM =E10.3,8H CTLM   =E10.XTR2520
     13,8H SHCLM =E10.3,8H SHCLMT=E10.3,20X,4H$ 15)                         XTR2530
440   FORMAT (8H IRET   =I10,110X4H$ 16)                                     XTR2540
450   FORMAT (5H XL1(I2,2H)=E10.3,5H YL1(I2,2H)=E10.3,5H ZL1(I2,2H)=E10.XTR2550
     13,5H XM2(I2,2H)=E10.3,5H YM2(I2,2H)=E10.3,5H ZM2(I2,2H)=E10.3,14X,XTR2560
     24H$116)                                                               XTR2570
460   FORMAT (8H COEF(1,I2,2H)=E10.3,9H COEFT(1,I2,2H)=E10.3,6H FFLM(I2,XTR2580
     12H)=E10.3,7H FFLMT(I2,2H)=E10.3,42X,4H$216)                           XTR2590
470   FORMAT (//28H EQUIPMENT STRUT INFORMATION/)                            XTR2600
480   FORMAT (8H JK     =I10,8H JKDAMP=I10,8H VISJK =E10.3,8H CTJK   =E10.XTR2610
     13,8H SHCJK =E10.3,8H SHCJKT=E10.3,20X,4H$ 17)                         XTR2620
490   FORMAT (5H XK1(I1,2H)=E10.3,5H YK1(I1,2H)=E10.3,5H ZK1(I1,2H)=E10.XTR2630
     13,5H XJ3(I1,2H)=E10.3,5H YJ3(I1,2H)=E10.3,5H ZJ3(I1,2H)=E10.3,20X,XTR2640
     24H$117)                                                               XTR2650
500   FORMAT (8H COEF(2,I1,2H)=E10.3,9H COEFT(2,I1,2H)=E10.3,6H FFJK(I1,XTR2660
     12H)=E10.3,7H FFJKT(I1,2H)=E10.3,46X,4H$217)                           XTR2670
510   FORMAT (//15H PARACHUTE DATA/)                                         XTR2680
520   FORMAT (8H NPAR   =I10,110X4H$ 18)                                     XTR2690
530   FORMAT (14H NO PARACHUTE )                                             XTR2700
540   FORMAT (8H PLGNOF=E10.3,8H PK     =E10.3,8H FPX    =E10.3,8H FPY    =XTR2710
     1E10.3,8H FPZ    =E10.3,8H PHITE =E10.3,20X,4H$118)                    XTR2720
550   FORMAT (8H PXVEL =E10.3,8H PYVEL =E10.3,8H PZVEL =E10.3,8H APX1   =XTR2730
     1E10.3,8H APY1   =E10.3,8H APZ1   =E10.3,20X,4H$218)                   XTR2740
560   FORMAT (//17H RETROROCKET DATA/)                                       XTR2750
570   FORMAT (8H NRR    =I10,110X4H$ 19)                                     XTR2760
580   FORMAT (16H NO RETROROCKETS)                                           XTR2770
590   FORMAT (6H RRX1(I1,2H)=E10.3,6H RRY1(I1,2H)=E10.3,6H RRZ1(I1,2H)=EXTR2780
     110.3,6H RRX2(I1,2H)=E10.3,6H RRY2(I1,2H)=E10.3,6H RRZ2(I1,2H)=E10.XTR2790
     23,14X,4H$119)                                                         XTR2800
```

```
600   FORMAT (6(5H TYM(I1,1H,I1,2H)=E10.3),8X,4H$219)                    XTR2810
610   FORMAT (6(6H THRR(I1,1H,I1,2H)=E10.3),2X,4H$319)                   XTR2820
620   FORMAT (//24H ACCELEROMETER LOCATIONS/)                            XTR2830
630   FORMAT (8H IACCEL=I10,8H NOACAP=I10,8H NOACCH=I10,8H NOACHS=I10,56XTR2840
     1X,4H$ 20)                                                          XTR2850
640   FORMAT (18H NO ACCELEROMETERS)                                     XTR2860
650   FORMAT (3(5H CAP(I1,1H,I1,2H)=E10.3),68X,4H$120)                   XTR2870
660   FORMAT (3(5H CCH(I1,1H,I1,2H)=E10.3),68X,4H$220)                   XTR2880
670   FORMAT (3(5H CHS(I1,1H,I1,2H)=E10.3),68X,4H$320)                   XTR2890
680   FORMAT (//21H ELASTIC FOOTPAD DATA/)                               XTR2900
690   FORMAT (8H NOMODE=,I1,119X,4H$ 21/22H RIGID FOOTPAD ASSUMED)       XTR2910
700   FORMAT (8H NOMODE=I1,8H NTCOR =,I2,8H MORDER=,I3,96X,4H$ 21)       XTR2920
710   FORMAT (6(6H NATT(,I3,2H)=,I3),44X,4H$121)                         XTR2930
720   FORMAT (7H COORD(,I2,4H,1)=,E10.3,7H COORD(,I2,4H,2)=,E10.3,82X,4HXTR2940
     1$221)                                                              XTR2950
730   FORMAT (3H I=,I3,5(9H FPPHI(I,,I1,2H)=,E10.3),12X,4H$321)          XTR2960
740   FORMAT (7H OMEGA(,I1,2H)=,E10.3,4H GM(,I1,2H)=,E10.3,91X,4H$421)   XTR2970
750   FORMAT (5H WNX(,I1,2H)=,E10.3,5H WNY(,I1,2H)=,E10.3,5H WNZ(,I1,2H)XTR2980
     1=,E10.3,4H PX(,I1,2H)=,E10.3,4H PY(,I1,2H)=,E10.3,4H PZ(,I1,2H)=,EXTR2990
     210.3,23X,4H$521)                                                   XTR3000
760   FORMAT (9H NDIAM(1,,I1,2H)=,I5,9H NDIAM(2,,I1,2H)=,I5,9H NDIAM(3,,XTR3010
     1I1,2H)=,I5,77X,4H$621)                                             XTR3020
770   FORMAT (6(7H AMASS(,I3,2H)=,E9.2),2X,4H$721)                       XTR3030
780   FORMAT (//33H FOOTPAD ATTENUATION SYSTEM DATA /)                   XTR3040
790   FORMAT (10H INATT   =,I10,10H TC      =,E10.3,10H DCM     =,E10.3,XTR3050
     110H CFM     =,E10.3,32H (NO FOOTPAD ATTENUATION SYSTEM),16X,4H$ 22XTR3060
     2)                                                                  XTR3070
800   FORMAT (10H INATT   =,I10,10H TC      =,E10.3,10H DCM     =,E10.3,XTR3080
     110H CFM     =,E10.3,48X,4H$ 22)                                    XTR3090
810   FORMAT (6(7H THICK(,I1,2H)=,E10.3),8X,4H$ 23)                      XTR3100
820   FORMAT (1H1,54X,23HLANDER INITIAL POSITION//)                      XTR3110
830   FORMAT (60H0INITIAL PAYLOAD C.G. LOCATION                          XTR3120
     1  X =,E10.3,10H     Y   =,E10.3,10H    Z    =,E10.3)               XTR3130
840   FORMAT (60H0INITIAL EQUIPMENT C.G. LOCATION                        XTR3140
     1  X =,E10.3,10H     Y   =,E10.3,10H    Z    =,E10.3)               XTR3150
850   FORMAT (60H0INITIAL FOOTPAD C.G. LOCATION                          XTR3160
     1  X =,E10.3,10H     Y   =,E10.3,10H    Z    =,E10.3)               XTR3170
860   FORMAT (60H0INITIAL PAYLOAD VELOCITY                               XTR3180
     1  X =,E10.3,10H     Y   =,E10.3,10H    Z    =,E10.3)               XTR3190
870   FORMAT (60H0INITIAL EQUIPMENT VELOCITY                             XTR3200
     1  X =,E10.3,10H     Y   =,E10.3,10H    Z    =,E10.3)               XTR3210
880   FORMAT (60H0INITIAL FOOTPAD VELOCITY                               XTR3220
     1  X =,E10.3,10H     Y   =,E10.3,10H    Z    =,E10.3)               XTR3230
890   FORMAT (60H0INITIAL PARACHUTE C.G. LOCATION                        XTR3240
     1  X =,E10.3,10H     Y   =,E10.3,10H    Z    =,E10.3)               XTR3250
900   FORMAT (60H INITIAL PARACHUTE FORCE AND CORD LENGTH                XTR3260
     1  F =,F10.5,20X,10H LENGTH  =,F10.5)                               XTR3270
910   FORMAT (86H0EQUIP. - PAYLOAD STRUT NO          1          2        XTR3280
     13          4          5          6)                               XTR3290
920   FORMAT (30H0          STRUT LENGTH         ,6E10.3)               XTR3300
930   FORMAT (105H0FT.PAD - PAYLOAD STRUT NO.        1          2        XTR3310
     13          4          5          6          7          8)         XTR3320
940   FORMAT (30H0          STRUT LENGTH         ,8E10.3)               XTR3330
950   FORMAT (1H1)                                                       XTR3340
      END                                                                XTR3350-
```

APPENDIX G

```
      OVERLAY ( SOFTLP, 2, 0 )
      PROGRAM INTLOP                                                    INL  10
C                                                                       INL  20
      COMMON / LIST8 / D11,DUMMY(26)                                    INL  30
C                                                                       INL  40
      COMMON/L5A/DT,TMAX,IPRINT,ISTOP,IRUNNO,ISERNO,JPRINT,NPRINT,NOFOR INL  50
C                                                                       INL  60
      COMMON/L12/T(1000),SPACE,NN,KA1,MAP,IDUM                          INL  70
C                                                                       INL  80
      MAP=1                                                             INL  90
C                                                                       INL 100
10    CALL MASTER                                                       INL 110
C                                                                       INL 120
      IF (IPRINT.GT.0) GO TO 30                                         INL 130
C                                                                       INL 140
      IPRINT=0                                                          INL 150
C                                                                       INL 160
      TIME=T(1+NN)                                                      INL 170
      IF (D11.LE..1) TMAX=TIME                                          INL 180
      IF (TIME.GE.TMAX) GO TO 20                                        INL 190
      IF (JPRINT.NE.NPRINT) GO TO 10                                    INL 200
      JPRINT=0                                                          INL 210
      CALL OUTPUT                                                       INL 220
      GO TO 10                                                          INL 230
C                                                                       INL 240
20    IPRINT=1                                                          INL 250
      ISTOP=1                                                           INL 260
30    IRUNNO=IRUNNO+1                                                   INL 270
      CALL OUTPUT                                                       INL 280
      END FILE 3                                                        INL 290
      RETURN                                                            INL 300
      END                                                               INL 310-
```

APPENDIX G

```
      SUBROUTINE MASTER                                                 MAS  10
C                                                                       MAS  20
C     THIS SUBROUTINE INTEGRATES THE EQUATIONS OF MOTION                MAS  30
C                                                                       MAS  40
      COMMON/L9A/IREAL                                                  MAS  50
C                                                                       MAS  60
      COMMON/L12/T(1000),SPACE,NN,KA1,MAP,K                             MAS  70
C                                                                       MAS  80
       DIMENSION BET(4),SET(4)                                          MAS  90
      DATA SET(1)/1.0/,SET(2)/2.0/,SET(3)/2.0/,SET(4)/1.0/              MAS 100
      DATA BET(1)/0.5/,BET(2)/0.5/,BET(3)/1.0/,BET(4)/0.0/              MAS 110
      IF (MAP.GT.1) GO TO 20                                            MAS 120
      N1=NN+1                                                           MAS 130
      N2XN1=N1+N1                                                       MAS 140
      N3XN1=N2XN1+N1                                                    MAS 150
      N4XN1=N3XN1+N1                                                    MAS 160
      N5XN1=N4XN1+N1                                                    MAS 170
      N6XN1=N5XN1+N1                                                    MAS 180
      N7XN1=N3XN1+N4XN1                                                 MAS 190
      N9XN1=N7XN1+N2XN1                                                 MAS 200
      N10XN1=N5XN1+N5XN1                                                MAS 210
      N12XN1=N10XN1+N2XN1                                               MAS 220
      DO 10 I=1,N1                                                      MAS 230
      KIX=I+N2XN1                                                       MAS 240
10    T(KIX)=0.0                                                        MAS 250
      IREAL=1                                                           MAS 260
      K=0                                                               MAS 270
      CALL ACCEL                                                        MAS 280
      LL=1                                                              MAS 290
      KR=1                                                              MAS 300
      MAP=2                                                             MAS 310
      RETURN                                                            MAS 320
20    DO 30 I=1,KR                                                      MAS 330
      LRR=N3XN1*(KR-I+1)                                                MAS 340
      DO 30 J=1,N3XN1                                                   MAS 350
      LR=LRR+J                                                          MAS 360
      LRJ=LR-N3XN1                                                      MAS 370
30    T(LR)=T(LRJ)                                                      MAS 380
      MAP=2                                                             MAS 390
      IF (KR.GE.4) GO TO 90                                             MAS 400
      DO 40 I=1,NN                                                      MAS 410
      KIX=I+N2XN1                                                       MAS 420
40    T(KIX)=0.0                                                        MAS 430
      K=1                                                               MAS 440
50    DO 60 I=1,NN                                                      MAS 450
      KIX=I+N1                                                          MAS 460
      DELYI=SPACE*T(KIX)                                                MAS 470
      KIX=I+N2XN1                                                       MAS 480
      T(KIX)=T(KIX)+DELYI*SET(K)                                        MAS 490
      KIX1=I+N3XN1                                                      MAS 500
60    T(I)=T(KIX1)+BET(K)*DELYI                                         MAS 510
      IF (K.GE.4) GO TO 70                                              MAS 520
      T(N1)=BET(K)*SPACE+T(N4XN1)                                       MAS 530
      IREAL=0                                                           MAS 540
      CALL ACCEL                                                        MAS 550
      K=K+1                                                             MAS 560
```

```
      GO TO 50                                                          MAS 570
70    DO 80 I=1,NN                                                      MAS 580
      KIX=I+N2XN1                                                       MAS 590
      KIX1=I+N3XN1                                                      MAS 600
      KIX2=I+N5XN1                                                      MAS 610
      T(I)=T(KIX1)+T(KIX)/6.                                            MAS 620
      T(KIX)=T(KIX2)                                                    MAS 630
80    CONTINUE                                                          MAS 640
      T(N1)=T(N4XN1)+SPACE                                              MAS 650
      T(N3XN1)=T(N6XN1)                                                 MAS 660
      IREAL=1                                                           MAS 670
      CALL ACCEL                                                        MAS 680
      IF (KA1.LT.0) RETURN                                              MAS 690
      KR=KR+1                                                           MAS 700
      RETURN                                                            MAS 710
90    DO 100 I=1,NN                                                     MAS 720
      KIX=I+N4XN1                                                       MAS 730
      KIX1=I+N7XN1                                                      MAS 740
      KIX2=I+N10XN1                                                     MAS 750
      KIX3=I+N10XN1+N3XN1                                               MAS 760
      DEL=SPACE*(55.*T(KIX)-59.*T(KIX1)+37.*T(KIX2)-9.*T(KIX3))/24.0    MAS 770
      KIX4=I+N3XN1                                                      MAS 780
100   T(I)=T(KIX4)+DEL                                                  MAS 790
      T(N1)=T(N4XN1)+SPACE                                              MAS 800
      T(N3XN1)=T(N6XN1)                                                 MAS 810
      IREAL=0                                                           MAS 820
      CALL ACCEL                                                        MAS 830
      DO 110 I=1,NN                                                     MAS 840
      KIX=I+N1                                                          MAS 850
      KIX1=I+N4XN1                                                      MAS 860
      KIX2=I+N7XN1                                                      MAS 870
      KIX3=I+N10XN1                                                     MAS 880
      KIX4=I+N3XN1                                                      MAS 890
      KIX5=I+N5XN1                                                      MAS 900
      KIX6=I+N2XN1                                                      MAS 910
      DEL=SPACE*(9.*T(KIX)+19.*T(KIX1)-5.*T(KIX2)+T(KIX3))/24.0         MAS 920
      YI=T(KIX4)+DEL                                                    MAS 930
      T(I)=YI+19.*(T(I)-YI)/270.                                        MAS 940
      T(KIX6)=T(KIX5)                                                   MAS 950
110   CONTINUE                                                          MAS 960
      IREAL=1                                                           MAS 970
      CALL ACCEL                                                        MAS 980
      LL=2                                                              MAS 990
      KR=4                                                              MAS1000
      RETURN                                                            MAS1010
      END                                                               MAS1020-
```

APPENDIX G

```
      SUBROUTINE GEOM                                                   GEO  10
C                                                                       GEO  20
C     CALCULATE THE DIRECTION COSINES  RELATING THE LANDER COORD. SYSTEMGEO  30
C     TO THE FIXED COORD. SYSTEM                                        GEO  40
C                                                                       GEO  50
      COMMON/L12/QRX(1),QRY,QRZ,QVX,QVY,QVZ,QWX,QWY,QWZ,                GEO  60
     1QRCX,QRCY,QRCZ,QVCX,QVCY,QVCZ,QWCX,QWCY,QWCZ,                     GEO  70
     2QRSX,QRSY,QRSZ,QVSX,QVSY,QVSZ,QWSX,QWSY,QWSZ,                     GEO  80
     3QPSI,QTHTA,QPHI,QPSIC,QTHTAC,QPHIC,QPSIS,QTHTAS,QPHIS,DUM55(964), GEO  90
     4DT,NN,KA1,MAP,IDUM                                                GEO 100
C                                                                       GEO 110
      COMMON/LIST8/D11,D12,D13,D21,D22,D23,D31,D32,D33,DS11,DS12,DS13,  GEO 120
     1DS21,DS22,DS23,DS31,DS32,DS33,DC11,DC12,DC13,DC21,DC22,DC23,      GEO 130
     2DC31,DC32,DC33                                                    GEO 140
C                                                                       GEO 150
C     PAYLOAD                                                           GEO 160
      COSP=COS(QPSI)                                                    GEO 170
      SINP=SIN(QPSI)                                                    GEO 180
      COSPH=COS(QPHI)                                                   GEO 190
      SINPH=SIN(QPHI)                                                   GEO 200
      COST=COS(QTHTA)                                                   GEO 210
      SINT=SIN(QTHTA)                                                   GEO 220
C                                                                       GEO 230
      D11=COSP*COST                                                     GEO 240
      D12=COSP*SINT*SINPH-SINP*COSPH                                    GEO 250
      D13=SINP*SINPH+COSP*SINT*COSPH                                    GEO 260
      D21=SINP*COST                                                     GEO 270
      D22=COSP*COSPH+SINP*SINT*SINPH                                    GEO 280
      D23=SINP*SINT*COSPH-COSP*SINPH                                    GEO 290
      D31=-SINT                                                         GEO 300
      D32=COST*SINPH                                                    GEO 310
      D33=COST*COSPH                                                    GEO 320
C                                                                       GEO 330
C     FOOTPAD                                                           GEO 340
C                                                                       GEO 350
      COSPS=COS(QPSIS)                                                  GEO 360
      SINPS=SIN(QPSIS)                                                  GEO 370
      COSTS=COS(QTHTAS)                                                 GEO 380
      SINTS=SIN(QTHTAS)                                                 GEO 390
      COSPHS=COS(QPHIS)                                                 GEO 400
      SINPHS=SIN(QPHIS)                                                 GEO 410
C                                                                       GEO 420
      DS11=COSPS*COSTS                                                  GEO 430
      DS12=COSPS*SINTS*SINPHS-SINPS*COSPHS                              GEO 440
      DS13=SINPS*SINPHS+COSPS*SINTS*COSPHS                              GEO 450
      DS21=SINPS*COSTS                                                  GEO 460
      DS22=COSPS*COSPHS+SINPS*SINTS*SINPHS                              GEO 470
      DS23=SINPS*SINTS*COSPHS-COSPS*SINPHS                              GEO 480
      DS31=-SINTS                                                       GEO 490
      DS32=COSTS*SINPHS                                                 GEO 500
      DS33=COSTS*COSPHS                                                 GEO 510
C                                                                       GEO 520
C     SECONDARY EQUIPMENT ITEM                                          GEO 530
      COSPC=COS(QPSIC)                                                  GEO 540
      SINPC=SIN(QPSIC)                                                  GEO 550
      COSTC=COS(QTHTAC)                                                 GEO 560
```

```
      SINTC=SIN(QTHTAC)                                                 GEO 570
      COSPHC=COS(QPHIC)                                                 GEO 580
      SINPHC=SIN(QPHIC)                                                 GEO 590
C                                                                       GEO 600
      DC11=COSPC*COSTC                                                  GEO 610
      DC12=COSPC*SINTC*SINPHC-SINPC*COSPHC                              GEO 620
      DC13=SINPC*SINPHC+COSPC*SINTC*COSPHC                              GEO 630
      DC21=SINPC*COSTC                                                  GEO 640
      DC22=COSPC*COSPHC+SINPC*SINTC*SINPHC                              GEO 650
      DC23=SINPC*SINTC*COSPHC-COSPC*SINPHC                              GEO 660
      DC31=-SINTC                                                       GEO 670
      DC32=COSTC*SINPHC                                                 GEO 680
      DC33=COSTC*COSPHC                                                 GEO 690
C                                                                       GEO 700
C                                                                       GEO 710
      RETURN                                                            GEO 720
      END                                                               GEO 730-
```

APPENDIX G

```
      SUBROUTINE ACCEL                                                  ACC  10
C                                                                       ACC  20
C     THIS SUBROUTINE DIRECTS THE DETERMINATION OF SYSTEM ACCELERATIONS ACC  30
C     FOR ANY GIVEN SET OF COORDINATE DISPLACEMENTS AND VELOCITIES-     ACC  40
C                                                                       ACC  50
      DIMENSION DUM5(46), QQ(5), QQD(5), QQDD(5)                        ACC  60
C                                                                       ACC  70
      COMMON/L2/UXX,UYY,UZZ,UCXX,UCYY,UCZZ,USXX,USYY,USZZ,FCJK,FCLM,    ACC  80
     1UXY,UYZ,UXZ,UCXY,UCXZ,UCYZ,PLGNUF,PK,HSX1,HCX1,VISJK,VISLM,IP,    ACC  90
     2IT,JK,LM,JKDAMP,LMDAMP,NSPC,NSPS(48),NCPC                         ACC 100
C                                                                       ACC 110
      COMMON/L3B/AX,AY,AZ,WDX,WDY,WDZ,ACX,ACY,ACZ,WDCX,WDCY,WDCZ,       ACC 120
     1ASX,ASY,ASZ,WDSX,WDSY,WDSZ                                        ACC 130
C                                                                       ACC 140
      COMMON/L5A/DT,TMAX,IPRINT,ISTOP,IRUNNO,ISERNO,JPRINT,NPRINT,NOFOR ACC 150
C                                                                       ACC 160
      COMMON/L5B/OLCMAX(6),OLCMIN(6),OLSMAX(48),OLSMIN(48),JC,JS,OLCB(6)ACC 170
     1,OLCL(6),OLSB(48),OLSL(48),OMACX(7),OMACY(7),OMACZ(7),OMAX(7),    ACC 180
     2OMAY(7),OMAZ(7),OMASX(7),OMASY(7),OMASZ(7),ENGKE,OECS,ENGPE,OESS, ACC 190
     3OFFACT,ENGREF,ENGTOT,AX1,AY1,AZ1,ACX3,ACY3,ACZ3,                  ACC 200
     4ASX2,ASY2,ASZ2,L1,ICRKT2                                          ACC 210
C                                                                       ACC 220
      COMMON/L5C/ZETA,PLM,SEQM,FPM,G                                    ACC 230
C                                                                       ACC 240
      COMMON/L6A/SLJKO(6),SLLMO(48)                                     ACC 250
C                                                                       ACC 260
      COMMON/L6B/XL1(48),YL1(48),ZL1(48),XM2(48),YM2(48),ZM2(48),XJ3(6),ACC 270
     1YJ3(6),ZJ3(6),XK1(6),YK1(6),ZK1(6),CXX,CXY,CXZ,CYX,CYY,CYZ,       ACC 280
     2CZX,CZY,CZZ,CCXX,CCXY,CCXZ,CCYX,CCYY,CCYZ,CCZX,CCZY,CCZZ          ACC 290
C                                                                       ACC 300
      COMMON/L7A/FSGX,FSGY,FSGZ,TSGX,TSGY,TSGZ,GFS(5), AREA, AREAM      ACC 310
C                                                                       ACC 320
      COMMON/L7B/QX(48),QY(48),QZ(48),QSQP(48),QSHT,QFC(48),QCH(48),QSH,ACC 330
     1QSR(48),QFF,QVIS,QDAMP,QFX,QFY,QFZ,QTX1,QTY1,QTZ1,JKLM,N,QTSX2,   ACC 340
     2QTSY2,QTSZ2,QTCX3,QTCY3,QTCZ3,FORP(48),FHCQ(48),SO(48),QCHT(48),  ACC 350
     3QSRT(48),QSD(48),SQ(48),QRGX,QRGY,QRGZ,QVGX,QVGY,QVGZ,QWGX,QWGY,  ACC 360
     4QWGZ,QSX(48),QSY(48),QSZ(48),GFA(5)                               ACC 370
C                                                                       ACC 380
      COMMON/L9A/IREAL                                                  ACC 390
C                                                                       ACC 400
      COMMON/L9B/SHCJK,SHCJKT,SHCLM,SHCLMT,CTJK,CTLM,QKT                ACC 410
C                                                                       ACC 420
      COMMON/L10/RINGX(7),RHO(7),AEL(6),UNX(6),UNY(6,30),UNZ(6,30),     ACC 430
     1SOILP(3),NTYPE,TC,DCM,CFM,THICK(6),INATT,GE,RNGENG,EX(6,30),      ACC 440
     2EY(6,30),EZ(6,30),NI(7),KA,IABCD1,EFRICT                          ACC 450
C                                                                       ACC 460
      COMMON/L11/AA1(3,6),AA2(3,6),AA3(3,6),CAP(3,6),CCH(3,6),CHS(3,6), ACC 470
     1IACCEL,NOACAP,NOACCH,NOACHS                                       ACC 480
C                                                                       ACC 490
      COMMON/L12/QRX(1),QRY,QRZ,QVX,QVY,QVZ,QWX,QWY,QWZ,                ACC 500
     1QRCX,QRCY,QRCZ,QVCX,QVCY,QVCZ,QWCX,QWCY,QWCZ,                     ACC 510
     2QRSX,QRSY,QRSZ,QVSX,QVSY,QVSZ,QWSX,QWSY,QWSZ,                     ACC 520
     3QPSI,QTHTA,QPHI,QPSIC,QTHTAC,QPHIC,QPSIS,QTHTAS,QPHIS,DUM55(964), ACC 530
     4DTDUM,NN,KA1,MAP,IDUM                                             ACC 540
C                                                                       ACC 550
      COMMON/L13/SLGTH(3,6),FC(3,6),COEF(2,48),COEFT(2,48),             ACC 560
```

APPENDIX G

```
     1FFLM(48),FFLMT(48),FFJK(6),FFJKT(6),FFC(48),FFT(48),IRET,NS
C
      COMMON/L14/PVEL(48)
C
      COMMON/L19/      HSY1,HSZ1,ALTX,ALTY,ALTZ,RRX1(6),RRY1(6),RRZ1(6),
     1RRX2(6),RRY2(6),RRZ2(6),     THRR(6,10),TYM(6,10),CRRX(6),CRRY(6),
     2CRRZ(6),HCY1,HCZ1,NRR,IRR,FRRX,FRRY,FRRZ,TRRX,TRRY,TRRZ
C
      COMMON/L22/PXVEL,PYVEL,PZVEL,APX1,APY1,APZ1,RPX,RPY,RPZ,FPPX,FPPY,
     1FPPZ,TPPX1,TPPY1,TPPZ1,FPX,FPY,FPZ,PHITE,IPARA,NPAR,ICRKT9,PNRG
C
      COMMON/L25/NOMODE,OMEGA(5),SPHI(540,5),APHI(144,5),WNX(5),WNY(5),
     1WNZ(5),PX(5),PY(5),PZ(5),GF(5),GM(5),COORD(74,2),FPPHI(222,5),
     2NTCOR,IINP,NORUN,MORDER,NATT(102),NDIAM(3,5),ASPHI(18,5),
     3CGPHI(3,5),WMX(5,5),WMY(5,5),WMZ(5,5)     ,AMASS(102)
C
      COMMON/LIST8/D11,D12,D13,D21,D22,D23,D31,D32,D33,DS11,DS12,DS13,
     1DS21,DS22,DS23,DS31,DS32,DS33,DC11,DC12,DC13,DC21,DC22,DC23,
     2DC31,DC32,DC33
C
      COMMON/MO/FORJK(6),SLJK(6),CHJKT(6),CHJK(6),SRJKT(6),SRJK(6),
     1SDJK(6),VELJK(6),FORLM(48),SLLM(48),CHLMT(48),CHLM(48),SRLMT(48),
     2SRLM(48),SDLM(48),VELLM(48)
C
C     INCORP. TO REMOVE UNDERFLOW CAUSED BY FIRST INTERATION RESULTS.
C
      TIME=DUM55(2*NOMODE+1)
      IF (TIME.GT..001) GO TO 10
      IF (ABS(QWX).LT.1.0E-24) QWX=0.0
      IF (ABS(QWY).LT.1.0E-24) QWY=0.0
      IF (ABS(QWZ).LT.1.0E-24) QWZ=0.0
      IF (ABS(QWCX).LT.1.0E-24) QWCX=0.0
      IF (ABS(QWCY).LT.1.0E-24) QWCY=0.0
      IF (ABS(QWCZ).LT.1.0E-24) QWCZ=0.0
      IF (ABS(QWSX).LT.1.0E-24) QWSX=0.0
      IF (ABS(QWSY).LT.1.0E-24) QWSY=0.0
      IF (ABS(QWSZ).LT.1.0E-24) QWSZ=0.0
      IF (ABS(QPSI).LT.1.0E-24) QPSI=0.0
      IF (ABS(QTHTA).LT.1.0E-24) QTHTA=0.
      IF (ABS(QPHI).LT.1.0E-24) QPHI=0.0
      IF (ABS(QPSIC).LT.1.0E-24) QPSIC=0.0
      IF (ABS(QTHTAC).LT.1.0E-24) QTHTAC=0.0
      IF (ABS(QPHIC).LT.1.0E-24) QPHIC=0.0
      IF (ABS(QPSIS).LT.1.0E-24) QPSIS=0.0
      IF (ABS(QTHTAS).LT.1.0E-24) QTHTAS=0.0
      IF (ABS(QPHIS).LT.1.0E-24) QPHIS=0.0
10    CONTINUE
C
C     DETERMINE IF IT IS A PRINT TIME
C
      IF (TIME.LT.(DT/2.)) GO TO 20
      IF (IREAL.EQ.1) JPRINT=JPRINT+1
20    CONTINUE
      IF (NOFOR.NE.1) GO TO 30
      IF (NPRINT.EQ.JPRINT) WRITE (3) TIME
30    CONTINUE
```

APPENDIX G

```
C
C     SET UP GENERALIZED COORDINATES FOR ACCELERATION CALCULATIONS
C
      IF (NOMODE.EQ.0) GO TO 50
      DO 40 I=1,NOMODE
      QQ(I)=DUM55(I)
      II=NOMODE+I
40    QQD(I)=DUM55(II)
50    CONTINUE
C
C     DETERMINE DIRECTION COSINES FOR THE SYSTEM
C
C
      CALL GEOM
C
C     SET UP FOR ATTENUATOR FORCE CALCULATIONS
C
      DO 80 I=1,LM
      QX(I)=XL1(I)
      QY(I)=YL1(I)
      QZ(I)=ZL1(I)
      QSX(I)=XM2(I)
      QSY(I)=YM2(I)
      QSZ(I)=ZM2(I)
      IF (NOMODE.EQ.0) GO TO 70
      KK3=3*I
      KK2=KK3-1
      KK1=KK3-2
      DO 60 JJ=1,NOMODE
      QSX(I)=QSX(I)+APHI(KK1,JJ)*QQ(JJ)
      QSY(I)=QSY(I)+APHI(KK2,JJ)*QQ(JJ)
      QSZ(I)=QSZ(I)+APHI(KK3,JJ)*QQ(JJ)
60    GFA(JJ)=0.0
70    CONTINUE
      SO(I)=SLLMO(I)
      FORP(I)=FORLM(I)
      QCHT(I)=CHLMT(I)
      QSRT(I)=SRLMT(I)
      QSR(I)=SRLM(I)
      QSD(I)=SDLM(I)
      QSQP(I)=SLLM(I)
      PVEL(I)=VELLM(I)
      FFC(I)=FFLM(I)
      FFT(I)=FFLMT(I)
80    QCH(I)=CHLM(I)
      QKT=CTLM
      QSH=SHCLM
      QSHT=SHCLMT
      JKLM=1
      N=LM
      NS=1
      QVIS=VISLM
      QRGX=QRSX
      QRGY=QRSY
      QRGZ=QRSZ
      QVGX=QVSX
```

```
      QVGY=QVSY                                                         ACC1690
      QVGZ=QVSZ                                                         ACC1700
      QWGX=QWSX                                                         ACC1710
      QWGY=QWSY                                                         ACC1720
      QWGZ=QWSZ                                                         ACC1730
      IF (LMDAMP) 90,90,100                                             ACC1740
90    QDAMP=0.0                                                         ACC1750
      GO TO 110                                                         ACC1760
100   QDAMP=1.0                                                         ACC1770
110   CONTINUE                                                          ACC1780
C                                                                       ACC1790
C     CALCULATE ATTENUATOR FORCES AND TORQUES                           ACC1800
C                                                                       ACC1810
      CALL STROKE                                                       ACC1820
C                                                                       ACC1830
C                                                                       ACC1840
C     REMEMBER RESULTS                                                  ACC1850
C                                                                       ACC1860
      IF (IREAL) 140,140,120                                            ACC1870
120   CONTINUE                                                          ACC1880
      DO 130 I=1,LM                                                     ACC1890
      IF (SQ(I).LT.OLSMIN(I)) OLSMIN(I)=SQ(I)                           ACC1900
      IF (SQ(I).GT.OLSMAX(I)) OLSMAX(I)=SQ(I)                           ACC1910
      FORLM(I)=FHCQ(I)                                                  ACC1920
      SLLM(I)=SQ(I)                                                     ACC1930
      CHLM(I)=QCH(I)                                                    ACC1940
      CHLMT(I)=QCHT(I)                                                  ACC1950
      SRLMT(I)=QSRT(I)                                                  ACC1960
      SDLM(I)=QSD(I)                                                    ACC1970
      VELLM(I)=PVEL(I)                                                  ACC1980
130   SRLM(I)=QSR(I)                                                    ACC1990
C                                                                       ACC2000
140   CONTINUE                                                          ACC2010
C                                                                       ACC2020
C     REMEMBER SUM OF FORCES AND TORQUES                                ACC2030
C                                                                       ACC2040
C     FORCE ON PAYLOAD FROM FOOTPAD (IN FIXED COORD. SYSTEM)            ACC2050
C                                                                       ACC2060
      FSX=QFX                                                           ACC2070
      FSY=QFY                                                           ACC2080
      FSZ=QFZ                                                           ACC2090
C                                                                       ACC2100
C     TORQUE ON PAYLOAD FROM FOOTPAD                                    ACC2110
C                                                                       ACC2120
      TSX1=QTX1                                                         ACC2130
      TSY1=QTY1                                                         ACC2140
      TSZ1=QTZ1                                                         ACC2150
C                                                                       ACC2160
C     TORQUE ON FOOTPAD FROM FOOTPAD                                    ACC2170
C                                                                       ACC2180
      TSX2=QTSX2                                                        ACC2190
      TSY2=QTSY2                                                        ACC2200
      TSZ2=QTSZ2                                                        ACC2210
C                                                                       ACC2220
C     SET UP FOR SECONDARY EQUIPMENT ITEM STRUT FORCE CALCULATIONS      ACC2230
C                                                                       ACC2240
```

```
      DO 150 I=1,JK                                                     ACC2250
      QX(I)=XK1(I)                                                      ACC2260
      QY(I)=YK1(I)                                                      ACC2270
      QZ(I)=ZK1(I)                                                      ACC2280
      QSX(I)=XJ3(I)                                                     ACC2290
      QSY(I)=YJ3(I)                                                     ACC2300
      QSZ(I)=ZJ3(I)                                                     ACC2310
      SQ(I)=SLJKQ(I)                                                    ACC2320
      FORP(I)=FORJK(I)                                                  ACC2330
      QCHT(I)=CHJKT(I)                                                  ACC2340
      QSRT(I)=SRJKT(I)                                                  ACC2350
      QSR(I)=SRJK(I)                                                    ACC2360
      QSD(I)=SDJK(I)                                                    ACC2370
      QSQP(I)=SLJK(I)                                                   ACC2380
      PVEL(I)=VELJK(I)                                                  ACC2390
      FFC(I)=FFJK(I)                                                    ACC2400
      FFT(I)=FFJKT(I)                                                   ACC2410
150   QCH(I)=CHJK(I)                                                    ACC2420
      QKT=CTJK                                                          ACC2430
      QSH=SHCJK                                                         ACC2440
      QSHT=SHCJKT                                                       ACC2450
      JKLM=0                                                            ACC2460
      N=JK                                                              ACC2470
      NS=2                                                              ACC2480
      QVIS=VISJK                                                        ACC2490
      QRGX=QRCX                                                         ACC2500
      QRGY=QRCY                                                         ACC2510
      QRGZ=QRCZ                                                         ACC2520
      QVGX=QVCX                                                         ACC2530
      QVGY=QVCY                                                         ACC2540
      QVGZ=QVCZ                                                         ACC2550
      QWGX=QWCX                                                         ACC2560
      QWGY=QWCY                                                         ACC2570
      QWGZ=QWCZ                                                         ACC2580
      IF (JKDAMP) 160,160,170                                           ACC2590
160   QDAMP=0.0                                                         ACC2600
      GO TO 180                                                         ACC2610
170   QDAMP=1.0                                                         ACC2620
180   CONTINUE                                                          ACC2630
C                                                                       ACC2640
C     CALCULATE SECONDARY EQUIPMENT ITEM STRUT FORCES AND TORQUES       ACC2650
C                                                                       ACC2660
      CALL STROKE                                                       ACC2670
C                                                                       ACC2680
C                                                                       ACC2690
C     REMEMBER RESULTS                                                  ACC2700
C                                                                       ACC2710
      IF (IREAL) 210,210,190                                            ACC2720
190   CONTINUE                                                          ACC2730
      DO 200 I=1,JK                                                     ACC2740
      IF (SQ(I).LT.OLCMIN(I)) OLCMIN(I)=SQ(I)                           ACC2750
      IF (SQ(I).GT.OLCMAX(I)) OLCMAX(I)=SQ(I)                           ACC2760
      FORJK(I)=FRCQ(I)                                                  ACC2770
      SLJK(I)=SQ(I)                                                     ACC2780
      CHJKT(I)=QCHT(I)                                                  ACC2790
      CHJK(I)=QCH(I)                                                    ACC2800
```

```
      SRJKT(I)=QSRT(I)                                                  ACC2810
      SDJK(I)=QSD(I)                                                    ACC2820
      VELJK(I)=PVEL(I)                                                  ACC2830
200   SRJK(I)=QSR(I)                                                    ACC2840
C                                                                       ACC2850
210   CONTINUE                                                          ACC2860
C                                                                       ACC2870
C     REMEMBER SUM OF FORCES AND TORQUES                                ACC2880
C                                                                       ACC2890
C     FORCE ON PAYLOAD FROM SECONDARY EQUIP. ITEM (IN FIXED COORD. SYS.)ACC2900
C                                                                       ACC2910
      FCX=QFX                                                           ACC2920
      FCY=QFY                                                           ACC2930
      FCZ=QFZ                                                           ACC2940
C                                                                       ACC2950
C     TORQUE ON PAYLOAD FROM SECONDARY EQUIPMENT ITEM                   ACC2960
C                                                                       ACC2970
      TCX1=QTX1                                                         ACC2980
      TCY1=QTY1                                                         ACC2990
      TCZ1=QTZ1                                                         ACC3000
C                                                                       ACC3010
C     TORQUE ON SECONDARY EQUIPMENT ITEM FROM SECONDARY EQUIPMENT       ACC3020
C     ITEM STRUTS                                                       ACC3030
C                                                                       ACC3040
      TCX3=QTCX3                                                        ACC3050
      TCY3=QTCY3                                                        ACC3060
      TCZ3=QTCZ3                                                        ACC3070
C                                                                       ACC3080
C     DETERMINE SOIL REACTION LOADS                                     ACC3090
C                                                                       ACC3100
      CALL FPSOIL                                                       ACC3110
C                                                                       ACC3120
C     TOTAL GENERALIZED FORCE                                           ACC3130
C                                                                       ACC3140
      DO 220 JJ=1,NOMODE                                                ACC3150
220   GF(JJ)=GFA(JJ)+GFS(JJ)                                            ACC3160
C                                                                       ACC3170
C     RETRO ROCKET FORCES                                               ACC3180
C                                                                       ACC3190
      IF (NRR.GT.0) CALL RETRO                                          ACC3200
C                                                                       ACC3210
C     PARACHUTE FORCES                                                  ACC3220
C                                                                       ACC3230
      IF (NPAR.GT.0) CALL PARA                                          ACC3240
C                                                                       ACC3250
C     PAYLOAD LINEAR ACCEL. IN FIXED COORD. SYSTEM                      ACC3260
C                                                                       ACC3270
      PQR=1.0/PLM                                                       ACC3280
      AX=(FSX+FCX+FRRX+FPPX-PLM*G*COS(ZETA))*PQR                        ACC3290
      AY=(FSY+FCY+FRRY+FPPY)*PQR                                        ACC3300
      AZ=(FSZ+FCZ+FRRZ+FPPZ+PLM*G*SIN(ZETA))*PQR                        ACC3310
C                                                                       ACC3320
C     PAYLOAD LINEAR ACCEL. IN PAYLOAD COORD. SYSTEM                    ACC3330
C                                                                       ACC3340
      AX1=D11*AX+D21*AY+D31*AZ                                          ACC3350
      AY1=D12*AX+D22*AY+D32*AZ                                          ACC3360
```

APPENDIX G

```
      AZ1=D13*AX+D23*AY+D33*AZ                                          ACC3370
C                                                                       ACC3380
C     MAXIMUM PAYLOAD ACCEL.                                            ACC3390
C                                                                       ACC3400
      IF (ABS(AX1).GT.ABS(OMAX(1))) OMAX(1)=AX1                         ACC3410
      IF (ABS(AY1).GT.ABS(OMAY(1))) OMAY(1)=AY1                         ACC3420
      IF (ABS(AZ1).GT.ABS(OMAZ(1))) OMAZ(1)=AZ1                         ACC3430
C                                                                       ACC3440
C     SECONDARY EQUIP. ITEM ACCEL. IN FIXED COORD. SYSTEM               ACC3450
C                                                                       ACC3460
      PQR=1.0/SEQM                                                      ACC3470
      ACX=(-SEQM*G*COS(ZETA)-FCX)*PQR                                   ACC3480
      ACY=(-FCY)*PQR                                                    ACC3490
      ACZ=(SEQM*G*SIN(ZETA)-FCZ)*PQR                                    ACC3500
C                                                                       ACC3510
C     SECONDARY EQUIP. ITEM ACCEL. IN SECONDARY EQUIP. ITEM COORD. SYS. ACC3520
C                                                                       ACC3530
      ACX3=DC11*ACX+DC21*ACY+DC31*ACZ                                   ACC3540
      ACY3=DC12*ACX+DC22*ACY+DC32*ACZ                                   ACC3550
      ACZ3=DC13*ACX+DC23*ACY+DC33*ACZ                                   ACC3560
C                                                                       ACC3570
C     MAXIMUM SECONDARY EQUIP. ITEM ACCEL.                              ACC3580
C                                                                       ACC3590
      IF (ABS(ACX3).GT.ABS(OMACX(1))) OMACX(1)=ACX3                     ACC3600
      IF (ABS(ACY3).GT.ABS(OMACY(1))) OMACY(1)=ACY3                     ACC3610
      IF (ABS(ACZ3).GT.ABS(OMACZ(1))) OMACZ(1)=ACZ3                     ACC3620
C                                                                       ACC3630
C     FOOTPAD LINEAR ACCEL. IN FIXED COORDINATE SYSTEM                  ACC3640
C                                                                       ACC3650
      PQR=1.0/FPM                                                       ACC3660
      ASX=(FSGX-FSX-FPM*G*COS(ZETA))*PQR                                ACC3670
      ASY=(FSGY-FSY)*PQR                                                ACC3680
      ASZ=(FSGZ-FSZ+FPM*G*SIN(ZETA))*PQR                                ACC3690
C                                                                       ACC3700
C     FOOTPAD LINEAR ACCEL. IN THE FOOTPAD COORD. SYSTEM                ACC3710
C                                                                       ACC3720
      ASX2=DS11*ASX+DS21*ASY+DS31*ASZ                                   ACC3730
      ASY2=DS12*ASX+DS22*ASY+DS32*ASZ                                   ACC3740
      ASZ2=DS13*ASX+DS23*ASY+DS33*ASZ                                   ACC3750
C                                                                       ACC3760
C     GENERALIZED COORDINATE ACCELERATIONS                              ACC3770
C                                                                       ACC3780
      IF (NOMODE.EQ.0) GO TO 250                                        ACC3790
      DO 240 JJ=1,NOMODE                                                ACC3800
      XA=0.0                                                            ACC3810
      YA=0.0                                                            ACC3820
      ZA=0.0                                                            ACC3830
      DO 230 JJJ=1,NOMODE                                               ACC3840
      XA=XA+WMX(JJ,JJJ)*QQ(JJJ)                                         ACC3850
      YA=YA+WMY(JJ,JJJ)*QQ(JJJ)                                         ACC3860
      ZA=ZA+WMZ(JJ,JJJ)*QQ(JJJ)                                         ACC3870
230   CONTINUE                                                          ACC3880
      XA=WNX(JJ)+PY(JJ)+PZ(JJ)-XA                                       ACC3890
      YA=WNY(JJ)+PX(JJ)+PZ(JJ)-YA                                       ACC3900
      ZA=WNZ(JJ)+PZ(JJ)+PY(JJ)-ZA                                       ACC3910
240   QDD(JJ)=(1./GM(JJ))*(GF(JJ)+QWSX*QWSX*XA+QWSY*QWSY*YA+QWSZ*QWSZ*ZAACC3920
```

APPENDIX G

```
     1)-OMEGA(JJ)*OMEGA(JJ)*QQ(JJ)                                      ACC3930
250   CONTINUE                                                          ACC3940
C     PAYLOAD TORQUE                                                    ACC3950
      TX=TCX1+TSX1+TRRX+TPPX1                                           ACC3960
      TY=TCY1+TSY1+TRRY+TPPY1                                           ACC3970
      TZ=TCZ1+TSZ1+TRRZ+TPPZ1                                           ACC3980
C                                                                       ACC3990
C                                                                       ACC4000
C     PAYLOAD ANGULAR ACCEL.                                            ACC4010
C                                                                       ACC4020
      BX=TX-QWZ*QWX*UXY+QWX*QWY*UXZ-(QWZ*QWZ-QWY*QWY)*UYZ-QWY*QWZ*(UZZ-UACC4030
     1YY)                                                               ACC4040
      BY=TY-QWX*QWY*UYZ+QWY*QWZ*UXY-(QWX*QWX-QWZ*QWZ)*UXZ-QWZ*QWX*(UXX-UACC4050
     1ZZ)                                                               ACC4060
      BZ=TZ-QWY*QWZ*UXZ+QWX*QWZ*UYZ-(QWY*QWY-QWX*QWX)*UXY-QWX*QWY*(UYY-UACC4070
     1XX)                                                               ACC4080
C                                                                       ACC4090
      WDX=CXX*BX+CXY*BY+CXZ*BZ                                          ACC4100
      WDY=CYX*BX+CYY*BY+CYZ*BZ                                          ACC4110
      WDZ=CZX*BX+CZY*BY+CZZ*BZ                                          ACC4120
C                                                                       ACC4130
C     SECONDARY EQUIPMENT ITEM ANGULAR ACCELERATIONS                    ACC4140
C                                                                       ACC4150
      BCX=TCX3-QWCZ*QWCX*UCXY+QWCX*QWCY*UCXZ-(QWCZ*QWCZ-QWCY*QWCY)*UCYZ-ACC4160
     1QWCY*QWCZ*(UCZZ-UCYY)                                             ACC4170
      BCY=TCY3-QWCX*QWCY*UCYZ+QWCY*QWCZ*UCXY-(QWCX*QWCX-QWCZ*QWCZ)*UCXZ-ACC4180
     1QWCZ*QWCX*(UCXX-UCZZ)                                             ACC4190
      BCZ=TCZ3-QWCY*QWCZ*UCXZ+QWCX*QWCZ*UCYZ-(QWCY*QWCY-QWCX*QWCX)*UCXY-ACC4200
     1QWCX*QWCY*(UCYY-UCXX)                                             ACC4210
C                                                                       ACC4220
      WDCX=CCXX*BCX+CCXY*BCY+CCXZ*BCZ                                   ACC4230
      WDCY=CCYX*BCX+CCYY*BCY+CCYZ*BCZ                                   ACC4240
      WDCZ=CCZX*BCX+CCZY*BCY+CCZZ*BCZ                                   ACC4250
C                                                                       ACC4260
C     FOOTPAD TORQUE                                                    ACC4270
C                                                                       ACC4280
      TSX=TSGX+TSX2                                                     ACC4290
      TSY=TSGY+TSY2                                                     ACC4300
      TSZ=TSGZ+TSZ2                                                     ACC4310
C                                                                       ACC4320
C     FOOTPAD ANGULAR ACCELERATION                                      ACC4330
C                                                                       ACC4340
      IF (NOMODE.GT.0) GO TO 260                                        ACC4350
C                                                                       ACC4360
C     FOOTPAD FLEXIBILITY NOT INCLUDED                                  ACC4370
C                                                                       ACC4380
      WDSX=TSX/USXX                                                     ACC4390
      WDSY=(TSY-QWSZ*QWSX*(USXX-USZZ))/USYY                             ACC4400
      WDSZ=(TSZ-QWSX*QWSY*(USYY-USXX))/USZZ                             ACC4410
      GO TO 290                                                         ACC4420
260   CONTINUE                                                          ACC4430
C                                                                       ACC4440
C     FOOTPAD FLEXIBILITY INCLUDED                                      ACC4450
C                                                                       ACC4460
      XA1=0.0                                                           ACC4470
      YA1=0.0                                                           ACC4480
```

APPENDIX G

```
      ZA1=0.0                                                           ACC4490
      XA2=0.0                                                           ACC4500
      YA2=0.0                                                           ACC4510
      ZA2=0.0                                                           ACC4520
      XA3=0.0                                                           ACC4530
      YA3=0.0                                                           ACC4540
      ZA3=0.0                                                           ACC4550
      DO 270 JJ=1,NOMODE                                                ACC4560
      DO 270 JJJ=1,NOMODE                                               ACC4570
      XA3=XA3-(WMZ(JJ,JJJ)-WMY(JJ,JJJ))*QQ(JJ)*QQ(JJJ)                  ACC4580
      YA3=YA3-(WMX(JJ,JJJ)-WMZ(JJ,JJJ))*QQ(JJ)*QQ(JJJ)                  ACC4590
      ZA3=ZA3-(WMY(JJ,JJJ)-WMX(JJ,JJJ))*QQ(JJ)*QQ(JJJ)                  ACC4600
270   CONTINUE                                                          ACC4610
      DO 280 JJ=1,NOMODE                                                ACC4620
      XA1=XA1+(WNX(JJ)*QQ(JJ)+2.*(PY(JJ)+PZ(JJ)))*QQ(JJ)                ACC4630
      YA1=YA1+(WNY(JJ)*QQ(JJ)+2.*(PX(JJ)+PZ(JJ)))*QQ(JJ)                ACC4640
      ZA1=ZA1+(WNZ(JJ)*QQ(JJ)+2.*(PX(JJ)+PY(JJ)))*QQ(JJ)                ACC4650
      XA2=XA2+(WNX(JJ)*QQ(JJ)+PY(JJ)+PZ(JJ))*QQD(JJ)                    ACC4660
      YA2=YA2+(WNY(JJ)*QQ(JJ)+PX(JJ)+PZ(JJ))*QQD(JJ)                    ACC4670
      ZA2=ZA2+(WNZ(JJ)*QQ(JJ)+PX(JJ)+PY(JJ))*QQD(JJ)                    ACC4680
      XA3=XA3+((WNZ(JJ)-WNY(JJ))*QQ(JJ)+2.*(PY(JJ)-PZ(JJ)))*QQ(JJ)      ACC4690
      YA3=YA3+((WNX(JJ)-WNZ(JJ))*QQ(JJ)+2.*(PZ(JJ)-PX(JJ)))*QQ(JJ)      ACC4700
      ZA3=ZA3+((WNY(JJ)-WNX(JJ))*QQ(JJ)+2.*(PX(JJ)-PY(JJ)))*QQ(JJ)      ACC4710
280   CONTINUE                                                          ACC4720
      WDSX=(1./(USXX+XA1))*(TSX-2.*QWSX*XA2-QWSY*QWSZ*XA3)              ACC4730
      WDSY=(1./(USYY+YA1))*(TSY-2.*QWSY*YA2-QWSX*QWSZ*(USXX-USZZ+YA3))  ACC4740
      WDSZ=(1./(USZZ+ZA1))*(TSZ-2.*QWSZ*ZA2-QWSX*QWSY*(USYY-USXX+ZA3))  ACC4750
290   CONTINUE                                                          ACC4760
      DUM5(1)=QVX                                                       ACC4770
      DUM5(2)=QVY                                                       ACC4780
      DUM5(3)=QVZ                                                       ACC4790
      DUM5(4)=AX                                                        ACC4800
      DUM5(5)=AY                                                        ACC4810
      DUM5(6)=AZ                                                        ACC4820
      DUM5(7)=WDX                                                       ACC4830
      DUM5(8)=WDY                                                       ACC4840
      DUM5(9)=WDZ                                                       ACC4850
      DUM5(10)=QVCX                                                     ACC4860
      DUM5(11)=QVCY                                                     ACC4870
      DUM5(12)=QVCZ                                                     ACC4880
      DUM5(13)=ACX                                                      ACC4890
      DUM5(14)=ACY                                                      ACC4900
      DUM5(15)=ACZ                                                      ACC4910
      DUM5(16)=WDCX                                                     ACC4920
      DUM5(17)=WDCY                                                     ACC4930
      DUM5(18)=WDCZ                                                     ACC4940
      DUM5(19)=QVSX                                                     ACC4950
      DUM5(20)=QVSY                                                     ACC4960
      DUM5(21)=QVSZ                                                     ACC4970
      DUM5(22)=ASX                                                      ACC4980
      DUM5(23)=ASY                                                      ACC4990
      DUM5(24)=ASZ                                                      ACC5000
      DUM5(25)=WDSX                                                     ACC5010
      DUM5(26)=WDSY                                                     ACC5020
      DUM5(27)=WDSZ                                                     ACC5030
      IF (ABS(COS(QTHTA))-0.1E-32) 310,310,300                          ACC5040
```

APPENDIX G

```
300   DUM5(28)=(QWZ*COS(QPHI)+QWY*SIN(QPHI))/COS(QTHTA)                ACC5050
      DUM5(29)=QWY*COS(QPHI)-QWZ*SIN(QPHI)                             ACC5060
      DUM5(30)=QWX+SIN(QTHTA)/COS(QTHTA)*(QWY*SIN(QPHI)+QWZ*COS(QPHI)) ACC5070
      GO TO 320                                                        ACC5080
C                                                                      ACC5090
310   DUM5(28)=0.0                                                     ACC5100
      DUM5(29)=QWX                                                     ACC5110
      DUM5(30)=SQRT(QWY*QWY+QWZ*QWZ)                                   ACC5120
C                                                                      ACC5130
320   IF (ABS(COS(QTHTAC))-0.1E-32) 340,340,330                        ACC5140
C                                                                      ACC5150
330   DUM5(31)=(QWCZ*COS(QPHIC)+QWCY*SIN(QPHIC))/COS(QTHTAC)           ACC5160
      DUM5(32)=QWCY*COS(QPHIC)-QWCZ*SIN(QPHIC)                         ACC5170
      DUM5(33)=QWCX+SIN(QTHTAC)/COS(QTHTAC)*(QWCY*SIN(QPHIC)+QWCZ*COS(QPACC5180
     1HIC))                                                            ACC5190
      GO TO 350                                                        ACC5200
C                                                                      ACC5210
340   DUM5(31)=0.0                                                     ACC5220
      DUM5(32)=QWCX                                                    ACC5230
      DUM5(33)=SQRT(QWCY*QWCY+QWCZ*QWCZ)                               ACC5240
C                                                                      ACC5250
350   IF (ABS(COS(QTHTAS))-0.1E-32) 370,370,360                        ACC5260
C                                                                      ACC5270
360   DUM5(34)=(QWSZ*COS(QPHIS)+QWSY*SIN(QPHIS))/COS(QTHTAS)           ACC5280
      DUM5(35)=QWSY*COS(QPHIS)-QWSZ*SIN(QPHIS)                         ACC5290
      DUM5(36)=QWSX+SIN(QTHTAS)/COS(QTHTAS)*(QWSY*SIN(QPHIS)+QWSZ*COS(QPACC5300
     1HIS))                                                            ACC5310
      GO TO 380                                                        ACC5320
C                                                                      ACC5330
370   DUM5(34)=0.0                                                     ACC5340
      DUM5(35)=QWSX                                                    ACC5350
      DUM5(36)=SQRT(QWSY*QWSY+QWSZ*QWSZ)                               ACC5360
380   CONTINUE                                                         ACC5370
      IF (NOMODE.EQ.0) GO TO 400                                       ACC5380
      DO 390 I=1,NOMODE                                                ACC5390
      DUM5(I+36)=QQD(I)                                                ACC5400
      NQD=36+NOMODE+I                                                  ACC5410
390   DUM5(NQD)=QDD(I)                                                 ACC5420
400   CONTINUE                                                         ACC5430
      NQD=2*NOMODE+1                                                   ACC5440
      DO 410 I=1,NN                                                    ACC5450
      NQD=NQD+1                                                        ACC5460
410   DUM55(NQD)=DUM5(I)                                               ACC5470
C                                                                      ACC5480
C     ACCELEROMETER CALCULATIONS                                       ACC5490
C                                                                      ACC5500
      IF (IACCEL) 540,540,420                                          ACC5510
C                                                                      ACC5520
C     PAYLOAD ACCELEROMETER VALUES                                     ACC5530
C                                                                      ACC5540
420   IF (NOACAP) 450,450,430                                          ACC5550
430   DO 440 I=1,NOACAP                                                ACC5560
      AA1(1,I)=AX1+WDY*CAP(3,I)-WDZ*CAP(2,I)-CAP(1,I)*(QWY**2+QWZ**2)+QWACC5570
     1X*(CAP(2,I)*QWY+CAP(3,I)*QWZ)                                    ACC5580
      AA1(2,I)=AY1+WDZ*CAP(1,I)-WDX*CAP(3,I)-CAP(2,I)*(QWX**2+QWZ**2)+QWACC5590
     1Y*(CAP(1,I)*QWX+CAP(3,I)*QWZ)                                    ACC5600
```

APPENDIX G

```
      AA1(3,I)=AZ1+WDX*CAP(2,I)-WDY*CAP(1,I)-CAP(3,I)*(QWX**2+QWY**2)+QWACC5610
     1Z*(CAP(1,I)*QWX+CAP(2,I)*QWY)                                    ACC5620
      IF (ABS(AA1(1,I)).GT.ABS(OMAX(I+1))) OMAX(I+1)=AA1(1,I)          ACC5630
      IF (ABS(AA1(2,I)).GT.ABS(OMAY(I+1))) OMAY(I+1)=AA1(2,I)          ACC5640
      IF (ABS(AA1(3,I)).GT.ABS(OMAZ(I+1))) OMAZ(I+1)=AA1(3,I)          ACC5650
440   CONTINUE                                                         ACC5660
C                                                                      ACC5670
C     FOOTPAD ACCELEROMETER VALUES                                     ACC5680
C                                                                      ACC5690
450   IF (NOACHS) 520,520,460                                          ACC5700
460   DO 470 I=1,NOACHS                                                ACC5710
      AA2(1,I)=ASX2+WDSY*CHS(3,I)-WDSZ*CHS(2,I)-(QWSY**2+QWSZ**2)*CHS(1,ACC5720
     1I)+QWSX*(QWSY*CHS(2,I)+QWSZ*CHS(3,I))                            ACC5730
      AA2(2,I)=ASY2+WDSZ*CHS(1,I)-WDSX*CHS(3,I)-(QWSX**2+QWSZ**2)*CHS(2,ACC5740
     1I)+QWSY*(QWSX*CHS(1,I)+QWSZ*CHS(3,I))                            ACC5750
      AA2(3,I)=ASZ2+WDSX*CHS(2,I)-WDSY*CHS(1,I)-(QWSX**2+QWSY**2)*CHS(3,ACC5760
     1I)+QWSZ*(QWSX*CHS(1,I)+QWSY*CHS(2,I))                            ACC5770
470   CONTINUE                                                         ACC5780
      IF (NOMODE.EQ.0) GO TO 500                                       ACC5790
      DO 490 I=1,NOACHS                                                ACC5800
      LZ=3*I                                                           ACC5810
      LY=LZ-1                                                          ACC5820
      LX=LY-1                                                          ACC5830
      DO 480 JJ=1,NOMODE                                               ACC5840
      AA2(1,I)=AA2(1,I)+ASPHI(LX,JJ)*QDD(JJ)+(-(QWSY**2+QWSZ**2)*ASPHI(LACC5850
     1X,JJ)+(QWSX*QWSY-WDSZ)*ASPHI(LY,JJ)+(QWSX*QWSZ+WDSY)*ASPHI(LZ,JJ))ACC5860
     2*QQ(JJ)+2.*(QWSY*ASPHI(LZ,JJ)-QWSZ*ASPHI(LY,JJ))*QQD(JJ)         ACC5870
      AA2(2,I)=AA2(2,I)+ASPHI(LY,JJ)*QDD(JJ)+(-(QWSX**2+QWSZ**2)*ASPHI(LACC5880
     1Y,JJ)+(QWSY*QWSZ-WDSX)*ASPHI(LZ,JJ)+(QWSX*QWSY+WDSZ)*ASPHI(LX,JJ))ACC5890
     2*QQ(JJ)+2.*(QWSZ*ASPHI(LX,JJ)-QWSX*ASPHI(LZ,JJ))*QQD(JJ)         ACC5900
      AA2(3,I)=AA2(3,I)+ASPHI(LZ,JJ)*QDD(JJ)+(-(QWSX**2+QWSY**2)*ASPHI(LACC5910
     1Z,JJ)+(QWSX*QWSZ-WDSY)*ASPHI(LX,JJ)+(QWSY*QWSZ+WDSX)*ASPHI(LY,JJ))ACC5920
     2*QQ(JJ)+2.*(QWSX*ASPHI(LY,JJ)-QWSY*ASPHI(LX,JJ))*QDD(JJ)         ACC5930
480   CONTINUE                                                         ACC5940
490   CONTINUE                                                         ACC5950
500   CONTINUE                                                         ACC5960
      DO 510 I=1,NOACHS                                                ACC5970
      IF (ABS(AA2(1,I)).GT.ABS(OMASX(I+1))) OMASX(I+1)=AA2(1,I)        ACC5980
      IF (ABS(AA2(2,I)).GT.ABS(OMASY(I+1))) OMASY(I+1)=AA2(2,I)        ACC5990
      IF (ABS(AA2(3,I)).GT.ABS(OMASZ(I+1))) OMASZ(I+1)=AA2(3,I)        ACC6000
510   CONTINUE                                                         ACC6010
C                                                                      ACC6020
C     SECONDARY EQUIPMENT ITEM ACCELEROMETER VALUES                    ACC6030
C                                                                      ACC6040
520   IF (NOACCH) 540,540,530                                          ACC6050
530   DO 540 I=1,NOACCH                                                ACC6060
      AA3(1,I)=ACX3+WDCY*CCH(3,I)-WDCZ*CCH(2,I)-(QWCY**2+QWCZ**2)*CCH(1,ACC6070
     1I)+QWCX*(CCH(2,I)*QWCY+CCH(3,I)*QWCZ)                            ACC6080
      AA3(2,I)=ACY3+WDCZ*CCH(1,I)-WDCX*CCH(3,I)-(QWCX**2+QWCZ**2)*CCH(2,ACC6090
     1I)+QWCY*(CCH(1,I)*QWCX+CCH(3,I)*QWCZ)                            ACC6100
      AA3(3,I)=ACZ3+WDCX*CCH(2,I)-WDCY*CCH(1,I)-(QWCX**2+QWCY**2)*CCH(3,ACC6110
     1I)+QWCZ*(CCH(1,I)*QWCX+CCH(2,I)*QWCY)                            ACC6120
      IF (ABS(AA3(1,I)).GT.ABS(OMACX(I+1))) OMACX(I+1)=AA3(1,I)        ACC6130
      IF (ABS(AA3(2,I)).GT.ABS(OMACY(I+1))) OMACY(I+1)=AA3(2,I)        ACC6140
      IF (ABS(AA3(3,I)).GT.ABS(OMACZ(I+1))) OMACZ(I+1)=AA3(3,I)        ACC6150
540   CONTINUE                                                         ACC6160
```

```
C
      IF (JPRINT.NE.NPRINT) GO TO 590
C
C     OUTPUT ACCELERATIONS AT NODES OF STRUCTURAL ANALYSIS PROGRAM
C
      IF (NOFOR.EQ.0) GO TO 590
      DO 570 I=1,NTCOR
      AOX=ASX2+WDSY*COORD(I,2)-WDSZ*COORD(I,1)+QWSX*(QWSY*COORD(I,1)+QWS
     1Z*COORD(I,2))
      AOY=ASY2-WDSX*COORD(I,2)-(QWSX**2+QWSZ**2)*COORD(I,1)+QWSY*QWSZ*CO
     1ORD(I,2)
      AOZ=ASZ2+WDSX*COORD(I,1)-(QWSX**2+QWSY**2)*COORD(I,2)+QWSZ*QWSY*CO
     1ORD(I,1)
      IF (NOMODE.EQ.0) GO TO 560
      LZ=3*I
      LY=LZ-1
      LX=LY-1
      DO 550 JJ=1,NOMODE
      AOX=AOX+FPPHI(LX,JJ)*QDD(JJ)+(-(QWSY**2+QWSZ**2)*FPPHI(LX,JJ)+(QWS
     1X*QWSY-WDSZ)*FPPHI(LY,JJ)+(QWSX*QWSZ+WDSY)*FPPHI(LZ,JJ))*QQ(JJ)+2.
     2*(QWSY*FPPHI(LZ,JJ)-QWSZ*FPPHI(LY,JJ))*QQD(JJ)
      AOY=AOY+FPPHI(LY,JJ)*QDD(JJ)+(-(QWSX**2+QWSZ**2)*FPPHI(LY,JJ)+(QWS
     1Y*QWSZ-WDSX)*FPPHI(LZ,JJ)+(QWSX*QWSY+WDSZ)*FPPHI(LX,JJ))*QQ(JJ)+2.
     2*(QWSZ*FPPHI(LX,JJ)-QWSX*FPPHI(LZ,JJ))*QQD(JJ)
      AOZ=AOZ+FPPHI(LZ,JJ)*QDD(JJ)+(-(QWSX**2+QWSY**2)*FPPHI(LZ,JJ)+(QWS
     1X*QWSZ-WDSY)*FPPHI(LX,JJ)+(QWSY*QWSZ+WDSX)*FPPHI(LY,JJ))*QQ(JJ)+2.
     2*(QWSX*FPPHI(LY,JJ)-QWSY*FPPHI(LX,JJ))*QQD(JJ)
550   CONTINUE
560   CONTINUE
      WRITE (3) AOX,AOY,AOZ
570   CONTINUE
C
C     OUTPUT C.G. ACCELERATIONS FOR STRUCTURAL ANALYSIS PROGRAM
C
      AXO=ASX2
      AYO=ASY2
      AZO=ASZ2
      DO 580 I=1,NOMODE
      AXO=AXO+CGPHI(1,I)*QDD(I)+(-(QWSY**2+QWSZ**2)*CGPHI(1,I)+(QWSX*QWS
     1Y-WDSZ)*CGPHI(2,I)+(QWSX*QWSZ+WDSY)*CGPHI(3,I))*QQ(I)+2.*(QWSY*CGP
     2HI(3,I)-QWSZ*CGPHI(2,I))*QQD(I)
      AYO=AYO+CGPHI(2,I)*QDD(I)+(-(QWSX**2+QWSZ**2)*CGPHI(2,I)+(QWSY*QWS
     1Z-WDSX)*CGPHI(3,I)+(QWSX*QWSY+WDSZ)*CGPHI(1,I))*QQ(I)+2.*(QWSZ*CGP
     2HI(1,I)-QWSX*CGPHI(3,I))*QQD(I)
      AOZ=AOZ+CGPHI(3,I)*QDD(I)+(-(QWSX**2+QWSY**2)*CGPHI(3,I)+(QWSX*QWS
     1Z-WDSY)*CGPHI(1,I)+(QWSY*QWSZ+WDSX)*CGPHI(2,I))*QQ(I)+2.*(QWSX*CGP
     2HI(2,I)-QWSY*CGPHI(1,I))*QQD(I)
580   CONTINUE
      WRITE (3) AXO,AYO,AZO,WDSX,WDSY,WDSZ,AX1,AY1,AZ1,WDX,WDY,WDZ,ACX3,
     1ACY3,ACZ3,WDCX,WDCY,WDCZ
590   CONTINUE
C
      RETURN
      END
```

APPENDIX G

```
      SUBROUTINE STROKE                                                 STR  10
C                                                                       STR  20
C     THIS SUBROUTINE DETERMINES THE STRUT STROKE FORCES AS A FUNCTION  STR  30
C     OF LANDER COMPONENT VELOCITIES AND POSITIONS                      STR  40
C                                                                       STR  50
C     STROKE FORCE PROFILE IS EITHER FREE RETURN (IRET=0)               STR  60
C     OR FRICTION RETURN (IRET=1)                                       STR  70
C                                                                       STR  80
      COMMON/L5A/DT,TMAX,IPRINT,ISTOP,IRUNNO,ISERNO,JPRINT,NPRINT,NOFOR STR  90
C                                                                       STR 100
      COMMON/L5D/IC,ISS,OFCMAX(6),OFCMIN(6),OFSMAX(48),OFSMIN(48),      STR 110
     1TSSQ(48),TCSQ(6),TOTSCR(48),TOTCCR(6)                             STR 120
C                                                                       STR 130
      COMMON/L7A/FSGX,FSGY,FSGZ,TSGX,TSGY,TSGZ,GFS(5), AREA, AREAM      STR 140
C                                                                       STR 150
      COMMON/L7B/QX(48),QY(48),QZ(48),QSQP(48),QSHT,QFC(48),QCH(48),QSH,STR 160
     1QSR(48),QFF,QVIS,QDAMP,QFX,QFY,QFZ,QTX1,QTY1,QTZ1,JKLM,N,QTSX2,   STR 170
     2QTSY2,QTSZ2,QTCX3,QTCY3,QTCZ3,FORP(48),FHCQ(48),SO(48),QCHT(48),  STR 180
     3QSRT(48),QSD(48),SQ(48),QRGX,QRGY,QRGZ,QVGX,QVGY,QVGZ,QWGX,QWGY,  STR 190
     4QWGZ,QSX(48),QSY(48),QSZ(48),GFA(5)                               STR 200
C                                                                       STR 210
      COMMON/L9A/IREAL                                                  STR 220
C                                                                       STR 230
      COMMON/L12/QRX(1),QRY,QRZ,QVX,QVY,QVZ,QWX,QWY,QWZ,                STR 240
     1QRCX,QRCY,QRCZ,QVCX,QVCY,QVCZ,QWCX,QWCY,QWCZ,                     STR 250
     2QRSX,QRSY,QRSZ,QVSX,QVSY,QVSZ,QWSX,QWSY,QWSZ,                     STR 260
     3QPSI,QTHTA,QPHI,QPSIC,QTHTAC,QPHIC,QPSIS,QTHTAS,QPHIS,DUM55(964), STR 270
     4DTDUM,NN,KA1,MAP,IDUM                                             STR 280
C                                                                       STR 290
      COMMON/L13/SLGTH(3,6),FC(3,6),COEF(2,48),COEFT(2,48),             STR 300
     1FFLM(48),FFLMT(48),FFJK(6),FFJKT(6),FFC(48),FFT(48),IRET,NS       STR 310
C                                                                       STR 320
      COMMON/L14/PVEL(48)                                               STR 330
C                                                                       STR 340
      COMMON/L25/NOMODE,OMEGA(5),SPHI(540,5),APHI(144,5),WNX(5),WNY(5), STR 350
     1WNZ(5),PX(5),PY(5),PZ(5),GF(5),GM(5),COORD(74,2),FPPHI(222,5),    STR 360
     2NTCOR,IINP,NORUN,MORDER,NATT(102),NDIAM(3,5),ASPHI(18,5),         STR 370
     3CGPHI(3,5),WMX(5,5),WMY(5,5),WMZ(5,5)     ,AMASS(102)             STR 380
C                                                                       STR 390
      COMMON/LIST8/D11,D12,D13,D21,D22,D23,D31,D32,D33,DS11,DS12,DS13,  STR 400
     1DS21,DS22,DS23,DS31,DS32,DS33,DC11,DC12,DC13,DC21,DC22,DC23,      STR 410
     2DC31,DC32,DC33                                                    STR 420
C                                                                       STR 430
      COMMON/MO/FORJK(6),SLJK(6),CHJKT(6),CHJK(6),SRJKT(6),SRJK(6),     STR 440
     1SDJK(6),VELJK(6),FORLM(48),SLLM(48),CHLMT(48),CHLM(48),SRLMT(48), STR 450
     2SRLM(48),SDLM(48),VELLM(48)                                       STR 460
C                                                                       STR 470
      DIMENSION A(48),B(48),C(48),AS(48),BS(48),CS(48),AA(48),BB(48),   STR 480
     1CC(48),XVELQ(48),YVELQ(48),ZVELQ(48),XVELSQ(48),YVELSQ(48),       STR 490
     2ZVELSQ(48),RXQ(48),RYQ(48),RZQ(48),RSXQ(48),RSYQ(48),RSZQ(48),    STR 500
     3S(48),UVQX(48),UVQY(48),UVQZ(48),SVELQ(48),FDQ(48),FQ(48),FQX(48),STR 510
     4FQY(48),FQZ(48),TSQX2(48),TSQY2(48),TSQZ2(48),TCQX3(48),TCQY3(48),STR 520
     5TCQZ3(48),TQX1(48),TQY1(48),TQZ1(48),CRUSH(48),QSF(48),QSFT(48)   STR 530
C                                                                       STR 540
      M1=1                                                              STR 550
      IF (NS.GT.1) M1=2                                                 STR 560
```

APPENDIX G

```
      IF (NS.EQ.1) M=1                                                  STR 570
      DO 560 I=1,N                                                      STR 580
      IF (NS.GT.1.AND.I.LE.2) M=2                                       STR 590
      IF (NS.GT.1.AND.I.GT.2) M=3                                       STR 600
      RXQ(I)=QRX(1)+D11*QX(I)+D12*QY(I)+D13*QZ(I)                       STR 610
      RYQ(I)=QRY+D21*QX(I)+D22*QY(I)+D23*QZ(I)                          STR 620
      RZQ(I)=QRZ+D31*QX(I)+D32*QY(I)+D33*QZ(I)                          STR 630
      IF (NS.GT.1) GO TO 10                                             STR 640
      RSXQ(I)=QRGX+DS11*QSX(I)+DS12*QSY(I)+DS13*QSZ(I)                  STR 650
      RSYQ(I)=QRGY+DS21*QSX(I)+DS22*QSY(I)+DS23*QSZ(I)                  STR 660
      RSZQ(I)=QRGZ+DS31*QSX(I)+DS32*QSY(I)+DS33*QSZ(I)                  STR 670
      GO TO 20                                                          STR 680
10    RSXQ(I)=QRGX+DC11*QSX(I)+DC12*QSY(I)+DC13*QSZ(I)                  STR 690
      RSYQ(I)=QRGY+DC21*QSX(I)+DC22*QSY(I)+DC23*QSZ(I)                  STR 700
      RSZQ(I)=QRGZ+DC31*QSX(I)+DC32*QSY(I)+DC33*QSZ(I)                  STR 710
C                                                                       STR 720
20    IF (IRET) 30,30,40                                                STR 730
30    QSF(I)=QSD(I)                                                     STR 740
      QSFT(I)=QSR(I)                                                    STR 750
40    AA(I)=RXQ(I)-RSXQ(I)                                              STR 760
      BB(I)=RYQ(I)-RSYQ(I)                                              STR 770
      CC(I)=RZQ(I)-RSZQ(I)                                              STR 780
C                                                                       STR 790
      S(I)=SQRT(AA(I)*AA(I)+BB(I)*BB(I)+CC(I)*CC(I))                    STR 800
C                                                                       STR 810
      UVQX(I)=AA(I)/S(I)                                                STR 820
      UVQY(I)=BB(I)/S(I)                                                STR 830
      UVQZ(I)=CC(I)/S(I)                                                STR 840
      CRUSH(I)=0.0                                                      STR 850
C                                                                       STR 860
      IF (IDUM-3) 50,60,60                                              STR 870
50    DDT=DT/2.0                                                        STR 880
      GO TO 70                                                          STR 890
60    DDT=DT                                                            STR 900
70    SVELQ(I)=(S(I)-QSQP(I))/DDT                                       STR 910
C                                                                       STR 920
C     LENGTH OF STRUT (I) DURING THE TIME INTERVAL DT                   STR 930
C                                                                       STR 940
      SQ(I)=S(I)                                                        STR 950
C                                                                       STR 960
      IF (IRET) 80,80,170                                               STR 970
80    IF (SQ(I)-SO(I)) 90,130,110                                       STR 980
90    IF (QSF(I)-(SQ(I)-SO(I))) 130,130,100                             STR 990
100   QSD(I)=QSF(I)                                                     STR1000
      GO TO 200                                                         STR1010
110   IF (QSFT(I)-(SQ(I)-SO(I))) 120,130,130                            STR1020
120   QSD(I)=QSFT(I)                                                    STR1030
      GO TO 200                                                         STR1040
130   FHCQ(I)=0.0                                                       STR1050
      IF (SVELQ(I)) 140,150,160                                         STR1060
140   FDQ(I)=1.0                                                        STR1070
      GO TO 450                                                         STR1080
150   FDQ(I)=0.0                                                        STR1090
      GO TO 450                                                         STR1100
160   FDQ(I)=-1.0                                                       STR1110
      GO TO 450                                                         STR1120
```

APPENDIX G

```
C
C     IF NEG ,STR IS COMP. ,IF ZERO - NO CHANGE ,IF POS - EXTEND.
C
170   IF (SVELQ(I)) 180,210,180
180   IF (ABS(SVELQ(I))*PVEL(I)/SVELQ(I)) 190,190,200
190   QSD(I)=QSR(I)
      GO TO 200
200   IF (SVELQ(I)) 220,210,330
C
C     FORP(I)= PREV.VALUE OF STROKE FORCE. FDQ(I)= FRICTION COEF.
C
C
C     STRUT IS NOT STROKING
C
210   FHCQ(I)=FORP(I)
      FDQ(I)=0.0
      QSD(I)=QSR(I)
      GO TO 450
C
C     STRUT IS COMPRESSING
C
220   FDQ(I)=1.0
      IF (SQ(I)-(SO(I)+QSD(I))) 260,230,240
C
C     STRUT HAS NOT CHANGED LENGTH
C
230   FHCQ(I)=0.0
      GO TO 450
C
C     STRUT IS LONGER THAN ORIGINAL
C
240   IF (SQ(I)-(SO(I)+QSHT)) 250,250,420
250   FHCQ(I)=-QCHT(I)*(SQ(I)-(SO(I)+QSD(I)))
      GO TO 450
C
C     STRUT IS SHORTER THAN ORIGINAL
C
260   IF (SQ(I)-((SO(I)+QSD(I))-FC(M,1)*COEF(M1,I)/QCH(I))) 280,280,270
C
C     ELASTIC STROKING
C
270   FHCQ(I)=QCH(I)*((SO(I)+QSD(I))-SQ(I))
      GO TO 450
C
C     PLASTIC CRUSHING OR AGAINST STOP
C
280   IF (SQ(I)-(SO(I)-QSH)) 290,310,310
C
C     AGAINST STOP
C
290   STL=(SO(I)-QSH)-SQ(I)
      NFLAG=3
      GO TO 780
300   QSR(I)=-QSH+QFC(I)*COEF(M1,I)/QCH(I)
      QSF(I)=QSR(I)
      FHCQ(I)=QFC(I)*COEF(M1,I)+QKT*((SO(I)+QSD(I))-SQ(I))
```

```
      GO TO 450                                                         STR1690
C                                                                       STR1700
C     PLASTIC CRUSHING                                                  STR1710
310   STL=(SO(I)+QSD(I))-SQ(I)                                          STR1720
      NFLAG=1                                                           STR1730
      GO TO 780                                                         STR1740
320   QSR(I)=SQ(I)+QFC(I)*COEF(M1,I)/QCH(I)-SO(I)                       STR1750
      QSF(I)=QSR(I)                                                     STR1760
      FHCQ(I)=QFC(I)*COEF(M1,I)                                         STR1770
      GO TO 440                                                         STR1780
C                                                                       STR1790
C                                                                       STR1800
C     STRUT IS EXTENDING                                                STR1810
C                                                                       STR1820
330   FDQ(I)=-1.0                                                       STR1830
      IF (SQ(I)-(SO(I)+QSD(I))) 340,360,370                             STR1840
C                                                                       STR1850
C     STRUT IS SHORTER THAN ORIGINAL                                    STR1860
C                                                                       STR1870
340   IF (SQ(I)-(SO(I)-QSH)) 290,350,350                                STR1880
350   FHCQ(I)=QCH(I)*((SO(I)+QSD(I))-SQ(I))                             STR1890
      GO TO 450                                                         STR1900
C                                                                       STR1910
360   FHCQ(I)=0.0                                                       STR1920
      GO TO 450                                                         STR1930
C                                                                       STR1940
C     STRUT IS LONGER THAN ORIGINAL                                     STR1950
C                                                                       STR1960
370   IF (SQ(I)-((SO(I)+QSD(I))+FC(M,1)*COEFT(M1,I)/QCH(I))) 380,390,390STR1970
C                                                                       STR1980
C     ELASTIC CRUSHING                                                  STR1990
C                                                                       STR2000
380   FHCQ(I)=-QCHT(I)*(SQ(I)-(SO(I)+QSD(I)))                           STR2010
      GO TO 450                                                         STR2020
C                                                                       STR2030
C     PLASTIC STROKING OR AGAINST STOP                                  STR2040
C                                                                       STR2050
390   IF (SQ(I)-(SO(I)+QSHT)) 400,400,420                               STR2060
C                                                                       STR2070
C     PLASTIC CRUSHING                                                  STR2080
C                                                                       STR2090
400   STL=SQ(I)-(SO(I)+QSD(I))                                          STR2100
      NFLAG=2                                                           STR2110
      GO TO 780                                                         STR2120
410   QSR(I)=SQ(I)-QFC(I)*COEFT(M1,I)/QCH(I)-SO(I)                      STR2130
      QSFT(I)=QSR(I)                                                    STR2140
      FHCQ(I)=-QFC(I)*COEFT(M1,I)                                       STR2150
      GO TO 440                                                         STR2160
C                                                                       STR2170
C     AGAINST STOP                                                      STR2180
C                                                                       STR2190
420   STL=SQ(I)-(SO(I)+QSD(I))                                          STR2200
      NFLAG=4                                                           STR2210
      GO TO 780                                                         STR2220
430   QSR(I)=QSHT-QFC(I)*COEFT(M1,I)/QCH(I)                             STR2230
      QSFT(I)=QSR(I)                                                    STR2240
```

APPENDIX G

```
      FHCQ(I)=QFC(I)*COEFT(M1,I)-QKT*(SQ(I)-(SO(I)+QSD(I)))
      GO TO 450
440   CRUSH(I)=ABS(SVELQ(I)*DT*FHCQ(I))
450   CONTINUE
      IF (IRET) 460,460,470
460   QSR(I)=QSFT(I)
      QSD(I)=QSF(I)
470   PVEL(I)=SVELQ(I)
C
C
C     TOTAL STRUT FORCE IS STATIC FORCE (FHCQ(I)) PLUS FRICTION FORCE
C     AND VISCOUS FORCE IF THEY EXIST
C
      IF (SQ(I)-SO(I)) 480,490,500
480   QFF=FFC(I)
      GO TO 510
490   QFF=0.0
      GO TO 510
500   QFF=FFT(I)
510   AVEL=ABS(SVELQ(I))
      CFF=1.0
      IF (AVEL-0.1) 520,520,530
520   CFF=SQRT(AVEL/0.1)
530   FQ(I)=FHCQ(I)+FDQ(I)*(CFF*QFF+QVIS*AVEL*AVEL*QDAMP)
C
C     FORCE COMPONENTS IN STRUT (I) IN FIXED COORD. SYSTEM
C
      FQX(I)=FQ(I)*UVQX(I)
      FQY(I)=FQ(I)*UVQY(I)
      FQZ(I)=FQ(I)*UVQZ(I)
      IF (NS.NE.1) GO TO 560
C
C     FORCE COMPONENTS IN STRUT (I) IN FOOTPAD COORD. SYSTEM
C
      FX=DS11*FQX(I)+DS21*FQY(I)+DS31*FQZ(I)
      FX=-FX
      FY=DS12*FQX(I)+DS22*FQY(I)+DS32*FQZ(I)
      FY=-FY
      FZ=DS13*FQX(I)+DS23*FQY(I)+DS33*FQZ(I)
      FZ=-FZ
      IF (NOFOR.NE.1) GO TO 540
      IF (NPRINT.EQ.JPRINT) WRITE (3) FX,FY,FZ
540   CONTINUE
C
C     DETERMINE ATTENUATOR GENERALIZED FORCES
C
      IF (NOMODE.EQ.0) GO TO 560
      KK3=3*I
      KK2=KK3-1
      KK1=KK3-2
      DO 550 JJ=1,NOMODE
550   GFA(JJ)=GFA(JJ)+FX*APHI(KK1,JJ)+FY*APHI(KK2,JJ)+FZ*APHI(KK3,JJ)
560   CONTINUE
C
C     SUM OF ALL STRUT FORCES ACTING ON PAYLOAD FROM ATTENUATORS
C     OR SECONDARY EQUIP. ITEM STRUTS
```

```
C
      QFX=0.
      QFY=0.0
      QFZ=0.0
      DO 570 I=1,N
      QFX=QFX+FQX(I)
      QFY=QFY+FQY(I)
      QFZ=QFZ+FQZ(I)
C
C     DETERMINE TORQUE ON PAYLOAD FROM ATTEN. OR SECONDARY EQUIP. ITEM
C
      TQX1(I)=QY(I)*(D13*FQX(I)+D23*FQY(I)+D33*FQZ(I))-QZ(I)*(D12*FQX(I)
     1+D22*FQY(I)+D32*FQZ(I))
      TQY1(I)=QZ(I)*(D11*FQX(I)+D21*FQY(I)+D31*FQZ(I))-QX(I)*(D13*FQX(I)
     1+D23*FQY(I)+D33*FQZ(I))
570   TQZ1(I)=QX(I)*(D12*FQX(I)+D22*FQY(I)+D32*FQZ(I))-QY(I)*(D11*FQX(I)
     1+D21*FQY(I)+D31*FQZ(I))
C
C     SUM ALL TORQUES ON SECONDARY EQUIP. ITEM FROM ATTEN. OR
C     SECONDARY EQUIP. ITEM STRUTS
      QTX1=0.0
      QTY1=0.0
      QTZ1=0.0
      DO 580 I=1,N
      QTX1=QTX1+TQX1(I)
      QTY1=QTY1+TQY1(I)
580   QTZ1=QTZ1+TQZ1(I)
C
C
C     IF(JKLM) EQUIP. STRUTS, EQUIP. STRUT, ATTENUATOR
C
C
      IF (JKLM) 680,680,590
C
590   DO 660 I=1,N
      IF (IREAL) 640,640,600
600   IF (FQ(I).LT.OFSMIN(I)) OFSMIN(I)=FQ(I)
      IF (FQ(I).GT.OFSMAX(I)) OFSMAX(I)=FQ(I)
      IF (SQ(I)-SC(I)) 610,610,620
610   QFF=FFC(I)
      GO TO 630
 20   QFF=FFT(I)
630   TSSQ(I)=TSSQ(I)+ABS(SVELQ(I)*QFF*DT)
      TOTSCR(I)=TOTSCR(I)+CRUSH(I)
C
C     DETERMINE TORQUE ON FOOTPAD FROM ATTEN.
C
640   TSQX2(I)=QSZ(I)*(DS12*FQX(I)+DS22*FQY(I)+DS32*FQZ(I))-QSY(I)*(DS13
     1*FQX(I)+DS23*FQY(I)+DS33*FQZ(I))
      TSQY2(I)=QSX(I)*(DS13*FQX(I)+DS23*FQY(I)+DS33*FQZ(I))-QSZ(I)*(DS11
     1*FQX(I)+DS21*FQY(I)+DS31*FQZ(I))
      TSQZ2(I)=QSY(I)*(DS11*FQX(I)+DS21*FQY(I)+DS31*FQZ(I))-QSX(I)*(DS12
     1*FQX(I)+DS22*FQY(I)+DS32*FQZ(I))
      IF (SQ(I).LT.(SO(I)-1.05*QSH)) GO TO 650
      IF (SQ(I).GT.(SO(I)+1.05*QSHT)) GO TO 650
      GO TO 660
```

APPENDIX G

```
650   ISTOP=4
      ISS=I
      IPRINT=1
660   CONTINUE
C
C     SUM TORQUES ON FOOTPAD FROM ATTEN.
C
C
      QTSX2=0.0
      QTSY2=0.0
      QTSZ2=0.0
C
      DO 670 I=1,N
      QTSX2=QTSX2+TSQX2(I)
      QTSY2=QTSY2+TSQY2(I)
670   QTSZ2=QTSZ2+TSQZ2(I)
C
C
      RETURN
C
C
C     DETERMINE TORQUE ON EQUIP. FROM EQUIP. STRUTS
C
680   DO 750 I=1,N
C
      IF (IREAL) 730,730,690
690   IF (FQ(I).LT.OFCMIN(I)) OFCMIN(I)=FQ(I)
      IF (FQ(I).GT.OFCMAX(I)) OFCMAX(I)=FQ(I)
      IF (SQ(I)-SO(I)) 700,700,710
700   QFF=FFC(I)
      GO TO 720
710   QFF=FFT(I)
720   TCSQ(I)=TCSQ(I)+ABS(SVELQ(I)*QFF*DT)
      TOTCCR(I)=TOTCCR(I)+CRUSH(I)
C
730   TCQX3(I)=QSZ(I)*(DC12*FQX(I)+DC22*FQY(I)+DC32*FQZ(I))-QSY(I)*(DC13
     1*FQX(I)+DC23*FQY(I)+DC33*FQZ(I))
      TCQY3(I)=QSX(I)*(DC13*FQX(I)+DC23*FQY(I)+DC33*FQZ(I))-QSZ(I)*(DC11
     1*FQX(I)+DC21*FQY(I)+DC31*FQZ(I))
      TCQZ3(I)=QSY(I)*(DC11*FQX(I)+DC21*FQY(I)+DC31*FQZ(I))-QSX(I)*(DC12
     1*FQX(I)+DC22*FQY(I)+DC32*FQZ(I))
      IF (SQ(I).LT.(SO(I)-1.05*QSH)) GO TO 740
      IF (SQ(I).GT.(SO(I)+1.05*QSHT)) GO TO 740
      GO TO 750
740   ISTOP=3
      IC=I
      IPRINT=1
750   CONTINUE
C
C     SUM TORQUES ON EQUIP. FROM EQUIP. STRUTS
C
      QTCX3=0.0
      QTCY3=0.0
      QTCZ3=0.0
C
      DO 760 I=1,N
```

```
      QTCX3=QTCX3+TCQX3(I)                                              STR3930
      QTCY3=QTCY3+TCQY3(I)                                              STR3940
760   QTCZ3=QTCZ3+TCQZ3(I)                                              STR3950
      RETURN                                                            STR4000
C                                                                       STR4010
780   J=1                                                               STR4020
790   IF (SLGTH(M,J)-STL) 800,810,820                                   STR4030
800   J=J+1                                                             STR4040
      IF (J.GT.6) GO TO 830                                             STR4050
      GO TO 790                                                         STR4060
810   QFC(I)=FC(M,J)                                                    STR4070
      GO TO (320,410,300,430), NFLAG                                    STR4080
820   IF (J.EQ.1) GO TO 840                                             STR4090
      QFC(I)=(STL-SLGTH(M,J-1))*(FC(M,J)-FC(M,J-1))/(SLGTH(M,J)-SLGTH(M,STR4100
     1J-1))+FC(M,J-1)                                                   STR4110
      GO TO (320,410,300,430), NFLAG                                    STR4120
830   QFC(I)=FC(M,6)                                                    STR4130
      GO TO (320,410,300,430), NFLAG                                    STR4140
840   QFC(I)=FC(M,1)                                                    STR4150
      GO TO (320,410,300,430), NFLAG                                    STR4160
C                                                                       STR4170
      END                                                               STR4190-
```

APPENDIX G

```
      SUBROUTINE FPSOIL
C
C     THIS SUBROUTINE DETERMINES THE FORCES ON THE FOOTPAD DUE TO
C     THE SOIL/FOOTPAD INTERACTION.  IN ADDITION, PROVISIONS FOR A
C     SECONDARY ATTENUATION SYSTEM ON THE BOTTOM OF THE FOOTPAD
C     ARE ALSO INCLUDED HERE.
C
      COMMON/L5A/DT,TMAX,IPRINT,ISTOP,IRUNNO,ISERNO,JPRINT,NPRINT,NOFOR
C
      COMMON/L5C/ZETA,PLM,SEQM,FPM,G
C
      COMMON/L7A/FSGX,FSGY,FSGZ,TSGX,TSGY,TSGZ,GFS(5), AREA, AREAM
C
      COMMON/L7B/QX(48),QY(48),QZ(48),QSQP(48),QSHT,QFC(48),QCH(48),QSH,
     1QSR(48),QFF,QVIS,QDAMP,QFX,QFY,QFZ,QTX1,QTY1,QTZ1,JKLM,N,QTSX2,
     2QTSY2,QTSZ2,QTCX3,QTCY3,QTCZ3,FORP(48),FHCQ(48),SO(48),QCHT(48),
     3QSRT(48),QSD(48),SQ(48),QRGX,QRGY,QRGZ,QVGX,QVGY,QVGZ,QWGX,QWGY,
     4QWGZ,QSX(48),QSY(48),QSZ(48),GFA(5)
C
      COMMON/L9A/IREAL,ICRKT3
C
      COMMON/L10/RINGX(7),RHO(7),AEL(6),UNX(6),UNY(6,30),UNZ(6,30),
     1SOILP(3),NTYPE,TC,DCM,CFM,THICK(6),INATT,GE,RNGENG,EX(6,30),
     2EY(6,30),EZ(6,30),NI(7),KA,IABCD1,EFRICT
C
      COMMON/L12/QRX(1),QRY,QRZ,QVX,QVY,QVZ,QWX,QWY,QWZ,
     1QRCX,QRCY,QRCZ,QVCX,QVCY,QVCZ,QWCX,QWCY,QWCZ,
     2QRSX,QRSY,QRSZ,QVSX,QVSY,QVSZ,QWSX,QWSY,QWSZ,
     3QPSI,QTHTA,QPHI,QPSIC,QTHTAC,QPHIC,QPSIS,QTHTAS,QPHIS,DUM55(964),
     4DTDUM,NN,KA1,MAP,IDUM
C
      COMMON/L25/NOMODE,OMEGA(5),SPHI(540,5),APHI(144,5),WNX(5),WNY(5),
     1WNZ(5),PX(5),PY(5),PZ(5),GF(5),GM(5),COORD(74,2),FPPHI(222,5),
     2NTCOR,IINP,NORUN,MORDER,NATT(102),NDIAM(3,5),ASPHI(18,5),
     3CGPHI(3,5),WMX(5,5),WMY(5,5),WMZ(5,5)     ,AMASS(102)
C
      COMMON/LIST8/D11,D12,D13,D21,D22,D23,D31,D32,D33,DS11,DS12,DS13,
     1DS21,DS22,DS23,DS31,DS32,DS33,DC11,DC12,DC13,DC21,DC22,DC23,
     2DC31,DC32,DC33
C
      DIMENSION D(7),Q(5),QD(5),TH(6,30)
C
      TIME=DUM55(2*NOMODE+1)
C
C     DETERMINE MAGNITUDE AND VELOCITY OF GENERALIZED COORDINATES
C
      IF (NOMODE.EQ.0) GO TO 20
      NQDP=NOMODE
      DO 10 JJ=1,NOMODE
      NQDP=NQDP+1
      Q(JJ)=DUM55(JJ)
10    QD(JJ)=DUM55(NQDP)
20    CONTINUE
      IF (TIME.GT.0.) GO TO 60
      PI=3.14159265
      DO 40 I=1,KA
```

APPENDIX G

```
      NELS=NI(I)                                                        FPS 570
      IF (INATT.EQ.0) GO TO 40                                          FPS 580
      DO 30 J=1,NELS                                                    FPS 590
30    TH(I,J)=TC*THICK(I)                                               FPS 600
40    CONTINUE                                                          FPS 610
C                                                                       FPS 620
C     DETERMINE SOIL MECHANICS ROUTINE TO BE USED                       FPS 630
C         NTYPE = 0 - PRIMARY SOIL MECHANICS                            FPS 640
C         NTYPE = 1 - SECONDARY SOIL MECHANICS                          FPS 650
C                                                                       FPS 660
      IF (NTYPE.EQ.1) GO TO 60                                          FPS 670
      PI2=PI/2.0                                                        FPS 680
      PI3=PI2*1.5                                                       FPS 690
      D(1)=0.0                                                          FPS 700
      KR=KA+1                                                           FPS 710
      DO 50 M=2,KR                                                      FPS 720
50    D(M)=RINGX(M)-RINGX(1)                                            FPS 730
      GR=G/GE                                                           FPS 740
      SLPHI=SOILP(1)/57.2958                                            FPS 750
      SLRHO=SOILP(2)/GE                                                 FPS 760
      DR=SOILP(3)                                                       FPS 770
      TANPHI=TAN(SLPHI)                                                 FPS 780
      SN=(1.+TANPHI)/(1.-TANPHI)                                        FPS 790
      CMS=29.*TANPHI*EXP(1.4*DR)                                        FPS 800
60    DELM=0.0                                                          FPS 810
C                                                                       FPS 820
C     SET SUMS EQUAL TO ZERO                                            FPS 830
C                                                                       FPS 840
      IF (NOMODE.EQ.0) GO TO 80                                         FPS 850
      DO 70 N=1,NOMODE                                                  FPS 860
70    GFS(N)=0.0                                                        FPS 870
      KK=1                                                              FPS 880
80    CONTINUE                                                          FPS 890
      AREA=0.0                                                          FPS 900
      AREAM=0.0                                                         FPS 910
      FSGX=0.0                                                          FPS 920
      FSGY=0.0                                                          FPS 930
      FSGZ=0.0                                                          FPS 940
      TSGX=0.0                                                          FPS 950
      TSGY=0.0                                                          FPS 960
      TSGZ=0.0                                                          FPS 970
      IF (NTYPE.EQ.1) GO TO 150                                         FPS 980
      RRD=0.0                                                           FPS 990
      RDD=0.                                                            FPS1000
C                                                                       FPS1010
C     CALCULATE MAX. FOOTPAD SOIL PENETRATION                           FPS1020
C                                                                       FPS1030
      IF (INATT.EQ.0) GO TO 100                                         FPS1040
      DELMA=0.0                                                         FPS1050
      ISAV=0                                                            FPS1060
      DO 90 I=1,KA                                                      FPS1070
      NELS=NI(I)                                                        FPS1080
      DO 90 J=1,NELS                                                    FPS1090
      DELA=-(DS11*EX(I,J)+DS12*EY(I,J)+DS13*EZ(I,J)+GRSX)               FPS1100
      IF (DELA.LT.0.0.OR.DELA.LT.DELMA) GO TO 90                        FPS1110
      DELMA=DELA                                                        FPS1120
```

APPENDIX G

```
      ISAV=I                                                            FPS1130
      JSAV=J                                                            FPS1140
90    CONTINUE                                                          FPS1150
      IF (ISAV.EQ.0.AND.NOMODE.EQ.0) GO TO 340                          FPS1160
      IF (ISAV.EQ.0) GO TO 150                                          FPS1170
      TEMP=TH(ISAV,JSAV)                                                FPS1180
      DAX=EX(ISAV,JSAV)-TEMP*UNX(ISAV)                                  FPS1190
      DAY=EY(ISAV,JSAV)-TEMP*UNY(ISAV,JSAV)                             FPS1200
      DAZ=EZ(ISAV,JSAV)-TEMP*UNZ(ISAV,JSAV)                             FPS1210
      DELM=ABS(DS11*DAX+DS12*DAY+DS13*DAZ+QRSX)                         FPS1220
      GO TO 120                                                         FPS1230
100   TEMP=SQRT(DS12*DS12+DS13*DS13)                                    FPS1240
      SIA=DS12**2/TEMP                                                  FPS1250
      COA=DS13**2/TEMP                                                  FPS1260
      DO 110 I=1,KA                                                     FPS1270
      DDEL=QRSX+DS11*EX(I,1)                                            FPS1280
      EYZ=SQRT(EZ(I,1)**2+EY(I,1)**2)                                   FPS1290
      TEMP=EYZ*(SIA+COA)                                                FPS1300
      DEL1=DDEL+TEMP                                                    FPS1310
      DEL2=DDEL-TEMP                                                    FPS1320
      TEMP=EYZ*(SIA-COA)                                                FPS1330
      DEL3=DDEL+TEMP                                                    FPS1340
      DEL4=DDEL-TEMP                                                    FPS1350
      DELX=-AMIN1(DEL1,DEL2,DEL3,DEL4)                                  FPS1360
      IF (DELX.GT.DELM) DELM=DELX                                       FPS1370
110   CONTINUE                                                          FPS1380
      IF (DELM.LE.0.) GO TO 150                                         FPS1390
C                                                                       FPS1400
C     CALCULATE CHANGE IN FOOTPAD RADIUS WITH DEPTH                     FPS1410
C                                                                       FPS1420
120   DO 130 M=2,KR                                                     FPS1430
      IF (DELM.GE.D(M-1).AND.DELM.LE.D(M)) GO TO 140                    FPS1440
130   CONTINUE                                                          FPS1450
      RDD=0.0                                                           FPS1460
      RRD=1.0                                                           FPS1470
      GO TO 150                                                         FPS1480
140   RDD=(RHO(M)-RHO(M-1))/(D(M)-D(M-1))                               FPS1490
      RD=RHO(M-1)+(DELX-D(M-1))*RDD                                     FPS1500
      RRD=(RD/RHO(KR))**2                                               FPS1510
C                                                                       FPS1520
C     DETERMINE FORCES ON EACH ELEMENTAL AREA                           FPS1530
C                                                                       FPS1540
150   DO 330 I=1,KA                                                     FPS1550
      NELS=NI(I)                                                        FPS1560
      DO 330 J=1,NELS                                                   FPS1570
      FZ=0.0                                                            FPS1580
      FY=0.0                                                            FPS1590
      QQX=EX(I,J)                                                       FPS1600
      QQY=EY(I,J)                                                       FPS1610
      QQZ=EZ(I,J)                                                       FPS1620
      IF (NOMODE.EQ.0) GO TO 170                                        FPS1630
      KQ=KK                                                             FPS1640
      DO 160 L=1,NOMODE                                                 FPS1650
      QQX=QQX+Q(L)*SPHI(KQ,L)                                           FPS1660
      QQY=QQY+Q(L)*SPHI(KQ+1,L)                                         FPS1670
      QQZ=QQZ+Q(L)*SPHI(KQ+2,L)                                         FPS1680
```

APPENDIX G

```
160   CONTINUE                                                          FPS1690
      KK=KK+3                                                           FPS1700
170   CONTINUE                                                          FPS1710
C                                                                       FPS1720
C     DETERMINE DISPLACEMENT OF CONTROL POINT                           FPS1730
C                                                                       FPS1740
      DEL=DS11*QQX+DS12*QQY+DS13*QQZ+QRSX                               FPS1750
      IF (DEL.GT.0.) GO TO 330                                          FPS1760
      DELX=-DEL                                                         FPS1770
C                                                                       FPS1780
C     COMPUTE VELOCITIES OF FOOTPAD CONTROL CONTACT POINT               FPS1790
C                                                                       FPS1800
      A1=QQZ*QWSY-QQX*QWSZ                                              FPS1810
      A2=QQX*QWSZ-QQZ*QWSX                                              FPS1820
      A3=QQY*QWSX-QQX*QWSY                                              FPS1830
      IF (NOMODE.EQ.0) GO TO 190                                        FPS1840
      DO 180 L=1,NOMODE                                                 FPS1850
      A1=A1+QD(L)*SPHI(KQ,L)                                            FPS1860
      A2=A2+QD(L)*SPHI(KQ+1,L)                                          FPS1870
      A3=A3+QD(L)*SPHI(KQ+2,L)                                          FPS1880
180   CONTINUE                                                          FPS1890
190   CONTINUE                                                          FPS1900
      VX=QVSX+(DS11*A1+DS12*A2+DS13*A3)                                 FPS1910
      VY=QVSY+(DS21*A1+DS22*A2+DS23*A3)                                 FPS1920
      VZ=QVSZ+(DS31*A1+DS23*A3+DS33*A3)                                 FPS1930
      VAP=(VX**2+VY**2+VZ**2)**.5                                       FPS1940
      VB=SQRT(VY**2+VZ**2)                                              FPS1950
      UNXF=UNX(I)*DS11+UNY(I,J)*DS12+UNZ(I,J)*DS13                      FPS1960
      UNYF=UNX(I)*DS21+UNY(I,J)*DS22+UNZ(I,J)*DS23                      FPS1970
      UNZF=UNX(I)*DS31+UNY(I,J)*DS32+UNZ(I,J)*DS33                      FPS1980
      IF (NTYPE.NE.1) GO TO 200                                         FPS1990
C                                                                       FPS2000
C     DETERMINE SOIL FORCES THROUGH SECONDARY SOILS ROUTINE             FPS2010
C                                                                       FPS2020
      PRESS=SOILP(2)*DELX                                               FPS2030
      IF (PRESS.GT.SOILP(3)) PRESS=SOILP(3)                             FPS2040
      FX=PRESS*AEL(I)                                                   FPS2050
      VBAR=ABS(VB)                                                      FPS2060
      COEFF=SOILP(1)                                                    FPS2070
      IF (VBAR.LT.(0.01553*GE)) COEFF=COEFF*SIN(VBAR*PI/(.01553*GE))    FPS2080
      FH=COEFF*FX                                                       FPS2090
      B=SOILP(2)*AEL(I)                                                 FPS2100
      GO TO 240                                                         FPS2110
C                                                                       FPS2120
C     DETERMINE SOIL FORCES THROUGH PRIMARY SOILS ROUTINE               FPS2130
C                                                                       FPS2140
200   CONTINUE                                                          FPS2150
      DT11=-VX/VAP                                                      FPS2160
      DT12=VY/VAP                                                       FPS2170
      DT13=VZ/VAP                                                       FPS2180
      IF (ABS(DT11).GT.1.) DT11=1.0                                     FPS2190
      THETAL=ACOS(DT11)                                                 FPS2200
      DT31=COS(THETAL-PI/2)                                             FPS2210
      THETAL=ACOS(ABS(DT11))                                            FPS2220
      IF (VX.GT.0) THETAL=PI-THETAL                                     FPS2230
      IF (THETAL.GE.PI3) GO TO 330                                      FPS2240
```

APPENDIX G

```
      TEMP=UNYF*DT12+UNZF*DT13                                          FPS2250
      UNV=TEMP+UNXF*DT11                                                FPS2260
      UNN=TEMP+UNXF*DT31                                                FPS2270
      AELFT=ABS(UNV)*AEL(I)                                             FPS2280
      AELPT=ABS(UNN)*AEL(I)                                             FPS2290
C                                                                       FPS2300
C     COMPUTE SEMIEMPERICAL SOIL RELATIONSHIPS                          FPS2310
C                                                                       FPS2320
      IF (THETAL.GE.PI2) AAR=ABS(TEMP+UNXF)/ABS(TEMP)                   FPS2330
      IF (THETAL.LT.PI2) AAR=AELPT/AELFT                                FPS2340
      THETAP=THETAL*57.2958                                             FPS2350
      IF (THETAL.LT.PI2) FTHET=1.-THETAL/PI2                            FPS2360
      IF (THETAL.GE.PI2) FTHET=0.0                                      FPS2370
      TEMP=FTHET*GR*TANPHI*RRD                                          FPS2380
      IF (DR.LT..5) CD=TEMP*(4.+80.*DR)+.8                              FPS2390
      IF (DR.GE..5) CD=4.*TEMP*EXP(4.83*DR)+.8                          FPS2400
      IF (THETAL-PI2) 210,220,220                                       FPS2410
210   XLAMB=.25*AAR*(1.-1./EXP(50.*THETAL))*(1.+SIN(THETAL))            FPS2420
      GO TO 230                                                         FPS2430
220   XLAMB=.5*AAR*(1.-(THETAL-PI2)/(PI3-PI2))                          FPS2440
230   DFAP=SLRHO*AELFT*(G*DELX*CMS+CD*VAP**2)                           FPS2450
      CTH=COS(THETAL)                                                   FPS2460
      STH=SIN(THETAL)                                                   FPS2470
      AEM=ABS(UNXF)*AEL(I)                                              FPS2480
      ARAD=(AELFT/AEM)**1.5                                             FPS2490
C                                                                       FPS2500
C     CALCULATE ELEMENTAL SOIL FORCE                                    FPS2510
C                                                                       FPS2520
      DMASS=(CTH*(SN*RDD*ARAD-1.))*VAP**2*SLRHO*AELFT                   FPS2530
      IF (DMASS.LT.0.0) DMASS=0.0                                       FPS2540
      FAP=DFAP+DMASS                                                    FPS2550
      FX=FAP*(CTH+XLAMB*STH)                                            FPS2560
      FH=FAP*(STH-XLAMB*CTH)                                            FPS2570
240   CONTINUE                                                          FPS2580
      IF (VB.EQ.0.0) GO TO 250                                          FPS2590
      FZ=-FH*VZ/VB                                                      FPS2600
      FY=-FH*VY/VB                                                      FPS2610
250   CONTINUE                                                          FPS2620
      AREA=AREA+AEL(I)                                                  FPS2630
C                                                                       FPS2640
C     CONVERT FORCE COMPONENTS TO FOOTPAD CORD. SYSTEM FOR MOMENT       FPS2650
C     CALCULATIONS                                                      FPS2660
C                                                                       FPS2670
      FXF=DS11*FX+DS21*FY+DS31*FZ                                       FPS2680
      FYF=DS12*FX+DS22*FY+DS32*FZ                                       FPS2690
      FZF=DS13*FX+DS23*FZ+DS33*FZ                                       FPS2700
      IF (INATT.EQ.0) GO TO 290                                         FPS2710
C                                                                       FPS2720
C     CALCULATE FORCES WITH ATTENUATOR                                  FPS2730
C                                                                       FPS2740
      IF (TH(I,J).EQ.0.0) GO TO 290                                     FPS2750
      IF (NTYPE.NE.1) GO TO 260                                         FPS2760
      C1=1.0                                                            FPS2770
      C2=-COEFF*VY/VB                                                   FPS2780
      C3=-COEFF*VZ/VB                                                   FPS2790
      GO TO 270                                                         FPS2800
```

APPENDIX G

```
260   CONTINUE                                                          FPS2810
      B=SLRHO*AELFT*G*CMS                                               FPS2820
      C1=CTH+XLAMB*STH                                                  FPS2830
      TEMP=XLAMB*CTH-STH                                                FPS2840
      C2=TEMP*VY/VB                                                     FPS2850
      C3=TEMP*VZ/VB                                                     FPS2860
270   CONTINUE                                                          FPS2870
      XMF=(DS11*C1+DS21*C2+DS31*C3)*ABS(UNXF)                           FPS2880
      NPLAS=0                                                           FPS2890
      AEAT=AEL(I)*ABS(UNX(I))                                           FPS2900
      DC=0.0                                                            FPS2910
      IF (DCM.NE.0.0) DC=FXF/(AEAT*CFM/DCM+B*XMF)                       FPS2920
      IF (DC.GE.DCM) DC=(FXF-CFM*AEAT)/(B*XMF)                          FPS2930
      IF (DC.LT.0.0) GO TO 290                                          FPS2940
      DCX=DC*ABS(UNXF)                                                  FPS2950
      IF (DELX.GT.DCX) GO TO 280                                        FPS2960
      DCXS=DCX                                                          FPS2970
      DCX=DELX                                                          FPS2980
      DCY=DC*UNYF                                                       FPS2990
      DCY=DCX/DCXS*DCY                                                  FPS3000
      DCZ=DC*UNZF                                                       FPS3010
      DCZ=DCX/DCXS*DCZ                                                  FPS3020
      DC=SQRT(DCX**2+DCY**2+DCZ**2)                                     FPS3030
280   CONTINUE                                                          FPS3040
      IF (DC.GT.TH(I,J)) DC=TH(I,J)                                     FPS3050
      IF (DC.GT.DCM.AND.DC.LE.TH(I,J)) NPLAS=1                          FPS3060
      FCRUSH=-CFM*AEL(I)                                                FPS3070
      IF (NPLAS.EQ.0) FCRUSH=FCRUSH*DC/DCM                              FPS3080
      FXF=FCRUSH*UNX(I)                                                 FPS3090
      FYF=FCRUSH*UNY(I,J)                                               FPS3100
      FZF=FCRUSH*UNZ(I,J)                                               FPS3110
      FX=FXF*DS11+FYF*DS12+FZF*DS13                                     FPS3120
      FY=FXF*DS21+FYF*DS22+FZF*DS23                                     FPS3130
      FZ=FXF*DS31+FYF*DS32+FZF*DS33                                     FPS3140
      QQX=QQX-DC*UNX(I)                                                 FPS3150
      QQY=QQY-DC*UNY(I,J)                                               FPS3160
      QQZ=QQZ-DC*UNZ(I,J)                                               FPS3170
      IF (NPLAS.EQ.0.OR.IREAL.NE.1) GO TO 290                           FPS3180
      DC=DC-DCM                                                         FPS3190
      TH(I,J)=TH(I,J)-DC                                                FPS3200
      IF (TH(I,J).LE.DCM) TH(I,J)=0.0                                   FPS3210
      EX(I,J)=EX(I,J)-DC*UNX(I)                                         FPS3220
      EY(I,J)=EY(I,J)-DC*UNY(I,J)                                       FPS3230
      EZ(I,J)=EZ(I,J)-DC*UNZ(I,J)                                       FPS3240
290   CONTINUE                                                          FPS3250
      TXF=FZF*QQY-FYF*QQZ                                               FPS3260
      TYF=FXF*QQZ-FZF*QQX                                               FPS3270
      TZF=FYF*QQX-FXF*QQY                                               FPS3280
C                                                                       FPS3290
C     SUM FORCES FROM FOOTPAD ELEMENTS                                  FPS3300
C                                                                       FPS3310
      FSGX=FSGX+FX                                                      FPS3320
      FSGY=FSGY+FY                                                      FPS3330
      FSGZ=FSGZ+FZ                                                      FPS3340
      TSGX=TSGX+TXF                                                     FPS3350
      TSGY=TSGY+TYF                                                     FPS3360
```

APPENDIX G

```
      TSGZ=TSGZ+TZF                                                     FPS3370
      IF (NOMODE.EQ.0) GO TO 310                                        FPS3380
C                                                                       FPS3390
C     COMPUTE GENERALIZED FORCES                                        FPS3400
C                                                                       FPS3410
      DO 300 N=1,NOMODE                                                 FPS3420
      GFS(N)=GFS(N)+FXF*SPHI(KQ,N)+FYF*SPHI(KQ+1,N)+FZF*SPHI(KQ+2,N)    FPS3430
300   CONTINUE                                                          FPS3440
310   CONTINUE                                                          FPS3450
      IF (AREA.GT.AREAM) AREAM=AREA                                     FPS3460
      IF (INATT.EQ.0) GO TO 320                                         FPS3470
      XPLAS=NPLAS                                                       FPS3480
320   CONTINUE                                                          FPS3490
      IF (NOFOR.NE.1) GO TO 330                                         FPS3500
      IF (NPRINT.EQ.JPRINT) WRITE (3) I,J,FXF,FYF,FZF                   FPS3510
330   CONTINUE                                                          FPS3520
      IF (NOFOR.NE.1) GO TO 340                                         FPS3530
      I=-10                                                             FPS3540
      IF (NPRINT.EQ.JPRINT) WRITE (3) I,J,FXF,FYF,FZF                   FPS3550
340   RETURN                                                            FPS3560
      END                                                               FPS3570-
```

APPENDIX G

```
      SUBROUTINE OUTPUT                                                 OUT  10
C                                                                       OUT  20
C     THIS SUBROUTINE STORES ALL DETAILED DATA FOR PRINTOUT AND PRINTS  OUT  30
C     IT WHEN A FULL PAGE IS AVAILABLE. DETERMINATION OF WHEN A PRINT   OUT  40
C     INTERVAL HAS BEEN REACHED IS LEFT TO THE MAIN EXECUTIVE PROGRAM   OUT  50
C                                                                       OUT  60
      DIMENSION Q(5),DQ(5),DDQ(5)                                       OUT  70
C                                                                       OUT  80
      COMMON/L1A/RXO(1),RYO,RZO,RXVELO,RYVELO,RZVELO,PSIO,THTAO,PHIO,   OUT  90
     1WXO,WYO,WZO,RCXO,RCYO,RCZO,CXVELO,CYVELO,CZVELO,DUM1(6),RSXO,     OUT 100
     2RSYO,RSZO,SXVELO,SYVELO,SZVELO,ZETAO                              OUT 110
C                                                                       OUT 120
      COMMON/L2/UXX,UYY,UZZ,UCXX,UCYY,UCZZ,USXX,USYY,USZZ,FCJK,FCLM,    OUT 130
     1UXY,UYZ,UXZ,UCXY,UCXZ,UCYZ,PLGNOF,PK,HSX1,HCX1,VISJK,VISLM,IP,   OUT 140
     2IT,JK,LM,JKDAMP,LMDAMP,NSPC,NSPS(48),NCPC                         OUT 150
C                                                                       OUT 160
      COMMON/L5A/DT,TMAX,IPRINT,ISTOP,IRUNNO,ISERNO,JPRINT,NPRINT,NOFOR OUT 170
C                                                                       OUT 180
      COMMON/L5B/OLCMAX(6),OLCMIN(6),OLSMAX(48),OLSMIN(48),JC,JS,OLCB(6)OUT 190
     1,OLCL(6),OLSB(48),OLSL(48),OMACX(7),OMACY(7),OMACZ(7),OMAX(7),    OUT 200
     2OMAY(7),OMAZ(7),OMASX(7),OMASY(7),OMASZ(7),ENGKE,OECS,ENGPE,OESS, OUT 210
     3OFFACT,ENGKEF,ENGTOT,AX1,AY1,AZ1,ACX3,ACY3,ACZ3,                  OUT 220
     4ASX2,ASY2,ASZ2,L1,ICRKT2                                          OUT 230
C                                                                       OUT 240
      COMMON/L5C/ZETA,PLM,SEQM,FPM,G                                    OUT 250
C                                                                       OUT 260
      COMMON/L5D/IC,ISS,OFCMAX(6),OFCMIN(6),OFSMAX(48),OFSMIN(48),      OUT 270
     1TSSQ(48),TCSQ(6),TOTSCR(48),TOTCCR(6)                             OUT 280
C                                                                       OUT 290
      COMMON/L6A/SLJKO(6),SLLMO(48)                                     OUT 300
C                                                                       OUT 310
      COMMON/L7A/FSGX,FSGY,FSGZ,TSGX,TSGY,TSGZ,GFS(5), AREA, AREAM      OUT 320
C                                                                       OUT 330
      COMMON/L9B/SHCJK,SHCJKT,SHCLM,SHCLMT,CTJK,CTLM,GKT                OUT 340
C                                                                       OUT 350
      COMMON/L10/RINGX(7),RHO(7),AEL(6),UNX(6),UNY(6,30),UNZ(6,30),     OUT 360
     1SOILP(3),NTYPE,TC,DCM,CFM,THICK(6),INATT,GL,RNGENG,EX(6,30),      OUT 370
     2EY(6,30),EZ(6,30),NI(7),KA,IABCD1,EFRICT                          OUT 380
C                                                                       OUT 390
      COMMON/L11/AA1(3,6),AA2(3,6),AA3(3,6),CAP(3,6),CCH(3,6),CHS(3,6), OUT 400
     1IACCEL,NOACAP,NOACCH,NOACHS                                       OUT 410
C                                                                       OUT 420
      COMMON/L12/RX(1),RY,RZ,RXVEL,RYVEL,RZVEL,WX,WY,WZ,                OUT 430
     1RCX,RCY,RCZ,RCXVEL,RCYVEL,RCZVEL,WCX,WCY,WCZ,                     OUT 440
     2RSX,RSY,RSZ,RSXVEL,RSYVEL,RSZVEL,WSX,WSY,WSZ,                     OUT 450
     3QPSI,QTHTA,QPHI,QPSIC,QTHTAC,QPHIC,QPSIS,QTHTAS,QPHIS,DUM55(964), OUT 460
     4DTDUM,NN,KA1,MAP,IDUM                                             OUT 470
C                                                                       OUT 480
      COMMON/L22/PXVEL,PYVEL,PZVEL,APX1,APY1,APZ1,RPX,RPY,RPZ,FPPX,FPPY,OUT 490
     1FPPZ,TPPX1,TPPY1,TPPZ1,FPX,FPY,FPZ,PHITE,IPARA,NPAR,ICRKT9,PNRG  OUT 500
C                                                                       OUT 510
      COMMON/L25/NOMODE,OMEGA(5),SPHI(540,5),APHI(144,5),WNX(5),WNY(5), OUT 520
     1WNZ(5),PX(5),PY(5),PZ(5),GF(5),GM(5),COORD(74,2),FPPHI(222,5),    OUT 530
     2NTCOR,IINP,NORUN,MORDER,NATT(102),NDIAM(3,5),ASPHI(18,5),         OUT 540
     3CGPHI(3,5),WMX(5,5),WMY(5,5),WMZ(5,5)     ,AMASS(102)             OUT 550
C                                                                       OUT 560
```

APPENDIX G

```
      COMMON/LIST8/D11,D12,D13,D21,D22,D23,D31,D32,D33,DS11,DS12,DS13,
     1DS21,DS22,DS23,DS31,DS32,DS33,DC11,DC12,DC13,DC21,DC22,DC23,
     2DC31,DC32,DC33
C
      COMMON/MO/FORJK(6),SLJK(6),CHJKT(6),CHJK(6),SRJKT(6),SRJK(6),
     1SDJK(6),VELJK(6),FORLM(48),SLLM(48),CHLMT(48),CHLM(48),SRLMT(48),
     2SRLM(48),SDLM(48),VELLM(48)
C
      DIMENSION
     1    OX(25),    OY(25),    OZ(25),   ODX(25),   ODY(25),
     2   ODZ(25),  OPSI(25), ODPSI(25), OTHTA(25),ODTHTA(25),
     3  OPHI(25), ODPHI(25),   OCX(25),   OCY(25),   OCZ(25),
     4  OCDX(25),  OCDY(25),  OCDZ(25), OCPSI(25),OCDPSI(25),
     5OCTHTA(25),OCDTHT(25), OCPHI(25), OCDPHI(25),   OSX(25),
     6   OSY(25),   OSZ(25),    TM(25),  OSDX(25),  OSDY(25),
     7  OSDZ(25), OSPSI(25),OSDPSI(25),OSTHTA(25),OSDTHT(25),
     8 OSPHI(25),OSDPHI(25),  OLC1(25),  OLC2(25),  OLC3(25),
     9  OLC4(25),  OLC5(25),  OLC6(25),   OLS(48,25),OFS(25),
     $ OAREA(25),   OAX(25),   OAY(25),   OAZ(25),
     $  OACX(25),  OACY(25),  OACZ(25),  OASX(25),  OASY(25),  OASZ(25),
     $  OAA1(18,25),          OAA2(18,25),          OAA3(18,25)
     $,    OQ(25,5)
     $,OAPSI(25),OATHT(25),OAPHI(25),OACPSI(25),OACTHT(25),OACPHI(25),
     $OASPSI(25),OASTHT(25),OASPHI(25)
C
      DATA NOP/3HNO./
C
      DEGRAD=57.2957795131
      IF (NOMODE.EQ.0) GO TO 20
      NQD=1+NN+NOMODE
      NQDP=NOMODE
      DO 10 JJ=1,NOMODE
      NQD=NQD+1
      NQDP=NQDP+1
      Q(JJ)=DUM55(JJ)
      DQ(JJ)=DUM55(NQDP)
10    DDQ(JJ)=DUM55(NQD)
20    CONTINUE
C
C     SAVE PAYLOAD DISPLACEMENTS AND VELOCITIES
C
      TM(L1)=DUM55(2*NOMODE+1)
      OX(L1)=RX(1)
      OY(L1)=RY
      OZ(L1)=RZ
      ODX(L1)=RXVEL
      ODY(L1)=RYVEL
      ODZ(L1)=RZVEL
      OPSI(L1)=QPSI*DEGRAD
      ODPSI(L1)=WZ*DEGRAD
      OTHTA(L1)=QTHTA*DEGRAD
      ODTHTA(L1)=WY*DEGRAD
      OPHI(L1)=QPHI*DEGRAD
      ODPHI(L1)=WX*DEGRAD
C
C     SAVE EQUIPMENT DISPLACEMENTS AND VELOCITIES
```

APPENDIX G

```
C
      OCX(L1)=RCX                                                       OUT1130
      OCY(L1)=RCY                                                       OUT1140
      OCZ(L1)=RCZ                                                       OUT1150
      OCDX(L1)=RCXVEL                                                   OUT1160
      OCDY(L1)=RCYVEL                                                   OUT1170
      OCDZ(L1)=RCZVEL                                                   OUT1180
      OCPSI(L1)=QPSIC*DEGRAD                                            OUT1190
      OCDPSI(L1)=WCZ*DEGRAD                                             OUT1200
      OCTHTA(L1)=QTHTAC*DEGRAD                                          OUT1210
      OCDTHT(L1)=WCY*DEGRAD                                             OUT1220
      OCPHI(L1)=QPHIC*DEGRAD                                            OUT1230
      OCDPHI(L1)=WCX*DEGRAD                                             OUT1240
C                                                                       OUT1250
C     SAVE FOOTPAD DISPLACEMENTS AND VELOCITIES                         OUT1260
C                                                                       OUT1270
      OSX(L1)=RSX                                                       OUT1280
      OSY(L1)=RSY                                                       OUT1290
      OSZ(L1)=RSZ                                                       OUT1300
      OSDX(L1)=RSXVEL                                                   OUT1310
      OSDY(L1)=RSYVEL                                                   OUT1320
      OSDZ(L1)=RSZVEL                                                   OUT1330
      OSPSI(L1)=QPSIS*DEGRAD                                            OUT1340
      OSDPSI(L1)=WSZ*DEGRAD                                             OUT1350
      OSTHTA(L1)=QTHTAS*DEGRAD                                          OUT1360
      OSDTHT(L1)=WSY*DEGRAD                                             OUT1370
      OSPHI(L1)=QPHIS*DEGRAD                                            OUT1380
      OSDPHI(L1)=WSX*DEGRAD                                             OUT1390
      IF (NOMODE.EQ.0) GO TO 40                                         OUT1400
      OSXP=0.0                                                          OUT1410
      OSYP=0.0                                                          OUT1420
      OSZP=0.0                                                          OUT1430
      OSXV=0.0                                                          OUT1440
      OSYV=0.0                                                          OUT1450
      OSZV=0.0                                                          OUT1460
      OSXA=0.0                                                          OUT1470
      OSYA=0.0                                                          OUT1480
      OSZA=0.0                                                          OUT1490
      DO 30 JJ=1,NOMODE                                                 OUT1500
      OSXP=OSXP+CGPHI(1,JJ)*Q(JJ)                                       OUT1510
      OSYP=OSYP+CGPHI(2,JJ)*Q(JJ)                                       OUT1520
      OSZP=OSZP+CGPHI(3,JJ)*Q(JJ)                                       OUT1530
      OSXV=OSXV+CGPHI(1,JJ)*DQ(JJ)+(WSY*CGPHI(3,JJ)-WSZ*CGPHI(2,JJ))*Q(JOUT1550
     1J)                                                                OUT1560
      OSYV=OSYV+CGPHI(2,JJ)*DQ(JJ)+(WSZ*CGPHI(3,JJ)-WSX*CGPHI(1,JJ))*Q(JOUT1570
     1J)                                                                OUT1580
      OSZV=OSZV+CGPHI(3,JJ)*DQ(JJ)+(WSX*CGPHI(1,JJ)-WSY*CGPHI(3,JJ))*Q(JOUT1590
     1J)                                                                OUT1600
30    CONTINUE                                                          OUT1610
      OSX(L1)=OSX(L1)+OSXP*DS11+OSYP*DS12+OSZP*DS13                     OUT1620
      OSY(L1)=OSY(L1)+OSXP*DS21+OSYP*DS22+OSZP*DS23                     OUT1630
      OSZ(L1)=OSZ(L1)+OSXP*DS31+OSYP*DS32+OSZP*DS33                     OUT1640
      OSDX(L1)=OSDX(L1)+OSXV*DS11+OSYV*DS12+OSZV*DS13                   OUT1650
      OSDY(L1)=OSDY(L1)+OSXV*DS21+OSYV*DS22+OSZV*DS23                   OUT1660
      OSDZ(L1)=OSDZ(L1)+OSXV*DS31+OSYV*DS32+OSZV*DS33                   OUT1670
40    CONTINUE                                                          OUT1680
```

APPENDIX G

```
C
C     SAVE GENERALIZED COORDINATE TIME HISTORIES
C
      DO 50 J=1,NOMODE
50    OQ(L1,J)=Q(J)
C
C     SAVE STROKE IN EQUIPMENT STRUTS
C
      IF (NCPC.EQ.0) GO TO 60
      OLC1(L1)=SLJK(1)-SLJKO(1)
      OLC2(L1)=SLJK(2)-SLJKO(2)
      OLC3(L1)=SLJK(3)-SLJKO(3)
      OLC4(L1)=SLJK(4)-SLJKO(4)
      OLC5(L1)=SLJK(5)-SLJKO(5)
      OLC6(L1)=SLJK(6)-SLJKO(6)
C
C     SAVE STROKE IN ATTENUATOR STRUTS
C
60    IF (NSPC.EQ.0) GO TO 80
      DO 70 I=1,NSPC
      J=NSPS(I)
70    OLS(I,L1)=SLLM(J)-SLLMO(J)
C
C     SAVE C.G. ACCELERATIONS
C
80    OAREA(L1)=AREA
      OFG(L1)=FSGX
      IF (TM(L1).EQ.0.0) OFG(L1)=0.0
      IF (TM(L1).EQ.0.0) OAREA(L1)=0.0
      NQD=NOMODE+NOMODE+1
      OAX(L1)=DUM55(NQD+4)
      OAY(L1)=DUM55(NQD+5)
      OAZ(L1)=DUM55(NQD+6)
      OACX(L1)=DUM55(NQD+13)
      OACY(L1)=DUM55(NQD+14)
      OACZ(L1)=DUM55(NQD+15)
      OASX(L1)=DUM55(NQD+22)
      OASY(L1)=DUM55(NQD+23)
      OASZ(L1)=DUM55(NQD+24)
      IF (NOMODE.EQ.0) GO TO 100
      ANGX=DUM55(NQD+25)
      ANGY=DUM55(NQD+26)
      ANGZ=DUM55(NQD+27)
      DO 90 JJ=1,NOMODE
      OSXA=OSXA+CGPHI(1,JJ)*DDQ(JJ)+(-(WSY**2+WSZ**2)*CGPHI(1,JJ)+(WSX*W
     1SY-ANGZ)*CGPHI(2,JJ)+(WSX*WSZ+ANGY)*CGPHI(3,JJ))*Q(JJ)+2.*(WSY*CGP
     2HI(3,JJ)-WSZ*CGPHI(2,JJ))*DQ(JJ)
      OSYA=OSYA+CGPHI(2,JJ)*DDQ(JJ)+(-(WSX**2+WSZ**2)*CGPHI(2,JJ)+(WSY*W
     1SZ-ANGX)*CGPHI(3,JJ)+(WSX*WSY+ANGZ)*CGPHI(1,JJ))*Q(JJ)+2.*(WSZ*CGP
     2HI(1,JJ)-WSX*CGPHI(3,JJ))*DQ(JJ)
      OSZA=OSZA+CGPHI(3,JJ)*DDQ(JJ)+(-(WSX**2+WSY**2)*CGPHI(3,JJ)+(WSX*W
     1SZ-ANGY)*CGPHI(1,JJ)+(WSY*WSZ+ANXX)*CGPHI(2,JJ))*Q(JJ)+2.*(WSX*CGP
     2HI(2,JJ)-WSY*CGPHI(1,JJ))*DQ(JJ)
90    CONTINUE
      OASX(L1)=OASX(L1)+OSXA*DS11+OSYA*DS12+OSZA*DS13
      OASY(L1)=OASY(L1)+OSXA*DS21+OSYA*DS22+OSZA*DS23
```

APPENDIX G

```
      OASZ(L1)=OASZ(L1)+OSXA*DS31+OSYA*DS32+OSZA*DS33                   OUT2250
100   CONTINUE                                                          OUT2260
C                                                                       OUT2270
C     MAXIMUM FOOTPAD ACCEL.                                            OUT2280
C                                                                       OUT2290
      IF (ABS(OASX(L1)).GT.ABS(OMASX(1))) OMASX(1)=OASX(L1)             OUT2300
      IF (ABS(OASY(L1)).GT.ABS(OMASY(1))) OMASY(1)=OASY(L1)             OUT2310
      IF (ABS(OASZ(L1)).GT.ABS(OMASZ(1))) OMASZ(1)=OASZ(L1)             OUT2320
C                                                                       OUT2330
C     SAVE ANGULAR ACCELERATIONS                                        OUT2340
C                                                                       OUT2350
      NQD=2*NOMODE+1                                                    OUT2360
      OAPSI(L1)=DUM55(NQD+9)*DEGRAD                                     OUT2370
      OATHT(L1)=DUM55(NQD+8)*DEGRAD                                     OUT2380
      OAPHI(L1)=DUM55(NQD+7)*DEGRAD                                     OUT2390
      OACPSI(L1)=DUM55(NQD+18)*DEGRAD                                   OUT2400
      OACTHT(L1)=DUM55(NQD+17)*DEGRAD                                   OUT2410
      OACPHI(L1)=DUM55(NQD+16)*DEGRAD                                   OUT2420
      OASPSI(L1)=DUM55(NQD+27)*DEGRAD                                   OUT2430
      OASTHT(L1)=DUM55(NQD+26)*DEGRAD                                   OUT2440
      OASPHI(L1)=DUM55(NQD+25)*DEGRAD                                   OUT2450
C                                                                       OUT2460
C     SAVE ACCELEROMETERS READINGS                                      OUT2470
C                                                                       OUT2480
      IF (IACCEL.LE.0) GO TO 110                                        OUT2490
      OAA1(1,L1)=AA1(1,1)                                               OUT2500
      OAA1(2,L1)=AA1(2,1)                                               OUT2510
      OAA1(3,L1)=AA1(3,1)                                               OUT2520
      OAA1(4,L1)=AA1(1,2)                                               OUT2530
      OAA1(5,L1)=AA1(2,2)                                               OUT2540
      OAA1(6,L1)=AA1(3,2)                                               OUT2550
      OAA1(7,L1)=AA1(1,3)                                               OUT2560
      OAA1(8,L1)=AA1(2,3)                                               OUT2570
      OAA1(9,L1)=AA1(3,3)                                               OUT2580
      OAA1(10,L1)=AA1(1,4)                                              OUT2590
      OAA1(11,L1)=AA1(2,4)                                              OUT2600
      OAA1(12,L1)=AA1(3,4)                                              OUT2610
      OAA1(13,L1)=AA1(1,5)                                              OUT2620
      OAA1(14,L1)=AA1(2,5)                                              OUT2630
      OAA1(15,L1)=AA1(3,5)                                              OUT2640
      OAA1(16,L1)=AA1(1,6)                                              OUT2650
      OAA1(17,L1)=AA1(2,6)                                              OUT2660
      OAA1(18,L1)=AA1(3,6)                                              OUT2670
      OAA2(1,L1)=AA2(1,1)                                               OUT2680
      OAA2(2,L1)=AA2(2,1)                                               OUT2690
      OAA2(3,L1)=AA2(3,1)                                               OUT2700
      OAA2(4,L1)=AA2(1,2)                                               OUT2710
      OAA2(5,L1)=AA2(2,2)                                               OUT2720
      OAA2(6,L1)=AA2(3,2)                                               OUT2730
      OAA2(7,L1)=AA2(1,3)                                               OUT2740
      OAA2(8,L1)=AA2(2,3)                                               OUT2750
      OAA2(9,L1)=AA2(3,3)                                               OUT2760
      OAA2(10,L1)=AA2(1,4)                                              OUT2770
      OAA2(11,L1)=AA2(2,4)                                              OUT2780
      OAA2(12,L1)=AA2(3,4)                                              OUT2790
      OAA2(13,L1)=AA2(1,5)                                              OUT2800
```

APPENDIX G

```
      OAA2(14,L1)=AA2(2,5)                                              OUT2810
      OAA2(15,L1)=AA2(3,5)                                              OUT2820
      OAA2(16,L1)=AA2(1,6)                                              OUT2830
      OAA2(17,L1)=AA2(2,6)                                              OUT2840
      OAA2(18,L1)=AA2(3,6)                                              OUT2850
      OAA3(1,L1)=AA3(1,1)                                               OUT2860
      OAA3(2,L1)=AA3(2,1)                                               OUT2870
      OAA3(3,L1)=AA3(3,1)                                               OUT2880
      OAA3(4,L1)=AA3(1,2)                                               OUT2890
      OAA3(5,L1)=AA3(2,2)                                               OUT2900
      OAA3(6,L1)=AA3(3,2)                                               OUT2910
      OAA3(7,L1)=AA3(1,3)                                               OUT2920
      OAA3(8,L1)=AA3(2,3)                                               OUT2930
      OAA3(9,L1)=AA3(3,3)                                               OUT2940
      OAA3(10,L1)=AA3(1,4)                                              OUT2950
      OAA3(11,L1)=AA3(2,4)                                              OUT2960
      OAA3(12,L1)=AA3(3,4)                                              OUT2970
      OAA3(13,L1)=AA3(1,5)                                              OUT2980
      OAA3(14,L1)=AA3(2,5)                                              OUT2990
      OAA3(15,L1)=AA3(3,5)                                              OUT3000
      OAA3(16,L1)=AA3(1,6)                                              OUT3010
      OAA3(17,L1)=AA3(2,6)                                              OUT3020
      OAA3(18,L1)=AA3(3,6)                                              OUT3030
C                                                                       OUT3040
C                                                                       OUT3050
C     IF IPRINT = 0 , CONTINUE .    IF IPRINT = 1 , RUN IS OVER . PRINT OUT3060
C     FINAL SUMMARY                                                     OUT3070
C                                                                       OUT3080
110   IF (IPRINT) 120,120,130                                           OUT3090
C                                                                       OUT3100
120   L1=L1+1                                                           OUT3110
      IF (L1.LE.25) RETURN                                              OUT3120
C                                                                       OUT3130
      L1=L1-1                                                           OUT3140
C                                                                       OUT3150
C     PRINT PAYLOAD DISPLACEMENTS AND VELOCITIES                        OUT3160
C                                                                       OUT3170
130   WRITE (IT,330)                                                    OUT3180
      WRITE (IT,340)                                                    OUT3190
      WRITE (IT,350)                                                    OUT3200
      WRITE (IT,360) (TM(K),OX(K),ODX(K),OY(K),ODY(K),OZ(K),ODZ(K),OPSI(OUT3210
     1K),ODPSI(K),OTHTA(K),ODTHTA(K),OPHI(K),ODPHI(K),K=1,L1)           OUT3220
C                                                                       OUT3230
C     PRINT EQUIPMENT DISPLACEMENTS AND VELOCITIES                      OUT3240
C                                                                       OUT3250
      WRITE (IT,370)                                                    OUT3260
      WRITE (IT,340)                                                    OUT3270
      WRITE (IT,350)                                                    OUT3280
      WRITE (IT,360) (TM(K),OCX(K),OCDX(K),OCY(K),OCDY(K),OCZ(K),OCDZ(K)OUT3290
     1,OCPSI(K),OCDPSI(K),OCTHTA(K),OCDTHT(K),OCPHI(K),OCDPHI(K),K=1,L1)OUT3300
C                                                                       OUT3310
C     PRINT FOOTPAD DISPLACEMENTS AND VELOCITIES                        OUT3320
C                                                                       OUT3330
      WRITE (IT,380)                                                    OUT3340
      WRITE (IT,340)                                                    OUT3350
      WRITE (IT,350)                                                    OUT3360
```

APPENDIX G

```
      WRITE (IT,360) (TM(K),OSX(K),OSDX(K),OSY(K),OSDY(K),OSZ(K),OSDZ(K)OUT3370
     1,OSPSI(K),OSDPSI(K),OSTHTA(K),OSDTHT(K),OSPHI(K),OSDPHI(K),K=1,L1)OUT3380
C                                                                       OUT3390
C     PRINT C.G. ACCELERATIONS                                          OUT3400
C                                                                       OUT3410
      WRITE (IT,400)                                                    OUT3420
      WRITE (IT,410)                                                    OUT3430
      WRITE (IT,420)                                                    OUT3440
      WRITE (IT,430) (TM(K),OAREA(K),OFG(K),OAX(K),OAY(K),OAZ(K),OACX(K)OUT3450
     1,OACY(K),OACZ(K),OASX(K),OASY(K),OASZ(K),K=1,L1)                  OUT3460
C                                                                       OUT3470
C     PRINT ANGULAR ACCELERATIONS ABOUT C.G.                            OUT3480
C                                                                       OUT3490
      WRITE (6,830)                                                     OUT3500
      WRITE (6,840)                                                     OUT3510
      WRITE (6,850)                                                     OUT3520
      WRITE (6,860) (TM(K),OAPSI(K),OATHT(K),OAPHI(K),OACPSI(K),OACTHT(KOUT3530
     1),OACPHI(K),OASPSI(K),OASTHT(K),OASPHI(K),K=1,L1)                 OUT3540
C                                                                       OUT3550
C     PRINT GENERALIZED COORDINATE TIME HISTORIES                       OUT3560
C                                                                       OUT3570
      IF (NOMODE.EQ.0) GO TO 150                                        OUT3580
      WRITE (6,730)                                                     OUT3590
      WRITE (6,740)                                                     OUT3600
      DO 140 K=1,L1                                                     OUT3610
140   WRITE (6,750) TM(K),(OQ(K,JJ),JJ=1,NOMODE)                        OUT3620
150   CONTINUE                                                          OUT3630
C                                                                       OUT3640
C     PRINT STROKE IN EQUIPMENT STRUTS                                  OUT3650
C                                                                       OUT3660
      IF (NCPC.EQ.0) GO TO 160                                          OUT3670
      WRITE (6,820)                                                     OUT3680
      WRITE (6,810) (I,I=1,6)                                           OUT3690
      WRITE (6,800) (TM(K),OLC1(K),OLC2(K),OLC3(K),OLC4(K),OLC5(K),OLC6(OUT3700
     1K),K=1,L1)                                                        OUT3710
C                                                                       OUT3720
C     PRINT STROKE IN ATTENUATOR STRUTS                                 OUT3730
C                                                                       OUT3740
160   IF (NSPC.EQ.0) GO TO 190                                          OUT3750
      NSTART=-17                                                        OUT3760
      NEND=0                                                            OUT3770
170   NSTART=NSTART+18                                                  OUT3780
      NEND=NEND+18                                                      OUT3790
      IF (NEND.GT.NSPC) NEND=NSPC                                       OUT3800
      WRITE (6,760)                                                     OUT3810
      WRITE (6,780) (NOP,NSPS(I),I=NSTART,NEND)                         OUT3820
      DO 180 K=1,L1                                                     OUT3830
      WRITE (6,770) TM(K),(OLS(I,K),I=NSTART,NEND)                      OUT3840
      IF ((NEND-NSTART).NE.18) WRITE (6,790)                            OUT3850
180   CONTINUE                                                          OUT3860
      IF (NEND-NSPC) 170,190,190                                        OUT3870
190   CONTINUE                                                          OUT3880
C                                                                       OUT3890
C     PRINT ACCELEROMETER READINGS                                      OUT3900
C                                                                       OUT3910
      IF (IACCEL.LE.0) GO TO 220                                        OUT3920
```

APPENDIX G

```
      IF (NOACCH.LE.0) GO TO 200                                        OUT3930
      WRITE (6,660)                                                     OUT3940
      WRITE (6,690)                                                     OUT3950
      WRITE (6,710)                                                     OUT3960
      WRITE (6,720) (TM(K),(OAA3(K,I),I=1,9),K=1,L1)                    OUT3970
      IF (NOACCH.LE.3) GO TO 200                                        OUT3980
      WRITE (6,660)                                                     OUT3990
      WRITE (6,700)                                                     OUT4000
      WRITE (6,710)                                                     OUT4010
      WRITE (6,720) (TM(K),(OAA3(K,I),I=10,18),K=1,L1)                  OUT4020
200   IF (NOACAP.LE.0) GO TO 210                                        OUT4030
      WRITE (6,670)                                                     OUT4040
      WRITE (6,690)                                                     OUT4050
      WRITE (6,710)                                                     OUT4060
      WRITE (6,720) (TM(K),(OAA1(K,I),I=1,9),K=1,L1)                    OUT4070
      IF (NOACAP.LE.3) GO TO 210                                        OUT4080
      WRITE (6,670)                                                     OUT4090
      WRITE (6,700)                                                     OUT4100
      WRITE (6,710)                                                     OUT4110
      WRITE (6,720) (TM(K),(OAA1(K,I),I=10,18),K=1,L1)                  OUT4120
210   IF (NOACHS.LE.0) GO TO 220                                        OUT4130
      WRITE (6,680)                                                     OUT4140
      WRITE (6,690)                                                     OUT4150
      WRITE (6,710)                                                     OUT4160
      WRITE (6,720) (TM(K),(OAA2(K,I),I=1,9),K=1,L1)                    OUT4170
      IF (NOACHS.LE.3) GO TO 220                                        OUT4180
      WRITE (6,680)                                                     OUT4190
      WRITE (6,700)                                                     OUT4200
      WRITE (6,710)                                                     OUT4210
      WRITE (6,720) (TM(K),(OAA2(K,I),I=10,18),K=1,L1)                  OUT4220
220   IF (IPRINT) 230,230,240                                           OUT4230
C                                                                       OUT4240
230   L1=1                                                              OUT4250
      RETURN                                                            OUT4260
C                                                                       OUT4270
C     SET UP FOR FINAL SUMMARY PRINTOUT                                 OUT4280
C                                                                       OUT4290
240   WRITE (IP,440) ISERNO,IRUNNO,RXVELO,RYVELO,RZVELO                 OUT4300
      WRITE (IP,450) WXO,WYO,WZO                                        OUT4310
      WRITE (IP,470) ZETAO                                              OUT4320
      WRITE (IP,480) TM(L1)                                             OUT4330
      GO TO (250,260,270,280,290), ISTOP                                OUT4340
250   WRITE (IP,490)                                                    OUT4350
      GO TO 300                                                         OUT4360
260   WRITE (IP,500)                                                    OUT4370
      GO TO 300                                                         OUT4380
270   WRITE (IP,510) IC                                                 OUT4390
      GO TO 300                                                         OUT4400
280   WRITE (IP,520) ISS                                                OUT4410
      GO TO 300                                                         OUT4420
290   WRITE (IP,530)                                                    OUT4430
300   CONTINUE                                                          OUT4440
C                                                                       OUT4450
C     SET UP FOR SUMMARY OF STRUT AND ACCELERATION INFORMATION          OUT4460
C                                                                       OUT4470
      DO 310 I=1,JK                                                     OUT4480
```

APPENDIX G

```
      OLCB(I)=OLCMAX(I)-SLJKO(I)                                        OUT4490
310   OLCL(I)=SLJKO(I)-OLCMIN(I)                                        OUT4500
      DO 320 I=1,LM                                                     OUT4510
      OLSB(I)=OLSMAX(I)-SLLMO(I)                                        OUT4520
320   OLSL(I)=SLLMO(I)-OLSMIN(I)                                        OUT4530
      WRITE (6,460)                                                     OUT4540
      WRITE (6,540) (OFCMIN(I),I=1,JK)                                  OUT4550
      WRITE (6,550) (OFCMAX(I),I=1,JK)                                  OUT4560
      WRITE (6,560)                                                     OUT4570
      WRITE (6,540) (OFSMIN(I),I=1,LM)                                  OUT4580
      WRITE (6,550) (OFSMAX(I),I=1,LM)                                  OUT4590
      WRITE (6,570)                                                     OUT4600
      WRITE (6,540) (OLCB(I),I=1,JK)                                    OUT4610
      WRITE (6,550) (OLCL(I),I=1,JK)                                    OUT4620
      WRITE (6,560)                                                     OUT4630
      WRITE (6,540) (OLSB(I),I=1,LM)                                    OUT4640
      WRITE (6,550) (OLSL(I),I=1,LM)                                    OUT4650
      WRITE (6,390)                                                     OUT4660
      WRITE (IP,580)                                                    OUT4670
      WRITE (IP,590)                                                    OUT4680
      WRITE (IP,600) (OMACX(I),I=1,7)                                   OUT4690
      WRITE (IP,610) (OMACY(I),I=1,7)                                   OUT4700
      WRITE (IP,620) (OMACZ(I),I=1,7)                                   OUT4710
      WRITE (IP,630)                                                    OUT4720
      WRITE (6,600) (OMAX(I),I=1,7)                                     OUT4730
      WRITE (6,610) (OMAY(I),I=1,7)                                     OUT4740
      WRITE (IP,620) (OMAZ(I),I=1,7)                                    OUT4750
      WRITE (6,650)                                                     OUT4760
      WRITE (6,600) (OMASX(I),I=1,7)                                    OUT4770
      WRITE (6,610) (OMASY(I),I=1,7)                                    OUT4780
      WRITE (6,620) (OMASZ(I),I=1,7)                                    OUT4790
      WRITE (IP,390)                                                    OUT4800
      WRITE (IT,640) AREAM                                              OUT4810
      WRITE (IP,390)                                                    OUT4820
      RETURN                                                            OUT4830
C                                                                       OUT4840
C     FORMAT STATEMENTS                                                 OUT4850
C                                                                       OUT4860
C                                                                       OUT4870
330   FORMAT (35H1   PAYLOAD ORIENTATION INFORMATION)                   OUT4880
340   FORMAT (123H0  TIME          X AXIS              Y AXIS           OUT4890
     1  Z AXIS              PSI AXIS              THTA AXIS            PHI AOUT4900
     2XIS)                                                              OUT4910
350   FORMAT (126H              POS.       VEL.       POS.       VEL.      POOUT4920
     1S.       VEL.       POS.       VEL.       POS.       VEL.       POS.   OUT4930
     2  VEL.//)                                                         OUT4940
360   FORMAT (1H ,F9.6,12E10.3/)                                        OUT4950
370   FORMAT (37H1   EQUIPMENT ORIENTATION INFORMATION)                 OUT4960
380   FORMAT (35H1   FOOTPAD ORIENTATION INFORMATION)                   OUT4970
390   FORMAT (1H0)                                                      OUT4980
400   FORMAT (83H1              SOIL      GROUND          ACCELERATIONS ON COUT4990
     1OMPONENT  CENTERS OF GRAVITY)                                     OUT5000
410   FORMAT (113H   TIME     IMPACT  REACTION                PAYLOAD    OUT5010
     1                EQUIPMENT ITEM                          FOOTPAD)  OUT5020
420   FORMAT (1H,12X,110HAREA      FORCE       X DIR.     Y DIR.     Z DIR. OUT5030
     1      X DIR.     Y DIR.     Z DIR.       X DIR.     Y DIR.     Z DIR.//)OUT5040
```

```
430   FORMAT (1H ,F8.5,E9.2,E10.3,3(2X,3E10.3)/)                          OUT5050
440   FORMAT (1H1,60X,12HSUMMARY PAGE,//,11H SERIES NO.,I8,8H RUN NO.,I4OUT5060
     1,43H    INITIAL CONDITIONS -- LINEAR    X VEL.=,F7.2,12H     Y VELOUT5070
     2.=,F7.2,12H     Z VEL.=,F7.2)                                      OUT5080
450   FORMAT (55X,19H  ANGULAR  WX VEL.=,F7.2,12H    WY VEL.=,F7.2,12H  OUT5090
     1  WZ VEL.=,F7.2)                                                   OUT5100
460   FORMAT (/22H    PEAK STRUT FORCES /,20H    EQUIPMENT STRUTS)       OUT5110
470   FORMAT (18H0   GROUND SLOPE =,F9.3)                                OUT5120
480   FORMAT (20H0   TOTAL RUN TIME =,F8.3,22H SEC.  STOPPED BECAUSE)    OUT5130
490   FORMAT (1H+,50X,13H OF MAX. TIME/)                                 OUT5140
500   FORMAT (1H+,50X,32H G LOADS EXCEED ALLOWABLE LIMITS/)              OUT5150
510   FORMAT (1H+,50X,9H STRUT C(,I2,14H) BOTTOMED OUT/)                 OUT5160
520   FORMAT (1H+,50X,9H STRUT S(,I2,14H) BOTTOMED OUT/)                 OUT5170
530   FORMAT (1H+,50X,23H FOOTPAD STRUCK PAYLOAD/)                       OUT5180
540   FORMAT (23H           TENSION      ,9E10.3)                        OUT5190
550   FORMAT (23H           COMPRESSION  ,9E10.3)                        OUT5200
560   FORMAT (/,21H    ATTENUATOR STRUTS)                                OUT5210
570   FORMAT (/25H    MAXIMUM STRUT STROKES/,20H    EQUIPMENT STRUTS)    OUT5220
580   FORMAT (107H0   MAXIMUM ACCELERATIONS        C.G.          1       OUT5230
     1    2          3          4          5          6)                OUT5240
590   FORMAT (18H          EQUIPMENT)                                    OUT5250
600   FORMAT (14X,7H X DIR.,7X,7E12.5)                                   OUT5260
610   FORMAT (14X,7H Y DIR.,7X,7E12.5)                                   OUT5270
620   FORMAT (14X,7H Z DIR.,7X,7E12.5)                                   OUT5280
630   FORMAT (16H          PAYLOAD)                                      OUT5290
640   FORMAT (34H    MAXIMUM FOOTPAD CONTACT AREA =E14.5)                OUT5300
650   FORMAT (16H          FOOTPAD)                                      OUT5310
660   FORMAT (39H1EQUIPMENT ACCELEROMETER TIME HISTORIES)                OUT5320
670   FORMAT (37H1PAYLOAD ACCELEROMETER TIME HISTORIES)                  OUT5330
680   FORMAT (37H1FOOTPAD ACCELEROMETER TIME HISTORIES)                  OUT5340
690   FORMAT (20H0 ACCELEROMETER NOS.,11X,1H1,39X,1H2,39X,1H3)           OUT5350
700   FORMAT (20H0 ACCELEROMETER NOS.,11X,1H4,39X,1H5,39X,1H6)           OUT5360
710   FORMAT (7H0  TIME,3(11X,1HX,12X,1HY,12X,1HZ,2X),//)                OUT5370
720   FORMAT (1X,F10.6,1X,9E13.6)                                        OUT5380
730   FORMAT (45H1   TIME HISTORIES OF GENERALIZED COORDINATES)          OUT5390
740   FORMAT (69H0  TIME      MODE (1)    MODE (2)    MODE (3)    MODE (OUT5400
     14)    MODE (5))                                                    OUT5410
750   FORMAT (1H0,F9.6,5(2X,E10.3))                                      OUT5420
760   FORMAT (28H1STROKE OF ATTENUATOR STRUTS)                           OUT5430
770   FORMAT (1X,F5.4,18F7.2/)                                           OUT5440
780   FORMAT (1X,5HTIME 18(A3,I2,2X))                                    OUT5450
790   FORMAT (1H )                                                       OUT5460
800   FORMAT (1XF6.4,6F15.10/)                                           OUT5470
810   FORMAT (1X,6HTIME  6(3HNO.I2,10X))                                 OUT5480
820   FORMAT (27H1STROKE OF EQUIPMENT STRUTS)                            OUT5490
830   FORMAT (1H1,38X,39HANGULAR ACCELERATIONS ABOUT LANDER AXES)        OUT5500
840   FORMAT (1H ,24X,7HPAYLOAD,26X,14HEQUIPMENT ITEM,27X,7HFOOTPAD)     OUT5510
850   FORMAT (7H   TIME,9X,3HPSI,8X,5HTHETA,8X,3HPHI,10X,3HPSI,8X,5HTHETOUT5520
     1A,8X,3HPHI,10X,3HPSI,8X,5HTHETA,8X,3HPHI//)                        OUT5530
860   FORMAT (1H ,F8.5,1X,3(2X,E10.3),1X,3(2X,E10.3),1X,3(2X,E10.3)/)    OUT5540
      END                                                                OUT5550-
```

"The aeronautical and space activities of the United States shall be conducted so as to contribute . . . to the expansion of human knowledge of phenomena in the atmosphere and space. The Administration shall provide for the widest practicable and appropriate dissemination of information concerning its activities and the results thereof."

—NATIONAL AERONAUTICS AND SPACE ACT OF 1958

NASA SCIENTIFIC AND TECHNICAL PUBLICATIONS

TECHNICAL REPORTS: Scientific and technical information considered important, complete, and a lasting contribution to existing knowledge.

TECHNICAL NOTES: Information less broad in scope but nevertheless of importance as a contribution to existing knowledge.

TECHNICAL MEMORANDUMS: Information receiving limited distribution because of preliminary data, security classification, or other reasons.

CONTRACTOR REPORTS: Scientific and technical information generated under a NASA contract or grant and considered an important contribution to existing knowledge.

TECHNICAL TRANSLATIONS: Information published in a foreign language considered to merit NASA distribution in English.

SPECIAL PUBLICATIONS: Information derived from or of value to NASA activities. Publications include conference proceedings, monographs, data compilations, handbooks, sourcebooks, and special bibliographies.

TECHNOLOGY UTILIZATION PUBLICATIONS: Information on technology used by NASA that may be of particular interest in commercial and other non-aerospace applications. Publications include Tech Briefs, Technology Utilization Reports and Notes and Technology Surveys.

Details on the availability of these publications may be obtained from:

SCIENTIFIC AND TECHNICAL INFORMATION DIVISION
NATIONAL AERONAUTICS AND SPACE ADMINISTRATION
Washington, D.C. 20546