NASA SP-222

THE NASTRAN USER'S MANUAL

Caleb W. McCormick

Editor

September 1970

FACILITY FORM 602

N70-41755
(ACCESSION NUMBER)

812
(PAGES)

(NASA CR OR TMX OR AD NUMBER)

(THRU)

1
(CODE)

32
(CATEGORY)

RECEIVED
OCT 1970

Scientific and Technical Information Division
OFFICE OF TECHNOLOGY UTILIZATION
NATIONAL AERONAUTICS AND SPACE ADMINISTRATION
1970
Washington, D.C.

For sale from Computer Software Management and Information Center (COSMIC)
Barrows Hall, University of Georgia, Athens, Georgia 30601 – Price $10.00

FOREWORD

For many decades the art of structural analysis remained essentially stagnant, not because of lack of theoretical understanding but because of limitations on capability for numerical computation. The analyst was constrained to apply approximate continuum solutions of the equations of elasticity to his structure which yield, for the most part, average stress and strain distributions not taking account of localized structural features. Fortunately, most aircraft could be approximated by a collection of beam-like one-dimensional structures--that is, structures where state of deformation could be adequately described by a set of functions of a single space coordinate. But, spacecraft structures and very high speed aircraft began to depart appreciably from such idealizations. Structural analysts began to adapt theory to aircraft structures viewed as an assemblage of a finite number of elastic components over 20 years ago. In one of the first papers on the subject, Levy in 1947 isolated each component, placed it in static equilibrium, and regarded the internal forces as the unknown quantities. The principle of minimum strain energy was applied to determine the correct internal force distribution. Subsequent papers by Schuerch, Levy, Turner, Clough, Martin and others took the deformations of the various discrete components of the structure as the unknown quantities, instead of the forces on the components. The correct deformation pattern was obtained by applying the principle of minimum potential energy. In all of these applications, matrix formulations were developed early as a means of organizing the bookkeeping. Numerical solutions were, for the most part, reduced to the processes of addition, subtraction, multiplication, inversion and finding the characteristic roots and vectors of matrices. But the analyst was limited at first by the desk calculator. The inversion of ten by ten matrices by Crout's or an equivalent method was a formidable exercise. It is no wonder that the earliest users of digital computers in the aircraft companies were the Structures and Dynamics Divisions of the Engineering Department. It was indeed fortunate that the birth of the digital computer came when it did.

But the development of software for structural analysis became a separated and individualistic activity with little or no coordination. There grew a tendency toward proprietary secrecy. Little compatability was developed among the various structural analysis programs throughout the country. The present program, called NASTRAN, is an attempt to bring together the best features of the state

of the art into a single program for the analysis of large complex structures. The result is an exemplary beginning. It will not satisfy every requirement at first. But, it forms a framework for an enormous step forward in the development of a common base. The NASA staff and contractors who conceived of and took part in this important new development are to be commended for their foresight and skill.

Dr. Raymond L. Bisplinghoff
Dean, School of Engineering
Massachusetts Institute of Technology

INTRODUCTION TO THE NASTRAN PROGRAM

The acronym NASTRAN is formed from NAsa STRuctural ANalysis. NASTRAN is a general purpose digital computer program for the analysis of large complex structures and has its origins in the research councils of NASA. During the annual review of NASA's research program in the area of structural dynamics by Douglas Michel of Headquarters in January 1964, it became apparent that there was considerable effort by many of the Centers to develop computer programs for structural analysis, designed to meet each of the Centers' particular needs. It was suggested that perhaps a single program could meet all their needs. The Office of Advanced Research and Technology appointed a committee with representation from eight NASA Centers to study this possibility. Thus formed, the AD HOC GROUP ON COMPUTER METHODS IN STRUCTURAL ANALYSIS was constituted as follows:

Ames Research Center	Richard M. Beam
	Perry P. Polentz
Flight Research Center	Richard J. Rosecrans
Goddard Space Flight Center	Thomas G. Butler
	Peter A. Smidinger
Jet Propulsion Laboratory	Marshall E. Alper
	Robert M. Bamford
Langley Research Center	Herbert J. Cunningham
Lewis Research Center	William C. Scott
	James D. McAleese
Manned Spacecraft Center	C. Thomas Modlin, Jr.
	William W. Renegar
Marshall Space Flight Center	Robert L. McComas

Adjoint Member: James Johnson from Wright Patterson Air Force Base

Chairman: Thomas G. Butler

After six months of investigation, the Ad Hoc Group reported to Headquarters that there was no digital program in existence which had broad, uniform capabilities

in the three interdependent disciplines of analytical mechanics, numerical methods, and computer programming. The Group did observe that there was considerable capability dispersed throughout the aerospace industry which had not been collected into a single program. They found also that there was a tendency toward proprietary secrecy which inhibited exchange of information. Communication was further hindered by the lack of compatibility between any two companies' structural analysis programs. The Ad Hoc Group recommended that NASA sponsor an entirely new program aimed at bringing together all the best in the state-of-the-arts. NASA is indebted to many people, but especially to these individuals in the several companies for assisting the Ad Hoc Group during its investigations:

M. John Turner of Boeing Seattle

W. J. Crichlaw of Lockheed Burbank

Paul H. Denke of Douglas Long Beach

Robert J. Melosh of Philco Western Development Labs

Richard H. Gallagher of Bell of Buffalo

P. L. Marshall of North American Columbus

Stanley Kaufman of Martin Baltimore

Headquarters endorsed the recommendations of the Ad Hoc Group and commissioned them to draw up a set of specifications. Fortunately, the papers from the first Wright Field Conference, "On Matrix Methods in Structural Analysis", were at hand to consult. The objectives of the specifications are now being achieved:

Combine the best of the state-of-the-arts in 3 disciplines.

Incorporate both the Force and the Displacement approaches of finite elements.

Organize to be General Purpose.

Embody large three dimensional structural capability.

Establish computer independence.

Provide for modification without cascading effects.

Build in the maximum of user convenience.

Document all aspects to gain maximum visibility.

The contract to implement the NASTRAN specifications was awarded to Computer Sciences Corporation (CSC) with MacNeal Schwendler, Martin Baltimore, and later

Bell Aerosystems Company as sub-contractors. The team that CSC assembled was one that identified strongly with the project. The designers were Dr. Richard H. MacNeal, Dr. Paul R. Peabody, Prof. C. W. McCormick, Mr. Stanley Kaufman, Mr. Thomas L. Clark, and Mr. David B. Hall. Except for Dr. Peabody, all of the designers were also involved with the implementation. The team of computer programmers was led by Mr. Keith H. Redner. The other principal members of the implementation team were Richard S. Pyle, Carl Hennrich, Steven E. Wall, Frank J. Douglas, Howard Dielmann, and David Herting. The quality of the NASTRAN program and its documentation is testimony to the purposefulness with which this implementation team applied themselves. We in NASA extend our sincere gratitude to all these men. This team has often exceeded the state-of-the-arts guidelines that were set down. A few examples are: the Segment File Allocator, the General Input/Output Module, matrix decomposition with active columns, the inclusion of scalar nonlinearities in control system dynamics, the generality in the plot module, and the development of the self-contained "inverse power with shifts" module for eigenvalue extraction. The overall design of the program has set a new standard for general purpose programs of any discipline. The framework used in NASTRAN can be disassociated from elastic structures and be applied to other disciplines, because there are no semantic implications in the executive operations. The program abounds in service code, that threads through every step of the problem physics, providing convenience to the analyst.

The NASTRAN Project personnel at Goddard Space Flight Center also strongly identified with the program. They are: Richard D. McConnell, William R. Case, James B. Mason, William L. Cook, and Edward F. Puccinelli. Their unflagging efforts in debugging and editing have been indispensable.

Many policy decisions had to be made as to the content of NASTRAN. The total framework of the program was considered to be the most important; i.e., commensurate large problem capability from basic statics for general conditions to advanced dynamics; with an executive system that could manage problems unbounded by core; was compact in its space requirements; could restart problems; could operate efficiently over different computers; and still be maintainable. This is

a costly venture and one could not expect the program to be complete in all its details. We wanted it to be complete in its principals and essentials. Consequently, some aspects were of necessity postponed.

It was decided that only basic finite elements would be included to deal with one and two dimensional elastic relationships such as beams, plates and axisymmetric shells. Economy of running time for the state-of-the-arts elements was a determining factor in their selection. More sophisticated and new elements have appeared in the state-of-the-art since the inception of this program, which can easily be incorporated.

An interesting type of decision erupted as a result of third generation computers. The relative costs of input-output and sorting operations had to be compared against regeneration whenever calculated data was used subsequently. In the majority of instances, the decision was made in favor of regeneration because the quantity of input data (usually from single precision engineering sources) was small; the compute time for regeneration was usually less than the associated input-output time; the quantity of generated data was usually orders of magnitude greater (and in double precision) compared to the engineering source data, and the read and write operations and subsequent logical operations for sorting and merging were very time-consuming.

In the matter of eigenvalues, the range of demands is such that no single current routine will satisfy all requirements. Two principal types of routines were decided upon; those that transform the whole matrix for simultaneous determination of roots and those that perform separate operations on the original matrix for each root extracted. The former is more efficient for a large number of roots, while the latter type is more efficient for a few roots of large matrices. Solution of complex matrices is performed only by the root tracking schemes and not by transformation methods, because existing transformation techniques for complex matrices are too expensive.

There was advice from many sources that the time was not right for a large general purpose program, because the flux in hardware and software was too great. The fear was that the endeavor would result in a program which would be obsolete

before it was finished. The rapidly changing computer technology had the opposite effect on the NASTRAN Project. The situation forced men to think more generally so that viability could be preserved in spanning the gap between second and third generation machines and anticipating the impact of fourth generation computers. The decision was made to write a single program in FORTRAN IV with some exceptional areas to be written in assembly language. FORTRAN IV version 13 in its various forms on different computers seems to have stabilized out as a language that will have currency for a reasonable time in the future. More than 99% of the program is written in this FORTRAN. The program is modular so that updating is a matter of revamping material within a module without modifying its external appearances.

The task of writing a program that performed efficiently on different manufacturers' computers forced many decisions. It was very tempting to capitulate to the disparities amongst the computers and resign ourselves to the rationale that for each computer, there would be a different version of NASTRAN. Fortunately, the decision was made to create just one version of NASTRAN. In some respects, this decision might have been viewed by some as having a corroding effect on the program. The conception derives from the condition that code was not written simultaneously for all computers. It was written first for the "development computer - the IBM Direct Coupled 7094/7040"; subsequently, it was tried on the others. Failures of programming designs on subsequent machines decreased the set of admissable procedures that remained in the intersection of the languages of all required computers. Fortunately, the remaining subset is sufficiently versatile, that it was possible to achieve commonality without becoming primitive. To date, the computers for which NASTRAN has been adopted are: IBM 7094/7044, UNIVAC 1108, CDC6600, and IBM 360. One serious lack of common intersection was in core management. NASTRAN is so large that logic demands that it be designed in multiple links horizontally and in many levels of overlay vertically with the additional ability to manage core dynamically. When it was found that Control Data did not provide for this type of core management, the decision was made to write a loader to replace that which Control Data offered with their SCOPE 3 operating system. The basic set of NASTRAN functional modules

is thus preserved as a single unit for all computers. Problems in trouble-shooting and maintenance are thus confined to a single source. This decision affected the compatibility with time sharing of the IBM TSS type. An entirely different version of NASTRAN would be required to adapt the program to the TSS system. Well-founded doubts also persist about its eventual execution efficiency. Consequently, NASTRAN is not designed to operate under a time sharing system.

Originally, a number of conveniences were going to be built into NASTRAN. As design evolved, the number of convenience nominees expanded. It was finally decided that conveniences having to do with the preparation of input data in NASTRAN format were properly external to the program. All such routines could be classified as NASTRAN auxiliary programs. Examples of this classification are: the automatic generation of grid points and elastic elements for an analytically known geometry, the computation of equation ordering for the minimization of the bandwidth of non zero elements in the stiffness matrix, or the formatting of experimental data as input to the General Element. Hundreds of such programs will probably be written and their lives will probably be short. For these reasons, they are considered external auxiliaries. Circulation of announcements about such programs will be made to users of the program, so they can be obtained easily.

Hopefully, the framework that has been built has also been sufficiently well fleshed out that it will serve a sizable portion of the large problems in the structural analysis community currently. It is intended that new capability be added or outdated capability be replaced by augmenting or replacing modules. An entire chapter in the Programmer's Manual has been devoted to the topic of Modifications and Additions in anticipation of serving this particular activity. The traffic in the development of new and increasingly versatile elastic modules is expected to be the most active. As analysts increase their use of the program, their detailed needs will become better defined with the consequent result that the traffic in "convenience code" will also be expected to increase. It is our strong desire that all such new features be called to the attention of the NASTRAN Project so that these ideas and routines can be disseminated to a broad audience.

Thomas G. Butler
NASTRAN Project Manager
Goddard Space Flight Center
Greenbelt, Maryland

EDITORS PREFACE TO THE NASTRAN USER'S MANUAL

The User's Manual is one of three manuals that constitute the documentation for NASTRAN, the other two being the Theoretical Manual and the Programmer's Manual. Although the User's Manual contains all of the information that is directly associated with the solution of problems with NASTRAN, the user will find it desirable to refer to the other manuals for assistance in the solution of specific user problems.

The Theoretical Manual is an excellent introduction to NASTRAN for those who are using NASTRAN for the first time. The User's Manual is restricted to those items related to the use of NASTRAN that are independent of the computing system being used. Computer dependent matters, such as operating system control cards, are treated in Section 5 of the Programmer's Manual.

NASTRAN uses a finite element structural model, wherein the distributed physical properties of a structure are represented by a finite number of structural elements which are interconnected at a finite number of grid points, to which loads are applied and for which displacements are calculated. The procedures for defining and loading a structural model are described in Section 1. This section contains a functional reference for every card that is used for structural modeling.

The NASTRAN Data Deck, including the details for each of the data cards, is described in Section 2. This section also discusses the NASTRAN control cards that are associated with the use of the program.

The initial version of NASTRAN contains twelve separate problem solution sequences, called rigid formats. Each of these rigid formats is associated with the solution of problems for a particular type of static or dynamic analysis. Section 3 contains a general description of rigid format procedures, along with specific instructions for the use of each rigid format.

The procedures for using the NASTRAN plotting capability are described in Section 4. Both deformed and undeformed plots of the structural model are available. Response curves are also available for transient response and frequency response analyses.

In addition to the rigid format procedures, the user may choose to write his own Direct Matrix Abstraction Program (DMAP). This procedure permits the user to execute a series of matrix operations of his choice along with any utility modules or executive operations that he may need. The rules governing the creation of DMAP programs are described in Section 5.

The NASTRAN diagnostic messages are documented and explained in Section 6. The NASTRAN Dictionary, in Section 7, contains descriptions of mnemonics, acronyms, phrases, and other commonly used NASTRAN terms.

Sample problems are not included in the User's Manual. However, a set of twenty demonstration problems, at least one for each of the twelve rigid formats, are described in an auxiliary publication entitled the NASTRAN Demonstration Problem Manual. The data decks are available on tape, in the form of a User's Master File, for each of the computers on which NASTRAN has been implemented. Samples of the printer output and of structure plots and response plots can be obtained by executing these demonstration problems.

A great many people have been associated with the development of NASTRAN and all have had some influence on the preparation of the User's Manual. Most of the members of both the programming staff and engineering staff have made some direct contributions to the User's Manual. Particular recognition is due Mr. Carl W. Hennrich who had direct responsibility for the collection and preparation of much of the material in the Manual. In addition, Mr Thomas G. Butler, the NASTRAN Project Manager, and his devoted group at Goddard Space Flight Center, should be commended for their painstaking and constructive review of the User's Manual.

Caleb W. McCormick

August, 1969

TABLE OF CONTENTS

Section			Page No.
1.	STRUCTURAL MODELING		
	1.1	INTRODUCTION	1.1-1
	1.2	GRID POINTS	1.2-1
		1.2.1 Grid Point Definition	1.2-1
		1.2.2 Grid Point Sequencing	1.2-2
		1.2.3 Grid Point Properties	1.2-6
	1.3	STRUCTURAL ELEMENTS	1.3-1
		1.3.1 Element Definition	1.3-1
		1.3.2 Bar Element	1.3-2
		1.3.3 Rod Element	1.3-4
		1.3.4 Shear Panels and Twist Panels	1.3-5
		1.3.5 Plate Elements	1.3-5
		1.3.6 Conical Shell Element	1.3-7
		1.3.7 Axisymmetric Shell Elements	1.3-10
		1.3.8 Scalar Elements	1.3-13
	1.4	CONSTRAINTS AND PARTITIONING	1.4-1
		1.4.1 Single-Point Constraints	1.4-1
		1.4.2 Multipoint Constraints	1.4-2
		1.4.3 Free Body Supports	1.4-3
		1.4.4 Partitioning	1.4-5
	1.5	APPLIED LOADS	1.5-1
		1.5.1 Static Loads	1.5-1
		1.5.2 Frequency Dependent Loads	1.5-3
		1.5.3 Time Dependent Loads	1.5-4
	1.6	DYNAMIC MATRICES	1.6-1
		1.6.1 Direct Formulation	1.6-2
		1.6.2 Modal Formulation	1.6-3
2.	NASTRAN DATA DECK		
	2.1	GENERAL DESCRIPTION OF DATA DECK	2.1-1
	2.2	EXECUTIVE CONTROL DECK	2.1-1

TABLE OF CONTENTS (Continued)

Section			Page No.
	2.2.1	Executive Control Card Descriptions	2.2-1
	2.2.2	Executive Control Deck Examples	2.2-3
2.3		CASE CONTROL DECK	2.3-1
	2.3.1	Data Selection	2.3-1
	2.3.2	Output Selection	2.3-2
	2.3.3	Subcase Definition	2.3-3
	2.3.4	Case Control Card Descriptions	2.3-6
2.4		BULK DATA DECK	2.4-1
	2.4.1	Format of Bulk Data Cards	2.4-1
	2.4.2	Bulk Data Card Descriptions	2.4-4
2.5		USER'S MASTER FILE	2.5-1
	2.5.1	Use of User's Master File	2.5-1
	2.5.2	Using the User's Master File Editor	2.5-2
	2.5.3	Rules for the User's Master File Editor	2.5-3
	2.5.4	Examples of User's Master File Editor Usage	2.5-3
2.6		USER GENERATED INPUT	2.6-1
3.	RIGID FORMATS		
3.1		GENERAL DESCRIPTION OF RIGID FORMATS	3.1-1
	3.1.1	Input File Processor	3.1-2
	3.1.2	Functional Modules and Supporting DMAP Operations	3.1-3
	3.1.3	Restart Procedures	3.1-4
	3.1.4	Rigid Format Output	3.1-8
	3.1.5	Use of Parameters	3.1-10
3.2		STATIC ANALYSIS	3.2-1
	3.2.1	DMAP Sequence for Static Analysis	3.2-1
	3.2.2	Description of DMAP Operations for Static Analysis	3.2-7
	3.2.3	Restart Tables for Static Analysis	3.2-12
	3.2.4	Case Control Deck and Parameters for Static Analysis	3.2-21

Section			Page No.
3.3	STATIC ANALYSIS WITH INERTIA RELIEF		3.3-1
	3.3.1	DMAP Sequence for Static Analysis with Inertia Relief	3.3-1
	3.3.2	Description of DMAP Operations for Static Analysis with Inertia Relief	3.3-6
	3.3.3	Restart Tables for Static Analysis with Inertia Relief	3.3-11
	3.3.4	Case Control Deck and Parameters for Static Analysis with Inertia Relief	3.3-20
3.4	NORMAL MODE ANALYSIS		3.4-1
	3.4.1	DMAP Sequence for Normal Mode Analysis	3.4-1
	3.4.2	Description of DMAP Operations for Normal Mode Analysis	3.4-6
	3.4.3	Restart Tables for Normal Mode Analysis	3.4-10
	3.4.4	Automatic Output for Normal Mode Analysis	3.4-16
	3.4.5	Case Control Deck and Parameters for Normal Mode Analysis	3.4-17
3.5	STATIC ANALYSIS WITH DIFFERENTIAL STIFFNESS		3.5-1
	3.5.1	DMAP Sequence for Static Analysis with Differential Stiffness	3.5-1
	3.5.2	Description of DMAP Operations for Static Analysis with Differential Stiffness	3.5-8
	3.5.3	Restart Tables for Static Analysis with Differential Stiffness	3.5-15
	3.5.4	Automatic Output for Static Analysis with Differential Stiffness	3.5-25
	3.5.5	Case Control Deck and Parameters for Static Analysis with Differential Stiffness	3.5-25
3.6	BUCKLING ANALYSIS		3.6-1
	3.6.1	DMAP Sequence for Buckling Analysis	3.6-1
	3.6.2	Description of DMAP Operations for Buckling Analysis	3.6-8
	3.6.3	Restart Tables for Buckling Analysis	3.6-14
	3.6.4	Automatic Output for Buckling Analysis	3.6-23
	3.6.5	Case Control Deck and Parameters for Buckling Analysis	3.6-23
3.7	PIECEWISE LINEAR ANALYSIS		3.7-1
	3.7.1	DMAP Sequence for Piecewise Linear Analysis	3.7-1
	3.7.2	Description of DMAP Operations for Piecewise Linear Analysis	3.7-8
	3.7.3	Restart Tables for Piecewise Linear Analysis	3.7-13
	3.7.4	Case Control Deck and Parameters for Piecewise Linear Analysis	3.7-22

TABLE OF CONTENTS (Continued)

Section		Page No.
3.8	DIRECT COMPLEX EIGENVALUE ANALYSIS	3.8-1
3.8.1	DMAP Sequence for Direct Complex Eigenvalue Analysis	3.8-1
3.8.2	Description of DMAP Operations for Direct Complex Eigenvalue Analysis	3.8-7
3.8.3	Restart Tables for Direct Complex Eigenvalue Analysis	3.8-12
3.8.4	Automatic Output for Direct Complex Eigenvalue Analysis	3.8-21
3.8.5	Case Control Deck and Parameters for Direct Complex Eigenvalue Analysis	3.8-22
3.9	DIRECT FREQUENCY AND RANDOM RESPONSE	3.9-1
3.9.1	DMAP Sequence for Direct Frequency and Random Response	3.9-1
3.9.2	Description of DMAP Operations for Direct Frequency and Random Response	3.9-8
3.9.3	Restart Tables for Direct Frequency and Random Response	3.9-13
3.9.4	Case Control Deck and Parameters for Direct Frequency and Random Response	3.9-22
3.10	DIRECT TRANSIENT RESPONSE	3.10-1
3.10.1	DMAP Sequence for Direct Transient Response	3.10-1
3.10.2	Description of DMAP Operations for Direct Transient Response	3.10-8
3.10.3	Restart Tables for Direct Transient Response	3.10-13
3.10.4	Case Control Deck and Parameters for Direct Transient Response	3.10-22
3.11	MODAL COMPLEX EIGENVALUE ANALYSIS	3.11-1
3.11.1	DMAP Sequence for Modal Complex Eigenvalue Analysis	3.11-1
3.11.2	Description of DMAP Operations for Modal Complex Eigenvalue Analysis	3.11-7
3.11.3	Restart Tables for Modal Complex Eigenvalue Analysis	3.11-12
3.11.4	Automatic Output for Modal Complex Eigenvalue Analysis	3.11-21
3.11.5	Case Control Deck and Parameters for Modal Complex Eigenvalue Analysis	3.11-21
3.12	MODAL FREQUENCY AND RANDOM RESPONSE	3.12-1
3.12.1	DMAP Sequence for Modal Frequency and Random Response	3.12-1
3.12.2	Description of DMAP Operations for Modal Frequency and Random Response	3.12-9

Section			Page No.
	3.12.3	Restart Tables for Modal Frequency and Random Response	3.12-15
	3.12.4	Automatic Output for Modal Frequency and Random Response	3.12-25
	3.12.5	Case Control Deck and Parameters for Modal Frequency and Random Response	3.12-25
3.13		MODAL TRANSIENT RESPONSE	3.13-1
	3.13.1	DMAP Sequence for Modal Transient Response	3.13-1
	3.13.2	Description of DMAP Operations for Modal Transient Response	3.13-9
	3.13.3	Restart Tables for Modal Transient Response	3.13-15
	3.13.4	Automatic Output for Modal Transient Response	3.13-25
	3.13.5	Case Control Deck and Parameters for Modal Transient Response	3.13-25
4.	PLOTTING		
4.1		PLOTTING	4.1-1
4.2		STRUCTURE PLOTTING	4.2-1
	4.2.1	General Rules	4.2-2
	4.2.2	Plot Request Packet Card Descriptions	4.2-2
	4.2.3	Summary of Structure Plot Request Packet Cards	4.2-16
4.3		X-Y OUTPUT	4.3-1
	4.3.1	X-Y Plotter Terminology	4.3-1
	4.3.2	Parameter Definition Cards	4.3-3
	4.3.3	Command Operation Cards	4.3-9
	4.3.4	Examples of X-Y Output Request Packets	4.3-17
	4.3.5	Summary of X-Y Output Request Packet Cards	4.3-19
5.	DIRECT MATRIX ABSTRACTION		
5.1		GENERAL	5.1-1
5.2		DMAP RULES	5.2-1
	5.2.1	DMAP Rules for Functional Module Instructions	5.2-1
	5.2.2	DMAP Rules for Executive Operation Instructions	5.2-4
	5.2.3	Techniques and Examples of Executive Module Usage	5.2-4
5.3		DMAP MODULE DESCRIPTIONS	5.3-1
	5.3.1	Matrix Operation Modules	5.3-3
	5.3.2	Utility Modules	5.3-16

Section			Page No.
	5.3.3	User Modules	5.3-28
	5.3.4	Executive Operation Modules	5.3-48
5.4	EXAMPLES		5.4-1
	5.4.1	DMAP Example	5.4-1
	5.4.2	DMAP Example	5.4-2
	5.4.3	DMAP Example to Use the Structure Plotter to Generate Undeformed Plots of the Structural Model	5.4-3
	5.4.4	Example of DMAP to Print Eigenvectors Associated with any of the Modal Formulation Rigid Formats	5.4-4
	5.4.5	Example of DMAP Using a User-Written Module	5.4-5
	5.4.6	DMAP ALTER Package for Using a User-Written Auxiliary Input File Processor	5.4-7
	5.4.7	DMAP to Perform Real Eigenvalue Analysis Using Direct Input Matrices	5.4-8
	5.4.8	DMAP Example to Print and Plot a Topological Picture of Two Matrices	5.4-10
	5.4.9	DMAP Example to Compute the r-th Power of a Matrix [Q]	5.4-11
6.	DIAGNOSTIC MESSAGES		
6.1	RIGID FORMAT DIAGNOSTIC MESSAGES		6.1-1
	6.1.1	Rigid Format Error Messages for Static Analysis	6.1-1
	6.1.2	Rigid Format Error Messages for Static Analysis with Inertia Relief	6.1-1
	6.1.3	Rigid Format Error Messages for Normal Mode Analysis	6.1-2
	6.1.4	Rigid Format Error Messages for Static Analysis with Differential Stiffness	6.1-2
	6.1.5	Rigid Format Error Messages for Buckling Analysis	6.1-3
	6.1.6	Rigid Format Error Messages for Piecewise Linear Analysis	6.1-3
	6.1.7	Rigid Format Error Messages for Direct Complex Eigenvalue Analysis	6.1-3
	6.1.8	Rigid Format Error Messages for Direct Frequency and Random Response	6.1-4
	6.1.9	Rigid Format Error Messages for Direct Transient Response	6.1-4
	6.1.10	Rigid Format Error Messages for Modal Complex Eigenvalue Analysis	6.1-4

Section		Page No.
6.1.11	Rigid Format Error Messages for Modal Frequency and Random Response	6.1-5
6.1.12	Rigid Format Error Messages for Modal Transient Response	6.1-5
6.2	NASTRAN SYSTEM AND USER MESSAGES	6.2-1
6.2.1	Preface Messages	6.2-2
6.2.2	Executive Module Messages	6.2-16
6.2.3	Functional Module Messages	6.2-19
7.	NASTRAN DICTIONARY	
7.1	NASTRAN DICTIONARY	7.1-1

1.1 INTRODUCTION

NASTRAN embodies a lumped element approach, wherein the distributed physical properties of a structure are represented by a model consisting of a finite number of idealized substructures or elements that are interconnected at a finite number of grid points, to which loads are applied. All input and output data pertain to the idealized structural model. The major steps in the definition and loading of a structural model are indicated in Figure 1.

As indicated in Figure 1, the grid point definition forms the basic framework for the structural model. All other parts of the structural model are referenced either directly or indirectly to the grid points.

Two general types of grid points are used in defining the structural model. They are:

1. Geometric grid point - a point in three-dimensional space at which three components of translation and three components of rotation are defined. The coordinates of each grid point are specified by the user.
2. Scalar point - a point in vector space at which one degree of freedom is defined. Scalar points can be coupled to geometric grid points by means of scalar elements and by constraint relationships.

The structural element is a convenient means for specifying many of the properties of the structure, including material properties, mass distribution and some types of applied loads. In static analysis by the displacement method, stiffness properties are input exclusively by means of structural elements. Mass properties (used in the generation of gravity and inertia loads) are input either as properties of structural elements or as properties of grid points. In dynamic analysis, mass, damping, and stiffness properties may be input either as the properties of structural elements or as the properties of grid points (direct input matrices).

Structural elements are defined on connection cards by referencing grid points, as indicated on Figure 1. In a few cases, all of the information required to generate the structural matrices for the element is given on the connection card. In most cases the connection card refers to a property card, on which the cross-sectional properties of the element are given. The property card in turn refers to a material card which gives the material properties. If some of the material properties are stress dependent or temperature dependent, a further reference is made to tables for this information.

Various kinds of constraints can be applied to the grid points. Single-point constraints are used to specify boundary conditions, including enforced displacements of grid points.

Multipoint constraints are used to specify a linear relationship among selected degrees of freedom, including the definition of infinitely rigid elements. Omitted points are used as a tool in matrix partitioning and for reducing the number of degrees of freedom used in dynamic analysis. Free-body supports are used to remove stress-free motions in static analysis and to evaluate the free-body inertia properties of the structural model.

Static loads may be applied to the structural model by concentrated loads at grid points, pressure loads on surfaces, or indirectly, by means of the mass and thermal expansion properties of structural elements are enforced deformations of one-dimensional structural elements. Due to the great variety of possible sources for dynamic loading, only general forms of loads are provided to the user in dynamic analysis.

The following sections describe the general procedures for defining structural models. Detailed instructions for each of the bulk data cards and case control cards are given in Section 2. Additional information on the case control cards and use of parameters is given for each rigid format in Section 3.

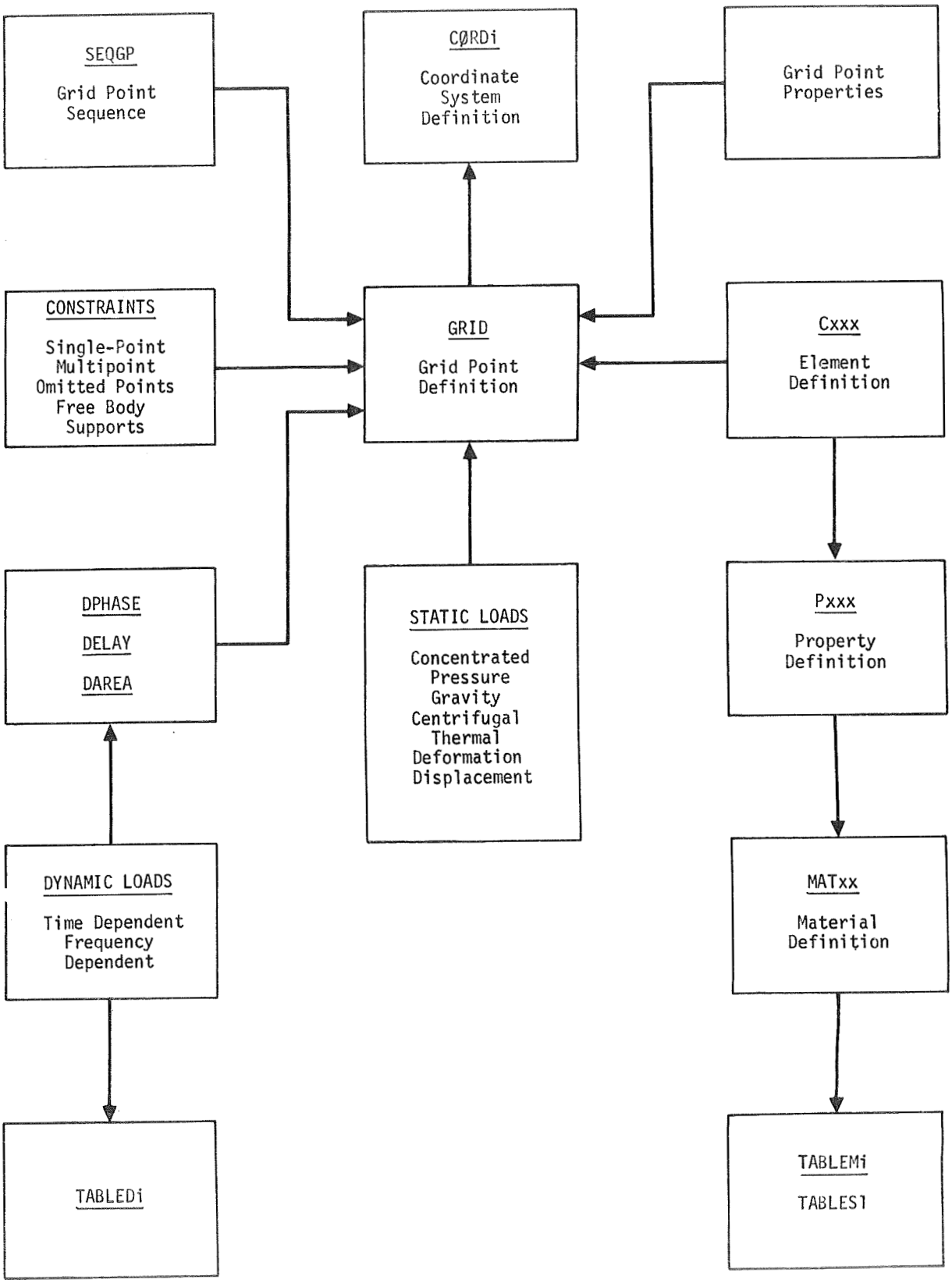

Figure 1. Structural model.

1.2 GRID POINTS

1.2.1 Grid Point Definition

Geometric grid points are defined on GRID bulk data cards by specifying their coordinates in either the basic or a local coordinate system. The implicitly defined basic coordinate system is rectangular, except when using axisymmetric elements. Local coordinate systems may be rectangular, cylindrical, or spherical. Each local system must be related directly or indirectly to the basic coordinate system. The CØRD1C, CØRD1R and CØRD1S cards are used to define cylindrical, rectangular and spherical local coordinate systems, respectively, in terms of three geometric grid points which have been previously defined. The CØRD2C, CØRD2R and CØRD2S cards are used to define cylindrical, rectangular and spherical local coordinate systems, respectively, in terms of the coordinates of three points in a previously defined coordinate system.

Six rectangular displacement components (3 translations and 3 rotations) are defined at each grid point. The local coordinate system used to define the directions of motion may be different from the local coordinate system used to locate the grid point. Both the location coordinate system and the displacement coordinate system are specified on the GRID card for each geometric grid point. The orientation of displacement components depends on the type of local coordinate system used to define the displacement components. If the defining local system is rectangular, the displacement system is parallel to the local system and is independent of the grid point location as indicated in Figure 1a. If the local system is cylindrical, the displacement components are in the radial, tangential and axial directions as indicated in Figure 1b. If the local system is spherical, the displacement components are in the radial, meridional, and azimuthal directions as indicated in Figure 1c. Each geometric grid point may have a unique displacement coordinate system associated with it. The collection of all displacement coordinate systems is known as the global coordinate system. All matrices are formed and all displacements are output in the global coordinate system.

Provision is also made on the GRID card to apply single-point constraints to any of the displacement components. Any constraints specified on the GRID card will be automatically used for all solutions. Constraints specified on the GRID card are usually restricted to those degrees of freedom that will not be elastically constrained and hence must be removed from the model in order to avoid singularities in the stiffness matrix.

The GRDSET card is provided to avoid the necessity of repeating the specification of location coordinate systems, displacement coordinate systems, and single-point constraints, when all, or many, of the GRID cards have the same entries for these items. When any of the 3 items are specified on the GRDSET card, the entries are used to replace blank fields on the GRID card for these items. This feature is useful in the case of such problems as space trusses where one wishes to remove all of the rotational degrees of freedom or in the case of plane structures where one wishes to remove all of the out-of-plane or all of the in-plane motions.

Scalar points are defined either on an SPØINT card or by reference on a connection card for a scalar element. SPØINT cards are used primarily to define scalar points appearing in constraint equations, but to which no structural elements are connected. A scalar point is implicitly defined if it is used as a connection point for any scalar element. Special scalar points, called "extra points", may be introduced for dynamic analyses. Extra points are used in connection with transfer functions and other forms of direct matrix input used in dynamic analyses and are defined on EPØINT cards.

1.2.2 Grid Point Sequencing

The best solution times are obtained if the grid points can be sequenced in such a manner as to create stiffness matrices having relatively narrow bands. In some cases the bandwidth can be substantially reduced by purposely sequencing a few of the grid points well outside the band. The resulting nonzero terms outside the band are treated individually by the triangular decomposition routines. Columns of a matrix containing nonzero terms outside the band are referred to as "active columns". The details of the partially banded decomposition routines are given in Section 2.2 of the Theoretical Manual. If the bandwidth is large enough to cause excessive use of secondary storage devices (spill) during the triangular decomposition of the stiffness matrix in static analysis, it may be more efficient to use the partitioning procedure described in Section 1.4.4.

Excluding grid points that are purposely sequenced outside the band, the bandwidths of stiffness matrices are proportional to the maximum difference between any two connected grid point sequence numbers. The discussion and examples that follow will discuss bandwidths and active columns in terms of geometric grid points. Since each geometric grid point can have one to six degrees of freedom, the bandwidths of the resulting matrices are determined accordingly. The semiband is defined as the maximum number of columns included from the diagonal term in any row

to the most remote term inside the band. If the diagonal terms are excluded, the semiband is proportional to the maximum difference between any two connected grid point numbers in the band. In the discussion of the examples, it is assumed that the grid points are connected with one-dimensional elements.

Examples of proper grid point sequencing for minimum bandwidth for one-dimensional systems are shown in Figure 2. For open loops, a consecutive numbering system should be used as shown in Figure 2a. Generally there is improvement in the accumulated roundoff error if the grid points are sequenced from the flexible end to the stiff end.

For closed loops the grid points should be sequenced as shown in Figure 2b. This model will have twice the semiband of the model shown in Figure 2a. If the sequencing is as shown in Figure 2c, the semiband will be half of that for the sequencing shown in Figure 2b. However, the connection between grid points 1 and 8 will create a number of active columns equal to the semiband, and the net result is that the semiband of the first case is equal to the sum of the semiband and number of active columns for the second case. Since it takes about twice as long to process active columns as terms inside the band, the sequence shown in Figure 2b is to be preferred.

Examples of grid point sequencing for surfaces are shown in Figure 3. For plane or curved surfaces where the pattern of grid points tends to be rectangular, the sequencing shown in Figure 3a will result in the shortest solution times. The semiband will be proportional to the number of grid points along the short direction of the pattern. If the pattern of grid points shown in Figure 3a is made into a closed surface by connecting grid points 1 and 17, 2 and 18, etc., a number of active columns equal to the semiband will be created. An alternate sequencing for a closed loop is shown in Figure 3b, where the semiband is proportional to twice the number of grid points in a row. For cylindrical or similar closed surfaces, the sequencing indicated in Figure 3b is more efficient if the number of grid points in the circumferential direction is more than twice the number in the axial direction. If the number of grid points in the circumferential direction is less than twice the number in the axial direction, the sequencing indicated in Figure 3a, with the consecutive numbering in the circumferential direction, is more efficient.

In general, sequences of grid points that generate active columns cannot be expected to shorten computing times substantially unless the semiband can be reduced by about two for each active column introduced. This is not likely to be the case for most surfaces. An exception is the case of radial patterns, where the sequencing indicated in Figure 3c is the most efficient if there are

more grid points on a circumferential line than on a radial line. In this case, the semiband is proportional to the number of grid points on a radial line, and the number of active columns is equal to the number of degrees of freedom at the center grid point. If there are more grid points on a radial line than a circumferential line, the consecutive numbering should extend in the circumferential direction, beginning with the outermost circumferential ring. In this case, the semiband is proportional to the number of grid points on a circumferential line and there are no active columns.

If the grid points form a full circular pattern, the closure will create a number of active columns proportional to the number of grid points on a radial line if the grid points are numbered as shown in Figure 3c. A more efficient scheme is to number the radial lines alternately, similar to the sequence shown for a rectangular array in Figure 3b. This sequence will result in shorter solution times if the number of grid points on a circumferential line is greater than twice the number on a radial line. The central point must be sequenced at the end in order to limit the active columns to the number of degrees of freedom at the central point. If the central point is sequenced first, the number of active columns will be proportional to the number of radial lines. If the number of grid points on a circumferential line is less than twice the number of grid points on a radial line, the consecutive numbering should extend in the circumferential direction. This sequencing procedure will result in a semiband proportional to the number of grid points on a circumferential line and no active columns. If the central point does not exist, the sequencing problem is similar to that discussed for rectangular arrays in connection with Figures 3a and 3b.

Sequencing problems for three-dimensional structures may be treated in two broad general classes. The first class consists of structural models that are compact, without appendages or connecting substructures. The second class consists of models that are composed of several substructures interconnected at a relatively small number of locations. Examples of the first type of model are solid structures, such as rectangular bars or cellular structures where an external shell is filled with bulkheads such as a submarine. For these types of structures the general procedure is to sequence the grid points in imaginary surfaces perpendicular to the largest axis of the structure. The grid point numbers are sequenced within each surface in the most effective way, beginning at one end of the structure and proceeding to the other end. Assuming that only adjacent surfaces are connected, the semiband will be proportional to the largest number of grid points in a surface.

Examples of the second type of model are airframes and radio telescopes. For these types of structures, the general procedure is to sequence the individual substructures in the most effective way and allow the degrees of freedom associated with the connecting grid points to be treated as active columns. The computing time for terms outside the band is proportional to the total length of active columns, where the length of an active column is equal to the difference between the row number of the first nonzero term in the column and the row number of the extremity of the band. In sequencing the connecting grid points for two substructures, the number of active columns is minimized by sequencing the connecting grid points after both substructures. However, in many cases, the connecting grid points can be advantageously sequenced between the two parts or among the points of the second part. This procedure tends to increase the number of active columns, but reduces the length of each one. Sequencing the connecting grid points first or among the points of the first part tends to maximize both the number of active columns and the lengths of each one.

Although scalar points are defined only in vector space, the pattern of their connections is used in a manner similar to that of geometric grid points for sequencing scalar points among themselves or with geometric grid points. Since scalar points introduced for dynamic analysis (extra points) are defined in connection with direct input matrices, the sequencing of these points is determined by direct reference to the positions of the added terms in the dynamic matrices.

The external identification numbers used for grid points may be selected in any manner the user desires. However, in order to preserve the bandwidth of the stiffness matrix, and hence to substantially reduce computing times when using the displacement method, the internal sequencing of the grid points must not be arbitrary, In order to allow arbitrary external grid point numbers and still preserve sparsity in the triangular decomposition factors to the greatest extent possible, provision is made for the user to resequence the grid point numbers for internal operations. This feature also makes it possible to easily change the sequence if a poor initial choice is made. All output associated with grid points is identified with the external grid point numbers. The SEQGP card is used to resequence geometric grid points and scalar points. The SEQEP card is used to sequence the extra points in with the previously sequenced geometric grid points and scalar points.

1.2.3 Grid Point Properties

Some of the characteristics of the structural model are introduced as properties of grid points, rather than as properties of structural elements. Any of the various forms of direct matrix input are considered as describing the structural model in terms of properties of grid points.

Thermal fields are defined by specifying the temperatures at grid points. The TEMP card is used to specify the temperature at grid points for use in connection with thermal loading and temperature dependent material properties. The TEMPD card is used to specify a default temperature, in order to avoid a large number of duplicate entries on a TEMP card when the temperature is uniform over a large portion of the structure. The TEMPAX card is used for conical shell problems.

Mass properties may be input as properties of grid points by using the concentrated mass element (see Section 5.5 of the Theoretical Manual). The CØNM1 card is used to define a 6x6 matrix of mass coefficients at a geometric grid point in any selected coordinate system. The CØNM2 card is used to define a concentrated mass at a geometric grid point in terms of its mass, the three coordinates of its center of gravity, the three moments of inertia about its center of gravity, and its three products of inertia, referred to any selected coordinate system.

In dynamic analysis, mass, damping, and stiffness properties may be provided, in part or entirely, as properties of grid points through the use of direct input matrices. The DMIG card is used to define direct input matrices for use in dynamic analysis. These matrices may be associated with components of geometric grid points, scalar points, or extra points introduced for dynamic analysis. The TF card is used to define transfer functions that are internally converted to direct matrix input.

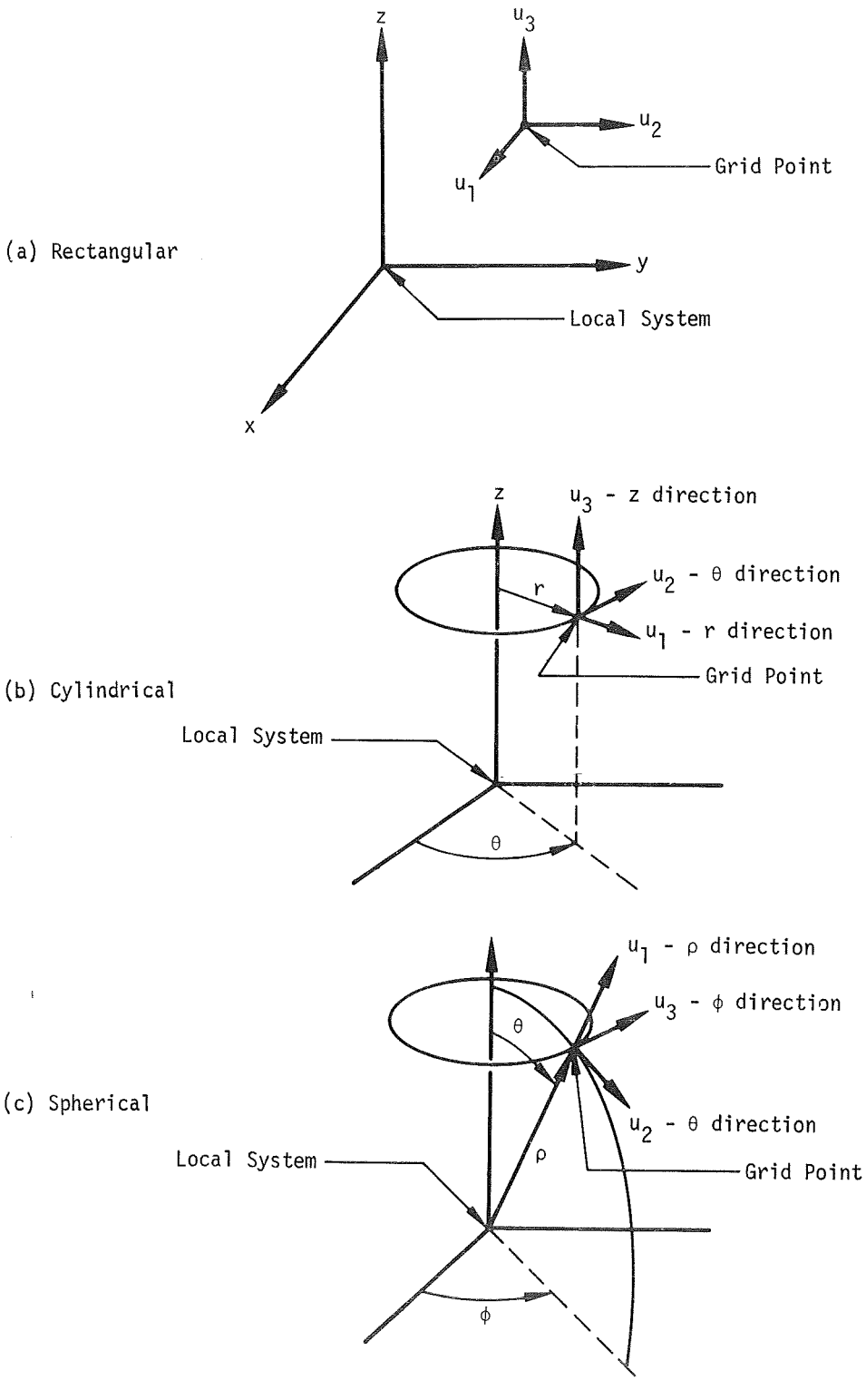

Figure 1. Displacement coordinate systems.

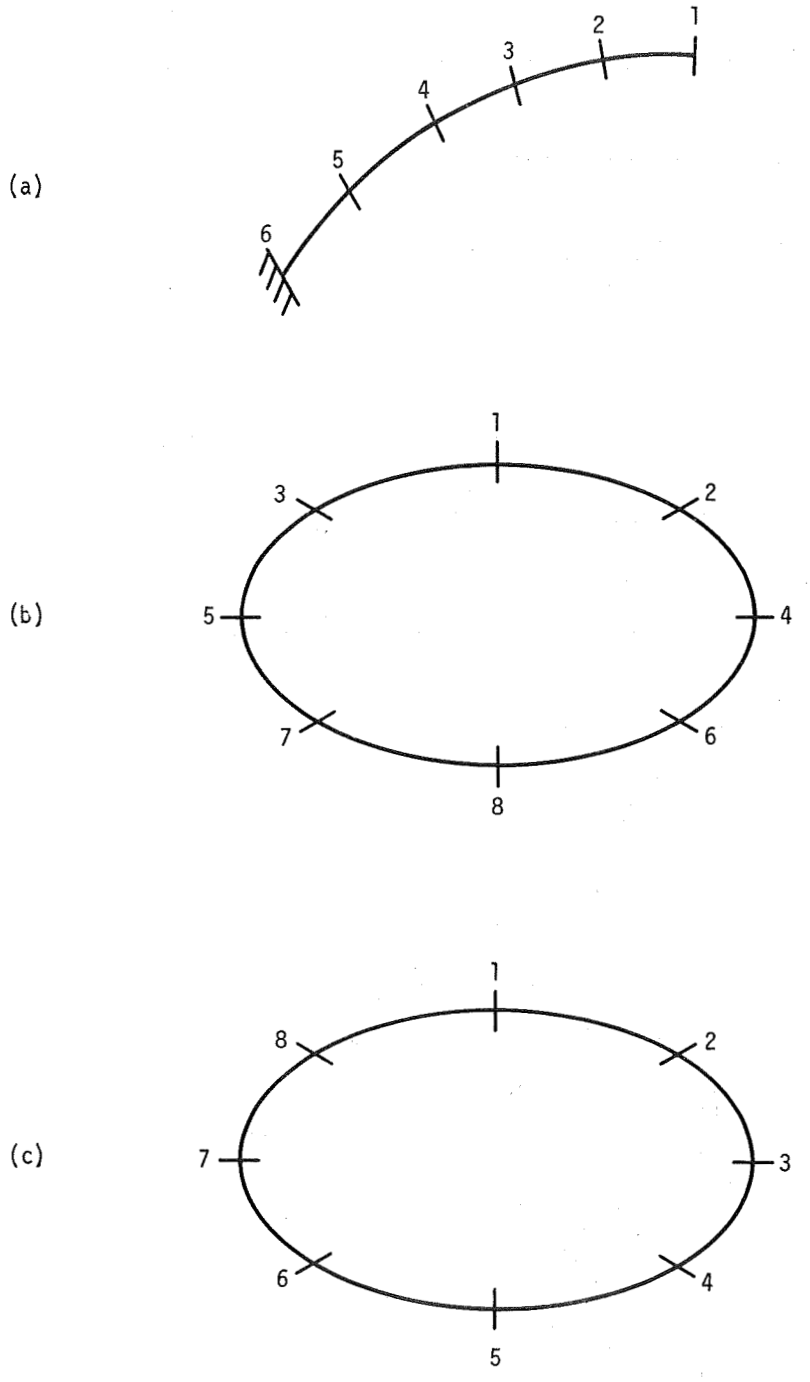

Figure 2. Grid point sequencing for one-dimensional systems.

(a)

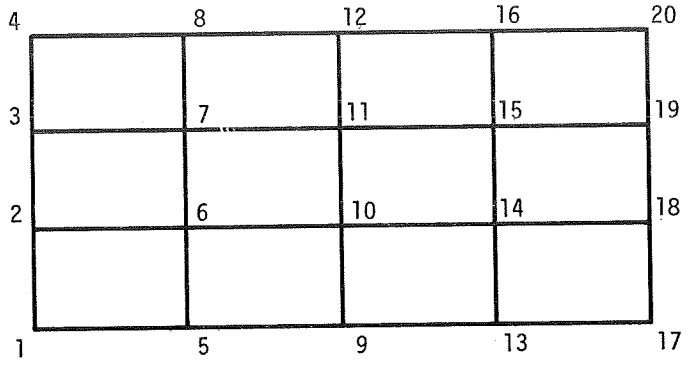

(b)

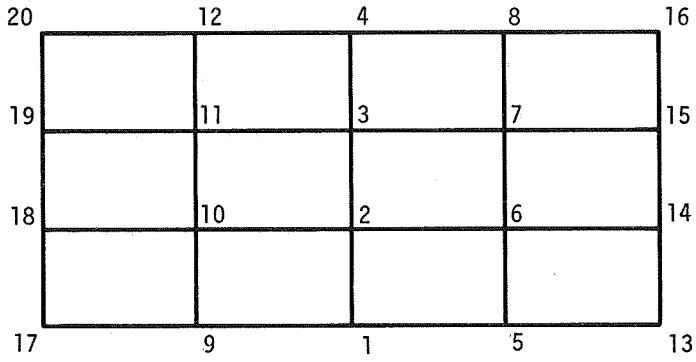

(c)

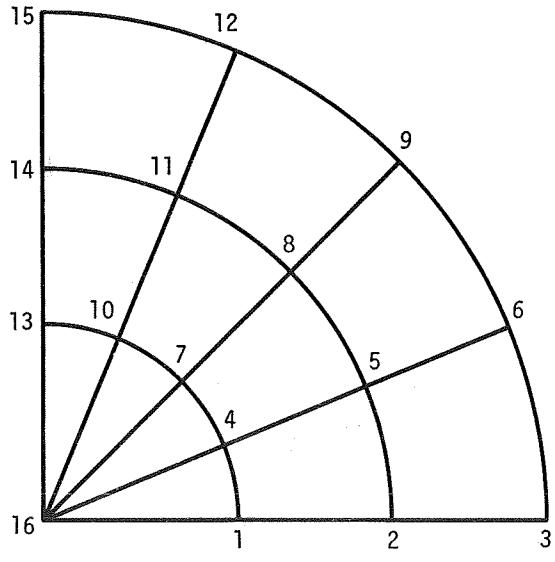

Figure 3. Grid point sequencing for surfaces.

1.3 STRUCTURAL ELEMENTS

1.3.1 Element Definition

Structural elements are defined on connection cards that identify the grid points to which the element is connected. The mnemonics for all such cards have a prefix of the letter "C", followed by an indication of the type of element, such as CBAR and CRØD. The order of the grid point identification defines the positive direction of the axis of a one-dimensional element and the positive surface of a plate element. The connection cards include additional orientation information when required. Except for the simplest elements, each connection card references a property definition card. If many elements have the same properties, this system of referencing eliminates a large number of duplicate entries.

The property definition cards define geometric properties such as thicknesses, cross-sectional areas, and moments of inertia. The mnemonics for all such cards have a prefix of the letter "P", followed by some, or all of the characters used on the associated connection card, such as PBAR and PRØD. Other included items are the nonstructural mass and the location of points where stresses will be calculated. Except for the simplest elements, each property definition card will reference a material property card.

In some cases, the same finite element can be defined by using different bulk data cards. These alternate cards have been provided for user convenience. In the case of a rod element, the normal definition is accomplished with a connection card (CRØD) which references a property card (PRØD). However, an alternate definition uses a CØNRØD card which combines connection and property information on a single card. This is more convenient if a large number of rod elements all have different properties.

In the case of plate elements, a different property card is provided for each type of element, such as membrane or sandwich plates. Thus, each property card contains only the information required for a single type of plate element, and in most cases, a single card has sufficient space for all of the property information. In order to maintain uniformity in the relationship between connection cards and property cards, a number of connection card types contain the same information, such as the connection cards for the various types of triangular elements. Also, the property cards for triangular and quadrilateral elements of the same type contain the same information.

The material property definition cards are used to define the properties for each of the materials used in the structural model. The MAT1 card is used to define the properties for isotropic materials. The MATS1 card specifies table references for isotropic material properties that are stress dependent. The TABLES1 card defines a tabular stress-strain function for use in Piecewise Linear Analysis. The MATT1 card specifies table references for isotropic material properties that are temperature dependent. The TABLEM1, TABLEM2, TABLEM3, and TABLEM4 cards define four different types of tabular functions for use in generating temperature dependent material properties.

The MAT2 card is used to define the properties for anisotropic materials. The MATT2 card specifies table references for anisotropic material properties that are temperature dependent. This card may reference any of the TABLEM1, TABLEM2, TABLEM3, or TABLEM4 cards.

The MAT3 card is used to define the properties for orthotropic materials used in the modeling of axisymmetric shells. This card may only be referenced by CTRIARG, CTRAPRG and PTØRDRG cards. The MATT3 card specifies table references for use in generating temperature dependent properties for this type of material.

The GENEL card is used to define general elements whose properties are defined in terms of deflection influence coefficients and which can be connected between any number of grid points. One of the important uses of the general element is the representation of part of a structure by means of experimentally measured data. No output data is prepared for the general element. Detail information on the general element is given in Section 5.7 of the Theoretical Manual.

1.3.2 Bar Element

The bar element is defined with a CBAR card and its properties (constant over the length) are defined with a PBAR card. The bar element includes extension, torsion, bending in two perpendicular planes and the associated shears. The shear center is assumed to coincide with the elastic axis. Any five of the six forces at either end of the element may be set equal to zero by using the pin flags on the CBAR card. The integers 1 to 6 represent the axial force, shearing force in Plane 1, shearing force in Plane 2, axial torque, moment in Plane 2 and moment in Plane 1 respectively. The structural and nonstructural mass of the bar are lumped at the ends of the element, unless coupled mass is requested with the PARAM card CØUPMASS (see Section 3.5.1). Theoretical aspects of the bar element are treated in Section 5.2 of the Theoretical Manual.

The element coordinate system is shown in Figure 1a. End a is offset from grid point a an amount measured by vector $\vec{w}_a$ and end b is offset from grid point b an amount measured by vector $\vec{w}_b$. The vectors $\vec{w}_a$ and $\vec{w}_b$ are measured in the global coordinates of the connected grid point. The x-axis of the element coordinate system is defined by a line connecting end a to end b of the bar element. The orientation of the bar element is described in terms of two reference planes. The reference planes are defined with the aid of vector $\vec{v}$. This vector may be defined directly with three components in the global system at end a of the bar or by a line drawn from end a to a third referenced grid point. The first reference plane (Plane 1) is defined by the x-axis and the vector $\vec{v}$. The second reference plane (Plane 2) is defined by the vector cross product $(\vec{x} \times \vec{v})$ and the x-axis. The subscripts 1 and 2 refer to forces and geometric properties associated with bending in planes 1 and 2 respectively. The reference planes are not necessarily principal planes. The coincidence of the reference planes and the principal planes is indicated by a zero product of inertia (I_{12}) on the PBAR card. If shearing deformations are included, the reference axes and the principal axes must coincide. When pin flags and offsets are used, the effect of the pin is to free the force at the end of the element x-axis of the beam, not at the grid point. The positive directions for element forces are shown in Figure 1b. The following element forces, either real or complex (depending on the rigid format), are output on request:

1. Bending moments at both ends in the two reference planes.
2. Shears in the two reference planes.
3. Average axial force.
4. Torque about the bar axis.

The following real element stresses are output on request:

1. Average axial stress.
2. Extensional stress due to bending at four points on the cross-section at both ends.
3. Maximum and minimum extensional stresses at both ends.
4. Margins of safety in tension and compression for the whole element.

Tensile stresses are given a positive sign and compressive stresses a negative sign. Only the average axial stress and the extensional stresses due to bending are available as complex stresses. The stress recovery coefficients on the PBAR card are used to locate points on the cross-section for stress recovery. The subscript 1 is associated with the distance of a stress recovery point from plane 2. The subscript 2 is associated with the distance from plane 1.

The use of the BARØR card avoids unnecessary repetition of input when a large number of bar elements either have the same property identification number or have their reference axes oriented in the same manner. This card is used to define default values on the CBAR card for the property identification number and the orientation vector for the reference axes. The default values are used only when the corresponding fields on the CBAR card are blank.

1.3.3 Rod Element

The rod element is defined with a CRØD card and its properties with a PRØD card. The rod element includes extensional and torsional properties. The CØNRØD card is an alternate form that includes both the connection and property information on a single card. The tube element is a specialized form that is assumed to have a circular cross-section. The tube element is defined with a CTUBE card and its properties with a PTUBE card. The structural and nonstructural mass of the rod are lumped at the adjacent grid points unless coupled mass is requested with the PARAM card CØUPMASS (see Section 3.5.1). Theoretical aspects of the rod element are treated in Section 5.2 of the Theoretical Manual.

The x-axis, of the element coordinate system, is defined by a line connecting end a to end b as shown in Figure 2. The axial force and torque are output on request in either the real or complex form. The positive directions for these forces are indicated in Figure 2. The following real element stresses are output on request:

1. Axial stress
2. Torsional stress
3. Margin of safety for axial stress
4. Margin of safety for torsional stress.

Positive directions are the same as those indicated in Figure 2 for element forces. Only the axial stress and the torsional stress are available as complex stresses.

Another kind of rod element is the viscous damper, that has extensional and torsional viscous damping properties rather than stiffness properties. The viscous damper element is defined with a CVISC card and its properties with a PVISC card. This element is used in the direct formulation of dynamic matrices.

1.3.4 Shear Panels and Twist Panels

The shear panel is defined with a CSHEAR card and its properties with a PSHEAR card. A shear panel is a two-dimensional structural element that resists the action of tangential forces applied to its edges, but does not resist the action of normal forces. The structural and nonstructural mass of the shear panel are lumped at the connected grid points. Details of the shear panel element are discussed in Section 5.3 of the Theoretical Manual.

The element coordinate system for a shear panel is shown in Figure 3. The integers 1, 2, 3 and 4 refer to the order of the connected grid points on the CSHEAR card. The corner loads in the directions of the diagonals are output on request in either the real or complex form. The positive directions for these forces are indicated in Figure 3. The shear stresses are calculated at the corners in skewed coordinates parallel to the exterior edges. The average of the four corner stresses and the maximum stress are output on request in either the real or complex form. A margin of safety is also output when the stresses are real.

The twist panel performs the same function for bending action that the shear panel performs for membrane action. The twist panel is defined with a CTWIST card and its properties with a PTWIST card. In calculating the stiffness matrix, a twist panel is assumed to be solid. For built-up panels, the thickness in the PTWIST card must be adjusted to give the correct moment of inertia of the cross-section. If mass calculations are being made, the density will also have to be adjusted on a MAT1 card. The element coordinate system and directions for positive forces are shown in Figure 4. Stress recovery is similar to that for shear panels.

1.3.5 Plate Elements

NASTRAN includes two different shapes of plate elements (triangular and quadrilateral) and two different stress systems (membrane and bending) which are uncoupled. There are in all a total of nine different forms of plate elements that are defined by connection cards as follows:

1. CTRMEM - triangular element with finite inplane stiffness and zero bending stiffness.
2. CTRBSC - basic unit from which the bending properties of the other plate elements are formed.
3. CTRPLT - triangular element with zero inplane stiffness and finite bending stiffness.
4. CTRIA1 - triangular element with both inplane and bending stiffness. It is designed for sandwich plates which can have different materials referenced for membrane, bending and transverse shear properties.

5. CTRIA2 - triangular element with both inplane and bending stiffness that assumes a solid homogeneous cross-section.

6. CQDMEM - quadrilateral element with finite inplane stiffness and zero bending stiffness.

7. CQDPLT - quadrilateral element with zero inplane stiffness and finite bending stiffness.

8. CQUAD1 - quadrilateral element with both inplane and bending stiffness. It is designed for sandwich plates which can have different materials referenced for membrane, bending and transverse shear properties.

9. CQUAD2 - quadrilateral element with both inplane and bending stiffness that assumes a solid homogeneous cross-section.

Theoretical aspects of the plate elements are treated in Section 5.8 of the Theoretical Manual.

The properties for the above elements are defined on the PTRMEM, PTRBSC, PTRPLT, PTRIA1, PTRIA2, PQDMEM, PQDPLT, PQUAD1 and PQUAD2 cards respectively. Anisotropic material may be specified for all plate elements. Transverse shear flexibility may be included for all bending elements on an optional basis, except for homogeneous plates (CTRIA2 and CQUAD2), where this effect is automatically included. Structural mass is calculated only for elements that specify a membrane thickness and is based only on the membrane thickness. Nonstructural mass can be specified for all plate elements except the basic bending triangle. Only lumped mass procedures are used for membrane elements. Coupled mass procedures may be requested for elements that include bending stiffness with the PARAM card CØUPMASS (see Section 3.5.1).

The element coordinate systems for triangular and quadrilateral plate elements are shown in Figure 5. The integers 1, 2, 3 and 4 refer to the order of the connected grid points on the connection cards defining the elements. The angle θ is the orientation angle for anisotropic materials.

Average values of element forces are calculated for all plate elements having a finite bending stiffness. The positive directions for plate element forces in the element coordinate system are shown in Figure 6a. The following element forces per unit of length, either real or complex, are output on request:

1. Bending moments on the x and y faces.

2. Twisting moment

3. Shear forces on the x and y faces.

No membrane forces are output.

Average values of the membrane stresses are calculated for the triangular and quadrilateral membrane elements. The positive directions for the membrane stresses in the element coordinate

system are shown in Figure 6b. The following real membrane stresses are output on request:

1. Normal stresses in the x and y directions
2. Shear stress on the x face in the y direction
3. Angle between the x-axis and the major principal axis
4. Major and minor principal stresses
5. Maximum shear stress

Only the normal stresses and shearing stress are available in the complex form.

If the plate element has bending stiffness the average stresses are calculated on the two faces of the plate for homogeneous plates and at two specified points on the cross-section for other plate elements. The distances to the specified points are given on the property cards. The positive directions for these fiber distances are defined according to the right-hand sequence of the grid points specified on the connection card. These distances must be nonzero in order to obtain nonzero stress output. The same stresses are calculated for each of the faces as are calculated for membrane elements.

The quadrilateral plate elements are intended for use when the surfaces are reasonably flat and the geometry is nearly rectangular. For these conditions the quadrilateral elements eliminate the modeling bias associated with the use of triangular elements, and quadrilaterals give more accurate results for the same mesh size. If the surfaces are highly warped, curved or swept, triangular elements should be used. Under extreme conditions quadrilateral elements will give results that are considerably less accurate than triangular elements for the same mesh size. Quadrilateral elements should be kept as nearly square as practicable, as the accuracy tends to deteriorate as the aspect ratio of the quadrilateral increases. Triangular elements should be kept as nearly equilateral as practicable, as the accuracy tends to deteriorate as the triangles become obtuse and as the ratio of the longest to the shortest side increases.

1.3.6 Conical Shell Element

The properties of the conical shell element are assumed to be symmetrical with respect to the axis of the shell. However, the loads and deflections need not be axisymmetric, as they are expanded in Fourier series with respect to the azimuthal coordinate. Due to symmetry, the resulting load and deformation systems for different harmonic orders are independent, a fact that results in a large time saving when the use of the conical shell element is compared with an

equivalent model constructed from plate elements. Theoretical aspects of the conical shell element are treated in Section 5.9 of the Theoretical Manual.

At present the conical shell element cannot be combined with other types of elements. The existence of a conical shell problem is defined by the AXIC card. This card also indicates the number of harmonics desired in the problem formulation. Only a limited number of bulk data cards are allowed when using conical shell elements. The list of allowable cards is given on the AXIC card description in Section 2.4.2.

The geometry of a problem using the conical shell element is described with RINGAX cards instead of GRID cards. The RINGAX cards describe concentric circles about the basic z-axis, with their locations given by radii and z-coordinates as shown in Figure 7. The degrees of freedom defined by each RINGAX card are the fourier coefficients of the motion with respect to angular position around the circle. For example the radial motion, u_r, at any angle, ϕ, is described by the equation:

$$u_r(\phi) = \sum_{n=0}^{N} u_r^n \cos\phi + \sum_{n=0}^{N} u_r^{n*} \sin n\phi \ , \qquad (1)$$

where u_r^n and u_r^{n*} are the fourier coefficients of radial motion for the n-harmonic. For calculation purposes the series is limited to N harmonics as defined by the AXIC card. The first sum in the above equation describes symmetric motion with respect to the $\phi = 0$ plane. The second sum with the "starred" (*) superscripts describes the antisymmetric motion. Thus each RINGAX data card will produce six times N degrees of freedom for each series.

The selection of symmetric or antisymmetric solutions is controlled by the AXISYM card in the Case Control Deck. For general loading conditions, a combination of the symmetric and antisymmetric solutions must be made, using the SYMCØM card in the Case Control Deck (Section 2.3 of the User's Manual).

Since the user is rarely interested in applying his loads in terms of fourier harmonics and interpreting his data by manually performing the above summations, NASTRAN is provided with special data cards which automatically perform these operations. The PØINTAX card is used like a GRID card to define physical points on the structure for loading and output. Sections of the circle may be defined by a SECTAX card which defines a sector with two angles and a referenced RINGAX card. The PØINTAX and SECTAX cards define six degrees of freedom each. The basic coordi-

nate system for these points is a cylindrical system (r, ϕ, z) and their applied loads must be described in this coordinate system. Since the displacements of these points are dependent on the harmonic motions, they may not be constrained in any manner.

The conical shell element is connected to two RINGAX points with a CCØNEAX card. The properties of the conical shell element are described on the PCØNEAX card. The RINGAX points must be placed on the neutral surface of the element and the points for stress calculation must be given on the PCØNEAX card relative to the neutral surface. Up to fourteen angular positions around the element may be specified for stress and force output. These values will be calculated midway between the two connected rings.

The structure defined with RINGAX and CCØNEAX cards must be constrained in a special manner. All harmonics may be constrained for a particular degree of freedom on a ring by using permanent single-point constraints on the RINGAX cards. Specified harmonics of each degree of freedom on a ring may be constrained with a SPCAX card. This card is the same as the SPC card except that a harmonic must be specified. The MPCAX, ØMITAX, and SUPAX data cards correspond to the MPC, ØMIT, and SUPØRT data except that harmonics must be specified. SPCADD and MPCADD cards may be used to combine constraint sets in the usual manner.

The conical shell structure may be loaded in various ways. Concentrated forces may be described by FØRCE and MØMENT cards applied to PØINTAX points. Pressure loads may be input in the PRESAX data card which defines an area bounded by two rings and two angles. Temperature fields are described by a paired list of angles and temperatures around a ring as required by the TEMPAX card. Direct loads on the harmonics of a RINGAX point are given by the FØRCEAX and MØMAX card. Since the basic coordinate system is cylindrical the loads are given in the r, ϕ, and z directions. The value of a harmonic load F_n is the total load on the whole ring of radius r. If a sinusoidal load per unit length of maximum value a_n is given, the value on the FØRCEAX card must be:

$$F_n = 2\pi r a_n \qquad n = 0 \ , \tag{2}$$

$$F_n = \pi r a_n \qquad n > 0 \ . \tag{3}$$

Displacements of rings and forces in conical shell elements can be requested in two ways:

1. The harmonic coefficients of displacements on a ring or forces in a conical element.
2. The displacements at specified points or the average value over a specified sector of a ring. The forces in the element at specified azimuths or average values over specified sectors of a conical element.

Harmonic output is requested by ring number for displacements and conical shell element number for element forces. The number of harmonics that will be output for any request is a constant for any single execution. This number is controlled by the HARMØNICS card in the Case Control Deck (see Section 2.3).

The following element forces per unit of width are output either as harmonic coefficients or at specified locations on request:

1. Bending moments on the u and v faces
2. Twisting moments
3. Shearing forces on the u and v faces

The following element stresses are calculated at two specified points on the cross-section of the element and output either as harmonic coefficients or at specified locations on request:

1. Normal stresses in u and v directions
2. Shearing stress on the u face in the v direction
3. Angle between the u-axis and the major principal axis
4. Major and minor principal stresses
5. Maximum shear stress

1.3.7 Axisymmetric Shell Elements

Two types of elements are provided that have an axisymmetric geometric configuration and that are restricted to axisymmetric applied loading. The first type is the ring element, which may have a triangular or trapezoidal cross-section and in the limiting case becomes a solid core element (see Section 5.11 of the Theoretical Manual). These elements are used for the modeling of axisymmetric thick walled structures of arbitrary profile. The second type is the toroidal ring element, which in the limiting case becomes a cap element (see Section 5.10 of the Theoretical Manual). The two types of axisymmetric ring elements cannot be used together nor can either of the elements be used with any other elements. Otherwise, these elements are used in a conventional manner, and except for their own connection and property cards, do not have special bulk data cards.

The coordinate system for the triangular ring element is shown on Figure 8. The cylindrical system is implied by the use of the triangular ring element. Hence, no explicit definition of the basic cylindrical coordinate system is required. Cylindrical anisotropy is optional for the

material properties in the ring element. Orientation of the orthotropic axes in the (r,z) plane is specified by the angle θ. Deformation behavior of the element is described in terms of translations in the r and z directions at each of the 3 connected grid points. All other degrees of freedom should be constrained.

The triangular ring element is defined with a CTRIARG card. No property card is used for this element. The material property reference is given on the connection card. The integers 1, 2 and 3 on Figure 8 refer to the order of the connected grid points on the CTRIARG card. This order must be counter-clockwise around the element. The grid points must lie in the r-z plane of the basic cylindrical coordinate system, and they must lie to the right of the axis of symmetry.

The radial and axial forces at each connected grid point are output on request. The positive directions for these forces are shown in Figure 8. These are apparent element forces and they include any equivalent thermal loads. The stresses at the centroid of an element are output on request. The available quantities are the normal stresses in the radial, circumferential and axial directions, and the shear stress on the radial face in the axial direction. Positive stresses are in the positive direction on the positive face.

The coordinate system for the trapezoidal ring element is shown in Figure 9. This element is similar to the triangular ring element. This element has the additional restriction that the element numbering must begin at the lower left hand corner of the element. Also, the parallel faces of the trapezoid must be perpendicular to the axis of symmetry. This element can be used in the limiting case where the r coordinates associated with grid points 1 and 4 are zero. In this special case the element is referred to as a core element.

The trapezoidal ring element is defined with a CTRAPRG card in a manner similar to that for a triangular element. The forces at the four connected grid points are provided on request in a manner similar to that for a triangular element. In addition to providing the stresses at the centroid of the trapezoid, similar stresses are provided at the four connected grid points.

The coordinate system for the toroidal ring is shown in Figure 10. This spherical coordinate system is implied by the use of the toroidal element, and hence, no explicit definition is required. The toroidal element may use orthotropic materials. The axes of orthotropy are assumed to coincide with the element coordinate axes.

Deformation behavior of the toroidal element is described by five degrees of freedom for each

of the two grid rings which it connects. The degrees of freedom in the implicit coordinate system are:

1. $\bar{u}$ - radial displacement
2. Not defined for toroidal element (must be constrained)
3. $\bar{w}$ - axial displacement
4. $w' = \frac{\partial w}{\partial \xi}$ slope in ξ-direction
5. $u' = \frac{\partial u}{\partial \xi}$ strain in ξ-direction
6. $w'' = \frac{\partial^2 w}{\partial \xi^2}$ curvature in $z\xi$-plane

The displacements u and w are in the basic coordinate system, and hence can be expressed in other local coordinate systems if desired. However, the quantities u', w' and w" are always in the element coordinate system.

The toroidal ring element is defined with a CTØRDRG card and its properties with a PTØRDRG card. The integers 1 and 2 on Figure 10 refer to the order of the connected grid points on the CTØRDRG card. The grid points must lie in the r-$\bar{z}$ plane of the basic coordinate system and they must lie to the right of the axis of symmetry. The angles α_1 and α_2 in Figure 10 are the angles of curvature and are defined as the angle measured in degrees from the axis of symmetry to a line which is perpendicular to the tangent to the surface at grid points 1 and 2 respectively. For conic rings $\alpha_1 = \alpha_2$ and for cylindrical rings $\alpha_1 = \alpha_2 = 90$ degrees. Toroidal elements may be connected to form closed figures in the r-$\bar{z}$ plane, but slope discontinuities are not permitted at connection points.

The following forces, evaluated at each end of the toroidal element, are output on request:

1. Radial force
2. Axial force
3. Meridional moment
4. A generalized force which corresponds to the w' degree of freedom.
5. A generalized force which corresponds to the w" degree of freedom.

The first three forces are referenced to the global coordinate system and the two generalized forces are referenced to the element coordinate system. For a definition of the generalized forces see Section 5.10 of the Theoretical Manual.

The following stresses, evaluated at both ends and the midspan of each element, are output on request:

1. Tangential membrane stress (Force per unit length)
2. Circumferential membrane stress (Force per unit length)
3. Tangential bending stress (Moment per unit length)
4. Circumferential bending stress (Moment per unit length)
5. Shearing stress (Force per unit length)

The positive directions for these stresses are indicated in Figure 11.

1.3.8 Scalar Elements

Scalar elements are connected between pairs of degrees of freedom (at either scalar or geometric grid points) or between one degree of freedom and ground. Scalar elements are available as springs, masses and viscous dampers. Scalar spring elements are useful for representing elastic properties that cannot be conveniently modeled with the usual metric structural elements. Scalar masses are useful for the selective representation of inertia properties, such as occurs when a concentrated mass is effectively isolated for motion in one direction only. The scalar damper is used to provide viscous damping between two selected degrees of freedom or between one degree of freedom and ground. It is possible, using only scalar elements and constraints, to construct a model for the linear behavior of any structure. However it is expected that these elements will be used only when the usual metric elements are not satisfactory. Scalar elements are useful for modeling part of a structure with its vibration modes or when trying to consider electrical or heat transfer properties as part of an overall structural analysis. The reader is referred to Sections 5.5 and 5.6 of the Theoretical Manual for further discussions on the use of scalar elements.

The most general definition of a scalar spring is given with a CELAS1 card. The associated properties are given on the PELAS card. The properties include the magnitude of the elastic spring, a damping coefficient, and a stress coefficient to be used in stress recovery. The CELAS2 defines a scalar spring without reference to a property card. The CELAS3 card defines a scalar spring that is connected only to scalar points and the properties are given on a PELAS card. The CELAS4 card defines a scalar spring that is connected only to scalar points and without reference

to a property card. No damping coefficient or stress coefficient is available with the CELAS4 card.

Scalar elements may be connected to ground without the use of constraint cards. Grounded connections are indicated on the connection card by leaving the appropriate scalar identification number blank. Since the values for scalar elements are not functions of material properties, no references to such cards are needed.

The CMASS1, CMASS2, CMASS3 and CMASS4 cards define scalar masses in a manner similar to the scalar spring definitions. The associated PMASS card contains only the magnitude of the scalar mass.

The CDAMP1, CDAMP2, CDAMP3 and CDAMP4 cards define scalar dampers in a manner similar to the scalar spring definitions. The associated PDAMP card contains only a value for the scalar damper.

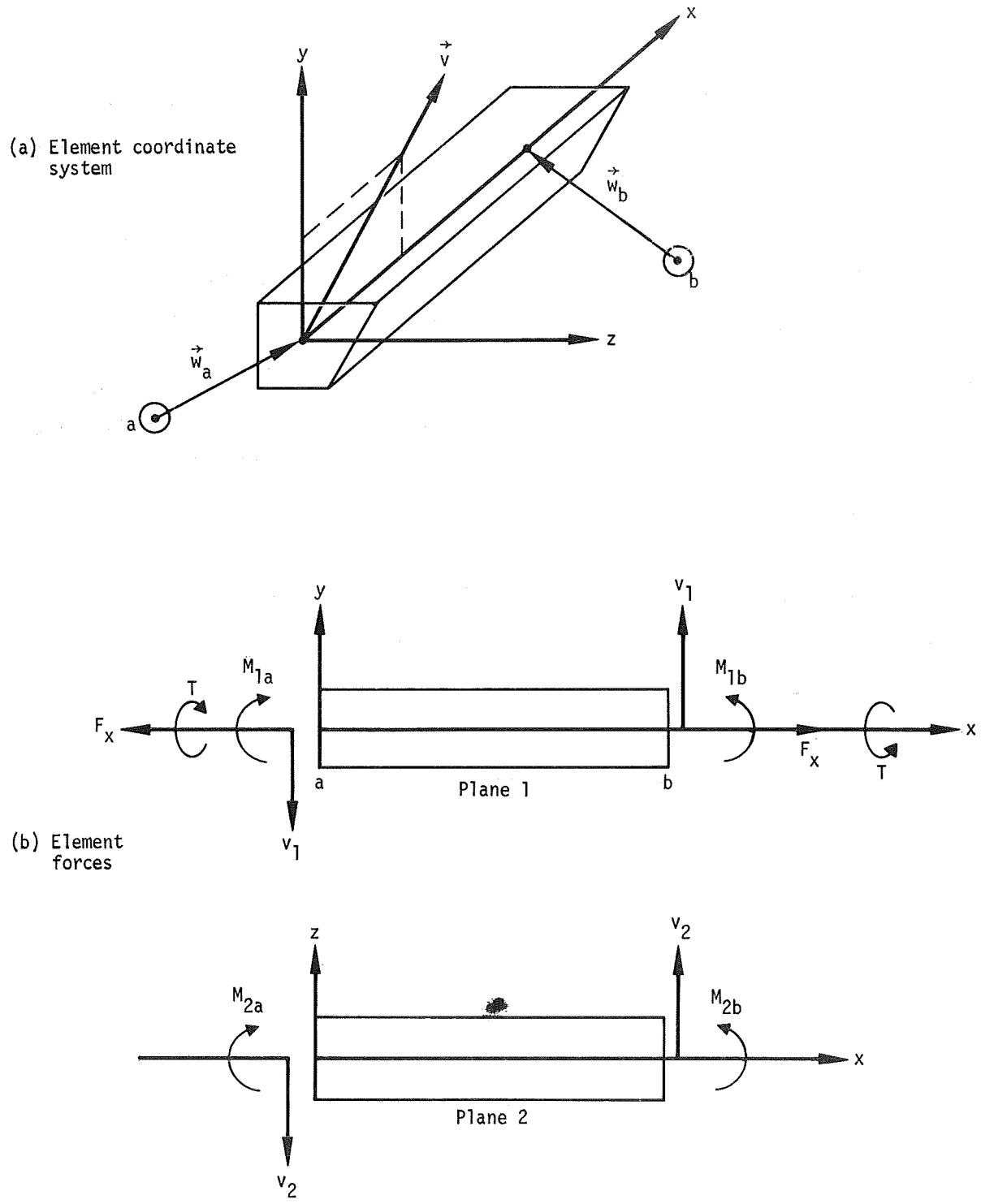

Figure 1. Bar element coordinate system and element forces.

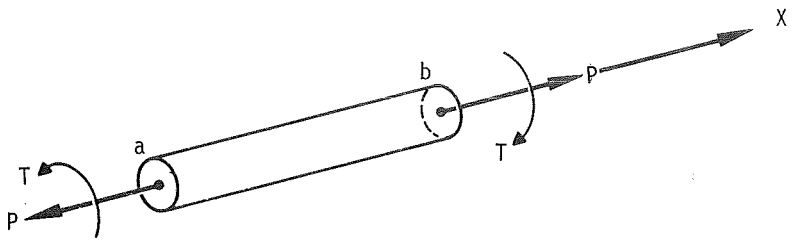

Figure 2. Rod element coordinate system and element forces

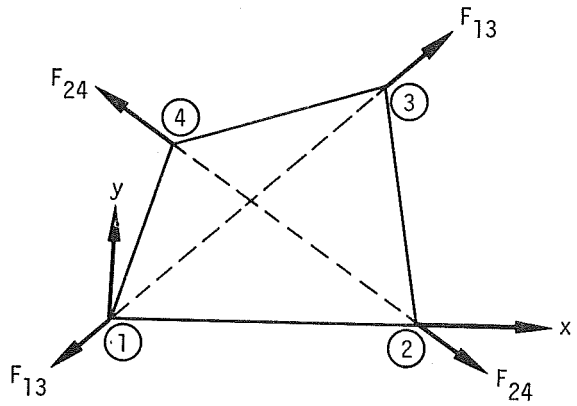

Figure 3. Shear panel coordinate system and element forces

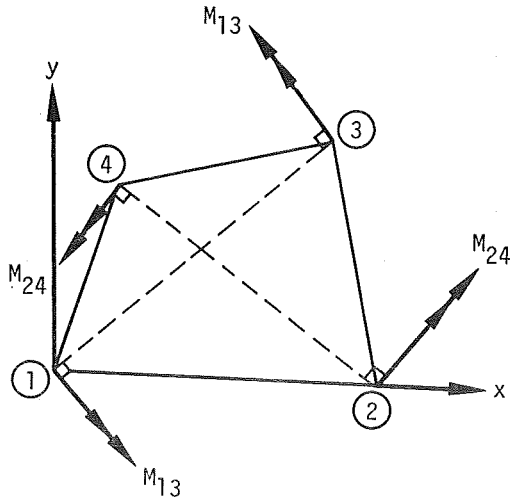

Figure 4. Twist panel coordinate system and element forces.

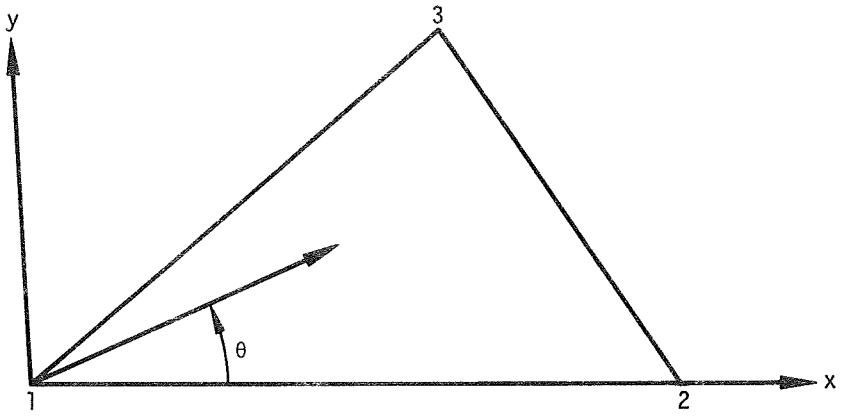

(a)

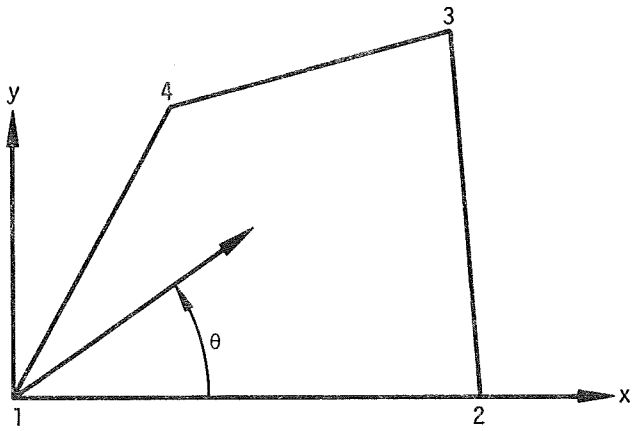

(b)

Figure 5. Plate element coordinate systems.

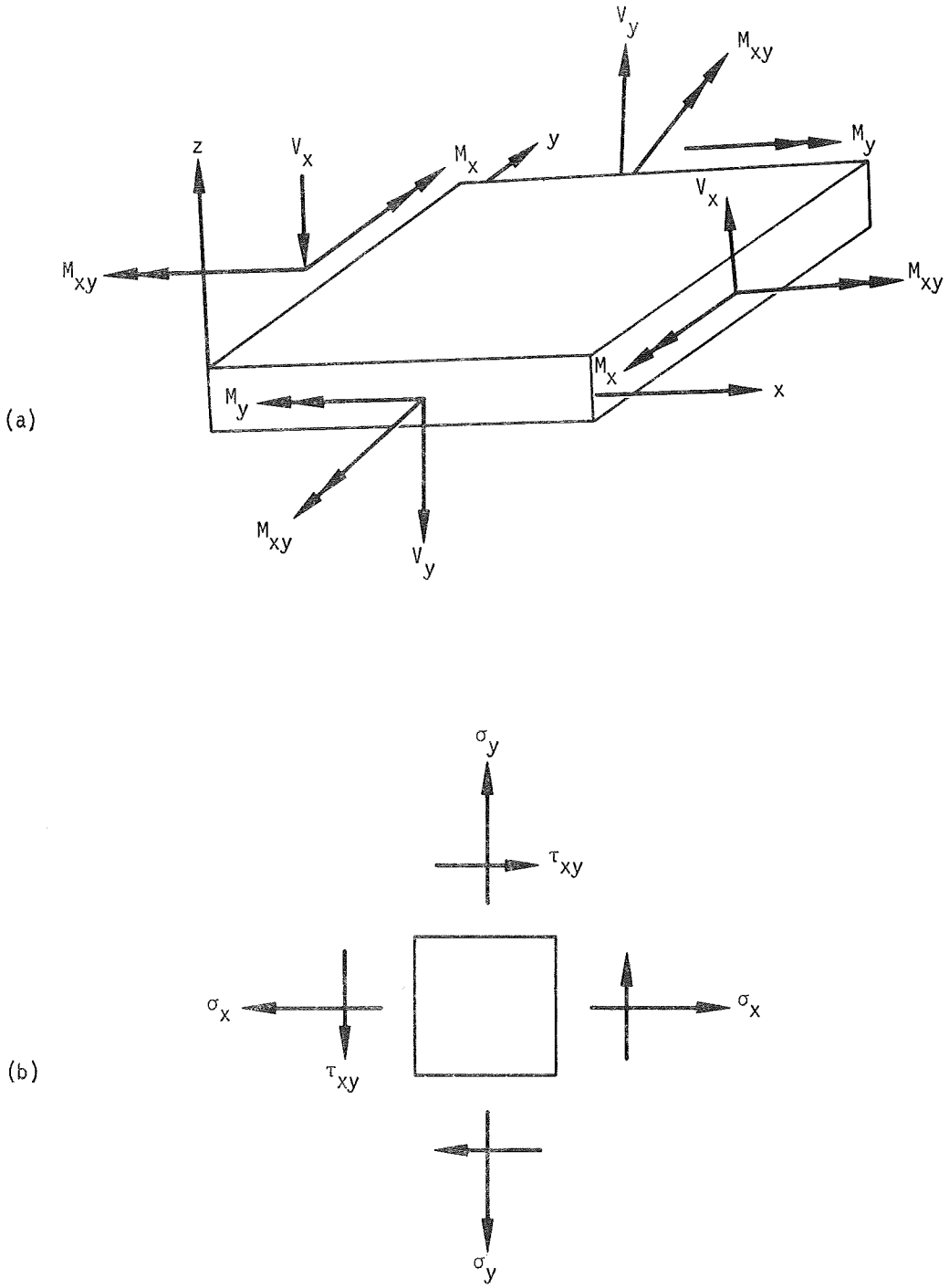

Figure 6. Forces and stresses in plate elements.

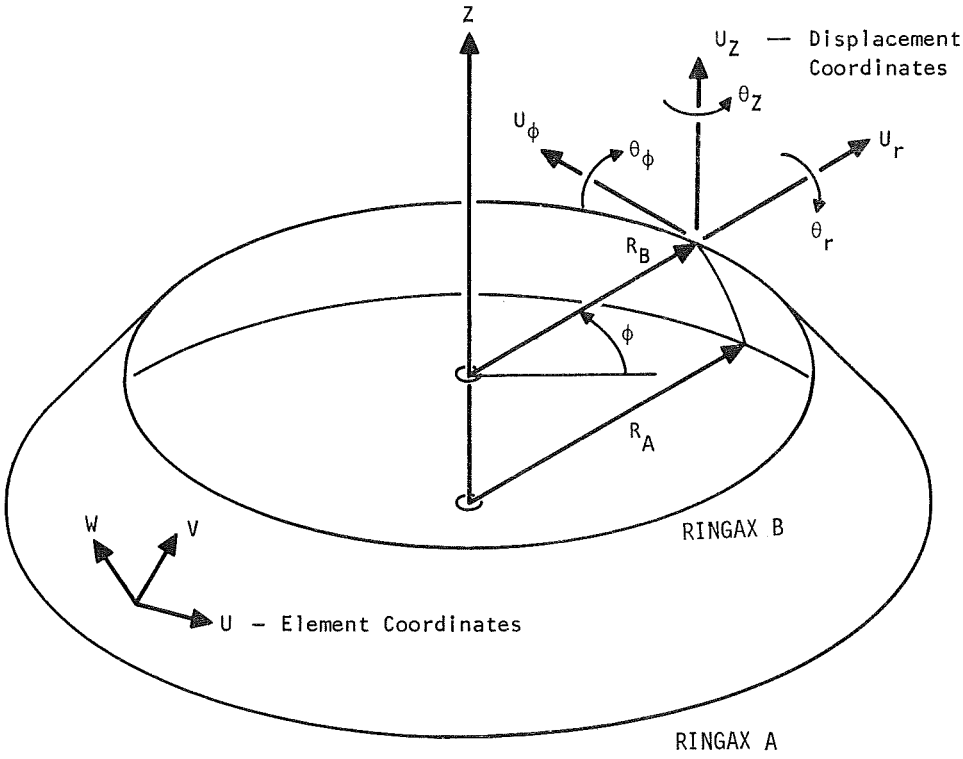

Figure 7. Geometry for conical shell element.

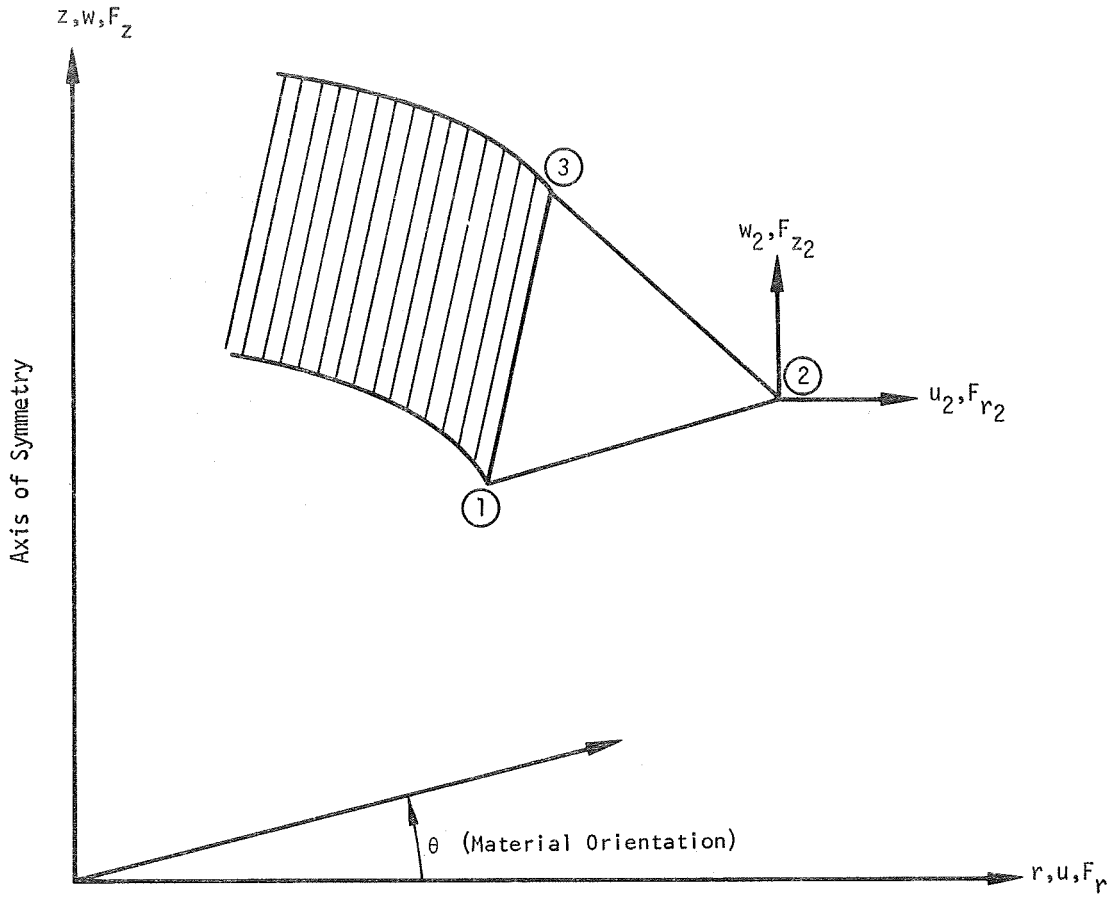

Figure 8. Triangular ring element coordinate system.

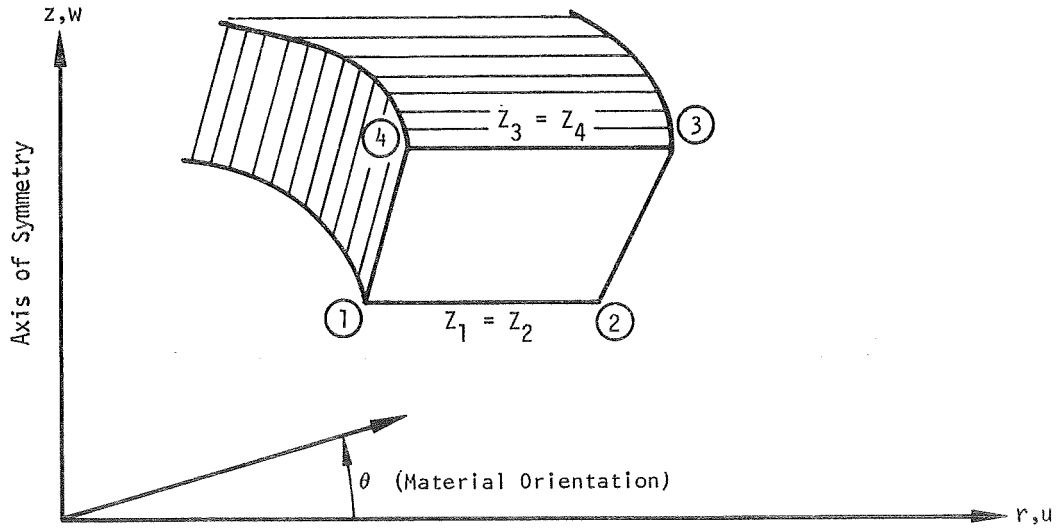

Figure 9. Trapezoidal ring element coordinate system.

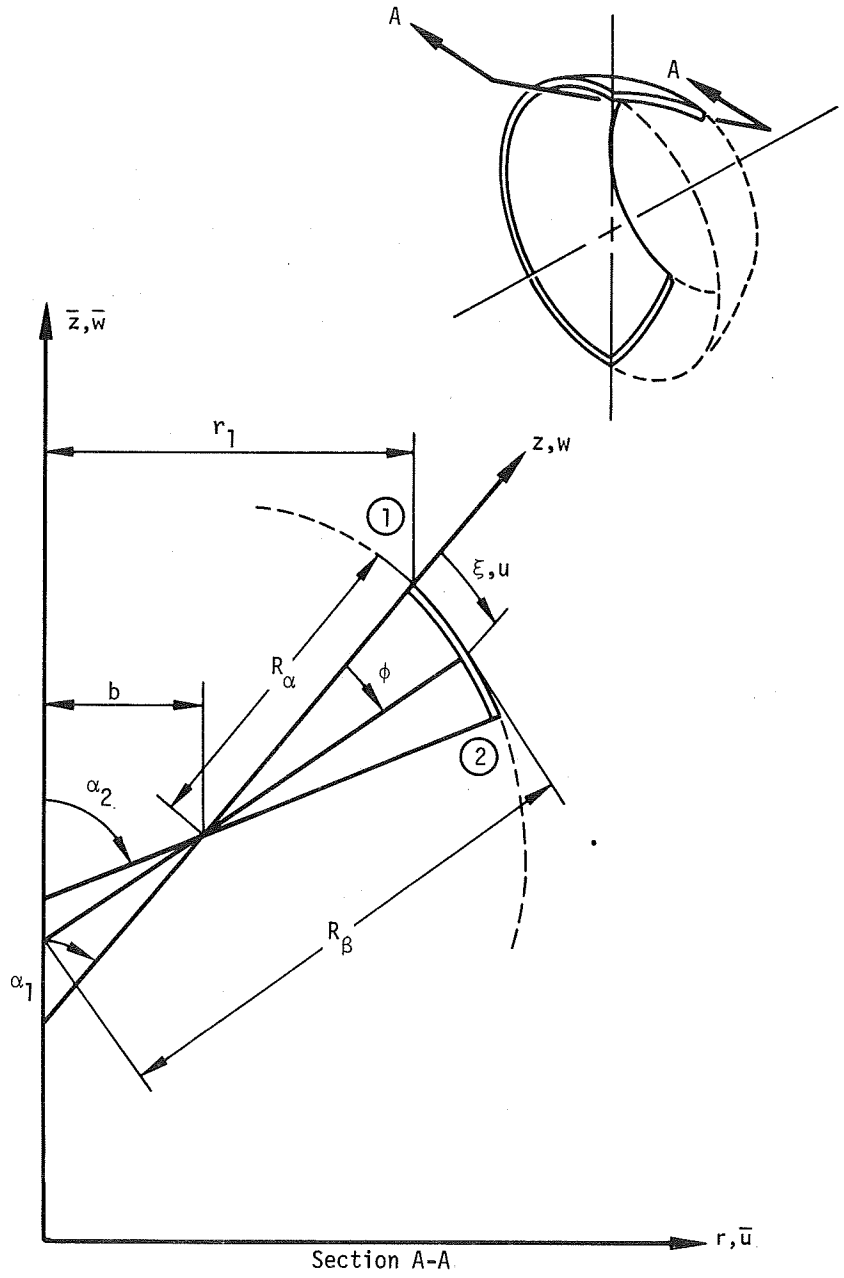

Figure 10. Toroidal ring element coordinate system.

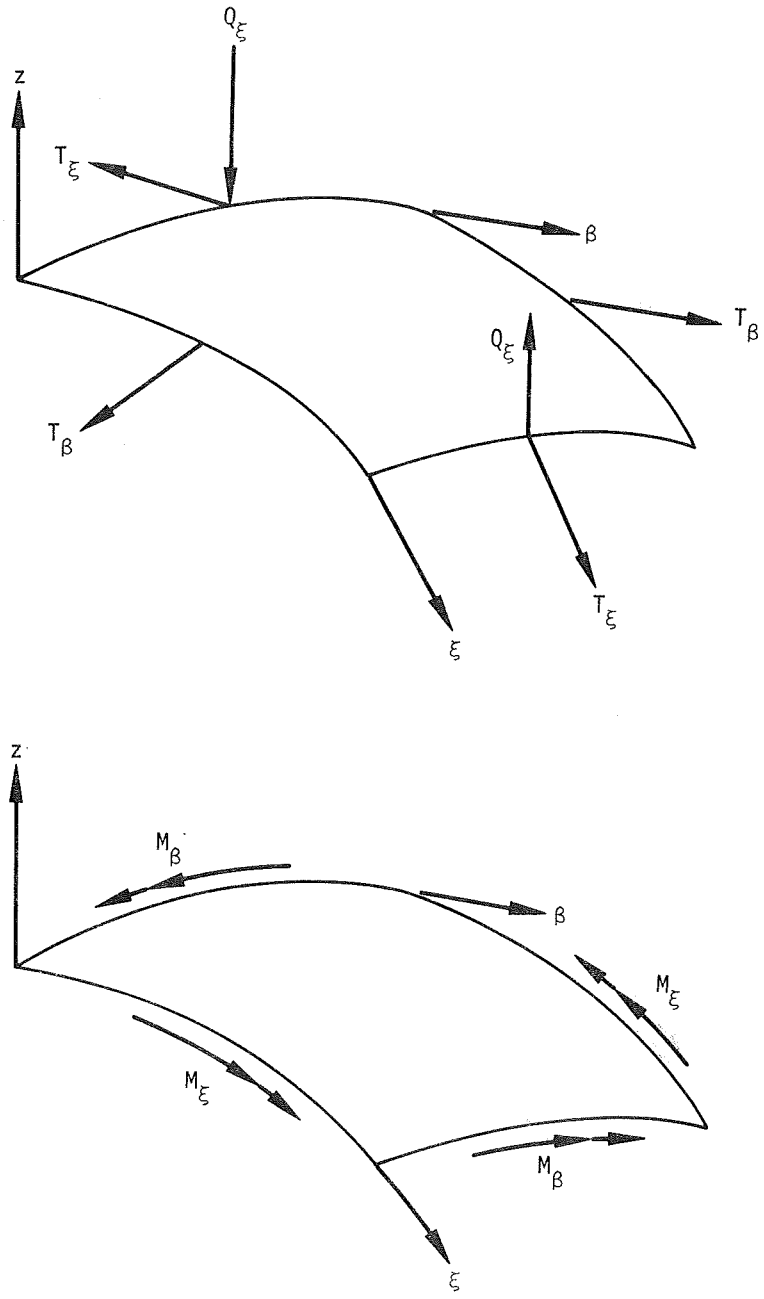

Figure 11. Stresses for toroidal element.

1.4 CONSTRAINTS AND PARTITIONING

Structural matrices are initially assembled in terms of all structural grid points, which excludes only the extra scalar points introduced for dynamic analysis. These matrices are generated with six degrees of freedom for each geometric grid point and a single degree of freedom for each scalar point. Various constraints are applied to these matrices in order to remove undesired singularities, provide boundary conditions, define rigid elements, and provide other desired characteristics for the structural model.

There are two basic kinds of constraints. Single-point constraints are used to constrain a degree of freedom to zero or to a prescribed value, and multipoint constraints are used to constrain a degree of freedom to be equal to a linear combination of the values of other degrees of freedom. The following four types of bulk data cards are provided for the definition of constraints:

1. Single-point constraint cards
2. Multipoint constraint cards
3. Cards to define reaction points on free bodies
4. Cards to define the omitted coordinates in matrix partitioning

The latter type does not produce constraint forces in static analysis.

1.4.1 Single-Point Constraints

A single-point constraint applies a fixed value to a translational or rotational component at a geometric grid point or to a scalar point. One of the most common uses of single-point constraints is to specify the boundary conditions of a structural model by fixing the appropriate degrees of freedom. Multiple sets of single-point constraints can be provided in the Bulk Data Deck, with selections made at execution time by using the subcase structure in the Case Control Deck as explained in Section 2.3.3. This procedure is particularly useful in the solution of problems having one or more planes of symmetry.

The elements connected to a grid point may not provide resistance to motion in certain directions, causing the stiffness matrix to be singular. Single-point constraints are used to remove these degrees of freedom from the stiffness matrix. A typical example is a planar structure composed of membrane and extensional elements. The translations normal to the plane and all three rotational degrees of freedom must be constrained since the corresponding stiffness matrix

terms are all zero. If a grid point has a direction of zero stiffness, the single-point constraint need not be exactly in that direction, but only needs to have a component in that direction. This allows the use of single-point constraints for the removal of such singularities regardless of the orientation of the global coordinate system. Although the displacements will depend on the direction of the constraint, the internal forces will be unaffected.

One of the tasks performed by the Structural Matrix Assembler (Section 4.27 of the Programmer's Manual) is to examine the stiffness matrix for singularities at the grid point level. Singularities remaining at this level, following the application of the single-point constraints, are listed in the Grid Point Singularity Table (GPST). This table is automatically printed following the comparison of the possible singularities tabulated by the Structural Matrix Assembler with the single-point constraints and the dependent coordinates of the multipoint constraint equations provided by the user. The GPST contains all possible combinations of single-point constraints, in the global coordinate system, that can be used to remove the singularities. These remaining singularities are treated only as warnings, because it cannot be determined at the grid point level whether or not the singularities are removed by other means, such as general elements or multipoint constraints in which these singularities are associated with independent coordinates.

Single-point constraints are defined on SPC, SPC1, SPCADD and SPCAX cards. The SPC card is the most general way of specifying single-point constraints. The SPC1 card is a less general card that is more convenient when a number of grid points have the same components constrained to a zero displacement. The SPCADD card defines a union of single-point constraint sets specified with SPC or SPC1 cards. The SPCAX card is used only for specifying single-point constraints in problems using conical shell elements.

Single-point constraints can also be defined on the GRID card. In this case, however, the constraints are part of the model and modifications cannot be made at the subcase level. Also, only zero displacements can be specified on the GRID card.

1.4.2 Multipoint Constraints

Each multipoint constraint is described by a single equation that specifies a linear relationship for two or more degrees of freedom. Multiple sets of multipoint constraints can be provided in the Bulk Data Deck, with selections made at execution time by using the subcase structure in the Case Control Deck as explained in Section 2.3.3. Multipoint constraints are

discussed in Sections 3.5.1 and 5.4 of the Theoretical Manual.

Multipoint constraints are defined on MPC, MPCADD and MPCAX cards. The MPC card is the basic card for defining multipoint constraints. The first coordinate mentioned on the card is taken as the dependent degree of freedom, i.e. that degree of freedom that is removed from the equations of motion. Dependent degrees of freedom may appear as independent terms in other equations of the set, however, they may appear as dependent terms in only a single equation. The MPCADD card defines a union of multipoint constraint sets specified with MPC cards. The MPCAX card is used only for specifying multipoint constraints in problems using conical shell elements. Some uses of multipoint constraints are:

1. To enforce zero motion in directions other than those corresponding with components of the global coordinate system. In this case, the multipoint constraint will involve only the degrees of freedom at a single grid point. The constraint equation relates the displacement in the direction of zero motion to the displacement components in the global system at the grid point.
2. To describe rigid elements and mechanisms such as levers, pulleys and gear trains. In this application, the degrees of freedom associated with the rigid element that are in excess of those needed to describe rigid body motion are eliminated with multipoint constraint equations. Treatment of very stiff members as being rigid elements eliminates the ill-conditioning associated with their treatment as ordinary elastic elements.
3. To be used with scalar elements to generate nonstandard structural elements and other special effects.
4. To describe parts of a structure by local vibration modes. This application is treated in section 14.1 of the Theoretical Manual. The general idea is that the matrix of local eigenvectors represents a set of constraints relating physical coordinates to modal coordinates.

At present, the user provides the coefficients in the multipoint constraint equations.

1.4.3 Free Body Supports

In the following discussion, a free body is defined as a structure that is capable of motion without internal stress, i.e. it has one or more rigid body degrees of freedom. The stiffness matrix for a free body is singular with the defect equal to the number of stress-free, or rigid

body modes. A solid three-dimensional body has up to six rigid body modes. Linkages and mechanisms can have a greater number. No restriction is placed in the program on the number of stress-free modes, in order to permit the analysis of mechanisms.

Free-body supports are defined with a SUPØRT card. In the case of problems using conical shell elements, the SUPAX card is used. In either case, only a single set can be specified, and if such cards appear in the Bulk Data Deck, they are automatically used in the solution. Free-body supports must be defined in the global coordinate system.

In static analysis by the displacement method, the rigid body modes must be restrained in order to remove the singularity of the stiffness matrix. The required constraints may be supplied with single-point constraints, multipoint constraints, or free-body supports. If free-body supports are used, the rigid body characteristics will be calculated and a check will be made on the sufficiency of the supports. Such a check is obtained by calculating the rigid body error ratio as defined in the Rigid Body Matrix Generator operation in Section 3.2.2. This error ratio is automatically printed following the execution of the Rigid Body Matrix Generator. The error ratio should be zero, but may be nonzero for any of the following reasons:

1. Round-off error accumulation
2. Insufficient free-body supports have been provided
3. Redundant free-body supports have been provided

The redundancy of the supports may be caused by improper use of the free-body supports themselves, or by the presence of single-point or multipoint constraints that constrain the rigid body motions.

Static analysis with inertia relief is necessarily made on a model having at least one rigid body motion. Such rigid body motion must be constrained by the use of free-body supports. These supported degrees of freedom define a reference system, and the elastic displacements are calculated relative to the motion of the support points. The element stresses and forces will be independent of any valid set of supports.

Rigid body vibration modes are calculated by a separate procedure provided that a set of free-body supports are supplied by the user. This is done to improve efficiency and, in some cases, reliability. The determinant method, for example, has difficulty extracting zero frequency roots of high multiplicity, whereas the alternate procedure of extracting rigid body modes is both efficient and reliable. If the user does not specify free-body supports (or he specifies

an insufficient number of them) the (remaining) rigid body modes will be calculated by the method selected for the finite frequency modes, provided zero frequency is included in the range of interest. If the user does not provide free-body supports, and if zero frequency is not included in the range of interest, the rigid body modes will not be calculated.

Free-body supports must be specified if the mode acceleration method of solution improvement is used for dynamics problems having rigid body degrees of freedom (see Section 9.4 of the Theoretical Manual). This solution improvement technique involves a static solution, and although the dynamic solution can be made on a free-body, the static solution cannot be performed without removing the singularities in the stiffness matrix associated with the rigid body motions.

1.4.4 Partitioning

A two-way partitioning scheme is provided as an optional feature for the NASTRAN model. The partitions are defined by listing the degrees of freedom for one of the partitions on the ØMIT card. These degrees of freedom are referred to as the omitted set. The remaining degrees of freedom are referred to as the analysis set. The ØMIT1 card is easier to use if a large number of grid points have the same degrees of freedom in the omitted set. In the case of problems using conical shell elements, the ØMITAX card is used.

Partitioning can be used to improve the efficiency in the solution of ordinary statics problems where the bandwidth of the unpartitioned stiffness matrix is large enough to cause excessive use of secondary storage devices during the triangular decomposition of the stiffness matrix. In this application, the analysis set should be relatively small and should be selected so that the omitted set will consist of uncoupled partitions, each having a bandwidth of approximately the same size and smaller than the original matrix. The omitted set might be thought of as consisting of several substructures which are coupled to the analysis set.

Matrix partitioning also improves efficiency when solving a number of similar cases with stiffness changes in local regions of the structure. In this application, the omitted set is relatively large, and should be selected so that the structural elements that will be changed are connected only to points in the analysis set. The stiffness matrix for the omitted set is then unaffected by the structural changes, and only the smaller stiffness matrix for the analysis set need be decomposed for each case. In order to avoid repeating the decomposition of the stiffness matrix for the omitted set, the alter feature must be used to replace the functional module SMP1

with SMP2. The alter feature is described in section 2.2, and a similar use of SMP2 occurs near the end of the DMAP sequence used in the rigid format for Static Analysis with Differential Stiffness.

One of the more important applications of partitioning is the Guyan Reduction, described in Section 3.5.4 of the Theoretical Manual. This technique is a means for reducing the number of degrees of freedom used in dynamic analysis with minimum loss of accuracy. Its basis is that many fewer grid points are needed to describe the inertia of a structure than are needed to describe its elasticity with comparable accuracy. The error in the approximation is small provided that the set of displacements used for dynamic analysis is judiciously chosen. Its members should be uniformly dispersed throughout the structure and all large mass items should be connected to grid points that are members of the analysis set.

The user is cautioned to consider the fact that the matrix operations associated with this partitioning procedure tend to create nonzero terms and to fill what were previously very sparse matrices. The partitioning option is most effectively used if the members of the omitted set are either a very large fraction or a very small fraction of the total set. In most of the applications the omitted set is a large fraction of the total and the matrices used for analysis, while small, are usually full. If the analysis set is not a small fraction of the total, a solution using the larger, but sparser matrices, may well be more efficient. The partitioning option can also be used to make modest reductions in the order of the problem by placing a few scattered grid points in the omitted set. If the points in the omitted set are uncoupled, the sparseness in the matrices will be well preserved.

1.5 APPLIED LOADS

1.5.1 Static Loads

In NASTRAN, static loads are applied to geometric and scalar grid points in a variety of ways, including:

1. Loads applied directly to grid points.
2. Pressure on surfaces.
3. Gravity loads (internally generated).
4. Centrifugal forces due to steady rotation.
5. Equivalent loads resulting from thermal expansion
6. Equivalent loads resulting from enforced deformations of structural elements.
7. Equivalent loads resulting from enforced displacements of grid points.

Additional information on static loads is given in Section 3.6 of the Theoretical Manual. Any number of load sets can be defined in the Bulk Data Deck. However, only those sets selected in the Case Control Deck, as described in Section 2.3, will be used in the problem solution. The manner of selecting each type of load is specified on the associated bulk data card description in Section 2.4.

The FØRCE card is used to define a static load applied to a geometric grid point in terms of components defined by a local coordinate system. The orientation of the load components depends on the type of local coordinate system used to define the load. The directions of the load components are the same as those indicated on Figure 1 of Section 1.2 for displacement components. The FØRCE1 card is used if the direction is determined by a vector connecting two grid points, and a FØRCE2 card is used if the direction is specified by the cross product of two such vectors. The MØMENT, MØMENT1 and MØMENT2 cards are used in a similar fashion to define the application of a concentrated moment at a geometric grid point. The SLØAD card is used to define a load at a scalar point. In this case, only the magnitude is specified, as only one component of motion exists at a scalar point.

The FØRCEAX and MØMAX cards are used to define the loading of specified harmonics on rings of conical shell elements. FØRCE and MØMENT cards may be used to apply concentrated loads or moments to conical shell elements, providing that such points have been defined with a PØINTAX card.

Pressure loads on triangular and quadrilateral elements are defined with a PLØAD2 card. The positive direction of the loading is determined by the order of the grid points on the element connection card, using the right hand rule. The magnitude and direction of the load is automatically computed from the value of the pressure and the coordinates of the connected grid points. The load is applied to the connected grid points. The PLØAD card is used in a similar fashion to define the loading of any three or four grid points regardless of whether they are connected with two-dimensional elements. The PRESAX card is used to define a pressure loading on a conical shell element.

The GRAV card is used to specify a gravity load by providing the components of the gravity vector in any defined coordinate system. The gravity load is obtained from the gravity vector and the mass matrix assembled by the Structural Matrix Assembler (see Section 4.28 of the Programmer's Manual). The gravitational acceleration is not calculated at scalar points. The user is required to introduce gravity loads at scalar points directly.

The RFØRCE card is used to define a static loading condition due to a centrifugal force field. A centrifugal force load is specified by the designation of a grid point that lies on the axis of rotation and by the components of rotational velocity in any defined coordinate system. In the calculation of the centrifugal force, the mass matrix is regarded as pertaining to a set of distinct rigid bodies connected to grid points. Deviations from this viewpoint, such as the use of scalar points or the use of mass coupling between grid points, can result in errors.

The equivalent loads due to thermal expansion are calculated by separate subroutines for each type of structural element, and are applied to the connected grid points. The temperatures that are specified at grid points (using TEMP, TEMPD and TEMPAX cards) are interpolated to the centers of the elements. The temperature is assumed to be uniform throughout the volume of each element. The thermal expansion coefficients and temperature dependent elastic moduli are defined on the material property definition cards. The mere presence of a thermal field does not imply the application of a thermal load. A thermal load will not be applied unless the user makes a specific request in the Case Control Deck.

Enforced axial deformations can be applied to rod and bar elements. They are useful in the simulation of misfit and misalignment in engineering structures. As in the case of thermal expansion, the equivalent loads are calculated by separate subroutines for each type of structural

element, and are applied to the connected grid points. The magnitude of the axial deformation is specified on a DEFØRM card.

The equivalent loads resulting from enforced displacments of grid points are calculated by the program and added to the other applied loads. The magnitudes of the enforced displacements are specified on SPC cards (SPCAX in the case of conical shell problems) in the global coordinate system. The application of the load is automatic when the user selects the associated SPC set in the Case Control Deck.

The LØAD card in the Bulk Data Deck defines a static loading condition that is a linear combination of load sets consisting of loads applied directly to grid points, pressure loads, gravity loads and centrifugal forces. This card must be used if gravity loads are to be used in combination with loads applied directly to grid points, pressure loads or centrifugal forces. The application of the combined loading condition is requested in the Case Control Deck by selecting the set number of the LØAD combination.

It should be noted that the equivalent loads (thermal, enforced deformation and enforced displacement) must be separately selected in the Case Control Deck. For any particular solution, the total static load will be the sum of the applied loads (grid point loading, pressure loading, gravity loading and centrifugal forces) and the equivalent loads.

1.5.2 Frequency Dependent Loads

A discussion of frequency response calculations is given in Section 12.1 of the Theoretical Manual. The DLØAD card is used to define linear combinations of frequency dependent loads that are defined on RLØAD1 or RLØAD2 cards. The RLØAD1 card defines a frequency dependent load of the form

$$\{P(f)\} = \left\{A[C(f) + iD(f)]e^{i(\theta-2\pi f\tau)}\right\}, \qquad (1)$$

where A is defined on a DAREA card, C(f) and D(f) are defined on TABLEDi cards, θ is defined on a DPHASE card, and τ is defined on a DELAY card. The RLØAD2 card defines a frequency dependent load of the form

$$\{P(f)\} = \left\{AB(f)e^{i\{\phi(f)+\theta-2\pi f\tau\}}\right\}, \qquad (2)$$

where A is defined on a DAREA card, B(f) and $\phi(f)$ are defined on TABLEDi cards, θ is defined on a

DPHASE card, and τ is defined on a DELAY card. The coefficients on the DAREA, DELAY and DPHASE cards may be different for each loaded degree of freedom. The loads are applied to the specified components in the global coordinate system.

A discussion of random response calculations is given in Section 12.2 of the Theoretical Manual. The RANDPS card defines load set power spectral density factors for use in random analysis of the form

$$S_{jk}(f) = (X + iY)G(f) \tag{3}$$

where G(f) is defined on a TABRNDi card. The subscripts j and k define the subcase numbers of the load definitions. If the applied loads are independent, only the diagonal terms (j=k) need be defined. The RANDT1 card is used to specify the time lag constants for use in the computation of the autocorrelation functions.

1.5.3 Time Dependent Loads

A discussion of transient response calculations is given in Section 11 of the Theoretical Manual. The DLØAD card is used to define linear combinations of time dependent loads that are defined on TLØAD1 and TLØAD2 cards. The TLØAD1 card defines a time dependent load of the form

$$\{P(t)\} = \{AF(t - \tau)\} \tag{4}$$

where A is defined on a DAREA card, τ is defined on a DELAY card, and $F(t-\tau)$ is defined on a TABLEDi card. The TLØAD2 card defines a time dependent load of the form

$$\{P(t)\} = \begin{cases} \{0\}, & \tilde{t} < 0 \text{ or } \tilde{t} > T_2 - T_1 \\ \left\{A\tilde{t}^B e^{C\tilde{t}} \cos(2\pi f\tilde{t}+P)\right\}, & 0 < \tilde{t} < T_2 - T_1 \end{cases} \tag{5}$$

where $\tilde{t} = t - T_1 - \tau$ and A and τ are defined as above. The coefficients on the DAREA and DELAY cards may be different for each loaded degree of freedom. The loads are applied to the specified components in the global coordinate system.

Nonlinear effects are treated as an additional applied load vector, for which the components are functions of the degrees of freedom. This additional load vector is added to the right side of the equations of motion and treated along with the applied load vector during numerical inte-

gration. It is required that the points to which the nonlinear loads are applied and the degrees of freedom on which they depend be members of the solution set, i.e., that they cannot be degrees of freedom eliminated by constraints. It is further required, that if a modal formulation is used, the points referenced by the nonlinear loads be members of the set of extra scalar points introduced for dynamic analysis.

At present, NASTRAN includes four different types of nonlinear elements. For a discussion of nonlinear elements see Section 11.2 of the Theoretical Manual. The NØLIN1 card defines a nonlinear load of the form

$$P_i(t) = S_i T(u_j) \tag{6}$$

where P_i is the load applied to u_i, S_i is a scale factor, $T(u_j)$ is a tabulated function defined with a TABLEDi card, and u_j is any permissible displacement component. The NØLIN2 card defines a nonlinear load of the form

$$P_i(t) = S_i\, u_j\, u_k \tag{7}$$

where u_j and u_k are any permissible pair of displacement components. They may be the same. The NØLIN3 card defines a nonlinear load of the form

$$P_i(t) = \begin{cases} S_i(u_j)^A & , \quad u_j > 0 \\ 0 & , \quad u_j \leq 0 \end{cases} , \tag{8}$$

where A is an exponent. The NØLIN4 card defines a nonlinear load of the form

$$P_i(t) = \begin{cases} -S_i(-u_j)^A & , \quad u_j < 0 \\ 0 & , \quad u_j \geq 0 \end{cases} . \tag{9}$$

1.6 DYNAMIC MATRICES

The dynamic matrices are defined as the stiffness, mass and damping matrices used in either the direct or modal formulation of dynamics problems. The assembly of dynamics matrices is discussed in Section 9.3 of the Theoretical Manual. There are three general sources for the elements of the dynamic matrices.

1. Matrices generated by the Structural Matrix Assembler.
2. Direct input matrices.
3. Modal matrices obtained from real eigenvalue analysis.

The Structural Matrix Assembler generates stiffness terms from the following sources:

1. Structural elements defined on connection cards, e.g., CBAR and CRØD.
2. General elements defined on GENEL cards.
3. Scalar springs defined on CELASi cards.

The Structural Matrix Assembler generates mass terms from the following sources:

1. A 6x6 matrix of mass coefficients at a grid point defined on a CØNM1 card.
2. A concentrated mass element defined on a CØNM2 card in terms of its mass and moments of inertia about its center of gravity.
3. Structural mass for all elements, except plate elements without membrane stiffness, using the mass density on the material definition card.
4. Nonstructural mass for all elements specifying a value on the property card.
5. Scalar masses defined on CMASSi cards.

A discussion of inertia properties, including the Lumped Mass method and the Coupled Mass method are given in Section 5.5 of the Theoretical Manual. The Structural Matrix Assembler will use the Lumped Mass method for bars, rods and plates unless the PARAM card CØUPBAR (see Section 3.1.5) is used to request the Coupled Mass method.

The Structural Matrix Assembler generates damping terms from the following sources:

1. Viscous rod elements defined on CVISC cards.
2. Scalar viscous dampers defined on CDAMPi cards.
3. Element structural damping by multiplying the stiffness matrix of an individual structural element by a damping factor obtained from the material properties (MATi) card for the element.

In addition, uniform structural damping is provided by multiplying the stiffness matrix generated

in Structural Matrix Assembler by a damping factor that is specified by the user on the PARAM card G (see Section 3.1.5).

The direct input matrices are generated by transfer functions (TF cards) or they are supplied directly by the user (DMIG cards). The terms of the direct input matrices may be associated either with grid points or with extra points introduced for dynamic analysis.

The modal matrices are obtained from real eigenvalue analysis using the stiffness and mass matrices generated by the Structural Matrix Assembler.

1.6.1 Direct Formulation

In the direct method of dynamic problem formulation, the degrees of freedom are simply the displacements at grid points. The dynamic matrices are assembled from the direct input matrices and the stiffness, mass and damping matrices generated by the Structural Matrix Assembler. The direct input matrices are generated by transfer functions (TF cards) or they are supplied directly by the user (DMIG cards).

For frequency response analysis and complex eigenvalue analysis the complete dynamic matrices are:

$$[K_{dd}] = (1 + ig)[K^1_{dd}] + [K^2_{dd}] + i[K^4_{dd}], \quad (1)$$

$$[B_{dd}] = [B^1_{dd}] + [B^2_{dd}] \ , \quad (2)$$

$$[M_{dd}] = [M^1_{dd}] + [M^2_{dd}] \ , \quad (3)$$

where the subscripts dd indicate the solution set composed of the degrees of freedom remaining after all constraints have been applied and the extra scalar points introduced for dynamic analysis. The matrices K, B and M are the stiffness, damping and mass matrices respectively. The superscript 1 indicates the matrices generated by the Structural Matrix Assembler. The superscript 2 indicates the direct input matrices. The matrix $[K^4_{dd}]$ is a structural damping matrix obtained by multiplying the stiffness matrix of an individual structural element by a damping factor obtained from the material properties (MATi) card for the element. The matrix $[K^1_{dd}]$ is multiplied by the damping factor (g) to provide for uniform structural damping in cases where it is appropriate. The constant g is specified by the user on a PARAM card (see Section 3.1.5).

For transient response analysis the complete dynamic matrices are:

$$[K_{dd}] = [K^1_{dd}] + [K^2_{dd}] \quad , \tag{4}$$

$$[B_{dd}] = [B^1_{dd}] + [B^2_{dd}] + \frac{g}{\omega_3}[K^1_{dd}] + \frac{1}{\omega_4}[K^4_{dd}] \quad , \tag{5}$$

$$[M_{dd}] = [M^1_{dd}] + [M^2_{dd}] \quad , \tag{6}$$

where ω_3 is the radian frequency at which the term $\frac{g}{\omega_3}[K^1_{dd}]$ produces the same magnitude of damping as the term $ig[K^1_{dd}]$ in frequency response analysis, and ω_4 is the radian frequency at which the term $\frac{1}{\omega_4}[K^4_{dd}]$ produces the same magnitude of damping as the term $i[K^4_{dd}]$ in frequency response analysis. The equivalent viscous damping is only an approximation to the structural damping as the viscous damping forces are larger at higher frequencies and smaller at lower frequencies. Therefore, the quantities ω_3 and ω_4 are frequently selected by the user to be at the center of the frequency range of interest. A small value of g/ω_3 is frequently useful to insure stability of higher modes in nonlinear transient analysis. The user specifies the values of ω_3 and ω_4 on PARAM cards W3 and W4 (see Section 3.1.5). If ω_3 and ω_4 are omitted, the corresponding terms are ignored.

1.6.2 Modal Formulation

In the modal method of dynamic problem formulation, the vibration modes of the structure in a selected frequency range are used as degrees of freedom, thereby reducing the number of degrees of freedom while maintaining accuracy in the selected frequency range. The frequency range is specified on PARAM cards by either selecting the number of lowest modes obtained from a real eigenvalue analysis or selecting all of the modes in a given frequency range (see Section 3.1.5).

It is important to have both direct and modal methods of dynamic problem formulation, in order to maximize efficiency in different situations. The modal method will usually be more efficient in problems where a small fraction of all of the modes are sufficient to produce the desired accuracy, provided that the bandwidth of the direct stiffness matrix is large. The bandwidth may be large due either to a compact structural arrangement or to dynamic coupling effects. The direct method will usually be more efficient for problems in which the bandwidth of the direct stiffness matrix is small and for problems with dynamic coupling in which a large

fraction of the vibration modes are required to produce the desired accuracy. For problems without dynamic coupling, i.e., for problems in which the matrices of the modal formulation are diagonal, the modal method will frequently be more efficient, even though a large fraction of the modes are needed.

The complete dynamic matrices used in dynamic analysis by the modal method include the direct input mass, damping and stiffness matrices $[M^2_{dd}]$, $[B^2_{dd}]$, $[K^2_{dd}]$, and the modal matrices $[m_i]$, $[b_i]$ and $[k_i]$, obtained from real eigenvalue analysis. The matrix $[m_i]$ is the modal mass matrix with off-diagonal terms (which should be zero) omitted. The modal damping matrix $[b_i]$ and stiffness matrix $[k_i]$ are obtained from $[m_i]$ by:

$$[b_i] = [2\pi f_i \; g(f_i) \; m_i] \quad , \tag{7}$$

$$[k_i] = [4\pi^2 \; f_i^2 \; m_i] \quad , \tag{8}$$

where f_i is the frequency of the ith normal mode and $g(f_i)$ is obtained by interpolation of a table supplied by the user to represent the variation of structural damping with frequency. This table is defined with a TABDMP card. Structural damping will not be used in the modal formulation unless an SDAMPING card is used in the Case Control Deck to select a particular TABDMP card. The specification of damping properties for the modal method is somewhat less general than it is for the direct method, in that viscous dampers and nonuniform structural damping are not used.

The mode acceleration method of data recovery is optional when using the modal formulation for transient response and frequency response problems, see Section 9.4 of the Theoretical Manual for details. In this procedure, the inertia and damping forces are computed from the modal solution. These forces are then added to the applied forces and the combination is used to obtain a more accurate displacement vector for the structure by static analysis. This improved displacement vector is used in the stress recovery operation. The mode acceleration method is selected with the PARAM card MØDACC (see Section 3.1.5).

2.1 GENERAL DESCRIPTION OF DATA DECK

The input deck begins with the required resident operating system control cards. The type and number of these cards will vary with the installation. Instructions for the preparation of these control cards should be obtained from the programming staff at each installation.

The operating system control cards are followed by the NASTRAN Data Deck, which consists of the following three sections:

1. Executive Control Deck
2. Case Control Deck
3. Bulk Data Deck

The Executive Control Deck begins with the NASTRAN ID card and ends with the CEND card, as indicated in Figure 1. It identifies the job and the type of solution to be performed. It also declares the general conditions under which the job is to be executed, such as, maximum time allowed, type of system diagnostics desired, restart conditions, and whether or not the job is to be checkpointed. If the job is to be executed with a rigid format, the number of the rigid format is declared along with any alterations to the rigid format that may be desired. If Direct Matrix Abstraction is used, the complete DMAP sequence must appear in the Executive Control Deck. The executive control cards and examples of their use are described in Section 2.2.

The Case Control Deck begins with the first card following CEND and ends with the card preceeding BEGIN BULK, as indicated in Figure 1. It defines the subcase structure for the problem, makes selections from the Bulk Data Deck, and makes output requests for printing, punching and plotting. A general discussion of the functions of the Case Control Deck and a detail description of the cards used in this deck are given in Section 2.3. The special requirements of the Case Control Deck for each rigid format are discussed in Section 3.

The Bulk Data Deck begins with the card following BEGIN BULK and ends with the card preceeding ENDDATA, as indicated in Figure 1. It contains all of the details of the structural model and the conditions for the solution. The BEGIN BULK and ENDDATA cards must be present even though no new bulk data is being introduced into the problem or all of the bulk data is coming from an alternate source, such as User's Master File or user generated input. Generally speaking only one structural model can be defined in the Bulk Data Deck. However, some of the bulk data, such as cards associated with loading conditions, constraints, direct input matrices, transfer functions and thermal

fields may exist in multiple sets. All types of data that are available in multiple sets are discussed in Section 2.3.1. Only sets selected in the Case Control Deck will be used in any particular solution.

Comment cards may be inserted in any of the parts of the NASTRAN Data Deck. These cards are identified by a $ in column one. Columns 2-72 may contain any desired text.

All NASTRAN data cards are to be punched using the character set shown in the table below.

Character	Card Punch(s)	Character	Card Punch(s)
blank	blank	N	11-5
0	0	Ø	11-6
1	1	P	11-7
2	2	Q	11-8
3	3	R	11-9
4	4	S	0-2
5	5	T	0-3
6	6	U	0-4
7	7	V	0-5
8	8	W	0-6
9	9	X	0-7
A	12-1	Y	0-8
B	12-2	Z	0-9
C	12-3	$	11-3-8
D	12-4	/	0-1
E	12-5	+	12
F	12-6	-	11
G	12-7	(	0-4-8
H	12-8	)	12-4-8
I	12-9	'	4-8
J	11-1	=	3-8
K	11-2	,	0-3-8
L	11-3	.	12-3-8
M	11-4	*	11-4-8

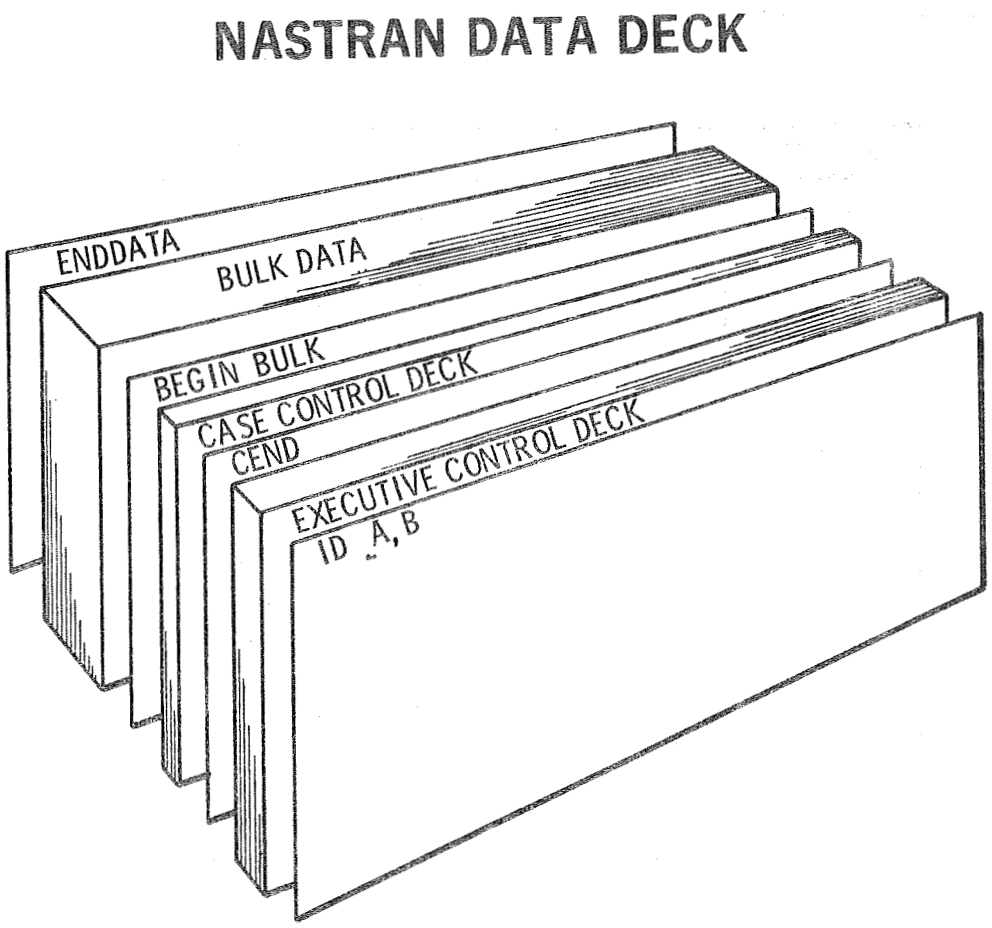

Figure 1. NASTRAN data deck.

2.2 EXECUTIVE CONTROL DECK

The format of the Executive control cards is free field. The name of the operation (e.g., CHKPNT) begins in column 1 and is separated from the operand by one or more blanks. The fields in the operand are separated by commas, and may be integers (Ki) or alphanumeric (Ai) as indicated in the following control card descriptions. The first character of an alphanumeric field must be alphabetic followed by up to 7 additional alphanumeric characters. Blank characters may be placed adjacent to separating commas if desired. The individual cards are described in Section 2.2.1 and examples follow in Section 2.2.2.

2.2.1 Executive Control Card Descriptions

ID A1, A2 Required.

A1, A2 -- Any legal alphanumeric fields chosen by the user for problem identification.

RESTART A1, A2, K1/K2/K3 Required for Restart.

A1, A2 -- Fields taken from ID card of previously checkpointed problem.

K1/K2/K3 -- Month/Day/Year that Problem Tape was generated.

The complete restart dictionary consists of this card followed by one card for each file checkpointed. The restart dictionary is automatically punched when operating in the checkpoint mode.

UMF K1, K2 Required when using User's Master File

K1 -- User specified tape identification number assigned during the generation of the User's Master File.

K2 -- Problem identification number assigned during generation of User's Master File.

CHKPNT A Optional. Default option is NØ.

A -- YES if problem is to be checkpointed.

A -- NØ if problem is not to be checkpointed.

APP A Required.

A -- DISPLACEMENT indicates one of the Displacement Approach rigid formats.

A -- DMAP indicates Direct Matrix Abstraction Approach (DMAP).

SØL K1, K2 Required when using rigid format (see Section 3.1 for available options)

K1 -- Solution number of Rigid Format.

K2 -- Subset of solution K1

ALTER K1, K2 Optional.

K1, K2 -- First and last DMAP instructions of series to be deleted and replaced with any following DMAP instructions.

ALTER K Optional.

K -- Input any following DMAP instructions after statement K.

TIME K Required.

K -- Maximum allowable execution time in minutes.

ENDALTER Required when using ALTER.

Indicates end of DMAP alterations.

DIAG K Optional request for diagnostic output.

K = 1 Dump memory following fatal error.

K = 2 Print File Allocation Table (FIAT) following each call to the File Allocator.

K = 3 Print status of the Data Pool following each call to the Data Pool Housekeeper.

K = 4 Print the Operation Sequence Control Array (ØSCAR)

K = 5 Print BEGIN time on-line for each functional module.

K = 6 Print END time on-line for each functional module.

Multiple options may be selected by using multiple integers separated by commas. Other options and other rules associated with the DIAG card which primarily concern the programmer can be found in Section 6.11.3 of the Programmer's Manual.

BEGIN Required when using DMAP approach.

Indicates beginning of DMAP sequence. This card is supplied as part of a Rigid Format.

END Required when using DMAP approach.

Indicates end of DMAP sequence. This card is supplied as part of a Rigid Format.

UMFEDIT Required when using User's Master File Editor (see Section 2.5)

CEND Required

Indicates end of Executive control cards.

The ID card must appear first and CEND must be the last card of the Executive Control Deck. Otherwise the Executive Control card groups (RESTART dictionary, DMAP sequence, ALTER packet) can be in any order.

2.2.2 Executive Control Deck Examples

1. Cold start, no checkpoint, rigid format, diagnostic output.

```
ID          MYNAME, BRIDGE23
APP         DISPLACEMENT
SØL         2,0
TIME        5
DIAG        1,2
CEND
```

2. Cold start, checkpoint, rigid format.

```
ID          PERSØNZZ, SPACECFT
CHKPNT      YES
APP         DISPLACEMENT
SØL         1,3
TIME        15
CEND
```

3. Restart, no checkpoint, rigid format. The restart dictionary indicated by the brace is automatically punched on previous run in which the CHKPNT option was selected by the user.

```
ID JØESHMØE, PRØJECTX
RESTART  PERSØNZZ, SPACECFT, 05/13/67,
     1, XVPS, FLAGS=0, REEL=1, FILE=6
     2, REENTER AT DMAP SEQUENCE NUMBER 7
     3, GPL, FLAGS=0 REEL=1, FILE=7
                    .
                    .
                    .
$ END OF CHECKPØINT DICTIØNARY
APP           DISPLACEMENT
SØL           3,3
TIME          10
CEND
```

4. Cold start, no checkpoint, DMAP. User-written DMAP program is indicated by braces.

```
ID            IAM007, TRYIT
APP           DMAP
BEGIN

{DMAP statements go here}

END
TIME          8
CEND
```

5. Restart, checkpoint, altered rigid format, diagnostic output.

```
ID GØØDGUY, NEATDEAL
RESTART BADGUY, NØSHØW, 05/09/68,
     1, XVPS, FLAGS=0, REEL=1, FILE=6
     2, REENTER AT DMAP SEQUENCE NUMBER 7
     3, GPL, FLAGS=0, REEL=1, FILE=7
                    .
                    .
                    .
$ END ØF CHECKPØINT DICTIØNARY
CHKPNT          YES
DIAG            2,4
APP             DISPLACEMENT
SØL             3,3
TIME            15
ALTER           20
MATPRN          KGGX,,,,// $
TABPT           GPST,,,,// $
ENDALTER
CEND
```

2.3 CASE CONTROL DECK

2.3.1 Data Selection

The case control cards that are used for selecting items from the Bulk Data Deck are listed below in functional groups. A detailed description of each card is given in Section 2.3.4. The first four characters of the mnemonic are sufficient if unique.

The following case control cards are associated with the selection of applied loads for both static and dynamic analysis:

1. DEFØRM - selects element deformation set.
2. DLØAD - selects dynamic loading condition.
3. DSCØEFFICIENT - selects loading increments for static analysis with differential stiffness.
4. LØAD - selects static loading condition.
5. NØNLINEAR - selects nonlinear loading condition for transient response.
6. PLCØEFFICIENT - selects loading increments for piecewise linear analysis.

The following case control cards are used for the selection of constraints:

1. AXISYMMETRIC - selects boundary conditions for conical shell elements.
2. MPC - selects set of multipoint constraints.
3. SPC - selects set of single-point constraints.

The following case control cards are used for the selection of direct input matrices:

1. B2PP - selects direct input damping matrices.
2. K2PP - selects direct input stiffness matrices.
3. M2PP - selects direct input mass matrices.
4. TFL - selects transfer functions.

The following case control cards specify the conditions for dynamic analyses:

1. CMETHØD - selects the conditions for complex eigenvalue extraction.
2. FREQUENCY - selects the frequencies to be used for frequency and random response calculations.
3. IC - selects the initial conditions for direct transient response.
4. METHØD - selects the conditions for real eigenvalue analysis.
5. RANDØM - selects the power spectral density functions to be used in random analysis.

6. SDAMPING - selects table to be used for determination of modal damping.

7. TSTEP - selects time steps to be used for integration in transient response problems.

The following case control cards are associated with the use of thermal fields:

1. TEMPERATURE(LØAD) - selects thermal field to be used for determining equivalent static loads.

2. TEMPERATURE(MATERIAL) - selects thermal field to be used for determining material properties.

3. TEMPERATURE - selects thermal field for determining both equivalent static loads and material properties.

2.3.2 Output Selection

Printer output requests may be grouped in packets following ØUTPUT cards or the individual requests may be placed anywhere in the Case Control Deck ahead of any structure plotter or curve plotter requests. Plotter requests are described in Section 4. The case control cards that are used for output selection are listed below in functional groups. A detailed description of each card is given in Section 2.3.4.

The following cards are associated with output control, titling and bulk data echoes:

1. TITLE - defines a text to be printed on first line of each page of output.

2. SUBTITLE - defines a text to be printed on second line of each page of output.

3. LABEL - defines a text to be printed on third line of each page of output.

4. LINE - sets the number of data lines per printed page, default is 50 for 11-inch paper.

5. MAXLINES - sets the maximum number of output lines, default is 20,000.

6. ECHØ - selects echo options for Bulk Data Deck, default is a sorted bulk data echo.

The following cards are used in connection with some of the specific output requests for calculated quantities:

1. SET - defines lists of point numbers, elements numbers, or frequencies for use in output requests.

2. ØFREQUENCY - selects a set of frequencies to be used for output requests in frequency response problems; default is all frequencies used in the calculations.

3. TSTEP - selects a set of time steps to be used for output requests in transient response problems.

The following cards are used to make output requests for the calculated response of components in the SØLUTIØN set (components in the direct or modal formulation of the general K system) for dynamics problems:

1. SACCELERATIØN - requests the acceleration of the independent components for a selected set of points or modal coordinates.
2. SDISPLACEMENT - requests the displacements of the independent components for a selected set of points or modal coordinates.
3. SVELØCITY - requests the velocities of the independent components for a selected set of points or modal coordinates.
4. NLLØAD - requests the nonlinear loads for a selected set of PHYSICAL points (grid points and extra points introduced for dynamic analysis) in transient response problems.

The following cards are used to make output requests for stresses and forces, as well as the calculated response of points used in the structural model:

1. ELFØRCE - requests the forces in a set of structural elements.
2. STRESS - requests the stresses in a set of structural elements.
3. SPCFØRCES - requests the single-point forces of constraint at a set of points.
4. ØLØAD - selects a set of applied loads for output.
5. ACCELERATIØN - requests the accelerations for a selected set of PHYSICAL points (grid points plus extra points introduced for dynamic analysis).
6. DISPLACEMENT - requests the displacements for a selected set of PHYSICAL points.
7. VELØCITY - requests the velocities for a selected set of PHYSICAL points.
8. HARMØNICS - controls the number of harmonics that will be output for requests associated with the conical shell element.

2.3.3 Subcase Definition

In general, a separate subcase is defined for each loading condition. In statics problems separate subcases are also defined for each set of constraints. In complex eigenvalue analysis and frequency response separate subcases are defined for each unique set of direct input matrices. Subcases may be used in connection with output requests, such as in requesting different output for each mode in a real eigenvalue problem.

The Case Control Deck is structured so that a minimum amount of repetition is required. Only one level of subcase definition is provided. All items placed above the subcase level (ahead of the first subcase) will be used for all following subcases, unless overridden within the individual subcase.

In static problems, provision has been made for the combination of the results of several subcases. This is convenient for studying various combinations of individual loading conditions and for the superposition of solutions for symmetrical and antisymmetrical boundaries.

Typical examples of subcase definition are given following a brief description of the cards used in subcase definitions.

The following case control cards are associated with subcase definition:

1. SUBCASE - defines the beginning of a subcase that is terminated by the next subcase delimiters encountered.

2. SUBCØM - defines a combination of two or more preceeding subcases in statics problems. Output requests above the subcase level are used.

3. SUBSEQ - must appear in a subcase defined by SUBCØM to give the coefficients for making the linear combination of the preceeding subcases.

4. SYM - defines a subcase in statics problems for which only output requests within the subcase will be honored. Primarily for use with symmetry problems where the individual parts of the solution may not be of interest.

5. SYMCØM - defines a combination of two or more preceeding SYM subcases in static problems. Output requests above the subcase level are used.

6. SYMSEQ - may appear in a subcase defined by SYMCØM to give the coefficient for making the linear combination of the preceeding SYM subcases. A default value of 1.0 is used if no SYMSEQ card appears.

7. REPCASE - defines a subcase in statics problems that is used to make additional output requests for the previous real subcase. This card is required because multiple output requests for the same item are not permitted in the same subcase.

8. MØDES - repeats the subcase in which it appears MØDES times for eigenvalue problems. Used to repeat the same output request for several consecutive modes.

The following examples of Case Control Decks indicate typical ways of defining subcases:

1. Static analysis with multiple loads.

```
ØUTPUT
    DISPLACEMENT = ALL
MPC = 3
    SUBCASE 1
        SPC = 2
        TEMPERATURE(LØAD) = 101
        LØAD = 11
    SUBCASE 2
        SPC = 2
        DEFØRM = 52
        LØAD = 12
    SUBCASE 3
        SPC = 4
        LØAD = 12
    SUBCASE 4
        MPC = 4
        SPC = 4
```

Four subcases are defined in this example. The displacements at all grid points will be printed for all four subcases. MPC = 3 will be used for the first three subcases and will be overridden by MPC = 4 in the last subcase. Since the constraints are the same for subcases 1 and 2 and the subcases are contiguous, the static solutions will be performed simultaneously. In subcase 1, thermal load 101 and external load 11 are internally superimposed, as are the external and deformation loads in subcase 2. In subcase 4 the static loading will result entirely from enforced displacements of grid points.

2. Linear combination of subcases.

```
SPC = 2
ØUTPUT
    SET 1 = 1 THRU 10,20,30
    DISPLACEMENT = ALL
    STRESS = 1
SUBCASE 1
    LØAD = 101
    ØLØAD = ALL
SUBCASE 2
    LØAD = 201
    ØLØAD = ALL
SUBCØM 51
    SUBSEQ = 1.0,1.0
SUBCØM 52
    SUBSEQ = 2.5,1.5
```

Two static loading conditions are defined in subcases 1 and 2. SUBCØM 51 defines the sum of subcases 1 and 2. SUBCØM 52 defines a linear combination consisting of 2.5 times subcase 1 plus 1.5 times subcase 2. The displacements at all grid points and the stresses for the elements numbers in SET will be printed for all four subcases. In addition, the nonzero components of the static load vectors will be printed for subcases 1 and 2.

3. Statics problem with one plane of symmetry.

```
ØUTPUT
    SET 1 = 1,11,21,31,51
    SET 2 = 1 THRU 10, 101 THRU 110
    DISPLACEMENT = 1
    ELFØRCE = 2
SYM 1
    SPC = 11
    LØAD = 21
    ØLØAD = ALL
SYM 2
    SPC = 12
    LØAD = 22
SYMCØM 3
SYMCØM 4
    SYMSEQ 1.0,-1.0
```

Two SYM subcases are defined in subcases 1 and 2. SYMCØM 3 defines the sum and SYMCØM 4 the

difference of the two SYM subcases. The nonzero components of the static load will be printed for subcase 1 and no output is requested for subcase 2. The displacements for the grid point numbers in set 1 and the forces for elements in set 2 will be printed for subcases 3 and 4.

4. Use of REPCASE in statics problems.

```
SET 1 = 1 THRU 10, 101 THRU 110, 201 THRU 210
SET 2 = 21 THRU 30, 121 THRU 130, 221 THRU 230
SET 3 = 31 THRU 40, 131 THRU 140, 231 THRU 240
    SUBCASE 1
        LØAD =10
        SPC = 11
        DISPLACEMENT = ALL
        SPCFØRCE = 1
        ELFØRCE = 1
    REPCASE 2
        ELFØRCE = 2
    REPCASE 3
        ELFØRCE = 3
```

This example defines one subcase for solution and two subcases for output control. The displacements at all grid points and the nonzero components of the single-point forces of constraint along with forces for the elements in SET 1 will be printed for SUBCASE 1. The forces for elements in SET 2 will be printed for REPCASE 2 and the forces for elements in SET 3 will be printed for REPCASE 3.

5. Use of MØDES in eigenvalue problems

```
    METHØD = 2
    SPC = 10
SUBCASE 1
    DISPLACEMENT = ALL
    STRESS = ALL
    MØDES = 2
SUBCASE 2
    DISPLACEMENT = ALL
```

In this example the displacements at all grid points will be printed for all modes. The stresses in all elements will be printed for the first two modes.

2.3.4 Case Control Card Descriptions

The format of the case control cards is free-field. In presenting general formats for each card embodying all options, the following conventions are used:

1. Upper-case letters must be punched as shown.
2. Lower-case letters indicate that a substitution must be made.
3. Braces { } indicate that a choice of contents is mandatory.

4. Brackets [ ] contain an option that may be omitted or included by the user.

5. Underlined options or values are the default values.

6. Physical card consists of information punched in columns 1 thru 72 of a card. Most case control cards are limited to a single physical card.

7. Logical card may have more than 72 columns with the use of continuation cards.

The structure plotter output request packet and the x-y output request packet, while part of the Case Control Deck, are treated separately in Sections 4.2 and 4.3, respectively.

Case Control Data Card - ACCELERATIØN - Acceleration Output Request.

Description: Requests form and type of acceleration vector output.

Format and Example(s):

$$\text{ACCELERATIØN}\left[\left(\begin{matrix}\text{SØRT1}\\ \text{SØRT2}\end{matrix}, \begin{matrix}\text{PRINT}\\ \text{PUNCH}\end{matrix}, \begin{matrix}\text{REAL}\\ \text{IMAG}\\ \text{PHASE}\end{matrix}\right)\right] = \left\{\begin{matrix}\text{ALL}\\ \text{n}\\ \text{NØNE}\end{matrix}\right\}$$

ACCELERATIØN = 5

ACCELERATIØN(SØRT2, PHASE) = ALL

ACCELERATIØN(SØRT1, PRINT, PUNCH, PHASE) = 17

Option	Meaning
SØRT1	Output will be presented as a tabular listing of grid points for each load, frequency, eigenvalue, or time, depending on the rigid format. SØRT1 is not available on Transient problems (where the default is SØRT2).
SØRT2	Output will be presented as a tabular listing of frequency or time for each grid point. SØRT2 is available only in Transient and Frequency Response problems.
PRINT	The printer will be the output media.
PUNCH	The card punch will be the output media.
REAL or IMAG	Requests real and imaginary output on Frequency Response problems.
PHASE	Requests magnitude and phase ($0.0° < \text{phase} < 360.0°$) on Frequency Response problems.
ALL	Accelerations for all points will be output.
n	Set identification of a previously appearing SET card. Only accelerations of points whose identification numbers appear on this SET card will be output (Integer > 0).
NØNE	Accelerations for no points will be output.

Remarks:
1. Both PRINT and PUNCH may be requested.
2. Acceleration output is only available for Transient and Frequency Response problems.
3. On a Frequency Response problem any request for SØRT2 output causes all output to be SØRT2.
4. ACCELERATIØN = NØNE allows overriding an overall output request.

Case Control Data Card AXISYMMETRIC - Conical Shell Boundary Conditions.

Description: Selects boundary conditions for Axisymmetric Shell problem.

Format and Example(s):

AXISYMMETRIC = {SINE / CØSINE}

AXISYMMETRIC = CØSINE

Option	Meaning
SINE	Sine boundary conditions will be used.
CØSINE	Cosine boundary conditions will be used.

Remarks: 1. This card is required and used for Conical Shell problems only.

2. See Section 1.3.6 of User's Manual for a discussion of the Conical Shell problem.

Case Control Data Card B2PP - Direct Input Damping Matrix Selection.

Description: Selects a direct input damping matrix.

Format and Example(s):

B2PP = name
B2PP = BDMIG
B2PP = B2PP

Option	Meaning
name	BCD name of DMIG matrix that is input on the Bulk Data Card DMIG.

Remarks: 1. B2PP is used only in dynamics problems.

2. DMIG matrices will not be used unless selected.

Case Control Data Card CMETHØD - Complex Eigenvalue Extraction Method Selection.

Description: Selects complex eigenvalue extraction data to be used by module CEAD.

Format and Example(s):

CMETHØD = n

CMETHØD = 77

Option	Meaning
n	Set identification of EIGC (and EIGP) card (Integer > 0).

Remarks: Eigenvalue extraction data must be selected when extracting complex eigenvalues using Functional Module CEAD.

Case Control Data Card DEFØRM - Element Deformation Static Load.

Description: Selects the Element Deformation Set to be applied to the structural model.

Format and Example(s):

DEFØRM = n

DEFØRM = 27

Option	Meaning
n	Set identification of DEFØRM cards (Integer > 0).

Remarks:
1. DEFØRM bulk data cards will not be used unless selected in the Case Control Deck.
2. DEFØRM is only applicable in statics, inertia relief, differential stiffness, and buckling problems.
3. The total load applied will be the sum of external, (LØAD), thermal (TEMP(LØAD)), element deformation (DEFØRM) and constrained displacement loads (SPC).
4. Static, thermal and element deformation loads should have unique identification numbers.

Case Control Data Card DISPLACEMENT - Displacement Output Request.

Description: Requests form and type of displacement vector output.

Format and Example(s):

$$\text{DISPLACEMENT} \quad \left[\left(\begin{matrix}\text{SØRT1}\\ \text{SØRT2}\end{matrix}, \begin{matrix}\text{PRINT}\\ \text{PUNCH}\end{matrix}, \begin{matrix}\text{REAL}\\ \text{IMAG}\\ \text{PHASE}\end{matrix}\right)\right] = \left\{\begin{matrix}\text{ALL}\\ \text{n}\\ \text{NØNE}\end{matrix}\right\}$$

DISPLACEMENT = 5

DISPLACEMENT(REAL) = ALL

DISPLACEMENT(SØRT2, PUNCH, REAL) = ALL

Option	Meaning
SØRT1	Output will be presented as a tabular listing of grid points for each load, frequency, eigenvalue, or time, depending on the rigid format. SØRT1 is not available on Transient problems (where the default is SØRT2).
SØRT2	Output will be presented as a tabular listing of frequency or time for each grid point. SØRT2 is available only in Transient and Frequency Response problems.
PRINT	The printer will be the output media.
PUNCH	The card punch will be the output media.
REAL or IMAG	Requests real and imaginary output on Complex Eigenvalue or Frequency Response problems.
PHASE	Requests magnitude and phase ($0.0° < \text{phase} < 360.0°$) on Complex Eigenvalue or Frequency Response problems.
ALL	Displacements for all points will be output.
NØNE	Displacements for no points will be output.
n	Set identification of previously appearing SET card. Only displacements of points whose identification numbers appear on this SET card will be output (Integer > 0).

Remarks:
1. Both PRINT and PUNCH may be requested.
2. On a Frequency Response problem any request for SØRT2 causes all output to be SØRT2.
3. VECTØR is an alternate form and is entirely equivalent to DISPLACEMENT.
4. DISPLACEMENT = NØNE allows overriding an overall output request.

Case Control Data Card DLØAD - Dynamic Load Set Selection.

Description: Selects the dynamic load to be applied in a Transient or Frequency Response problem.

Format and Example(s):

DLØAD = n

DLØAD = 73

Option	Meaning
n	Set identification of a DLØAD, RLØAD1, RLØAD2, TLØAD1, or TLØAD2 card (Integer > 0).

Remarks:
1. The above loads will not be used by NASTRAN unless selected in Case Control.
2. RLØAD1 and RLØAD2 may only be selected in a Frequency Response problem.
3. TLØAD1 and TLØAD2 may only be selected in a Transient Response problem.

Case Control Data Card DSCØEFFICIENT - Differential Stiffness Coefficient Set.

Description: Selects the coefficient set for a Differential Stiffness problem.

Format and Example(s):

DSCØEFFICIENT = {DEFAULT / n}

DSCØEF = 15

DSCØEF = DEFAULT

Option	Meaning
DEFAULT	A single default coefficient of value 1.0.
n	Set identification of DSFACT card (Integer > 0).

Remarks: 1. DSFACT cards will not be used unless selected.

2. DSCØEFFICIENT must appear in the 2nd Subcase of a differential stiffness problem.

Case Control Data Card ECHØ - Bulk Data Echo Request.

Description: Requests echo of bulk data deck.

Format and Example(s):

$$\text{ECHØ} = \left\{ \begin{array}{l} \text{SØRT} \\ \text{UNSØRT} \\ \text{BØTH} \\ \text{NØNE} \end{array} \right\}$$

ECHØ = BØTH

ECHØ = SØRT, UNSØRT

Option	Meaning
SØRT	Sorted echo will be printed.
UNSØRT	Unsorted echo will be printed.
BØTH	Both sorted and unsorted echo will be printed.
NØNE	No echo will be printed.

Remarks: 1. If no ECHØ card appears a sorted echo will be printed.

2. If CHKPNT = YES a sorted echo will be printed unless ECHØ = NØNE.

Case Control Data Card ELFØRCE - Element Force Output Request.

Description: Requests form and type of element force output.

Format and Example(s):

$$\text{ELFØRCE} \quad \left[\left(\begin{matrix}\text{SØRT1} \\ \text{SØRT2}\end{matrix}, \begin{matrix}\text{PRINT} \\ \text{PUNCH}\end{matrix}, \begin{matrix}\text{REAL} \\ \text{IMAG} \\ \text{PHASE}\end{matrix}\right)\right] = \left\{\begin{matrix}\text{ALL} \\ \text{n} \\ \text{NØNE}\end{matrix}\right\}$$

ELFØRCE = ALL

ELFØRCE(REAL, PUNCH, PRINT) = 17

ELFØRCE = 25

Option	Meaning
SØRT1	Output will be presented as a tabular listing of elements for each load, frequency, eigenvalue, or time, depending on the rigid format. SØRT1 is not available on Transient problems (where the default is SØRT2).
SØRT2	Output will be presented as a tabular listing of frequency or time for each element type. SØRT2 is available only in Transient and Frequency Response problems.
PRINT	The printer will be the output media.
PUNCH	The card punch will be the output media.
REAL or IMAG	Requests real and imaginary output on Complex Eigenvalue or Frequency Response problems.
PHASE	Requests magnitude and phase ($0.0° < \text{phase} < 360.0°$) on Complex Eigenvalue or Frequency Response problems.
ALL	Forces for all elements will be output.
NØNE	Forces for no elements will be output.
n	Set identification of a previously appearing SET card. Only forces of elements whose identification numbers appear on this SET card will be output (Integer > 0).

Remarks:
1. Both PRINT and PUNCH may be requested.
2. ALL cannot be used in a Transient problem.
3. On Frequency Response problems any request for SØRT2 output causes all output to be SØRT2.
4. FØRCE is an alternate form and is entirely equivalent to ELFØRCE.
5. ELFØRCE = NØNE allows overriding an overall request.

Case Control Data Card ELSTRESS - Element Stress Output Request.

Description: Requests form and type of element stress output.

Format and Example(s):

$$\text{ELSTRESS} \quad \left[\left(\frac{\text{SØRT1}}{\text{SØRT2}}, \frac{\text{PRINT}}{\text{PUNCH}}, \frac{\text{REAL}}{\text{IMAG}}\right)\right] = \left\{\begin{matrix}\text{ALL}\\ \text{n}\\ \text{NØNE}\end{matrix}\right\}$$

ELSTRESS = 5

ELSTRESS = ALL

ELSTRESS(SØRT1, PRINT, PUNCH, PHASE) = 15

Option	Meaning
SØRT1	Output will be presented as a tabular listing of elements for each load, frequency, eigenvalue, or time, depending on the rigid format. SØRT1 is not available on Transient problems (where the default is SØRT2).
SØRT2	Output will be presented as a tabular listing of frequency or time for each element type. SØRT2 is available only in Transient and Frequency Response problems.
PRINT	The printer will be the output media.
PUNCH	The card punch will be the output media.
REAL or IMAG	Requests real and imaginary printout on Complex Eigenvalue or Frequency Response problems.
PHASE	Requests magnitude and phase ($0.0° < \text{phase} < 360.0°$) on Complex Eigenvalue or Frequency Response problems.
ALL	Stresses for all elements will be output.
n	Set identification of a previously appearing SET card (Integer > 0). Only stresses for elements whose identification numbers appear on this SET card will be output.
NØNE	Stress for no elements will be output.

Remarks:
1. Both PRINT and PUNCH may be requested.
2. ALL cannot be used in a Transient problem.
3. On a Frequency Response problem any request for SØRT2 output causes all output to be SØRT2.
4. STRESS is an alternate form and is entirely equivalent to ELSTRESS.
5. ELSTRESS = NØNE allows overriding an overall output request.

Case Control Data Card FØRCE - Element Force Output Request.

Description: Requests form and type of element force output.

Format and Example(s):

$$\text{FØRCE} \quad \left[\left(\begin{matrix}\text{SØRT1} \\ \text{SØRT2}\end{matrix}, \begin{matrix}\text{PRINT} \\ \text{PUNCH}\end{matrix}, \begin{matrix}\text{REAL} \\ \text{IMAG} \\ \text{PHASE}\end{matrix}\right)\right] = \left\{\begin{matrix}\text{ALL} \\ n \\ \text{NØNE}\end{matrix}\right\}$$

FØRCE = ALL

FØRCE(REAL, PUNCH, PRINT) = 17

FØRCE = 25

Option	Meaning
SØRT1	Output will be presented as a tabular listing of elements for each load, frequency, eigenvalue, or time, depending on the rigid format. SØRT1 is not available on Transient problems (where the default is SØRT2).
SØRT2	Output will be presented as a tabular listing of frequency or time for each element type. SØRT2 is available only in Transient and Frequency Response problems.
PRINT	The printer will be the output media.
PUNCH	The card punch will be the output media.
REAL or IMAG	Requests real and imaginary printout on Complex Eigenvalue or Frequency Response problems.
PHASE	Requests magnitude and phase ($0.0° < \text{phase} < 360.0°$) on Complex Eigenvalue or Frequency Response problems.
ALL	Forces for ALL elements will be output.
n	Set identification of a previously appearing SET card. Only forces whose element identification numbers appear on this SET card will be output (Integer > 0).
NØNE	Forces for no elements will be output.

Remarks:
1. Both PRINT and PUNCH may be requested.
2. ALL cannot be used in a Transient problem.
3. On Frequency Response problems any request for SØRT2 output causes all output to be SØRT2.
4. ELFØRCE is an alternate form and is entirely equivalent to FØRCE.
5. FØRCE = NØNE allows overriding an overall request.

Case Control Data Card FREQUENCY - Frequency Set Selection

Description: Selects the set of frequencies to be solved in Frequency Response problems.

Format and Example(s):

FREQUENCY = n
FREQUENCY = 17

Option	Meaning
n	Set identification of a FREQ, FREQ1 or FREQ2 type card (Integer > 0).

Remarks: 1. The FREQ, FREQ1 or FREQ2 cards will not be used unless selected in Case Control.

2. A frequency set selection is required for a Frequency Response problem.

Case Control Data Card HARMØNICS - Harmonic Printout Control.

Description: Controls number of harmonics output in axisymmetric shell problems.

Format and Example(s):

$$\text{HARMØNICS} = \left\{ \begin{matrix} \text{ALL} \\ \text{NØNE} \\ n \end{matrix} \right\}$$

Option	Meaning
ALL	All Harmonics will be output.
NØNE	No Harmonics will be output.
n	The first n+1 Harmonics will be output (Integer > 0).

Remarks: If no HARMØNICS card appears in Case Control, no harmonic output will be printed.

Case Control Data Card IC - Transient Initial Condition Set Selection.

Description: To select the initial conditions for Direct Transient problems.

Format and Example(s):

IC = n

IC = 17

Option	Meaning
n	Set identification of TIC card (Integer > 0).

Remarks: 1. TIC cards will not be used (hence no initial conditions) unless selected in Case Control.

2. Initial conditions are not allowed in a Modal Transient problem.

Case Control Data Card K2PP - Direct Input Stiffness Matrix Selection.

Description: Selects a direct input stiffness matrix.

Format and Example(s):

K2PP = name
K2PP = KDMIG
K2PP = K2PP

Option	Meaning
name	BCD name of a DMIG matrix that is input on the bulk data card DMIG.

Remarks: 1. K2PP is used only in dynamics problems.

2. DMIG matrices will not be used unless selected.

Case Control Data Card LABEL - Output Label.

Description: Defines a BCD label which will appear on the third heading line of each page of NASTRAN printer output.

Format and Example(s):

LABEL = { Any BCD data }

LABEL = STEVEN E. WALL'S PRØBLEM

Remarks:
1. LABEL appearing at the subcase level will label output for that subcase only.
2. LABEL appearing before all subcases will label any outputs which are not subcase dependent.
3. If no LABEL card is supplied, the label line will be blank.
4. LABEL information is also placed on NASTRAN plotter output as applicable.

Case Control Data Card LINE - Data Lines Per Page.

Description: Defines the number of data lines per printed page.

Format and Example(s):

LINE = $\left\{\begin{matrix}50\\n\end{matrix}\right\}$

LINE = 35

Option	Meaning
n	Number of data lines per page (Integer > 0).

Remarks: 1. If no LINE card appears, 50 is used

2. For 11 inch paper, 50 is recommended; for 8-1/2 inch paper, 35 is recommended.

Case Control Data Card LØAD - External Static Load Set Selection.

Description: Selects the external static load set to be applied to the structural model.

Format and Example(s):

LØAD = n

LØAD = 15

Option	Meaning
n	Set identification of at least one external load card and hence must appear on at least one FØRCE, FØRCE1, FØRCE2, MØMENT, MØMENT1, MØMENT2, GRAV, PLØAD, PLØAD2, RFØRCE, PRESAX, FØRCEAX, MØMAX, SLØAD, or LØAD card (Integer > 0).

Remarks:

1. The above static load cards will not be used by NASTRAN unless selected in Case Control.
2. A GRAV card cannot have the same set identification number as any of the other loading card types. If it is desired to apply a gravity load along with other static loads, a LØAD bulk data card must be used.
3. LØAD is only applicable in statics, inertia relief, differential stiffness, buckling, and piecewise linear problems.
4. The total load applied will be the sum of external (LØAD), thermal (TEMP(LØAD)), element deformation (DEFØRM) and constrained displacement (SPC) Loads.
5. Static, thermal and element deformation loads should have unique set identification numbers.

Case Control Data Card M2PP - Direct Input Mass Matrix Selection.

Description: Selects a direct input mass matrix.

Format and Example(s):

M2PP = name
M2PP = MDMIG
M2PP = M2PP

Option	Meaning
name	BCD name of a DMIG matrix that is input on the bulk data card DMIG.

Remarks: 1. M2PP is supported only in dynamics problems.

2. DMIG matrices will not be used unless selected.

Case Control Data Card MAXLINES - Maximum Number of Output Lines.

Description: Sets the maximum number of output lines to a given value.

Format and Example(s):

MAXLINES = $\left\{\begin{matrix}20000 \\ n\end{matrix}\right\}$

MAXLINES = 50000

Option	Meaning
n	Maximum number of output lines which the user wishes to allow (Integer > 0).

Remarks:

1. Any time this number is exceeded, NASTRAN will terminate thru PEXIT.
2. This does not override any system MAXLINES parameters such as those on JØB cards or space requests.

Case Control Data Card METHØD - Real Eigenvalue Extraction Method Selection.

Description: Selects the Real Eigenvalue Parameters to be used by the READ module.

Format and Example(s):

METHØD = n

METHØD = 33

Option	Meaning
n	Set identification number of an EIGR card (normal modes or modal formulation) or an EIGB card (buckling). (Integer > 0)

Remarks: An eigenvalue extraction method must be selected when extracting real eigenvalues using Functional Module READ.

Case Control Data Card MØDES - Duplicate Case Control.

Description: Repeats case control MØDES times - to allow control of output in eigenvalue problems.

Format and Example(s):

MØDES = n

MØDES = 1

Option	Meaning
n	Number of times to duplicate case control. (Integer > 0).

Remarks: 1. This card can be illustrated by an example. Suppose stress output is desired for the first five modes only and Displacements only thereafter. The following example would accomplish this:

```
SUBCASE 1
MØDES = 5
ØUTPUT
STRESS = ALL
SUBCASE 6
ØUTPUT
DISPLACEMENTS = ALL
BEGIN BULK
```

2. The MØDES card causes the results for each eigenvalue to be considered as a separate, successively numbered subcase, beginning with the subcase number containing the MØDES card.

3. If the MØDES card is not used, eigenvalue results are considered to be a part of a single subcase. Hence, any output requests for the single subcase will apply for all eigenvalues.

Case Control Data Card MPC - Multipoint Constraint Set Selection.

Description: Selects the multipoint constraint set to be applied to the structural model.

Format and Example(s):

MPC = n

MPC = 17

Option	Meaning
n	"n" is the set identification of a Multipoint-Constraint Set and hence must appear on at least one MPC or MPCADD card. (Integer > 0).

Remarks: MPC or MPCADD cards will not be used by NASTRAN unless selected in Case Control.

Case Control Data Card NLLØAD - Nonlinear Load Output Request.

Description: Requests form and type of nonlinear load output for Transient problems.

Format and Example(s):

$$\text{NLLØAD}\ \left[\left(\frac{\text{PRINT}}{\text{PUNCH}}\right)\right] = \left\{\begin{matrix}\text{ALL}\\ \text{n}\\ \text{NØNE}\end{matrix}\right\}$$

NLLØAD = ALL

Option	Meaning
PRINT	The printer will be the output media.
PUNCH	The card punch will be the output media.
ALL	Nonlinear loads for all solution points will be output.
NØNE	Nonlinear loads will not be output.
n	Set identification of previously appearing SET card. (Integer > 0). Only nonlinear loads for points whose identification numbers appear on this SET card will be output.

Remarks:
1. Nonlinear loads are output only in the solution (D or H) set.
2. The output will have a SØRT2 format.
3. Both PRINT and PUNCH may be used.
4. NLLØAD = NØNE allows overriding an overall output request.

Case Control Data Card NØNLINEAR - Nonlinear Load Set Selection.

Description: Selects nonlinear load for transient problems.

Format and Example(s):

NØNLINEAR = n
NØNLINEAR LØAD SET = 75

Option	Meaning
n	Set identification of NØLINi cards (Integer > 0).

Remarks: NØLINi cards will not be used unless selected in Case Control.

Case Control Data Card ØFREQUENCY - Output Frequency Set.

Description: Selects from the solution set of frequencies a subset for output requests.

Format and Example(s):

ØFREQUENCY $= \left\{ \frac{\text{ALL}}{\text{n}} \right\}$

ØFREQUENCY = ALL

ØFREQUENCY SET = 15

Option	Meaning
ALL	Output for all frequencies will be printed out.
n	Set identification of previously appearing SET card. (Integer > 0). Output for frequencies closest to those given on this SET card will be output.

Remarks: ØFREQUENCY is defaulted to ALL if it is not supplied.

Case Control Data Card ØLØAD - Applied Load Output Request

Description: Requests form and type of applied load vector output.

Format and Example(s):

$$\text{ØLØAD} \quad \left[\left(\begin{matrix}\text{SØRT1}\\ \text{SØRT2}\end{matrix}, \begin{matrix}\text{PRINT}\\ \text{PUNCH}\end{matrix}, \begin{matrix}\text{REAL}\\ \text{IMAG}\\ \text{PHASE}\end{matrix}\right)\right] = \left\{\begin{matrix}\text{ALL}\\ \text{n}\\ \text{NØNE}\end{matrix}\right\}$$

ØLØAD = ALL

ØLØAD(SØRT1, PHASE) = 5

Option	Meaning
SØRT1	Output will be presented as a tabular listing of grid points for each load, frequency, eigenvalue, or time, depending on the rigid format. SØRT1 is not available on Transient problems (where the default is SØRT2).
SØRT2	Output will be presented as a tabular listing of frequency or time for each grid point. SØRT2 is available only in Transient and Frequency Response problems.
PRINT	The printer will be the output media.
PUNCH	The card punch will be the output media.
REAL or IMAG	Requests real and imaginary output on Complex Eigenvalue or Frequency Response problems.
PHASE	Requests magnitude and phase ($0.0° < \text{phase} < 360.0°$) on Complex Eigenvalue or Frequency Response problems.
ALL	Applied loads for all points will be output. (SØRT1 will only output nonzero values).
NØNE	Applied loads for no points will be output.
n	Set identification of previously appearing SET card. Only loads on points whose identification numbers appear on this SET card will be output (Integer > 0).

Remarks:
1. Both PRINT and PUNCH may be requested.
2. On a Frequency Response problem any request for SØRT2 causes all output to be SØRT2.
3. In a Statics problem a request for SØRT2 causes loads at all points (zero and non-zero) to be output.
4. ØLØAD = NØNE allows overriding an overall output request.

Case Control Data Card ØUTPUT - Output Packet Delimiter.

Description: Delimits the various output packets, structure plotter, curve plotter, and printer/punch.

Format and Example(s):

ØUTPUT [(PLØT / XYØUT / XYPLØT)]

ØUTPUT

ØUTPUT(PLØT)

ØUTPUT(XYØUT)

Option	Meaning
No qualifier	Beginning of printer output packet - this is not a required card.
PLØT	Beginning of structure plotter packet. This card must preceed all structure plotter control cards.
XYØUT or XYPLØT	Beginning of curve plotter packet. This card must precede all curve plotter control cards. XYPLØT and XYØUT are entirely equivalent.

Remarks:

1. The structure plotter packet and the curve plotter packet must be at the end of the Case Control Deck. Either may come first.

2. The delimiting of a printer packet is completely optional.

Case Control Data Card PLCØEFFICIENT - Piecewise Linear Coefficient Set.

Description: Selects the coefficient set for Piecewise Linear problems.

Format and Example(s):

PLCØEFFICIENT = $\left\{\begin{matrix}\text{DEFAULT} \\ \text{n}\end{matrix}\right\}$

PLCØEFFICIENT = DEFAULT

PLCØEFFICIENT = 25

Option	Meaning
DEFAULT	A single default coefficient of value 1.0.
n	Set identification of PLFACT card (Integer > 0).

Remarks: PLFACT cards will not be used unless selected.

Case Control Data Card PLØTID - Plotter Identification.

Description: Defines BCD identification which will appear on the first frame of any NASTRAN plotter output.

Format and Example(s):

PLØTID = { Any BCD data }

PLØTID = MSC - BLDG. 125 BØX 91 - - RETURN TØ MACNEAL-SCHWENDLER CØRP.

Remarks:

1. PLØTID must appear before the ØUTPUT(PLØT) or ØUTPUT(XYØUT) cards.
2. The presence of PLØTID causes a special header frame to be plotted with the supplied identification plotted several times. This allows easy identification of NASTRAN plotter output.
3. If no PLØTID card appears, no ID frame will be plotted.
4. The PLØTID header frame will not be generated for the table plotters.

Case Control Data Card RANDØM - Random Analysis Set Selection.

Description: Selects the RANDPS and RANDTi cards to be used in Random Analysis.

Format and Example(s):

RANDØM = n

RANDØM = 177

Option	Meaning
n	Set identification of RANDPS and RANDTi cards to be used in RANDØM analysis (Integer > 0).

Remarks: RANDPS cards must be selected to do Random Analysis.

Case Control Data Card REPCASE - Repeat Case Subcase Delimiter.

Description: Delimits and identifies a repeated subcase.

Format and Example(s):

REPCASE n
REPCASE 137

Option	Meaning
n	Subcase number (Integer > 1).

Remarks:
1. "n" must be strictly increasing (i.e. greater than all previous subcase set identification numbers).
2. This case will only re-output the previous real case. This allows additional set specification.
3. REPCASE may only be used in Statics or Inertia Relief.
4. One or more repeated subcases (REPCASEs) must immediately follow the subcase (SUBCASE) to which they refer. (See example 4 in Section 2.3.3).

Case Control Data Card SACCELERATIØN - Solution Set Acceleration Output Request

Description: Requests form and type of solution set acceleration output.

Format and Example(s):

$$\text{SACCELERATIØN} \left[\left(\begin{matrix}\text{SØRT1}\\ \text{SØRT2}\end{matrix}, \begin{matrix}\text{PRINT}\\ \text{PUNCH}\end{matrix}, \begin{matrix}\text{REAL}\\ \text{IMAG}\\ \text{PHASE}\end{matrix}\right)\right] = \left\{\begin{matrix}\text{ALL}\\ \text{n}\\ \text{NØNE}\end{matrix}\right\}$$

SACCELERATIØN = ALL

SACCELERATIØN(PUNCH, IMAG) = 142

Option	Meaning
SØRT1	Output will be presented as a tabular listing of grid points for each load, frequency, eigenvalue, or time, depending on the rigid format. SØRT1 is not available on Transient problems (where the default is SØRT2).
SØRT2	Output will be presented as a tabular listing of frequency or time for each grid point (or mode number). SØRT2 is available only in Transient and Frequency Response problems.
PRINT	The printer will be the output media.
PUNCH	The card punch will be the output media.
REAL or IMAG	Requests real and imaginary output on Frequency Response problems.
PHASE	Requests magnitude and phase ($0.0° < \text{phase} < 360.0°$) on Frequency Response problems.
ALL	Acceleration for all solution points (modes) will be output.
NØNE	Acceleration for no solution points (modes) will be output.
n	Set identification of a previously appearing SET card. Only accelerations of points whose identification numbers appear on this SET card will be output (Integer > 0)

Remarks:
1. Both PRINT and PUNCH may be requested.
2. Acceleration output is only available for Transient and Frequency Response problems.
3. On a Frequency Response problem any request for SØRT2 output causes all output to be SØRT2.
4. SACCELERATIØN = NØNE allows overriding an overall output request.

Case Control Data Card SDAMPING - Structural Damping.

Description: Selects table which defines damping as a function of frequency in Modal Formulation problems.

Format and Example(s):

SDAMPING = n

SDAMPING = 77

Option	Meaning
n	Set identification of a TABDMP1 table (Integer > 0).

Remarks: If SDAMPING is not used BHH = [0].

Case Control Data Card SDISPLACEMENT - Solution Set Displacement Output Request.

Description: Requests form and type of solution set displacement output.

Format and Example(s):

$$\text{SDISPLACEMENT} \quad \left[\left(\begin{matrix}\text{SØRT1}\\ \text{SØRT2}\end{matrix}, \begin{matrix}\text{PRINT}\\ \text{PUNCH}\end{matrix}, \begin{matrix}\text{REAL}\\ \text{IMAG}\\ \text{PHASE}\end{matrix}\right)\right] = \left\{\begin{matrix}\text{ALL}\\ \text{n}\\ \text{NØNE}\end{matrix}\right\}$$

SDISPLACEMENT = ALL

SDISPLACEMENT(SØRT2, PUNCH, PHASE) = NØNE

Option	Meaning
SØRT1	Output will be presented as a tabular listing of grid points for each load, frequency, eigenvalue, or time, depending on the rigid format. SØRT1 is not available on Transient problems (where the default is SØRT2).
SØRT2	Output will be presented as a tabular listing of frequency or time for each grid point (or mode number). SØRT2 is available only in Transient and Frequency Response problems.
PRINT	The printer will be the output media.
PUNCH	The card punch will be the output media.
REAL or IMAG	Requests real and imaginary output on Complex Eigenvalue or Frequency Response problems.
PHASE	Requests magnitude and phase ($0.0° < \text{phase} < 360.0°$) on Complex Eigenvalue or Frequency Response problems.
ALL	Displacements for all points (modes) will be output.
NØNE	Displacements for no points (modes) will be output.
n	Set identification of previously appearing SET card. Only displacements of points whose identification numbers appear on this SET card will be output (Integer > 0).

Remarks:
1. Both PRINT and PUNCH may be requested.
2. On a Frequency Response problem any request for SØRT2 causes all output to be SØRT2.
3. SVECTØR is an alternate form which is entirely equivalent to SDISPLACEMENT.
4. SDISPLACEMENT = NØNE allows overriding an overall output request.

Case Control Data Card SET - Set Definition Card.

Description: 1) Lists identification numbers (point or element) for output requests.
2) Lists the frequencies for which output will be printed in Frequency Response Problems.

Format and Example(s):

1) SET n = $\{i_1[,i_2, i_3\text{THRU } i_4 \text{ EXCEPT } i_5, i_6, i_7, i_8 \text{ THRU } i_9]\}$

```
SET 77 = 5

SET 88 = 5, 6, 7, 8, 9, 10 THRU 55 EXCEPT 15, 16, 77,
         78, 79, 100 THRU 300

SET 99 = 1 THRU 100000
```

2) SET n = $\{r_1 [, r_2, r_3, r_4]\}$

```
SET 101 = 1.0, 2.0, 3.0

SET 105 = 1.009, 10.2, 13.4,
          14.0, 15.0
```

Option	Meaning
n	Set identification (Integer > 0). Any set may be redefined by reassigning its identification number. Sets inside SUBCASE delimiters are local to the SUBCASE.
i_1, i_2 etc.	Element or point identification number at which output is requested. (Integer > 0) If no such identification number exists, the request is ignored.
i_3 THRU i_4	Output at set identification numbers i_3 thru i_4 ($i_4 > i_3$).
EXCEPT	Set identification numbers following EXCEPT will be deleted from output list as long as they are in the range of the set defined by the immediately preceding THRU.
r_1, r_2 etc.	Frequencies for output (Real > 0.0). The nearest solution frequency will be output. EXCEPT and THRU cannot be used.

Remarks: A SET card may be more than one physical card. A comma (,) at the end of a physical card signifies a continuation card. Commas may not end a set.

Case Control Data Card SPC - Single-Point Constraint Set Selection.

Description : Selects the single-point constraint set to be applied to the structural model.

Format and Example(s):

SPC = n

SPC = 10

Option	Meaning
n	Set identification of a single-point constraint set and hence must appear on a SPC, SPC1 or SPCADD card (Integer > 0).

Remarks: SPC, SPC1 or SPCADD cards will not be used by NASTRAN unless selected in Case Control.

Case Control Data Card SPCFØRCES - Single-Point Forces of Constraint Output Request.

Description: Requests form and type of Single-Point Force of constraint vector output.

Format and Example(s):

$$\text{SPCFØRCES} \quad \left[\left(\begin{matrix}\text{SØRT1}\\ \text{SØRT2}\end{matrix}, \begin{matrix}\text{PRINT}\\ \text{PUNCH}\end{matrix}, \begin{matrix}\text{REAL}\\ \text{IMAG}\\ \text{PHASE}\end{matrix}\right)\right] = \left\{\begin{matrix}\text{ALL}\\ \text{n}\\ \text{NØNE}\end{matrix}\right\}$$

SPCFØRCES = 5

SPCFØRCES(SØRT2, PUNCH, PRINT, IMAG) = ALL

SPCFØRCES(PHASE) = NØNE

Option	Meaning
SØRT1	Output will be presented as a tabular listing of grid points for each load, frequency, eigenvalue, or time, depending on the rigid format. SØRT1 is not available on Transient problems (where the default is SØRT2).
SØRT2	Output will be presented as a tabular listing of frequency or time for each grid point. SØRT2 is available only in Transient and Frequency Response problems.
PRINT	The printer will be the output media.
PUNCH	The card punch will be the output media.
REAL or IMAG	Requests real and imaginary output on Complex Eigenvalue or Frequency Response problems.
PHASE	Requests magnitude and phase ($0.0° < \text{phase} < 360.0°$) on Complex Eigenvalue or Frequency Response problems.
ALL	Single-Point forces of constraint for all points will be output. (SØRT1 will only output nonzero values.)
NØNE	Single point forces of constraint for no points will be output.
n	Set identification of previously appearing SET card. Only single-point forces constraint for points whose identification numbers appear on this SET card will be output (Integer > 0).

Remarks:
1. Both PRINT and PUNCH may be requested.
2. On a Frequency Response problem any request for SØRT2 causes all output to be SØRT2.
3. In a Statics problem a request for SØRT2 causes loads at all points (zero and non-zero) to be output.
4. SPCFØRCES = NØNE allows overriding an overall output request.

Case Control Data Card STRESS - Element Stress Output Request.

Description: Requests form and type of element stress output.

Format and Example(s):

$$\text{STRESS} \quad \left[\left(\begin{matrix}\text{SØRT1}\\ \text{SØRT2}\end{matrix}, \begin{matrix}\text{PRINT}\\ \text{PUNCH}\end{matrix}, \begin{matrix}\text{REAL}\\ \text{IMAG}\\ \text{PHASE}\end{matrix}\right)\right] = \left\{\begin{matrix}\text{ALL}\\ \text{n}\\ \text{NØNE}\end{matrix}\right\}$$

STRESS = 5

STRESS = ALL

STRESS(SØRT1, PRINT, PUNCH, PHASE) = 15

Option	Meaning
SØRT1	Output will be presented as a tabular listing of elements for each load, frequency, eigenvalue, or time, depending on the rigid format. SØRT1 is not available on Transient problems (where the default is SØRT2).
SØRT2	Output will be presented as a tabular listing of frequency or time for each element type. SØRT2 is available only in Transient and Frequency Response problems.
PRINT	The printer will be the output media.
PUNCH	The card punch will be the output media.
REAL or IMAG	Requests real and imaginary printout on Complex Eigenvalue or Frequency Response problems.
PHASE	Requests magnitude and phase ($0.0° < \text{phase} < 360.0°$) on Complex Eigenvalue or Frequency Response problems.
ALL	Stresses for all elements will be output.
n	Set identification of a previously appearing SET card (Integer > 0). Only stresses for elements whose identification numbers appear on this SET card will be output.
NØNE	Stresses for no points will be output.

Remarks:
1. Both PRINT and PUNCH may be requested.
2. ALL cannot be used in a Transient problem.
3. On a Frequency Response problem any request for SØRT2 output causes all output to be SØRT2.
4. ELSTRESS is an alternate form and is entirely equivalent to STRESS.
5. STRESS = NØNE allows overriding an overall output request.

Case Control Data Card SUBCASE - Subcase Delimiter.

Description: Delimits and identifies a subcase.

Format and Example(s):

SUBCASE n
SUBCASE 101

Option	Meaning
n	Subcase identification number (Integer > 0).

Remarks: 1. The subcase identification number, n, must be strictly increasing (i.e., greater than all previous subcase identification numbers).

2. Plot requests and RANDØM requests refer to n.

Case Control Data Card SUBCØM - Combination Subcase Delimiter.

Description: Delimits and identifies a combination subcase.

Format and Example(s):

SUBCØM n
SUBCØM 125

Option	Meaning
n	Subcase identification number (Integer > 2).

Remarks:
1. The subcase identification number, n, must be strictly increasing (i.e., greater than all previous subcase identification numbers).
2. A SUBSEQ card must appear in this subcase.
3. SUBCØM may only be used in Statics or Inertia Relief problems.
4. Output requests above the subcase level will be utilized.

Case Control Data Card SUBSEQ - Subcase Sequence Coefficients.

Description: Gives the coefficients for forming a linear combination of the previous subcases.

Format and Example(s):

SUBSEQ = R_1 [, R_2, R_3, . . ., R_N]
SUBSEQ = 1.0, -1.0, 0.0, 2.0

Option	Meaning
R_1 to R_N	Coefficients of the previously occuring subcases (Real).

Remarks:
1. A SUBSEQ card must only appear in a SUBCØM subcase.
2. A SUBSEQ card may be more than one physical card. A comma at the end signifies a continuation card.
3. SUBSEQ may only be used in Statics or Inertia Relief problems.

Case Control Data Card SUBTITLE - Output Subtitle.

Description: Defines a BCD subtitle which will appear on the second heading line of each page of NASTRAN printer output.

Format and Example(s):

SUBTITLE = { Any BCD data }

SUBTITLE = NASTRAN PRØBLEM NØ. 5-1A

Remarks:
1. SUBTITLE appearing at the subcase level will title output for that subcase only.
2. SUBTITLE appearing before all subcases will title any outputs which are not subcase dependent.
3. If no SUBTITLE card is supplied, the subtitle line will be blank.
4. SUBTITLE information is also placed on NASTRAN plotter output as applicable.

Case Control Data Card SVECTØR - Solution Set Displacement Output Request.

Description: Requests form and type of solution set displacement output.

Format and Example(s):

$$\text{SVECTØR} \quad \left[\left(\begin{matrix}\text{SØRT1} \\ \text{SØRT2}\end{matrix}, \begin{matrix}\text{PRINT} \\ \text{PUNCH}\end{matrix}, \begin{matrix}\text{REAL} \\ \text{IMAG} \\ \text{PHASE}\end{matrix}\right)\right] = \left\{\begin{matrix}\text{ALL} \\ \text{n} \\ \text{NØNE}\end{matrix}\right\}$$

SVECTØR = ALL

SVECTØR(SØRT2, PUNCH, PHASE) = NØNE

Option	Meaning
SØRT1	Output will be presented as a tabular listing of grid points for each load, frequency, eigenvalue, or time, depending on the rigid format. SØRT1 is not available on Transient problems (where the default is SØRT2).
SØRT2	Output will be presented as a tabular listing of frequency or time for each grid point (or mode number). SØRT2 is available only in Transient and Frequency Response problems.
PRINT	The printer will be the output media.
PUNCH	The card punch will be the output media.
REAL or IMAG	Requests real and imaginary output on Complex Eigenvalue or Frequency Response problems.
PHASE	Requests magnitude and phase ($0.0° < \text{phase} < 360.0°$) on Complex Eigenvalue or Frequency Response problems.
ALL	Displacements for all points (modes) will be output.
NØNE	Displacements for no points (modes) will be output.
n	Set identification of previously appearing SET card. Only displacements of points whose identification numbers appear on this SET card will be output (Integer > 0).

Remarks:
1. Both PRINT and PUNCH may be requested.
2. On a Frequency Response problem any request for SØRT2 causes all output to be SØRT2.
3. SDISPLACEMENT is an alternate form and is entirely equivalent to SVECTØR.
4. SVECTØR = NØNE allows overriding an overall output request.

Case Control Data Card SVELØCITY - Solution Set Velocity Output Request

Description: Requests form and type of solution set velocity output.

Format and Example(s):

$$\text{SVELØCITY} \left[\left(\begin{matrix}\text{SØRT1} \\ \text{SØRT2}\end{matrix}, \begin{matrix}\text{PRINT} \\ \text{PUNCH}\end{matrix}, \begin{matrix}\text{REAL} \\ \text{IMAG} \\ \text{PHASE}\end{matrix}\right)\right] = \left\{\begin{matrix}\text{ALL} \\ \text{n} \\ \text{NØNE}\end{matrix}\right\}$$

SVELØCITY = 5

SVELØCITY(SØRT2, PUNCH, PRINT, PHASE) = ALL

Option	Meaning
SØRT1	Output will be presented as a tabular listing of grid points for each load, frequency, eigenvalue, or time, depending on the rigid format. SØRT1 is not available on Transient problems (where the default is SØRT2).
SØRT2	Output will be presented as a tabular listing of frequency or time for each grid point (or mode number). SØRT2 is available only in Transient and Frequency Response problems.
PRINT	The printer will be the output media.
PUNCH	The card punch will be the output media.
REAL or IMAG	Requests real and imaginary output on Frequency Response problems.
PHASE	Requests magnitude and phase ($0.0° < \text{phase} < 360.0°$) on Frequency Response problems.
ALL	Velocity for all solution points (modes) will be output.
NØNE	Velocity for no solution points (modes) will be output.
n	Set identification of a previously appearing SET card. Only velocities of points whose identification numbers appear on this SET card will be output (Integer > 0).

Remarks:
1. Both PRINT and PUNCH may be requested.
2. Velocity output is only available for Transient and Frequency Response problems.
3. On a Frequency Response problem any request for SØRT2 output causes all output to be SØRT2.
4. SVELØCITY = NØNE allows overriding an overall output request.

Case Control Data Card SYM - Symmetry Subcase Delimiter.

Description: Delimits and identifies a symmetry subcase.

Format and Example(s):

SYM n
SYM 123

Option	Meaning
n	Subcase identification number (Integer > 0).

Remarks:
1. The subcase identification number, n, must be strictly increasing (i.e., greater than all previous subcase identification numbers).
2. Plot requests and RANDØM requests should refer to n.
3. Overall output requests will not propagate into a SYM subcase (i.e. any output desired must be requested within the subcase).
4. SYM may only be used in Statics or Inertia Relief.

Case Control Data Card SYMCØM - Symmetry Combination Subcase Delimiter.

Description: Delimits and identifies a symmetry combination subcase.

Format and Example(s):

SYMCØM n
SYMCØM 123

Option	Meaning
n	Subcase identification number (Integer > 2).

Remarks:
1. The subcase identification number, n, must be strictly increasing (i.e., greater than all previous subcase identification numbers).
2. SYMCØM may only be used in Statics or Inertia Relief problems.

Case Control Data Card SYMSEQ - Symmetry Sequence Coefficients.

Description: Gives the coefficients for combining the symmetry subcases into the total structure.

Format and Example(s):

SYMSEQ = R_1[, R_2, R_3 --- R_n]
SYMSEQ = 1.0, -2.0, 3.0, 4.0

Option	Meaning
R_1 to R_N	Coefficients of the previously occurring N SYM subcases (Real).

Remarks:
1. A SYMSEQ card may only appear in a SYMCØM subcase.
2. The default value for the coefficients is 1.0 if no SYMSEQ card appears.
3. A SYMSEQ card may consist of more than one physical card.
4. SYMSEQ may only be used in Statics or Inertia Relief.

Case Control Data Card TEMPERATURE - Thermal Properties Set Selection.

Description: Selects the temperature set to be used in either material property calculation or thermal loading.

Format and Example(s):

TEMPERATURE [(MATERIAL / LØAD / BØTH)] = n

TEMPERATURE(LØAD) = 15

TEMPERATURE(MATERIAL) = 7

TEMPERATURE = 7

Option	Meaning
MATERIAL	The selected temperature table will be used to determine temperature-dependent material properties indicated on the MATTi type cards.
LØAD	The selected temperature table will be used to determine an equivalent static load.
BØTH	Both options, MATERIAL and LØAD will use the same temperature table.
n	Set identification of TEMP, TEMPD or TEMPAX cards (Integer > 0).

Remarks:
1. Only one temperature-dependent material request may be made in any problem.
2. Thermal loading may only be used in Statics, Inertia Relief, Differential Stiffness, and Buckling problems.
3. Temperature-dependent materials may not be used in Piecewise Linear problems.
4. The total load applied will be the sum of external (LØAD), thermal (TEMP(LØAD)), element deformation (DEFØRM) and constrained displacement (SPC) loads.
5. Static, thermal and element deformation loads should have unique set identification numbers.

Case Control Data Card TFL - Transfer Function Set Selection.

Description: Selects the Transfer function set to be added to the direct input matrices.

Format and Example(s):

TFL = n
TFL = 77

Option	Meaning
n	Set identification of a TF card (Integer > 0).

Remarks:
1. Transfer functions will not be used unless selected in the Case Control Deck.
2. Transfer functions are supported on dynamics problems only.
3. Transfer functions are simply another form of direct matrix input.

Case Control Data Card TITLE - Output Title.

Description: Defines a BCD title which will appear on the first heading line of each page of NASTRAN printer output.

Format and Example(s):

TITLE = { Any BCD data }

TITLE = **$// ABCDEFGHI .... $

Remarks:
1. TITLE appearing at the subcase level will title output for that subcase only.
2. TITLE appearing before all subcases will title any outputs which are not subcase dependent.
3. If no TITLE card is supplied, the title line will contain data and page numbers only.
4. TITLE information is also placed on NASTRAN plotter output as applicable.

Case Control Data Card TSTEP - Transient Time Step Set Selection.

Description: Selects integration and output time steps for Transient problems.

Format and Example(s):

TSTEP = n
TSTEP = 731

Option	Meaning
n	Set identification of a selected TSTEP bulk data card (Integer > 0).

Remarks: 1. A TSTEP card must be selected to execute a Transient problem.

2. Only one TSTEP card may have this value of n.

Case Control Data Card VECTØR - Displacement Output Request.

Description: Requests form and type of displacement vector output.

Format and Example(s):

$$\text{VECTØR} \quad \left[\left(\begin{matrix} \text{SØRT1} \\ \text{SØRT2} \end{matrix}, \begin{matrix} \text{PRINT} \\ \text{PUNCH} \end{matrix}, \begin{matrix} \text{REAL} \\ \text{IMAG} \\ \text{PHASE} \end{matrix} \right) \right] = \left\{ \begin{matrix} \text{ALL} \\ \text{n} \\ \text{NØNE} \end{matrix} \right\}$$

VECTØR = 5

VECTØR(REAL) = ALL

VECTØR(SØRT2, PUNCH, REAL) = ALL

Option	Meaning
SØRT1	Output will be presented as a tabular listing of grid points for each load, frequency, eigenvalue, or time, depending on the rigid format. SØRT1 is not available on Transient problems (where the default is SØRT2).
SØRT2	Output will be presented as a tabular listing of frequency or time for each grid point. SØRT2 is available only in Transient and Frequency Response problems.
PRINT	The printer will be the output media.
PUNCH	The card punch will be the output media.
REAL or IMAG	Requests real and imaginary output on Complex Eigenvalue or Frequency Response problems.
PHASE	Requests magnitude and phase (0.0° < phase < 360.0°) on Complex Eigenvalue or Frequency Response problems.
ALL	Displacements for all points will be output.
NØNE	Displacements for no points will be output.
n	Set identification of a previously appearing SET card. Only displacements of points whose identification numbers appear on this SET card will be output (Integer > 0).

Remarks:
1. Both PRINT and PUNCH may be requested.
2. On a Frequency Response problem any request for SØRT2 causes all output to be SØRT2.
3. DISPLACEMENT is an alternate form and is entirely equivalent to VECTØR.
4. VECTØR = NØNE allows overriding an overall output request.

Case Control Data Card VELØCITY - Velocity Output Request.

Description: Requests form and type of velocity vector output.

Format and Example(s):

$$\text{VELØCITY} \quad \left[\left(\frac{\text{SØRT1}}{\text{SØRT2}}, \frac{\text{PRINT}}{\text{PUNCH}}, \frac{\text{REAL}}{\text{IMAG}}{\text{PHASE}}\right)\right] = \left\{\begin{matrix}\text{ALL}\\ \text{n}\\ \text{NØNE}\end{matrix}\right\}$$

VELØCITY = 5

VELØCITY(SØRT2, PHASE, PUNCH) = ALL

Option	Meaning
SØRT1	Output will be presented as a tabular listing of grid points for each load, frequency, eigenvalue, or time, depending on the rigid format. SØRT1 is not available on Transient problems (where the default is SØRT2).
SØRT2	Output will be presented as a tabular listing of frequency or time for each grid point. SØRT2 is available only in Transient and Frequency Response problems.
PRINT	The printer will be the output media.
PUNCH	The card punch will be the output media.
REAL or IMAG	Requests real and imaginary output on Frequency Response problems.
PHASE	Requests magnitude and phase ($0.0° < \text{phase} < 360.0°$) on Frequency Response problems.
ALL	Velocity for all solution points will be ouptut.
NØNE	Velocity for no solution points will be output.
n	Set identification of a previously appearing SET card. Only velocities of points whose identification numbers appear on this SET card will be output (Integer > 0).

Remarks:

1. Both PRINT and PUNCH may be requested.
2. Velocity output is only available for Transient and Frequency Response problems.
3. On a Frequency Response problem any request for SØRT2 output causes all output to be SØRT2.
4. VELØCITY = NØNE allows overriding an overall output request.

2.4 BULK DATA DECK

The primary NASTRAN input medium is the Bulk Data card. These cards are used to define the structural model and various pools of data which may be selected by Case Control at execution time.

For large problems the Bulk Data Deck may consist of several thousand cards. In order to minimize the handling of large numbers of cards, provision has been made in NASTRAN to store the bulk data on the Problem Tape, from which it may be modified on subsequent runs. A User's Master File (Section 2.5) is also provided for the storage of Bulk Data Decks.

For any cold start, the entire Bulk Data Deck must be submitted. Thereafter, if the original run was checkpointed, the Bulk Data Deck exists on the Problem Tape in sorted form where it may be modified and reused on restart. On restart the bulk data cards contained in the Bulk Data Deck are added to the bulk data contained on the Old Problem Tape. Cards are removed from the Old Problem Tape (or the User's Master File) by the use of a delete card. Cards to be deleted are indicated by inserting a bulk data card with a / in column one and the sorted bulk data sequence numbers in fields two and three. All bulk data cards in the range of the sequence numbers in fields two and three will be deleted. In the case where only a single card is deleted, field three may be left blank.

The Bulk Data Deck may be submitted with the cards in any order as a sort is performed prior to the execution of the Input File Processor. It should be noted that the machine time to perform this is minimized for a deck that is already sorted. The sort time for a badly sorted deck will become significant for large decks. The user may obtain a printed copy of either the unsorted or sorted bulk data by selection in the Case Control Deck. A sorted echo is necessary in order to make modifications on a secondary execution using the Problem Tape. This echo is automatically provided unless specifically suppressed by the user.

2.4.1 Format of Bulk Data Cards

The bulk data card format is variable to the extent that any quantity except the mnemonic can be punched anywhere within a specified 8 or 16-column field. The normal card uses an 8-column field as indicated in the following diagram:

Small Field Bulk Data Card

The mnemonic is punched in field 1 beginning in column 1. Fields 2-9 are for data items. The only limitations in data items are that they must lie completely within the designated field, have no imbedded blanks, and must be of the proper type, i.e., blank, integer, real, double precision, or BCD*. Real numbers may be encoded in various ways. Except in the case of zero or blank, a real number must contain a decimal point. For example, the real number 7.0 may be encoded as 7.0, .7E1, 0.7+1, 70.-1, .70+1, etc. A double precision number must contain both a decimal point and an exponent with the character D such as 7.0D0. Double precision data values are only allowed in a few situations, such as on the PARAM card. BCD data values consist of one to eight alphanumeric characters, the first of which must be alphabetic.

Normally field 10 is reserved for optional user identification. However, in the case of continuation cards field 10 (except column 73 which is not referenced) is used in conjunction with field 1 of the continuation card as an identifier and hence must contain a unique entry. The continuation card contains the symbol + in column 1 followed by the same seven characters that appeared in columns 74-80 of field 10 of the card that is being continued. This allows the data to be submitted as an unsorted deck.

The small field data card should be more than adequate for the kinds of data normally associated with structural engineering problems. Since abbreviated forms of floating point numbers are allowed, up to seven significant decimal digits may be used in an eight-character field. Occasionally, however, the input is generated by another computer program or is available in a form where a wider field would be desirable. For this case, the larger field format with a 16-character data field is provided. Each logical card consists of two physical cards as indicated in the following diagram:

* See SEQGP and SEQEP for exceptions.

Large Field Bulk Data Card

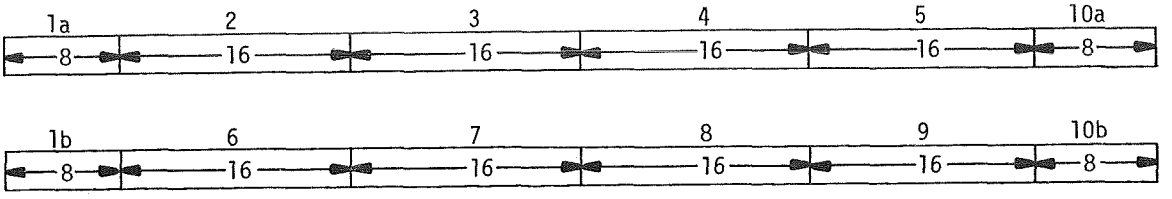

The large field card is denoted by placing the symbol * after the mnemonic in field 1a and some unique character configuation in the last 7 columns of field 10a. The second physical card contains the symbol * in column 1 followed by the same seven characters that appeared after column 73 in field 10a of the first card. The second card may in turn be used to point to a large or small field continuation card, depending on whether the continuation card contains the symbol * or the symbol + in column 1. The use of multiple and large field cards are illustrated in the following examples:

Small Field Card with Small Field Continuation Card.

TYPE									QED123
+ED123									

Large Field Card

TYPE*					QED124
*ED124					

Large Field Card with Large Field Continuation Card

TYPE*					QED301
*ED301					QED302
*ED302					QED305
*ED305					

Large Field Card Followed by a Small Field Continuation Card and a Large Field Continuation Card

TYPE*					QED462
*ED462					QED421
+ED421					QED361
*ED361					QED291
*ED291					

Small Field Card with Large Field Continuation Card

TYPE								QED632
*ED632								QED204
*ED204								

In the above examples column 73 arbitrarily contains the symbol Q in all cases where field 10 is used as a pointer. However, column 73 could have been left blank or the same symbol used in column 1 of the following card could have been used (i.e., the symbols * or +).

2.4.2 Bulk Data Card Descriptions

The detailed descriptions of the bulk data cards are contained in this section in alphabetical order. For details pertaining to the use of each card and for a discussion of the cards in functional groups, the user is referred to Section 1 - Structural Modeling. Small field examples are given for each card along with a description of the contents of each field. In the Format and Example section of each card description, both a symbolic card format description and an example of an actual card are shown. Literal constants are shown in the card format section enclosed in quotes (e.g., "0"). Fields that are required to be blank are indicated in the card format section by whenever they are followed by nonblank fields or whenever such notation will clarify the card description.

The Input File Processor will produce error messages for any cards that do not have the proper format or which contain illegal data.

Input Data Card $ Comment

Description: For user convenience in inserting commentary material into the unsorted echo of his input Bulk Data Deck. The $ card is otherwise ignored by the program. These cards will not appear in a sorted echo nor will they exist on the New Problem Tape.

Format and Example:

1	2	3	4	5	6	7	8	9	10
$	followed	by any	legitimate	characters	in	card	columns	2-80	
$	THIS IS	A REMARK	(*,'$$)-+/						

Input Data Card / Delete

Description: Delete cards are used to remove cards from either the Old Problem Tape on restart or the User's Master File.

Format and Example:

1	2	3	4	5	6	7	8	9	10
/	K1	K2							
/	4								

Field	Contents
K1	Sorted sequence number of first card in sequence to be removed
K2	Sorted sequence number of last card in sequence to be removed

Remarks:
1. The delete card causes bulk data cards having sort sequence numbers K1 thru K2 to be removed from the Bulk Data Deck.
2. If K2 is blank, only card K1 is removed from the Bulk Data Deck.
3. If neither an Old Problem Tape nor a User's Master File are used in the current execution, the delete cards are ignored.

Input Data Card AXIC Conical Shell Problem "Flag"

Description: Defines the existence of an axisymmetric conical shell problem.

Format and Example:

1	2	3	4	5	6	7	8	9	10
AXIC	H								
AXIC	15								

Field	Contents
H	Highest harmonic defined for the problem ($0 \leq$ Integer ≤ 998)

Remarks: 1. Only one (1) AXIC card is allowed. When the AXIC card is present, most other cards are not allowed. The types which are allowed with the AXIC card are listed below:

CCØNEAX	MAT1	SPCAX
DAREA	MATT1	SUPAX
DELAY	MØMAX	TABDMP1
DLØAD	MØMENT	TABLED1
DMI	MPCADD	TABLED2
DMIG	MPCAX	TABLED3
DPHASE	NØLIN1	TABLED4
DSFACT	NØLIN2	TABLEM1
EIGB	NØLIN3	TABLEM2
EIGC	NØLIN4	TABLEM3
EIGP	ØMITAX	TABLEM4
EIGR	PARAM	TEMPAX
EPØINT	PCØNEAX	TF
FØRCE	PØINTAX	TIC
FØRCEAX	PRESAX	TLØAD1
FREQ	RINGAX	TLØAD2
FREQ1	RLØAD1	TSTEP
FREQ2	RLØAD2	
GRAV	SECTAX	
LØAD	SPCADD	

2. For a discussion of the conical shell problem, see Section 5.9 of the Theoretical Manual.

Input Data Card BARØR Simple Beam Orientation Default

Description: Defines default values for fields 3 and 6-9 of the CBAR card.

Format and Example:

1	2	3	4	5	6	7	8	9	10
BARØR		PID			X1,GO	X2	X3	F	
BARØR		39			0.6	2.9	-5.87	1	

Field	Contents
PID	Identification number of PBAR property card (Integer > 0 or blank)
X1, X2, X3	Vector components measured in displacement coordinate system at GA to determine (with the vector from end A to end B) the orientation of the element coordinate system for the bar element (Real or blank; see below)
GO	Grid point identification number (Integer > 0; see below)
F	Flag to specify the nature of fields 6-8 as follows:

	6	7	8
F = 1	X1	X2	X3
F = 2	GO	blank	blank

Remarks: 1. The contents of fields on this card will be assumed for any CBAR card whose corresponding fields are blank.

2. Only one BARØR card may appear in the user's Bulk Data Deck.

3. For an explanation of bar element geometry, see Section 1.3.2.

Input Data Card CBAR Simple Beam Element Connection

Description: Defines a simple beam element (BAR) of the structural model.

Format and Example:

1	2	3	4	5	6	7	8	9	10
CBAR	EID	PID	GA	GB	X1,GO	X2	X3	F	abc
CBAR	2	39	7	3	13			2	123
+bc	PA	PB	Z1A	Z2A	Z3A	Z1B	Z2B	Z3B	
+23		513							

Field	Contents
EID	Unique element identification number (Integer > 0)
PID	Identification number of a PBAR property card (Integer > 0 or blank*)
GA, GB	Grid point identification numbers of connection points (Integer > 0; GA ≠ GB)
X1, X2, X3	Vector components measured in displacement coordinate system at GA to determine (with the vector from end A to end B) the orientation of the element coordinate system for the bar element (Real, $X1^2 + X2^2 + X3^2 > 0$ or blank*) (see below)
GO	Grid point identification number to optionally supply X1, X2, X3 (Integer > 0 or blank*) (see below)
F	Flag to specify the nature of fields 6-8 as follows:

	6	7	8
F = blank*			
F = 1	X1	X2	X3
F = 2	GO	blank/0	blank/0

PA, PB	Pin Flags for bar ends A and B (Up to 5 of the unique digits 1-6 anywhere in the field with no imbedded blanks; Integer > 0) (These degree of freedom codes refer to the element forces not to the global degrees of freedom) (See the Theoretical Manual Section 5.2)
Z1A,Z2A,Z3A Z1B,Z2B,Z3B	Offset vectors measured in displacement coordinate system at points GA and GB (Real)

Remarks:
1. Element identification numbers must be unique with respect to all other element identification numbers.
2. For an explanation of bar element geometry, see Section 1.3.2.
3. Zero (0) must be used in fields 7 and 8 in order to override entries in these fields associated with F = 1 in field 9 on a BARØR card.

* See the BARØR card for default options for fields 3, 6, 7, 8 and 9.

Input Data Card CCØNEAX Axisymmetric Shell Element Connection

Description: Defines the connection of a conical shell element.

Format and Example:

1	2	3	4	5	6	7	8	9	10
CCØNEAX	ID	PID	RA	RB					
CCØNEAX	1	2	3	4					

Field	Contents
ID	Unique element identification number (Integer > 0)
PID	Identification number of a PCØNEAX card (Integer > 0)
RA	Identification number of a RINGAX card (Integer > 0; RA ≠ RB)
RB	Identification number of a RINGAX card (Integer > 0; RA ≠ RB)

Remarks: 1. This card is allowed if and only if an AXIC card is also present.

2. For a discussion of the conical shell problem, see Section 5.9 of the Theoretical Manual.

Input Data Card CDAMP1 Scalar Damper Connection

Description: Defines a scalar damper element of the structural model.

Format and Example:

1	2	3	4	5	6	7	8	9	10
CDAMP1	EID	PID	G1	C1	G2	C2			
CDAMP1	19	6	0		23	2			

Field	Contents
EID	Unique element identification number (Integer > 0)
PID	Identification number of a PDAMP property card (Integer > 0)
G1, G2	Geometric grid point identification number (Integer ≥ 0)
C1, C2	Component number (6 ≥ Integer ≥ 0)

Remarks:

1. Scalar points may be used for G1 and/or G2 in which case the corresponding C1 and/or C2 must be zero or blank. Zero or blank may be used to indicate a grounded* terminal G1 or G2 with a corresponding blank or zero C1 or C2. If only scalar points and/or ground are involved, it is more efficient to use the CDAMP3 card.
2. Element identification numbers must be unique with respect to all other element identification numbers.
3. The two connection points, (G1, C1) and (G2, C2), must be distinct.
4. For a discussion of the scalar elements, see Section 5.6 of the Theoretical Manual.

* A grounded terminal is a scalar point or coordinate of a geometric grid point whose displacement is constrained to zero.

Input Data Card CDAMP2 Scalar Damper Property and Connection

Description: Defines a scalar damper element of the structural model without reference to a property value.

Format and Example:

1	2	3	4	5	6	7	8	9	10
CDAMP2	EID	B	G1	C1	G2	C2			
CDAMP2	16	-2.98	32	1					

Field	Contents
EID	Unique element identification number (Integer > 0)
B	The value of the scalar damper (Real)
G1, G2	Geometric grid point identification number (Integer $\geq$ 0)
C1, C2	Component number (6 $\geq$ Integer $\geq$ 0)

Remarks:

1. Scalar points may be used for G1 and/or G2 in which case the corresponding C1 and/or C2 must be zero or blank. Zero or blank may be used to indicate a grounded* terminal G1 or G2 with a corresponding blank or zero C1 or C2. If only scalar points and/or ground are involved, it is more efficient to use the CDAMP4 card.
2. Element identification numbers must be unique with respect to all other element identification numbers.
3. This single card completely defines the element since no material or geometric properties are required.
4. The two connection points, (G1, C1) and (G2, C2), must be distinct.
5. For a discussion of the scalar elements, see Section 5.6 of the Theoretical Manual.

* A grounded terminal is a scalar point or coordinate of a geometric grid point whose displacement is constrained to zero.

Input Data Card CDAMP3 Scalar Damper Connection

Description: Defines a scalar damper element of the structural model which is connected only to scalar points.

Format and Example:

1	2	3	4	5	6	7	8	9	10
CDAMP3	EID	PID	S1	S2	EID	PID	S1	S2	
CDAMP3	16	978	24	36	17	978	24	37	

Field	Contents
EID	Unique element identification number (Integer > 0)
PID	Identification number of a PDAMP property card (Integer > 0)
S1, S2	Scalar point identification numbers (Integer $\geq$ 0; S1 $\neq$ S2)

Remarks:
1. S1 or S2 may be blank or zero indicating a constrained coordinate.
2. Element identification numbers must be unique with respect to all other element identification numbers.
3. One or two scalar damper elements may be defined on a single card.
4. For a discussion of the scalar elements, see Section 5.6 of the Theoretical Manual.

Input Data Card CDAMP4 Scalar Damper Property and Connection

Description: Defines a scalar damper element of the structural model which is connected only to scalar points.

Format and Example:

1	2	3	4	5	6	7	8	9	10
CDAMP4	EID	B	S1	S2	EID	B	S1	S2	
CDAMP4	16	-2.6	4	9	17	+8.6	3	7	

Field	Contents
EID	Unique element identification number (Integer > 0)
B	The scalar damper value (Real)
S1, S2	Scalar point identification numbers (Integer $\geq$ 0; S1 $\neq$ S2)

Remarks:

1. S1 or S2 may be blank or zero indicating a constrained coordinate.
2. Element identification numbers must be unique with respect to all other element identification numbers.
3. This card completely defines the element since no material or geometric properties are required.
4. One or two scalar damper elements may be defined on a single card.
5. For a discussion of the scalar elements, see Section 5.6 of the Theoretical Manual.

Input Data Card CELAS1 Scalar Spring Connection

Description: Defines a scalar spring element of the structural model.

Format and Example:

1	2	3	4	5	6	7	8	9	10
CELAS1	EID	PID	G1	C1	G2	C2			
CELAS1	2	6			8	1			

Field	Contents
EID	Unique element identification number (Integer > 0)
PID	Identification number of a PELAS property card (Integer > 0)
G1, G2	Geometric grid point identification number (Integer > 0)
C1, C2	Component number ($6 \geq$ Integer ≥ 0)

Remarks:

1. Scalar points may be used for G1 and/or G2 in which case the corresponding C1 and/or C2 must be zero or blank. Zero or blank may be used to indicate a grounded* terminal G1 or G2 with a corresponding blank or zero C1 or C2. If only scalar points and/or ground are involved, it is more efficient to use the CELAS3 card.
2. Element identification numbers must be unique with respect to all other element identification numbers.
3. The two connection points, (G1, C1) and (G2, C2), must be distinct.
4. For a discussion of the scalar elements, see Section 5.6 of the Theoretical Manual.

* A grounded terminal is a scalar point or coordinate of a geometric grid point whose displacement is constrained to zero.

Input Data Card CELAS2 Scalar Spring Property and Connection

Description: Defines a scalar spring element of the structural model without reference to a property value.

Format and Example:

1	2	3	4	5	6	7	8	9	10
CELAS2	EID	K	G1	C1	G2	C2	GE	S	
CELAS2	28	6.2+3	32		19	4			

Field	Contents
EID	Unique element identification number (Integer > 0)
K	The value of the scalar spring (Real)
G1, G2	Geometric grid point identification number (Integer $\geq$ 0)
C1, C2	Components number (6 $\geq$ Integer $\geq$ 0)
GE	Damping coefficient (Real)
S	Stress coefficient (Real)

Remarks:

1. Scalar points may be used for G1 and/or G2 in which case the corresponding C1 and/or C2 must be zero or blank. Zero or blank may be used to indicate a grounded* terminal G1 or G2 with a corresponding blank or zero C1 or C2. If only scalar points and/or ground are involved, it is more efficient to use the CELAS4 card.
2. Element identification numbers must be unique with respect to all other element identification numbers.
3. This single card completely defines the element since no material or geometric properties are required.
4. The two connection points, (G1, C1) and (G2, C2), must be distinct.
5. For a discussion of the scalar elements, see Section 5.6 of the Theoretical Manual.

* A grounded terminal is a scalar point or coordinate of a geometric grid point whose displacement is constrained to zero.

Input Data Card CELAS3 Scalar Spring Connection

Description: Defines a scalar spring element of the structural model which is connected only to scalar points.

Format and Example:

1	2	3	4	5	6	7	8	9	10
CELAS3	EID	PID	S1	S2	EID	PID	S1	S2	
CELAS3	19	2	14	15	2	3	0	28	

Field	Contents
EID	Unique element identification number (Integer > 0)
PID	Identification number of a PELAS property card (Integer > 0)
S1, S2	Scalar point identification numbers (Integer $\geq$ 0; S1 $\neq$ S2)

Remarks:

1. S1 or S2 may be blank or zero indicating a constrained coordinate.
2. Element identification numbers must be unique with respect to all other element identification numbers.
3. One or two scalar springs may be defined on a single card.
4. For a discussion of the scalar elements, see Section 5.6 of the Theoretical Manual.

Input Data Card CELAS4 Scalar Spring Property and Connection

Description: Defines a scalar element of the structural model which is connected only to scalar points without reference to a property value.

Format and Example:

1	2	3	4	5	6	7	8	9	10
CELAS4	EID	K	S1	S2	EID	K	S1	S2	
CELAS4	42	6.2-3	2		13	6.2-3	0	2	

Field	Contents
EID	Unique element identification number (Integer > 0)
K	The scalar spring value (Real)
S1, S2	Scalar point identification numbers (Integer $\geq$ 0; S1 $\neq$ S2)

Remarks:

1. S1 or S2 but not both may be blank or zero indicating a constrained coordinate.
2. Element identification numbers must be unique with respect to all other element identification numbers.
3. This card completely defines the element since no material or geometric properties are required.
4. No damping coefficient is available with this form. (Assumed to be 0.0)
5. No stress coefficient is available with this form.
6. One or two scalar springs may be defined on a single card.
7. For a discussion of the scalar elements, see Section 5.6 of the Theoretical Manual.

Input Data Card CMASS1 Scalar Mass Connection

Description: Defines a scalar mass element of the structural model.

Format and Example:

1	2	3	4	5	6	7	8	9	10
CMASS1	EID	PID	G1	C1	G2	C2			
CMASS1	32	6	2	1	2	3			

Field	Contents
EID	Unique element identification number (Integer > 0)
PID	Identification number of a PMASS property card (Integer > 0)
G1, G2	Geometric grid point identification number (Integer $\geq$ 0)
C1, C2	Component number ($6 \geq$ Integer $\geq$ 0)

Remarks:

1. Scalar points may be used for G1 and/or G2 in which case the corresponding C1 and/or C2 must be zero or blank. Zero or blank may be used to indicate a grounded* terminal G1 or G2 with a corresponding blank or zero C1 or C2. If only scalar points and/or ground are involved, it is more efficient to use the CMASS3 card.
2. Element identification numbers must be unique with respect to all other element identification numbers.
3. The two connection points, (G1, C1) and (G2, C2), must be distinct.
4. For a discussion of the scalar elements, see Section 5.6 of the Theoretical Manual.

* A grounded terminal is a scalar point or coordinate of a geometric grid point whose displacement is constrained to zero.

Input Data Card CMASS2 Scalar Mass Property and Connection

Description: Defines a scalar mass element of the structural model without reference to a property value.

Format and Example:

1	2	3	4	5	6	7	8	9	10
CMASS2	EID	M	G1	C1	G2	C2			
CMASS2	32	9.25	6	1	7				

Field	Contents
EID	Unique element identification number (Integer > 0)
M	The value of the scalar mass (Real)
G1, G2	Geometric grid point identification number (Integer $\geq$ 0)
C1, C2	Component number (6 $\geq$ Integer $\geq$ 0)

Remarks:

1. Scalar points may be used for G1 and/or G2 in which case the corresponding C1 and/or C2 must be zero or blank. Zero or blank may be used to indicate a grounded* terminal G1 or G2 with a corresponding blank or zero C1 or C2. If only scalar points and/or ground are involved, it is more efficient to use the CMASS4 card.
2. Element identification numbers must be unique with respect to all other element identification numbers.
3. This card completely defines the element since no material or geometric properties are required.
4. The two connection points, (G1, C1) and (G2, C2), must be distinct.
5. For a discussion of the scalar elements, see Section 5.6 of the Theoretical Manual.

* A grounded terminal is a scalar point or coordinate of a geometric grid point whose displacement is constrained to zero.

Input Data Card CMASS3 Scalar Mass Connection

Description: Defines a scalar mass element of the structural model which is connected only to scalar points.

Format and Example:

1	2	3	4	5	6	7	8	9	10
CMASS3	EID	PID	S1	S2	EID	PID	S1	S2	
CMASS3	13	42	62	1					

Field	Contents
EID	Unique element identification number (Integer > 0)
PID	Identification of a PMASS property card (Integer > 0)
S1, S2	Scalar point identification numbers (Integer $\geq$ 0; S1 $\neq$ S2)

Remarks:
1. S1 or S2 may be blank or zero indicating a constrained coordinate.
2. Element identification numbers must be unique with respect to all other element identification numbers.
3. One or two scalar masses may be defined on a single card.
4. For a discussion of the scalar elements, see Section 5.6 of the Theoretical Manual.

Input Data Card CMASS4 Scalar Mass Property and Connection

Description: Defines a scalar mass element of the structural model which is connected only to scalar points without reference to a property value.

Format and Example:

1	2	3	4	5	6	7	8	9	10
CMASS4	EID	M	S1	S2	EID	M	S1	S2	
CMASS4	23	14.92	6	23	2	-16.3	0	29	

Field	Contents
EID	Unique element identification number (Integer > 0)
M	The scalar mass value (Real)
S1, S2	Scalar point identification numbers (Integer $\geq$ 0; S1 $\neq$ S2)

Remarks:

1. S1 or S2 may be blank or zero indicating a constrained coordinate.
2. Element identification numbers must be unique with respect to all other element identification numbers.
3. This card completely defines the element since no material or geometric properties are required.
4. One or two scalar masses may be defined on a single card.
5. For a discussion of the scalar elements, see Section 5.6 of the Theoretical Manual.

Input Data Card CØNM1 Concentrated Mass Element Connection

Description: Defines a 6x6 symmetric mass matrix at a geometric grid point of the structural model.

Format and Example:

1	2	3	4	5	6	7	8	9	10
CØNM1	EID	G	CID	M11	M21	M22	M31	M32	abc
CØNM1	2	22	2	2.9		6.3			+1
+bc	M33	M41	M42	M43	M44	M51	M52	M53	def
+1	4.8				28.6				+2
+ef	M54	M55	M61	M62	M63	M64	M65	M66	
+2		28.6						28.6	

Field	Contents
EID	Unique element identification number (Integer > 0)
G	Grid point identification number (Integer > 0)
CID	Coordinate system identification number for the mass matrix (Integer $\geq$ 0)
Mij	Mass matrix values (Real)

Remarks: 1. For a less general means of defining concentrated mass at grid points, see CØNM2.

2. Element identification numbers must be unique with respect to all other element identification numbers.

Input Data Card CØNM2 Concentrated Mass Element Connection

Description: Defines a concentrated mass at a grid point of the structural model.

Format and Example:

1	2	3	4	5	6	7	8	9	10
CØNM2	EID	G	CID	M	X1	X2	X3		abc
CØNM2	2	15	6	49.7					123
+bc	I11	I21	I22	I31	I32	I33			
+23	16.2		16.2			7.8			

Field	Contents
EID	Element identification number (Integer > 0)
G	Grid point identification number (Integer >0)
CID	Coordinate system identification number (Integer $\geq$ 0)
M	Mass Value (Real)
X1,X2,X3	Offset distances for the mass in the coordinate system defined in field 4 (Real)
Iij	Mass moments of inertia measured at the mass c.g. in coordinate system defined by field 4 (Real)

Remarks:
1. Element identification numbers must be unique with respect to all other element identification numbers.
2. For a more general means of defining concentrated mass at grid points, see CØNM1.
3. The continuation card may be omitted.

Input Data Card CØNRØD Rod Element Property and Connection

Description: Defines a rod element of the structural model without reference to a property card.

Format and Example:

1	2	3	4	5	6	7	8	9	10
CØNRØD	EID	G1	G2	MID	A	J	C	NSM	
CØNRØD	2	16	17	23	2.69				

Field	Contents
EID	Unique element identification number (Integer > 0)
G1, G2	Grid point identification numbers of connection points (Integer > 0; G1 ≠ G2)
MID	Material identification number (Integer > 0)
A	Area of rod (Real)
J	Torsional constant (Real)
C	Coefficient for torsional stress determination (Real)
NSM	Nonstructural mass per unit length (Real)

Remarks: 1. Element identification numbers must be unique with respect to all other element identification numbers.

2. CØNRØD cards may only reference MAT1 material cards.

Input Data Card CØRD1C Cylindrical Coordinate System Definition

Description: Defines a cylindrical coordinate system by reference to three grid points. These points must be defined in coordinate systems whose definition does not involve the coordinate system being defined. The first point is the origin, the second lies on the z-axis, and the third lies in the plane of the azimuthal origin.

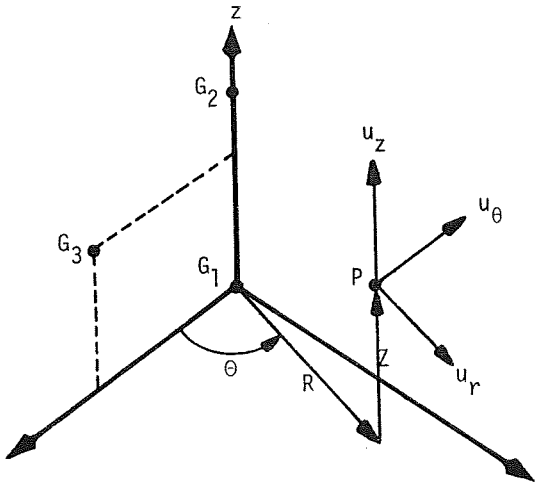

Format and Example:

1	2	3	4	5	6	7	8	9	10
CØRD1C	CID	G1	G2	G3	CID	G1	G2	G3	
CØRD1C	3	16	32	19					

Field	Contents
CID	Coordinate system identification number (Integer > 0)
G1, G2, G3	Grid point identification numbers (Integer > 0; G1 ≠ G2 ≠ G3)

Remarks:
1. Coordinate system identification numbers on all CØRD1R, CØRD1C, CØRD1S, CØRD2R, CØRD2C, and CØRD2S cards must all be unique.
2. The three points G1, G2, G3 must be noncollinear.
3. The location of a grid point (P in the sketch) in this coordinate system is given by (R, Θ, Z) where Θ is measured in degrees.
4. The displacement coordinate directions at P are dependent on the location of P as shown above by (u_r, u_θ, u_z).
5. Points on the z-axis may not have their displacement directions defined in this coordinate system since an ambiguity results.
6. One or two coordinate systems may be defined on a single card.

Input Data Card CØRD1R Rectangular Coordinate System Definition

Description: Defines a rectangular coordinate system by reference to three grid points. These points must be defined in coordinate systems whose definition does not involve the coordinate system being defined. The first point is the origin, the second lies on the z-axis, and the third lies in the x-z plane.

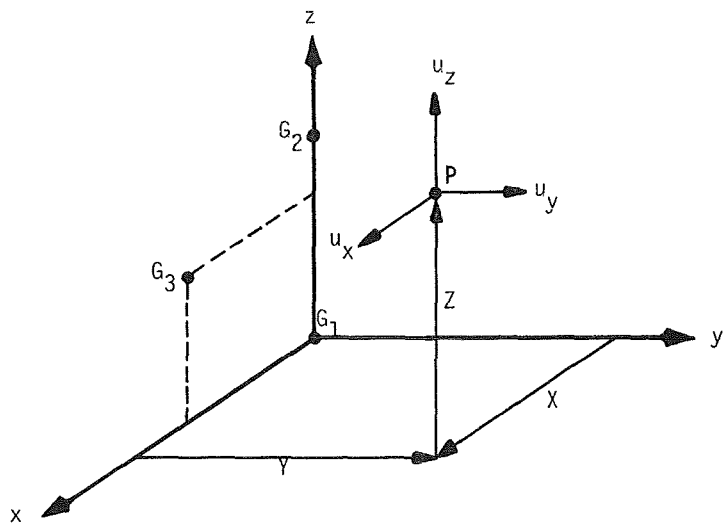

Format and Example:

1	2	3	4	5	6	7	8	9	10
CØRD1R	CID	G1	G2	G3	CID	G1	G2	G3	
CØRD1R	3	16	32	19					

Field	Contents
CID	Coordinate system identification number (Integer > 0)
G1, G2, G3	Grid point identification numbers (Integer > 0; G1 ≠ G2 ≠ G3)

Remarks:
1. Coordinate system identification numbers on all CØRD1R, CØRD1C, CØRD1S, CØRD2R, CØRD2C, and CØRD2S cards must all be unique.
2. The three points G1, G2, G3 must be noncollinear.
3. The location of a grid point (P in the sketch) in this coordinate system is given by (X, Y, Z).
4. The displacement coordinate directions at P are shown above by (u_x, u_y, u_z).
5. One or two coordinate systems may be defined on a single card.

Input Data Card CØRD1S Spherical Coordinate System Definition

Description: Defines a spherical coordinate system by reference to three grid points. These points must be defined in coordinate systems whose definition does not involve the coordinate system being defined. The first point is the origin, the second lies on the z-axis, and the third lies in the plane of the azimuthal origin.

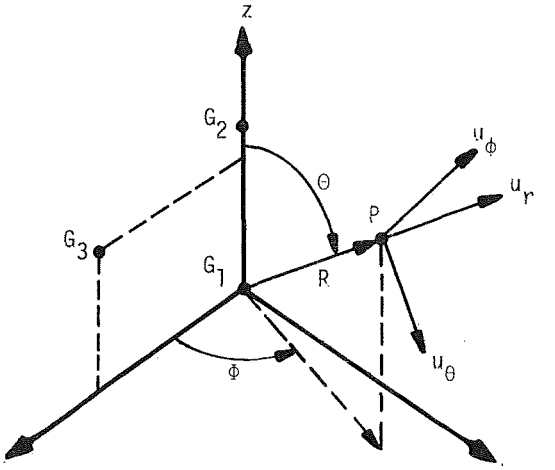

Format and Example:

1	2	3	4	5	6	7	8	9	10
CØRD1S	CID	G1	G2	G3	CID	G1	G2	G3	
CØRD1S	3	16	32	19					

Field	Contents
CID	Coordinate system identification number (Integer > 0)
G1, G2, G3	Grid point identification numbers (Integer > 0; G1 ≠ G2 ≠ G3)

Remarks:

1. Coordinate system identification numbers on all CØRD1R, CØRD1C, CØRD1S, CØRD2R, CØRD2C, and CØRD2S cards must all be unique.
2. The three points G1, G2, G3 must be noncollinear.
3. The location of a grid point (P in the sketch) in this coordinate system is given by (R, Θ, Φ) where Θ and Φ are measured in degrees.
4. The displacement coordinate directions at P are dependent on the location of P as shown above by (u_r, u_θ, u_ϕ).
5. Points on the polar axis may not have their displacement directions defined in this coordinate system since an ambiguity results.
6. One or two coordinate systems may be defined on a single card.

Input Data Card CØRD2C Cylindrical Coordinate System Definition

Description: Defines a cylindrical coordinate system by reference to the coordinates of three points. The first point defines the origin. The second point defines the direction of the z-axis. The third lies in the plane of the azimuthal origin. The reference coordinate must be independently defined.

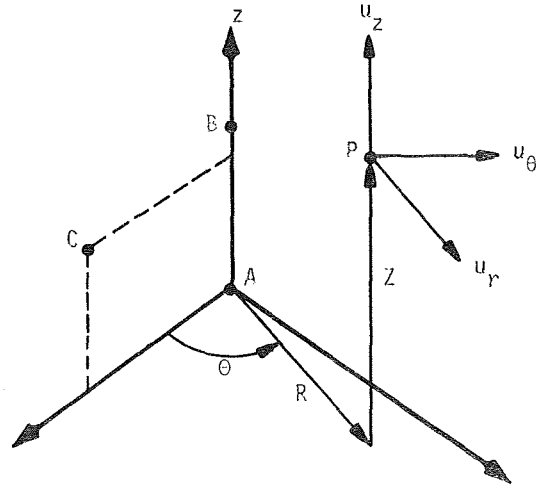

Format and Example:

1	2	3	4	5	6	7	8	9	10
CØRD2C	CID	RID	A1	A2	A3	B1	B2	B3	ABC
CØRD2C	3	17	-2.9	1.0	0.0	3.6	0.0	1.0	123
+BC	C1	C2	C3						
+23	5.2	1.0	-2.9						

Field	Contents
CID	Coordinate system identification number (Integer > 0)
RID	Reference to a coordinate system which is defined independently of new coordinate system (Integer ≥ 0 or blank)
A1,A2,A3 B1,B2,B3 C1,C2,C3	Coordinates of three points in coordinate system defined in field 3 (Real)

(continued)

CØRD2C (cont.)

Remarks: 1. Continuation card must be present.

2. The three points (A1, A2, A3), (B1, B2, B3), (C1, C2, C3) must be unique and noncollinear. Noncollinearity is checked by the geometry processor.

3. Coordinate system identification numbers on all CØRD1R, CØRD1C, CØRD1S, CØRD2R, CØRD2C, and CØRD2S cards must all be unique.

4. An RID of zero references the basic coordinate system.

5. The location of a grid point (P in the sketch) in this coordinate system is given by (R, Θ, Z) where Θ is measured in degrees.

6. The displacement coordinate directions at P are dependent on the location of P as shown above by (u_r, u_θ, u_z).

7. Points on the z-axis may not have their displacement direction defined in this coordinate system since an ambiguity results.

Input Data Card CØRD2R Rectangular Coordinate System Definition

Description: Defines a rectangular coordinate system by reference to the coordinates of three points. The first point defines the origin. The second point defines the direction of the z-axis. The third point defines a vector which, with the z-axis, defines the x-z plane. The reference coordinate must be independently defined.

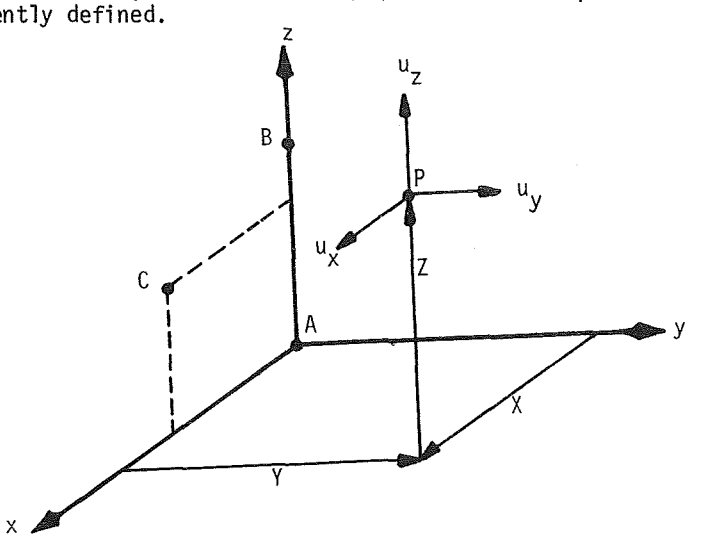

Format and Example:

1	2	3	4	5	6	7	8	9	10
CØRD2R	CID	RID	A1	A2	A3	B1	B2	B3	ABC
CØRD2R	3	17	-2.9	1.0	0.0	3.6	0.0	1.0	123
+BC	C1	C2	C3						
+23	5.2	1.0	-2.9						

Field	Contents
CID	Coordinate system identification number (Integer > 0)
RID	Reference to a coordinate system which is defined independently of new coordinate system (Integer ≥ 0 or blank)
A1,A2,A3 B1,B2,B3 C1,C2,C3	Coordinates of three points in coordinate system defined in field 3 (Real)

Remarks:

1. Continuation card must be present.
2. The three points (A1, A2, A3), (B1, B2, B3), (C1, C2, C3) must be unique and non-collinear. Noncollinearity is checked by the geometry processor.
3. Coordinate system identification numbers on all CØRD1R, CØRD1C, CØRD1S, CØRD2R, CØRD2C, and CØRD2S cards must all be unique.
4. An RID of zero references the basic coordinate system.
5. The location of a grid point (P in the sketch) in this coordinate system is given by (X, Y, Z).
6. The displacement coordinate directions at P are shown by (u_x, u_y, u_z).

Input Data Card CØRD2S Spherical Coordinate System Definition

Description: Defines a spherical coordinate system by reference to the coordinates of three points. The first point defines the origin. The second point defines the direction of the z-axis. The third lies in the plane of the azimuthal origin. The reference coordinate must be independently defined.

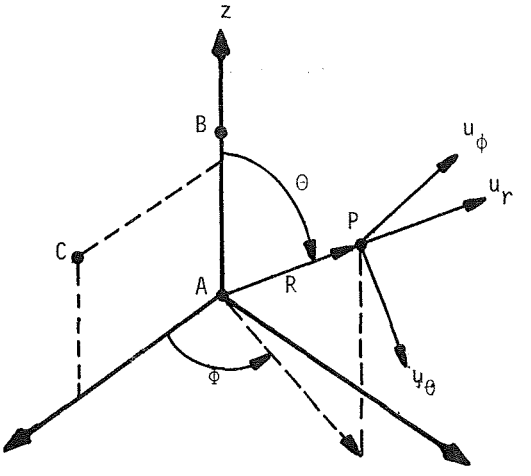

Format and Example:

1	2	3	4	5	6	7	8	9	10
CØRD2S	CID	RID	A1	A2	A3	B1	B2	B3	ABC
CØRD2S	3	17	-2.9	1.0	0.0	3.6	0.0	1.0	123
+BC	C1	C2	C3						
+23	5.2	1.0	-2.9						

Field	Contents
CID	Coordinate system identification number (Integer > 0)
RID	Reference to a coordinate system which is defined independently of new coordinate system (Integer ≥ 0 or blank)
A1,A2,A3 B1,B2,B3 C1,C2,C3	Coordinates of three points in coordinate system defined in field 3 (Real)

(Continued)

CØRD2S (cont.)

Remarks:

1. Continuation card must be present.
2. The three points (A1, A2, A3), (B1, B2, B3), (C1, C2, C3) must be unique and noncollinear. Noncollinearity is checked by the geometry processor.
3. Coordinate system identification numbers on all CØRD1R, CØRD1C, CØRD1S, CØRD2R, CØRD2C, and CØRD2S cards must all be unique.
4. An RID of zero references the basic coordinate system.
5. The location of a grid point (P in the sketch) in this coordinate system is given by (R, Θ, Φ) where Θ and Φ are measured in degrees.
6. The displacement coordinate directions at P are shown above by (u_r, u_θ, u_ϕ).
7. Points on the polar axis may not have their displacement directions defined in this coordinate system since an ambiguity results.

Input Data Card CQDMEM Quadrilateral Element Connection

Description: Defines a quadrilateral membrane element (QDMEM) of the structural model.

Format and Example:

1	2	3	4	5	6	7	8	9	10
CQDMEM	EID	PID	G1	G2	G3	G4	TH		
CQDMEM	72	13	13	14	15	16	29.2		

Field	Contents
EID	Element identification number (Integer > 0)
PID	Identification number of a PQDMEM property card (Integer > 0)
G1,G2,G3,G4	Grid point identification numbers of connection points (Integer > 0; G1 ≠ G2 ≠ G3 ≠ G4)
TH	Material property orientation angle in degrees (Real) The sketch below gives the sign convention for TH.

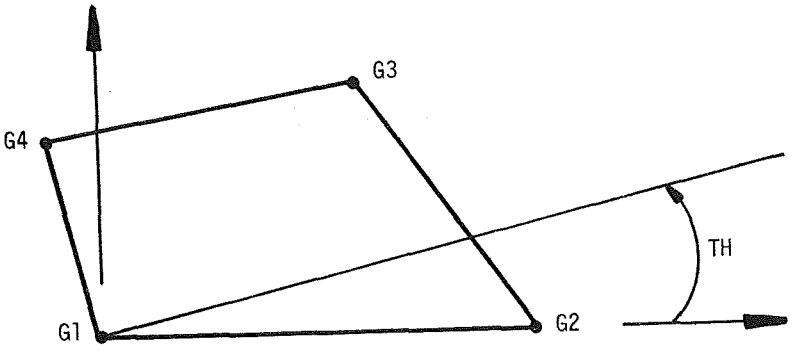

Remarks:
1. Element identification numbers must be unique with respect to all other element identification numbers.
2. Grid points G1 thru G4 must be ordered consecutively around the perimeter of the element.
3. All interior angles must be less than 180°.

Input Data Card CQDPLT Quadrilateral Element Connection

Description: Defines a quadrilateral bending element (QDPLT) of the structural model.

Format and Example:

1	2	3	4	5	6	7	8	9	10
CQDPLT	EID	PID	G1	G2	G3	G4	TH		
CQDPLT	72	13	13	14	15	16	29.2		

Field	Contents
EID	Element identification number (Integer > 0)
PID	Identification number of a PQDPLT property card (Integer > 0)
G1,G2,G3,G4	Grid point identification numbers of connection points (Integer > 0; G1 ≠ G2 ≠ G3 ≠ G4)
TH	Material property orientation angle in degrees (Real) The sketch below gives the sign convention for TH.

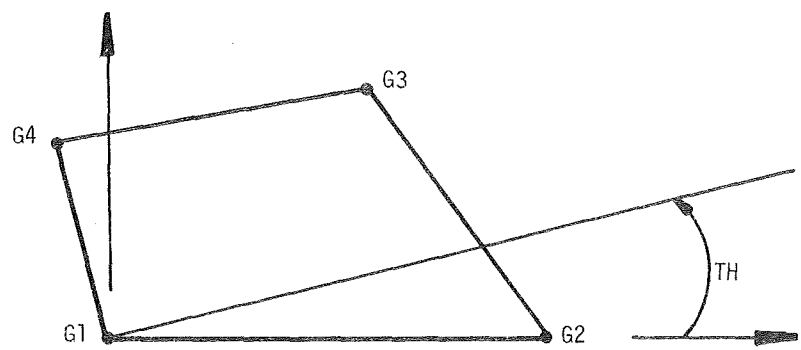

Remarks:
1. Element identification numbers must be unique with respect to all other element identification numbers.
2. Grid points G1 thru G4 must be ordered consecutively around the perimeter of the element.
3. All interior angles must be less than 180°.
4. No structural mass is generated by this element.

Input Data Card CQUAD1 Quadrilateral Element Connection

Description: Defines a quadrilateral membrane and bending element (QUAD1) of the structural model.

Format and Example:

1	2	3	4	5	6	7	8	9	10
CQUAD1	EID	PID	G1	G2	G3	G4	TH		
CQUAD1	72	13	13	14	15	16	29.2		

Field	Contents
EID	Element identification number (Integer > 0)
PID	Identification number of a PQUAD1 property card (Integer > 0)
G1,G2,G3,G4	Grid point identification numbers of connection points (Integer > 0; G1 ≠ G2 ≠ G3 ≠ G4)
TH	Material property orientation angle in degrees (Real) The sketch below gives the sign convention for TH.

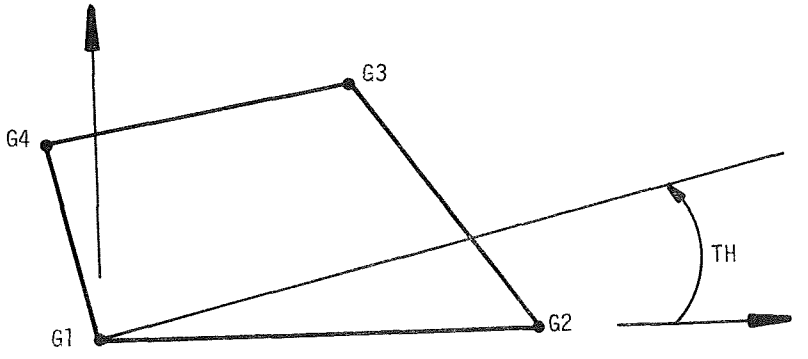

Remarks:
1. Element identification numbers must be unique with respect to all other element identification numbers.
2. Grid points G1 thru G4 must be ordered consecutively around the perimeter of the element.
3. All interior angles must be less than 180°.

Input Data Card CQUAD2 Quadrilateral Element Connection

Description: Defines a homogeneous quadrilateral membrane and bending element (QUAD2) of the structural model.

Format and Example:

1	2	3	4	5	6	7	8	9	10
CQUAD2	EID	PID	G1	G2	G3	G4	TH		
CQUAD2	72	13	13	14	15	16	29.2		

Field	Contents
EID	Element identification number (Integer > 0)
PID	Identification number of a PQUAD2 property card (Integer > 0)
G1,G2,G3,G4	Grid point identification numbers of connection points (Integer > 0; G1 ≠ G2 ≠ G3 ≠ G4)
TH	Material property orientation angle in degrees (Real) The sketch below gives the sign convention for TH.

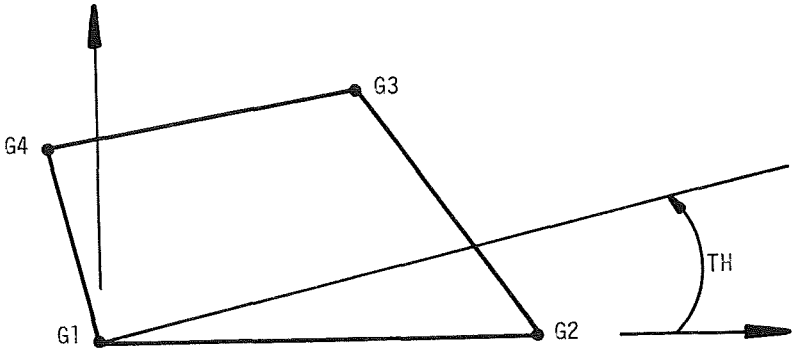

Remarks:
1. Element identification numbers must be unique with respect to all other element identification numbers.
2. Grid points G1 thru G4 must be ordered consecutively around the perimeter of the element.
3. All interior angles must be less than 180°.

Input Data Card CRØD Rod Element Connection

Description: Defines a tension-compression-torsion element (RØD) of the structural model.

Format and Example:

1	2	3	4	5	6	7	8	9	10
CRØD	EID	PID	G1	G2	EID	PID	G1	G2	
CRØD	12	13	21	23	3	12	24	5	

Field	Contents
EID	Element identification number (Integer > 0)
PID	Identification number of a PRØD property card (Integer > 0)
G1, G2	Grid point identification numbers of connection points (Integer > 0; G1 ≠ G2)

Remarks:
1. Element identification numbers must be unique with respect to all other element identification numbers.
2. See CØNRØD for alternative method of rod definition.
3. One or two RØD elements may be defined on a single card.

Input Data Card CSHEAR Shear Panel Element Connection

Description: Defines a shear panel element (SHEAR) of the structural model.

Format and Example:

1	2	3	4	5	6	7	8	9	10
CSHEAR	EID	PID	G1	G2	G3	G4			
CSHEAR	3	6	1	5	3	7			

Field	Contents
EID	Element identification number (Integer > 0)
PID	Identification number of a PSHEAR property card (Integer > 0)
G1, G2, G3, G4	Grid point identification numbers of connection points (Integer > 0; G1 ≠ G2 ≠ G3 ≠ G4)

Remarks:
1. Element identification numbers must be unique with respect to all other element identification numbers.
2. Grid points G1 thru G4 must be ordered consecutively around the perimeter of the element.
3. All interior angles must be less than 180°.

Input Data Card CTØRDRG Toroidal Ring Element Connection

Description: Defines an axisymmetric toroidal cross-section ring element (TØRDRG) of the structural model.

Format and Example:

1	2	3	4	5	6	7	8	9	10
CTØRDRG	EID	PID	G1	G2	A1	A2			
CTØRDRG	25	2	47	48	30.0	60.0			

Field	Contents
EID	Element identification number (Integer > 0)
PID	Property identification number (Integer > 0)
G1, G2	Grid Point identification numbers of connection points (Integer > 0; G1 ≠ G2)
A1	Angle of curvature at grid point 1 in degrees (Real; 0° ≤ A1 ≤ 180°)
A2	Angle of curvature at grid point 2 in degrees (Real; 0° ≤ A2 ≤ 180°)

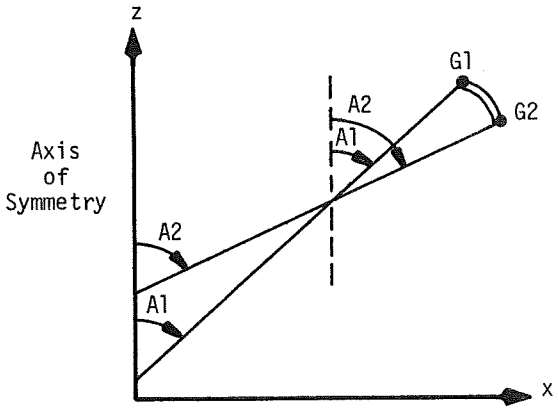

Remarks: 1. Element identification numbers must be unique with respect to all other element identification numbers.

2. Grid points G1 and G2 must lie in the x-z plane and to the right of the axis of symmetry (the z-axis).

Input Data Card CTRAPRG Trapezoidal Ring Element Connection

Description: Defines an axisymmetric trapezoidal cross-section ring element (TRAPRG) of the structural model without reference to a property card.

Format and Example:

1	2	3	4	5	6	7	8	9	10
CTRAPRG	EID	G1	G2	G3	G4	TH	MID		
CTRAPRG	72	13	14	15	16	29.2	13		

Field	Contents
EID	Element identification number (Integer > 0)
G1,G2,G3,G4	Grid point identification number of connection points (Integers > 0; G1 ≠ G2 ≠ G3 ≠ G4)
TH	Material property orientation angle in degrees (Real) - The sketch below gives the sign convention for TH.
MID	Material property identification number (Integer > 0)

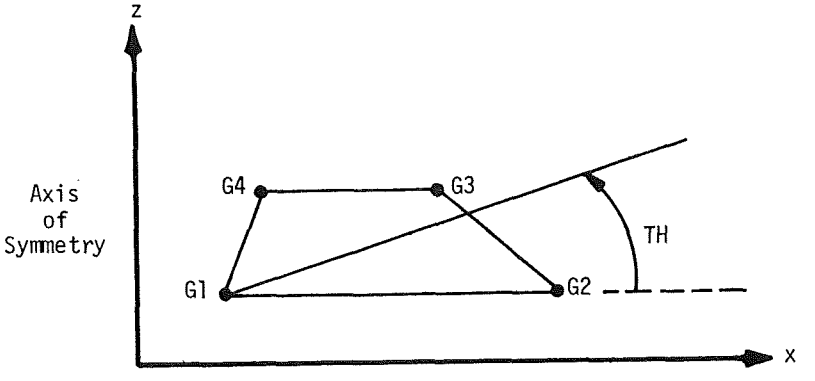

Remarks:
1. Element identification numbers must be unique with respect to all other element identification numbers.
2. The four grid points must lie in the x-z plane of both the basic and any local coordinate systems and to the right of the axis of symmetry (the z-axis).
3. Grid points G1, G2, G3 and G4 must be ordered counterclockwise around the perimeter of the element as in the above sketch.
4. The line connecting grid points G1 and G2 and the line connecting grid points G3 and G4 must both be parallel to the x-axis.
5. All interior angles must be less than 180°.
6. The material property identification number must reference only a MAT1 or MAT3 card.

Input Data Card CTRBSC Triangular Element Connection

Description: Defines a basic triangular bending element (TRBSC) of the structural model.

Format and Example:

1	2	3	4	5	6	7	8	9	10
CTRBSC	EID	PID	G1	G2	G3	TH			
CTRBSC	16	2	12	1	3	16.2			

Field	Contents
EID	Element identification number (Integer > 0)
PID	Identification number of a PTRBSC property card (Integer > 0)
G1,G2,G3	Grid point identification numbers of connection points (Integer > 0; G1 ≠ G2 ≠ G3)
TH	Material property orientation angle in degrees (Real) - The sketch below gives the sign convention for TH.

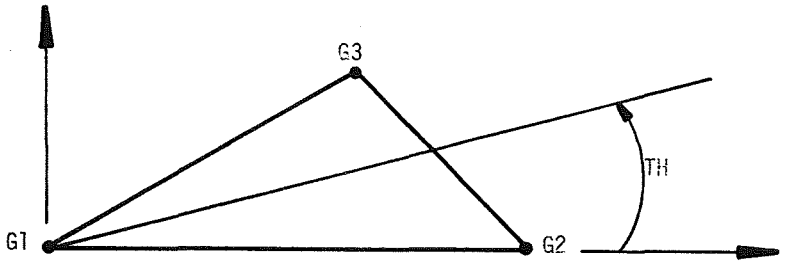

Remarks:
1. Element identification numbers must be unique with respect to all other element identification numbers.
2. Interior angles must be less than 180°.
3. No structural mass is generated by this element.

Input Data Card CTRIA1 Triangular Element Connection

Description: Defines a triangular membrane and bending element (TRIA1) of the structural model.

Format and Example:

1	2	3	4	5	6	7	8	9	10
CTRIA1	EID	PID	G1	G2	G3	TH			
CTRIA1	16	2	12	1	3	16.2			

Field	Contents
EID	Element identification number (Integer > 0)
PID	Identification number of a PTRIA1 property card (Integer > 0)
G1,G2,G3	Grid point identification numbers of connection points (Integer > 0; G1 ≠ G2 ≠ G3)
TH	Material property orientation angle in degrees (Real) - The sketch below gives the sign convention for TH.

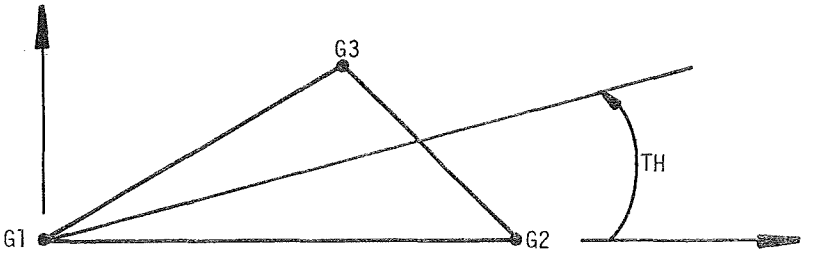

Remarks: 1. Element identification numbers must be unique with respect to all other element identification numbers.

2. Interior angles must be less than 180°.

Input Data Card CTRIA2 Triangular Element Connection

Description: Defines a triangular membrane and bending element (TRIA2) of the structural model.

Format and Example:

1	2	3	4	5	6	7	8	9	10
CTRIA2	EID	PID	G1	G2	G3	TH			
CTRIA2	16	2	12	1	3	16.2			

Field	Contents
EID	Element identification number (Integer > 0)
PID	Identification number of a PTRIA2 property card (Integer > 0)
G1,G2,G3	Grid point identification numbers of connection points (Integer > 0; G1 ≠ G2 ≠ G3)
TH	Material property orientation angle in degrees (Real) - The sketch below gives the sign convention for TH.

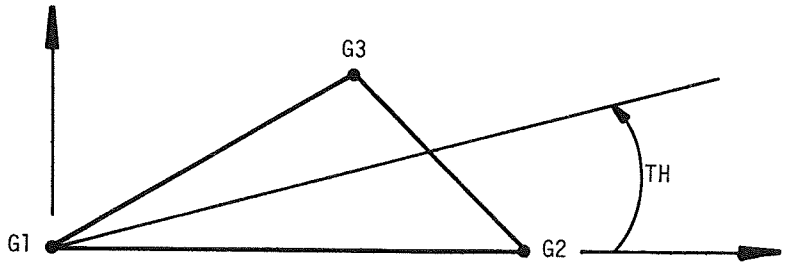

Remarks: 1. Element identification numbers must be unique with respect to all other element identification numbers.

2. Interior angles must be less than 180°.

Input Data Card CTRIARG Triangular Ring Element Connection

Description: Defines an Axisymmetric triangular cross section ring element (TRIARG) of the structural model without reference to a property card.

Format and Example:

1	2	3	4	5	6	7	8	9	10
CTRIARG	EID	G1	G2	G3	TH	MID			
CTRIARG	16	12	13	14	29.2	17			

Field	Contents
EID	Element identification number (Integer > 0)
G1, G2, G3	Grid point identification numbers of connection points (Integers > 0; G1 ≠ G2 ≠ G3)
TH	Material property orientation angle in degrees (Real) - The sketch below gives the sign convention for the TH.
MID	Material identification number (Integer > 0)

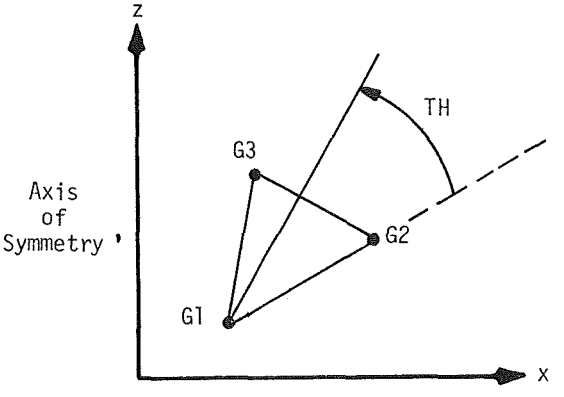

Remarks:
1. Element identification numbers must be unique with respect to all other element identification numbers.
2. The grid points must lie in the x-z plane of both the basic and any local coordinate systems and to the right of the axis of symmetry (the z-axis).
3. Grid points G1, G2 and G3 must be ordered counterclockwise around the perimeter or the element as in the above sketch.
4. The material property identification number must reference only a MAT1 or MAT3 card.

Input Data Card CTRMEM Triangular Element Connection

Description: Defines a triangular membrane element (TRMEM) of the structural model.

Format and Example:

1	2	3	4	5	6	7	8	9	10
CTRMEM	EID	PID	G1	G2	G3	TH			
CTRMEM	16	2	12	1	3	16.3			

Field	Contents
EID	Element identification number (Integer > 0)
PID	Identification number of a PTRMEM property card (Integer > 0)
G1,G2,G3	Grid point identification numbers of connection points (Integer > 0; G1 ≠ G2 ≠ G3)
TH	Material property orientation angle in degrees (Real) - The sketch below gives the sign convention for TH.

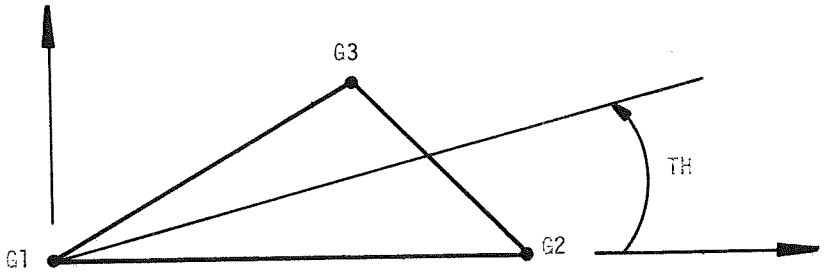

Remarks: 1. Element identification numbers must be unique with respect to all other element identification numbers.

2. Interior angles must be less than 180°.

Input Data Card CTRPLT Triangular Element Connection

Description: Defines a triangular bending element (TRPLT) of the structural model.

Format and Example:

1	2	3	4	5	6	7	8	9	10
CTRPLT	EID	PID	G1	G2	G3	TH			
CTRPLT	16	2	12	1	3	16.2			

Field	Contents
EID	Element identification number (Integer > 0)
PID	Identification number of a PTRPLT property card (Integer > 0)
G1,G2,G3	Grid point identification numbers of connection points (Integer > 0; G1 ≠ G2 ≠ G3)
TH	Material property orientation angle in degrees (Real) - The sketch below gives the sign convention for TH.

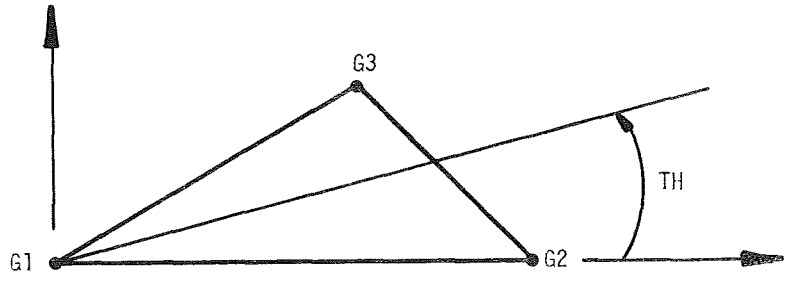

Remarks:
1. Element identification numbers must be unique with respect to all other element identification numbers.
2. Interior angles must be less than 180°.
3. No structural mass is generated by this element.

Input Data Card CTUBE Tube Element Connection

Description: Defines a tension-compression-torsion element (TUBE) of the structural model.

Format and Example:

1	2	3	4	5	6	7	8	9	10
CTUBE	EID	PID	G1	G2	EID	PID	G1	G2	
CTUBE	12	13	21	23	3	12	24	5	

Field	Contents
EID	Element identification number (Integer > 0)
PID	Identification number of a PTUBE property card (Integer > 0)
G1, G2	Grid point identification numbers of connection points (Integer > 0; G1 ≠ G2)

Remarks: 1. Element identification numbers must be unique with respect to all other element identification numbers.

2. One or two TUBE elements may be defined on a single card.

Input Data Card CTWIST Twist Panel Element Connection

Description: Defines a twist panel element (TWIST) of the structural model.

Format and Example:

1	2	3	4	5	6	7	8	9	10
CTWIST	EID	PID	G1	G2	G3	G4			
CTWIST	2	6	1	5	3	7			

Field	Contents
EID	Element identification number (Integer > 0)
PID	Identification number of a PTWIST property card (Integer > 0)
G1,G2,G3,G4	Grid point identification numbers of connection points (Integer > 0; G1 ≠ G2 ≠ G3 ≠ G4)

Remarks:
1. Element identification numbers must be unique with respect to all other element identification numbers.
2. Grid points G1 thru G4 must be ordered consecutively around the perimeter of the element.
3. All interior angles must be less than 180°.

Input Data Card CVISC Viscous Damper Connection

Description: Defines a viscous damper element (VISC) of the structural model.

Format and Example:

1	2	3	4	5	6	7	8	9	10
CVISC	EID	PID	G1	G2	EID	PID	G1	G2	
CVISC	21	6327	29	31	22	6527	35	33	

Field	Contents
EID	Element identification number (Integer > 0)
PID	Identification number of PVISC property card (Integer > 0)
G1, G2	Grid point identification numbers of connection points (Integer > 0; G1 ≠ G2)

Remarks: 1. Element identification numbers must be unique with respect to all other element identification numbers.

2. One or two VISC elements may be defined on a single card.

Input Data Card DAREA Dynamic Load Scale Factor

Description: This card is used in conjunction with the RLØAD1, RLØAD2, TLØAD1, and TLØAD2 data cards and defines the point where the dynamic load is to be applied with the scale (area) factor A.

Format and Example:

1	2	3	4	5	6	7	8	9	10
DAREA	SID	P	C	A	P	C	A		
DAREA	3	6	2	8.2	15	1	10.1		

Field	Contents
SID	Identification number of DAREA set (Integer > 0)
P	Grid or scalar point identification number (Integer > 0)
C	Component number (1-6 for grid point; blank or 0 for scalar point)
A	Scale (area) factor A for the designated coordinate (Real)

Remarks: One or two dynamic load time delays may be defined on a single card.

Input Data Card DEFØRM Element Deformation

Description: Defines enforced axial deformation for one-dimensional elements for use in statics problems.

Format and Example:

1	2	3	4	5	6	7	8	9	10
DEFØRM	SID	EID	D	EID	D	EID	D		
DEFØRM	1	535	.05	536	-.10				

Field	Contents
SID	Deformation set identification number (Integer > 0)
EID	Element number (Integer > 0)
D	Deformation (+ = elongation) (Real)

Remarks:
1. The referenced element must be one-dimensional (i.e., a RØD (including CØNRØD), TUBE or BAR).
2. Deformation sets must be selected in the Case Control Deck (DEFØRM=SID) to be used by NASTRAN.
3. From one to three enforced element deformations may be defined on a single card.

Input Data Card DELAY Dynamic Load Time Delay

Description: This card is used in conjunction with the RLØAD1, RLØAD2, TLØAD1 and TLØAD2 data cards and defines the time delay term τ in the equations of the loading function.

Format and Example:

1	2	3	4	5	6	7	8	9	10
DELAY	SID	P	C	T	P	C	T		
DELAY	5	21	6	4.25	7	6	8.1		

Field	Contents
SID	Identification number of DELAY set (Integer > 0)
P	Grid or scalar point identification number (Integer > 0)
C	Component number (1-6 for grid point, blank or 0 for scalar point)
T	Time delay τ for designated coordinate (Real)

Remarks: One or two dynamic load time delays may be defined on a single card.

Input Data Card DLØAD Dynamic Load Combination (Superposition)

Description: Defines a dynamic loading condition for frequency response or transient response problems as a linear combination of load sets defined via RLØAD1 or RLØAD2 cards (for frequency response) or TLØAD1 or TLØAD2 cards (for transient response).

Format and Example:

1	2	3	4	5	6	7	8	9	10
DLØAD	SID	S	S1	L1	S2	L2	S3	L3	+abc
DLØAD	17	1.0	2.0	6	-2.0	7	2.0	8	+A
+abc	S4	L4		-etc.-					
+A	-2.0	9							

-etc.-

Field	Contents
SID	Load set identification number (Integer > 0)
S	Scale Factor (Real)
Si	Scale Factors (Real)
Li	Load set identification numbers defined via card types enumerated above (Integer > 0)

Remarks: 1. The load vector being defined by this card is given by

$$\{P\} = S \sum_i S_i \{P_i\} .$$

2. The Li must be unique.
3. SID must be unique from all Li.
4. Nonlinear transient loads may not be included; they are selected separately in the Case Control Deck.
5. Linear load sets must be selected in the Case Control Deck (DLØAD=SID) to be used by NASTRAN.
6. A DLØAD card may not reference a set identification number defined by another DLØAD card.
7. TLØAD1 and TLØAD2 loads may be combined only thru the use of the DLØAD card.
8. RLØAD1 and RLØAD2 loads may be combined only thru the use of the DLØAD card.
9. SID must be unique for all TLØAD1, TLØAD2, RLØAD1, and RLØAD2 cards.

Input Data Card DMI Direct Matrix Input

Description: Used to define matrix data blocks directly. Generates a matrix of the form

$$[A] = \begin{bmatrix} A_{11} & A_{12} & \cdots & A_{1n} \\ A_{21} & A_{22} & \cdots & A_{2n} \\ \vdots & \vdots & & \vdots \\ A_{m1} & \cdots & & A_{mn} \end{bmatrix}$$

where the elements A_{ij} may be real or complex single-precision numbers.

Formats and Example: (The first logical card is a header card.)

1	2	3	4	5	6	7	8	9	10
DMI	NAME	"0"	FØRM	TIN	TØUT		M	N	
DMI	QQQ	0	2	3	3		4	2	
DMI	NAME	J	I1	A(I1,J)	A(I1+1,J)		etc.	I2	+abc
DMI	QQQ	1	1	1.0	2.0	3.0	4.0	3	+1
+abc	A(I2,J)		etc.						
+1	5.0	6.0							
DMI	QQQ	2	2	6.0	7.0	4	8.0	9.0	

(etc. for each nonnull column)

Field	Contents
NAME	Any NASTRAN BCD value (1-8 alphnumeric characters, the first of which must be alphabetic) which will be used in the DMAP sequence to reference the data block
FØRM	1 Square matrix (not symmetric) 2 General rectangular matrix 6 Symmetric matrix
TIN	Type of matrix being input as follows: 1 Real, single-precision (One field is used per element) 3 Complex, single-precision (Two fields are used per element)
TØUT	Type of matrix which will be created 1 Real, single-precision 3 Complex, single-precision 2 Real, double-precision 4 Complex, double-precision
M	Number of rows in A (Integer > 0)
N	Number of columns in A (Integer > 0)
J	Column number of A (Integer > 0)
I1,I2,etc.	Row number of A (Integer > 0)
A(Ix,J)	Element of A (See TIN) (Real)

(Continued)

DMI (cont.)

Remarks: 1. The user must write a DMAP (or make alterations to a rigid format) in order to use the DMI feature since he is defining a data block. All of the rules governing the use of data blocks in DMAP sequences apply. In the example shown above, the data block QQQ is defined to be the complex, single-precision rectangular 4x2 matrix

$$[QQQ] = \begin{bmatrix} (1.0, 2.0) & (0.0, 0.0) \\ (3.0, 4.0) & (6.0, 7.0) \\ (5.0, 6.0) & (0.0, 0.0) \\ (0.0, 0.0) & (8.0, 9.0) \end{bmatrix}$$

The DMAP data block NAME (QQQ in the example) will appear in the initial FIAT and the data block will initially appear on the Data Pool File (PØØL).

2. A limit to the number of DMI's which may be defined is set by the size of the Data Pool Dictionary. The total number of DMI's may not exceed this size.

3. There are a number of reserved words which may not be used for DMI names. Among these are PØØL, NPTP, ØPTP, UMF, NUMF, PLT1, PLT2, INPT, GEØM1, GEØM2, GEØM3, GEØM4 GEØM5, EDT, MPT, EPT, DIT, DYNAMICS, IFPFILE, AXIC, FØRCE, MATPØØL, PCDB, XYCDB, CASECC, any DTI names, and SCRATCH1 thru SCRATCH9.

4. Field 3 of the header card must contain an integer 0.

5. For symmetric matrices, the entire matrix must be input.

6. Only nonzero terms need be entered.

Input Data Card DMIG Direct Matrix Input at Grid Points

Description: Defines structure-related direct input matrices.

Format and Example:

1	2	3	4	5	6	7	8	9	10
DMIG	NAME	"0"	IFØ	TIN	TØUT				
DMIG	STIF	0	1	3	4				
DMIG	NAME	GJ	CJ		G1	C1	X_{ij}	Y_{ij}	Xabc
DMIG	STIF	27	1		2	3	3.+5	3.+3	EKG1
+abc	GI	CI	X_{ij}	Y_{ij}	GI	CI	X_{ij}	Y_{ij}	Xcef
+KG1	2	4	2.5+10	0.	50		1.0	0.	

etc. for each column containing nonzero terms

Field	Contents
NAME	BCD name of matrix (one to eight alphanumeric characters the first of which is alphabetic)
IFØ	1 Square matrix 2 General rectangular matrix 6 Symmetric matrix
TIN	Type of matrix being input as follows: 1 Real, single-precision (One field is used per element) 3 Complex, single-precision (Two fields are used per element)
TØUT	Type of matrix which will be created 1 Real, single-precision 3 Complex, single-precision 2 Real, double-precision 4 Complex, double-precision
GJ, GI	Grid or scalar or extra point identification number (Integer > 0)
CJ, CI	Component number for GJ a grid point ($0 \leq CJ \leq 6$); blank or zero for GJ a scalar or extra point
X_{ij}, Y_{ij}	Real and imaginary parts of matrix element

Remarks:
1. Matrices defined on this card may be used in dynamics by selection in the Case Control Deck by K2PP=NAME, B2PP=NAME, or M2PP=NAME for $[K^2_{pp}]$, $[B^2_{pp}]$, or $[M^2_{pp}]$, respectively.
2. In addition to the header card containing IFØ, TIN and TØUT, a logical card consisting of one or more physical cards is needed for each nonnull column of the matrix.
3. If TIN = 1, Y_{ij} must be blank.
4. Field 3 of the header card must contain an integer 0.
5. For symmetric matrices, the entire matrix must be input.
6. Only nonzero terms need be entered.

Input Data Card DPHASE Dynamic Load Phase Lead

Description: This card is used in conjunction with the RLØAD1 and RLØAD2 data cards to define the phase lead term θ in the equation of the loading function.

Format and Example:

1	2	3	4	5	6	7	8	9	10
DPHASE	SID	P	C	TH	P	C	TH		
DPHASE	4	21	6	2.1	8	6	7.2		

Field	Contents
SID	Identification number of DPHASE set (Integer > 0)
P	Grid or scalar point identification number (Integer > 0)
C	Component number (1-6 for grid point, 0 or blank for scalar point)
TH	Phase lead θ (in degrees) for designated coordinate (Real)

Remarks: One or two dynamic load phase lead terms may be defined on a single card.

Input Data Card DSFACT Differential Stiffness Factors

Description: Used to define scale factors for applied loads and stiffness matrices in a Differential Stiffness Analysis.

Format and Example:

1	2	3	4	5	6	7	8	9	10
DSFACT	SID	B1	B2	B3	B4	B5	B6	B7	abc
DSFACT	97	-1.0	-2.0	-4.0					
+bc	B8	B9	-etc.-						

-etc.-

Field	Contents
SID	Set identification number (Unique Integer > 0)
Bi	Scale factor (Real)

Remarks: 1. Load sets must be selected in the Case Control Deck (DSCØ=SID) to be used by NASTRAN.

2. All fields following the last entry must be blank.

3. An error is detected if any continuation cards follow the last entry.

Input Data Card DTI Direct Table Input

Description: Used to define table data blocks directly.

Format and Example: (The first logical card is a header card)

1	2	3	4	5	6	7	8	9	10
DTI	NAME	"0"	T1	T2	T3	T4	T5	T6	+00
DTI	XXX	0	3	4	4096	32768	1	0	
+00	V	V		-etc.-		ENDREC			+01

-etc.-

DTI	NAME	IREC	V	V	V	V	V	V	+11
DTI	XXX	1	2.0	-6	ABC	6.0D0	-1	2	+11
+11	V	V	V	V		-etc.-	ENDREC		+12
+11	4	-6.2	2.9	1	DEF	-1	ENDREC		

-etc.-

Field	Contents
NAME	Any NASTRAN BCD value (1-8 alphanumeric characters, the first of which must be alphabetic) which will be used in the DMAP sequence to reference the data block
Ti	Trailer values (65535 $\geq$ Integer $\geq$ 0)
NREC	Number of records in the data block excluding the header record (Integer > 0)
IREC	Record Number (NREC $\geq$ IREC > 0)
V	Value (blank, integer, real, BCD (except "ENDREC"), double precision)
ENDREC	The BCD value ENDREC which flags the end of the string of values that constitute logical record IREC

Remarks:
1. If records are encountered for which IREC > NREC, an error will be detected.
2. Records may be made as long as desired via continuation cards.
3. Values may be of any type (blank, integer, real, BCD, double precision) with the exception that a BCD value may not be "ENDREC".
4. All fields following ENDREC must be blank.
5. The user must write a DMAP (or make alterations to a rigid format) in order to use the DTI feature since he is defining a data block. All of the rules governing the use of data blocks in DMAP sequences apply.
6. The DMAP data block NAME (XXX in the example) will appear in the initial FIAT and the data block will initially appear on the PØØL.
7. There must be NREC logical cards in addition to the header card. These must have IREC values 1 thru NREC.
8. If trailer is not specified, T1 = NREC, T2 thru T6 = 65535.

Input Data Card EIGB Buckling Analysis Data

Description: Defines data needed to perform buckling analysis.

Format and Example:

1	2	3	4	5	6	7	8	9	10
EIGB	SID	METHØD	L1	L2	NEP	NDP	NDN	E	+abc
EIGB	13	DET	0.1	2.5	2	1	1	0.0	ABC
+abc	NØRM	G	C						
+BC	MAX								

Field	Contents
SID	Set identification number (Unique integer > 0)
METHØD	One of the BCD values "INV" or "DET"
L1, L2	Eigenvalue range of interest (Real; L1 < L2 > 0.0)
NEP	Estimate of number of roots in positive range (Integer > 0)
NDP, NDN	Desired number of positive and negative roots (Default = 3 NEP) (Integer > 0)
E	Convergence criteria (optional) (Real $\geq$ 0.0)
NØRM	One of the BCD values "MAX" or "PØINT"
G	Grid or scalar point identification number (Integer > 0) (Required if and only if NØRM = "PØINT")
C	Component number (One of the integers 1-6) (Required if and only if NØRM="PØINT" and G is a geometric grid point)

Remarks:
1. Buckling analysis root extraction data sets must be selected in the Case Control Deck (METHØD = SID) to be used by NASTRAN.
2. The units of L1 and L2 are (radians per unit time)^2.
3. The continuation card is required.
4. For E = 0.0, no off-diagonal modal mass terms are computed.
5. If METHØD = DET, L1 must be greater than or equal to 0.0.

Input Data Card EIGC Complex Eigenvalue Extraction Data

Description: Defines data needed to perform complex eigenvalue analysis.

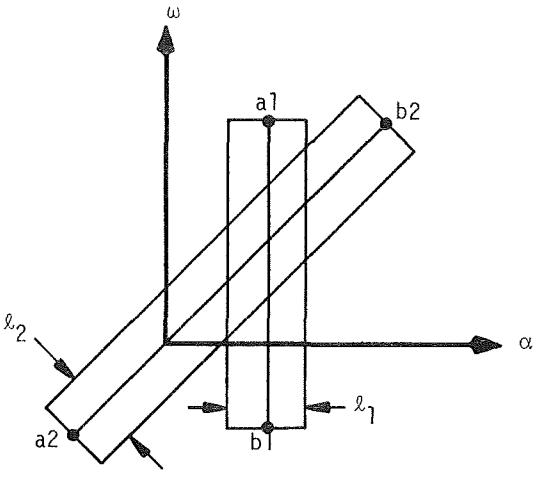

Format and Example:

1	2	3	4	5	6	7	8	9	10
EIGC	SID	METHØD	NØRM	G	C	E			+abc
EIGC	14	DET	PØINT	27		1.-8			ABC
+abc	α_{a1}	ω_{a1}	α_{b1}	ω_{b1}	ℓ_1	N_{e1}	N_{d1}		+def
+BC	2.0	5.6	2.0	-3.4	2.0	4	4		DEF
+def	α_{a2}	ω_{a2}	α_{b2}	ω_{b2}	ℓ_2	N_{e2}	N_{d2}		
+EF	-5.5	-5.5	5.6	5.6	1.5	6	3		

(etc.)

Field	Contents
SID	Set identification number (Unique integer > 0)
METHØD	One of the BCD values "INV" or "DET"
NØRM	One of the BCD values "MAX" or "PØINT"
G	Grid or scalar point identification number (required if and only if NØRM=PØINT) (Integer > 0)
C	Component number (required if and only if NØRM="PØINT" and G is a geometric grid point) (0 ≤ integer ≤ 6)
E	Convergence criterion (optional) (Real ≥ 0.0)
$(\alpha_{aj}, \omega_{aj})$ $(\alpha_{bj}, \omega_{bj})$	Two complex points defining a line in the complex plane (Real)
ℓ_j	Width of region in complex plane (Real > 0.0)
N_{ej}	Estimated number of roots in each region (Integer > 0)
N_{dj}	Desired number of roots in each region (Default is $3N_{ej}$) (Integer > 0)

(Continued)

EIGC (cont.)

Remarks: 1. Each continuation card defines a rectangular search region. Any number of regions may be used and they may overlap. Roots in overlapping regions will not be extracted more than once.

2. Complex eigenvalue extraction data sets must be selected in the Case Control Deck (CMETHØD=SID) to be used by NASTRAN.

3. The units of α, ω are radians per unit time.

4. At least one continuation card is required.

Input Data Card EIGP Poles in Complex Plane

Description: Defines poles that are used in complex eigenvalue extraction.

Format and Example:

1	2	3	4	5	6	7	8	9	10
EIGP	SID	α	ω	M	α	ω	M		
EIGP	15	-5.2	0.0	2	6.3	5.5	3		

Field	Contents
SID	Set identification number (Integer > 0)
(α,ω)	Coordinates of point in complex plane (Real)
M	Multiplicity of complex root at pole defined by (α,ω) (Integer > 0)

Remarks:
1. Defines poles in complex plane that are used with associated EIGC card having same set number.
2. The units of α,ω are radians per unit time.
3. Poles are used only in the Determinent Method.
4. One or two poles may be defined on a single card.

Input Data Card EIGR Real Eigenvalue Extraction Data

Description: Defines data needed to perform real eigenvalue analysis.

Format and Example:

1	2	3	4	5	6	7	8	9	10
EIGR	SID	METHØD	F1	F2	NE	ND	NZ	E	+abc
EIGR	13	DET	1.9	15.6	10	12	0	1.-3	ABC
+abc	NØRM	G	C						
+BC	PØINT	32	4						

Field	Contents
SID	Set identification number (Unique integer > 0)
METHØD	One of the BCD values "INV", "DET" or "GIV"
F1, F2	Frequency range of interest (required for METHØD = "DET" or "INV") (Real ≥ 0.0; F1 < F2). Frequency range over which eigenvectors are desired for METHØD = "GIV". The frequency range is ignored if ND > 0, in which case the eigenvectors for the first ND positive roots are found. (Real, F1 = 0.0, F2 > 0.0)
NE	Estimate of number of roots in range (required for METHØD = "DET", "INV") (Integer > 0)
ND	Desired number of roots for METHØD = "DET" or "INV" (Default is 3 NE) (Integer > 0) Desired number of eigenvectors for METHØD = "GIV" (Default is zero) (Integer ≥ 0)
NZ	Number of free body modes (optional - used only if METHØD="DET") (Integer ≥ 0)
E	Mass orthoganality test parameter (defalut is 0.0 which means no test will be made) (Real ≥ 0.0)
NØRM	One of the BCD values "MASS", "MAX" or "PØINT"
G	Grid or scalar point identification number (required if and only if NØRM="PØINT") (Integer ≥ 0)
C	Component number (One of the integers 1-6) (Required if and only if NØRM="PØINT" and G is a geometric grid point)

Remarks:
1. Real eigenvalue extraction data sets must be selected in the Case Control Deck (METHØD = SID) to be used by NASTRAN.
2. The units of F1 and F2 are cycles per unit time.
3. The continuation card is required.
4. If METHØD = "GIV", all eigenvalues are found.

Input Data Card EPØINT Extra Point

Description: Defines extra points of the structural model for use in dynamics problems.

Format and Example:

1	2	3	4	5	6	7	8	9	10
EPØINT	ID	ID	ID	ID	ID	ID	ID	ID	
EPØINT	3	18	1	4	16	2			

Alternate Form

EPØINT	ID1	"THRU"	ID2						
EPØINT	17	THRU	43						

Field	Contents
ID,ID1,ID2	Extra point identification number (Integer > 0; ID1 < ID2)

Remarks:
1. Identification numbers of points defined by GRID, SPØINT and EPØINT cards and scalar points defined on scalar element connection cards must all be unique.
2. This card is used to define coordinates used in transfer function definitions (see TF card).
3. If the alternate form is used, extra points ID1 thru ID2 are defined.

Input Data Card FØRCE Static Load

Description: Defines a static load at a grid point by specifying a vector.

Format and Example:

1	2	3	4	5	6	7	8	9	10
FØRCE	SID	G	CID	F	N1	N2	N3		
FØRCE	2	5	6	2.9	0.0	1.0	0.0		

Field	Contents
SID	Load set identification number (Integer > 0)
G	Grid point identification number (Integer > 0)
CID	Coordinate system identification number (Integer ≥ 0)
F	Scale factor (Real)
N1,N2,N3	Components of Vector measured in coordinate system defined by CID (Real; $N1^2 + N2^2 + N3^2 > 0.0$)

Remarks: 1. The static load applied to grid point G is given by

$$\vec{F} = F\,(N1,N2,N3).$$

2. Load sets must be selected in the Case Control Deck (LØAD=SID) to be used by NASTRAN.

3. A CID of zero references the basic coordinate system.

Input Data Card FØRCE1 Static Load

Description: Used to define a static load by specification of a value and two grid points which determine the direction.

Format and Example:

1	2	3	4	5	6	7	8	9	10
FØRCE1	SID	G	F	G1	G2				
FØRCE1	6	13	-2.93	16	13				

Field	Contents
SID	Load set identification number (Integer > 0)
G	Grid point identification number (Integer > 0)
F	Value of load (Real)
G1, G2	Grid point identification numbers (Integer > 0; G1 ≠ G2)

Remarks: 1. The direction of the force is determined by the vector from G1 to G2.

2. Load sets must be selected in the Case Control Deck (LØAD=SID) to be used by NASTRAN.

Input Data Card FØRCE2 Static Load

Description: Used to define a static load by specification of a value and four grid points which determine the direction.

Format and Example:

1	2	3	4	5	6	7	8	9	10
FØRCE2	SID	G	F	G1	G2	G3	G4		
FØRCE2	6	13	-2.93	16	13	17	13		

Field	Contents
SID	Load set identification number (Integer > 0)
G	Grid point identification number (Integer > 0)
F	Value of load (Real)
G1,G2,G3,G4	Grid point identification numbers (Integer > 0; G1 ≠ G2; G3 ≠ G4)

Remarks: 1. The direction of the force is determined by the vector product whose factors are vectors from G1 to G2 and G3 to G4 respectively.

2. Load sets must be selected in the Case Control Deck (LØAD=SID) to be used by NASTRAN.

Input Data Card FØRCEAX Conical Shell Static Load

Description: Defines a static loading of a conical shell coordinate.

Format and Example:

1	2	3	4	5	6	7	8	9	10
FØRCEAX	SID	RID	HID	S	FR	FP	FZ		
FØRCEAX	1	2	3	2.0	0.1	0.2	0.3		

Field	Contents
SID	Load set identification number (Integer > 0)
RID	Ring identification number (see RINGAX) (Integer > 0)
HID	Harmonic identification number (Integer $\geq$ 0)
S	Scale factor for load (Real)
FR, FP, FZ	Load components in r, ϕ, z directions (Real)

Remarks:

1. This card is allowed if and only if an AXIC card is also present.
2. Axisymmetric shell loads must be selected in the Case Control Deck (LØAD=SID) to be used by NASTRAN.
3. A separate card is needed for the definition of the force associated with each harmonic.
4. For a discussion of the conical shell problem, see Section 5.9 of the Theoretical Manual.

Input Data Card FREQ Frequency List

Description: Defines a set of frequencies to be used in the solution of frequency response problems.

Format and Example:

1	2	3	4	5	6	7	8	9	10
FREQ	SID	F	F	F	F	F	F	F	abc
FREQ	3	2.98	3.05	17.9	21.3	25.6	28.8	31.2	ABC
+bc	F	F	F	F	F	F	F	F	
+BC	29.2	22.4	19.3						

-etc.-

Field	Contents
SID	Frequency set identification number (Integer > 0)
F	Frequency value (Real > 0.0)

Remarks:
1. The units for the frequencies are cycles per unit time.
2. Frequency sets must be selected in the Case Control Deck (FREQ=SID) to be used by NASTRAN.
3. All FREQ, FREQ1 and FREQ2 cards must have unique frequency set identification numbers.

Input Data Card FREQ1 Frequency List

Description: Defines a set of frequencies to be used in the solution of frequency response problems by specification of a starting frequency, frequency increment, and number of increments desired.

Format and Example:

1	2	3	4	5	6	7	8	9	10
FREQ1	SID	F1	DF	NDF					
FREQ1	6	2.9	0.5	13					

Field	Contents
SID	Frequency set identification number (Integer > 0)
F1	First frequency in set (Real ≥ 0.0)
DF	Frequency increment (Real > 0.0)
NDF	Number of frequency increments (Integer > 0)

Remarks:

1. The units for the frequency F1 and the frequency increment DF are cycles per unit time.
2. The frequencies defined by this card are given by

$$f_i = F1 + (i - 1)\,DF, \quad i = 1, NDF + 1$$

3. Frequency sets must be selected in the Case Control Deck (FREQ=SID) to be used by NASTRAN.
4. All FREQ, FREQ1 and FREQ2 cards must have unique frequency set identification numbers.

Input Data Card FREQ2 Frequency List

Description: Defines a set of frequencies to be used in the solution of frequency response problems by specification of a starting frequency, final frequency, and number of logarithmic increments desired.

Format and Example:

1	2	3	4	5	6	7	8	9	10
FREQ2	SID	F1	F2	NF					
FREQ2	6	1.0	1.E5	5					

Field	Contents
SID	Frequency set identification number (Integer > 0)
F1	First frequency (Real > 0.0)
F2	Last frequency (Real > 0.0; F2 > F1)
NF	Number of logarithmic intervals (Integer > 0)

Remarks:

1. The units for the frequencies F1 and F2 are cycles per unit time.
2. The frequencies defined by this card are given by

$$f_i = F1 \cdot e^{(i-1)d}, \qquad i = 1,2,\ldots,NF + 1$$

where $$d = \frac{1}{NF} \log_e \frac{F2}{F1}$$

For the example shown, the list of frequencies will be 1.0, 10.0, 100.0, 1000.0, 10000.0, and 100000.0 cycles per unit time.

3. Frequency sets must be selected in the Case Control Deck (FREQ=SID) to be used by NASTRAN.
4. All FREQ, FREQ1 and FREQ2 cards must have unique frequency set identification numbers.

Input Data Card GENEL General Element

Description.: Defines a general element in terms of its transformation matrices

$$\begin{Bmatrix} u_i \\ f_d \end{Bmatrix} = \begin{bmatrix} Z & S \\ -S^T & 0 \end{bmatrix} \begin{Bmatrix} f_i \\ u_d \end{Bmatrix}$$

where

$$\{u_i\} = [u_i, u_i, \ldots, u_i^m]^T$$

$$\{u_d\} = [u_d, u_d, \ldots, u_d^n]^T$$

$$[Z] = \begin{bmatrix} Z_{11} & Z_{12} & \cdots & Z_{1m} \\ & Z_{22} & & \vdots \\ & \downarrow & & \vdots \\ Z_{m1} & \cdots & \cdots & Z_{mm} \end{bmatrix} \quad \text{where } [Z]^T = [Z]$$

$$[S] = \begin{bmatrix} S_{11} & \cdots & S_{1n} \\ \vdots & & \vdots \\ S_{m1} & \cdots & S_{mn} \end{bmatrix}$$

The required information lists are $\{u_i\}$ and $\{u_d\}$; the matrices needed are [Z] and [S].

Format: (An example is given on the following page.)

1	2	3	4	5	6	7	8	9	10
GENEL	EID		UI1	CI1	UI2	CI2	UI3	CI3	X1
+1	UI4	CI4	UI5	CI5	UI6	CI6	UI7	CI7	X2
+2				etc.					X3
+3	UIm, the last item in the UI-list, will appear in one of fields 2,4,6,8								X4
+4	"UD"		UD1	CD1	UD2	CD2	UD3	CD3	X5
+5				etc.					X6
+6	UDn, the last item in the UD-list, will appear in one of fields 2,4,6,8								X7
+7	"Z"	Z11	Z21	Z31	etc.		Z22	Z32	X8
+8	etc.		Z33	Z43	etc.				X9
+9				etc.					X10
+10	Zmm, the last item in the Z-matrix, will appear in one of fields 2-9								X11
+11	"S"	S11	S12	etc.		S21	etc.		X12
+12	Smn, the last item in the S-matrix, will appear in one of fields 2-9								

(Continued)

GENEL (cont.)

Field	Contents
EID	Unique element identification number, a positive integer
UI1, CI1 etc. UD1, CD1 etc.	Identification numbers of coordinates in the UI or UD list, in sequence corresponding to the [Z]- and [S]-matrices
Zij Sij	Values of the transfer matrices [Z] and [S], ordered by row (only from the diagonal for [Z]) according to the UI- and UD- lists
"UD", "Z", "S"	BCD data words which indicate the start of data belonging to UD , [Z], or [S]

Example: Let element 629 be defined by

$$\{u_i\} = [1\text{-}1,13\text{-}4,42,24\text{-}2]^T$$

$$\{u_d\} = [6\text{-}2,33]^T$$

where i-j means the jth component of grid point i

$$[Z] = \begin{bmatrix} 1.0 & 2.0 & 3.0 & 4.0 \\ 2.0 & 5.0 & 6.0 & 7.0 \\ 3.0 & 6.0 & 8.0 & 9.0 \\ 4.0 & 7.0 & 9.0 & 0.0 \end{bmatrix} \qquad [S] = \begin{bmatrix} 1.5 & 2.5 \\ 3.5 & 4.5 \\ 5.5 & 6.5 \\ 7.5 & 8.5 \end{bmatrix}$$

The data cards necessary to input this general element are shown below

1	2	3	4	5	6	7	8	9	10
GENEL	629		1	1	13	4	42	0	X1
+1	24	2							X2
+2	UD		6	2	33	0			X3
+3	Z	1.0	2.0	3.0	4.0	5.0	6.0	7.0	X4
+4	8.0	9.0	0.0						X5
+5	S	1.5	2.5	3.5	4.5	5.5	6.5	7.5	X6
+6	8.5								

Input Data Card GRAV Gravity Vector

Description: Used to define gravity vectors for use in determining gravity loading for the structural model.

Format and Example:

1	2	3	4	5	6	7	8	9	10
GRAV	SID	CID	G	N1	N2	N3			
GRAV	1	3	32.2	0.0	0.0	-1.0			

Field	Contents
SID	Set identification number (Integer > 0)
CID	Coordinate system identification number (Integer ≥ 0)
G	Gravity vector scale factor (Real)
N1, N2, N3	Gravity vector components (Real; $N1^2 + N2^2 + N3^2 > 0.0$)

Remarks: 1. The gravity vector is defined by

$$\vec{g} = G \cdot (N1, N2, N3).$$

2. A CID of zero references the basic coordinate system.
3. Gravity loads may be combined with "simple loads" (e.g., FØRCE, MØMENT) only by specification on a LØAD card. That is, the SID on a GRAV card may not be the same as that on a simple load card.
4. Load sets must be selected in the Case Control Deck (LØAD=SID) to be used by NASTRAN.

Input Data Card GRDSET Grid Point Default

Description: Defines default options for fields 3, 7 and 8 of all GRID cards.

Format and Example:

1	2	3	4	5	6	7	8	9	10
GRDSET		CP				CD	PS		
GRDSET		16				32	3456		

Field	Contents
CP	Identification number of coordinate system in which the location of the grid point is defined (Integer ≥ 0)
CD	Identification number of coordinate system in which displacements are measured at grid point (Integer ≥ 0)
PS	Permanent single-point constraints associated with grid point (any of the digits 1-6 with no imbedded blanks) (Integer ≥ 0)

Remarks:
1. The contents of fields 3, 7 or 8 of this card are assumed for the corresponding fields of any GRID card whose field 3, 7 and 8 are blank. If any of these fields on the GRID card are blank, the default option defined by this card occurs for that field. If no permanent single-point constraints are desired or one of the coordinate systems is basic, the default may be overridden on the GRID card by making one of fields 3, 7 or 8 zero (rather than blank). Only one GRDSET card may appear in the user's Bulk Data Deck.
2. The primary purpose of this card is to minimize the burden of preparing data for problems with a large amount of repetition (e.g., two-dimensional pinned-joint problems).
3. At least one of the entries CP, CD, or PS must be nonzero.

Input Data Card GRID Grid Point

Description: Defines the location of a geometric grid point of the structural model, the directions of its displacement, and its permanent single-point constraints.

Format and Example:

1	2	3	4	5	6	7	8	9	10
GRID	ID	CP	X1	X2	X3	CD	PS		
GRID	2	3	1.0	2.0	3.0		316		

Field	Contents
ID	Grid point identification number (Integer > 0)
CP	Identification number of coordinate system in which the location of the grid point is defined (Integer ≥ 0 or blank*).
X1,X2,X3	Location of the grid point in coordinate system CP (Real)
CD	Identification number of coordinate system in which displacements, degrees of freedom, constraints, and solution vectors are defined at the grid point (Integer ≥ 0 or blank*)
PS	Permanent single-point constraints associated with grid point (any of the digits 1-6 with no imbedded blanks) (Integer ≥ 0 or blank*)

Remarks:

1. Identification numbers of points defined by GRID, SPØINT and EPØINT cards and scalar points defined on scalar element connection cards must all be unique.
2. The meaning of X1, X2 and X3 depend on the type of coordinate system, CP, as follows: (see CØRD__ card descriptions)

Type	X1	X2	X3
Rectangular	X	Y	Z
Cylindrical	R	Θ(degrees)	Z
Spherical	R	Θ(degrees)	Φ(degrees)

3. The collection of all CD coordinate systems defined on all GRID cards is called the Global Coordinate System. All degrees-of-freedom, constraints, and solution vectors are expressed in the Global Coordinate System.

* See the GRDSET card for default options for fields 3, 7 and 8.

Input Data Card LØAD Static Load Combination (Superposition)

Description: Defines a static load as a linear combination of load sets defined via FØRCE, MØMENT, FØRCE1, MØMENT1, FØRCE2, MØMENT2, PLØAD, PLØAD2, SLØAD, RFØRCE and GRAV cards.

Format and Example:

1	2	3	4	5	6	7	8	9	10
LØAD	SID	S	S1	L1	S2	L2	S3	L3	abc
LØAD	101	-0.5	1.0	3	6.2	4			
+bc	S4	L4		-etc.-					

(etc.)

Field	Contents
SID	Load set identification number (Integer > 0)
S	Scale factor (Real)
Si	Scale factors (Real)
Li	Load set identification numbers defined via card types enumerated above (Integer > 0)

Remarks: 1. The load vector defined is given by

$$\{P\} = S \sum_i S_i \{P_{Li}\}$$

2. The Li must be unique. The remainder of the physical card containing the last entry must be blank.
3. This card must be used if gravity loads (GRAV) are to be used with any of the other types.
4. Load sets must be selected in the Case Control Deck (LØAD=SID) to be used by NASTRAN.
5. A LØAD card may not reference a set identification number defined by another LØAD card.

Input Data Card MAT1 Material Property Definition

Description: Defines the material properties for linear, temperature-independent, isotropic materials.

Format and Example:

1	2	3	4	5	6	7	8	9	10
MAT1	MID	E	G	NU	RHØ	A	TREF	GE	+abc
MAT1	17	3.+7	1.9+7		4.28	0.19	5.37+2	0.23	ABC
+abc	ST	SC	SS						
+BC	20.+4	15.+4	12.+4						

Field	Contents
MID	Material identification number (Integer > 0)
E	Young's modulus (Real ≥ 0.0 or blank)
G	Shear modulus (Real ≥ 0.0 or blank)
NU	Poisson's ratio (Real or blank)
RHØ	Mass density (Real)
A	Thermal expansion coefficient (Real)
TREF	Thermal expansion reference temperature (Real)
GE	Structural element damping coefficient (Real)
ST, SC, SS	Stress limits for tension, compression and shear (Real) (Used only to compute margins of safety in certain elements; they have no effect on the computational procedures)

Remarks:

1. One of E or G must be positive (i.e., either E > 0.0 or G > 0.0 or both E and G may be > 0.0).
2. If any one of E, G or NU is blank, it will be computed to satisfy the identity E = 2(1+NU)G; otherwise, values supplied by the user will be used.
3. The material identification number must be unique for all MAT1, MAT2 and MAT3 cards.
4. MAT1 materials may be made temperature dependent by use of the MATT1 card.
5. The mass density, RHØ, will be used to automatically compute mass for all structural elements except the two-dimensional bending only elements TRBSC, TRPLT and QDPLT.

Input Data Card MAT2 Material Property Definition

Description: Defines the material properties for linear, temperature-independent, anisotropic materials.

Format and Example:

1	2	3	4	5	6	7	8	9	10
MAT2	MID	G11	G12	G13	G22	G23	G33	RHØ	+abc
MAT2	13	6.2+3			6.2+3		5.1+3	0.056	ABC
+abc	A1	A2	A12	TO	GE	ST	SC	SS	
+BC	0.15			-500.0	0.002	20.+5			

Field	Contents
MID	Material identification number (Integer > 0)
Gij	The material property matrix (Real)
RHØ	Mass density (Real)
Ai	Thermal expansion coefficient vector (Real)
TO	Thermal expansion reference temperature (Real)
GE	Structural element damping coefficient (Real)
ST, SC, SS	Stress limits for tension, compression and shear (Real) (Used only to compute margins of safety in certain elements; they have no effect on the computational procedures)

Remarks:
1. The material identification numbers must be unique for all MAT1, MAT2 and MAT3 cards.
2. MAT2 materials may be made temperature dependent by use of the MATT2 card.
3. The mass density, RHØ, will be used to automatically compute mass for all structural elements except the two-dimensional bending only elements TRBSC, TRPLT and QDPLT.

Input Data Card MAT3 Material Property Definition

Description: Defines the material properties for linear, temperature-independent, orthotropic materials.

Format and Example:

1	2	3	4	5	6	7	8	9	10
MAT3	MID	EX	EY	EZ	NUXY	NUYZ	NUZX	RHØ	+abc
MAT3	23	1.0+7	1.1+7	1.2+7	.3	.25	.27	1.0-5	ABC
+abc	GXY	GYZ	GZX	AX	AY	AZ	TREF	GE	
+BC	2.5+6	3.0+6	2.5+6	1.0-4	1.0-4	1.1-4	68.5	.23	

Field	Contents
MID	Material identification number (Integer > 0)
EX, EY, EZ	Young's moduli in the x, y and z directions respectively (Real ≥ 0.0)
NUXY,NUYZ,NUZX	Poisson's Ratios (Coupled strain ratios in the xy, zy and zx directions respectively) (Real)
RHØ	Mass density (Real)
GXY, GYZ, GZX	Shear moduli for xy, yz and zx (Real ≥ 0.0)
AX, AY, AZ	Thermal expansion coefficients (Real)
TREF	Thermal expansion reference temperature (Real)
GE	Structural element damping coefficient (Real)

Remarks:

1. The material identification number must be unique with respect to the collection of all MAT1, MAT2 and MAT3 cards.
2. MAT3 materials may be made temperature-dependent by use of the MATT3 card.
3. All nine of the numbers EX, EY, EZ, NUXY, NUYZ, NUZX, GXY, GYZ and GZX must be present.
4. A nonfatal warning diagnostic will occur if any of NUXY or NUYZ has an absolute value greater than 1.0.
5. MAT3 materials may only be referenced by CTRIARG, CTRAPRG and PTØRDRG cards.
6. The mass density, RHØ, will be used to automatically compute mass for the TRIARG, TRAPRG and TØRDRG elements.

Input Data Card MATS1 Material Stress Dependence

Description: Specifies table references for material properties which are stress-dependent.

Format and Example:

1	2	3	4	5	6	7	8	9	10
MATS1	MID	R1							+abc
MATS1	17	28							ABC

Field	Contents
MID	Material property identification number which matches the identification number on some basic MAT1 card (Integer > 0)
R1	Reference to table identification number (Integer ≥ 0)

Remarks: 1. Blank or zero entries mean no table dependence of the referenced quantity on the basic MAT1 card.

2. TABLES1 type tables must be used.

Input Data Card MATT1 Material Temperature Dependence

Description: Specifies table references for material properties which are temperature-dependent.

Format and Example:

1	2	3	4	5	6	7	8	9	10
MATT1	MID	R1	R2	R3	R4	R5	R6	R7	+abc
MATT1	17	32				15			ABC
+abc	R8	R9	R10						
+BC	62								

Field	Contents
MID	Material property identification number which matches the identification number on some basic MAT1 card (Integer > 0)
Ri	References to table identification numbers (Integer ≥ 0)

Remarks: 1. Blank or zero entries mean no table dependence of the referenced quantity on the basic MAT1 card.

2. TABLEM1, TABLEM2, TABLEM3 or TABLEM4 type tables may be used.

Input Data Card MATT2 Material Temperature Dependence

Description: Specifies table references for material properties which are temperature-dependent.

Format and Example:

1	2	3	4	5	6	7	8	9	10
MATT2	MID	R1	R2	R3	R4	R5	R6	R7	+abc
MATT2	17	32				15			ABC
+abc	R8	R9	R10	R11	R12	R13	R14	R15	
+BC	62								

Field	Contents
MID	Material property identification number which matches the identification number on some basic MAT2 card (Integer > 0)
Ri	References to table identification numbers (Integer ≥ 0)

Remarks: 1. Blank or zero entries mean no table dependence of the referenced quantity on the basic MAT2 card.

2. TABLEM1, TABLEM2, TABLEM3 or TABLEM4 type tables may be used.

Input Data Card MATT3 Material Temperature Dependence

Description: Specifies table references for orthotropic, "MAT3", material properties which are temperature-dependent.

Format and Example:

1	2	3	4	5	6	7	8	9	10
MATT3	MID	R1	R2	R3	R4	R5	R6	R7	+abc
MATT3	23	48			54				ABC
+abc	R8	R9	R10	R11	R12	R13	R14	R15	
+BC	74								

Field	Contents
MID	Material property identification number which matches the identification number on some basic MAT3 card (Integer > 0)
Ri	References to table identification numbers (Integer ≥ 0)

Remarks: 1. Blank or zero entries imply no table dependence of the referenced quantity on the basic MAT3 card.

2. TABLEM1, TABLEM2, TABLEM3 or TABLEM4 type tables may be used.

Input Data Card MØMAX Conical Shell Static Moment

Description: Defines a static moment loading of a conical shell coordinate.

Format and Example:

1	2	3	4	5	6	7	8	9	10
MØMAX	SID	RID	HID	S	MR	MP	MZ		
MØMAX	1	2	3	1.0	0.1	0.2	0.3		

Field	Contents
SID	Load set identification number (Integer > 0)
RID	Ring identification number (see RINGAX)(Integer > 0)
HID	Harmonic identification number (Integer ≥ 0)
S	Scale factor (Real)
MR, MP, MZ	Moment components in the r, ϕ, z directions (Real)

Remarks:
1. This card is allowed if and only if an AXIC card is also present.
2. Load sets must be selected in the Case Control Deck (LØAD=SID) to be used by NASTRAN.
3. A separate card is needed for the definition of the moment associated with each harmonic.
4. For a discussion of the conical shell problem, see Section 5.9 of the Theoretical Manual.

Input Data Card MØMENT Static Moment

Description: Defines a static moment at a grid point by specifying a vector.

Format and Example:

1	2	3	4	5	6	7	8	9	10
MØMENT	SID	G	CID	M	N1	N2	N3		
MØMENT	2	5	6	2.9	0.0	1.0	0.0		

Field	Contents
SID	Load set identification number (Integer > 0)
G	Grid point identification number (Integer > 0)
CID	Coordinate system identification number (Integer ≥ 0)
M	Scale factor (Real)
N1,N2,N3	Components of Vector measured in coordinate system defined by CID (Real; $N1^2 + N2^2 + N3^2 > 0.0$)

Remarks: 1. The static moment applied to grid point G is given by

$$\vec{m} = M \cdot (N1, N2, N3)$$

2. Load sets must be selected in the Case Control Deck (LØAD=SID) to be used by NASTRAN.

3. A CID of zero references the basic coordinate system.

Input Data Card MØMENT1 Static Moment

Description: Used to define a static moment by specification of a value and two grid points which determine the direction.

Format and Example:

1	2	3	4	5	6	7	8	9	10
MØMENT1	SID	G	M	G1	G2				
MØMENT1	6	13	-2.93	16	13				

Field	Contents
SID	Load set identification number (Integer > 0)
G	Grid point identification number (Integer > 0)
M	Value of moment (Real)
G1, G2	Grid point identification numbers (Integer > 0; G1 ≠ G2)

Remarks: 1. The direction of the moment is determined by the vector from G1 to G2.

2. Load sets must be selected in the Case Control Deck (LØAD-SID) to be used by NASTRAN.

Input Data Card MØMENT2 Static Moment

Description: Used to define a static moment by specification of a value and four grid points which determine the direction.

Format and Example:

1	2	3	4	5	6	7	8	9	10
MØMENT2	SID	G	M	G1	G2	G3	G4		
MØMENT2	6	13	-2.93	16	13	17	13		

Field	Contents
SID	Load set identification number (Integer > 0)
G	Grid point identification number (Integer > 0)
M	Value of moment (Real)
G1,G2,G3,G4	Grid point identification numbers (Integer > 0; G1 ≠ G2; G3 ≠ G4)

Remarks: 1. The direction of the force is determined by the vector product whose factors are vectors from G1 to G2 and G3 to G4 respectively.

2. Load sets must be selected in the Case Control Deck (LØAD=SID) to be used by NASTRAN.

Input Data Card MPC Multipoint Constraint

Description: Defines a multipoint constraint equation of the form

$$\sum_j A_j u_j = 0$$

Format and Example:

1	2	3	4	5	6	7	8	9	10
MPC	SID	G	C	A	G	C	A		abc
MPC	3	28	3	6.2	2		4.29		+B
+bc		G	C	A	-etc.-				
+B		1	4	-2.91					

Field	Contents
SID	Set identification number (Integer > 0)
G	Identification number of grid or scalar point (Integer > 0)
C	Component number - any one of the digits 1-6 in the case of geometric grid points; blank or zero in the case of scalar points (Integer)
A	Coefficient (Real; the first A must be nonzero)

Remarks:

1. The first coordinate in the sequence is assumed to be the dependent coordinate and must be unique for all equations of the set.
2. Forces of multipoint constraint are not recovered.
3. Multipoint constraint sets must be selected in the Case Control Deck (MPC=SID) to be used by NASTRAN.
4. Dependent coordinates on MPC cards may not appear on ØMIT, ØMIT1, SUPØRT, SPC or SPC1 cards.

Input Data Card MPCADD Multipoint Constraint Set Definition

Description: Defines a multipoint constraint set as a union of multipoint constraint sets defined via MPC cards.

Format and Example:

1	2	3	4	5	6	7	8	9	10
MPCADD	SID	S1	S2	S3	S4	S5	S6	S7	abc
MPCADD	101	2	3	1	6	4			
+bc	S8	S9	-etc.-						

Field	Contents
SID	Set identification number (Integer > 0)
Sj	Set identification numbers of multipoint constraint sets defined via MPC cards (Integer > 0)

Remarks:
1. The Sj must be unique.
2. Multipoint constraint sets must be selected in the Case Control Deck (MPC=SID) to be used by NASTRAN.
3. Sj may not be the identification number of a multipoint constraint set defined by another MPCADD card.

Input Data Card MPCAX Conical Shell Multipoint Constraint

Description: Defines a multipoint constraint equation of the form

$$\sum_j A_j u_j = 0$$

for conical shell coordinates.

Format and Example:

1	2	3	4	5	6	7	8	9	10
MPCAX	SID				RID	HID	C	A	+abc
MPCAX	32				17	6	1	1.0	+1
+abc	RID	HID	C	A	RID	HID	C	A	+def
+1	23	4	2	-6.8					

-etc.-

Field	Contents
SID	Set identification number (Integer > 0)
RID	Ring identification number (Integer > 0)
HID	Harmonic identification number (Integer > 0)
C	Component number ($1 \leq$ Integer ≤ 6)
A	Coefficient (Real; the first A must be nonzero)

Remarks: 1. This card is allowed if and only if an AXIC card is also present.

2. The first coordinate in the sequence is assumed to be the dependent coordinate and must be unique for all equations of the set.

3. Multipoint constraint sets must be selected in the Case Control Deck (MPC=SID) to be used by NASTRAN.

4. Dependent coordinates appearing on MPCAX cards may not appear on ØMITAX, SPCAX, or SUPAX cards.

5. For a discussion of the conical shell problem, see Section 5.9 of the Theoretical Manual.

Input Data Card NØLIN1 Nonlinear Transient Response Dynamic Load

Description: Defines nonlinear transient forcing functions of the form

$$P_i(t) = S\ T(u_j(t))$$

Format and Example:

1	2	3	4	5	6	7	8	9	10
NØLIN1	SID	GI	CI	S	GJ	CJ	T		
NØLIN1	21	3	4	2.1	3	1	6		

Field	Contents
SID	Nonlinear load set identification number (Integer > 0)
GI	Grid or scalar or extra point identification number at which nonlinear load is to be applied (Integer > 0)
CI	Component number for GI a grid point (0 < Integer ≤ 6); blank or zero if GI is a scalar or extra point
S	Scale factor (Real)
GJ	Grid or scalar or extra point identification number (Integer > 0)
CJ	Component number for GJ a grid point (0 < Integer ≤ 6); blank or zero if GJ is a scalar or extra point
T	Identification number of a TABLEDi card (Integer > 0)

Remarks: 1. Nonlinear loads must be selected in the Case Control Deck (NØNLINEAR=SID) to be used by NASTRAN.

2. Nonlinear loads may not be referenced on a DLØAD card.

3. All coordinates referenced on NØLIN1 cards must be members of the solution set. This means the u_e set for modal formulation and the $u_d = u_e + u_a$ set for direct formulation.

Input Data Card NØLIN2 Nonlinear Transient Response Dynamic Load

Description: Defines nonlinear transient forcing functions of the form

$$P_i(t) = S\, u_j(t) u_k(t)$$

Format and Example:

1	2	3	4	5	6	7	8	9	10
NØLIN2	SID	GI	CI	S	GJ	CJ	GK	CK	
NØLIN2	14	2	1	2.9	2	1	2	1	

Field	Contents
SID	Nonlinear load set identification number (Integer > 0)
GI	Grid or scalar or extra point identification number at which nonlinear load is to be applied (Integer > 0)
CI	Component number GI a grid point (0 < Integer ≤ 6); blank or zero if GI is a scalar or extra point
S	Scale factor (Real)
GJ	Grid or scalar or extra point identification number (Integer > 0)
CJ	Component number for GJ a grid point (0 < Integer ≤ 6); blank or zero if GJ is a scalar or extra point
GK	Grid or scalar or extra point identification number (Integer > 0)
CK	Component number of GK a grid point (0 < Integer ≤ 6); blank or zero if GK is a scalar or extra point

Remarks: 1. Nonlinear loads must be selected in the Case Control Deck (NØNLINEAR=SID) to be used by NASTRAN.

2. Nonlinear loads may not be referenced on a DLØAD card.

3. All coordinates referenced on NØLIN2 cards must be members of the solution set. This means the u_e set for modal formulation and the $u_d = u_e + u_a$ set for direct formulation.

Input Data Card NØLIN3 Nonlinear Transient Response Dynamic Load

Description: Defines nonlinear transient forcing functions of the form

$$P_i(t) = \begin{cases} S\left(u_j(t)\right)^A, & u_j(t) > 0 \\ 0, & u_j(t) \le 0 \end{cases}$$

Format and Example:

1	2	3	4	5	6	7	8	9	10
NØLIN3	SID	GI	CI	S	GJ	CJ	A		
NØLIN3	4	102		-6.1	2	5	-3.5		

Field	Contents
SID	Nonlinear load set identification number (Integer > 0)
GI	Grid or scalar or extra point identification number at which nonlinear load is to be applied (Integer > 0)
CI	Component number for GI a grid point (0 < Integer ≤ 6); blank or zero if GI is a scalar or extra point
S	Scale factor (Real)
GJ	Grid or scalar or extra point identification number (Integer > 0)
CJ	Component number for GJ a grid point (0 < Integer ≤ 6); blank or zero if GJ is a scalar or extra point
A	Amplification factor (Real)

Remarks: 1. Nonlinear loads must be selected in the Case Control Deck (NØNLINEAR=SID) to be used by NASTRAN.

2. Nonlinear loads may not be referenced on a DLØAD card.

3. All coordinates referenced on NØLIN3 cards must be members of the solution set. This means the u_e set for modal formulation and the $u_d = u_e + u_a$ set for direct formulation.

Input Data Card NØLIN4 Nonlinear Transient Response Dynamic Load

Description: Defines nonlinear transient forcing functions of the form

$$P_i(t) = \begin{cases} -S\left(-u_j(t)\right)^A & , \quad u_j(t) < 0 \\ 0 & , \quad u_j(t) \geq 0 \end{cases}$$

Format and Example:

1	2	3	4	5	6	7	8	9	10
NØLIN4	SID	GI	CI	S	GJ	CJ	A		
NØLIN4	2	4	6	2.0	101		16.3		

Field	Contents
SID	Nonlinear load set identification number (Integer > 0)
GI	Grid or scalar or extra point identification number at which nonlinear load is to be applied (Integer > 0)
CI	Component number for GI a grid point (0 < Integer ≤ 6); blank or zero if GI is a scalar or extra point
S	Scale factor (Real)
GJ	Grid or scalar or extra point identification number (Integer > 0)
CJ	Component number for GJ a grid point (0 < Integer ≤ 6); blank or zero if GJ is a scalar or extra point
A	Amplification factor (Real)

Remarks: 1. Nonlinear loads must be selected in the Case Control Deck (NØNLINEAR=SID) to be used by NASTRAN.

2. Nonlinear loads may not be referenced on a DLØAD card.

3. All coordinates referenced on NØLIN4 cards must be members of the solution set. This means the u_e set for modal formulation and the $u_d = u_e + u_a$ set for direct formulation.

Input Data Card ØMIT Omitted Coordinates

Description: Defines coordinates (degrees of freedom) that the user desires to omit from the problem through matrix partitioning. Used to reduce the number of independent degrees of freedom.

Format and Example:

1	2	3	4	5	6	7	8	9	10
ØMIT	ID	C	ID	C	ID	C	ID	C	
ØMIT	16	2	23	3516			1	4	

Field	Contents
ID	Grid or scalar point identification number (Integer > 0)
C	Component number, zero or blank for scalar points, any unique combination of the digits 1-6 for grid points

Remarks: 1. Coordinates specified on ØMIT cards may not be specified on ØMIT1, SUPØRT, SPC or SPC1 cards nor may they appear as dependent coordinates in multipoint constraint relations (MPC) or as permanent single-point constraints on a GRID card.

2. As many as 24 coordinates may be omitted by a single card.

Input Data Card ØMIT1 Omitted Coordinates

Description: Defines coordinates (degrees of freedom) that the user desires to omit from the problem through matrix partitioning. Used to reduce the number of independent degrees of freedom.

Format and Example:

1	2	3	4	5	6	7	8	9	10
ØMIT1	C	G	G	G	G	G	G	G	abc
ØMIT1	3	2	1	3	10	9	6	5	ABC
+bc	G	G	G	-etc.-					
+BC	7	8							

-etc.-

Field	Contents
C	Component number (Any unique combination of the digits 1-6 (with no imbedded blanks) when point identification numbers are grid points; must be null or zero if point identification numbers are scalar points)
G	Grid or scalar point identification number (Integer > 0)

Remarks: A coordinate referenced on this card may not appear as a dependent coordinate in a multipoint constraint relation (MPC card), nor may it be referenced on a SPC, SPC1, ØMIT, or SUPØRT card or on a GRID card as permanent single-point constraints.

Input Data Card ØMITAX Omitted Conical Shell Coordinate

Description: Defines coordinates that the user desires to omit from the problem through matrix partitioning. Used to reduce the number of independent degrees of freedom.

Format and Example:

1	2	3	4	5	6	7	8	9	10
ØMITAX	RID	HID	C	RID	HID	C			
ØMITAX	2	6	3	4	7	1			

Field	Contents
RID	Ring identification number (Integer > 0)
HID	Harmonic identification number (Integer ≥ 0)
C	Component number (any unique combination of the digits 1-6)

Remarks:
1. This card is allowed if and only if an AXIC card is also present.
2. Up to 12 coordinates may be omitted via this card.
3. Coordinates appearing on ØMITAX cards may not appear on MPCAX, SUPAX or SPCAX cards.
4. For a discussion of the conical shell problem, see Section 5.9 of the Theoretical Manual.

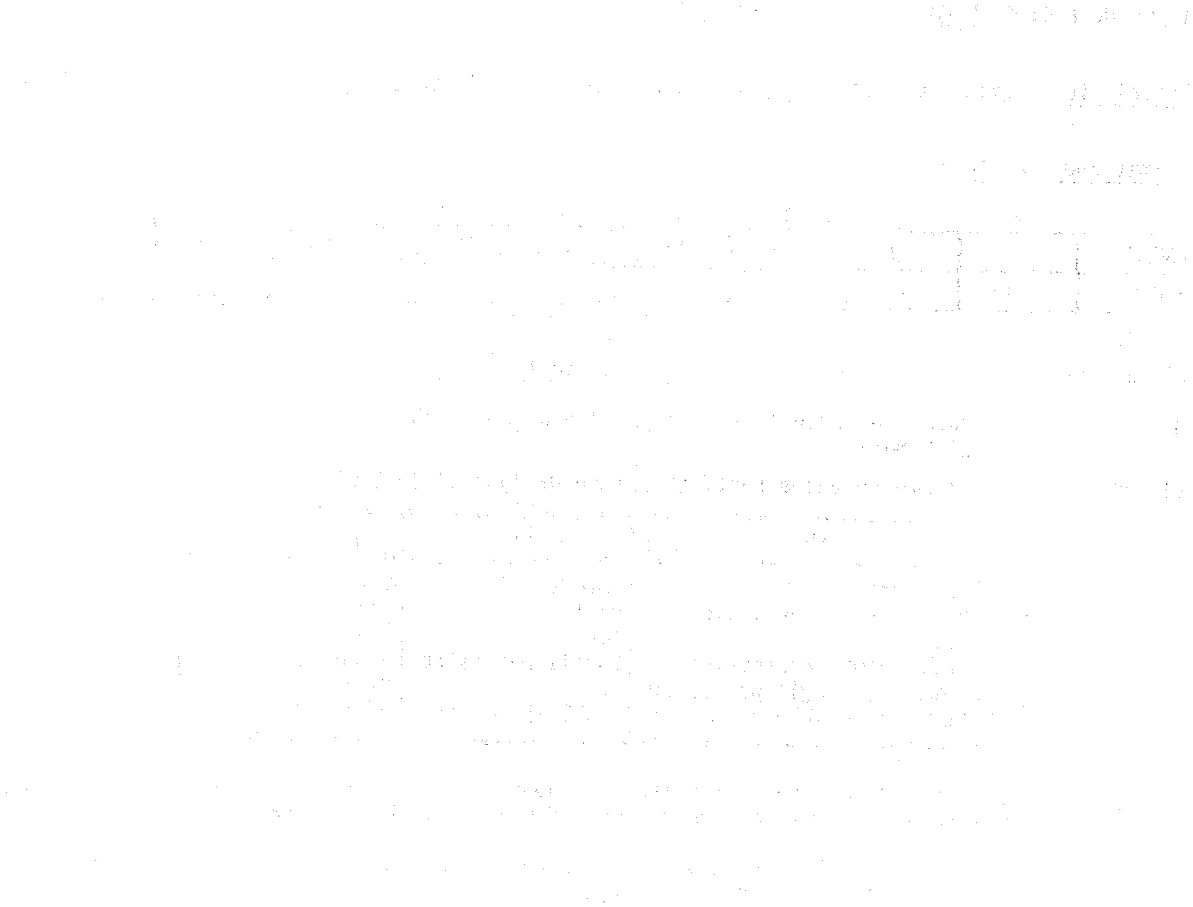

Input Data Card PARAM Parameter

Description: Specifies values for parameters used in DMAP sequences (including rigid formats).

Format and Example :

1	2	3	4	5	6	7	8	9	10
PARAM	N	V1	V2						
PARAM	IRES	1							

Field	Contents
N	Parameter name (one to eight alphanumeric characters, the first of which is alphabetic)
V1, V2	Parameter value based on parameter type as follows:

Type	V1	V2
Integer	Integer	Blank
Real, single-precision	Real	Blank
BCD	BCD	Blank
Real, double-precision	Double-precision	Blank
Complex, single-precision	Real	Real
Complex, double-precision	Double-precision	Double-precision

Remarks: 1. Only parameters for which assigned values are allowed may be given values via the PARAM card. Section 5 describes parameters as used in DMAP.

2. See Section 3.1.5 for a list of parameters used in rigid formats that may be initialized by the user on PARAM cards.

Input Data Card PBAR Simple Beam Property

Description: Defines the properties of a simple beam (bar) which is used to create bar elements via the CBAR card.

Format and Example:

1	2	3	4	5	6	7	8	9	10
PBAR	PID	MID	A	I1	I2	J	NSM		abc
PBAR	39	6	2.9		5.97				123
+bc	C1	C2	D1	D2	E1	E2	F1	F2	def
+23			2.0	4.0					
+ef	K1	K2	I12						

Field	Contents
PID	Property identification number (Integer > 0)
MID	Material identification number (Integer > 0)
A	Area of bar cross-section (Real)
I1, I2, I12	Area moments of inertia (Real)
J	Torsional constant (Real)
NSM	Nonstructural mass per unit length (Real)
K1, K2	Area factor for shear (Real)
Ci, Di, Ei, Fi	Stress recovery coefficients (Real)

Remarks: 1. PBAR cards may only reference MAT1 material cards.

2. See Section 1.3.2 for a discussion of bar element geometry.

Input Data Card PCØNEAX Conical Shell Element Property

Description: Defines the properties of a conical shell element described on a CCØNEAX card.

Format and Example:

1	2	3	4	5	6	7	8	9	10
PCØNEAX	ID	MID1	T1	MID2	I	MID3	T2	NSM	+abc
PCØNEAX	2	4	1.0	6	16.3	8	2.1	0.5	+1
+abc	Z1	Z2	PHI1	PHI2	PHI3	PHI4	PHI5	PHI6	+def
+1	0.001	-0.002	23.6	42.9					+2
+def	PHI7	PHI8	PHI9	PHI10	PHI11	PHI12	PHI13	PHI14	
+2									

Field	Contents
ID	Property identification number (Unique Integer > 0)
MIDi	Material identification number for membrane, bending, and transverse shear (Integer ≥ 0)
T1,T2	Membrane thickness and transverse shear thickness (Real)
I	Moment of Inertia per unit width (Real)
NSM	Nonstructural mass per unit area (Real)
Z1, Z2	Fiber distances for stress recovery (Real)
PHIi	Azimuthal coordinates (in degrees) for stress recovery (Real)

Remarks:
1. This card is allowed if and only if an AXIC card is also present.
2. PCØNEAX cards may only reference MAT1 material cards.
3. If MID1 = 0, then T1 must be 0.0.
4. If MID2 = 0, then I must be 0.0.
5. If MID3 = 0, then T2 must be 0.0.
6. A maximum of 14 azimuthal coordinates for stress recovery may be specified. An error will be detected if more than two (2) continuation cards appear.
7. For a discussion of the conical shell problem, see Section 5.9 of the Theoretical Manual.

Input Data Card PDAMP Scalar Damper Property

Description: Used to define the damping value of a scalar damper element which is defined by means of the CDAMP1 or CDAMP3 cards.

Format and Example:

1	2	3	4	5	6	7	8	9	10
PDAMP	PID	B	PID	B	PID	B	PID	B	
PDAMP	14	-2.3	2	6.1					

Field	Contents
PID	Property identification number (Integer > 0)
B	Value of scalar damper (Real)

Remarks:
1. This card defines a damper value. The user is cautioned to be careful when using negative damper values. Damper values are defined directly on the CDAMP2 and CDAMP4 cards. A structural viscous damper, CVISC, may also be used for geometric grid points.
2. Up to four damper properties may be defined on a single card.
3. For a discussion of scalar elements, see Section 5.6 of the Theoretical Manual.

Input Data Card PELAS Scalar Elastic Property

Description: Used to define the stiffness, damping coefficient, and stress coefficient of a scalar elastic element (spring) by means of the CELAS1 or CELAS3 card.

Format and Example:

1	2	3	4	5	6	7	8	9	10
PELAS	PID	K	GE	S	PID	K	GE	S	
PELAS	7	4.29	0.06	7.92	27	2.17	0.0032		

Field	Contents
PID	Property identification number (Integer > 0)
K	Elastic property value (Real)
GE	Damping coefficient, g_e (Real)
S	Stress coefficient (Real)

Remarks:
1. The user is cautioned to be careful using negative spring values. (Values are defined directly on some of the CELASi card types.)
2. One or two elastic spring properties may be defined on a single card.
3. For a discussion of scalar elements, see Section 5.6 of the Theoretical Manual.

Input Data Card PLFACT Piecewise Linear Analysis Factor Definition Card

Description: Defines scale factors for Piecewise Linear Analysis loading.

Format and Example:

1	2	3	4	5	6	7	8	9	10
PLFACT	SID	B1	B2	B3	B4	B5	B6	B7	+abc
PLFACT	6	0.2	0.3	0.4	0.5	0.6	0.7	0.8	ABC
+abc	B8	B9	-etc.-						
+BC	0.9	1.0							

Field	Contents
SID	Unique set identification number (Integer > 0)
Bi	Loading factor (Real)

Remarks:

1. The remainder of the physical card containing the last entry must be null.
2. At any stage of the Piecewise Linear Analysis, the accumulated load is given by

$$\{P_i\} = B_i\{P\}$$

where {P} is the total load defined in the usual way.

Example: If it were desired to load the structure in ten equally spaced load increments then set

$$B_i = 0.1 \cdot i \quad ; \quad i = 1, 10$$

3. Normally, the B_i form a monotonically increasing sequence. A singular stiffness matrix will result if $B_i = B_{i-1}$.
4. At least two factors must be defined.
5. Piecewise Linear Analysis factor sets must be selected in the Case Control Deck (PLCØEFF=SID) to be used by NASTRAN.

Input Data Card PLØAD Static Pressure Load

Description: Defines a static pressure load.

Format and Example:

1	2	3	4	5	6	7	8	9	10
PLØAD	SID	P	G1	G2	G3	G4			
PLØAD	1	-4.0	16	32	11				

Field	Contents
SID	Load set identification number (Integer > 0)
P	Pressure (Real)
G1,G2,G3,G4	Grid point identification numbers (Integer > 0; G4 may be zero)

Remarks:

1. Grid points must be unique and noncollinear.
2. If four grid points are given, four triangles are formed and half of P is applied to each one. For each triangle the direction is defined by

$$+(\vec{r}_{12} \times \vec{r}_{13})$$

where $\vec{r}_{ij}$ is the vector from Gi to Gj.

3. Load sets must be selected in the Case Control Deck (LØAD=SID) to be used by NASTRAN.

Input Data Card PLØAD2 Pressure Load

Description: Defines a uniform static pressure load applied to two-dimensional elements. Only QUAD1, QUAD2, QDMEM, QDPLT, SHEAR, TRBSC, TRIA1, TRIA2, TRMEM, TRPLT or TWIST elements may have a pressure load applied to them via this card.

Format and Example:

1	2	3	4	5	6	7	8	9	10
PLØAD2	SID	P	EID	EID	EID	EID	EID	EID	
PLØAD2	21	-3.6		4	16		2		

Alternate Form

PLØAD2	SID	P	EID1	"THRU"	EID2				
PLØAD2	1	30.4	16	THRU	48				

Field	Contents
SID	Load set identification number (Integer > 0)
P	Pressure value (Real)
EID EID1 EID2	Element identification number (Integer > 0; EID1 < EID2)

Remarks:

1. EID must be 0 or blank for omitted entrys.
2. Load sets must be selected in the Case Control Deck (LØAD=SID) to be used by NASTRAN.
3. At least one positive EID must be present on each PLØAD2 card.
4. If the alternate form is used, all elements EID1 thru EID2 must be two-dimensional.
5. The pressure load is computed for each element as if the grid points to which the element is connected were specified on a PLØAD card. The grid point sequence specified on the element connection card is assumed for the purpose of computing pressure loads.
6. All elements referenced must exist.

Input Data Card PLØTEL Dummy Element Definition

Description: Defines a dummy one-dimensional element for use in plotting. This element is not used in the model during any of the solution phases of a problem. It is used to simplify plotting of structures with large numbers of collinear grid points where the plotting of each one along with the elements connecting them would result in a confusing plot. The use of this "element" is entirely the responsibility of the user.

Format and Example:

1	2	3	4	5	6	7	8	9	10
PLØTEL	EID	G1	G2		EID	G1	G2		
PLØTEL	29	35	16						

Field	Contents
EID	Element identification number (Integer > 0)
G1, G2	Grid point identification numbers of connection points (Integer > 0; G1 ≠ G2)

Remarks: 1. Element identification numbers must be unique with respect to all other element identification numbers.

2. One or two PLØTEL elements may be defined on a single card.

Input Data Card PMASS Scalar Mass Property

Description: Used to define the mass value of a scalar mass element which is defined by means of the CMASS1 or CMASS3 cards.

Format and Example:

1	2	3	4	5	6	7	8	9	10
PMASS	PID	M	PID	M	PID	M	PID	M	
PMASS	7	4.29	6	13.2					

Field	Contents
PID	Property identification number (Integer > 0)
M	Value of scalar mass (Real)

Remarks:
1. This card defines a mass value. The user is cautioned to be careful when using negative mass values. (Values are defined directly on some of the CMASSi card types.)
2. Up to four mass properties may be defined by this card.
3. For a discussion of scalar elements, see Section 5.6 of the Theoretical Manual.

Input Data Card PØINTAX Conical Shell Point

Description: Defines the location of a point on an axisymmetric shell ring at which loads may be applied via the FØRCE or MØMENT cards and at which displacements may be requested. These points are not subject to constraints via MPCAX, SPCAX, or ØMITAX cards.

Format and Example:

1	2	3	4	5	6	7	8	9	10
PØINTAX	ID	RID	PHI						
PØINTAX	2	3	30.0						

Field	Contents
ID	Point identification number (Unique Integer > 0)
RID	Identification number of a RINGAX card (Integer > 0)
PHI	Azimuthal angle in degrees (Real)

Remarks:
1. This card is allowed if and only if an AXIC card is also present.
2. PØINTAX identification numbers must be unique with respect to all other PØINTAX, RINGAX and SECTAX identification numbers.
3. For a discussion of the conical shell problem, see Section 5.9 of the Theoretical Manual.

Input Data Card PQDMEM Quadrilateral Membrane Property

Description: Used to define the properties of a quadrilateral membrane. Referenced by the CQDMEM card. No bending properties are included.

Foramt and Example:

1	2	3	4	5	6	7	8	9	10
PQDMEM	PID	MID	T	NSM	PID	MID	T	NSM	
PQDMEM	235	2	0.5	0.0					

Field	Contents
PID	Property identification number (Integer > 0)
MID	Material identification number (Integer > 0)
T	Thickness of membrane (Real)
NSM	Nonstructural mass per unit area (Real)

Remarks: 1. All PQDMEM cards must have unique property identification numbers.

2. One or two quadrilateral membrane properties may be defined on a single card.

Input Data Card PQDPLT Quadrilateral Plate Property

Description: Used to define the bending properties of a quadrilateral plate element. Referenced by the CQDPLT card. No membrane properties are included.

Format and Example:

1	2	3	4	5	6	7	8	9	10
PQDPLT	PID	MID1	I	MID2	T	NSM	Z1	Z2	
PQDPLT	16	23	4.29	16	2.63	1.982	0.05	-0.05	

Field	Contents
PID	Property identification number (Integer > 0)
MID1	Material identification number for bending (Integer > 0)
I	Bending area moment of inertia per unit width (Real)
MID2	Material identification number for transverse shear (Integer $\geq$ 0)
T	Transverse shear thickness (Real)
NSM	Nonstructural mass per unit area (Real)
Z1, Z2	Fiber distances for stress computation, positive according to the right-hand sequences defined on the CQDPLT card (Real)

Remarks: 1. All PQDPLT cards must have unique property identification numbers.

2. If T is zero, the element is assumed to be rigid in transverse shear.

3. No structural mass is generated for this element.

Input Data Card PQUAD1 General Quadrilateral Element Property

Description: Defines the properties of a general quadrilateral element of the structural model, including bending, membrane, and transverse shear effects. Referenced by the CQUAD1 card.

Format and Example:

1	2	3	4	5	6	7	8	9	10
PQUAD1	PID	MID1	T1	MID2	I	MID3	T3	NSM	abc
PQUAD1	32	16	2.98	9	6.45	16	5.29	6.32	WXYZ1
+bc	Z1	Z2							
+XYZ1	0.09	-0.06							

Field	Contents
PID	Property identification number (Integer > 0)
MID1	Material identification number for membrane (Integer ≥ 0)
T1	Membrane thickness (Real)
MID2	Material identification number for bending (Integer ≥ 0)
I	Area moment of inertia per unit width (Real)
MID3	Material identification number for transverse shear (Integer ≥ 0)
T3	Transverse shear thickness (Real)
NSM	Nonstructural mass per unit area (Real)
Z1, Z2	Fiber distances for stress computation, positive according to the right-hand sequence defined on the CQUAD1 card (Real)

Remarks: 1. All PQUAD1 cards must have unique property identification numbers.

2. If T3 is zero, the element is assumed to be rigid in transverse shear.

3. The membrane thickness, T1, is used to compute the structural mass for this element.

Input Data Card PQUAD2 Homogeneous Quadrilateral Property

Decription : Defines the properties of a homogeneous quadrilateral element of the structural model, including bending, membrane and transverse shear effects. Referenced by the CQUAD2 card.

Format and Example:

1	2	3	4	5	6	7	8	9	10
PQUAD2	PID	MID	T	NSM	PID	MID	T	NSM	
PQUAD2	32	16	2.98	9.0	45	16	5.29	6.32	

Field	Contents
PID	Property identification number (Integer > 0)
MID	Material identification number (Integer > 0)
T	Thickness (Real)
NSM	Nonstructual mass per unit area (Real)

Remarks:
1. All PQUAD2 cards must have unique identification numbers.
2. The thickness used to compute membrane and transverse shear properties is T.
3. The area moment of inertia per unit width used to compute the bending stiffness is $T^3/12$.
4. Outer fiber distances of $\pm T/2$ are assumed.
5. One or two homogeneous quadrilateral properties may be defined on a single card.

Input Data Card PRESAX Conical Shell Pressure Load

Description: Defines the static pressure loading of a conical shell element.

Format and Example:

1	2	3	4	5	6	7	8	9	10
PRESAX	SID	P	RID1	RID2	PHI1	PHI2			
PRESAX	3	7.92	4	3	20.6	31.4			

Field	Contents
SID	Load set identification number (Integer > 0)
P	Pressure value (Real)
RID1, RID2	Ring identification numbers (see RINGAX card) (Integer > 0)
PHI1, PHI2	Azimuthal angles in degrees (Real)

Remarks: 1. This card is allowed if and only if an AXIC card is also present.

2. Load sets must be selected in the Case Control Deck (LØAD=SID) in order to be used by NASTRAN.

3. For a discussion of the conical shell problem, see Section 5.9 of the Theoretical Manual.

Input Data Card PRØD Rod Property

Description: Defines the properties of a rod which is referenced by the CRØD card.

Format and Example:

1	2	3	4	5	6	7	8	9	10
PRØD	PID	MID	A	J	C	NSM			
PRØD	17	23	42.6	17.92	4.236	0.5			

Field	Contents
PID	Property identification number (Integer > 0)
MID	Material identification number (Integer > 0)
A	Area of rod (Real)
J	Torsional constant (Real)
C	Coefficient to determine torsional stress (Real)
NSM	Nonstructual mass per unit length (Real)

Remarks: 1. PRØD cards must all have unique property identification numbers.

2. PRØD cards may only reference MAT1 material cards.

Input Data Card PSHEAR Shear Panel Property

Description: Defines the elastic properties of a shear panel. Referenced by the CSHEAR card.

Format and Example:

1	2	3	4	5	6	7	8	9	10
PSHEAR	PID	MID	T	NSM	PID	MID	T	NSM	
PSHEAR	13	2	4.9	16.2	14	6	4.9	14.7	

Field	Contents
PID	Property identification number (Integer > 0)
MID	Material identification number (Integer > 0)
T	Thickness of shear panel (Real $\neq$ 0.0)
NSM	Nonstructural mass per unit area (Real)

Remarks: 1. All PSHEAR cards must have unique identification numbers.

2. PSHEAR cards may only reference MAT1 material cards.

3. One or two shear panel properties may be defined on a single card.

Input Data Card PTØRDRG Toroidal Ring Property

Description: Used to define membrane and flexure (bending) properties of a toroidal ring element. Referenced by the CTØRDRG card.

Format and Example:

1	2	3	4	5	6	7	8	9	10
PTØRDRG	PID	MID	TM	TF	PID	MID	TM	TF	
PTØRDRG	2	4	0.1	0.15					

Field	Contents
PID	Property identification number (Integer > 0)
MID	Material identification number (Integer > 0)
TM	Thickness for membrane (Real)
TF	Thickness for flexure (Real)

Remarks:
1. All PTØRDRG cards must have unique property identification numbers.
2. The material identification number MID must reference only a MAT1 or MAT3 card.
3. One or two toroidal ring properties may be defined on a single card.

Input Data Card PTRBSC Basic Bending Triangle Property

Description: Defines basic bending triangle (TRBSC) properties. Referenced by the CTRBSC card. No membrane properties are included.

Format and Example:

1	2	3	4	5	6	7	8	9	10
PTRBSC	PID	MID1	I	MID2	T	Z1	Z2		
PTRBSC	3	17	6.29	4	16.				

Field	Contents
PID	Property identification number (Integer > 0)
MID1	Material identification number for bending (Integer > 0)
I	Bending area moment of inertia per unit width (Real)
MID2	Material identification number for transverse shear (Integer ≥ 0)
T	Transverse shear thickness (Real)
Z1, Z2	Fiber distances for shear computation, positive according to the right-hand sequence defined in the CTRBSC card (Real)

Remarks:
1. All PTRBSC cards must have unique property identification numbers.
2. If T is zero, the element is assumed to be rigid in transverse shear.
3. No structural mass is generated by this element.

Input Data Card PTRIA1 General Triangular Element Property

Description: Defines the properties of a general triangular element of the structural model, including bending, membrane and transverse shear effects. Referenced by the CTRIA1 card.

Format and Example:

1	2	3	4	5	6	7	8	9	10
PTRIA1	PID	MID1	T1	MID2	I	MID3	T3	NSM	abc
PTRIA1	32	16	2.98	9	6.45	16	5.29	6.32	QED
+bc	Z1	Z2							
+ED									

Field	Contents
PID	Property identification number (Integer > 0)
MID1	Material identification number for membrane (Integer ≥ 0)
T1	Membrane thickness (Real)
MID2	Material identification number for bending (Integer ≥ 0)
I	Area of moment of inertia per unit width (Real)
MID3	Bending material identification number for transverse shear (Integer ≥ 0)
T3	Transverse shear thickness (Real)
NSM	Nonstructural mass per unit area (Real)
Z1, Z2	Fiber distances for stress calculations, positive according to the right-hand sequence defined on the CTRIA1 card (Real)

Remarks:
1. All PTRIA1 cards must have unique property identification numbers.
2. If T3 is zero, the element is assumed to be rigid in transverse shear.
3. The membrane thickness, T1, is used to compute the structural mass for this element.

Input Data Card PTRIA2 Homogeneous Triangular Element Property

Description: Defines the properties of a homogeneous triangular element of the structural model, including membrane, bending and transverse shear effects. Referenced by the CTRIA2 card.

Format and Example:

1	2	3	4	5	6	7	8	9	10
PTRIA2	PID	MID	T	NSM	PID	MID	T	NSM	
PTRIA2	2	16	3.92	14.7	6	16	2.96		

Field	Contents
PID	Property identification number (Integer > 0)
MID	Material identification number (Integer > 0)
T	Thickness (Real)
NSM	Nonstructural mass per unit area (Real)

Remarks:

1. All PTRIA2 cards must have unique identification numbers.
2. The thickness used to compute the membrane and transverse shear properties is T.
3. The area moment of inertia per unit width used to compute the bending stiffness is $T^3/12$.
4. Outer fiber distances of $\pm T/2$ are assumed.
5. One or two homogeneous triangular element properties may be defined on a single card.

Input Data Card PTRMEM Triangular Membrane Property

Description: Used to define the properties of a triangular membrane element. Referenced by the CTRMEM card. No bending properties are included.

Format and Example:

1	2	3	4	5	6	7	8	9	10
PTRMEM	PID	MID	T	NSM	PID	MID	T	NSM	
PTRMEM	17	23	4.25	0.2					

Field	Contents
PID	Property identification number (Integer > 0)
MID	Material identification number (Integer > 0)
T	Membrane thickness (Real)
NSM	Nonstructural mass per unit area (Real)

Remarks: 1. All PTRMEM cards must have unique property identification numbers.

2. One or two triangular membrane properties may be defined on a single card.

Input Data Card PTRPLT Triangular Plate Property

Description: Used to define the bending properties of a triangular plate element. Referenced by the CTRPLT card. No membrane properties are included.

Format and Example:

1	2	3	4	5	6	7	8	9	10
PTRPLT	PID	MID1	I	MID2	T	NSM	Z1	Z2	
PTRPLT	17	26	4.29	16	3.9-4	2.634			

Field	Contents
PID	Property identification number (Integer > 0)
MID1	Material identification number for bending (Integer > 0)
I	Bending area moment of inertia per unit width (Real)
MID2	Material identification number for transverse shear (Integer ≥ 0)
T	Transverse shear thickness (Real)
NSM	Nonstructural mass per unit area (Real)
Z1, Z2	Fiber distances for stress computation, positive according to the right-hand sequence defined on the CTRPLT card (Real)

Remarks:
1. All PTRPLT cards must have unique property identification numbers.
2. If T is zero, the element is assumed to be rigid in transverse shear.
3. No structural mass is generated by this element.

Input Data Card PTUBE Tube Property

Description: Defines the properties of a thin-walled cylindrical tube element. Referenced by the CTUBE card.

Format and Example:

1	2	3	4	5	6	7	8	9	10
PTUBE	PID	MID	ØD	T	NSM				
PTUBE	2	6	6.29	0.25					

Field	Contents
PID	Property identification number (Integer > 0)
MID	Material identification number (Integer > 0)
ØD	Outside diameter of tube (Real > 0.0)
T	Thickness of tube (Real; T ≤ 1/2 ØD)
NSM	Nonstructural mass per unit length (Real)

Remarks: 1. If T is zero, a solid circular rod is assumed.

2. PTUBE cards must all have unique property identification numbers.

3. PTUBE cards may only reference MAT1 material cards.

Input Data Card PTWIST Twist Panel Property

Description: Defines the elastic properties of a twist panel element. Referenced by the CTWIST card.

Format and Example:

1	2	3	4	5	6	7	8	9	10
PTWIST	PID	MID	T	NSM	PID	MID	T	NSM	
PTWIST	4	6	2.3	9.4	5	6	1.6		

Field	Contents
PID	Property identification number (Integer > 0)
MID	Material identification number (Integer > 0)
T	Thickness of twist panel (Real $\neq$ 0.0)
NSM	Nonstructural mass per unit area (Real)

Remarks: 1. All PTWIST cards must have unique identification numbers.

2. PTWIST cards may only reference MAT1 material cards.

3. One or two twist panel properties may be defined on a single card.

Input Data Card PVISC Viscous Element Property

Description: Defines the viscous properties of a one-dimensional viscous element which is used to create viscous elements by means of the CVISC card.

Format and Example:

1	2	3	4	5	6	7	8	9	10
PVISC	PID	C1	C2		PID	C1	C2		
PVISC	3	6.2	3.94						

Field	Contents
PID	Property identification number (Integer > 0)
C1, C2	Viscous coefficients for extension and rotation (Real)

Remarks:
1. Used for both extensional and rotational viscous elements.
2. Has meaning for dynamics problems only.
3. Viscous properties are material independent; in particular, they are temperature-independent.
4. One or two viscous element properties may be defined on a single card.

Input Data Card RANDPS Power Spectral Density Specification

Description: Defines load set power spectral density factors for use in Random Analysis having the frequency dependent form

$$S_{jk}(F) = (X + iY)\ G(F)$$

Format and Example:

1	2	3	4	5	6	7	8	9	10
RANDPS	SID	J	K	X	Y	TID			
RANDPS	5	3	7	2.0	2.5	4			

Field	Contents
SID	Random analysis set identification number (Integer > 0)
J	Subcase identification number of excited load set (Integer > 0)
K	Subcase identification number of applied load set (Integer $\geq$ 0; K $\geq$ J)
X,Y	Components of complex number (Real)
TID	Identification number of a TABRNDi card which defines G(F) (Integer $\geq$ 0)

Remarks:
1. IF J = K, then Y must be 0.0
2. For TID = 0, G(F) = 1.0
3. Set identification numbers must be selected in the Case Control Deck (RANDØM=SID) to be used by NASTRAN.
4. Only 20 unique sets may be defined. As many RANDPS cards as desired with the same SID may be input, however.

Input Data Card RANDT1 Autocorrelation Function Time Lag

Description: Defines time lag constants for use in random analysis autocorrelation function computation.

Format and Example:

1	2	3	4	5	6	7	8	9	10
RANDT1	SID	N	TO	TMAX					
RANDT1	5	10	3.2	9.6					

Field	Contents
SID	Random analysis set identification number (Integer > 0)
N	Number of time lag intervals (Integer > 0)
TO	Starting time lag (Real ≥ 0.0)
TMAX	Maximum time lag (Real > TO)

Remarks: 1. At least one RANDPS card must be present with the same set identification number.

2. The time lags defined on this card are given by

$$T_i = T_o + \frac{T_{max} - T_o}{N}(i - 1), \qquad i = 1, N + 1$$

3. Time lag sets must be selected in the Case Control Deck (RANDØM=SID) to be used by NASTRAN.

Input Data Card RFØRCE Rotational Force

Description: Defines a static loading condition due to a centrifugal force field.

Format and Example:

1	2	3	4	5	6	7	8	9	10
RFØRCE	SID	G	CID	A	N1	N2	N3		
RFØRCE	2	5		-6.4	0.0	0.0	1.0		

Field	Contents
SID	Load set identification number (Integer > 0)
G	Grid point identification number (Integer $\geq$ 0)
CID	Coordinate system defining rotation direction (Integer $\geq$ 0)
A	Scale factor for rotational velocity in revolutions per unit time (Real)
N1, N2, N3	Rectangular components of rotation direction vector (Real; $N1^2 + N2^2 + N3^2 > 0.0$)

Remarks:
1. G = 0 means the basic coordinate system origin.
2. CID = 0 means the basic coordinate system.
3. Load sets must be selected in the Case Control Deck (LØAD=SID) to be used by NASTRAN.
4. Rotational force sets can be combined with other static loads only by using the LØAD bulk data card.

Input Data Card RINGAX Conical Shell Ring

Description: Defines a ring for conical shell problems.

Format and Example:

1	2	3	4	5	6	7	8	9	10
RINGAX	ID		R	Z			PS		
RINGAX	3		2.0	-10.0			162		

Field	Contents
ID	Ring identification number (Integer > 0)
R	Ring radius (Real > 0.0)
Z	Ring axial location (Real)
PS	Permanent single-point constraints (any unique combination of the digits 1-6)

Remarks:
1. This card is allowed if and only if an AXIC card is also present.
2. The number of degrees of freedom defined is (6-PS)·H where H is the harmonic count and PS is the number of digits in field 8. (See AXIC card.)
3. RINGAX identification numbers must be unique with respect to all other PØINTAX, RINGAX and SECTAX identification numbers.
4. For a discussion of the conical shell problem, see Section 5.9 of the Theoretical Manual.

Input Data Card RLØAD1 Frequency Response Dynamic Load

Description: Defines a frequency dependent dynamic load of the form

$$\{P(f)\} = \left\{A[C(f) + iD(f)]\, e^{i\{\theta - 2\pi f\tau\}}\right\}$$

for use in frequency response problems.

Format and Example:

1	2	3	4	5	6	7	8	9	10
RLØAD1	SID	L	M	N	TC	TD			
RLØAD1	5	3	6	9	1	2			

Field	Contents
SID	Set identification number (Integer > 0)
L	Identification number of DAREA card set which defines A (Integer > 0)
M	Identification number of DELAY card set which defines τ (Integer ≥ 0)
N	Identification number of DPHASE card set which defines θ (Integer ≥ 0)
TC	Set identification number of TABLEDi card which gives C(f) (Integer ≥ 0; TC + TD > 0)
TD	Set identification number of TABLEDi card which gives D(f) (Integer ≥ 0; TC + TD > 0)

Remarks:

1. If any of M, N, TC or TD are blank or zero, the corresponding τ, θ, C(f), or D(f) will be zero.
2. Dynamic load sets must be selected in the Case Control Deck (DLØAD=SID) to be used by NASTRAN.
3. RLØAD1 loads may be combined with RLØAD2 loads only by specification on a DLØAD card. That is, the SID on a RLØAD1 card may not be the same as that on a RLØAD2 card.
4. SID must be unique for all RLØAD1, RLØAD2, TLØAD1 and TLØAD2 cards.

Input Data Card RLØAD2 Frequency Response Dynamic Load

Description: Defines a frequency dependent dynamic load of the form

$$\{P(f)\} = \{AB(f)e^{i\{\phi(f) + \theta - 2\pi f\tau\}}\}$$

for use in frequency response problems.

Format and Example:

1	2	3	4	5	6	7	8	9	10
RLØAD2	SID	L	M	N	TB	TP			
RLØAD2	5	3	6	21	7	2			

Field	Contents
SID	Set identification number (Integer > 0)
L	Identification number of DAREA card set which defines A (Integer > 0)
M	Identification number of DELAY card set which defines τ (Integer $\geq$ 0)
N	Identification number of DPHASE card set which defines θ (Integer $\geq$ 0)
TB	Set identification number of TABLEDi card which gives B(f) (Integer > 0)
TP	Set identification number of TABLEDi card which gives ϕ(f) (Integer $\geq$ 0)

Remarks:

1. If any of M, N or TP are zero, the corresponding τ, θ or ϕ(f) will be zero.
2. Dynamic load sets must be selected in the Case Control Deck (DLØAD=SID) to be used by NASTRAN.
3. RLØAD2 loads may be combined with RLØAD1 loads only by specification on a DLØAD card. That is, the SID on a RLØAD2 card may not be the same as that on a RLØAD1 card.
4. SID must be unique for all RLØAD1, RLØAD2, TLØAD1 and TLØAD2 cards.

Input Data Card SECTAX Conical Shell Sector

Description: Defines a sector of a conical shell.

Format and Example:

1	2	3	4	5	6	7	8	9	10
SECTAX	ID	RID	R	PHI1	PHI2				
SECTAX	1	2	3.0	30.0	40.0				

Field	Contents
ID	Sector identification number (Unique Integer > 0)
RID	Ring identification number (see RINGAX)(Integer > 0)
R	Effective radius (Real)
PHI1, PHI2	Azimuthal limits of sector in degrees (Real)

Remarks: 1. This card is allowed if and only if an AXIC card is also present.

2. SECTAX identification numbers must be unique with respect to all other PØINTAX, RINGAX and SECTAX identification numbers.

3. For a discussion of the conical shell problem, see Section 5.9 of the Theoretical Manual.

Input Data Card SEQEP Extra Point Resequencing

Description: The purpose of this card is to allow the user to reidentify the formation sequence of the extra points of his structural model in such a way as to optimize bandwidth which is essential for efficient solutions by the displacement method.

Format and Example:

1	2	3	4	5	6	7	8	9	10
SEQEP	ID	SEQID	ID	SEQID	ID	SEQID	ID	SEQID	
SEQEP	5392	15.6			2	1.9.2.6	3	2	

Field	Contents
ID	Extra point identification number (Integer > 0)
SEQID	Sequenced identification number (a special number described below)

Remarks:

1. ID is any extra point identification number which is to be reidentified for sequencing purposes. The sequence number is a special number which may have any of the following forms where X is a decimal integer digit - XXXX.X.X.X, XXXX.X.X, XXXX.X or XXXX where any of the leading X's may be omitted. This number must contain no imbedded blanks.
2. If the user wishes to insert an extra point between two already existing grid, scalar and/or extra points, such as 15 and 16, for example, he would define it as, say 5392, and then use this card to insert extra point number 5392 between them by equivalencing it to, say, 15.6. All output referencing this point will refer to 5392.
3. The SEQID numbers must be unique and may not be the same as a point ID which is not being changed. No extra point ID may be referenced more than once.
4. No continuation cards (small field or large field) are allowed with either the SEQGP or the SEQEP card.
5. From one to four extra points may be resequenced on a single card.

Input Data Card SEQGP Grid and Scalar Point Resequencing

Description: Used to order the grid points and user-supplied scalar points of the problem. The purpose of this card is to allow the user to reidentify the formation sequence of the grid and scalar points of his structural model in such a way as to optimize bandwidth which is essential for efficient solutions by the displacement method.

Format and Example:

1	2	3	4	5	6	7	8	9	10
SEQGP	ID	SEQID	ID	SEQID	ID	SEQID	ID	SEQID	
SEQGP	5392	15.6			2	1.9.2.6	3	2	

Field	Contents
ID	Grid or scalar point identification number (Integer > 0)
SEQID	Sequenced identification number (a specical number described below)

Remarks:

1. ID is any grid or scalar point identification number which is to be reidentified for sequencing purposes. The grid point sequence number (SEQID) is a special number which may have any of the following forms where X is a decimal integer digit - XXXX.X.X.X, XXXX.X.X, XXXX.X or XXXX where any of the leading X's may be omitted. This number must contain no imbedded blanks.
2. If the user wishes to insert a grid point between two already existing grid points, such as 15 and 16, for example, he would define it as, say 5392, and then use this card to insert grid point number 5392 between them by equivalencing it to, say 15.6. All output referencing this point will refer to 5392.
3. The SEQID numbers must be unique and may not be the same as a point ID which is not being changed. No grid point ID may be referenced more than once.
4. No continuation cards (small field or large field) are allowed with either the SEQGP or the SEQEP card.
5. From one to four grid or scalar points may be resequenced on a single card.

Input Data Card SLØAD Static Scalar Load

Description: Used to apply static loads to scalar points.

Format and Example:

1	2	3	4	5	6	7	8	9	10
SLØAD	SID	S	F	S	F	S	F		
SLØAD	16	2	5.9	17	-6.3	14	-2.93		

Field	Contents
SID	Load set identification number (Integer > 0)
S	Scalar point identification number (Integer > 0)
F	Load value (Real)

Remarks:
1. Load sets must be selected in the Case Control Deck (LØAD=SID) to be used by NASTRAN.
2. Up to three scalar loads may be defined on a single card.

Input Data Card SPC Single-Point Constraint

Description : Defines sets of single-point constraints and enforced displacements.

Format and Example:

1	2	3	4	5	6	7	8	9	10
SPC	SID	G	C	D	G	C	D		
SPC	2	32	436	-2.6	5		+2.9		

Field	Contents
SID	Identification number of single-point constraint set (Integer > 0)
G	Grid or scalar point identification number (Integer > 0)
C	Component number (6 ≥ Integer ≥ 0; up to six unique such digits may be placed in the field with no imbedded blanks)
D	Value of enforced displacement for all coordinates designated by G and C (Real)

Remarks:

1. A coordinate referenced on this card may not appear as a dependent coordinate in a multipoint constraint relation (MPC card), nor may it be referenced on a SPC1, ØMIT, ØMIT1 or SUPØRT card. D must be 0.0 for dynamics problems.
2. Single-point forces of constraint are recovered during stress data recovery.
3. Single-point constraint sets must be selected in the Case Control Deck (SPC=SID) to be used by NASTRAN.
4. From one to twelve single-point constraints may be defined on a single card.
5. SPC degrees of freedom may be redundantly specified as permanent constraints on the GRID card.

Input Data Card SPC1 Single-Point Constraint

Description: Defines sets of single-point constraints.

Format and Example:

1	2	3	4	5	6	7	8	9	10
SPC1	SID	C	G1	G2	G3	G4	G5	G6	abc
SPC1	3	2	1	3	10	9	6	5	ABC
+bc	G7	G8	G9	-etc.-					
+BC	2	8							

-etc.-

Field	Contents
SID	Identification number of single-point constraint set (Integer > 0)
C	Component number (Any unique combination of the digits 1-6 (with no imbedded blanks) when point identification numbers are grid points; must be null if point identification numbers are scalar points)
Gi	Grid or scalar point identification numbers (Integer > 0)

Remarks:
1. Note that enforced displacements are not available via this card. As many continuation cards as desired may appear.
2. A coordinate referenced on this card may not appear as a dependent coordinate in a multipoint constraint relation, nor may it be referenced on a SPC, ØMIT, ØMIT1, SUPØRT card.
3. Single-point constraint sets must be selected in the Case Control Deck (SPC=SID) to be used by NASTRAN.
4. SPC degrees of freedom may be redundantly specified as permanent constraints on the GRID card.

Input Data Card SPCADD Single-Point Constraint

Description: Defines a single-point constraint set as a union of single-point constraint sets defined via SPC or SPC1 cards.

Format and Example:

1	2	3	4	5	6	7	8	9	10
SPCADD	SID	S1	S2	S3	S4	S5	S6	S7	abc
SPCADD	101	3	2	9	1				
+bc	S8	S9	-etc.-						

-etc.-

Field	Contents
SID	Identification number for new single-point constraint set (Integer > 0)
Si	Identification numbers of single-point constraint sets defined via SPC or SPC1 cards (Integer > 0; SID ≠ Si)

Remarks:
1. Single-point constraint sets must be selected in the Case Control Deck (SPC=SID) to be used by NASTRAN.
2. No Si may be the identification number of a single-point constraint set defined by another SPCADD card.
3. The Si values must be unique.

Input Data Card SPCAX Conical Shell Single-Point Constraint

Description: Defines sets of single-point constraints for conical shell coordinates. Enforced displacements may also be defined.

Format and Example:

1	2	3	4	5	6	7	8	9	10
SPCAX	SID	RID	HID	C	V				
SPCAX	2	3	4	13	6.0				

Field	Contents
SID	Identification number of single-point constraint set (Integer > 0)
RID	Ring identification number (see RINGAX) (Integer ≥ 0)
HID	Harmonic identification number (Integer ≥ 0)
C	Component identification number (any unique combination of the digits 1-6)
V	Enforced displacement value (Real)

Remarks:
1. This card is allowed if and only if an AXIC card is also present.
2. Single-point constraint sets must be selected in the Case Control Deck (SPC=SID) to be used by NASTRAN.
3. Coordinates appearing on SPCAX cards may not appear on MPCAX, SUPAX or ØMITAX cards.
4. For a discussion of the conical shell problem, see Section 5.9 of the Theoretical Manual.

Input Data Card SPØINT Scalar Point

Description: Defines scalar points of the structural model.

Format and Example:

1	2	3	4	5	6	7	8	9	10
SPØINT	ID	ID	ID	ID	ID	ID	ID	ID	
SPØINT	3	18	1	4	16	2			
Alternate Form									
SPØINT	ID1	"THRU"	ID2						
SPØINT	5	THRU	649						

Field	Contents
ID,ID1,ID2	Scalar point identification number (Integer > 0; ID1 < ID2)

Remarks:
1. Scalar point defined by their appearance on a scalar connection card need not appear on a SPØINT card.
2. Identification numbers of scalar points, extra points (EPØINT) and geometric grid points (GRID) must all be unique.
3. This card is used primarily to define scalar points appearing in single or multipoint constraint equations but to which no scalar elements are connected.
4. If the alternate form is used, scalar points ID1 thru ID2 are defined.
5. For a discussion of scalar points, see Section 5.6 of the Theoretical Manual.

Input Data Card SUPAX Conical Shell Fictitious Support

Description: Defines conical shell coordinate at which the user desires determinate reactions to be applied to a free body during analysis.

Format and Example:

1	2	3	4	5	6	7	8	9	10
SUPAX	RID	HID	C	RID	HID	C			
SUPAX				4	3	2			

Field	Contents
RID	Ring identification number (Integer > 0)
HID	Harmonic identification number (Integer ≥ 0)
C	Component number (any unique combination of the digits 1-6)

Remarks: 1. This card is allowed if and only if an AXIC card is also present.

2. Up to 12 coordinates may appear on a single card.

3. Coordinates appearing on SUPAX cards may not appear on MPCAX, SPCAX or ØMITAX cards.

4. For a discussion of the conical shell problem, see Section 5.9 of the Theoretical Manual.

Input Data Card SUPØRT Fictitious Support

Description: Defines coordinates at which the user desires determinate reactions to be applied to a free body during analysis.

Format and Example:

1	2	3	4	5	6	7	8	9	10
SUPØRT	ID	C	ID	C	ID	C	ID	C	
SUPØRT	16	215							

Field	Contents
ID	Grid or scalar point identification number (Integer > 0)
C	Component number (Zero or blank for scalar points; any unique combination of the digits 1-6 for grid points)

Remarks:
1. Coordinates defined on this card may not appear on single-point constraint cards (SPC, SPC1), on omit cards (ØMIT, ØMIT1) or in multipoint constraint equations as dependent coordinates (MPC).
2. From one to twenty-four support coordinates may be defined on a single card.

Input Data Card TABDMP1 Structural Damping Table

Description: Defines structural damping as a tabular function of frequency.

Format and Example:

1	2	3	4	5	6	7	8	9	10
TABDMP1	ID								abc
TABDMP1	3								ABC
+bc	f_1	g_1	f_2	g_2	f_3	g_3	f_4	g_4	
+BC	2.5	.01057	2.6	.01362	ENDT				

(etc.)

Field	Contents
ID	Table identification number (Integer > 0)
f_i	Frequency value in cycles per unit time (Real $\geq$ 0.0)
g_i	Damping value (Real)

Remarks:

1. The f_i must be in either ascending or descending order but not both.
2. Jumps ($f_i = f_{i+1}$) are allowed, but not at the end points.
3. At least two entries must be present.
4. Any f_i, g_i entry may be ignored by placing the BCD string "SKIP" in either of two fields used for that entry.
5. The end of the table is indicated by the existence of the BCD string "ENDT" in either of the two fields following the last entry. An error is detected if any continuation cards follow the card containing the end-of-table flag "ENDT".
6. The TABDMP1 mnemonic infers the use of the algorithm

$$\boxed{G = g_T(F)}$$

where F is input to the table and G is returned. The table look-up $g_T(F)$ is performed using linear interpolation within the table and linear extrapolation outside the table using the last two end points at the appropriate table end. At jump points the average $g_T(F)$ is used. There are no error returns from this table look-up procedure.

7. Structural damping tables must be selected in the Case Control Deck (SDAMP=ID) to be used by NASTRAN.
8. Structural damping is used only in modal formulations of complex eigenvalue analysis, frequency response analysis, or transient response analysis.

Input Data Card TABLED1 Dynamic Load Tabular Function

Description: Defines a tabular function for use in generating frequency-dependent and time-dependent dynamic loads.

Format and Example:

1	2	3	4	5	6	7	8	9	10
TABLED1	ID								+abc
TABLED1	32								ABC
+abc	x_1	y_1	x_2	y_2	x_3	y_3	x_4	y_4	+def
+BC	-3.0	6.9	2.0	5.6	3.0	5.6	ENDT		

-etc.-

Field	Contents
ID	Table identification number (Integer > 0)
x_i, y_i	Tabular entries (Real)

Remarks:

1. The x_i must be in either ascending or decending order but not both.
2. Jumps between two points ($x_i = x_{i+1}$) are allowed, but not at the end points.
3. At least two entries must be present.
4. Any x-y entry may be ignored by placing the BCD string "SKIP" in either of the two fields used for that entry.
5. The end of the table is indicated by the existence of the BCD string "ENDT" in either of the two fields following the last entry. An error is detected if any continuation cards follow the card containing the end-of-table flag "ENDT".
6. Each TABLEDi mnemonic infers the use of a specific algorithm. For TABLED1 type tables, this algorithm is

$$\boxed{Y = y_T(X)}$$

where X is input to the table and Y is returned. The table look-up $y_T(x)$, $x = X$, is performed using linear interpolation within the table and linear extrapolation outside the table using the last two end points at the appropriate table end. At jump points the average $y_T(x)$ is used. There are no error returns from this table look-up procedure.

Input Data Card TABLED2 Dynamic Load Tabular Function

Description: Defines a tabular function for use in generating frequency-dependent and time-dependent dynamic loads. Also contains parametric data for use with the table.

Format and Example:

1	2	3	4	5	6	7	8	9	10
TABLED2	ID	X1							+abc
TABLED2	15	-10.5							ABC
+abc	x_1	y_1	x_2	y_2	x_3	y_3	x_4	y_4	+def
+BC	1.0	-4.5	2.0	-4.2	2.0	2.8	7.0	6.5	DEF
+def	x_5	y_5	x_6	y_6	x_7	y_7	x_8	y_8	+ghi
+EF	SKIP	SKIP	9.0	6.5	ENDT				

(etc.)

Field	Contents
ID	Table identification number (Integer > 0)
X1	Table parameter (Real)
x_i, y_i	Tabular entries (Real)

Remarks:

1. The x_i must be in either ascending or decending order but not both.
2. Jumps between two points ($x_i = x_{i+1}$) are allowed, but not at the end points.
3. At least two entries must be present.
4. Any x-y entry may be ignored by placing the BCD string "SKIP" in either of the two fields used for that entry.
5. The end of the table is indicated by the existence of the BCD string "ENDT" in either of the two fields following the last entry. An error is detected if any continuation cards follow the card containing the end-of-table flag "ENDT".
6. Each TABLEDi mnemonic infers the use of a specific algorithm. For TABLED2 type tables, this algorithm is

$$\boxed{Y = y_T(X - X1)}$$

where X is input to the table and Y is returned. The table look-up $y_T(x)$, $x = X-X1$, is performed using linear interpolation within the table and linear extrapolation outside the table using the last two end points at the appropriate table end. At jump points the average $y_T(x)$ is used. There are no error returns from this table look-up procedure.

Input Data Card TABLED3 Dynamic Load Tabular Function

Description: Defines a tabular function for use in generating frequency-dependent and time-dependent dynamic loads. Also contains parametric data for use with the table.

Format and Example:

1	2	3	4	5	6	7	8	9	10
TABLED3	ID	X1	X2						+abc
TABLED3	62	126.9	30.0						ABC
+abc	x_1	y_1	x_2	y_2	x_3	y_3	x_4	y_4	+def
+BC	2.9	2.9	3.6	4.7	5.2	5.7	ENDT		

-etc.-

Field	Contents
ID	Table identification number (Integer > 0)
X1, X2	Table parameters (Real; X2 ≠ 0.0)
x_i, y_i	Tabular entries (Real)

Remarks:

1. The x_i must be in either ascending or descending order but not both.
2. Jumps between two points ($x_i = x_{i+1}$) are allowed, but not at the end points.
3. At least two entries must be present.
4. Any x-y entry may be ignored by placing the BCD string "SKIP" in either of the two fields used for that entry.
5. The end of the table is indicated by the existence of the BCD string "ENDT" in either of the two fields following the last entry. An error is detected if any continuation cards follow the card containing the end-of-table flag "ENDT".
6. Each TABLEDi mnemonic infers the use of a specific algorithm. For TABLED3 type tables, this algorithm is

$$Y = y_T\left(\frac{X - X1}{X2}\right)$$

where X is input to the table and Y is returned. The table look-up $y_T(x)$, $x = \frac{X - X1}{X2}$, is performed using linear interpolation within the table and linear extrapolation outside the table using the last two end points at the appropriate table end. At jump points the average $y_T(x)$ is used. There are no error returns from this table look-up procedure.

Input Data Card TABLED4 Dynamic Load Tabular Function

Description: Defines coefficients of a power series for use in generating frequency-dependent and time-dependent dynamic loads. Also contains parametric data for use with the table.

Format and Example:

1	2	3	4	5	6	7	8	9	10
TABLED4	ID	X1	X2	X3	X4				+abc
TABLED4	28	0.0	1.0	0.0	100.				ABC
+abc	A_0	A_1	A_2	A_3	A_4	A_5	A_6	A_7	+def
+BC	2.91	-0.0329	6.51-5	0.0	-3.4-7	ENDT			

etc.

Field	Contents
ID	Table identification number (Integer > 0)
X1,X2,X3,X4	Table parameters (Real; X2 ≠ 0.0; X3 < X4)
A_i	Coefficient entries (Real)

Remarks:

1. At least one entry must be present.
2. The end of the table is indicated by the existence of the BCD string "ENDT" in the field following the last entry. An error is detected if any continuation cards follow the card containing the end-of-table flag "ENDT".
3. Each TABLEDi mnemonic infers the use of a specific algorithm. For TABLED4 type tables, this algorithm is

$$Y = \sum_{i=0}^{N} A_i \left(\frac{X - X1}{X2} \right)^i$$

where X is input to the table and Y is returned. Whenever X < X3, use X3 for X; whenever X > X4, use X4 for X. There are N + 1 entries in the table. There are no error returns from this table look-up procedure.

Input Data Card TABLEM1 Material Property Table

Description: Defines a tabular function for use in generating temperature dependent material properties.

Format and Example:

1	2	3	4	5	6	7	8	9	10
TABLEM1	ID								+abc
TABLEM1	32								ABC
+abc	x_1	y_1	x_2	y_2	x_3	y_3	x_4	y_4	+def
+BC	-3.0	6.9	2.0	5.6	3.0	5.6	ENDT		

(etc.)

Field	Contents
ID	Table identification number (Integer > 0)
x_i, y_i	Tabular entries (Real)

Remarks:

1. The x_i must be in either ascending or descending order but not both.
2. Jumps between two points ($x_i = x_{i+1}$) are allowed, but not at the end points.
3. At least two entries must be present.
4. Any x-y entry may be ignored by placing the BCD string "SKIP" in either of the two fields used for that entry.
5. The end of the table is indicated by the existence of the BCD string "ENDT" in either of the two fields following the last entry. An error is detected if any continuation cards follow the card containing the end-of-table flag "ENDT".
6. Each TABLEMi mnemonic infers the use of a specific algorithm. For TABLEM1 type tables, this algorithm is

$$\boxed{Y = y_T(X)}$$

where X is input to the table and Y is returned. The table look-up $y_T(x)$, $x = X$, is performed using linear interpolation within the table and linear extrapolation outside the table using the last two end points at the appropriate table end. At jump points the average $y_T(x)$ is used. There are no error returns from this table look-up procedure.

Input Data Card TABLEM2 Material Property Table

Description: Defines a tabular function for use in generating temperature dependent material properties. Also contains parametric data for use with the table.

Format and Example:

1	2	3	4	5	6	7	8	9	10
TABLEM2	ID	X1							+abc
TABLEM2	15	-10.5							ABC
+abc	x_1	y_1	x_2	y_2	x_3	y_3	x_4	y_4	+def
+BC	1.0	-4.5	2.0	-4.5	2.0	2.8	7.0	6.5	DEF
+def	x_5	y_5	x_6	y_6	x_7	y_7	x_8	y_8	+ghi
+EF	SKIP	SKIP	9.0	6.5	ENDT				

(etc.)

Field	Contents
ID	Table identification number (Integer > 0)
X1	Table parameter (Real)
x_i, y_i	Tabular entries (Real)

Remarks:

1. The x_i must be in either ascending or descending order but not both.
2. Jumps between two points ($x_i = x_{i+1}$) are allowed, but not at the end points.
3. At least two entries must be present.
4. Any x-y entry may be ignored by placing the BCD string "SKIP" in either of the two fields used for that entry.
5. The end of the table is indicated by the existence of the BCD string "ENDT" in either of the two fields following the last entry. An error is detected if any continuation cards follow the card containing the end-of-table flag "ENDT".
6. Each TABLEMi mnemonic infers the use of a specific algorithm. For TABLEM2 type tables, this algorithm is

$$\boxed{Y = Z\, y_T(X - X1)}$$

where X is input to the table, Y is returned and Z is supplied from the basic MATi card. The table look-up $y_T(x)$, $x = X - X1$, is performed using linear interpolation within the table and linear extrapolation outside the table using the last two end points at the appropriate table end. At jump points the average $y_T(x)$ is used. There are no error returns from this table look-up procedure.

Input Data Card TABLEM3 Material Property Table

Description: Defines a tabular function for use in generating temperature dependent material properties. Also contains parametric data for use with the table.

Format and Example:

1	2	3	4	5	6	7	8	9	10
TABLEM3	ID	X1	X2						+abc
TABLEM3	62	126.9	30.0						ABC
+abc	x_1	y_1	x_2	y_2	x_3	y_3	x_4	y_4	+def
+BC	2.9	2.9	3.6	4.7	5.2	5.7	ENDT		

(etc.)

Field	Contents
ID	Table identification number (Integer > 0)
X1, X2	Table parameters (Real; X2 ≠ 0.0)
x_i, y_i	Tabular entries (Real)

Remarks:

1. The x_i must be in either ascending or descending order but not both.
2. Jumps between two points ($x_i = x_{i+1}$) are allowed, but not at the end points.
3. At least two entries must be present.
4. Any x-y entry may be ignored by placing the BCD string "SKIP" in either of the two fields used for that entry.
5. The end of the table is indicated by the existence of the BCD string "ENDT" in either of the two fields following the last entry. An error is detected if any continuation cards follow the card containing the end-of-table flag "ENDT".
6. Each TABLEMi mnemonic infers the use of a specific algorithm. For TABLEM3 type tables, this algorithm is

$$Y = Z\, y_T\left(\frac{X - X1}{X2}\right)$$

where X is input to the table, Y is returned and Z is supplied from basic MATi card. The table look-up $y_T(x)$, $x = \frac{X - X1}{X2}$, is performed using linear interpolation within the table and linear extrapolation outside the table using the last two end points at the appropriate table end. At jump points the average $y_T(x)$ is used. There are no error returns from this table look-up procedure.

Input Data Card TABLEM4 Material Property Table

Description: Defines coefficients of a power series for use in generating temperature dependent material properties. Also contains parametric data for use with the table.

Format and Example:

1	2	3	4	5	6	7	8	9	10
TABLEM4	ID	X1	X2	X3	X4				+abc
TABLEM4	28	0.0	1.0	0.0	100.				ABC
+abc	A_0	A_1	A_2	A_3	A_4	A_5	A_6	A_7	+def
+BC	2.91	-0.0329	6.51-5	0.0	-3.4-7	ENDT			

etc.

Field	Contents
ID	Table identification number (Integer > 0)
X1,X2,X3,X4	Table parameters (Real; X2 ≠ 0.0; X3 < X4)
A_i	Coefficient entries (Real)

Remarks:

1. At least one entry must be present.
2. The end of the table is indicated by the existence of the BCD string "ENDT" in the field following the last entry. An error is detected if any continuation cards follow the card containing the end-of-table flag "ENDT".
3. Each TABLEMi mnemonic infers the use of a specific algorithm. For TABLEM4 type tables, this algorithm is

$$Y = Z \sum_{i=0}^{N} A_i \left(\frac{X - X1}{X2} \right)^i$$

where X is input to the table, Y is returned and Z is supplied from the basic MATi card. Whenever X < X3, use X3 for X; whenever X > X4, use X4 for X. There are N +1 entries in the table. There are no error returns from this table look-up procedure.

Input Data Card TABLES1 Tabular Stress-Strain Function

Description: Defines a tabular stress-strain function for use in Piecewise Linear Analysis.

Format and Example:

1	2	3	4	5	6	7	8	9	10
TABLES1	ID								+abc
TABLES1	32								ABC
+abc	x_1	y_1	x_2	y_2	x_3	y_3	x_4	y_4	+def
+BC	-3.0	6.9	2.0	5.6	3.0	5.6	ENDT		

-etc.-

Field	Contents
ID	Table identification number (Integer > 0)
x_i, y_i	Tabular entries (Real)

Remarks:

1. The x_i must be in either ascending or descending order but not both.
2. For Piecewise Linear Analysis, the y_i numbers must form a nondecreasing sequence for an ascending x_i sequence and vice versa.
3. Jumps between two points ($x_i = x_{i+1}$) are allowed, but not at the end points.
4. At least two entries must be present.
5. Any x-y entry may be ignored by placing the BCD string "SKIP" in either of the two fields used for that entry.
6. The end of the table is indicated by the existence of the BCD string "ENDT" in either of the two fields following the last entry. An error is detected if any continuation cards follow the card containing the end-of-table flag "ENDT".
7. Each TABLESi mnemonic infers the use of a specific algorithm. For TABLES1 type tables, this algorithm is

$$\boxed{Y = y_T(X)}$$

where X is input to the table and Y is returned. The table look-up $y_T(x)$, $x = X$, is performed using linear interpolation within the table and linear extrapolation outside the table using the last two end points at the appropriate table end. At jump points the average $y_T(x)$ is used. There are no error returns from this table look-up procedure.

8. The table may have a zero slope only at its end.

Input Data Card TABRND1 Power Spectral Density Table

Description: Defines Power Spectral density as a tabular function of frequency for use in Random Analysis. Referenced on the RANDPS card.

Format and Example:

1	2	3	4	5	6	7	8	9	10
TABRND1	ID								abc
TABRND1	3								ABC
+bc	f_1	g_1	f_2	g_2	f_3	g_3	f_4	g_4	def
+BC	2.5	.01057	2.6	.01362	ENDT				

-etc.-

Field	Contents
ID	Table identification number (Integer > 0)
f_i	Frequency value in cycles per unit time (Real ≥ 0.0)
g_i	Power Spectral Density (Real)

Remarks:

1. The f_i must be in either ascending or descending order but not both.
2. Jumps between two points ($f_i = f_{i+1}$) are allowed, but not at the end points.
3. At least two entries must be present.
4. Any f-g entry may be ignored by placing the BCD string "SKIP" in either of the two fields used for that entry.
5. The end of the table is indicated by the existence of the BCD string "ENDT" in either of the two fields following the last entry. An error is detected if any continuation cards follow the card containing the end-of-table flag "ENDT"
6. The TABRND1 mnemonic infers the use of the algorithm

$$G = g_T(F)$$

where F is input to the table and G is returned. The table look-up $g_T(F)$ is performed using linear interpolation within the table and linear extrapolation outside the table using the last two end points at the appropriate table end. At jump points the average $g_T(F)$ is used. There are no error returns from this table look-up procedure.

Input Data Card TEMP Temperature Field

Description: Defines temperature at grid points for determination of:
1) Thermal loading
2) Temperature-dependent material properties

Format and Example:

1	2	3	4	5	6	7	8	9	10
TEMP	SID	G	T	G	T	G	T		
TEMP	3	94	316.2	49	219.8				

Field	Contents
SID	Temperature set identification number (Integer > 0)
G	Grid point identification number (Integer > 0)
T	Temperature (Real)

Remarks:
1. If thermal effects are requested, all grid points of the structural model must have a temperature defined by either the TEMP card or the TEMPD card.
2. Temperature sets must be selected in the Case Control Deck (TEMP=SID) to be used by NASTRAN.
3. From one to three grid point temperatures may be defined on a single card.

Input Data Card TEMPAX Conical Shell Temperature

Description: Defines temperature sets for conical shell problems.

Format and Example:

1	2	3	4	5	6	7	8	9	10
TEMPAX	SID	RID	PHI	TEMP	SID	RID	PHI	TEMP	
TEMPAX	4	7	30.0	105.3					

Field	Contents
SID	Temperature set identification number (Integer > 0)
RID	Ring identification number (see RINGAX card)(Integer > 0)
PHI	Azimuthal angle in degrees (Real)
TEMP	Temperature (Real)

Remarks: 1. This card is allowed if and only if an AXIC card is also present.

2. One or two temperatures may be defined on each card.

3. Temperature sets must be selected in the Case Control Deck (TEMP=SID) to be used by NASTRAN.

4. For a discussion of the conical shell problem, see Section 5.9 of the Theoretical Manual.

Input Data Card TEMPD Temperature Field Default

Description: Defines a temperature default for all grid points of the structural model which have not been given a temperature on a TEMP card.

Format and Example:

1	2	3	4	5	6	7	8	9	10
TEMPD	SID	T	SID	T	SID	T	SID	T	
TEMPD	1	216.3							

Field	Contents
SID	Temperature set identification number (Integer > 0)
T	Default temperature (Real)

Remarks:
1. If thermal effects are requested, all grid points of the structural model must have a temperature defined by either the TEMP card or the TEMPD card.
2. Temperature sets must be selected in the Case Control Deck (TEMP=SID) to be used by NASTRAN.
3. From one to four default temperatures may be defined on a single card.

Input Data Card TF Dynamic Transfer Function

Description: 1. May be used to define a transfer function of the form

$$(B0 + B1p + B2p^2)u_d + \sum_i (A0(i) + A1(i)p + A2(i)p^2)u_i = 0$$

2. May be used as a means of direct matrix input.

Format and Example:

1	2	3	4	5	6	7	8	9	10
TF	SID	GD	CD	B0	B1	B2			+abc
TF	1	2	3	4.0	5.0	6.0			+ABC
+abc	G(1)	C(1)	A0(1)	A1(1)	A2(1)				+def
+ABC	3	4	5.0	6.0	7.0				+DEF

(etc.)

Field	Contents
SID	Set identification number (Integer > 0)
GD,G(i)	Grid, scalar or extra point identification numbers (Integer > 0)
CD,C(i)	Component numbers (Null or zero for scalar or extra points, any one of the digits 1-6 for a grid point)
B0,B1,B2 A0(i),A1(i), A2(i)	Transfer function coefficients (Real)

Remarks: 1. The matrix elements defined by this card are added to the dynamic matrices for the problem.

2. Transfer Function sets must be selected in the Case Control Deck (TFL=SID) to be used by NASTRAN.

3. The constraint relation given above will hold only if no elements are connected to the dependent coordinate.

Input Data Card TIC Transient Initial Condition

Description: Defines values for the initial conditions of coordinates used in Transient analysis. Both displacement and velocity values may be specified at independent coordinates of the structural model.

Format and Example:

1	2	3	4	5	6	7	8	9	10
TIC	SID	G	C	UO	VO				
TIC	1	3	2	5.0	-6.0				

Field	Contents
SID	Set identification number (Integer > 0)
G	Grid or scalar or extra point identification number (Integer > 0)
C	Component number (Null or zero for scalar or extra points, any one of the digits 1-6 for a grid point)
UO	Initial displacement value (Real)
VO	Initial velocity value (Real)

Remarks:
1. Transient initial condition sets must be selected in the Case Control Deck (IC=SID) to be used by NASTRAN.
2. If no TIC set is selected in Case Control Deck, all initial conditions are assumed zero.
3. Initial conditions for coordinates not specified on TIC cards will be assumed zero.
4. Initial conditions may be used only in direct formulation.

Input Data Card TLØAD1 Transient Response Dynamic Load

Description: Defines a time-dependent dynamic load of the form

$$\{P(t)\} = \{A\ F(t - \tau)\}$$

for use in transient response problems.

Format and Example:

1	2	3	4	5	6	7	8	9	10
TLØAD1	SID	L	M		TF				
TLØAD1	5	7	9		13				

Field	Contents
SID	Set identification number (Integer > 0)
L	Identification number of DAREA card set which defines A (Integer > 0)
M	Identification number of DELAY card set which defines τ (Integer $\geq$ 0)
TF	Identification number of TABLEDi card which gives $F(t - \tau)$ (Integer > 0)

Remarks:
1. If M is zero, τ will be zero.
2. Field 5 must be blank.
3. Dynamic load sets must be selected in the Case Control Deck (DLØAD=SID) to be used by NASTRAN.
4. TLØAD1 loads may be combined with TLØAD2 loads only by specification on a DLØAD card. That is, the SID on a TLØAD1 card may not be the same as that on a TLØAD2 card.
5. SID must be unique for all TLØAD1, TLØAD2, RLØAD1 and RLØAD2 cards.

Input Data Card TLØAD2 Transient Response Dynamic Load

Description: Defines a time-dependent dynamic load of the form

$$\{P(t)\} = \begin{cases} \{0\}, & \tilde{t} < 0 \text{ or } \tilde{t} > T2 - T1 \\ \left\{A\ \tilde{t}^{B}\ e^{C\tilde{t}}\ \cos(2\pi F\tilde{t} + P)\right\}, & 0 \le \tilde{t} \le T2 - T1 \end{cases}$$

for use in transient response problems where $\tilde{t} = t - T1 - \tau$.

Format and Example:

1	2	3	4	5	6	7	8	9	10
TLØAD2	SID	L	M		T1	T2	F	P	ABC
TLØAD2	4	10	7		2.1	4.7	12.0	30.0	+12
+BC	C	B							
+12	2.0	3.0							

Field	Contents
SID	Set identification number (Integer > 0)
L	Identification number of DAREA card set which defines A (Integer > 0)
M	Identification number of DELAY card set which defines τ (Integer $\geq$ 0)
T1	Time constant (Real $\geq$ 0.0)
T2	Time constant (Real, T2 > T1)
F	Frequency in cycles per unit time (Real $\geq$ 0.0)
P	Phase angle in degrees (Real)
C	Exponential coefficient (Real)
B	Growth coefficient (Real)

Remarks:
1. If M is zero, τ will be zero.
2. Field 5 must be blank.
3. Dynamic load sets must be selected in the Case Control Deck (DLØAD=SID) to be used by NASTRAN.
4. TLØAD2 loads may be combined with TLØAD1 loads only by specification on a DLØAD card. That is, the SID on a TLØAD2 card may not be the same as that on a TLØAD1 card.
5. SID must be unique for all TLØAD1, TLØAD2, RLØAD1 and RLØAD2 cards.

Input Data Card TSTEP Transient Time Step

Description: Defines time step intervals at which solution will be generated and output in Transient Analysis.

Format and Example:

1	2	3	4	5	6	7	8	9	10
TSTEP	SID	N(1)	DT(1)	NØ(1)					+abc
TSTEP	2	10	.001	5					+ABC
+abc		N(2)	DT(2)	NØ(2)					+def
+ABC		9	0.01	1					+DEF

(etc.)

Field	Contents
SID	Set identification number (Integer > 0)
N(i)	Number of time steps of value DT(i) (Integer ≥ 2)
DT(i)	Time increment (Real > 0.0)
NØ(i)	Skip factor for output (Every NØ(i)th step will be saved for output) (Integer > 0)

Remarks: TSTEP cards must be selected in the Case Control Deck (TSTEP=SID) in order to be used by NASTRAN.

2.5 USER'S MASTER FILE

As a means of aiding the user in handling the large (several boxes of cards) Bulk Data Decks which are typical of NASTRAN problems, the User's Master File is provided for storage of many Bulk Data Decks on a single tape. There are many advantages to using a Master File. For a problem that several investigators are concurrently studying, the User's Master File provides a convenient common source of data. Standardization is easy to impose since there can be only one legitimate structural model deck for any given problem. When various parts of a structure are being analyzed separately, they may all be placed on the same User's Master File for ease of use. Errors due to card handling equipment (and people!) are sharply reduced since a several box input deck is reduced to a few cards. Finally, the convenience to the user in submitting jobs should be emphasized (run decks can be hand-carried!).

2.5.1 Use of User's Master File

Functionally, the User's Master File exhibits all of the properties of an Old Problem Tape (ØPTP) which would result if a job were terminated after the NASTRAN preface; only the control cards used are different. Thus the User's Master File (UMF) becomes an alternate source of bulk data input to NASTRAN which may be modified in identically the same way as bulk data is changed during a modified restart. Since the UMF is used as an alternate ØPTP functionally, only one or the other may appear in a run. The UMF, then, is used only for an initial run and may not be used in conjunction with a restart. The checkpoint feature may be used with a UMF run, however, and the resulting New Problem Tape (NPTP) may be used as an ØPTP in a subsequent restart.

In describing the use of the User's Master File, the UMF control cards will be contrasted with their ØPTP counterparts. In place of the setup card for the ØPTP tape (see Chapter 5 of the Programmer's Manual for a discussion of these machine and installation dependent NASTRAN driver control cards), use a setup card for the selected UMF tape. In place of the restart dictionary in the Executive Control Deck, use the card

$$\text{UMF} \quad k_1, k_2$$

described in Section 2.2.1, which selects Bulk Data Deck k_2 from UMF tape k_1 to use in the current execution.

2.5.2 Using the User's Master File Editor

To assist the NASTRAN user in creating and maintaining User's Master Files, an auxiliary NASTRAN preface module, the User's Master File Editor, is provided. The functions performed by the Editor are:

1. Create a New User's Master File (NUMF) from Bulk Data Decks supplied by the user.
2. List and/or punch Bulk Data Decks from an already existing UMF.
3. Edit Bulk Data Decks (which may be modified) from an old UMF onto a new UMF.

Bulk Data Decks must be acceptable to the NASTRAN preface (XSØRT and IFP) to be accepted by the Editor.

The executive control card that causes NASTRAN to execute as the User's Master File Editor is UMFEDIT. When in the Editor mode, NASTRAN executes only the preface. A separate run is required to use a User' Master File generated by the Editor. Preface module UMFEDT, which is where the User's Master File Editor actions occur, reads data cards from the System Input Stream which are used to control Editor activity. Some of these data cards precede the Bulk Data Deck being processed while others follow. The remainder of this section will be devoted to describing these cards and the action caused by them. Section 2.5.3 gives some rules to be followed when making up data cards for the Editor. Several examples will then be given in Section 2.5.4 to illustrate the functions performed by the User's Master File Editor.

Table 1 shows the Editor data cards and describes the action taken for each one. Three classes are described, depending on the tapes used. The cards are free-field format as are the executive control cards and case control cards previously described. The symbolic quantities tid and pid are arbitrarily selected integers chosen by the user who causes the User's Master File to be created.

2.5.3 Rules for the User's Master File Editor

1. The tape identification number, tid, and the problem identification number, pid, are positive integers selected by the user. The only exception to this is that pid may be zero if the card is being used only to specify a value for tid or to indicate a new deck rather than an alter set.
2. The tape identification number, tid, must be the same for all decks on a single UMF.
3. Only one pass is made while either reading the UMF or writing the NUMF. Sequential processing requests are thereby required. This means that the problem identification numbers must form an increasing sequence corresponding to the order of the decks.
4. A corollary to 2 is that a deck to be inserted between two decks on an existing UMF must be given a problem identification number whose value "lies between" the values of the problem identification numbers for the two UMF decks. Thus, an initial numbering sequence such as 10, 20, 30, ... is recommended.
5. Most NASTRAN users develop the habit of "storing" data cards not needed for a given run behind the ENDDATA card where they are normally ignored. This must not be done when using the Editor since it reads data from this position. Data cards following the FINIS card are ignored, however.

2.5.4 Examples of User's Master File Editor Usage

Several examples of User's Master File Editor usage are given in this section. The user is well-advised to study these examples both from the standpoint of understanding the functioning of the Editor and from the standpoint of learning how to use this NASTRAN feature. A symbolic representation of the contents of the UMF and/or NUMF used in each example is given along with an explanation of specific items of interest. These examples illustrate all of the capability of the User's Master File Editor.

Example 1. Create a User's Master File

```
ID  A,B
TIME 1
APP DMAP
BEGIN
END
UMFEDIT
CEND
TITLE = USER'S MASTER FILE CØNTAINS
LABEL = PRØBLEMS 50, 60, ..., 80
ECHØ = BØTH
MAXLINES=50000
BEGIN BULK
    .
    .
ENDDATA
NUMF  21026, 50
BEGIN BULK
    .
    .
    .
ENDDATA
NUMF  21026, 60
    .
    .
    .
    .
    .
BEGIN BULK
    .
    .
    .
ENDDATA
NUMF  21026, 80
FINIS
```

1st Bulk Data Deck

2nd Bulk Data Deck

Last Bulk Data Deck

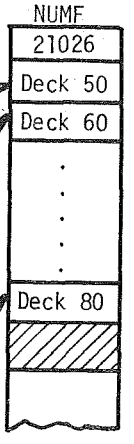

Notes:

1. A tape must be setup for NASTRAN file NUMF.
2. A tape must not be setup for NASTRAN file UMF.
3. The DMAP sequence will not be used but must appear in the Executive Control Deck.
4. ECHØ = BØTH is recommended since the unsorted Bulk Data Deck is available only during the run used to create the User's Master File. The sorted echo is needed in order to make alterations to the bulk data when using the User's Master File in a NASTRAN run.
5. Note that the tape identification number, tid, is the same on all of the NUMF cards.
6. Note that the problem identification numbers, pid, are increasing according to the data deck order.

Example 2. List and/or punch selected decks from a User's Master File

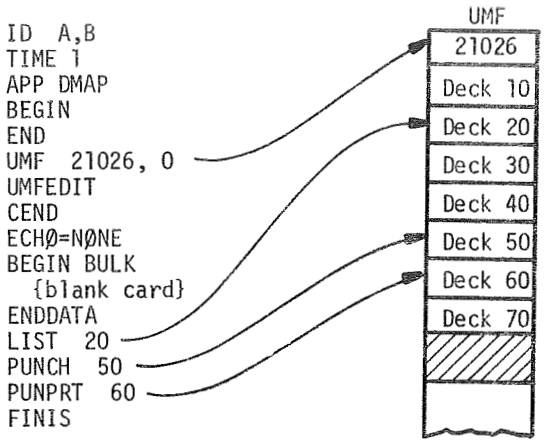

Notes:

1. A tape containing the proper User's Master File must be setup on NASTRAN file UMF.
2. A tape must not be setup for NASTRAN file NUMF.
3. The DMAP sequence will not be used but must appear in the Executive Control Deck.
4. The dummy Bulk Data Deck consisting of a single blank card will not be used but must appear.
5. ECHØ = NØNE is recommended to suppress printout of the dummy Bulk Data Deck. This has no effect on the User's Master File Editor.
6. The zero value of pid on the UMF card is required since only tid is being used in this application.
7. The LIST, PUNCH, and PUNPRT cards must be sequenced such that the pid values form an increasing sequence.
8. The above requests will cause a sorted Bulk Data Deck echo to be made for decks 20 and 60; decks 50 and 60 will be punched.

Example 3. Copy a User's Master File while listing and/or punching selected decks.

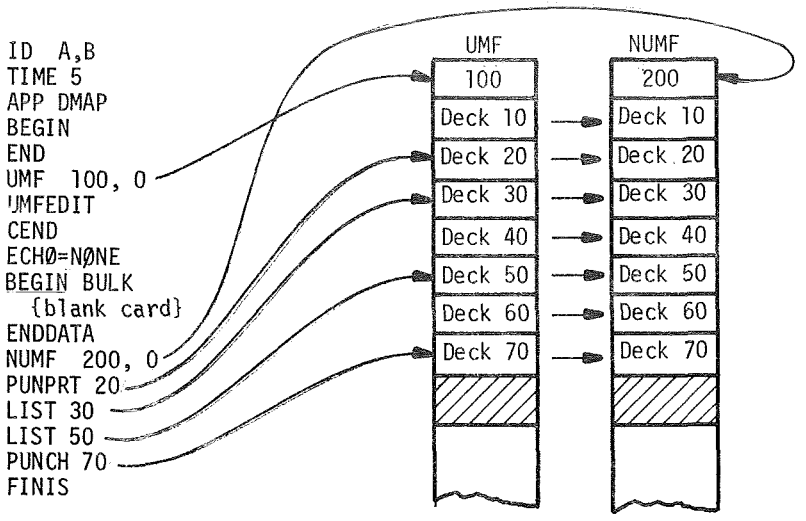

Notes:

1. A tape containing the User's Master File to be copied must be setup on NASTRAN file UMF.
2. A tape must be setup on NASTRAN file NUMF.
3. The DMAP sequence is not used but must appear in the Executive Control Deck.
4. The dummy Bulk Data Deck consisting of a single blank card will not be used but must appear.
5. ECHØ = NØNE is recommended to suppress printout of the dummy Bulk Data Deck. This has no effect on the User's Master File Editor.
6. The zero value of pid on the UMF card is required since only tid is being used in this application.
7. The zero value of pid on the NUMF card is not used. This card is used to specify tid for the NUMF. If the NUMF card were absent, the same tid would be put on the NUMF as existed on the UMF.
8. The LIST, PUNCH, and PUNPRT cards must be sequenced such that the pid values form an increasing sequence.
9. The above requests will cause a sorted Bulk Data Deck echo to be made for decks 20, 30, and 50; decks 20 and 70 will be punched.
10. All of the decks contained on the UMF will be copied onto the NUMF tape. The tape identification number will be different as explained in note 7.

Example 4. Edit a User's Master File

```
ID A,B
TIME 5
APP DMAP
BEGIN
END
UMF  21026, 20
UMFEDIT
CEND
TITLE = MØDIFICATIØN ØF
SUBTITLE = DECKS 20 AND 50
ECHØ = BØTH
BEGIN BULK
  {alter cards for Deck 20}
ENDDATA
NUMF  333, 20
REMØVE 40
UMF  21026, 50
BEGIN BULK
  {alter cards for Deck 50}
ENDDATA
NUMF  333, 55
REMØVE 60
UMF  21026, 0
BEGIN BULK
  {Deck 65}
ENDDATA
NUMF 333, 65
LIST 80
FINIS
```

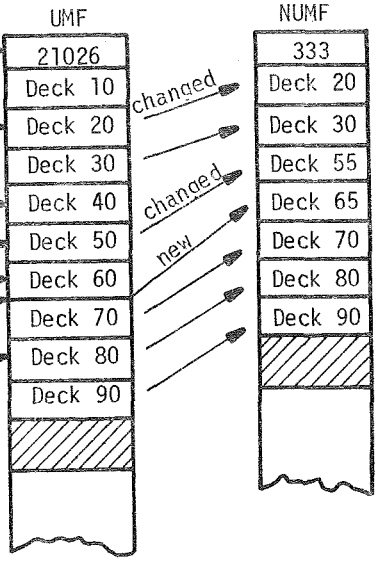

Notes:

1. A tape containing the User's Master File to be edited must be setup on NASTRAN file UMF.

2. A tape must be setup on NASTRAN file NUMF.

3. The DMAP sequence is not used but must appear in the Executive Control Deck.

4. ECHØ = BØTH is recommended since the alter cards are available only during the run used to perform the edit. The sorted echo is needed for those decks being altered in order to make further alterations to the bulk data when using the newly created User's Master File in a NASTRAN run. Decks not being altered will not be echoed as a result of the ECHØ = BØTH card. Such decks may be echoed as they are copied as shown in the example for Deck 80.

5. The pid values must form an increasing sequence.

6. The requests in the above example will cause listings to be generated for deck 80; no decks will be punched.

7. Decks 30, 70, 80, and 90 will be copied onto the NUMF with no changes.

8. Decks 10, 40, and 60 will be removed (i.e., not copied onto the NUMF).

9. Decks 20 and 50 will be modified. In addition the problem identification number of Deck 50 will be changed to 55.

10. Deck 65 will be added.

11. Deck 10 is removed because it appears prior to the first call to the Editor. This may be avoided by using a pid of zero and a dummy Bulk Data Deck as shown in Example 3.

Table 1. User's Master File Editor Control Card Actions.

I. UMF Only is Present

A. FINIS
   1. Terminate run.
B. BEGIN BULK (Not Allowed)
C. REMØVE pid (Not Allowed)
D. LIST pid
   1. Skip UMF forward to pid and list the Bulk Data Deck on the printer.
E. PUNCH pid
   1. Skip UMF forward to pid and punch the Bulk Data Deck on the punch.
F. UMF tid, pid (Not Allowed)
G. NUMF tid, pid (Not Allowed)
H. PUNPRT pid
   1. Skip UMF forward to pid and then list and punch the Bulk Data Deck.

II. NUMF Only is Present

A. FINIS
   1. Write end-of-file on NUMF.
   2. Terminate run.
B. BEGIN BULK
   1. Process the next Bulk Data Deck.
C. REMØVE pid (Not Allowed)
D. LIST pid (Not Allowed)
E. PUNCH pid (Not Allowed)
F. UMF tid, pid (Not Allowed)
G. NUMF tid, pid
   1. If first entry to Editor, write tape identification file on NUMF.
   2. Add preceeding Bulk Data Deck to NUMF and punch UMF card for use with UMF.
H. PUNPRT pid (Not Allowed)

III. Both UMF and NUMF are Present

A. FINIS
   1. Copy any remaining Bulk Data Decks from UMF to NUMF.
   2. Write end-of-file on NUMF.
   3. Terminate run.
B. BEGIN BULK
   1. Process the next Bulk Data Deck which may be a new deck or a modified deck from the UMF.
C. REMØVE pid
   1. Copy UMF onto NUMF up to indicated deck.
   2. Skip indicated deck on UMF.
D. LIST pid
   1. Copy UMF onto NUMF through indicated deck.
   2. List indicated Bulk Data Deck on printer.
E. PUNCH pid
   1. Copy UMF onto NUMF through indicated deck.
   2. Punch indicated Bulk Data Deck on printer.
F. UMF tid, pid
   1. Copy UMF onto NUMF up to indicated deck. (Must be immediately followed by BEGIN BULK card.)
G. NUMF tid, pid
   1. If first entry to Editor, write tape identification file on NUMF.
   2. Copy UMF onto NUMF up to deck with identification greater than pid.
   3. Add preceeding Bulk Data Deck to NUMF and punch UMF card for use with UMF.
H. PUNPRT pid
   1. Copy UMF onto NUMF through indicated deck.
   2. List indicated Bulk Data Deck on printer.
   3. Punch indicated Bulk Data Deck on punch.

2.6 USER GENERATED INPUT

It may happen that a user will want to take a problem previously run on another program and run it using NASTRAN. In many instances, this provides the user with the quickest means of familiarizing himself with NASTRAN since he is running a problem which he understands intimately. Also, he may wish to extend his analysis of some previously analyzed problem into regions which previous programs would not allow. In either event, he is faced with the problem of Input Data conversion.

The simplest way to convert structural model data is to write a small FØRTRAN (or other language) program to read in the data cards composing the input data deck for the previous program and punch a new NASTRAN Bulk Data Deck. Usually, the information is in a one to one correspondence, and this procedure is quite straight forward, requiring only a minimal knowledge of programing. While a large deck of cards may result, by using the User's Master File feature described in Section 2.5, the amount of large deck handling may be minimized.

3.1 GENERAL DESCRIPTION OF RIGID FORMATS

The most general way of using NASTRAN is with a user written Direct Matrix Abstraction Program (DMAP). This procedure permits the user to execute a series of matrix operations of his choice along with any utility modules or executive operations that he may need. The user may even choose to write a module of his own. The rules governing all of these operations are described in Section 5.

In order to relieve the user from the necessity of constructing a DMAP sequence for each of his problems, a number of such sequences have been included in NASTRAN as rigid formats. A rigid format consists of two parts. The first part is a DMAP sequence that is stored in NASTRAN and available to the user by specifying the number of the rigid format on the SØL card in the Executive Control Deck. The second part of a rigid format is a set of restart tables that automatically modify the series of DMAP operations to account for any changes that are made in any part of the Data Deck when making a restart, after having previously run all, or a part of the problem. Without such tables, the user would have to carefully modify his DMAP sequence to account for the conditions surrounding each restart. The chances for error in making these modifications for restart are very great. The restart tables not only relieve the user of the burden of modifying his DMAP sequence, but also assures him of a correct and efficient program execution.

In addition to the DMAP sequence provided with each rigid format, a number of options are available, which are subsets of each complete DMAP sequence. Subsets are selected by specifying the subset number (zero for the complete DMAP sequence) along with the rigid format number on the SØL card in the Executive Control Deck. Besides zero, the following subsets have been provided:

1. Remove all DMAP instructions associated with loop control (all rigid formats except 3 and 5)
2. Remove all DMAP instructions associated with the mode acceleration method of data recovery (rigid formats 11 and 12).
3. A union of subsets 1 and 2.

The removal of instructions associated with loop control assures the Executive System that each module will only be executed once, and that there is no possibility of branching back to a previously executed module. This permits the Executive System to drop files earlier in the execution that would otherwise have to be kept available for possible looping. The appearance of the REPT instruction in the DMAP sequence indicates the possibility of looping. The removal of the DMAP instructions associated with the mode acceleration method of data recovery allows more efficient

restarts. The deletion of operations for each subset is controlled by the restart tables.

If the user wishes to modify the DMAP sequence of a rigid format in some manner not provided for in the available subsets, he can use the ALTER feature described in Section 2. Typical uses are to schedule an EXIT prior to completion, in order to check intermediate output, schedule the printing of a table or matrix for diagnostic purposes, and to delete, or add a functional module to the DMAP sequence. Any DMAP instructions that are added to a rigid format are automatically executed when a restart is performed. The user should be familiar with the rules for DMAP programing, as described in Section 5, prior to making alterations to a rigid format.

The following rigid formats are currently included in NASTRAN:

1. Static Analysis
2. Static Analysis with Inertia Relief
3. Normal Mode Analysis
4. Static Analysis with Differential Stiffness
5. Buckling Analysis
6. Piecewise Linear Analysis
7. Direct Complex Eigenvalue Analysis
8. Direct Frequency and Random Response
9. Direct Transient Response
10. Modal Complex Eigenvalue Analysis
11. Modal Frequency and Random Response
12. Modal Transient Response

3.1.1 Input File Processor

The Input File Processor operates in the Preface prior to the execution of the DMAP operations in the rigid format. A complete description of the operations in the Preface is given in the Programmer's Manual. The main interest here is to indicate the source of data blocks that are created in the Preface and hence appear only as inputs in the DMAP sequences of the rigid formats. None of the data blocks created by the Input File Processor are checkpointed, as they are always regenerated on restart. The Input File Processor is divided into three parts. The first part (IFP1) processes the Case Control Deck, the second part (IFP) processes the Bulk Data Deck, and the third part (IFP3) performs additional processing of the bulk data cards associated with the conical shell element.

IFP1 processes the Case Control Deck and creates the Case Control Data Block (CASECC), the Plot Control Data Block (PCDB), and the XY-Plot Control Data Block (XYCDB). IFP1 also examines all of the cards, except those associated with plotting, for errors in format or use. If errors are detected, they are classed as either fatal or warning, and suitable error messages are provided. Reference to Section 2.3 will assist the user in correcting errors in the Case Control Deck. If the error is fatal, the Executive System will not allow the execution to continue beyond the completion of the Preface.

The Bulk Data Deck is sorted in the Preface, if necessary, before the execution of the second part of the Input File Processor. IFP checks all of the bulk data cards for errors according to the rules given for each card in Section 2.4. If errors are detected, suitable messages are provided to the user. If the error is classed as fatal, the Executive System will not allow the execution to continue beyond the completion of the Preface. IFP creates the data blocks that are input to the various parts of the Geometry Processor (GEØM1, GEØM2, GEØM3 and GEØM4), the Element Properties Table (EPT), the Material Properties Table (MPT), the Element Deformation Table (EDT), and the Direct Input Table (DIT).

The third part of the Input File Processor (IFP3) converts the information on the special conical shell cards (CCØNEAX, FØRCEAX, MØMAX, MPCAX, ØMITAX, PCØNEAX, PØINTAX, PRESAX, RINGAX, SECTAX, SPCAX, SUPAX, and TEMPAX) to reflect the number of harmonics specified by the user on the AXIC card. This converted information is added to any existing information on data blocks GEØM1, GEØM2, GEØM3 and GEØM4.

3.1.2 Functional Modules and Supporting DMAP Operations

The DMAP listings for the twelve rigid formats currently included in NASTRAN are presented in the following sections. The mnemonics for the major functional modules are circled on the DMAP listings for ease of identification. Each major functional module is usually preceeded and/or succeeded by several supporting DMAP operations. Brief descriptions of the operations in the functional modules are given for each of the rigid formats. The complete details for each functional module are given in the Programmer's Manual. Additional information is also given in the Theoretical Manual. The format of a functional module DMAP instruction is given in Section 5.

Many of the executive modules in the following list appear repeatedly in the rigid formats. Since the purpose of many of these operations in a rigid format is obvious, they are frequently

omitted from the descriptions of the DMAP operations in the following sections. More complete descriptions of the executive modules are given in Section 5.

1. BEGIN indicates the beginning of the DMAP sequence constituting the rigid format.

2. FILE makes declarations relative to a particular file.

   ABC = TAPE states that file ABC will be assigned to a physical tape if one is available.

   DEF = APPEND states that file DEF may be extended as the result of an internal loop in the rigid format.

   GHI = SAVE states that file GHI should not be dropped after use as it may be needed for subsequent executions of an internal loop.

3. CHKPNT specifies a list of files to be written on the new problem tape, including files that may have been purged, either because they were not generated in this particular execution or were explicitly purged with a PURGE statement.

4. LABEL specifies a labeled point in the sequence of DMAP instructions. Labels are referenced by REPT, JUMP and CØND instructions.

5. REPT specifies the end of a loop. The variable field contains the label name for the beginning of the loop and the number of times the loop is to be repeated.

6. JUMP specifies an unconditional transfer to the label indicated.

7. CØND specifies a conditional tranfer to the label indicated based on the value of the parameter named. The transfer occurs if the parameter value is negative.

8. SAVE specifies variable parameter values that are to be saved for future use.

9. PURGE specifies the names of files that are conditionally dropped based on the parameter named.

10. EQUIV specifies the names of files that are conditionally equivalenced based on the parameter named.

11. END indicates the end of the DMAP sequence constituting the rigid format and causes a normal termination when executed.

3.1.3 Restart Procedures

Scheduled exits can be requested at any point in a rigid format by means of the ALTER feature. An exit is scheduled by inserting the following cards in the Executive Control Deck:

```
ALTER     K1
EXIT      K2
ENDALTER
```

K1 = DMAP statement number after which exit will take place.

K2 = Number of times EXIT instruction will be skipped before being executed - default is zero. For use with loops, where user wishes to execute the loop K2 times before scheduling the exit.

If the user chooses to restart the problem without making any changes, the Executive System will

execute an unmodified restart following the last completed checkpoint.

Unscheduled exits are usually caused by errors on input cards or errors in the structural model resulting from missing or inconsistent input data. When such errors are detected, an unscheduled exit is performed accompanied with the output of the applicable user error messages. Following the correction of the input data errors, a modified restart can be performed.

Unscheduled exits may also occur because of machine failure or insufficient time allowance. In these cases, an unmodified restart is usually made following the last completed checkpoint. In some cases, where a portion of the problem has been completed, including the output for the completed portion, a modified restart must be made following an unscheduled exit due to insufficient time allowance. These situations are discussed under case control requirements in the sections dealing with the individual rigid formats.

The initial execution of any problem must be made with a complete NASTRAN Data Deck, including all of the bulk data. However, all or part of the bulk data may be assembled from alternate input sources, such as the User's Master File or a module written by the user to generate input. The User's Master File is described in Section 2.5 and user generated input is discussed in Section 2.6.

A New Problem Tape is constructed only when checkpointing (CHKPNT) is requested in the Executive Control Deck. The New Problem Tape should be assigned to a physical tape or other storage device that can be dismounted and saved at the conclusion of the execution. At the completion of an initial execution, the New Problem Tape contains the input deck, with the bulk data in sorted form, and all of the files that were checkpointed during the execution.

For restarts, the Old Problem Tape is defined as the Problem Tape that was written during the previous execution. The New Problem Tape is defined as the Problem Tape written during the current execution, beginning with the restart. At the completion of an unmodified restart the New Problem Tape contains the input deck, with the bulk data in sorted form, all files from the Old Problem Tape that are necessary to complete the solution, and all of the files checkpointed during the current execution. At the completion of a modified restart, the New Problem Tape is similar, except the input deck is modified according to the information submitted for the restart.

For restarts, the Bulk Data Deck consists only of delete cards (see Section 2.4) and new cards which the user wishes to add. The previous Bulk Data Deck is read from the Old Problem

Tape. All other parts of the NASTRAN Data Deck, including the Executive Control Deck, the Case Control Deck, the BEGIN BULK card and the ENDDATA card must be resubmitted even though no changes are made in the control decks and no new bulk data is added. In addition, the RESTART cards punched during the previous execution must be included in the Executive Control Deck. When changing rigid formats, the solution number (SØL) must be changed to the number of the new rigid format.

Any changes in the Case Control Deck associated with bulk data selection or subcase definition, or changes in the Bulk Data Deck, in the form of deletions or additions, mark the restart as being modified. If no such changes are made, the Executive System performs an unmodified restart at the last completed checkpoint. If only changes have been made in the output requests, the restart is considered unmodified. However, some modules preceeding the last completed checkpoint may have to be executed in order to prepare the output.

For modified restarts, a number of previously executed DMAP instructions may have to be re-executed, depending on the nature of the modifications made by the user. The DMAP instructions that need to be executed in a modified restart are automatically determined within the program be comparing all changes made in Case Control cards and Bulk Data cards with the restart tables that are part of each rigid format. In addition, if the previous execution terminated prior to completion on the same rigid format, all DMAP instructions beyond the last completed checkpoint are executed on restart.

Each rigid format includes a two-dimensional restart table. The length of the table is equal to the number of DMAP instructions in the rigid format and the width of the table is arbitrarily set at 155 bit positions. Each restart table is subdivided into the following three parts:

1. Card Name Restart Table - Bit Positions 1-62.
2. Rigid Format Change Restart Table - Bit Positions 63-93
3. File Name Restart Table - Bit Positions 94-154.

See, for example, the restart tables associated with Static Analysis in Sections 3.2.3.3, 3.2.3.4 and 3.2.3.5 respectively. Bit positions 63-74 are associated with rigid formats 1-12 respectively. Bit positions 75-93 are reserved for additional rigid formats. Section 3.2.3.1 indicates the bit positions in the range 1-62 that are currently used in the Card Name Restart Table for Static Analysis. Section 3.2.3.2 indicates the bit positions in the range 94-154 that are currently used in the File Name Restart Table for Static Analysis. Similar tables

exist for the other rigid formats.

Under restart conditions, any deletions or additions to the Bulk Data Deck cause the appropriate bit positions in the range 1-62 of a bit mask to be turned on. For example, if a new FØRCE card were introduced into the Bulk Data Deck on restart of a problem in Static Analysis, bit position 60 would be turned on. Mnemonics in the Card Name Restart Table with $ appended are associated with changes or conditions in the Case Control Deck. For example, SPC$ indicates a change in single-point constraint selection and would turn on bit position 10. PLØT$ indicates the presence of a request for structure plots and would turn on bit position 18.

If the restart is performed on a different rigid format than the previous exection, the bit position associated with the rigid format number for the previous execution is turned on in the bit mask. For example, if the previous execution were Normal Modes Analysis (rigid format number 3), bit number 65 in the mask would be turned on.

Following the preparation of this mask, it is compared with the first two parts of the restart table. Where bit positions that have been turned on in the mask match bit positions in the restart table (indicated by the presence of the units digit for the bit position), the associated DMAP instruction is marked for execution. For example, the addition of a new FØRCE card in Static Analysis (bit position 60) will mark the first three DMAP instructions for exection, GP3 along with the four following instructions, and several instructions near the end of the DMAP sequence, beginning with SSG1. If only the load set number had been changed in the Case Control Deck (LØAD$, bit position 59), GP3 and the four following instructions would not have been marked for execution.

Examination of the Rigid Format Change Restart Tables for Static Analysis indicates that changing from Normal Modes Analysis to Static Analysis (bit position 65) only marks the first three instructions and several instructions associated with data recovery for execution. Actually several other modules need to be executed as a result of the rigid format change. These additional modules will be identified with the aid of the File Name Restart Table.

If the previous operation marks modules for execution requiring files that will not be generated and are not available on the Old Problem Tape, the bit positions for all such files are determined, and reference is made to the File Name Restart Table for a match to determine which DMAP instructions are required to generate the missing files. For example, in a Static Analysis restart, assume that the Static Load Table (SLT) is needed for restart and is not available.

Section 3.2.3.2 indicates that the bit position for this file is 96, and Section 3.2.3.5 indicates that GP3 and the four following DMAP instructions should be executed to generate file SLT. This operation may mark modules for execution that result in further reference to the File Name Restart Table for needed files.

The restart table also contains the information indicating which DMAP instructions should be deleted for particular subsets of the rigid format. This information is arbitrarily placed in the Card Name Restart Table. The deletion of a DMAP instruction is indicated by following it with the symbols $SS with the affected subset numbers on the same line. For example, near the end of the Card Name Table for Static Analysis (Section 3.2.3.3), it is indicated that the DMAP instructions CØND, REPT, JUMP and LABEL are deleted for subsets 1 and 3.

3.1.4 Rigid Format Output

Although most of the rigid format output is optional, some of the printer output is automatic. The printer output is designed for 132 characters per line, with the lines per page controlled by the LINE card in the Case Control Deck. The default is LINE = 50 for 11-inch paper. Optional titles are printed at the top of each page from information in the Case Control Deck. These titles may be defined at the subcase level. The pages are automatically dated and numbered.

The output from data recovery and plot modules is all optional, and its selection is controlled by cards in the Case Control Deck. The details of making selections in the Case Control Deck are described in Section 2.3 for printer and punch output, and in Section 4 for plotter output. Since the outputs from the data recovery and plot modules vary considerably with the rigid format, a list of available output is included in the section on the Case Control Deck for each rigid format. Detail information on the force and stress output available for each element type is given in Section 1.3.

The first part of the output for a NASTRAN run is prepared during the execution of the Preface, prior to the beginning of the DMAP sequence of the rigid format. The following output is either automatically or optionally provided during the execution of the Preface:

1. NASTRAN title page - automatic
2. Executive Control Deck echo - automatic
3. Case Control Deck echo - automatic
4. Unsorted Bulk Data Deck echo - optional, selected in Case Control Deck.

5. Sorted Bulk Data Deck echo - automatic, unless suppressed in the Case Control Deck.

6. DMAP listing - automatic, list of DMAP instructions, including alters, for subset of rigid format being executed.

7. Checkpoint Dictionary - automatic, when operating in checkpoint mode. A printed echo and the punched cards are prepared for additions to the checkpoint dictionary after the execution of each checkpoint.

When making restarts, the following additional output is automatically prepared during the execution of the Preface:

1. Asterisks are placed beside the DMAP statement numbers of all instructions marked for execution by the Card Name Table in the case of modified restarts, and by the Rigid Format Change Table in the case of restarts on different rigid formats.

2. Message indicating the bit position activated by a rigid format change.

3. Table indicating, among other things, the card names and the associated "packed bit positions" activated by modifications in the NASTRAN Data Deck. The reader is referred to the Programmer's Manual for the interpretation of the rest of this table.

4. A list of files, along with the DMAP instructions that were marked for execution by the File Name Table.

5. List of files from the Old Problem Tape, including purged files, used to initiate the restart.

A number of fatal errors are detected by DMAP statements in the various rigid formats. The messages associated with these errors are documented in Section 6.1. These messages indicate the presence of fatal user errors that, either cannot be determined by the functional modules, or they can be more effectively detected by DMAP statements in the rigid format.

NASTRAN diagnostic messages are usually identified by number and documented in Section 6.2. These messages may be either program diagnostics or user diagnostics, and they may contain information, warnings, or an indication of a fatal error. There are also a few unnumbered, self-explanatory messages, for example, the time that the execution of each functional module begins and ends.

The Grid Point Singularity Table (GPST) is automatically output following the execution of the Grid Point Singularity Processor (GPSP) if singularities remain in the stiffness matrix at the grid point level. This table contains all possible combinations of single-point constraints, in the global coordinate system, that can be used to remove the singularities. Entries in this table should only be treated as warnings, because it cannot be determined at the grid point level whether or not the singularities are removed by other means, such as general elements or multi-point constraints. Further information on this matter is given in the Theoretical Manual.

Several items of output are discussed in other sections. Automatic output that is not associated with all of the rigid formats is discussed in the sections treating the individual rigid

formats. Some output is under the control of PARAM cards. These items are discussed in Section 3.1.5. The DIAG card is used to control the printing of some output. A list of the available output under DIAG control is given in the description of the executive control cards in Section 2.2.1.

Any of the matrices or tables that are prepared by the functional modules can be printed by using selected utility modules described in Section 5.3.2. These utility modules can be scheduled at any point in the rigid format by using the ALTER feature. In general, they should be scheduled immediately after the functional module that generates the table or matrix to be printed. However, the user is cautioned to check the calling sequence for the utility module, in order to be certain that all required inputs have been generated prior to this point.

3.1.5 Use of Parameters

Some of the data items and user options are input on PARAM cards. Details on these cards are given in Sections 2.4 and 5.2.1.5. The following is a list of parameter names (field 2 of the PARAM card) that are available to the user:

1. GRDPNT - optional in all rigid formats. A positive integer value of this parameter will cause the Grid Point Weight Generator to be executed. The value of the integer indicates the grid point to be used as a reference point. If the integer is zero or is not a defined grid point, the reference point is taken as the origin of the basic coordinate system. The following weight and balance information is automatically printed following the execution of the Grid Point Weight Generator.

   (1) Reference point.

   (2) Rigid body mass matrix [MO] relative to the reference point in the basic coordinate system.

   (3) Transformation matrix [S] from basic coordinate system to principal mass axes.

   (4) Principal masses and associated centers of gravity.

   (5) Inertia matrix I(S) about the center of gravity relative to the principal mass axes.

   (6) Inertia matrix I(Q) about the center of gravity relative to the principal inertia axes.

2. WTMASS - optional in all rigid formats. The terms of the mass matrix are multiplied by the real value of this parameter when they are generated in SMA2.

3. IRES - optional in all statics problems (rigid formats 1, 2, 4, 5 and 6). A positive integer value of this parameter will cause the printing of the residual vectors following each execution of SSG3.

4. LFREQ and HFREQ - required in all modal formulations of dynamics problems (rigid formats 10, 11 and 12) unless LMØDES is used. The real values of these parameters give the frequency range (LFREQ is lower limit and HFREQ is upper limit) of the modes to be used in the modal formulation.

5. LMØDES - required in all modal formulations of dynamics problems (rigid formats 10, 11 and 12) unless LFREQ and HFREQ are used. The real value of this parameter is the number of lowest modes to be used in the modal formulation.

6. G - optional in the direct formulation of all dynamics problems (rigid formats 7, 8 and 9). The real value of this parameter is used as a uniform structural damping coefficient in the direct formulation of dynamics problems.

7. W3 and W4 - optional in the direct formulation of Transient Response problems. The real values of these parameters are used as pivotal frequencies for uniform structural damping and element structural damping respectively.

8. MØDACC - optional in the modal formulation of Frequency Response and Transient Response Problems. A positive integer value of this parameter causes the Dynamic Data Recovery module to use the mode acceleration method.

9. CØUPMASS - optional in all rigid formats. A positive integer value of this parameter will cause the generation of coupled mass matrices rather than lumped mass matrices for all bar elements, rod elements, and plate elements that include bending stiffness. This option applies to both structural and nonstructural mass for the following elements: BAR, CØNRØD, QUAD1, QUAD2, RØD, TRIA1, TRIA2, TUBE. Since structural mass is not defined for the following list of elements, the option applies only to the nonstructural mass: QDPLT, TRBSC, TRPLT.

3.2 STATIC ANALYSIS

3.2.1 DMAP Sequence for Static Analysis

```
RIGID FORMAT 1

   N A S T R A N  S O U R C E  P R O G R A M  C O M P I L A T I O N
DMAP-DMAP INSTRUCTION
NO.

  1  BEGIN     NO.1 STATICS ANALYSIS - SERIES L $

  2  FILE      LLL=TAPE $

  3  FILE      QG=APPEND/PGG=APPEND/UGV=APPEND/GM=SAVE/KNN=SAVE $

  4  GP1       GEOM1,GEOM2,/GPL,EQEXIN,GPDT,CSTM,BGPDT,SIL/V,N,LUSET/ C,N,123/
               V,N,NOGPDT $

  5  SAVE      LUSET$

  6  CHKPNT    GPL,EQEXIN,GPDT,CSTM,BGPDT,SIL $

  7  GP2       GEOM2,EQEXIN/ECT $

  8  CHKPNT    ECT $

  9  PLTSET    PCDB,EQEXIN,ECT/PLTSETX,PLTPAR,GPSETS,ELSETS/V,N,NSIL/ V,N,
               JUMPPLOT $

 10  SAVE      NSIL,JUMPPLOT $

 11  PRTMSG    PLTSETX//$

 12  CHKPNT    PLTPAR,GPSETS,ELSETS $

 13  SETVAL    //V,N,PLTFLG/C,N,1/V,N,PFILE/C,N,0 $

 14  SAVE      PLTFLG,PFILE $

 15  COND      P1,JUMPPLOT $

 16  PLOT      PLTPAR,GPSETS,ELSETS,CASECC,BGPDT,EQEXIN,SIL,,/PLOTX1/ V,N,
               NSIL/V,N,LUSET/V,N,JUMPPLOT/V,N,PLTFLG/V,N,PFILE $

 17  SAVE      JUMPPLOT,PLTFLG,PFILE $

 18  PRTMSG    PLOTX1//$

 19  LABEL     P1$

 20  GP3       GEOM3,EQEXIN,GEOM2/SLT,GPTT/C,N,123/V,N,NOGRAV/C,N,123 $

 21  SAVE      NOGRAV$

 22  PARAM     //C,N,AND/V,N,SKPMGG/V,N,NOGRAV/V,Y,GRDPNT$

 23  PURGE     MGG/SKPMGG$

 24  CHKPNT    SLT,GPTT,MGG $
```

```
RIGID FORMAT DMAP LISTING
SERIES L

RIGID FORMAT 1

   N A S T R A N  S O U R C E  P R O G R A M  C O M P I L A T I O N
DMAP=DMAP INSTRUCTION
NO.

25  (TA1,)     ,ECT,EPT,BGPDT,SIL,GPTT,CSTM/EST,,GEI,ECPT,GPCT/V,N,LUSET/ C,N,
               123/V,N,NOSIMP/C,N,0/V,N,NOGENL/V,N,GENEL $

26  SAVE       NOSIMP,NOGENL,GENEL $

27  PARAM      //C,N,AND/V,N,NOELMT/V,N,NOGENL/V,N,NOSIMP $

28  COND       ERROR4,NOELMT $

29  PURGE      GPST/NOSIMP/OGPST/GENEL $

30  CHKPNT     EST,ECPT,GPCT,GEI,GPST,OGPST $

31  COND       LBL1,NOSIMP$

32  (SMA1)     CSTM,MPT,ECPT,GPCT, DIT/KGGX,,GPST/V,N,NOGENL/V,N,NOK4GG $

33  CHKPNT     GPST,KGGX $

34  COND       LBL1,SKPMGG$

35  (SMA2)     CSTM,MPT,ECPT,GPCT,DIT/MGG,/V,Y,WTMASS=1.0/V,N,NOMGG/V,N,NOBGG/
               V,Y,CØUPMASS=-1 $

36  SAVE       NOMGG$

37  CHKPNT     MGG $

38  COND       LBL1,GRDPNT$

39  COND       ERROR2,NOMGG$

40  (GPWG)     BGPDT,CSTM,EQEXIN,MGG/OGPWG/V,Y,GRDPNT=-1/V,Y,WTMASS$

41  OFP        OGPWG,,,,,//V,N,CARDNO $

42  SAVE       CARDNO $

43  LABEL      LBL1 $

44  EQUIV      KGGX,KGG/NOGENL $

45  CHKPNT     KGG $

46  COND       LBL11A,NOGENL $

47  (SMA3)     GEI,KGGX/KGG/V,N,LUSET/V,N,NOGENL/V,N,NOSIMP $

48  CHKPNT     KGG $

49  LABEL      LBL11A $

50  PARAM      //C,N,MPY/V,N,NSKIP/C,N,0/C,N,0 $
```

```
RIGID FORMAT DMAP LISTING
SERIES L

RIGID FORMAT 1

   N A S T R A N  S O U R C E  P R O G R A M  C O M P I L A T I O N
DMAP-DMAP INSTRUCTION
NO.

 51   JUMP      LBL11 $

 52   LABEL     LBL11 $

 53   GP4       CASECC,GEOM4,EQEXIN,SIL,GPDT/RG,YS,USET/V,N,LUSET/V,N,MPCF1/ V,
                N,MPCF2/V,N,SINGLE/V,N,OMIT/V,N,REACT/V,N,NSKIP/V,N,REPEAT/ V,
                N,NOSET/V,N,NOL/V,N,NOA $

 54   SAVE      MPCF1,MPCF2,SINGLE,OMIT,REACT,NSKIP,REPEAT,NOSET,NOL,NOA $

 55   COND      ERROR3,NOL $

 56   PARAM     //C,N,AND/V,N,NOSR/V,N,SINGLE/V,N,REACT $

 57   PURGE     KRR,KLR,QR,DM/REACT/ GM/MPCF1/ GO,KOOB,LOO,UOO,PO,UOOV,RUOV/
                OMIT/PS,KFS,KSS/SINGLE/QG/NOSR $

 58   EQUIV     KGG,KNN/MPCF1 $

 59   CHKPNT    KRR,KLR,QR,DM,GM,GO,KOOB,LOO,UOO,PO,UOOV,QG,PS,KFS,KSS,USET,
                RG,YS,RUOV,KNN $

 60   COND      LBL4,GENEL $

 61   GPSP      GPL,GPST,USET,SIL/OGPST $

 62   OFP       OGPST,,,,,//V,N,CARDNO $

 63   SAVE      CARDNO $

 64   LABEL     LBL4 $

 65   COND      LBL2,MPCF2 $

 66   MCE1      USET,RG/GM $

 67   CHKPNT    GM $

 68   MCE2      USET,GM,KGG,,,/KNN,,, $

 69   CHKPNT    KNN$

 70   LABEL     LBL2 $

 71   EQUIV     KNN,KFF/SINGLE $

 72   CHKPNT    KFF $

 73   COND      LBL3,SINGLE $

 74   SCE1      USET,KNN,,,/KFF,KFS,KSS,,, $

 75   CHKPNT    KFS,KSS,KFF$
```

```
RIGID FORMAT DMAP LISTING
SERIES L

RIGID FORMAT 1

   N A S T R A N  S O U R C E  P R O G R A M  C O M P I L A T I O N
DMAP-DMAP INSTRUCTION
NO.

 76  LABEL     LBL3 $

 77  EQUIV     KFF,KAA/OMIT $

 78  CHKPNT    KAA $

 79  COND      LBL5,OMIT $

 80  SMP1      USET,KFF,,,/GO,KAA,KOOB,LOO,UOO,,,,, $

 81  CHKPNT    GO,KAA,KOOB,LOO,UOO$

 82  LABEL     LBL5 $

 83  EQUIV     KAA,KLL/REACT $

 84  CHKPNT    KLL$

 85  COND      LBL6,REACT $

 86  RBMG1     USET,KAA,/KLL,KLR,KRR,,, $

 87  CHKPNT    KLL,KLR,KRR$

 88  LABEL     LBL6 $

 89  RBMG2     KLL/LLL,ULL $

 90  CHKPNT    ULL,LLL$

 91  COND      LBL7,REACT $

 92  RBMG3     LLL,ULL,KLR,KRR/DM $

 93  CHKPNT    DM$

 94  LABEL     LBL7 $

 95  SSG1      SLT,BGPDT,CSTM,SIL,EST,MPT,GPTT,EDT,MGG,CASECC,DIT/PG/V,N,
               LUSET/V,N,NSKIP $

 96  CHKPNT    PG $

 97  EQUIV     PG,PL/NOSET $

 98  CHKPNT    PL $

 99  COND      LBL10,NOSET $

100  SSG2      USET,GM,YS,KFS,GO,DM,PG/QR,PO,PS,PL $

101  CHKPNT    QR,PO,PS,PL $
```

```
 RIGID FORMAT DMAP LISTING
 SERIES L

 RIGID FORMAT 1

    N A S T R A N  S O U R C E  P R O G R A M  C O M P I L A T I O N
DMAP-DMAP INSTRUCTION
 NO.

102   LABEL     LBL10 $

103   (SSG3)    LLL,ULL,KLL,PL,LOO,UOO,KOOB,PO/ULV,UOOV,RULV,RUOV/ V,N,OMIT/V,
                Y,IRES=-1 $

104   CHKPNT    ULV,UOOV,RULV,RUOV$

105   COND      LBL9,IRES$

106   MATGPR    GPL,USET,SIL,RULV//C,N,L $

107   MATGPR    GPL,USET,SIL,RUOV//C,N,O $

108   LABEL     LBL9$

109   (SDR1)    USET,PG,ULV,UOOV,YS,GO,GM,PS,KFS,KSS,QR/UGV,PGG,QG/V,N,NSKIP/
                C,N,STATICS$

110   CHKPNT    UGV,PGG$

111   COND      LBL8,REPEAT $

112   REPT      LBL11,100$

113   JUMP      ERROR1$

114   LABEL     LBL8 $

115   CHKPNT    QG $

116   (SDR2)    CASECC,CSTM,MPT,DIT,EQEXIN,SIL,GPTT,EDT,BGPDT,PGG,QG,UGV,EST,/
                OPG1,OQG1,OUGV1,OES1,OEF1,PUGV1/C,N,STATICS $

117   OFP       OUGV1,OPG1,OQG1,OEF1,OES1,//V,N,CARDNO $

118   SAVE      CARDNO $

119   COND      P2,JUMPPLOT $

120   (PLOT)    PLTPAR,GPSETS,ELSETS,CASECC,BGPDT,EQEXIN,SIL,PUGV1, / PLOTX2/V,
                N,NSIL/V,N,LUSET/V,N,JUMPPLOT/V,N,PLTFLG/V,N,PFILE $

121   PRTMSG    PLOTX2// $

122   LABEL     P2 $

123   JUMP      FINIS$

124   LABEL     ERROR1$

125   PRTPARM   //C,N,-1/C,N,STATICS$

126   LABEL     ERROR2$
```

```
 RIGID FORMAT DMAP LISTING
 SERIES L

 RIGID FORMAT 1

    N A S T R A N  S O U R C E  P R O G R A M  C O M P I L A T I O N
DMAP-DMAP INSTRUCTION
 NO.

127   PRTPARM   //C,N,-2/C,N,STATICS$

128   LABEL     ERROR3 $

129   PRTPARM   //C,N,-3/C,N,STATICS $

130   LABEL     ERROR4 $

131   PRTPARM   //C,N,-4/C,N,STATICS $

132   LABEL     FINIS$

133   END       $
```

3.2.2 Description of DMAP Operations for Static Analysis

4. GP1 generates coordinate system transformation matrices, tables of grid point locations, and tables for relating internal and external grid point numbers.

7. GP2 generates Element Connection Table with internal indices.

9. PLTSET transforms user input into a form used to drive structure plotter.

11. PRTMSG prints error messages associated with structure plotter.

15. Go to DMAP No. 19 if no undeformed structure plot request.

16. PLØT generates all requested undeformed structure plots.

18. PRTMSG prints plotter data and engineering data for each undeformed plot generated.

20. GP3 generates Static Loads Table and Grid Point Temperature Table.

25. TA1 generates element tables for use in matrix assembly and stress recovery.

28. Go to DMAP No. 130 and print error message if no elements have been defined.

31. Go to DMAP No. 43 if there are no structural elements.

32. SMA1 generates stiffness matrix $[K^{X}_{gg}]$ and Grid Point Singularity Table.

34. Go to DMAP No. 43 if no gravity loads and no weight and balance request.

35. SMA2 generates mass matrix $[M_{gg}]$.

38. Go to DMAP No. 43 if no weight and balance request.

39. Go to DMAP No. 126 and print error message if no mass matrix exists.

40. GPWG generates weight and balance information.

41. ØFP formats weight and balance information and places it on the system output file for printing.

44. Equivalence $[K^{X}_{gg}]$ to $[K_{gg}]$ if no general elements.

46. Go to DMAP No. 49 if no general elements.

47. SMA3 adds general elements to $[K^{X}_{gg}]$ to obtain stiffness matrix $[K_{gg}]$.

51. Go to next DMAP instruction if cold start or modified restart. LBL11 will be altered by the Executive System to the proper location inside the loop for unmodified restarts within the loop.

52. Beginning of Loop for additional constraint sets.

53. GP4 generates flags defining members of various displacement sets (USET), forms multipoint constraint equations $[R_g]\{u_g\} = 0$ and forms enforced displacement vector $\{Y_s\}$.

55. Go to DMAP No. 128 and print error message if no independent degrees of freedom are defined.

58. Equivalence $[K_{gg}]$ to $[K_{nn}]$ if no multipoint constraints.

60. Go to DMAP No. 64 if general elements present.

61. GPSP determines if possible grid point singularities remain.

62. ØFP formats the table of possible grid point singularities and places it on the system output file for printing.

65. Go to DMAP No. 70 if MCE1 and MCE2 have already been executed for current set of multipoint constraints.

66. MCE1 partitions multipoint constraint equations $[R_g] = [R_m \mid R_n]$ and solves for multipoint constraint transformation matrix $[G_m] = -[R_m]^{-1}[R_n]$.

68. MCE2 partitions stiffness matrix

$$[K_{gg}] = \left[\begin{array}{c|c} \bar{K}_{nn} & K_{nm} \\ \hline K_{mn} & K_{mm} \end{array}\right]$$

and performs matrix reduction

$$[K_{nn}] = [\bar{K}_{nn}] + [G_m^T][K_{mn}] + [K_{mn}^T][G_m] + [G_m^T][K_{mm}][G_m] .$$

71. Equivalence $[K_{nn}]$ to $[K_{ff}]$ if no single-point constraints.

73. Go to DMAP No. 76 if no single-point constraints.

74. SCE1 partitions out single-point constraints

$$[K_{nn}] = \left[\begin{array}{c|c} K_{ff} & K_{fs} \\ \hline K_{sf} & K_{ss} \end{array}\right] .$$

77. Equivalence $[K_{ff}]$ to $[K_{aa}]$ if no omitted coordinates.

79. Go to DMAP No. 82 if no omitted coordinates.

80. SMP1 partitions constrained stiffness matrix

$$[K_{ff}] = \left[\begin{array}{c|c} \bar{K}_{aa} & K_{ao} \\ \hline K_{oa} & K_{oo} \end{array}\right] ,$$

solves for transformation matrix $[G_o] = -[K_{oo}]^{-1}[K_{oa}]$

and performs matrix reduction $[K_{aa}] = [\bar{K}_{aa}] + [K_{oa}^T][G_o]$.

83. Equivalence $[K_{aa}]$ to $[K_{\ell\ell}]$ if no free-body supports.

85. Go to DMAP No. 88 if no free-body supports.

86. RBMG1 partitions out-free body supports

$$[K_{aa}] = \left[\begin{array}{c|c} K_{\ell\ell} & K_{\ell r} \\ \hline K_{r\ell} & K_{rr} \end{array}\right] .$$

89. RBMG2 decomposes constrained stiffness matrix $[K_{\ell\ell}] = [L_{\ell\ell}][U_{\ell\ell}]$.

91. Go to DMAP No. 94 if no free-body supports.

92. RBMG3 forms rigid body transformation matrix

$$[D] = -[K_{\ell\ell}]^{-1}[K_{\ell r}] \quad ,$$

calculates rigid body check matrix

$$[X] = [K_{rr}] + [K_{\ell r}^T][D] \quad ,$$

and calculates rigid body error ratio

$$\varepsilon = \frac{||X||}{||K_{rr}||} \quad .$$

95. SSG1 generates static load vectors $\{P_g\}$.

97. Equivalence $\{P_g\}$ to $\{P_\ell\}$ if no constraints applied.

100. SSG2 applies constraints to static load vectors

$$\{P_g\} = \left\{\begin{array}{c}\bar{P}_n \\ \hline P_m\end{array}\right\} \quad , \qquad \{P_n\} = \{\bar{P}_n\} + [G_m^T]\{P_m\} \quad ,$$

$$\{P_n\} = \left\{\begin{array}{c}\bar{P}_f \\ \hline P_s\end{array}\right\} \quad , \qquad \{P_f\} = \{\bar{P}_f\} - [K_{fs}]\{Y_s\} \quad ,$$

$$\{P_f\} = \left\{\begin{array}{c}\bar{P}_a \\ \hline P_o\end{array}\right\} \quad , \qquad \{P_a\} = \{\bar{P}_a\} + [G_o^T]\{P_o\} \quad ,$$

$$\{P_a\} = \left\{\begin{array}{c}P_\ell \\ \hline P_r\end{array}\right\}$$

and calculates determinate forces of reaction $\{q_r\} = -\{P_r\} - [D^T]\{P_\ell\}$.

103. SSG3 solves for displacements of independent coordinates

$$\{u_\ell\} = [K_{\ell\ell}]^{-1}\{P_\ell\} ,$$

solves for displacements of omitted coordinates

$$\{u_o^o\} = [K_{oo}]^{-1}\{P_o\} ,$$

calculates residual vector (RULV) and residual vector error ratio for independent coordinates

$$\{\delta P_\ell\} = \{P_\ell\} - [K_{\ell\ell}]\{u_\ell\} ,$$

$$\varepsilon_\ell = \frac{\{u_\ell^T\}\{\delta P_\ell\}}{\{P_\ell^T\}\{u_\ell\}}$$

and calculates residual vector (RUØV) and residual vector error ratio for omitted coordinates

$$\{\delta P_o\} = \{P_o\} - [K_{oo}]\{u_o^o\} ,$$

$$\varepsilon_o = \frac{\{u_o^T\}\{\delta P_o\}}{\{P_o^T\}\{u_o^o\}}$$

105. Go to DMAP No. 108 if residual vectors are not to be printed.

106. MATGPR prints the residual vector for independent coordinates (RULV)

107. MATGPR prints the residual vector for omitted coordinates (RUØV).

109. SDR1 recovers dependent displacements

$$\begin{Bmatrix} u_\ell \\ \hline u_r \end{Bmatrix} = \{u_a\} , \qquad \{u_o\} = [G_o]\{u_a\} + \{u_o^o\} ,$$

$$\begin{Bmatrix} u_a \\ \hline u_o \end{Bmatrix} = \{u_f\} , \qquad \begin{Bmatrix} u_f \\ \hline Y_s \end{Bmatrix} = \{u_n\} ,$$

$$\{u_m\} = [G_m]\{u_n\} , \qquad \begin{Bmatrix} u_n \\ \hline u_m \end{Bmatrix} = \{u_g\} ,$$

and recovers single-point forces of constraint

$$\{q_s\} = -\{P_s\} + [K_{fs}^T]\{u_f\} + [K_{ss}]\{Y_s\}.$$

111. Go to DMAP No. 114 if all constraint sets have been processed.

112. Go to DMAP No. 52 if additional sets of constraints need to be processed.

113. Go to DMAP No. 124 and print error message if number of loops exceeds 100.

116. SDR2 calculates element forces and stresses (ØES1, ØEF1) and prepares load vectors, displacement vectors and single-point forces of constraint for output (ØPG1, ØUGV1, PUGV1, ØUG1).

117. ØFP formats tables prepared by SDR2 and places them on the system output file for printing.

119. Go to DMAP No. 122 if no deformed structure plots are requested.

120. PLØT generates all requested deformed structure plots.

121. PRTMSG prints plotter data and engineering data for each deformed plot generated.

123. Go to DMAP No. 132 and make normal exit.

125. STATIC ANALYSIS ERRØR MESSAGE NØ. 1 - ATTEMPT TØ EXECUTE MØRE THAN 100 LØØPS.

127. STATIC ANALYSIS ERRØR MESSAGE NØ. 2 - MASS MATRIX REQUIRED FØR WEIGHT AND BALANCE CALCULATIONS.

129. STATIC ANALYSIS ERRØR MESSAGE NØ. 3 - NØ INDEPENDENT DEGREES ØF FREEDØM HAVE BEEN DEFINED.

131. STATIC ANALYSIS ERRØR MESSAGE NØ. 4 - NØ ELEMENTS HAVE BEEN DEFINED.

3.2.3 Restart Tables for Static Analysis

3.2.3.1 Bit Positions for Card Name Restart Table.

Card Name	Bit Pos.	Card Name	Bit Pos.	Card Name	Bit Pos.
AXIC	1	CTUBE	2	SPCADD	10
CELAS1	1	CTWIST	2	SPCAX	10
CELAS2	1	PBAR	3	SPC$	10
CELAS3	1	PBEAM	3	ØMIT	11
CELAS4	1	PCØNEAX	3	ØMIT1	11
CMASS1	1	PQDMEM	3	ØMITAX	11
CMASS2	1	PQDPLT	3	SUPAX	12
CMASS3	1	PQUAD1	3	SUPØRT	12
CMASS4	1	PQUAD2	3	TEMP	13
CØRD1C	1	PRØD	3	TEMPAX	13
CØRD1R	1	PSHEAR	3	TEMPD	13
CØRD1S	1	PTØRDRG	3	WTMASS	14
CØRD2C	1	PTRBSC	3	GRDPNT	15
CØRD2R	1	PTRIA1	3	PLØTEL	16
CØRD2S	1	PTRIA2	3	IRES	17
GRDSET	1	PTRMEM	3	PLØT$	18
GRID	1	PTRPLT	3	PØUT$	19
PØINTAX	1	PTUBE	3	LØØP$	22
RINGAX	1	PTWIST	3	LØØP1$	23
SECTAX	1	GENEL	4	CØUPMASS	24
SEQGP	1	CØNM1	5	DEFØRM	59
SPØINT	1	CØNM2	5	DEFØRM$	59
BARØR	2	PELAS	6	LØAD$	59
BEAMØR	2	PMASS	7	RFØRCE$	59
CBAR	2	MAT1	8	FØRCE	60
CBEAM	2	MAT2	8	FØRCE1	60
CCØNEAX	2	MAT3	8	FØRCE2	60
CØNRØD	2	MATT1	8	FØRCEAX	60
CQDMEM	2	MATT2	8	LØAD	60
CQDPLT	2	MATT3	8	MØMAX	60
CQUAD1	2	TABLEM1	8	MØMENT	60
CQUAD2	2	TABLEM2	8	MØMENT1	60
CRØD	2	TABLEM3	8	MØMENT2	60
CSHEAR	2	TABLEM4	8	PLØAD	60
CTØRDRG	2	TEMPMT$	8	PLØAD1	60
CTRAPRG	2	TEMPMX$	8	PLØAD2	60
CTRBSC	2	MPC	9	PRESAX	60
CTRIA1	2	MPCADD	9	RFØRCE	60
CTRIA2	2	MPCAX	9	SLØAD	60
CTRIARG	2	MPC$	9	GRAV	61
CTRMEM	2	SPC	10	TEMPLD$	62
CTRPLT	2	SPC1	10		

3.2.3.2 Bit Positions for File Name Restart Table

File Name	Bit Pos.	File Name	Bit Pos.
BGPDT	94	KLL	107
CSTM	94	KLR	107
EQEXIN	94	KRR	107
GPDT	94	LLL	108
GPL	94	ULL	108
SIL	94	DM	109
ECT	95	PG	110
GPTT	96	PL	111
SLT	96	PØ	111
ECPT	97	PS	111
EST	97	QR	111
GEI	97	RULV	112
GPCT	97	RUØV	112
GPST	98	ULV	112
KGGX	98	UØØV	112
MGG	99	PGG	113
KGG	100	QG	113
RG	101	UGV	113
USET	101	ØEF1	114
YS	101	ØES1	114
ØGPST	102	ØPG1	114
GM	103	ØQG1	114
KNN	104	ØUGV1	114
KFF	105	PUGV1	114
KFS	105		
KSS	105		
GØ	106		
KAA	106		
KØØB	106		
LØØ	106		
UØØ	106		

3.2.3.3 Card Name Restart Table

DMAP Inst.	Bit Position 1	10	20	30	40	50	60
BEGIN	12345678901234567	89	234				9012
FILE	12345678901234567	89	234				9012
FILE	12345678901234567	89	234				9012
$SS	1 3						
GP1	1						
SAVE	1						
CHKPNT	1						
GP2	12 45	6					
CHKPNT	12 45	6					
PLTSET		8					
SAVE		8					
PRTMSG		8					
CHKPNT		8					
SETVAL		8					
SAVE		8					
COND		8					
PLOT		8					
SAVE		8					
PRTMSG		8					
LABEL		8					
GP3	12	3					C1
SAVE	12	3					C1
PARAM	12	3 5					C1
PURGE	12	3 5					C1
CHKPNT	12	3 5					C1
TA1,	1234567						
SAVE	1234567						
PARAM	1234567						
COND	1234567						
PURGE	1234567						
CHKPNT	1234567						
COND	123 5678	45					1
SMA1	123 6 8						
CHKPNT	123 6 8						
COND	123 5 78	45	4				1
SMA2	123 5 78	45	4				1
SAVE	123 5 78	45	4				1
CHKPNT	123 5 78	45	4				1
COND	123 5 78	45					
COND	123 5 78	45					
GPWG	123 5 78	45					
OFP	123 5 78	45					
SAVE	123 5 78	45	4				1
LABEL	123 5 78	45					1
EQUIV	123 6 8						
CHKPNT	123 6 8						
COND	1234 6 8						
SMA3	1234 6 8						
CHKPNT	1234 6 8						
LABEL	1234 6 8						
PARAM		9012	23				
JUMP			23				
$SS	1 3						
LABEL			23				
GP4	1	9012	23				
SAVE	1	9012	23				
COND	1	9012	23				

DMAP Inst.	Bit Position 1 10 20 30 40 50 60
PARAM	1 9012 23
PURGE	1 9012 23
EQUIV	1234 6 89 23
CHKPNT	1 9 23
COND	123 6 8 0 23
GPSP	123 6 8 0 23
OFP	123 6 8 0 23
SAVE	123 6 8 0 23
LABEL	123 6 8 0 23
COND	1234 6 89 23
MCE1	1 9 23
CHKPNT	1 9 23
MCE2	1234 6 89 23
CHKPNT	1234 6 89 23
LABEL	1234 6 89 23
EQUIV	1234 6 890 23
CHKPNT	1234 6 890 23
COND	1234 6 890 23
SCE1	1234 6 890 23
CHKPNT	1234 6 890 23
LABEL	1234 6 890 23
EQUIV	1234 6 8901 23
CHKPNT	1234 6 8901 23
COND	1234 6 8901 23
SMP1	1234 6 8901 23
CHKPNT	1234 6 8901 23
LABEL	1234 6 8901 23
EQUIV	1234 6 89012 23
CHKPNT	1234 6 89012 23
COND	1234 6 89012 23
RBMG1	1234 6 89012 23
CHKPNT	1234 6 89012 23
LABEL	1234 6 89012 23
RBMG2	1234 6 89012 23
CHKPNT	1234 6 89012 23
COND	1234 6 89012 23
RBMG3	1234 6 89012 23
CHKPNT	1234 6 89012 23
LABEL	1234 6 89012 23
SSG1	123 5678 23 9012
CHKPNT	123 5678 23 9012
EQUIV	123 56789012 23 9012
CHKPNT	123 56789012 23 9012
COND	123 56789012 23 9012
SSG2	123 56789012 23 9012
CHKPNT	123 56789012 23 9012
LABEL	123 56789012 23 9012
SSG3	123456789012 23 9012
CHKPNT	123456789012 23 9012
COND	123456789012 7 23 9012
MATGPR	123456789012 7 23 9012
MATGPR	123456789012 7 23 9012
LABEL	123456789012 7 23 9012
SDR1	123456789012 23 9012
CHKPNT	123456789012 23 9012
COND	23
$SS	1 3

DMAP Inst.	Bit Position 1 10 20 30 40 50 60
REPT	23
$SS	1 3
JUMP	23
$SS	1 3
LABEL	23
$SS	1 3
CHKPNT	123456789012 89012
SDR2	89
OFP	9
SAVE	9
COND	8
PLOT	8
PRTMSG	8
LABEL	8
JUMP	12345678901234567 89 234 9012
LABEL	12345678901234567 89 234 9012
$SS	1 3
PRTPARM	12345678901234567 89 234 9012
$SS	1 3
LABEL	12345678901234567 89 234 9012
PRTPARM	12345678901234567 89 234 9012
LABEL	12345678901234567 89 234 9012
PRTPARM	12345678901234567 89 234 9012
LABEL	12345678901234567 89 234 9012
PRTPARM	12345678901234567 89 234 9012
LABEL	12345678901234567 89 234 9012
END	12345678901234567 89 234 9012

3.2.3.4 Rigid Format Change Restart Table

DMAP Inst.	Bit Position 64 70 80
BEGIN	4567890 1234
FILE	4567890 1234
FILE	4567890 1234
GP1	
SAVE	
CHKPNT	
GP2	
CHKPNT	
PLTSET	
SAVE	
PRTMSG	
CHKPNT	
SETVAL	
SAVE	
COND	
PLOT	
SAVE	
PRTMSG	
LABEL	
GP3	
SAVE	
PARAM	
PURGE	
CHKPNT	
TA1,	
SAVE	
PARAM	4567890 1234
COND	4567890 1234
PURGE	
CHKPNT	
COND	
SMA1	
CHKPNT	
COND	
SMA2	
SAVE	
CHKPNT	
COND	
COND	
GPWG	
OFP	
SAVE	
LABEL	
EQUIV	
CHKPNT	
COND	
SMA3	
CHKPNT	
LABEL	
PARAM	
JUMP	
LABEL	
GP4	
SAVE	
COND	4567890 1234
PARAM	
PURGE	

DMAP Inst.	Bit Position 64 70 80
EQUIV	
CHKPNT	
COND	
GPSP	
OFP	
SAVE	
LABEL	
COND	
MCE1	
CHKPNT	
MCE2	
CHKPNT	
LABEL	
EQUIV	
CHKPNT	
COND	
SCE1	
CHKPNT	
LABEL	
EQUIV	
CHKPNT	
COND	
SMP1	
CHKPNT	
LABEL	
EQUIV	
CHKPNT	
COND	
RBMG1	
CHKPNT	
LABEL	
RBMG2	
CHKPNT	
COND	
RBMG3	
CHKPNT	
LABEL	
SSG1	
CHKPNT	
EQUIV	
CHKPNT	
COND	
SSG2	
CHKPNT	
LABEL	
SSG3	4
CHKPNT	4
COND	4567890 1234
MATGPR	4567890 1234
MATGPR	4567890 1234
LABEL	4567890 1234
SDR1	4567890 1234
CHKPNT	4567890 1234
COND	4567890 1234
REPT	4567890 1234
JUMP	4567890 1234
LABEL	4567890 1234

DMAP Inst.	Bit Position 64 70 80
CHKPNT	45678901234
SDR2	
OFP	
SAVE	
COND	
PLOT	
PRTMSG	
LABEL	
JUMP	45678901234
LABEL	45678901234
PRTPARM	45678901234
LABEL	45678901234
PRTPARM	45678901234
LABEL	45678901234
PRTPARM	45678901234
LABEL	45678901234
PRTPARM	45678901234
LABEL	45678901234
END	45678901234

3.2.3.5 File Name Restart Table

DMAP Inst.	Bit Position 94	100	110	120
BEGIN				
FILE				
FILE				
GP1	4			
SAVE	4			
CHKPNT	4			
GP2	5			
CHKPNT	5			
PLTSET				
SAVE				
PRTMSG				
CHKPNT				
SETVAL				
SAVE				
COND				
PLOT				
SAVE				
PRTMSG				
LABEL				
GP3	6			
SAVE	6			
PARAM	6			
PURGE	6 9			
CHKPNT	6			
TA1	7			
SAVE	7			
PARAM	7			
COND	7			
PURGE	78 2			
CHKPNT	7			
COND	89			
SMA1	8			
CHKPNT	8			
COND	9			
SMA2	9			
SAVE	9			
CHKPNT	9			
COND				
COND				
GPWG				
OFP				
SAVE				
LABEL	89			
EQUIV	0			
CHKPNT	0			
COND	0			
SMA3	0			
CHKPNT	0			
LABEL	0			
PARAM				
JUMP	1			
LABEL	0			
GP4	1			
SAVE	1			
COND	1			
PARAM	1			
PURGE	1 3 567 9 1			

DMAP Inst.	Bit Position 94	100	110	120
EQUIV	4			
CHKPNT				
COND	2			
GPSP	2			
OFP	2			
SAVE	2			
LABEL	2			
COND	34			
MCE1	3			
CHKPNT	3			
MCE2	4			
CHKPNT	4			
LABEL	34			
EQUIV	5			
CHKPNT	5			
COND	5			
SCE1	5			
CHKPNT	5			
LABEL	5			
EQUIV	6			
CHKPNT	6			
COND	6			
SMP1	6			
CHKPNT	6			
LABEL	6			
EQUIV	7			
CHKPNT	7			
COND	7			
RBMG1	7			
CHKPNT	7			
LABEL	7			
RBMG2	8			
CHKPNT	8			
COND	9			
RBMG3	9			
CHKPNT	9			
LABEL	9			
SSG1	0			
CHKPNT	0			
EQUIV	1			
CHKPNT	1			
COND	1			
SSG2	1			
CHKPNT	1			
LABEL	1			
SSG3	2			
CHKPNT	2			
COND				
MATGPR				
MATGPR				
LABEL				
SDR1	3			
CHKPNT	3			
COND				
REPT				
JUMP				
LABEL				

DMAP Inst.	94	Bit Position 100	110	120
CHKPNT			3	
SDR2			4	
OFP				
SAVE				
COND				
PLOT				
PRTMSG				
LABEL				
JUMP				
LABEL				
PRTPARM				
LABEL				
PRTPARM				
LABEL				
PRTPARM				
LABEL				
PRTPARM				
LABEL				
END				

3.2.4 Case Control Deck and Parameters for Static Analysis

The following items relate to subcase definition and data selection for Static Analysis:

1. A separate subcase must be defined for each unique combination of constraints and static loads.
2. A static loading condition must be defined for (not necessarily within) each subcase with a LØAD, TEMPERATURE(LØAD), or DEFØRM selection unless all loading is specified with grid point displacements on SPC cards.
3. An SPC set must be selected for (not necessarily within) each subcase, unless the model is a properly supported free body, or all constraints are specified on GRID cards, Scalar Connection cards, or with General Elements.
4. Loading conditions associated with the same sets of constraints should be in contiguous subcases in order to avoid unnecessary looping.
5. REPCASE may be used to repeat subcases in order to allow multiple sets of the same output item.

The following output may be requested for Static Analysis solutions:

1. Displacements and nonzero components of static loads and single-point forces of constraint at selected grid points or scalar points.
2. Forces and stresses in selected elements.
3. Undeformed and deformed plots of the structural model.

The following parameters are used in Static Analysis:

1. GRDPNT - optional - a positive integer value of this parameter will cause the Grid Point Weight Generator to be executed and the resulting weight and balance information to be printed.
2. WTMASS - optional - the terms of the mass matrix are multiplied by the real value of this parameter when they are generated in SMA2.
3. IRES - optional - a positive integer value of this parameter will cause the printing of the residual vectors following the execution of SSG3.

4. CØUPMASS - optional - a positive integer value of this parameter will cause the generation of coupled mass matrices rather than lumped mass matrices for all bar elements, rod elements, and plate elements that include bending stiffness (see Section 3.1 for list of elements).

3.3 STATIC ANALYSIS WITH INERTIA RELIEF

3.3.1 DMAP Sequence for Static Analysis with Inertia Relief

```
RIGID FORMAT 2

   N A S T R A N  S O U R C E  P R O G R A M  C O M P I L A T I O N
DMAP=DMAP INSTRUCTION
 NO.

  1  BEGIN     NO.2 INTERTIA RELIEF ANALYSIS - SERIES L $

  2  FILE      LLL=TAPE $

  3  FILE      QG=APPEND/PGG=APPEND/UGV=APPEND/GM=SAVE/KNN=SAVE/MNN=SAVE $

  4  GP1       GEOM1,GEOM2,/GPL,EQEXIN,GPDT,CSTM,BGPDT,SIL/V,N,LUSET/ C,N,123/
               V,N,NOGPDT $

  5  SAVE      LUSET$

  6  CHKPNT    GPL,EQEXIN,GPDT,CSTM,BGPDT,SIL $

  7  GP2       GEOM2,EQEXIN/ECT $

  8  CHKPNT    ECT $

  9  PLTSET    PCDB,EQEXIN,ECT/PLTSETX,PLTPAR,GPSETS,ELSETS/V,N,NSIL/ V,N,
               JUMPPLOT $

 10  SAVE      NSIL,JUMPPLOT $

 11  PRTMSG    PLTSETX//$

 12  CHKPNT    PLTPAR,GPSETS,ELSETS $

 13  SETVAL    //V,N,PLTFLG/C,N,1/V,N,PFILE/C,N,0 $

 14  SAVE      PLTFLG,PFILE $

 15  COND      P1,JUMPPLOT $

 16  PLOT      PLTPAR,GPSETS,ELSETS,CASECC,BGPDT,EQEXIN,SIL,,/PLOTX1/ V,N,
               NSIL/V,N,LUSET/V,N,JUMPPLOT/V,N,PLTFLG/V,N,PFILE $

 17  SAVE      JUMPPLOT,PLTFLG,PFILE $

 18  PRTMSG    PLOTX1//$

 19  LABEL     P1 $

 20  GP3       GEOM3,EQEXIN,GEOM2/SLT,GPTT/C,N,123/V,N,NOGRAV/C,N,123 $

 21  CHKPNT    SLT,GPTT $

 22  TA1,      ,ECT,EPT,BGPDT,SIL,GPTT,CSTM/EST,,GEI,ECPT,GPCT/V,N,LUSET/ C,N,
               123/V,N,NOSIMP/C,N,0/V,N,NOGENL/V,N,GENEL $

 23  SAVE      NOSIMP,NOGENL,GENEL $

 24  COND      ERROR1,NOSIMP$
```

```
RIGID FORMAT DMAP LISTING
SERIES L

RIGID FORMAT 2

   N A S T R A N  S O U R C E  P R O G R A M  C O M P I L A T I O N
DMAP-DMAP INSTRUCTION
 NO.

 25  PURGE     OGPST/GENEL $

 26  CHKPNT    EST,ECPT,GPCT,GEI,OGPST $

 27  (SMA1)    CSTM,MPT,ECPT,GPCT, DIT/KGGX,,GPST/V,N,NOGENL/V,N,NOK4GG$

 28  CHKPNT    GPST,KGGX $

 29  (SMA2)    CSTM,MPT,ECPT,GPCT,DIT/MGG,/V,Y,WTMASS=1.0/V,N,NOMGG/V,N,NOBGG/
               V,Y,CØUPMASS=-1 $

 30  SAVE      NOMGG$

 31  COND      ERROR1,NOMGG$

 32  CHKPNT    MGG $

 33  COND      LGPWG,GRDPNT$

 34  (GPWG)    BGPDT,CSTM,EQEXIN,MGG/OGPWG/V,Y,GRDPNT=-1/V,Y,WTMASS$

 35  OFP       OGPWG,,,,,//V,N,CARDNO $

 36  SAVE      CARDNO $

 37  LABEL     LGPWG$

 38  EQUIV     KGGX,KGG/NOGENL $

 39  CHKPNT    KGG $

 40  COND      LBL11A,NOGENL $

 41  (SMA3)    GEI,KGGX/KGG/V,N,LUSET/V,N,NOGENL/V,N,NOSIMP $

 42  CHKPNT    KGG $

 43  LABEL     LBL11A $

 44  PARAM     //C,N,MPY/V,N,NSKIP/C,N,0/C,N,0 $

 45  JUMP      LBL11 $

 46  LABEL     LBL11 $

 47  (GP4)     CASECC,GEOM4,EQEXIN,SIL,GPDT/RG,YS,USET/V,N,LUSET/V,N,MPCF1/ V,
               N,MPCF2/V,N,SINGLE/V,N,OMIT/V,N,REACT/V,N,NSKIP/V,N,REPEAT/ V,
               N,NOSET/V,N,NOL/V,N,NOA $

 48  SAVE      MPCF1,MPCF2,SINGLE,OMIT,REACT,NSKIP,REPEAT,NOSET,NOL,NOA $

 49  COND      ERROR3,NOL $
```

```
RIGID FORMAT DMAP LISTING
SERIES L

RIGID FORMAT 2

   N A S T R A N  S O U R C E  P R O G R A M  C O M P I L A T I O N
DMAP-DMAP INSTRUCTION
NO.

 50   COND      ERROR4,REACT $

 51   PURGE     GM/MPCF1/GO,KOOB,LOO,UOO,MOOB,MOAB,PO,UOOV,RUOV/OMIT/ KSS,KFS,
                PS/SINGLE$

 52   EQUIV     KGG,KNN/MPCF1/MGG,MNN/MPCF1$

 53   CHKPNT    GM,RG,GO,KOOB,LOO,UOO,MOOB,MOAB,PO,KSS,KFS,YS,PS,USET,RUOV,
                KNN,MNN $

 54   COND      LBL4,GENEL $

 55   (GPSP)    GPL,GPST,USET,SIL/OGPST $

 56   OFP       OGPST,,,,,//V,N,CARDNO $

 57   SAVE      CARDNO $

 58   LABEL     LBL4 $

 59   COND      LBL2,MPCF2 $

 60   (MCE1)    USET,RG/GM $

 61   CHKPNT    GM$

 62   (MCE2)    USET,GM,KGG,MGG,,/KNN,MNN,,$

 63   CHKPNT    KNN,MNN$

 64   LABEL     LBL2 $

 65   EQUIV     KNN,KFF/SINGLE/MNN,MFF/SINGLE$

 66   CHKPNT    KFF,MFF $

 67   COND      LBL3,SINGLE $

 68   (SCE1)    USET,KNN,MNN,,/KFF,KFS,KSS,MFF,, $

 69   CHKPNT    KFS,KSS,KFF,MFF $

 70   LABEL     LBL3 $

 71   EQUIV     KFF,KAA/OMIT/ MFF,MAA/OMIT$

 72   CHKPNT    KAA,MAA $

 73   COND      LBL5,OMIT $

 74   (SMP1)    USET,KFF,MFF,,/GO,KAA,KOOB,LOO,UOO,MAA,MOOB,MOAB,, $

 75   CHKPNT    GO,KAA,KOOB,LOO,UOO,MAA,MOOB,MOAB$
```

```
RIGID FORMAT DMAP LISTING
SERIES L

RIGID FORMAT 2

   N A S T R A N  S O U R C E  P R O G R A M  C O M P I L A T I O N
DMAP-DMAP INSTRUCTION
NO.

 76  LABEL    LBL5 $

 77  (RBMG1)  USET,KAA,MAA/KLL,KLR,KRR,MLL,MLR,MRR$

 78  CHKPNT   KLL,KLR,KRR,MLL,MLR,MRR$

 79  (RBMG2)  KLL/LLL,ULL $

 80  CHKPNT   ULL,LLL$

 81  (RBMG3)  LLL,ULL,KLR,KRR/DM $

 82  CHKPNT   DM$

 83  (RBMG4)  DM,MLL,MLR,MRR/MR$

 84  CHKPNT   MR$

 85  (SSG1)   SLT,BGPDT,CSTM,SIL,EST ,MPT,GPTT,EDT,MGG,CASECC,DIT/PG/V,N,
              LUSET/V,N,NSKIP $

 86  CHKPNT   PG $

 87  (SSG2)   USET,GM,YS,KFS,GO,DM,PG/QR,PO,PS,PL $

 88  CHKPNT   QR,PO,PS,PL $

 89  (SSG4)   PL,QR,PO,MR,MLR,DM,MLL,MOOB,MOAB,GO,USET/PLI,POI/V,N,OMIT $

 90  CHKPNT   PLI,POI$

 91  (SSG3)   LLL,ULL,KLL,PLI,LOO,UOO,KOOB,POI/ULV,UOOV,RULV,RUOV/ V,N,OMIT/
              V,Y,IRES=-1 $

 92  CHKPNT   ULV,UOOV,RULV,RUOV$

 93  COND     LBL9,IRES $

 94  MATGPR   GPL,USET,SIL,RULV//C,N,L $

 95  MATGPR   GPL,USET,SIL,RUOV//C,N,O $

 96  LABEL    LBL9 $

 97  (SDR1)   USET,PG,ULV,UOOV,YS,GO,GM,PS,KFS,KSS,QR/UGV,PGG,QG/V,N,NSKIP/
              C,N,STATICS$

 98  CHKPNT   UGV,QG,PGG $

 99  COND     LBL8,REPEAT $

100  REPT     LBL11,100$
```

```
 RIGID FORMAT DMAP LISTING
 SERIES L

 RIGID FORMAT 2

    N A S T R A N  S O U R C E  P R O G R A M  C O M P I L A T I O N
DMAP-DMAP INSTRUCTION
 NO.

101  JUMP      ERROR2$

102  LABEL     LBL8 $

103  CHKPNT    CSTM $

104  (SDR2)    CASECC,CSTM,MPT,DIT,EQEXIN,SIL,GPTT,EDT,BGPDT,PGG,QG,UGV,EST,/
               OPG1,OQG1,OUGV1,OES1,OEF1,PUGV1/C,N,STATICS $

105  OFP       OUGV1,OPG1,OQG1,OEF1,OES1,//V,N,CARDNO $

106  SAVE      CARDNO $

107  COND      P2,JUMPPLOT $

108  (PLOT)    PLTPAR,GPSETS,ELSETS,CASECC,BGPDT,EQEXIN,SIL,PUGV1, / PLOTX2/V,
               N,NSIL/V,N,LUSET/V,N,JUMPPLOT/V,N,PLTFLG/V,N,PFILE $

109  PRTMSG    PLOTX2// $

110  LABEL     P2 $

111  JUMP      FINIS$

112  LABEL     ERROR1$

113  PRTPARM   //C,N,-1/C,N,INERTIA$

114  LABEL     ERROR2$

115  PRTPARM   //C,N,-2/C,N,INERTIA$

116  LABEL     ERROR3 $

117  PRTPARM   //C,N,-3/C,N,INERTIA $

118  LABEL     ERROR4 $

119  PRTPARM   //C,N,-4/C,N,INERTIA $

120  LABEL     FINIS$

121  END       $
```

3.3.2 Description of DMAP Operations for Static Analysis with Inertia Relief

4. GP1 generates coordinate system transformation matrices, tables of grid point locations, and tables for relating internal and external grid point numbers.

7. GP2 generates Element Connection Table with internal indices.

9. PLTSET transforms user input into a form used to drive structure plotter.

11. PRTMSG prints error messages associated with structure plotter.

15. Go to DMAP No. 19 if no undeformed structure plot request.

16. PLØT generates all requested undeformed structure plots.

18. PRTMSG prints plotter data and engineering data for each undeformed plot generated.

20. GP3 generates Static Loads Table and Grid Point Temperature Table.

22. TA1 generates element tables for use in matrix assembly and stress recovery.

24. Go to DMAP No. 112 and print error message if there are no structural elements.

27. SMA1 generates stiffness matrix $[K^{X}_{gg}]$ and Grid Point Singularity Table.

29. SMA2 generates mass matrix $[M_{gg}]$.

31. Go to DMAP No. 112 and print error message if no mass matrix exists.

33. Go to DMAP No. 37 if no weight and balance request.

34. GPWG generates weight and balance information.

35. ØFP formats weight and balance information and places it on the system output file for printing.

38. Equivalence $[K^{X}_{gg}]$ to $[K_{gg}]$ if no general elements.

40. Go to DMAP No. 43 if no general elements.

41. SMA3 adds general elements to $[K^{X}_{gg}]$ to obtain stiffness matrix $[K_{gg}]$.

45. Go to next DMAP instruction if cold start or modified restart. LBL11 will be altered by the Executive System to the proper location inside the loop for unmodified restarts within the loop.

46. Beginning of Loop for additional constraint sets.

47. GP4 generates flags defining members of various displacement sets (USET), forms multipoint constraint equations $[R_g]\{u_g\} = 0$ and forms enforced displacement vector $\{Y_s\}$.

49. Go to DMAP No. 116 and print error message if no independent degrees of freedom are defined.

50. Go to DMAP No. 118 and print error message if no free-body supports.

52. Equivalence $[K_{gg}]$ to $[K_{nn}]$ and $[M_{gg}]$ to $[M_{nn}]$ if no multipoint constraints.

54. Go to DMAP No. 58 if general elements present.

55. GPSP determines if possible grid point singularities remain.

56. ØFP Formats table of possible grid point singularities and places it on the system output file for printing.

59. Go to DMAP No. 64 if MCE1 and MCE2 have already been executed for current set of multipoint constraints.

60. MCE1 partitions multipoint constraint equations $[R_g] = [R_m \mid R_n]$ and solves for multipoint constraint transformation matrix $[G_m] = -[R_m]^{-1}[R_n]$.

62. MCE2 partitions stiffness and mass matrices

$$[K_{gg}] = \left[\begin{array}{c|c} \bar{K}_{nn} & K_{nm} \\ \hline K_{mn} & K_{mm} \end{array}\right] \quad \text{and} \quad [M_{gg}] = \left[\begin{array}{c|c} \bar{M}_{nn} & M_{nm} \\ \hline M_{mn} & M_{mm} \end{array}\right]$$

and performs matrix reductions

$$[K_{nn}] = [\bar{K}_{nn}] + [G_m^T][K_{mn}] + [K_{mn}^T][G_m] + [G_m^T][K_{mm}][G_m] \quad \text{and}$$

$$[M_{nn}] = [\bar{M}_{nn}] + [G_m^T][M_{mn}] + [M_{mn}^T][G_m] + [G_m^T][M_{mm}][G_m].$$

65. Equivalence $[K_{nn}]$ to $[K_{ff}]$ and $[M_{nn}]$ to $[M_{ff}]$ if no single-point constraints.

67. Go to DMAP No. 70 if no single-point constraints.

68. SCE1 partitions out single-point constraints

$$[K_{nn}] = \left[\begin{array}{c|c} K_{ff} & K_{fs} \\ \hline K_{sf} & K_{ss} \end{array}\right] \quad \text{and} \quad [M_{nn}] = \left[\begin{array}{c|c} M_{ff} & M_{fs} \\ \hline M_{sf} & M_{ss} \end{array}\right].$$

71. Equivalence $[K_{ff}]$ to $[K_{aa}]$ and $[M_{ff}]$ to $[M_{aa}]$ if no omitted coordinates.

73. Go to DMAP No. 76 if no omitted coordinates.

74. SMP1 partitions constrained stiffness and mass matrices

$$[K_{ff}] = \left[\begin{array}{c|c} \bar{K}_{aa} & K_{ao} \\ \hline K_{oa} & K_{oo} \end{array}\right] \quad \text{and} \quad [M_{ff}] = \left[\begin{array}{c|c} \bar{M}_{aa} & M_{ao} \\ \hline M_{oa} & M_{oo} \end{array}\right],$$

solves for transformation matrix $[G_o] = -[K_{oo}]^{-1}[K_{oa}]$

and performs matrix reductions $[K_{aa}] = [\bar{K}_{aa}] + [K_{oa}^T][G_o]$

and $[M_{aa}] = [\bar{M}_{aa}] + [M_{oa}^T][G_o] + [G_o^T][M_{oa}] + [G_o^T][M_{oo}][G_o]$.

77. RBMG1 partitions out free-body supports

$$[K_{aa}] = \left[\begin{array}{c|c} K_{\ell\ell} & K_{\ell r} \\ \hline K_{r\ell} & K_{rr} \end{array}\right] \quad \text{and} \quad [M_{aa}] = \left[\begin{array}{c|c} M_{\ell\ell} & M_{\ell r} \\ \hline M_{r\ell} & M_{rr} \end{array}\right].$$

79. RBMG2 decomposes constrained stiffness matrix $[K_{\ell\ell}] = [L_{\ell\ell}][U_{\ell\ell}]$.

81. RBMG3 forms rigid body transformation matrix

$$[D] = -[K_{\ell\ell}]^{-1}[K_{\ell r}],$$

calculates rigid body check matrix

$$[X] = [K_{rr}] + [K_{\ell r}^T][D],$$

and calculates rigid body error ratio

$$\varepsilon = \frac{||X||}{||K_{rr}||}$$

83. RBMG4 forms rigid body mass matrix $[m_r] = [M_{rr}] + [M_{\ell r}^T][D] + [D^T][M_{\ell r}] + [D^T][M_{\ell\ell}][D]$.

85. SSG1 generates static load vectors $\{P_g\}$.

87. SSG2 applies constraints to static load vectors

$$\{P_g\} = \left\{\begin{array}{c}\bar{P}_n \\ \hline P_m\end{array}\right\}, \qquad \{P_n\} = \{\bar{P}_n\} + [G_m^T]\{P_m\},$$

$$\{P_n\} = \left\{\begin{array}{c}\bar{P}_f \\ \hline P_s\end{array}\right\}, \qquad \{P_f\} = \{\bar{P}_f\} - [K_{fs}]\{Y_s\},$$

$$\{P_f\} = \left\{\begin{array}{c}\bar{P}_a \\ \hline P_o\end{array}\right\}, \qquad \{P_a\} = \{\bar{P}_a\} + [G_o^T]\{P_o\},$$

$$\{P_a\} = \left\{\begin{array}{c}P_\ell \\ \hline P_r\end{array}\right\}$$

and calculates determinate forces of reaction $\{q_r\} = -\{P_r\} - [D^T]\{P_\ell\}$.

89. SSG4 calculates inertia loads and combines them with static loads

$$\{P_\ell^i\} = \{P_\ell\} + [M_{\ell\ell}][D] + [M_{\ell r}]\,[m_r]^{-1}\{q_r\} \qquad \text{and}$$

$$\{P_o^i\} = \{P_o\} + [M_{oo}][G_o] + [M_{ao}^T]\left\{\frac{D}{I}\right\}[m_r]^{-1}\{q_r\} \quad .$$

91. SSG3 solves for displacements of independent coordinates

$$\{u_\ell\} = [K_{\ell\ell}]^{-1}\{P_\ell^i\} ,$$

solves for displacements of omitted coordinates

$$\{u_o^o\} = [K_{oo}]^{-1}\{P_o^i\} ,$$

calculates residual vector (RULV) and residual vector error ratio for independent coordinates

$$\{\delta P_\ell^i\} = \{P_\ell^i\} - [K_{\ell\ell}]\{u_\ell\}$$

$$\varepsilon_\ell = \frac{\{u_\ell^T\}\{\delta P_\ell^i\}}{\{P_\ell^i\}^T\{u_\ell\}}$$

and calculates residual vector (RUØV) and residual vector error ratio for omitted coordinates

$$\{\delta P_o^i\} = \{P_o^i\} - [K_{oo}]\{u_o^o\},$$

$$\varepsilon_o = \frac{\{u_o^T\}\{\delta P_o^i\}}{\{P_o^i\}^T\{u_o^o\}} .$$

93. Go to DMAP No. 96 if residual vectors are not to be printed.

94. Print residual vector for independent coordinates (RULV)

95. Print residual vector for omitted coordinates (RUØV).

97. SDR1 recovers dependent displacements

$$\begin{Bmatrix} u_\ell \\ \hline u_r \end{Bmatrix} = \{u_a\}, \qquad \{u_o\} = [G_o]\{u_a\} + \{u_o^o\} ,$$

$$\begin{Bmatrix} u_a \\ \hline u_o \end{Bmatrix} = \{u_f\} , \qquad \begin{Bmatrix} u_f \\ \hline Y_s \end{Bmatrix} = \{u_n\},$$

$$\{u_m\} = [G_m]\{u_n\} , \qquad \begin{Bmatrix} u_n \\ \hline u_m \end{Bmatrix} = \{u_g\}$$

and recovers single-point forces of constraint

$$\{q_s\} = -\{P_s\} + [K_{fs}^T]\{u_f\} + [K_{ss}]\{Y_s\} .$$

99. Go to DMAP No. 102 if all constraint sets have been processed.

100. Go to DMAP No. 46 if additional sets of constraints need to be processed.

101. Go to DMAP No. 114 and print error message if number of loops exceeds 100.

104. SDR2 calculates element forces and stresses (ØES1, ØEF1) and prepares load vectors, displacement vectors and single-point forces of constraint for output (ØPG1, ØUGV1, PUGV1, ØQG1).

105. ØFP formats tables prepared by SDR2 and places them on the system output file for printing.

107. Go to DMAP No. 110 if no deformed structure plots are requested.

108. PLØT generates all requested deformed structure plots.

109. PRTMSG prints plotter data and engineering data for each deformed plot generated.

111. Go to DMAP No. 120 and make normal exit.

113. STATIC ANALYSIS WITH INERTIA RELIEF ERRØR MESSAGE NØ. 1 - MASS MATRIX REQUIRED FØR CALCULATIØN ØF INERTIA LØADS.

115. STATIC ANALYSIS WITH INERTIA RELIEF ERRØR MESSAGE NØ. 2 - ATTEMPT TØ EXECUTE MØRE THAN 100 LØØPS.

117. STATIC ANALYSIS WITH INERTIA RELIEF ERRØR MESSAGE NØ. 3 - NO INDEPENDENT DEGREES ØF FREEDØM HAVE BEEN DEFINED.

119. STATIC ANALYSIS WITH INERTIA RELIEF ERRØR MESSAGE NØ. 4 - FREE-BØDY SUPPØRTS ARE REQUIRED.

3.3.3 Restart Tables for Static Analysis with Inertia Relief

3.3.3.1 Bit Positions for Card Name Restart Table

Card Name	Bit Pos.
AXIC	1
CELAS1	1
CELAS2	1
CELAS3	1
CELAS4	1
CMASS1	1
CMASS2	1
CMASS3	1
CMASS4	1
CØRD1C	1
CØRD1R	1
CØRD1S	1
CØRD2C	1
CØRD2R	1
CØRD2S	1
GRDSET	1
GRID	1
PØINTAX	1
RINGAX	1
SECTAX	1
SEQGP	1
SPØINT	1
BARØR	2
BEAMØR	2
CBAR	2
CBEAM	2
CCØNEAX	2
CØNRØD	2
CQDMEM	2
CQDPLT	2
CQUAD1	2
CQUAD2	2
CRØD	2
CSHEAR	2
CTØRDRG	2
CTRAPRG	2
CTRBSC	2
CTRIA1	2
CTRIA2	2
CTRIARG	2
CTRMEM	2
CTRPLT	2
CTUBE	2
CTWIST	2
PBAR	3
PBEAM	3
PCØNEAX	3
PQDMEM	3
PQDPLT	3
PQUAD1	3
PQUAD2	3
PRØD	3
PSHEAR	3
PTØRDRG	3
PTRBSC	3
PTRIA1	3
PTRIA2	3
PTRMEM	3
PTRPLT	3
PTUBE	3
PTWIST	3
GENEL	4
CØNM1	5
CØNM2	5
PELAS	6
PMASS	7
MAT1	8
MAT2	8
MAT3	8
MATT1	8
MATT2	8
MATT3	8
TABLEM1	8
TABLEM2	8
TABLEM3	8
TABLEM4	8
TEMPMT$	8
TEMPMX$	8
MPC	9
MPCADD	9
MPCAX	9
MPC$	9
SPC	10
SPC1	10
SPCADD	10
SPCAX	10
SPC$	10
ØMIT	11
ØMIT1	11
ØMITAX	11
SUPAX	12
SUPØRT	12
TEMP	13
TEMPAX	13
TEMPD	13
WTMASS	14
GRDPNT	15
PLØTEL	16
IRES	17
PLØT$	18
PØUT$	19
LØØP$	22
LØØP1$	23
CØUPMASS	24
DEFØRM	59
DEFØRM$	59
LØAD$	59
RFØRCE$	59
FØRCE	60
FØRCE1	60
FØRCE2	60
FØRCEAX	60
LØAD	60
MØMAX	60
MØMENT	60
MØMENT1	60
MØMENT2	60
PLØAD	60
PLØAD1	60
PLØAD2	60
PRESAX	60
RFØRCE	60
SLØAD	60
GRAV	61
TEMPLD$	62

3.3.3.2 Bit Positions for File Name Restart Table

File Name	Bit Pos.	File Name	Bit Pos.
BGPDT	94	KLL	107
CSTM	94	KLR	107
EQEXIN	94	KRR	107
GPDT	94	MLL	107
GPL	94	MLR	107
SIL	94	MRR	107
ECT	95	LLL	108
GPTT	96	ULL	108
SLT	96	DM	109
ECPT	97	MR	110
EST	97	PG	111
GEI	97	PL	112
GPCT	97	PØ	112
GPST	98	PS	112
KGGX	98	QR	112
MGG	99	PLI	113
KGG	100	PØI	113
RG	101	RULV	114
USET	101	RUØV	114
YS	101	ULV	114
ØGPST	102	UØØV	114
GM	103	PGG	115
KNN	104	QG	115
MNN	104	UGV	115
KFF	105	ØEFT	116
KFS	105	ØEST	116
KSS	105	ØPGT	116
MFF	105	ØQGT	116
GØ	106	ØUGVT	116
KAA	106	PUGVT	116
KØØB	106		
LØØ	106		
MAA	106		
MØAB	106		
MØØB	106		
UØØ	106		

3.3.3.3 Card Name Restart Table

DMAP Inst.	Bit Position 1	10	20	30	40	50	60
BEGIN	1234567890123456789		234				9012
FILE	1234567890123456789		234				9012
FILE	1234567890123456789		234				9012
$SS	1 3						
GP1	1						
SAVE	1						
CHKPNT	1						
GP2	12 45			6			
CHKPNT	12 45			6			
PLTSET				8			
SAVE				8			
PRTMSG				8			
CHKPNT				8			
SETVAL				8			
SAVE				8			
COND				8			
PLOT				8			
SAVE				8			
PRTMSG				8			
LABEL				8			
GP3	12	3					01
CHKPNT	12	3					01
TA1,	1234567						
SAVE	1234567						
COND	12345678	4					
PURGE	1234567						
CHKPNT	1234567						
SMA1	123 6 8						
CHKPNT	123 6 8						
SMA2	123 5 78	4	4				
SAVE	123 5 78	4	4				
COND	123 5 78	4	4				
CHKPNT	123 5 78	4	4				
COND	123 5 78	45					
GPWG	123 5 78	45					
OFP	123 5 78	45					
SAVE	123 5 78	45					
LABEL	123 5 78	45					
EQUIV	123 6 8						
CHKPNT	123 6 8						
COND	1234 6 8						
SMA3	1234 6 8						
CHKPNT	1234 6 8						
LABEL	1234 6 8						
PARAM	1	9012	23				
JUMP			23				
$SS	1 3						
LABEL			23				
GP4	1	9012	23				
SAVE	1	9012	23				
COND	1	9012	23				
COND	1	9012	23				
PURGE	1	9012	23				
EQUIV	123456789		23				
CHKPNT	1	9	23				
COND	123 6 8 0		23				
GPSP	123 6 8 0		23				

DMAP Inst.	Bit Position 1 10 20 30 40 50 60
OFP	123 6 8 0 23
SAVE	123 6 8 0 23
LABEL	123 6 8 0 23
COND	123456789 23
MCE1	1 9 23
CHKPNT	1 9 23
MCE2	123456789 23
CHKPNT	123456789 23
LABEL	123456789 23
EQUIV	1234567890 23
CHKPNT	1234567890 23
COND	1234567890 23
SCE1	1234567890 23
CHKPNT	1234567890 23
LABEL	1234567890 23
EQUIV	12345678901 23
CHKPNT	12345678901 23
COND	12345678901 23
SMP1	12345678901 23
CHKPNT	12345678901 23
LABEL	12345678901 23
RBMG1	123456789012 23
CHKPNT	123456789012 23
RBMG2	1234 6 89012 23
CHKPNT	1234 6 89012 23
RBMG3	1234 6 89012 23
CHKPNT	1234 6 89012 23
RBMG4	123456789012 23
CHKPNT	123456789012 23
SSG1	123 5678 23 9012
CHKPNT	123 5678 23 9012
SSG2	123 56789012 23 9012
CHKPNT	123 56789012 23 9012
SSG4	123 56789012 23 9012
CHKPNT	123 56789012 23 9012
SSG3	123456789012 23 9012
CHKPNT	123456789012 23 9012
COND	123456789012 7 23 9012
MATGPR	123456789012 7 23 9012
MATGPR	123456789012 7 23 9012
LABEL	123456789012 7 23 9012
SDR1	123456789012 23 9012
CHKPNT	123456789012 23 9012
COND	23
$SS	1 3
REPT	23
$SS	1 3
JUMP	23
$SS	1 3
LABEL	23
$SS	1 3
CHKPNT	9
SDR2	89
OFP	9
SAVE	9
COND	8
PLOT	8

DMAP Inst.	Bit Position 1	10	20	30	40	50	60
PRTMSG			8				
LABEL			8				
JUMP	12345678901234567	89	234				9012
LABEL	12345678901234567	89	234				9012
PRTPARM	12345678901234567	89	234				9012
LABEL	12345678901234567	89	234				9012
$SS	1 3						
PRTPARM	12345678901234567	89	234				9012
$SS	1 3						
LABEL	12345678901234567	89	234				9012
PRTPARM	12345678901234567	89	234				9012
LABEL	12345678901234567	89	234				9012
PRTPARM	12345678901234567	89	234				9012
LABEL	12345678901234567	89	234				9012
END	12345678901234567	89	234				9012

3.3.3.4 Rigid Format Change Restart Table

DMAP Inst.	Bit Position 63 70 80
BEGIN	3 5678901234
FILE	3 5678901234
FILE	3 5678901234
GP1	
SAVE	
CHKPNT	
GP2	
CHKPNT	
PLTSET	
SAVE	
PRTMSG	
CHKPNT	
SETVAL	
SAVE	
COND	
PLOT	
SAVE	
PRTMSG	
LABEL	
GP3	
CHKPNT	
TA1,	
SAVE	
COND	
PURGE	
CHKPNT	
SMA1	
CHKPNT	
SMA2	3 678
SAVE	3 678
COND	3 5678901234
CHKPNT	3 678
COND	
GPWG	
OFP	
SAVE	
LABEL	
EQUIV	
CHKPNT	
COND	
SMA3	
CHKPNT	
LABEL	
PARAM	
JUMP	
LABEL	
GP4	
SAVE	
COND	3 5678901234
COND	3 5678901234
PURGE	
EQUIV	
CHKPNT	
COND	
GPSP	
OFP	
SAVE	

DMAP Inst.	Bit Position 63 70 80
LABEL	
COND	
MCE1	
CHKPNT	
MCE2	
CHKPNT	
LABEL	
EQUIV	
CHKPNT	
COND	
SCE1	
CHKPNT	
LABEL	
EQUIV	
CHKPNT	
COND	
SMP1	
CHKPNT	
LABEL	
RBMG1	
CHKPNT	
RBMG2	
CHKPNT	
RBMG3	
CHKPNT	
RBMG4	
CHKPNT	
SSG1	
CHKPNT	
SSG2	
CHKPNT	
SSG4	
CHKPNT	
SSG3	3
CHKPNT	3
COND	3 5678901234
MATGPR	3 5678901234
MATGPR	3 5678901234
LABEL	3 5678901234
SDR1	3 5678901234
CHKPNT	3 5678901234
COND	3 5678901234
REPT	3 5678901234
JUMP	3 5678901234
LABEL	3 5678901234
CHKPNT	
SDR2	
OFP	
SAVE	
COND	
PLOT	
PRTMSG	
LABEL	
JUMP	3 5678901234
LABEL	3 5678901234
PRTPARM	3 5678901234
LABEL	3 5678901234

DMAP Inst.	63	Bit Position 70	80
PRTPARM	3	56789C1234	
LABEL	3	56789C1234	
PRTPARM	3	56789C1234	
LABEL	3	56789C1234	
PRTPARM	3	56789C1234	
LABEL	3	56789C1234	
END	3	56789C1234	

3.3.3.5 File Name Restart Table

DMAP Inst.	94	Bit Position 100	110	120
BEGIN				
FILE				
FILE				
GP1	4			
SAVE	4			
CHKPNT	4			
GP2	5			
CHKPNT	5			
PLTSET				
SAVE				
PRTMSG				
CHKPNT				
SETVAL				
SAVE				
COND				
PLOT				
SAVE				
PRTMSG				
LABEL				
GP3	6			
CHKPNT	6			
TA1,	7			
SAVE	7			
COND	7 9			
PURGE	7 2			
CHKPNT	7			
SMA1	8			
CHKPNT	8			
SMA2	9			
SAVE	9			
COND	9			
CHKPNT	9			
COND				
GPWG				
OFP				
SAVE				
LABEL				
EQUIV	0			
CHKPNT	0			
COND	0			
SMA3	0			
CHKPNT	0			
LABEL	0			
PARAM	1			
JUMP				
LABEL	0			
GP4	1			
SAVE	1			
COND	1			
COND	1			
PURGE	1 3 56	2 4		
EQUIV	4			
CHKPNT				
COND	2			
GPSP	2			
OFP	2			
SAVE	2			

DMAP Inst.	94	Bit Position 100	110	120
LABEL	2			
COND	34			
MCE1	3			
CHKPNT	3			
MCE2	4			
CHKPNT	4			
LABEL	34			
EQUIV	5			
CHKPNT	5			
COND	5			
SCE1	5			
CHKPNT	5			
LABEL	5			
EQUIV	6			
CHKPNT	6			
COND	6			
SMP1	6			
CHKPNT	6			
LABEL	6			
RBMG1	7			
CHKPNT	7			
RBMG2	8			
CHKPNT	8			
RBMG3	9			
CHKPNT	9			
RBMG4	0			
CHKPNT	0			
SSG1	1			
CHKPNT	1			
SSG2	2			
CHKPNT	2			
SSG4	3			
CHKPNT	3			
SSG3	4			
CHKPNT	4			
COND				
MATGPR				
MATGPR				
LABEL				
SDR1			5	
CHKPNT			5	
COND				
REPT				
JUMP				
LABEL				
CHKPNT				
SDR2				6
OFP				
SAVE				
COND				
PLOT				
PRTMSG				
LABEL				
JUMP				
LABEL				
PRTPARM				
LABEL				

DMAP		Bit Position		
Inst.	94	100	110	120
PRTPARM				
LABEL				
PRTPARM				
LABEL				
PRTPARM				
LABEL				
END				

3.3.4 Case Control Deck and Parameters for Static Analysis with Inertia Relief

The following items relate to subcase definition and data selection for Static Analysis with Inertia Relief:

1. A separate subcase must be defined for each unique combination of constraints and static loads.
2. A static loading condition must be defined for (not necessarily within) each subcase with a LØAD selection.
3. An SPC set may be selected only if used to remove grid point singularities or some, but not all, of the free body motions. At least one free body support must be provided with a SUPØRT card in the Bulk Data Deck.
4. Loading conditions associated with the same sets of constraints should be in contiguous subcases in order to avoid unnecessary looping.
5. REPCASE may be used to repeat subcases in order to allow multiple sets for the same output item.

The following output may be requested for Static Analysis with Inertia Relief:

1. Displacements at selected grid points due to the sum of the applied loads and the inertia loads.
2. Nonzero components of the applied static loads at selected grid points.
3. Reactions on free-body supports due to applied loads (single-point forces of constraint).
4. Forces and stresses in selected elements due to the sum of the applied loads and inertia loads.
5. Undeformed and deformed plots of the structural model.

The following parameters are used in Static Analysis with Inertia Relief:

1. GRDPNT - optional - a positive integer value of this parameter will cause the Grid Point Weight Generator to be executed and the resulting weight and balance information to be printed.
2. WTMASS - optional - the terms of the mass matrix are multiplied by the real value of this parameter when they are generated in SMA2.

3. IRES - optional - a positive integer value of this parameter will cause the printing of the residual vectors following the execution of SSG3.

4. CØUPMASS - optional - a positive integer value of this parameter will cause the generation of coupled mass matrices rather than lumped mass matrices for all bar elements, rod elements, and plate elements that include bending stiffness (see Section 3.1 for list of elements).

3.4 NORMAL MODE ANALYSIS

3.4.1 DMAP Sequence for Normal Mode Analysis

```
RIGID FORMAT 3

   N A S T R A N  S O U R C E  P R O G R A M  C O M P I L A T I O N
DMAP=DMAP INSTRUCTION
 NO.

  1  BEGIN     NO.3 NORMAL MODES ANALYSIS - SERIES L $

  2  FILE      LLL=TAPE $

  3  (GP1)     GEOM1,GEOM2,/GPL,EQEXIN,GPDT,CSTM,BGPDT,SIL/V,N,LUSET/ C,N,123/
               V,N,NOGPDT $

  4  SAVE      LUSET$

  5  CHKPNT    GPL,EQEXIN,GPDT,CSTM,BGPDT,SIL $

  6  (GP2)     GEOM2,EQEXIN/ECT $

  7  CHKPNT    ECT $

  8  PLTSET    PCDB,EQEXIN,ECT/PLTSETX,PLTPAR,GPSETS,ELSETS/V,N,NSIL/ V,N,
               JUMPPLOT $

  9  SAVE      NSIL,JUMPPLOT $

 10  PRTMSG    PLTSETX//$

 11  CHKPNT    PLTPAR,GPSETS,ELSETS $

 12  SETVAL    //V,N,PLTFLG/C,N,1/V,N,PFILE/C,N,0 $

 13  SAVE      PLTFLG,PFILE $

 14  COND      P1,JUMPPLOT $

 15  (PLOT)    PLTPAR,GPSETS,ELSETS,CASECC,BGPDT,EQEXIN,SIL,,/PLOTX1/ V,N,
               NSIL/V,N,LUSET/V,N,JUMPPLOT/V,N,PLTFLG/V,N,PFILE $

 16  SAVE      JUMPPLOT,PLTFLG,PFILE $

 17  PRTMSG    PLOTX1//$

 18  LABEL     P1 $

 19  (GP3)     GEOM3,EQEXIN,/,GPTT/C,N,123/V,N,NOGRAV/C,N,123 $

 20  CHKPNT    GPTT$

 21  (TA1,)    ,ECT,EPT,BGPDT,SIL,GPTT,CSTM/EST,,GEI,ECPT,GPCT/V,N,LUSET/ C,N,
               123/V,N,NOSIMP/C,N,0/V,N,NOGENL/V,N,GENEL $

 22  SAVE      NOGENL,NOSIMP,GENEL $

 23  COND      ERROR1,NOSIMP$

 24  PURGE     OGPST/GENEL $
```

```
RIGID FORMAT DMAP LISTING
SERIES L

RIGID FORMAT 3

   N A S T R A N  S O U R C E  P R O G R A M  C O M P I L A T I O N
DMAP=DMAP INSTRUCTION
 NO.

 25  CHKPNT   EST,ECPT,GPCT,GEI,OGPST $

 26  SMA1     CSTM,MPT,ECPT,GPCT,DIT/KGGX,,GPST/V,N,NOGENL/V,N,NOK4GG$

 27  CHKPNT   KGGX,GPST $

 28  SMA2     CSTM,MPT,ECPT,GPCT,DIT/MGG,/V,Y,WTMASS=1.0/V,N,NOMGG/V,N,NOBGG/
              V,Y,COUPMASS=-1 $

 29  SAVE     NOMGG$

 30  COND     ERROR1,NOMGG$

 31  CHKPNT   MGG $

 32  COND     LGPWG,GRDPNT$

 33  GPWG     BGPDT,CSTM,EQEXIN,MGG/OGPWG/V,Y,GRDPNT=-1/V,Y,WTMASS$

 34  OFP      OGPWG,,,,,//V,N,CARDNO $

 35  SAVE     CARDNO $

 36  LABEL    LGPWG$

 37  EQUIV    KGGX,KGG/NOGENL $

 38  CHKPNT   KGG $

 39  COND     LBL11,NOGENL $

 40  SMA3     GEI,KGGX/KGG/V,N,LUSET/V,N,NOGENL/C,N,-1 $

 41  CHKPNT   KGG $

 42  LABEL    LBL11 $

 43  PARAM    //C,N,MPY/V,N,NSKIP/C,N,0/C,N,0 $

 44  GP4      CASECC,GEOM4,EQEXIN,SIL,GPDT/RG,,USET/V,N,LUSET/V,N,MPCF1/ V,N,
              MPCF2/V,N,SINGLE/V,N,OMIT/V,N,REACT/V,N,NSKIP/V,N,REPEAT/ V,N,
              NOSET/V,N,NOL/V,N,NOA $

 45  SAVE     MPCF1,MPCF2,SINGLE,OMIT,REACT,NSKIP,REPEAT,NOSET,NOL,NOA $

 46  COND     ERROR3,NOL $

 47  PURGE    KRR,KLR,DM,MLR,MR/REACT/GM/MPCF1/GO,KOOB, LOO,UOO,MOOB,MOAB/
              OMIT/KFS/SINGLE/QG/NOSET$

 48  EQUIV    KGG,KNN/MPCF1/MGG,MNN/MPCF1$

 49  CHKPNT   KRR,KLR,DM,MLR,MR,GM,RG,GO,KOOB,LOO,UOO,MOOB, MOAB,KFS,QG,USET,
```

```
RIGID FORMAT DMAP LISTING
SERIES L

RIGID FORMAT 3

   N A S T R A N  S O U R C E  P R O G R A M  C O M P I L A T I O N
DMAP-DMAP INSTRUCTION
 NO.
                KNN,MNN$

 50  COND       LBL4,GENEL $

 51  GPSP       GPL,GPST,USET,SIL/OGPST $

 52  OFP        OGPST,,,,,//V,N,CARDNO $

 53  SAVE       CARDNO $

 54  LABEL      LBL4 $

 55  COND       LBL2,MPCF2 $

 56  MCE1       USET,RG/GM $

 57  CHKPNT     GM$

 58  MCE2       USET,GM,KGG,MGG,,/KNN,MNN,,$

 59  CHKPNT     KNN,MNN$

 60  LABEL      LBL2 $

 61  EQUIV      KNN,KFF/SINGLE/MNN,MFF/SINGLE$

 62  CHKPNT     KFF,MFF $

 63  COND       LBL3,SINGLE $

 64  SCE1       USET,KNN,MNN,,/KFF,KFS,,MFF,, $

 65  CHKPNT     KFS,KFF,MFF$

 66  LABEL      LBL3 $

 67  EQUIV      KFF,KAA/OMIT/ MFF,MAA/OMIT$

 68  CHKPNT     KAA,MAA $

 69  COND       LBL5,OMIT $

 70  SMP1       USET,KFF,MFF,,/GO,KAA,K00B,L00,U00,MAA,M00B,M0AB,, $

 71  CHKPNT     KAA,MAA,GO$

 72  LABEL      LBL5 $

 73  COND       LBL6,REACT $

 74  RBMG1      USET,KAA,MAA/KLL,KLR,KRR,MLL,MLR,MRR$

 75  CHKPNT     KLL,KLR,KRR,MLL,MLR,MRR$
```

```
RIGID FORMAT DMAP LISTING
SERIES L

RIGID FORMAT 3

   N A S T R A N  S O U R C E  P R O G R A M  C O M P I L A T I O N
DMAP-DMAP INSTRUCTION
NO.

 76  (RBMG2)   KLL/LLL,ULL $

 77  CHKPNT    ULL,LLL$

 78  (RBMG3)   LLL,ULL,KLR,KRR/DM $

 79  CHKPNT    DM$

 80  (RBMG4)   DM,MLL,MLR,MRR/MR$

 81  CHKPNT    MR$

 82  LABEL     LBL6 $

 83  (DPD)     DYNAMICS,GPL,SIL,USET/GPLD,SILD,USETD,,,,,,,EED,EQDYN/V,N,
               LUSET/V,N,LUSETD/V,N,NOTFL/V,N,NODLT/V,N,NOPSDL/V,N,NOFRL/ V,N,
               NONLFT/V,N,NOTRL/V,N,NOEED/C,N,123/V,N,NOUE $

 84  SAVE      NOEED $

 85  COND      ERROR2,NOEED$

 86  CHKPNT    EED $

 87  (READ)    KAA,MAA,MR,DM,EED,USET,CASECC/LAMA,PHIA,MI,OEIGS/C,N,MODES/ V,
               N,NEIGV$

 88  SAVE      NEIGV $

 89  CHKPNT    LAMA,PHIA,MI,OEIGS$

 90  OFP       LAMA,OEIGS,,,,//V,N,CARDNO $

 91  SAVE      CARDNO $

 92  COND      FINIS,NEIGV $

 93  (SDR1)    USET,,PHIA,,,GO,GM,,KFS,,/PHIG,,QG/C,N,1/C,N,REIG $

 94  CHKPNT    PHIG,QG$

 95  (SDR2)    CASECC,CSTM,MPT,DIT,EQEXIN,SIL,,,BGPDT,LAMA,QG,PHIG,EST,/,OQG1,
               OPHIG,OES1,OEF1,PPHIG/C,N,REIG $

 96  OFP       OPHIG,OQG1,OEF1,OES1,,//V,N,CARDNO $

 97  SAVE      CARDNO $

 98  COND      P2,JUMPPLOT $

 99  (PLOT)    PLTPAR,GPSETS,ELSETS,CASECC,BGPDT,EQEXIN,SIL,,PPHIG / PLOTX2/V,
               N,NSIL/V,N,LUSET/V,N,JUMPPLOT/V,N,PLTFLG/V,N,PFILE $
```

```
 RIGID FORMAT DMAP LISTING
 SERIES L

 RIGID FORMAT 3

    N A S T R A N  S O U R C E  P R O G R A M  C O M P I L A T I O N
DMAP-DMAP INSTRUCTION
 NO.

100   PRTMSG    PLOTX2// $

101   LABEL     P2 $

102   JUMP      FINIS$

103   LABEL     ERROR1$

104   PRTPARM   //C,N,-1/C,N,MODES$

105   LABEL     ERROR2$

106   PRTPARM   //C,N,-2/C,N,MODES$

107   LABEL     ERROR3 $

108   PRTPARM   //C,N,-3/C,N,MODES $

109   LABEL     FINIS$

110   END       $
```

3.4.2 Description of DMAP Operations for Normal Mode Analysis

3. GP1 generates coordinate system transformation matrices, tables of grid point locations, and tables for relating internal and external grid point numbers.

6. GP2 generates Element Connection Table with internal indices.

8. PLTSET transforms user input into a form used to drive structure plotter.

10. PRTMSG prints error messages associated with structure plotter.

14. Go to DMAP No. 18 if no undeformed structure plot request.

15. PLØT generates all requested undeformed structure plots.

17. PRTMSG prints plotter data and engineering data for each undeformed plot generated.

19. GP3 generates Grid Point Temperature Table.

21. TA1 generates element tables for use in matrix assembly and stress recovery.

23. Go to DMAP No. 103 and print error message if there are no structural elements.

26. SMA1 generates stiffness matrix $[K^{X}_{gg}]$ and Grid Point Singularity Table.

28. SMA2 generates mass matrix $[M_{gg}]$.

30. Go to DMAP No. 103 and print error message if no mass matrix exists.

32. Go to DMAP No. 36 if no weight and balance request.

33. GPWG generates weight and balance information.

34. ØFP formats weight and balance information and places it on the system output file for printing.

37. Equivalence $[K^{X}_{gg}]$ to $[K_{gg}]$ if no general elements.

39. Go to DMAP No. 42 if no general elements.

40. SMA3 adds general elements to stiffness matrix $[K^{X}_{gg}]$ to obtain stiffness matrix $[K_{gg}]$.

44. GP4 generates flags defining members of various displacement sets (USET) and forms multipoint constraint equations $[R_g]\{u_g\} = 0$.

46. Go to DMAP No. 107 and print error message if no independent degrees of freedom are defined.

48. Equivalence $[K_{gg}]$ to $[K_{nn}]$ and $[M_{gg}]$ to $[M_{nn}]$ if no multipoint constraints.

50. Go to DMAP No. 54 if general elements present.

51. GPSP determines if possible grid point singularities remain.

52. ØFP formats table of possible grid point singularities and places it on the system output file for printing.

55. Go to DMAP No. 60 if MCE1 and MCE2 have already been executed for current set of multipoint constraints.

56. MCE1 partitions multipoint constraint equations $[R_g] = [R_m \mid R_n]$ and solves for multipoint constraint transformation matrix $[G_m] = -[R_m]^{-1}[R_n]$.

58. MCE2 partitions stiffness and mass matrices

$$[K_{gg}] = \left[\begin{array}{c|c} \bar{K}_{nn} & K_{nm} \\ \hline K_{mn} & K_{mm} \end{array}\right] \quad \text{and} \quad [M_{gg}] = \left[\begin{array}{c|c} \bar{M}_{nn} & M_{nm} \\ \hline M_{mn} & M_{mm} \end{array}\right]$$

and performs matrix reductions

$$[K_{nn}] = [\bar{K}_{nn}] + [G_m^T][K_{mn}] + [K_{mn}^T][G_m] + [G_m^T][K_{mm}][G_m] \quad \text{and}$$

$$[M_{nn}] = [\bar{M}_{nn}] + [G_m^T][M_{mn}] + [M_{mn}^T][G_m] + [G_m^T][M_{mm}][G_m].$$

61. Equivalence $[K_{nn}]$ to $[K_{ff}]$ and $[M_{nn}]$ to $[M_{ff}]$ if no single-point constraints.

63. Go to DMAP No. 66 if no single-point constraints.

64. SCE1 partitions out single-point constraints

$$[K_{nn}] = \left[\begin{array}{c|c} K_{ff} & K_{fs} \\ \hline K_{sf} & K_{ss} \end{array}\right] \quad \text{and} \quad [M_{nn}] = \left[\begin{array}{c|c} M_{ff} & M_{fs} \\ \hline M_{sf} & M_{ss} \end{array}\right].$$

67. Equivalence $[K_{ff}]$ to $[K_{aa}]$ and $[M_{ff}]$ to $[M_{aa}]$ if no omitted coordinates.

69. Go to DMAP No. 72 if no omitted coordinates.

70. SMP1 partitions constrained stiffness and mass matrices

$$[K_{ff}] = \left[\begin{array}{c|c} \bar{K}_{aa} & K_{ao} \\ \hline K_{oa} & K_{oo} \end{array}\right] \quad \text{and} \quad [M_{ff}] = \left[\begin{array}{c|c} \bar{M}_{aa} & M_{ao} \\ \hline M_{oa} & M_{oo} \end{array}\right],$$

solves for transformation matrix $[G_o] = -[K_{oo}]^{-1}[K_{oa}]$,

and performs matrix reductions $[K_{aa}] = [\bar{K}_{aa}] + [K_{oa}^T][G_o]$

and $[M_{aa}] = [\bar{M}_{aa}] + [M_{oa}^T][G_o] + [G_o^T][M_{oa}] + [G_o^T][M_{oo}][G_o]$.

73. Go to DMAP No. 82 if no free-body supports.

74. RBMG1 partitions out free-body supports

$$[K_{aa}] = \left[\begin{array}{c|c} K_{\ell\ell} & K_{\ell r} \\ \hline K_{r\ell} & K_{rr} \end{array}\right] \quad \text{and} \quad [M_{aa}] = \left[\begin{array}{c|c} M_{\ell\ell} & M_{\ell r} \\ \hline M_{r\ell} & M_{rr} \end{array}\right]$$

76. RBMG2 decomposes constrained stiffness matrix $[K_{\ell\ell}] = [L_{\ell\ell}][U_{\ell\ell}]$.

78. RBMG3 forms rigid body transformation matrix

$$[D] = -[K_{\ell\ell}]^{-1}[K_{\ell r}],$$

calculates rigid body check matrix

$$[X] = [K_{rr}] + [K_{\ell r}^T][D],$$

and calculates rigid body error ratio

$$\varepsilon = \frac{||X||}{||K_{rr}||} .$$

80. RBMG4 forms rigid body mass matrix $[m_r] = [M_{rr}] + [M_{\ell r}^T][D] + [D^T][M_{\ell r}] + [D^T][M_{\ell\ell}][D]$.

83. DPD extracts Eigenvalue Extraction Data from Dynamics data block.

85. Go to DMAP No. 105 and print error message if no Eigenvalue Extraction Data.

87. READ extracts real eigenvalues from the equation

$$[K_{aa} - \lambda M_{aa}]\{u_a\} = 0 ,$$

calculates rigid body modes by finding a square matrix $[\phi_{ro}]$ such that

$$[m_o] = [\phi_{ro}^T][m_r][\phi_{ro}]$$

is diagonal and normalized, computes rigid body eigenvectors

$$[\phi_{ao}] = \begin{bmatrix} D\ \phi_{ro} \\ \hline \phi_{ro} \end{bmatrix} ,$$

calculates modal mass matrix

$$[m] = [\phi_a^T][M_{aa}][\phi_a]$$

and normalizes eigenvectors according to one of the following user requests:

1) Unit value of selected coordinate
2) Unit value of largest component
3) Unit value of generalized mass.

90. ØFP formats eigenvalues and summary of eigenvalue extraction information and places them on the system output file for printing.

92. Go to DMAP No. 109 and exit if no eigenvalues found.

93. SDR1 recovers dependent components of the eigenvectors

$$\{\phi_o\} = [G_o]\{\phi_a\} \quad , \qquad \begin{Bmatrix} \phi_a \\ \hline \phi_o \end{Bmatrix} = \{\phi_f\} \quad ,$$

$$\begin{Bmatrix} \phi_f \\ \hline \phi_s \end{Bmatrix} = \{\phi_n\} \quad , \qquad \{\phi_m\} = [G_m]\{\phi_n\} \quad ,$$

$$\begin{Bmatrix} \phi_n \\ \hline \phi_m \end{Bmatrix} = \{\phi_g\}$$

and recovers single-point forces of constraint $\{q_s\} = [K_{fs}^T]\{\phi_s\}$.

95. SDR2 calculates element forces and stresses (ØES1, ØEF1) and prepares eigenvectors and single-point forces of constraint for output (ØQG1, ØPHIG, PPHIG).

96. ØFP formats tables prepared by SDR2 and places them on the system output file for printing.

98. Go to DMAP No. 101 if no deformed structure plots are requested.

99. PLØT generates all requested deformed structure plots.

100. PRTMSG prints plotter data and engineering data for each deformed plot generated.

102. Go to DMAP No. 109 and make normal exit.

104. NØRMAL MØDE ANALYSIS ERRØR MESSAGE NØ. 1 - MASS MATRIX REQUIRED FØR REAL EIGENVALUE ANALYSIS.

106. NØRMAL MØDE ANALYSIS ERRØR MESSAGE NØ. 2 - EIGENVALUE EXTRACTIØN DATA REQUIRED FØR REAL EIGENVALUE ANALYSIS.

108. NØRMAL MØDE ANALYSIS ERRØR MESSAGE NØ. 3 - NØ INDEPENDENT DEGREES ØF FREEDØM HAVE BEEN DEFINED.

3.4.3 Restart Tables for Normal Mode Analysis

3.4.3.1 Bit Positions for Card Name Restart Table

Card Name	Bit Pos.	Card Name	Bit Pos.	Card Name	Bit Pos.
AXIC	1	PBAR	3	ØMIT1	11
CELAS1	1	PBEAM	3	ØMITAX	11
CELAS2	1	PCØNEAX	3	SUPAX	12
CELAS3	1	PQDMEM	3	SUPØRT	12
CELAS4	1	PQDPLT	3	TEMP	13
CMASS1	1	PQUAD1	3	TEMPAX	13
CMASS2	1	PQUAD2	3	TEMPD	13
CMASS3	1	PRØD	3	WTMASS	14
CMASS4	1	PSHEAR	3	GRDPNT	15
CØRD1C	1	PTØRDRG	3	PLØTEL	16
CØRD1R	1	PTRBSC	3	PLØT$	18
CØRD1S	1	PTRIA1	3	PØUT$	19
CØRD2C	1	PTRIA2	3	CØUPMASS	24
CØRD2R	1	PTRMEM	3	EIGR	61
CØRD2S	1	PTRPLT	3	METHØD$	62
GRDSET	1	PTUBE	3		
GRID	1	PTWIST	3		
PØINTAX	1	GENEL	4		
RINGAX	1	CØNM1	5		
SECTAX	1	CØNM2	5		
SEQGP	1	PELAS	6		
SPØINT	1	PMASS	7		
BARØR	2	MAT1	8		
BEAMØR	2	MAT2	8		
CBAR	2	MAT3	8		
CBEAM	2	MATT1	8		
CCØNEAX	2	MATT2	8		
CØNRØD	2	MATT3	8		
CQDMEM	2	TABLEM1	8		
CQDPLT	2	TABLEM2	8		
CQUAD1	2	TABLEM3	8		
CQUAD2	2	TABLEM4	8		
CRØD	2	TEMPMT$	8		
CSHEAR	2	TEMPMX$	8		
CTØRDRG	2	MPC	9		
CTRAPRG	2	MPCADD	9		
CTRBSC	2	MPCAX	9		
CTRIA1	2	MPC$	9		
CTRIA2	2	SPC	10		
CTRIARG	2	SPC1	10		
CTRMEM	2	SPCADD	10		
CTRPLT	2	SPCAX	10		
CTUBE	2	SPC$	10		
CTWIST	2	ØMIT	11		

3.4.3.2 Bit Positions for File Name Restart Table

File Name	Bit Pos.
BGPDT	94
CSTM	94
EQEXIN	94
GPDT	94
GPL	94
SIL	94
ECT	95
GPTT	96
ECPT	97
EST	97
GEI	97
GPCT	97
GPST	98
KGGX	98
MGG	99
KGG	100
RG	101
USET	101
ØGPST	102
GM	103
KNN	104
MNN	104
KFF	105
KFS	105
MFF	105
GØ	106
KAA	106
KØØB	106
LØØ	106
MAA	106
MØAB	106
MØØB	106
UØØ	106
KLL	107
KLR	107
KRR	107
MLL	107
MLR	107
MRR	107
LLL	108

File Name	Bit Pos.
ULL	108
DM	109
MR	110
EED	111
EQDYN	111
GPLD	111
SILD	111
USETD	111
LAMA	112
MI	112
ØEIGS	112
PHIA	112
PHIG	113
QG	113
ØEF1	114
OES1	114
ØPHIG	114
ØQG1	114
PPHIG	114

3.4.3.3 Card Name Restart Table

DMAP Inst.	Bit Position 1	10	20	30	40	50	60
BEGIN	12345678901234567 89			4			12
FILE	12345678901234567 89			4			12
GP1	1						
SAVE	1						
CHKPNT	1						
GP2	12 45		6				
CHKPNT	12 45		6				
PLTSET			8				
SAVE			8				
PRTMSG			8				
CHKPNT			8				
SETVAL			8				
SAVE			8				
COND			8				
PLOT			8				
SAVE			8				
PRTMSG			8				
LABEL			8				
GP3	1	3					
CHKPNT	1	3					
TA1,	1234567						
SAVE	1234567						
COND	12345678	4					
PURGE	1234567						
CHKPNT	1234567						
SMA1	123 6 8						
CHKPNT	123 6 8						
SMA2	123 5 78	4		4			
SAVE	123 5 78	4		4			
COND	123 5 78	4		4			
CHKPNT	123 5 78	4		4			
COND	123 5 78	45					
GPWG	123 5 78	45					
OFP	123 5 78	45					
SAVE	123 5 78	45					
LABEL	123 5 78	45					
EQUIV	123 6 8						
CHKPNT	123 6 8						
COND	1234 6 8						
SMA3	1234 6 8						
CHKPNT	1234 6 8						
LABEL	1234 6 8						
PARAM	1	9012					
GP4	1	9012					
SAVE	1	9012					
COND	1	9012					
PURGE	1	9012					
EQUIV	123456789			4			
CHKPNT	1	9					
COND	123 6 8 0						
GPSP	123 6 8 0						
OFP	123 6 8 0						
SAVE	123 6 8 0						
LABEL	123 6 8 0						
COND	123456789			4			
MCE1	1	9					
CHKPNT	1	9					

DMAP Inst.	Bit Position 1 10 20 30 40 50 60
MCE2	123456789 4
CHKPNT	123456789 4
LABEL	123456789 4
EQUIV	1234567890 4
CHKPNT	1234567890 4
COND	1234567890 4
SCE1	1234567890 4
CHKPNT	1234567890 4
LABEL	1234567890 4
EQUIV	12345678901 4
CHKPNT	12345678901 4
COND	12345678901 4
SMP1	12345678901 4
CHKPNT	12345678901 4
LABEL	12345678901 4
COND	123456789012 4
RBMG1	123456789012 4
CHKPNT	123456789012 4
RBMG2	1234 6 89012
CHKPNT	1234 6 89012
RBMG3	1234 6 89012
CHKPNT	1234 6 89012
RBMG4	123456789012 4
CHKPNT	123456789012 4
LABEL	123456789012 4
DPD	1
SAVE	1
COND	1
CHKPNT	1
READ	123456789012 4 12
SAVE	123456789012 4 12
CHKPNT	123456789012 4 12
OFP	123456789012 4 12
SAVE	123456789012 4 12
COND	123456789012 4 12
SDR1	123456789012 4 12
CHKPNT	123456789012 4 12
SDR2	89
OFP	9
SAVE	9
COND	8
PLOT	8
PRTMSG	8
LABEL	8
JUMP	1234567890123456 89 4 12
LABEL	1234567890123456 89 4 12
PRTPARM	1234567890123456 89 4 12
LABEL	1234567890123456 89 4 12
PRTPARM	1234567890123456 89 4 12
LABEL	1234567890123456 89 4 12
PRTPARM	1234567890123456 89 4 12
LABEL	1234567890123456 89 4 12
END	1234567890123456 89 4 12

3.4.3.4 Rigid Format Change Restart

DMAP Inst.	Bit Position 63 70 80
BEGIN	34 6789C1234
FILE	34 6789C1234
GP1	
SAVE	
CHKPNT	
GP2	
CHKPNT	
PLTSET	
SAVE	
PRTMSG	
CHKPNT	
SETVAL	
SAVE	
COND	
PLOT	
SAVE	
PRTMSG	
LABEL	
GP3	
CHKPNT	
TA1,	
SAVE	
COND	
PURGE	
CHKPNT	
SMA1	
CHKPNT	
SMA2	3 678
SAVE	3 678
COND	34 6789C1234
CHKPNT	3 678
COND	
GPWG	
OFP	
SAVE	
LABEL	
EQUIV	
CHKPNT	
COND	
SMA3	
CHKPNT	
LABEL	
PARAM	
GP4	
SAVE	
COND	
PURGE	
EQUIV	
CHKPNT	
COND	
GPSP	
OFP	
SAVE	
LABEL	
COND	
MCE1	
CHKPNT	
MCE2	
CHKPNT	
LABEL	
EQUIV	
CHKPNT	
COND	
SCE1	
CHKPNT	
LABEL	
EQUIV	
CHKPNT	
COND	
SMP1	
CHKPNT	
LABEL	
COND	
RBMG1	
CHKPNT	
RBMG2	
CHKPNT	
RBMG3	
CHKPNT	
RBMG4	
CHKPNT	
LABEL	
DPD	
SAVE	
COND	34 6789C1234
CHKPNT	
READ	
SAVE	
CHKPNT	
OFP	
SAVE	
COND	
SDR1	34 678901234
CHKPNT	34 6789C1234
SDR2	
OFP	
SAVE	
COND	
PLOT	
PRTMSG	
LABEL	
JUMP	34 678901234
LABEL	34 678901234
PRTPARM	34 678901234
LABEL	34 678901234
PRTPARM	34 678901234
LABEL	34 678901234
PRTPARM	34 678901234
LABEL	34 678901234
END	34 678901234

3.4.3.5 File Name Restart Table

DMAP Inst.	Bit Position 94	100	110	120
BEGIN				
FILE				
GP1	4			
SAVE	4			
CHKPNT	4			
GP2	5			
CHKPNT	5			
PLTSET				
SAVE				
PRTMSG				
CHKPNT				
SETVAL				
SAVE				
COND				
PLOT				
SAVE				
PRTMSG				
LABEL				
GP3	6			
CHKPNT	6			
TA1,	7			
SAVE	7			
COND	7			
PURGE	7	2		
CHKPNT	7			
SMA1	8			
CHKPNT	8			
SMA2	9			
SAVE	9			
COND	9			
CHKPNT	9			
COND				
GPWG				
OFP				
SAVE				
LABEL				
EQUIV		0		
CHKPNT		0		
COND		0		
SMA3		0		
CHKPNT		0		
LABEL		0		
PARAM		1		
GP4		1		
SAVE		1		
COND		1		
PURGE		1	3 567 90	3
EQUIV			4	
CHKPNT				
COND			2	
GPSP			2	
OFP			2	
SAVE			2	
LABEL			2	
COND			34	
MCE1			3	
CHKPNT			3	

DMAP Inst.	Bit Position 94	100	110	120
MCE2			4	
CHKPNT			4	
LABEL			34	
EQUIV			5	
CHKPNT			5	
COND			5	
SCE1			5	
CHKPNT			5	
LABEL			5	
EQUIV			6	
CHKPNT			6	
COND			6	
SMP1			6	
CHKPNT			6	
LABEL			6	
COND			7890	
RBMG1			7	
CHKPNT			7	
RBMG2			8	
CHKPNT			8	
RBMG3			9	
CHKPNT			9	
RBMG4			0	
CHKPNT			0	
LABEL			7890	
DPD			1	
SAVE			1	
COND			1	
CHKPNT			1	
READ			2	
SAVE			2	
CHKPNT			2	
OFP			2	
SAVE			2	
COND			34	
SDR1			3	
CHKPNT			3	
SDR2			4	
OFP				
SAVE				
COND				
PLOT				
PRTMSG				
LABEL				
JUMP				
LABEL				
PRTPARM				
LABEL				
PRTPARM				
LABEL				
PRTPARM				
LABEL				
END				

3.4.4 Automatic Output for Normal Mode Analysis

Each eigenvalue is identified with a mode number determined by sorting the eigenvalues by their magnitude. The following summary of the eigenvalues extracted is automatically printed:

1. Mode Number
2. Extraction Order
3. Eigenvalue
4. Radian Frequency
5. Cyclic Frequency
6. Generalized Mass
7. Generalized Stiffness

The following summary of the eigenvalue analysis performed, using the Inverse Power method, is automatically printed:

1. Number of eigenvalues extracted.
2. Number of starting points used.
3. Number of starting point moves.
4. Number of triangular decompositions.
5. Number of vector iterations.
6. Reason for termination.
   (1) Two consecutive singularities encountered while performing triangular decomposition.
   (2) Four shift points while tracking a single root.
   (3) All eigenvalues found in the frequency range specified.
   (4) Three times the number of roots estimated in the frequency range have been extracted.
   (5) All eigenvalues that exist in the problem have been found.
   (6) The number of roots desired have been found.
   (7) One or more eigenvalues have been found outside the frequency range specified.
   (8) Insufficient time to find another root.
   (9) Unable to converge
7. Largest off-diagonal modal mass term and the number failing the criteria.

The following summary of the eigenvalue analysis performed, using the Determinant method, is automatically printed:

1. Number of eigenvalues extracted.
2. Number of passes through starting points.
3. Number of criteria changes.
4. Number of starting point moves.
5. Number of triangular decompositions.
6. Number of failures to iterate to a root.
7. Reason for termination.
   (1) The number of roots desired have been found.
   (2) All predictions for eigenvalues are outside the frequency range specified.
   (3) Insufficient time to find another root.
   (4) Matrix is singular at first three starting points.
8. Largest off-diagonal modal mass term and the number failing the criterion.
9. Swept determinant function for each starting point.

The following summary of the eigenvalue analysis performed using the Givens method, is automatically printed:

1. Number of eigenvalues extracted.
2. Number of eigenvectors computed.
3. Number of eigenvalue convergence failures.
4. Number of eigenvector convergence failures.
5. Reason for termination.
   (1) Normal termination.
   (2) Insufficient time to calculate eigenvalues and number of eigenvectors requested.
   (3) Insufficient time to find additional eigenvectors.
6. Largest off-diagonal modal mass term and the number failing the criterion.

3.4.5 Case Control Deck and Parameters for Normal Mode Analysis

The following items relate to subcase definition and data selection for Normal Modes:

1. METHØD must be used to select an EIGR card that exists in the Bulk Data Deck.
2. On restart, the current EIGR card controls the eigenvalue extraction, regardless of what calculations were made in the previous execution. Consequently, when making restarts with either the Determinant method or the Inverse Power method, METHØD should be changed

to select an EIGR card that avoids the extraction of previously found eigenvalues. This is particularly important following unscheduled exits due to insufficient time to find all eigenvalues in the range of interest.

3. An SPC set must be selected unless the model is a free body or all constraints are specified on GRID cards, Scalar Connection cards or with General Elements.

4. Multiple subcases are used only to control output requests. A single subcase is sufficient if the same output is desired for all modes. If multiple subcases are present, the output requests will be honored in succession for increasing mode numbers. MØDES may be used to repeat subcases in order to make the same output request for several consecutive modes.

The following output may be requested for Normal Mode Analysis:

1. Eigenvectors along with the associated eigenvalue for each mode.

2. Nonzero components of the single-point forces of constraint for selected modes at selected grid points.

3. Forces and stresses in selected elements for selected modes.

4. Undeformed plot of the structural model and mode shapes for selected modes.

The following parameters are used in Normal Mode Analysis:

1. GRDPNT - optional - a positive integer value of this parameter will cause the Grid Point Weight Generator to be executed and the resulting weight and balance information to be printed.

2. WTMASS - optional - the terms of the mass matrix are multiplied by the real value of this parameter when they are generated in SMA2.

3. CØUPMASS - optional - a positive integer value of this parameter will cause the generation of coupled mass matrices rather than lumped mass matrices for all bar elements, rod elements, and plate elements that include bending stiffness (see Section 3.1 for list of elements).

3.5 STATIC ANALYSIS WITH DIFFERENTIAL STIFFNESS

3.5.1 DMAP Sequence for Static Analysis with Differential Stiffness

```
RIGID FORMAT 4

   N A S T R A N  S O U R C E  P R O G R A M  C O M P I L A T I O N
DMAP-DMAP INSTRUCTION
NO.

  1  BEGIN     NO.4 DIFFERENTIAL STIFFNESS ANALYSIS - SERIES L $

  2  FILE      LBLL=TAPE/LLL=TAPE $

  3  FILE      QBG=APPEND/UBGV=APPEND $

  4  (GP1)     GEOM1,GEOM2,/GPL,EQEXIN,GPDT,CSTM,BGPDT,SIL/V,N,LUSET/ C,N,123/
               V,N,NOGPDT $

  5  SAVE      LUSET$

  6  CHKPNT    GPL,EQEXIN,GPDT,CSTM,BGPDT,SIL $

  7  (GP2)     GEOM2,EQEXIN/ECT $

  8  CHKPNT    ECT $

  9  PLTSET    PCDB,EQEXIN,ECT/PLTSETX,PLTPAR,GPSETS,ELSETS/V,N,NSIL/ V,N,
               JUMPPLOT $

 10  SAVE      NSIL,JUMPPLOT $

 11  PRTMSG    PLTSETX//$

 12  CHKPNT    PLTPAR,GPSETS,ELSETS $

 13  SETVAL    //V,N,PLTFLG/C,N,1/V,N,PFILE/C,N,0 $

 14  SAVE      PLTFLG,PFILE $

 15  COND      P1,JUMPPLOT $

 16  (PLOT)    PLTPAR,GPSETS,ELSETS,CASECC,BGPDT,EQEXIN,SIL,,/PLOTX1/ V,N,
               NSIL/V,N,LUSET/V,N,JUMPPLOT/V,N,PLTFLG/V,N,PFILE $

 17  SAVE      JUMPPLOT,PLTFLG,PFILE $

 18  PRTMSG    PLOTX1//$

 19  LABEL     P1$

 20  (GP3)     GEOM3,EQEXIN,GEOM2/SLT,GPTT/C,N,123/V,N,NOGRAV/C,N,123 $

 21  SAVE      NOGRAV$

 22  PARAM     //C,N,AND/V,N,SKPMGG/V,N,NOGRAV/V,Y,GRDPNT$

 23  PURGE     MGG/SKPMGG$

 24  CHKPNT    SLT,GPTT,MGG $
```

```
RIGID FORMAT DMAP LISTING
SERIES L

RIGID FORMAT 4

   N A S T R A N  S O U R C E  P R O G R A M  C O M P I L A T I O N
DMAP-DMAP INSTRUCTION
NO.

25  (TA1,)    ,ECT,EPT,BGPDT,SIL,GPTT,CSTM/EST,,GEI,ECPT,GPCT/V,N,LUSET/ C,N,
              123/V,N,NOSIMP/C,N,0/V,N,NOGENL/V,N,GENEL $

26  SAVE      NOSIMP,NOGENL,GENEL $

27  COND      ERROR1,NOSIMP$

28  PURGE     OGPST/GENEL $

29  CHKPNT    EST,ECPT,GPCT,GEI,OGPST $

30  (SMA1)    CSTM,MPT,ECPT,GPCT,DIT/KGGX,,GPST/V,N,NOGENL/V,N,NOK4GG $

31  CHKPNT    GPST,KGGX $

32  COND      LBL1,SKPMGG$

33  (SMA2)    CSTM,MPT,ECPT,GPCT,DIT/MGG,/V,Y,WTMASS=1.0/V,N,NOMGG/V,N,NOBGG/
              V,Y,COUPMASS=-1 $

34  SAVE      NOMGG$

35  CHKPNT    MGG $

36  COND      LBL1,GRDPNT$

37  COND      ERROR4,NOMGG$

38  (GPWG)    BGPDT,CSTM,EQEXIN,MGG/OGPWG/V,Y,GRDPNT=-1/V,Y,WTMASS$

39  OFP       OGPWG,,,,,//V,N,CARDNO $

40  SAVE      CARDNO $

41  LABEL     LBL1 $

42  EQUIV     KGGX,KGG/NOGENL $

43  CHKPNT    KGG $

44  COND      LBL11,NOGENL $

45  (SMA3)    GEI,KGGX/KGG/V,N,LUSET/V,N,NOGENL/V,N,NOSIMP $

46  CHKPNT    KGG $

47  LABEL     LBL11 $

48  PARAM     //C,N,MPY/V,N,NSKIP/C,N,0/C,N,0 $

49  (GP4)     CASECC,GEOM4,EQEXIN,SIL,GPDT/RG,YS,USET/V,N,LUSET/V,N,MPCF1/ V,
              N,MPCF2/V,N,SINGLE/V,N,OMIT/V,N,REACT/V,N,NSKIP/V,N,REPEAT/ V,
              N,NOSET/V,N,NOL/V,N,NOA $
```

```
RIGID FORMAT DMAP LISTING
SERIES L

RIGID FORMAT 4

   N A S T R A N  S O U R C E  P R O G R A M  C O M P I L A T I O N
DMAP-DMAP INSTRUCTION
 NO.

 50  SAVE      MPCF1,MPCF2,SINGLE,OMIT,REACT,NSKIP,REPEAT,NOSET,NOL,NOA $

 51  COND      ERROR5,NOL $

 52  PURGE     GM/MPCF1/GO,KOOB,LOO,UOO,PO,UOOV,RUOV/OMIT/PS,KFS,KSS,QG/
               SINGLE/UBOOV/OMIT/YBS,PBS,KBFS,KBSS,KDFS,KDSS/SINGLE $

 53  EQUIV     KGG,KNN/MPCF1 $

 54  CHKPNT    GM,RG,GO,KOOB,LOO,UOO,PO,UOOV,RUOV,YS,PS,KFS,KSS,USET,KNN,
               UBOOV,YBS,PBS,KBFS,KBSS,KDFS,KDSS,QG $

 55  COND      LBL4D,REACT $

 56  JUMP      ERROR2$

 57  LABEL     LBL4D $

 58  COND      LBL4,GENEL$

 59  (GPSP)    GPL,GPST,USET,SIL/OGPST $

 60  OFP       OGPST,,,,,//V,N,CARDNO $

 61  SAVE      CARDNO $

 62  LABEL     LBL4 $

 63  COND      LBL2,MPCF2 $

 64  (MCE1)    USET,RG/GM $

 65  CHKPNT    GM$

 66  (MCE2)    USET,GM,KGG,,,/KNN,,, $

 67  CHKPNT    KNN$

 68  LABEL     LBL2 $

 69  EQUIV     KNN,KFF/SINGLE $

 70  CHKPNT    KFF$

 71  COND      LBL3,SINGLE $

 72  (SCE1)    USET,KNN,,,/KFF,KFS,KSS,,, $

 73  CHKPNT    KFS,KSS,KFF$

 74  LABEL     LBL3 $

 75  EQUIV     KFF,KAA/OMIT $
```

```
RIGID FORMAT DMAP LISTING
SERIES L

RIGID FORMAT 4

   N A S T R A N  S O U R C E  P R O G R A M  C O M P I L A T I O N
DMAP-DMAP INSTRUCTION
NO.

 76   CHKPNT    KAA$

 77   COND      LBL5,OMIT $

 78   (SMP1)    USET,KFF,,,/GO,KAA,K00B,L00,U00,,,,, $

 79   CHKPNT    GO,KAA,K00B,L00,U00$

 80   LABEL     LBL5 $

 81   (RBMG2)   KAA/LLL,ULL $

 82   CHKPNT    ULL,LLL$

 83   (SSG1)    SLT,BGPDT,CSTM,SIL,EST ,MPT,GPTT,EDT,MGG,CASECC,DIT/PG/V,N,
                LUSET/C,N,1 $

 84   CHKPNT    PG $

 85   EQUIV     PG,PL/NOSET$

 86   CHKPNT    PL $

 87   COND      LBL10,NOSET$

 88   (SSG2)    USET,GM,YS,KFS,GO,,PG/,PO,PS,PL$

 89   CHKPNT    PO,PS,PL $

 90   LABEL     LBL10$

 91   (SSG3)    LLL,ULL,KAA,PL,L00,U00,K00B,PO/ULV,U00V,RULV,RU0V/ V,N,OMIT/V,
                Y,IRES=-1 $

 92   CHKPNT    ULV,U00V,RULV,RU0V$

 93   COND      LBL9,IRES$

 94   MATGPR    GPL,USET,SIL,RULV//C,N,L $

 95   MATGPR    GPL,USET,SIL,RU0V//C,N,0 $

 96   LABEL     LBL9$

 97   (SDR1)    USET,PG,ULV,U00V,YS,GO,GM,PS,KFS,KSS,/UGV,PGG,QG/C,N,1/C,N,DS0$

 98   CHKPNT    UGV,QG,PGG $

 99   (SDR2)    CASECC,CSTM,MPT,DIT,EQEXIN,SIL,GPTT,EDT,BGPDT,PGG,QG,UGV,EST,/
                OPG1,OQG1,OUGV1,OES1,OEF1,PUGV1/C,N,DS0 $

100   OFP       OUGV1,OPG1,OQG1,OEF1,OES1,//V,N,CARDNO $
```

```
RIGID FORMAT DMAP LISTING
SERIES L

RIGID FORMAT 4

   N A S T R A N  S O U R C E  P R O G R A M  C O M P I L A T I O N
DMAP-DMAP INSTRUCTION
 NO.

101   SAVE      CARDNO $

102   CHKPNT    PUGV1 $

103   (DSMG1)   CASECC,GPTT,SIL,EDT,UGV,CSTM,MPT,ECPT,GPCT,DIT/KDGG/ V,N,
                DSCOSET$

104   SAVE      DSCOSET $

105   CHKPNT    KDGG $

106   EQUIV     KDGG,KDNN/MPCF2$

107   CHKPNT    KDNN $

108   COND      LBL2D,MPCF2 $

109   (MCE2)    USET,GM,KDGG,,,/KDNN,,, $

110   CHKPNT    KDNN $

111   LABEL     LBL2D $

112   EQUIV     KDNN,KDFF/SINGLE$

113   CHKPNT    KDFF $

114   COND      LBL3D,SINGLE $

115   (SCE1)    USET,KDNN,,,/KDFF,KDFS,KDSS,,, $

116   CHKPNT    KDFF,KDFS,KDSS $

117   LABEL     LBL3D $

118   EQUIV     KDFF,KDAA/OMIT $

119   CHKPNT    KDAA $

120   COND      LBL5D,OMIT $

121   (SMP2)    USET,GO,KDFF/KDAA$

122   CHKPNT    KDAA $

123   LABEL     LBL5D $

124   EQUIV     PL,PBL/DSCOSET/PS,PBS/DSCOSET/YS,YBS/DSCOSET/U00V,UB00V/
                DSCOSET$

125   CHKPNT    PBL,PBS,YBS,UB00V $

126   PARAM     //C,N,MPY/V,N,NDSKIP/C,N,0/C,N,0 $
```

```
 RIGID FORMAT DMAP LISTING
 SERIES L

 RIGID FORMAT 4

    N A S T R A N  S O U R C E  P R O G R A M  C O M P I L A T I O N
DMAP-DMAP INSTRUCTION
 NO.

127  JUMP      DSLOOP $

128  LABEL     DSLOOP $

129  (DSMG2)   MPT,KAA,KDAA,KFS,KDFS,KSS,KDSS,PL,PS,YS,UOOV/KBLL,KBFS,KBSS,
               PBL,PBS,YBS,UBOOV/V,N,NDSKIP/ V,N,REPEATD/ V,N,DSCOSET$

130  SAVE      NDSKIP,REPEATD $

131  CHKPNT    KBLL,KBFS,KBSS,PBL,PBS,YBS,UBOOV $

132  (RBMG2)   KBLL/LBLL,UBLL/V,N,POWER/V,N,DET $

133  SAVE      DET,POWER $

134  CHKPNT    LBLL,UBLL $

135  PRTPARM   //C,N,0/C,N,DET $

136  PRTPARM   //C,N,0/C,N,POWER $

137  (SSG3)    LBLL,UBLL,KBLL,PBL,,,,,/UBLV,,RUBLV,/C,N,-1/V,Y,IRES$

138  CHKPNT    UBLV,RUBLV$

139  COND      LBL9D,IRES$

140  MATGPR    GPL,USET,SIL,RUBLV//C,N,L$

141  LABEL     LBL9D$

142  (SDR1)    USET,,UBLV,UBOOV,YBS,GO,GM,PBS,KBFS,KBSS,/UBGV,,QBG/V,N,NDSKIP/
               C,N,DS1$

143  CHKPNT    UBGV,QBG $

144  COND      LBL8D,REPEATD $

145  REPT      DSLOOP,100$

146  JUMP      ERROR3$

147  LABEL     LBL8D $

148  CHKPNT    CSTM $

149  (SDR2)    CASECC,CSTM,MPT,DIT,EQEXIN,SIL,GPTT,EDT,BGPDT,,QBG,UBGV,EST,/ ,
               OQBG1,OUBGV1,OESB1,OEFB1,PUBGV1/C,N,DS1 $

150  OFP       OUBGV1,OQBG1,OEFB1,OESB1,,//V,N,CARDNO $

151  SAVE      CARDNO $
```

```
 RIGID FORMAT DMAP LISTING
 SERIES L

 RIGID FORMAT 4

    N A S T R A N  S O U R C E  P R O G R A M  C O M P I L A T I O N
DMAP-DMAP INSTRUCTION
 NO.

152   COND      P2,JUMPPLOT $

153   PLOT      PLTPAR,GPSETS,ELSETS,CASECC,BGPDT,EQEXIN,SIL,PUGV1,PUBGV1/
                PLOTX2/V,N,NSIL/V,N,LUSET/V,N,JUMPPLOT/V,N,PLTFLG/V,N,PFILE $

154   PRTMSG    PLOTX2// $

155   LABEL     P2 $

156   JUMP      FINIS$

157   LABEL     ERROR1$

158   PRTPARM   //C,N,-1/C,N,DIFFSTIF$

159   LABEL     ERROR2$

160   PRTPARM   //C,N,-2/C,N,DIFFSTIF$

161   LABEL     ERROR3$

162   PRTPARM   //C,N,-3/C,N,DIFFSTIF$

163   LABEL     ERROR4$

164   PRTPARM   //C,N,-4/C,N,DIFFSTIF$

165   LABEL     ERROR5 $

166   PRTPARM   //C,N,-5/C,N,DIFFSTIF $

167   LABEL     FINIS$

168   END       $
```

3.5.2 Description of DMAP Operations for Static Analysis with Differential Stiffness

4. GP1 generates coordinate system transformation matrices, tables of grid point locations, and tables for relating internal and external grid point numbers.

7. GP2 generates Element Connection Table with internal indices.

9. PLTSET transforms user input into a form used to drive structure plotter.

11. PRTMSG prints error messages associated with structure plotter.

15. Go to DMAP No. 19 if no undeformed structure plot request.

16. PLØT generates all requested undeformed structure plots.

18. PRTMSG prints plotter data and engineering data for each undeformed plot generated.

20. GP3 generates Static Loads Table and Grid Point Temperature Table.

25. TA1 generates element tables for use in matrix assembly and stress recovery.

27. Go to DMAP No. 157 and print error message if no structural elements.

30. SMA1 generates stiffness matrix $[K^{X}_{gg}]$ and Grid Point Singularity Table.

32. Go to DMAP No. 41 if no gravity loads and no weight and balance request.

33. SMA2 generates mass matrix $[M_{gg}]$.

36. Go to DMAP No. 41 if no weight and balance request.

37. Go to DMAP No. 163 and print error message if no mass matrix exists.

38. GPWG generates weight and balance information.

39. ØFP formats weight and balance information and places it on the system output file for printing.

42. Equivalence $[K^{X}_{gg}]$ to $[K_{gg}]$ if no general elements.

44. Go to DMAP No. 47 if no general elements.

45. SMA3 adds general elements to $[K^{X}_{gg}]$ to obtain stiffness matrix $[K_{gg}]$.

49. GP4 generates flags defining members of various displacement sets (USET), forms multipoint constraint equations $[R_g]\{u_g\} = 0$ and forms enforced displacement vector $\{Y_s\}$.

51. Go to DMAP No. 165 and print error message if no independent degrees of freedom are defined.

53. Equivalence $[K_{gg}]$ to $[K_{nn}]$ if no mulitpoint constraints.

55. Go to DMAP No. 57 if no free-body supports supplied.

56. Go to DMAP No. 159 and print error message if free-body supports are present.

58. Go to DMAP No. 62 if general elements present.

59. GPSP determines if possible grid point singularities remain.

60. ØFP formats table of possible grid point singularities and places it on the system output file for printing.

63. Go to DMAP No. 68 if MCE1 and MCE2 have already been executed for current set of multipoint constraints.

64. MCE1 partitions multipoint constraint equations $[R_g] = [R_m \mid R_n]$ and solves for multipoint constraint transformation matrix $[G_m] = -[R_m]^{-1}[R_n]$.

66. MCE2 partitions stiffness matrix

$$[K_{gg}] = \left[\begin{array}{c|c} \bar{K}_{nn} & K_{nm} \\ \hline K_{mn} & K_{mm} \end{array}\right]$$

and performs matrix reduction

$$[K_{nn}] = [\bar{K}_{nn}] + [G_m^T][K_{mn}] + [K_{mn}^T][G_m] + [G_m^T][K_{mm}][G_m].$$

69. Equivalence $[K_{nn}]$ to $[K_{ff}]$ if no single-point constraints.

71. Go to DMAP No. 74 if no single-point constraints.

72. SCE partitions out single-point constraints.

$$[K_{nn}] = \left[\begin{array}{c|c} K_{ff} & K_{fs} \\ \hline K_{sf} & K_{ss} \end{array}\right].$$

75. Equivalence $[K_{ff}]$ to $[K_{aa}]$ if no omitted coordinates.

77. Go to DMAP No. 80 if no omitted coordinates.

78. SMP1 partitions constrained stiffness matrix

$$[K_{ff}] = \left[\begin{array}{c|c} \bar{K}_{aa} & K_{ao} \\ \hline K_{oa} & K_{oo} \end{array}\right]$$

solves for transformation matrix $[G_o] = -[K_{oo}]^{-1}[K_{oa}]$
and performs matrix reduction $[K_{aa}] = [\bar{K}_{aa}] + [K_{oa}^T][G_o]$.

81. RMBG2 decomposes constrained stiffness matrix $[K_{\ell\ell}] = [L_{\ell\ell}][U_{\ell\ell}]$

83. SSG1 generates static load vectors $\{P_g\}$.

85. Equivalence $\{P_g\}$ to $\{P_\ell\}$ if no constraints applied.

87. Go to DMAP No. 90 if no constraints applied.

88. SSG2 applies constraints to static load vectors

$$\{P_g\} = \begin{Bmatrix} \bar{P}_n \\ \hline P_m \end{Bmatrix} , \qquad \{P_n\} = \{\bar{P}_n\} + [G_m^T]\{P_m\} ,$$

$$\{P_n\} = \begin{Bmatrix} \bar{P}_f \\ \hline P_s \end{Bmatrix} , \qquad \{P_f\} = \{\bar{P}_f\} - [K_{fs}]\{Y_s\} ,$$

$$\{P_f\} = \begin{Bmatrix} P_a \\ \hline P_o \end{Bmatrix} \quad \text{and} \quad \{P_\ell\} = \{P_a\} + [G_o^T]\{P_o\} .$$

91. SSG3 solves for displacements of independent coordinates

$$\{u_\ell\} = [K_{\ell\ell}]^{-1}\{P_\ell\} ,$$

solves for displacements of omitted coordinates

$$\{u_o^o\} = [K_{oo}]^{-1}\{P_o\},$$

calculates residual vector (RULV) and residual vector error ratio for independent coordinates

$$\{\delta P_\ell\} = \{P_\ell\} - [K_{\ell\ell}]\{u_\ell\}$$

$$\varepsilon_\ell = \frac{\{u_\ell^T\}\{\delta P_\ell\}}{\{P_\ell^T\}\{u_\ell\}}$$

and calculates residual vector (RUØV) and residual vector error ratio for omitted coordinates

$$\{\delta P_o\} = \{P_o\} - [K_{oo}]\{u_o^o\},$$

$$\varepsilon_o = \frac{\{u_o^T\}\{\delta P_o\}}{\{P_o^T\}\{u_o^o\}} .$$

93. Go to DMAP No. 96 if residual vectors are not to be printed.

94. Print residual vector for independent coordinates (RULV).

95. Print residual vector for omitted coordinates (RUØV).

97. SDR1 recovers dependent displacements

$$\{u_o\} = [G_o]\{u_\ell\} + \{u_o^o\} \quad ,$$

$$\left\{\begin{array}{c} u_a \\ \hline u_o \end{array}\right\} = \{u_f\} \quad , \qquad \left\{\begin{array}{c} u_f \\ \hline Y_s \end{array}\right\} = \{u_n\} \quad ,$$

$$\{u_m\} = [G_m]\{u_n\}, \qquad \left\{\begin{array}{c} u_n \\ \hline u_m \end{array}\right\} = \{u_g\} \quad ,$$

and recovers single-point forces of constraint

$$\{q_s\} = -\{P_s\} + [K_{fs}^T]\{u_f\} + [K_{ss}]\{Y_s\} \ .$$

99. SDR2 calculates element forces and stresses (ØES1, ØEF1) and prepares load vectors, displacement vectors and single-point forces of constraint for output (ØGP1, ØUGV1, PUGV1, ØQG1).

100. ØFP formats tables prepared by SDR2 and places them on the system output file for printing.

103. DSMG1 generates differential stiffness matrix $[K_{gg}^d]$.

106. Equivalence $[K_{gg}^d]$ to $[K_{nn}^d]$ if no multipoint constraints.

108. Go to DMAP No. 111 if no multipoint constraints.

109. MCE2 partitions differential stiffness matrix

$$[K_{gg}^d] = \left[\begin{array}{c|c} \bar{K}_{nn}^d & K_{nm}^d \\ \hline K_{mn}^d & K_{mm}^d \end{array}\right]$$

and performs matrix reduction $[K_{nn}^d] = [\bar{K}_{nn}^d] + [G_m^T][K_{mn}^d] + [K_{mn}^d][G_m] + [G_m^T][K_{mm}^d][G_m]$.

112. Equivalence $[K_{nn}^d]$ to $[K_{ff}^d]$ if no single-point constraints.

114. Go to DMAP No. 117 if no single-point constraints.

115. SCE1 partitions out single-point constraints

$$[K_{nn}^d] = \left[\begin{array}{c|c} K_{ff}^d & K_{fs}^d \\ \hline K_{sf}^d & K_{ss}^d \end{array}\right]$$

118. Equivalence $[K_{ff}^d]$ to $[K_{aa}^d]$ if no omitted coordinates.

120. Go to DMAP No. 123 if no omitted coordinates.

121. SMP2 partitions constrained differential stiffness matrix

$$[K^d_{ff}] = \left[\begin{array}{c|c} \bar{K}^d_{aa} & K^d_{ao} \\ \hline K^d_{oa} & K^d_{oo} \end{array}\right]$$

and performs matrix reduction $[K^d_{aa}] = [\bar{K}^d_{aa}] + [K^d_{ao}][G_o]$.

124. Equivalence $\{P_\ell\}$ to $\{P^b_\ell\}$, $\{P_s\}$ to $\{P^b_s\}$, $\{Y_s\}$ to $\{Y^b_s\}$ and $\{u^o_o\}$ to $\{u^{ob}_o\}$ if no scale factors are specified on a DSFACT card.

127. Go to next DMAP instruction if cold start or modified restart. DSLØØP will be altered by the executive System to the proper location inside the loop for unmodified restarts within the loop.

128. Beginning of loop for additional differential stiffness scale factors.

129. DSMG2 adds partitions of stiffness matrix to similar partitions of differential stiffness matrix

$$[K^b_{\ell\ell}] = [K_{aa}] + \beta[K^d_{aa}] ,$$

$$[K^b_{fs}] = [K_{fs}] + \beta[K^d_{fs}] \quad \text{and}$$

$$[K^b_{ss}] = [K_{ss}] + \beta[K^d_{ss}]$$

and multiplies partitions of load vectors and displacement vectors by current value of differential stiffness scale factor (β)

$$\{P^b_\ell\} = \beta\{P_\ell\} , \qquad \{P^b_s\} = \beta\{P_s\} ,$$

$$\{Y^b_s\} = \beta\{Y_s\} \quad \text{and} \qquad \{u^{ob}_o\} = \beta\{u^o_o\} .$$

131. RMBG2 decomposes the combined differential stiffness matrix and elastic stiffness matrix.

$$[K^b_{\ell\ell}] = [L^b_{\ell\ell}][U^b_{\ell\ell}].$$

135. PRTPARM prints the scaled value of the determinant of the combined differential stiffness matrix and elastic stiffness matrix.

136. PRTPARM prints the scale factor (power of ten) of the determinant of the combined differential stiffness matrix and the elastic stiffness matrix.

137. SSG3 solves for displacements of independent coordinates for current value of differential stiffness scale factor (β)

$$\{u^b_\ell\} = [K^b_{\ell\ell}]^{-1}\{P^b_\ell\}$$

and calculates residual vector (RBULV) and residual vector error ratio for current value of differential stiffness load factor

$$\{\delta P^b_\ell\} = \{P^b_\ell\} - [K^b_{\ell\ell}]\{u^b_\ell\} ,$$

$$\varepsilon^b_\ell = \frac{\{u^b_\ell\}^T\{\delta P^b_\ell\}}{\{P^b_\ell\}^T\{u^b_\ell\}}$$

139. Go to DMAP No. 141 if residual vector for current value of differential stiffness load factor is not to be printed.

140. Print residual vector for current value of differential stiffness load factor.

142. SDR1 recovers dependent displacements for current value of differential stiffness scale factor

$$\{u_o^b\} = [G_o]\{u_\ell^b\} + \{u_o^{ob}\} , \qquad \begin{Bmatrix} u_\ell^b \\ \hline u_o^b \end{Bmatrix} = \{u_f^b\} ,$$

$$\begin{Bmatrix} u_f^b \\ \hline Y_s^b \end{Bmatrix} = \{u_n^b\} , \qquad \{u_m^b\} = [G_m]\{u_n^b\} ,$$

$$\begin{Bmatrix} u_n^b \\ \hline u_m^b \end{Bmatrix} = \{u_g^b\}$$

and recovers single-point forces of constraint for current value of differential stiffness scale factor

$$\{q_s^b\} = -\{P_s^b\} + [K_{sf}^b]\{u_f^b\} + [K_{ff}^b]\{Y_s^b\} .$$

144. Go to DMAP No. 147 if all differential stiffness scale factors have been processed.

145. Go to DMAP No. 128 if additional differential stiffness scale factors need to be processed.

146. Go to DMAP No. 161 if number of differential stiffness scale factors exceeds 100.

149. SDR2 calculates element forces and stresses (ØEFB1, ØESB1) and prepares load vectors, displacement vectors and single-point forces of constraint for output (ØUBGV1, PUBGV1, ØQBG1) for all differential stiffness scale factors.

150. ØFP formats tables prepared by SDR2 and places them on the system output file for printing.

152. Go to DMAP No. 155 if no deformed structure plots are requested.

153. PLØT generates all requested deformed structure plots.

154. PRTMSG prints plotter data and engineering data for each deformed plot generated.

156. Go to DMAP No. 167 and make normal exit.

158. STATIC ANALYSIS WITH DIFFERENTIAL STIFFNESS ERRØR MESSAGE NØ. 1 - NØ STRUCTURAL ELEMENTS HAVE BEEN DEFINED.

160. STATIC ANALYSIS WITH DIFFERENTIAL STIFFNESS ERRØR MESSAGE NØ. 2 - FREE BØDY-SUPPØRTS NØT ALLØWED.

162. STATIC ANALYSIS WITH DIFFERENTIAL STIFFNESS ERRØR MESSAGE NØ. 3 - ATTEMPT TØ EXECUTE MØRE THAN 100 LØØPS.

164. STATIC ANALYSIS WITH DIFFERENTIAL STIFFNESS ERRØR MESSAGE NØ. 4 - MASS MATRIX REQUIRED FØR WEIGHT AND BALANCE CALCULATIØNS.

165. STATIC ANALYSIS WITH DIFFERENTIAL STIFFNESS ERRØR MESSAGE NØ. 5 - NØ INDEPENDENT DEGREES ØF FREEDØM HAVE BEEN DEFINED.

3.5.3 Restart Tables for Static Analysis with Differential Stiffness

3.5.3.1 Bit Positions for Card Name Restart Table

Card Name	Bit Pos.	Card Name	Bit Pos.	Card Name	Bit Pos.
AXIC	1	PBAR	3	ØMIT1	11
CELAS1	1	PBEAM	3	ØMITAX	11
CELAS2	1	PCØNEAX	3	SUPAX	12
CELAS3	1	PQDMEM	3	SUPØRT	12
CELAS4	1	PQDPLT	3	TEMP	13
CMASS1	1	PQUAD1	3	TEMPAX	13
CMASS2	1	PQUAD2	3	TEMPD	13
CMASS3	1	PRØD	3	WTMASS	14
CMASS4	1	PSHEAR	3	GRDPNT	15
CØRD1C	1	PTØRDRG	3	PLØTEL	16
CØRD1R	1	PTRBSC	3	IRES	17
CØRD1S	1	PTRIA1	3	PLØT$	18
CØRD2C	1	PTRIA2	3	PØUT$	19
CØRD2R	1	PTRMEM	3	LØØP$	22
CØRD2S	1	PTRPLT	3	LØØP1$	23
GRDSET	1	PTUBE	3	CØUPMASS	24
GRID	1	PTWIST	3	DSFACT	58
PØINTAX	1	GENEL	4	DSCØ$	58
RINGAX	1	CØNM1	5	DEFØRM	59
SECTAX	1	CØNM2	5	DEFØRM$	59
SEQGP	1	PELAS	6	LØAD$	59
SPØINT	1	PMASS	7	RFØRCE$	59
BARØR	2	MAT1	8	FØRCE	60
BEAMØR	2	MAT2	8	FØRCE1	60
CBAR	2	MAT3	8	FØRCE2	60
CBEAM	2	MATT1	8	FØRCEAX	60
CCØNEAX	2	MATT2	8	LØAD	60
CØNRØD	2	MATT3	8	MØMAX	60
CQDMEM	2	TABLEM1	8	MØMENT	60
CQDPLT	2	TABLEM2	8	MØMENT1	60
CQUAD1	2	TABLEM3	8	MØMENT2	60
CQUAD2	2	TABLEM4	8	PLØAD	60
CRØD	2	TEMPMT$	8	PLØAD1	60
CSHEAR	2	TEMPMX$	8	PLØAD2	60
CTØRDRG	2	MPC	9	PRESAX	60
CTRAPRG	2	MPCADD	9	RFØRCE	60
CTRBSC	2	MPCAX	9	SLØAD	60
CTRIA1	2	MPC$	9	GRAV	61
CTRIA2	2	SPC	10	TEMPLD$	62
CTRIARG	2	SPC1	10		
CTRMEM	2	SPCADD	10		
CTRPLT	2	SPCAX	10		
CTUBE	2	SPC$	10		
CTWIST	2	ØMIT	11		

3.5.3.2 Bit Positions for File Name Restart Table

File Name	Bit Pos.
BGPDT	94
CSTM	94
EQEXIN	94
GPDT	94
GPL	94
SIL	94
ECT	95
GPTT	96
SLT	96
ECPT	97
EST	97
GEI	97
GPCT	97
GPST	98
KGGX	98
MGG	99
KGG	100
RG	101
USET	101
YS	101
ØGPST	102
GM	103
KNN	104
KFF	105
KFS	105
KSS	105
GØ	106
KAA	106
KØØB	106
LØØ	106
UØØ	106
LLL	107
ULL	107
PG	108
PL	109
PØ	109
PS	109
RULV	110
RUØV	110
ULV	110
UØØV	110
PGG	111
QG	111
UGV	111
ØEF1	112
ØES1	112

File Name	Bit Pos.
ØPG1	112
ØQG1	112
ØUGV1	112
PUGV1	112
KDGG	113
KDNN	114
KDFF	115
KDFS	115
KDSS	115
KDAA	116
KBLL	117
KBFS	117
KBSS	117
PBL	117
PBS	117
UBØØV	117
YBS	117
LBLL	118
UBLL	118
UBLV	119
RUBLV	119
QBG	120
UBGV	120
ØEFB1	121
ØESB1	121
ØQBG1	121
ØUBGV1	121
PUBGV1	121

3.5.3.3 Card Name Restart Table

DMAP Inst.	Bit Position 1	10	20	30	40	50	60
BEGIN	12345678901234567	89	234				89012
FILE	12345678901234567	89	234				89012
FILE	12345678901234567	89	234				89012
GP1	1						
SAVE	1						
CHKPNT	1						
GP2	12 45		6				
CHKPNT	12 45		6				
PLTSET			8				
SAVE			8				
PRTMSG			8				
CHKPNT			8				
SETVAL			8				
SAVE			8				
COND			8				
PLOT			8				
SAVE			8				
PRTMSG			8				
LABEL			8				
GP3	12	3					C1
SAVE	12	3					C1
PARAM	12	3 5					C1
PURGE	12	3 5					C1
CHKPNT	12	3					C1
TA1,	1234567						
SAVE	1234567						
COND	12345678						
PURGE	1234567						
CHKPNT	1234567						
SMA1	123 6 8						
CHKPNT	123 6 8						
COND	123 5 78	45	4				1
SMA2	123 5 78	4	4				1
SAVE	123 5 78	4	4				1
CHKPNT	123 5 78	4	4				1
COND	123 5 78	45					
COND	123 5 78	45					
GPWG	123 5 78	45					
OFP	123 5 78	45					
SAVE	123 5 78	45					
LABEL	123 5 78	45	4				1
EQUIV	123 6 8						
CHKPNT	123 6 8						
COND	1234 6 8						
SMA3	1234 6 8						
CHKPNT	1234 6 8						
LABEL	1234 6 8						
PARAM	1	901					
GP4	1	901					
SAVE	1	901					
COND	1	901					
PURGE	1	901					
EQUIV	1234 6 89						
CHKPNT	1	9					
COND	1	2					
JUMP	1	2					
LABEL	1	2					

DMAP Inst.	Bit Position 1 10 20 30 40 50 60
COND	123 6 8 0
GPSP	123 6 8 0
OFP	123 6 8 0
SAVE	123 6 8 0
LABEL	123 6 8 0
COND	1234 6 89
MCE1	1 9
CHKPNT	1 9
MCE2	1234 6 89
CHKPNT	1234 6 89
LABEL	1234 6 89
EQUIV	1234 6 890
CHKPNT	1234 6 890
COND	1234 6 890
SCE1	1234 6 890
CHKPNT	1234 6 890
LABEL	1234 6 890
EQUIV	1234 6 8901
CHKPNT	1234 6 8901
COND	1234 6 8901
SMP1	1234 6 8901
CHKPNT	1234 6 8901
LABEL	1234 6 8901
RBMG2	1234 6 8901
CHKPNT	1234 6 8901
SSG1	123 5678 9012
CHKPNT	123 5678 9012
EQUIV	123 5678901 9012
CHKPNT	123 5678901 9012
COND	123 5678901 9012
SSG2	123 5678901 9012
CHKPNT	123 5678901 9012
LABEL	123 5678901 9012
SSG3	12345678901 9012
CHKPNT	12345678901 9012
COND	12345678901 7 9012
MATGPR	12345678901 7 9012
MATGPR	12345678901 7 9012
LABEL	12345678901 7 9012
SDR1	12345678901 9012
CHKPNT	12345678901 9012
SDR2	9
OFP	9
SAVE	9
CHKPNT	9
DSMG1	12345678901 89012
SAVE	12345678901 89012
CHKPNT	12345678901 9012
EQUIV	12345678901 9012
CHKPNT	12345678901 9012
COND	12345678901 9012
MCE2	12345678901 9012
CHKPNT	12345678901 9012
LABEL	12345678901 9012
EQUIV	12345678901 9012
CHKPNT	12345678901 9012
COND	12345678901 9012

DMAP Inst.	Bit Position 1 10 20 30 40 50 60
SCE1	12345678901 9012
CHKPNT	12345678901 9012
LABEL	12345678901 9012
EQUIV	12345678901 9012
CHKPNT	12345678901 9012
COND	12345678901 9012
SMP2	12345678901 9012
CHKPNT	12345678901 9012
LABEL	12345678901 9012
EQUIV	12345678901 23 89012
CHKPNT	12345678901 23 89012
PARAM	12345678901 23 89012
JUMP	23
$SS	1 3
LABEL	23
DSMG2	12345678901 23 89012
SAVE	12345678901 23 89012
CHKPNT	12345678901 23 89012
RBMG2	12345678901 23 89012
SAVE	12345678901 23 89012
CHKPNT	12345678901 23 89012
PRTPARM	12345678901 23 89012
PRTPARM	12345678901 23 89012
SSG3	12345678901 23 89012
CHKPNT	12345678901 23 89012
COND	12345678901 7 23 89012
MATGPR	12345678901 7 23 89012
LABEL	12345678901 7 23 89012
SDR1	12345678901 23 89012
CHKPNT	12345678901 23 89012
COND	23
$SS	1 3
REPT	23
$SS	1 3
JUMP	23
$SS	1 3
LABEL	23
$SS	1 3
CHKPNT	9
SDR2	89
OFP	9
SAVE	9
COND	8
PLOT	8
PRTMSG	8
LABEL	8
JUMP	123456789012345678 9 234 89012
LABEL	123456789012345678 9 234 89012
PRTPARM	123456789012345678 9 234 89012
LABEL	123456789012345678 9 234 89012
PRTPARM	123456789012345678 9 234 89012
LABEL	123456789012345678 9 234 89012
$SS	1 3
PRTPARM	123456789012345678 9 234 89012
$SS	1 3
LABEL	123456789012345678 9 234 89012
PRTPARM	123456789012345678 9 234 89012

DMAP Inst.	Bit Position 1 10 20 30 40 50 60
LABEL	1234567890123456789 234 89012
PRTPARM	1234567890123456789 234 89012
LABEL	1234567890123456789 234 89012
END	1234567890123456789 234 89012

3.5.3.4 Rigid Format Change Restart Table

DMAP Inst.	Bit Position 63 70 80	DMAP Inst.	Bit Position 63 70 80
BEGIN	345 789C1234	COND	
FILE	345 789C1234	GPSP	
FILE	345 789C1234	OFP	
GP1		SAVE	
SAVE		LABEL	
CHKPNT		COND	
GP2		MCE1	
CHKPNT		CHKPNT	
PLTSET		MCE2	
SAVE		CHKPNT	
PRTMSG		LABEL	
CHKPNT		EQUIV	
SETVAL		CHKPNT	
SAVE		COND	
COND		SCE1	
PLOT		CHKPNT	
SAVE		LABEL	
PRTMSG		EQUIV	
LABEL		CHKPNT	
GP3		COND	
SAVE		SMP1	
PARAM		CHKPNT	
PURGE		LABEL	
CHKPNT		RBMG2	
TA1,		CHKPNT	
SAVE		SSG1	
COND	345 789C1234	CHKPNT	
PURGE		EQUIV	
CHKPNT		CHKPNT	
SMA1		COND	
CHKPNT		SSG2	
COND		CHKPNT	
SMA2		LABEL	
SAVE		SSG3 4	
CHKPNT		CHKPNT 4	
COND		COND 45 89C1234	
COND		MATGPR 45 89C1234	
GPWG		MATGPR 45 89C1234	
OFP		LABEL 45 89C1234	
SAVE		SDR1	
LABEL		CHKPNT	
EQUIV		SDR2	
CHKPNT		OFP	
COND		SAVE	
SMA3		CHKPNT.	
CHKPNT		DSMG1	
LABEL		SAVE	
PARAM		CHKPNT	
GP4		EQUIV	
SAVE		CHKPNT	
COND	345 9C1234	COND	
PURGE		MCE2	
EQUIV		CHKPNT	
CHKPNT		LABEL	
COND	345 9C1234	EQUIV	
JUMP	345 9C1234	CHKPNT	
LABEL	345 9C1234	COND	

DMAP Inst.	Bit Position 63	70	80
SCE1			
CHKPNT			
LABEL			
EQUIV			
CHKPNT			
COND			
SMP2			
CHKPNT			
LABEL			
EQUIV			
CHKPNT			
PARAM			
JUMP			
LABEL			
DSMG2			
SAVE			
CHKPNT			
RBMG2			
SAVE			
CHKPNT			
PRTPARM			
PRTPARM			
SSG3			
CHKPNT			
COND			
MATGPR			
LABEL			
SDR1	345	78901234	
CHKPNT	345	78901234	
COND	345	78901234	
REPT	345	78901234	
JUMP	345	78901234	
LABEL	345	78901234	
CHKPNT			
SDR2			
OFP			
SAVE			
COND			
PLOT			
PRTMSG			
LABEL			
JUMP	345	78901234	
LABEL	345	78901234	
PRTPARM	345	78901234	
LABEL	345	78901234	
PRTPARM	345	78901234	
LABEL	345	78901234	
PRTPARM	345	78901234	
LABEL	345	78901234	
PRTPARM	345	78901234	
LABEL	345	78901234	
PRTPARM	345	78901234	
LABEL	345	78901234	
END	345	78901234	

3.5.3.5 File Name Restart Table

DMAP Inst.	94	Bit Position 100	110	120
BEGIN				
FILE				
FILE				
GP1	4			
SAVE	4			
CHKPNT	4			
GP2	5			
CHKPNT	5			
PLTSET				
SAVE				
PRTMSG				
CHKPNT				
SETVAL				
SAVE				
COND				
PLOT				
SAVE				
PRTMSG				
LABEL				
GP3	6			
SAVE	6			
PARAM	6			
PURGE	6			
CHKPNT	6			
TA1,	7			
SAVE	7			
COND	7 9			
PURGE	7	2		
CHKPNT	7			
SMA1	8			
CHKPNT	8			
COND	9			
SMA2	9			
SAVE	9			
CHKPNT	9			
COND				
COND				
GPWG				
OFP				
SAVE				
LABEL	7 9			
EQUIV	0			
CHKPNT	0			
COND	0			
SMA3	0			
CHKPNT	0			
LABEL	0			
PARAM	1			
GP4	1			
SAVE	1			
COND	1			
PURGE	1 3 56	901	5 7	
EQUIV	4			
CHKPNT				
COND				
JUMP				
LABEL				

DMAP Inst.	94	Bit Position 100	110	120
COND	2			
GPSP	2			
OFP	2			
SAVE	2			
LABEL	2			
COND	34			
MCE1	3			
CHKPNT	3			
MCE2	4			
CHKPNT	4			
LABEL	34			
EQUIV	5			
CHKPNT	5			
COND	5			
SCE1	5			
CHKPNT	5			
LABEL	5			
EQUIV	6			
CHKPNT	6			
COND	6			
SMP1	6			
CHKPNT	6			
LABEL	6			
RBMG2	7			
CHKPNT	7			
SSG1	8			
CHKPNT	8			
EQUIV	9			
CHKPNT	9			
COND	9			
SSG2	9			
CHKPNT	9			
LABEL	9			
SSG3	0			
CHKPNT	0			
COND				
MATGPR				
LABEL				
SDR1	1			
CHKPNT	1			
SDR2	2			
OFP				
SAVE				
CHKPNT	2			
DSMG1	3			
SAVE	3			
CHKPNT	3			
EQUIV	4			
CHKPNT	4			
COND	4			
MCE2	4			
CHKPNT	4			
LABEL	4			
EQUIV	5			
CHKPNT	5			
COND	5			

DMAP Inst.	Bit Position 94	100	110	120
SCE1			5	
CHKPNT			5	
LABEL			5	
EQUIV			6	
CHKPNT			6	
COND			6	
SMP2			6	
CHKPNT			6	
LABEL			6	
EQUIV			7	
CHKPNT			7	
PARAM			7	
JUMP				
LABEL				
DSMG2			7	
SAVE			7	
CHKPNT			7	
RBMG2			8	
SAVE			8	
CHKPNT			8	
PRTPARM			8	
PRTPARM			8	
SSG3			9	
CHKPNT			9	
COND				
MATGPR				
LABEL				
SDR1				0
CHKPNT				0
COND				
REPT				
JUMP				
LABEL				
CHKPNT				
SDR2				1
OFP				
SAVE				
COND				
PLOT				
PRTMSG				
LABEL				
JUMP				
LABEL				
PRTPARM				
LABEL				
PRTPARM				
LABEL				
PRTPARM				
LABEL				
PRTPARM				
LABEL				
PRTPARM				
LABEL				
END				

3.5.4 Automatic Output for Static Analysis with Differential Stiffness

The value of the determinant of the sum of the elastic stiffness and the differential stiffness is automatically printed for each differential stiffness loading condition.

3.5.5 Case Control Deck and Parameters for Static Analysis with Differential Stiffness

The following items relate to subcase definition and data selection for Static Analysis with Differential Stiffness:

1. The Case Control Deck must contain at least two subcases. Other than DSCØEFFICIENT in the second subcase, all subcases are used only for output selection.
2. DSCØEFFICIENT must appear in the second subcase, either to select a DSFACT set from the Bulk Data Deck, or to explicitly select the default value of unity.
3. A static loading condition must be defined above the subcase level with a LØAD, TEMPERATURE(LØAD), or DEFØRM selection, unless all loading is specified by grid point displacements on SPC cards.
4. An SPC set must be selected above the subcase level unless all constraints are specified on GRID cards.
5. Output requests that apply only to the linear solution must appear in the first subcase.
6. Output requests that apply only to the solution with differential stiffness must be placed in the second and succeeding subcases. If only two subcases exist, the output requests in the second subcase will be honored for all differential stiffness loading conditions.
7. Output requests that apply to all solutions, both with and without differential stiffness may be placed above the subcase level.

The following output may be requested for Static Analysis with Differential Stiffness:

1. Nonzero Components of the applied static load for the linear solution at selected grid points.
2. Displacement and nonzero components of the single-point forces of constraint, with and without differential stiffness, at selected grid points.
3. Forces and stresses in selected elements, with and without differential stiffness.

4. Undeformed and deformed plots of the structural model.

The following parameters are used in Static Analysis with Differential Stiffness:

1. GRDPNT - optional - a positive integer value of this parameter will cause the Grid Point Weight Generator to be executed and the resulting weight and balance information to be printed.

2. WTMASS - optional - the terms of the mass matrix are multiplied by the real value of this parameter when they are generated in SMA2.

3. IRES - optional - a positive integer value of this parameter will cause the printing of the residual vectors following the execution of SSG3.

4. COUPMASS - optional - a positive integer value of this parameter will cause the generation of coupled mass matrices rather than lumped mass matrices for all bar elements, rod elements, and plate elements that include bending stiffness (see Section 3.1 for list of elements).

3.6 BUCKLING ANALYSIS

3.6.1 DMAP Sequence for Buckling Analysis

```
RIGID FORMAT 5

   N A S T R A N  S O U R C E  P R O G R A M  C O M P I L A T I O N
DMAP-DMAP INSTRUCTION
 NO.

  1  BEGIN     NO.5 BUCKLING ANALYSIS - SERIES L $

  2  FILE      LLL=TAPE $

  3  GP1       GEOM1,GEOM2,/GPL,EQEXIN,GPDT,CSTM,BGPDT,SIL/V,N,LUSET/ C,N,123/
               V,N,NOGPDT $

  4  SAVE      LUSET$

  5  CHKPNT    GPL,EQEXIN,GPDT,CSTM,BGPDT,SIL $

  6  GP2       GEOM2,EQEXIN/ECT $

  7  CHKPNT    ECT $

  8  PLTSET    PCDB,EQEXIN,ECT/PLTSETX,PLTPAR,GPSETS,ELSETS/V,N,NSIL/ V,N,
               JUMPPLOT $

  9  SAVE      NSIL,JUMPPLOT $

 10  PRTMSG    PLTSETX//$

 11  CHKPNT    PLTPAR,GPSETS,ELSETS $

 12  SETVAL    //V,N,PLTFLG/C,N,1/V,N,PFILE/C,N,0 $

 13  SAVE      PLTFLG,PFILE $

 14  COND      P1,JUMPPLOT $

 15  PLOT      PLTPAR,GPSETS,ELSETS,CASECC,BGPDT,EQEXIN,SIL,,/PLOTX1/ V,N,
               NSIL/V,N,LUSET/V,N,JUMPPLOT/V,N,PLTFLG/V,N,PFILE $

 16  SAVE      JUMPPLOT,PLTFLG,PFILE $

 17  PRTMSG    PLOTX1//$

 18  LABEL     P1 $

 19  GP3       GEOM3,EQEXIN,GEOM2/SLT,GPTT/C,N,123/V,N,NOGRAV/C,N,123 $

 20  SAVE      NOGRAV$

 21  PARAM     //C,N,AND/V,N,SKPMGG/V,N,NOGRAV/V,Y,GRDPNT$

 22  PURGE     MGG/SKPMGG$

 23  CHKPNT    SLT,GPTT,MGG $

 24  TA1,      ,ECT,EPT,BGPDT,SIL,GPTT,CSTM/EST,,GEI,ECPT,GPCT/V,N,LUSET/ C,N,
               123/V,N,NOSIMP/C,N,0/V,N,NOGENL/V,N,GENEL $
```

```
RIGID FORMAT DMAP LISTING
SERIES L

RIGID FORMAT 5

   N A S T R A N  S O U R C E  P R O G R A M  C O M P I L A T I O N
DMAP-DMAP INSTRUCTION
 NO.

 25  SAVE     NOSIMP,NOGENL,GENEL $

 26  COND     ERROR1,NOSIMP$

 27  PURGE    OGPST/GENEL$

 28  CHKPNT   EST,ECPT,GPCT,GEI,OGPST $

 29  (SMA1)   CSTM,MPT,ECPT,GPCT,DIT/KGGX,,GPST/V,N,NOGENL/V,N,NOK4GG $

 30  CHKPNT   GPST,KGGX $

 31  COND     LBL1,SKPMGG$

 32  (SMA2)   CSTM,MPT,ECPT,GPCT,DIT/MGG,/V,Y,WTMASS=1.0/V,N,NOMGG/V,N,NOBGG/
              V,Y,COUPMASS=-1 $

 33  SAVE     NOMGG$

 34  CHKPNT   MGG $

 35  COND     ERROR5,NOMGG$

 36  COND     LBL1,GRDPNT$

 37  (GPWG)   BGPDT,CSTM,EQEXIN,MGG/OGPWG/V,Y,GRDPNT=-1/V,Y,WTMASS$

 38  OFP      OGPWG,,,,,//V,N,CARDNO $

 39  SAVE     CARDNO $

 40  LABEL    LBL1 $

 41  EQUIV    KGGX,KGG/NOGENL $

 42  CHKPNT   KGG $

 43  COND     LBL11,NOGENL $

 44  (SMA3)   GEI,KGGX/KGG/V,N,LUSET/V,N,NOGENL/C,N,-1 $

 45  CHKPNT   KGG $

 46  LABEL    LBL11 $

 47  PARAM    //C,N,MPY/V,N,NSKIP/C,N,0/C,N,0 $

 48  (GP4)    CASECC,GEOM4,EQEXIN,SIL,GPDT/RG,YS,USET/V,N,LUSET/V,N,MPCF1/ V,
              N,MPCF2/V,N,SINGLE/V,N,OMIT/V,N,REACT/V,N,NSKIP/V,N,REPEAT/ V,
              N,NOSET/V,N,NOL/V,N,NOA $

 49  SAVE     MPCF1,MPCF2,SINGLE,OMIT,REACT,NSKIP,REPEAT,NOSET,NOL,NOA $
```

```
RIGID FORMAT DMAP LISTING
SERIES L

RIGID FORMAT 5

   N A S T R A N  S O U R C E  P R O G R A M  C O M P I L A T I O N
DMAP-DMAP INSTRUCTION
NO.

 50   COND      ERROR6,NOA $

 51   PARAM     //C,N,AND/V,N,NOSR/V,N,SINGLE/V,N,REACT$

 52   PURGE     GM/MPCF1/GO,KOOB,LOO,UOO,PO,UOOV,RUOV/OMIT/PS,KFS,KSS/SINGLE/
                QG/NOSR$

 53   EQUIV     KGG,KNN/MPCF1 $

 54   CHKPNT    GM,RG,GO,KOOB,LOO,UOO,PO,UOOV,RUOV,YS,PS,KFS,KSS,USET,QG,KNN $

 55   COND      LBL4D,REACT $

 56   JUMP      ERROR2$

 57   LABEL     LBL4D $

 58   COND      LBL4,GENEL$

 59   (GPSP)    GPL,GPST,USET,SIL/OGPST $

 60   OFP       OGPST,,,,,//V,N,CARDNO $

 61   SAVE      CARDNO $

 62   LABEL     LBL4 $

 63   COND      LBL2,MPCF2 $

 64   (MCE1)    USET,RG/GM $

 65   CHKPNT    GM$

 66   (MCE2)    USET,GM,KGG,,,/KNN,,, $

 67   CHKPNT    KNN$

 68   LABEL     LBL2 $

 69   EQUIV     KNN,KFF/SINGLE $

 70   CHKPNT    KFF$

 71   COND      LBL3,SINGLE $

 72   (SCE1)    USET,KNN,,,/KFF,KFS,KSS,,, $

 73   CHKPNT    KFS,KSS,KFF$

 74   LABEL     LBL3 $

 75   EQUIV     KFF,KAA/OMIT $
```

```
RIGID FORMAT DMAP LISTING
SERIES L

RIGID FORMAT 5

   N A S T R A N  S O U R C E  P R O G R A M  C O M P I L A T I O N
DMAP=DMAP INSTRUCTION
NO.

 76   CHKPNT    KAA$

 77   COND      LBL5,OMIT $

 78   SMP1      USET,KFF,,,,/GO,KAA,K00B,L00,U00,,,,, $

 79   CHKPNT    GO,KAA,K00B,L00,U00$

 80   LABEL     LBL5 $

 81   RBMG2     KAA/LLL,ULL $

 82   CHKPNT    ULL,LLL$

 83   SSG1      SLT,BGPDT,CSTM,SIL,EST,MPT,GPTT,EDT,MGG,CASECC,DIT/PG/ V,N,
                LUSET/C,N,1 $

 84   CHKPNT    PG $

 85   EQUIV     PG,PL/NOSET$

 86   CHKPNT    PL $

 87   COND      LBL10,NOSET$

 88   SSG2      USET,GM,YS,KFS,GO,,PG/,PO,PS,PL$

 89   CHKPNT    PO,PS,PL $

 90   LABEL     LBL10$

 91   SSG3      LLL,ULL,KAA,PL,L00,U00,K00B,PO/ULV,U00V,RULV,RU0V/ V,N,OMIT/V,
                Y,IRES=-1 $

 92   CHKPNT    ULV,U00V,RULV,RU0V$

 93   COND      LBL9,IRES$

 94   MATGPR    GPL,USET,SIL,RULV//C,N,L $

 95   MATGPR    GPL,USET,SIL,RU0V//C,N,0 $

 96   LABEL     LBL9$

 97   SDR1      USET,PG,ULV,U00V,YS,GO,GM,PS,KFS,KSS,/UGV,PGG,QG/C,N,1/ C,N,
                BKL0$

 98   CHKPNT    UGV,QG,PGG $

 99   SDR2      CASECC,CSTM,MPT,DIT,EQEXIN,SIL,GPTT,EDT,BGPDT,PGG,QG,UGV,EST,/
                0PG1,0QG1,0UGV1,0ES1,0EF1,PUGV1/C,N,BKL0 $

100   CHKPNT    PUGV1 $
```

```
 RIGID FORMAT DMAP LISTING
 SERIES L

 RIGID FORMAT 5

    N A S T R A N  S O U R C E  P R O G R A M  C O M P I L A T I O N
DMAP-DMAP INSTRUCTION
 NO.

101   OFP       OUGV1,OPG1,OQG1,OEF1,OES1,//V,N,CARDNO $

102   SAVE      CARDNO $

103   (DSMG1)   CASECC,GPTT,SIL,EDT,UGV,CSTM,MPT,ECPT,GPCT,DIT/KDGG/ V,N,
                DSCOSET$

104   CHKPNT    KDGG $

105   EQUIV     KDGG,KDNN/MPCF2$

106   CHKPNT    KDNN $

107   COND      LBL2D,MPCF2 $

108   (MCE2)    USET,GM,KDGG,,,/KDNN,,, $

109   CHKPNT    KDNN $

110   LABEL     LBL2D $

111   EQUIV     KDNN,KDFF/SINGLE$

112   CHKPNT    KDFF $

113   COND      LBL3D,SINGLE $

114   (SCE1)    USET,KDNN,,,/KDFF,KDFS,KDSS,,, $

115   CHKPNT    KDFF,KDFS,KDSS $

116   LABEL     LBL3D $

117   EQUIV     KDFF,KDAA/OMIT $

118   CHKPNT    KDAA $

119   COND      LBL5D,OMIT $

120   (SMP2)    USET,GO,KDFF/KDAA$

121   CHKPNT    KDAA $

122   LABEL     LBL5D $

123   ADD       KDAA,/KDAAM/C,N,(-1.0,0.0)/C,N,(0.0,0.0) $

124   CHKPNT    KDAAM $

125   (DPD)     DYNAMICS,GPL,SIL,USET/GPLD,SILD,USETD,,,,,,,EED,EQDYN/V,N,
                LUSET/V,N,LUSETD/V,N,NOTFL/V,N,NODLT/V,N,NOPSDL/V,N,NOFRL/ V,N,
                NONLFT/V,N,NOTRL/V,N,NOEED/C,N,123/V,N,NOUE $
```

```
 RIGID FORMAT DMAP LISTING
 SERIES L

 RIGID FORMAT 5

    N A S T R A N  S O U R C E  P R O G R A M  C O M P I L A T I O N
DMAP-DMAP INSTRUCTION
 NO.

126  SAVE      NOEED $

127  COND      ERROR3,NOEED$

128  CHKPNT    EED $

129  READ      KAA,KDAAM,,,EED,USET,CASECC/LAMA,PHIA,,OEIGS/C,N,BUCKLING/ V,N,
               NEIGV/C,N,2$

130  SAVE      NEIGV $

131  CHKPNT    LAMA,PHIA,OEIGS $

132  OFP       OEIGS,LAMA,,,,//V,N,CARDNO $

133  SAVE      CARDNO $

134  COND      ERROR4,NEIGV $

135  SDR1      USET,,PHIA,,,GO,GM,,KFS,,/PHIG,,BQG/C,N,1/C,N,BKL1 $

136  CHKPNT    PHIG,BQG $

137  SDR2      CASECC,CSTM,MPT,DIT,EQEXIN,SIL,,,BGPDT,LAMA,BQG,PHIG,EST,/ ,
               OBQG1,OPHIG,OBES1,OBEF1,PPHIG/C,N,BKL1 $

138  OFP       OPHIG,OBQG1,OBEF1,OBES1,,,//V,N,CARDNO $

139  SAVE      CARDNO $

140  COND      P2,JUMPPLOT $

141  PLOT      PLTPAR,GPSETS,ELSETS,CASECC,BGPDT,EQEXIN,SIL,PUGV1,PPHIG /
               PLOTX2/V,N,NSIL/V,N,LUSET/V,N,JUMPPLOT/V,N,PLTFLG/V,N,PFILE $

142  PRTMSG    PLOTX2// $

143  LABEL     P2 $

144  JUMP      FINIS$

145  LABEL     ERROR1$

146  PRTPARM   //C,N,-1/C,N,BUCKLING$

147  LABEL     ERROR2$

148  PRTPARM   //C,N,-2/C,N,BUCKLING$

149  LABEL     ERROR3$

150  PRTPARM   //C,N,-3/C,N,BUCKLING$
```

```
 RIGID FORMAT DMAP LISTING
 SERIES L

 RIGID FORMAT 5

    N A S T R A N  S O U R C E  P R O G R A M  C O M P I L A T I O N
DMAP-DMAP INSTRUCTION
 NO.

151   LABEL     ERROR4$

152   PRTPARM   //C,N,-4/C,N,BUCKLING$

153   LABEL     ERROR5$

154   PRTPARM   //C,N,-5/C,N,BUCKLING$

155   LABEL     ERROR6 $

156   PRTPARM   //C,N,-6/C,N,BUCKLING $

157   LABEL     FINIS$

158   END       $
```

3.6.2 Description of DMAP Operations for Buckling Analysis

3. GP1 generates coordinate system transformation matrices, tables of grid point locations, and tables for relating internal and external grid point numbers.

6. GP2 generates Element Connection Table with internal indices.

8. PLTSET transforms user input into a form used to drive structure plotter.

10. PRTMSG prints error messages associated with structure plotter.

14. Go to DMAP No. 18 if no undeformed structure plot request.

15. PLØT generates all requested undeformed structure plots.

17. PRTMSG prints plotter data and engineering data for each undeformed plot generated.

19. GP3 generates Static Loads Table and Grid Point Temperature Table.

24. TA1 generates element tables for use in matrix assembly and stress recovery.

26. Go to DMAP No. 145 and print error message if no structural elements.

29. SMA1 generates stiffness matrix $[K^{X}_{gg}]$ and Grid Point Singularity Table.

31. Go to DMAP No. 40 if no gravity loads and no weight and balance request.

32. SMA2 generates mass matrix $[M_{gg}]$.

35. Go to DMAP No. 153 and print error message if no mass matrix exists.

36. Go to DMAP No. 40 if no weight and balance request.

37. GPWG generates weight and balance information.

38. ØFP formats weight and balance information and places it on the system output file for printing.

41. Equivalence $[K^{X}_{gg}]$ to $[K_{gg}]$ if no general elements.

43. Go to DMAP No. 46 if no general elements.

44. SMA3 adds general elements to $[K^{X}_{gg}]$ to obtain stiffness matrix $[K_{gg}]$.

48. GP4 generates flags defining members of various displacement sets (USET), forms multipoint constraint equations $[R_g]\{u_g\} = 0$ and forms enforced displacement vector $\{Y_s\}$.

50. Go to DMAP No. 155 and print error message if no independent degrees of freedom are defined.

53. Equivalence $[K_{gg}]$ to $[K_{nn}]$ if no multipoint constraints.

55. Go to DMAP No. 57 if no free-body supports supplied.

56. Go to DMAP No. 147 and print error message if free-body supports are present.

58. Go to DMAP No. 62 if general elements present.

59. GPSP determines if possible grid point singularities remain.

60. ØFP formats table of possible grid point singularities and places it on the system output file for printing.

63. Go to DMAP No. 68 if MCE1 and MCE2 have already been executed for current set of multipoint constraints.

64. MCE1 partitions multipoint constraint equations $[R_g] = [R_m \mid R_n]$ and solves for multipoint constraint transformation matrix $[G_m] = -[R_m]^{-1}[R_n]$.

66. MCE2 partitions stiffness matrix

$$[K_{gg}] = \left[\begin{array}{c|c} \bar{K}_{nn} & K_{nm} \\ \hline K_{mn} & K_{mm} \end{array}\right]$$

and performs matrix reduction

$$[K_{nn}] = [\bar{K}_{nn}] + [G_m^T][K_{mn}] + [K_{mn}^T][G_m] + [G_m^T][K_{mm}][G_m].$$

69. Equivalence $[K_{nn}]$ to $[K_{ff}]$ if no single-point constraints.

71. Go to DMAP No. 74 if no single-point constraints.

72. SCE1 partitions out single-point constraints

$$[K_{nn}] = \left[\begin{array}{c|c} K_{ff} & K_{fs} \\ \hline K_{sf} & K_{ss} \end{array}\right].$$

75. Equivalence $[K_{ff}]$ to $[K_{aa}]$ if no omitted coordinates.

77. Go to DMAP No. 80 if no omitted coordinates.

78. SMP1 partitions constrained stiffness matrix

$$[K_{ff}] = \left[\begin{array}{c|c} \bar{K}_{aa} & K_{ao} \\ \hline K_{oa} & K_{oo} \end{array}\right],$$

solves for transformation matrix $[G_o] = -[K_{oo}]^{-1}[K_{oa}]$

and performs matrix reduction $[K_{aa}] = [\bar{K}_{aa}] + [K_{oa}^T][G_o]$.

81. RBMG2 decomposes constrained stiffness matrix $[K_{aa}] = [L_{\ell\ell}][U_{\ell\ell}]$.

83. SSG1 generates static load vectors $\{P_g\}$.

85. Equivalence $\{P_g\}$ to $\{P_\ell\}$ if no constraints applied.

87. Go to DMAP No. 90 if no constraints applied.

88. SSG2 applies constraints to static load vectors

$$\{P_g\} = \begin{Bmatrix} \bar{P}_n \\ \hline P_m \end{Bmatrix}, \qquad \{P_n\} = \{\bar{P}_n\} + [G_m^T]\{P_m\},$$

$$\{P_n\} = \begin{Bmatrix} \bar{P}_f \\ \hline P_s \end{Bmatrix}, \qquad \{P_f\} = \{\bar{P}_f\} - [K_{fs}]\{Y_s\},$$

$$\{P_f\} = \begin{Bmatrix} \bar{P}_a \\ \hline P_o \end{Bmatrix} \text{ and } \{P_\ell\} = \{P_a\} + [G_o^T]\{P_o\} \quad .$$

91. SSG3 solves for displacements of independent coordinates

$$\{u_\ell\} = [K_{\ell\ell}]^{-1}\{P_\ell\} ,$$

solves for displacements of omitted coordinates

$$\{u_o^o\} = [K_{oo}]^{-1}\{P_o\},$$

calculates residual vector (RULV) and residual vector error ratio for independent coordinates

$$\{\delta P_\ell\} = \{P_\ell\} - [K_{\ell\ell}]\{u_\ell\}$$

$$\varepsilon_\ell = \frac{\{u_\ell^T\}\{\delta P_\ell\}}{\{P_\ell^T\}\{u_\ell\}}$$

and calculates residual vector (RUØV) and residual vector error ratio for omitted coordinates

$$\{\delta P_o\} = \{P_o\} - [K_{oo}]\{u_o^o\},$$

$$\varepsilon_o = \frac{\{u_o^T\}\{\delta P_o\}}{\{P_o^T\}\{u_o\}}$$

93. Go to DMAP No. 96 if residual vectors are not to be printed.

94. Print residual vector for independent coordinates (RULV)

95. Print residual vector for omitted coordinates (RUØV).

97. SDR1 recovers dependent displacements

$$\{u_o\} = [G_o]\{u_\ell\} + \{u_o^o\},$$

$$\begin{Bmatrix} u_a \\ \hline u_o \end{Bmatrix} = \{u_f\} \quad , \qquad \begin{Bmatrix} u_f \\ \hline Y_s \end{Bmatrix} = \{u_n\},$$

$$\{u_m\} = [G_m]\{u_n\} \quad , \qquad \begin{Bmatrix} u_n \\ \hline u_m \end{Bmatrix} = \{u_g\},$$

and recovers single-point forces of constraint

$$\{q_s\} = -\{P_s\} + [K_{fs}^T]\{u_f\} + [K_{ss}]\{Y_s\}.$$

99. SDR2 calculates element forces and stresses (ØES1, ØEF1) and prepares load vectors, displacement vectors and single-point forces of constraint for output (ØPG1, ØUGV1, PUGV1, ØQG1).

101. ØFP formats tables prepared by SDR2 and places them on the system output file for printing.

103. DSMG1 generates differential stiffness matrix $[K_{gg}^d]$.

105. Equivalence $[K_{gg}^d]$ to $[K_{nn}^d]$ if no multipoint constraints.

107. Go to DMAP No. 110 if no mulitpoint constraints.

108. MCE2 partitions differential stiffness matrix

$$[K_{gg}^d] = \left[\begin{array}{c|c} \bar{K}_{nn}^d & K_{nm}^d \\ \hline K_{mn}^d & K_{mm}^d \end{array}\right]$$

and performs matrix reduction $[K_{nn}^d] = [\bar{K}_{nn}^d] + [G_m^T][K_{mn}^d] + [K_{mn}^d][G_m] + [G_m^T][K_{mm}^d][G_m]$.

111. Equivalence $[K_{nn}^d]$ to $[K_{ff}^d]$ if no single-point constraints.

113. Go to DMAP No. 113 if no single-point constraints.

114. SCE1 partitions out single-point constraints

$$[K_{nn}^d] = \left[\begin{array}{c|c} K_{ff}^d & K_{fs}^d \\ \hline K_{sf}^d & K_{ss}^d \end{array}\right].$$

117. Equivalence $[K_{ff}^d]$ to $[K_{aa}^d]$ if no omitted coordinates.

119. Go to DMAP No. 122 if no omitted coordinates.

120. SMP2 partitions constrained differential stiffness matrix

$$[K^d_{ff}] = \left[\begin{array}{c|c} \bar{K}^d_{aa} & K^d_{ao} \\ \hline K^d_{oa} & K^d_{oo} \end{array}\right]$$

and performs matrix reduction $[K^d_{aa}] = [\bar{K}^d_{aa}] + [K^d_{ao}][G_o]$.

125. DPD extracts Eigenvalue Extraction Data from Dynamics data block.

127. Go to DMAP No. 149 and print error message if no Eigenvalue Extraction Data.

129. READ extracts real eigenvalues from the equation

$$[K_{\ell\ell} + \lambda K^d_{\ell\ell}]\{u_\ell\} = 0$$

and normalizes eigenvectors according to one of the following user requests:
1) Unit value of selected coordinate
2) Unit value of largest component

132. ØFP formats eigenvalues and summary of eigenvalue extraction information and places them on the system output file for printing.

134. Go to DMAP No. 151 and print error message if no eigenvalues found.

135. SDR1 recovers dependent components of the eigenvectors

$$\{\phi_o\} = [G_o]\{\phi_a\}, \qquad \left\{\begin{array}{c} \phi_a \\ \hline \phi_o \end{array}\right\} = \{\phi_f\},$$

$$\left\{\begin{array}{c} \phi_f \\ \hline \phi_s \end{array}\right\} = \{\phi_n\}, \qquad \{\phi_m\} = [G_m]\{\phi_n\},$$

$$\left\{\begin{array}{c} \phi_n \\ \hline \phi_m \end{array}\right\} = \{\phi_g\}$$

and recovers single point forces of constraint $\{q_s\} = [K^T_{fs}]\{\phi_f\}$.

137. SDR2 calculates element forces and stresses (ØBES1, ØBEF1) and prepares eigenvectors and single-point forces of constraint for output (ØBQG1, ØPHIG, PPHIG).

138. ØFP formats tables prepared by SDR2 and places them on the system output file for printing.

140. Go to DMAP No. 143 if no deformed structure plots are requested.

141. PLØT generates all requested deformed structure plots.

142. PRTMSG prints plotter data and engineering data for each deformed plot generated.

144. Go to DMAP No. 157 and make normal exit.

146. BUCKLING ANALYSIS ERRØR MESSAGE NØ. 1 - NØ STRUCTURAL ELEMENTS HAVE BEEN DEFINED.

148. BUCKLING ANALYSIS ERRØR MESSAGE NØ. 2 - FREE BØDY-SUPPØRTS NØT ALLØWED.

150. BUCKLING ANALYSIS ERRØR MESSAGE NØ. 3 - EIGENVALUE EXTRACTIØN DATA REQUIRED FØR REAL EIGENVALUE ANALYSIS.

152. BUCKLING ANALYSIS ERRØR MESSAGE NØ. 4 - NØ EIGENVALUES FØUND.

154. BUCKLING ANALYSIS ERRØR MESSAGE NØ. 5 - MASS MATRIX REQUIRED FØR WEIGHT AND BALANCE CALCULATIØNS.

156. BUCKLING ANALYSIS ERRØR MESSAGE NØ. 6 - NØ INDEPENDENT DEGREES ØF FREEDØM HAVE BEEN DEFINED.

3.6.3 Restart Tables for Buckling Analysis

3.6.3.1 Bit Positions for Card Name Restart Table.

Card Name	Bit Pos.	Card Name	Bit Pos.	Card Name	Bit Pos.
AXIC	1	PBAR	3	ØMIT1	11
CELAS1	1	PBEAM	3	ØMITAX	11
CELAS2	1	PCØNEAX	3	SUPAX	12
CELAS3	1	PQDMEM	3	SUPØRT	12
CELAS4	1	PQDPLT	3	TEMP	13
CMASS1	1	PQUAD1	3	TEMPAX	13
CMASS2	1	PQUAD2	3	TEMPD	13
CMASS3	1	PRØD	3	WTMASS	14
CMASS4	1	PSHEAR	3	GRDPNT	15
CØRD1C	1	PTØRDRG	3	PLØTEL	16
CØRD1R	1	PTRBSC	3	IRES	17
CØRD1S	1	PTRIA1	3	PLØT$	18
CØRD2C	1	PTRIA2	3	PØUT$	19
CØRD2R	1	PTRMEM	3	CØUPMASS	24
CØRD2S	1	PTRPLT	3	GRAV	57
GRDSET	1	PTUBE	3	TEMPLD$	58
GRID	1	PTWIST	3	DEFØRM	59
PØINTAX	1	GENEL	4	DEFØRM$	59
RINGAX	1	CØNM1	5	LØAD$	59
SECTAX	1	CØNM2	5	RFØRCE$	59
SEQGP	1	PELAS	6	FØRCE	60
SPØINT	1	PMASS	7	FØRCE1	60
BARØR	2	MAT1	8	FØRCE2	60
BEAMØR	2	MAT2	8	FØRCEAX	60
CBAR	2	MAT3	8	LØAD	60
CBEAM	2	MATT1	8	MØMAX	60
CCØNEAX	2	MATT2	8	MØMENT	60
CØNRØD	2	MATT3	8	MØMENT1	60
CQDMEM	2	TABLEM1	8	MØMENT2	60
CQDPLT	2	TABLEM2	8	PLØAD	60
CQUAD1	2	TABLEM3	8	PLØAD1	60
CQUAD2	2	TABLEM4	8	PLØAD2	60
CRØD	2	TEMPMT$	8	PRESAX	60
CSHEAR	2	TEMPMX$	8	RFØRCE	60
CTØRDRG	2	MPC	9	SLØAD	60
CTRAPRG	2	MPCADD	9	EIGB	61
CTRBSC	2	MPCAX	9	METHØD$	62
CTRIA1	2	MPC$	9		
CTRIA2	2	SPC	10		
CTRIARG	2	SPC1	10		
CTRMEM	2	SPCADD	10		
CTRPLT	2	SPCAX	10		
CTUBE	2	SPC$	10		
CTWIST	2	ØMIT	11		

3.6.3.2 Bit Positions for File Name Restart Table

File Name	Bit Pos.
BGPDT	94
CSTM	94
EQEXIN	94
GPDT	94
GPL	94
SIL	94
ECT	95
GPTT	96
SLT	96
ECPT	97
EST	97
GEI	97
GPCT	97
GPST	98
KGGX	98
MGG	99
KGG	100
RG	101
USET	101
YS	101
ØGPST	102
GM	103
KNN	104
KFF	105
KFS	105
KSS	105
GØ	106
KAA	106
KØØB	106
LØØ	106
UØØ	106
LLL	107
ULL	107
PG	108
PL	109
PØ	109
PS	109
RULV	110
RUØV	110
ULV	110
UØØV	110
PGG	111
QG	111
UGV	111
ØEF1	112
ØES1	112
ØPG1	112
ØQG1	112
ØUGV1	112
PUGV1	112
KDGG	113
KDNN	114
KDFF	115
KDFS	115
KDSS	115
KDAA	116
EED	117
EQDYN	117
GPLD	117
SILD	117
USETD	117
LAMA	118
ØEIGS	118
PHIA	118
QG	119
PHIG	119
ØBEF1	120
ØBES1	120
ØBQG1	120
ØPHIG	120
PPHIG	120
KDAAM	121

3.6.3.3 Card Name Restart Table

DMAP Inst.	Bit Position 1 10 20 30 40 50 60
BEGIN	12345678901234567894 789012
FILE	12345678901234567894 789012
GP1	1
SAVE	1
CHKPNT	1
GP2	12 45 6
CHKPNT	12 45 6
PLTSET	8
SAVE	8
PRTMSG	8
CHKPNT	8
SETVAL	8
SAVE	8
COND	8
PLOT	8
SAVE	8
PRTMSG	8
LABEL	8
GP3	12 3 7 0
SAVE	12 3 7 0
PARAM	12 3 7 0
PURGE	12 3 7 0
CHKPNT	12 3 7 0
TA1,	1234567
SAVE	1234567
COND	12345678
PURGE	1234567
CHKPNT	1234567
SMA1	123 6 8
CHKPNT	123 6 8
COND	123 5 78 45 4 7
SMA2	123 5 78 4 4 7
SAVE	123 5 78 4 4 7
CHKPNT	123 5 78 4 4 7
COND	123 5 78 45
COND	123 5 78 45
GPWG	123 5 78 45
OFP	123 5 78 45
SAVE	123 5 78 45 4
LABEL	123 5 78 45 7
EQUIV	123 6 8
CHKPNT	123 6 8
COND	1234 6 8
SMA3	1234 6 8
CHKPNT	1234 6 8
LABEL	1234 6 8
PARAM	1 901
GP4	1 901
SAVE	1 901
COND	1 901
PARAM	1 901
PURGE	1 901
EQUIV	1234 6 89
CHKPNT	1 9
COND	1 2
JUMP	1 2
LABEL	1 2

DMAP Inst.	Bit Position 1 10 20 30 40 50 60
CCND	123 6 8 C
GPSP	123 6 8 0
OFP	123 6 8 0
SAVE	123 6 8 0
LABEL	123 6 8 0
CCND	1234 6 89
MCE1	1 9
CHKPNT	1 9
MCE2	1234 6 89
CHKPNT	1234 6 89
LABEL	1234 6 89
EQUIV	1234 6 890
CHKPNT	1234 6 890
CCND	1234 6 890
SCE1	1234 6 890
CHKPNT	1234 6 890
LABEL	1234 6 890
EQUIV	1234 6 8901
CHKPNT	1234 6 8901
CCND	1234 6 8901
SMP1	1234 6 8901
CHKPNT	1234 6 8901
LABEL	1234 6 8901
RBMG2	1234 6 8901
CHKPNT	1234 6 8901
SSG1	123 5678 7890
CHKPNT	123 5678 7890
EQUIV	123 5678901 7890
CHKPNT	123 5678901 7890
CCND	123 5678901 7890
SSG2	123 5678901 7890
CHKPNT	123 5678901 7890
LABEL	123 5678901 7890
SSG3	12345678901 7890
CHKPNT	12345678901 7890
COND	12345678901 7 7890
MATGPR	12345678901 7 7890
MATGPR	12345678901 7 7890
LABEL	12345678901 7 7890
SDR1	12345678901 7890
CHKPNT	12345678901 7890
SDR2	9
CHKPNT	9
OFP	9
SAVE	9
DSMG1	12345678901 7890
CHKPNT	12345678901 7890
EQUIV	12345678901 7890
CHKPNT	12345678901 7890
COND	12345678901 7890
MCE2	12345678901 7890
CHKPNT	12345678901 7890
LABEL	12345678901 7890
EQUIV	12345678901 7890
CHKPNT	12345678901 7890
CCND	12345678901 7890
SCE1	12345678901 7890

DMAP Inst.	Bit Position 1 10 20 30 40 50 60
CHKPNT	12345678901 7890
LABEL	12345678901 7890
EQUIV	12345678901 7890
CHKPNT	12345678901 7890
CCND	12345678901 7890
SMP2	12345678901 7890
CHKPNT	12345678901 7890
LABEL	12345678901 7890
ADD	12345678901 7890
CHKPNT	12345678901 7890
DPD	12345678901 78901
SAVE	12345678901 78901
CCND	12345678901 78901
CHKPNT	12345678901 78901
READ	12345678901 789012
SAVE	12345678901 789012
CHKPNT	12345678901 789012
OFP	12345678901 789012
SAVE	12345678901 789012
CCND	12345678901 789012
SDR1	12345678901 789012
CHKPNT	12345678901 789012
SDR2	89
OFP	9
SAVE	9
CCND	8
PLOT	8
PRTMSG	8
LABEL	8
JUMP	1234567890123456789 4 789012
LABEL	1234567890123456789 4 789012
PRTPARM	1234567890123456789 4 789012
LABEL	1234567890123456789 4 789012
PRTPARM	1234567890123456789 4 789012
LABEL	1234567890123456789 4 789012
PRTPARM	1234567890123456789 4 789012
LABEL	1234567890123456789 4 789012
PRTPARM	1234567890123456789 4 789012
LABEL	1234567890123456789 4 789012
PRTPARM	1234567890123456789 4 789012
LABEL	1234567890123456789 4 789012
END	1234567890123456789 4 789012

3.6.3.4 Rigid Format Change Restart Table

DMAP Inst.	Bit Position 63 70 80	DMAP Inst.	Bit Position 64 70 80
BEGIN	3456 8901234	COND	
FILE	3456 8901234	GPSP	
GP1		OFP	
SAVE		SAVE	
CHKPNT		LABEL	
GP2		COND	
CHKPNT		MCE1	
PLTSET		CHKPNT	
SAVE		MCE2	
PRTMSG		CHKPNT	
CHKPNT		LABEL	
SETVAL		EQUIV	
SAVE		CHKPNT	
COND		COND	
PLOT		SCE1	
SAVE		CHKPNT	
PRTMSG		LABEL	
LABEL		EQUIV	
GP3		CHKPNT	
SAVE		COND	
PARAM		SMP1	
PURGE		CHKPNT	
CHKPNT		LABEL	
TA1,		RBMG2	
SAVE		CHKPNT	
COND	3456 8901234	SSG1	
PURGE		CHKPNT	
CHKPNT		EQUIV	
SMA1		CHKPNT	
CHKPNT		COND	
COND		SSG2	
SMA2		CHKPNT	
SAVE		LABEL	
CHKPNT		SSG3 4	
COND		CHKPNT 4	
COND		COND 45 8901234	
GPWG		MATGPR 45 8901234	
OFP		MATGPR 45 8901234	
SAVE		LABEL 45 8901234	
LABEL		SDR1	
EQUIV		CHKPNT	
CHKPNT		SDR2	
COND		CHKPNT	
SMA3		OFP	
CHKPNT		SAVE	
LABEL		DSMG1	
PARAM		CHKPNT	
GP4		EQUIV	
SAVE		CHKPNT	
COND	3456 8901234	COND	
PARAM		MCE2	
PURGE		CHKPNT	
EQUIV		LABEL	
CHKPNT		EQUIV	
COND	345 901234	CHKPNT	
JUMP	345 901234	COND	
LABEL	345 901234	SCE1	

DMAP Inst.	Bit Position 63 70 80
CHKPNT	
LABEL	
EQUIV	
CHKPNT	
COND	
SMP2	
CHKPNT	
LABEL	
ADD	
CHKPNT	
DPD	
SAVE	
COND	345 78901234
CHKPNT	
READ	
SAVE	
CHKPNT	
OFP	
SAVE	
COND	
SDR1	345 78901234
CHKPNT	345 78901234
SDR2	
OFP	
SAVE	
COND	
PLOT	
PRTMSG	
LABEL	
JUMP	345 78901234
LABEL	345 78901234
PRTPARM	345 78901234
LABEL	345 78901234
PRTPARM	345 78901234
LABEL	345 78901234
PRTPARM	345 78901234
LABEL	345 78901234
PRTPARM	345 78901234
LABEL	345 78901234
PRTPARM	345 78901234
LABEL	345 78901234
PRTPARM	345 78901234
LABEL	345 78901234
END	345 78901234

3.6.3.4 File Name Restart Table

DMAP Inst.	Bit Position 94	100	110	120
BEGIN				
FILE				
GP1	4			
SAVE	4			
CHKPNT	4			
GP2	5			
CHKPNT	5			
PLTSET				
SAVE				
PRTMSG				
CHKPNT				
SETVAL				
SAVE				
COND				
PLOT				
SAVE				
PRTMSG				
LABEL				
GP3	6			
SAVE	6			
PARAM	6			
PURGE	6			
CHKPNT	6			
TA1,	7			
SAVE	7			
COND	7 9			
PURGE	7 2			
CHKPNT	7			
SMA1	8			
CHKPNT	8			
COND	9			
SMA2	9			
SAVE	9			
CHKPNT	9			
COND				
COND				
GPWG				
OFP				
SAVE				
LABEL	7 9			
EQUIV	0			
CHKPNT	0			
COND	0			
SMA3	0			
CHKPNT	0			
LABEL	0			
PARAM	1			
GP4	1			
SAVE	1			
COND	1			
PARAM	1			
PURGE	1 3 56 901			
EQUIV	4			
CHKPNT				
COND				
JUMP				
LABEL				

DMAP Inst.	Bit Position 94	100	110	120
COND	2			
GPSP	2			
OFP	2			
SAVE	2			
LABEL	2			
COND	34			
MCE1	3			
CHKPNT	3			
MCE2	4			
CHKPNT	4			
LABEL	34			
EQUIV	5			
CHKPNT	5			
COND	5			
SCE1	5			
CHKPNT	5			
LABEL	5			
EQUIV	6			
CHKPNT	6			
COND	6			
SMP1	6			
CHKPNT	6			
LABEL	6			
RBMG2	7			
CHKPNT	7			
SSG1	8			
CHKPNT	8			
EQUIV	9			
CHKPNT	9			
COND	9			
SSG2	9			
CHKPNT	9			
LABEL	9			
SSG3	0			
CHKPNT	0			
COND				
MATGPR				
MATGPR				
LABEL				
SDR1	1			
CHKPNT	1			
SDR2	2			
CHKPNT	2			
OFP				
SAVE				
DSMG1	3			
CHKPNT	3			
EQUIV	4			
CHKPNT	4			
COND	4			
MCE2	4			
CHKPNT	4			
LABEL	4			
EQUIV	5			
CHKPNT	5			
COND	5			
SCE1	5			

DMAP Inst.	94	Bit Position 100	110	120
CHKPNT			5	
LABEL			5	
EQUIV			6	
CHKPNT			6	
COND			6	
SMP2			6	
CHKPNT			6	
LABEL			6	
ADD				1
CHKPNT				1
DPD			7	
SAVE			7	
COND			7	
CHKPNT			7	
READ			8	
SAVE			8	
CHKPNT			8	
OFP			8	
SAVE			8	
COND			9	
SDR1			9	
CHKPNT			9	
SDR2			0	
OFP				
SAVE				
COND				
PLOT				
PRTMSG				
LABEL				
JUMP				
LABEL				
PRTPARM				
LABEL				
PRTPARM				
LABEL				
PRTPARM				
LABEL				
PRTPARM				
LABEL				
PRTPARM				
LABEL				
PRTPARM				
LABEL				
END				

3.6.4 Automatic Output for Buckling Analysis

The summary of the eigenvalues associated with the buckling modes and the summary of the eigenvalue analysis performed, as described in the Normal Mode Analysis rigid format, are automatically printed.

3.6.5 Case Control Deck and Parameters for Buckling Analysis

The following items relate to subcase definition and data selection for Buckling Analysis:

1. The Case Control Deck must contain at least two subcases. Subcases beyond the second are used only for output selection.
2. METHØD must appear in the second subcase to select an EIGB card from the Bulk Data Deck.
3. A static loading condition must be defined in the first subcase with a LØAD, TEMPERATURE(LØAD), or DEFØRM selection, unless all loading is specified by grid point displacements on SPC cards.
4. An SPC set must be selected above the subcase level, unless all constraints are specified on GRID cards.
5. Output requests that apply only to the solution under static load must be placed in the first subcase.
6. Output requests that apply to the buckling solution only must be placed in the second and succeeding subcases. If only two subcases exist, the output requests in the second subcase will be honored for all buckling modes.
7. Output requests that apply to both the static solution and the buckling modes may be placed above the subcase level.

The following output may be requested for Buckling Analysis:

1. Displacements and nonzero components of the static loads and single-point forces of constraint at selected grid points for the static analysis.
2. Forces and stresses in selected elements for the static loading condition.
3. Mode shapes and nonzero components of the single-point forces of constraint at selected grid points for selected modes.
4. Undeformed plot of the structural model and mode shapes for selected buckling modes.

The following parameters are used in Buckling Analysis:

1. GRDPNT - optional - a positive integer value of this parameter will cause the Grid Point Weight Generator to be executed and the resulting weight and balance information to be printed.

2. WTMASS - optional - the terms of the mass matrix are multiplied by the real value of this parameter when they are generated in SMA2.

3. IRES - optional - a positive integer value of this parameter will cause the printing of the residual vectors following the execution of SSG3.

4. COUPMASS - optional - a positive integer value of this parameter will cause the generation of coupled mass matrices rather than lumped mass matrices for all bar elements, rod elements, and plate elements that include bending stiffness (see Section 3.1 for list of elements).

3.7 PIECEWISE LINEAR ANALYSIS

3.7.1 DMAP Sequence for Piecewise Linear Analysis

```
RIGID FORMAT 6

   N A S T R A N  S O U R C E  P R O G R A M  C O M P I L A T I O N
DMAP-DMAP INSTRUCTION
 NO.

  1  BEGIN     NO.6 PIECEWISE LINEAR STATICS ANALYSIS - SERIES L $

  2  FILE      LLL=TAPE $

  3  FILE      QG1=APPEND/UGV1=APPEND/KGGSUM=SAVE/PGV1=APPEND $

  4  (GP1)     GEOM1,GEOM2,/GPL,EQEXIN,GPDT,CSTM,BGPDT,SIL/V,N,LUSET/ C,N,123/
               V,N,NOGPDT $

  5  SAVE      LUSET$

  6  CHKPNT    GPL,EQEXIN,GPDT,CSTM,BGPDT,SIL $

  7  (GP2)     GEOM2,EQEXIN/ECT $

  8  CHKPNT    ECT $

  9  PLTSET    PCDB,EQEXIN,ECT/PLTSETX,PLTPAR,GPSETS,ELSETS/V,N,NSIL/ V,N,
               JUMPPLOT $

 10  SAVE      NSIL,JUMPPLOT $

 11  PRTMSG    PLTSETX// $

 12  CHKPNT    PLTPAR,GPSETS,ELSETS $

 13  SETVAL    //V,N,PLTFLG/C,N,1/V,N,PFILE/C,N,0 $

 14  SAVE      PLTFLG,PFILE $

 15  COND      P1,JUMPPLOT $

 16  (PLOT)    PLTPAR,GPSETS,ELSETS,CASECC,BGPDT,EQEXIN,SIL,,/PLOTX1/ V,N,
               NSIL/V,N,LUSET/V,N,JUMPPLOT/V,N,PLTFLG/V,N,PFILE $

 17  SAVE      JUMPPLOT,PLTFLG,PFILE $

 18  PRTMSG    PLOTX1// $

 19  LABEL     P1$

 20  (GP3)     GEOM3,EQEXIN,GEOM2/SLT,GPTT/C,N,123/V,N,NOGRAV/C,N,123 $

 21  SAVE      NOGRAV$

 22  PARAM     //C,N,AND/V,N,SKPMGG/V,N,NOGRAV/V,Y,GRDPNT$

 23  PURGE     MGG/SKPMGG$

 24  CHKPNT    SLT,GPTT,MGG $
```

```
RIGID FORMAT DMAP LISTING
SERIES L

RIGID FORMAT 6

   N A S T R A N  S O U R C E  P R O G R A M  C O M P I L A T I O N
DMAP-DMAP INSTRUCTION
NO.

25  (TA1,)     ,ECT,EPT,BGPDT,SIL,GPTT,CSTM/EST,,GEI,ECPT,GPCT/V,N,LUSET/ C,N,
               123/V,N,NOSIMP/C,N,0/V,N,NOGENL/V,N,GENEL $

26  SAVE       NOSIMP,NOGENL,GENEL $

27  PARAM      //C,N,AND/V,N,NOELMT/V,N,NOGENL/V,N,NOSIMP $

28  COND       ERROR4,NOELMT $

29  PURGE      GPST/NOSIMP/OGPST/GENEL/ $

30  CHKPNT     EST,ECPT,GPCT,GEI,GPST,OGPST $

31  COND       LBL1,NOSIMP$

32  (SMA1)     CSTM,MPT,ECPT,GPCT,DIT/KGGX,,GPST/V,N,NOGENL/V,N,NOK4GG/ $

33  CHKPNT     GPST,KGGX $

34  COND       LBL1,SKPMGG$

35  (SMA2)     CSTM,MPT,ECPT,GPCT,DIT/MGG,/V,Y,WTMASS=1.0/V,N,NOMGG/V,N,NOBGG/
               V,Y,COUPMASS=-1 $

36  SAVE       NOMGG$

37  CHKPNT     MGG $

38  COND       LBL1,GRDPNT$

39  COND       ERROR3,NOMGG$

40  (GPWG)     BGPDT,CSTM,EQEXIN,MGG/OGPWG/V,Y,GRDPNT=-1/V,Y,WTMASS$

41  OFP        OGPWG,,,,,//V,N,CARDNO $

42  SAVE       CARDNO $

43  LABEL      LBL1 $

44  (PLA1)     CSTM,MPT,ECPT,GPCT,DIT,CASECC,EST/KGGXL,ECPTNL,ESTL,ESTNL/V,N,
               KGGLPG/V,N,NPLALIM/V,N,ECPTNLPG/V,N,PLSETNO/V,N,NONLSTR/V,N,
               PLFACT/ $

45  SAVE       KGGLPG,NPLALIM,ECPTNLPG,PLSETNO,NONLSTR,PLFACT $

46  COND       ERROR1,ECPTNLPG$

47  PURGE      ONLES,ESTNL1/NONLSTR/ $

48  CHKPNT     KGGXL,ECPTNL,ESTL,ESTNL,ESTNL1 $

49  PARAM      //C,N,ADD/V,N,ALWAYS/C,N,-1/C,N,0/ $
```

```
RIGID FORMAT DMAP LISTING
SERIES L

RIGID FORMAT 6

   N A S T R A N  S O U R C E  P R O G R A M  C O M P I L A T I O N
DMAP-DMAP INSTRUCTION
NO.

 50  PARAM     //C,N,ADD/V,N,NEVER/C,N,1/C,N,0/ $

 51  EQUIV     KGGX,KGG/NOGENL/KGGXL,KGGL/NOGENL/ $

 52  CHKPNT    KGG,KGGL $

 53  COND      LBL11,NOGENL $

 54  (SMA3)    GEI,KGGX/KGG/V,N,LUSET/V,N,NOGENL/V,N,NOSIMP $

 55  CHKPNT    KGG $

 56  (SMA3)    GEI,KGGXL/KGGL/V,N,LUSET/V,N,NOGENL/V,N,KGGLPG/ $

 57  CHKPNT    KGGL $

 58  LABEL     LBL11 $

 59  PARAM     //C,N,MPY/V,N,NSKIP/C,N,0/C,N,0 $

 60  (GP4)     CASECC,GEOM4,EQEXIN,SIL,GPDT/RG,YS,USET/V,N,LUSET/V,N,MPCF1/ V,
               N,MPCF2/V,N,SINGLE/V,N,OMIT/V,N,REACT/V,N,NSKIP/V,N,REPEAT/ V,
               N,NOSET/V,N,NOL/V,N,NOA $

 61  SAVE      MPCF1,MPCF2,SINGLE,OMIT,REACT,NSKIP,REPEAT,NOSET,NOL,NOA $

 62  PARAM     //C,N,AND/V,N,NOSR/V,N,SINGLE/V,N,REACT/ $

 63  PURGE     KRR,KLR,QR,DM/REACT/ GM/MPCF1/ GO,KOOB,LOO,UOO,PO,UOOV,RUOV/
               OMIT/PS,KFS,KSS/SINGLE/QG/NOSR/ $

 64  EQUIV     KGG,KNN/MPCF1 $

 65  CHKPNT    KRR,KLR,QR,DM,GM,GO,KOOB,LOO,UOO,PO,UOOV,QG,PS,KFS,KSS,USET,
               RG,YS,RUOV,KNN $

 66  (SSG1)    SLT,BGPDT,CSTM,SIL,EST,MPT,,,MGG,CASECC,DIT/PG1/V,N, LUSET/C,N,
               1/ $

 67  CHKPNT    PG1 $

 68  EQUIV     PG1,PL/NOSET/ $

 69  CHKPNT    PL $

 70  COND      LBL4,GENEL $

 71  (GPSP)    GPL,GPST,USET,SIL/OGPST $

 72  OFP       OGPST,,,,,,//V,N,CARDNO $

 73  SAVE      CARDNO $
```

```
RIGID FORMAT DMAP LISTING
SERIES L

RIGID FORMAT 6

   N A S T R A N  S O U R C E  P R O G R A M  C O M P I L A T I O N
DMAP-DMAP INSTRUCTION
NO.

 74  LABEL     LBL4 $
 75  PARAM     //C,N,ADD/V,N,PLACOUNT/C,N,1/C,N,0 $
 76  COND      LBL2,MPCF2 $
 77  MCE1      USET,RG/GM $
 78  CHKPNT    GM $
 79  JUMP      LOOPBGN $
 80  LABEL     LOOPBGN $
 81  EQUIV     KGG,KNN/MPCF2/ $
 82  CHKPNT    KNN $
 83  COND      LBL2,MPCF2 $
 84  MCE2      USET,GM,KGG,,,/KNN,,, $
 85  CHKPNT    KNN$
 86  LABEL     LBL2 $
 87  EQUIV     KNN,KFF/SINGLE $
 88  CHKPNT    KFF $
 89  COND      LBL3,SINGLE $
 90  SCE1      USET,KNN,,,/KFF,KFS,KSS,,, $
 91  CHKPNT    KFS,KSS,KFF$
 92  LABEL     LBL3 $
 93  EQUIV     KFF,KAA/OMIT $
 94  CHKPNT    KAA $
 95  COND      LBL5,OMIT $
 96  SMP1      USET,KFF,,,/GO,KAA,K00B,L00,U00,,,,, $
 97  CHKPNT    GO,KAA,K00B,L00,U00 $
 98  LABEL     LBL5 $
 99  EQUIV     KAA,KLL/REACT $
100  CHKPNT    KLL $
```

```
 RIGID FORMAT DMAP LISTING
 SERIES L

 RIGID FORMAT 6

    N A S T R A N  S O U R C E  P R O G R A M  C O M P I L A T I O N
DMAP-DMAP INSTRUCTION
 NO.

101   COND      LBL6,REACT $

102   RBMG1     USET,KAA,/KLL,KLR,KRR,,, $

103   CHKPNT    KLL,KLR,KRR$

104   LABEL     LBL6 $

105   RBMG2     KLL/LLL,ULL $

106   CHKPNT    ULL,LLL $

107   COND      LBL7,REACT $

108   RBMG3     LLL,ULL,KLR,KRR/DM $

109   CHKPNT    DM $

110   LABEL     LBL7 $

111   ADD       PG1,/PG/V,N,PLFACT/C,N,(1.0,0.0) $

112   CHKPNT    PG $

113   COND      LBL10,NOSET $

114   SSG2      USET,GM,YS,KFS,GO,DM,PG/QR,PO,PS,PL $

115   CHKPNT    QR,PO,PS,PL $

116   LABEL     LBL10 $

117   SSG3      LLL,ULL,KLL,PL,LOO,UOO,KOOB,PO/ULV,UOOV,RULV,RUOV/ V,N,OMIT/V,
                Y,IRES=-1 $

118   CHKPNT    ULV,UOOV,RULV,RUOV $

119   COND      LBL9,IRES $

120   MATGPR    GPL,USET,SIL,RULV//C,N,L $

121   MATGPR    GPL,USET,SIL,RUOV//C,N,O $

122   LABEL     LBL9 $

123   SDR1      USET,PG,ULV,UOOV,YS,GO,GM,PS,KFS,KSS,QR/DELTAUGV,DELTAPG,
                DELTAQG/C,N,1/C,N,STATICS $

124   CHKPNT    DELTAUGV,DELTAPG,DELTAQG $

125   PLA2      DELTAUGV,DELTAPG,DELTAQG/UGV1,PGV1,QG1/V,N,PLACOUNT $

126   SAVE      PLACOUNT $
```

```
 RIGID FORMAT DMAP LISTING
 SERIES L

 RIGID FORMAT 6

    N A S T R A N  S O U R C E  P R O G R A M  C O M P I L A T I O N
DMAP-DMAP INSTRUCTION
 NO.

127  CHKPNT    UGV1,QG1,PGV1 $

128  EQUIV     ESTNL,ESTNL1/NEVER/ECPTNL,ECPTNL1/NEVER/ $

129  COND      PLALBL2A,NONLSTR $

130  (PLA3)    CSTM,MPT,DIT,DELTAUGV,ESTNL,CASECC/ONLES,ESTNL1/V,N,PLACOUNT/
               V,N,PLSETNO/ $

131  CHKPNT    ESTNL1 $

132  OFP       ONLES,,,,,,//V,N,CARDNO $

133  SAVE      CARDNO $

134  LABEL     PLALBL2A $

135  PARAM     //C,N,SUB/V,N,DIFF/V,N,NPLALIM/V,N,PLACOUNT/ $

136  COND      LOOPEND,DIFF $

137  (PLA4)    CSTM,MPT,ECPTNL,GPCT,DIT,DELTAUGV/KGGNL,ECPTNL1/V,N,PLACOUNT/V,
               N,PLSETNO/V,N,PLFACT/ $

138  SAVE      PLACOUNT,PLSETNO,PLFACT $

139  CHKPNT    KGGNL,ECPTNL1 $

140  EQUIV     KGGNL,KGGSUM/KGGLPG/ $

141  CHKPNT    KGGSUM $

142  COND      PLALBL3,KGGLPG $

143  (ADD)     KGGNL,KGGL/KGGSUM/C,N,(1.0,0.0)/C,N,(1.0,0.0) $

144  CHKPNT    KGGSUM $

145  LABEL     PLALBL3 $

146  EQUIV     KGGSUM,KGG/ALWAYS/ $

147  CHKPNT    KGG $

148  EQUIV     ESTNL1,ESTNL/ALWAYS/ECPTNL1,ECPTNL/ALWAYS $

149  CHKPNT    ESTNL,ECPTNL $

150  COND      PLALBL4,ALWAYS $

151  (PLA2)    KGGSUM,KGG,/,,/C,N,0 $

152  (PLA2)    ESTNL1,ECPTNL1,/,,/C,N,0 $
```

```
 RIGID FORMAT DMAP LISTING
 SERIES L

 RIGID FORMAT 6

    N A S T R A N  S O U R C E  P R O G R A M  C O M P I L A T I O N
DMAP-DMAP INSTRUCTION
 NO.

153  LABEL     PLALBL4 $

154  REPT      LOOPBGN,100 $

155  JUMP      ERROR2$

156  LABEL     LOOPEND $

157  (SDR2)    CASECC,CSTM,MPT,DIT,EQEXIN,SIL,GPTT,EDT,BGPDT,PGV1,QG1,UGV1,
               ESTL,/OPG1,OQG1,OUGV1,OES1,OEF1,PUGV1/C,N,PLA $

158  OFP       OUGV1,OPG1,OQG1,OEF1,OES1,//V,N,CARDNO $

159  SAVE      CARDNO $

160  COND      P2,JUMPPLOT $

161  (PLOT)    PLTPAR,GPSETS,ELSETS,CASECC,BGPDT,EQEXIN,SIL,PUGV1,/PLOTX2/ V,
               N,NSIL/V,N,LUSET/V,N,JUMPPLOT/V,N,PLTFLG/V,N,PFILE $

162  PRTMSG    PLOTX2// $

163  LABEL     P2 $

164  JUMP      FINIS$

165  LABEL     ERROR1$

166  PRTPARM   //C,N,-1/C,N,PLA$

167  LABEL     ERROR2$

168  PRTPARM   //C,N,-2/C,N,PLA$

169  LABEL     ERROR3$

170  PRTPARM   //C,N,-3/C,N,PLA$

171  LABEL     ERROR4 $

172  PRTPARM   //C,N,-4/C,N,PLA $

173  LABEL     FINIS$

174  END       $
```

3.7.2 Description of DMAP Operations for Piecewise Linear Analysis

4. GP1 generates coordinate system transformation matrices, tables of grid point locations, and tables for relating internal and external grid point numbers.

7. GP2 generates Element Connection Table with internal indices.

9. PLTSET transforms user input into a form used to drive structure plotter.

11. PRTMSG prints error messages associated with structure plotter.

15. Go to DMAP No. 19 if no undeformed structure plot request.

16. PLØT generates all requested undeformed structure plots.

18. PRTMSG prints plotter data and engineering data for each undeformed plot generated.

20. GP3 generates Static Loads Table and Grid Point Temperature Table.

25. TA1 generates element tables for use in matrix assembly and stress recovery.

28. Go to DMAP No. 171 and print error message if no elements have been defined.

31. Go to DMAP No. 43 if there are no structural elements.

32. SMA1 generates stiffness matrix $[K^{X}_{gg}]$ and Grid Point Singularity Table.

34. Go to DMAP No. 43 if no gravity loads and no weight and balance request.

35. SMA2 generates mass matrix $[M_{gg}]$.

38. Go to DMAP No. 43 if no weight and balance request.

39. Go to DMAP No. 169 and print error message if no mass matrix exists.

40. GPWG generates weight and balance information.

41. ØFP formats weight and balance information and places it on the system output file for printing.

44. PLA1 extracts the linear terms from $[K^{X}_{gg}]$ to give $[K^{X\ell}_{gg}]$, extracts the nonlinear entries from the Element Connection and Properties Table to give ECPTNL, and separates the linear and nonlinear entries in the Element Summary Table to give ESTL and ESTNL.

46. Go to DMAP No. 165 and print error message if no elements have a stress dependent modulus of elasticity.

51. Equivalence $[K^{X}_{gg}]$ to $[K_{gg}]$ and $[K^{X\ell}_{gg}]$ to $[K^{\ell}_{gg}]$ if no general elements.

53. Go to DMAP No. 58 if no general elements.

54. SMA3 adds general elements to $[K^{X}_{gg}]$ to obtain stiffness matrix $[K_{gg}]$.

56. SMA3 adds general elements to $[K^{X\ell}_{gg}]$ to obtain stiffness matrix of linear elements $[K^{\ell}_{gg}]$.

60. GP4 generates flags defining members of various displacement sets (USET), forms multipoint constraint equations $[R_g]\{u_g\} = 0$.

64. Equivalence $[K_{gg}]$ to $[K_{nn}]$ if no multipoint constraints.

66. SSG1 generates total static load vector $\{P^{1}_{g}\}$.

68. Equivalence $\{P_g^1\}$ to $\{P_\ell\}$ if no constraints applied.

70. Go to DMAP No. 74 if general elements present.

71. GPSP determines if possible grid point singularities remain.

72. ØFP formats the table of possible grid point singularities and places it on the system output file for printing.

76. Go to DMAP No. 86 if no multipoint constraints.

77. MCE1 partitions multipoint constraint equations $[R_g] = [R_m \mid R_n]$ and solves for multipoint constraint transformation matrix $[G_m] = -[R_m]^{-1}[R_n]$.

80. Beginning of loop for Piecewise Linear Analysis.

81. Equivalence $[K_{gg}]$ to $[K_{nn}]$ if no multipoint constraints.

83. Go to DMAP No. 86 if no multipoint constraints.

84. MCE2 partitions stiffness matrix

$$[K_{gg}] = \left[\begin{array}{c|c} \bar{K}_{nn} & K_{nm} \\ \hline K_{mn} & K_{mm} \end{array}\right]$$

and performs matrix reduction

$$[K_{nn}] = [\bar{K}_{nn}] + [G_m^T][K_{mn}] + [K_{mn}^T][G_m] + [G_m^T][K_{mm}][G_m].$$

87. Equivalence $[K_{nn}]$ to $[K_{ff}]$ if no single-point constraints.

89. Go to DMAP No. 92 if no single-point constraints.

90. SCE1 partitions out single-point constraints

$$[K_{nn}] = \left[\begin{array}{c|c} K_{ff} & K_{fs} \\ \hline K_{sf} & K_{ss} \end{array}\right] .$$

93. Equivalence $[K_{ff}]$ to $[K_{aa}]$ if no omitted coordinates.

95. Go to DMAP No. 94. if no omitted coordinates.

96. SMP1 partitions constrained stiffness matrix

$$[K_{ff}] = \left[\begin{array}{c|c} \bar{K}_{aa} & K_{ao} \\ \hline K_{oa} & K_{oo} \end{array}\right],$$

solves for transformation matrix $[G_o] = -[K_{oo}]^{-1}[K_{oa}]$
and performs matrix reduction $[K_{aa}] = [\bar{K}_{aa}] + [K_{oa}^T][G_o]$.

99. Equivalence $[K_{aa}]$ to $[K_{\ell\ell}]$ if no free-body supports.

101. Go to DMAP No. 104 if no free-body supports.

102. RBMG1 partitions out free-body supports

$$[K_{aa}] = \left[\begin{array}{c|c} K_{\ell\ell} & K_{\ell r} \\ \hline K_{r\ell} & K_{rr} \end{array}\right] .$$

105. RBMG2 decomposes constrained stiffness matrix $[K_{\ell\ell}] = [L_{\ell\ell}][U_{\ell\ell}]$.

107. Go to DMAP No. 110 if no free-body supports.

108. RBMG3 forms rigid body transformation matrix

$$[D] = -[K_{\ell\ell}]^{-1}[K_{\ell r}],$$

calculates rigid body check matrix

$$[X] = [K_{rr}] + [K_{\ell r}^T][D],$$

and calculates rigid body error ratio

$$\varepsilon = \frac{||X||}{||K_{rr}||}$$

111. Multiply total load vector $\{P_g^1\}$ by factor to obtain applied load vector $\{P_g\}$ for current loop.

113. Go to DMAP No. 116 if no constraints applied.

114. SSG2 applies constraints to static load vector for current loop.

$$\{P_g\} = \left\{\begin{array}{c} \bar{P}_n \\ \hline P_m \end{array}\right\}, \qquad \{P_n\} = \{\bar{P}_n\} + [G_m^T]\{P_m\},$$

$$\{P_n\} = \left\{\begin{array}{c} \bar{P}_f \\ \hline P_s \end{array}\right\}, \qquad \{P_f\} = \{\bar{P}_f\} - [K_{fs}]\{Y_s\},$$

$$\{P_f\} = \left\{\begin{array}{c} \bar{P}_a \\ \hline P_o \end{array}\right\}, \qquad \{P_a\} = \{\bar{P}_a\} + [G_o^T]\{P_o\},$$

$$\{P_a\} = \left\{\begin{array}{c} P_\ell \\ \hline P_r \end{array}\right\}$$

and calculates incremental determinate forces of reaction for current loop

$$\{q_r\} = -\{P_r\} - [D^T]\{P_\ell\}.$$

117. SSG3 solves for displacements of independent coordinates

$$\{u_\ell\} = [K_{\ell\ell}]^{-1}\{P_\ell\} ,$$

solves for displacements of omitted coordinates

$$\{u_o^o\} = [K_{oo}]^{-1}\{P_o\},$$

calculates residual vector (RULV) and residual vector error ratio for independent coordinates

$$\{\delta P_\ell\} = \{P_\ell\} - [K_{\ell\ell}]\{u_\ell\} .$$

$$\varepsilon_\ell = \frac{\{u_\ell^T\}\{\delta P_\ell\}}{\{P_\ell^T\}\{u_\ell\}} .$$

and calculates residual vector (RUØV) and residual vector error ratio for omitted coordinates

$$\{\delta P_o\} = \{P_o\} - [K_{oo}]\{u_o^o\},$$

$$\varepsilon_o = \frac{\{u_o^T\}\{\delta P_o\}}{\{P_o^T\}\{u_o^o\}} .$$

119. Go to DMAP No. 122 if residual vectors are not to be printed.

120. Print residual vector for independent coordinates (RULV)

121. Print residual vector for omitted coordinates (RUØV).

123. SDR1 recovers dependent incremental displacements for current loop

$$\begin{Bmatrix} u_\ell \\ \hline u_r \end{Bmatrix} = \{u_a\}, \qquad \{u_o\} = [G_o]\{u_a\} + \{u_o^o\},$$

$$\begin{Bmatrix} u_a \\ \hline u_o \end{Bmatrix} = \{u_f\} , \qquad \begin{Bmatrix} u_f \\ \hline Y_s \end{Bmatrix} = \{u_n\} ,$$

$$\{u_m\} = [G_m]\{u_n\}, \qquad \begin{Bmatrix} u_n \\ \hline u_m \end{Bmatrix} = \{u_g\},$$

and recovers incremental single-point forces of constraint for current loop

$$\{\delta q_s\} = -\{P_s\} + [K_{fs}^T]\{u_f\} .$$

125. PLA2 adds the incremental displacement vector and the incremental single-point forces of constraint vector for the current loop to the accumulated sum of these vectors.

$$\{u_{g_{i+1}}\} = \{u_{g_i}\} + \{u_{g_i}\} \quad \text{and}$$

$$\{q_{g_{i+1}}\} = \{q_{g_i}\} + \{q_{g_i}\} .$$

128. Allocate separate files for ESTNL and ESTNL1 and for ECPTNL and ECPTNL1.

129. Go to DMAP No. 134 if no stress output requested for nonlinear elements.

130. PLA3 calculates incremental stresses in nonlinear elements for which an output request has been made and updates the accumulated stresses in these elements.

132. ØFP formats the accumulated stresses in nonlinear elements and places them on the system output file for printing.

136. Go to DMAP No. 156 if all loading increments have been completed.

137. PLA4 generates stiffness matrix for nonlinear elements and updates stress information in ECPTNL.

140. Equivalence $[K_{gg}^{n\ell}]$ to $[K_{gg}]$ if all elements are nonlinear.

142. Go to DMAP No. 145 if all elements are nonlinear.

143. Add stiffness matrix for nonlinear elements to stiffness matrix for linear elements

$$[K_{gg}^{n\ell}] + [K_{gg}^{\ell}] = \text{KGGSUM}$$

146. Equivalence KGGSUM to $[K_{gg}]$ for next pass through loop.

148. Equivalence existing element tables to updated tables for next pass through loop.

150. Go to DMAP No. 153 - next two instructions are never executed.

151. PLA2 is used to define KGGSUM.

152. PLA2 is used to define ESTNL1 and ECPTNL1.

154. Go to DMAP No. 80 if additional load increments need to be processed.

155. Go to DMAP No. 167 and print error message if more than 100 loops.

156. End of loop for Piecewise Linear Analysis.

157. SDR2 calculates element forces and stresses for linear elements (ØES1, ØEF1) and prepares load vectors, displacement vectors and single-point forces of constraint for output (ØPG1, ØUGV1, PUGV1, ØQG1).

158. ØFP formats tables prepared by SDR2 and places them on the system output file for printing.

160. Go to DMAP No. 163 if no deformed structure plots are requested.

161. PLØT generates all requested deformed structure plots.

162. PRTMSG prints plotter data and engineering data for each deformed plot generated.

164. Go to DMAP No. 173 and make normal exit.

166. PIECEWISE LINEAR ANALYSIS ERRØR MESSAGE NØ. 1 - NØ NØNLINEAR ELEMENTS HAVE BEEN DEFINED.

168. PIECEWISE LINEAR ANALYSIS ERRØR MESSAGE NØ. 2 - ATTEMPT TØ EXECUTE MØRE THAN 100 LØØPS.

170. PIECEWISE LINEAR ANALYSIS ERRØR MESSAGE NØ. 3 - MASS MATRIX REQUIRED FØR WEIGHT AND BALANCE CALCULATIØNS.

172. PIECEWISE LINEAR ANALYSIS ERRØR MESSAGE NØ. 4 - NØ ELEMENTS HAVE BEEN DEFINED.

3.7.3 Restart Tables for Piecewise Linear Analysis

3.7.3.1 Bit Positions for Card Name Restart Table

Card Name	Bit Pos.	Card Name	Bit Pos.	Card Name	Bit Pos.
AXIC	1	PBEAM	3	SPCADD	10
CELAS1	1	PCØNEAX	3	SPCAX	10
CELAS2	1	PQDMEM	3	SPC$	10
CELAS3	1	PQDPLT	3	ØMIT	11
CELAS4	1	PQUAD1	3	ØMIT1	11
CMASS1	1	PQUAD2	3	ØMITAX	11
CMASS2	1	PRØD	3	SUPAX	12
CMASS3	1	PSHEAR	3	SUPØRT	12
CMASS4	1	PTØRDRG	3	TEMP	13
CØRD1C	1	PTRBSC	3	TEMPAX	13
CØRD1R	1	PTRIA1	3	TEMPD	13
CØRD1S	1	PTRIA2	3	WTMASS	14
CØRD2C	1	PTRMEM	3	GRDPNT	15
CØRD2R	1	PTRPLT	3	PLØTEL	16
CØRD2S	1	PTUBE	3	IRES	17
GRDSET	1	PTWIST	3	PLØT$	18
GRID	1	GENEL	4	PØUT$	19
PØINTAX	1	CØNM1	5	LØØP$	22
RINGAX	1	CØNM2	5	LØØP1$	23
SECTAX	1	PELAS	6	CØUPMASS	24
SEQGP	1	PMASS	7	DSCØ$	58
SPØINT	1	MAT1	8	PLFACT	58
BARØR	2	MAT2	8	DEFØRM	59
BEAMØR	2	MAT3	8	DEFØRM$	59
CBAR	2	MATS1	8	LØAD$	59
CBEAM	2	MATS2	8	RFØRCE$	59
CCØNEAX	2	MATT1	8	FØRCE	60
CØNRØD	2	MATT2	8	FØRCE1	60
CQDMEM	2	MATT3	8	FØRCE2	60
CQDPLT	2	TABLEM1	8	FØRCEAX	60
CQUAD1	2	TABLEM2	8	LØAD	60
CQUAD2	2	TABLEM3	8	MØMAX	60
CRØD	2	TABLEM4	8	MØMENT	60
CSHEAR	2	TABLES1	8	MØMENT1	60
CTØRDRG	2	TABLES2	8	MØMENT2	60
CTRAPRG	2	TABLES3	8	PLØAD	60
CTRBSC	2	TABLES4	8	PLØAD1	60
CTRIA1	2	TEMPMT$	8	PLØAD2	60
CTRIA2	2	TEMPMX$	8	PRESAX	60
CTRIARG	2	MPC	9	RFØRCE	60
CTRMEM	2	MPCADD	9	SLØAD	60
CTRPLT	2	MPCAX	9	GRAV	61
CTUBE	2	MPC$	9	TEMPLD$	61
CTWIST	2	SPC	10		
PBAR	3	SPC1	10		

3.7.3.2 Bit Positions for File Name Restart Table

File Name	Bit Pos.
BGPDT	94
CSTM	94
EQEXIN	94
GPDT	94
GPL	94
SIL	94
ECT	95
GPTT	96
SLT	96
ECPT	97
EST	97
GEI	97
GPCT	97
GPST	98
KGGX	98
MGG	99
KGGXL	100
ECPTNL	100
ESTL	100
ESTNL	100
KGG	101
KGGL	101
RG	102
USET	102
YS	102
PG1	103
ØGPST	104
GM	105
KNN	106
KFF	107
KFS	107
KSS	107
GØ	108
KAA	108
KØØB	108
LØØ	108
UØØ	108
KLL	109
KLR	109
KRR	109
LLL	110
ULL	110
DM	111
PG	112
PL	113
PØ	113
PS	113
QR	113
RULV	114
RUØV	114
ULV	114
UØØV	114
PGG	115
DELTAQG	115
DELTAUGV	115
UGV1	116
QG1	116
ØNLES	117
ESTNL1	117
KGGNL	118
ECTPNL1	118
KGGSUM	119
ØEF1	120
ØES1	120
ØPG1	120
ØQG1	120
ØUGV1	120
PUGV1	120

3.7.3.3 Card Name Restart Table

DMAP Inst.	Bit Position 1 10 20 30 40 50 60
BEGIN	1234567890123456789 234 89012
FILE	1234567890123456789 234 89012
FILE	1234567890123456789 234 89012
GP1	1
SAVE	1
CHKPNT	1
GP2	12 45 6
CHKPNT	12 45 6
PLTSET	8
SAVE	8
PRTMSG	8
CHKPNT	8
SETVAL	8
SAVE	8
COND	8
PLOT	8
SAVE	8
PRTMSG	8
LABEL	8
GP3	12 3 01
SAVE	12 3 01
PARAM	12 3 5 01
PURGE	12 3 5 01
CHKPNT	
TA1,	1234567
SAVE	1234567
PARAM	1234567
COND	1234567
PURGE	1234567
CHKPNT	1234567
COND	123 5678 45 1
SMA1	123 6 8
CHKPNT	123 6 8
COND	123 5 78 45 4 1
SMA2	123 5 78 45 4 1
SAVE	123 5 78 45 4 1
CHKPNT	123 5 78 45 4 1
COND	123 5 78 45
COND	123 5 78 45
GPWG	123 5 78 45
OFP	123 5 78 45
SAVE	123 5 78 45
LABEL	123 5 78 45 4 1
PLA1	123 6 8
SAVE	123 6 8
COND	123 6 8
PURGE	123 6 8
CHKPNT	123 6 8
PARAM	123 6 8
PARAM	123 6 8
EQUIV	123 6 8
CHKPNT	123 6 8
COND	1234 6 8
SMA3	1234 6 8
CHKPNT	1234 6 8
SMA3	1234 6 8
CHKPNT	1234 6 8

DMAP Inst.	Bit Position 1 10 20 30 40 50 60
LABEL	1234 6 8
PARAM	1 9012
GP4	1 9012
SAVE	1 9012
PARAM	1 9012
PURGE	1 9012
EQUIV	1234 6 89 23
CHKPNT	1 9
SSG1	123 5678 9012
CHKPNT	123 5678 9012
EQUIV	123 5678 9012
CHKPNT	123 5678 9012
COND	123 6 8 0
GPSP	123 6 8 0
OFP	123 6 8 0
SAVE	123 6 8 0
LABEL	123 6 8 0
PARAM	23
COND	1234 6 89
MCE1	1 9
CHKPNT	1 9
JUMP	23
LABEL	1234 6 89 23
EQUIV	1234 6 89 23
CHKPNT	1234 6 89 23
COND	1234 6 89 23
MCE2	1234 6 89 23
CHKPNT	1234 6 89 23
LABEL	1234 6 89 23
EQUIV	1234 6 890 23
CHKPNT	1234 6 890 23
COND	1234 6 890 23
SCE1	1234 6 890 23
CHKPNT	1234 6 890 23
LABEL	1234 6 890 23
EQUIV	1234 6 8901 23
CHKPNT	1234 6 8901 23
COND	1234 6 8901 23
SMP1	1234 6 8901 23
CHKPNT	1234 6 8901 23
LABEL	1234 6 8901 23
EQUIV	1234 6 89012 23
CHKPNT	1234 6 89012 23
COND	1234 6 89012 23
RBMG1	1234 6 89012 23
CHKPNT	1234 6 89012 23
LABEL	1234 6 89012 23
RBMG2	1234 6 89012 23
CHKPNT	1234 6 89012 23
COND	1234 6 89012 23
RBMG3	1234 6 89012 23
CHKPNT	1234 6 89012 23
LABEL	1234 6 89012 23
ADD	123 5678 23 89012
CHKPNT	123 5678 23 89012
COND	123 56789012 23 89012
SSG2	123 56789012 23 89012

DMAP Inst.	Bit Position 1 10 20 30 40 50 60
CHKPNT	123 56789012 23 89012
LABEL	123 56789012 23 89012
SSG3	123456789012 23 89012
CHKPNT	123456789012 23 89012
CCND	123456789012 7 23 89012
MATGPR	123456789012 7 23 89012
MATGPR	123456789012 7 23 89012
LABEL	123456789012 7 23 89012
SDR1	123456789012 23 89012
CHKPNT	123456789012 23 89012
PLA2	123456789012 23 89012
SAVE	123456789012 23 89012
CHKPNT	123456789012 23 89012
EQUIV	123456789012 23 89012
CCND	23
PLA3	23
CHKPNT	23
OFP	23
SAVE	23
LABEL	23
PARAM	123456789012 23 89012
CCND	123456789012 23 89012
PLA4	123456789012 23 89012
SAVE	123456789012 23 89012
CHKPNT	123456789012 23 89012
EQUIV	123456789012 23 89012
CHKPNT	123456789012 23 89012
CCND	123456789012 23 89012
ADD	123456789012 23 89012
CHKPNT	123456789012 23 89012
LABEL	123456789012 23 89012
EQUIV	123456789012 23 89012
CHKPNT	123456789012 23 89012
EQUIV	123456789012 23 89012
CHKPNT	123456789012 23 89012
CCND	123456789012 23 89012
PLA2	123456789012 23 89012
PLA2	123456789012 23 89012
LABEL	123456789012 23 89012
REPT	123456789012 23 89012
JUMP	123456789012 23 89012
LABEL	123456789012 23 89012
SDR2	89
OFP	9
SAVE	9
CCND	8
PLOT	8
PRTMSG	8
LABEL	8
JUMP	1234567890123456789 234 89012
LABEL	1234567890123456789 234 89012
PRTPARM	1234567890123456789 234 89012
LABEL	1234567890123456789 234 89012
PRTPARM	1234567890123456789 234 89012
LABEL	1234567890123456789 234 89012
PRTPARM	1234567890123456789 234 89012
LABEL	1234567890123456789 234 89012
PRTPARM	1234567890123456789 234 89012
LABEL	1234567890123456789 234 89012
END	1234567890123456789 234 89012

3.7.3.4 Rigid Format Change Restart Table

DMAP Inst.	Bit Position 63 70 80
BEGIN	34567 901234
FILE	34567 901234
FILE	34567 901234
GP1	
SAVE	
CHKPNT	
GP2	
CHKPNT	
PLTSET	
SAVE	
PRTMSG	
CHKPNT	
SETVAL	
SAVE	
COND	
PLOT	
SAVE	
PRTMSG	
LABEL	
GP3	
SAVE	
PARAM	
PURGE	
CHKPNT	
TA1,	
SAVE	
PARAM	34567 901234
COND	34567 901234
PURGE	
CHKPNT	
COND	
SMA1	
CHKPNT	
COND	
SMA2	
SAVE	
CHKPNT	
COND	
COND	
GPWG	
OFP	
SAVE	
LABEL	
PLA1	
SAVE	
COND	
PURGE	
CHKPNT	
PARAM	
PARAM	
EQUIV	
CHKPNT	
COND	
SMA3	
CHKPNT	
SMA3	
CHKPNT	

DMAP Inst.	Bit Position 63 70 80
LABEL	
PARAM	
GP4	
SAVE	
PARAM	
PURGE	
EQUIV	
CHKPNT	
SSG1	
CHKPNT	
EQUIV	
CHKPNT	
COND	
GPSP	
OFP	
SAVE	
LABEL	
PARAM	
COND	
MCE1	
CHKPNT	
JUMP	
LABEL	
EQUIV	
CHKPNT	
COND	
MCE2	
CHKPNT	
LABEL	
EQUIV	
CHKPNT	
COND	
SCE1	
CHKPNT	
LABEL	
EQUIV	
CHKPNT	
COND	
SMP1	
CHKPNT	
LABEL	
EQUIV	
CHKPNT	
COND	
RBMG1	
CHKPNT	
LABEL	
RBMG2	
CHKPNT	
COND	
RBMG3	
CHKPNT	
LABEL	
ADD	34 67
CHKPNT	34 67
COND	34 67
SSG2	34 67

DMAP Inst.	Bit Position 63 70 80
CHKPNT	34 67
LABEL	34 67
SSG3	34 67
CHKPNT	34 67
COND	34567 9C1234
MATGPR	34567 9C1234
MATGPR	34567 9C1234
LABEL	34567 9C1234
SDR1	34567 9C1234
CHKPNT	34567 9C1234
PLA2	
SAVE	
CHKPNT	
EQUIV	
COND	
PLA3	
CHKPNT	
OFP	
SAVE	
LABEL	
PARAM	
COND	
PLA4	
SAVE	
CHKPNT	
EQUIV	
CHKPNT	
COND	
ADD	
CHKPNT	
LABEL	
EQUIV	
CHKPNT	
EQUIV	
CHKPNT	
COND	
PLA2	
PLA2	
LABEL	
REPT	
JUMP	
LABEL	
SDR2	
OFP	
SAVE	
COND	
PLOT	
PRTMSG	
LABEL	
JUMP	34567 9C1234
LABEL	34567 9C1234
PRTPARM	34567 9C1234
LABEL	34567 9C1234
PRTPARM	34567 9C1234
LABEL	34567 9C1234
PRTPARM	34567 9C1234
LABEL	34567 9C1234

DMAP Inst.	Bit Position 63 70 80
PRTPARM	34567 9C1234
LABEL	34567 9C1234
END	34567 9C1234

3.7.3.5 File Name Restart Table

DMAP Inst.	Bit Position 94	100	110	120
BEGIN				
FILE				
FILE				
GP1	4			
SAVE	4			
CHKPNT	4			
GP2	5			
CHKPNT	5			
PLTSET				
SAVE				
PRTMSG				
CHKPNT				
SETVAL				
SAVE				
COND				
PLOT				
SAVE				
PRTMSG				
LABEL				
GP3	6			
SAVE	6			
PARAM	6 9			
PURGE	6			
CHKPNT	6			
TA1,	7			
SAVE	7			
PARAM	7			
COND	7			
PURGE	78			
CHKPNT	7			
COND	89			
SMA1	8			
CHKPNT	8			
COND	9			
SMA2	9			
SAVE	9			
CHKPNT	9			
COND				
COND				
GPWG				
OFP				
SAVE				
LABEL	89			
PLA1	0			
SAVE	0			
COND	0			
PURGE	0			
CHKPNT	0			
PARAM	0			
PARAM	0			
EQUIV	1			
CHKPNT	1			
COND	1			
SMA3	1			
CHKPNT	1			
SMA3	1			
CHKPNT	1			

DMAP Inst.	Bit Position 94	100	110	120
LABEL	1			
PARAM	2			
GP4	2			
SAVE	2			
PARAM	2			
PURGE	2 5 789 1 345			
EQUIV				
CHKPNT				
SSG1	3			
CHKPNT	3			
EQUIV	3			
CHKPNT	3			
COND	4			
GPSP	4			
OFP	4			
SAVE	4			
LABEL	4			
PARAM				
COND	56			
MCE1	5			
CHKPNT	5			
JUMP				
LABEL				
EQUIV	6			
CHKPNT	6			
COND	6			
MCE2	6			
CHKPNT	6			
LABEL	56			
EQUIV	7			
CHKPNT	7			
COND	7			
SCE1	7			
CHKPNT	7			
LABEL	7			
EQUIV	8			
CHKPNT	8			
COND	8			
SMP1	8			
CHKPNT	8			
LABEL	8			
EQUIV	9			
CHKPNT	9			
COND	9			
RBMG1	9			
CHKPNT	9			
LABEL	9			
RBMG2	0			
CHKPNT	0			
COND	1			
RBMG3	1			
CHKPNT	1			
LABEL	1			
ADD	2			
CHKPNT	2			
COND	3			
SSG2	3			

DMAP Inst.	94	Bit Position 100	110	120	DMAP Inst.	94	Bit Position 100	110	120
CHKPNT			3		PRTPARM				
LABEL			3		LABEL				
SSG3			4		END				
CHKPNT			4						
COND									
MATGPR									
MATGPR									
LABEL									
SDR1			5						
CHKPNT			5						
PLA2			6						
SAVE									
CHKPNT									
EQUIV			7						
COND			7						
PLA3			7						
CHKPNT			7						
OFP									
SAVE									
LABEL			7						
PARAM			8						
COND			8						
PLA4			8						
SAVE			8						
CHKPNT			8						
EQUIV			9						
CHKPNT			9						
COND			9						
ADD			9						
CHKPNT			9						
LABEL			9						
EQUIV									
CHKPNT									
EQUIV									
CHKPNT									
COND									
PLA2									
PLA2									
LABEL									
REPT									
JUMP									
LABEL									
SDR2				0					
OFP									
SAVE									
COND									
PLOT									
PRTMSG									
LABEL									
JUMP									
LABEL									
PRTPARM									
LABEL									
PRTPARM									
LABEL									
PRTPARM									
LABEL									

3.7.4 Case Control Deck and Parameters for Piecewise Linear Analysis

The following items relate to subcase definition and data selection for Piecewise Linear Analysis:

1. The Case Control Deck must contain one and only one subcase.
2. A static loading condition must be defined with a LØAD selection.
3. An SPC set must be selected unless all constraints are specified on GRID cards.
4. PLCØEFFICIENT must appear either to select a PLFACT set from the Bulk Data Deck or to explicitly select the default value of unity.

The following output may be requested for Piecewise Linear Analysis:

1. Accumulated sums of displacements and nonzero components of the static loads and single-point forces of constraint at selected grid points for each load increment.
2. Stresses in selected elements. If an element is composed of a nonlinear material the accumulated stress will be output for each load increment. Stresses in linear elements are only calculated for the total load.
3. Undeformed plot of the structural model and deformed plots for each load increment.

The following parameters are used in Piecewise Linear Analysis:

1. GRDPNT - optional - a positive integer value of this parameter will cause the Grid Point Weight Generator to be executed and the resulting weight and balance information to be printed.
2. WTMASS - optional - the terms of the mass matrix are multiplied by the real value of this parameter when they are generated in SMA2.
3. IRES - optional - a positive integer value of this parameter will cause the printing of the residual vectors following the execution of SSG3.
4. CØUPMASS - optional - a positive integer value of this parameter will cause the generation of coupled mass matrices rather than lumped mass matrices for all bar elements, rod elements, and plate elements that include bending stiffness (see Section 3.1 for list of elements).

3.8 DIRECT COMPLEX EIGENVALUE ANALYSIS

3.8.1 DMAP Sequence for Direct Complex Eigenvalue Analysis

```
RIGID FORMAT 7

   N A S T R A N  S O U R C E  P R O G R A M  C O M P I L A T I O N
DMAP-DMAP INSTRUCTION
 NO.

  1  BEGIN     NO.7 DIRECT COMPLEX EIGENVALUE ANALYSIS - SERIES L $

  2  FILE      KGGX=TAPE/ KGG=TAPE $

  3  GP1       GEOM1,GEOM2,/GPL,EQEXIN,GPDT,CSTM,BGPDT,SIL/V,N,LUSET/ C,N,123/
               V,N,NOGPDT $

  4  SAVE      LUSET,NOGPDT$

  5  PURGE     USET,GM,GO,KAA,BAA,MAA,K4AA,KFS,EST/NOGPDT $

  6  CHKPNT    GPL,EQEXIN,GPDT,CSTM,BGPDT,SIL,USET,GM,GO,KAA,BAA,MAA,K4AA,EST$

  7  COND      LBL5,NOGPDT$

  8  GP2       GEOM2,EQEXIN/ECT $

  9  CHKPNT    ECT $

 10  PLTSET    PCDB,EQEXIN,ECT/PLTSETX,PLTPAR,GPSETS,ELSETS/V,N,NSIL/ V,N,
               JUMPPLOT $

 11  SAVE      NSIL,JUMPPLOT $

 12  PRTMSG    PLTSETX//$

 13  CHKPNT    PLTPAR,GPSETS,ELSETS $

 14  SETVAL    //V,N,PLTFLG/C,N,1/V,N,PFILE/C,N,0 $

 15  SAVE      PLTFLG,PFILE $

 16  COND      P1,JUMPPLOT $

 17  PLOT      PLTPAR,GPSETS,ELSETS,CASECC,BGPDT,EQEXIN,SIL,,/PLOTX1/ V,N,
               NSIL/V,N,LUSET/V,N,JUMPPLOT/V,N,PLTFLG/V,N,PFILE $

 18  PRTMSG    PLOTX1//$

 19  LABEL     P1 $

 20  GP3       GEOM3,EQEXIN,/,GPTT/C,N,123/V,N,NOGRAV/C,N,123 $

 21  CHKPNT    GPTT$

 22  TA1,      ,ECT,EPT,BGPDT,SIL,GPTT,CSTM/EST,,GEI,ECPT,GPCT/V,N,LUSET/ C,N,
               123/V,N,NOSIMP=-1/C,N,0/V,N,NOGENL=-1/V,N,GENEL $

 23  SAVE      NOSIMP,NOGENL,GENEL$

 24  PURGE     K4GG,GPST,OGPST,MGG,BGG,K4NN,K4FF,K4AA,MNN,MFF,MAA,BNN,BFF,BAA,
```

```
RIGID FORMAT DMAP LISTING
SERIES L

RIGID FORMAT 7

   N A S T R A N  S O U R C E  P R O G R A M  C O M P I L A T I O N
DMAP-DMAP INSTRUCTION
 NO.
                KGGX/NOSIMP / OGPST/GENEL$

 25   CHKPNT    EST,ECPT,GPCT,GEI,K4GG,GPST,MGG,BGG,KGGX,OGPST, K4NN,K4FF,K4AA,
                MNN,MFF,MAA,BNN,BFF,BAA $

 26   COND      LBL1,NOSIMP$

 27   (SMA1)    CSTM,MPT,ECPT,GPCT,DIT/KGGX,K4GG,GPST/V,N,NOGENL/V,N,NOK4GG$

 28   SAVE      NOK4GG$

 29   PURGE     K4NN,K4GG,K4FF,K4AA/NOK4GG$

 30   CHKPNT    KGGX,GPST,K4GG,K4NN,K4FF,K4AA $

 31   (SMA2)    CSTM,MPT,ECPT,GPCT,DIT/MGG,BGG/V,Y,WTMASS=1.0/V,N,NOMGG/ V,N,
                NOBGG=-1/V,Y,COUPMASS=-1 $

 32   SAVE      NOMGG,NOBGG$

 33   PURGE     BNN,BFF,BAA/NOBGG$

 34   CHKPNT    MGG,BGG,BNN,BFF,BAA$

 35   COND      LBL1,GRDPNT$

 36   COND      ERROR3,NOMGG$

 37   (GPWG)    BGPDT,CSTM,EQEXIN,MGG/OGPWG/V,Y,GRDPNT=-1/V,Y,WTMASS$

 38   OFP       OGPWG,,,,,//V,N,CARDNO $

 39   SAVE      CARDNO $

 40   LABEL     LBL1$

 41   EQUIV     KGGX,KGG/NOGENL $

 42   CHKPNT    KGG $

 43   COND      LBL11,NOGENL $

 44   (SMA3)    GEI,KGGX/KGG/V,N,LUSET/V,N,NOGENL/V,N,NOSIMP $

 45   CHKPNT    KGG $

 46   LABEL     LBL11 $

 47   PARAM     //C,N,MPY/V,N,NSKIP/C,N,0/C,N,0 $

 48   (GP4)     CASECC,GEOM4,EQEXIN,SIL,GPDT/RG,,USET/V,N,LUSET/V,N,MPCF1/ V,N,
                MPCF2/V,N,SINGLE/V,N,OMIT/V,N,REACT/V,N,NSKIP/V,N,REPEAT/ V,N,
                NOSET=-1/V,N,NOL/V,N,NOA=-1 $
```

```
RIGID FORMAT DMAP LISTING
SERIES L

RIGID FORMAT 7

   N A S T R A N  S O U R C E  P R O G R A M  C O M P I L A T I O N
DMAP-DMAP INSTRUCTION
NO.

 49  SAVE      MPCF1,MPCF2,SINGLE,OMIT,NSKIP,NOSET,REACT,REPEAT,NOL,NOA $

 50  PURGE     GM,GMD/MPCF1/GO,KOOB,LOO,UOO,MOOB,MOAB,GOD/OMIT/KFS,QPC/
               SINGLE $

 51  EQUIV     KGG,KNN/MPCF1/MGG,MNN/MPCF1/ BGG,BNN/MPCF1/K4GG,K4NN/MPCF1$

 52  CHKPNT    GM,RG,GO,KOOB,LOO,UOO,MOOB,MOAB,KFS,QPC,USET,GMD,GOD, KNN,MNN,
               BNN,K4NN $

 53  COND      LBL4,GENEL $

 54  COND      LBL4,NOSIMP $

 55  (GPSP)    GPL,GPST,USET,SIL/OGPST $

 56  OFP       OGPST,,,,,//V,N,CARDNO $

 57  SAVE      CARDNO $

 58  LABEL     LBL4 $

 59  COND      LBL2,MPCF2 $

 60  (MCE1)    USET,RG/GM $

 61  CHKPNT    GM $

 62  (MCE2)    USET,GM,KGG,MGG,BGG,K4GG/KNN,MNN,BNN,K4NN $

 63  CHKPNT    KNN,MNN,BNN,K4NN $

 64  LABEL     LBL2 $

 65  EQUIV     KNN,KFF/SINGLE/MNN,MFF/SINGLE/BNN,BFF/SINGLE/K4NN,K4FF/SINGLE$

 66  CHKPNT    KFF,MFF,BFF,K4FF $

 67  COND      LBL3,SINGLE $

 68  (SCE1)    USET,KNN,MNN,BNN,K4NN/KFF,KFS,,MFF,BFF,K4FF $

 69  CHKPNT    KFS,KFF,MFF,BFF,K4FF $

 70  LABEL     LBL3 $

 71  EQUIV     KFF,KAA/OMIT/ MFF,MAA/OMIT/BFF,BAA/OMIT/K4FF,K4AA/OMIT$

 72  CHKPNT    KAA,MAA,BAA,K4AA $

 73  COND      LBL5,OMIT $

 74  (SMP1)    USET,KFF,MFF,BFF,K4FF/GO,KAA,KOOB,LOO,UOO,MAA,MOOB,MOAB,BAA,
```

```
RIGID FORMAT DMAP LISTING
SERIES L

RIGID FORMAT 7

   N A S T R A N  S O U R C E  P R O G R A M  C O M P I L A T I O N
DMAP-DMAP INSTRUCTION
NO.
                K4AA $

 75  CHKPNT     GO,KAA,MAA,BAA,K4AA $

 76  LABEL      LBL5 $

 77  (DPD)      DYNAMICS,GPL,SIL,USET/GPLD,SILD,USETD,TFPOOL,,,,,,EED,EQDYN/ V,
                N,LUSET/V,N,LUSETD/V,N,NOTFL/V,N,NODLT/V,N,NOPSDL/V,N,NOFRL/ V,
                N,NONLFT/V,N,NOTRL/V,N,NOEED/C,N,123/V,N,NOUE $

 78  SAVE       LUSETD,NOUE $

 79  EQUIV      GO,GOD/NOUE/GM,GMD/NOUE$

 80  CHKPNT     USETD,EED,EQDYN,TFPOOL,GOD,GMD,SILD,GPLD $

 81  PARAM      //C,N,ADD/V,N,NEVER/C,N,1/C,N,0 $

 82  PARAM      //C,N,MPY/V,N,REPEATE/C,N,1/C,N,-1 $

 83  JUMP       LBL13 $

 84  LABEL      LBL13 $

 85  PURGE      PHID,CLAMA,OPHID,OQPC1,OCPHIP,OESC1,OEFC1,CPHIP,QPC/NEVER $

 86  (CASE)     CASECC,/CASEXX/C,N,CEIGN/V,N,REPEATE/V,N,NOLOOP $

 87  SAVE       REPEATE,NOLOOP $

 88  CHKPNT     CASEXX $

 89  (MTRXIN)   CASEXX,MATPOOL,EQDYN,,,TFPOOL/K2PP,M2PP,B2PP/V,N,LUSETD/V,N,
                NOK2PP/V,N,NOM2PP/V,N,NOB2PP $

 90  SAVE       NOK2PP,NOB2PP,NOM2PP $

 91  PARAM      //C,N,AND/V,N,BDEBA/V,N,NOUE/V,N,NOB2PP$

 92  PARAM      //C,N,AND/V,N,MDEMA/V,N,NOUE/V,N,NOM2PP$

 93  PARAM      //C,N,AND/V,N,KDEK2/V,N,NOGENL/V,N,NOSIMP $

 94  PURGE      K2DD/NOK2PP/M2DD/NOM2PP/B2DD/NOB2PP$

 95  EQUIV      M2PP,M2DD/NOA/B2PP,B2DD/NOA/K2PP,K2DD/NOA/ MAA,MDD/MDEMA/BAA,
                BDD/BDEBA$

 96  CHKPNT     K2PP,M2PP,B2PP,K2DD,M2DD,B2DD,BDD,MDD $

 97  COND       LBL18,NOGPDT$

 98  (GKAD)     USETD,GM,GO,KAA,BAA,MAA,K4AA,K2PP,M2PP,B2PP/KDD,BDD,MDD,GMD,
```

```
RIGID FORMAT DMAP LISTING
SERIES L

RIGID FORMAT 7

   N A S T R A N  S O U R C E  P R O G R A M  C O M P I L A T I O N
DMAP-DMAP INSTRUCTION
 NO.
                GOD,K2DD,M2DD,B2DD/C,N,CMPLEV/C,N,DISP/C,N,DIRECT/C,Y,G=0.0/ C,
                N,0.0/C,N,0.0/V,N,NOK2PP/V,N,NOM2PP/V,N,NOB2PP/ V,N,MPCF1/V,N,
                SINGLE/V,N,OMIT/V,N,NOUE/V,N,NOK4GG/V,N,NOBGG/ V,N,KDEK2/C,N,
                -1 $

 99   LABEL     LBL18$

100   EQUIV     B2DD,BDD/NOBGG/ M2DD,MDD/NOSIMP/ K2DD,KDD/KDEK2 $

101   CHKPNT    KDD,BDD,MDD,GOD,GMD $

102   COND      ERROR1,NOEED$

103   CEAD      KDD,BDD,MDD,EED,CASEXX/PHID,CLAMA,OCEIGS/V,N,EIGVS $

104   SAVE      EIGVS $

105   CHKPNT    PHID,CLAMA,OCEIGS $

106   OFP       OCEIGS,CLAMA,,,,,//V,N,CARDNO $

107   SAVE      CARDNO $

108   COND      LBL16,EIGVS $

109   VDR       CASEXX,EQDYN,USETD,PHID,CLAMA,,/OPHID,/C,N,CEIGN/C,N,DIRECT/ C,
                N,0/V,N,NOD/V,N,NOP/C,N,0 $

110   SAVE      NOD,NOP $

111   COND      LBL15,NOD $

112   OFP       OPHID,,,,,,//V,N,CARDNO $

113   SAVE      CARDNO $

114   LABEL     LBL15$

115   COND      LBL16,NOP$

116   EQUIV     PHID,CPHIP/NOA $

117   COND      LBL17,NOA $

118   SDR1      USETD,, PHID,,,GOD,GMD,,KFS,,/CPHIP,,QPC/C,N,1/C,N,DYNAMICS $

119   LABEL     LBL17$

120   CHKPNT    CPHIP,QPC $

121   SDR2      CASEXX,CSTM,MPT,DIT,EQDYN,SILD,,,,CLAMA,QPC,CPHIP,EST,/,OQPC1,
                OCPHIP,OESC1,OEFC1,/C,N,CEIG $
```

```
 RIGID FORMAT DMAP LISTING
 SERIES L

 RIGID FORMAT 7

    N A S T R A N  S O U R C E  P R O G R A M  C O M P I L A T I O N
DMAP-DMAP INSTRUCTION
 NO.

122  OFP       OCPHIP,OQPC1,OEFC1,OESC1,,//V,N,CARDNO $

123  SAVE      CARDNO $

124  LABEL     LBL16 $

125  COND      FINIS,REPEATE $

126  REPT      LBL13,100 $

127  JUMP      ERROR2 $

128  JUMP      FINIS $

129  LABEL     ERROR2 $

130  PRTPARM   //C,N,-2/C,N,DIRCEAD$

131  LABEL     ERROR1$

132  PRTPARM   //C,N,-1/C,N,DIRCEAD$

133  LABEL     ERROR3$

134  PRTPARM   //C,N,-3/C,N,DIRCEAD$

135  LABEL     FINIS$

136  END       $
```

3.8.2 Description of DMAP Operations for Direct Complex Eigenvalue Analysis

3. GP1 generates coordinate system transformation matrices, tables of grid point locations, and tables for relating internal and external grid point numbers.

7. Go to DMAP No. 76 if only Direct Matrix Input.

8. GP2 generates Element Connection Table with internal indices.

10. PLTSET transforms user input into a form used to drive structure plotter.

12. PRTMSG prints error messages associated with structure plotter.

16. Go to DMAP No. 19 if no undeformed structure plot request.

17. PLØT generates all requested undeformed structure plots.

18. PRTMSG prints plotter data and engineering data for each undeformed plot generated.

20. GP3 generates Grid Point Temperature Table.

22. TA1 generates element tables for use in matrix assembly and stress recovery.

26. Go to DMAP No. 40 if there are no structural elements.

27. SMA1 generates stiffness matrix $[K^{x}_{gg}]$, structural damping matrix $[K^{4}_{gg}]$ and Grid Point Singularity Table.

31. SMA2 generates mass matrix $[M_{gg}]$ and viscous damping matrix $[B_{gg}]$.

35. Go to DMAP No. 40 if no weight and balance request.

36. Go to DMAP No. 133 and print error message if no mass matrix exists.

37. GPWG generates weight and balance information.

38. ØFP formats the weight and balance information and places it on the system output file for printing.

41. Equivalence $[K^{x}_{gg}]$ to $[K_{gg}]$ if no general elements.

43. Go to DMAP No. 46 if no general elements.

44. SMA3 adds general elements to $[K^{x}_{gg}]$ to obtain stiffness matrix $[K_{gg}]$.

48. GP4 generates flags defining members of various displacement sets (USET) and forms multipoint constraint equations $[R_g]\{u_g\} = 0$.

51. Equivalence $[K_{gg}]$ to $[K_{nn}]$, $[M_{gg}]$ to $[M_{nn}]$, $[B_{gg}]$ to $[B_{nn}]$ and $[K^{4}_{gg}]$ to $[K^{4}_{nn}]$ if no multi-point constraints.

53. Go to DMAP No. 58 if general elements present.

54. Go to DMAP No. 58 if no structural elements.

55. GPSP determines if possible grid point singularities remain.

56. ØFP formats table of possible grid point singularities and places it on the system output file for printing.

59. Go to DMAP No. 64 if MCE1 and MCE2 have already been executed for current set of multi-point constraints.

60. MCE1 partitions multipoint constraint equations $[R_g] = [R_m \mid R_n]$ and solves for multipoint constraint transformation matrix $[G_m] = -[R_m]^{-1}[R_n]$.

62. MCE2 partitions stiffness, mass and damping matrices

$$[K_{gg}] = \left[\begin{array}{c|c} \bar{K}_{nn} & K_{nm} \\ \hline K_{mn} & K_{mm} \end{array}\right], \quad [M_{gg}] = \left[\begin{array}{c|c} \bar{M}_{nn} & M_{nm} \\ \hline M_{mn} & M_{mm} \end{array}\right],$$

$$[B_{gg}] = \left[\begin{array}{c|c} \bar{B}_{nn} & B_{nm} \\ \hline B_{mn} & B_{mm} \end{array}\right] \quad \text{and} \quad [K^4_{gg}] = \left[\begin{array}{c|c} \bar{K}^4_{nn} & K^4_{nm} \\ \hline K^4_{mn} & K^4_{mm} \end{array}\right]$$

and performs matrix reductions

$$[K_{nn}] = [\bar{K}_{nn}] + [G_m^T][K_{mn}] + [K_{mn}^T][G_m] + [G_m^T][K_{mm}][G_m],$$

$$[M_{nn}] = [\bar{M}_{nn}] + [G_m^T][M_{mn}] + [M_{mn}^T][G_m] + [G_m^T][M_{mm}][G_m],$$

$$[B_{nn}] = [\bar{B}_{nn}] + [G_m^T][B_{mn}] + [B_{mn}^T][G_m] + [G_m^T][B_{mm}][G_m],$$

$$[K^4_{nn}] = [\bar{K}^4_{nn}] + [G_m^T][K^4_{mn}] + [K^4_{mn}]^T[G_m] + [G_m^T][K^4_{mm}][G_m].$$

65. Equivalence $[K_{nn}]$ to $[K_{ff}]$, $[M_{nn}]$ to $[M_{ff}]$, $[B_{nn}]$ to $[B_{ff}]$ and $[K^4_{nn}]$ to $[K^4_{ff}]$ if no single-point constraints.

67. Go to DMAP No. 70 if no single-point constraints.

68. SCE1 partitions out single-point constraints

$$[K_{nn}] = \left[\begin{array}{c|c} K_{ff} & K_{fs} \\ \hline K_{sf} & K_{ss} \end{array}\right], \quad [M_{nn}] = \left[\begin{array}{c|c} M_{ff} & M_{fs} \\ \hline M_{sf} & M_{ss} \end{array}\right],$$

$$[B_{nn}] = \left[\begin{array}{c|c} B_{ff} & B_{fs} \\ \hline B_{sf} & B_{ss} \end{array}\right] \quad \text{and} \quad [K^4_{nn}] = \left[\begin{array}{c|c} K^4_{ff} & K^4_{fs} \\ \hline K^4_{sf} & K^4_{ss} \end{array}\right].$$

71. Equivalence $[K_{ff}]$ to $[K_{aa}]$, $[M_{ff}]$ to $[M_{aa}]$, $[B_{ff}]$ to $[B_{aa}]$ and $[K^4_{ff}]$ to $[K^4_{aa}]$ if no omitted coordinates.

73. Go to DMAP No. 76 if no omitted coordinates.

74. SMP1 partitions constrained stiffness, mass and damping matrices.

$$[K_{ff}] = \left[\begin{array}{c|c} K_{aa} & K_{ao} \\ \hline K_{oa} & K_{oo} \end{array}\right], \qquad [M_{ff}] = \left[\begin{array}{c|c} M_{aa} & M_{ao} \\ \hline M_{oa} & M_{oo} \end{array}\right],$$

$$[B_{ff}] = \left[\begin{array}{c|c} B_{aa} & B_{ao} \\ \hline B_{oa} & B_{oo} \end{array}\right] \text{ and } \qquad [K^4_{ff}] = \left[\begin{array}{c|c} K^4_{aa} & K^4_{ao} \\ \hline K^4_{oa} & K^4_{oo} \end{array}\right].$$

solves for transformation matrix $[G_o] = -[K_{oo}]^{-1}[K_{oa}]$
and performs matrix reductions

$$[K^1_{aa}] = [K_{aa}] + [K_{ao}][G_o],$$

$$[M^1_{aa}] = [M_{aa}] + [M_{ao}][G_o] + [M_{ao}G_o]^T + [G_o^T][M_{oo}][G_o],$$

$$[B^1_{aa}] = [B_{aa}] + [B_{ao}][G_o] + [B_{ao}G_o]^T + [G_o^T][B_{oo}][G_o] \text{ and}$$

$$[K^4_{aa}] = [K^4_{aa}] + [K^4_{ao}][G_o] + [K^4_{ao}G_o]^T + [G_o^T][K^4_{oo}][G_o]$$

77. DPD generates flags defining members of various displacement sets used in dynamic analysis (USETD), tables relating internal and external grid point numbers, including extra points introduced for dynamic analysis, and prepares Transfer Function Pool and Eigenvalue Extraction Data.

79. Equivalence $[G_o]$ to $[G^d_o]$ and $[G_m]$ to $[G^d_m]$ if no extra points introduced for dynamic analysis.

83. Go to next DMAP instruction if cold start or modified restart. LBL13 will be altered by the Executive System to the proper location inside the loop for unmodified starts within the loop.

84. Beginning of loop for additional sets of direct input matrices.

86. CASE extracts user requests from CASECC for current loop.

89. MTRXIN selects the direct input matrices for the current loop, $[K^2_{pp}]$, $[M^2_{pp}]$ and $[B^2_{pp}]$.

95. Equivalence $[M^2_{pp}]$ to $[M^2_{dd}]$, $[B^2_{pp}]$ to $[B^2_{dd}]$ and $[K^2_{pp}]$ to $[K^2_{dd}]$ if no constraints applied. Equivalence $[M_{aa}]$ to $[M_{dd}]$ if no direct input mass matrices and no extra points, and $[B_{aa}]$ to $[B_{dd}]$ if no direct input damping matrices and no extra points.

97. Go to DMAP No. 99 if only extra points defined.

98. GKAD assembles stiffness, mass, and damping matrices for use in Direct Complex Eigenvalue Analysis

$$[K_{dd}] = (1 + ig)[K^1_{dd}] + [K^2_{dd}] + i[K^4_{dd}],$$

$$[M_{dd}] = [M^1_{dd}] + [M^2_{dd}] \text{ and}$$

$$[B_{dd}] = [B^1_{dd}] + [B^2_{dd}].$$

Direct input matrices may be complex.

100. Equivalence $[K^2_{dd}]$ to $[K_{dd}]$ if all stiffness is Direct Matrix Input, $[M^2_{dd}]$ to $[M_{dd}]$ if all mass is Direct Matrix Input and $[B^2_{dd}]$ to $[B_{dd}]$ if all damping is Direct Matrix Input.

102. Go to DMAP No. 131 and print error message if no Eigenvalue Extraction Data.

103. CEAD extracts complex eigenvalues from the equation

$$[M_{dd}p^2 + B_{dd}p + K_{dd}]\{u_d\} = 0$$

and normalizes eigenvectors according to one of the following user requests:
(1) Unit magnitude of selected coordinate
(2) Unit magnitude of largest component.

106. ØFP formats the summary of complex eigenvalues and summary of eigenvalue extraction information and places them on the system output file for printing.

108. Go to DMAP No. 124 if no eigenvalues found.

109. VDR prepares eigenvectors for output, using only the independent degrees of freedom.

111. Go to DMAP No. 114 if no output request for the independent degrees of freedom.

112. ØFP formats the eigenvectors for independent degrees of freedom and places them on the system output file for printing.

115. Go to DMAP No. 124 if no output request involving dependent degrees of freedom or forces and stresses.

116. Equivalence $\{\phi_d\}$ to $\{\phi_p\}$ if no constraints applied.

117. Go to DMAP No. 119 if no constraints applied.

118. SDR1 recovers dependent components of eigenvectors

$$\{\phi_o\} = [G^d_o]\{\phi_d\} \quad , \qquad \left\{\begin{matrix}\phi_d \\ \hline \phi_o\end{matrix}\right\} = \{\phi_f + \phi_e\} \quad ,$$

$$\left\{\begin{matrix}\phi_f + \phi_e \\ \hline \phi_s\end{matrix}\right\} = \{\phi_n + \phi_e\} \quad , \qquad \{\phi_m\} = [G^d_m]\{\phi_n + \phi_e\} \quad ,$$

$$\left\{\begin{matrix}\phi_n + \phi_e \\ \hline \phi_m\end{matrix}\right\} = \{\phi_p\}$$

and recovers single-point forces of constraint

$$\{q_s\} = [K^T_{fs}]\{\phi_f\} \quad .$$

121. SDR2 calculates element forces and stresses (ØESC1, ØEFC1) and prepares eigenvectors and single-point forces of constraint for output (ØCPHIP, ØQPC1).

122. ØFP formats tables prepared by SDR2 and places them on the system output file for printing.

125. Go to DMAP No. 135 if no additional sets of direct input matrices need to be processed.

126. Go to DMAP No. 84 if additional sets of direct input matrices need to be processed.

127. Go to DMAP No. 129 and print error message if more than 100 loops.

128. Go to DMAP No. 135 and make normal exit.

130. DIRECT CØMPLEX EIGENVALUE ANALYSIS ERRØR MESSAGE NØ. 2 - ATTEMPT TØ EXECUTE MØRE THAN 100 LØØPS.

132. DIRECT CØMPLEX EIGENVALUE ANALYSIS ERRØR MESSAGE NØ. 1 - EIGENVALUE EXTRACTIØN DATA REQUIRED FØR CØMPLEX EIGENVALUE ANALYSIS.

134. DIRECT CØMPLEX EIGENVALUE ANALYSIS ERRØR MESSAGE NØ. 3 - MASS MATRIX REQUIRED FØR WEIGHT AND BALANCE CALCULATIØNS.

3.8.3 Restart Tables for Direct Complex Eigenvalue Analysis

3.8.3.1 Bit Positions for Card Name Restart Table

Card Name	Bit Pos.	Card Name	Bit Pos.	Card Name	Bit Pos.
AXIC	1	CTRMEM	2	SPCADD	10
CDAMP1	1	CTRPLT	2	SPCAX	10
CDAMP2	1	CTUBE	2	SPC$	10
CDAMP3	1	CTWIST	2	ØMIT	11
CDAMP4	1	PBAR	3	ØMIT1	11
CELAS1	1	PBEAM	3	ØMITAX	11
CELAS2	1	PCØNEAX	3	PARAM	12
CELAS3	1	PQDMEM	3	SUPAX	12
CELAS4	1	PQDPLT	3	SUPØRT	12
CMASS1	1	PQUAD1	3	TEMP	13
CMASS2	1	PQUAD2	3	TEMPAX	13
CMASS3	1	PRØD	3	TEMPD	13
CMASS4	1	PSHEAR	3	WTMASS	14
CØRD1C	1	PTØRDRG	3	GRDPNT	15
CØRD1R	1	PTRBSC	3	PLØTEL	16
CØRD1S	1	PTRIA1	3	PLØT$	18
CØRD2C	1	PTRIA2	3	PØUT$	19
CØRD2R	1	PTRMEM	3	AØUT$	21
CØRD2S	1	PTRPLT	3	LØØP$	22
GRDSET	1	PTUBE	3	LØØP1$	23
GRID	1	PTWIST	3	CØUPMASS	24
PØINTAX	1	GENEL	4	NØLØØP$	25
RINGAX	1	CØNM1	5	G	56
SECTAX	1	CØNM2	5	EPØINT	57
SEQGP	1	PELAS	6	SEQEP	57
SPØINT	1	PMASS	7	TF	57
BARØR	2	MAT1	8	CVISC	58
BEAMØR	2	MAT2	8	PDAMP	59
CBAR	2	MAT3	8	PVISC	59
CBEAM	2	MATT1	8	DMIG	60
CCØNEAX	2	MATT2	8	B2PP$	60
CØNRØD	2	MATT3	8	K2PP$	60
CQDMEM	2	TABLEM1	8	M2PP$	60
CQDPLT	2	TABLEM2	8	TF$	60
CQUAD1	2	TABLEM3	8	EIGC	61
CQUAD2	2	TABLEM4	8	EIGP	61
CRØD	2	TEMPMT$	8	CMETHØD$	62
CSHEAR	2	TEMPMX$	8		
CTØRDRG	2	MPC	9		
CTRAPRG	2	MPCADD	9		
CTRBSC	2	MPCAX	9		
CTRIA1	2	MPC$	9		
CTRIA2	2	SPC	10		
CTRIARG	2	SPC1	10		

3.8.3.2 Bit Positions for File Name Restart Table

File Name	Bit Pos.
BGPDT	94
CSTM	94
EQEXIN	94
GPDT	94
GPL	94
SIL	94
ECT	95
GPTT	96
ECPT	97
EST	97
GEI	97
GPCT	97
GPST	98
K4GG	98
KGGX	98
BGG	99
MGG	99
KGG	100
RG	101
USET	101
YS	101
ØGPST	102
GM	103
BNN	104
K4NN	104
KNN	104
MNN	104
BFF	105
K4FF	105
KFF	105
KFS	105
MFF	105
BAA	106
GØ	106
K4AA	106
KAA	106
KØØB	106
LØØ	106
MAA	106
MØAB	106
MØØB	106

File Name	Bit Pos.
UØØ	106
EED	107
EQDYN	107
GPLD	107
SILD	107
TFPØØL	107
USETD	107
CASEXX	108
B2PP	109
K2PP	109
M2PP	109
B2DD	110
BDD	110
GMD	110
GØD	110
K2DD	110
KDD	110
M2DD	110
MDD	110
CLAMA	111
ØCEIGS	111
PHID	111
ØPHID	112
CPHIP	113
QPC	113
ØCPHIP	114
ØEFCl	114
ØESCl	114
ØQPCl	114

3.8.3.3 Card Name Restart Table

DMAP Inst.	Bit Position 1	10	20	30	40	50	60
BEGIN	12345678901234	56 89 1234					6789012
FILE	12345678901234	56 89 1234					6789012
GP1	1						
SAVE	1						
PURGE	1						
CHKPNT	1						
COND	1						
GP2	12 45	6					8
CHKPNT	12 45	6					8
PLTSET		8					
SAVE		8					
PRTMSG		8					
CHKPNT		8					
SETVAL		8					
SAVE		8					
COND		8					
PLOT		8					
PRTMSG		8					
LABEL		8					
GP3	1	3					
CHKPNT	1	3					
TA1,	1234567						89
SAVE	1234567						89
PURGE	1234567						89
CHKPNT	1234567						89
COND	123 5678	45					
SMA1	123 6 8						
SAVE	123 6 8						
PURGE	123 6 8						
CHKPNT	123 6 8						
SMA2	123 5 78	4		4			89
SAVE	123 5 78	4		4			89
PURGE	123 5 78	4		4			89
CHKPNT	123 5 78	4		4			89
COND	123 5 78	45					
COND	123 5 78	45					
GPWG	123 5 78	45					
OFP	123 5 78	45					
SAVE	123 5 78	45					
LABEL	123 5 7	45					
EQUIV	123 6 8						
CHKPNT	123 6 8						
COND	1234 6 8						
SMA3	1234 6 8						
CHKPNT	1234 6 8						
LABEL	1234 6 8						
PARAM	1	901					
GP4	1	901					
SAVE	1	901					
PURGE	1	901					
EQUIV	123456789			4			
CHKPNT	1	9					
COND	123 6 8 0						
COND	123 6 8 0						
GPSP	123 6 8 0						
OFP	123 6 8 0						
SAVE	123 6 8 0						

DMAP Inst.	Bit Position 1	10	20	30	40	50	60
LABEL	123 6 8 0						
COND	123456789			4			
MCE1	1 9						
CHKPNT	1 9						
MCE2	123456789			4			89
CHKPNT	123456789			4			89
LABEL	123456789			4			89
EQUIV	1234567890			4			89
CHKPNT	1234567890			4			89
COND	1234567890			4			89
SCE1	1234567890			4			89
CHKPNT	1234567890			4			89
LABEL	1234567890			4			89
EQUIV	12345678901			4			89
CHKPNT	12345678901			4			89
COND	12345678901			4			89
SMP1	12345678901			4			89
CHKPNT	12345678901			4			89
LABEL	12345678901			4			89
DPD	1 901						7 1
SAVE	1 901						7 1
EQUIV	12345678901			234			67890
CHKPNT	1 901						7 1
PARAM				23			
PARAM	12345678901234 6			23			6789012
JUMP				23			
$SS	1 3						
LABEL	1234567890123456 89			123			6789012
PURGE				23			
CASE	1234567890123456			23 5			6789012
SAVE	1234567890123456			23 5			6789012
CHKPNT	1234567890123456			23 5			6789012
MTRXIN	1			23			7 0
SAVE	1			23			7 0
PARAM	1			23			7 0
PARAM	1			23			7 0
PARAM	1			23			7 0
PURGE	12345678901			234			67890
EQUIV	12345678901			234			67890
CHKPNT	12345678901			234			67890
COND	12345678901			234			67890
GKAD	12345678901			234			67890
LABEL	12345678901			234			67890
EQUIV	12345678901			234			67890
CHKPNT	12345678901			234			67890
COND	12345678901			234			67890
CEAD	12345678901			234			6789012
SAVE	12345678901			234			6789012
CHKPNT	12345678901			234			6789012
OFP	12345678901			234			6789012
SAVE	12345678901			234			6789012
COND				1			
VDR				1			
SAVE				1			
COND				1			
OFP				1			
SAVE				1			

DMAP Inst.	Bit Position 1 10 20 30 40 50 60
LABEL	1
COND	12345678901 234 6789012
EQUIV	12345678901 234 6789012
COND	12345678901 234 6789012
SDR1	12345678901 234 6789012
LABEL	12345678901 234 6789012
CHKPNT	12345678901 234 6789012
SDR2	9
OFP	9
SAVE	9
LABEL	12345678901 234
COND	23 6789012
$SS	1 3
REPT	23 6789012
$SS	1 3
JUMP	23
$SS	1 3
JUMP	1234567890123456 89 1234 6789012
LABEL	23
$SS	1 3
PRTPARM	23 6789012
$SS	1 3
LABEL	1234567890123456 89 1234 6789012
PRTPARM	1234567890123456 89 1234 6789012
LABEL	1234567890123456 89 1234 6789012
PRTPARM	1234567890123456 89 1234 6789012
LABEL	1234567890123456 89 1234 6789012
END	1234567890123456 89 1234 6789012

3.8.3.4 Rigid Format Change Restart Table

DMAP Inst.	Bit Position 63 70 80
BEGIN	345678 C1234
FILE	345678 C1234
GP1	
SAVE	
PURGE	
CHKPNT	
COND	
GP2	
CHKPNT	
PLTSET	
SAVE	
PRTMSG	
CHKPNT	
SETVAL	
SAVE	
COND	
PLOT	
PRTMSG	
LABEL	
GP3	
CHKPNT	
TA1,	
SAVE	
PURGE	
CHKPNT	
COND	
SMA1	
SAVE	
PURGE	
CHKPNT	
SMA2	3 678
SAVE	3 678
PURGE	3 678
CHKPNT	3 678
COND	
COND	
GPWG	
OFP	
SAVE	
LABEL	
EQUIV	
CHKPNT	
COND	
SMA3	
CHKPNT	
LABEL	
PARAM	
GP4	
SAVE	
PURGE	
EQUIV	
CHKPNT	
COND	
COND	
GPSP	
OFP	
SAVE	

DMAP Inst.	Bit Position 63 70 80
LABEL	
COND	
MCE1	
CHKPNT	
MCE2	
CHKPNT	
LABEL	
EQUIV	
CHKPNT	
COND	
SCE1	
CHKPNT	
LABEL	
EQUIV	
CHKPNT	
COND	
SMP1	
CHKPNT	
LABEL	
DPD	
SAVE	
EQUIV	
CHKPNT	
PARAM	
PARAM	345678 C1234
JUMP	345678 C1234
LABEL	345678 C1234
PURGE	
CASE	345678 C1234
SAVE	345678 C1234
CHKPNT	345678 C1234
MTRXIN	
SAVE	
PARAM	
PARAM	
PARAM	
PURGE	
EQUIV	
CHKPNT	
COND	
GKAD	
LABEL	
EQUIV	
CHKPNT	
COND	345678 C1234
CEAD	
SAVE	
CHKPNT	
OFP	
SAVE	
COND	
VDR	
SAVE	
COND	
OFP	
SAVE	
LABEL	

DMAP Inst.	Bit Position 63	70	80
CCND	345678	C1234	
EQUIV	345678	C1234	
CCND	345678	C1234	
SDR1	345678	C1234	
LABEL			
CHKPNT			
SDR2			
OFP			
SAVE			
LABEL			
CCND	345678	C1234	
REPT	345678	C1234	
JUMP	345678	C1234	
JUMP	345678	C1234	
LABEL	345678	C1234	
PRTPARM	345678	C1234	
LABEL	345678	C1234	
PRTPARM	345678	C1234	
LABEL	345678	C1234	
PRTPARM	345678	C1234	
LABEL	345678	C1234	
END	345678	C1234	

3.8.3.5 File Name Restart Table

DMAP Inst.	Bit Position 94	100	110	120
BEGIN				
FILE				
GP1	4			
SAVE	4			
PURGE				
CHKPNT				
COND				
GP2	5			
CHKPNT	5			
PLTSET				
SAVE				
PRTMSG				
CHKPNT				
SETVAL				
SAVE				
COND				
PLOT				
PRTMSG				
LABEL				
GP3	6			
CHKPNT	6			
TA1,	7			
SAVE	7			
PURGE	789 2 456			
CHKPNT	7			
COND	8			
SMA1	8			
SAVE	8			
PURGE	8 456			
CHKPNT	8			
SMA2	9			
SAVE	9			
PURGE	9			
CHKPNT	9			
COND				
COND				
GPWG				
OFP				
SAVE				
LABEL	8			
EQUIV	0			
CHKPNT	0			
COND	0			
SMA3	0			
CHKPNT	0			
LABEL	0			
PARAM	1			
GP4	1			
SAVE	1			
PURGE	1 3 56 0 3			
EQUIV	4			
CHKPNT				
COND	2			
COND	2			
GPSP	2			
OFP	2			
SAVE	2			

DMAP Inst.	Bit Position 94	100	110	120
LABEL	2			
COND	34			
MCE1	3			
CHKPNT	3			
MCE2	4			
CHKPNT	4			
LABEL	34			
EQUIV	5			
CHKPNT	5			
COND	5			
SCE1	5			
CHKPNT	5			
LABEL	5			
EQUIV	6			
CHKPNT	6			
COND	6			
SMP1	6			
CHKPNT	6			
LABEL	6			
DPD	7			
SAVE	7			
EQUIV	0			
CHKPNT	7			
PARAM				
PARAM	8			
JUMP	8			
LABEL	8			
PURGE				
CASE	8			
SAVE	8			
CHKPNT	8			
MTRXIN	9			
SAVE	9			
PARAM	9			
PARAM	9			
PARAM	9			
PURGE	0			
EQUIV	0			
CHKPNT	0			
COND	0			
GKAD	0			
LABEL	0			
EQUIV	1			
CHKPNT	1			
COND	1			
CEAD	1			
SAVE	1			
CHKPNT	1			
OFP	1			
SAVE	1			
COND	2			
VDR	2			
SAVE	2			
COND	2			
OFP	2			
SAVE	2			
LABEL	2			

DMAP Inst.	94	Bit Position 100	110	120
COND			3	
EQUIV			3	
COND			3	
SDR1			3	
LABEL			3	
CHKPNT			3	
SDR2			4	
OFP				
SAVE				
LABEL			23	
COND				
REPT				
JUMP				
JUMP				
LABEL				
PRTPARM				
LABEL				
PRTPARM				
LABEL				
PRTPARM				
LABEL				
END				

3.8.4 Automatic Output for Direct Complex Eigenvalue Analysis

Each complex eigenvalue is identified with a root number determined by sorting the complex eigenvalues according to the magnitude of the imaginary part, with positive values considered as a group ahead of all negative values. The following summary of the complex eigenvalues extracted is automatically printed for each set of direct input matrices:

1. Root Number
2. Extraction Order
3. Real and Imaginary Parts of the Eigenvalue
4. The coefficients f_j (frequency) and g_j (damping coefficient) in the following representation of the eigenvalue

$$P_j = 2\pi f_j(i - \frac{1}{2} g_j)$$

The following summary of the eigenvalue analysis performed using the Determinant method is automatically printed for each set of direct input matrices:

1. Number of eigenvalues extracted
2. Number of passes through starting points.
3. Number of criteria changes.
4. Number of starting point moves.
5. Number of triangular decompositions.
6. Number of failures to iterate to a root.
7. Number of predictions outside region.
8. Reason for termination:
   (1) The number of roots desired have been found.
   (2) All predictions for eigenvalues are outside the regions specified.
   (3) Insufficient time to find another root.
   (4) Matrix is singular at first three starting points.
9. Swept determinant functions for each starting point.

The following summary of the eigenvalue analysis performed, using the Inverse Power method, is automatically printed for each region specified:

1. Number of eigenvalues extracted.
2. Number of starting points used.
3. Number of starting point moves.
4. Number of triangular decompositions.
5. Number of vector iterations.
6. Reason for termination.
   (1) Two consecutive singularities encountered while performing triangular decomposition.
   (2) Four starting point moves while tracking a single root.
   (3) All eigenvalues found in the region specified.
   (4) Three times the number of roots estimated in the region have been extracted.
   (5) All eigenvalues that exist in the problem have been found.
   (6) The number of roots desired have been found.
   (7) One or more eigenvalues have been found outside the region specified.
   (8) Insufficient time to find another root.
   (9) Unable to converge.

3.8.5 Case Control Deck and Parameters for Direct Complex Eigenvalue Analysis

The following items relate to subcase definition and data selections for Direct Complex Eigenvalue Analysis.

1. At least one subcase must be defined for each unique set of direct input matrices (K2PP, M2PP, B2PP).
2. Multiple subcases for each set of direct input matrices are used only to control output requests. A single subcase for each set of direct input matrices is sufficient if the same output is desired for all modes. If consecutive multiple subcases are present for a single set of direct input matrices, the output requests will be honored in succession for increasing mode numbers. MØDES may be used to repeat subcases in order to make the same output request for several consecutive modes.

3. CMETHØD must be used to select an EIGC card from the Bulk Data Deck for each set of direct input matrices.

4. On restart following an unscheduled exit due to insufficient time, the subcase structure must be changed to reflect the sets of direct input matrices that were completed, and either CMETHØD must be changed to select an EIGC card that reflects any complex eigenvalues found in the previous execution or EIGP cards must be used to insert poles for previously found eienvalues. Otherwise, the previously found eigenvalues will be extracted again.

5. Constraints must be defined above the subcase level.

The following printed output, sorted by complex eigenvalue root number (SØRT1), may be requested for any complex eigenvalue extracted, as either real and imaginary parts or magnitude and phase angle (0° - 360° lead):

1. The eigenvector for a list of PHYSICAL points (grid points and extra scalar points introduced for dynamic analysis) or SØLUTIØN points (points used in formulation of the general K system).

2. Nonzero components of the single-point forces of constraint for a list of PHYSICAL points.

3. Stresses and forces in selected elements.

In addition an undeformed plot of the structural model may be requested.

The following parameters are used in Direct Complex Eigenvalue Analysis:

1. GRDPNT - optional - a positive integer value of this parameter will cause the Grid Point Weight Generator to be executed and the resulting weight and balance information to be printed.

2. WTMASS - optional - the terms of the mass matrix are multiplied by the real value of this parameter when they are generated in SMA2.

3. G - optional - the real value of this parameter is used as a uniform structural damping coefficient in the direct formulation of dynamics problems.

4. CØUPMASS - optional - a positive integer value of this parameter will cause the generation of coupled mass matrices rather than lumped mass matrices for all bar elements, rod elements, and plate elements that include bending stiffness (see section 3.1 for list of elements).

3.9 DIRECT FREQUENCY AND RANDOM RESPONSE

3.9.1 DMAP Sequence for Direct Frequency and Random Response

```
RIGID FORMAT 8

   N A S T R A N  S O U R C E  P R O G R A M  C O M P I L A T I O N
DMAP-DMAP INSTRUCTION
 NO.

  1  BEGIN    NO.8 DIRECT FREQUENCY RESPONSE ANALYSIS - SERIES L $

  2  FILE     KGGX=TAPE/ KGG=TAPE $

  3  GP1      GEOM1,GEOM2,/GPL,EQEXIN,GPDT,CSTM,BGPDT,SIL/V,N,LUSET/ C,N,123/
              V,N,NOGPDT $

  4  SAVE     LUSET,NOGPDT$

  5  PURGE    USET,GM,GO,KAA,BAA,MAA,K4AA,KFS,PSF,QPC,EST/NOGPDT $

  6  CHKPNT   GPL,EQEXIN,GPDT,CSTM,BGPDT,SIL,USET,GM,GO,KAA,BAA,MAA,K4AA,
              KFS,PSF,QPC,EST $

  7  COND     LBL5,NOGPDT$

  8  GP2      GEOM2,EQEXIN/ECT $

  9  CHKPNT   ECT $

 10  PLTSET   PCDB,EQEXIN,ECT/PLTSETX,PLTPAR,GPSETS,ELSETS/V,N,NSIL/ V,N,
              JUMPPLOT $

 11  SAVE     NSIL,JUMPPLOT $

 12  PRTMSG   PLTSETX//$

 13  CHKPNT   PLTPAR,GPSETS,ELSETS $

 14  SETVAL   //V,N,PLTFLG/C,N,1/V,N,PFILE/C,N,0 $

 15  SAVE     PLTFLG,PFILE $

 16  COND     P1,JUMPPLOT $

 17  PLOT     PLTPAR,GPSETS,ELSETS,CASECC,BGPDT,EQEXIN,SIL,,/PLOTX1/ V,N,
              NSIL/V,N,LUSET/V,N,JUMPPLOT/V,N,PLTFLG/V,N,PFILE $

 18  PRTMSG   PLOTX1//$

 19  LABEL    P1 $

 20  GP3      GEOM3,EQEXIN,/,GPTT/C,N,123/V,N,NOGRAV/C,N,123 $

 21  CHKPNT   GPTT$

 22  TA1,     ,ECT,EPT,BGPDT,SIL,GPTT,CSTM/EST,,GEI,ECPT,GPCT/V,N,LUSET/ C,N,
              123/V,N,NOSIMP=-1/C,N,0/V,N,NOGENL=-1/V,N,GENEL $

 23  SAVE     NOSIMP,NOGENL,GENEL$
```

```
RIGID FORMAT DMAP LISTING
SERIES L

RIGID FORMAT 8

   N A S T R A N  S O U R C E  P R O G R A M  C O M P I L A T I O N
DMAP-DMAP INSTRUCTION
NO.

 24   PURGE     K4GG,GPST,OGPST,MGG,BGG,K4NN,K4FF,K4AA,MNN,MFF,MAA,BNN,BFF,BAA,
                KGGX/NOSIMP/OGPST/GENEL$

 25   CHKPNT    EST,ECPT,GPCT,GEI,K4GG,GPST,MGG,BGG,KGGX,OGPST, K4NN,K4FF,K4AA,
                MNN,MFF,MAA,BNN,BFF,BAA $

 26   COND      LBL1,NOSIMP$

 27   (SMA1)    CSTM,MPT,ECPT,GPCT,DIT/KGGX,K4GG,GPST/V,N,NOGENL/V,N,NOK4GG$

 28   SAVE      NOK4GG$

 29   PURGE     K4NN,K4GG,K4FF,K4AA/NOK4GG$

 30   CHKPNT    KGGX,GPST,K4GG,K4NN,K4FF,K4AA$

 31   (SMA2)    CSTM,MPT,ECPT,GPCT,DIT/MGG,BGG/V,Y,WTMASS=1.0/V,N,NOMGG/ V,N,
                NOBGG=-1/V,Y,COUPMASS=-1 $

 32   SAVE      NOMGG,NOBGG$

 33   PURGE     BNN,BFF,BAA/NOBGG$

 34   CHKPNT    MGG,BGG,BNN,BFF,BAA$

 35   COND      LBL1,GRDPNT$

 36   COND      ERROR4,NOMGG$

 37   (GPWG)    BGPDT,CSTM,EQEXIN,MGG/OGPWG/V,Y,GRDPNT=-1/V,Y,WTMASS$

 38   OFP       OGPWG,,,,,//V,N,CARDNO $

 39   SAVE      CARDNO $

 40   LABEL     LBL1$

 41   EQUIV     KGGX,KGG/NOGENL $

 42   CHKPNT    KGG $

 43   COND      LBL11,NOGENL $

 44   (SMA3)    GEI,KGGX/KGG/V,N,LUSET/V,N,NOGENL/V,N,NOSIMP $

 45   CHKPNT    KGG $

 46   LABEL     LBL11 $

 47   PARAM     //C,N,MPY/V,N,NSKIP/C,N,0/C,N,0 $

 48   (GP4)     CASECC,GEOM4,EQEXIN,SIL,GPDT/RG,,USET/V,N,LUSET/V,N,MPCF1=-1/
                V,N,MPCF2=-1/V,N,SINGLE=-1/V,N,OMIT=-1/V,N,REACT=-1/V,N,NSKIP/
```

```
RIGID FORMAT DMAP LISTING
SERIES L

RIGID FORMAT 8

   N A S T R A N  S O U R C E  P R O G R A M  C O M P I L A T I O N
DMAP-DMAP INSTRUCTION
NO.
                V,N,REPEAT/V,N,NOSET=-1/V,N,NOL/V,N,NOA=-1 $

 49   SAVE      MPCF1,SINGLE,OMIT,NOSET,REACT,MPCF2,NSKIP,REPEAT,NOL,NOA$

 50   PURGE     GM,GMD/MPCF1/GO,KOOB,LOO,UOO,MOOB,MOAB,GOD/OMIT/KFS,PSF,QPC/
                SINGLE$

 51   EQUIV     KGG,KNN/MPCF1/MGG,MNN/MPCF1/ BGG,BNN/MPCF1/K4GG,K4NN/MPCF1$

 52   CHKPNT    GM,RG,GO,KOOB,LOO,UOO,MOOB,MOAB,KFS,QPC,USET,GMD,GOD,PSF, KNN,
                MNN,BNN,K4NN $

 53   COND      LBL4,GENEL $

 54   COND      LBL4,NOSIMP $

 55   (GPSP)    GPL,GPST,USET,SIL/OGPST $

 56   OFP       OGPST,,,,,//V,N,CARDNO $

 57   SAVE      CARDNO $

 58   LABEL     LBL4 $

 59   COND      LBL2,MPCF1 $

 60   (MCE1)    USET,RG/GM $

 61   CHKPNT    GM $

 62   (MCE2)    USET,GM,KGG,MGG,BGG,K4GG/KNN,MNN,BNN,K4NN$

 63   CHKPNT    KNN,MNN,BNN,K4NN $

 64   LABEL     LBL2 $

 65   EQUIV     KNN,KFF/SINGLE/MNN,MFF/SINGLE/BNN,BFF/SINGLE/K4NN,K4FF/SINGLE$

 66   CHKPNT    KFF,MFF,BFF,K4FF $

 67   COND      LBL3,SINGLE $

 68   (SCE1)    USET,KNN,MNN,BNN,K4NN/KFF,KFS,,MFF,BFF,K4FF$

 69   CHKPNT    KFS,KFF,MFF,BFF,K4FF $

 70   LABEL     LBL3 $

 71   EQUIV     KFF,KAA/OMIT/MFF,MAA/OMIT/BFF,BAA/OMIT/K4FF,K4AA/OMIT$

 72   CHKPNT    KAA,MAA,BAA,K4AA $

 73   COND      LBL5,OMIT $
```

```
RIGID FORMAT DMAP LISTING
SERIES L

RIGID FORMAT 8

   N A S T R A N  S O U R C E  P R O G R A M  C O M P I L A T I O N
DMAP-DMAP INSTRUCTION
NO.

74  (SMP1)    USET,KFF,MFF,BFF,K4FF/GO,KAA,K00B,L00,U00,MAA,M00B,M0AB,BAA,
              K4AA$

75  CHKPNT    GO,KAA,MAA,BAA,K4AA $

76  LABEL     LBL5 $

77  (DPD)     DYNAMICS,GPL,SIL,USET/GPLD,SILD,USETD,TFP00L,DLT,PSDL,FRL,,,,
              EQDYN/V,N,LUSET/V,N,LUSETD/V,N,NOTFL/V,N,NODLT/V,N,NOPSDL/V,N,
              NOFRL/V,N,NONLFT/V,N,NOTRL/V,N,NOEED/C,N,123/V,N,NOUE $

78  SAVE      LUSETD,NOUE,NODLT,NOFRL,NOPSDL $

79  EQUIV     GO,GOD/NOUE/GM,GMD/NOUE$

80  CHKPNT    USETD,EQDYN,TFP00L,DLT,FRL,GOD,GMD,SILD,PSDL,GPLD $

81  PARAM     //C,N,ADD/V,N,NEVER/C,N,1/C,N,0 $

82  PARAM     //C,N,MPY/V,N,REPEATF/C,N,-1/C,N,1 $

83  JUMP      LBL13 $

84  LABEL     LBL13 $

85  PURGE     0UDVC1,0UDVC2,XYPLTFA,0PPC1,0QPC1,0UPVC1,0ESC1,0EFC1,0PPC2,
              0QPC2,0UPVC2,0ESC2,0EFC2,XYPLTF,PSDF,AUTO,XYPLTR/NEVER $

86  (CASE)    CASECC,PSDL/CASEXX/C,N,FREQ/V,N,REPEATF/V,N,NOLOOP $

87  SAVE      REPEATF,NOLOOP $

88  CHKPNT    CASEXX $

89  (MTRXIN)  CASEXX,MATP00L,EQDYN,,TFP00L/K2PP,M2PP,B2PP/V,N,LUSETD/V,N,
              N0K2PP/V,N,N0M2PP/V,N,N0B2PP $

90  SAVE      N0K2PP,N0M2PP,N0B2PP $

91  PARAM     //C,N,AND/V,N,BDEBA/V,N,NOUE/V,N,N0B2PP$

92  PARAM     //C,N,AND/V,N,KDEK2/V,N,N0GENL/V,N,N0SIMP $

93  PARAM     //C,N,AND/V,N,MDEMA/V,N,NOUE/V,N,N0M2PP$

94  PURGE     K2DD/N0K2PP/M2DD/N0M2PP/B2DD/N0B2PP$

95  EQUIV     M2PP,M2DD/N0A/B2PP,B2DD/N0A/K2PP,K2DD/N0A/ MAA,MDD/MDEMA/BAA,
              BDD/BDEBA$

96  CHKPNT    K2PP,M2PP,B2PP,K2DD,M2DD,B2DD,BDD,MDD $

97  COND      LBL18,N0GPDT$
```

```
 RIGID FORMAT DMAP LISTING
 SERIES L

 RIGID FORMAT 8

    N A S T R A N  S O U R C E  P R O G R A M  C O M P I L A T I O N
DMAP-DMAP INSTRUCTION
 NO.

 98 (GKAD)     USETD,GM,GO,KAA,BAA,MAA,K4AA,K2PP,M2PP,B2PP/KDD,BDD,MDD,GMD,
               GOD,K2DD,M2DD,B2DD/C,N,FREQRESP/C,N,DISP/C,N,DIRECT/C,Y,G=0.0/
               C,N,0.0/C,N,0.0/V,N,NOK2PP/V,N,NOM2PP/V,N,NOB2PP/ V,N,MPCF1/V,
               N,SINGLE/V,N,OMIT/V,N,NOUE/V,N,NOK4GG/V,N,NOBGG/ V,N,KDEK2/C,N,
               -1 $

 99  LABEL     LBL18$

100  EQUIV     B2DD,BDD/NOBGG/ M2DD,MDD/NOSIMP/ K2DD,KDD/KDEK2 $

101  CHKPNT    KDD,BDD,MDD,GMD,GOD $

102  COND      ERROR1,NOFRL$

103  COND      ERROR2,NODLT$

104 (FRRD)     CASEXX,USETD,DLT,FRL,GMD,GOD,KDD,BDD,MDD,,DIT/UDVF,PSF,PDF,PPF/
               C,N,DISP/C,N,DIRECT/V,N,LUSETD/V,N,MPCF1/V,N,SINGLE/V,N,OMIT/
               V,N,NONCUP/V,N,FRQSET $

105  EQUIV     PPF,PDF/NOSET $

106  CHKPNT    PSF,PPF,UDVF,PDF $

107 (VDR)      CASEXX,EQDYN,USETD,UDVF,PPF,XYCDB,/OUDVC1,/C,N,FREQRESP/C,N,
               DIRECT/V,N,NOSORT2/V,N,NOD/V,N,NOP/C,N,0 $

108  SAVE      NOD,NOP,NOSORT2 $

109  COND      LBL15,NOD $

110  COND      LBL15A,NOSORT2 $

111  CHKPNT    OUDVC1 $

112 (SDR3)     OUDVC1,,,,,/OUDVC2,,,,, $

113  OFP       OUDVC2,,,,,//V,N,CARDNO $

114  SAVE      CARDNO $

115  CHKPNT    OUDVC2 $

116 (XYTRAN)   XYCDB,OUDVC2,,,,/XYPLTFA/C,N,FREQ/C,N,DSET/V,N,PFILE/ V,N,
               CARDNO $

117  SAVE      PFILE,CARDNO $

118 (XYPLOT)   XYPLTFA// $

119  JUMP      LBL15 $

120  LABEL     LBL15A $
```

```
 RIGID FORMAT DMAP LISTING
 SERIES L

 RIGID FORMAT 8

    N A S T R A N  S O U R C E  P R O G R A M  C O M P I L A T I O N
DMAP-DMAP INSTRUCTION
 NO.

121   OFP       OUDVC1,,,,,//V,N,CARDNO $

122   SAVE      CARDNO $

123   LABEL     LBL15 $

124   COND      LBL16,NOP $

125   EQUIV     UDVF,UPVC/NOA $

126   COND      LBL19,NOA $

127   (SDR1)    USETD,,UDVF,,,GOD,GMD,PSF,KFS,,/UPVC,,QPC/C,N,1/C,N,DYNAMICS $

128   LABEL     LBL19$

129   CHKPNT    UPVC,QPC $

130   (SDR2)    CASEXX,CSTM,MPT,DIT,EQDYN,SILD,,,,PPF,QPC,UPVC,EST,XYCDB/OPPC1,
                OQPC1,OUPVC1,OESC1,OEFC1,/C,N,FREQRESP/V,N,NOSORT2 $

131   SAVE      NOSORT2 $

132   COND      LBL17,NOSORT2 $

133   (SDR3)    OPPC1,OQPC1,OUPVC1,OESC1,OEFC1,/OPPC2,OQPC2,OUPVC2,OESC2,
                OEFC2, $

134   CHKPNT    OPPC2,OQPC2,OUPVC2,OESC2,OEFC2 $

135   OFP       OPPC2,OQPC2,OUPVC2,OEFC2,OESC2,//V,N,CARDNO $

136   SAVE      CARDNO $

137   (XYTRAN)  XYCDB,OPPC2,OQPC2,OUPVC2,OESC2,OEFC2/XYPLTF/C,N,FREQ/C,N,PSET/
                V,N,PFILE/V,N,CARDNO $

138   SAVE      PFILE,CARDNO $

139   (XYPLOT)  XYPLTF// $

140   COND      LBL16,NOPSDL $

141   (RANDOM)  XYCDB,DIT,PSDL,OUPVC2,OPPC2,OQPC2,OESC2,OEFC2,CASEXX/PSDF,AUTO/
                V,N,NORD $

142   SAVE      NORD $

143   CHKPNT    PSDF,AUTO $

144   COND      LBL16,NORD $

145   (XYTRAN)  XYCDB,PSDF,AUTO,,,/XYPLTR/C,N,RAND/C,N,PSET/V,N,PFILE/ V,N,
```

```
RIGID FORMAT DMAP LISTING
SERIES L

RIGID FORMAT 8

   N A S T R A N  S O U R C E  P R O G R A M  C O M P I L A T I O N
DMAP-DMAP INSTRUCTION
 NO.
                CARDNO $

146  SAVE       PFILE,CARDNO $

147  XYPLOT     XYPLTR// $

148  JUMP       LBL16 $

149  LABEL      LBL17 $

150  OFP        OUPVC1,OPPC1,OQPC1,OEFC1,OESC1,//V,N,CARDNO $

151  SAVE       CARDNO $

152  LABEL      LBL16 $

153  COND       FINIS,REPEATF $

154  REPT       LBL13,100 $

155  JUMP       ERROR3 $

156  JUMP       FINIS $

157  LABEL      ERROR3 $

158  PRTPARM    //C,N,-3/C,N,DIRFRRD$

159  LABEL      ERROR2$

160  PRTPARM    //C,N,-2/C,N,DIRFRRD$

161  LABEL      ERROR1$

162  PRTPARM    //C,N,-1/C,N,DIRFRRD$

163  LABEL      ERROR4$

164  PRTPARM    //C,N,-4/C,N,DIRFRRD$

165  LABEL      FINIS$

166  END        $
```

3.9.2 Description of DMAP Operations for Direct Frequency and Random Response

3. GP1 generates coordinate system transformation matrices, tables of grid point locations, and tables for relating internal and external grid point numbers.

7. Go to DMAP No. 74 if only Direct Matrix Input.

8. GP2 generates Element Connection Table with internal indices.

10. PLTSET transforms user input into a form used to drive structure plotter.

12. PRTMSG prints error messages associated with structure plotter.

16. Go to DMAP No. 19 if no undeformed structure plot request.

17. PLØT generates all requested undeformed structure plots.

18. PRTMSG prints plotter data and engineering data for each undeformed plot generated.

20. GP3 generates Grid Point Temperature Table.

22. TA1 generates element tables for use in matrix assembly and stress recovery.

26. Go to DMAP No. 40 if there are no structural elements.

27. SMA1 generates stiffness matrix $[K^{X}_{gg}]$, structural damping matrix $[K^{4}_{gg}]$ and Grid Point Singularity Table.

31. SMA2 generates mass matrix $[M_{gg}]$ and viscous damping matrix $[B_{gg}]$.

35. Go to DMAP No. 40 if no weight and balance request.

36. Go to DMAP No. 165 and print error message if no mass matrix exists.

37. GPWG generates weight and balance information.

38. ØFP formats weight and balance information and places it on the system output file for printing.

41. Equivalence $[K^{X}_{gg}]$ to $[K_{gg}]$ if no general elements.

43. Go to DMAP No. 46 if no general elements.

44. SMA3 adds general elements to $[K^{X}_{gg}]$ to obtain stiffness matrix $[K_{gg}]$.

48. GP4 generates flags defining members of various displacement sets (USET) and forms multi-point constraint equations $[R_g]\{u_g\} = 0$.

51. Equivalence $[K_{gg}]$ to $[K_{nn}]$, $[M_{gg}]$ to $[M_{nn}]$, $[B_{gg}]$ to $[B_{nn}]$ and $[K^{4}_{gg}]$ to $[K^{4}_{nn}]$ if no multi-point constraints.

53. Go to DMAP No. 58 if general elements present.

54. Go to DMAP No. 58 if no structural elements.

55. GPSP determines if possible grid point singularities remain.

56. ØFP formats the table of possible grid point singularities and places it on the system output file for printing.

59. Go to DMAP No. 64 if MCE1 and MCE2 have already been executed for current set of multi-point constraints.

60. MCE1 partitions multipoint constraint equations $[R_g] = [R_m \mid R_n]$ and solves for multipoint constraint transformation matrix $[G_m] = -[R_m]^{-1}[R_n]$.

62. MCE2 partitions stiffness, mass and damping matrices

$$[K_{gg}] = \left[\begin{array}{c|c} \bar{K}_{nn} & K_{nm} \\ \hline K_{mn} & K_{mm} \end{array}\right], \quad [M_{gg}] = \left[\begin{array}{c|c} \bar{M}_{nn} & M_{nm} \\ \hline M_{mn} & M_{mm} \end{array}\right],$$

$$[B_{gg}] = \left[\begin{array}{c|c} \bar{B}_{nn} & B_{nm} \\ \hline B_{mn} & B_{mm} \end{array}\right] \quad \text{and} \quad [K^4_{gg}] = \left[\begin{array}{c|c} \bar{K}^4_{nn} & K^4_{nm} \\ \hline K^4_{mn} & K^4_{mm} \end{array}\right]$$

and performs matrix reductions

$$[K_{nn}] = [\bar{K}_{nn}] + [G_m^T][K_{mn}] + [K_{mn}^T][G_m] + [G_m^T][K_{mm}][G_m],$$

$$[M_{nn}] = [\bar{M}_{nn}] + [G_m^T][M_{mn}] + [M_{mn}^T][G_m] + [G_m^T][M_{mm}][G_m],$$

$$[B_{nn}] = [\bar{B}_{nn}] + [G_m^T][B_{mn}] + [B_{mn}^T][G_m] + [G_m^T][B_{mm}][G_m],$$

$$[K^4_{nn}] = [\bar{K}^4_{nn}] + [G_m^T][K^4_{mn}] + [K^4_{mn}]^T[G_m] + [G_m^T][K^4_{mm}][G_m].$$

65. Equivalence $[K_{nn}]$ to $[K_{ff}]$, $[M_{nn}]$ to $[M_{ff}]$, $[B_{nn}]$ to $[B_{ff}]$ and $[K^4_{nn}]$ to $[K^4_{ff}]$ if no single-point constraints.

67. Go to DMAP No. 70 if no single-point constraints.

68. SCE1 partitions out single-point constraints

$$[K_{nn}] = \left[\begin{array}{c|c} K_{ff} & K_{fs} \\ \hline K_{sf} & K_{ss} \end{array}\right], \quad [M_{nn}] = \left[\begin{array}{c|c} M_{ff} & M_{fs} \\ \hline M_{sf} & M_{ss} \end{array}\right],$$

$$[B_{nn}] = \left[\begin{array}{c|c} B_{ff} & B_{fs} \\ \hline B_{sf} & B_{ss} \end{array}\right] \quad \text{and} \quad [K^4_{nn}] = \left[\begin{array}{c|c} K^4_{ff} & K^4_{fs} \\ \hline K^4_{sf} & K^4_{ss} \end{array}\right].$$

71. Equivalence $[K_{ff}]$ to $[K_{aa}]$, $[M_{ff}]$ to $[M_{aa}]$, $[B_{ff}]$ to $[B_{aa}]$ and $[K^4_{ff}]$ to $[K^4_{aa}]$ if no omitted coordinates.

73. Go to DMAP No. 76 if no omitted coordinates.

74. SMP1 partitions constrained stiffness, mass and damping matrices.

$$[K_{ff}] = \left[\begin{array}{c|c} K_{aa} & K_{ao} \\ \hline K_{oa} & K_{oo} \end{array}\right], \qquad [M_{ff}] = \left[\begin{array}{c|c} M_{aa} & M_{ao} \\ \hline M_{oa} & M_{oo} \end{array}\right],$$

$$[B_{ff}] = \left[\begin{array}{c|c} B_{aa} & B_{ao} \\ \hline B_{oa} & B_{oo} \end{array}\right] \quad \text{and} \quad [K^4_{ff}] = \left[\begin{array}{c|c} K^4_{aa} & K^4_{ao} \\ \hline K^4_{oa} & K^4_{oo} \end{array}\right].$$

solves for transformation matrix $[G_o] = -[K_{oo}]^{-1}[K_{oa}]$
and performs matrix reductions

$$[K^1_{aa}] = [K_{aa}] + [K_{ao}][G_o],$$

$$[M^1_{aa}] = [M_{aa}] + [M_{ao}][G_o] + [M_{ao}G_o]^T + [G_o^T][M_{oo}][G_o],$$

$$[B^1_{aa}] = [B_{aa}] + [B_{ao}][G_o] + [B_{ao}G_o]^T + [G_o^T][B_{oo}][G_o] \text{ and}$$

$$[K^4_{aa}] = [K^4_{aa}] + [K^4_{ao}][G_o] + [K^4_{ao}G_o]^T + [G_o^T][K^4_{oo}][G_o]$$

77. DPD generates flags defining members of various displacement sets used in dynamic analysis (USETD), tables relating internal and external grid point numbers, including extra points introduced for dynamic analysis, and prepares Transfer Function Pool, Dynamics Load Table, Power Spectral Density List and Frequency Response List.

79. Equivalence $[G_o]$ to $[G^d_o]$ and $[G_m]$ to $[G^d_m]$ if no extra points introduced for dynamic analysis.

83. Go to next DMAP instruction if cold start or modified restart. LBL13 will be altered by the Executive System to the proper location inside the loop for unmodified starts within the loop.

84. Beginning of loop for additional sets of direct input matrices.

86. CASE extracts user requests from CASECC for current loop.

89. MTRXIN selects the direct input matrices for the current loop, $[K^2_{pp}]$, $[M^2_{pp}]$ and $[B^2_{pp}]$.

95. Equivalence $[M^2_{pp}]$ to $[M^2_{dd}]$, $[B^2_{pp}]$ to $[B^2_{dd}]$ and $[K^2_{pp}]$ to $[K^2_{dd}]$ if no constraints applied. Equivalence $[M_{aa}]$ to $[M_{dd}]$ if no direct input mass matrices and no extra points, and $[B_{aa}]$ to $[B_{dd}]$ if no direct input damping matrices and no extra points.

97. Go to DMAP No. 99 if only extra points defined.

98. GKAD assembles stiffness, mass, and damping matrices for use in Direct Frequency Response

$$[K_{dd}] = (1 + ig)[K^1_{dd}] + [K^2_{dd}] + i[K^4_{dd}],$$

$$[M_{dd}] = [M^1_{dd}] + [M^2_{dd}] \text{ and}$$

$$[B_{dd}] = [B^1_{dd}] + [B^2_{dd}].$$

Direct input matrices may be complex.

100. Equivalence $[K^2_{dd}]$ to $[K_{dd}]$ if all stiffness is Direct Matrix Input, $[M^2_{dd}]$ to $[M_{dd}]$ if all mass is Direct Matrix Input and $[B^2_{dd}]$ to $[B_{dd}]$ if all damping is Direct Matrix Input.

102. Go to DMAP No. 163 and print error message if no Frequency Response List.

103. Go to DMAP No. 161 and print error message if no Dynamics Load Table.

104. FRRD forms the dynamic load vectors $\{P_d\}$ and solves for the displacements using the following equation

$$[-M_{dd}\omega^2 + iB_{dd}\omega + K_{dd}]\{u_d\} = \{P_d\}.$$

105. Equivalence $\{P_p\}$ to $\{P_d\}$ if no constraints applied.

107. VDR prepares displacements, sorted by frequency, for output using only the independent degrees of freedom.

109. Go to DMAP No. 123 if no output request for the independent degrees of freedom.

110. Go to DMAP No. 120 if no output request for independent displacements sorted by point number.

112. SDR3 sorts the independent displacements by point number.

113. ØFP formats the requested independent displacements sorted by point number and places them on the system output file for printing.

116. XYTRAN prepares the input for X-Y plotting of the independent displacements vs. frequency.

118. XYPLØT prepares the requested X-Y plots of the independent displacements vs. frequency.

121. ØFP formats the requested independent displacements sorted by frequency and places them on the system output file for printing.

124. Go to DMAP No. 154 if no output request involving dependent degrees of freedom or forces and stresses.

125. Equivalence $\{u_d\}$ to $\{u_p\}$ if no constraints applied.

126. Go to DMAP No. 128 if no constraints applied.

127. SDR1 recovers dependent components of displacements

$$\{u_o\} = [G^d_o]\{u_d\} \quad , \qquad \begin{Bmatrix} u_d \\ \hline u_o \end{Bmatrix} = \{u_f + u_e\} \quad ,$$

$$\begin{Bmatrix} u_f + u_e \\ \hline u_s \end{Bmatrix} = \{u_n + u_e\} \quad , \qquad \{u_m\} = [G^d_m]\{u_f + u_e\} \quad ,$$

$$\begin{Bmatrix} u_n + u_e \\ \hline u_m \end{Bmatrix} = \{u_p\}$$

and recovers single-point forces of constraint $\{q_s\} = -\{P_s\} + [K^T_{fs}]\{u_f\}$.

130. SDR2 calculates element forces and stresses (ØESC1, ØEFC1) and prepares load vectors, displacement vectors and single-point forces of constraint for output (ØPPC1, ØQPC1, ØUPVC1) - all sorted by frequency.

132. Go to DMAP No. 151 if no output requests sorted by point number or element number.

133. SDR3 prepares requested output sorted by point number or element number.

135. ØFP formats the requested output sorted by point number or element number and places it on the system output file for printing.

137. XYTRAN prepares the input for requested X-Y plots.

139. XYPLØT prepares the requested X-Y plots of displacements, forces, stresses, loads or single-point forces of constraint vs. frequency.

140. Go to DMAP No. 154 if no Power Spectral Density List.

141. RANDØM calculates power spectral density functions and autocorrelation functions using the previously calculated frequency response.

144. Go to DMAP No. 154 if no RANDØM calculations requested.

145. ØFP formats outputs of RANDØM according to user request and places them on the system output file for printing.

147. XYTRAN prepares the input for requested X-Y plots of the RANDØM output.

149. XYPLØT prepares the requested X-Y plots of autocorrelation functions and power spectral density functions.

150. Go to DMAP No. 154 if no frequency response output requests sorted by frequency.

152. ØFP formats frequency response output requests sorted by frequency and places them on the system output file for printing.

155. Go to DMAP No. 167 if no additional sets of direct input matrices need to be processed.

156. Go to DMAP No. 84 if additional sets of direct input matrices need to be processed.

157. Go to DMAP No. 159 and print error message if more than 100 loops.

158. Go to DMAP No. 167 and make normal exit.

160. DIRECT FREQUENCY AND RANDØM RESPØNSE ERRØR MESSAGE NØ. 3 - ATTEMPT TØ EXECUTE MØRE THAN 100 LØØPS.

162. DIRECT FREQUENCY AND RANDØM RESPØNSE ERRØR MESSAGE NØ. 2 - DYNAMIC LØADS TABLE REQUIRED FØR FREQUENCY RESPØNSE CALCULATIØNS.

164. DIRECT FREQUENCY AND RANDØM RESPØNSE ERRØR MESSAGE NØ. 1 - FREQUENCY RESPØNSE LIST REQUIRED FØR FREQUENCY RESPØNSE CALCULATIØNS.

166. DIRECT FREQUENCY AND RANDØM RESPØNSE ERRØR MESSAGE NØ. 4 - MASS MATRIX REQUIRED FØR WEIGHT AND BALANCE CALCULATIØNS.

3.9.3 Restart Tables for Direct Frequency and Random Response

3.9.3.1 Bit Positions for Card Name Restart Table

Card Name	Bit Pos.
AXIC	1
CDAMP1	1
CDAMP2	1
CDAMP3	1
CDAMP4	1
CELAS1	1
CELAS2	1
CELAS3	1
CELAS4	1
CMASS1	1
CMASS2	1
CMASS3	1
CMASS4	1
CØRD1C	1
CØRD1R	1
CØRD1S	1
CØRD2C	1
CØRD2R	1
CØRD2S	1
GRDSET	1
GRID	1
PØINTAX	1
RINGAX	1
SECTAX	1
SEQGP	1
SPØINT	1
BARØR	2
BEAMØR	2
CBAR	2
CBEAM	2
CCØNEAX	2
CØNRØD	2
CQDMEM	2
CQDPLT	2
CQUAD1	2
CQUAD2	2
CRØD	2
CSHEAR	2
CTØRDRG	2
CTRAPRG	2
CTRBSC	2
CTRIA1	2
CTRIA2	2
CTRIARG	2
CTRMEM	2
CTRPLT	2
CTUBE	2
CTWIST	2
PBAR	3
PBEAM	3
PCØNEAX	3
PQDMEM	3
PQDPLT	3
PQUAD1	3
PQUAD2	3
PRØD	3
PSHEAR	3
PTØRDRG	3
PTRBSC	3
PTRIA1	3
PTRIA2	3
PTRMEM	3
PTRPLT	3
PTUBE	3
PTWIST	3
GENEL	4
CØNM1	5
CØNM2	5
PELAS	6
PMASS	7
MAT1	8
MAT2	8
MAT3	8
MATT1	8
MATT2	8
MATT3	8
TABLEM1	8
TABLEM2	8
TABLEM3	8
TABLEM4	8
TEMPMT$	8
TEMPMX$	8
MPC	9
MPCADD	9
MPCAX	9
MPC$	9
SPC	10
SPC1	10
SPCADD	10
SPCAX	10
SPC$	10
ØMIT	11
ØMIT1	11
ØMITAX	11
PARAM	12
SUPAX	12
SUPØRT	12
TEMP	13
TEMPAX	13
TEMPD	13
WTMASS	14
GRDPNT	15
PLØTEL	16
PLØT$	18
PØUT$	19
XYØUT$	20
AØUT$	21
LØØP$	22
LØØP1$	23
CØUPMASS	24
NØLØØP$	25
RANDØM$	26
TABRND1	54
TABRND2	54
TABRND3	54
TABRND4	54
RANDPS	55
RANDT1	55
RANDT2	55
G	56
EPØINT	57
SEQEP	57
TF	57
CVISC	58
PDAMP	59
PVISC	59
B2PP$	60
DMIG	60
K2PP$	60
M2PP$	60
TF$	60
DAREA	61
DELAY	61
DLØAD	61
DPHASE	61
FREQ	61
FREQ1	61
FREQ2	61
RLØAD1	61
RLØAD2	61
TABLED1	61
TABLED2	61
TABLED3	61
TABLED4	61
DLØAD$	62
FREQ$	62

3.9.3.2 Bit Positions for File Name Restart Table

File Name	Bit Pos.	File Name	Bit Pos.
BGPDT	94	DLT	107
CSTM	94	EQDYN	107
EQEXIN	94	FRL	107
GPDT	94	GPLD	107
GPL	94	PSDL	107
SIL	94	SILD	107
ECT	95	TFPØØL	107
GPTT	96	USETD	107
ECPT	97	CASEXX	108
EST	97	B2PP	109
GEI	97	K2PP	109
GPCT	97	M2PP	109
GPST	98	B2DD	110
K4GG	98	BDD	110
KGGX	98	GMD	110
BGG	99	GØD	110
MGG	99	K2DD	110
KGG	100	KDD	110
RG	101	M2DD	110
USET	101	MDD	110
YS	101	PDF	111
ØGPST	102	PPF	111
GM	103	PSF	111
BNN	104	UDVF	111
K4NN	104	ØUDVC1	112
KNN	104	ØUDVC2	113
MNN	104	QPC	114
BFF	105	UPVC	114
K4FF	105	ØEFC1	115
KFF	105	ØESC1	115
KFS	105	ØPPC1	115
MFF	105	ØQPC1	115
BAA	106	ØUPVC1	115
GØ	106	ØEFC2	116
K4AA	106	ØESC2	116
KAA	106	ØPPC2	116
KØØB	106	ØQPC2	116
LØØ	106	ØUPVC2	116
MAA	106	PSDF	117
MØAB	106	AUTØ	117
MØØB	106		
UØØ	106		

3.9.3.3 Card Name Restart Table

DMAP Inst.	Bit Position 1	10	20	30	40	50	60
BEGIN	12345678901234	5678901234					456789012
FILE	12345678901234	5678901234					456789012
GP1	1						
SAVE	1						
PURGE	1						
CHKPNT	1						
COND	1						
GP2	12 45	6					8
CHKPNT	12 45	6					8
PLTSET			8				
SAVE			8				
PRTMSG			8				
CHKPNT			8				
SETVAL			8				
SAVE			8				
COND			8				
PLOT			8				
PRTMSG			8				
LABEL			8				
GP3	1	3					
CHKPNT	1	3					
TAL,	1234567						89
SAVE	1234567						89
PURGE	1234567						89
CHKPNT	1234567						89
COND	123 5678	45					
SMA1	123 6 8						
SAVE	123 6 8						
PURGE	123 6 8						
CHKPNT	123 6 8						
SMA2	123 5 78	4		4			89
SAVE	123 5 78	4		4			89
PURGE	123 5 78	4		4			89
CHKPNT	123 5 78	4		4			89
COND	123 5 78	45					
COND	123 5 78	45					
GPWG	123 5 78	45					
OFP	123 5 78	45					
SAVE	123 5 78	45					
LABEL	123 5 78	45					
EQUIV	123 6 8						
CHKPNT	123 6 8						
COND	1234 6 8						
SMA3	1234 6 8						
CHKPNT	1234 6 8						
LABEL	1234 6 8						
PARAM	1	901					
GP4	1	901					
SAVE	1	901					
PURGE	1	901					
EQUIV	123456789			4			
CHKPNT	1	9					
COND	123 6 8 0						
COND	123 6 8 0						
GPSP	123 6 8 0						
OFP	123 6 8 0						
SAVE	123 6 8 0						

DMAP Inst.	Bit Position 1 10 20 30 40 50 60
LABEL	123 6 8 0
CCND	123456789 4
MCE1	1 9
CHKPNT	1 9
MCE2	123456789 4 89
CHKPNT	123456789 4 89
LABEL	123456789 4 89
EQUIV	1234567890 4 89
CHKPNT	1234567890 4 89
CCND	1234567890 4 89
SCE1	1234567890 4 89
CHKPNT	1234567890 4 89
LABEL	1234567890 4 89
EQUIV	12345678901 4 89
CHKPNT	12345678901 4 89
CCND	12345678901 4 89
SMP1	12345678901 4 89
CHKPNT	12345678901 4 89
LABEL	12345678901 4 89
DPD	1 5 7 1
SAVE	1 5 7 1
EQUIV	12345678901 234 67890
CHKPNT	1 5 7 1
PARAM	23
PARAM	12345678901234 6 23 456789012
JUMP	23
$SS	1 3
LABEL	1234567890123456 890123 6789012
PURGE	23
CASE	12345678901234 6 23 5 456789012
SAVE	12345678901234 6 23 5 456789012
CHKPNT	12345678901234 6 23 5 456789012
MTRXIN	1 23 7 0
SAVE	1 23 7 0
PARAM	1 23 7 0
PARAM	1 23 7 0
PARAM	1 23 7 0
PURGE	12345678901 234 67890
EQUIV	12345678901 234 67890
CHKPNT	12345678901 234 67890
COND	12345678901 234 67890
GKAD	12345678901 234 67890
LABEL	12345678901 234 67890
EQUIV	12345678901 234 67890
CHKPNT	12345678901 234 67890
CCND	12345678901 234 6789012
CCND	12345678901 234 6789012
FRRD	12345678901 234 6789012
EQUIV	12345678901 234 6789012
CHKPNT	12345678901 234 6789012
VDR	01
SAVE	01
COND	01
CCND	01
CHKPNT	01
SDR3	01
OFP	1

DMAP Inst.	Bit Position 1 10 20 30 40 50 60
SAVE	1
CHKPNT	91
XYTRAN	0
SAVE	0
XYPLCT	0
JUMP	1
LABEL	1
OFP	1
SAVE	1
LABEL	1
CCND	12345678901 234 6789012
EQUIV	12345678901 234 6789012
CCND	12345678901 234 6789012
SDR1	12345678901 234 6789012
LABEL	12345678901 234 6789012
CHKPNT	12345678901 234 6789012
SDR2	90
SAVE	90
CCND	90
SDR3	90
CHKPNT	90
OFP	9
SAVE	9
XYTRAN	0
SAVE	0
XYPLCT	0
CCND	0 45
RANDCM	6 45
SAVE	6 45
CHKPNT	6
CCND	0 6 45
XYTRAN	0
SAVE	0
XYPLCT	0
JUMP	0
LABEL	9
OFP	9
SAVE	9
LABEL	0
CCND	23
$SS	1 3
REPT	23
$SS	1 3
JUMP	23
$SS	1 3
JUMP	12345678901234568901234 6789012
LABEL	23
$SS	1 3
PRTPARM	23
$SS	1 3
LABEL	12345678901234568901234 6789012
PRTPARM	12345678901234568901234 6789012
LABEL	12345678901234568901234 6789012
PRTPARM	12345678901234568901234 6789012
LABEL	12345678901234568901234 6789012
PRTPARM	12345678901234568901234 6789012
LABEL	12345678901234568901234 6789012
END	12345678901234568901234 6789012

3.9.3.4 Rigid Format Change Restart Table

DMAP Inst.	Bit Position 63 70 80
BEGIN	3456789 1234
FILE	3456789 1234
GP1	
SAVE	
PURGE	
CHKPNT	
CCND	
GP2	
CHKPNT	
PLTSET	
SAVE	
PRTMSG	
CHKPNT	
SETVAL	
SAVE	
CCND	
PLOT	
PRTMSG	
LABEL	
GP3	
CHKPNT	
TA1,	
SAVE	
PURGE	
CHKPNT	
CCND	
SMA1	
SAVE	
PURGE	
CHKPNT	
SMA2	3 678
SAVE	3 678
PURGE	3 678
CHKPNT	3 678
CCND	
CCND	
GPWG	
OFP	
SAVE	
LABEL	
EQUIV	
CHKPNT	
CCND	
SMA3	
CHKPNT	
LABEL	
PARAM	
GP4	
SAVE	
PURGE	
EQUIV	
CHKPNT	
CCND	
CCND	
GPSP	
OFP	
SAVE	

DMAP Inst.	Bit Position 63 70 80
LABEL	
CCND	
MCE1	
CHKPNT	
MCE2	
CHKPNT	
LABEL	
EQUIV	
CHKPNT	
CCND	
SCE1	
CHKPNT	
LABEL	
EQUIV	
CHKPNT	
CCND	
SMP1	
CHKPNT	
LABEL	
DPD	
SAVE	
EQUIV	
CHKPNT	
PARAM	
PARAM	3456789 1234
JUMP	3456789 1234
LABEL	3456789 1234
PURGE	
CASE	3456789 1234
SAVE	3456789 1234
CHKPNT	3456789 1234
MTRXIN	
SAVE	
PARAM	
PARAM	
PARAM	
PURGE	
EQUIV	
CHKPNT	
CCND	
GKAD	
LABEL	
EQUIV	
CHKPNT	
CCND	3456789 1234
CCND	3456789 1234
FRRD	
EQUIV	
CHKPNT	
VDR	
SAVE	
CCND	
CCND	
CHKPNT	
SDR3	
OFP	
SAVE	

DMAP Inst.	Bit Position 63	70	80
CHKPNT			
XYTRAN			
SAVE			
XYPLOT			
JUMP			
LABEL			
OFP			
SAVE			
LABEL			
COND	3456789	1234	
EQUIV	3456789	1234	
COND	3456789	1234	
SDR1	3456789	1234	
LABEL	3456789	1234	
CHKPNT	3456789	1234	
SDR2			
SAVE			
COND			
SDR3			
CHKPNT			
OFP			
SAVE			
XYTRAN			
SAVE			
XYPLOT			
COND			
RANDCM			
SAVE			
CHKPNT			
COND			
XYTRAN			
SAVE			
XYPLOT			
JUMP			
LABEL			
OFP			
SAVE			
LABEL			
COND	3456789	1234	
REPT	3456789	1234	
JUMP	3456789	1234	
JUMP	3456789	1234	
LABEL	3456789	1234	
PRTPARM	3456789	1234	
LABEL	3456789	1234	
PRTPARM	3456789	1234	
LABEL	3456789	1234	
PRTPARM	3456789	1234	
LABEL	3456789	1234	
PRTPARM	3456789	1234	
LABEL	3456789	1234	
END	3456789	1234	

3.9.3.5 File Name Restart Table

DMAP Inst.	94	Bit Position 100	110	120
BEGIN				
FILE				
GP1	4			
SAVE	4			
PURGE				
CHKPNT				
COND				
GP2	5			
CHKPNT	5			
PLTSET				
SAVE				
PRTMSG				
CHKPNT				
SETVAL				
SAVE				
COND				
PLOT				
PRTMSG				
LABEL				
GP3	6			
CHKPNT	6			
TA1,	7			
SAVE	7			
PURGE	789	2 456		
CHKPNT	7			
COND	8			
SMA1	8			
SAVE	8			
PURGE	8			
CHKPNT	8			
SMA2	9			
SAVE	9			
PURGE	9			
CHKPNT	9			
COND				
COND				
GPWG				
OFP				
SAVE				
LABEL	8			
EQUIV	C			
CHKPNT	0			
COND	C			
SMA3	C			
CHKPNT	C			
LABEL	0			
PARAM	1			
GP4	1			
SAVE	1			
PURGE	1 3	56	01 4	
EQUIV	4			
CHKPNT				
COND	2			
COND	2			
GPSP	2			
OFP	2			
SAVE	2			

DMAP Inst.	94	Bit Position 100	110	120
LABEL	2			
COND	34			
MCE1	3			
CHKPNT	3			
MCE2	4			
CHKPNT	4			
LABEL	34			
EQUIV	5			
CHKPNT	5			
COND	5			
SCE1	5			
CHKPNT	5			
LABEL	5			
EQUIV	6			
CHKPNT	6			
COND	6			
SMP1	6			
CHKPNT	6			
LABEL	6			
DPD	7			
SAVE	7			
EQUIV	C			
CHKPNT	7			
PARAM				
PARAM	8			
JUMP	8			
LABEL	8			
PURGE				
CASE	8			
SAVE	8			
CHKPNT	8			
MTRXIN	9			
SAVE	9			
PARAM	9			
PARAM	9			
PARAM	9			
PURGE	0			
EQUIV	0			
CHKPNT	0			
COND	0			
GKAD	0			
LABEL	0			
EQUIV	1			
CHKPNT	1			
COND	1			
COND	1			
FRRD	1			
EQUIV	1			
CHKPNT	1			
VDR	2			
SAVE	2			
COND	2			
COND	2			
CHKPNT	2			
SDR3	3			
OFP				
SAVE				

DMAP Inst.	94	Bit Position 100	110	120
CHKPNT			3	
XYTRAN				
SAVE				
XYPLOT				
JUMP				
LABEL				
OFP				
SAVE				
LABEL				
COND			4	
EQUIV			4	
COND			4	
SDR1			4	
LABEL			4	
CHKPNT			4	
SDR2			5	
SAVE			5	
COND			6	
SDR3			6	
CHKPNT			6	
OFP				
SAVE				
XYTRAN				
SAVE				
XYPLOT				
COND			7	
RANDOM			7	
SAVE			7	
CHKPNT			7	
COND				
XYTRAN				
SAVE				
XYPLOT				
JUMP				
LABEL			6	
OFP				
SAVE				
LABEL			4	
COND				
REPT				
JUMP				
JUMP				
LABEL				
PRTPARM				
LABEL				
PRTPARM				
LABEL				
PRTPARM				
LABEL				
PRTPARM				
LABEL				
END				

3.9.4 Case Control Deck and Parameters for Direct Frequency and Random Response

The following items relate to subcase definition and data selection for Direct Frequency and Random Response:

1. At least one subcase must be defined for each unique set of direct input matrices (K2PP, M2PP, B2PP).
2. Consecutive subcases for each set of direct input matrices are used to define the loading conditions - one subcase for each dynamic loading condition.
3. Constraints must be defined above the subcase level.
4. DLØAD must be used to define a frequency-dependent loading condition for each subcase.
5. FREQUENCY must be used to select one, and only one, FREQ, FREQ1, or FREQ2 card from the Bulk Data Deck for each unique set of direct input matrices.
6. On restart following an unscheduled exit due to insufficient time, the subcase structure must be changed to reflect the sets of direct input matrices that were completed, and FREQUENCY must be changed to select a FREQ, FREQ1, or FREQ2 card that reflects any frequencies for which the response has already been determined. Otherwise the previous calculations will be repeated.
7. ØFREQUENCY may be used above the subcase level or within each subcase to select a subset of the solution frequencies for output requests. The default is to use all solution frequencies.
8. If Random Response calculations are desired, RANDØM must be used to select RANDPS and RANDTi cards from the Bulk Data Deck. Only one ØFREQUENCY card can be used for each set of direct input matrices.

The following printed output, sorted by frequency (SØRT1) or by point number or element number (SØRT2), is available, either as real and imaginary parts or magnitude and phase angle (0° - 360° lead), for the list of frequencies specified by ØFREQUENCY.

1. Displacements, velocities, and accelerations for a list of PHYSICAL points (grid points and extra scalar points introduced for dynamic analysis) or SØLUTIØN points (points used in formulation of the general K system).

2. Nonzero components of the applied load vector and single-point forces of constraint for a list of PHYSICAL points.

3. Stresses and forces in selected elements (ALL available only for SØRT1).

The following printed output is available for Random Response calculations:

1. Power spectral density function and mean deviation for the response of selected components for points or elements.

2. Autocorrelation function for the response of selected components for points or elements.

The following plotter output is available for Frequency Response calculations:

1. Undeformed plot of the structural model.

2. X-Y plot of any component of displacement, velocity, or acceleration of a PHYSICAL point or SØLUTIØN point.

3. X-Y Plot of any component of the applied load vector or single-point force of constraint.

4. X-Y plot of any stress or force component for an element.

The following plotter output is available for Random Response calculations:

1. X-Y plot of the power spectral density versus frequency for the response of selected components for points or elements.

2. X-Y plot of the autocorrelation versus time lag for the response of selected components for points or elements.

The data used for preparing the X-Y plots may be punched or printed in tabular form (see Section 4.2). Also, a printed summary is prepared for each X-Y plot which includes the maximum and minimum values of the plotted function.

The following parameters are used in Frequency Response calculations:

1. GRDPNT - optional - a positive integer value of this parameter will cause the Grid Point Weight Generator to be executed and the resulting weight and balance information to be printed.

2. WTMASS - optional - the terms of the mass matrix are multiplied by the real value of this parameter when they are generated in SMA2.

3. G - optional - the real value of this parameter is used as a uniform structural damping coefficient in the direct formulation of dynamics problems.

4. COUPMASS - optional - a positive integer value of this parameter will cause the generation of coupled mass matrices rather than lumped mass matrices for all bar elements, rod elements, and plate elements that include bending stiffness (see Section 3.1 for list of elements).

3.10 DIRECT TRANSIENT RESPONSE

3.10.1 DMAP Sequence for Direct Transient Response

```
RIGID FORMAT 9

   N A S T R A N  S O U R C E  P R O G R A M  C O M P I L A T I O N
DMAP=DMAP INSTRUCTION
 NO,

  1  BEGIN     NO,9 DIRECT TRANSIENT RESPONSE ANALYSIS - SERIES L $

  2  FILE      KGGX=TAPE/ KGG=TAPE $

  3  GP1       GEOM1,GEOM2,/GPL,EQEXIN,GPDT,CSTM,BGPDT,SIL/V,N,LUSET/ C,N,123/
               V,N,NOGPDT $

  4  SAVE      LUSET,NOGPDT$

  5  PURGE     USET,GM,GO,KAA,BAA,MAA,K4AA,PST,KFS,QP,EST/NOGPDT $

  6  CHKPNT    GPL,EQEXIN,GPDT,CSTM,BGPDT,SIL,USET,GM,GO,KAA,BAA,MAA,K4AA,
               PST,KFS,QP,EST $

  7  COND      LBL5,NOGPDT$

  8  GP2       GEOM2,EQEXIN/ECT $

  9  CHKPNT    ECT $

 10  PLTSET    PCDB,EQEXIN,ECT/PLTSETX,PLTPAR,GPSETS,ELSETS/V,N,NSIL/ V,N,
               JUMPPLOT = -1 $

 11  SAVE      NSIL,JUMPPLOT $

 12  PRTMSG    PLTSETX//$

 13  CHKPNT    PLTPAR,GPSETS,ELSETS $

 14  SETVAL    //V,N,PLTFLG/C,N,1/V,N,PFILE/C,N,0 $

 15  SAVE      PLTFLG,PFILE $

 16  COND      P1,JUMPPLOT$

 17  PLOT      PLTPAR,GPSETS,ELSETS,CASECC,BGPDT,EQEXIN,SIL,,/PLOTX1/ V,N,
               NSIL/V,N,LUSET/V,N,JUMPPLOT/V,N,PLTFLG/V,N,PFILE $

 18  SAVE      JUMPPLOT,PLTFLG,PFILE $

 19  PRTMSG    PLOTX1//$

 20  LABEL     P1 $

 21  GP3       GEOM3,EQEXIN,/,GPTT/C,N,123/V,N,NOGRAV/C,N,123 $

 22  CHKPNT    GPTT $

 23  TA1,      ,ECT,EPT,BGPDT,SIL,GPTT,CSTM/EST,,GEI,ECPT,GPCT/V,N,LUSET/ C,N,
               123/V,N,NOSIMP=-1/C,N,0/V,N,NOGENL=-1/V,N,GENEL $
```

```
RIGID FORMAT DMAP LISTING
SERIES L

RIGID FORMAT 9

   N A S T R A N  S O U R C E  P R O G R A M  C O M P I L A T I O N
DMAP-DMAP INSTRUCTION
NO.

 24   SAVE      NOSIMP,NOGENL,GENEL$

 25   PURGE     K4GG,GPST,OGPST,MGG,BGG, K4NN,K4FF,K4AA,MNN,MFF,MAA,BNN,BFF,
                BAA,KGGX/NOSIMP/ OGPST/GENEL$

 26   CHKPNT    EST,ECPT,GPCT,GEI,K4GG,GPST,MGG,BGG,KGGX,OGPST, K4NN,K4FF,K4AA,
                MNN,MFF,MAA,BNN,BFF,BAA $

 27   COND      LBL1,NOSIMP$

 28   (SMA1)    CSTM,MPT,ECPT,GPCT, DIT/KGGX,K4GG,GPST/V,N,NOGENL/ V,N,NOK4GG$

 29   SAVE      NOK4GG$

 30   PURGE     K4NN,K4GG,K4FF,K4AA/NOK4GG$

 31   CHKPNT    KGGX,GPST,K4GG,K4NN,K4FF,K4AA $

 32   (SMA2)    CSTM,MPT,ECPT,GPCT,DIT/MGG,BGG/V,Y,WTMASS=1.0/V,N,NOMGG/ V,N,
                NOBGG=-1/V,Y,CØUPMASS=-1 $

 33   SAVE      NOMGG,NOBGG$

 34   PURGE     BNN,BFF,BAA,BGG/NOBGG$

 35   CHKPNT    MGG,BGG,BNN,BFF,BAA $

 36   COND      LBL1,GRDPNT$

 37   COND      ERROR3,NOMGG$

 38   (GPWG)    BGPDT,CSTM,EQEXIN,MGG/OGPWG/V,Y,GRDPNT=-1/V,Y,WTMASS$

 39   OFP       OGPWG,,,,,//V,N,CARDNO $

 40   SAVE      CARDNO $

 41   LABEL     LBL1 $

 42   EQUIV     KGGX,KGG/NOGENL $

 43   CHKPNT    KGG $

 44   COND      LBL11,NOGENL $

 45   (SMA3)    GEI,KGGX/KGG/V,N,LUSET/V,N,NOGENL/V,N,NOSIMP $

 46   CHKPNT    KGG $

 47   LABEL     LBL11 $

 48   PARAM     //C,N,MPY/V,N,NSKIP/C,N,0/C,N,0 $
```

```
RIGID FORMAT DMAP LISTING
SERIES L

RIGID FORMAT 9

   N A S T R A N  S O U R C E  P R O G R A M  C O M P I L A T I O N
DMAP-DMAP INSTRUCTION
NO.

49 (GP4)      CASECC,GEOM4,EQEXIN,SIL,GPDT/RG,,USET/V,N,LUSET/V,N,MPCF1=-1/
              V,N,MPCF2=-1/V,N,SINGLE=-1/V,N,OMIT=-1/V,N,REACT=-1/V,N,NSKIP/
              V,N,REPEAT/V,N,NOSET=-1/V,N,NOL/V,N,NOA=-1 $

50  SAVE      MPCF1,SINGLE,OMIT,NOSET,REACT,MPCF2,NSKIP,REPEAT,NOL,NOA $

51  PURGE     GM,GMD/MPCF1/GO,KOOB,LOO,UOO,MOOB,MOAB,GOD/OMIT/KFS,PST,QP/
              SINGLE$

52  EQUIV     KGG,KNN/MPCF1/MGG,MNN/MPCF1/ BGG,BNN/MPCF1/K4GG,K4NN/MPCF1$

53  CHKPNT    GM,RG,GO,KOOB,LOO,UOO,MOOB,MOAB,KFS,QP,USET,GMD,GOD,PST, KNN,
              MNN,BNN,K4NN $

54  COND      LBL4,GENEL $

55  COND      LBL4,NOSIMP $

56 (GPSP)     GPL,GPST,USET,SIL/OGPST $

57  OFP       OGPST,,,,,//V,N,CARDNO $

58  SAVE      CARDNO $

59  LABEL     LBL4 $

60  COND      LBL2,MPCF1 $

61 (MCE1)     USET,RG/GM $

62  CHKPNT    GM $

63 (MCE2)     USET,GM,KGG,MGG,BGG,K4GG/KNN,MNN,BNN,K4NN $

64  CHKPNT    KNN,MNN,BNN,K4NN $

65  LABEL     LBL2 $

66  EQUIV     KNN,KFF/SINGLE/MNN,MFF/SINGLE/BNN,BFF/SINGLE/K4NN,K4FF/SINGLE$

67  CHKPNT    KFF,MFF,BFF,K4FF $

68  COND      LBL3,SINGLE $

69 (SCE1)     USET,KNN,MNN,BNN,K4NN/KFF,KFS, ,MFF,BFF,K4FF $

70  CHKPNT    KFS,KFF,MFF,BFF,K4FF $

71  LABEL     LBL3 $

72  EQUIV     KFF,KAA/OMIT/ MFF,MAA/OMIT/BFF,BAA/OMIT/K4FF,K4AA/OMIT$

73  CHKPNT    KAA,MAA,BAA,K4AA $
```

```
RIGID FORMAT DMAP LISTING
SERIES L

RIGID FORMAT 9

   N A S T R A N  S O U R C E  P R O G R A M  C O M P I L A T I O N
DMAP-DMAP INSTRUCTION
NO.

 74   COND      LBL5,OMIT $

 75   (SMP1)    USET,KFF,MFF,BFF,K4FF/GO,KAA,K00B,L00,U00,MAA,M00B,M0AB,BAA,
                K4AA $

 76   CHKPNT    GO,KAA,MAA,BAA,K4AA $

 77   LABEL     LBL5 $

 78   (DPD)     DYNAMICS,GPL,SIL,USET/GPLD,SILD,USETD,TFPOOL,DLT,,,NLFT,TRL,,
                EQDYN/V,N,LUSET/V,N,LUSETD/V,N,NOTFL/V,N,NODLT/V,N,NOPSDL/ V,N,
                NOFRL/V,N,NONLFT/V,N,NOTRL/V,N,NOEED/C,N,123/V,N,NOUE $

 79   SAVE      LUSETD,NODLT,NONLFT,NOTRL,NOUE $

 80   PURGE     PNLD/NONLFT$

 81   EQUIV     GO,GOD/NOUE/GM,GMD/NOUE $

 82   CHKPNT    USETD,EQDYN,TFPOOL,DLT,TRL,GOD,GMD,NLFT,PNLD,SILD,GPLD $

 83   (MTRXIN)  CASECC,MATPOOL,EQDYN,,TFPOOL/K2PP,M2PP,B2PP/V,N,LUSETD/V,N,
                NOK2PP/V,N,NOM2PP/V,N,NOB2PP $

 84   SAVE      NOK2PP,NOM2PP,NOB2PP $

 85   PARAM     //C,N,AND/V,N,KDEKA/V,N,NOUE/V,N,NOK2PP$

 86   PARAM     //C,N,AND/V,N,MDEMA/V,N,NOUE/V,N,NOM2PP$

 87   PARAM     //C,N,AND/V,N,KDEK2/V,N,NOGENL/V,N,NOSIMP $

 88   PURGE     K2DD/NOK2PP/M2DD/NOM2PP/B2DD/NOB2PP$

 89   EQUIV     M2PP,M2DD/NOA/B2PP,B2DD/NOA/K2PP,K2DD/NOA/MAA,MDD/MDEMA/ KAA,
                KDD/KDEKA$

 90   CHKPNT    K2PP,M2PP,B2PP,K2DD,M2DD,B2DD,MDD,KDD $

 91   COND      LBL16,NOGPDT$

 92   (GKAD)    USETD,GM,GO,KAA,BAA,MAA,K4AA,K2PP,M2PP,B2PP/KDD,BDD,MDD,GMD,
                GOD,K2DD,M2DD,B2DD/C,N,TRANRESP/C,N,DISP/C,N,DIRECT/C,Y,G=0.0/
                C,Y,W3=0.0/C,Y,W4=0.0/V,N,NOK2PP/V,N,NOM2PP/V,N,NOB2PP/ V,N,
                MPCF1/V,N,SINGLE/V,N,OMIT/V,N,NOUE/V,N,NOK4GG/V,N,NOBGG/ V,N,
                KDEK2/C,N,-1 $

 93   LABEL     LBL16$

 94   EQUIV     M2DD,MDD/NOSIMP/ K2DD,KDD/KDEK2 $

 95   CHKPNT    KDD,BDD,MDD,GMD,GOD $
```

```
RIGID FORMAT DMAP LISTING
SERIES L

RIGID FORMAT 9

   N A S T R A N  S O U R C E  P R O G R A M  C O M P I L A T I O N
DMAP-DMAP INSTRUCTION
 NO.

 96   COND      ERROR1,NOTRL$

 97   PARAM     //C,N,ADD/V,N,NEVER/C,N,1/C,N,0 $

 98   PARAM     //C,N,MPY/V,N,REPEATT/C,N,1/C,N,-1 $

 99   JUMP      LBL13 $

100   LABEL     LBL13$

101   PURGE     PNLD,OUDV1,OPNL1,OUDV2,OPNL2,XYPLTTA,OPP1,OQP1,OUPV1,OES1,
                OEF1,OPP2,OQP2,OUPV2,OES2,OEF2,PLOTX2,XYPLTT/NEVER $

102   (CASE)    CASECC,/CASEXX/C,N,TRAN/V,N,REPEATT/V,N,NOLOOP $

103   SAVE      REPEATT,NOLOOP $

104   CHKPNT    CASEXX $

105   (TRD)     CASEXX,USETD,DLT,TRL,NLFT,DIT,KDD,BDD,MDD,GMD,GOD,/UDVT,PDT,
                PST, PPT,PNLD/C,N,DIRECT/V,N,LUSETD/V,N,MPCF1/V,N,SINGLE/V,N,
                OMIT/C,N,0/V,N,NOUE/C,N,0 $

106   EQUIV     PPT,PDT/NOSET $

107   CHKPNT    UDVT,PDT,PST,PPT,PNLD $

108   (VDR)     CASEXX,EQDYN,USETD,UDVT,PPT,XYCDB,PNLD/OUDV1,OPNL1/ C,N,
                TRANRESP/C,N,DIRECT/C,N,0/V,N,NOD/V,N,NOP/C,N,0 $

109   SAVE      NOD,NOP $

110   CHKPNT    OUDV1,OPNL1 $

111   COND      LBL15,NOD $

112   (SDR3)    OUDV1,OPNL1,,,,/OUDV2,OPNL2,,,, $

113   OFP       OUDV2,OPNL2,,,,,//V,N,CARDNO $

114   SAVE      CARDNO $

115   CHKPNT    OPNL2,OUDV2 $

116   (XYTRAN)  XYCDB,OUDV2,OPNL2,,,/XYPLTTA/C,N,TRAN/C,N,DSET/V,N,PFILE/ V,N,
                CARDNO $

117   SAVE      PFILE,CARDNO $

118   (XYPLOT)  XYPLTTA// $

119   LABEL     LBL15 $
```

```
 RIGID FORMAT DMAP LISTING
 SERIES L

 RIGID FORMAT 9

    N A S T R A N  S O U R C E  P R O G R A M  C O M P I L A T I O N
DMAP-DMAP INSTRUCTION
 NO.

120   PARAM     //C,N,AND/V,N,PJUMP/V,N,NOP/V,N,JUMPPLOT $

121   COND      LBL18,PJUMP $

122   EQUIV     UDVT,UPV/NOA $

123   COND      LBL17,NOA $

124   SDR1      USETD,,UDVT,,,GOD,GMD,PST,KFS,,/UPV,,QP/C,N,1/C,N,DYNAMICS $

125   LABEL     LBL17$

126   CHKPNT    UPV,QP $

127   SDR2      CASEXX,CSTM,MPT,DIT,EQDYN,SILD,,,BGPDT,PPT,QP,UPV,EST,XYCDB/
                OPP1,OQP1,OUPV1,OES1,OEF1,PUGV/C,N,TRANRESP $

128   SDR3      OPP1,OQP1,OUPV1,OES1,OEF1,/ OPP2,OQP2,OUPV2,OES2,OEF2, $

129   CHKPNT    OPP2,OQP2,OUPV2,OES2,OEF2 $

130   OFP       OPP2,OQP2,OUPV2,OEF2,OES2,//V,N,CARDNO $

131   SAVE      CARDNO $

132   COND      P2,JUMPPLOT $

133   PLOT      PLTPAR,GPSETS,ELSETS,CASEXX,BGPDT,EQEXIN,SIL,,PUGV/PLOTX2/ V,N,
                NSIL/V,N,LUSET/V,N,JUMPPLOT/V,N,PLTFLG/V,N,PFILE $

134   SAVE      PFILE $

135   PRTMSG    PLOTX2// $

136   LABEL     P2 $

137   XYTRAN    XYCDB,OPP2,OQP2,OUPV2,OES2,OEF2/XYPLTT/C,N,TRAN/C,N,PSET/ V,N,
                PFILE/V,N,CARDNO $

138   SAVE      PFILE,CARDNO $

139   XYPLOT    XYPLTT// $

140   LABEL     LBL18 $

141   COND      FINIS,REPEATT $

142   REPT      LBL13,100$

143   JUMP      ERROR2 $

144   JUMP      FINIS $
```

```
 RIGID FORMAT DMAP LISTING
 SERIES L

 RIGID FORMAT 9

    N A S T R A N  S O U R C E  P R O G R A M  C O M P I L A T I O N
DMAP-DMAP INSTRUCTION
 NO.

145  LABEL    ERROR2 $

146  PRTPARM  //C,N,-2/C,N,DIRTRD$

147  LABEL    ERROR1$

148  PRTPARM  //C,N,-1/C,N,DIRTRD$

149  LABEL    ERROR3$

150  PRTPARM  //C,N,-3/C,N,DIRTRD$

151  LABEL    FINIS$

152  END      $
```

3.10.2 Description of DMAP Operations for Direct Transient Response

3. GP1 generates coordinate system transformation matrices, tables of grid point locations, and tables for relating internal and external grid point numbers.

7. Go to DMAP No. 77 if only Direct Matrix Input.

8. GP2 generates Element Connection Table with internal indices.

10. PLTSET transforms user input into a form used to drive structure plotter.

12. PRTMSG prints error messages associated with structure plotter.

16. Go to DMAP No. 20 if no undeformed structure plot request.

17. PLØT generates all requested undeformed structure plots.

19. PRTMSG prints plotter data and engineering data for each undeformed plot generated.

21. GP3 generates Grid Point Temperature Table.

23. TA1 generates element tables for use in matrix assembly and stress recovery.

27. Go to DMAP No. 41 if there are no structural elements.

28. SMA1 generates stiffness matrix $[K^{x}_{gg}]$, structural damping matrix $[K^{4}_{gg}]$ and Grid Point Singularity Table.

32. SMA2 generates mass matrix $[M_{gg}]$ and viscous damping matrix $[B_{gg}]$.

36. Go to DMAP No. 41 if no weight and balance request.

37. Go to DMAP No. 149 and print error message if no mass matrix exists.

38. GPWG generates weight and balance information.

39. ØFP formats weight and balance information and places it on the system output file for printing.

42. Equivalence $[K^{x}_{gg}]$ to $[K_{gg}]$ if no general elements.

44. Go to DMAP No. 47 if no general elements.

45. SMA3 adds general elements to $[K^{x}_{gg}]$ to obtain stiffness matrix $[K_{gg}]$.

49. GP4 generates flags defining members of various displacement sets (USET) and forms multipoint constraint equations $[R_g]\{u_g\} = 0$.

52. Equivalence $[K_{gg}]$ to $[K_{nn}]$, $[M_{gg}]$ to $[M_{nn}]$, $[B_{gg}]$ to $[B_{nn}]$ and $[K^{4}_{gg}]$ to $[K^{4}_{nn}]$ if no multi-point constraints.

54. Go to DMAP No. 59 if general elements present.

55. Go to DMAP No. 59 if no structural elements.

56. GPSP determines if possible grid point singularities remain.

57. ØFP formats the table of possible grid point singularities and places it on the system output file for printing.

60. Go to DMAP No. 65 if MCE1 and MCE2 have already been executed for current set of multi-point constraints.

61. MCE1 partitions multipoint constraint equations $[R_g] = [R_m \mid R_n]$ and solves for multipoint constraint transformation matrix $[G_m] = -[R_m]^{-1}[R_n]$.

63. MCE2 partitions stiffness, mass and damping matrices

$$[K_{gg}] = \left[\begin{array}{c|c} \bar{K}_{nn} & K_{nm} \\ \hline K_{mn} & K_{mm} \end{array}\right], \quad [M_{gg}] = \left[\begin{array}{c|c} \bar{M}_{nn} & M_{nm} \\ \hline M_{mn} & M_{mm} \end{array}\right],$$

$$[B_{gg}] = \left[\begin{array}{c|c} \bar{B}_{nn} & B_{nm} \\ \hline B_{mn} & B_{mm} \end{array}\right] \quad \text{and} \quad [K^4_{gg}] = \left[\begin{array}{c|c} \bar{K}^4_{nn} & K^4_{nm} \\ \hline K^4_{mn} & K^4_{mm} \end{array}\right]$$

and performs matrix reductions

$$[K_{nn}] = [\bar{K}_{nn}] + [G_m^T][K_{mn}] + [K_{mn}^T][G_m] + [G_m^T][K_{mm}][G_m],$$

$$[M_{nn}] = [\bar{M}_{nn}] + [G_m^T][M_{mn}] + [M_{mn}^T][G_m] + [G_m^T][M_{mm}][G_m],$$

$$[B_{nn}] = [\bar{B}_{nn}] + [G_m^T][B_{mn}] + [B_{mn}^T][G_m] + [G_m^T][B_{mm}][G_m],$$

$$[K^4_{nn}] = [\bar{K}^4_{nn}] + [G_m^T][K^4_{mn}] + [K^4_{mn}]^T[G_m] + [G_m^T][K^4_{mm}][G_m].$$

66. Equivalence $[K_{nn}]$ to $[K_{ff}]$, $[M_{nn}]$ to $[M_{ff}]$, $[B_{nn}]$ to $[B_{ff}]$ and $[K^4_{nn}]$ to $[K^4_{ff}]$ if no single-point constraints.

68. Go to DMAP No. 71 if no single-point constraints.

69. SCE1 partitions out single-point constraints

$$[K_{nn}] = \left[\begin{array}{c|c} K_{ff} & K_{fs} \\ \hline K_{sf} & K_{ss} \end{array}\right], \quad [M_{nn}] = \left[\begin{array}{c|c} M_{ff} & M_{fs} \\ \hline M_{sf} & M_{ss} \end{array}\right],$$

$$[B_{nn}] = \left[\begin{array}{c|c} B_{ff} & B_{fs} \\ \hline B_{sf} & B_{ss} \end{array}\right] \quad \text{and} \quad [K^4_{nn}] = \left[\begin{array}{c|c} K^4_{ff} & K^4_{fs} \\ \hline K^4_{sf} & K^4_{ss} \end{array}\right].$$

72. Equivalence $[K_{ff}]$ to $[K_{aa}]$, $[M_{ff}]$ to $[M_{aa}]$, $[B_{ff}]$ to $[B_{aa}]$ and $[K^4_{ff}]$ to $[K^4_{aa}]$ if no omitted coordinates.

74. Go to DMAP No. 77 if no omitted coordinates.

75. SMP1 partitions constrained stiffness, mass and damping matrices.

$$[K_{ff}] = \left[\begin{array}{c|c} K_{aa} & K_{ao} \\ \hline K_{oa} & K_{oo} \end{array}\right], \qquad [M_{ff}] = \left[\begin{array}{c|c} M_{aa} & M_{ao} \\ \hline M_{oa} & M_{oo} \end{array}\right],$$

$$[B_{ff}] = \left[\begin{array}{c|c} B_{aa} & B_{ao} \\ \hline B_{oa} & B_{oo} \end{array}\right] \text{ and } \qquad [K^4_{ff}] = \left[\begin{array}{c|c} K^4_{aa} & K^4_{ao} \\ \hline K^4_{oa} & K^4_{oo} \end{array}\right].$$

solves for transformation matrix $[G_o] = -[K_{oo}]^{-1}[K_{oa}]$
and performs matrix reductions

$$[K^1_{aa}] = [K_{aa}] + [K_{ao}][G_o],$$

$$[M^1_{aa}] = [M_{aa}] + [M_{ao}][G_o] + [M_{ao}G_o]^T + [G_o^T][M_{oo}][G_o],$$

$$[B^1_{aa}] = [B_{aa}] + [B_{ao}][G_o] + [B_{ao}G_o]^T + [G_o^T][B_{oo}][G_o] \text{ and}$$

$$[K^4_{aa}] = [K^4_{aa}] + [K^4_{ao}][G_o] + [K^4_{ao}G_o]^T + [G_o^T][K^4_{oo}][G_o] \quad .$$

78. DPD generates flags defining members of various displacement sets used in dynamic analysis (USETD), tables relating internal and external grid point numbers, including extra points introduced for dynamic analysis, and prepares Transfer Function Pool, Dynamics Load Table, Nonlinear Function Table and Transient Response List.

81. Equivalence $[G_o]$ to $[G^d_o]$ and $[G_m]$ to $[G^d_m]$ if no extra points introduced for dynamic analysis.

83. MTRXIN selects the direct input matrices $[K^2_{pp}]$, $[M^2_{pp}]$ and $[B^2_{pp}]$.

89. Equivalence $[M^2_{pp}]$ to $[M^2_{dd}]$, $[B^2_{pp}]$ to $[B^2_{dd}]$ and $[K^2_{pp}]$ to $[K^2_{dd}]$ if no constraints applied. Equivalence $[M_{aa}]$ to $[M_{dd}]$ if no direct input mass matrices and no extra points, and $[K_{aa}]$ to $[K_{dd}]$ if no direct input damping matrices and no extra points.

91. Go to DMAP No. 93 if only extra points defined.

92. GKAD assembles stiffness, mass, and damping matrices for use in Direct Transient Response

$$[K_{dd}] = [K^1_{dd}] + [K^2_{dd}],$$

$$[M_{dd}] = [M^1_{dd}] + [M^2_{dd}] \text{ and}$$

$$[B_{dd}] = [B^1_{dd}] + [B^2_{dd}] + \frac{g}{\omega_3}[K^1_{dd}] + \frac{1}{\omega_4}[K^4_{dd}].$$

All matrices are real.

94. Equivalence $[K^2_{dd}]$ to $[K_{dd}]$ if all stiffness is Direct Matrix Input and $[M^2_{dd}]$ to $[M_{dd}]$ if all mass is Direct Matrix Input.

96. Go to DMAP No. 147 and print error message if no Transient Response List.

99. Go to next DMAP instruction if cold start or modified restart. LBL13 will be altered by the Executive System to the proper location inside the loop for unmodified starts within the loop.

100. Beginning of loop for additional dynamic load sets.

102. CASE extracts user requests from CASECC for current loop.

105. TRD forms the linear and nonlinear dynamic load vectors $\{P_d\}$ and $\{P_d^{n\ell}\}$ and integrates the equations of motion over specified time periods to solve for the displacements, velocities and accelerations, using the following equation

$$[M_{dd}p^2 + B_{dd}p + K_{dd}]\{u_d\} = \{P_d\} + \{P_d^{n\ell}\} .$$

106. Equivalence $\{P_p\}$ to $\{P_d\}$ if no constraints applied.

108. VDR prepares displacements, velocities and accelerations, sorted by time step, for output using only the independent degrees of freedom.

111. Go to DMAP No. 119 if no output request for the independent degrees of freedom.

112. SDR3 sorts the independent displacements, velocities, accelerations and nonlinear load vectors by point number.

113. ØFP formats the requested independent displacements, velocities, accelerations and nonlinear load vectors sorted by point number and places them on the system output file for printing.

116. XYTRAN prepares the input for X-Y plotting of the independent displacements, velocities, accelerations and nonlinear load vectors vs time.

118. XYPLØT prepares requested X-Y plots of the independent displacements, velocities, accelerations and nonlinear load vectors vs time.

121. Go to DMAP No. 140 if no output request involving dependent degrees of freedom or forces and stresses.

122. Equivalence $\{u_d\}$ to $\{u_p\}$ if no constraints applied.

123. Go to DMAP No. 125 if no constraints applied.

124. SDR1 recovers dependent components of displacements

$$\{u_o\} = [G_o^d]\{u_d\} , \qquad \begin{Bmatrix} u_d \\ \hline u_o \end{Bmatrix} = \{u_f + u_e\} ,$$

$$\begin{Bmatrix} u_f + u_e \\ \hline u_s \end{Bmatrix} = \{u_n + u_e\} , \qquad \{u_m\} = [G_m^d]\{u_f + u_e\} ,$$

$$\begin{Bmatrix} u_n + u_e \\ \hline u_m \end{Bmatrix} = \{u_p\}$$

and recovers single-point forces of constraint $\{q_s\} = -\{P_s\} + [K_{fs}^T]\{u_f\}$.

127. SDR2 calculates element forces and stresses (ØES1, ØEF1) and prepares load vectors, displacement, velocity and acceleration vectors and single-point forces of constraint for output (ØPP1, ØQP1, ØUPV1) - all sorted by time step.

128. SDR3 prepares requested output sorted by point number or element number.

130. ØFP formats requested output sorted by point number or element number and places it on the the system output file for printing.

132. Go to DMAP No. 136 if no deformed structure plots requested.

133. PLØT prepares all requested deformed structure plots.

135. PRTMSG prints plotter data and engineering data for each deformed plot generated.

137. XYTRAN prepares the input for requested X-Y plots.

139. XYPLØT prepares requested X-Y plots of displacements, velocities, accelerations, forces, stresses, loads or single-point forces of constraint vs. time.

141. Go to DMAP No. 151 if no additional dynamic load sets need to be processed.

142. Go to DMAP No. 100 if additional dynamic load sets need to be processed.

143. Go to DMAP No. 145 and print error message if more than 100 loops.

144. Go to DMAP No. 151 and make normal exit.

146. DIRECT TRANSIENT RESPØNSE ERRØR MESSAGE NØ. 2 - ATTEMPT TØ EXECUTE MØRE THAN 100 LØØPS.

148. DIRECT TRANSIENT RESPØNSE ERRØR MESSAGE NØ. 1 - TRANSIENT RESPØNSE LIST REQUIRED FØR TRANSIENT RESPØNSE CALCULATIØNS.

150. DIRECT TRANSIENT RESPØNSE ERRØR MESSAGE NØ. 3 - MASS MATRIX REQUIRED FØR WEIGHT AND BALANCE CALCULATIØNS.

3.10.3 Restart Tables for Direct Transient Response

3.10.3.1 Bit Positions for Card Name Restart Table

Card Name	Bit Pos.	Card Name	Bit Pos.	Card Name	Bit Pos.
AXIC	1	PBAR	3	TEMP	13
CDAMP1	1	PBEAM	3	TEMPAX	13
CDAMP2	1	PCØNEAX	3	TEMPD	13
CDAMP3	1	PQDMEM	3	WTMASS	14
CDAMP4	1	PQDPLT	3	GRDPNT	15
CELAS1	1	PQUAD1	3	PLØTEL	16
CELAS2	1	PQUAD2	3	PLØT$	18
CELAS3	1	PRØD	3	PØUT$	19
CELAS4	1	PSHEAR	3	XYØUT$	20
CMASS1	1	PTØRDRG	3	AØUT$	21
CMASS2	1	PTRBSC	3	LØØP$	22
CMASS3	1	PTRIA1	3	LØØP1$	23
CMASS4	1	PTRIA2	3	CØUPMASS	24
CØRD1C	1	PTRMEM	3	NØLØØP$	25
CØRD1R	1	PTRPLT	3	G	56
CØRD1S	1	PTUBE	3	W3	56
CØRD2C	1	PTWIST	3	W4	56
CØRD2R	1	GENEL	4	EPØINT	57
CØRD2S	1	CØNM1	5	SEQEP	57
GRDSET	1	CØNM2	5	TF	57
GRID	1	PELAS	6	CVISC	58
PØINTAX	1	PMASS	7	PDAMP	59
RINGAX	1	MAT1	8	PVISC	59
SECTAX	1	MAT2	8	DMIG	60
SEQGP	1	MAT3	8	B2PP$	60
SPØINT	1	MATT1	8	K2PP$	60
BARØR	2	MATT2	8	M2PP$	60
BEAMØR	2	MATT3	8	TF$	60
CBAR	2	TABLEM1	8	DAREA	61
CBEAM	2	TABLEM2	8	DELAY	61
CCØNEAX	2	TABLEM3	8	DLØAD	61
CØNRØD	2	TABLEM4	8	NØLIN1	61
CQDMEM	2	TEMPMT$	8	NØLIN2	61
CQDPLT	2	TEMPMX$	8	NØLIN3	61
CQUAD1	2	MPC	9	NØLIN4	61
CQUAD2	2	MPCADD	9	TABLED1	61
CRØD	2	MPCAX	9	TABLED2	61
CSHEAR	2	MPC$	9	TABLED3	61
CTØRDRG	2	SPC	10	TABLED4	61
CTRAPRG	2	SPC1	10	TIC	61
CTRBSC	2	SPCADD	10	TLØAD1	61
CTRIA1	2	SPCAX	10	TLØAD2	61
CTRIA2	2	SPC$	10	TSTEP	61
CTRIARG	2	ØMIT	11	DLØAD$	62
CTRMEM	2	ØMIT1	11	IC$	62
CTRPLT	2	ØMITAX	11	NLFØRCE	62
CTUBE	2	SUPAX	12	TSTEP$	62
CTWIST	2	SUPØRT	12		

3.10.3.2 Bit Positions for File Name Restart Table

File Name	Bit Pos.
BGPDT	94
CSTM	94
EQEXIN	94
GPDT	94
GPL	94
SIL	94
ECT	95
GPTT	96
ECPT	97
EST	97
GEI	97
GPCT	97
GPST	98
K4GG	98
KGGX	98
BGG	99
MGG	99
KGG	100
RG	101
USET	101
YS	101
ØGPST	102
GM	103
BNN	104
K4NN	104
KNN	104
MNN	104
BFF	105
K4FF	105
KFF	105
KFS	105
MFF	105
BAA	106
GØ	106
K4AA	106
KAA	106
LØØ	106
KØØB	106
MAA	106
MØAB	106
MØØB	106
UØØ	106
DLT	107
EQDYN	107
GPLD	107
NLFT	107
SILD	107
TFPØØL	107
TRL	107
USETD	107
CASEXX	108
B2PP	109
K2PP	109
M2PP	109
B2DD	110
BDD	110
GMD	110
GØD	110
K2DD	110
KDD	110
M2DD	110
MDD	110
PDT	111
PNLD	111
PPT	111
PST	111
UDVT	111
ØUDV1	112
ØPNL1	112
ØUDV2	113
ØPNL2	113
QP	114
UPV	114
ØEF1	115
ØES1	115
ØPP1	115
ØQP1	115
ØUPV1	115
PUGV	115
ØEF2	116
ØES2	116
ØPP2	116
ØQP2	116
ØUPV2	116

3.10.3.3 Card Name Restart Table

DMAP Inst.	Bit Position 1	10	20	30	40	50	60
BEGIN	1234567890123456	8901234					6789012
FILE	1234567890123456	8901234					6789012
GP1	1						
SAVE	1						
PURGE	1						
CHKPNT	1						
COND	1						
GP2	12 45	6					8
CHKPNT	12 45	6					8
PLTSET		8					
SAVE		8					
PRTMSG		8					
CHKPNT		8					
SETVAL		8					
SAVE		8					
COND		8					
PLOT		8					
SAVE		8					
PRTMSG		8					
LABEL		8					
GP3	1	3					
CHKPNT	1	3					
TA1,	1234567						89
SAVE	1234567						89
PURGE	1234567						89
CHKPNT	1234567						89
COND	123 5678	45					
SMA1	123 6 8						
SAVE	123 6 8						
PURGE	123 6 8						
CHKPNT	123 6 8						
SMA2	123 5 78	4		4			89
SAVE	123 5 78	4		4			89
PURGE	123 5 78	4		4			89
CHKPNT	123 5 78	4		4			89
COND	123 5 78	45					
CCND	123 5 78	45					
GPWG	123 5 78	45					
OFP	123 5 78	45					
SAVE	123 5 78	45					
LABEL	123 5 7	45					
EQUIV	123 6 8						
CHKPNT	123 6 8						
COND	1234 6 8						
SMA3	1234 6 8						
CHKPNT	1234 6 8						
LABEL	1234 6 8						
PARAM	1	901					
GP4	1	901					
SAVE	1	901					
PURGE	1	901					
EQUIV	123456789			4			
CHKPNT	1	9					
COND	123 6 8 C						
CCND	123 6 8 0						
GPSP	123 6 8 0						
OFP	123 6 8 0						

DMAP Inst.	Bit Position 1 10 20 30 40 50 60
SAVE	123 6 8 0
LABEL	123 6 8 0
CCND	123456789 4
MCE1	1 9
CHKPNT	1 9
MCE2	123456789 4 89
CHKPNT	123456789 4 89
LABEL	123456789 4 89
EQUIV	1234567890 4 89
CHKPNT	1234567890 4 89
CCND	1234567890 4 89
SCE1	1234567890 4 89
CHKPNT	1234567890 4 89
LABEL	1234567890 4 89
EQUIV	12345678901 4 89
CHKPNT	12345678901 4 89
CCND	12345678901 4 89
SMP1	12345678901 4 89
CHKPNT	12345678901 4 89
LABEL	12345678901 4 89
DPD	1 7 1
SAVE	1 7 1
PURGE	1 7 1
EQUIV	12345678901 4 67890
CHKPNT	1 7 0
MTRXIN	1 7 0
SAVE	1 7 0
PARAM	1 7 0
PARAM	1 7 0
PARAM	1 7 0
PURGE	12345678901 4 7890
EQUIV	12345678901 4 7890
CHKPNT	12345678901 4 7890
CCND	12345678901 4 7890
GKAD	12345678901 4 67890
LABEL	12345678901 4 67890
EQUIV	12345678901 4 67890
CHKPNT	12345678901 4 67890
CCND	12345678901 4 67890
PARAM	234
PARAM	12345678901234 6 234 6789012
JUMP	234
$SS	1 3
LABEL	123456789012345678 234 6789012
PURGE	234
CASE	1234567890123456 2345 6789012
SAVE	1234567890123456 2345 6789012
CHKPNT	1234567890123456 2345 6789012
TRD	12345678901 234 6789012
EQUIV	12345678901 234 6789012
CHKPNT	12345678901 234 6789012
VDR	01
SAVE	01
CHKPNT	01
CCND	01
SDR3	01
OFP	1

DMAP Inst.	Bit Position 1	10	20	30	40	50	60
SAVE			1				
CHKPNT			01				
XYTRAN			0				
SAVE			0				
XYPLOT			0				
LABEL			1				
PARAM	12345678901			234			6789012
COND	12345678901			234			6789012
EQUIV	12345678901			234			6789012
COND	12345678901			234			6789012
SDR1	12345678901			234			6789012
LABEL	12345678901			234			6789012
CHKPNT	12345678901			234			6789012
SDR2			890				
SDR3			90				
CHKPNT			90				
OFP			9				
SAVE			9				
COND			8				
PLOT			8				
SAVE			8				
PRTMSG			8				
LABEL			8				
XYTRAN			0				
SAVE			0				
XYPLOT			0				
LABEL			0				
COND				23			
$SS	1 3						
REPT				23			
$SS	1 3						
JUMP				23			
$SS	1 3						
JUMP	1234567890123456		8901234				6789012
LABEL				23			
$SS	1 3						
PRTPARM				23			
$SS	1 3						
LABEL	1234567890123456		8901234				6789012
PRTPARM	1234567890123456		8901234				6789012
LABEL	1234567890123456		8901234				6789012
PRTPARM	1234567890123456		8901234				6789012
LABEL	1234567890123456		8901234				6789012
END	1234567890123456		8901234				6789012

3.10.3.4 Rigid Format Change Restart Table

DMAP Inst.	Bit Position 63 70 80
BEGIN	3456789C 234
FILE	3456789C 234
GP1	
SAVE	
PURGE	
CHKPNT	
COND	
GP2	
CHKPNT	
PLTSET	
SAVE	
PRTMSG	
CHKPNT	
SETVAL	
SAVE	
COND	
PLOT	
SAVE	
PRTMSG	
LABEL	
GP3	
CHKPNT	
TA1,	
SAVE	
PURGE	
CHKPNT	
COND	
SMA1	
SAVE	
PURGE	
CHKPNT	
SMA2	3 678
SAVE	3 678
PURGE	3 678
CHKPNT	3 678
COND	
COND	
GPWG	
OFP	
SAVE	
LABEL	
EQUIV	
CHKPNT	
COND	
SMA3	
CHKPNT	
LABEL	
PARAM	
GP4	
SAVE	
PURGE	
EQUIV	
CHKPNT	
COND	
COND	
GPSP	
OFP	

DMAP Inst.	Bit Position 63 70 80
SAVE	
LABEL	
COND	
MCE1	
CHKPNT	
MCE2	
CHKPNT	
LABEL	
EQUIV	
CHKPNT	
COND	
SCE1	
CHKPNT	
LABEL	
EQUIV	
CHKPNT	
COND	
SMP1	
CHKPNT	
LABEL	
DPD	
SAVE	
PURGE	
EQUIV	
CHKPNT	
MTRXIN	
SAVE	
PARAM	
PARAM	
PARAM	
PURGE	
EQUIV	
CHKPNT	
COND	
GKAD	
LABEL	
EQUIV	
CHKPNT	
COND	3456789Y 234
PARAM	
PARAM	3456789C 234
JUMP	3456789C 234
LABEL	3456789C 234
PURGE	
CASE	3456789C 234
SAVE	3456789C 234
CHKPNT	3456789C 234
TRD	
EQUIV	
CHKPNT	
VDR	
SAVE	
CHKPNT	
COND	
SDR3	
OFP	
SAVE	

DMAP Inst.	Bit Position 63	70	80
CHKPNT			
XYTRAN			
SAVE			
XYPLOT			
LABEL			
PARAM	3456789C	234	
COND	3456789C	234	
EQUIV	3456789C	234	
COND	3456789C	234	
SDR1	3456789C	234	
LABEL	3456789C	234	
CHKPNT	34567890	234	
SDR2			
SDR3			
CHKPNT			
OFP			
SAVE			
COND			
PLOT			
SAVE			
PRTMSG			
LABEL			
XYTRAN			
SAVE			
XYPLOT			
LABEL			
COND	3456789C	234	
REPT	3456789C	234	
JUMP	3456789C	234	
JUMP	3456789C	234	
LABEL	3456789C	234	
PRTPARM	3456789C	234	
LABEL	3456789C	234	
PRTPARM	3456789C	234	
LABEL	3456789C	234	
PRTPARM	3456789C	234	
LABEL	3456789C	234	
END	3456789C	234	

3.10.3.5 File Name Restart Table

DMAP Inst.	Bit Position 94	100	110	120
BEGIN				
FILE				
GP1	4			
SAVE	4			
PURGE				
CHKPNT				
COND				
GP2	5			
CHKPNT	5			
PLTSET				
SAVE				
PRTMSG				
CHKPNT				
SETVAL				
SAVE				
COND				
PLOT				
SAVE				
PRTMSG				
LABEL				
GP3	6			
CHKPNT	6			
TA1,	7			
SAVE	7			
PURGE	789 2 456			
CHKPNT	7			
COND	8			
SMA1	8			
SAVE	8			
PURGE	8			
CHKPNT	8			
SMA2	9			
SAVE	9			
PURGE	9			
CHKPNT	9			
COND				
COND				
GPWG				
OFP				
SAVE				
LABEL	8			
EQUIV	0			
CHKPNT	0			
COND	0			
SMA3	0			
CHKPNT	0			
LABEL	0			
PARAM	1			
GP4	1			
SAVE	1			
PURGE	1 3 56 01 4			
EQUIV	4			
CHKPNT				
COND	2			
COND	2			
GPSP	2			
OFP	2			

DMAP Inst.	Bit Position 94	100	110	120
SAVE				
LABEL	2			
COND	34			
MCE1	3			
CHKPNT	3			
MCE2	4			
CHKPNT	4			
LABEL	34			
EQUIV	5			
CHKPNT	5			
COND	5			
SCE1	5			
CHKPNT	5			
LABEL	5			
EQUIV	6			
CHKPNT	6			
COND	6			
SMP1	6			
CHKPNT	6			
LABEL	6			
DPD	7			
SAVE	7			
PURGE	7			
EQUIV	0			
CHKPNT	7			
MTRXIN	9			
SAVE	9			
PARAM	9			
PARAM	9			
PARAM	9			
PURGE	0			
EQUIV	0			
CHKPNT	0			
COND	0			
GKAD	0			
LABEL	0			
EQUIV	0			
CHKPNT	0			
COND	1			
PARAM				
PARAM	8			
JUMP	8			
LABEL	8			
PURGE				
CASE	8			
SAVE	8			
CHKPNT	8			
TRD	1			
EQUIV	1			
CHKPNT	1			
VDR	2			
SAVE	2			
CHKPNT	2			
COND	3			
SDR3	3			
OFP				
SAVE				

DMAP Inst.	94	Bit Position 100	110	120
CHKPNT			3	
XYTRAN				
SAVE				
XYPLOT				
LABEL				
PARAM			4	
COND			4	
EQUIV			4	
COND			4	
SDR1			4	
LABEL			4	
CHKPNT			4	
SDR2			5	
SDR3			6	
CHKPNT			6	
OFP				
SAVE				
COND				
PLOT				
SAVE				
PRTMSG				
LABEL				
XYTRAN				
SAVE				
XYPLOT				
LABEL			4	
COND				
REPT				
JUMP				
JUMP				
LABEL				
PRTPARM				
LABEL				
PRTPARM				
LABEL				
PRTPARM				
LABEL				
END				

3.10.4 Case Control Deck and Parameters for Direct Transient Response

The following items relate to subcase definition and data selection for Direct Transient Response:

1. One subcase must be defined for each dynamic loading condition.
2. DLØAD or NØNLINEAR must be used to define a time-dependent loading condition for each subcase.
3. Constraints must be defined above the subcase level.
4. TSTEP must be used to select the time-step intervals to be used for integration and output in each subcase.
5. On restart following an unscheduled exit due to insufficient time, the subcase structure should be changed to reflect any completed loading conditions. The TSTEP selections must be changed if it is desired to resume the integration at the point terminated.

The following printed output, sorted by point number or element number (SØRT2) is available at selected multiples of the integration time step:

1. Displacements, velocities, and accelerations for a list of PHYSICAL points (grid points and extra scalar points introduced for dynamic analysis) or SØLUTIØN points (points used in formulation of the general K system).
2. Nonzero components of the applied load vector and single point forces of constraint for a list of PHYSICAL points.
3. Nonlinear force vector for a list of SØLUTIØN points.
4. Stresses and forces in selected elements (ALL not allowed).

The following plotter output is available for Transient Response:

1. Undeformed plot of the structural model.
2. Deformed shapes of the structural model for selected time intervals.
3. X-Y plot of any component of displacement, velocity, or acceleration of a PHYSICAL point or SØLUTIØN point.
4. X-Y plot of any component of the applied load vector, nonlinear force vector, or single-point force of constraint.

5. X-Y plot of any stress or force component for an element.

The data used for preparing the X-Y plots may be punched or printed in tabular form (see Section 4.2). Also, a printed summary is prepared for each X-Y plot which includes the maximum and minimum values of the plotted function.

The following parameters are used in Direct Transient Response:

1. GRDPNT - optional - A positive integer value of this parameter will cause the Grid Point Weight Generator to be executed and the resulting weight and balance information to be printed.

2. WTMASS - optional - The terms of the mass matrix are multiplied by the real value of this parameter when they are generated in SMA2.

3. G - optional - The real value of this parameter is used as a uniform structural damping coefficient in the direct formulation of dynamics problems.

4. W3 and W4 - optional - The values of these parameters are used as pivotal frequencies for uniform structural damping and element structural damping respectively.

5. COUPMASS - optional - A positive integer value of this parameter will cause the generation of coupled mass matrices rather than lumped mass matrices for all bar elements, rod elements and plate elements that include bending stiffness (see Section 3.1 for list of elements).

3.11 MODAL COMPLEX EIGENVALUE ANALYSIS

3.11.1 DMAP Sequence for Modal Complex Eigenvalue Analysis

```
RIGID FORMAT 10

   N A S T R A N  S O U R C E  P R O G R A M  C O M P I L A T I O N
DMAP-DMAP INSTRUCTION
 NO.

  1  BEGIN     NO.10 MODAL COMPLEX EIGENVALUE ANALYSIS - SERIES L $

  2  FILE      LLL=TAPE $

  3  (GP1)     GEOM1,GEOM2,/GPL,EQEXIN,GPDT,CSTM,BGPDT,SIL/V,N,LUSET/ C,N,123/
               V,N,NOGPDT $

  4  SAVE      LUSET$

  5  CHKPNT    GPL,EQEXIN,GPDT,CSTM,BGPDT,SIL $

  6  (GP2)     GEOM2,EQEXIN/ECT $

  7  CHKPNT    ECT $

  8  PLTSET    PCDB,EQEXIN,ECT/PLTSETX,PLTPAR,GPSETS,ELSETS/V,N,NSIL/ V,N,
               JUMPPLOT $

  9  SAVE      NSIL,JUMPPLOT $

 10  PRTMSG    PLTSETX//$

 11  CHKPNT    PLTPAR,GPSETS,ELSETS $

 12  SETVAL    //V,N,PLTFLG/C,N,1/V,N,PFILE/C,N,0 $

 13  SAVE      PLTFLG,PFILE $

 14  COND      P1,JUMPPLOT $

 15  (PLOT)    PLTPAR,GPSETS,ELSETS,CASECC,BGPDT,EQEXIN,SIL,,/PLOTX1/ V,N,
               NSIL/V,N,LUSET/V,N,JUMPPLOT/V,N,PLTFLG/V,N,PFILE $

 16  PRTMSG    PLOTX1//$

 17  LABEL     P1 $

 18  (GP3)     GEOM3,EQEXIN,/,GPTT/C,N,123/V,N,NOGRAV/C,N,123 $

 19  CHKPNT    GPTT $

 20  (TA1,)    ,ECT,EPT,BGPDT,SIL,GPTT,CSTM/EST,,GEI,ECPT,GPCT/V,N,LUSET/ C,N,
               123/V,N,NOSIMP/C,N,0/V,N,NOGENL/V,N,GENEL $

 21  SAVE      NOGENL,NOSIMP,GENEL$

 22  COND      ERROR1,NOSIMP$

 23  PURGE     OGPST/GENEL$

 24  CHKPNT    EST,ECPT,GPCT,GEI,OGPST$
```

```
RIGID FORMAT DMAP LISTING
SERIES L

RIGID FORMAT 10

   N A S T R A N  S O U R C E  P R O G R A M  C O M P I L A T I O N
DMAP=DMAP INSTRUCTION
NO.

25  (SMA1)     CSTM,MPT,ECPT,GPCT, DIT/KGGX,,GPST/V,N,NOGENL/V,N,NOK4GG$

26  CHKPNT     KGGX,GPST$

27  (SMA2)     CSTM,MPT,ECPT,GPCT,DIT/MGG,/V,Y,WTMASS=1.0/V,N,NOMGG/V,N,NOBGG/
               V,Y,COUPMASS=-1 $

28  SAVE       NOMGG$

29  COND       ERROR1,NOMGG$

30  CHKPNT     MGG $

31  COND       LGPWG,GRDPNT$

32  (GPWG)     BGPDT,CSTM,EQEXIN,MGG/OGPWG/V,Y,GRDPNT=-1/V,Y,WTMASS$

33  OFP        OGPWG,,,,,//V,N,CARDNO $

34  SAVE       CARDNO $

35  LABEL      LGPWG$

36  EQUIV      KGGX,KGG/NOGENL $

37  CHKPNT     KGG $

38  COND       LBL11,NOGENL $

39  (SMA3)     GEI,KGGX/KGG/V,N,LUSET/V,N,NOGENL/C,N,-1 $

40  CHKPNT     KGG $

41  LABEL      LBL11 $

42  PARAM      //C,N,MPY/V,N,NSKIP/C,N,0/C,N,0 $

43  (GP4)      CASECC,GEOM4,EQEXIN,SIL,GPDT/RG,YS,USET/V,N,LUSET/V,N,MPCF1/ V,
               N,MPCF2/V,N,SINGLE/V,N,OMIT/V,N,REACT/V,N,NSKIP/V,N,REPEAT/ V,
               N,NOSET/V,N,NOL/V,N,NOA $

44  SAVE       MPCF1,SINGLE,OMIT,REACT,NOSET,MPCF2,NSKIP,REPEAT,NOL,NOA $

45  PARAM      //C,N,AND/V,N,NOSR/V,N,REACT/V,N,SINGLE$

46  PURGE      GM,GMD/MPCF1/GO,KOOB,LOO,UOO,MOOB,MOAB,GOD/OMIT/KFS/SINGLE/
               QPC/NOSR/KLR,KRR,MLR,MRR,DM,MR/REACT $

47  EQUIV      KGG,KNN/MPCF1/MGG,MNN/MPCF1$

48  CHKPNT     KRR,KLR,DM,MLR,MRR,MR,GM,RG,GO,KOOB,LOO,UOO, MOOB,MOAB,KFS,QPC,
               USET,KNN,MNN,MRR,GMD,GOD $
```

```
RIGID FORMAT DMAP LISTING
SERIES L

RIGID FORMAT 10

   N A S T R A N  S O U R C E  P R O G R A M  C O M P I L A T I O N
DMAP-DMAP INSTRUCTION
 NO.

 49  COND      LBL4,GENEL $
 50  GPSP      GPL,GPST,USET,SIL/OGPST $
 51  OFP       OGPST,,,,,//V,N,CARDNO $
 52  SAVE      CARDNO $
 53  LABEL     LBL4 $
 54  COND      LBL2,MPCF1 $
 55  MCE1      USET,RG/GM $
 56  CHKPNT    GM$
 57  MCE2      USET,GM,KGG,MGG,,/KNN,MNN,,$
 58  CHKPNT    KNN,MNN$
 59  LABEL     LBL2 $
 60  EQUIV     KNN,KFF/SINGLE/MNN,MFF/SINGLE$
 61  CHKPNT    KFF,MFF $
 62  COND      LBL3,SINGLE $
 63  SCE1      USET,KNN,MNN,,/KFF,KFS,,MFF,, $
 64  CHKPNT    KFS,KFF,MFF $
 65  LABEL     LBL3 $
 66  EQUIV     KFF,KAA/OMIT/ MFF,MAA/OMIT$
 67  CHKPNT    KAA,MAA $
 68  COND      LBL5,OMIT $
 69  SMP1      USET,KFF,MFF,,/GO,KAA,KOOB,LOO,UOO,MAA,MOOB,MOAB,, $
 70  CHKPNT    KAA,MAA,GO$
 71  LABEL     LBL5 $
 72  COND      LBL6,REACT $
 73  RBMG1     USET,KAA,MAA/KLL,KLR,KRR,MLL,MLR,MRR$
 74  CHKPNT    KLL,KLR,KRR,MLL,MLR,MRR $
 75  RBMG2     KLL/LLL,ULL $
```

```
RIGID FORMAT DMAP LISTING
SERIES L

RIGID FORMAT 10

   N A S T R A N  S O U R C E  P R O G R A M  C O M P I L A T I O N
DMAP-DMAP INSTRUCTION
 NO.

 76  CHKPNT   ULL,LLL$

 77  (RBMG3)  LLL,ULL,KLR,KRR/DM $

 78  CHKPNT   DM$

 79  (RBMG4)  DM,MLL,MLR,MRR/MR$

 80  CHKPNT   MR $

 81  LABEL    LBL6 $

 82  (DPD)    DYNAMICS,GPL,SIL,USET/GPLD,SILD,USETD,TFPOOL,,,,,,EED,EQDYN/ V,
              N,LUSET/V,N,LUSETD/V,N,NOTFL/V,N,NODLT/V,N,NOPSDL/V,N, NOFRL/V,
              N,NONLFT/V,N,NOTRL/V,N,NOEED/C,N,123/V,N,NOUE $

 83  SAVE     LUSETD,NOUE,NOEED $

 84  COND     ERROR2,NOEED$

 85  EQUIV    GO,GOD/NOUE/GM,GMD/NOUE $

 86  CHKPNT   USETD,EED,EQDYN,TFPOOL,GOD,GMD,SILD,GPLD $

 87  (READ)   KAA,MAA,MR,DM,EED,USET,CASECC/LAMA,PHIA,MI,OEIGS/C,N,MODES/V,N,
              NEIGV$

 88  SAVE     NEIGV $

 89  CHKPNT   LAMA,PHIA,MI,OEIGS $

 90  OFP      OEIGS,LAMA,,,,,//V,N,CARDNO $

 91  SAVE     CARDNO $

 92  COND     ERROR4,NEIGV $

 93  PARAM    //C,N,ADD/V,N,NEVER/C,N,1/C,N,0 $

 94  PARAM    //C,N,MPY/V,N,REPEATE/C,N,1/C,N,-1 $

 95  JUMP     LBL13 $

 96  LABEL    LBL13 $

 97  PURGE    PHIH,CLAMA,OPHIH,CPHID,CPHIP,QPC,OQPC1,OCPHIP,OESC1,OEFC1/
              NEVER $

 98  (CASE)   CASECC,/CASEXX/C,N,CEIGN/V,N,REPEATE/V,N,NOLOOP $

 99  SAVE     REPEATE,NOLOOP $

100  CHKPNT   CASEXX $
```

```
 RIGID FORMAT DMAP LISTING
 SERIES L

 RIGID FORMAT 10

    N A S T R A N  S O U R C E  P R O G R A M  C O M P I L A T I O N
DMAP-DMAP INSTRUCTION
 NO.

101  (MTRXIN)   CASEXX,MATPOOL,EQDYN,,TFPOOL/K2PP,M2PP,B2PP/V,N,LUSETD/V,N,
                NOK2PP/V,N,NOM2PP/V,N,NOB2PP $

102  SAVE       NOK2PP,NOM2PP,NOB2PP $

103  PURGE      K2DD/NOK2PP/M2DD/NOM2PP/B2DD/NOB2PP$

104  EQUIV      M2PP,M2DD/NOSET/B2PP,B2DD/NOSET/K2PP,K2DD/NOSET$

105  CHKPNT     K2PP,M2PP,B2PP,K2DD,M2DD,B2DD $

106  (GKAD)     USETD,GM,GO,,,,,K2PP,M2PP,B2PP/,,,GMD,GOD,K2DD, M2DD,B2DD/C,N,
                CMPLEV/C,N,DISP/C,N,MODAL/C,N,0,0/ C,N,0,0/C,N,0,0/V,N,NOK2PP/
                V,N,NOM2PP/V,N,NOB2PP/ V,N,MPCF1/V,N,SINGLE/V,N,OMIT/V,N,NOUE/
                C,N,-1/C,N,-1/ C,N,-1/C,N,-1 $

107  CHKPNT     K2DD,M2DD,B2DD,GOD,GMD $

108  (GKAM)     USETD,PHIA,MI,LAMA,DIT,M2DD,B2DD,K2DD,CASEXX / MHH,BHH,KHH,
                PHIDH/V,N,NOUE/C,Y,LMODES=0/C,Y,LFREQ=0.0/ C,Y,HFREQ=0.0/V,N,
                NOM2PP/V,N,NOB2PP/V,N,NOK2PP/V,N,NONCUP/ V,N,FMODE $

109  SAVE       NONCUP,FMODE $

110  CHKPNT     MHH,BHH,KHH,PHIDH $

111  (CEAD)     KHH,BHH,MHH,EED,CASEXX/PHIH,CLAMA,OCEIGS/V,N,EIGVS$

112  SAVE       EIGVS $

113  CHKPNT     PHIH,CLAMA,OCEIGS $

114  OFP        OCEIGS,CLAMA,,,,//V,N,CARDNO $

115  SAVE       CARDNO $

116  COND       LBL17,EIGVS $

117  (VDR)      CASEXX,EQDYN,USETD,PHIH,CLAMA,,/OPHIH,/C,N,CEIGEN/C,N,MODAL/ V,
                N,NOSORT2/V,N,NOH/V,N,NOP/V,N,FMODE $

118  SAVE       NOH,NOP $

119  COND       LBL16,NOH $

120  OFP        OPHIH,,,,,//V,N,CARDNO $

121  SAVE       CARDNO $

122  LABEL      LBL16$

123  COND       LBL17,NOP $
```

```
 RIGID FORMAT DMAP LISTING
 SERIES L

 RIGID FORMAT 10

    N A S T R A N  S O U R C E  P R O G R A M  C O M P I L A T I O N
DMAP-DMAP INSTRUCTION
 NO.

124 (DDR1)     PHIH,PHIDH/CPHID $

125  CHKPNT    CPHID $

126 (SDR1)     USETD,,CPHID,,,GOD,GMD,,KFS,,/CPHIP,,QPC/C,N,1 /C,N,DYNAMICS$

127  CHKPNT    CPHIP,QPC $

128 (SDR2)     CASEXX,CSTM,MPT,DIT,EQDYN,SILD,,,,CLAMA,QPC,CPHIP,EST,/ ,OQPC1,
                OCPHIP,OESC1,OEFC1, /C,N,CEIGEN $

129  OFP       OCPHIP,OQPC1,OEFC1,OESC1,,//V,N,CARDNO $

130  SAVE      CARDNO $

131  LABEL     LBL17$

132  COND      FINIS,REPEATE $

133  REPT      LBL13,100 $

134  JUMP      ERROR3 $

135  JUMP      FINIS $

136  LABEL     ERROR3 $

137  PRTPARM   //C,N,-3/C,N,MDLCEAD$

138  LABEL     ERROR2$

139  PRTPARM   //C,N,-2/C,N,MDLCEAD$

140  LABEL     ERROR1$

141  PRTPARM   //C,N,-1/C,N,MDLCEAD$

142  LABEL     ERROR4$

143  PRTPARM   //C,N,-4/C,N,MDLCEAD$

144  LABEL     FINIS$

145  END       $
```

3.11.2 Description of DMAP Operations for Modal Complex Eigenvalue Analysis

3. GP1 generates coordinate system transformation matrices, tables of grid point locations, and tables for relating internal and external grid point numbers.

6. GP2 generates Element Connection Table with internal indices.

8. PLTSET transforms user input into a form used to drive structure plotter.

10. PRTMSG prints error messages associated with structure plotter.

14. Go to DMAP No. 17 if no undeformed structure plot request.

15. PLØT generates all requested undeformed structure plots.

16. PRTMSG prints plotter data and engineering data for each undeformed plot generated.

18. GP3 generates Grid Point Temperature Table.

20. TA1 generates element tables for use in matrix assembly and stress recovery.

22. Go to DMAP No. 140 and print error message if there are no structural elements.

25. SMA1 generates stiffness matrix $[K^{X}_{gg}]$ and Grid Point Singularity Table.

27. SMA2 generates mass matrix $[M_{gg}]$.

29. Go to DMAP No. 140 and print error message if no mass matrix exists.

31. Go to DMAP No. 35 if no weight and balance request.

32. GPWG generates weight and balance information.

33. ØFP formats weight and balance information and places it on the system output file for printing.

36. Equivalence $[K^{X}_{gg}]$ to $[K_{gg}]$ if no general elements.

38. Go to DMAP No. 41 if no general elements.

39. SMA3 adds general elements to stiffness matrix $[K^{X}_{gg}]$ to obtain stiffness matrix $[K_{gg}]$.

43. GP4 generates flags defining members of various displacement sets (USET) and forms multipoint constraint equations $[R_g]\{u_g\} = 0$.

47. Equivalence $[K_{gg}]$ to $[K_{nn}]$ and $[M_{gg}]$ to $[M_{nn}]$ if no multipoint constraints.

49. Go to DMAP No. 53 if general elements present.

50. GPSP determines if possible grid point singularities remain.

51. ØFP formats table of possible grid point singularities and places it on the system output file for printing.

54. Go to DMAP No. 59 if no multipoint constraints.

55. MCE1 partitions multipoint constraint equations $[R_g] = [R_m \mid R_n]$ and solves for multipoint constraint transformation matrix $[G_m] = -[R_m]^{-1}[R_n]$.

57. MCE2 partitions stiffness and mass matrices

$$[K_{gg}] = \left[\begin{array}{c|c} \bar{K}_{nn} & K_{nm} \\ \hline K_{mn} & K_{mm} \end{array}\right] \quad \text{and} \quad [M_{gg}] = \left[\begin{array}{c|c} \bar{M}_{nn} & M_{nm} \\ \hline M_{mn} & M_{mm} \end{array}\right]$$

and performs matrix reductions

$$[K_{nn}] = [\bar{K}_{nn}] + [G_m^T][K_{mn}] + [K_{mn}^T][G_m] + [G_m^T][K_{mm}][G_m] \quad \text{and}$$

$$[M_{nn}] = [\bar{M}_{nn}] + [G_m^T][M_{mn}] + [M_{mn}^T][G_m] + [G_m^T][M_{mm}][G_m].$$

60. Equivalence $[K_{nn}]$ to $[K_{ff}]$ and $[M_{nn}]$ to $[M_{ff}]$ if no single-point constraints.

62. Go to DMAP No. 65 if no single-point constraints.

63. SCE1 partitions out single-point constraints

$$[K_{nn}] = \left[\begin{array}{c|c} K_{ff} & K_{fs} \\ \hline K_{sf} & K_{ss} \end{array}\right] \quad \text{and} \quad [M_{nn}] = \left[\begin{array}{c|c} M_{ff} & M_{fs} \\ \hline M_{sf} & M_{ss} \end{array}\right] .$$

66. Equivalence $[K_{ff}]$ to $[K_{aa}]$ and $[M_{ff}]$ to $[M_{aa}]$ if no omitted coordinates.

68. Go to DMAP No. 71 if no omitted coordinates.

69. SMP1 partitions constrained stiffness and mass matrices

$$[K_{ff}] = \left[\begin{array}{c|c} \bar{K}_{aa} & K_{ao} \\ \hline K_{oa} & K_{oo} \end{array}\right] \quad \text{and} \quad [M_{ff}] = \left[\begin{array}{c|c} \bar{M}_{aa} & M_{ao} \\ \hline M_{oa} & M_{oo} \end{array}\right] ,$$

solves for transformation matrix $[G_o] = -[K_{oo}]^{-1}[K_{oa}]$

and performs matrix reduction $[K_{aa}] = [\bar{K}_{aa}] + [K_{oa}^T][G_o]$

and $[M_{aa}] = [\bar{M}_{aa}] + [M_{oa}^T][G_o] + [G_o^T][M_{oa}] + [G_o^T][M_{oo}][G_o]$.

72. Go to DMAP No. 81 if no free-body supports.

73. RBMG1 partitions out free-body supports

$$[K_{aa}] = \left[\begin{array}{c|c} K_{\ell\ell} & K_{\ell r} \\ \hline K_{r\ell} & K_{rr} \end{array}\right] \quad \text{and} \quad [M_{aa}] = \left[\begin{array}{c|c} M_{\ell\ell} & M_{\ell r} \\ \hline M_{r\ell} & M_{rr} \end{array}\right] .$$

75. RBMG2 decomposes constrained stiffness matrix $[K_{\ell\ell}] = [L_{\ell\ell}][U_{\ell\ell}]$.

77. RBMG3 forms rigid body transformation matrix

$$[D] = -[K_{\ell\ell}]^{-1}[K_{\ell r}],$$

calculates rigid body check matrix

$$[X] = [K_{rr}] + [K_{\ell r}^T][D],$$

and calculates rigid body error ratio

$$\varepsilon = \frac{||X||}{||K_{rr}||}$$

79. RBMG4 forms rigid body mass matrix $[m_r] = [M_{rr}] + [M_{\ell r}^T][D] + [D^T][M_{\ell r}] + [D^T][M_{\ell\ell}][D]$.

82. DPD generates flags defining members of various displacement sets used in dynamic analysis (USETD), tables relating internal and external grid point numbers, including extra points introduced for dynamic analysis, and prepares Transfer Function Pool and Eigenvalue Extraction Data.

84. Go to DMAP No. 138 and print error message if no Eigenvalue Extraction Data.

85. Equivalence $[G_o]$ to $[G_o^d]$ and $[G_m]$ to $[G_m^d]$ if no extra points introduced for dynamic analysis.

87. READ extracts real eigenvalues from the equation

$$[K_{aa} - \lambda M_{aa}]\{u_a\} = 0 ,$$

calculates rigid body modes by finding a square matrix $[\phi_{ro}]$ such that

$$[m_o] = [\phi_{ro}^T][m_r][\phi_{ro}]$$

is diagonal and normalized and computes rigid body eigenvectors

$$[\phi_{ao}] = \begin{bmatrix} D_m \phi_{ro} \\ \hline \phi_{ro} \end{bmatrix} ,$$

calculates modal mass matrix

$$[m] = [\phi_a^T][M_{aa}][\phi_a]$$

and normalizes eigenvectors according to one of the following user requests:

1) Unit value of selected coordinate
2) Unit value of largest component
3) Unit value of generalized mass.

90. ØFP formats the summary of eigenvalues and summary of eigenvalue extraction information and places them on the system output file for printing.

92. Go to DMAP No. 142 and print error message if no eigenvalues found.

95. Go to next DMAP instruction if cold start or modified restart. LBL13 will be altered by the Executive System to the proper location inside the loop for unmodified starts within the loop.

96. Beginning of loop for additional sets of direct input matrices.

98. CASE extracts user requests from CASECC for current loop.

101. MTRXIN selects the direct input matrices for the current loop, $[K_{pp}^2]$, $[M_{pp}^2]$ and $[B_{pp}^2]$.

104. Equivalence $[M^2_{pp}]$ to $[M^2_{dd}]$, $[B^2_{pp}]$ to $[B^2_{dd}]$ and $[K^2_{pp}]$ to $[K^2_{dd}]$ if no constraints applied.

106. GKAD applies constraints to direct input matrices $[K^2_{pp}]$, $[M^2_{pp}]$ and $[B^2_{pp}]$, forming $[K^2_{dd}]$, $[M^2_{dd}]$ and $[B^2_{dd}]$.

108. GKAM assembles stiffness mass and damping matrices in modal coordinates for use in Complex Eigenvalue Analysis.

$$[K_{hh}] = [k] + [\phi^T_{dh}][K^2_{dd}][\phi_{dh}] ,$$

$$[M_{hh}] = [m] + [\phi^T_{dh}][M^2_{dd}][\phi_{dh}],$$

$$[B_{hh}] = [b] + [\phi^T_{dh}][B^2_{dd}][\phi_{dh}],$$

where m_i = modal masses

$b_i = m_i\ 2\pi\ f_i\ g(f_i)$

$k_i = m_i\ 4\pi^2\ f_i^2$

and direct input matrices may be complex.

111. CEAD extracts complex eigenvalues from the equation

$$[M_{hh}p^2 + B_{hh}p + K_{hh}]\{u_h\} = 0$$

and normalizes eigenvectors according to one of the following user requests:
(1) Unit magnitude of selected coordinate
(2) Unit magnitude of largest component.

114. ØFP formats the summary of complex eigenvalues and summary of eigenvalue extraction information and places them on the system output file for printing.

116. Go to DMAP No. 131 if no complex eigenvalues found.

117. VDR prepares eigenvectors for output, using only the extra points introduced for dynamic analysis and modal coordinates.

119. Go to DMAP No. 122 if no output request for the extra points introduced for dynamic analysis or modal coordinates.

120. ØFP formats eigenvectors for extra points introduced for dynamic analysis and modal coordinates and places them on the system output file for printing.

123. Go to DMAP No. 131 if no output request involving dependent degrees of freedom or forces and stresses.

124. DDR1 transforms the complex eigenvectors from modal to physical coordinates

$$[\phi_d] = [\phi_{dh}][\phi_h].$$

126. SDR1 recovers dependent components of eigenvectors

$$\{\phi_o\} = [G_o^d]\{\phi_d\} \quad , \qquad \begin{Bmatrix} \phi_d \\ \hline \phi_o \end{Bmatrix} = \{\phi_f + \phi_e\} \quad ,$$

$$\begin{Bmatrix} \phi_f + \phi_e \\ \hline \phi_s \end{Bmatrix} = \{\phi_n + \phi_e\} \quad , \qquad \{\phi_m\} = [G_m^d]\{\phi_n + \phi_e\} \quad ,$$

$$\begin{Bmatrix} \phi_n + \phi_e \\ \hline \phi_m \end{Bmatrix} = \{\phi_p\}$$

and recovers single-point forces of constraint $\{q_s\} = [K_{fs}^T]\{\phi_f\}$.

128. SDR2 calculates element forces and stresses (ØESC1, ØEFC1) and prepares eigenvectors and single-point forces of constraint for outuptut (ØCPHIP, ØQPC1).

129. ØFP formats tables prepared by SDR2 and places them on system output file for printing.

132. Go to DMAP No. 144 if no additional sets of direct input matrices need to be processed.

133. Go to DMAP No. 96 if additional sets of direct input matrices need to be processed.

134. Go to DMAP No. 136 and print error message if more than 100 loops.

135. Go to DMAP No. 144 and make normal exit.

137. MØDAL CØMPLEX EIGENVALUE ANALYSIS ERRØR MESSAGE NØ. 3 - ATTEMPT TØ EXECUTE MØRE THAN 100 LØØPS.

139. MØDAL CØMPLEX EIGENVALUE ANALYSIS ERRØR MESSAGE NØ. 2 - EIGENVALUE EXTRACTIØN DATA REQUIRED FØR REAL EIGENVALUE ANALYSIS.

141. MØDAL CØMPLEX EIGENVALUE ANALYSIS ERRØR MESSAGE NØ. 1 - MASS MATRIX REQUIRED FØR MØDAL FØRMULATIØN.

143. MØDAL CØMPLEX EIGENVALUE ANALYSIS ERRØR MESSAGE NØ. 4 - REAL EIGENVALUES REQUIRED FØR MØDAL FØRMULATIØN.

3.11.3 Restart Tables for Modal Complex Eigenvalue Analysis

3.11.3.1 Bit Positions for Card Name Restart Table

Card Name	Bit Pos.	Card Name	Bit Pos.	Card Name	Bit Pos.
AXIC	1	PBAR	3	ØMIT1	11
CELAS1	1	PBEAM	3	ØMITAX	11
CELAS2	1	PCØNEAX	3	SUPAX	12
CELAS3	1	PQDMEM	3	SUPØRT	12
CELAS4	1	PQDPLT	3	TEMP	13
CMASS1	1	PQUAD1	3	TEMPAX	13
CMASS2	1	PQUAD2	3	TEMPD	13
CMASS3	1	PRØD	3	WTMASS	14
CMASS4	1	PSHEAR	3	GRDPNT	15
CØRD1C	1	PTØRDRG	3	PLØTEL	16
CØRD1R	1	PTRBSC	3	PLØT$	18
CØRD1S	1	PTRIA1	3	PØUT$	19
CØRD2C	1	PTRIA2	3	AØUT$	21
CØRD2R	1	PTRMEM	3	LØØP$	22
CØRD2S	1	PTRPLT	3	LØØP1$	23
GRDSET	1	PTUBE	3	CØUPMASS	24
GRID	1	PTWIST	3	NØLØØP$	25
PØINTAX	1	GENEL	4	EPØINT	56
RINGAX	1	CØNM1	5	SEQEP	56
SECTAX	1	CØNM2	5	TF	56
SEQGP	1	PELAS	6	DMIG	57
SPØINT	1	PMASS	7	B2PP$	57
BARØR	2	MAT1	8	K2PP$	57
BEAMØR	2	MAT2	8	M2PP$	57
CBAR	2	MAT3	8	TF$	57
CBEAM	2	MATT1	8	EIGP	58
CCØNEAX	2	MATT2	8	EIGR	58
CØNRØD	2	MATT3	8	METHØD$	59
CQDMEM	2	TABLEM1	8	EIGC	60
CQDPLT	2	TABLEM2	8	CMETHØD$	61
CQUAD1	2	TABLEM3	8	HFREQ	62
CQUAD2	2	TABLEM4	8	LFREQ	62
CRØD	2	TEMPMT$	8	LMØDES	62
CSHEAR	2	TEMPMX$	8	SDAMP$	62
CTØRDRG	2	MPC	9	TABDMP1	62
CTRAPRG	2	MPCADD	9		
CTRBSC	2	MPCAX	9		
CTRIA1	2	MPC$	9		
CTRIA2	2	SPC	10		
CTRIARG	2	SPC1	10		
CTRMEM	2	SPCADD	10		
CTRPLT	2	SPCAX	10		
CTUBE	2	SPC$	10		
CTWIST	2	ØMIT	11		

3.11.3.2 Bit Positions for File Name Restart Table

File Name	Bit Pos.
BGPDT	94
CSTM	94
EQEXIN	94
GPDT	94
GPL	94
SIL	94
ECT	95
GPTT	96
ECPT	97
EST	97
GEI	97
GPCT	97
GPST	98
KGGX	98
MGG	99
KGG	100
RG	101
USET	101
YS	101
ØGPST	102
GM	103
KNN	104
MNN	104
KFF	105
KFS	105
MFF	105
GØ	106
KAA	106
KØØB	106
LØØ	106
MAA	106
MØAB	106
MØØB	106
UØØ	106
KLL	107
KLR	107
KRR	107
MLL	107
MLR	107
MRR	107
LLL	108
ULL	108
DM	109
MR	110
EED	111
EQDYN	111

File Name	Bit Pos.
GPLD	111
SILD	111
TFPØØL	111
USETD	111
LAMA	112
MI	112
PHIA	112
ØEIGS	112
CASEXX	113
B2PP	114
K2PP	114
M2PP	114
GMD	115
GØD	115
B2DD	115
K2DD	115
M2DD	115
BHH	116
KHH	116
MHH	116
PHIDH	116
CALMA	117
ØCEIGS	117
PHIH	117
ØPHIH	118
CPHID	119
CPHIP	120
QPC	120
ØCPHIP	121
ØEFC1	121
ØESC1	121
ØQPC1	121

3.11.3.3 Card Name Restart Table

DMAP Inst.	Bit Position 1	10	20	30	40	50	60
BEGIN	12345678901234	56 89 1234					6789C12
FILE	12345678901234	56 89 1234					6789C12
GP1	1						
SAVE	1						
CHKPNT	1						
GP2	12 45	6					
CHKPNT	12 45	6					
PLTSET		8					
SAVE		8					
PRTMSG		8					
CHKPNT		8					
SETVAL		8					
SAVE		8					
COND		8					
PLOT		8					
PRTMSG		8					
LABEL		8					
GP3	1	3					
CHKPNT	1	3					
TA1,	1234567						
SAVE	1234567						
COND	12345678	4					
PURGE	1234567						
CHKPNT	1234567						
SMA1	123 6 8						
CHKPNT	123 6 8						
SMA2	123 5 78	4	4				
SAVE	123 5 78	4	4				
COND	123 5 78	4	4				
CHKPNT	123 5 78	4	4				
COND	123 5 78	45					
GPWG	123 5 78	45					
OFP	123 5 78	45					
SAVE	123 5 78	45					
LABEL	123 5 78	45					
EQUIV	123 6 8						
CHKPNT	123 6 8						
COND	123 6 8						
SMA3	1234 6 8						
CHKPNT	1234 6 8						
LABEL	1234 6 8						
PARAM	1	9012					
GP4	1	9012					
SAVE	1	9012					
PARAM	1	9012					
PURGE	1	9012					
EQUIV	123456789		4				
CHKPNT	1	9					
COND	123 6 8 0						
GPSP	123 6 8 0						
OFP	123 6 8 0						
SAVE	123 6 8 0						
LABEL	123 6 8 0						
COND	123456789		4				
MCE1	1	9					
CHKPNT	1	9					
MCE2	123456789		4				

DMAP Inst.	Bit Position 1 10 20 30 40 50 60
CHKPNT	123456789 4
LABEL	123456789 4
EQUIV	1234567890 4
CHKPNT	1234567890 4
COND	1234567890 4
SCE1	1234567890 4
CHKPNT	1234567890 4
LABEL	1234567890 4
EQUIV	12345678901 4
CHKPNT	12345678901 4
COND	12345678901 4
SMP1	12345678901 4
CHKPNT	12345678901 4
LABEL	12345678901 4
COND	123456789012 4
RBMG1	123456789012 4
CHKPNT	123456789012 4
RBMG2	1234 6 89012
CHKPNT	1234 6 89012
RBMG3	1234 6 89012
CHKPNT	1234 6 89012
RBMG4	123456789012 4
CHKPNT	123456789012 4
LABEL	123456789012 4
DPD	1 9012 6 8 0
SAVE	1 9012 6 8 0
COND	1 9012 6 8 0
EQUIV	123456789012 234 6789
CHKPNT	1 9012 6 8
READ	123456789012 4 89
SAVE	123456789012 4 89
CHKPNT	123456789012 4 89
OFP	123456789012 4 89
SAVE	123456789012 4 89
COND	123456789012 4 89
PARAM	23
PARAM	12345678901234 6 23 6789012
JUMP	23
$SS	1 3
LABEL	1234567890123456 89 123 6789012
PURGE	23
CASE	12345678901234 6 23 5 6789012
SAVE	12345678901234 6 23 5 6789012
CHKPNT	12345678901234 6 23 5 6789012
MTRXIN	1 23 67
SAVE	1 23 67
PURGE	123456789012 23 67
EQUIV	123456789012 23 67
CHKPNT	123456789012 23 67
GKAD	123456789012 234 6789
CHKPNT	123456789012 234 6789
GKAM	123456789012 234 6789 2
SAVE	123456789012 234 6789 2
CHKPNT	123456789012 234 6789 2
CEAD	123456789012 234 6789012
SAVE	123456789012 234 6789012
CHKPNT	123456789012 234 6789012

DMAP Inst.	Bit Position 1 10 20 30 40 50 60
OFP	123456789012 234 6789012
SAVE	123456789012 234 6789012
CCND	1
VDR	1
SAVE	1
CCND	1
OFP	1
SAVE	1
LABEL	1
COND	123456789012 234 6789012
DDR1	123456789012 234 6789012
CHKPNT	123456789012 234 6789012
SDR1	123456789012 234 6789012
CHKPNT	123456789012 234 6789012
SDR2	9
OFP	9
SAVE	9
LABEL	123456789012 6789012
COND	23
$SS	1 3
REPT	23
$SS	1 3
JUMP	23
$SS	1 3
JUMP	1234567890123456 89 1234 6789012
LABEL	23
$SS	1 3
PRTPARM	23
$SS	1 3
LABEL	1234567890123456 89 1234 6789012
PRTPARM	1234567890123456 89 1234 6789012
LABEL	1234567890123456 89 1234 6789012
PRTPARM	1234567890123456 89 1234 6789012
LABEL	1234567890123456 89 1234 6789012
PRTPARM	1234567890123456 89 1234 6789012
LABEL	1234567890123456 89 1234 6789012
END	1234567890123456 89 1234 6789012

3.11.3.4 Rigid Format Change Restart Table

DMAP Inst.	Bit Position 63 70 80
BEGIN	3456789C1 34
FILE	3456789C1 34
GP1	
SAVE	
CHKPNT	
GP2	
CHKPNT	
PLTSET	
SAVE	
PRTMSG	
CHKPNT	
SETVAL	
SAVE	
COND	
PLOT	
PRTMSG	
LABEL	
GP3	
CHKPNT	
TA1,	
SAVE	
COND	
PURGE	
CHKPNT	
SMA1	
CHKPNT	
SMA2	3 678
SAVE	3 678
COND	3 678
CHKPNT	3 678
COND	
GPWG	
OFP	
SAVE	
LABEL	
EQUIV	
CHKPNT	
COND	
SMA3	
CHKPNT	
LABEL	
PARAM	
GP4	
SAVE	
PARAM	
PURGE	
EQUIV	
CHKPNT	
COND	
GPSP	
OFP	
SAVE	
LABEL	
COND	
MCE1	
CHKPNT	
MCE2	

DMAP Inst.	Bit Position 63 70 80
CHKPNT	
LABEL	
EQUIV	
CHKPNT	
COND	
SCE1	
CHKPNT	
LABEL	
EQUIV	
CHKPNT	
COND	
SMP1	
CHKPNT	
LABEL	
COND	
RBMG1	
CHKPNT	
RBMG2	
CHKPNT	
RBMG3	
CHKPNT	
RBMG4	
CHKPNT	
LABEL	
DPD	
SAVE	
COND	3456789C1 34
EQUIV	
CHKPNT	
READ	
SAVE	
CHKPNT	
OFP	
SAVE	
COND	3456789C1 34
PARAM	
PARAM	3456789C1 34
JUMP	3456789C1 34
LABEL	3456789C1 34
PURGE	
CASE	3456789C1 34
SAVE	3456789C1 34
CHKPNT	3456789C1 34
MTRXIN	
SAVE	
PURGE	
EQUIV	
CHKPNT	
GKAD	
CHKPNT	
GKAM	
SAVE	
CHKPNT	
CEAD	
SAVE	
CHKPNT	
OFP	

DMAP Inst.	Bit Position 63 70 80
SAVE	
COND	
VDR	
SAVE	
COND	
OFP	
SAVE	
LABEL	
COND	
DDR1	
CHKPNT	
SDR1	3456789C1 34
CHKPNT	3456789C1 34
SDR2	
OFP	
SAVE	
LABEL	
COND	3456789C1 34
REPT	3456789C1 34
JUMP	3456789C1 34
JUMP	3456789C1 34
LABEL	3456789C1 34
PRTPARM	3456789C1 34
LABEL	3456789C1 34
PRTPARM	3456789C1 34
LABEL	3456789C1 34
PRTPARM	3456789C1 34
LABEL	3456789C1 34
PRTPARM	3456789C1 34
LABEL	3456789C1 34
END	3456789C1 34

3.11.3.5 File Name Restart Table

DMAP Inst.	94	Bit Position 100	110	120
BEGIN				
FILE				
GP1	4			
SAVE	4			
CHKPNT	4			
GP2	5			
CHKPNT	5			
PLTSET				
SAVE				
PRTMSG				
CHKPNT				
SETVAL				
SAVE				
COND				
PLOT				
PRTMSG				
LABEL				
GP3	6			
CHKPNT	6			
TA1,	7			
SAVE	7			
COND	7			
PURGE	7	2		
CHKPNT	7			
SMA1	8			
CHKPNT	8			
SMA2	9			
SAVE	9			
COND	9			
CHKPNT	9			
COND				
GPWG				
OFP				
SAVE				
LABEL				
EQUIV	0			
CHKPNT	0			
COND	0			
SMA3	0			
CHKPNT	0			
LABEL	0			
PARAM	1			
GP4	1			
SAVE	1			
PARAM	1			
PURGE	1	3 567 90	5	0
EQUIV	4			
CHKPNT				
COND	2			
GPSP	2			
OFP	2			
SAVE	2			
LABEL	2			
COND	34			
MCE1	3			
CHKPNT	3			
MCE2	4			

DMAP Inst.	94	Bit Position 100	110	120
CHKPNT	4			
LABEL	34			
EQUIV	5			
CHKPNT	5			
COND	5			
SCE1	5			
CHKPNT	5			
LABEL	5			
EQUIV	6			
CHKPNT	6			
COND	6			
SMP1	6			
CHKPNT	6			
LABEL	6			
COND	7890			
RBMG1	7			
CHKPNT	7			
RBMG2	8			
CHKPNT	8			
RBMG3	9			
CHKPNT	9			
RBMG4	0			
CHKPNT	0			
LABEL	7890			
DPD	1			
SAVE	1			
COND	1			
EQUIV		5		
CHKPNT	1			
READ	2			
SAVE	2			
CHKPNT	2			
OFP	2			
SAVE	2			
COND				
PARAM				
PARAM	3			
JUMP	3			
LABEL	3			
PURGE				
CASE	3			
SAVE	3			
CHKPNT	3			
MTRXIN	4			
SAVE	4			
PURGE	4			
EQUIV	4			
CHKPNT	4			
GKAD	5			
CHKPNT	5			
GKAM	6			
SAVE	6			
CHKPNT	6			
CEAD	7			
SAVE	7			
CHKPNT	7			
OFP	7			

DMAP Inst.	Bit Position 94	100	110	120
SAVE				7
CCND				8
VDR				8
SAVE				8
CCND				8
OFP				8
SAVE				8
LABEL				8
CCND				9
DDR1				9
CHKPNT				9
SDR1				0
CHKPNT				0
SDR2				1
OFP				1
SAVE				1
LABEL				
CCND				
REPT				
JUMP				
JUMP				
LABEL				
PRTPARM				
LABEL				
PRTPARM				
LABEL				
PRTPARM				
LABEL				
PRTPARM				
LABEL				
END				

3.11.4 Automatic Output for Modal Complex Eigenvalue Analysis

The Eigenvalue Summary Table and the Eigenvalue Analysis Summary, as described under Normal Mode Analysis, are automatically printed. All real eigenvalues extracted are included even though not all are used in the modal formulation.

The Complex Eigenvalue Summary Table and the Complex Eigenvalue Analysis Summary, as described under Direct Complex Eigenvalue Analysis, are automatically printed for each set of direct input matrices.

3.11.5 Case Control Deck and Parameters for Modal Complex Eigenvalue Analysis

The following items related to subcase definition and data selection must be considered in addition to the list presented with Direct Complex Eigenvalue Analysis:

1. METHØD must appear above the subcase level to select an EIGR card that exists in the Bulk Data Deck.
2. All of the eigenvectors used in the modal formulation must be determined in a single execution.
3. An SPC set must be selected above the subcase level unless the model is a free body or all constraints are specified on GRID cards, Scalar Connection cards or with General Elements.
4. SDAMPING must be used to select a TABDMP1 table if structural damping is desired.

Output that may be requested is the same as that described under Direct Complex Eigenvalue Analysis. Output for SØLUTIØN points will have the modal coordinates identified by the mode number determined in Real Eigenvalue Analysis.

The eigenvectors used in the modal formulation may be obtained for the SØLUTIØN points by using the ALTER feature to print the matrix of eigenvectors following the execution of READ. The eigenvectors for all points in the model may be obtained by running the problem initially on the Normal Mode Analysis rigid format or by making a modified restart using the Normal Mode Analysis rigid format.

The following parameters are used in Modal Complex Eigenvalue Analysis:

1. GRDPNT - optional - A positive integer value of this parameter will cause the Grid Point Weight Generator to be executed and the resulting weight and balance information to be printed.

2. WTMASS - optional - The terms of the mass matrix are multiplied by the real value of this parameter when they are generated in SMA2.

3. CØUPMASS - optional - a positive integer value of this parameter will cause the generation of coupled mass matrices rather than lumped mass matrices for all bar elements, rod elements, and plate elements that include bending stiffness (see Section 3.1 for list of elements).

4. LFREQ and HFREQ - required unless LMØDES is used. The real values of these parameters give the frequency range (LFREQ is lower limit and HFREQ is upper limit) of the modes to be used in the modal formulation.

5. LMØDES - required unless LFREQ and HFREQ are used. The integer value of this parameter is the number of lowest modes to be used in the modal formulation.

3.12 MODAL FREQUENCY AND RANDOM RESPONSE

3.12.1 DMAP Sequence for Modal Frequency and Random Response

```
RIGID FORMAT 11

   N A S T R A N  S O U R C E  P R O G R A M  C O M P I L A T I O N
DMAP-DMAP INSTRUCTION
 NO.

  1  BEGIN     NO,11 MODAL FREQUENCY RESPONSE ANALYSIS - SERIES L $

  2  FILE      LLL=TAPE $

  3  (GP1)     GEOM1,GEOM2,/GPL,EQEXIN,GPDT,CSTM,BGPDT,SIL/V,N,LUSET/ C,N,123/
               V,N,NOGPDT $

  4  SAVE      LUSET$

  5  CHKPNT    GPL,EQEXIN,GPDT,CSTM,BGPDT,SIL $

  6  (GP2)     GEOM2,EQEXIN/ECT $

  7  CHKPNT    ECT $

  8  PLTSET    PCDB,EQEXIN,ECT/PLTSETX,PLTPAR,GPSETS,ELSETS/V,N,NSIL/ V,N,
               JUMPPLOT $

  9  SAVE      NSIL,JUMPPLOT $

 10  PRTMSG    PLTSETX//$

 11  CHKPNT    PLTPAR,GPSETS,ELSETS $

 12  SETVAL    //V,N,PLTFLG/C,N,1/V,N,PFILE/C,N,0 $

 13  SAVE      PLTFLG,PFILE $

 14  COND      P1,JUMPPLOT $

 15  (PLOT)    PLTPAR,GPSETS,ELSETS,CASECC,BGPDT,EQEXIN,SIL,,/PLOTX1/ V,N,
               NSIL/V,N,LUSET/V,N,JUMPPLOT/V,N,PLTFLG/V,N,PFILE $

 16  PRTMSG    PLOTX1//$

 17  LABEL     P1 $

 18  (GP3)     GEOM3,EQEXIN,/,GPTT/C,N,123/V,N,NOGRAV/C,N,123 $

 19  CHKPNT    GPTT $

 20  (TA1,)    ,ECT,EPT,BGPDT,SIL,GPTT,CSTM/EST,,GEI,ECPT,GPCT/V,N,LUSET/ C,N,
               123/V,N,NOSIMP/C,N,0/V,N,NOGENL/V,N,GENEL $

 21  SAVE      NOGENL,NOSIMP,GENEL$

 22  COND      ERROR1,NOSIMP$

 23  PURGE     OGPST/GENEL$

 24  CHKPNT    EST,ECPT,GPCT,GEI,OGPST$
```

```
RIGID FORMAT DMAP LISTING
SERIES L

RIGID FORMAT 11

   N A S T R A N  S O U R C E  P R O G R A M  C O M P I L A T I O N
DMAP-DMAP INSTRUCTION
 NO.

 25  (SMA1)    CSTM,MPT,ECPT,GPCT, DIT/KGGX,,GPST/V,N,NOGENL /V,N,NOK4GG$

 26   CHKPNT   KGGX,GPST$

 27  (SMA2)    CSTM,MPT,ECPT,GPCT,DIT/MGG,/V,Y,WTMASS=1.0/V,N,NOMGG/V,N,NOBGG/
               V,Y,COUPMASS=-1 $

 28   SAVE     NOMGG$

 29   COND     ERROR1,NOMGG$

 30   CHKPNT   MGG $

 31   COND     LGPWG,GRDPNT$

 32  (GPWG)    BGPDT,CSTM,EQEXIN,MGG/OGPWG/V,Y,GRDPNT=-1/V,Y,WTMASS$

 33   OFP      OGPWG,,,,,//V,N,CARDNO $

 34   SAVE     CARDNO $

 35   LABEL    LGPWG$

 36   EQUIV    KGGX,KGG/NOGENL $

 37   CHKPNT   KGG $

 38   COND     LBL11,NOGENL $

 39  (SMA3)    GEI,KGGX/KGG/V,N,LUSET/V,N,NOGENL/C,N,-1 $

 40   CHKPNT   KGG $

 41   LABEL    LBL11 $

 42   PARAM    //C,N,MPY/V,N,NSKIP/C,N,0/C,N,0 $

 43  (GP4)     CASECC,GEOM4,EQEXIN,SIL,GPDT/RG,,USET/V,N,LUSET/V,N,MPCF1/ V,N,
               MPCF2/V,N,SINGLE/V,N,OMIT/V,N,REACT/V,N,NSKIP/V,N,REPEAT/ V,N,
               NOSET/V,N,NOL/V,N,NOA $

 44   SAVE     MPCF1,SINGLE,OMIT,REACT,NOSET,MPCF2,NSKIP,REPEAT,NOL,NOA $

 45   PARAM    //C,N,AND/V,N,NOSR/V,N,REACT/V,N,SINGLE$

 46   PURGE    GM,GMD/MPCF1/GO,KOOB,LOO,UOO,MOOB,MOAB,GOD/OMIT/KFS,PSF/SINGLE/
               QPC/NOSR/KLR,KRR,MLR,MRR,DM,MR/REACT/MDD/MODACC $

 47   EQUIV    KGG,KNN/MPCF1/MGG,MNN/MPCF1$

 48   CHKPNT   KRR,KLR,DM,MLR,MRR,MR,GM,RG,GO,KOOB,LOO,UOO, MOOB,MOAB,KFS,PSF,
               QPC,USET,KNN,MNN,GOD,GMD $
```

```
RIGID FORMAT DMAP LISTING
SERIES L

RIGID FORMAT 11

   N A S T R A N  S O U R C E  P R O G R A M  C O M P I L A T I O N
DMAP-DMAP INSTRUCTION
NO.

 49  COND      LBL4,GENEL $
 50  GPSP      GPL,GPST,USET,SIL/OGPST $
 51  OFP       OGPST,,,,,//V,N,CARDNO $
 52  SAVE      CARDNO $
 53  LABEL     LBL4 $
 54  COND      LBL2,MPCF1 $
 55  MCE1      USET,RG/GM $
 56  CHKPNT    GM$
 57  MCE2      USET,GM,KGG,MGG,,/KNN,MNN,,$
 58  CHKPNT    KNN,MNN $
 59  LABEL     LBL2 $
 60  EQUIV     KNN,KFF/SINGLE/MNN,MFF/SINGLE$
 61  CHKPNT    KFF,MFF $
 62  COND      LBL3,SINGLE $
 63  SCE1      USET,KNN,MNN,,/KFF,KFS,,MFF,, $
 64  CHKPNT    KFS,KFF,MFF$
 65  LABEL     LBL3 $
 66  EQUIV     KFF,KAA/OMIT/ MFF,MAA/OMIT$
 67  CHKPNT    KAA,MAA $
 68  COND      LBL5,OMIT $
 69  SMP1      USET,KFF,MFF,,/GO,KAA,KOOB,LOO,UOO,MAA,MOOB,MOAB,, $
 70  CHKPNT    KAA,MAA,GO$
 71  LABEL     LBL5 $
 72  EQUIV     KAA,KLL/REACT $
 73  CHKPNT    KLL $
 74  COND      LBL6,REACT $
 75  RBMG1     USET,KAA,MAA/KLL,KLR,KRR,MLL,MLR,MRR$
```

```
RIGID FORMAT DMAP LISTING
SERIES L

RIGID FORMAT 11

   N A S T R A N  S O U R C E  P R O G R A M  C O M P I L A T I O N
DMAP-DMAP INSTRUCTION
 NO.

 76   CHKPNT    KLL,KLR,KRR,MLL,MLR,MRR$

 77   JUMP      LBL8 $

 78   LABEL     LBL6 $

 79   COND      LBL7,MODACC $

 80   LABEL     LBL8 $

 81   (RBMG2)   KLL/LLL,ULL $

 82   CHKPNT    ULL,LLL$

 83   COND      LBL7,REACT $

 84   (RBMG3)   LLL,ULL,KLR,KRR/DM $

 85   CHKPNT    DM $

 86   (RBMG4)   DM,MLL,MLR,MRR/MR$

 87   CHKPNT    MR $

 88   LABEL     LBL7 $

 89   (DPD)     DYNAMICS,GPL,SIL,USET/GPLD,SILD,USETD,TFPOOL,DLT,PSDL,FRL,,,
                EED,EQDYN/V,N,LUSET/V,N,LUSETD/V,N,NOTFL/V,N,NODLT/V,N,NOPSDL/
                V,N,NOFRL/V,N,NONLFT/V,N,TRL/V,N,NOEED/C,N,123/V,N,NOUE $

 90   SAVE      LUSETD,NOUE,NODLT,NOFRL,NOEED,NOPSDL $

 91   COND      ERROR2,NOEED$

 92   PURGE     UEVF/NOUE $

 93   EQUIV     GO,GOD/NOUE/GM,GMD/NOUE $

 94   CHKPNT    USETD,EQDYN,TFPOOL,DLT,FRL,EED,GOD,GMD,UEVF,SILD,PSDL,GPLD $

 95   (READ)    KAA,MAA,MR,DM,EED,USET,CASECC/LAMA,PHIA,MI,OEIGS/C,N,MODES/V,N,
                NEIGV$

 96   SAVE      NEIGV $

 97   CHKPNT    LAMA,PHIA,MI,OEIGS $

 98   OFP       OEIGS,LAMA,,,,//V,N,CARDNO $

 99   SAVE      CARDNO $

100   COND      ERROR4,NEIGV $
```

```
 RIGID FORMAT DMAP LISTING
 SERIES L

 RIGID FORMAT 11

    N A S T R A N  S O U R C E  P R O G R A M  C O M P I L A T I O N
DMAP=DMAP INSTRUCTION
 NO.

101   PARAM     //C,N,ADD/V,N,NEVER/C,N,1/C,N,0 $

102   PARAM     //C,N,MPY/V,N,REPEATF/C,N,1/C,N,-1 $

103   JUMP      LBL13 $

104   LABEL     LBL13 $

105   PURGE     OUAVC1,OUHVC2,XYPLTFA,OPPC1,OQPC1,OUPVC1,OESC1,OEFC1,OPPC2,
                OQPC2,OUPVC2,OESC2,OEFC2,XYPLTF,PSDF,AUTO,XYPLTR/NEVER $

106   (CASE)    CASECC,PSDL/CASEXX/C,N,FREQ/V,N,REPEATF/V,N,NOLOOP $

107   SAVE      REPEATF,NOLOOP $

108   CHKPNT    CASEXX $

109   (MTRXIN)  CASEXX,MATPOOL,EQDYN,,TFPOOL/K2PP,M2PP,B2PP/V,N,LUSETD/V,N,
                NOK2PP/V,N,NOM2PP/V,N,NOB2PP $

110   SAVE      NOK2PP,NOM2PP,NOB2PP $

111   PURGE     K2DD/NOK2PP/M2DD/NOM2PP/B2DD/NOB2PP$

112   PARAM     //C,N,AND/V,N,MDEMA/V,N,NOUE/V,N,NOM2PP$

113   EQUIV     M2PP,M2DD/NOA/B2PP,B2DD/NOA/K2PP,K2DD/NOA/MAA,MDD/MDEMA $

114   CHKPNT    K2PP,M2PP,B2PP,K2DD,M2DD,B2DD,MDD $

115   (GKAD)    USETD,GM,GO,,,MAA,,K2PP,M2PP,B2PP/,,MDD,GMD, GOD,K2DD,M2DD,
                B2DD/C,N,FREQRESP/C,N,DISP/C,N,MODAL/C,N,0,0/ C,N,0,0/C,N,0,0/
                V,N,NOK2PP/V,N,NOM2PP/V,N,NOB2PP/ V,N,MPCF1/V,N,SINGLE/V,N,
                OMIT/V,N,NOUE/C,N,-1/C,N,-1/ C,N,-1/V,Y,MODACC = -1 $

116   CHKPNT    MDD,GMD,GOD,K2DD,M2DD,B2DD $

117   (GKAM)    USETD,PHIA,MI,LAMA,DIT,M2DD,B2DD,K2DD,CASEXX / MHH,BHH,KHH,
                PHIDH/V,N,NOUE/C,Y,LMODES=0/C,Y,LFREQ=0.0/C,Y, HFREQ=0.0/V,N,
                NOM2PP/V,N,NOB2PP/V,N,NOK2PP/V,N,NONCUP/ V,N,FMODE $

118   SAVE      NONCUP,FMODE $

119   CHKPNT    MHH,BHH,KHH,PHIDH $

120   COND      ERROR5,NOFRL $

121   COND      ERROR6,NODLT $

122   (FRRD)    CASEXX,USETD,DLT,FRL,GMD,GOD,KHH,BHH,MHH,PHIDH,DIT/UHVF,PSF,
                PDF,PPF/C,N,DISP/C,N,MODAL/V,N,LUSETD/V,N,MPCF1/V,N,SINGLE/V,N,
                OMIT/V,N,NONCUP/V,N,FRQSET $
```

```
 RIGID FORMAT DMAP LISTING
 SERIES L

 RIGID FORMAT 11

    N A S T R A N  S O U R C E  P R O G R A M  C O M P I L A T I O N
DMAP-DMAP INSTRUCTION
 NO.

123   SAVE      FRQSET $

124   EQUIV     PPF,PDF/NOSET $

125   CHKPNT    PSF,PPF,UHVF,PDF $

126   VDR       CASEXX,EQDYN,USETD,UHVF,PPF,XYCDB,/OUHVC1,/C,N,FREQRESP/ C,N,
                MODAL/V,N,NOSORT2/V,N,NOH/V,N,NOP/V,N,FMODE $

127   SAVE      NOH,NOP,NOSORT2 $

128   COND      LBL16,NOH $

129   COND      LBL16A,NOSORT2 $

130   CHKPNT    OUHVC1 $

131   SDR3      OUHVC1,,,,,/OUHVC2,,,,, $

132   OFP       OUHVC2,,,,,//V,N,CARDNO $

133   SAVE      CARDNO $

134   CHKPNT    OUHVC2 $

135   XYTRAN    XYCDB,OUHVC2,,,,/XYPLTFA/C,N,FREQ/C,N,HSET/V,N,PFILE/ V,N,
                CARDNO $

136   SAVE      PFILE,CARDNO $

137   XYPLOT    XYPLTFA // $

138   JUMP      LBL16 $

139   LABEL     LBL16A $

140   OFP       OUHVC1,,,,,//V,N,CARDNO $

141   SAVE      CARDNO $

142   LABEL     LBL16 $

143   COND      LBL14,NOP $

144   PARAM     //C,N,NOT/V,N,NOMOD/V,Y,MODACC $

145   DDR1      UHVF,PHIDH/UDV1F $

146   CHKPNT    UDV1F $

147   COND      LBLMOD,MODACC $

148   DDR2      USETD,UDV1F,PDF,K2DD,B2DD,MDD,FRL,ULL,LLL,DM/UDV2F,UEVF,PAF/ C,
```

```
 RIGID FORMAT DMAP LISTING
 SERIES L

 RIGID FORMAT 11

    N A S T R A N  S O U R C E  P R O G R A M  C O M P I L A T I O N
DMAP-DMAP INSTRUCTION
 NO.
                N,FREQRESP/V,N,NOUE/V,N,REACT/V,N,FRQSET $

149   CHKPNT    UDV2F,UEVF,PAF $

150   EQUIV     UDV2F,UDV1F/NOMOD $

151   CHKPNT    UDV1F $

152   LABEL     LBLMOD $

153   SDR1      USETD,,UDV1F,,,GOD,GMD,PSF,KFS,,/UPVC,,QPC/C,N,1/C,N,DYNAMICS $

154   CHKPNT    UPVC,QPC $

155   SDR2      CASEXX,CSTM,MPT,DIT,EQDYN,SILD,,,,PPF,QPC,UPVC,EST,XYCDB/OPPC1,
                OQPC1,OUPVC1,OESC1,OEFC1,/C,N,FREQ/V,N,NOSORT2 $

156   SAVE      NOSORT2 $

157   COND      LBL18,NOSORT2 $

158   SDR3      OPPC1,OQPC1,OUPVC1,OESC1,OEFC1,/OPPC2,OQPC2,OUPVC2,OESC2,
                OEFC2, $

159   CHKPNT    OUPVC2,OPPC2,OQPC2,OESC2,OEFC2 $

160   OFP       OPPC2,OQPC2,OUPVC2,OEFC2,OESC2,//V,N,CARDNO $

161   SAVE      CARDNO $

162   XYTRAN    XYCDB,OPPC2,OQPC2,OUPVC2,OESC2,OEFC2/XYPLTF/C,N,FREQ/C,N,PSET/
                V,N,PFILE/V,N,CARDNO $

163   SAVE      PFILE,CARDNO $

164   XYPLOT    XYPLTF// $

165   COND      LBL14,NOPSDL $

166   RANDOM    XYCDB,DIT,PSDL,OUPVC2,OPPC2,OQPC2,OESC2,OEFC2,CASEXX/PSDF,AUTO/
                V,N,NORD $

167   SAVE      NORD $

168   CHKPNT    PSDF,AUTO $

169   COND      LBL14,NORD $

170   XYTRAN    XYCDB,PSDF,AUTO,,,/XYPLTR/C,N,RAND/C,N,PSET/V,N,PFILE/ V,N,
                CARDNO $

171   SAVE      PFILE,CARDNO $
```

```
 RIGID FORMAT DMAP LISTING
 SERIES L

 RIGID FORMAT 11

    N A S T R A N  S O U R C E  P R O G R A M  C O M P I L A T I O N
DMAP-DMAP INSTRUCTION
 NO.

172  XYPLOT   XYPLTR// $

173  JUMP     LBL14 $

174  LABEL    LBL18 $

175  OFP      OUPVC1,OPPC1,OQPC1,OEFC1,OESC1,//V,N,CARDNO $

176  SAVE     CARDNO $

177  LABEL    LBL14 $

178  COND     FINIS,REPEATF $

179  REPT     LBL13,100 $

180  JUMP     ERROR3 $

181  JUMP     FINIS $

182  LABEL    ERROR3 $

183  PRTPARM  //C,N,-3/C,N,MDLFRRD$

184  LABEL    ERROR2$

185  PRTPARM  //C,N,-2/C,N,MDLFRRD$

186  LABEL    ERROR1$

187  PRTPARM  //C,N,-1/C,N,MDLFRRD$

188  LABEL    ERROR4$

189  PRTPARM  //C,N,-4/C,N,MDLFRRD$

190  LABEL    ERROR5$

191  PRTPARM  //C,N,-5/C,N,MDLFRRD$

192  LABEL    ERROR6$

193  PRTPARM  //C,N,-6/C,N,MDLFRRD$

194  LABEL    FINIS$

195  END      $
```

3.12.2 Description of DMAP Operations for Modal Frequency and Random Response

3. GP1 generates coordinate system transformation matrices, tables of grid point locations, and tables for relating internal and external grid point numbers.

6. GP2 generates Element Connection Table with internal indices.

8. PLTSET transforms user input into a form used to drive structure plotter.

10. PRTMSG prints error messages associated with structure plotter.

14. Go to DMAP No. 17 if no undeformed structure plot request.

15. PLØT generates all requested undeformed structure plots.

16. PRTMSG prints plotter data and engineering data for each undeformed plot generated.

20. GP3 generates Grid Point Temperature Table.

20. TA1 generates element tables for use in matrix assembly and stress recovery.

22. Go to DMAP No. 186 and print error message if there are no structural elements.

25. SMA1 generates stiffness matrix $[K^{X}_{gg}]$ and Grid Point Singularity Table.

27. SMA2 generates mass matrix $[M_{gg}]$.

29. Go to DMAP No. 186 and print error message if no mass matrix exists.

31. Go to DMAP No. 35 if no weight and balance request.

32. GPWG generates weight and balance information.

33. ØFP formats weight and balance information and places it on the system output file for printing.

36. Equivalence $[K^{X}_{gg}]$ to $[K_{gg}]$ if no general elements.

38. Go to DMAP No. 41 if no general elements.

39. SMA3 adds general elements to stiffness matrix $[K^{X}_{gg}]$ to obtain stiffness matrix $[K_{gg}]$.

43. GP4 generates flags defining members of various displacement sets (USET) and forms multipoint constraint equations $[R_g]\{u_g\} = 0$.

47. Equivalence $[K_{gg}]$ to $[K_{nn}]$ and $[M_{gg}]$ to $[M_{nn}]$ if no multipoint constraints.

49. Go to DMAP No. 53 if general elements present.

50. GPSP determines if possible grid point singularities remain.

51. ØFP formats table of possible grid point singularities and places it on the system output file for printing.

54. Go to DMAP No. 59 if no multipoint constraints.

55. MCE1 partitions multipoint constraint equations $[R_g] = [R_m \mid R_n]$ and solves for multipoint constraint transformation matrix $[G_m] = -[R_m]^{-1}[R_n]$.

57. MCE2 partitions stiffness and mass matrices

$$[K_{gg}] = \left[\begin{array}{c|c} \bar{K}_{nn} & K_{nm} \\ \hline K_{mn} & K_{mm} \end{array}\right] \quad \text{and} \quad [M_{gg}] = \left[\begin{array}{c|c} \bar{M}_{nn} & M_{nm} \\ \hline M_{mn} & M_{mm} \end{array}\right]$$

and performs matrix reductions

$$[K_{nn}] = [\bar{K}_{nn}] + [G_m^T][K_{mn}] + [K_{mn}^T][G_m] + [G_m^T][K_{mm}][G_m] \quad \text{and}$$

$$[M_{nn}] = [\bar{M}_{nn}] + [G_m^T][M_{mn}] + [M_{mn}^T][G_m] + [G_m^T][M_{mm}][G_m].$$

60. Equivalence $[K_{nn}]$ to $[K_{ff}]$ and $[M_{nn}]$ to $[M_{ff}]$ if no single-point constraints.

62. Go to DMAP No. 65 if no single-point constraints.

63. SCE1 partitions out single-point constraints

$$[K_{nn}] = \left[\begin{array}{c|c} K_{ff} & K_{fs} \\ \hline K_{sf} & K_{ss} \end{array}\right] \quad \text{and} \quad [M_{nn}] = \left[\begin{array}{c|c} M_{ff} & M_{fs} \\ \hline M_{sf} & M_{ss} \end{array}\right] .$$

66. Equivalence $[K_{ff}]$ to $[K_{aa}]$ and $[M_{ff}]$ to $[M_{aa}]$ if no omitted coordinates.

68. Go to DMAP No. 71 if no omitted coordinates.

69. SMP1 partitions constrained stiffness and mass matrices

$$[K_{ff}] = \left[\begin{array}{c|c} \bar{K}_{aa} & K_{ao} \\ \hline K_{oa} & K_{oo} \end{array}\right] \quad \text{and} \quad [M_{ff}] = \left[\begin{array}{c|c} \bar{M}_{aa} & M_{ao} \\ \hline M_{oa} & M_{oo} \end{array}\right] ,$$

solves for transformation matrix $[G_o] = -[K_{oo}]^{-1}[K_{oa}]$

and performs matrix reduction $[K_{aa}] = [\bar{K}_{aa}] + [K_{oa}^T][G_o]$

and $[M_{aa}] = [\bar{M}_{aa}] + [M_{oa}^T][G_o] + [G_o^T][M_{oa}] + [G_o^T][M_{oo}][G_o]$.

72. Equivalence $[K_{aa}]$ to $[K_{\ell\ell}]$ if no free-body supports.

74. Go to DMAP No. 78 if no free-body supports.

75. RBMG1 partitions out free-body supports

$$[K_{aa}] = \left[\begin{array}{c|c} K_{\ell\ell} & K_{\ell r} \\ \hline K_{r\ell} & K_{rr} \end{array}\right] \quad \text{and} \quad [M_{aa}] = \left[\begin{array}{c|c} M_{\ell\ell} & M_{\ell r} \\ \hline M_{r\ell} & M_{rr} \end{array}\right] .$$

77. Go to DMAP No. 80

79. Go to DMAP No. 88 if no request for mode acceleration data recovery.

81. RBMG2 decomposes constrained stiffness matrix $[K_{\ell\ell}] = [L_{\ell\ell}][U_{\ell\ell}]$.

83. Go to DMAP No. 88 if no free-body supports.

88. RBMG3 forms rigid body transformation matrix

$$[D] = -[K_{\ell\ell}]^{-1}[K_{\ell r}],$$

calculates rigid body check matrix

$$[X] = [K_{rr}] + [K_{\ell r}^T][D],$$

and calculates rigid body error ratio

$$\varepsilon = \frac{||X||}{||K_{rr}||}$$

86. RBMG4 forms rigid body mass matrix $[m_r] = [M_{rr}] + [M_{\ell r}^T][D] + [D^T][M_{\ell r}] + [D^T][M_{\ell\ell}][D]$.

89. DPD generates flags defining members of various displacement sets used in dynamic analysis (USETD), tables relating internal and external grid point numbers, including extra points introduced for dynamic analysis, and prepares Transfer Function Pool, Dynamic Loads Table, Power Spectral Density List, Frequency Response List and Eigenvalue Extraction Data.

91. Go to DMAP No. 184 and print error message if no Eigenvalue Extraction Data.

93. Equivalence $[G_o]$ to $[G_o^d]$ and $[G_m]$ to $[G_m^d]$ if no extra points introduced for dynamic analysis.

95. READ extracts real eigenvalues from the equation

$$[K_{aa} - \lambda M_{aa}]\{u_a\} = 0 ,$$

calculates rigid body modes by finding a square matrix $[\phi_{ro}]$ such that

$$[m_o] = [\phi_{ro}^T][m_r][\phi_{ro}]$$

is diagonal and normalized and computes rigid body eigenvectors

$$[\phi_{ao}] = \begin{bmatrix} D_m \phi_{ro} \\ \hline \phi_{ro} \end{bmatrix} ,$$

calculates modal mass matrix

$$[m] = [\phi_a^T][M_{aa}][\phi_a]$$

and normalizes eigenvectors according to one of the following user requests:

1) Unit value of selected coordinate
2) Unit value of largest component
3) Unit value of generalized mass.

98. ØFP formats the summary of eigenvalues and summary of eigenvalue extraction information and places them on the system output file for printing.

100. Go to DMAP No. 188 and print error message if no eigenvalues found.

103. Go to next DMAP instruction if cold start or modified restart. LBL13 will be altered by the Executive System to the proper location inside the loop for unmodified starts within the loop.

104. Beginning of loop for additional sets of direct input matrices.

106. CASE extracts user requests from CASECC for current loop.

109. MTRXIN selects the direct input matrices for the current loop, $[K_{pp}^2]$, $[M_{pp}^2]$ and $[B_{pp}^2]$.

113. Equivalence $[M^2_{pp}]$ to $[M^2_{dd}]$, $[B^2_{pp}]$ to $[B^2_{dd}]$ and $[K^2_{pp}]$ to $[K^2_{dd}]$ if no constraints applied and $[M_{aa}]$ to $[M_{dd}]$ if no direct input mass matrices and no extra points introduced for Dynamic analysis.

115. GKAD applies constraints to direct input matrices $[K^2_{pp}]$, $[M^2_{pp}]$ and $[B^2_{pp}]$, forming $[K^2_{dd}]$, $[M^2_{dd}]$ and $[B^2_{dd}]$.

117. GKAM assembles stiffness mass and damping matrices in modal coordinates for use in Frequency Response.

$$[K_{hh}] = [k] + [\phi^T_{dh}][K^2_{dd}][\phi_{dh}] ,$$

$$[M_{hh}] = [m] + [\phi^T_{dh}][M^2_{dd}][\phi_{dh}],$$

$$[B_{hh}] = [b] + [\phi^T_{dh}][B^2_{dd}][\phi_{dh}],$$

where m_i = modal masses

$b_i = m_i\ 2\pi\ f_i\ g(f_i)$

$k_i = m_i\ 4\pi^2 f_i^2$

and direct input matrices may be complex.

120. Go to DMAP No. 190 and print error message if no Frequency Response List.

121. Go to DMAP No. 192 and print error message if no Dynamic Loads Table.

122. FRRD forms the dynamic load vectors $\{P_h\}$ and solves for the displacements using the following equation

$$[-M_{hh}\omega^2 + iB_{hh}\omega + K_{hh}]\{u_h\} = \{P_h\}.$$

124. Equivalence $\{P_p\}$ to $\{P_d\}$ if no constraints applied.

126. VDR prepares displacements, sorted by frequency, for output using only the extra points introduced for dynamic analysis and modal coordinates (solution points).

128. Go to DMAP No. 142 if no output request for solution points.

129. Go to DMAP No. 139 if no output request for solution points sorted by extra point or mode number.

131. SDR3 sorts the solution point displacements by extra point or mode number.

132. ØFP formats the requested solution point displacements sorted by extra point or mode number and places them on the system output file for printing.

135. XYTRAN prepares the input for X-Y plotting of the solution point displacements vs. frequency.

137. XYPLØT prepares requested X-Y plots of the solution point displacements vs. frequency.

138. Go to DMAP No. 142.

140. ØFP formats the requested solution point displacements sorted by frequency and places them on the system output file for printing.

143. Go to DMAP No. 177 if no output request involving dependent degrees of freedom or forces and stresses.

145. DDR1 transforms the solution vector of displacements from modal to physical coordinates

$$\{u_d\} = [\phi_{dh}]\{u_h\}$$

147. Go to DMAP No. 152 if mode acceleration technique not requested.

148. DDR2 calculates an improved displacement vector using the mode acceleration technique, if requested.

153. SDR1 recovers dependent components of displacements

$$\{u_o\} = [G_o^d]\{u_d\} \quad , \qquad \begin{Bmatrix} u_d \\ \hline\hline u_o \end{Bmatrix} = \{u_f + u_e\} \quad ,$$

$$\begin{Bmatrix} u_f + u_e \\ \hline\hline u_s \end{Bmatrix} = \{u_n + u_e\} \quad , \qquad \{u_m\} = [G_m^d]\{u_f + u_e\} \quad ,$$

$$\begin{Bmatrix} u_n + u_e \\ \hline\hline u_m \end{Bmatrix} = \{u_p\}$$

and recovers single-point forces of constraint $\{q_s\} = -\{P_s\} + [K_{fs}^T]\{u_f\}$.

155. SDR2 calculates element forces and stresses (ØESC1, ØEFC1) and prepares load vectors, displacement vectors and single-point forces of constraint for output (ØPPC1, ØQPC1, ØUPVC1) - all sorted by frequency.

157. Go to DMAP No. 174 if no output requests sorted by point number or element number.

158. SDR3 prepares requested output sorted by point number or element number.

160. ØFP formats the requested output sorted by point number or element number and places it on the system output file for printing.

162. XYTRAN prepares the input for requested X-Y plots.

164. XYPLØT prepares requested X-Y plots of displacements, forces, stresses, loads or single-point forces of constraint vs. frequency.

165. Go to DMAP No. 177 if no Power Spectral Density List.

166. RANDØM calculates power spectral density functions and autocorrelation functions using the previously calculated frequency response.

169. Go to DMAP No. 177 if no RANDØM calculations requested.

170. XYTRAN prepares the input for requested X-Y plots of the RANDØM output.

172. XYPLØT prepares requested X-Y plots of autocorrelation functions and power spectral density functions.

173. Go to DMAP No. 177 because there are no frequency response output requests sorted by frequency.

175. ØFP formats the frequency response output requests sorted by frequency and places them on the system output file for printing.

178. Go to DMAP No. 194 if no additional sets of direct input matrices need to be processed.

179. Go to DMAP No. 104 if additional sets of direct input matrices need to be processed.

180. Go to DMAP No. 182 and print error message if more than 100 loops.

181. Go to DMAP No. 194 and make normal exit.

183. MØDAL FREQUENCY AND RANDØM RESPØNSE ERRØR MESSAGE NØ. 3 - ATTEMPT TØ EXECUTE MØRE THAN 100 LØØPS.

185. MØDAL FREQUENCY AND RANDØM RESPØNSE ERRØR MESSAGE NØ. 2 - EIGENVALUE EXTRACTIØN DATA REQUIRED FØR REAL EIGENVALUE ANALYSIS.

187. MØDAL FREQUENCY AND RANDØM RESPØNSE ERRØR MESSAGE NØ. 1 - MASS MATRIX REQUIRED FØR MØDAL FØRMULATIØN.

189. MØDAL FREQUENCY AND RANDØM RESPØNSE ERRØR MESSAGE NØ. 4 - REAL EIGENVALUES REQUIRED FØR MØDAL FØRMULATIØN.

191. MØDAL FREQUENCY AND RANDØM RESPØNSE ERRØR MESSAGE NØ. 5 - FREQUENCY RESPØNSE LIST REQUIRED FØR FREQUENCY RESPØNSE CALCULATIØNS.

193. MØDAL FREQUENCY AND RANDØM RESPØNSE ERRØR MESSAGE NØ. 6 - DYNAMIC LØADS TABLE REQUIRED FØR FREQUENCY RESPØNSE CALCULATIØNS.

3.12.3 Restart Tables for Modal Frequency and Random Response

3.12.3.1 Bit Positions for Card Name Restart Table

Card Name	Bit Pos.	Card Name	Bit Pos.	Card Name	Bit Pos.
AXIC	1	PQUAD2	3	XYØUT$	20
CELAS1	1	PRØD	3	AØUT$	21
CELAS2	1	PSHEAR	3	LØØP$	22
CELAS3	1	PTØRDRG	3	LØØP1$	23
CELAS4	1	PTRBSC	3	CØUPMASS	24
CMASS1	1	PTRIA1	3	NØLØØP$	25
CMASS2	1	PTRIA2	3	RANDØM$	26
CMASS3	1	PTRMEM	3	MØDACC	53
CMASS4	1	PTRPLT	3	TABRND1	54
CØRD1C	1	PTUBE	3	TABRND2	54
CØRD1R	1	PTWIST	3	TABRND3	54
CØRD1S	1	GENEL	4	TABRND4	54
CØRD2C	1	CØNM1	5	RANDPS	55
CØRD2R	1	CØNM2	5	RANDT1	55
CØRD2S	1	PELAS	6	RANDT2	55
GRDSET	1	PMASS	7	EPØINT	56
GRID	1	MAT1	8	SEQEP	56
PØINTAX	1	MAT2	8	TF	56
RINGAX	1	MAT3	8	DMIG	57
SECTAX	1	MATT1	8	B2PP$	57
SEQGP	1	MATT2	8	K2PP$	57
SPØINT	1	MATT3	8	M2PP$	57
BARØR	2	TABLEM1	8	TF$	57
BEAMØR	2	TABLEM2	8	DAREA	58
CBAR	2	TABLEM3	8	DELAY	58
CBEAM	2	TABLEM4	8	DLØAD	58
CCØNEAX	2	TEMPMT$	8	DPHASE	58
CØNRØD	2	TEMPMX$	8	FREQ	58
CQDMEM	2	MPC	9	FREQ1	58
CQDPLT	2	MPCADD	9	FREQ2	58
CQUAD1	2	MPCAX	9	RLØAD1	58
CQUAD2	2	MPC$	9	RLØAD2	58
CRØD	2	SPC	10	TABLED1	58
CSHEAR	2	SPC1	10	TABLED2	58
CTØRDRG	2	SPCADD	10	TABLED3	58
CTRAPRG	2	SPCAX	10	TABLED4	58
CTRBSC	2	SPC$	10	EIGR	59
CTRIA1	2	ØMIT	11	METHØD$	60
CTRIA2	2	ØMIT1	11	DLØAD$	61
CTRIARG	2	ØMITAX	11	FREQ$	61
CTRMEM	2	SUPAX	12	HFREQ	62
CTRPLT	2	SUPØRT	12	LFREQ	62
CTUBE	2	TEMP	13	LMØDES	62
CTWIST	2	TEMPAX	13	TABDMP1	62
PBAR	3	TEMPD	13	SDAMP$	62
PBEAM	3	WTMASS	14		
PCØNEAX	3	GRDPNT	15		
PQDMEM	3	PLØTEL	16		
PQDPLT	3	PLØT$	18		
PQUAD1	3	PØUT$	19		

3.12.3.2 Bit Positions for File Name Restart Table

File Name	Bit Pos.	File Name	Bit Pos.
BGPDT	94	FRL	111
CSTM	94	GPLD	111
EQEXIN	94	PSDL	111
GPDT	94	SILD	111
GPL	94	TFPØØL	111
SIL	94	USETD	111
ECT	95	LAMA	112
GPTT	96	MI	112
ECPT	97	ØEIGS	112
EST	97	PHIA	112
GEI	97	CASEXX	113
GPCT	97	B2PP	114
GPST	98	K2PP	114
KGGX	98	M2PP	114
MGG	99	B2DD	115
KGG	100	GMD	115
RG	101	GØD	115
USET	101	K2DD	115
YS	101	M2DD	115
ØGPST	102	MDD	115
GM	103	BHH	116
KNN	104	KHH	116
MNN	104	MHH	116
KFF	105	PHIDH	116
KFS	105	PDF	117
MFF	105	PPF	117
GØ	106	PSF	117
KAA	106	UHVF	117
KØØB	106	ØUHVC1	118
LØØ	106	ØUHVC2	119
MAA	106	PAF	120
MØAB	106	UDV2F	120
MØØB	106	UEVF	120
UØØ	106	QPC	121
KLL	107	UPVC	121
KLR	107	ØEFC1	122
KRR	107	ØESC1	122
MLL	107	ØPPC1	122
MLR	107	ØQPC1	122
MRR	107	ØUPVC1	122
LLL	108	ØEFC2	123
ULL	108	ØESC2	123
DM	109	ØPPC2	123
MR	110	ØQPC2	123
DLT	111	ØUPVC2	123
EED	111	UDV1F	124
EQDYN	111	PSDF	125
		AUTØ	125

3.12.3.3 Card Name Restart Table

DMAP Inst.	Bit Position 1	10	20	30	40	50	60
BEGIN	12345678901234	56	8901234				3456789012
FILE	12345678901234	56	8901234				3456789012
GP1	1						
SAVE	1						
CHKPNT	1						
GP2	12 45		6				
CHKPNT	12 45		6				
PLTSET			8				
SAVE			8				
PRTMSG			8				
CHKPNT			8				
SETVAL			8				
SAVE			8				
COND			8				
PLOT			8				
PRTMSG			8				
LABEL			8				
GP3	1	3					
CHKPNT	1	3					
TA1,	1234567						
SAVE	1234567						
COND	12345678	4					
PURGE	1234567						
CHKPNT	1234567						
SMA1	123 6 8						
CHKPNT	123 6 8						
SMA2	123 5 78	4		4			
SAVE	123 5 78	4		4			
COND	123 5 78	4		4			
CHKPNT	123 5 78	4		4			
COND	123 5 78	45					
GPWG	123 5 78	45					
OFP	123 5 78	45					
SAVE	123 5 78	45					
LABEL	123 5 78	45					
EQUIV	123 6 8						
CHKPNT	123 6 8						
COND	123 6 8						
SMA3	1234 6 8						
CHKPNT	1234 6 8						
LABEL	1234 6 8						
PARAM	1	9012					
GP4	1	9012					
SAVE	1	9012					
PARAM	1	9012					
PURGE	1	9012					
EQUIV	123456789			4			
CHKPNT	1	9					
COND	123 6 8 0						
GPSP	123 6 8 0						
OFP	123 6 8 0						
SAVE	123 6 8 0						
LABEL	123 6 8 0						
COND	123456789			4			
MCE1	1	9					
CHKPNT	1	9					
MCE2	123456789			4			

DMAP Inst.	Bit Position 1 10 20 30 40 50 60
CHKPNT	123456789 4
LABEL	123456789 4
EQUIV	1234567890 4
CHKPNT	1234567890 4
COND	1234567890 4
SCE1	1234567890 4
CHKPNT	1234567890 4
LABEL	1234567890 4
EQUIV	12345678901 4
CHKPNT	12345678901 4
COND	12345678901 4
SMP1	12345678901 4
CHKPNT	12345678901 4
LABEL	12345678901 4
EQUIV	123456789012 4
CHKPNT	123456789012 4
COND	123456789012 4
RBMG1	123456789012 4
CHKPNT	123456789012 4
JUMP	1234 6 89012
LABEL	1234 6 89012
COND	1234 6 89012
LABEL	1234 6 89012
RBMG2	1234 6 89012
CHKPNT	1234 6 89012
COND	1234 6 89012
RBMG3	1234 6 89012
CHKPNT	1234 6 89012
RBMG4	123456789012 4
CHKPNT	123456789012 4
LABEL	123456789012 4
DPD	1 9012 56 89
SAVE	1 9012 56 89
COND	1 9012 56 89
PURGE	1 9012 56 89
EQUIV	123456789012 234 67 90
CHKPNT	1 9012 56 89
READ	123456789012 4 90
SAVE	123456789012 4 90
CHKPNT	123456789012 4 90
OFP	123456789012 4 90
SAVE	123456789012 4 90
COND	123456789012 4 90
PARAM	23
PARAM	12345678901234 6 23 3456789012
JUMP	23
$SS	1 3
LABEL	12345678901234 56 890123 3456789012
PURGE	23
CASE	12345678901234 6 23 5 3456789012
SAVE	12345678901234 6 23 5 3456789012
CHKPNT	12345678901234 6 23 5 3456789012
MTRXIN	1 23 67
SAVE	1 23 67
PURGE	123456789012 23 67
PARAM	123456789012 23 67
EQUIV	123456789012 23 67

DMAP Inst.	Bit Position 1 10 20 30 40 50 60
CHKPNT	123456789012 23 67
GKAD	123456789012 234 3 67 90
CHKPNT	123456789012 234 3 67 90
GKAM	123456789012 234 67 90 2
SAVE	123456789012 234 67 90 2
CHKPNT	123456789012 234 67 90 2
COND	123456789012 234 6789012
COND	123456789012 234 6789012
FRRD	123456789012 234 6789012
SAVE	123456789012 234 6789012
EQUIV	123456789012 234 6789012
CHKPNT	123456789012 234 6789012
VDR	01
SAVE	01
COND	01
COND	01
CHKPNT	01
SDR3	01
OFP	1
SAVE	1
CHKPNT	01
XYTRAN	0
SAVE	0
XYPLOT	0
JUMP	0
LABEL	0
OFP	1
SAVE	1
LABEL	0
COND	123456789012 234 3 6789012
PARAM	123456789012 234 3 6789012
DDR1	123456789012 234 6789012
CHKPNT	123456789012 234 6789012
COND	123456789012 234 3 6789012
$SS	23
DDR2	123456789012 234 3 6789012
$SS	23
CHKPNT	123456789012 234 3 6789012
$SS	23
EQUIV	123456789012 234 3 6789012
$SS	23
CHKPNT	123456789012 234 3 6789012
$SS	23
LABEL	123456789012 234 3 6789012
$SS	23
SDR1	123456789012 234 3 6789012
CHKPNT	123456789012 234 3 6789012
SDR2	90
SAVE	90
COND	90
SDR3	90
CHKPNT	90
OFP	9
SAVE	9
XYTRAN	0
SAVE	0
XYPLOT	0

DMAP Inst.	Bit Position 1	10	20	30	40	50	60
COND			0	6			45
RANDCM				6			45
SAVE				6			45
CHKPNT				6			45
COND				6			45
XYTRAN			0				
SAVE			0				
XYPLOT			0				
JUMP			0				
LABEL			9				
OFP			9				
SAVE			9				
LABEL			0				45
COND				23			
$SS	1 3						
REPT				23			
$SS	1 3						
JUMP				23			
$SS	1 3						
JUMP	1234567890123456		8901234				3456789012
LABEL				23			
$SS	1 3						
PRTPARM				23			
$SS	1 3						
LABEL	1234567890123456		8901234				3456789012
PRTPARM	1234567890123456		8901234				3456789012
LABEL	1234567890123456		8901234				3456789012
PRTPARM	1234567890123456		8901234				3456789012
LABEL	1234567890123456		8901234				3456789012
PRTPARM	1234567890123456		8901234				3456789012
LABEL	1234567890123456		8901234				3456789012
PRTPARM	1234567890123456		8901234				3456789012
LABEL	1234567890123456		8901234				3456789012
PRTPARM	1234567890123456		8901234				3456789012
LABEL	1234567890123456		8901234				3456789012
END	1234567890123456		8901234				3456789012

3.12.3.4 Rigid Format Change Restart Table

DMAP Inst.	Bit Position 63 70 80
BEGIN	3456789012 4
FILE	3456789012 4
GP1	
SAVE	
CHKPNT	
GP2	
CHKPNT	
PLTSET	
SAVE	
PRTMSG	
CHKPNT	
SETVAL	
SAVE	
COND	
PLOT	
PRTMSG	
LABEL	
GP3	
CHKPNT	
TA1,	
SAVE	
COND	
PURGE	
CHKPNT	
SMA1	
CHKPNT	
SMA2	3 678
SAVE	3 678
COND	3 678
CHKPNT	3 678
COND	
GPWG	
OFP	
SAVE	
LABEL	
EQUIV	
CHKPNT	
COND	
SMA3	
CHKPNT	
LABEL	
PARAM	
GP4	
SAVE	
PARAM	
PURGE	
EQUIV	
CHKPNT	
COND	
GPSP	
OFP	
SAVE	
LABEL	
COND	
MCE1	
CHKPNT	
MCE2	

DMAP Inst.	Bit Position 63 70 80
CHKPNT	
LABEL	
EQUIV	
CHKPNT	
COND	
SCE1	
CHKPNT	
LABEL	
EQUIV	
CHKPNT	
COND	
SMP1	
CHKPNT	
LABEL	
EQUIV	
CHKPNT	
COND	
RBMG1	
CHKPNT	
JUMP	
LABEL	
COND	
LABEL	
RBMG2	
CHKPNT	
COND	
RBMG3	
CHKPNT	
RBMG4	
CHKPNT	
LABEL	
DPD	
SAVE	
COND	3456789012 4
PURGE	
EQUIV	
CHKPNT	
READ	
SAVE	
CHKPNT	
OFP	
SAVE	
COND	3456789012 4
PARAM	
PARAM	3456789012 4
JUMP	3456789012 4
LABEL	3456789012 4
PURGE	
CASE	3456789012 4
SAVE	3456789012 4
CHKPNT	3456789012 4
MTRXIN	
SAVE	
PURGE	
PARAM	
EQUIV	
CHKPNT	

DMAP Inst.	Bit Position 63 70 80
GKAD	
CHKPNT	
GKAM	
SAVE	
CHKPNT	
COND	3456789C12 4
COND	3456789C12 4
FRRD	
SAVE	
EQUIV	
CHKPNT	
VDR	
SAVE	
COND	
COND	
CHKPNT	
SDR3	
OFP	
SAVE	
CHKPNT	
XYTRAN	
SAVE	
XYPLOT	
JUMP	
LABEL	
OFP	
SAVE	
LABEL	
COND	
PARAM	
DDR1	
CHKPNT	
COND	
DDR2	
CHKPNT	
EQUIV	
CHKPNT	
LABEL	
SDR1	3456789C12 4
CHKPNT	3456789C12 4
SDR2	
SAVE	
COND	
SDR3	
CHKPNT	
OFP	
SAVE	
XYTRAN	
SAVE	
XYPLOT	
COND	
RANDOM	
SAVE	
CHKPNT	
COND	
XYTRAN	
SAVE	

DMAP Inst.	Bit Position 63 70 80
XYPLOT	
JUMP	
LABEL	
OFP	
SAVE	
LABEL	
COND	3456789C12 4
REPT	3456789C12 4
JUMP	3456789C12 4
JUMP	3456789C12 4
LABEL	3456789C12 4
PRTPARM	3456789C12 4
LABEL	3456789C12 4
PRTPARM	3456789C12 4
LABEL	3456789C12 4
PRTPARM	3456789C12 4
LABEL	3456789C12 4
PRTPARM	3456789C12 4
LABEL	3456789C12 4
PRTPARM	3456789C12 4
LABEL	3456789C12 4
PRTPARM	3456789C12 4
LABEL	3456789C12 4
END	3456789C12 4

3.12.3.5 File Name Restart Table

DMAP Inst.	Bit Position 94	100	110	120
BEGIN				
FILE				
GP1	4			
SAVE	4			
CHKPNT	4			
GP2	5			
CHKPNT	5			
PLTSET				
SAVE				
PRTMSG				
CHKPNT				
SETVAL				
SAVE				
COND				
PLOT				
PRTMSG				
LABEL				
GP3	6			
CHKPNT	6			
TA1,	7			
SAVE	7			
COND	7			
PURGE	7	2		
CHKPNT	7			
SMA1	8			
CHKPNT	8			
SMA2	9			
SAVE	9			
COND	9			
CHKPNT	9			
COND				
GPWG				
OFP				
SAVE				
LABEL				
EQUIV	0			
CHKPNT	0			
COND	0			
SMA3	0			
CHKPNT	0			
LABEL	0			
PARAM	1			
GP4	1			
SAVE	1			
PARAM	1			
PURGE	1	3 567	90 5	1
EQUIV	4			
CHKPNT				
COND	2			
GPSP	2			
OFP	2			
SAVE	2			
LABEL	2			
COND	34			
MCE1	3			
CHKPNT	3			
MCE2	4			

DMAP Inst.	Bit Position 94	100	110	120
CHKPNT	4			
LABEL	34			
EQUIV	5			
CHKPNT	5			
COND	5			
SCE1	5			
CHKPNT	5			
LABEL	5			
EQUIV	6			
CHKPNT	6			
COND	6			
SMP1	6			
CHKPNT	6			
LABEL	6			
EQUIV	7			
CHKPNT	7			
COND	7			
RBMG1	7			
CHKPNT	7			
JUMP				
LABEL	7			
COND	890			
LABEL	8			
RBMG2	8			
CHKPNT	8			
COND	9			
RBMG3	9			
CHKPNT	9			
RBMG4	0			
CHKPNT	0			
LABEL	890			
DPD	1			
SAVE	1			
COND	1			
PURGE	1			
EQUIV				5
CHKPNT	1			
READ	2			
SAVE	2			
CHKPNT	2			
OFP	2			
SAVE	2			
COND	2			
PARAM				
PARAM	3			
JUMP	3			
LABEL	3			
PURGE				
CASE	3			
SAVE	3			
CHKPNT	3			
MTRXIN	4			
SAVE	4			
PURGE	4			
PARAM	4			
EQUIV	4			
CHKPNT	4			

DMAP Inst.	94	Bit Position 100	110	120
GKAD				5
CHKPNT				5
GKAM				6
SAVE				6
CHKPNT				6
CCND				7
COND				7
FRRD				7
SAVE				7
EQUIV				7
CHKPNT				7
VDR				8
SAVE				8
COND				8
COND				8
CHKPNT				8
SDR3				9
OFP				
SAVE				
CHKPNT				9
XYTRAN				
SAVE				
XYPLOT				
JUMP				
LABEL				
OFP				
SAVE				
LABEL				
COND			0	4
PARAM				
DDR1				4
CHKPNT				4
COND			0	
DDR2			0	
CHKPNT			0	
EQUIV			0	
CHKPNT			0	
LABEL			0	
SDR1			1	
CHKPNT			1	
SDR2			2	
SAVE			2	
COND			3	
SDR3			3	
CHKPNT			3	
OFP				
SAVE				
XYTRAN				
SAVE				
XYPLOT				
COND				5
RANDOM				5
SAVE				5
CHKPNT				5
COND				
XYTRAN				
SAVE				

DMAP Inst.	94	Bit Position 100	110	120
XYPLOT				
JUMP				
LABEL				
OFP				
SAVE				
LABEL				
COND				
REPT				
JUMP				
JUMP				
LABEL				
PRTPARM				
LABEL				
PRTPARM				
LABEL				
PRTPARM				
LABEL				
PRTPARM				
LABEL				
PRTPARM				
LABEL				
PRTPARM				
LABEL				
END				

3.12.4 Automatic Output for Modal Frequency and Random Response

The Eigenvalue Summary Table and the Eigenvalue Analysis Summary, as described under Normal Mode Analysis, are automatically printed. All real eigenvalues extracted are included even though not all are used in the modal formulation.

3.12.5 Case Control Deck and Parameters for Modal Frequency and Random Response

The following items related to subcase definition and data selection must be considered in addition to the list presented with Direct Frequency and Random Response:

1. METHØD must appear above the subcase level to select an EIGR card that exists in the Bulk Data Deck.
2. All of the eigenvectors used in the modal formulation must be determined in a single execution.
3. An SPC set must be selected above the subcase level unless the model is a free body or all constraints are specified on GRID cards, Scalar Connection cards or with General Elements.
4. SDAMPING must be used to select a TABDMP1 table if structural damping is desired.

Output that may be requested is the same as that described under Direct Frequency and Random Response. Output for SØLUTIØN points will have the modal coordinates identified by the mode number determined in Real Eigenvalue Analysis.

The eigenvectors used in the modal formulation may be obtained for the SØLUTIØN points by using the ALTER feature to print the matrix of eigenvectors following the execution of READ. The eigenvectors for all points in the model may be obtained by running the problem initially on the Normal Mode Analysis rigid format or by making a modified restart using the Normal Mode Analysis rigid format.

The following parameters are used in Modal Frequency and Random Response:

1. GRDPNT - optional - A positive integer value of this parameter will cause the Grid Point Weight Generator to be executed and the resulting weight and balance information to be printed.
2. WTMASS - optional - The terms of the mass matrix are multiplied by the real value of this parameter when they are generated in SMA2.

3. CØUPMASS - optional - a positive integer value of this parameter will cause the generation of coupled mass matrices rather than lumped mass matrices for all bar elements, rod elements, and plate elements that include bending stiffness (see Section 3.1 for list of elements).

4. LFREQ and HFREQ - required unless LMØDES is used. The real values of these parameters give the frequency range (LFREQ is lower limit and HFREQ is upper limit) of the modes to be used in the modal formulation.

5. LMØDES - required unless LFREQ and HFREQ are used. The integer value of this parameter is the number of lowest modes to be used in the modal formulation.

6. MØDACC - optional - A positive integer value of this parameter causes the Dynamic Data Recovery module to use the mode acceleration method.

3.13 MODAL TRANSIENT RESPONSE

3.13.1 DMAP Sequence for Modal Transient Response

```
RIGID FORMAT 12

   N A S T R A N  S O U R C E  P R O G R A M  C O M P I L A T I O N
DMAP-DMAP INSTRUCTION
NO.

 1  BEGIN     NO,12 MODAL TRANSIENT RESPONSE ANALYSIS - SERIES L $

 2  FILE      LLL=TAPE $

 3  (GP1)     GEOM1,GEOM2,/GPL,EQEXIN,GPDT,CSTM,BGPDT,SIL/V,N,LUSET/ C,N,123/
              V,N,NOGPDT $

 4  SAVE      LUSET$

 5  CHKPNT    GPL,EQEXIN,GPDT,CSTM,BGPDT,SIL $

 6  (GP2)     GEOM2,EQEXIN/ECT $

 7  CHKPNT    ECT $

 8  PLTSET    PCDB,EQEXIN,ECT/PLTSETX,PLTPAR,GPSETS,ELSETS/V,N,NSIL/ V,N,
              JUMPPLOT $

 9  SAVE      NSIL,JUMPPLOT $

10  PRTMSG    PLTSETX//$

11  CHKPNT    PLTPAR,GPSETS,ELSETS $

12  SETVAL    //V,N,PLTFLG/C,N,1/V,N,PFILE/C,N,0 $

13  SAVE      PLTFLG,PFILE $

14  COND      P1,JUMPPLOT $

15  (PLOT)    PLTPAR,GPSETS,ELSETS,CASECC,BGPDT,EQEXIN,SIL,,/PLOTX1/ V,N,
              NSIL/V,N,LUSET/V,N,JUMPPLOT/V,N,PLTFLG/V,N,PFILE $

16  SAVE      JUMPPLOT,PLTFLG,PFILE $

17  PRTMSG    PLOTX1//$

18  LABEL     P1 $

19  (GP3)     GEOM3,EQEXIN,/,GPTT/C,N,123/V,N,NOGRAV/C,N,123 $

20  CHKPNT    GPTT $

21  (TA1,)    ,ECT,EPT,BGPDT,SIL,GPTT,CSTM/EST,,GEI,ECPT,GPCT/V,N,LUSET/ C,N,
              123/V,N,NOSIMP/C,N,0/V,N,NOGENL/V,N,GENEL $

22  SAVE      NOGENL,NOSIMP,GENEL$

23  COND      ERROR1,NOSIMP$

24  PURGE     OGPST/GENEL$
```

```
RIGID FORMAT DMAP LISTING
SERIES L

RIGID FORMAT 12

   N A S T R A N  S O U R C E  P R O G R A M  C O M P I L A T I O N
DMAP=DMAP INSTRUCTION
 NO.

 25   CHKPNT    EST,ECPT,GPCT,GEI,OGPST$

 26   SMA1      CSTM,MPT,ECPT,GPCT, DIT/KGGX,,GPST/V,N,NOGENL /V,N,NOK4GG$

 27   CHKPNT    KGGX,GPST$

 28   SMA2      CSTM,MPT,ECPT,GPCT,DIT/MGG,/V,Y,WTMASS=1.0/V,N,NOMGG/C,N,-1/ V,
                Y,COUPMASS=-1 $

 29   SAVE      NOMGG$

 30   COND      ERROR1,NOMGG$

 31   CHKPNT    MGG $

 32   COND      LGPWG,GRDPNT$

 33   GPWG      BGPDT,CSTM,EQEXIN,MGG/OGPWG/V,Y,GRDPNT=-1/V,Y,WTMASS$

 34   OFP       OGPWG,,,,,//V,N,CARDNO $

 35   SAVE      CARDNO $

 36   LABEL     LGPWG$

 37   EQUIV     KGGX,KGG/NOGENL $

 38   CHKPNT    KGG $

 39   COND      LBL11,NOGENL $

 40   SMA3      GEI,KGGX/KGG/V,N,LUSET/V,N,NOGENL/C,N,-1 $

 41   CHKPNT    KGG $

 42   LABEL     LBL11 $

 43   PARAM     //C,N,MPY/V,N,NSKIP/C,N,0/C,N,0 $

 44   GP4       CASECC,GEOM4,EQEXIN,SIL,GPDT/RG,,USET/V,N,LUSET/V,N,MPCF1/ V,N,
                MPCF2/V,N,SINGLE/V,N,OMIT/V,N,REACT/V,N,NSKIP/V,N,REPEAT/ V,N,
                NOSET/V,N,NOL/V,N,NOA $

 45   SAVE      MPCF1,SINGLE,OMIT,REACT,NOSET,MPCF2,NSKIP,REPEAT,NOL,NOA $

 46   PARAM     //C,N,AND/V,N,NOSR/V,N,REACT/V,N,SINGLE$

 47   PURGE     GM,GMD/MPCF1/GO,KOOB,LOO,UOO,MOOB,MOAB,@OD/OMIT/KFS,PST/SINGLE/
                QP/NOSR/KLR,KRR,MLR,MRR,DM,MR/REACT $

 48   EQUIV     KGG,KNN/MPCF1/MGG,MNN/MPCF1$

 49   CHKPNT    KRR,KLR,DM,MLR,MRR,MR,GM,RG,GO,KOOB,LOO,UOO, MOOB,MOAB,KFS,PST,
```

```
RIGID FORMAT DMAP LISTING
SERIES L

RIGID FORMAT 12

   N A S T R A N  S O U R C E  P R O G R A M  C O M P I L A T I O N
DMAP-DMAP INSTRUCTION
 NO.
                QP,USET,KNN,MNN,GOD,GMD $

 50  COND       LBL4,GENEL $

 51  (GPSP)     GPL,GPST,USET,SIL/OGPST $

 52  OFP        OGPST,,,,,//V,N,CARDNO $

 53  SAVE       CARDNO $

 54  LABEL      LBL4 $

 55  COND       LBL2,MPCF1 $

 56  (MCE1)     USET,RG/GM $

 57  CHKPNT     GM$

 58  (MCE2)     USET,GM,KGG,MGG,,/KNN,MNN,,$

 59  CHKPNT     KNN,MNN$

 60  LABEL      LBL2 $

 61  EQUIV      KNN,KFF/SINGLE/MNN,MFF/SINGLE$

 62  CHKPNT     KFF,MFF $

 63  COND       LBL3,SINGLE $

 64  (SCE1)     USET,KNN,MNN,,/KFF,KFS,,MFF,, $

 65  CHKPNT     KFS,KFF,MFF $

 66  LABEL      LBL3 $

 67  EQUIV      KFF,KAA/OMIT/ MFF,MAA/OMIT$

 68  CHKPNT     KAA,MAA $

 69  COND       LBL5,OMIT $

 70  (SMP1)     USET,KFF,MFF,,/GO,KAA,K00B,L00,U00,MAA,M00B,M0AB,, $

 71  CHKPNT     KAA,MAA,GO $

 72  LABEL      LBL5 $

 73  EQUIV      KAA,KLL/REACT $

 74  CHKPNT     KLL $

 75  COND       LBL6,REACT $
```

```
RIGID FORMAT DMAP LISTING
SERIES L

RIGID FORMAT 12

   N A S T R A N  S O U R C E  P R O G R A M  C O M P I L A T I O N
DMAP-DMAP INSTRUCTION
NO.

 76  (RBMG1)    USET,KAA,MAA/KLL,KLR,KRR,MLL,MLR,MRR$

 77  CHKPNT     KLL,KLR,KRR,MLL,MLR,MRR$

 78  JUMP       LBL8 $

 79  LABEL      LBL6 $

 80  COND       LBL7,MODACC $

 81  LABEL      LBL8 $

 82  (RBMG2)    KLL/LLL,ULL $

 83  CHKPNT     ULL,LLL $

 84  COND       LBL7,REACT $

 85  (RBMG3)    LLL,ULL,KLR,KRR/DM $

 86  CHKPNT     DM $

 87  (RBMG4)    DM,MLL,MLR,MRR/MR$

 88  CHKPNT     MR $

 89  LABEL      LBL7 $

 90  (DPD)      DYNAMICS,GPL,SIL,USET/GPLD,SILD,USETD,TFPOOL,DLT,,,NLFT,TRL,
                EED ,EQDYN/V,N,LUSET/V,N,LUSETD/V,N,NOTFL/V,N,NODLT/V,N,NOPSDL/
                V,N,NOFRL/V,N,NONLFT/V,N,NOTRL/V,N,NOEED/C,N,123/V,N,NOUE $

 91  SAVE       LUSETD,NODLT,NONLFT,NOTRL,NOUE,NOEED $

 92  COND       ERROR2,NOEED$

 93  PURGE      UEVT/NOUE/PNLH/NONLFT $

 94  EQUIV      GO,GOD/NOUE/GM,GMD/NOUE $

 95  CHKPNT     USETD,EQDYN,TFPOOL,DLT,TRL,EED,GOD,GMD,UEVT,NLFT,PNLH,SILD,
                GPLD $

 96  (READ)     KAA,MAA,MR,DM,EED,USET,CASECC/LAMA,PHIA,MI,OEIGS/C,N,MODES/V,N,
                NEIGV$

 97  SAVE       NEIGV $

 98  CHKPNT     LAMA,PHIA,MI,OEIGS $

 99  OFP        OEIGS,LAMA,,,,,//V,N,CARDNO $

100  SAVE       CARDNO $
```

```
 RIGID FORMAT DMAP LISTING
 SERIES L

 RIGID FORMAT 12

    N A S T R A N  S O U R C E  P R O G R A M  C O M P I L A T I O N
DMAP-DMAP INSTRUCTION
 NO.

101   COND      ERROR4,NEIGV $

102   MTRXIN    CASECC,MATPOOL,EQDYN,,TFPOOL/K2PP,M2PP,B2PP/V,N,LUSETD/V,N,
                NOK2PP/V,N,NOM2PP/V,N,NOB2PP $

103   SAVE      NOK2PP,NOM2PP,NOB2PP $

104   PURGE     K2DD/NOK2PP/M2DD/NOM2PP/B2DD/NOB2PP$

105   PARAM     //C,N,AND/V,N,MDEMA/V,N,NOUE/V,N,NOM2PP$

106   EQUIV     M2PP,M2DD/NOA/B2PP,B2DD/NOA/K2PP,K2DD/NOA/MAA,MDD/MDEMA $

107   CHKPNT    K2PP,M2PP,B2PP,K2DD,M2DD,B2DD,MDD $

108   GKAD      USETD,GM,GO,,,MAA,,K2PP,M2PP,B2PP/,,MDD,GMD, GOD,K2DD,M2DD,
                B2DD/C,N,TRANRESP/C,N,DISP/C,N,MODAL/C,N,0,0/ C,N,0,0/C,N,0,0/
                V,N,NOK2PP/V,N,NOM2PP/V,N,NOB2PP/ V,N,MPCF1/V,N,SINGLE/V,N,
                OMIT/V,N,NOUE/C,N,-1/C,N,-1/ C,N,-1/V,Y,MODACC = -1 $

109   CHKPNT    MDD,GMD,GOD,K2DD,M2DD,B2DD $

110   GKAM      USETD,PHIA,MI,LAMA,DIT,M2DD,B2DD,K2DD,CASECC/ MHH,BHH,KHH,
                PHIDH/V,N,NOUE/C,Y,LMODES=0/C,Y,LFREQ=0.0/ C,Y,HFREQ=0.0/V,N,
                NOM2PP/V,N,NOB2PP/V,N,NOK2PP/V,N,NONCUP/ V,N,FMODE $

111   SAVE      NONCUP,FMODE $

112   CHKPNT    MHH,BHH,KHH,PHIDH $

113   COND      ERROR5,NOTRL $

114   PARAM     //C,N,ADD/V,N,NEVER/C,N,1/C,N,0 $

115   PARAM     //C,N,MPY/V,N,REPEATT/C,N,1/C,N,-1 $

116   JUMP      LBL13 $

117   LABEL     LBL13$

118   PURGE     PNLH,OUHV1,OPNL1,OUHV2,OPNL2,XYPLTTA,OPP1,OQP1,OUPV1,OES1,
                OEF1,OPP2,OQP2,OUPV2,OES2,OEF2,PLOTX2,XYPLTT/NEVER $

119   CASE      CASECC,/CASEXX/C,N,TRAN/V,N,REPEATT/V,N,NOLOOP $

120   SAVE      REPEATT,NOLOOP $

121   CHKPNT    CASEXX $

122   TRD       CASEXX,USETD,DLT,TRL,NLFT,DIT,KHH,BHH,MHH,GMD,GOD,PHIDH/UHVT,
                PDT,PST,PPT,PNLH/C,N,MODAL/V,N,LUSETD/V,N,MPCF1/V,N,SINGLE/ V,
                N,OMIT/V,N,NONCUP/V,N,NOUE/C,N,0 $
```

```
 RIGID FORMAT DMAP LISTING
 SERIES L

 RIGID FORMAT 12

    N A S T R A N  S O U R C E  P R O G R A M  C O M P I L A T I O N
DMAP-DMAP INSTRUCTION
 NO.

123  CHKPNT   UHVT,PDT,PST,PPT,PNLH $

124  VDR      CASEXX,EQDYN,USETD,UHVT,PPT,XYCDB,PNLH/OUHV1,OPNL1/ C,N,
              TRANRESP/C,N,MODAL/C,N,0/V,N,NOH/V,N,NOP/V,N,FMODE $

125  SAVE     NOH,NOP $

126  CHKPNT   OUHV1,OPNL1 $

127  COND     LBL16,NOH $

128  SDR3     OUHV1,OPNL1,,,,/OUHV2,OPNL2,,,, $

129  OFP      OUHV2,OPNL2,,,,//V,N,CARDNO $

130  SAVE     CARDNO $

131  CHKPNT   OPNL2,OUHV2 $

132  XYTRAN   XYCDB,OUHV2,OPNL2,,,/XYPLTTA/C,N,TRAN/C,N,HSET/V,N,PFILE/ V,N,
              CARDNO $

133  SAVE     PFILE,CARDNO $

134  XYPLOT   XYPLTTA// $

135  LABEL    LBL16 $

136  PARAM    //C,N,AND/V,N,PJUMP/V,N,NOP/V,N,JUMPPLOT $

137  COND     LBL15,PJUMP $

138  PARAM    //C,N,NOT/V,N,NOMOD/V,Y,MODACC $

139  DDR1     UHVT,PHIDH/UDV1T $

140  CHKPNT   UDV1T $

141  COND     LBLMOD,MODACC $

142  DDR2     USETD,UDV1T,PDT,K2DD,B2DD,MDD,,ULL,LLL,DM/UDV2T,UEVT,PAF/ C,N,
              TRANRESP/V,N,NOUE/V,N,REACT/C,N,0 $

143  CHKPNT   UDV2T,UEVT,PAF $

144  EQUIV    UDV2T,UDV1T/NOMOD $

145  CHKPNT   UDV1T $

146  LABEL    LBLMOD $

147  EQUIV    UDV1T,UPV/NOA $
```

```
RIGID FORMAT DMAP LISTING
SERIES L

RIGID FORMAT 12

   N A S T R A N  S O U R C E  P R O G R A M  C O M P I L A T I O N
DMAP-DMAP INSTRUCTION
 NO.

148   COND      LBL14,NOA $

149   SDR1      USETD,,UDV1T,,,GOD,GMD,PST,KFS,,/UPV,,QP/C,N,1/C,N,DYNAMICS$

150   LABEL     LBL14$

151   CHKPNT    UPV,QP $

152   SDR2      CASEXX,CSTM,MPT,DIT,EQDYN,SILD,,,BGPDT,PPT,QP,UPV,EST,XYCDB/
                OPP1,OQP1,OUPV1,OES1,OEF1,PUGV/C,N,TRANRESP $

153   SDR3      OPP1,OQP1,OUPV1,OES1,OEF1,/OPP2,OQP2,OUPV2,OES2,OEF2, $

154   CHKPNT    OPP2,OQP2,OUPV2,OES2,OEF2 $

155   OFP       OUPV2,OPP2,OQP2,OEF2,OES2,//V,N,CARDNO $

156   SAVE      CARDNO $

157   COND      P2,JUMPPLOT $

158   PLOT      PLTPAR,GPSETS,ELSETS,CASEXX,BGPDT,EQEXIN,SIL,,PUGV/PLOTX2/ V,N,
                NSIL/V,N,LUSET/V,N,JUMPPLOT/V,N,PLTFLG/V,N,PFILE $

159   SAVE      PFILE $

160   PRTMSG    PLOTX2// $

161   LABEL     P2 $

162   CHKPNT    OQP2,OUPV2,OES2,OEF2,OPP2 $

163   XYTRAN    XYCDB,OPP2,OQP2,OUPV2,OES2,OEF2/XYPLTT/C,N,TRAN/C,N,PSET/ V,N,
                PFILE/V,N,CARDNO $

164   SAVE      PFILE,CARDNO $

165   XYPLOT    XYPLTT// $

166   LABEL     LBL15 $

167   COND      FINIS,REPEATT $

168   REPT      LBL13,100$

169   JUMP      ERROR3 $

170   JUMP      FINIS $

171   LABEL     ERROR3 $

172   PRTPARM   //C,N,-3/C,N,MDLTRD$
```

```
 RIGID FORMAT DMAP LISTING
 SERIES L

 RIGID FORMAT 12

    N A S T R A N  S O U R C E  P R O G R A M  C O M P I L A T I O N
DMAP-DMAP INSTRUCTION
 NO.

173  LABEL    ERROR2$

174  PRTPARM  //C,N,-2/C,N,MDLTRD$

175  LABEL    ERROR1$

176  PRTPARM  //C,N,-1/C,N,MDLTRD$

177  LABEL    ERROR4$

178  PRTPARM  //C,N,-4/C,N,MDLTRD$

179  LABEL    ERROR5$

180  PRTPARM  //C,N,-5/C,N,MDLTRD$

181  LABEL    FINIS$

182  END      $
```

3.13.2 Description of DMAP Operations for Modal Transient Response.

3. GP1 generates coordinate system transformation matrices, tables of grid point locations, and tables for relating internal and external grid point numbers.

6. GP2 generates Element Connection Table with internal indices.

8. PLTSET transforms user input into a form used to drive structure plotter.

10. PRTMSG prints error messages associated with structure plotter.

14. Go to DMAP No. 18 if no undeformed structure plot request.

15. PLØT generates all requested undeformed structure plots.

17. PRTMSG prints plotter data and engineering data for each undeformed plot generated.

19. GP3 generates Grid Point Temperature Table.

21. TA1 generates element tables for use in matrix assembly and stress recovery.

23. Go to DMAP No. 175 and print error message if there are no structural elements.

26. SMA1 generates stiffness matrix $[K^{X}_{gg}]$ and Grid Point Singularity Table.

28. SMA2 generates mass matrix $[M_{gg}]$.

30. Go to DMAP No. 175 and print error message if no mass matrix exists.

32. Go to DMAP No. 36 if no weight and balance request.

33. GPWG generates weight and balance information.

34. ØFP formats weight and balance information and places it on the system output file for printing.

37. Equivalence $[K^{X}_{gg}]$ to $[K_{gg}]$ if no general elements.

39. Go to DMAP No. 42 if no general elements.

40. SMA3 adds general elements to stiffness matrix $[K^{X}_{gg}]$ to obtain stiffness matrix $[K_{gg}]$.

44. GP4 generates flags defining members of various displacement sets (USET) and forms multipoint constraint equations $[R_g]\{u_g\} = 0$.

48. Equivalence $[K_{gg}]$ to $[K_{nn}]$ and $[M_{gg}]$ to $[M_{nn}]$ if no multipoint constraints.

50. Go to DMAP No. 54 if general elements present.

51. GPSP determines if possible grid point singularities remain.

52. ØFP formats the table of possible grid point singularities and places it on the system output file for printing.

55. Go to DMAP No. 60 if no multipoint constraints.

56. MCE1 partitions multipoint constraint equations $[R_g] = [R_m \mid R_n]$ and solves for multipoint constraint transformation matrix $[G_m] = -[R_m]^{-1}[R_n]$.

58. MCE2 partitions stiffness and mass matrices

$$[K_{gg}] = \left[\begin{array}{c|c} \bar{K}_{nn} & K_{nm} \\ \hline K_{mn} & K_{mm} \end{array}\right] \quad \text{and} \quad [M_{gg}] = \left[\begin{array}{c|c} \bar{M}_{nn} & M_{nm} \\ \hline M_{mn} & M_{mm} \end{array}\right]$$

and performs matrix reductions

$$[K_{nn}] = [\bar{K}_{nn}] + [G_m^T][K_{mn}] + [K_{mn}^T][G_m] + [G_m^T][K_{mm}][G_m] \quad \text{and}$$

$$[M_{nn}] = [\bar{M}_{nn}] + [G_m^T][M_{mn}] + [M_{mn}^T][G_m] + [G_m^T][M_{mm}][G_m].$$

61. Equivalence $[K_{nn}]$ to $[K_{ff}]$ and $[M_{nn}]$ to $[M_{ff}]$ if no single-point constraints.

63. Go to DMAP No. 66 if no single-point constraints.

64. SCE1 partitions out single-point constraints

$$[K_{nn}] = \left[\begin{array}{c|c} K_{ff} & K_{fs} \\ \hline K_{sf} & K_{ss} \end{array}\right] \quad \text{and} \quad [M_{nn}] = \left[\begin{array}{c|c} M_{ff} & M_{fs} \\ \hline M_{sf} & M_{ss} \end{array}\right] .$$

67. Equivalence $[K_{ff}]$ to $[K_{aa}]$ and $[M_{ff}]$ to $[M_{aa}]$ if no omitted coordinates.

69. Go to DMAP No. 72 if no omitted coordinates.

70. SMP1 partitions constrained stiffness and mass matrices

$$[K_{ff}] = \left[\begin{array}{c|c} \bar{K}_{aa} & K_{ao} \\ \hline K_{oa} & K_{oo} \end{array}\right] \quad \text{and} \quad [M_{ff}] = \left[\begin{array}{c|c} \bar{M}_{aa} & M_{ao} \\ \hline M_{oa} & M_{oo} \end{array}\right] ,$$

solves for transformation matrix $[G_o] = -[K_{oo}]^{-1}[K_{oa}]$

and performs matrix reduction $[K_{aa}] = [\bar{K}_{aa}] + [K_{oa}^T][G_o]$

and $[M_{aa}] = [\bar{M}_{aa}] + [M_{oa}^T][G_o] + [G_o^T][M_{oa}] + [G_o^T][M_{oo}][G_o]$.

73. Equivalence $[K_{aa}]$ to $[K_{\ell\ell}]$ if free-body supports.

75. Go to DMAP No. 79 if no free-body supports.

76. RBMG1 partitions out free-body supports

$$[K_{aa}] = \left[\begin{array}{c|c} K_{\ell\ell} & K_{\ell r} \\ \hline K_{r\ell} & K_{rr} \end{array}\right] \quad \text{and} \quad [M_{aa}] = \left[\begin{array}{c|c} M_{\ell\ell} & M_{\ell r} \\ \hline M_{r\ell} & M_{rr} \end{array}\right] .$$

78. Go to DMAP No. 81.

80. Go to DMAP No. 89 if no request for mode acceleration data recovery.

83. RBMG2 decomposes constrained stiffness matrix $[K_{\ell\ell}] = [L_{\ell\ell}][U_{\ell\ell}]$.

84. Go to DMAP No. 89 if no free-body supports.

85. RBMG3 forms rigid body transformation matrix

$$[D] = -[K_{\ell\ell}]^{-1}[K_{\ell r}],$$

calculates rigid body check matrix

$$[X] = [K_{rr}] + [K_{\ell r}^T][D],$$

and calculates rigid body error ratio

$$\varepsilon = \frac{||X||}{||K_{rr}||}$$

87. RBMG4 forms rigid body mass matrix $[m_r] = [M_{rr}] + [M_{\ell r}^T][D] + [D^T][M_{\ell r}] + [D^T][M_{\ell\ell}][D]$.

90. DPD generates flags defining members of various displacement sets used in dynamic analysis (USETD), tables relating internal and external grid point numbers, including extra points introduced for dynamic analysis, and prepares Transfer Function Pool, Eigenvalue Extraction Data, Dynamic Loads Table, Nonlinear Function Table and Transient Response List.

92. Go to DMAP No. 173 and print error message if no Eigenvalue Extraction Data.

94. Equivalence $[G_o]$ to $[G_o^d]$ and $[G_m]$ to $[G_m^d]$ if no extra points introduced for dynamic analysis.

96. READ extracts real eigenvalues from the equation

$$[K_{aa} - \lambda M_{aa}]\{u_a\} = 0 ,$$

calculates rigid body modes by finding a square matrix $[\phi_{ro}]$ such that

$$[m_o] = [\phi_{ro}^T][m_r][\phi_{ro}]$$

is diagonal and normalized and computes rigid body eigenvectors

$$[\phi_{ao}] = \begin{bmatrix} D_m \phi_{ro} \\ \hline \phi_{ro} \end{bmatrix} ,$$

calculates modal mass matrix

$$[m] = [\phi_a^T][M_{aa}][\phi_a]$$

and normalizes eigenvectors according to one of the following user requests:

1) Unit value of selected coordinate
2) Unit value of largest component
3) Unit value of generalized mass.

99. ØFP formats the summary of eigenvalues and summary of eigenvalue extraction information and places them on the system output file for printing.

101. Go to DMAP No. 177 and print error message if no eigenvalues found.

102. MTRXIN selects the direct input matrices $[K_{pp}^2]$, $[M_{pp}^2]$ and $[B_{pp}^2]$.

106. Equivalence $[M_{pp}^2]$ to $[M_{dd}^2]$, $[B_{pp}^2]$ to $[B_{dd}^2]$ and $[K_{pp}^2]$ to $[K_{dd}^2]$ if no constraints applied. Equivalence $[M_{aa}]$ to $[M_{dd}]$ if no direct input mass matrices and no extra points.

108. GKAD applies constraints to direct input matrices $[K_{pp}^2]$, $[M_{pp}^2]$ and $[B_{pp}^2]$, forming $[K_{dd}^2]$, $[M_{dd}^2]$ and $[B_{dd}^2]$.

110. GKAM assembles stiffness mass and damping matrices in modal coordinates for use in Transient Response.

$$[K_{hh}] = [k] + [\phi_{dh}^T][K_{dd}^2][\phi_{dh}] ,$$

$$[M_{hh}] = [m] + [\phi_{dh}^T][M_{dd}^2][\phi_{dh}],$$

$$[B_{hh}] = [b] + [\phi_{dh}^T][B_{dd}^2][\phi_{dh}],$$

where m_i = modal masses

$b_i = m_i \; 2\pi \; f_i \; g(f_i)$

$k_i = m_i \; 4\pi^2 f_i^2$

and all matrices are real.

113. Go to DMAP No. 179 and print error message if no Transient Response List.

116. Go to next DMAP instruction if cold start or modified restart. LBL13 will be altered by the Executive System to the proper location inside the loop for unmodified starts within the loop.

117. Beginning of loop for additional dynamic load sets.

119. CASE extracts user requests from CASECC for current loop.

122. TRD forms the linear and nonlinear dynamic load vectors $\{P_d\}$ and $\{P_d^{n\ell}\}$ and integrates the equations of motion over specified time periods to solve for the displacements, velocities and accelerations, using the following equation

$$[M_{hh}p^2 + B_{hh}p + K_{hh}]\{u_h\} = \{P_h\} + \{P_h^{n\ell}\}$$

124. VDR prepares displacements, velocities and accelerations, sorted by time step, for output using only the extra points introduced for dynamic analysis and modal coordinates (solution points).

127. Go to DMAP No. 135 if no output request for the solution points.

128. SDR3 sorts the solution point displacements, velocities, accelerations and nonlinear load vectors by point number.

129. ØFP formats the requested solution point displacements, velocities, accelerations and nonlinear load vectors sorted by point number and places them on the system output file for printing.

132. XYTRAN prepares the input for X-Y plotting of the solution point displacements, velocities, accelerations and nonlinear load vectors vs time.

134. XYPLØT prepares requested X-Y plots of the solution point displacements, velocities, accelerations and nonlinear load vectors vs time.

137. Go to DMAP No. 166 if no output request involving dependent degrees of freedom, forces and stresses, or deformed structure plot.

139. DDR1 transforms the solution vector displacements from modal to physical coordinates

$$\{u_d\} = [\phi_{dh}]\{u_h\} .$$

141. Go to DMAP No. 146 if mode acceleration technique not requested.

142. DDR2 calculates an improved displacement vector using the mode acceleration technique, if requested.

147. Equivalence $\{u_d\}$ to $\{u_p\}$ if no constraints applied.

148. Go to DMAP No. 150 if no constraints applied.

149. SDR1 recovers dependent components of displacements

$$\{u_o\} = [G_o^d]\{u_d\} \qquad \begin{Bmatrix} u_d \\ \hline u_o \end{Bmatrix} = \{u_f + u_e\} \quad ,$$

$$\begin{Bmatrix} u_f + u_e \\ \hline u_s \end{Bmatrix} = \{u_n + u_e\} \quad , \qquad \{u_m\} = [G_m^d]\{u_f + u_e\} \quad ,$$

$$\begin{Bmatrix} u_n + u_e \\ \hline u_m \end{Bmatrix} = \{u_p\}$$

and recovers single-point forces of constraint $\{q_s\} = -\{P_s\} + [K_{fs}^T]\{u_f\}$.

152. SDR2 calculates element forces and stresses (ØES1, ØEF1) and prepares load vectors, displacement, velocity and acceleration vectors and single-point forces of constraint for output (ØPP1, ØQP1, ØUPV1) - all sorted by time step.

153. SDR3 prepares requested output sorted by point number or element number.

155. ØFP formats requested output sorted by point number or element number and places it on the system output file for printing.

157. Go to DMAP No. 161 if no deformed structure plots requested.

158. PLØT prepares all requested deformed structure plots.

160. PRTMSG prints plotter data nad engineering data for each deformed plot generated.

163. XYTRAN prepares the input for requested X-Y plots.

165. XYPLØT prepares requested X-Y plots of displacements, velocities, accelerations, forces, stresses, loads or single-point forces of constraint vs. time.

167. Go to DMAP No. 181 if no additional dynamic load sets need to be processed.

168. Go to DMAP No. 117 if additional dynamic load sets need to be processed.

169. Go to DMAP No. 171 and print error message if more than 100 loops.

170. Go to DMAP No. 181 and make normal exit.

172. MØDAL TRANSIENT RESPØNSE ERRØR MESSAGE NØ. 3 - ATTEMPT TØ EXECUTE MØRE THAN 100 LØØPS.

174. MØDAL TRANSIENT RESPØNSE ERRØR MESSAGE NØ. 2 - EIGENVALUE EXTRACTIØN DATA REQUIRED FØR REAL EIGENVALUE ANALYSIS.

176. MØDAL TRANSIENT RESPØNSE ERRØR MESSAGE NØ. 1 - MASS MATRIX REQUIRED FØR MØDAL FØMULATIØN.

178. MØDAL TRANSIENT RESPØNSE ERRØR MESSAGE NØ. 4 - REAL EIGENVALUES REQUIRED FØR MØDAL FØRMULATIØN.

180. MØDAL TRANSIENT RESPØNSE ERRØR MESSAGE NØ. 5 - TRANSIENT RESPØNSE LIST REQUIRED FØR TRANSIENT RESPØNSE CALCULATIØNS.

3.13.3 Restart Tables for Modal Transient Response

3.13.3.1 Bit Positions for Card Name Restart Table

Card Name	Bit Pos.	Card Name	Bit Pos.	Card Name	Bit Pos.
AXIC	1	PQDPLT	3	GRDPNT	15
CELAS1	1	PQUAD1	3	PLØTEL	16
CELAS2	1	PQUAD2	3	PLØT$	18
CELAS3	1	PRØD	3	PØUT$	19
CELAS4	1	PSHEAR	3	XYØUT$	20
CMASS1	1	PTØRDRG	3	AØUT$	21
CMASS2	1	PTRBSC	3	LØØP$	22
CMASS3	1	PTRIA1	3	LØØP1$	23
CMASS4	1	PTRIA2	3	CØUPMASS	24
CØRD1C	1	PTRMEM	3	NØLØØP$	25
CØRD1R	1	PTRPLT	3	MØDACC	55
CØRD1S	1	PTUBE	3	EPØINT	56
CØRD2C	1	PTWIST	3	SEQEP	56
CØRD2R	1	GENEL	4	TF	56
CØRD2S	1	CØNM1	5	DMIG	57
GRDSET	1	CØNM2	5	B2PP$	57
GRID	1	PELAS	6	K2PP$	57
PØINTAX	1	PMASS	7	M2PP$	57
RINGAX	1	MAT1	8	TF$	57
SECTAX	1	MAT2	8	DAREA	58
SEQGP	1	MAT3	8	DELAY	58
SPØINT	1	MATT1	8	DLØAD	58
BARØR	2	MATT2	8	NØLIN1	58
BEAMØR	2	MATT3	8	NØLIN2	58
CBAR	2	TABLEM1	8	NØLIN3	58
CBEAM	2	TABLEM2	8	NØLIN4	58
CCØNEAX	2	TABLEM3	8	TABLED1	58
CØNRØD	2	TABLEM4	8	TABLED2	58
CQDMEM	2	TEMPMT$	8	TABLED3	58
CQDPLT	2	TEMPMX$	8	TABLED4	58
CQUAD1	2	MPC	9	TLØAD1	58
CQUAD2	2	MPCADD	9	TLØAD2	58
CRØD	2	MPCAX	9	TSTEP	58
CSHEAR	2	MPC$	9	EIGR	59
CTØRDRG	2	SPC	10	METHØD$	60
CTRAPRG	2	SPC1	10	DLØAD$	61
CTRBSC	2	SPCADD	10	NLFØRCE	61
CTRIA1	2	SPCAX	10	TSTEP$	61
CTRIA2	2	SPC$	10	HFREQ	62
CTRIARG	2	ØMIT	11	LFREQ	62
CTRMEM	2	ØMIT1	11	LMØDES	62
CTRPLT	2	ØMITAX	11	TABDMP1	62
CTUBE	2	SUPAX	12	SDAMP$	62
CTWIST	2	SUPØRT	12		
PBAR	3	TEMP	13		
PBEAM	3	TEMPAX	13		
PCØNEAX	3	TEMPD	13		
PQDMEM	3	WTMASS	14		

3.13.3.2 Bit Positions for File Name Restart Table

File Name	Bit Pos.
BGPDT	94
CSTM	94
EQEXIN	94
GPDT	94
GPL	94
SIL	94
ECT	95
GPTT	96
ECPT	97
EST	97
GEI	97
GPCT	97
GPST	98
KGGX	98
MGG	99
KGG	100
RG	101
USET	101
YS	101
ØGPST	102
GM	103
KNN	104
MNN	104
KFF	105
KFS	105
MFF	105
GØ	106
KAA	106
KØØB	106
LØØ	106
MAA	106
MØAB	106
MØØB	106
UØØ	106
KLL	107
KLR	107
KRR	107
MLL	107
MLR	107
MRR	107
LLL	108
ULL	108
DM	109
MR	110
DLT	111
EED	111
EQDYN	111
GPLD	111

File Name	Bit Pos.
NLFT	111
SILD	111
TFPØØL	111
TRL	111
USETD	111
LAMA	112
MI	112
ØEIGS	112
PHIA	112
B2PP	113
K2PP	113
M2PP	113
B2DD	114
GMD	114
GØD	114
K2DD	114
M2DD	114
MDD	114
BHH	115
KHH	115
MHH	115
PHIDH	115
CASEXX	116
PDT	117
PNLH	117
PPT	117
PST	117
UHVT	117
ØPNL1	118
ØUHV1	118
ØPNL2	119
ØUHV2	119
PAF	120
UDV2T	120
UEVT	120
QP	121
UPV	121
ØEF1	122
ØES1	122
ØPP1	122
ØQP1	122
ØUPV1	122
PUGV	122
ØEF2	123
ØES2	123
ØPP2	123
ØQP2	123
ØUPV2	123
UDV1T	124

3.13.3.3 Card Name Restart Table

DMAP Inst.	Bit Position 1	10	20	30	40	50	60
BEGIN	12345678901234	56789012	34567890123456	8901234			56789012
FILE	12345678901234	56789012	34567890123456	8901234			56789012
GP1	1						
SAVE	1						
CHKPNT	1						
GP2	12 45		6				
CHKPNT	12 45		6				
PLTSET			8				
SAVE			8				
PRTMSG			8				
CHKPNT			8				
SETVAL			8				
SAVE			8				
COND			8				
PLOT			8				
SAVE			8				
PRTMSG			8				
LABEL			8				
GP3	1	3					
CHKPNT	1	3					
TA1,	1234567						
SAVE	1234567						
COND	12345678	4					
PURGE	1234567						
CHKPNT	1234567						
SMA1	123 6 8						
CHKPNT	123 6 8						
SMA2	123 5 78	4	4				
SAVE	123 5 78	4	4				
COND	123 5 78	4	4				
CHKPNT	123 5 78	4	4				
COND	123 5 78	45					
GPWG	123 5 78	45					
OFP	123 5 78	45					
SAVE	123 5 78	45					
LABEL	123 5 78	45					
EQUIV	123 8						
CHKPNT	123 6 8						
COND	1234 6 8						
SMA3	1234 6 8						
CHKPNT	1234 6 8						
LABEL	1234 6 8						
PARAM	1	9012					
GP4	1	9012					
SAVE	1	9012					
PARAM	1	9012					
PURGE	1	9012					
EQUIV	123456789			4			
CHKPNT	1	9					
COND	123 6 8 0						
GPSP	123 6 8 0						
OFP	123 6 8 0						
SAVE	123 6 8 0						
LABEL	123 6 8 0						
COND	123456789			4			
MCE1	1	9					
CHKPNT	1	9					

DMAP Inst.	Bit Position 1 10 20 30 40 50 60
MCE2	123456789 4
CHKPNT	123456789 4
LABEL	123456789 4
EQUIV	1234567890 4
CHKPNT	1234567890 4
COND	1234567890 4
SCE1	1234567890 4
CHKPNT	1234567890 4
LABEL	1234567890 4
EQUIV	12345678901 4
CHKPNT	12345678901 4
COND	12345678901 4
SMP1	12345678901 4
CHKPNT	12345678901 4
LABEL	12345678901 4
EQUIV	123456789012 4
CHKPNT	123456789012 4
COND	123456789012 4
RBMG1	123456789012 4
CHKPNT	123456789012 4
JUMP	1234 6 89012
LABEL	1234 6 89012
COND	1234 6 89012
LABEL	1234 6 89012
RBMG2	1234 6 89012
CHKPNT	1234 6 89012
COND	1234 6 89012
RBMG3	1234 6 89012
CHKPNT	1234 6 89012
RBMG4	123456789012 4
CHKPNT	123456789012 4
LABEL	123456789012 4
DPD	1 9012 6 89
SAVE	1 9012 6 89
COND	1 9012 6 89
PURGE	1 9012 6 89
EQUIV	123456789012 4 67 90
CHKPNT	1 9012 6 89
READ	123456789012 4 C
SAVE	123456789012 4 C
CHKPNT	123456789012 4 C
OFP	123456789012 4 C
SAVE	123456789012 4 C
COND	123456789012 4 C
MTRXIN	1 67
SAVE	1 67
PURGE	123456789012 67
PARAM	123456789012 67
EQUIV	123456789012 67
CHKPNT	123456789012 67
GKAD	123456789012 4 67 90
CHKPNT	123456789012 4 67 90
GKAM	123456789012 4 67 90 2
SAVE	123456789012 4 67 90 2
CHKPNT	123456789012 4 67 90 2
COND	123456789012 4 67 90 2
PARAM	23

DMAP Inst.	Bit Position 1 TO 20	30	40	50	60
PARAM	12345678901234 6	234			56789012
JUMP		234			
$SS	1 3				
LABEL	12345678901234567890	1234			56789012
PURGE		23			
CASE	12345678901234 6	2345			56789012
SAVE	12345678901234 6	2345			56789012
CHKPNT	12345678901234 6	2345			56789012
TRD	123456789012	234			6789012
CHKPNT	123456789012	234			6789012
VDR		01			
SAVE		01			
CHKPNT		01			
COND		01			
SDR3		01			
OFP		1			
SAVE		1			
CHKPNT		1			
XYTRAN		0			
SAVE		0			
XYPLOT		0			
LABEL		1			
PARAM	123456789012	234			56789012
COND	123456789012	234			56789012
PARAM	123456789012	234			56789012
DDR1	123456789012	234			6789012
CHKPNT	123456789012	234			6789012
COND	123456789012	234			56789012
$SS	23				
DDR2	123456789012	234			56789012
$SS	23				
CHKPNT	123456789012	234			56789012
$SS	23				
EQUIV	123456789012	234			56789012
$SS	23				
CHKPNT	123456789012	234			56789012
$SS	23				
LABEL	123456789012	234			56789012
$SS	23				
EQUIV	123456789012	234			56789012
COND	123456789012	234			56789012
SDR1	123456789012	234			56789012
LABEL	123456789012	234			56789012
CHKPNT	123456789012	234			56789012
SDR2	890				
SDR3	90				
CHKPNT	90				
OFP	9				
SAVE	9				
COND	8				
PLOT	8				
SAVE	8				
PRTMSG	8				
LABEL	8				
CHKPNT	9				
XYTRAN	0				
SAVE	0				

DMAP Inst.	Bit Position 1	10	20	30	40	50	60
XYPLOT			0				
LABEL			0				
COND				23			
$SS	1 3						
REPT				23			
$SS	1 3						
JUMP				23			
$SS	1 3						
JUMP	1234567890123456		8901234				56789012
LABEL				23			
$SS	1 3						
PRTPARM				23			
$SS	1 3						
LABEL	1234567890123456		8901234				56789012
PRTPARM	1234567890123456		8901234				56789012
LABEL	1234567890123456		8901234				56789012
PRTPARM	1234567890123456		8901234				56789012
LABEL	1234567890123456		8901234				56789012
PRTPARM	1234567890123456		8901234				56789012
LABEL	1234567890123456		8901234				56789012
PRTPARM	1234567890123456		8901234				56789012
LABEL	1234567890123456		8901234				56789012
END	1234567890123456		8901234				56789012

3.13.3.4 Rigid Format Change Restart Table

DMAP Inst.	Bit Position 63	70	80
BEGIN	3456789C123		
FILE	3456789C123		
GP1			
SAVE			
CHKPNT			
GP2			
CHKPNT			
PLTSET			
SAVE			
PRTMSG			
CHKPNT			
SETVAL			
SAVE			
COND			
PLOT			
SAVE			
PRTMSG			
LABEL			
GP3			
CHKPNT			
TA1,			
SAVE			
COND			
PURGE			
CHKPNT			
SMA1			
CHKPNT			
SMA2	3	678	
SAVE	3	678	
COND	3	678	
CHKPNT	3	678	
COND			
GPWG			
OFP			
SAVE			
LABEL			
EQUIV			
CHKPNT			
COND			
SMA3			
CHKPNT			
LABEL			
PARAM			
GP4			
SAVE			
PARAM			
PURGE			
EQUIV			
CHKPNT			
COND			
GPSP			
OFP			
SAVE			
LABEL			
COND			
MCE1			
CHKPNT			

DMAP Inst.	Bit Position 63	70	80
MCE2			
CHKPNT			
LABEL			
EQUIV			
CHKPNT			
COND			
SCE1			
CHKPNT			
LABEL			
EQUIV			
CHKPNT			
COND			
SMP1			
CHKPNT			
LABEL			
EQUIV			
CHKPNT			
COND			
RBMG1			
CHKPNT			
JUMP			
LABEL			
COND			
LABEL			
RBMG2			
CHKPNT			
COND			
RBMG3			
CHKPNT			
RBMG4			
CHKPNT			
LABEL			
DPD			
SAVE			
COND	3456789C123		
PURGE			
EQUIV			
CHKPNT			
READ			
SAVE			
CHKPNT			
OFP			
SAVE			
COND	3456789C123		
MTRXIN			
SAVE			
PURGE			
PARAM			
EQUIV			
CHKPNT			
GKAD			
CHKPNT			
GKAM			
SAVE			
CHKPNT			
COND	3456789C123		
PARAM			

DMAP Inst.	Bit Position 63 70 80
PARAM	34567890123
JUMP	3456789C123
LABEL	3456789C123
PURGE	
CASE	3456789C123
SAVE	3456789C123
CHKPNT	3456789C123
TRD	
CHKPNT	
VDR	
SAVE	
CHKPNT	
COND	
SDR3	
OFP	
SAVE	
CHKPNT	
XYTRAN	
SAVE	
XYPLOT	
LABEL	
PARAM	
COND	
PARAM	
DDR1	
CHKPNT	
COND	
DDR2	
CHKPNT	
EQUIV	
CHKPNT	
LABEL	
EQUIV	
COND	3456789C123
SDR1	3456789C123
LABEL	3456789C123
CHKPNT	34567890123
SDR2	
SDR3	
CHKPNT	
OFP	
SAVE	
COND	
PLOT	
SAVE	
PRTMSG	
LABEL	
CHKPNT	
XYTRAN	
SAVE	
XYPLOT	
LABEL	
COND	34567890123
REPT	34567890123
JUMP	3456789C123
JUMP	3456789C123
LABEL	3456789C123

DMAP Inst.	Bit Position 63 70 80
PRTPARM	3456789C123
LABEL	3456789C123
PRTPARM	3456789C123
LABEL	3456789C123
PRTPARM	3456789C123
LABEL	3456789C123
PRTPARM	3456789C123
LABEL	3456789C123
PRTPARM	3456789C123
LABEL	34567890123
END	3456789C123

3.13.3.5 File Name Restart Table

DMAP Inst.	Bit Position 94	100	110	120
BEGIN				
FILE				
GP1	4			
SAVE	4			
CHKPNT	4			
GP2	5			
CHKPNT	5			
PLTSET				
SAVE				
PRTMSG				
CHKPNT				
SETVAL				
SAVE				
COND				
PLOT				
SAVE				
PRTMSG				
LABEL				
GP3	6			
CHKPNT	6			
TA1,	7			
SAVE	7			
COND	7			
PURGE	7 2			
CHKPNT	7			
SMA1	8			
CHKPNT	8			
SMA2	9			
SAVE	9			
COND	9			
CHKPNT	9			
COND				
GPWG				
OFP				
SAVE				
LABEL				
EQUIV	0			
CHKPNT	0			
COND	0			
SMA3	0			
CHKPNT	0			
LABEL	0			
PARAM	1			
GP4	1			
SAVE	1			
PARAM	1			
PURGE	1 3 567 90 4			1
EQUIV	4			
CHKPNT				
COND	2			
GPSP	2			
OFP	2			
SAVE	2			
LABEL	2			
COND	34			
MCE1	3			
CHKPNT	3			

DMAP Inst.	Bit Position 94	100	110	120
MCE2	4			
CHKPNT	4			
LABEL	34			
EQUIV	5			
CHKPNT	5			
COND	5			
SCE1	5			
CHKPNT	5			
LABEL	5			
EQUIV	6			
CHKPNT	6			
COND	6			
SMP1	6			
CHKPNT	6			
LABEL	6			
EQUIV	7			
CHKPNT	7			
COND	7			
RBMG1	7			
CHKPNT	7			
JUMP				
LABEL	7			
COND	890			
LABEL	8			
RBMG2	8			
CHKPNT	8			
COND	9			
RBMG3	9			
CHKPNT	9			
RBMG4	0			
CHKPNT	0			
LABEL	890			
DPD	1			
SAVE	1			
COND	1			
PURGE	1			
EQUIV	4			
CHKPNT	1			
READ	2			
SAVE	2			
CHKPNT	2			
OFP	2			
SAVE	2			
COND	2			
MTRXIN	3			
SAVE	3			
PURGE	3			
PARAM	3			
EQUIV	3			
CHKPNT	3			
GKAD	4			
CHKPNT	4			
GKAM	5			
SAVE	5			
CHKPNT	5			
COND	7			
PARAM				

DMAP Inst.	Bit Position 94	100	110	120
PARAM				
JUMP				
LABEL				
PURGE				
CASE			6	
SAVE			6	
CHKPNT			6	
TRD			7	
CHKPNT			7	
VDR			8	
SAVE			8	
CHKPNT			8	
COND			9	
SDR3			9	
OFP				
SAVE				
CHKPNT			9	
XYTRAN				
SAVE				
XYPLOT				
LABEL			9	
PARAM			0	
COND			0	
PARAM				
DDR1				4
CHKPNT				4
COND			0	
DDR2			0	
CHKPNT			0	
EQUIV			0	
CHKPNT			0	
LABEL			0	
EQUIV			1	
COND			1	
SDR1			1	
LABEL			1	
CHKPNT			1	
SDR2				2
SDR3				3
CHKPNT				
OFP				
SAVE				
COND				
PLOT				
SAVE				
PRTMSG				
LABEL				
CHKPNT				3
XYTRAN				
SAVE				
XYPLOT				
LABEL				
COND				
REPT				
JUMP				
JUMP				
LABEL				

DMAP Inst.	Bit Position 94	100	110	120
PRTPARM				
LABEL				
PRTPARM				
LABEL				
PRTPARM				
LABEL				
PRTPARM				
LABEL				
PRTPARM				
LABEL				
END				

3.13.4 Automatic Output for Modal Transient Response

The Eigenvalue Summary Table and the Eigenvalue Analysis Summary, as described under Normal Mode Analysis, are automatically printed. All real eigenvalues extracted are included even though not all are used in the modal formulation.

3.13.5 Case Control Deck and Parameters for Modal Transient Response

The following items related to subcase definition and data selection must be considered in addition to the list presented with Direct Transient Response:

1. METHØD must appear above the subcase level to select an EIGR card that exists in the Bulk Data Deck.
2. All of the eigenvectors used in the modal formulation must be determined in a single execution.
3. An SPC set must be selected above the subcase level unless the model is a free body or all constraints are specified on GRID cards, Scalar Connection cards or with General Elements.
4. SDAMPING must be used to select a TABDMP1 table if structural damping is desired.

Output that may be requested is the same as that described under Direct Transient Response. Output for SØLUTIØN points will have the modal coordinates identified by the mode number determined in Real Eigenvalue Analysis.

The eigenvectors used in the modal formulation may be obtained for the SØLUTIØN points by using the ALTER feature to print the matrix of eigenvectors following the execution of READ. The eigenvectors for all points in the model may be obtained by running the problem initially on the Normal Mode Analysis rigid format or by making a modified restart using the Normal Mode Analysis rigid format.

The following parameters are used in Modal Transient Response:

1. GRDPNT - optional - A positive integer value of this parameter will cause the Grid Point Weight Generator to be executed and the resulting weight and balance information to be printed.
2. WTMASS - optional - The terms of the mass matrix are multiplied by the real value of this parameter when they are generated in SMA2.

3. CØUPMASS - optional - a positive integer value of this parameter will cause the generation of coupled mass matrices rather than lumped mass matrices for all bar elements, rod elements, and plate elements that include bending stiffness (see Section 3.1 for list of elements).

4. LFREQ and HFREQ - required unless LMØDES is used. The values of these parameters give the frequency range (LFREQ is lower limit and HFREQ is upper limit) of the modes to be used in the modal formulation.

5. LMØDES - required unless LFREQ and HFREQ are used. The integer value of this parameter is the number of lowest modes to be used in the modal formulation.

6. MØDACC - optional - A positive integer value of this parameter causes the Dynamic Data Recovery module to use the mode acceleration method.

4.1 PLOTTING

NASTRAN provides the capability for generating on any of several different plotters the following kinds of plots:

1. Undeformed geometric projections of the structural model.
2. Static deformations of the structural model by either displaying the deformed shape (alone or superimposed on the undeformed shape), or displaying the displacement vectors at the grid points (superimposed on either the deformed or undeformed shape).
3. Modal deformations (sometimes called mode shapes or eigenvectors) resulting from real eigenvalue analysis by the same options stated in 2 above.
4. Transient deformations of the structural model by displaying either vectors or the deformed shape for specified times.
5. X-Y graphs of transient response or frequency response.
6. Topological displays of matrices.

Structure plots (items 1-4) are discussed in Section 4.2 while X-Y plots (item 5) are discussed in Section 4.3. Matrix plots are generated by Utility Module SEEMAT described in Section 5 and must be accomplished by altering a Rigid Format or using a DMAP sequence. Requests for structure plots or X-Y plots are accomplished in the Case Control Deck by submitting a structure plot request packet or an X-Y output request packet. The discussion of these packets constitutes most of the remainder of this chapter.

In order to actually create plots, a plotter and model name must be specified by the user. The method used to specify this information may vary according to the plot request made, but the actual names used do not vary. In addition, a physical plot tape must be set up by the user. The control cards needed to set up a plot tape are generally installation dependent and are described in Section 5 of the Programmer's Manual. There are two plot tapes (PLT1 and PLT2). It is only necessary to set up the plot tape used by the specified plotter. The number of plots for PLT1 on IBM 360 computers is limited (see Section 5.3.5 of the Programmer's Manual).

The following table is a list of permissible plotter and model names, together with the corresponding plot tapes which must be set up by the user. The underlined items are the default models for each plotter. A model name is generally specified as two items, each having a default value. The default value of the second item is in some cases dependent upon the value specified for the first item. If no plotter is specified by the user, the requested plots will be created for the Stromberg Carlson (SC) model 4020 microfilm plotter.

Plotter Name	Plot Tape	Plotter Model
BL	PLT1	{STE / LTE}, 30
CALCØMP	PLT2	{765 / 763}, {205 / 210 / 105 / 110} {565 / 563}, {205 / 210 / 105 / 110 / 305 / 310}
DD	PLT2	80,B
EAI	PLT1	3500,{30 / 45}
NASTPLT	PLT2	{M / T / D}, {0 / T}
SC	PLT2	4020

The plotter name, BL, is used for Benson Lehner plotters. The default model is an STE, 30. The first model item may be either STE or LTE, where STE is a short line electroplotter and LTE is a long line electroplotter. The second model item may only equal 30, which is the size of the plotter table in inches. Both the STE and LTE plotters are table plotters.

The plotter name, CALCØMP, is used for California Computer plotters. The default model is a 765, 205. The first model item is the plotter model number as used in California Computer hardware descriptions. The 700 series plotters are those having the ZIP mode and 24 incremental directions. The 500 series plotters are those having only 8 incremental directions. The 600 series may have either 24 or 8 incremental directions. If the user has access to only a 663 or 665 plotter, it should be specified as a 563 or 565 if it has only 8 incremental directions, and as a 763 or 765 if it has 24 incremental directions. The 563 and 763 are both 30-inch drum plotters, while the 565 and 765 are both 12-inch drum plotters.

The second model item indicates the type of tape transport used with the CALCØMP plotter and the increment size of the plotter. There are two possible increment sizes, .010 and .005 inches. The last two digits of this second model item represent these two possible increment sizes, i.e., 10 = .010 and 05 = .005. The first digit of the second model item represents the type of tape transport attached to the plotter. There are three types of tape transports available. The primary differences among these transports are the number of characters needed to cause one incremental movement on the plotter. Some transports (e.g. the 470, 570 and 750 models) require three characters. These transports can only be attached to the 500 series plotters. Other transports (e.g. the 760 and 770) require two characters for each incremental movement. Still other transports (e.g. the 780) require only one character for each incremental movement. The first digit of the second model item is the number of characters required by the tape transport for each incremental movement. An example of a legitimate CALCØMP model name is (763,105). This represents a 763, 30-inch drum plotter with an increment size of .005 inches, driven by a tape transport requiring only one character for each incremental movement (e.g. a 780 tape transport).

The plotter name, DD, is used for Data Display plotters. The only permissible model is the (80,B) microfilm plotter.

The plotter name, EAI, is used for Electronic Associates Inc. plotters. The first model item is the model number as described in EAI hardware descriptions. The only permissible model is an EAI 3500. This is a table plotter having either a 30-inch or 45-inch plotting surface. The second model item is the size of the plotting surface. The default size is a 30-inch surface, i.e., 3500, 30.

The plotter name, NASTPLT, is used for the NASTRAN General Purpose plotter package. This plotter package is used if the desired plotter is not available in the NASTRAN plotting software. However, if this package is specified, a separate program must be written to interpret the resulting plot tape and create the corresponding plots on the actual plotter desired. The default model is M, 0. The first model item may either be M, T, or D. This indicates the actual plotter is a microfilm, table or drum plotter, respectively. The second model item indicates whether or not the actual plotter has any typing capability: 0 = typing possible, 1 = no typing possible. If no typing capability exists, all printed characters will be drawn. The default plotter type is a microfilm plotter with typing capability. An example of an acceptable model is (T,1). This represents a table plotter having no typing capability. A more detailed description of the

implications of the NASTRAN General Purpose plotter package is given in Section 6 of the Programmer's Manual.

The plotter name, SC, is used for Stromberg Carlson plotters. The only permissible model is the 4020 microfilm plotter. If the only available plotter model is a 4060, the user should determine if it has a 4020 compatibility package, as is usually the case, so as to avoid using the NASTRAN General Purpose plotter.

The operation of the Structure Plotter is of sufficient theoretical content to warrant inclusion in the Theoretical Manual. Section 13 of the Theoretical Manual provides a discussion of the basic theory and gives some examples of plotter output.

The availability of NASTRAN plotting capability is a function of the particular rigid format as shown in the following table. Note that deformed structure plots are not available for either frequency response rigid formats or complex eigenvalue analysis rigid formats. Complex numbers are the source of this restriction.

Plotter Availability for the NASTRAN Rigid Formats

Rigid Format	Structure Plotter		Curve Plotter	Matrix Topology Plotter
	Undeformed	Deformed		
1	x	x		*
2	x	x		*
3	x	x		*
4	x	x		*
5	x	x		*
6	x	x		*
7	x			*
8	x		x	*
9	x	x	x	*
10	x			*
11	x		x	*
12	x	x	x	*

* The matrix topology plotter is not automatically available in any rigid format. Utility module SEEMAT must be altered into the Rigid Format DMAP sequence in order to use this feature (see Section 5.2).

4.2 STRUCTURE PLOTTING

In order to assist NASTRAN users both in the preparation of the analytical model and in the interpretation of output, the structure plotter provides the following capabilities for undeformed structures:

1. Place a symbol at the grid point locations. (optional)
2. Identify grid points by placing the grid point identification number to the right of the grid point locations. (optional)
3. Identify elements by placing the element identification number and element symbol at the center of each element. (optional)
4. Connect the grid points in a predetermined manner using the structural elements or PLØTEL elements.

The following capabilities are provided for deformed structures:

1. Place a symbol at the deflected grid point location. (optional)
2. Identify the deflected grid points by placing the grid point identification number to the right of the deflected grid point locations. (optional)
3. Connect the deflected grid points in a predetermined manner using the structural elements or PLØTEL elements.
4. Draw lines originating at the undeflected or deflected grid point location, drawn to user-specified scale, representing the X, Y, Z components or resultant summations of the grid point deflections.

The above plots are available in either orthographic, perspective, or stereoscopic projections on several plotters. Stereoscopic plots are normally made only on microfilm plotters since a stereoscopic viewer or projector must be used to obtain the stereoscopic effect. A request for structure plotting is made in the Case Control Deck by means of a plot request packet which includes all cards from an ØUTPUT(PLØT) card to either a BEGIN BULK or ØUTPUT(XYØUT) [or ØUTPUT(XYPLØT)] card.

The data card format is free-field, subject to rules in paragraphs below. The cards are basically sequence dependent even though some interchanging in sequence of defining parameters is permissible. The elements and grid points to be plotted may be defined anywhere in the submittal, but the parameters describing the characteristics of the plot are evaluated on the current basis every time a PLØT or FIND card (see Section 4.2.2.2) is encountered. In order to minimize mistakes, it is suggested that a strict sequence dependency be assumed.

4.2.1 General Rules

4.2.1.1 Rules for Free-Field Card Specification

1. Only columns 1 thru 72 are available. Any information specified in columns 73 thru 80 will be ignored.

2. If the last character on a card is a comma (not necessarily in column 72), the next card is a continuation of this physical card. Any number of continuation cards may be specified, and together they form a logical card.

3. The mnemonics or values can be placed anywhere on the card, but must be separated by delimiters.

4. The following delimiters are used:

   a. blank

   b. , comma

   c. (left parenthesis

   d.) right parenthesis

   e. = equal sign

   All of these delimiters can be used as needed to aid the legibility of the data.

4.2.1.2 Plot Request Packet Card Format

In the plot request packet card descriptions presented in Section 4.2.2, the following notation will be used to describe the card format:

1. Upper-case letters must be punched exactly as shown.

2. Lower-case letters indicate that a substitution must be made.

3. Braces { } indicate that a choice of the contents is mandatory.

4. Brackets [ ] contain an option that may be omitted or included by the user.

5. Underlined options or values are those for which a default option or an initialized (or computed) value was programmed.

6. A physical card consists of information punched in columns 1 through 72 of a card.

7. A logical card may consist of more than one physical card through the use of continuation cards.

8. Numerical values may always be either integer or real numbers, even though a specific type is at times suggested in order to conform to the input in other sections of the program.

4.2.2 Plot Request Packet Card Descriptions

The general form for each card of the plot request packet is shown enclosed in a rectangular box. Description of the card contents then follows for each card.

4.2.2.1 SET Definition Cards

These cards specify sets of elements, corresponding to portions of the structure, which may be referenced by PLØT and FIND cards. The SET card is required.

Each set of elements defines by implication a set of grid points connected by those elements. The set may be modified for plotting deformation data by deleting some of its grid points. The elements are used for creating the plot itself and element labeling while the grid points are used for labeling, symbol printing, and drawing deformation vectors.

SET i [INCLUDE] [ELEMENTS] j_1, j_2, j_3 THRU j_4, j_5, etc.

[INCLUDE / EXCLUDE / EXCEPT] [ELEMENTS / GRID POINTS] k_1, k_2, k_3 THRU k_4, k_5, etc.

i = set identification number (positive integer, unique for each set)

j = element identification numbers or element types

k = element identification numbers or grid point identification numbers or element types

Permissible element types are:

RØD, CØNRØD, BAR, TUBE, VISC, TRIA1, TRIA2, TRBSC, TRPLT, TRMEM,
QUAD1, QUAD2, QDPLT, QDMEM, SHEAR, TWIST, PLØTEL

ALL may be used to select all permissible element types.

INCLUDE may be used at any time for element information. When used with grid points, INCLUDE can be used only to restore previously EXCLUDEd grid points. It cannot be used to include grid points in the original set of grid points.

EXCLUDE can be used to delete elements or element types. All grid points that are associated with deleted elements are also deleted. EXCLUDE can be used to delete deformation vectors from grid points enumerated after an EXCLUDE command.

EXCEPT is a modifier to an INCLUDE or an EXCLUDE statement.

THRU is used to indicate all of the integers in a sequence of identification numbers, starting with the integer preceding THRU and ending with the integer following THRU. The integers in the range of the THRU statement need not be consecutive, e.g., the sequence 2, 4, 7, 9 may be specified

as 2 THRU 9.. THRU is not applicable if element types are specified.

Each SET must be a logical card. Redefinition of sets previously defined is not permitted; however, there is no restriction on the number of sets. The sets of identification numbers can be assembled by use of the word ALL, or by individually listing the integers in any order such as 1065, 32, 46, 47, 7020, or by listing sequences using THRU, EXCLUDE, and EXCEPT such as 100 THRU 1000 EXCEPT 182 EXCLUDE 877 THRU 911. Examples of SET cards:

Examples of SET cards:

1. SET 1 INCLUDE 1, 5, 10 THRU 15 EXCEPT 12
   (Set will consist of elements 1, 5, 10, 11, 13, 14 and 15)

2. SET 25 = RØD, CØNRØD, EXCEPT 21
   (Set will consist of all RØD and CØNRØD elements except element 21)

3. SET 10 SHEAR EXCLUDE GRID PØINTS 20, 30 THRU 60, EXCEPT 35,
   36 INCLUDE ELEMENTS 70 THRU 80.
   (This set will include all shear elements plus elements 70 thru 80, and the associated grid point set will contain all grid points connected by these elements. Grid points 20, 30 thru 34 and 37 thru 60 will appear on all plots with their symbols and labels, however no deformation vectors will appear at these grid points when VECTØR is commanded.

4. SET (15) = (15 THRU 100) EXCEPT (21 THRU 25)
   (This set will include all elements from 15 to 20 and from 26 to 100).

5. SET 2 = ALL EXCEPT BAR
   (This set will include all elements except bars).

NOTE: The equal signs, commas, and parentheses above are delimiters and are not required, because blanks also serve as delimiters.

4.2.2.2 Cards Defining Parameters

These cards specify how the structure will be plotted, i.e., type of projection, view angles, scales, etc. All the multiple choice parameters are defaulted to a preselected choice if not specified. Each parameter requiring a numerical value that is not specified by the user can either be established internally in the program by means of the FIND card or can assume default values. The FIND card is used to request that the program select a SCALE, ØRIGIN, and/or VANTAGE PØINT to allow the construction of a plot in a user-specified region of the paper or film. The FIND card is described at the end of this Section, following the discussion of the associated parameters.

The parameter cards are listed here in a logical sequence; however, they need not be so specified. Any order may be used, but if a parameter is specified more than once, the value or choice stated last will be used. Each parameter may be either an individual card, or any number of them may be combined on one logical card.

All the parameters used in the generation of the various plots will be printed out as part of the output, whether they are directly specified, defaulted or established using the FIND card.

Initialization of parameters to default values occurs only once. Subsequently, these values remain until altered by a direct input. The only exceptions are the view angles, scale factors, vantage point parameters, and the origins. Whenever the plotter or the method of projection is changed, the view angles are reset to the default values, unless they are respecified by the user. In addition, the scale factors, vantage point parameters, and the origin must be redefined by the user.

PLØTTER plotter name, MØDEL name [DENSITY {800 / 556 / 200} BPI]

The plotter names and MØDEL names are listed in Section 4.1. The tape density information is used only in print-out and does not control the density of the generated plot tape. To actually specify the tape density, the user must use the customary means of communication established at a given installation between the user and the computer operators. This card is required for plotters other than the SC 4020.

{ØRTHØGRAPHIC / PERSPECTIVE / STEREØSCØPIC} PRØJECTIØN

The default option is orthographic projection. See Section 13 of the Theoretical Manual for a discussion of the various projections. This card is optional.

AXES r, s, t [{SYMMETRIC / ANTISYMMETRIC}]

VIEW γ, β, α

r, s, t = X or MX, Y or MY, Z or MZ (where "M" implies the negative axis)

γ, β, α = three angles of rotation in degrees (real numbers)

These two parameter cards define the orientation of the object in relation to the observer, that is the angles of view. Both of these cards are optional. Defining the observer's coordinate system as R, S, T and the basic coordinate system of the object as X, Y, Z, the angular relationship between the two systems is defined by the three angles γ, β and α as follows:

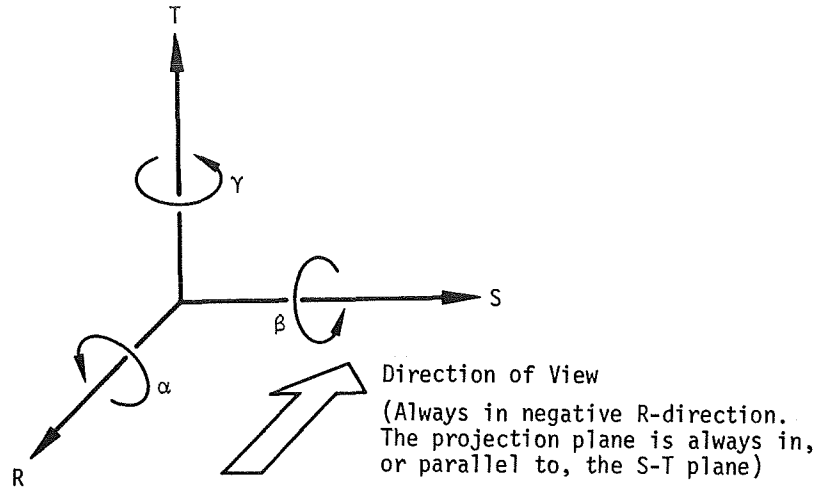

Using the above convention, γ and β represent the angles of turn and tilt. The default values are:

γ = 34.27°

β = 23.17° for orthographic and stereoscopic projections

0.0° for perspective projection

α = 0.0° .

The order in which γ, β, and α are specified is critically important as illustrated in Figure 1, at the end of this section. Also, see section 13.1.1 of the Theoretical Manual.

The AXES card can be used to preposition the object in 90° increments in such a manner that only rotations less than 90° are required by the VIEW card to obtain the desired orientation. This is accomplished by entering X, Y, Z, MX, MY or MZ in the fields corresponding to R, S, T axes, where MX, MY and MZ represent the negative X, Y and Z axis directions respectively. The default values are X, Y, Z.

An undeformed or deformed plot of the symmetric portion of an object can be obtained by reversing the sign of the axis that is normal to the plane of symmetry. In the case of multiple planes of symmetry, the signs of all associated planes should be reversed. The ANTISYMMETRIC option should be specified when a symmetric structure is loaded in an unsymmetric manner. This will cause the deformations to be plotted antisymmetrically with respect to the specified plane or

planes. Since the AXES card applies to all parts (SETS) of a single frame, symmetric and anti-symmetric combinations cannot be made with this card (see the symmetry option on the PLØT execution card in Section 4.2.2.3).

MAXIMUM DEFØRMATIØN d

This card must always be included if a deformed structure is to be plotted. The value of d represents the length to which the maximum displacement component is scaled in each subcase. The maximum deformation of the structure must be specified in units of the structure (not inches of paper). This data is necessary since the actual deformations are usually too small to be distinguishable from the undeformed structure if they were plotted to true scale. If FIND card parameters are to be based on the deformed structure, the FIND card must be preceded by the MAXIMUM DEFØRMATIØN card.

SCALE a[, b]

a = real number representing scale to which the model is drawn

b = ratio of model size/real object size (stereoscopic projection only)

For orthographic or perspective projections, the scale "a" is the ratio of the plotted object in inches to the real object in the units of the structural model, i.e., one inch of paper equals one unit of structure. For stereoscopic projection, the stereoscopic effect is enhanced by first reducing the real object to a smaller model (scale "b"), and then applying scale "a". The ratio of plotted/real object is then the product a x b. A scale must be defined in order to make a plot, however, the SCALE card is not recommended for general use. See the FIND card described at the end of this Section in order to have the scale determined automatically.

ØRIGIN i, u, v

i = origin identification number (any positive integer)

u = horizontal displacement of paper origin from RST origin

v = vertical displacement of paper origin from RST origin

In the transformation performed for any of the three projections, the origins of both the object (XYZ system) and of the observer (RST system) are assumed to be coincident.

This card refers to the paper origin. It represents the displacement of the paper origin (lower left hand corner) from the RST origin. The units are inches and are not subject to the scaling of the plotted object. The ØRIGIN card is not recommended for general use. See the FIND card described at the end of this Section in order to have the origin located so as to place the plotted object in the center of the image area.

Ten (10) origins are permitted to be active at one time. However, any one can be redefined at any time. An eleventh origin is also provided if more than 10 origins are erroneously defined (i.e., only the last of these surplus origins will be retained). CAUTION: when a new projection or plotter is called for, all previously defined origins are deleted.

VANTAGE PØINT r_o, s_o, t_o [, s_{or}]

(perspective and stereoscopic projections only)

r_o = R-coordinate of the observer

s_o = S-coordinate of the observer in perspective projection or
S-coordinate of the left eye of the observer in the stereoscopic projection

t_o = T-coordinate of the observer

s_{or} = S-coordinate of the right eye of the observer in the stereoscopic (not needed in perspective projection)

This card defines the location of the observer with respect to the structural model. A vantage point is required for either perspective or stereoscopic projections. The VANTAGE PØINT card is not recommended for general use. See the FIND card described at the end of this Section. A theoretical description of vantage point is contained in Section 13 of the Theoretical Manual.

PRØJECTIØN PLANE SEPARATIØN d_o

(perspective and stereoscopic projections only)

This card specifies the R-direction separation of the observer and the projection plane.

The PRØJECTIØN PLANE SEPARATIØN card is not recommended for general use. See the FIND card described at the end of this Section. The card may be ommitted if VANTAGE PØINT is included on the FIND card. A theoretical description of projection plane separation is contained in Section 13 of the Theoretical Manual.

ØCULAR SEPARATIØN os

(stereoscopic projection only)

Ocular separation - S-coordinate separation of the two vantage points in the stereoscopic projection is defaulted to 2.756 inches which is the separation used in the standard stereoscopic cameras and viewers (70mm). It is recommended that the default value be used.

CAMERA type [, BLANK FRAMES n]

(microfilm plotters only)

This card offers three options of different cameras or combinations:

type = FILM - 35mm or 16mm film (positive or negative images)

type = PAPER - positive prints

type = BØTH - positive prints and 35mm or 16mm film

The request for a 35mm or 16mm camera and positive or negative images must be communicated to the plotter operator through normal means of communications at the installation. Insertion of blank frames between plots is optional and is applicable only to plots generated on film. The type option must be FILM or BØTH if blank frames are desired. The plotter must be operated in the manual mode in order to have blank frames inserted between positive prints. If blank frames are desired only on film, and not on paper, the plotter must be operated in the automatic mode. The

default values are type = PAPER, n = 1. This card is completely optional.

PAPER SIZE a {X / BY} b, [TYPE name]

(table plotters only)

a = horizontal size of paper in inches

b = vertical size of paper in inches

name = any BCD value desired by user for identification purposes.

The default parameters are 8.5 x 11.0, type VELLUM. This card is completely optional.

PEN i [, SIZE j] [, CØLØR name]

(table plotters only)

i = pen designation number

j = pen size number (0 thru 3)

name = color desired

This card generates a message on the printed output which may be used to inform the plotter operator as to what size and which color pen point to mount in the various pen holders. The actual number of pens available will depend on the plotter hardware configuration at each installation. This card does not control the pen used in generating the plot (see the PEN option on the PLØT execution card in Section 4.2.2.3). The PEN card is optional, and is not appropriate for microfilm plotters.

The pen designations vary on various plotters; therefore, the designation numbers used here are only the pointers to true identification of the pens. The following table summarizes these pen designations and the acutal pen numbers on the plotters used.

NASTRAN Pen Designation	PLOTTER Pen Number	
	EAI 3500	All Others
1	0	1
2	1	2
3	2	3
4	3	4
5	4	1
6	5	2
7	6	3
8	7	4

```
FIND  [SCALE],[ØRIGIN i],[VANTAGE PØINT],[SET j],[REGIØN le,be,re,te]
```

i = origin identification number (any positive integer).

j = set identification number (any positive integer).

le = fractional distance of left edge of plot region from the lower left corner of the image area (default value = 0).

be = fractional distance of bottom edge of plot region from the lower left corner of the image area (default value = 0).

re = fractional distance of right edge of plot region from the lower left corner of the image area (default value = 1.).

te = fractional distance of top edge of plot region from the lower left corner of the image area (default value = 1.).

The FIND card requests the structure plotter to compute any of the parameters SCALE, ØRIGIN i, and/or VANTAGE PØINT indicated by the user based on SET j, MAXIMUM DEFØRMATIØN, REGIØN le, be, re, te, and the paper size for table plotters.

Any one, two, or all three parameters may be computed by the program by using this card, provided that the parameters(s) not requested have already been defined. If no set is specified on this card, the first set defined is used by default. If no options are specified on the FIND card, a SCALE and VANTAGE PØINT are selected and ØRIGIN 1 is located, using the first defined SET, so that the plotted object is located within the image area. The plot region is defined as some fraction of the image area (image area = 0, 0, 1., 1. and first quadrant = .5, .5, 1., 1.). The image area is located inside the margins on the paper. Each FIND card must be one (1) logical card. The FIND card is recommended for general use.

4.2.2.3 PLØT Execution Card

```
PLØT [STATIC | MØDAL | TRANSIENT] DEFØRMATIØN i1, i2 THRU i3, i4, etc.] [RANGE λ1, λ2 | TIME t1, t2] [MAXIMUM DEFØRMATIØN d],
[SET j1][ØRIGIN k1][SYMMETRY | ANTISYMMETRY w][PEN | DENSITY p][SYMBØLS m[, n]][LABEL GRID PØINTS | ELEMENTS | BØTH],
[SHAPE | VECTØR v | SHAPE, VECTØR v] ,
[SET j2][ØRIGIN k2] .... etc.
```

This logical card will cause one picture to be generated for each subcase, mode or time step requested, using the current parameter values. If only the word PLØT appears on the card, a picture of the undeformed structure will be prepared using the first defined set and the first defined origin. The available plot options and their meanings are:

1. STATIC - Plot static deformations in Rigid Formats 1, 2, 4, 5, and 6.

   MØDAL - Plot mode shapes in Rigid Formats 3 and 5.

   TRANSIENT - Plot transient deformations in Rigid Formats 9 and 12.

2. DEFØRMATIØN - Nonzero integers following refer to subcases that are to be plotted. Default is all subcases. See SHAPE and VECTØR for use of "0" with command.

3. RANGE - Refers to range of eigenvalues (not frequency range or mode numbers), using requested subcases, for which plots will be prepared.

   TIME - Refers to time interval, using requested subcases and output time steps, for which plots will be prepared.

4. MAXIMUM DEFØRMATIØN - Real number following is used as the maximum displacement component in scaling the displacements for all subcases. Each subcase is separately scaled according to its own maximum if this item is absent.

5. SET - Integer following identifies a set which defines the portion of the structure to be plotted. Default is first set defined.

6. ØRIGIN - Integer following identifies the origin to be used for the plot. Default is first origin defined.

7. SYMMETRY w - Prepare an undeformed or deformed plot of the symmetric portion of an object where w is the normal to the plane or planes of symmetry.

   ANTISYMMETRY w - Prepare a deformed plot of the symmetric portion of an object that is loaded in an antisymmetrical manner, where w is the normal to the plane or planes of symmetry.

The symbol w may specify the basic coordinates X, Y, or Z, or any combination thereof. This option allows the plotting of symmetric and/or antisymmetric combinations, providing an origin is selected for the portion of the structure defined by the bulk data that allows sufficient room for the complete plot. This does not permit the combination of symmetric and antisymmetric subcases, as each plot must represent a single subcase. This capability is limited to the plotting of structures that are loaded in a symmetric or an antisymmetric manner.

8. PEN - Integer following controls the internal NASTRAN pen number (see table in Section 4.2.2.2) that is used to generate the plot on table plotters.

   DENSITY - Integer following specifies line density for film plotters. A line density of d is d times heavier than a line density of 1.

9. SYMBØLS m[,n] - All of the grid points associated with the specified set will have symbol m overprinted with symbol n printed at its location. If n is not specified, only symbol m will be printed.

Following is a table of symbols available on each plotter. Symbols that are not available on a given plotter are defaulted to a similar symbol indicated in parentheses.

SYMBØL NØ. m or n	SYMBØL	AVAILABILITY		
		EAI 3500	SC4020	All Others
0	no symbol	X	X	X
1	X	X	X	X
2	*	X	X	X
3	+	X	X	X
4		X	X	X
5	·	X	X	X
6	○	X	X	X
7	□	X	X	X
8	◇	X	(7)	X
9	△	(7)	(7)	X

10. LABEL GRID PØINTS - All the grid points associated with the specified set have their identification number printed to the right of the undeflected or deflected location (undeflected location in the case of superimposed plots).

    LABEL ELEMENTS- All the elements included in the specified set are identified by the element identification number and type at the center of each element.

    LABEL BØTH - Label both the grid points and elements.

    Labels for element types are given in the following table:

Element Type	Label
BAR	BR
CØNRØD	CR
QDMEM	QM
QDPLT	QP
QUAD1	Q1
QUAD2	Q2
RØD	RD
SHEAR	SH
TRBSC	TB
TRIA1	T1
TRIA2	T2
TRIMEM	TM
TRPLT	TP
TUBE	TU
TWIST	TW
VISC	VS
PLØTEL	PL

11. SHAPE - All the elements included in the specified set are shown by connecting the associated grid points in a predetermined manner.

Both deformed and undeformed shapes may be specified. All of the deformed shapes relating to the subcases listed after DEFØRMATIØN may be underlaid on each of their plots by including "0" with the subcase string after DEFØRMATIØN on the PLØT card. The undeformed plot will be drawn using PEN 1 or DENSITY 1 and symbol 2 (if SYMBØLS is specified).

12. VECTØR v - A line will be plotted at the grid points of the set, representing in length and direction the deformation of the point.

Vectors representing the total deformation or its principal components may be plotted by insertion of the proper letter(s) for variable v. Possible vector combinations are:

X or Y or Z - requesting individual components

XY or XZ or YZ - requesting 2 specified components

XYZ - requesting all 3 components

RXY or RXZ or RYZ - requesting vector sum of 2 components

RXYZ or R - requesting total vector deformation.

All plots requesting the VECTØR option shall have an underlay generated of the undeformed shape using the same sets, "PEN 1" or "DENSITY 1", and symbol 2 (if SYMBØLS is specified). If "SHAPE" and "VECTØR" are specified; the underlay will depend on whether "0" is used with DEFØRMATIØN. It will be the deformed shape when not used and will be both deformed and undeformed shapes when it is used. The part of the vector at the grid point will be the tail when the underlay is undeformed and the head when it is deformed.

Examples of PLØT Cards

1. PLØT

Undeformed SHAPE using first defined SET, first defined ØRIGIN and PEN 1 (or DENSITY 1).

2. PLØT SET 3 ØRIGIN 4 PEN 2 SHAPE SYMBØLS 3 LABEL

Undeformed SHAPE using SET 3, ØRIGIN 4, PEN 2 (or DENSITY 2) with each grid point of the set having a + placed at its location, and its identification number printed adjacent to it.

3. PLØT MØDAL DEFØRMATIØN 5 SHAPE

   Modal deformations as defined in subcase 5 using first defined SET, first defined ØRIGIN, and PEN 1 (or DENSITY 1).

4. PLØT STATIC DEFØRMATIØN 0, 3 THRU 5, 8 PEN 4, SHAPE

   STATIC deformations as defined in subcases 3, 4, 5 and 8, deformed SHAPE; drawn with PEN 4, using first defined SET and ØRIGIN, underlayed with undeformed SHAPE drawn with PEN 1. This command will cause four plots to be generated.

5. PLØT STATIC DEFØRMATIØN 0 THRU 5,

   SET 2 ØRIGIN 3 PEN 3 SHAPE,

   SET 2 ØRIGIN 4 PEN 4 VECTØRS XYZ SYMBØLS 6,

   SET 35 SHAPE

   Deformations as defined in subcases 1, 2, 3, 4, and 5, undeformed underlay with PEN 1, consisting of SET 2 at ØRIGIN 3, SET 2 at ØRIGIN 4 (with an * placed at each grid point location), and SET 35 at ØRIGIN 4. Deflected data as follows: SHAPE using SET 2 at ØRIGIN 3 (PEN 3) and SET 35 at ØRIGIN 4 (PEN 4); 3 VECTØRS (X, Y and Z) drawn at each grid point of SET 2 at ØRIGIN 4 (PEN 4) (less any excluded grid points), with O placed at the end of each vector.

6. PLØT STATIC DEFØRMATIØNS 0, 3, 4,

   SET 1 ØRIGIN 2 DENSITY 3 SHAPE,

   SET 1 SYMMETRY Z SHAPE,

   SET 2 ØRIGIN 3 SHAPE,

   SET 2 SYMMETRY Z SHAPE

   Static deformations as defined in subcases 3 and 4, both halves of a problem solved by symmetry using the X-Y principal plane as the plane of symmetry. SET 1 at ØRIGIN 2 and SET 2 at ØRIGIN 3, with the deformed shape plotted using DENSITY 3 and the undeformed structure plotted using DENSITY 1. The deformations of the "opposite" half will be plotted to correspond to symmetric loading. This command will cause two plots to be generated.

7. PLØT TRANSIENT DEFØRMATIØN 1, TIME 0.1, 0.2, MAXIMUM DEFØRMATIØN 2.0, SET 1, ØRIGIN 1,

   PEN 2, SYMBØLS 2, VECTØR R

   Transient deformations as defined in subcase 1 for time = 0.1 to time = 0.2, using set 1 at origin 1. The undeformed shape using pen or density 1 with an * at each grid point location will be drawn as an underlay for the resultant deformation vectors using pen or density 2 with an * typed at the end of each vector drawn. In addition a plotted value of 2.0 will be used for the single maximum deformation occuring on any of the plots produced. All other deformations on all other plots will be scaled relative to this single maximum deformation. This command will cause a plot to be generated for each output time step which lies between 0.1 and 0.2.

4.2.3 Summary of Structure Plot Request Packet Cards

SET Definition - Required

```
SET i [INCLUDE][ELEMENTS] j1, j2, j3 THRU j4, j5, etc.

     [INCLUDE  ][ELEMENTS   ]
     [EXCLUDE  ][GRID PØINTS] k1, k2, k3 THRU k4, k5, etc.
     [EXCEPT   ]
```

Parameter Definition - Optional, except as noted

```
PLØTTER plotter name, MØDEL name [DENSITY {800} BPI]
                                 {556}
                                 {200}
```
(Required if not SC-4020)

```
{ØRTHØGRAPHIC  }
{PERSPECTIVE   } PRØJECTIØN
{STEREØSCØPIC  }
```

```
AXES r, s, t [{SYMMETRIC    }]
             {ANTISYMMETRIC}
```

```
VIEW γ, β, α
```

```
SCALE a[, b]
```
(Required if not on FIND card)

```
ØRIGIN i, u, v
```
(Required if not on FIND card)

```
VANTAGE PØINT r0, s0, t0[, sor]
```
(Required for perspective and steroscopic projections if not on FIND card)

```
PRØJECTIØN PLANE SEPARATIØN d0
```
(Required for perspective and steroscopic projections if VANTAGE PØINT not on FIND card)

```
ØCULAR SEPARATIØN os
```

```
MAXIMUM DEFØRMATIØN d
```
(Required if deformed shapes are to be drawn)

```
PEN i[, SIZE j][, CØLØR name]
```

```
CAMERA type [,BLANK FRAMES n]
```

```
PAPER SIZE  a {X} b, TYPE name
              {BY}
```

FIND Card - Optional

```
FIND [SCALE],[ØRIGIN i],[VANTAGE PØINT],[SET j], [REGIØN le, be, re, te]
```

PLØT Execution Card - Required

```
PLØT [{STATIC    } DEFØRMATIØN i1, i2 THRU i3, i4, etc.] [{RANGE λ1, λ2} ][MAXIMUM DEFØRMATIØN d],
     {MØDAL      }                                       {TIME  t1, t2}
     {TRANSIENT  }

[SET j1][ØRIGIN k1][{SYMMETRY     } w][{PEN     } p][SYMBØLS m[, n]][LABEL {GRID PØINTS} ],
                   {ANTISYMMETRY}     {DENSITY}                          {ELEMENTS     }
                                                                         {BØTH         }
[SHAPE                 ],
[VECTØR v              ]
[SHAPE, VECTØR  v      ]
[SET j2][ØRIGIN k2] .... etc.
```

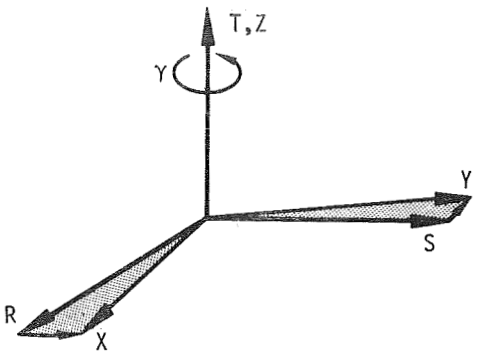

a) γ - rotation about T-axis.

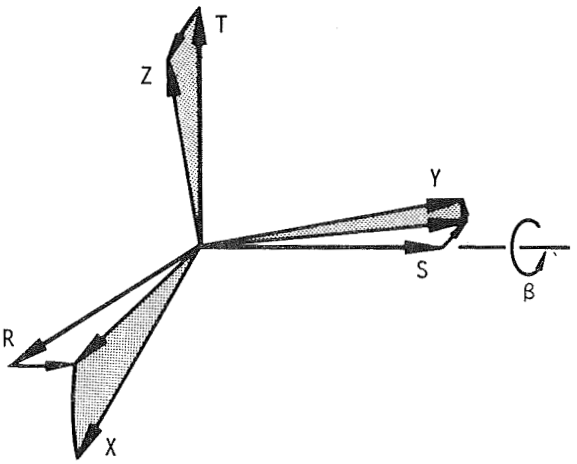

(b) β — rotation about S-axis

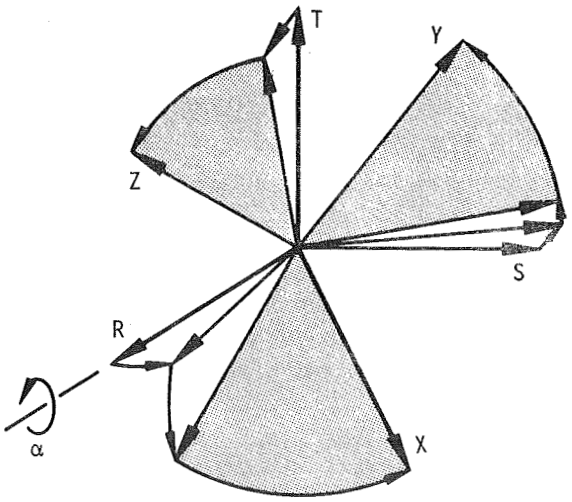

(c) α - rotation about R-axis

Figure 1. Plotter coordinate system-model orientation.

4.3 X-Y ØUTPUT

In rigid formats used for transient response and frequency response (including random response), the amount of output data generated is voluminous. In order to aid the user in assimilating this vast amount of data, the X-Y output processing modules XYTRAN and XYPLØT have been provided. The primary purpose of these modules is to generate plotted graphs of y(x) where x is frequency or time and y is any response quantity selected by the user for observation. The user is not required to specify any parametric data for the X-Y plotter; however, he may do so if he wishes in order to obtain desired scales, regions of observation, etc.

In addition to (or in place of) the plots, X-Y tabular output may be printed or punched, and summary data (e.g., maximum and minimum values and locations of these values) may be obtained for any X-Y output.

The X-Y output described above is obtained by the user via the X-Y output request packet of the Case Control Deck. This packet includes all cards between ØUTPUT(XYPLØT) [or ØUTPUT(XYØUT)] and either BEGIN BULK or ØUTPUT(PLØT). The remainder of this section describes the X-Y output request data cards and the rules for writing them. Examples are provided to illustrate the use of this feature.

4.3.1 X-Y Plotter Terminology

A single set of plotted X-Y pairs is known as a "curve". Curves are the entities that the user requests to be plotted. The surface (paper, microfilm frame, etc.) on which one or more curves is plotted is known as a "frame". Curves may be plotted on a whole frame, an upper half frame, or a lower half frame. Grid lines, tic marks, axes, axis labeling and other graphic control items may be chosen by the user. The program will select defaults for parameters not selected by the user.

Only three cards are required for an X-Y plot request. The required cards are:

1. X-Y output request packet identifier - ØUTPUT(XYPLØT) or ØUTPUT(XYØUT).
2. Plotter selection card.
3. At least one command operation card.

The terms ØUTPUT(XYPLØT) and ØUTPUT(XYØUT) are interchangeable and either form may be used for any of the X-Y output requests. The plotter selection card is described as item 1 in Section 4.3.2.1.

If the output is limited to printing and/or punching the plotter selection card is not required. The command operation card is used to request the various forms of X-Y output. This card is described in Section 4.3.3.

If only the required cards are used, the graphic control items will all assume default values. Curves using all default parameters have the following general characteristics:

1. Tic marks are drawn on all edges of the frame. Five spaces are provided on each edge of the frame.
2. All tic marks are labeled with their values.
3. Linear scales are used.
4. Scales are selected such that all points fall within the frame.
5. The plotted points are connected with straight lines.
6. The plotted points are not identified with symbols.

The above characteristics may be modified by inserting any of the parameter definition cards, described in Section 4.3.2, ahead of the command operation card or cards. The use of a parameter definition card sets the value of that parameter for all following command operation cards unless the CLEAR card is inserted (see item 16 of Section 4.3.2.1). If grid lines are requested, they will be drawn at the locations of all tic marks that result from defaults or user request. The locations of tic marks (or grid lines) for logarithmic scales cannot be selected by the user. Default values for logarithmic spacing are selected by the program. The default values for the number of tic marks (or grid lines) per cycle depend on the number of logarithmic cycles required for the range of the plotted values.

The definition and rules for the X-Y output request packet cards follow. The definition notation used in Section 4.2.1.2 will also be followed here. The form of statements used in the X-Y output request packet differs in many instances from that of similar cards used in the structure plotter request packet. The user is cautioned to prepare his input decks as specified herein.

4.3.2 Parameter Definition Cards

4.3.2.1 Cards Pertaining to All Curves

1. PLØTTER = plotter name, model name

   Selects plotter; required if plots are requested. Plotter choices are listed in Section 4.1. (Note: one or both of the plot tapes must be set up. See Section 5 of the Programmer's Manual for instructions.)

2. CAMERA = c (Integer)

   Used for microfilm plotters only to select camera as follows: $c \leq 1$ for film, $c = 2$ for paper, $c \geq 3$ for both; default value is 3.

3. PENSIZE = ps (Integer ≥ 0)

   Used to select pen for table plotter; default value is 1. (See Section 4.2.2.2)

4. DENSITY = d (Integer ≥ 0)

   Used to select line density for microfilm plotters only; default value is 1. A line density of d is d times heavier than a line density of 1.

5. SKIP = s (Integer ≥ 0)

   Used to insert blank frames between requested frames for microfilm plotters; default value is 1.

6. XPAPER = x (Real)
   YPAPER = y (Real)

   Defines paper size for table plotters; default value is x = 8.5 inches and y = 11.0 inches.

7. XMIN = x1 (Real)
   XMAX = x2 (Real)

   Specifies limits of abscissa of curve; default values are chosen so as to accommodate all points.

8. XLØG = {YES / NØ}

   Request for logarithmic x-coordinate, default value is NØ. Default value for tic division interval depends on number of log cycles (see table at end of this Section).

9. YAXIS = {YES / NØ}

   Request for plotting y-axis; default value is NØ.

10. XINTERCEPT = xi (Real)

    Location on the x-axis where the y-axis will be drawn; default value is 0.0.

11. UPPER TICS = ut (Integer*)

    Request for tic marks to be drawn on the upper edge of the frame; default value is integer one.

12. LØWER TICS = lt (Integer*)

    Request for tic marks to be drawn on the lower edge of the frame; default value is integer one.

13. CURVELINESYMBØL = cls (Integer)

    Request for points to be connected by lines (cls = 0), identified by symbol |cls| (cls < 0), or both (cls > 0); default value is 0; see Section 4.2.2.3 for the list of symbols.

14. XDIVISIØNS = xd (Integer > 0)

    Applies xd uniform spaces along the x-direction for whichever of the following are called for: UPPER TICS, LØWER TICS, YINTERCEPT; default value is 5 spaces, not applicable to log scales.

15. XVALUE PRINT SKIP = xps (Integer ≥ 0)

    Request for values to be placed on tic marks. The number of tic marks to be skipped between labeled tic marks is xps.

16. CLEAR

    Causes all parameter values except PLØTTER and titles (XTITLE, YTITLE, YTTITLE, YBTITLE, TCURVE) to revert to their default values.

17. XTITLE = {any legitimate character string}

    Title to be used with x-axis.

18. TCURVE = {any legitimate character string}

    Curve title.

The default values for tic divisions on log plots are given in the following table, but will range over whole cycles:

Number of Cycles	Intermediate Values
1, 2	2., 3., 4., 5., 6., 7., 8., 9.
3	2., 3., 5., 7., 9.
4	2., 4., 6., 8.
5	2., 5., 8.
6,7	3., 6.
8, 9, 10	3.

4.3.2.2 Cards Pertaining Only to Whole Frame Curves.

1. YMIN = y1 (Real)
   YMAX = y2 (Real)

   Specifies limits of ordinate of curve; default values are chosen so as to accommodate all points.

* See note on page 4.3-8.

2. XAXIS = {YES / NØ}

   Request for plotting x-axis; default value is NØ.

3. YINTERCEPT = yi (Real)

   Location on the y-axis where x-axis is drawn; default value is 0.0.

4. YLØG = {YES / NØ}

   Request for logarithmic y-coordinate; default value is NØ. Default value for tic division interval depends on number of log cycles (see Section 4.3.2.1).

5. LEFT TICS = lt (Integer*)

   Request for tic marks to be drawn on the left edge of the frame; default value is integer one.

6. RIGHT TICS = rt (Integer*)

   Request for tic marks to be drawn on the right edge of the frame; default value is integer one.

7. ALLEDGE TICS = aet (Integer*)

   Request for tic marks to be drawn on all edges of the frame; default value is zero.

8. YDIVISIØNS = yd (Integer > 0)

   Applies yd uniform spaces along the y-direction for whichever of the following are called for: LEFT TICS, RIGHT TICS, XINTERCEPT; default value is 5 spaces; not applicable to log scales.

9. YVALUE PRINT SKIP = yps (Integer ≥ 0)

   Request for values to be placed on tic marks. The number of tic marks to be skipped between labeled tic marks is yps.

10. XGRID LINES = {YES / NØ}

    Request for drawing in the grid lines parallel to the y-axis at locations requested for tic marks; default value is NØ.

11. YGRID LINES = {YES / NØ}

    Request for drawing in the grid lines parallel to the x-axis at locations requested for tic marks; default value is NØ.

12. YTITLE = {any legitimate character string}

    Title to be used with y-axis.

4.3.2.3 Cards Pertaining Only to Upper Half Frame Curves

1. YTMIN = yt1 (Real)
   YTMAX = yt2 (Real)

   Specifies limits of ordinate of curve; default values are chosen so as to accommodate all points.

* See note on page 4.3-8.

2. XTAXIS = {YES / NØ}

   Request for plotting x-axis; default value is NØ.

3. YTINTERCEPT = yti (Real)

   Location on the y-axis where x-axis is drawn; default value is 0.0.

4. YTLØG = {YES / NØ}

   Request for logarithmic y-coordinate, default value is NØ. Default value for tic division interval depends on number of log cycles (see table in Section 4.3.2.1).

5. TLEFT TICS = tlt (Integer*)

   Request for tic marks to be drawn on the left edge of the upper half frame; default value is integer one.

6. TRIGHT TICS = trt (Integer*)

   Request for tic marks to be drawn on the right edge of the upper half frame; default value is integer one.

7. TALL EDGE TICS = taet (Integer*)

   Request for tic marks to be drawn on all edges of the upper half frame; default value is zero.

8. YTDIVISIØNS = ytd (Integer > 0)

   y-direction tic divisions; default value is 5 spaces; not applicable to log scales.

9. YTVALUE PRINT SKIP = ytps (Integer $\geq$ 0)

   Request for values to be placed on tic marks. The number of tic marks to be skipped between labeled tic marks is ytps.

10. XTGRID LINES = {YES / NØ}

    Request for drawing in the grid lines parallel to the y-axis at locations requested for tic marks; default value is NØ.

11. YTGRID LINES = {YES / NØ}

    Request for drawing in the grid lines parallel to the x-axis at locations requested for tic marks; default value is NØ.

12. YTTITLE = {any legitimate character string}

    Title to be used with y-axis.

* See note on page 4.3-8.

4.3.2.4 Cards Pertaining Only to Lower Half Frame Curves

1. YBMIN = yb1 (Real)
   YBMAX = yb2 (Real)

   Specifies limits of ordinate of curve; default values are chosen so as to accommodate all points.

2. XBAXIS = {YES / NØ}

   Request for plotting x-axis; default value is NØ.

3. YBINTERCEPT = ybi (Real)

   Location on the y-axis where x-axis is drawn; default value is 0.0.

4. YBLØG = {YES / NØ}

   Request for logarithmic y-coordinate, default value is NØ; default value for tic division interval depends on number of log cycles (see table in Section 4.3.2.1).

5. BLEFT TICS = blt (Integer*)

   Request for tic marks to be drawn on the left edge of the lower half frame; default value is integer one.

6. BRIGHT TICS = brt (Integer*)

   Request for tic marks to be drawn on the right edge of the lower half frame; default value is integer one.

7. BALL EDGE TICS = baet (Integer*)

   Request for tic marks to be drawn on all edges of the lower half frame; default value is zero.

8. YBDIVISIØNS = ybd (Integer > 0)

   y-direction tic divisions; default value is 5 spaces; not applicable to log scales.

9. YBVALUE PRINT SKIP = ybps (Integer ≥ 0)

   Request for values to be placed on tic marks. The number of tic marks to be skipped between labeled tic marks is ybps.

10. XBGRID LINES = {YES / NØ}

    Request for drawing in the grid lines parallel to the y-axis at locations requested for tic marks; default value is NØ.

* See note on page 4.3-8.

11. YBGRID LINES = $\left\{\begin{matrix}\text{YES}\\ \text{NØ}\end{matrix}\right\}$

Request for drawing in the grid lines parallel to the x-axis at locations requested for tic marks; default value is NØ.

12. YBTITLE = any legitimate character string

Title to be used with y-axis.

* Note

To determine if on any given edge (a) tic marks will be drawn without values, (b) no tic marks or values will be drawn or (c) tic marks with values will be drawn, the following sum must be computed by the user. Add the tic integer value of the edge in question to its associated ALLEDGE TICS, TALL EDGE TICS, or BALL EDGE TICS integer value. If the resulting value is less than 0, tic marks will be drawn without values. If the resulting value is 0, no tic marks or values will be drawn. If the resulting value is greater than 0, tic marks with values will be drawn. The user should be "careful" in his use of the ALLEDGE TICS, TALL EDGE TICS, or BALL EDGE TICS cards. For example, the use of only the ALLEDGE TICS = -1 card will result in no tic marks or values being drawn since the default values for individual edges is + 1.

4.3.3 Command Operation Cards

When a command operation is encountered, one or more frames will be generated using the current parameter specifications. The form of this card is:

Operation 1 or more (required)	Curve Type 1 only (required)	Plot Type	Subcase List	Curve Request(s)
{XYPLØT, XYPRINT, XYPUNCH, XYPEAK}	{ACCE, DISP, ELFØRCE, NØNLINEAR, ØLØAD, SACCE, SDISP, SPCF, STRESS, SVELØ, VECTØR, VELØ}	{RESPØNSE, AUTØ, PSDF}	{i_1, i_2, i_3, i_4 THRU i_5, i_6, etc.} default is all subcases	"frames"

Operation - The entries in the Operation field have the following meaning:

1. XYPLØT - generate X-Y plots for the selected plotter.
2. XYPRINT - generate tabular printer output for the X-Y pairs.
3. XYPUNCH - generate punched card output for the X-Y pairs. Each card contains the following information:
    1. X-Y pair sequence number
    2. X-value
    3. Y-value
    4. Card sequence number
4. XYPEAK - output is limited to the printed summary page for each curve. This summary page contains the maximum and minimum values of y for the range of x.

Curve Type - The entries in the curve type field have the meaning given below. Only one may appear in a single command operation logical card. However, there is no limit to the number of such cards.

Curve Type	Meaning
ACCE	Acceleration in the physical set
DISP	Displacement in the physical set
ELFØRCE	Element Force
NØNLINEAR	Nonlinear load
ØLØAD	Load
SACCE	Acceleration in the solution set
SDISP	Displacement in the solution set
SPCF	Single-point force of constraint
STRESS	Element stress
SVELØ	Velocity in the solution set
VECTØR	Displacement in the physical set
VELØ	Velocity in the physical set

Solution set requests are more efficient, as the time-consuming recovery of the dependent displacements can be avoided. If there is a request for STRESS or ELFØRCE, the recovery of dependent displacements cannot be avoided.

Plot Type - The entries in the Plot Type field have the following meanings:

1. RESPØNSE - generate frequency response or transient response output. This is the default value.
2. AUTØ - generate output for the autocorrelation function.
3. PSDF - generate output for the power spectral density function.

Subcase List - Generate output for the subcase numbers that are listed. Default is all subcases for which solutions were obtained.

Curve Request(s) - The word "frames" represents a series of curve identifiers of the following general form:

/a1(b1,c1),a2(b2,c2),etc./d1(e1,f1),d2(e2,f2),etc./etc.

The information between slashes (/) specifies curves that are to be drawn on the same frame. The symbol a1 identifies the grid point or element number associated with the first plot on the first frame. The symbol a2 identifies the grid point or element number associated with the second plot on the first frame. The symbols d1 and d2 identify similar items for plots on the second frame, etc.

The symbols b1 and b2 are codes for the items to be plotted on the upper half of the first frame, and c1 and c2 are codes for the items to be plotted on the lower half of the first frame. If any of the symbols b1, c1, b2, or c2 are missing, the corresponding curve is not generated. If the comma (,) and c1 are absent along with the comma (,) and c2, full frame plots will be prepared on the first frame for the items represented by b1 and b2. For any single frame, curve identifiers must be all of the whole frame type or all of the half frame type, i.e., the comma (,) following b1 and b2 must be present for all entries or absent for all entries in a single frame. The symbols e1, f1, e2, and f2 serve a similar purpose for the second frame, etc. If continuation cards are needed the previous card may be terminated with any one of the slashes (/) or commas (,) in the general format.

The manner in which the item code (e.g., b1, b2) is implemented is dependent upon whether the Plot Type is either (a) RESPØNSE or (b) AUTØ or PSDF.

Plot Type RESPØNSE

For geometric grid points, the item code is one of the mnemonics T1, T2, T3, R1, R2, R3, T1RM, T2RM, T3RM, R1RM, R2RM, R3RM, T1IP, T2IP, T3IP, R1IP, R2IP, or R3IP, where Ti stands for the ith translational component, Ri stands for the ith rotational component, and RM means real or magnitude and IP means imaginary or phase. For scalar or extra points, use T1, T1RM, or T1IP. For elements use a positive integer from the following tables for element stress item codes or element force item codes. See Section 1.3 for interpretation of symbols.

Plot Types AUTØ or PSDF

For geometric grid points, the item code is one of the mnemonics T1, T2, T3, R1, R2, R3; for scalar or extra points use T1. The symbols T1, T2, T3, R1, R2, R3 are defined as above. For elements use a positive integer from the following tables noting that if an item has a real and imaginary part, the selection of either part will result in the use of both parts. Real numbers will be treated as if they are complex numbers with zero imaginary parts.

Element Stress Item Codes

(All items are stresses unless otherwise denoted)

Element Name	Real Element Stresses Item Code	Item	Complex Element Stresses Item Code	Item	Real-Mag. or Imag.-Phase
RØD	2	Axial Stress	2	Axial Stress	RM
	3	Axial Safety Margin	3	Axial Stress	IP
	4	Torsional Stress	4	Torsional Stress	RM
	5	Torsional Safety Margin	5	Torsional Stress	IP
TUBE		Same as RØD		Same as RØD	
SHEAR	2	Maximum Shear	2	Maximum Shear	RM
	3	Average Shear	3	Maximum Shear	IP
	4	Safety Margin	4	Average Shear	RM
			5	Average Shear	IP
TWIST	2	Maximum	2	Maximum	RM
	3	Average	3	Maximum	IP
	4	Safety Margin	4	Average	RM
			5	Average	IP
TRIA1		Z1 = Fibre Distance 1		Z1 = Fibre Distance 1	
	3	Normal-x at Z1	3	Normal-x at 1	RM
	4	Normal-y at Z1	4	Normal-x at 1	IP
	5	Shear-xy at Z1	5	Normal-y at 1	RM
	6	θ-Shear Angle at Z1	6	Normal-y at 1	IP
	7	Major-Principal at Z1	7	Shear-xy at 1	RM
	8	Minor-Principal at Z1	8	Shear-xy at 1	IP
	9	Max-Shear at Z1		Z2 = Fibre Distance 2	
		Z2 = Fibre Distance 2	10	Normal-x at 2	RM
	11	Normal-x at Z2	11	Normal-x at 2	IP
	12	Normal-y at Z2	12	Normal-y at 2	RM
	13	Shear-xy at Z2	13	Normal-y at 2	IP
	14	θ-Shear Angle at Z2	14	Shear-xy at 2	RM
	15	Major-Principal at Z2	15	Shear-xy at 2	IP
	16	Minor-Principal at Z2			
	17	Maximum-Shear at Z2			
TRBSC		Same as TRIA1		Same as TRIA1	
TRPLT		Same as TRIA1		Same as TRIA1	
TRMEM	2	Normal-x	2	Normal-x	RM
	3	Normal-y	3	Normal-x	IP
	4	Shear-xy	4	Normal-y	RM
	5	θ-Shear Angle	5	Normal-y	IP
	6	Major-Principal	6	Shear-xy	RM
	7	Minor-Principal	7	Shear-xy	IP
	8	Maximum Shear			
CØNRØD		Same as RØD		Same as RØD	
ELAS1	2	Stress	2	Stress	RM
			3	Stress	IP
ELAS2	2	Stress	2	Stress	RM
			3	Stress	IP

Element Name	Real Element Stresses: Item Code	Real Element Stresses: Item	Complex Element Stresses: Item Code	Complex Element Stresses: Item	Complex Element Stresses: Real-Mag. or Imag.-Phase
ELAS3	2	Stress	2	Stress	RM
			3	Stress	IP
QDPLT		Same as TRIA1		Same as TRIA1	
QDMEM		Same as TRMEM		Same as TRMEM	
TRIA2		Same as TRIA1		Same as TRIA1	
QUAD2		Same as TRIA1		Same as TRIA1	
QUAD1		Same as TRIA1		Same as TRIA1	
BAR	2	SA1 } *	2	SA1 } *	RM
	3	SA2 } *	3	SA2 } *	RM
	4	SA3 } *	4	SA3 } *	RM
	5	SA4 } *	5	SA4 } *	RM
	6	Axial	6	Axial	RM
	7	SA-maximum	7	SA1 } *	IP
	8	SA-minimum	8	SA2 } *	IP
	9	Safety Margin in Tension	9	SA3 } *	IP
	10	SB1 } *	10	SA4 } *	IP
	11	SB2 } *	11	Axial	IP
	12	SB3 } *	12	SB1 } *	RM
	13	SB4 } *	13	SB2 } *	RM
	14	SB-maximum	14	SB3 } *	RM
	15	SB-minimum	15	SB4 } *	RM
	16	Safety Margin in Comp.	16	SB1 } *	IP
			17	SB2 } *	IP
			18	SB3 } *	IP
			19	SB4 } *	IP
CØNEAX		Z1 = Fibre Distance 1			
	4	Normal-u at 1			
	5	Normal-v at 1			
	6	Shear-uv at 1			
	7	θ-Shear Angle at 1			
	8	Major-Principal at 1			
	9	Minor-Principal at 1			
	10	Maximum Shear at 1			
		Z2 = Fibre Distance 2			
	12	Normal-u at 2			
	13	Normal-v at 2			
	14	Shear-uv at 2			
	15	θ-Shear Angle at 2			
	16	Major-Principal at 2			
	17	Minor-Principal at 2			
	18	Maximum Shear at 2			
TRIARG	2	Radial (x)			
	3	Circum. (Theta)			
	4	Axial (z)			
	5	Shear (zx)			

* See footnote 2 on next page.

Element Name	Real Element Stresses Item Code	Item	Complex Element Stresses Item Code	Item	Real-Mag. or Imag.-Phase
TRAPRG	2	Radial (x) at 1			
	3	Circum. (Theta) at 1			
	4	Axial (z) at 1			
	5	Shear (zx) at 1			
	6	Radial (x) at 2			
	7	Circum. (Theta) at 2			
	8	Axial (z) at 2			
	9	Shear (zx) at 2			
	10	Radial (x) at 3			
	11	Circum. (Theta) at 3			
	12	Axial (z) at 3			
	13	Shear (zx) at 3			
	14	Radial (x) at 4			
	15	Circum. (Theta) at 4			
	16	Axial (z) at 4			
	17	Shear (zx) at 4			
	18	Radial (x) at 5			
	19	Circum. (Theta) at 5			
	20	Axial (z) at 5			
	21	Shear (zx) at 5			
TØRDRG	2	Mem.-Tangen. at 1			
	3	Mem.-Circum. at 1			
	4	Flex.-Tangen. at 1			
	5	Flex.-Circum. at 1			
	6	Shear-Force at 1			
	7	Mem.-Tangen. at 2			
	8	Mem.-Circum. at 2			
	9	Flex.-Tangen. at 2			
	10	Flex.-Circum. at 2			
	11	Shear-Force at 2			
	12	Mem.-Tangen. at 3			
	13	Mem.-Circum. at 3			
	14	Flex.-Tangen. at 3			
	15	Flex.-Circum. at 3			
	16	Shear-Force at 3			

Note:

1. If output is magnitude/phase the magnitude replaces the real part and the phase replaces the imaginary part.

2. The symbols SA1,2,3,4 and SB1,2,3,4 stand for stresses on end A or B at locations C, D, E, and F respectively as defined on the first continuation card of the PBAR bulk data card.

Element Force Item Codes

(All items are element forces (or moments) unless otherwise indicated)

Element Name	Real Element Forces		Complex Element Forces		
	Item Code	Item	Item Code	Item	Real-Mag. or Imag.-Phase
RØD	2	Axial Force	2	Axial Force	RM
	3	Torque	3	Axial Force	IP
			4	Torque	RM
			5	Torque	IP
TUBE		Same as RØD		Same as RØD	
SHEAR	2	Force Pts. 1, 3	2	Force Pts. 1, 3	RM
	3	Force Pts. 2, 4	3	Force Pts. 1, 3	IP
			4	Force Pts. 2, 4	RM
			5	Force Pts. 2, 4	IP
TWIST	2	Moment Pts. 1, 3	2	Moment Pts. 1, 3	RM
	3	Moment Pts. 2, 4	3	Moment Pts. 1, 3	IP
			4	Moment Pts. 2, 4	RM
			5	Moment Pts. 2, 4	IP
TRIA1	2	Bend-Moment-x	2	Bend-Moment-x	RM
	3	Bend-Moment-y	3	Bend-Moment-y	RM
	4	Twist-Moment	4	Twist-Moment	RM
	5	Shear-x	5	Shear-x	RM
	6	Shear-y	6	Shear-y	RM
			7	Bend-Moment-x	IP
			8	Bend-Moment-y	IP
			9	Twist-Moment	IP
			10	Shear-x	IP
			11	Shear-y	IP
TRBSC		Same as TRIA1		Same as TRIA1	
TRPLT		Same as TRIA1		Same as TRIA1	
CØNRØD		Same as RØD		Same as RØD	
ELAS1	2	Force	2	Force	RM
			3	Force	IP
ELAS2	2	Force	2	Force	RM
			3	Force	IP
ELAS3	2	Force	2	Force	RM
			3	Force	IP
ELAS4	2	Force	2	Force	RM
			3	Force	IP
QDPLT		Same as TRIA1		Same as TRIA1	
TRIA2		Same as TRIA1		Same as TRIA1	
QUAD2		Same as TRIA1		Same as TRIA1	

Element Name	Real Element Forces: Item Code	Real Element Forces: Item	Complex Element Forces: Item Code	Complex Element Forces: Item	Complex Element Forces: Real-Mag. or Imag.-Phase
QUAD1		Same as TRIA1		Same as TRIA1	
BAR	2	Bend-Moment A1	2	Bend-Moment A1	RM
	3	Bend-Moment A2	3	Bend-Moment A2	RM
	4	Bend-Moment B1	4	Bend-Moment B1	RM
	5	Bend-Moment B2	5	Bend-Moment B2	RM
	6	Shear-1	6	Shear-1	RM
	7	Shear-2	7	Shear-2	RM
	8	Axial Force	8	Axial Force	RM
	9	Torque	9	Torque	RM
			10	Bend-Moment A1	IP
			11	Bend-Moment A2	IP
			12	Bend-Moment B1	IP
			13	Bend-Moment B2	IP
			14	Shear-1	IP
			15	Shear-2	IP
			16	Axial Force	IP
			17	Torque	IP

4.3.4 Examples of X-Y Output Request Packets

BEGIN BULK or ØUTPUT(PLØT) card is shown as a reminder to the user to place his X-Y output request packet properly in his Case Control Deck, i.e., at the end of the Case Control Deck or just ahead of any structure plot requests.

Example 1

```
ØUTPUT(XYPLØT)
PLØTTER = SC 4020
XYPLØT SDISP / 16(T1)
BEGIN BULK
```

Causes a single whole frame to be plotted for the T1 displacement component of solution set point 16 using the default parameter values. If 16(T1) is not in the solution set, a warning message will be printed and no plot will be made. The plot will be generated for the SC 4020 plotter on NASTRAN tape PLT2 which must be set up.

Example 2

```
ØUTPUT(XYØUT)
PLØTTER =EAI 3500
XYPLØT, XYPRINT VELØ RESPØNSE 1,5 / 3(R1, ), 5( ,R1)
ØUTPUT(PLØT)
```

Causes a single frame (consisting of an upper half frame and a lower half frame) to be plotted using the default parameter values. The velocity of the first rotational component of grid point 3 will be plotted on the upper half frame and that of grid point 5 will be plotted on the lower half frame for subcases 1 and 5. Tabular printer output will also be generated for both curves. The plots will be generated for the EAI 3500, 30-inch, table plotter on NASTRAN tape PLT1 which must be set up. Scales will be selected such that the frame will fit on 8 1/2 x 11-inch paper.

Example 3

```
ØUTPUT(XYPLØT)
PLØTTER = SC 4020
YDIVISIØNS = 20
XDIVISIØNS = 10
XGRID LINES = YES
YGRID LINES = YES
XYPLØT DISP 2,5 /10(T1),10(T3)
```

Causes two whole frame plots to be generated, one for subcase 2 and one for subcase 5. Each

plot contains the T1 and T3 displacement component for grid point 10. The default parameters will be modified to include grid lines in both the x and y-directions with 10 spaces in the x-direction and 20 spaces in the y-direction. The plot will be generated for the SC 4020 plotter on NASTRAN tape PLT2 which must be set up.

Example 4

```
ØUTPUT(XYPLØT)
PLØTTER = EAI 3500
XAXIS = YES
YAXIS = YES
XPAPER = 17.0
YPAPER = 22.0
XYPLØT STRESS 3/ 15(2)/ 21(6)
```

Causes two whole frame plots to be generated using the results from subcase 3. The first plot is the response of the axial stress for rod element number 15. The second plot is the response of the major principal stress for triangular membrane element number 21. The default parameters will be modified to include the x-axis and y-axis drawn through the origin. Each plot will be scaled to fit on 17 x 22-inch paper. The plots will be generated for the EAI 3500, 30-inch, table plotter on NASTRAN tape PLT1 which must be set up.

4.3.5 Summary of X-Y Output Request Packet Cards

Type of value: I = Integer, R = Real, B = BCD. See Sections 4.3.2 and 4.3.3 for details of these cards.

Items pertaining to all plots

1.	PLØTTER	= p	-
2.	CAMERA	= c	(I)
3.	PENSIZE	= ps	(I)
4.	DENSITY	= d	(I)
5.	SKIP	= s	(I)
6.	XPAPER	= x	(R)
	YPAPER	= y	(R)
7.	XMIN	= x1	(R)
	XMAX	= x2	(R)
8.	XLØG	= yesno*	(B)
9.	YAXIS	= yesno*	(B)
10.	XINTERCEPT	= xi	(R)
11.	UPPER TICS	= ut	(I)
12.	LØWER TICS	= lt	(I)
13.	CURVLINESYMBØL	= cls	(I)
14.	XDIVISIØNS	= xd	(I)
15.	XVALUE PRINT SKIP	= xps	(I)
16.	CLEAR		-
17.	XTITLE	= {anything}	-
18.	TCURVE	= {anything}	-

	Whole frames only		Upper half frames only		Lower half frames only		
1	YMIN	= y1	YTMIN	= yt1	YBMIN	= yb1	(R)
	YMAX	= y2	YTMAX	= yt2	YBMAX	= yb2	(R)
2	XAXIS	= yesno*	XTAXIS	= yesno*	XBAXIS	= yesno*	(B)
3	YINTERCEPT	= yi	YTINTERCEPT	= yti	YBINTERCEPT	= ybi	(I)
4	YLØG	= yesno*	YTLØG	= yesno*	YBLØG	= yesno*	(B)
5	LEFT TICS	= lt	TLEFT TICS	= tlt	BLEFT TICS	= blt	(I)
6	RIGHT TICS	= rt	TRIGHT TICS	= trt	BRIGHT TICS	= brt	(I)
7	ALLEDGE TICS	= aet	TALL EDGE TICS	= taet	BALL EDGE TICS	= baet	(I)
8	YDIVISIØNS	= yd	YTDIVISIØNS	= ytd	YBDIVISIØNS	= ybd	(I)
9	YVALUE PRINT SKIP	= yps	YTVALUE PRINT SKIP	= ytps	YBVALUE PRINT SKIP	= ybps	(I)
10	XGRID LINES	= yesno*	XTGRID LINES	= yesno*	XBGRID LINES	= yesno*	(B)
11	YGRID LINES	= yesno*	YTGRID LINES	= yesno*	YBGRID LINES	= yesno*	(B)
12	YTITLE	= {anything}	YTTITLE	= {anything}	YBTITLE	= {anything}	-

Command operation cards

{XYPLØT, XYPRINT, XYPUNCH, XYPEAK, XYPAPERPLØT}

{ACCE, DISP, ELFØRCE, NØNLINEAR, ØLØAD, SACCE, SDISP, SPCF, STRESS, SVELØ, VECTØR, VELØ}

{RESPØNSE, AUTØ, PSDF}

subcases /curves

* yesno must be either YES or NØ

DIRECT MATRIX ABSTRACTION

5.1 GENERAL

In addition to using the rigid formats provided automatically by NASTRAN, the user may wish to execute a series of modules in a different manner than provided by the rigid format. Or, he may wish to perform a series of matrix operations which are not contained in any existing rigid format. If the modifications to an existing rigid format are minor, the ALTER feature described in Section 2 may be employed. Otherwise, a user-written Direct Matrix Abstraction Program (DMAP) should be used.

DMAP is the user-oriented language used by NASTRAN to solve problems. A rigid format is basically a collection of statements in this language. DMAP, like English or FØRTRAN, has many grammatical rules which must be followed to be interpretable by the NASTRAN DMAP compiler. Section 5.2 provides the user with the rules of DMAP which will allow him to understand the rigid format DMAP sequences, write ALTER packages, and construct his own DMAP sequences using the many modules contained in the NASTRAN DMAP repertoire.

Section 5.3 describes individually the many nonstructurally oriented modules contained in the NASTRAN library while Section 5.4 provides several examples of DMAP usage.

User-written modules must conform to the rules and usage conventions described herein.

5.2 DMAP RULES

Grammatically, DMAP instructions consist of two types: Executive Operation Instructions and Functional Module Instructions. Grammatical rules for these two types of instructions will be discussed separately in subsequent sections.

Functional modules are arbitrarily classified as structural modules, matrix operation modules, utility modules, or user-generated modules.

The DMAP sequence itself consists of a series of DMAP instructions or statements, the first of which is BEGIN and the last of which is END. The remaining statements consist of Executive Operation instructions and Functional Module calls.

5.2.1 DMAP Rules for Functional Module Instructions

The primary characteristic of the Functional Module DMAP instruction is its prescribed format. The general form of the Functional Module DMAP statement is:

```
MØD   I1,I2,---,Im/Ø1,Ø2,---,Øn/a1,b1,p1/a2,b2,p2----/az,bz,pz  $

   where   MØD is the DMAP Functional Module name,
           Ii; i = 1,m are the Input Data Block names,
           Øi; i = 1,n are the Øutput Data Block names,
   and     ai,bi,pi; i = 1,z are the Parameter Sections.
```

In the general form shown above, commas (,) are used to separate several like items while slashes (/) are used to separate sections from one another. The module name is separated from the rest of the instruction by a blank or a comma (,). The dollar sign ($) is used to end the instruction and is not required unless the instruction ends in the delimiter / . Blanks may be used in conjunction with any of the above delimiters for ease of reading.

A functional module communicates with other modules and the executive system entirely through its inputs, outputs and parameters. The characteristics or attributes of each functional module are contained in the Module Properties List (MPL) described in Section 2 of the Programmer's Manual and are reflected in the DMAP Module Descriptions that follow in Section 5.3 and in the Module Functional Descriptions contained in Chapter 4 of the Programmer's Manual. The module name is a BCD value (which consists of an alphabetic character followed by up to seven additional alphanumeric characters) and must correspond to an entry in the MPL. A Data Block name may be either a BCD value or null. The absence of a BCD value indicates that the Data Block is not needed for a particular application.

5.2.1.1 Each Functional Module DMAP statement must conform to the MPL regarding

1. Name spelling
2. Number of input data blocks
3. Number of output data blocks
4. Number of parameters
5. Type of each parameter

5.2.1.2 Functional Module Names

The only Functional Module DMAP names allowed are those contained in the MPL. Therefore, if a user wishes to add a module, he must either use one of the User Module names provided (see Section 5.3.3) or add a name to the MPL. The Programmer's Manual should be consulted when adding a new module to NASTRAN.

5.2.1.3 Functional Module Input Data Blocks

An input data block must be previously defined in the DMAP sequence. This is accomplished by causing the data block to be output from a previous DMAP instruction. Input File Processor outputs and any user-input (via Bulk Data Cards) DMI or DTI data block names are exempt from this rule as are data blocks existing on the Old Problem Tape. Since the number of Data Blocks is prescribed, the number of separating commas must be one less than the number of Data Blocks, even though one or more Data Blocks are null.

5.2.1.4 Functional Module Output Data Blocks

A data block name may appear as an output once and only once. New names may be equivalenced to old ones, however, as described in Section 5.2.3.2. Since the number of Data Blocks is prescribed, the number of separating commas must be one less than the number of Data Blocks, even though one or more Data Blocks are null.

5.2.1.5 Functional Module Parameters

Parameters are used for many purposes. They may convey data values into and/or out from the module, or they may simply serve as flags to control the computational flow within the module. The general form of a parameter section of a DMAP instruction is

ai,bi,pi

where the parameter specifications are:

$$ai = \begin{cases} V & \text{Parameter value is variable and may be changed by the module during execution.} \\ C & \text{Parameter value is prescribed initially by the user and is an unalterable constant.} \end{cases}$$

$$bi = \begin{cases} Y & \text{Initial parameter value may be specified on a PARAM bulk data card.} \\ N & \text{Initial parameter value may } \underline{\text{not}} \text{ be specified on a PARAM bulk data card.} \end{cases}$$

$$pi = \begin{cases} PNAME = v & \text{PNAME is a BCD value selected by the user to represent the name of the parameter.} \\ PNAME & \\ v & \end{cases}$$

The various forms available for pi require additional clarification. The form v means a value for the parameter and may only be used when ai=C and bi=N. The other forms will be clarified in the symbolic examples that follow. Each parameter has an initial value which is established when the DMAP sequence is complied during execution of the NASTRAN preface. The means by which initial values are established for all DMAP parameters will be explained by the symbolic examples that follow. The value used at execution time may differ from the initial value if and only if the module changes the value, if ai = "V", and the parameter name appears in a SAVE (see Section 5.3.4) instruction immediately following the module. Six parameter types are available. The proper type is specified by the Module Properties List (MPL). The types and examples of values as they would be written in DMAP are given below:

Parameter Type	Value Examples
Integer	7 -2 0
Real	-3.6 2.4+5 0.01-3
BCD	A12
Double-Precision	2.5D0
Complex Single-Precision	(1.0,-1.0)
Complex Double-Precision	(1.9D0,-4.0D1)

Many forms of the parameter section may be used. These will be explained in some detail.

null — This is equivalent to /C,N,v where v is the MPL default value which must exist. No nonnull parameters may follow a null parameter in the DMAP statement. A null is not punched, nor is the preceding /.

/C,N,v — Constant input parameter
Examples: /C,N,0/C,N,BKLO/C,N,(1.0,-1.0)

In the three examples shown, the values 0 (integer), BLKO (BCD) and 1.0-i1.0 (complex, single precision) are defined.

/C,Y,PNAME — Constant input parameter; MPL default value is used unless a PARAM bulk data card referencing PNAME is present. Error condition is detected if either no PARAM card is present or if no MPL default value exists.

/C,Y,PNAME=v — Constant input parameter; the value v is used unless a PARAM bulk data card referencing PNAME is present.

/V,Y,PNAME or /V,Y,PNAME=v — Variable parameter; may be input, output, or both; initial value is the first of

1. value from the most recently executed SAVE instruction, if any
2. value from PARAM bulk data card referencing PNAME will be used if present in Bulk Data Deck
3. v, if present in DMAP instruction
4. MPL default value, if any
5. 0

If a parameter is output from a functional module and if the output value is to be carried forward, a SAVE instruction must immediately follow the DMAP instruction in which the parameter is generated.

/V,N,PNAME or /V,N,PNAME=v — Variable parameter; may be input, output, or both; initial value is the first of

1. value from the most recently executed SAVE instruction, if any
2. v, if present in DMAP instruction
3. MPL default value, if any
4. 0

5.2.2 DMAP Rules for Executive Operation Instructions

Each Executive Operation statement has its own format which is generally open-ended, meaning the number of inputs, outputs, etc. is not prescribed. Executive Operation instructions or statements are divided into general categories as follows:

1. Declarative instructions FILE, BEGIN and LABEL which aid the DMAP compiler and the file allocator.
2. Instructions CHKPNT, EQUIV, PURGE and SAVE which aide the NASTRAN executive system in allocating files, interfacing between functional modules and in restarting a problem.
3. Control instructions REPT, JUMP, CØND, EXIT and END which control the order in which DMAP instructions are executed.

The rules associated with the Executive Operation instructions are distinct for each instruction and are discussed individually in Section 5.3.4.

5.2.3 Techniques and Examples of Executive Module Usage

Even though the DMAP program may be interpretable by the DMAP compiler it does not guarantee that the program will yield the desired results. Therefore this section is provided to acquaint the DMAP programmer with techniques and examples used in writing DMAP programs. In particular the instructions REPT, FILE, EQUIV, PURGE and CHKPNT will now be discussed in some detail. The DMAP module descriptions for all nonstructural modules will be found in Section 5.3.

The new DMAP user should read Section 5.3 to obtain the necessary knowledge of terminology before reading this section.

The data blocks and functional modules referenced in the following examples are fictitious and have no relationship to any real data blocks or functional modules.

A data block is described as having a status of "not generated," "generated" or "purged." A status of not generated means that the data block is available for generation by appearing as output in a functional module. A status of generated means that the data block contains data which is available for input to a subsequent module. A status of purged means that the data block cannot be generated and any functional module attempting to use this data block as input or output will be informed that the purged data block is not available for use.

5.2.3.1 The REPT and FILE Instructions (see Section 5.3.4)

The DMAP instructions bounded by the REPT instruction and the label referenced by the REPT instruction are referred to as a loop. The location referenced by the REPT is called the top of the loop. In many respects a DMAP loop is like a giant functional module since it requires inputs and generates output data blocks which usually can be handled correctly by the File Allocator (see Section 4.9 of the Programmer's Manual) without any special action by the DMAP programmer. The one exception is a data block that is not referenced outside the loop (i.e., an internal data block with respect to the loop). The file allocator considers internal data blocks as scratch data blocks to be used for the present pass through the loop but not to be saved for input at the top of the loop. Should the DMAP programmer desire to save an internal data block, he may do so by declaring the data block SAVE in the FILE instruction.

When the REPT instruction transfers control back to the top of the loop, the status of all internal data blocks is changed to "not generated" unless the internal data block is declared SAVE in a FILE instruction. Note that this rule also applies to data blocks declared APPEND (see Section 5.3.4). That is, an internal data block that is declared APPEND in a FILE instruction is not saved unless it is also declared SAVE. It should also be noted that equivalences established between internal data blocks (not declared saved) and data blocks referenced outside the loop are not carried over for the next time through the loop. The equivalence must be re-established each time through the loop. Data blocks generated by the Input File Processor are considered referenced outside of all DMAP loops.

EXAMPLE using REPT and FILE instructions.

```
            BEGIN   $
            FILE    X=SAVE / Y=APPEND,SAVE / Z=APPEND $
           ⎛LABEL   L1  $
           ⎜MØD1    B/W,Y  $
           ⎜CØND    L3,PX  $
DMAP       ⎜MØD2    A/X/V,N,PX=0  $
loop       ⎜SAVE    PX  $
           ⎜LABEL   L3  $
           ⎜MØD3    W,X,Y/Z  $
           ⎝REPT    L1,1  $
            MØD4    Z//  $
            END     $
```

Assume that MØD2 sets PX < 0 when it is executed. Note that Z is declared APPEND but it need not be declared SAVE since it is referenced outside the loop, whereas Y must be saved since it is an internal data block that is to be appended. X is an internal data block that is to be saved since it will only be generated the first time through the loop but is needed as input each time the loop is repeated. W is an internal data block that is generated each time through the loop; therefore it is not saved.

The following table shows what happens when the above DMAP program is executed. Only modules being executed are shown in the table. Data blocks A and B are assumed to be generated by the input file processor, and hence are considered referenced outside of all DMAP loops.

Module being executed	Input status and comments	Output status and comments
MØD1	B-assumed generated by the input file processor	W, Y - generated
CØND	PX is 0	No transfer occurs since PX ≥ 0
MØD2	A-assumed generated by the input file processor	X - generated PX is set < 0
SAVE	PX < 0	The value created above is saved for subsequent use.
MØD3	W, X, Y are all generated at this point	Z - generated
REPT	Loop count is initially set at 1	Transfer to L1 - set loop count to 1-1=0 Status of data blocks at top of loop will be: A, B, Z - generated (referenced outside loop) X, Y - generated (internal data blocks declared saved) W - not generated (internal data block)
MØD1	B - generated	W - generated Y - generated (appended)
CØND	PX is now < 0 due to SAVE	Transfer to L3 occurs
MØD3	W, X, Y - generated	Z - generated (appended)
REPT	Loop count is now 0	No transfer occurs.
MØD4	Z - generated	Output to printer (assumed)
END		Normal termination of problem.

5.2.3.2 The EQUIV Instruction (see Section 5.3.4)

There are no restrictions on the status of data blocks referenced in an EQUIV instruction. Consider the instruction EQUIV $A,B_1,---,B_N/P$ $ when P < 0. Data blocks $B_1,---,B_N$ take on all the characteristics of data block A including the status of A. This means the status of some B_j can change from purged to generated or not generated.

The EQUIV instruction will unequivalence data blocks when P ≥ 0. In an unequivalence operation, the status of all secondary data blocks reverts to not generated.

Suppose A, B, and C are all equivalenced and P ≥ 0. EQUIV A,B/P $ will break the equivalence between A and B but not between A and C.

Now consider the following situation. Data block B is to be generated by repeatedly executing functional module MØD2. The input to MØD2 is the previous output from MØD2. That is to say, each successive generation of B depends on the previous B generated. The following example shows how the EQUIV instruction is used to solve this problem. Assume parameter BREAK ≥ 0 and parameter LINK < 0.

EXAMPLE of EQUIV instruction.

```
                BEGIN    $
                MØD1     A/B  $
DMAP            LABEL    L1  $
loop            EQUIV    B,BB/BREAK  $
                MØD2     B/BB  $
                EQUIV    BB,B/LINK  $
                REPT     L1,1  $
                MØD3     BB//  $
                END      $
```

The following table shows what happens when the above DMAP program is executed. Only modules being executed are shown in the table.

Module being executed	Input status and comments	Output status and comments
MØD1	A-assumed generated by input processor	B - generated
EQUIV	B will not be equivalenced to BB since BREAK ≥ 0.	No action taken.
MØD2	B-generated	BB - generated
EQUIV	BB and B are not equivalenced. B - generated BB - generated LINK < 0.	B is equivalenced to BB. That is, B assumes all of the characteristics of BB. B and BB then both have the status of generated.
REPT	Loop count is initially 1	Transfer to L1; set loop count to 1-1=0.
EQUIV	B and BB are generated and equivalenced. BREAK ≥ 0.	The equivalence is broken; B - generated, BB - not generated
MØD2	B-generated	BB - generated
EQUIV	BB and B are generated and not equivalenced. LINK < 0.	B equivalenced to BB; B,BB - generated
REPT	Loop count is 0	No transfer occurs.
MØD3	BB - generated	Output to printer (assumed)
END		Normal termination of problem.

Since equivalences are automatically broken between internal files (not declared saved) and files referenced outside the loop, the above DMAP program could be written as follows and the same results achieved.

```
          BEGIN    $
          MØD1     A/B  $
          LABEL    L1  $
DMAP      MØD2     B/BB  $
loop      EQUIV    BB,B/LINK  $
          REPT     L1,1  $
          MØD3     B//  $
          END      $
```

Data block BB is now internal; therefore, the instruction EQUIV B,BB/BREAK $ is not needed.

5.2.3.3 The PURGE Instruction (see Section 5.3.4)

The status of a data block is changed to purged by explicitly or implicitly purging it. A data block is explicitly purged through the PURGE instruction, whereas it is implicitly purged if it is not created by the functional module in which it appears as an output.

The primary purpose of the PURGE instruction is to prepurge data blocks. Prepurging is the explicit purging of a data block prior to its appearance as output from a functional module. Prepurging data blocks allows the NASTRAN executive system to allocate available files more efficiently which decreases problem execution time. The DMAP programmer should look for data blocks that can be prepurged and purge them as soon as it is recognized that they will not be generated.

Sometimes during the execution of a problem it is necessary to generate a data block whose status is purged. This situation can occur both in DMAP looping and in a modified restart situation. In order to generate a data block that is purged it is first necessary to unpurge it (i.e., change its status from purged to not generated). Unpurging is achieved by executing a PURGE instruction which references the purged data block and whose purge parameter is positive.

The PURGE instruction thus has two functions, to unpurge as well as purge data blocks depending on the value of the purge parameter and the status of the referenced data block. The following table shows what action is taken by the PURGE instruction for all combinations of input.

PURGE A/P $		
Status of data block A prior to PURGE	Value of P	Status of Data block A after PURGE
Not generated	P ≥ 0	Not generated (i.e., no action taken)
Not generated	P < 0	Purged
Generated	P ≥ 0	Generated (i.e., no action taken)
Generated	P < 0	Purged
Purged	P ≥ 0	Not generated (i.e., unpurged)
Purged	P < 0	Purged (i.e., no action taken)

The user may wonder why he should not prepurge all data blocks and then unpurge them when necessary in order to really assist the file allocator. One should not do this, since there is a limited amount of space in the table where the status of data blocks is kept. One may overflow this table if too many data blocks are purged at one time. Therefore, only prepurge those data blocks that can truly be prepurged.

EXAMPLE of explicit and implicit purging and prepurging.

```
BEGIN   $
MØD1    IP/A/V,Y,PX/V,Y,PY/V,Y,PB  $
SAVE    PX,PY,PB  $
PURGE   X/PX / Y/PY  $
MØD2    A/B,C,D/V,Y,PB/V,Y,PC  $
SAVE    PC  $
PURGE   C/PC  $
MØD3    B,C,D/E  $
MØD4    E/X,Y,Z  $
MØD5    X,Y,Z//  $
END     $
```

Assume that module MØD1 sets PX < 0, PY ≥ 0 and PB = 0. Assume that B is not generated by MØD2 if PB = 0. Assume that MØD2 sets PC < 0, but does not change PB.

The following table shows what happens when the above DMAP program is executed. Only modules being executed are shown in the table.

Module being executed	Input status and comments	Output status and comments
MØD1	IP-assumed generated by the input file processor	A - generated PX < 0, PY ≥ 0, PB = 0
SAVE	PX < 0, PY ≥ 0, PB = 0	Parameter values are saved for use in subsequent modules.
PURGE	X,Y-not generated PX < 0, PY ≥ 0	X - purged (i.e., prepurged) Y - not generated
MØD2	A - generated; PB = 0	B - purged (i.e., implicitly); C, D - generated; PC < 0.
SAVE	PC < 0	PB value not saved since MØD2 did not reset it.
PURGE	C - generated PC < 0	C - purged
MØD3	B, C - purged D - generated	E - generated
MØD4	E - generated	X - purged; Y - generated; Z - generated
MØD5	X - purged Y, Z - generated	Output to printer (assumed)
END		Normal termination of problem.

EXAMPLE of unpurging.

```
            BEGIN   $
            FILE    X=SAVE/Y=SAVE  $
            FILE    Z=APPEND $
            MØD1    IP/A  $
           /LABEL   L1  $
          |CØND     L2,NPX  $
          |PURGE    X/NPX  $
DMAP      |MØD2     A/X,Y/V,Y,PX=0/V,N,NPX=0 $
loop      |SAVE     PX,NPX $
          |PURGE    X/PX  $
          |LABEL    L2  $
          |MØD3     X,Y/Z  $
           \REPT    L1,2  $
            MØD4    Z// $
            END     $
```

Assume that MØD2 sets PX<0 and NPX≥0 the first time it is executed. Assume that MØD2 sets PX ≥ 0 and NPX < 0 the second time it is executed.

The following table shows what happened when the above DMAP program is executed. Only modules being executed are shown in the table.

Module being executed	Input status and comments	Output status and comments
MØD1	IP-assumed generated by input file processor.	A - generated
CØND	NPX = 0	Jump not executed
PURGE	X - not generated	X - not generated (i.e., no action taken)
MØD2	A - generated	X, Y - generated; PX < 0, NPX ≥ 0
SAVE	PX < 0, NPX ≥ 0	
PURGE	X - generated; PX < 0	X - purged
MØD3	X - purged; Y - generated	Z - generated
REPT	Loop count = 2	Transfer to location L1; Loop count = 1
CØND	NPX ≥ 0	Jump not executed
PURGE	X - purged; NPX ≥ 0	X - not generated (i.e., unpurged)
MØD2	A - generated	X - generated; Y - generated (note old data for Y is lost because Y not Appended); PX ≥ 0, NPX < 0
SAVE	PX ≥ 0, NPX < 0	
PURGE	X - generated; PX ≥ 0	X - generated (i.e., no action taken)
MØD3	X,Y - generated	Z - generated (note new data appended to old because Z declared appended)
REPT	Loop count = 1	Transfer to location L1; Loop count = 0
CØND	NPX < 0	Transfer to location L2
MØD3	X, Y - generated	Z - generated (i.e., appended)
REPT	Loop count = 0	Fall through to next instruction
MØD4	Z - generated	Output to printer (assumed)
END		Normal termination of problem

5.2.3.4 The CHKPNT Instruction (see Section 5.3.4)

The CHKPNT instruction provides the user with a means for saving data blocks for subsequent restart of his problem with a minimum amount of redundant processing. The following rules will assure the DMAP programmer of the most efficient restart.

1. Checkpoint all output data blocks from every functional module.

2. Checkpoint all data blocks mentioned in a PURGE instruction.

3. Checkpoint all secondary data blocks in an EQUIV instruction. Never checkpoint primary data blocks in an EQUIV instruction.

EXAMPLE of checkpointing.

```
BEGIN  $
MØD1   A/B,C/V,Y,P1/V,Y,P2  $
SAVE   P1,P2  $
CHKPNT B,C  $
PURGE  X,Y/P1 / Z/P2  $
CHKPNT X,Y,Z  $
EQUIV  B,BB/P1 / C,CC,D/P2  $
CHKPNT BB,CC,D  $
  .
  .
  .

END    $
```

The same results are achieved if the above program is written as:

```
BEGIN  $
MØD1   A/B,C/V,YP1/V,Y,P2  $
SAVE   P1,P2  $
PURGE  X,Y/P1 / Z/P2  $
EQUIV  B,BB/P1 / C,CC,D/P2  $
CHKPNT B,C,X,Y,Z,BB,CC,D  $
  .
  .
  .

END    $
```

In the first example the data blocks were checkpointed as soon as possible, which is the most straightforward way, but it required three calls to the checkpoint module, which increases problem execution time. The second way is therefore more efficient but not quite so straightforward. Since checkpointing usually requires a small fraction of the total execution time, it is recommended that the user use the most straightforward method to avoid trouble. The rigid format DMAP sequences have been designed for efficiency and, consequently, they appear more complex than they really are.

5.3 DMAP MODULE DESCRIPTIONS

Descriptions of all nonstructurally oriented Modules are contained herein, arranged alphabetically by category as indicated by the lists below. Descriptions for the structurally oriented modules are contained in Section 4 of the Programmer's Manual. They are listed here in order to provide a complete list of all NASTRAN Modules. Additional information regarding nonstructurally oriented modules is also given in Section 4 of the Programmer's Manual.

Utility Modules

(See Section 5.3.2)

MATGPR
MATPRN
MATPRT
PARAM
PRTPARM
SEEMAT
SETVAL
TABPT

Matrix Operation Modules

(See Section 5.3.1)

ADD
DECØMP
FBS
MERGE
MPYAD
PARTN
SMPYAD
SØLVE
TRNSP

User Modules

(See Section 5.3.3)

DDR
DUMMØD1
DUMMØD2
DUMMØD3
DUMMØD4
INPUT
INPUTT1
INPUTT2
INPUTT3
INPUTT4
MØDA
MØDB
MØDC
ØUTPUT
ØUTPUT1
ØUTPUT2
ØUTPUT3
ØUTPUT4
XYPRNPLT

Executive Operation Modules

(See Section 5.3.4)

BEGIN
CHKPNT
CØND
END
EQUIV
EXIT
FILE
JUMP
LABEL
PURGE
REPT
SAVE

Structurally Oriented Modules

(See Section 4 of the Programmer's Manual)

CASE
CEAD
DDR1
DDR2
DPD
DSMG1
DSMG2
FRRD
GKAD
GKAM
GP1
GP2
GP3
GP4
GPSP
GPWG
MCE1
MCE2
MTRXIN
ØFP
PLA1
PLA2
PLA3
PLA4
PLØT
PLTSET
PRTMSG
RANDØM
RBMG1
RBMG2
RBMG3
RBMG4
READ
SCE1
SDR1
SDR2
SDR3
SMA1
SMA2
SMA3
SMP1
SMP2
SSG1
SSG2
SSG3
SSG4
TA1
TRD
VDR
XYPLØT
XYTRAN

In the examples that accompany each description, the following notation is used:

1. Upper case letters and special symbols in the DMAP calling sequence must be punched as shown except for data block names, parameter names, and label names which are symbolic.
2. Lower case letters represent constants whose permissible values are indicated in the descriptive text.

Due to the many possible forms which may be used when writing parameters, a variety of arbitrarily selected forms will be used in the examples. This does not imply that the form used in any example is required or that it is the only acceptable form allowed.

The terms form, type, and precision are used in many functional module descriptions. By form is meant one of the following:

Form	Meaning
1	Square
2	Rectangular
6	Symmetric

By type is meant one of the following:

Type	Meaning
1	Real, single precision
2	Real, double precision
3	Complex, single precision
4	Complex, double precision

By precision is meant one of the following:

Precision Indicator	Meaning
1	Single precision numbers
2	Double precision numbers

5.3.1 Matrix Operation Modules

Module	Basic Operation
ADD	$[X] = a[A] + b[B]$
DECØMP	$[A] \Rightarrow [L][U]$
FBS	$[X] = ([L][U])^{-1}[B]$
MERGE	$[A] \Leftarrow \left[\begin{array}{c\|c} A11 & A12 \\ \hline A21 & A22 \end{array}\right]$
MPYAD	$[X] = [A][B] + [C]$
PARTN	$[A] \Rightarrow \left[\begin{array}{c\|c} A11 & A12 \\ \hline A21 & A22 \end{array}\right]$
SMPYAD	$[X] = [A][B][C][D][E] + [F]$
SØLVE	$[X] = [A]^{-1}[B]$
TRNSP	$[X] = [A]^{T}$

I. NAME: ADD (Matrix Add)

II. PURPØSE: To compute [X] = a[A] + b[B] where a and b are scale factors.

III. DMAP CALLING SEQUENCE:

```
ADD  A,B/X/C,Y,ALPHA=(1.0,2.0)/C,Y,BETA=(3.0,4.0) $
```

IV. INPUT DATA BLØCKS:

A - Any matrix

B - Any matrix

Note: [A] and/or [B] may be purged, in which case the corresponding term in the matrix sum will be assumed null. The input data blocks must be unique.

V. ØUTPUT DATA BLØCKS:

X - matrix.

The type of [X] is maximum of the types of [A], [B], a, b. The size of [X] is the size of [A] if [A] is present. Otherwise it is that of [B].

Note: [X] cannot be purged.

VI. PARAMETERS:

ALPHA - Input-complex-no default value. This is a, the scalar multiplier for [A].

BETA - Input-complex-no default value. This is b, the scalar multiplier for [B].

Note: If Im(ALPHA) or Im(BETA) = 0.0 the corresponding parameter will be considered real.

I. DECOMP (Matrix Decomposition)

II. PURPØSE: To decompose a square matrix [A] into upper and lower triangular factors [U] and [L] .

$$[A] \Rightarrow [L][U]$$

III. DMAP CALLING SEQUENCE:

DECØMP A/L,U/V,Y,KSYM/V,Y,CHØLSKY/V,N,MINDIAG/V,N,DET/V,N,PØWER/V,N,SING $

IV. INPUT DATA BLØCKS:

A - A square matrix

V. ØUTPUT DATA BLØCKS:

L - Nonstandard lower triangular factor of [A].

U - Nonstandard upper triangular factor of [A].

VI. PARAMETERS:

KSYM - Input-integer-no default. 1, use symmetric decomposition. 0, use unsymmetric decomposition.

CHØLSKY - Input-integer-default = 0. 1, use Cholesky decomposition - matrix must be positive definite. 0, do not use Cholesky decomposition.

MINDIAG - Output-real-no default. The minimum diagonal term of [U].

DET - Output-complex single precision-no default. The scaled value of the determinant of [A].

PØWER - Output-integer-no default. Integer PØWER of 10 by which DET should be multiplied to obtain the determinant of [A].

SING - Output-integer-no default. SING is set to -1 if [A] is singular.

VII. REMARKS:

1. Non-standard triangular factor matrix data blocks are used to improve the efficiency of the back substitution process in module FBS. The format of these data blocks is given in Section 2 of the Programmer's Manual.

2. The matrix manipulating utility modules should be cautiously employed when dealing with non-standard matrix data blocks.

3. If the CHØLSKY option is selected, the resulting factor (which will be written as [U]) cannot be input to FBS.

I. NAME: FBS (Matrix Forward-Backward Substitution)

II. PURPØSE: To solve the matrix equation [L][U][X] = ±[B] where [L] and [U] are the lower and upper triangular factors of a matrix previously obtained via Functional Module DECØMP.

III. DMAP CALLING SEQUENCE:

```
FBS  L,U,B/X/C,N,a/C,N,b/C,N,c/C,N,d  $
```

IV. INPUT DATA BLØCKS:

L - Nonstandard lower triangular factor

U - Nonstandard upper triangular factor

B - Rectangular matrix

V. ØUTPUT DATA BLØCKS:

X - Rectangular matrix having the same dimensions as [B].

VI. PARAMETERS:

a - Input-integer-no default.
- 1 matrix [L][U] is symmetric
- 0 matrix [L][U] is unsymmetric

b - Input-integer-no default.
- 1 solve [L][U][X] = [B]
- -1 solve [L][U][X] = -[B]

c - Input-integer-no default.
- 1 - use single precision arithmetic
- 2 - use double precision arithmetic

d - Input-integer-no default.
- 1 - output [X] in single precision
- 2 - output [X] in double precision

VII. REMARKS:

1. Non-standard triangular factor matrix data blocks are used to improve the efficiency of the back substitution process. The format of these data blocks is given in Section 2 of the Programmer's Manual.
2. The matrix manipulating utility modules should be cautiously employed when dealing with non-standard matrix data blocks.
3. None of the parameters have default values.

I. NAME: MERGE (Matrix Merge)

II. PURPØSE: To form the matrix [A] from its partitions:

$$[A] \text{ <= } \left[\begin{array}{c|c} A11 & A12 \\ \hline A21 & A22 \end{array}\right] .$$

III. DMAP CALLING SEQUENCE:

MERGE A11,A21,A12,A22,CP,RP/A/V,Y,SYM/V,Y,PREC/V,Y,FØRM $

IV. INPUT DATA BLØCKS:

A11 - Matrix

A12 - Matrix

A21 - Matrix

A22 - Matrix

RP - Row partitioning vector (See below) - Single precision column vector.

CP - Column partitioning vector (See below) - Single precision column vector.

Notes:

1. Any or all of [A11], [A12], [A21], [A22] can be purged which implies [AIJ] = [0].
2. {RP} and {CP} may not both be purged.
3. See Remarks for meaning when either of {RP} or {CP} is purged.
4. [A11], [A12], [A21], [A22] must be unique matrices.

V. ØUTPUT DATA BLØCKS:

A - merged matrix from [A11], [A12], [A21], [A22]

Notes: [A] cannot be purged.

VI. PARAMETERS:

SYM - input-integer-no default. SYM $\leq$ 0, {RP} is used for {CP}. SYM > 0, {CP} and {RP} are distinct.

TYPE - Input-Integer-no default. Type of [A]

FØRM - Input-Integer-no default. Form of [A]

PREC - Input-Integer-no default. Precision of [A]

VII. REMARKS:

1. MERGE is the inverse of PARTN in the sense that if [A11], [A12], [A21], [A22] were produced by PARTN using {RP}, {CP}, FØRM, SYM, and TYPE from [A], MERGE will reproduce [A]. See PARTN for options on {RP}, {CP} and SYM.
2. All input data blocks must be distinct.

I. NAME: MPYAD (Matrix Multiply and Add)

II. PURPØSE: MPYAD performs the multiplication of two matrices and, optionally, addition of a third matrix to the product. By means of parameters, the user may compute [A][B]+[C], $[A]^T[B]+[C]$, [A][B]-[C], $[A]^T[B]-[C]$, -[A][B]+[C], $-[A]^T[B]+[C]$, -[A][B]-[C], or $-[A]^T[B]-[C]$.

III. DMAP CALLING SEQUENCE:

```
MPYAD   A,B,C/X/V,N,T/V,N,SIGNAB/V,N,SIGNC/V,N,PREC  $
```

IV. INPUT DATA BLØCKS:

A - Left hand matrix in the matrix product [A][B]

B - Right hand matrix in the matrix product [A][B]

C - Matrix to be added to [A][B]

Notes:

1. If no matrix is to be added, [C] must be purged.
2. [A], [B], [C] must be physically different data blocks.
3. [A] and [B] must not be purged.

V. ØUTPUT DATA BLØCK:

X - Matrix resulting from the MPYAD operation.

Note: [X] may not be purged.

VI. PARAMETERS:

T - integer, input, no default. $T = \begin{cases} 1, \text{ perform } [A]^T[B] \\ 0, \text{ perform } [A][B] \end{cases}$

SIGNAB - integer, input, no default. $SIGNAB = \begin{cases} +1, \text{ perform } [A][B] \\ -1, \text{ perform } -[A][B] \end{cases}$

SIGNC - integer, input, no default. $SIGNC = \begin{cases} +1, \text{ add } [C] \\ -1, \text{ subtract } [C] \end{cases}$

PREC - integer, input, no default. $PREC = \begin{cases} 1, \text{ elements of } [X] \text{ will be output in single-precision} \\ 2, \text{ elements of } [X] \text{ will be output in double-precision} \end{cases}$

VII. EXAMPLES:

1. [X] = [A][B]+[C] ([X] double precision)

```
MPYAD   A,B,C/X/C,N,0/C,N,1/C,N,1/C,N,2  $
```

2. $[X] = [A]^T[B]-[C]$ ([X] single-precision)

```
MPYAD   A,B,C/X/C,N,1/C,N,1/C,N,-1/C,N,1  $
```

3. [X] = -[A][B] ([X] double-precision)

```
MPYAD   A,B,/X/C,N,0/C,N,-1/C,N,0/C,N,2  $
```

I. NAME: PARTN (Matrix Partition)

II. PURPØSE: To partition [A] into [A11], [A12], [A21] and [A22]:

$$[A] \Rightarrow \left[\begin{array}{c|c} A11 & A12 \\ \hline A21 & A22 \end{array}\right].$$

III. DMAP CALLING SEQUENCE:

PARTN A,CP,RP/A11,A21,A12,A22/V,Y,SYM/V,Y,TYPE/V,Y,F11/V,Y,F21/V,Y,F12/V,Y,F22 $

IV. INPUT DATA BLØCKS:

A - Matrix to be partitioned.

RP - Row partitioning vector - single precision column vector.

CP - Column partitioning vector - single precision column vector.

V. ØUTPUT DATA BLØCKS:

A11 - Upper left partition of [A]

A12 - Upper right partition of [A]

A21 - Lower left partition of [A]

A22 - Lower right partition of [A]

Notes:

1. Any or all output data blocks may be purged.
2. For size of outputs see METHOD section below.

VI. PARAMETERS:

SYM - input-integer-no default. SYM chooses between a symmetric partition and one unsymmetric partition. If SYM ≤ 0, {CP} is used as {RP}. If SYM > 0, {CP} and {RP} are distinct.

TYPE - input-integer-no default. Type of output matrices.

F11 - input-integer-no default. Form of [A11].

F21 - input-integer-no default. Form of [A21].

F12 - input-integer-no default. Form of [A12].

F22 - input-integer-no default. Form of [A22].

VII. METHOD:

Let NC = number of nonzero terms in {CP}.

Let NR = number of nonzero terms in {RP}.

Let NRØWA = number of rows in [A]

Let NCØLA = number of columns in [A]

Case 1 {CP} purged

[A11] is a (NRØWA-NR) by NCØLA matrix.

[A21] is a NR by NCØLA matrix.

[A12] is not written.

[A22] is not written.

$$[A] \rightarrow \left[\begin{array}{c} A11 \\ \hline A21 \end{array}\right]$$

CASE 2 {RP} purged and SYM > 0

[A11] is a NRØWA by (NCØLA - NC) matrix.

[A21] is not written.

[A12] is a NRØWA by NC matrix.

[A22] is not written.

$$[A] \rightarrow [A11 \mid A12]$$

CASE 3 {RP} purged and SYM ≤ 0

[A11] is a (NRØWA - NC) by (NCØLA - NC) matrix.

[A21] is a NC by (NCØLA - NC) matrix.

[A12] is a (NRØWA - NC) by NC matrix.

[A22] is a NC by NC matrix.

$$[A] \rightarrow \left[\begin{array}{c|c} A11 & A12 \\ \hline A21 & A22 \end{array}\right]$$

CASE 4 neither {CP} nor {RP} purged

[A11] is a (NRØWA - NR) by (NCØLA - NC) matrix.

[A21] is a NR by (NCØLA - NC) matrix.

[A12] is a (NRØWA - NR) by NC matrix.

[A22] is a NR by NC matrix.

$$[A] \rightarrow \left[\begin{array}{c|c} A11 & A12 \\ \hline A21 & A22 \end{array}\right]$$

VIII. REMARKS:

1. If [A] is purged, PARTN will cause all output data blocks to be purged.
2. If {CP} is purged, [A] is partitioned as follows:

$$[A] \Rightarrow \left[\begin{array}{c} A11 \\ \hline A21 \end{array}\right].$$

3. If {RP} is purged and SYM > 0, [A] is partitioned as follows:

$$[A] \Rightarrow [A11 \mid A12]$$

4. If {RP} is purged and SYM ≤ 0, [A] is partitioned as follows:

$$[A] \Rightarrow \left[\begin{array}{c|c} A11 & A12 \\ \hline A21 & A22 \end{array}\right].$$

where {RP} is used as both the row and column partitioner.

5. {RP} and {CP} cannot both be purged.
6. $$[A] \Rightarrow \left[\begin{array}{c|c} A11 & A12 \\ \hline A21 & A22 \end{array}\right]$$

Let [A] be a m by n order matrix.

Let {CP} be a n order row matrix containing q zero elements.

Let {RP} be a m order column vector containing p zero element.

Partition [A11] will consist of all elements A_{ij} of [A] for which $CP_j = RP_i = 0$ in the same order as they appear in [A].

Partition [A12] will consist of all elements A_{ij} of [A] for which $CP_j \neq 0$ and $RP_i = 0$ in the same order as they appear in [A].

Partition [A21] will consist of all elements A_{ij} of [A] for which $CP_j = 0$ and $RP_i \neq 0$ in the same order as they appear in [A].

Partition [A22] will consist of all elements A_{ij} of [A] for which $CP_j \neq 0$ and $RP_i \neq 0$ in the same order as they appear in [A].

IX. EXAMPLE:

Let [A], {CP} and {RP} be defined as follows:

$$[A] = \begin{bmatrix} 1.0 & 2.0 & 3.0 & 4.0 \\ 5.0 & 6.0 & 7.0 & 8.0 \\ 9.0 & 10.0 & 11.0 & 12.0 \end{bmatrix}, \quad \{CP\} = \begin{Bmatrix} 1.0 \\ 0.0 \\ 1.0 \\ 1.0 \end{Bmatrix}, \quad \{RP\} = \begin{Bmatrix} 0.0 \\ 0.0 \\ 1.0 \end{Bmatrix}$$

Then, the DMAP instruction

```
PARTN  A,CP,RP/A11,A21,A12,A22/C,N,1/C,N,2/C,N,2/C,N,2/C,N,2 $
```

will create the matrices

$$[A11] = \begin{bmatrix} 2.0 \\ 6.0 \end{bmatrix} \qquad [A12] = \begin{bmatrix} 1.0 & 3.0 & 4.0 \\ 5.0 & 7.0 & 8.0 \end{bmatrix}$$

$$[A21] = [10.0] \qquad [A22] = [9.0 \quad 11.0 \quad 12.0]$$

I. NAME. SMPYAD (Matrix Series Multiply and Add)

II. PURPØSE: To multiply a series of matrices together:

$$[X] = [A][B][C][D][E] \pm [F].$$

III. DMAP CALLING SEQUENCE:

```
SMPYAD   A,B,C,D,E,F/X/C,N,n/V,N,SIGNX/V,N,SIGNF/V,N,PX/V,N,TA/V,N,TB/V,N,TC/V,N,TD  $
```

IV. INPUT DATA BLØCKS:

A, B, C, D, E - Up to 5 matrices to be multiplied together, from left to right.

F - Matrix to be added to the above product.

Notes:

1. If one of the five multiplication matrices is required in the product (see Parameter n below) and is purged, the multiplication will not be done.
2. If the [F] matrix is purged, no matrix will be added to the product.

V. ØUTPUT DATA BLØCKS:

X - Resultant matrix (may not be pre-purged)

VI. PARAMETERS:

1. n = number of matrices involved in the product, counting from the left (integer, input)
2. SIGNX = sign of the product matrix (e.g., [A][B][C][D][E])
   = 1 for plus, -1 for minus (integer, input)
3. SIGNF = sign of the matrix to be added to the product matrix (integer, input)
   = 1 for plus, -1 for minus
4. PX = output precision of the final result (integer, input)
   = 1 for single-precision, 2 for double-precision
5. TA, TB, TC, TD = transpose indicators for the [A],[B],[C], and [D] matrices (1 if transposed matrix to be used in the product; 0 if untransposed) - (integer, input)

Note:

All the parameters except n have default values as follows:

1. SIGNX = 1 (sign of product is plus)
2. SIGNF = 1 (sign of added matrix is plus)
3. PX = 1 (single-precision result)
4. TA, TB, TC, TD = 0 (use untransposed [A],[B],[C], and [D] matrices in the product)

VII. METHØD:

The method is the same as for the MPYAD module with the following additional remarks -

1. None of the matrices may be diagonal
2. Except for the final product, all intermediate matrix products are generated in double-precision.
3. The matrices are post-multiplied together from right-to-left, i.e., the first product calculated is the product of matrix n-1 and matrix n.

VIII. EXAMPLES:

1. To compute $[X] = [A][B]^T[C]-[F]$, use

```
SMPYAD  A,B,C,,,F/X/C,N,3/C,N,1/C,N,-1/C,N,2/C,N,0/C,N,1/C,N,0/C,N,0  $
```

2. To compute $[Z] = -[U]^T[V]^T[W]^T[X]^T[Y]$, use

```
SMPYAD  U,V,W,X,Y,/Z/C,N,5/C,N,-1/C,N,0/C,N,2/C,N,1/C,N,1/C,N,1/C,N,1  $
```

I. NAME: SØLVE (Linear System Solver)

II. PURPØSE: To solve the Matrix Equation

$$[A][X] = \pm[B]$$

III. DMAP CALLING SEQUENCE:

SØLVE A,B/X/V,Y,SYM/V,Y,SIGN/V,Y,PREC/V,Y,TYPE $

IV. INPUT DATA BLØCKS:

A - square real or complex matrix

B - rectangular real or complex matrix (if purged, the identity matrix is assumed.)

V. ØUTPUT DATA BLØCKS:

X - A rectangular matrix

Note: A standard matrix trailer will be written, identifying [X] as a rectangular matrix with the same dimensions as [B] and the type specified.

VI. PARAMETERS:

SYM - Input-integer-default = 0
- 0 - use unsymmetric decomposition
- 1 - use symmetric decomposition
- -1 - try symmetric decomposition, use unsymmetric if any leading minor of [A] is singular

SIGN - Input-integer-default = 1
- 1 - solve [A][X] = [B]
- -1 - solve [A][X] = -[B]

PREC - Input-integer-default = 1
- 1 - use single precision arithmetic
- 2 - use double precision arithmetic

TYPE - Input-integer-default = 1
- 1 - output type of matrix [X] is real single precision
- 2 - output type of matrix [X] is real double precision
- 3 - output type of matrix [X] is complex single precision
- 4 - output type of matrix [X] is complex double precision

VII. METHØD: Depending on the SYM flag and the type of [A], one of subroutines SDCØMP, DECØMP, or CDCØMP is called to form [A] = [L][U].

One of FBS or GFBS is then called to solve [L][Y] = ±[B] and [L][X] = [Y], as appropriate.

I. NAME: TRNSP (Matrix Transpose)

II. PURPØSE: To form $[A]^T$ given [A].

III. DMAP CALLING SEQUENCE:
TRNSP A/X $

IV. INPUT DATA BLØCKS:
A - Any matrix data block.
Note: If [A] is purged, TRNSP will cause [X] to be purged.

V. ØUTPUT DATA BLØCKS:
X - The matrix transpose of [A]
Note: [X] cannot be purged.

VI. PARAMETERS: None.

VII. REMARKS:
Transposition of large full matrices is very expensive and should be avoided if possible (see Section 2.1.4 of the Theoretical Manual).

5.3.2 Utility Modules

Module	Basic Function
MATGPR	Print Matrices with Grid Point Identification
MATPRN	Print Matrices
MATPRT	Print Matrices associated only with geometric grid points
PARAM	Manipulate Parameter values
PRTPARM	Print parameter values and DMAP error messages
SEEMAT	Generate Matrix Topology Displays
SETVAL	Set parameter values
TABPT	Print table data blocks

Utility modules are an arbitrary sub-division of the Functional Modules.

Utility modules are used to output matrix and table data blocks and to manipulate parameters.

The data block names corresponding to the various matrix and table data blocks used in the Rigid Format DMAP sequences may be found in Section 3 or in the NASTRAN mnemonic dictionary, Section 7.

I. NAME: MATGPR (Displacement Approach Matrix Printer)

II. PURPØSE: Prints matrices generated by the Displacement Approach. External grid point identification of each nonzero element is also printed.

III. DMAP CALLING SEQUENCE:

A. For matrices generated in Rigid Formats 1-6 or matrices generated in Rigid Formats 7-12 prior to module GKAD (or GKAM):

```
MATGPR GPL,USET,SIL,M//C,N,c/C,N,r  $
```

B. For matrices generated in Rigid Formats 7-12 after module GKAD (or GKAM):

```
MATGPR GPLD,USETD,SILD,M//C,N,c/C,N,r  $
```

IV. INPUT DATA BLØCKS:

GPL - Grid Point List
GPLD - Grid Point List (Dynamics)
USET - U-set
USETD - U-set (Dynamics)
SIL - Scalar Index List
SILD - Scalar Index List (Dynamics)
M - Any displacement approach matrix

V. ØUTPUT DATA BLØCKS: None

VI. PARAMETERS:

1. c-column size (number of rows) - must be the appropriate BCD value from the table below. (Input, no default)

2. r-row size (number of columns) - must be the appropriate BCD value from the table below. If not specified, it will be assumed that r=c. (Input, default = X which implies r=c)

MATGPR parameter value	Means matrix is same size as
M	U_m
Ø	U_o
R	U_r
SG	U_s (specified on GRID card)
SB	U_s (specified on SPC card)
L	U_ℓ
A	U_a
F	U_f
S	U_s (union of SG and SB)
N	U_n

G	U_g
E	U_e
P	U_p
NE	ξ_o
FE	ξ_i
D	U_d
H	U_h

Notes:

1. See Section 1 for a discussion of set notation.
2. If the value specified for c is not in the above table, the matrix will not be printed.
3. The user must know which sets correspond to the rows and columns of the matrix he wishes to print. This is usually apparent from the DMAP name of the matrix data block.

VII. REMARKS:

1. When using the form specified in IIIA, this module may not be scheduled until after GP4 since data blocks generated by GP4 are required inputs. When using the form specified in IIIB, this module may not be scheduled until after DPD since data blocks generated by DPD are required inputs.
2. If [M] is purged, no printing will be done.
3. The non-zero terms of the matrix will be printed along with the external grid point and component identification numbers corresponding to the row and column position of each term.

I. NAME: MATPRN (General Matrix Printer)

II. PURPØSE: To print general matrix data blocks.

III. DMAP CALLING SEQUENCE:
MATPRN M1,M2,M3,M4,M5// $

IV. INPUT DATA BLØCKS:
Mi - Matrix data blocks, any of which may be purged.

V. ØUTPUT DATA BLØCKS: None

VI. PARAMETERS: None

VII. ØUTPUT:
The nonzero band of each column of each input matrix data block is unpacked and printed in single precision.

VIII. NØTES:
1. Any or all input data blocks can be purged.
2. If any data block is not matrix type, the TABPT routine will be called.

IX. EXAMPLES:
1. MATPRN KGG,,,,// $
2. MATPRN KGG,PL,PG,BGG,UPV// $

I. NAME: MATPRT (Matrix Printer)

II. PURPØSE: To print matrix data blocks associated with grid points only.

III. DMAP CALLING SEQUENCE:

```
MATPRT   X//C,N,rc/C,N,y  $
```

IV. INPUT DATA BLØCK:

X - matrix data block to be printed. If [X] is purged, then nothing is done.

V. ØUTPUT DATA BLØCKS: None

VI. PARAMETERS:

1. rc - indicates whether [X] is stored by rows (rc = 1) or by columns (rc = 0) - (integer, input)
2. y - indicates whether [X] is to be printed even if purged (y < 0, do not print [X]; y ≥ 0, print [X]) — integer, input, default value = -1.

VII. METHØD:

Each column (or row) of the matrix is broken into groups of 6 terms (3 terms if complex) per printed line. If all the terms in a group = 0, the line is not printed. If the entire column (or row) = 0, it is not printed. If the entire matrix = 0, it is not printed.

VIII. REMARKS:

1. MATPRT should not be used if scalar or extra points are present. For this case, use MATPRN.
2. Only one matrix data block is printed by this instruction. The instruction may be repeated as many times as required, however.

I. NAME: PARAM (Parameter Processor)

II. PURPØSE: To perform specified arithmetic and logical operations on DMAP parameters.

III. DMAP CALLING SEQUENCE:
PARAM //C,N,op/V,N,ØUT/V,N,IN1/V,N,IN2 $

IV. INPUT DATA BLØCKS: None

V. ØUTPUT DATA BLØCKS: None

VI. PARAMETERS:
1. op is a BCD operation code from the table below (Input, no default).
2. ØUT is the name of the parameter which is being generated by PARAM (Output).
3. IN1 is the name of a parameter whose value is used to compute ØUT according to the table below (Input, no default).
4. IN2 is the name of a parameter whose value is used to compute ØUT according to the table below (Input, no default).

VII. REMARKS:
1. The table below gives the results for ØUT as a function of op, IN1, and IN2.

Arithmetic Operations					
op	ADD	SUB	MPY	DIV	NØT
ØUT	IN1+IN2	IN1-IN2	IN1·IN2	IN1/IN2	-IN1

Logical Operations												
op	AND				ØR				IMPL			
ØUT	-1	+1	+1	+1	-1	-1	-1	+1	-1	+1	-1	-1
IN1	<0	<0	≥0	≥0	<0	<0	≥0	≥0	<0	<0	≥0	≥0
IN2	<0	≥0	<0	≥0	<0	≥0	<0	≥0	<0	≥0	<0	≥0

Special Operation	
op	NØP
ØUT	ØUT

2. PARAM does its own SAVE; therefore, a SAVE is not needed following the module.

VIII. EXAMPLES:
1. PARAM //C,N,NØT/V,N,XYZ/V,N,NØXYZ $ - this example changes the sense of parameter NØXYZ which may be useful for the CØND or EQUIV instructions. Alternatively, XYZ could have been set in the following way:
2. PARAM //C,N,MPY/V,N,XYZ/V,N,NØXYZ/C,N,-1 $
3. PARAM //C,N,IMPL/V,N,ABC/V,N,DEF/V,N,GHI $
4. PARAM //C,N,NØP/V,N,P1=5 $ - this example sets the value of parameter P1 to 5 and saves it for subsequent use.

I. NAME: PRTPARM (Parameter and DMAP Message Printer)

II. PURPØSE: A. Prints parameter values.
B. Prints DMAP messages.

III. DMAP CALLING SEQUENCE:
PRTPARM //C,N,a/C,N,b $

IV. INPUT DATA BLØCKS: None

V. ØUTPUT DATA BLØCKS: None

VI. PARAMETERS:
a - Integer value (no default value)
b - BCD value (default value = XXXXXXXX)

VII. METHØD:

A. As a parameter printer, use a = 0. There are two options:

1. b = parameter name will cause the printout of the value of that parameter.

   Example: PRTPARM //C,N,0/C,N,LUSET $

2. b = XXXXXXXX will cause the printout of the values of all parameters in the current variable parameter table. Since this is the default value, it need not be specified.

   Example: PRTPARM //C,N,0 $

B. As a DMAP message printer, use a ≠ 0. There are two options:

1. a > 0 causes the printout of the jth message of category b where j=|a| and b is one of the values shown below. (The number of messages available in each category is also given.)

   Example: PRTPARM //C,N,1/C,N,DMAP $

2. a < 0 causes the same action as a > 0 with the additional action of program termination. Thus, PRTPARM may be used as a fatal message printer.

   Example: PRTPARM //C,N,-2/C,N,PLA $

VIII. REMARKS:

1. b is always a value.
2. Meaningless values of a and b will result in diagnostic messages from PRTPARM.

3. TABLE OF b CATEGORY VALUES

	Rigid Format	Value of b	Number of Messages
1	Static Analysis	STATICS	4
2	Static Analysis with Inertia Relief	INERTIA	4
3	Normal Mode Analysis	MØDES	3
4	Static Analysis with Differential Stiffness	DIFFSTIF	5
5	Buckling Analysis	BUCKLING	6
6	Piecewise Linear Analysis	PLA	4
7	Direct Complex Eigenvalue Analysis	DIRCEAD	3
8	Direct Frequency and Random Response	DIRFRRD	4
9	Direct Transient Response	DIRTRD	3
10	Modal Complex Eigenvalue Analysis	MDLCEAD	4
11	Modal Frequency and Random Response	MDLFRRD	6
12	Modal Transient Response	MDLTRD	5
	DMAP	DMAP	See Remark 5

4. For details on error messages for the ith Rigid Format see section 3.(i + 1).2 in the User's Manual.
5. The message number, a, may be any integer for DMAP messages.

I. NAME: SEEMAT (Pictorial Matrix Printer)

II. PURPØSE: Shows nonzero matrix elements on printer or plotter output positioned pictorially by row and column within the outlines of the matrix.

III. DMAP CALLING SEQUENCE:

SEEMAT M1,M2,M3,M4,M5//C,N,$\left\{\begin{matrix}\text{PRINT}\\\text{PLØT}\end{matrix}\right\}$/V,N,PFILE/V,N,PACK/C,N,plotter/
C,N,modeln1/C,N,modelb1/C,N,modeln2/C,N,modelb2 $

IV. INPUT DATA BLØCKS:
Matrix Data Blocks, any of which may be purged.

V. ØUTPUT DATA BLØCKS: None

VI. PARAMETERS:

1. PRINT implies use of the system output file. (Any value other than PLØT implies PRINT.)

   PLØT implies use of one of the plotters. Either of the plotter tapes PLT1 or PLT2 will be used, depending on the type of plotter requested (see Section 4.1).

   The default value for the first parameter is PRINT.

2. PFILE is the Plot File Number. (Used only if first parameter is PLØT.)

   Input/output variable integer parameter. Frame or sheet number. The value of this parameter will be incremented by one (1) for each frame (sheet) plotted by SEEMAT.

   The default value for the second parameter is 0.

3. PACK is reserved for a future modification that will allow the representation of a nonzero block of the matrix with a single character. This parameter may be specified as C,N only.

4. Plotter Name - If the first parameter = PLØT, one of the plotter names must be selected from the following list. Additional information on plotters and the meaning of the symbols used below is given in Section 4.1. The associated model identifiers are specified with the next four parameters. Each plotter has a default model associated with it, as indicated by the underlined model identifier.

Plotter Name	Model Identifiers
BL	LTE,30 / STE,30
EAI	3500,30 / 3500,45
SC	4020,0
CALCØMP	765,205 / 765,210 / 765,105 / 765,110 / 763,205 / 763,210 / 763,105 / 763,110 / 565,205 / 565,210 / 565,105 / 565,110 / 565,305 / 565,310 / 563,205 / 563,210 / 563,105 / 563,110 / 563,305 / 563,310
DD	80,B
NASTRAN	M,0 / T,0 / D,0 / M,1 / T,1 / D,1

5. The parameter modelnl is used to specify the first of the two model identifiers when it is an integer value.

6. The parameter modelbl is used to specify the first of the two model identifiers when it is a BCD value.

7. The parameter modeln2 is used to specify the second of the two model identifiers when it is an integer value.

8. The parameter modelb2 is used to specify the second of the two model identifiers when it is a BCD value.

VII. METHØD: The matrix is partitioned into blocks which can be printed on a single sheet of output paper or frame on the plotter selected. Only blocks containing nonzero elements will be output. Row and column indices are indicated. The user of this module is cautioned to make sure his line count limit is large enough. A default of 20,000 lines is provided by NASTRAN. This may be changed via the statement MAXLINES= value in the NASTRAN Case Control Deck. The transpose of the matrix is output.

VIII. REMARKS:

1. If a plotter is used, the appropriate tape must be made available to NASTRAN.
2. If a plotter is used, a SAVE instruction should be executed to update PFILE.
3. The nonzero elements are indicated by asterisks (*), except for diagonal elements of square matrices which are indicated by the letter D, and elements in the last row or column which are indicated by dollar signs ($).
4. The default model for any plotter is specified by omitting the last four parameters.
5. When two of the last four parameters are used to specify model identifiers, the remaining two parameters should be specified as C,N only.

IX. EXAMPLES :

1. Specify CALCØMP 765,205 as follows:

```
SEEMAT  M1,M2,M3,M4,M5//C,N,PLØT/V,N,PFILE/C,N/C,N,CALCØMP  $
```

2. Specify EAI 3500,45 as follows:

```
SEEMAT M1,M2,M3,M4,M5//C,N,PLØT/V,N,PFILE/C,N/C,N,EAI/C,N,3500/C,N/C,N,45/C,N  $
```

3. Specify Benson Lehner STE,30 as follows:

```
SEEMAT M1,M2,M3,M4,M5//C,N,PLØT/V,N,PFILE/C,N/C,N,BL/C,N/C,N,STE/C,N,30/C,N  $
```

4. Specify the printer rather than a plotter as follows:

```
SEEMAT  M1,M2,M3,M4,M5//  $
```

5. For additional examples see Section 5.4.8.

I. NAME: SETVAL (Set Values)

II. PURPØSE: Set DMAP Parameter variable values equal to other DMAP Parameter variables or DMAP Parameter constants.

III. DMAP CALLING SEQUENCE:

```
SETVAL      //V,N,X1/V,N,A1/V,N,X2/V,N,A2/V,N,X3/V,N,A3/V,N,X4/V,N,A4/V,N,X5/V,N,A5  $
```

IV. INPUT DATA BLØCKS: None

V. ØUTPUT DATA BLØCKS: None

VI. PARAMETERS:

X1, X2, X3, X4, X5	Output, integers, variables
A1, A2, A3, A4, A5	Input, integers; default values = 1, variables or constants.

VII. METHØD: This module sets X1 = A1, X2 = A2, X3 = A3, X4 = A4, and X5 = A5. Only two parameters need be specified in the calling sequence (X1 and A1).

VIII. REMARKS:

1. A SAVE instruction must immediately follow the SETVAL instruction if the output parameter values are to be subsequently used.
2. See PARAM for an alternate method of defining parameter values.
3. As an example, the statements

```
SETVAL  //V,N,X1/V,N,A1/V,N,X2/C,N,3  $
SAVE    X1,X2  $
```

are equivalent to the statements

```
PARAM   //C,N,ADD/V,N,X1/V,N,A1/C,N,0  $
PARAM   //C,N,NØP/V,N,X2=3  $
```

I. NAME: TABPT (Table Printer)

II. PURPØSE: To print table data blocks (may be used for matrix data blocks if desired).

III. DMAP CALLING SEQUENCE:

```
TABPT  TAB1,TAB2,TAB3,TAB4,TAB5// $
```

IV. INPUT DATA BLØCKS:

TAB1 -
TAB2 -
TAB3 - } Any NASTRAN data block.
TAB4 -
TAB5 -

Note: Any or all input data blocks can be purged.

V. ØUTPUT DATA BLØCKS: None

VI. PARAMETERS: None

VII. REMARKS:

1. Each input data block is treated as a table and its contents are printed on the system output file via a prescribed format. Each word of the table is identified by the module as to type (real, BCD, integer) and an appropriate format is used.
2. The trailer data for the table is also printed.
3. Purged input data blocks are not printed.

VIII. EXAMPLES:

```
TABPT  GEØM1,,,,// $
TABPT  GEØM1,GEØM2,GEØM3,GEØM4,GEØM5// $
```

5.3.3 User Modules

Module	
DDR	MØDA
DUMMØD1	MØDB
DUMMØD2	MØDC
DUMMØD3	ØUTPUT
DUMMØD4	ØUTPUT1
INPUT	ØUTPUT2
INPUTT1	ØUTPUT3
INPUTT2	ØUTPUT4
INPUTT3	XYPRNPLT
INPUTT4	

A number of modules have been placed in the NASTRAN system for which no actual code exists. These modules are available to the user who wishes to create his own data blocks by reading tapes or data cards, generate his own output on the printer, punch or plotter, or perform his own matrix computations. The appropriate MPL information is presented for each such user module in this section. All necessary interfaces with the Executive System have been completed for these user modules. The procedures for implementing a user module are fully described in Section 2 of the Programmer's Manual.

I. NAME: DDR (User Dummy Module)

II. PURPØSE: Can be used for any desired purpose.

III. DMAP CALLING SEQUENCE: (see REMARKS below)
DDR A,B,C,D,E,F,G,H,I,J,K,L,M/X,Y,Z/C,N,ABC/C,N,DEF/C,N,GHI/C,N,O/C,N,O/C,N,O/C,N,O $

IV. INPUT DATA BLØCKS: As desired by author of module.

V. ØUTPUT DATA BLØCKS: As desired by author of module.

VI. PARAMETERS: Parameters may be used as desired by the author of the module. The parameter types are indicated by the constants shown in the calling sequence shown above.

VII. REMARKS:
This module has been provided for the user of NASTRAN who may wish to include a module of his own design into the system. The number of inputs and outputs, as well as the number, type, and default values of the parameters, may be changed by changing the Module Properties List (MPL) in Block Data Program XMPLBD (see Section 2 of Programmer's Manual).

I. NAME: DUMMØD1 (Dummy Module - 1)

II. PURPØSE: Can be used for any desired purpose.

III. DMAP CALLING SEQUENCE: (see REMARKS)

```
DUMMØD1  I1,I2,I3,I4,I5,I6,I7,I8/
         Ø1,Ø2,Ø3,Ø4,Ø5,Ø6,Ø7,Ø8/
         C,N,-1/V,Y,P2=-1/V,N,P3=-1/C,Y,P4=-1/
         C,Y,P5=-1.0/C,N,-1.0/
         C,Y,P7=ABCDEFGH/
         C,Y,P8=-1.0D0/
         C,Y,P9=(-1.0,-1.0)/
         C,Y,P10=(-1.0D0,-1.0D0)  $
```

IV. INPUT DATA BLØCKS: As desired by author of module.

V. ØUTPUT DATA BLØCKS: As desired by author of module.

VI. PARAMETERS: Parameters may be used as desired by the author of the module. The parameter types are indicated by the default values shown in the calling sequence above.

VII. REMARKS: This module has been provided for the user of NASTRAN who may wish to include a module of his own design into the system. The number of inputs and outputs as well as the number, type, and default values of parameters may be changed by changing the Module Properties List (MPL) in Block Data Program XMPLBD (see Section 2 of Programmer's Manual).

I. NAME: DUMMØD2 (Dummy Module - 2)

II. PURPØSE: Can be used for any desired purpose.

III. DMAP CALLING SEQUENCE: (see REMARKS)

```
DUMMØD2  I1,I2,I3,I4,I5,I6,I7,I8/
         Ø1,Ø2,Ø3,Ø4,Ø5,Ø6,Ø7,Ø8/
         C,N,-1/V,Y,P2=-1/V,N,P3=-1/C,Y,P4=-1/
         C,Y,P5=-1.0/C,N,-1.0/
         C,Y,P7=ABCDEFGH/
         C,Y,P8=-1.0D0/
         C,Y,P9=(-1.0,-1.0)/
         C,Y,P10=(-1.0D0,-1.0D0)  $
```

IV. INPUT DATA BLØCKS: As desired by author of module.

V. ØUTPUT DATA BLØCKS: As desired by author of module.

VI. PARAMETERS: Parameters may be used as desired by the author of the module. The parameter types are indicated by the default values shown in the calling sequence above.

VII. REMARKS: This module has been provided for the user of NASTRAN who may wish to include a module of his own design into the system. The number of inputs and outputs as well as the number, type, and default values of parameters may be changed by changing the Module Properties List (MPL) in Block Data Program XMPLBD (see Section 2 of Programmer's Manual).

I. NAME: DUMMØD3 (Dummy Module - 3)

II. PURPØSE: Can be used for any desired purpose.

III. DMAP CALLING SEQUENCE: (see REMARKS)

```
DUMMØD3  I1,I2,I3,I4,I5,I6,I7,I8/
         Ø1,Ø2,Ø3,Ø4,Ø5,Ø6,Ø7,Ø8/
         C,N,-1/V,Y,P2=-1/V,N,P3=-1/C,Y,P4=-1/
         C,Y,P5=-1.0/C,N,-1.0/
         C,Y,P7=ABCDEFGH/
         C,Y,P8=-1.0D0/
         C,Y,P9=(-1.0,-1.0)/
         C,Y,P10=(-1.0D0,-1.0D0)  $
```

IV. INPUT DATA BLØCKS: As desired by author of module.

V. ØUTPUT DATA BLØCKS: As desired by author of module.

VI. PARAMETERS: Parameters may be used as desired by the author of the module. The parameter types are indicated by the default values shown in the calling sequence above.

VII. REMARKS: This module has been provided for the user of NASTRAN who may wish to include a module of his own design into the system. The number of inputs and outputs as well as the number, type, and default values of parameters may be changed by changing the Module Properties List (MPL) in Block Data Program XMPLBD (see Section 2 of Programmer's Manual).

I. NAME: DUMMØD4 (Dummy Module - 4)

II. PURPØSE: Can be used for any desired purpose.

III. DMAP CALLING SEQUENCE: (see REMARKS)

```
DUMMØD4  I1,I2,I3,I4,I5,I6,I7,I8/
         Ø1,Ø2,Ø3,Ø4,Ø5,Ø6,Ø7,Ø8/
         C,N,-1/V,Y,P2=-1/V,N,P3=-1/C,Y,P4=-1/
         C,Y,P5=-1.0/C,N,-1.0/
         C,Y,P7=ABCDEFGH/
         C,Y,P8=-1.0D0/
         C,Y,P9=(-1.0,-1.0)/
         C,Y,P10=(-1.0D0,-1.0D0)  $
```

IV. INPUT DATA BLØCKS: As desired by author of module.

V. ØUTPUT DATA BLØCKS: As desired by author of module.

VI. PARAMETERS: Parameters may be used as desired by the author of the module. The parameter types are indicated by the default values shown in the calling sequence above.

VII. REMARKS: This module has been provided for the user of NASTRAN who may wish to include a module of his own design into the system. The number of inputs and outputs as well as the number, type, and default values of parameters may be changed by changing the Module Properties List (MPL) in Block Data Program XMPLBD (see Section 2 of Programmer's Manual).

I. NAME: INPUT (Auxiliary Input File Processor)

II. PURPØSE: A user-written module to generate data block(s) and parameter(s) based on input data read by the module itself, or on parameter values or Input Data Blocks generated by NASTRAN, or by any combination of these.

III. DMAP CALLING SEQUENCE:
INPUT I1,I2,I3,I4,I5/Ø1,Ø2,Ø3,Ø4,Ø5/C,N,a/C,N,b/C,N,c $

IV. INPUT DATA BLØCKS: Any or all of the inputs may be purged according to the user-writer's design.

V. ØUTPUT DATA BLØCKS: May be tables or matrices depending on the user-writer's design; may or may not be purged.

VI. PARAMETERS: May be used as desired by the user-writer. Type is integer with default values of a=-1, b=0, c=0. If parameter is to be output from module, the form C,N,_ must be changed in the above example to V,N,NAME or some other form capable of being output.

VII. REMARKS: This module has been provided for the NASTRAN user who wishes to process his own data cards. Data block(s) created must be compatible with any subsequent module(s) using them as input. The number of input and output data blocks, as well as the number, type and default values of the parameters, may be changed by changing the Module Properties List (MPL) in Block Data Program XMPLBD (see Section 2 of Programmer's Manual).

I. NAME: INPUTT1 (Auxiliary Input File Processor)

II. PURPØSE: A user-written module to generate data block(s) and parameter(s) based on input data read by the module itself, or on parameter values or Input Data Blocks generated by NASTRAN, or by any combination of these.

III. DMAP CALLING SEQUENCE:
INPUTT1 I1,I2,I3,I4,I5/Ø1,Ø2,Ø3,Ø4,Ø5/C,N,a/C,N,b/C,N,c $

IV. INPUT DATA BLØCKS: Any or all of the inputs may be purged according to the user-writer's design.

V. ØUTPUT DATA BLØCKS: May be tables or matrices depending on the user-writer's design; may or may not be purged.

VI. PARAMETERS: May be used as desired by the user-writer. Type is integer with default values of a=-1, b=0, c=0. If parameter is to be output from module, the form C,N,_ must be changed in the above example to V,N,NAME or some other form capable of being output.

VII. REMARKS: This module has been provided for the NASTRAN user who wishes to process his own data cards. Data block(s) created must be compatible with any subsequent module(s) using them as input. The number of input and output data blocks, as well as the number, type and default values of the parameters, may be changed by changing the Module Properties List (MPL) in Block Data Program XMPLBD (See Section 2 of Programmer's Manual).

I. NAME: INPUTT2 (Auxiliary Input File Processor)

II. PURPØSE: A user-written module to generate data block(s) and parameter(s) based on input data read by the module itself, or on parameter values or Input Data Blocks generated by NASTRAN, or by any combination of these.

III. DMAP CALLING SEQUENCE:
INPUTT2 I1,I2,I3,I4,I5/Ø1,Ø2,Ø3,Ø4,Ø5/C,N,a/C,N,b/C,N,c $

IV. INPUT DATA BLØCKS: Any or all of the inputs may be purged according to the user-writer's design.

V. ØUTPUT DATA BLØCKS: May be tables or matrices depending on the user-writer's design; may or may not be purged.

VI. PARAMETERS: May be used as desired by the user-writer. Type is integer with default values of a=-1, b=0, c=0. If parameter is to be output from module, the form C,N,_ must be changed in the above example to V,N,NAME or some other form capable of being output.

VII. REMARKS: This module has been provided for the NASTRAN user who wishes to process his own data cards. Data block(s) created must be compatible with any subsequent module(s) using them as input. The number of input and output data blocks, as well as the number, type and default values of the parameters, may be changed by changing the Module Properties List (MPL) in Block Data Program XMPLBD (See Section 2 of Programmer's Manual).

I. NAME: INPUTT3 (Auxiliary Input File Processor)

II. PURPØSE: A user-written module to generate data block(s) and parameter(s) based on input data read by the module itself, or on parameter values or Input Data Blocks generated by NASTRAN, or by any combination of these.

III. DMAP CALLING SEQUENCE:
INPUTT3 I1,I2,I3,I4,I5/Ø1,Ø2,Ø3,Ø4,Ø5/C,N,a/C,N,b/C,N,c $

IV. INPUT DATA BLØCKS: Any or all of the inputs may be purged according to the user-writer's design.

V. ØUTPUT DATA BLØCKS: May be tables or matrices depending on the user-writer's design; may or may not be purged.

VI PARAMETERS: May be used as desired by the user-writer. Type is integer with default values of a=-1, b=0, c=0. If parameter is to be output from module, the form C,N,_ must be changed in the above example to V,N,NAME or some other form capable of being output.

VII. REMARKS: This module has been provided for the NASTRAN user who wishes to process his own data cards. Data block(s) created must be compatible with any subsequent module(s) using them as input. The number of input and output data blocks, as well as the number, type and default values of the parameters, may be changed by changing the Module Properties List (MPL) in Block Data Program XMPLBD (See Section 2 of Programmer's Manual).

I. NAME: INPUTT4 (Auxiliary Input File Processor)

II. PURPØSE: A user-written module to generate data block(s) and parameter(s) based on input data read by the module itself, or on parameter values or Input Data Blocks generated by NASTRAN, or by any combination of these.

III. DMAP CALLING SEQUENCE:
INPUTT4 I1,I2,I3,I4,I5/Ø1,Ø2,Ø3,Ø4,Ø5/C,N,a/C,N,b/C,N,c $

IV. INPUT DATA BLØCKS: Any or all of the inputs may be purged according to the user-writer's design.

V. ØUTPUT DATA BLØCKS: May be tables or matrices depending on the user-writer's design; may or may not be purged.

VI. PARAMETERS: May be used as desired by the user-writer. Type is integer with default values of a=-1, b=0, c=0. If parameter is to be output from module, the form C,N,_ must be changed in the above example to V,N,NAME or some other form capable of being output.

VII. REMARKS: This module has been provided for the NASTRAN user who wishes to process his own data cards. Data block(s) created must be compatible with any subsequent module(s) using them as input. The number of input and output data blocks, as well as the number, type and default values of the parameters, may be changed by changing the Module Properties List (MPL) in Block Data Program XMPLBD (See Section 2 of Programmer's Manual).

I. NAME: MØDA (User Dummy Module)

II. PURPØSE: Can be used for any desired purpose.

III. DMAP CALLING SEQUENCE: (See REMARKS below)

```
MODA  /W,X,Y,Z/C,N,0.0/C,N,0.0/C,N,0.0/C,N,0.0/C,N,0/C,N,0/C,N,0/C,N,0/C,N,0/
      C,N,0.0/C,N,0/C,N,0  $
```

IV. INPUT DATA BLØCKS: None

V. ØUTPUT DATA BLØCKS: As desired by author of module.

VI. PARAMETERS: Parameters may be used as desired by the author of the module. The parameter types are indicated by the constants shown in the calling sequence shown above.

VII. REMARKS: This module has been provided for the user of NASTRAN who may wish to include a module of his own design into the system. The number of inputs and outputs as well as the number, type, and default values of the parameters may be changed by changing the Module Properties List (MPL) in Block Data Program XMPLBD (see Section 2 of Programmer's Manual).

I. NAME: MØDB (User Dummy Module)

II. PURPØSE: Can be used for any desired purpose.

III. DMAP CALLING SEQUENCE: (See REMARKS below)

```
MØDB  A,B,C/W,X,Y,Z/C,N,1.0/C,N,1.0/C,N,1.0/C,N,0/C,N,0/C,N,0/C,N,1.0/
      C,N,0/C,N,0/C,N,0  $
```

IV. INPUT DATA BLØCKS: As desired by author of module.

V. ØUTPUT DATA BLØCKS: As desired by author of module.

VI. PARAMETERS: Parameters may be used as desired by the author of the module. The parameter types are indicated by the constants shown in the calling sequence shown above.

VII. REMARKS:

This module has been provided for the user of NASTRAN who may wish to include a module of his own design into the system. The number of inputs and outputs as well as the number, type, and default values of the parameters may be changed by changing the Module Properties List (MPL) in Block Data Program XMPLBD (see Section 2 of Programmer's Manual).

I. NAME: MØDC (User Dummy Module)

II. PURPØSE: Can be used for any desired purpose.

III. DMAP CALLING SEQUENCE: (See REMARKS below)
MØDC A,B//C,N,-1 $

IV. INPUT DATA BLØCKS: As desired by author of module.

V. ØUTPUT DATA BLØCKS: None

VI. PARAMETERS: Parameters may be used as desired by the author of the module. The parameter types are indicated by the constants shown in the calling sequence shown above.

VII. REMARKS:
This module has been provided for the user of NASTRAN who may wish to include a module of his own design into the system. The number of inputs and outputs as well as the number, type, and default values of the parameters may be changed by changing the Module Properties List (MPL) in Block Data Program XMPLBD (see Section 2 of Programmer's Manual).

I. NAME: ØUTPUT (Auxiliary Output File Processor)

II. PURPØSE: A user-written module to generate printer, plotter or punch output.

III. DMAP CALLING SEQUENCE: (see remark under METHØD)
ØUTPUT IN//C,Y,P=-1 $

IV. INPUT DATA BLØCKS:
IN - Contains any desired information which the module extracts and writes on the system output file, punch, or either of the two plotters. May be purged.

V. ØUTPUT DATA BLØCKS: None

VI. PARAMETERS: Parameters may be used as desired by the author of the module. Type is integer with MPL default value of -1 as shown above.

VII. METHØD: This module has been provided for the user of NASTRAN who may wish to process his own output. The number of inputs as well as the number, type, and default values of parameters may be changed by changing the Module Properties List (MPL) in Block Data Program XMPLBD (see Section 2 of Programmer's Manual).

I. NAME: ØUTPUT1 (Auxiliary Output File Processor)

II. PURPØSE: A user-written module to generate printer, plotter or punch output.

III. DMAP CALLING SEQUENCE: (see remark under METHØD)
ØUTPUT1 IN1,IN2,IN3,IN4,IN5//C,Y,P1=-1/C,Y,P2=-1 $

IV. INPUT DATA BLØCKS:
INi - Contains any desired information which the module extracts and writes on the system output file, punch, or either of the two plotters. May be purged.

V. ØUTPUT DATA BLØCKS: None

VI. PARAMETERS: Parameters may be used as desired by the author of the module. Type is integer with MPL default value of -1 as shown above.

VII. METHØD: This module has been provided for the user of NASTRAN who may wish to process his own output. The number of inputs as well as the number, type, and default values of parameters may be changed by changing the Module Properties List (MPL) in Block Data Program XMPLBD (see Section 2 of Programmer's Manual).

I. NAME: ØUTPUT2 (Auxiliary Output File Processor)

II. PURPØSE: A user-written module to generate printer, plotter or punch output.

III. DMAP CALLING SEQUENCE: (see remark under METHØD)
ØUTPUT2 IN1,IN2,IN3,IN4,IN5//C,Y,P1=-1/C,Y,P2=-1 $

IV. INPUT DATA BLØCKS:
INi - Contains any desired information which the module extracts and writes on the system output file, punch, or either of the two plotters. May be purged.

V. ØUTPUT DATA BLØCKS: None

VI. PARAMETERS: Parameters may be used as desired by the author of the module. Type is integer with MPL default value of -1 as shown above.

VII. METHØD: This module has been provided for the user of NASTRAN who may wish to process his own output. The number of inputs as well as the number, type, and default values of parameters may be changed by changing the Module Properties List (MPL) in Block Data Program XMPLBD (see Section 2 of Programmer's Manual).

I. NAME: ØUTPUT3 (Auxiliary Output File Processor)

II. PURPØSE: A user-written module to generate printer, plotter or punch output.

III. DMAP CALLING SEQUENCE: (see remark under METHØD)
ØUTPUT3 IN1,IN2,IN3,IN4,IN5//V,N,P1=-1/V,N,P2=-1 $

IV. INPUT DATA BLØCKS:
INi - Contains any desired information which the module extracts and writes on the system output file, punch, or either of the two plotters. May be purged.

V. ØUTPUT DATA BLØCKS: None

VI. PARAMETERS: Parameters may be used as desired by the author of the module. Type is integer with MPL default value of -1 as shown above.

VII. METHØD: This module has been provided for the user of NASTRAN who may wish to process his own output. The number of inputs as well as the number, type, and default values of parameters may be changed by changing the Module Properties List (MPL) in Block Data Program XMPLBD (see Section 2 of Programmer's Manual).

I. NAME: ØUTPUT4 (Auxiliary Output File Processor)

II. PURPØSE: A user-written module to generate printer, plotter or punch output.

III. DMAP CALLING SEQUENCE: (see remark under METHØD)
ØUTPUT4 IN1,IN2,IN3,IN4,IN5//V,N,P1=-1/V,N,P2=-1 $

IV. INPUT DATA BLØCKS:
INi - Contains any desired information which the module extracts and writes on the system output file, punch, or either of the two plotters. May be purged.

V. ØUTPUT DATA BLØCKS: None

VI. PARAMETERS: Parameters may be used as desired by the author of the module. Type is integer with MPL default value of -1 as shown above.

VII. METHØD: This module has been provided for the user of NASTRAN who may wish to process his own output. The number of inputs as well as the number, type, and default values of parameters may be changed by changing the Module Properties List (MPL) in Block Data Program XMPLBD (see Section 2 of Programmer's Manual).

I. NAME: XYPRNPLT (User Dummy Module)

II. PURPØSE: Can be used for any desired purpose.

III. DMAP CALLING SEQUENCE: (see REMARKS below)
XYPRNPLT A// $

IV. INPUT DATA BLØCKS: As desired by the author of module.

V. ØUTPUT DATA BLØCKS: None

VI. PARAMETERS: None

VII. REMARKS:
This module has been provided for the user of NASTRAN who may wish to include a module of his own design into the system. The number of inputs and outputs as well as the number, type, and default values of the parameters may be changed by changing the Module Properties List (MPL) in Block Data Program XMPLBD (see Section of Programmer's Manual).

5.3.4 Executive Operation Modules

Module	Basic Function
BEGIN	Always first in DMAP
CHKPNT	Write data blocks on checkpoint tape if checkpointing
CØND	Conditional forward jump
END	Always last in DMAP; terminates DMAP execution
EQUIV	Assign another name to a data block
EXIT	Conditional DMAP termination
FILE	Defines special data block characteristics to DMAP compiler
JUMP	Unconditional forward jump
LABEL	Defines DMAP location
PURGE	Conditional data block elimination
REPT	Repeat a series of DMAP instructions
SAVE	Save value of output parameter

All modules classified as Executive Operation Modules are individually described in this section. Additional discussions concerning the interaction of the Executive Modules with themselves and with the NASTRAN Executive System are contained in Section 5.2.3.

I. NAME: BEGIN (Begin DMAP program)

II. PURPØSE: BEGIN Is a declarative DMAP instruction which denotes the beginning of a DMAP program.

III. DMAP CALLING SEQUENCE:
BEGIN $

IV. REMARKS:
1. The BEGIN card is required when selecting APP DMAP in the Executive Control Deck and must be followed by DMAP instructions up to and including the END card.
2. BEGIN is a non-executable DMAP instruction which is used only by the DMAP compiler for information purposes.

I. NAME: CHKPNT (Checkpoint)

II. PURPØSE: Causes data blocks to be written on the New Problem Tape (NPTP) to enable the problem to be restarted with a minimum of redundant processing.

III. DMAP CALLING SEQUENCE:

CHKPNT D1,D2,...,DN $

where D1,D2,...,DN (N ≥ 1) are data blocks to be copied onto the problem tape for use in restarting problem.

IV. RULES:

1. A data block to be checkpointed must have been referenced in a previous PURGE, EQUIV or functional module instruction.
2. CHKPNT cannot be the first instruction of a DMAP loop.
3. Data Blocks generated by the Input File Processor (including DMI's and DTI's) should not be checkpointed since they are always regenerated on restart.
4. Checkpointing only takes place when a New Problem Tape (NPTP) is set up and the Executive Control Card CHKPNT YES appears in the Executive Control Deck. Otherwise, the CHKPNT instructions are ignored.
5. For each data block that is successfully checkpointed, a card of the restart dictionary is punched which gives the critical data for the data block as it exists on the Problem Tape.
6. For data blocks that have been purged or equivalenced, an entry is made in the restart dictionary to this effect. In these cases data blocks are not written on the Problem Tape.

I. NAME: CØND (Conditional Transfer)

II. PURPØSE:To alter the normal order of execution of DMAP modules by conditionally transferring program control to a specified location in the DMAP program.

III. DMAP CALLING SEQUENCE:

```
CØND  n,V $
```

where:

1. n is a BCD label name specifying the location where control is to be transferred. (See the LABEL instruction.)
2. V is a BCD name of a variable parameter whose value indicates whether or not to execute the transfer. If V < 0 the transfer is executed.

IV. EXAMPLE:

```
BEGIN $
  .
  .
  .
CØND  L1,K  $
MØDULE1  A/B/V,Y,P1  $
  .
  .
  .
LABEL  L1 $
MØDULEN  X/Y  $
  .
  .
  .
END $
```

If K ≥ 0, MØDULE1 is executed. If K < 0 control is transferred to the label L1 and MØDULEN is executed.

V. REMARKS:

Only forward transfers are allowed. See the REPT instruction for backward transfers.

I. NAME: END (End DMAP Program)

II. PURPØSE: Denotes the end of a DMAP program.

III. DMAP CALLING SEQUENCE:

```
END $
```

IV. NØTES:

1. The END instruction also acts as an implied EXIT instruction.
2. The END card is required whenever the analyst selects APP DMAP in his Executive Control Deck.

I. NAME: EQUIV (Data Block Name Equivalence)

II. PURPØSE: To attach one or more equivalent (alias) data block names to an existing data block so that the data block can be referenced by several equivalent names.

III. DMAP CALLING SEQUENCE:
EQUIV DBN1A,DBN2A,DBN3A/PARMA / DBN1B,DBN2B/PARMB $

Note: The number of data block names (DBNij) prior to each parameter (PARMj) and the number of such groups in a particular calling sequence are variable.

IV. INPUT DATA BLØCKS:
DBN1A,DBN2A, etc. - Any data block names appearing within the DMAP sequence. The 1st data block name in each group (DBN1A and DBN1B in the examples above) is known as the primary data block and the 2nd, etc. data block names become equivalent to the primary (depending on the associated parameter value). These equivalenced data blocks are known as secondary data blocks.

V. ØUTPUT DATA BLØCKS: (None specified or permitted)

VI. PARAMETERS:
PARMA, etc. - One required for each set of data block names.

VII. METHØD: The data block names in each group are made equivalent if the value of the associated parameter is < 0. If a number of data blocks are already equivalenced and the parameter value is ≥ 0, the equivalence is broken and the data block names again become unique. If the data blocks are not equivalenced and the parameter value is ≥ 0, no action is taken.

VIII. RULES:
1. The primary data block must be output from a previous functional module.
2. The primary data block must be referenced in the immediately preceding functional module and/or in a subsequent functional module.

I. NAME: EXIT (Terminate DMAP program)

II. PURPØSE: To conditionally terminate the execution of the DMAP program.

III. DMAP CALLING SEQUENCE:

EXIT c $

where c is an integer constant which specifies the number of times the instruction is to be ignored before terminating the program. If c = 0 the calling sequence may be shortened to EXIT $.

IV. EXAMPLE:

```
      BEGIN  $
        .
        .
        .
      LABEL L1 $
      MØDULE1 A/B/V,Y,P1 $
        .
DMAP    .
loop    .
      EXIT 3 $
      REPT L1,3 $
        .
        .
        .
      END $
```

V. REMARKS:

1. The EXIT instruction will be executed the third time the loop is repeated (i.e., the instructions within the loop will be executed four times).
2. EXIT may appear anywhere within the DMAP sequence.

I. NAME: FILE (File Allocation Aide)

II. PURPØSE: To inform the File Allocator (see Section 4.9 of the Programmer's Manual) of any special characteristics of a data block.

III. DMAP CALLING SEQUENCE:

FILE A=a1,a2...aα/B=b1,b2...bβ/..../Z=z1,z2...zω $

where:

A,B...Z are the names of the data blocks possessing special characteristics.

a1...aα,b1...bβ....z1...zω are the special characteristics from the list below.

The allowable special characteristics are:

1. SAVE - Indicates data block is to be saved for possible looping in DMAP program.
2. APPEND - Output data blocks which are generated within a DMAP loop are rewritten during each pass through the loop, unless the data block is declared APPEND in a FILE statement. The APPEND declaration allows a module to add information to a data block on successive passes through a DMAP loop.
3. TAPE - Indicates that data block is to be written on a physical tape if a physical tape is available.

Notes:

1. Data blocks created by the NASTRAN preface may not appear in FILE declarations.
2. Symbolic DMAP sequences which explain the use of the FILE instruction are given in Section 5.2.3.1.
3. FILE is a non-executable DMAP instruction which is used only by the DMAP compiler for information purposes.

I. NAME: JUMP (Unconditional Transfer)

II. PURPØSE: To alter the normal order of execution of DMAP modules by unconditionally transferring program control to a specified location in the DMAP program. The normal order of execution of DMAP modules is the order of occurrence of the modules as DMAP instructions in the DMAP program.

III. DMAP CALLING SEQUENCE:

JUMP n $

where n is a BCD name appearing on a LABEL instruction which specifies where control is to be transferred.

IV. Remarks:

Jumps must be forward in the DMAP sequence. See the REPT instruction for backward jumps.

I. NAME: LABEL (DMAP Location)

II. PURPØSE: To label a location in the DMAP program so that the location may be referenced by the DMAP instructions JUMP, CØND and REPT.

III. DMAP CALLING SEQUENCE:

LABEL n $

where n is a BCD name.

IV. Remarks:

1. The LABEL instruction is inserted just ahead of the DMAP instruction to be executed when transfer of control is made to the label.

2. LABEL is a non-executable DMAP instruction which is used only by the DMAP compiler for information purposes.

I. NAME: PURGE (Explicit Data Block Purge)

II. PURPØSE: To flag a data block so that it will not be allocated to a physical file.

III. DMAP CALLING SEQUENCE:

PURGE DBN1A,DBN2A,DBN3A/PARMA / DBN1B,DBN2B/PARMB $

Note: The number of data block names (DBN_{ij}) prior to each parameter ($PARM_j$) and the number of groups of data block names and parameters in a particular calling sequence is variable.

IV: INPUT DATA BLØCKS:

DBN1A,DBN2A, etc. - Any data block names appearing within the DMAP sequence.

V. ØUTPUT DATA BLØCKS: (None specified or permitted)

VI. PARAMETERS:

PARMA, etc. - One required for each group of data block names.

VII. METHØD: The data blocks in a group are purged if the value of the associated parameter is < 0. If a data block is already purged and the parameter value is ≥ 0, the purged data block is unpurged so that it may be subsequently reallocated. If the data block is not purged and the parameter value is ≥ 0, no action is taken.

I. NAME: REPT (Repeat)

II. PURPØSE: To repeat a group of DMAP instructions a specified number of times.

III. DMAP CALLING SEQUENCE:

```
REPT  n,c  $
```

where:

1. n is a BCD name which specifies the name of a label which marks the beginning of the group of DMAP instructions to be repeated. (See LABEL instruction).
2. c is an integer constant which specifies the number of times to repeat the instructions.

IV. EXAMPLE:

```
BEGIN $
  .
  .
  .
LABEL  L1  $
MØDULE1  A/B/V,Y,P1 $
   .
   .
   .
MØDULEN  B/C/V,Y,PN $
REPT  L1,3 $
  .
  .
  .
END $
```

V. REMARKS:

1. The instructions MØDULE1 to MODULEN will be repeated three times (i.e., executed four times) in the above example.
2. REPT is placed at the end of the group of instructions to be repeated.
3. The constant, c, may not be a parameter name.

I. NAME: SAVE (Save Variable Parameter Values)

II. PURPØSE: To specify which variable parameter values are to be saved from the preceding functional module DMAP instruction for use by subsequent modules.

III. DMAP CALLING SEQUENCE:

SAVE V1,V2,...,VN $

where the V1,V2,...,VN (N > 0) are the BCD names of some or all of the variable parameters which appear in the immediately preceding Functional Module DMAP instruction.

IV. REMARKS:

A SAVE instruction must immediately follow the functional module instruction wherein the parameters being saved are generated.

5.4 EXAMPLES

In order to facilitate the use of DMAP, several examples are provided in this section. The user is urged to study these examples both from the viewpoint of performing a sequence of matrix operations and that of a DMAP flow.

5.4.1 DMAP Example

Objective

1. Print the contents of table data block A.
2. Print matrix data blocks B,C, and D.
3. Print values of parameters P1 and P2.
4. Set parameter P3 equal to -7.

```
BEGIN     $
TABPT     A,,,,//  $
MATPRN    B,C,D,,//  $
PRTPARM   //C,N,0/C,N,P1  $
PRTPARM   //C,N,0/C,N,P2  $
PARAM     //C,N,NØP/V,N,P3=-7  $
END       $
```

Remarks:

To be a practical example, a restart situation is assumed. The user is cautioned to remember to reenter at DMAP instruction 2 by changing the last reentry point in the restart dictionary.

5.4.2 DMAP Example

Let the constrained stiffness matrix $[K_{\ell\ell}]$ and the load vector $\{P_\ell\}$ be defined by means of DMI bulk data cards. The following DMAP sequence will perform the series of matrix operations

$$\{u_1\} = [K_{\ell\ell}]^{-1}\{P_\ell\}$$
$$\{r\} = [K_{\ell\ell}]\{u_1\} - \{P_\ell\}$$
$$\{\delta u\} = [K_{\ell\ell}]^{-1}\{r\}$$
$$\{u_2\} = \{u_1\} + \{\delta u\}$$
$$\text{Print } \{u_2\}$$

```
BEGIN     $
SØLVE     KLL,PL/U1/C,N,1/C,N,1/C,N,1/C,N,1  $
MPYAD     KLL,U1,PL/R/C,N,0/C,N,1/C,N,-1/C,N,2  $
SØLVE     KLL,R/DU/C,N,1/C,N,1/C,N,2/C,N,2  $
ADD       U1,DU/U2/C,N,(1.0,0.0)/C,N,(1.0,0.0)  $
MATPRN    U2,,,,//  $
END       $
```

Remarks:

1. $[K_{\ell\ell}]$ is assumed symmetric.
2. In the example above, KLL will be decomposed twice. A more efficient DMAP sequence, which requires only a single decomposition for this problem, is given below.

```
BEGIN     $
DECØMP    KLL/LLL,ULL/C,N,1/C,N,0/V,N,MD/V,N,DET/V,N,IDET/V,N,SING  $
FBS       LLL,ULL,PL/U1/C,N,1/C,N,1/C,N,1/C,N,1  $
MPYAD     KLL,U1,PL/R/C,N,0/C,N,1/C,N,-1/C,N,2  $
FBS       LLL,ULL,R/DU/C,N,1/C,N,1/C,N,2/C,N,2  $
ADD       U1,DU/U2/C,N,(1.0,0.0)/C,N,(1.0,0.0)  $
MATPRN    U2,,,,//  $
END       $
```

5.4.3 DMAP Example to Use the Structure Plotter to Generate Undeformed Plots of the Structural Model

```
BEGIN     $
GP1       GEØM1,GEØM2,/GPL,EQEXIN,GPDT,CSTM,BGPDT,SIL/V,N,LUSET/V,N,NØCSTM/V,N,NØGPDT  $
SAVE      LUSET  $
GP2       GEØM2,EQEXIN/ECT  $
PLTSET    PCDB,EQEXIN,ECT/PLTSETX,PLTPAR,GPSETS,ELSETS/V,N,NSIL/V,N,NPSET  $
SAVE      NPSET,NSIL  $
PRTMSG    PLTSETX//  $
PARAM     //C,N,NØP/V,N,PLTFLG=1  $
PARAM     //C,N,NØP/V,N,PFILE=0  $
CØND      P1,NPSET  $
PLØT      PLTPAR,GPSETS,ELSETS,CASECC,BGPDT,EQEXIN,SIL,,/PLTX1/V,N,NSIL/V,N,LUSET/V,N,NPSET/
          V,N,PLTFLG/V,N,PFILE  $
SAVE      NPSET,PLTFLG,PFILE  $
PRTMSG    PLØTX1//  $
LABEL     P1  $
PRTPARM   //C,N,0  $
END       $
```

Remarks:

1. GEØM1, GEØM2, PCDB and CASECC are generated by the Input File Processor.

2. PRTPARM is used to print all current variable parameter values.

3. This DMAP sequence contains several structurally oriented modules. This sequence of DMAP instructions is essentially identical with the section of each rigid format associated with the operation of the Structure Plot Request Packet of the Case Control Deck (contained in data block PCDB).

5.4.4 Example of DMAP to Print Eigenvectors Associated with any of the Modal Formulation Rigid Formats

```
BEGIN     $
ØFP       LAMA,ØEIGS,,,,//C,N,0  $
SDR1      USET,,PHIA,,,GØ,GM,,KFS,,/PHIG,,QG/C,N,1/C,N,STATICS  $
SDR2      CASECC,CSTM,MPT,DIT,EQEXIN,SIL,,,BGPDT,LAMA,QG,PHIG,EST,/,ØQG1,ØPHIG,ØES1,ØEF1,/
          C,N,REIG  $
ØFP       ØPHIG,ØQG1,ØEF1,ØES1,,//C,N,0  $
END       $
```

Remarks:

1. A restart from a successfully executed modal formulation is assumed.
2. This DMAP sequence contains several structurally oriented modules.

5.4.5 Example of DMAP Using a User-written Module

As an example of how a user might perform matrix operations of his own design, the following DMAP is provided. Functional modules MØDA, MØDB, and MØDC are assumed to be written by the user and added to the NASTRAN system, replacing dummy modules with the same names. A brief explanation of a problem for which this DMAP is applicable is given.

```
 1   BEGIN      $
 2   PARAM      //C,N,NØP/V,N,TRUE=-1  $
 3   PARAM      //C,N,NØP/V,N,FALSE=+1  $
 4   MØDA       /X,Y,DB,A/V,N,BETA=0.0/V,N,SIGMA=1.0/V,N,FW=0.0/V,N,SW=0.0/V,N,ETAINF=5.0/
                V,N,M=100/C,N,0/C,N,0/C,N,0/V,N,ICØNV=0/V,N,ZCØNV=1.0E-4/V,N,ITMAX=10/
                C,N,0  $
 5   SAVE       BETA,SIGMA,FW,SW,ETAINF,M,ICØNV,ZCØNV,ITMAX  $
 6   LABEL      TØP  $
 7   FILE       A=SAVE  /  DB=SAVE  $
 8   SØLVE      A,DB/DY/C,N,0/C,N,1/C,N,1/C,N,1  $
 9   EQUIV      X,XX/FALSE  /  Y,YY/FALSE  $
10   MØDB       X,Y,DY/XX,YY,DBB,AA/V,N,BETA/V,N,SIGMA/V,N,FW/V,N,SW/V,N,M/C,N,0/V,N,ICØNV/
                V,N,ZCØNV/C,N,0/V,N,DØNE=1/V,N,DIVERGED=1  $
11   SAVE       DØNE,DIVERGED  $
12   CØND       QUIT,DIVERGED  $
13   CØND       ØUT,DØNE  $
14   EQUIV      XX,X/TRUE  /  YY,Y/TRUE  /  DBB,DB/TRUE  /  AA,A/TRUE  $
15   CØND       QUIT,ITMAX  $
16   REPT       TØP,1000  $
17   PRTPARM    //C,N,-1/C,N,DMAP  $
18   EXIT       $
19   LABEL      ØUT  $
20   MØDC       X,Y//  $
21   EXIT       $
22   LABEL      QUIT  $
23   PRTPARM    //C,N,-2/C,N,DMAP  $
24   EXIT       $
25   END        $
```

The above DMAP sequence is designed to solve an iteration problem where {x} is the set of independent variable values on which the discretized solution {y(x)} is defined. Let the discrete values of {y(x)} measured at {x} be called {y}. An iteration sequence

$$\{y\}^{i+1} = \{y\}^{i} + [A(\{y\}^{i},\{x\})]^{-1}\{\delta b(\{y\}^{i},\{x\})\}$$

is to be performed where [A] and {δb} are computable functions of {y} and {x}. A convergence-

divergence criterion is assumed known. It is also assumed that the independent variable distribution {x} may be modified as the solution proceeds. A brief description of the significant DMAP instructions is given below:

4 Initialization of all parameters and output data blocks. This module is assumed to be written by the user.

7 Prevents file allocator from dropping A and DB.

8 Compute $\{\delta y\} = [A]^{-1}\{\delta b\}$

9 Break equivalences.

10 Iterate to obtain new {x}, {y}, {δb}, [A]; test convergence and set parameters DØNE and DIVERGED. This module is assumed to be written by the user.

14 The new {x}, {y}, {δb}, [A] are established as current by replacing the old values.

20 Prints out the converged solutions {x} and {y}. This module is assumed to be written by the user.

5.4.6 DMAP ALTER Package for Using a User-Written Auxiliary Input File Processor

```
ALTER       1
INPUT       GEØM1,,,,/G1,,,G4,/C,N,3  $
PARAM       //C,N,NØP/V,N,TRUE=-1  $
EQUIV       G1,GEØM1/TRUE / G4,GEØM4/TRUE  $
CØND        LBLXXX,TRUE  $
TABPT       G1,G4,,,//  $
LABEL       LBLXXX  $
ENDALTER
```

Remarks:

1. This is an ALTER package that could be used by any Rigid Format.

2. The last three instructions are needed to avoid violating the Equivalence rule that a primary data block name must be referenced in a subsequent functional module. A way to avoid using these three instructions is to move the PARAM ahead of INPUT, in which case the EQUIV immediately follows the module in which the primary data blocks are output. In this case the ALTER package becomes

```
ALTER       1
PARAM       //C,N,NØP/V,N,TRUE=-1  $
INPUT       GEØM,,,,/G1,,,G4,/C,N,3  $
EQUIV       G1,GEØM1/TRUE / G4,GEØM4/TRUE  $
ENDALTER
```

3. It is assumed that a user-written module INPUT exists which reads data block GEØM1 (created by the Input File Processor of the NASTRAN Preface) and creates data blocks G1 and G4. It is then desired to use G1 and G4 in place of GEØM1 and GEØM4, the data blocks normally created by the NASTRAN Preface.

4. ALTER is described in Section 2.2.

5.4.7 DMAP to Perform Real Eigenvalue Analysis Using Direct Input Matrices

```
BEGIN     $
READ      KTEST,MTEST,,,DYNAMICS,,CASECC/LAMA,PHIA,MI,ØEIGS/C,N,MØDES/V,N,NE  $
ØFP       LAMA,ØEIGS,,,,//  $
MATPRN    PHIA,,,,//  $
END       $
```

Notes:

1. The echo of a test problem bulk data deck for the preceding DMAP sequence follows.

```
.   1  ..   2  ..   3  ..   4  ..   5  ..   6  ..   7  ..   8  ..   9  ..  10   .
DMI     KTEST   0       6       1       2               4       4
DMI     KTEST   1       1       200.0   -100.0
DMI     KTEST   2       1       -100.0  200.0   -100.0
DMI     KTEST   3       2       -100.0  200.0   -100.0
DMI     KTEST   4       3       -100.0  200.0
DMI     MTEST   0       6       1       2               4       4
DMI     MTEST   1       1       1.0
DMI     MTEST   2       2       1.0
DMI     MTEST   3       3       1.0
DMI     MTEST   4       4       1.0
EIGR    1       DET     .0      2.5     2       2                       +1
+1      MAX
```

2. Data blocks DYNAMICS and CASECC are generated by the NASTRAN Preface (Input File Processor) and contain the eigenvalue extraction data from the EIGR card and the eigenvalue method selection data extracted from the METHØD card in the Case Control Deck.

3. Data blocks KTEST and MTEST are generated by the NASTRAN Preface (Input File Processor) from the DMI bulk data cards.

4. Data block MI is the modal mass matrix, which is not used in this DMAP subsequent to READ, but which must appear as an output in READ. Parameter NE is an output parameter whose value is the number of eigenvalues extracted. If none are found NE will be set to -1.

Alternate DMAP to perform real eigenvalue analysis using Direct Input Matrices where the degrees of freedom are associated with grid points.

```
BEGIN     $
GP1       GEØM1,GEØM2,/GPL,EQEXIN,GPDT,CSTM,BGPDT,SIL/V,N,LUSET/C,N,O/C,N,O  $
SAVE      LUSET  $
GP4       CASECC,,EQEXIN,SIL,GPDT/,,USET/V,N,LUSET/C,N,O/C,N,O/C,N,O/C,N,O/C,N,O/C,N,O/
          C,N,O/C,N,O/C,N,O/C,N,O/C,N,O  $
DPD       DYNAMICS,GPL,SIL,USET/GPLD,SILD,USETD,,,,,,,EED,EQDYN/V,N,LUSET/C,N,O/C,N,O/
          C,N,O/C,N,O/C,N,O/C,N,O/C,N,O/C,N,O/V,N,NØEED/C,N,O/C,N,O  $
SAVE      NØEED  $
CØND      E1,NØEED  $
READ      KTEST,MTEST,,,EED,,CASECC/LAMA,PHIA,MI,ØEIGS/C,N,MØDES/V,N,NEIGV  $
SAVE      NEIGV  $
ØFP       LAMA,ØEIGS,,,,//  $
CØND      FINIS,NEIGV  $
SDR1      USET,,PHIA,,,,,,,,/PHIG,,/C,N,1/C,N,REIG  $
SDR2      CASECC,,,,EQEXIN,SIL,,,BGPDT,LAMA,,PHIG,,/,,ØPHIG,,,/C,N,REIG  $
ØFP       ØPHIG,,,,,//  $
JUMP      FINIS  $
LABEL     E1  $
PRTPARM   //C,N,-2/C,N,MØDES  $
LABEL     FINIS  $
END       $
```

Notes:

1. The echo of a test problem bulk data deck for the preceding DMAP sequence follows.

```
.   1  ..   2  ..   3  ..   4  ..   5  ..   6  ..   7  ..   8  ..   9  ..  10  .
DMI     KTEST   0       6       1       2               4       4
DMI     KTEST   1       1       200.0   -100.0
DMI     KTEST   2       1       -100.0  200.0   -100.0
DMI     KTEST   3       2       -100.0  200.0   -100.0
DMI     KTEST   4       3       -100.0  200.0
DMI     MTEST   0       6       1       2               4       4
DMI     MTEST   1       1       1.0
DMI     MTEST   2       2       1.0
DMI     MTEST   3       3       1.0
DMI     MTEST   4       4       1.0
EIGR    1       DET     .0      2.5     2       2                       +1
+1      MAX
SPØINT  1       THRU    4
```

2. Data block EED is generated by DPD, which copies the EIGR or EIGB cards from data block DYNAMICS. The actual card used is selected in case control by METHØD = SID.

3. Each degree-of-freedom defined by the DMI matrices must be associated with some grid or scalar point in this version. In the example above, this is done by defining four scalar points.

4. The EIGR card selected in the Case Control Deck will be used as explained in Note 2.

5.4.8 DMAP Example to Print and Plot a Topological Picture of Two Matrices

```
1.  BEGIN     $
2.  SEEMAT    KGG,KLL,,,//  $
3.  SEEMAT    KGG,KLL,,,//C,N,PLØT/V,N,P=0/C,N/C,N,SC/C,N,4020/C,N,X/C,N,0  $
4.  SAVE      P  $
5.  PRTPARM   //C,N,0/C,N,P  $
6.  PARAM     //C,N,MPY/V,N,P/C,N,0/C,N,1  $
7.  SEEMAT    KGG,KLL,,,//C,N,PLØT/V,N,P/C,N/C,N,EAI/C,N,3500/C,N,X/C,N,30  $
8.  SAVE      P  $
9.  PRTPARM   //C,N,0/C,N,P  $
10. END       $
```

Notes:

1. Instruction number 2 causes the picture to be generated on the printer.

2. Instruction number 3 causes the picture to be generated on the SC 4020 plotter.

3. The parameter P is initialized to zero by instruction number 3. The form V,N,P would also have accomplished the same thing since the MPL default value is zero.

4. Instruction number 5 prints the current value of parameter P. Since P was initially set to zero and instruction number 3 is the first instruction executed which has P as an input, then P will have a zero value on input to instruction number 3. P is incremented by one (1) for every frame generated on the SC 4020 plotter. Since the value of the output parameter P was saved in the immediately following SAVE instruction, the value printed by instruction number 5 will be the number of frames generated by the execution of instruction number 3.

5. Instruction number 6 causes the value of P to be set to zero (0), the product of zero (0) and one (1). Since PARAM is the only module which does its own SAVE, no succeeding SAVE instruction is necessary. This illustrates a commonly used technique for setting parameter values in DMAP programs.

6. Instructions 7, 8 and 9 essentially repeat instructions 3, 4 and 5 using the EAI 3500 table plotter in place of the SC 4020 plotter.

7. The END instruction, which is required, also acts as an EXIT instruction.

8. NASTRAN tapes PLT1 and PLT2 must both be set up in order to execute this DMAP successfully.

9. Matrix data blocks KGG and KLL are assumed to exist on the PØØL file. This will be the case if either DMI input is used or if a restart is being made from a run in which KGG and KLL were generated and checkpointed.

5.4.9 DMAP Example to Compute the r-th Power of a Matrix [Q]

```
BEGIN     $
MATPRN    Q,,,,//  $
PARAM     //C,N,NØP/V,N,TRUE=-1  $
PARAM     //C,N,SUB/V,N,RR/V,Y,R=-1/C,N,2  $
PARAM     //C,N,NØP/V,N,FALSE=+1  $
CØND      ERRØR1,RR  $
ADD       Q,/QQ/C,N,(1.0,0.0)/C,N,(0.0,0.0)  $
LABEL     DØIT  $
EQUIV     QQ,P/FALSE  $
MPYAD     Q,QQ,/P/C,N,0/C,N,1/C,N,1/C,N,2  $
EQUIV     P,QQ/TRUE  $
PARAM     //C,N,SUB/V,N,RRR/V,N,RR/C,N,1  $
PARAM     //C,N,SUB/V,N,RR/V,N,RRR/C,N,0  $
CØND      STØP,RR  $
REPT      DØIT,1000000  $
JUMP      ERRØR2  $
LABEL     STØP  $
MATPRN    P,,,,//  $
EXIT      $
LABEL     ERRØR1  $
PRTPARM   //C,N,-1/C,N,DMAP  $
EXIT      $
LABEL     ERRØR2  $
PRTPARM   //C,N,-2/C,N,DMAP  $
EXIT      $
END       $
```

Notes:

1. The matrix [Q] is assumed input via DMI bulk data cards.
2. The parameter R is assumed input on a PARAM bulk data card.
3. A logical flow diagram for this DMAP is shown in the following sketch.

DIRECT MATRIX ABSTRACTION

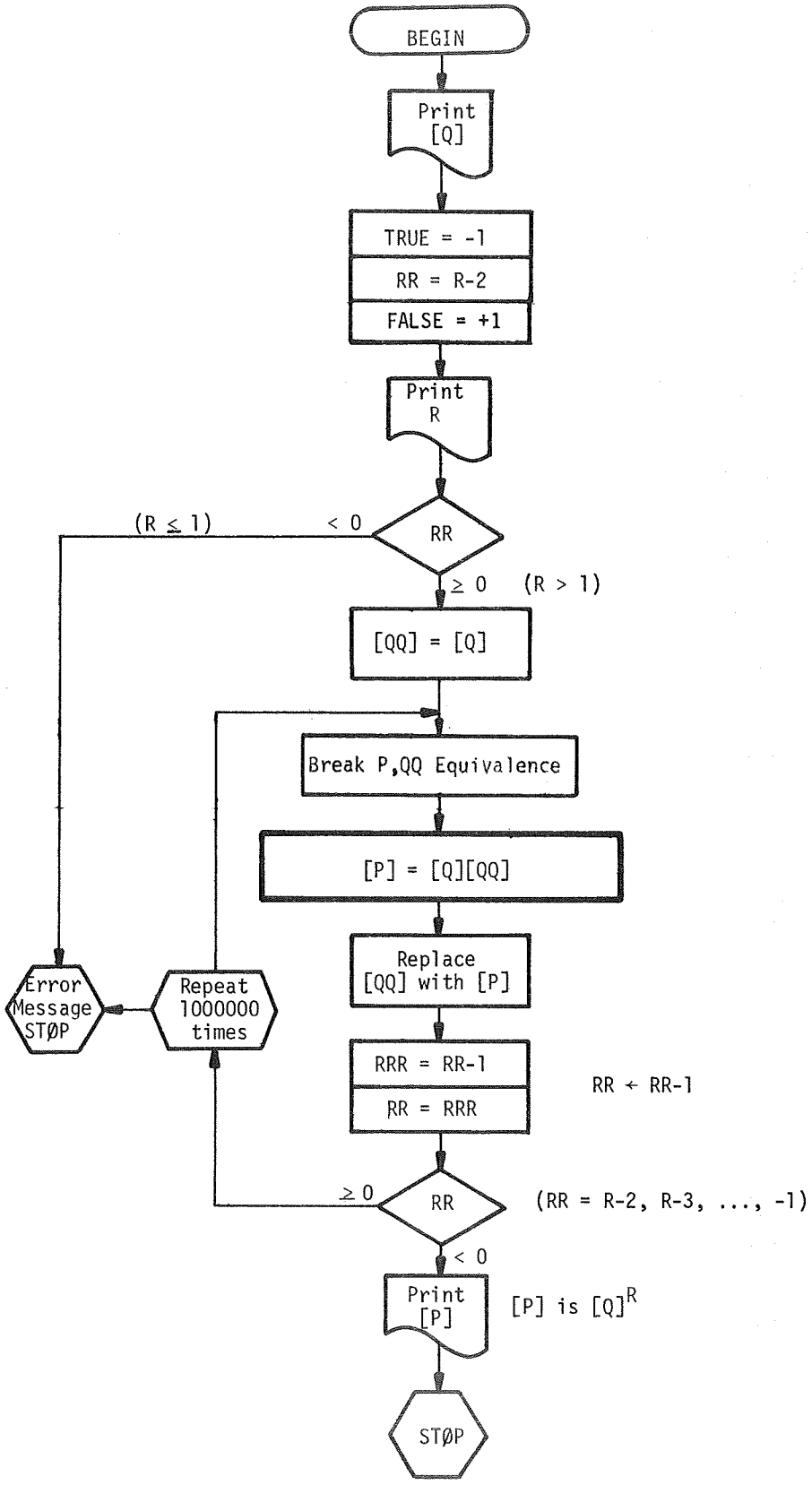

6.1 RIGID FORMAT DIAGNOSTIC MESSAGES

A number of fatal errors are detected by DMAP statements in the various rigid formats. These messages indicate the presence of fatal user errors that, either cannot be determined by the functional modules, or that can be more effectively detected by DMAP statements in the rigid format. The detection of such an error causes a transfer to a LABEL instruction near the end of the rigid format. The text of the message is output and the execution is terminated. These messages will always appear at the end of the NASTRAN output.

The texts of the rigid format error messages are given in the following sections for each of the rigid formats. The text for each message is given in capital letters and is followed by additional explanatory material, including suggestions for remedial action.

6.1.1 Rigid Format Error Messages for Static Analysis

NØ. 1 - ATTEMPT TØ EXECUTE MØRE THAN 100 LØØPS.

An attempt has been made to use more than 100 different sets of boundary conditions. This number may be increased by altering the REPT instruction following SDR1.

NØ. 2 - MASS MATRIX REQUIRED FØR WEIGHT AND BALANCE CALCULATIØNS.

The mass matrix is null because either no elements were defined with Connection cards, nonstructural mass was not defined on a Property card, or the density was not defined on a Material card.

NØ. 3 - NØ INDEPENDENT DEGREES ØF FREEDØM HAVE BEEN DEFINED.

Either no degrees of freedom have been defined on GRID, SPØINT or Scalar Connection cards, or all defined degrees of freedom have been constrained by SPC, MPC, SUPØRT, ØMIT, or GRDSET cards, or grounded on Scalar Connection cards.

NØ. 4 - NØ ELEMENTS HAVE BEEN DEFINED.

The stiffness matrix is null because no elements have been defined on either Connection cards or GENEL cards.

6.1.2 Rigid Format Error Messages for Static Analysis with Inertia Relief

NØ. 1 - MASS MATRIX REQUIRED FØR CALCULATIØN ØF INERTIA LØADS.

The mass matrix is null because either no elements were defined with Connection cards, nonstructural mass was not defined on a Property card, or the density was not defined on a Material card.

NØ. 2 - ATTEMPT TØ EXECUTE MØRE THAN 100 LØØPS.

An attempt has been made to use more than 100 different sets of boundary conditions. This number may be increased by altering the REPT instruction following SDR1.

NØ. 3 - NØ INDEPENDENT DEGREES ØF FREEDØM HAVE BEEN DEFINED.

Either no degrees of freedom have been defined on GRID, SPØINT or Scalar Connection cards, or all defined degrees of freedom have been constrained by SPC, MPC, SUPØRT, ØMIT, or GRDSET cards, or grounded on Scalar Connection cards.

NØ. 4 - FREE BØDY SUPPØRTS ARE REQUIRED.

A statically determinate set of supports must be specified on a SUPØRT card in order to determine the rigid body characteristics of the structural model.

6.1.3 Rigid Format Error Messages for Normal Mode Analysis

NØ. 1 - MASS MATRIX REQUIRED FØR REAL EIGENVALUE ANALYSIS.

The mass matrix is null because either no structural elements were defined with Connection cards, nonstructural mass was not defined on a Property card, or the density was not defined on a Material card.

NØ. 2 - EIGENVALUE EXTRACTIØN DATA REQUIRED FØR REAL EIGENVALUE ANALYSIS.

Eigenvalue extraction data must be supplied on an EIGR card and METHØD must select an EIGR set in the Case Control Deck.

NØ. 3 - NØ INDEPENDENT DEGREES ØF FREEDØM HAVE BEEN DEFINED.

Either no degrees of freedom have been defined on GRID, SPØINT or Scalar Connection cards, or all defined degrees of freedom have been constrained by SPC, MPC, SUPØRT, ØMIT, or GRDSET cards, or grounded on Scalar Connection cards.

6.1.4 Rigid Format Error Messages for Static Analysis with Differential Stiffness

NØ. 1 - NØ STRUCTURAL ELEMENTS HAVE BEEN DEFINED.

The differential stiffness matrix is null because no structural elements have been defined with Connection cards.

NØ. 2 - FREE BØDY SUPPØRTS NØT ALLØWED.

Free bodies are not allowed in Static Analysis with Differential Stiffness. The SUPØRT cards must be removed from the Bulk Data Deck and other constraints applied if required for stability.

NØ. 3 - ATTEMPT TØ EXECUTE MØRE THAN 100 LØØPS.

An attempt has been made to use more than 100 scale factors for differential stiffness calculations. This number may be increased by altering the REPT instruction following SDR1.

NØ. 4 - MASS MATRIX REQUIRED FØR WEIGHT AND BALANCE CALCULATIØNS.

The mass matrix is null because either no elements were defined with Connection cards, nonstructural mass was not defined on a Property card, or the density was not defined on a Material card.

NØ. 5 - NØ INDEPENDENT DEGREES ØF FREEDØM HAVE BEEN DEFINED.

Either no degrees of freedom have been defined on GRID, SPØINT or Scalar Connection cards, or all defined degrees of freedom have been constrained by SPC, MPC, ØMIT, or GRDSET cards, or grounded on Scalar Connection cards.

6.1.5 Rigid Format Error Messages for Buckling Analysis

NØ. 1 - NØ STRUCTURAL ELEMENTS HAVE BEEN DEFINED.

The differential stiffness matrix is null because no structural elements have been defined with Connection cards.

NØ. 2 - FREE BØDY SUPPØRTS NØT ALLØWED.

Free bodies are not allowed in Buckling Analysis. The SUPØRT cards must be removed from the Bulk Data Deck and other constraints applied if required for stability.

NØ. 3 - EIGENVALUE EXTRACTIØN DATA REQUIRED FØR REAL EIGENVALUE ANALYSIS.

Eigenvalue extraction data must be supplied on an EIGB card and METHØD must select an EIGB set in the Case Control Deck.

NØ. 4 - NØ EIGENVALUES FØUND.

No buckling modes exist in the range specified by the user.

NØ. 5 - MASS MATRIX REQUIRED FØR WEIGHT AND BALANCE CALCULATIØNS.

The mass matrix is null because either no elements were defined with Connection cards, nonstructural mass was not defined on a Property card or the density was not defined on a Material card.

NØ. 6 - NØ INDEPENDENT DEGREES ØF FREEDØM HAVE BEEN DEFINED.

Either no degrees of freedom have been defined on GRID, SPØINT or Scalar Connection cards, or all defined degrees of freedom have been constrained by SPC, MPC, ØMIT, or GRDSET cards, or grounded on Scalar Connection cards.

6.1.6 Rigid Format Error Messages for Piecewise Linear Analysis.

NØ. 1 - NØ NØNLINEAR ELEMENTS HAVE BEEN DEFINED.

A piecewise linear problem has not been formulated because none of the elements have a stress dependent modulus of elasticity defined on a Material card.

NØ. 2 - ATTEMPT TØ EXECUTE MØRE THAN 100 LØØPS.

An attempt has been made to use more than 100 load increments. This number may be increased by altering the REPT instruction preceding SDR2.

NØ. 3 - MASS MATRIX REQUIRED FØR WEIGHT AND BALANCE CALCULATIØNS.

The mass matrix is null because either no elements were defined with Connection cards, nonstructural mass was not defined on a Property card, or the density was not defined on a Material card.

NØ. 4 - NØ ELEMENTS HAVE BEEN DEFINED.

The stiffness matrix is null because no elements have been defined on either Connection cards or GENEL cards.

6.1.7 Rigid Format Error Messages for Direct Complex Eigenvalue Analysis.

NØ. 1 - EIGENVALUE EXTRACTIØN DATA REQUIRED FØR CØMPLEX EIGENVALUE ANALYSIS.

Eigenvalue extraction data must be supplied on an EIGC card and CMETHØD must select an EIGC set in the Case Control Deck.

NØ. 2 - ATTEMPT TØ EXECUTE MØRE THAN 100 LØØPS.

An attempt has been made to use more than 100 sets of direct input matrices. This number may be increased by altering the REPT instruction following SDR2.

NØ. 3 - MASS MATRIX REQUIRED FØR WEIGHT AND BALANCE CALCULATIØNS

The mass matrix is null because either no elements were defined on Connection cards, nonstructural mass was not defined an a Property card, or the density was not defined on a Material card.

6.1.8 Rigid Format Error Messages for Direct Frequency and Random Response.

NØ. 1 - FREQUENCY RESPØNSE LIST REQUIRED FØR FREQUENCY RESPØNSE CALCULATIØNS.

Frequencies to be used in the solution of frequency response problems must be supplied on a FREQ, FREQ1, or FREQ2 card and FREQ must select a frequency response set in the Case Control Deck.

NØ. 2 - DYNAMIC LØADS TABLE REQUIRED FØR FREQUENCY RESPØNSE CALCULATIØNS.

Dynamic loads to be used in the solution of frequency response problems must be specified on an RLØAD1 or RLØAD2 card and DLØAD must select a dynamic load set in the Case Control Deck.

NØ. 3 - ATTEMPT TØ EXECUTE MØRE THAN 100 LØØPS.

An attempt has been made to use more than 100 sets of direct input matrices. This number may be increased by altering the REPT instruction following the last ØFP instruction.

NØ. 4 - MASS MATRIX REQUIRED FØR WEIGHT AND BALANCE CALCULATIØNS.

The mass matrix is null because either no elements were defined on Connection cards, nonstructural mass was not defined on a Property card, or the density was not defined on a Material card.

6.1.9 Rigid Format Error Message for Direct Transient Response

NØ. 1 - TRANSIENT RESPØNSE LIST REQUIRED FØR TRANSIENT RESPØNSE CALCULATIØNS.

Time step intervals to be used must be specified on a TSTEP card and a TSTEP selection must be made in the Case Control Deck.

NØ. 2 - ATTEMPT TØ EXECUTE MØRE THAN 100 LØØPS.

An attempt has been made to use more than 100 dynamic load sets. This number may be increased by altering the REPT instruction following the last XYPLØT instruction.

NØ. 3 - MASS MATRIX REQUIRED FØR WEIGHT AND BALANCE CALCULATIØNS.

The mass matrix is null because either no elements were defined with Connection cards, nonstructural mass was not defined on a Property card, or the density was not defined on a Material card.

6.1.10 Rigid Format Error Messages for Modal Complex Eigenvalue Analysis.

NØ. 1 - MASS MATRIX REQUIRED FØR MØDAL FØRMULATIØN.

The mass matrix is null because either no structural elements were defined with Connection cards, nonstructural mass was not defined on a Property card, or the density was not defined on a Material card.

NØ. 2 - EIGENVALUE EXTRACTIØN DATA REQUIRED FØR REAL EIGENVALUE ANALYSIS.

Eigenvalue extraction data must be supplied on an EIGR card and METHØD must select an EIGR set in the Case Control Deck.

NØ. 3 - ATTEMPT TØ EXECUTE MØRE THAN 100 LØØPS.

An attempt has been made to use more than 100 different sets of direct input matrices. This number can be increased by altering the REPT instruction following SDR2.

NØ. 4 - REAL EIGENVALUES REQUIRED FØR MØDAL FØRMULATIØN.

No real eigenvalues were found in the frequency range specified by the user.

6.1.11 Rigid Format Error Messages for Modal Frequency and Random Response.

NØ. 1 - MASS MATRIX REQUIRED FØR MØDAL FØRMULATIØN.

The mass matrix is null because either no structural elements were defined with Connection cards, nonstructural mass was not defined on a Property card, or the density was not defined on a Material card.

NØ. 2 - EIGENVALUE EXTRACTIØN DATA REQUIRED FØR REAL EIGENVALUE ANALYSIS.

Eigenvalue extraction data must be supplied on an EIGR card and METHØD must select an EIGR set in the Case Control Deck.

NØ. 3 - ATTEMPT TØ EXECUTE MØRE THAN 100 LØØPS.

An attempt has been made to use more than 100 sets of direct input matrices. This number can be increased by altering the REPT instruction following the last ØFP instruction.

NØ. 4 - REAL EIGENVALUES REQUIRED FØR MØDAL FØRMULATIØN.

No real eigenvalues were found in the frequency range specified by the user.

NØ. 5 - FREQUENCY RESPØNSE LIST REQUIRED FØR FREQUENCY RESPØNSE CALCULATIØNS.

Frequencies to be used in the solution of frequency response problems must be supplied on a FREQ, FREQ1, or FREQ2 card and FREQ must select a frequency response set in the the Case Control Deck.

NØ. 6 - DYNAMIC LØADS TABLE REQUIRED FØR FREQUENCY RESPØNSE CALCULATIØNS.

Dynamic loads to be used in the solution of frequency response problems must be specified on an RLØAD1 or RLØAD2 card and DLØAD must select a dynamic load set in the Case Control Deck.

6.1.12 Rigid Format Error Messages for Modal Transient Response.

NØ. 1 - MASS MATRIX REQUIRED FØR MØDAL FØRMULATIØN.

The mass matrix is null because either no structural elements were defined with Connection cards, nonstructural mass was not defined on a Property card, or the density was not defined on a Material card.

NØ. 2 - EIGENVALUE EXTRACTIØN DATA REQUIRED FØR REAL EIGENVALUE ANALYSIS.

Eigenvalue extraction data must be supplied on an EIGR card and METHØD must select an EIGR set in the Case Control Deck.

NØ. 3 - ATTEMPT TØ EXECUTE MØRE THAN 100 LØØPS.

An attempt has been made to use more than 100 dynamic load sets. This number can be increased by altering the REPT instruction following the last XYPLØT instruction.

NØ. 4 - REAL EIGENVALUES REQUIRED FØR MØDAL FØRMULATIØN.

No real eigenvalues were found in the frequency range specified by the user.

NØ. 5 - TRANSIENT RESPØNSE LIST REQUIRED FØR TRANSIENT RESPØNSE CALCULATIØNS.

Time step intervals to be used must be specified on a TSTEP card and a TSTEP selection must be made in the Case Control Deck.

6.2 NASTRAN SYSTEM AND USER MESSAGES

NASTRAN system and user messages are identified by number. Message numbers have been assigned in groups as follows:

1 - 999	Preface Messages
1000 - 1999	Executive Module Messages
2000 - 3999	Functional Module Messages

These messages have the following format:

*** { SYSTEM / USER } { FATAL / WARNING / INFØRMATIØN } MESSAGE id, text.

where "id" is a unique message identification number and "text" is the message as indicated in capital letters for each of the diagnostic messages. A series of asterisks (****) in the text indicates information that will be filled in for a specific use of the message, such as, the number of a grid point or the name of a bulk data card. Many of the messages are followed by additional explanatory material, including suggestions for remedial action.

The system and user messages described in this section pertain only to those messages generated by NASTRAN. Although these messages can appear at various places in the output stream, they should be easily identified by their format. The various computer operating systems also produce diagnostic messages that can appear at various places in the output stream. The format of these messages will vary with the operating system. Reference should be made to the operating system manuals for interpretation of the messages that are not generated by NASTRAN.

System messages refer to diagnostics that are associated with program errors. In general such errors cannot be corrected by the user. Reference should be made to the Programmer's Manual and assistance secured from the programming staff. User messages refer to errors that are usually associated with the preparation of the NASTRAN Data Deck. Corrective action is indicated in the message text or the explanatory information following the text. In some cases reference may have to be made to other sections of the User's Manual for proper card formats or for clarification of procedures.

Fatal messages cause the termination of the execution following the printing of the message text. These messages will always appear at the end of the NASTRAN output. Warning and information

messages will appear at various places in the output stream. Such messages only convey warnings or information to the user. Consequently, the execution continues in a normal manner following the printing of the message text.

As an example, consider message number 2025, which will appear in the printed output as follows:

*** USER FATAL MESSAGE 2025, UNDEFINED CØØRDINATE SYSTEM 102.

The three leading asterisks (***) are always present in user and system diagnostic messages. The word USER indicates that this is a user message rather than a system message. The word FATAL indicates that this is a fatal message rather than a warning or information message. The number 2025 is the identification number for this message. The text of the message follows the comma (,). The number 102 replaces the asterisks (****) in the general message text, and indicates that 102 is the identification number of the undefined coordinate system.

6.2.1 Preface Messages

01 *** USER WARNING MESSAGE 1, ASSUMED FIRST INPUT FILE IS NULL.
User has specified N input data blocks when there should be N+1.

02 *** USER WARNING MESSAGE 2, PARAMETER NAMED ******** IS DUPLICATED.
No harm done. Parameter is saved just once.

03 *** USER FATAL MESSAGE 3, FØRMAT ERRØR IN PARAMETER NØ.***.
Double delimiter appears in parameter section of previous DMAP instruction.

04 *** SYSTEM FATAL MESSAGE 4, MPL PARAMETER ERRØR, MØDULE NAME = ******** PARAMETER NØ.***.
MPL entry for module is incorrect. See block data program XMPLBD.

05 *** USER FATAL MESSAGE 5, PARAMETER INPUT DATA ERRØR ILLEGAL VALUE FØR PARAMETER NAMED ********.
Type of parameter on PARAM card is inconsistent with type of parameter by same name in above DMAP instruction.

06 *** USER FATAL MESSAGE 6, ILLEGAL VALUE FØR PARAMETER NØ.***.
The type of parameter in DMAP instruction does not correspond to type requested in DMD or MFD section of Programmer's Manual.

07 *** USER FATAL MESSAGE 7, PARAMETER NØ.*** NEEDS PARAMETER NAME.
Parameter is not in correct format.

08 *** USER FATAL MESSAGE 8, BULK DATA PARAM CARD ERRØR. MUST NØT DEFINE PARAMETER NAMED ********.

The "N" in V,N,******** means user cannot set the value of the parameter with name ******** on a PARAM card.

09 *** USER FATAL MESSAGE 9, VALUE NEEDED FØR PARAMETER NØ.***.

Constant needs value in DMAP instruction or on PARAM card.

10 *** USER FATAL MESSAGE 10, ILLEGAL INPUT SECTIØN FØRMAT.

11 *** USER FATAL MESSAGE 11, ILLEGAL ØUTPUT SECTIØN FØRMAT.

12 *** USER FATAL MESSAGE 12, ILLEGAL CHARACTER IN DMAP INSTRUCTIØN NAME.

Name must be 8 or less alpha-numeric characters, the first character being alpha.

13 *** USER FATAL MESSAGE 13, DMAP INSTRUCTIØN NØT IN MØDULE LIBRARY.

14 *** SYSTEM FATAL MESSAGE 14, ARRAY NAMED ******** ØVERFLØWED.

See XGPI module description in MFD section of Programmer's Manual.

15 *** USER FATAL MESSAGE 15, INCØNSISTENT LENGTH USED FØR PARAMETER NAMED ********.

This parameter was used in a previous DMAP instruction which gave it a different type. See Section 5.2.1 of the User's Manual.

16 *** USER FATAL MESSAGE 16, ILLEGAL FØRMAT.

18 *** USER FATAL MESSAGE 18, TØØ MANY PARAMETERS IN DMAP PARAMETER LIST.

Incorrect calling sequence for DMAP instruction.

19 *** USER FATAL MESSAGE 19, LABEL NAMED ******** IS MULTIPLY DEFINED.

LABEL named appears in more than one place in DMAP program.

20 *** USER FATAL MESSAGE 20, ILLEGAL CHARACTERS IN PARAMETER NØ.***.

Name must be 8 or less alpha-numeric characters, the first character being alpha.

21 *** USER FATAL MESSAGE 21, PARAMETER NAMED ******** IS NØT IN PRECEDING DMAP INSTRUCTIØN PARAMETER LIST.

Parameters in SAVE instruction must appear in immediately preceding DMAP instruction.

22 *** USER FATAL MESSAGE 22, DATA BLØCK NAMED ******** MUST BE DEFINED PRIØR TØ THIS INSTRUCTIØN.

See Section 5.2 of the User's Manual.

23 *** USER FATAL MESSAGE 23, DATA BLØCK NAMED ******** IS NØT REFERENCED IN SUBSEQUENT FUNCTIØNAL MØDULE.

See Section 5.2 of the User's Manual. Error can be suppressed by adding the following :

```
PARAM   //C,N,NØP/V,N,TRUE=-1 $
CØND    LABELXXX,TRUE $
TABPT   ********,,,,// $
LABEL   LABELXXX $
```

24 *** SYSTEM FATAL MESSAGE 24, CANNØT FIND FILE NAMED ******** ØN DATA PØØL TAPE.

Contents of /XDPL/ does not match contents of Pool Tape.

25 *** USER FATAL MESSAGE 25, PARAMETER NAMED ******** NØT DEFINED.

Parameter is referenced in nonfunctional module, but is nowhere defined.

26 *** USER FATAL MESSAGE 26, LABEL NAMED ******** NØT DEFINED.

LABEL name does not appear in LABEL instruction.

27 *** USER WARNING MESSAGE 27, LABEL NAMED ******** NØT REFERENCED.

LABEL name appears only in a LABEL instruction.

28 *** SYSTEM FATAL MESSAGE 28, UNEXPECTED END ØF TAPE ØN NEW PRØBLEM TAPE.

Either you truly encountered an EØT or file linkage has been destroyed in /XFIST/, /XPFIST/ and/or /XXFIAT/.

29 *** SYSTEM FATAL MESSAGE 29, UNEXPECTED END ØF TAPE ØN ØLD PRØBLEM TAPE.

File linkage has been destroyed in /XFIST/, /XPFIST/ and/or /XXFIAT/.

30 *** SYSTEM FATAL MESSAGE 30, UNEXPECTED END ØF TAPE ØN DATA PØØL TAPE.

See Message 28.

31 *** SYSTEM FATAL MESSAGE 31, CØNTRØL FILE ******** INCØMPLETE ØR MISSING ØN NEW PRØBLEM TAPE.

Data block XCSA is not in correct format or it is missing.

32 *** USER FATAL MESSAGE 32, FILE NAMED ******** MUST BE DEFINED PRIØR TØ THIS INSTRUCTIØN.

See Section 5.2 of the User's Manual.

33 *** SYSTEM FATAL MESSAGE 33, NAME (********) IN NEW CØNTRØL FILE DICTIØNARY NØT VALID.

First record of data block XCSA on Problem Tape contains a name which is not recognized by XGPI module.

34 *** SYSTEM FATAL MESSAGE 34, CANNØT TRANSLATE DMAP INSTRUCTIØN NØ.***.

Error in subroutine XSCNDM or XRCARD.

35 *** USER FATAL MESSAGE 35, INCØRRECT ØLD PRØBLEM TAPE MØUNTED. ID ØF TAPE MØUNTED = ********, ********,**/**/** FILE =***. ID ØF TAPE DESIRED = ********,********,**/**/** FILE =***.

Wrong reel mounted for multireel Problem Tape.

36 *** SYSTEM FATAL MESSAGE 36, CANNØT FIND FILE NAMED ******** ØN ØLD PRØBLEM TAPE.

Header record of file on Problem Tape does not match file name in restart dictionary.

37 *** USER WARNING MESSAGE 37, WARNING ØNLY - MAY NØT BE ENØUGH FILES AVAILABLE FØR MØDULE REQUIREMENTS. FILES NEEDED = *** FILES AVAILABLE = ***.

Program will execute if enough data blocks referenced by the module are purged. Purged data blocks are not assigned files.

38 *** SYSTEM FATAL MESSAGE 38, NØT ENØUGH CØRE FØR GPI TABLES

User must break up DMAP program.

39 *** SYSTEM FATAL MESSAGE 39, RIGID FØRMAT DMAP SEQUENCE DØES NØT CØRRESPØND TØ MED TABLE.

The MED Table must have the same number of entries as there are DMAP instructions in DMAP sequence.

40 *** USER FATAL MESSAGE 40, ERRØR IN ALTER DECK - CANNØT FIND END ØF DMAP INSTRUCTIØN.

User should check ALTER part of the Executive Control Deck.

41 *** SYSTEM FATAL MESSAGE 41, TABLES INCØRRECT FØR REGENERATING DATA BLØCK ********.

File Name Table and MED Table used by routine XFLDEF are wrong.

42 *** USER WARNING MESSAGE 42, PARAMETER NAMED ******** ALREADY HAD VALUE ASSIGNED PREVIØUSLY.

Parameter appears in a previous instruction which assigned it a value.

44 *** USER FATAL MESSAGE 44, UNABLE TØ FIND END DMAP INSTRUCTIØN.

User has altered out the END instruction.

45 *** USER FATAL MESSAGE 45, DATA BLØCK NAMED ******** ALREADY APPEARED AS ØUTPUT ØR WAS USED AS INPUT BEFØRE BEING DEFINED.

See Section 5.2 of the User's Manual.

46 *** USER FATAL MESSAGE 46, INCØRRECT REENTRY PØINT.

The last reentry card in the restart dictionary has a DMAP instruction number greater than the instruction number on the END card of the DMAP program.

47 *** USER FATAL MESSAGE 47, THIS INSTRUCTIØN CANNØT BE FIRST INSTRUCTIØN ØF LØØP.

CHKPNT DMAP instruction must not follow a LABEL instruction which is located at the top of a loop.

48 *** USER WARNING MESSAGE 48, DATA BLØCK ******** IS ALWAYS REGENERATED, THEREFØRE IT WILL NØT BE CHECKPØINTED.

This data block is generated by Input File Processors (IFP) and must not be checkpointed to insure proper restart.

49 *** SYSTEM FATAL MESSAGE 49, MPL TABLE (MØDULE PRØPERTIES LIST) IS INCØRRECT.

Error is in common block /XGPI2/.

50 *** SYSTEM FATAL MESSAGE 50, CANNØT FIND JUMP ØSCAR ENTRY NEEDED FØR THIS RESTART.

There must be a dummy JUMP instruction before every LABEL instruction at top of a loop for rigid formats.

51 *** SYSTEM FATAL MESSAGE 51, NØT ENOUGH ØPEN CØRE FØR XGPIBS RØUTINE.

Additional core memory is required.

52 *** SYSTEM FATAL MESSAGE 52, NAMED CØMMØN /XLINK/ IS TØØ SMALL.

There must be one word in LINK table for every entry in MPL.

53 *** USER FATAL MESSAGE 53, INCØRRECT FØRMAT IN ABØVE CARD.

201 *** USER FATAL MESSAGE 201, REQUESTED BULK DATA DECK ********, NØT ØN USER MASTER FILE.

Requested UMF problem identification number not found on currently mounted UMF tape.

202 *** SYSTEM FATAL MESSAGE 202, UMF CØULD NØT BE ØPENED.

User Master File (UMF) not present (destroyed) in FIST.

203 *** SYSTEM FATAL MESSAGE 203, ILLEGAL EØR ØN UMF.

User Master File (UMF) contains no records in requested file.

204 *** USER FATAL MESSAGE 204, CØLD START, NØ BULK DATA.

No data cards were found after the BEGIN BULK card. A blank card will satisfy this rule.

205 *** USER WARNING MESSAGE 205, CØLD START, DELETE CARDS IGNØRED.

Delete (/) cards were present and ignored within the Bulk Data Deck.

206 *** USER FATAL MESSAGE 206, PREVIØUS CØNTINUATIØN MNEMØNIC HAS A DUPLICATE.

Two or more continuation cards were found with column 2-8 identical.

207 *** USER INFØ MESSAGE 207, BULK DATA NØT SØRTED, XSØRT WILL REØRDER DECK.

Bulk Data Deck was not in alpha-numeric sort. Sorting will be performed. Sorting of large deck can be time consuming.

208 *** USER FATAL MESSAGE 208, PREVIØUS CARD IS A DUPLICATE PARENT.

Two or more cards were found with column 74-80 identical and a continuation card is present with that mnemonic (column 2-8).

209 *** USER FATAL MESSAGE 209, PREVIØUS **** CØNTINUATIØN CARDS HAVE NØ PARENTS.

One or more continuation cards were found with a mnemonic (column 2-8) not matching any other card (column 74-80).

210 *** SYSTEM FATAL MESSAGE 210, SCRATCH CØULD NØT BE ØPENED.

One of the required scratch files was not present (destroyed) in FIST.

211 *** SYSTEM FATAL MESSAGE 211, ILLEGAL EØR ØN SCRATCH.

A required scratch file was formatted improperly.

212 *** SYSTEM FATAL MESSAGE 212, ILLEGAL EØF ØN ITAPE4.

Scratch file containing continuations was mispositioned.

213 *** SYSTEM FATAL MESSAGE 213, ILLEGAL EØF ØN ØPTP.

Old Problem Tape contained no bulk data (illegal format).

214 *** SYSTEM FATAL MESSAGE 214, ØPTP CØULD NØT BE ØPENED.

Old Problem Tape (ØPTP) not present (destroyed) in FIST.

215 *** SYSTEM FATAL MESSAGE 215, NPTP CØULD NØT BE ØPENED.

New Problem Tape (NPTP) not present (destroyed) in FIST.

216 *** SYSTEM FATAL MESSAGE 216, ILLEGAL INDEX.

FØRTRAN computed-GØ-TØ has received an illogical value.

303 *** SYSTEM FATAL MESSAGE 303, NØ ØPEN CØRE FØR IFP.

Overlay structure must be redefined.

304 *** SYSTEM FATAL MESSAGE 304, IFP NØT READING NPTP **** ****.

Self explanatory. The header record of fifth file is printed.

305 *** SYSTEM FATAL MESSAGE 305, GINØ CANNØT ØPEN FILE ******.

Unexpected nonstandard return from ØPEN.

306 *** SYSTEM FATAL MESSAGE 306, READ LØGIC RECØRD ERRØR.

Short record encountered. Bulk data card images occupy 20 words.

307 *** USER FATAL MESSAGE 307, ILLEGAL NAME FØR BULK DATA CARD ******.

See Section 2.4 of the User's Manual.

308 *** USER FATAL MESSAGE 308, CARD ****** NØT ALLØWED IN ****** APPRØACH.
See Section 2.4 of the User's Manual.

309 *** USER WARNING MESSAGE 309, CARD ****** IMPRØPER IN ******** APPRØACH.
See Section 2.4 of the User's Manual.

310 *** USER FATAL MESSAGE 310, CARD ****** NØT ALLØWED IN SAME DECK AS AXIC CARD.
See Section 2.4 of the User's Manual.

311 *** USER FATAL MESSAGE 311, NØNUNIQUE FIELD 2 ØN BULK DATA CARD ******** ***.
Sorted bulk data card indicated must have a unique integer in field 2.

312 *** USER FATAL MESSAGE 312, TØØ MANY CØNTINUATIØNS FØR BULK DATA CARD ******.
See bulk data card description in Section 2.4 of the User's Manual.

313 *** USER FATAL MESSAGE 313, ILLEGAL NUMBER ØF WØRDS ØN BULK DATA CARD ******.
See bulk data card description in Section 2.4 of the User's Manual.

314 *** SYSTEM FATAL MESSAGE 314, INVALID CALL FRØM IFP ******.
Code error, machine failure, or cell is being destroyed.

315 *** USER FATAL MESSAGE 315, FØRMAT ERRØR ØN BULK DATA CARD ******.
See bulk data card description in Section 2.4 of the User's Manual.

316 *** USER FATAL MESSAGE 316, ILLEGAL DATA ØN BULK DATA CARD ******.
See bulk data card description in Section 2.4 of the User's Manual.

319 *** SYSTEM FATAL MESSAGE 319, IFP READING EØF ØN NPTP.
Unexpected EØF encountered while attempting to read a card image.

320 *** USER FATAL MESSAGE 320, IFP ERRØR ****** LAST CARD PRØCESSED IS ******.
Code error in IFP or XSØRT.

321 *** USER FATAL MESSAGE 321, NØNUNIQUE PARAM NAME *****.
All names of parameters must be unique.

322 *** SYSTEM FATAL MESSAGE 322, ILLEGAL ENTRY TØ IFS1P.
IFP code error.

323 *** SYSTEM FATAL MESSAGE 323, ILLEGAL ENTRY TØ IFS2P.
IFP code error.

324 *** USER WARNING MESSAGE 324, BLANK CARD(S) IGNØRED.
Blank bulk data cards are ignored by NASTRAN.

325 *** USER FATAL MESSAGE 325, BAD DATA ØR FØRMAT ØR NØNUNIQUE NAME. DMI ******.
See bulk data card description in Section 2.4 of the User's Manual.

326 *** SYSTEM FATAL MESSAGE 326, NØ RØØM IN /XDPL/ FØR DMI ******.
Overflow of Data Pool Table. See Section 2 of the Programmer's Manual.

327 *** USER FATAL MESSAGE 327, BAD DATA ØR FØRMAT ØR NØNUNIQUE NAME. DMIG ******.
See bulk data card description in Section 2.4 of the User's Manual.

328 *** SYSTEM FATAL MESSAGE 328, ILLEGAL ENTRY TØ IFS3P.
IFP code error.

329 *** USER FATAL MESSAGE 329, ØNLY ØNE (1) AXIC CARD ALLØWED.
See bulk data card description in Section 2.4 of the User's Manual.

330 *** SYSTEM FATAL MESSAGE 330, NØ RØØM IN CØRE FØR PARAM CARDS.
Change overlay or increase core size.

331 *** USER FATAL MESSAGE 331, IMPRØPER PARAM CARD ******.
See bulk data card description in Section 2.4 of the User's Manual.

332 *** USER FATAL MESSAGE 332, AXIC CARD REQUIRED.
The presence of any conical shell data cards requires the presence of an AXIC card.
See the AXIC bulk data card description in Section 2.4 of the User's Manual.

501 *** SYSTEM FATAL MESSAGE 501, MED TABLE INCØRRECT FØR THIS SØLUTIØN.
Input to subroutine XSBSET is incorrect. Look for format error in array SS.

502 *** USER FATAL MESSAGE 502, ILLEGAL SUBSET NUMBER FØR THIS SØLUTIØN.
User specified an incorrect subset number on SØL control card.

503 *** USER FATAL MESSAGE 503, ILLEGAL SØLUTIØN NUMBER.
User specified an incorrect solution number on SØL control card.

504 *** USER FATAL MESSAGE 504, CANNØT CHANGE FRØM SØLUTIØN *** TØ SØLUTIØN ***.

505 *** USER FATAL MESSAGE 505, CØNTRØL CARD **** IS ILLEGAL.
Card preceding Message 505 cannot be processed correctly.

506 *** USER FATAL MESSAGE 506, CØNTRØL CARD **** DUPLICATED.

Card preceding Message 506 cannot be input more than once.

507 *** USER FATAL MESSAGE 507, ILLEGAL SPECIFICATIØN ØR FØRMAT ØN PRECEDING CARD.

508 *** USER FATAL MESSAGE 508, PRØBLEM TAPE MUST BE ØN PHYSICAL TAPE FØR CHECKPØINTING.

User requested checkpointing (i.e., CHKPNT YES) therefore Problem Tape must be setup on tape drive.

509 *** USER FATAL MESSAGE 509, WRØNG ØLD PRØBLEM TAPE MØUNTED. ØLD PRØBLEM TAPE ID = ********, ********,**/**/**, REEL NØ. = ***.

The Old Problem Tape identification does not match the identification on the RESTART restart card.

510 *** SYSTEM FATAL MESSAGE 510, CHECKPØINT DICTIØNARY EXCEEDS CØRE SIZE - REMAINING RESTART CARDS IGNØRED.

You have run out of open core. If approach is DMAP try putting restart deck before DMAP sequence. If this does not solve problem, or if approach is not DMAP, then you must decrease size of restart deck.

511 *** SYSTEM FATAL MESSAGE 511, DMAP SEQUENCE EXCEEDS CØRE SIZE - REMAINING DMAP INSTRUCTIØNS IGNØRED.

You have run out of open core. Split the DMAP sequence somewhere prior to where Message 511 was printed out.

512 *** USER FATAL MESSAGE 512, ØLD PRØBLEM TAPE IS MISSING AND IS NEEDED FØR RESTART.

The Problem Tape corresponding to identification on RESTART control card must be setup on the unit assigned to the Old Problem Tape.

513 *** USER FATAL MESSAGE 513, ALTER SEQUENCE NUMBERS ARE ØUT ØF ØRDER.

514 *** USER FATAL MESSAGE 514, ENDALTER CARD IS MISSING.

Alter deck must end with ENDALTER control card.

515 *** USER FATAL MESSAGE 515, END INSTRUCTIØN MISSING IN DMAP SEQUENCE.

DMAP sequence must end with END control card.

516 *** USER FATAL MESSAGE 516, UMF TAPE MUST BE MØUNTED ØN PHYSICAI TAPE DRIVE.

The UMF tape must be setup on the unit assigned to it.

517 *** USER FATAL MESSAGE 517, WRØNG UMF TAPE MØUNTED - TAPE ID = ****.

The tape identification number on the UMF tape does not match the tape identification number on the UMF control card.

518 *** USER FATAL MESSAGE 518, CANNØT USE UMF TAPE FØR RESTART.

519 *** USER FATAL MESSAGE 519, ID CARD MUST PRECEDE ALL ØTHER CØNTRØL CARDS.

520 *** USER FATAL MESSAGE 520, CØNTRØL CARD **** IS MISSING.

The control card mentioned is required for this problem.

521 *** USER FATAL MESSAGE 521, SPECIFY A SØLUTIØN ØR A DMAP SEQUENCE BUT NØT BØTH.

Your must either select a DMAP sequence from the library by using the SØL control card or by supplying your own DMAP sequence. Do one or the other, but not both.

522 *** USER FATAL MESSAGE 522, NEITHER A SØL CARD NØR A DMAP SEQUENCE WAS INCLUDED.

See Message 521.

523 *** USER FATAL MESSAGE 523, ENDALTER CARD ØUT ØF ØRDER.

ENDALTER control card must be preceded by the ALTER DECK.

524 *** SYSTEM FATAL MESSAGE 524, ALTERNATE RETURN TAKEN WHEN ØPENING FILE ****.

This occurs if file name is not in FIST or the end of tape was reached while writing on the file. The file name should correspond to one of the permanent entries in the FIST.

525 *** SYSTEM FATAL MESSAGE 525, ILLEGAL FØRMAT ENCØUNTERED WHILE READING FILE ****.

File is not in the correct format. Either the wrong tape was mounted or it does not contain what you think it should.

526 *** USER FATAL MESSAGE 526, CHECKPØINT DICTIØNARY ØUT ØF SEQUENCE - REMAINING RESTART CARDS IGNØRED.

The checkpoint dictionary which follows the RESTART control card must be sequenced according to first number on each card.

601 *** USER FATAL MESSAGE 601, THE KEYWØRD ØN THE ABØVE CARD IS ILLEGAL ØR MISSPELLED. SEE THE FØLLØWING LIST FØR LEGAL KEY WØRDS.

Case control expects each card to begin with a keyword (usually 4 characters in length). Your card does not. User Message 612 will list the legal keywords along with a brief description of function. To remove the error, consult Message 612 or NASTRAN case control card descriptions, User's Manual Section 2.3, and spell your request correctly.

602 *** USER WARNING MESSAGE 602, TWØ ØR MØRE ØF THE ABØVE CARD TYPES DETECTED WHERE ØNLY ØNE IS LEGAL. THE LAST FØUND WILL BE USED.

Remove the card with the duplicate meaning. Note that some cards have alternate forms.

603 *** USER FATAL MESSAGE 603, THE ABØVE CARD DØES NØT END PRØPERLY. CØMMENTS SHØULD BE PRECEDED BY A DØLLAR SIGN.

Case control cards of the form, name = value, should not contain more than one value. Consult your NASTRAN Case Control Deck document, User's Manual Section 2.3, for a complete description of the card or precede your comments with a dollar sign.

604 *** USER FATAL MESSAGE 604, THE ABØVE CARD HAS A NØNINTEGER IN AN INTEGER FIELD.

Consult your NASTRAN Case Control Deck document, User's Manual Section 2.3, for legal values.

605 *** USER FATAL MESSAGE 605, A SYMSEQ OR SUBSEQ CARD APPEARS WITHØUT A SYMCØM ØR SUBCØM CARD.

SYMSEQ or SUBSEQ cards must appear in a subcase defined by a SYMCØM or SUBCØM card. Check your Case Control Deck order and relabel your combination subcase.

606 *** USER FATAL MESSAGE 606, A REQUEST FØR TEMPERATURE DEPENDENT MATERIALS ØCCURS AT THE SUBCASE LEVEL. ØNLY ØNE ALLOWED PER PRØBLEM.

Only one temperature field for materials is allowed per NASTRAN run. The last specified will be used for the entire run. If additional ones are desired, a modified restart is in order.

607 *** USER FATAL MESSAGE 607, A REPCASE SUBCASE MUST BE PRECEDED BY A SUBCASE ØR SYM SUBCASE.

A REPCASE subcase is an attempt to reoutput the previously computed case, therefore it cannot be the first subcase.

608 *** USER FATAL MESSAGE 608, THE SET ID SPECIFIED ØN THE ABØVE CARD MUST BE DEFINED PRIØR TO THIS CARD.

Set identification numbers must be specified prior to their use. Also sets specified within a subcase die at the end of the subcase. Redefine set (or define set) or move set out of subcase.

609 *** USER FATAL MESSAGE 609, SUBCASE DELIMITER CARDS MUST HAVE A UNIQUE IDENTIFYING INTEGER.

Subcase type cards must have an identifying integer. These numbers must be strictly increasing. Renumber your subcase cards. The use of a nonblank delimiter (e.g., "=") will also cause this message to occur.

610 *** USER FATAL MESSAGE 610, THE VALUE FØLLØWING THE EQUAL SIGN IS ILLEGAL.

Case control cannot identify the BCD value after the equal sign. Consult NASTRAN case control card descriptions, User's Manual Section 2.3, for a full description of the card.

611 *** USER FATAL MESSAGE 611, TEN CARDS HAVE ILLEGAL KEY WØRDS. NASTRAN ASSUMES BEGIN BULK CARD IS MISSING. IT WILL NØW PRØCESS YØUR BULK DATA.

Only ten key words may be misspelled. A common source of this error may be the omission of the ØUTPUT(PLØT) or ØUTPUT(XYØUT) delimiter cards.

612 *** USER FATAL MESSAGE 612, --LIST OF LEGAL CASE CØNTROL MNEMØNICS.

This message is caused by Messages 601 or 611.

613 *** USER FATAL MESSAGE 613, THE ABØVE SET CØNTAINS 'EXCEPT' WHICH IS NØT PRECEDED BY 'THRU'.

Only identification numbers included in THRU statements may be excepted. Simplify your SET request.

614 *** USER FATAL MESSAGE 614, THE ABØVE SET IS BADLY SPECIFIED.

The grammar of the SET list is so confused that IFP1 cannot continue. Simplify the SET list.

615 *** USER FATAL MESSAGE 615, AN IMPRØPER ØR NØ NAME GIVEN TØ THE ABØVE SET.

SET lists must have integer names. This SET list does not have one. SET 10 = is the correct format. Give the SET a correct integer name.

616 *** USER FATAL MESSAGE 616, 'EXCEPT' CANNOT BE FØLLØWED BY 'THRU'. LIST EXPLICITLY ALL EXCEPTIØNS.

EXCEPT in SET list can only be followed by integers. An integer larger than THRU pair terminates THRU. Either list exceptions explicitly, use 2 'THRU's or terminate first THRU.

617 *** USER FATAL MESSAGE 617, A NØNPØSITIVE INTEGER APPEARS IN A PØSITIVE PØSITIØN.

Most integer values in case control must be positive. The above card either has a negative integer or a BCD value in a positive position. Check the Case Control Deck documentation in Section 2.3 of the User's Manual for the proper card format.

618 *** USER FATAL MESSAGE 618, PLØTTER ØUTPUT IS REQUESTED BUT NØ PLØT TAPE IS SET UP.

Neither PLT1 or PLT2 is a physical tape. Remove the plot control packet or set up the appropriate tape.

619 *** USER WARNING MESSAGE 619, SET MEMBER *** BELØNGS TØ *** THRU ***.

A set member is already included in a THRU. The individual member will be absorbed in the THRU.

620 *** USER WARNING MESSAGE 620, DUPLICATE *** IS IN SET LIST.

A set member is listed twice. The second reference will be deleted.

621 *** USER WARNING MESSAGE 621, INTERVAL *** THRU *** ØVERLAPS INTERVAL *** THRU ***. THE MAXIMUM INTERVAL WILL BE USED.

625 *** USER FATAL MESSAGE 625, SUBCASE ID'S MUST BE LESS THAN 99,999,999.

Reduce the size of your subcase identification number. Note also that BCD subcase identification numbers are not legal.

675 *** USER FATAL ERRØR MESSAGE 675, ABØVE CARD DØES NØT BEGIN WITH A NØNNUMERIC WØRD.

676 *** USER FATAL ERRØR MESSAGE 676, **** IS NOT RECØGNIZED ØN ABØVE CARD.

677 *** USER FATAL ERRØR MESSAGE 677, ILLEGAL VALUE SPECIFIED.

678 *** USER FATAL ERRØR MESSAGE 678, *** CØNTRADICTS PREVIOUS DEFINITIØN.

679 *** USER FATAL ERRØR MESSAGE 679, *** DELIMETER ILLEGALLY USED.

680 *** USER FATAL ERRØR MESSAGE 680, **** ILLEGAL IN STATEMENT.

681 *** USER FATAL ERRØR MESSAGE 681, **** IS ILLEGAL IN STATEMENT.

682 *** USER FATAL ERRØR MESSAGE 682, **** IS ILLEGAL IN STATEMENT.

683 *** USER FATAL ERRØR MESSAGE 683, TØØ MANY SUBCASES. MAXIMUM = 200 ØN ANY ØNE XY-ØUTPUT CØMMAND CARD.

684 *** USER FATAL ERRØR MESSAGE 684, SUBCASE-ID IS LESS THAN 1 ØR IS NØT IN ASCENDING ORDER.

685 *** USER FATAL ERRØR MESSAGE 685, **** = PØINT ØR ELEMENT ID IS ILLEGAL (LESS THAN 1).

686 *** USER FATAL ERRØR MESSAGE 686, NEGATIVE ØR ZERØ CØMPØNENTS ARE ILLEGAL.

687 *** USER FATAL ERRØR MESSAGE 687, ALPHA-CØMPØNENTS ARE NØT PREMITTED FØR STRESS ØR FØRCE XY-ØUTPUT REQUESTS.

688 *** USER FATAL ERRØR MESSAGE 688, **** CØMPØNENT NAME NØT RECØGNIZED.

689 *** USER FATAL ERRØR MESSAGE 689, LAST CARD ENDED WITH A DELIMETER BUT NØ CØNTINUATIØN CARD WAS PRESENT.

690 *** USER FATAL ERRØR MESSAGE 690, TYPE ØF CURVE WAS NØT SPECIFIED. (E.G. DISPLACEMENT, STRESS, ETC.).

691 *** USER FATAL ERRØR MESSAGE 691, MØRE THAN 2 ØR UNEQUAL NUMBER ØF CØMPØNENTS FØR IDENTIFICATIØN NUMBERS WITHIN A SINGLE FRAME.

692 *** USER FATAL ERRØR MESSAGE 692, XY-ØUTPUT CØMMAND IS INCØMPLETE.

693 *** USER FATAL ERRØR MESSAGE 693, INSUFFICIENT CØRE FØR SET TABLE.

694 *** USER FATAL ERRØR MESSAGE 694, AUTØ ØR PSDF REQUESTS MAY NØT USE SPLIT FRAME, THUS ØNLY ØNE CØMPØNENT PER ID IS PERMITTED.

695 *** USER FATAL ERRØR MESSAGE 695, CØMPØNENT VALUE = **** IS ILLEGAL FØR AUTØ ØR PSDF VECTØR REQUESTS.

969 *** USER FATAL ERRØR MESSAGE 969, CØMPØNENT VALUE = **** IS ILLEGAL FØR VECTØR TYPE SPECIFIED.

975 *** USER WARNING MESSAGE 975, XYTRAN DØES NØT RECØGNIZE **** AND IS IGNØRING.

976 *** USER WARNING MESSAGE 976, ØUTPUT DATA BLØCK **** IS PURGED. XYTRAN WILL PRØCESS ALL REQUESTS ØTHER THAN PLØT.

977 *** USER WARNING MESSAGE 977, FØLLØWING NAMED DATA BLØCK IS NØT IN SØRT2 FØRMAT.

978 *** USER WARNING MESSAGE 978, XYTRAN MØDULE FINDS DATA BLØCK (****) PURGED, NULL, ØR INADEQUATE, AND IS IGNØRING XY-ØUTPUT REQUEST FØR - **** - CURVES.

979 *** USER WARNING MESSAGE 979, AN XY-ØUTPUT REQUEST FØR PØINT ØR ELEMENT ID **** - **** - CURVE IS BEING PASSED ØVER. THE ID CØULD NØT BE FØUND IN DATA BLØCK ****.

980 *** USER WARNING MESSAGE 980, INSUFFICIENT CØRE TØ HANDLE ALL DATA FØR ALL CURVES ØF THIS FRAME ID = **** CØMPØNENT = **** DELETED FRØM ØUTPUT.

981 *** USER WARNING MESSAGE 981, CØMPØNENT = **** FØR ID = **** IS TØØ LARGE. THIS CØMPØNENTS CURVE NØT ØUTPUT.

982 *** USER WARNING MESSAGE 982, FØRMAT ØF SDR3 INPUT DATA BLØCK **** DØES NØT PERMIT SUCCESSFUL SØRT2 PRØCESSING.

983 *** USER WARNING MESSAGE 983, SDR3 HAS INSUFFICIENT CØRE TØ PERFØRM SØRT2 ØN INPUT DATA BLØCK **** ØR DATA BLØCK IS NØT IN CØRRECT FØRMAT.

984 *** USER WARNING MESSAGE 984, SDR3 FINDS ØUTPUT DATA BLØCK **** PURGED.

985 *** USER WARNING MESSAGE 985, SDR3 FINDS SCRATCH **** PURGED.

986 *** USER WARNING MESSAGE 986, INSUFFICIENT CØRE FØR SDR3.

991 *** USER WARNING MESSAGE 991, XYPLØT INPUT DATA FILE **** NØT FØUND. XYPLØT ABANDØNED.

The input data file probably has been purged and there were no plots to be done.

992 *** USER WARNING MESSAGE 992, XYPLØT INPUT DATA FILE I.D. RECØRDS TØØ SHØRT. XYPLØT ABANDØNED.

The input data file records have invalid word counts and further plotting is not feasible.

993 *** USER WARNING MESSAGE 993, XYPLØT FØUND ØDD NØ. ØF VALUES FØR DATA PAIRS IN FRAME ****, CURVE NØ. ****. LAST VALUE IGNØRED.

May indicate a bad input file, but plotting continues.

994 *** USER WARNING MESSAGE 994, XYPLØT ØUTPUT FILE NAME **** NØT FØUND. XYPLØT ABANDØNED.

A magnetic tape for plotting has not been properly set up and further plotting is useless.

995 *** USER WARNING MESSAGE 995, XYPLØT HAS ILLEGAL PLØTTER NUMBER = **** FRØM INPUT DATA FILE. PLØTTER NØ. **** ASSUMED.

Probable cause is the user not setting up the proper plotter number in the Case Control Deck. The plotting will be done on the plotter most commonly used at the installation.

996 *** USER WARNING MESSAGE 996, SPECIFIED PLØTTER PAPER SIZE TØØ SMALL. XYPLØT ASSUMES DIMENSIØN IS 8 INCHES.

Message is for table plotter only. Assumption is made that plotter paper will be at least as large as stated. In any event the table plotter will have an inch margin on all sides.

997 *** USER WARNING MESSAGE 997, NØ. ***. FRAME NØ. **** INPUT DATA INCØMPATIBLE. ASSUMPTIØNS MAY PRODUCE INVALID PLØT.

NØ. *** may take any value from 1 to 4 with the following meaning:

1. Specified X maximum equal X minimum. If this value is zero, then X maximum is set to 5.0 and X minimum to -5.0, otherwise 5 times the absolute value of X maximum is added to X maximum and subtracted from X minimum.
2. Specified X maximum is smaller than X minimum. The values are reversed.
3. Same meaning as number 1 except for Y maximum and Y minimum.
4. Same meaning as number 2 except for Y maximum and Y minimum.

6.2.2 Executive Module Messages

1001 *** SYSTEM FATAL MESSAGE 1001, ØSCAR NØT FØUND IN DPL.

ØSCAR file not present (destroyed) in Data Pool Dictionary.

1002 *** SYSTEM FATAL MESSAGE 1002, ØSCAR CØNTAINS NØ MØDULES.

XSFA found no modules on ØSCAR needing file allocation.

1003 *** SYSTEM FATAL MESSAGE 1003, PØØL CØULD NØT BE ØPENED.

Data Pool File (PØØL) not present (destroyed) in FIST.

1004 *** SYSTEM FATAL MESSAGE 1004, ILLEGAL EØF ØN PØØL.

End-Of-File encountered before ØSCAR file reached on Data Pool.

1011 *** SYSTEM FATAL MESSAGE 1011, MD ØR SØS TABLE ØVERFLØW.

Module description or serial ØSCAR table overflowed.

1012 *** SYSTEM FATAL MESSAGE 1012, PØØL CØULD NØT BE ØPENED.

Data Pool File (PØØL) not present (destroyed) in FIST.

1013 *** SYSTEM FATAL MESSAGE 1013, ILLEGAL EØR ØN PØØL.

ØSCAR record has illegal format.

1014 *** SYSTEM FATAL MESSAGE 1014, PØØL FILE MIS-POSITIØNED.

ØSCAR (PØØL) file not at position passed in XSFA calling sequence.

1021 *** SYSTEM FATAL MESSAGE 1021, FIAT ØVERFLØWED.

FIAT /XFIAT/ Table overflowed - reduce number of logical files. See Section 2 of the Programmer's Manual.

1031 *** SYSTEM FATAL MESSAGE 1031, DPL ØVERFLØW.
Data Pool Dictionary /XDPL/ overflowed - increase complied size. See Section 2 of the Programmer's Manual.

1032 *** SYSTEM FATAL MESSAGE 1032, PØØL ØR FILE BEING PØØLED/UN-PØØLED CØULD NØT BE ØPENED.
Files not present (destroyed) in FIST.

1033 *** SYSTEM FATAL MESSAGE 1033, ILLEGAL EØF ØN FILE BEING PØØLED.
File being pooled has illegal format.

1034 *** SYSTEM FATAL MESSAGE 1034, ILLEGAL EØR ØN FILE BEING PØØLED.
File being pooled has illegal format (bad header).

1035 *** SYSTEM FATAL MESSAGE 1035, EQUIV INDICATED, NØNE FØUND.
File (data block) equivalence not found as indicated by XSFA.

1041 *** SYSTEM FATAL MESSAGE 1041, ØLD/NEW PØØL CØULD NØT BE ØPENED.
Files not present (destroyed) in FIST.

1051 *** SYSTEM FATAL MESSAGE 1051, FIAT ØVERFLØW.
FIAT /XFIAT/ overflowed - reduce number of logical files. See Section 2 of the Programmer's Manual.

1101 *** USER FATAL MESSAGE 1101, CØULD NØT ØPEN FILE NAMED ********.
Data block has not been generated.

1102 *** SYSTEM FATAL MESSAGE 1102, CØULD NØT ØPEN FILE NAMED ********.
Problem Tape (NPTP) or Pool Table (PØØL) File linkage is broken. Look for error in /XFIST/, /XPFIST/ or /XXFIAT/.

1103 *** SYSTEM FATAL MESSAGE 1103, UNABLE TØ PØSITIØN DATA PØØL FILE CØRRECTLY.
Contents of /XDPL/ does not correspond to contents of PØØL file.

1104 *** SYSTEM FATAL MESSAGE 1104, FDICT TABLE IS INCORRECT.
Subroutine XCHK is not generating FDICT correctly.

1105 *** USER FATAL MESSAGE 1105, CANNØT FIND DATA BLØCK NAMED ******** HEADER RECØRD = ********.
Data block name or equivalenced data block name must match header record.

1106 *** USER FATAL MESSAGE 1106, CHECKPØINT DICTIØNARY ØVERFLØWED THERE IS NØ MØRE CØRE AVAILABLE.
Restart problem from this point with dictionary available.

1107 *** SYSTEM FATAL MESSAGE 1107, CANNØT FIT DATA BLØCK NAMED ******** ØN TWØ PRØBLEM TAPE REELS.
Use full tape reels for Problem Tape.

1108 *** SYSTEM FATAL MESSAGE 1108, PURGE TABLE ØVERFLØWED.

Reduce the number of data blocks being checkpointed at one time by replacing a single CHKPNT instruction with two CHKPNT instructions .

1109 *** SYSTEM FATAL MESSAGE 1109, CANNØT FIND DATA BLØCK NAMED NXPTDC HEADER RECØRD = ********.

Problem Tape is not positioned correctly for reading NXPTDC. Problem is in subroutine which previously wrote NXPTDC onto Problem Tape. Suspect modules are XGPI, XCEI or XCHK.

1201 *** SYSTEM FATAL MESSAGE 1201, FIAT ØVERFLØW.

FIAT /XFIAT/ overflowed - reduce number of logical files. See Section 2.4 of the Programmer's Manual.

1202 *** SYSTEM FATAL MESSAGE 1202, DPL ØVERFLØW.

Data Pool Dictionary /XDPL/ overflowed - increase compiled size. See Section 2.4 of the Programmer's Manual.

1703 *** USER WARNING MESSAGE 1703, PRECEDING BULK DATA DECK HAS BEEN CANCELED AND WILL NØT APPEAR ØN USER MASTER FILE.

The preceding Bulk Data Deck contains errors which preclude its inclusion on the User Master File. Appropriate error messages should appear in the echo of the Bulk Data Deck. Any subsequent Bulk Data Decks will be placed on the User Master File if error-free.

1704*** USER FATAL MESSAGE 1704, ILLEGAL TID VALUE ØN UMF CARD.

The TID value used on all UMF cards must be the same for any run and must match the TID value on the UMF tape being input. See Section 2.5 of the User's Manual for details.

1705 *** Reserved for future implementation in the User Master File Editor.

1706 *** Reserved for future implementation in the User Master File Editor.

1707 *** SYSTEM FATAL MESSAGE 1707, UMFEDT - UNEXPECTED EØF FROM READ.

The occurence of this message indicates a program failure in the User Master File Editor subroutine UMFEDT.

1708 *** SYSTEM FATAL MESSAGE 1708, UMFEDT - UNEXPECTED EØR FROM READ.

The occurence of this message indicates a program failure in the User Master File Editor subroutine UMFEDT.

1709 *** SYSTEM FATAL MESSAGE 1709, UMFEDT UNABLE TØ ØPEN ØNE ØF THE PERMANENT NASTRAN FILES UMF, NUMF, OR NPTP.

1710 *** Reserved for future implementation in the User Master File Editor.

1711 *** USER FATAL MESSAGE 1711, NØ TAPE SETUP FØR EITHER UMF ØR NUMF. THE USER MASTER FILE EDITØR REQUIRES AT LEAST ØNE ØF THESE TAPES TØ BE SET UP.

The tape(s) required must be appropriate to the requested action. See Section 2.5 of the User's Manual for details.

1712 *** Reserved for future implementation in the User Master File Editor.

1713 *** Reserved for future implementation in the User Master File Editor.

1714 *** Reserved for future implementation in the User Master File Editor.

1715 *** Reserved for future implementation in the User Master File Editor.

1716 *** Reserved for future implementation in the User Master File Editor.

1717 *** USER WARNING MESSAGE 1717, REQUEST TØ ADD DECK WITH PRØBLEM IDENTIFICATIØN NØ. = **** CØNFLICTS WITH IMPLIED REQUEST TØ CØPY THE SAME PRØBLEM FRØM THE UMF. THE NEW DECK WILL BE USED.

This message will occur whenever a deck is added whose PID value is the same as that of a problem already existing on the old User Master File.

1718 *** USER WARNING MESSAGE 1718, REMØVE REQUEST FØR PRØBLEM **** IS ØUT ØF SEQUENCE ØR NØT ØN UMF.

User Master File Editor control cards must form an increasing sequence. See Section 2.5 of the User's Manual for details.

1719 *** USER WARNING MESSAGE 1719, LIST REQUEST FØR PRØBLEM **** IS ØUT ØF SEQUENCE ØR NØT ØN UMF.

User Master File Editor control cards must form an increasing sequence. See Section 2.5 of the User's Manual for details.

1720 *** USER WARNING MESSAGE 1720, PUNCH REQUEST FØR PRØBLEM **** IS ØUT ØF SEQUENCE ØR NØT ØN UMF.

User Master File Editor control cards must form an increasing sequence. See Section 2.5 of the User's Manual for details.

1721 *** USER FATAL MESSAGE 1721, PRØBLEM WITH PID = **** IS NØT ØN UMF ØR CARD IS ØUT ØF SEQUENCE.

User Master File Editor control cards must form an increasing sequence. See Section 2.5 of the User's Manual for details.

1722 *** USER FATAL MESSAGE 1722, NUMF TAPE ID HAS ALREADY BEEN SPECIFIED.

The tape id value for the New User Master File (NUMF) may only be specified once. See Section 2.5 of the User's Manual for details.

1723 *** USER FATAL MESSAGE 1723, NUMF TAPE ID MAY NØT BE RESPECIFIED.

The tape id value for the New User Master File (NUMF) may only be specified once. See Section 2.5 of the User's Manual for details.

1724 *** USER WARNING MESSAGE 1724, PUNPRT REQUEST FØR PRØBLEM **** IS ØUT ØF SEQUENCE ØR NØT ØN UMF.

User Master File Editor control cards must form an increasing sequence. See Section 2.5 of the User's Manual for details.

1725 *** Reserved for future implementation in the User Master File Editor.

1726 *** Reserved for future implementation in the User Master File Editor.

1727 *** Reseverd for future implementation in the User Master File Editor.

1728 *** SYSTEM FATAL ERRØR 1728, UMFEDT UNABLE TØ LØCATE BULK DATA ØN NPTP.

1729 *** Reserved for future implementation in the User Master File Editor.

1730 *** Reserved for future implementation in the User Master File Editor.

1731 *** Reserved for future implementation in the User Master File Editor.

1732 *** Reserved for future implementation in the User Master File Editor.

1733 *** Reserved for future implementation in the User Master File Editor.

1734 *** Reserved for future implementation in the User Master File Editor.

1735 *** Reserved for future implementation in the User Master File Editor.

1736 *** USER FATAL ERRØR 1736, BAD USER MASTER FILE EDITØR DATA CARD.
See Section 2.5 of the User's Manual for instructions for using the User Master File Editor.

1737 *** Reserved for future implementation in the User Master File Editor.

1744 *** USER FATAL ERRØR 1744, DATA CARD(S) ******** GENERATED BY UTILITY MØDULE INPUT NØT ALLØWED IN BULK DATA.
Module is not capable of integrating same card type from two sources.

1745 **********
Message 1745 is reserved for utility module input.

6.2.3 Functional Module Messages

2001 *** USER FATAL MESSAGE 2001, SEQGP CARD REFERENCES UNDEFINED GRID PØINT ****.

2002 *** SYSTEM FATAL MESSAGE 2002, GRID PØINT **** NØT IN EQEXIN.
This message indicates a program design error in GP1.

2003 *** USER FATAL MESSAGE 2003, CØØRDINATE SYSTEM **** REFERENCES UNDEFINED GRID PØINT ****.
Applies to CØRD1j definitions.

2004 *** USER FATAL MESSAGE 2004, CØØRDINATE SYSTEM **** REFERENCES UNDEFINED CØØRDINATE SYSTEM ****.
Applies to CØRD2j definitions.

2005 *** SYSTEM FATAL MESSAGE 2005, INCØNSISTENT CØØRDINATE SYSTEM DEFINITIØN.
At least one coordinate system cannot be tied to the basic system. See Section 4.21.7 of the Programmer's Manual.

2006 *** USER FATAL MESSAGE 2006, INTERNAL GRID PØINT **** REFERENCES UNDEFINED CØØRDINATE SYSTEM ****.
The grid point whose internal sequence number is printed above references an undefined coordinate system in either field 3 or field 7 of a GRID card.

2007 *** USER FATAL MESSAGE 2007, ELEMENT **** REFERENCES UNDEFINED GRID PØINT ****.

2008 *** USER FATAL MESSAGE 2008, LØAD SET **** REFERENCES UNDEFINED GRID PØINT ****.

2009 *** USER FATAL MESSAGE 2009, TEMP SET **** REFERENCES UNDEFINED GRID PØINT ****.

2010 *** USER FATAL MESSAGE 2010, ELEMENT **** REFERENCES UNDEFINED PRØPERTY ****.

2011 *** USER FATAL MESSAGE 2011, NØ PRØPERTY CARD FØR ELEMENT TYPE ****.

2012 *** USER FATAL MESSAGE 2012, GRID PØINT **** SAME AS SCALAR PØINT.
Identification of grid and scalar points must be unique.

2013 *** USER WARNING MESSAGE 2013, NØ STRUCTURAL ELEMENTS EXIST.

Model checked for structural elements.

2014 *** SYSTEM FATAL MESSAGE 2014, LØGIC ERRØR IN ECPT CØNSTRUCTIØN.

The spill logic in the construction of the skeleton (TA1B) has failed. Problem should be referred to maintenance programming staff. A temporary fix may be available if additional storage can be provided to NASTRAN e.g., by increasing the region size (IBM 360).

2015 *** USER WARNING MESSAGE 2015, NØ ELEMENTS CØNNECT INTERNAL GRID PØINT ****.

The grid point whose internal identification number appears above has no elements connected to it. The message is a warning only since the degrees of freedom associated with the point may be removed by multipoint constraints or in other ways. The internal identification number is formed by assigning to each grid point and scalar point one of the integers 1, 2, --- according to its resequenced position. It may be determined from data block EQEXIN via a DMAP TABPT instruction.

2017 *** USER FATAL MESSAGE 2017, MATS1 CARD REFERENCES UNDEFINED MAT1 **** CARD.

The user should check that all MATS1 cards reference MAT1 cards that exist in the Bulk Data Deck.

2018 *** USER FATAL MESSAGE 2018, MATS2 CARD REFERENCES UNDEFINED MAT2 **** CARD.

The user should check that all MATS2 cards reference MAT2 cards that exist in the Bulk Data Deck.

2019 *** USER FATAL MESSAGE 2019, MATT1 CARD REFERENCES UNDEFINED MAT1 **** CARD.

The user should check that all MATT1 cards reference MAT1 cards that exist in the Bulk Data Deck.

2020 *** USER FATAL MESSAGE 2020, MATT2 CARD REFERENCES UNDEFINED MAT2 **** CARD.

The user should check that all MATT2 cards reference MAT2 cards that exist in the Bulk Data Deck.

2021 *** SYSTEM FATAL MESSAGE 2021, BAD GMMAT CALLING SEQUENCE.

The calling sequence of the subroutine which called either subroutine GMMATD or GMMATS defined a nonconformable matrix product. The subroutine examines the transpose flags in combination with the orders of the matrices to make sure that a conformable matrix product is defined by this input data. This test clearly is made for purposes of calling routine checkout only. No tests are made, nor can they be made, to insure that the calling routine has provided sufficient storage for arrays.

2022 *** SYSTEM FATAL MESSAGE 2022, SMA-B SCALAR PØINT INSERTIØN LØGIC ERRØR.

Probable error in creating the ECPT data block in module TA1. Use the TABPT module to print ECPT.

2023 *** SYSTEM FATAL MESSAGE 2023, DETCK UNABLE TØ FIND PIVØT PØINT **** IN GPCT.

Probable error in creating the ECPT data block in module TA1. Use the TABPT module to print ECPT.

2025 *** USER FATAL MESSAGE 2025, UNDEFINED CØØRDINATE SYSTEM ****.

The coordinate system identification number transmitted via ECPT(1) could not be found in the CSTM array. The user should check coordinate system numbers on GRID bulk data cards against those defined on CØRD1C, CØRD1R, etc., bulk data cards to insure that there are no undefined coordinate systems.

2026 *** USER FATAL MESSAGE 2026, ELEMENT **** GEØMETRY YIELDS UNREASØNABLE MATRIX.

Referenced element geometry and/or properties yields a numerical result which causes an element stiffness or mass matrix to be undefined. Possible causes include, but are not limited to, (1) the length of a rod or bar is zero because the end points have the same coordinates, (2) the sides of a triangle or quadrilateral are collinear which leads to a zero cross product in defining an element coordinate system, or (3) the bar orientation vector is parallel to the bar axis. Check GRID bulk data cards defining element end points for bad data.

2027 *** USER FATAL MESSAGE 2027, ELEMENT **** HAS INTERIØR ANGLE GREATER THAN 180 DEG. AT GRID PØINT ****.

SHEAR or TWIST panel element with the referenced element number has been defined with the four grid points out of the proper cyclical order. See bulk data card definitions for CSHEAR and CTWIST cards.

2028 *** SYSTEM FATAL MESSAGE 2028, SMA3A ERRØR NØ. ****.

Internal logic error in subroutine SMA3A of module SMA3. Possible error in generation of the GEI data block. Use the TABPT module to print GEI.

2029 *** USER FATAL MESSAGE 2029, UNDEFINED TEMPERATURE SET ****.

The referenced temperature set had no default temperature defined. Define a temperature or default temperature for each grid point in the model.

2030 *** SYSTEM FATAL MESSAGE 2030, BAD GPTT.

The format of the GPTT data block is incorrect. Use the TABPT module to print the GPTT data block.

2031 *** USER FATAL MESSAGE 2031, ELEMENT **** UNACCEPTABLE GEØMETRY.

2032 *** USER FATAL MESSAGE 2032, ELEMENT **** UNACCEPTABLE GEØMETRY.

2033 *** USER FATAL MESSAGE 2033, SINGULAR H-MATRIX FØR ELEMENT ****.

2034 *** SYSTEM FATAL MESSAGE 2034, ELEMENT **** SIL'S DØ NØT MATCH PIVØT.

Possible error in generation of the ECPT data block. Use the TABPT module to print ECPT.

2035 *** USER FATAL MESSAGE 2035, QUADRILATERAL **** INTERIØR ANGLE GREATER THAN 180 DEG.

2036 *** USER FATAL MESSAGE 2036, SINGULAR MATRIX FØR ELEMENT ****.

2037 *** USER FATAL MESSAGE 2037, BAD ELEMENT **** GEØMETRY.

2038 *** SYSTEM FATAL MESSAGE 2038, SINGULAR MATRIX FØR ELEMENT ****.

2039 *** USER FATAL MESSAGE 2039, ZERØ SLANT LENGTH FØR HARMØNIC **** ØF CCØNEAX ****.

2040 *** USER FATAL MESSAGE 2040, SINGULAR MATRIX FØR ELEMENT ****.

2041 *** USER FATAL MESSAGE 2041, A MATT1,MATT2,MATT3 OR MATS1 CARD REFERENCES TABLE NUMBER **** WHICH IS NØT DEFINED ØN A TABLEM1, TABLEM2, TABLEM3, TABLEM4 ØR TABLES1 CARD.

The user must insure that all table identification numbers on MATT1, MATT2, MATT3, or MATS1 cards reference tables which exist in the Bulk Data Deck.

2042 *** USER FATAL MESSAGE 2042, MISSING MATERIAL TABLE **** FØR ELEMENT ****.

The referenced material table identification number is missing. The user should check to see that all element property bulk data cards (e.g., PBAR, PRØD) reference material card identification numbers for material property cards that exist in the Bulk Data Deck.

2044 *** USER FATAL MESSAGE 2044, UNDEFINED TEMPERATURE SET ****.

The referenced temperature set was selected in the Case Control Deck but not defined in the Bulk Data Deck.

2045 *** USER FATAL MESSAGE 2045, TEMPERATURE UNDEFINED AT GRID PØINT WITH INTERNAL INDEX ****.

Temperatures must be defined at all grid points in a selected temperature set. The grid point whose internal index was printed had no temperature defined and a default temperature was not supplied for the selected temperature set.

2046 *** USER FATAL MESSAGE 2046, UNDEFINED ELEMENT DEFØRMATIØN SET ****.

2047 *** USER FATAL MESSAGE 2047, UNDEFINED MULTIPØINT CØNSTRAINT SET ****.

A multipoint constraint set selected in the Case Control Deck could not be found in either an MPC or MPCADD card or a set referenced on a MPCADD card could not be found on an MPC card.

2048 *** USER FATAL MESSAGE 2048, UNDEFINED GRID PØINT **** IN MULIT-PØINT CØNSTRAINT SET ****.

2049 *** USER FATAL MESSAGE 2049, UNDEFINED GRID PØINT **** HAS AN ØMITTED CØØRDINATE.

An ØMIT or ØMIT1 card references a grid point which has not been defined.

2050 *** USER FATAL MESSAGE 2050, UNDEFINED GRID PØINT **** HAS A SUPPØRT CØØRDINATE.

A SUPØRT card references a grid point which has not been defined.

2051 *** USER FATAL MESSAGE 2051, UNDEFINED GRID PØINT **** IN SINGLE PØINT CONSTRAINT SET ****.

An SPC1 card in the selected SPC set references a grid point which has not been defined.

2052 *** USER FATAL MESSAGE 2052, UNDEFINED GRID PØINT *** IN SINGLE-PØINT CØNSTRAINT SET ****.

An SPC card in the selected SPC set references a grid point which has not been defined.

2053 *** USER FATAL MESSAGE 2053, UNDEFINED SINGLE-PØINT CØNSTRAINT SET ****.

A single point constraint set selected in the Case Control Deck could not be found on either an SPCADD, SPC or SPC1 card, or a set referenced on an SPCADD card could not be found on either an SPC or SPC1 card.

2054 *** USER FATAL MESSAGE 2054, SUPER ELEMENT **** REFERENCES UNDEFINED SIMPLE ELEMENT ****.

2056 *** USER FATAL MESSAGE 2056, UNDEFINED SUPER ELEMENT **** PRØPERTIES.

2057 *** USER FATAL MESSAGE 2057, IRRATIØNAL SUPER ELEMENT **** TØPØLØGY.

2058 *** USER FATAL MESSAGE 2058, SUPER ELEMENT *** REFERENCES UNDEFINED SIMPLE ELEMENT TYPE.

2059 *** USER FATAL MESSAGE 2059, UNDEFINED GRID PØINT **** ØN SE--BFE FØR SUPER ELEMENT ****.

2060 *** USER FATAL MESSAGE 2060, UNDEFINED GRID PØINT **** ØN QDSEP CARD FØR SUPER ELEMENT ****.

2061 *** USER FATAL MESSAGE 2061, UNDEFINED GRID PØINT **** ØN GENERAL ELEMENT ****.

2062 *** USER FATAL MESSAGE 6062, UNDEFINED SUPER ELEMENT PRØPERTY **** FØR SUPER ELEMENT ****.

2063 *** SYSTEM FATAL MESSAGE 2063, TAIC LØGIC ERRØR. GENERAL ELEMENT DATA CØULD NØT BE FØUND IN THE ECT DATA BLØCK WHEN TRAILER LIST INDICATED IT WAS PRESENT. REFER PRØBLEM TO MAINTENANCE PRØGRAMMING STAFF.

2064 *** USER FATAL MESSAGE 2064, UNDEFINED EXTRA PØINT **** REFERENCED ØN SEQEP CARD.

2065 *** USER FATAL MESSAGE 2065, UNDEFINED GRID PØINT **** ØN DMIG CARD.

2066 *** USER FATAL MESSAGE 2066, UNDEFINED GRID PØINT **** ØN RLØAD- ØR TLØAD- CARD.

2067 *** USER FATAL MESSAGE 2067, UNDEFINED GRID PØINT **** ØN NØLIN- CARD.

2068 *** USER FATAL MESSAGE 2068, UNDEFINED GRID PØINT **** IN TRANSFER FUNCTIØN SET ****.

2069 *** USER FATAL MESSAGE 2069, UNDEFINED GRID PØINT **** IN TRANSIENT INITIAL CØNDITIØN SET ****.

2070 *** USER FATAL MESSAGE 2070, REQUESTED DMIG MATRIX **** IS UNDEFINED.

2071 *** USER FATAL MESSAGE 2071, DYNAMIC LØAD SET **** REFERENCES UNDEFINED TABLE ****.

2072 *** SYSTEM WARNING MESSAGE 2072, CARD TYPE *** NØT FØUND ØN DATA BLØCK.

This warning message is issued when the trailer bit for the card type = 1 but the corresponding record is not on the data block.

2073 *** USER INFØRMATIØN MESSAGE 2073, MPYAD METHØD = ****, NØ. ØF PASSES = ****.

This message gives the method selected and number of passes required.

2074 *** USER FATAL MESSAGE 2074, UNDEFINED TRANSFER FUNCTIØN SET ****.

2075 *** SYSTEM ØR USER DMAP FATAL MESSAGE 2075, IMPRØPER VALUE **** FØR FIRST PARAMETER IN DMAP INSTRUCTIØN SDR2.

2076 *** USER WARNING MESSAGE 2076, SDR2 ØUTPUT DATA BLØCK NØ. 1 IS PURGED.

2077 *** USER WARNING MESSAGE 2077, SDR2 ØUTPUT DATA BLØCK NØ. 2 IS PURGED.

2078 *** USER WARNING MESSAGE 2078, SDR2 ØUTPUT DATA BLØCK NØ. 3 IS PURGED.

2079 *** USER WARNING MESSAGE 2079, SDR2 FINDS THE -EDT-, -EST-, ØR -GPTT- PURGED ØR INADEQUATE AND IS THUS NØT PRØCESSING ANY REQUESTS FØR STRESSES ØR FØRCES.

2080 *** USER WARNING MESSAGE 2080, SDR2 ØUTPUT DATA BLØCK NØ. 6 IS PURGED.

2081 *** USER FATAL MESSAGE 2081, NULL DIFFERENTIAL STIFFNESS MATRIX.

Differential stiffness is not defined for all structural elements. Only the following elements are defined for differential stiffness calculations: RØD, TUBE, SHEAR (but not TWIST) panels, triangular and quadrilateral membranes (TRMEM, TRIA2, QDMEM, QUAD2), and BAR. The combination two dimensional elements TRIA1 and QUAD1, are defined only if their membrane thickness is nonzero. The user has not included any of these elements in his model and therefore a null differential stiffness matrix was generated.

2083 *** USER FATAL MESSAGE 2083, NULL DISPLACEMENT VECTØR.

The displacement vector for the linear solution part of a static analysis with differential stiffness problem, or the incremental displacement vector in a piecewise linear analysis rigid format problem is the zero vector. Check loading conditions.

2084 *** SYSTEM FATAL MESSAGE 2084, DSMG2 LØGIC ERRØR ****.

Incompatible input and output pairs in the DMAP calling sequence to module DSMG2. See the module description for DSMG2 in the Programmer's Manual.

2085 *** USER INFØRMATIØN MESSAGE 2085, SMA1 SPILL, NPVT ****.

During processing of the ECPT data block in module SMA1, so many elements were attached to the referenced pivot point (NPVT) that module spill logic was initiated.

2086 *** USER INFØRMATIØN MESSAGE 2086, SMA2 SPILL, NPVT ****.

See explanation for Message 2085.

2087 *** SYSTEM FATAL MESSAGE 2087, ECPT CØNTAINS BAD DATA.

Use the TABPT module to print the ECPT data block.

2088 *** USER FATAL MESSAGE 2088, DUPLICATE TABLE ID ****.

All tables must have unique numbers. Check for uniqueness.

2089 *** USER FATAL MESSAGE 2089, TABLE **** UNDEFINED.

The table number in the list of table numbers input to subroutine PRETAB via argument 7 was not found after reading the DIT data block. Check list of tables in the Bulk Data Deck.

2090 *** SYSTEM FATAL MESSAGE 2090, TABLE DICTIØNARY ENTRY **** MISSING.

Logic error in subroutine PRETAB, or open core used by PRETAB has been destroyed.

2091 *** SYSTEM FATAL MESSAGE 2091, PLA3, BAD ESTNL EL ID ****.

ESTNL data block is not in expected format. Use TABPT module to print the ESTNL data block.

2092 *** SYSTEM WARNING MESSAGE 2092, SDR2 FINDS A SYMMETRY SEQUENCE LENGTH = **** AND AN INSUFFICIENT NUMBER ØF VECTØRS AVAILABLE = **** WHILE ATTEMPTING TØ CØMPUTE STRESSES AND FORCES. ALL FURTHER STRESS AND FØRCES CØMPUTATIØN TERMINATED.

2093 *** USER FATAL MESSAGE 2093, NØLIN CARD FRØM NØLIN SET **** REFERENCES GRID PØINT **** UD SET.

2101A *** USER FATAL MESSAGE 2101A, GRID PØINT **** CØMPØNENT *** ILLEGALLY DEFINED IN SETS ****.

The above grid point and component has been defined in each of the above dependent subsets. A point may belong to at most one dependent subset.

2101B *** USER FATAL MESSAGE 2101B, SCALAR PØINT **** ILLEGALLY DEFINED IN SETS ****.

2102 *** USER WARNING MESSAGE 2102, LEFT-HAND MATRIX RØW PØSITIØN **** ØUT ØF RANGE - IGNØRED.

A term in the A matrix whose row position is larger than the stated dimension was detected and ignored.

2103 *** SYSTEM FATAL MESSAGE 2103, SUBRØUTINE MAT WAS CALLED WITH INFLAG=2, THE SINE ØF ANGLE X, MATERIAL ØRIENTATIØN ANGLE, NØNZERØ, BUT SIN(X)**2+CØS(X)**2 DIFFERED FRØM 1 IN ABSOLUTE VALUE BY MØRE THAN .0001.

A check is made in MAT to insure that ABS(SIN(THETA)**2+CØS(THETA)**2-1.00) .LE. .0001 when INFLAG = 2. The calling routine did not set SINTH and CØSTH cells in /MATIN/ properly.

2104 *** USER FATAL MESSAGE 2104, UNDEFINED CØØRDINATE SYSTEM ****.

See the explanation for Message 2025.

2105 *** USER FATAL MESSAGE 2105, PLØAD2 CARD FRØM LØAD SET **** REFERENCES MISSING ØR NØN-2-D ELEMENT ****.

PLØAD2 cards must reference two-dimensional elements.

2106 *** USER FATAL MESSAGE 2106, LØAD CARD DEFINES NØNUNIQUE LØAD SET ****.

2107 *** USER FATAL MESSAGE 2107, EIG-CARD FRØM SET **** REFERENCES DEPENDENT CØØRDINATE ØR GRID PØINT ****.

When the point option is used on an EIGB, EIGC or EIGR card, the referenced point and component must be in an independent set.

2111 *** USER WARNING MESSAGE 2111, BAR **** CØUPLED BENDING INERTIA SET TØ 0.0 IN DIFFERENTIAL STIFFNESS.

The coupled bending inertia term on a PBAR card, if nonzero, is set to zero in the differential stiffness routine for the BAR.

2112 *** SYSTEM FATAL MESSAGE 2112, UNDEFINED TABLE ****.

The referenced table number could not be found in core.

2113 *** USER FATAL MESSAGE 2113, MATERIAL ****, A NØN-MAT1 TYPE, IS NØT ALLØWED TØ BE STRESS DEPENDENT.

Only MAT1 material cards may be present in a piecewise linear analysis problem.

2114 *** USER FATAL MESSAGE 2114, MATT3 CARD REFERENCES UNDEFINED MAT3 **** CARD.

The user should check that all MATT3 cards reference MAT3 cards that exist in the Bulk Data Deck.

2115 *** USER FATAL MESSAGE 2115, TABLE **** (TYPE ****) ILLEGAL WITH STRESS-DEPENDENT MATERIAL.

Only TABLES1 cards may be used to define stress-strain curves for use in piecewise linear analysis.

2116 *** SYSTEM FATAL MESSAGE 2116, MATID **** TABLEID ****.

The referenced material table identification number could not be found among the set of all MAT1 cards in core.

2117 *** USER FATAL MESSAGE 2117, TEMPERATURE DEPENDENT MATERIAL PROPERTIES ARE NØT PERMISSIBLE IN A PIECEWISE LINEAR ANALYSIS PRØBLEM. TEMPERATURE SET = ****.

User should redefine his problem without temperature dependent material properties.

2127 *** SYSTEM FATAL MESSAGE 2127, PLA2 INPUT DATA BLØCK NØ. **** IS PURGED.

Data blocks DELTAUGV and DELTAPG cannot be purged. See module description for PLA2 in Section 4 of the Programmer's Manual.

2128 *** SYSTEM FATAL MESSAGE 2128, PLA2 ØUTPUT DATA BLØCK NØ. **** IS PURGED.

Data blocks UGV1, PGV1 cannot be purged. See module description for PLA2 in Section 4 of the Programmer's Manual.

2129 *** SYSTEM FATAL MESSAGE 2129, PLA2, ZERØ VECTØR ØN APPENDED DATA BLØCK NØ. ****.

Zero displacement vector found on UGV1 data block output from PLA2. Possible system failure.

2130 *** USER FATAL MESSAGE 2130, ZERØ INCREMENTAL DISPLACEMENT VECTØR NØT ADMISSIBLE AS INPUT TØ MØDULE PLA2.

See discussion of the Piecewise Linear Analysis rigid format.

2131 *** USER FATAL MESSAGE 2131, NØN-SCALAR ELEMENT *** REFERENCES A SCALAR PØINT.

An element which must be attached to a geometric grid point has been attached to a scalar point. No geometry data can be inferred.

2132 *** USER FATAL MESSAGE 2132, NØN-ZERØ SINGLE PØINT CONSTRAINT VALUE SPECIFIED BUT DATA BLØCK YS IS PURGED.

Many rigid formats do not support constrained displacements (especially dynamic solutions). An attempt to specify a constrained displacement in these cases results in this message.

2133 *** USER FATAL MESSAGE 2133, INITIAL CØNDITIØN IN SET **** SPECIFIED FØR PØINT NØT IN ANALYSIS SET.

Initial conditions can only be specified for analysis set points. Therefore the point/component mentioned on TIC cards must belong to the D or H sets.

2134 *** USER FATAL MESSAGE 2134, LØAD SET *** DEFINED FØR BØTH GRAVITY AND NØN-GRAVITY LØADS.

The same load set identification number cannot appear on both a GRAV card and another loading card such as FØRCE or MØMENT. To apply both a gravity load and a concentrated load simultaneously the LØAD card must be used.

2135 *** USER FATAL MESSAGE 2135, DLØAD CARD *** HAS A DUPLICATE SET ID FOR SET ID ***.

The Li set ID's on a DLØAD card are not unique. See DLØAD card description in the User's Manual.

2136 *** USER FATAL MESSAGE 2136, SET ID *** HAS BEEN DUPLICATED ØN A DLØAD, RLØAD1,2 or TLØAD1,2 CARD.

All dynamic load set ID's must be unique.

2137 *** USER FATAL MESSAGE 2137, PRØGRAM RESTRICTIØN FØR MØDULE SSG1 - ØNLY 100 LØAD SET ID'S ALLØWED. DATA CØNTAINS **** LØAD SET ID'S.

Reduce the number of Load Set ID's.

2138 *** USER FATAL MESSAGE 2138, ELEMENT IDENTIFICATION NUMBER **** IS TØØ LARGE.

Element identification numbers (on connection cards) must be less than 16,777,215.

3001 *** SYSTEM FATAL MESSAGE 3001, ATTEMPT TØ ØPEN DATA SET *** IN SUBRØUTINE ****** WHICH WAS NØT DEFINED IN FIST.

Subroutine did not expect data block to be purged. Check data block requirements for module.

3002 *** SYSTEM FATAL MESSAGE 3002, EØF ENCØUNTERED WHILE READING DATA SET ********(FILE ***) IN SUBRØUTINE ******.

This message is issued when an End-Of-File occurs while trying to skip the header record. The data block is not in the proper format.

3003 *** SYSTEM FATAL MESSAGE 3003, ATTEMPT TØ READ PAST THE END ØF A LØGICAL RECØRD IN DATA SET ********(FILE ***) IN SUBRØUTINE ********.

This message is issued when the file is positioned at the beginning of a logical record and the record does not contain at least three words. Data block is not in proper format.

3004 *** SYSTEM FATAL MESSAGE 3004, INCØNSISTANT TYPE FLAGS ENCØUNTERED WHILE PACKING DATA SET ****.

3005 *** SYSTEM FATAL MESSAGE 3005, ATTEMPT TØ ØPERATE ØN SINGULAR MATRIX **** IN SUBRØUTINE ****.

A diagonal term does not exist for a column of (U). This is normally detected in DECØMP implying care was not taken in processing singular matrices in the calling routine.

3006 *** SYSTEM FATAL MESSAGE 3006, BUFFER ASSIGNED WHEN ØPENING DATA BLØCK **** FILE (****) CØNFLICTS WITH BUFFERS CURRENTLY ØPEN.

Computation of buffer pointers or allocation of open core is in error.

3007 *** SYSTEM FATAL MESSAGE 3007, ILLEGAL INPUT TØ SUBRØUTINE ****.

Subroutine **** has encountered data which it cannot process. This error should not be caused by user input data. A system or programming error is indicated. Go directly to the subroutine listing or description to determine the exact cause of the problem.

3008 *** SYSTEM FATAL MESSAGE 3008, INSUFFICIENT CØRE AVAILABLE FØR SUBRØUTINE ********.

This message implies that the particular subroutine does not have sufficient core to meet its demands. The subroutine or module description should be consulted to determine the core requirements.

3009 *** SYSTEM FATAL MESSAGE 3009, DATA TRANSMISSIØN ERRØR ØN DATA SET *******(FILE ***).

IBM 7094, IØEX detected a data transmission error during GINØ READ.

3010 *** SYSTEM FATAL MESSAGE 3010, ATTEMPT TØ MANIPULATE DATA SET ********(FILE ***) BEFØRE ØPENING FILE.

An operation other than ØPEN or CLØSE is requested on a file which is not defined in the FIST.

3011 *** SYSTEM FATAL MESSAGE 3011, ATTEMPT TØ WRITE A TRAILER ØN FILE *** WHEN IT HAS BEEN PURGED.

The file did not exist in the FIST when WRTTRL was called.

3012 *** SYSTEM FATAL MESSAGE 3012, ATTEMPT TØ ØPEN DATA SET ********(FILE ***) WHICH HAS ALREADY BEEN ØPENED.

IBM 7094 GINØ ØPEN was called while the file was already open.

3013 *** SYSTEM FATAL MESSAGE 3013, ATTEMPT TØ READ DATA SET ********(FILE ***) WHEN IT WAS ØPENED FØR ØUTPUT.

IBM 7094 GINØ was called to READ a data block opened for output.

3014 *** SYSTEM FATAL MESSAGE 3014, ATTEMPT TØ WRITE DATA SET ********(FILE ***) WHEN IT WAS ØPENED FØR INPUT.

IBM 7094 GINØ was called to WRITE a data block opened for input.

3015 *** SYSTEM FATAL MESSAGE 3015, ATTEMPT TØ FWDREC ØN DATA SET ********(FILE ***) WHEN IT WAS ØPENED FØR ØUTPUT.

IBM 7094 GINØ was called to FWDREC a file opened for output.

3016 *** SYSTEM FATAL MESSAGE 3016, **** MATRIX IS NØT IN PRØPER FØRM IN SUBRØUTINE ****.

This implies that the input matrix is not in the proper form or type acceptable to the subroutine. Check the trailer information on the matrix and the subroutine description for the discrepancy.

3017 *** USER WARNING MESSAGE 3017, ØNE ØR MØRE GRID PØINT SINGULARITIES HAVE NØT BEEN REMØVED BY SINGLE ØR MULTI-PØINT CØNSTRAINTS.

Singularities or near singularities may exist at the grid point level. The listed singularities should be examined for data errors. The check performed here is neither necessary nor sufficient for a singular matrix.

3018 *** SYSTEM FATAL MESSAGE 3018, MØDULE ********, SEQUENCE NØ. ***, REQUIREMENTS EXCEED AVAILABLE FILES.

Segment File Alloctor (SFA) did not have sufficient logical files available to fill the request of the module. Cut module requirements or increase the logical files within the computer system. See Section 5 of the Programmer's Manual.

3019 *** USER FATAL MESSAGE 3019, MAXIMUM LINE CØUNT EXCEEDED IN SUBRØUTINE **** LINE CØUNT EQUALS ****.

The total number of lines written on the system output file has exceeded the set limit (default value is 20,000). If you wish to increase this value, include a card of the form "MAXLINES=n" in your Case Control Deck.

3020 *** SYSTEM FATAL MESSAGE 3020, GNFIST ØVERFLØWED FIST TABLE AT SEQUENCE NØ. *** DATA SET ********.

Generate FIST (GNFIST) routine overflowed FIST /XFIST/. Increase complied size. See Section 2 of the Programmer's Manual.

3021 *** SYSTEM FATAL MESSAGE 3021, FILE *** NØT DEFINED IN FIST.

An operation other than ØPEN or CLØSE is requested on a file which is not defined in the FIST.

3022 *** SYSTEM WARNING MESSAGE 3022, DATA SET ******** IS REQUIRED AS INPUT AND IS NØT ØUTPUT BY A PREVIØUS MØDULE IN THE CURRENT DMAP ROUTE.

Segment File Allocator (SFA) detected that an input data block to a future module has not been generated. If the future module requires that this data block exist, the module may terminate with a fatal error.

3023 *** USER INFØRMATIØN MESSAGE 3023, B = ****, C = ****, R = ****.

Gives the upper bandwidth (B) and number of active columns (C) used in the decomposition.

3024 *** USER INFØRMATIØN MESSAGE 3024, THE BANDWIDTH ØF MATRIX **** EXCEEDS THE MAXIMUM BANDWIDTH A MAXIMUM BANDWIDTH OF **** WILL BE USED.

This message indicates that a matrix has scattered terms way off the diagonal (i.e., a large bandwidth). Instead of searching all combinations of B and C, the search is started at the maximum bandwidth.

3025 *** SYSTEM FATAL MESSAGE 3025, ILLEGAL INDEX IN ACTIVE RØW ØR CØLUMN CALCULATIØN IN ****.

Possible machine error. Rerun problem. If error persists, a code error exists in the decomposition routine.

3026 *** SYSTEM FATAL MESSAGE 3026, MATRIX **** EXCEEDS MAXIMUM ALLØWABLE SIZE FØR BANDWIDTH PLUS ACTIVE CØLUMNS. BMAX = ****, CMAX = ****.

Sufficient space was not reserved for the generation of the B vs. C vector. SDCØMP should be recompiled to increase BMAX and CMAX.

3027 *** USER INFØRMATIØN MESSAGE 3027, DECØMPØSITIØN TIME ESTIMATE IS ****.

Gives the estimated time required for a decomposition in seconds.

3028 *** USER INFØRMATIØN MESSAGE 3028, BBAR = ****, CBAR = ****. R = ****.

Gives the lower bandwidth (BBAR) and number of active rows (CBAR) used in the decomposition.

3029 *** SYSTEM FATAL MESSAGE 3029, PHYSICAL END-ØF-FILE ENCØUNTERED ØN DATA SET **** (FILE ****).

Since logical End-Of-Files are used by GINØ, a physical End-Of-File indicates an attempt to read beyond valid data.

3032 *** USER FATAL MESSAGE 3032, UNABLE TØ FIND SELECTED SET (****) IN TABLE (****) IN SUBRØUTINE (****).

A particular set used in the problem was not included in the data. Good examples are loads, initial conditions, or frequency sets. Include the required data or change the Case Control Deck to select data already in problem. Set zero (0) has a special meaning. A set selection was required, but none was made. For example, no METHØD was selected for an eigenvalue extraction problem.

This message can also indicate that a LØAD card has referenced another LØAD card, which is not permitted.

3033 *** USER FATAL MESSAGE 3033, SUBCASE ID **** IS REFERENCED ØN ØNE ØR MØRE RANDPS CARDS BUT IS NØT A CURRENT SUBCASE ID.

The RANDPS set selected can only reference subcase identification numbers included in the current loop. All subcases in which the direct input matrices or transfer functions do not change are run together. Either add a subcase with referenced identification number,

change your RANDPS cards or change the identification numbers on your current subcases.

3034 *** USER WARNING MESSAGE 3034, ØRTHØGØNALITY CHECK FAILED, LARGEST TERM = **** EPSI = ****.

The off-diagonal terms of the modal mass matrix are larger than the user input criteria on the EIGB or EIGR bulk data card. The eigenvectors are not orthogonal to this extent. This nonorthogonality is especially important if a modal formulation is contemplated.

3035 *** USER INFØRMATIØN MESSAGE 3035, FØR LØAD ** EPSILØN SUB E=*****.

This is an informative message reflecting the accumulated round-off error of the static solution.

3036 *** SYSTEM FATAL MESSAGE 3036, DATA SET ******** IS REQUIRED AS INPUT BUT HAS NØT BEEN GENERATED ØR PURGED.

3038 *** SYSTEM FATAL MESSAGE 3038, DATA SET *** DØES NØT HAVE MULTIREEL CAPABILITY.

Computer hardware/software does not support multireel files.

3039 *** SYSTEM FATAL MESSAGE 3039, ENDSYS CANNØT FIND SAVE FILE.

File cannot be found to save and restore executive tables during link switching.

3040 *** SYSTEM FATAL MESSAGE 3040, ATTEMPT TØ WRITE DATA SET ********(FILE ***) WHEN IT IS AN INPUT FILE.

Input data blocks for a module (100 .LT. NAME .LT. 200) may be read only.

3041 *** USER WARNING MESSAGE 3041, EXTERNAL GRID PØINT *** DØES NØT EXIST ØR IS NØT A GEØMETRIC GRID PØINT. THE BASIC ØRIGIN WILL BE USED.

The reference grid point specified on the PARAM GRDPNT card for weight and balance calculations in GPWG cannot be used.

3042 *** USER WARNING MESSAGE 3042, INCØNSISTENT SCALAR MASSES HAVE BEEN USED. EPSILØN/DELTA = *****.

The GPWG has detected inconsistant scalar masses. Direct masses have been used. Skew inertia's will result. Examine your scalar masses and CØNM1 cards.

3043 *** USER FATAL MESSAGE 3043, UNCØNNECTED EXTRA PØINT (MØDAL CØØRDINATE=***) HAS BEEN DETECTED BY SUBRØUTINE ****.

Extra points must be connected via Direct Matrix Input (or Transfer Functions) in modal transient or frequency response.

3044 *** USER FATAL MESSAGE 3044, A PØINT ØN NØNLINEAR LØAD SET **** NØLIN **** IS NØT AN EXTRA PØINT. ØNLY EXTRA PØINTS MAY HAVE NØNLINEAR LØADS IN A MØDAL FØRMULATIØN.

Modal transient analysis (Rigid Format D-12) will support nonlinear loads only on extra points. Pick another nonlinear load set.

3045 *** USER WARNING MESSAGE 3045, INSUFFICIENT TIME TØ CØMPLETE THE REMAINING ** SØLUTIØN(S) IN MØDULE ***.

The time specified on the NASTRAN TIME card has expired in the named module. The module will be terminated. NASTRAN will continue running until the time on the job card

expires. Restart to obtain print-out, complete solutions or rerun problem.

3046 *** USER FATAL MESSAGE 3046, YØUR SELECTED LØADING CØNDITIØN, INITIAL CØNDITIØN, AND NØNLINEAR FØRCES ARE NULL. A ZERØ SØLUTIØN WILL RESULT.

Transient solution must have one of the above nonzero.

3047 *** USER FATAL MESSAGE 3047, NØ MØDES WITHIN RANGE AND LMØDES=0. A MØDAL FØRMULATIØN CANNØT BE MADE.

The modes used for a modal formulation must be selected by a PARAM card. Set LFREQ, HFREQ or LMØDES to request modes.

3048 *** SYSTEM FATAL MESSAGE 3048, BUFFER CØNTRØL WØRD INCØRRECT FØR GINØ **** ØPERATIØN ØN DATA BLØCK ****.

The buffer control word has been destroyed outside of GINØ or an attempt to READ a file opened to WRITE or similar error has occurred.

3049 *** SYSTEM FATAL MESSAGE 3049, GINØ UNABLE TØ PØSITIØN DATA BLØCK **** CØRRECTLY DURING **** ØPERATIØN.

A block number read does not match the expected block number. The file has been repositioned outside the GINØ environment or a machine or operating system error has occurred.

3050 *** USER FATAL MESSAGE 3050, INSUFFICIENT TIME REMAINING FØR DECØMPØSITIØN, ****. TIME ESTIMATE IS **** SECONDS.

The time estimated for a decomposition exceeds the remaining time. Increase the time estimate for the run.

3051 *** USER FATAL MESSAGE 3051, INITIAL CØNDITIØN SET **** WAS SELECTED FØR A MØDAL TRANSIENT PRØBLEM. INITIAL CØNDITIØNS ARE NØT ALLØWED IN SUCH A PRØBLEM.

3052 *** USER WARNING MESSAGE 3052, A RANDØM REQUEST FØR CURVE TYPE - **** -, PØINT - **** CØMPØNENT - **** -, SPECIFIES TØØ LARGE A CØMPØNENT ID. THE LAST CØMPØNENT WILL BE USED.

3053 *** USER WARNING MESSAGE 3053, THE ACCURACY ØF EIGENVALUE **** IS IN DØUBT. GIVENS-ØR FAILED TØ CØNVERGE IN **** ITERATIØNS.

Each eigenvalue is computed to the precision limits of each machine consistent with the maximum number of iterations allowed. A programming change would be required to increase the maximum iteration parameter.

3054 *** USER WARNING MESSAGE 3054, THE ACCURACY ØF EIGENVECTOR **** CØRRESPØNDING TØ THE EIGENVALUE **** IS IN DØUBT.

The eigenvector failed to converge in the allowable number of iterations. Particular attention should be given to the off-diagonal terms of the modal mass matrix (MI) to determine if this vector is orthogonal to the remaining vectors.

3055 *** USER FATAL MESSAGE 3055, AN ATTEMPT TØ MULTIPLY ØR MULTIPLY AND ADD NØN-CØNFØRMABLE MATRICES TØGETHER WAS MADE IN MØDULE ******.

The multiply/add subroutine requires conformable matrices. There are two possible equations

1. $[X] = [A][B] + [C]$

The number of columns of [A] must be equal to the number of rows of [B] and the number of columns of [C] must be equal to the number of columns of [B] and the number of rows of [C] must be equal to the number of rows of [A].

2. $[X] = [A]^T[B] + [C]$

The number of rows of [A] must be equal to the number of rows of [B]; the number of columns of [C] must be equal to the number of columns of [B] and the number of rows of [C] must be equal to the number of columns of [A].

7.1 NASTRAN DICTIONARY

This section contains descriptions of mnemonics, acronyms, phrases, and other commonly used NASTRAN terms. The first column of the Dictionary contains the NASTRAN terms in alphabetical order. The second column contains a code indicating a general category for each term. The codes and categories, along with general references to the Programmer's Manual and User's Manual, are as follows:

Code	Category	General Reference
IA	Input - Executive Control	UM-2.2
IB	Input - Bulk Data	UM-2.4
IC	Input - Case Control	UM-2.3
EM	Executive Module	UM-5.3.4
FMS	Functional Module - Structural	PM-4
FMM	Functional Module - Matrix Operation	UM-5.3.1
FMU	Functional Module - Utility	UM-5.3.2
FMX	Functional Module - User	UM-5.3.3
DBM	Data Block - Matrix	PM-2
DBT	Data Block - Table	PM-2
P	Parameter Name	UM-3
L	Rigid Format Label	UM-3
PH	Common Phase or Term	
M	Miscellaneous	

The third column of the Dictionary contains a definition or description of the terms given in the first column. References to the User's Manual are indicated by UM-i and the Programmer's Manual by PM-i, where i is the section number of the manual. References to particular rigid formats are indicated by D-i where i is the displacement approach rigid format number.

A	P	Parameter value used to control utility module MATGPR print of A-set matrices.
ACCE	IC	Abbreviated form of ACCELERATIØN.
ACCELERATIØN	IC	Output request for acceleration vector. (UM-2.3, 4.2)
Active Column	PH	Column containing at least one nonzero term outside the band.
ADD	FMM	Functional module to add two matrices together.
ADD	M	Parameter constant used in utility module PARAM.
ALL	IC	Output request for all of a specified type of output.
ALLEDGE TICS	IC	Requests tic marks on all edges of X-Y plot.
ALTER	IA	Alter statement for DMAP or rigid format.
ALWAYS	P	Parameter set to -1 by a PARAM statement in the Piecewise Linear Analysis Rigid Format (D-6).
AND	M	Parameter constant used in executive module PARAM.
AØUT$	M	Indicates restart with solution set output request.
APP	IA	Control card which specifies approach (DISP or DMAP).
APPEND	M	File may be extended (see FILE).
AUTØ	IC	Requests X-Y plot of autocorrelation function.
AUTØ	DBT	Autocorrelation function table.
AXES	IC	Defines orientation of object for structure plot.
AXIC	DBT	Generated by Input File Processor 3 (IFP3) for axisymmetrical conical shell problems.
AXIC	IB	Axisymmetrical conical shell definition card. When this card is present, most other bulk data cards may not be used.
AXISYMMETRIC	IC	Selects boundary conditions for axisymmetric shell problem.

B	PH	Upper semiband of matrix.
B2DD	DBM	$[B^2_{dd}]$ - Partition of direct input damping matrix.
B2PP	DBM	$[B^2_{pp}]$ - Direct input damping matrix for all physical points.
B2PP	IC	Selects direct input matrices - input on DMIG bulk data cards for use in Dynamics Rigid Formats (D-7 thru D-12).
B2PP$	M	Indicates restart with change in direct input damping matrices.
BAA	DBM	$[B_{aa}]$ - Partition of damping matrix
BALL EDGE TICS	IC	Request for all edge tic marks to be plotted on lower frame of an X-Y plot.
BAR	IC	Requests structure plot for all bar elements.
BARØR	IB	Bar orientation default definition.
BBAR	PH	Lower semiband of matrix.
BDD	DBM	$[B_{dd}]$ - Damping matrix used in direct formulation of dynamics problems (D-7 thru D-9).
BDEBA	P	Parameter used to indicate equivalence of BDD and BAA.
BEGIN	EM	The first DMAP statement is always BEGIN.
BEGIN BULK	IB	Control card which marks the end of the case control deck. Cards following this card are assumed to be bulk data cards.
BFF	DBM	$[B_{ff}]$ - Partition of damping matrix.
BGG	DBM	$[B_{gg}]$ - Damping matrix generated by Structural Matrix Assembler.
BGPDT	DBT	Basic grid point definition table.
BHH	DBM	$[B_{hh}]$ - Partition of damping matrix.
BKLO	P	Constant parameter value used in functional module SDR2 in the Buckling Analysis Rigid Format (D-5).
BKL1	P	Constant parameter value used in functional module SDR2 in the Buckling Analysis Rigid Format (D-5).
BL	IC	Requests Benson Lehner plotter.
BLANK FRAMES	IC	Requests blank frames between structure plots (UM-4.1).
BLEFT TICS	IC	Request for left edge tic marks to be plotted on bottom frame of an X-Y plot.
BNN	DBM	$[B_{nn}]$ - Partition of damping matrix.
BØTH	IC	Bulk data echo option - Requests both unsorted and sorted printout of bulk data deck.
BPI	IC	Bits per inch - Plot tape density must be specified on control cards in addition to this data card. The required value will vary from one installation to another.

BQG	DBM	Single-point forces of constraint for a Buckling Analysis problem. (D-5)
BRIGHT TICS	IC	Request for right edge tic marks to be plotted on bottom frame for X-Y plot.
BUCKLING	P	Constant parameter value used in functional module READ in the Buckling Analysis Rigid Format (D-5).
BUCKLING	P	Used in printing rigid format error messages for Buckling Analysis (D-5).
Bulk Data Deck	PH	The third of the three data decks necessary to run a problem under the NASTRAN system. This deck begins with the BEGIN BULK card and ends with the ENDDATA card, and contains the data of the mathematical model. The format of each bulk data card is fixed field, 8 or 16 columns for each value.

C	M	Used in parameter section of DMAP statement. Indicates that parameter is a constant.
C	PH	Symbol for active column in triangular decomposition ($\bar{C}$ used for active rows).
CALCØMP	IC	Request California Computer plotter.
CAMERA	IC	Selects one or both of the two cameras for the SC 4020 cathode ray tube electronic plotter. This information must usually also be given to the plotter operator on the run submittal slip which will vary from one installation to another. (UM-4)
CARDNØ	P	Parameter used to accumulate a count of all card output punched except the NASTRAN restart dictionary.
CASE	FMS	Extracts user request from CASECC for current loop in dynamics rigid formats (D-7 thru D-12).
Case Control Deck	PH	The second of the three data decks necessary to run a problem under the NASTRAN system. It contains cards which select particular data sets from the Bulk Data Deck, output request cards and titling information. Cards in this deck are free field.
CASECC	DBT	Case control data block.
CASEXX	DBT	Case control data block as modified by functional module CASE.
CBAR	IB	Bar element connection definition card.
CCØNEAX	IB	Axisymmetrical conical shell element connection card.
CDAMP1	IB	Scalar damper connection definition card.
CDAMP2	IB	Scalar damper property and connection definition card.
CDAMP3	IB	Scalar damper connection definition card (connecting scalar points).
CDAMP4	IB	Scalar damper property and connection definition card (connecting scalar points).
CEAD	FMS	Complex Eigenvalue Analysis - Displacement.
CEIG	P	Parameter used in SDR2 in Complex Eigenvalue Analysis (D-7 and D-10).
CEIGN	P	Parameter used in VDR in Complex Eigenvalue Analysis (D-7 and D-10).
CELAS1	IB	Scalar spring connection definition card.
CELAS2	IB	Scalar spring property and connection definition card.
CELAS3	IB	Scalar spring connection definition card (connecting scalar points).
CELAS4	IB	Scalar spring property and connection definition card (connecting scalar points).
CEND	IA	The last card of the Executive Control Deck.

Checkpoint	PH	The process of writing selected data blocks onto the New Problem Tape for subsequent restarts.
CHKPNT	EM	Checkpoint module.
CHKPNT	IA	Request for checkpoint execution.
CLAMA	DBT	Complex eigenvalue output table.
CLEAR	IC	Causes all parameter values used for X-Y plots to be reset to their default values except plotter and the titles (UM-4.2).
CMASS1	IB	Scalar mass connection definition card.
CMASS2	IB	Scalar mass property and connection definition card.
CMASS3	IB	Scalar mass connection definition card (connecting scalar points).
CMASS4	IB	Scalar mass property and connection definition card (connecting scalar points).
CMETHØD	IC	Complex eigenvalue analysis method selection.
CMETHØD$	M	Indicates restart with change in complex eigenvalue analysis method selection.
CMPLEV	P	Parameter used in GKAD to indicate complex eigenvalue problem.
Cold Start	PH	A NASTRAN problem initiated at its logical beginning. A cold start will never use an Old Problem Tape but it may create a New Problem Tape for subsequent restarts.
CØLØR	IC	Selects ink color for table plotters (UM-4.1).
CØND	EM	Conditional transfer.
CØNM1	IB	Structural mass element connection definition card.
CØNM2	IB	Structural mass element connection definition card.
CØNRØD	IB	Rod element property and connection definition card.
CØNRØD	IC	Requests structure plot for all CØNRØD elements.
CØRD1C	IB	Cylindrical coordinate system definition (by grid point ID).
CØRD1R	IB	Rectangular coordinate system definition (by grid point ID).
CØRD1S	IB	Spherical coordinate system definition (by grid point ID).
CØRD2C	IB	Cylindrical coordinate system definition (by coordinates).
CØRD2R	IB	Rectangular coordinate system definition (by coordinates).
CØRD2S	IB	Spherical coordinate system definition (by coordinates).
CØSINE	IC	Indicates cosine boundary conditions for conical shell problem.
CØUPMASS	P	Parameter used to request coupled mass.

CPHID	DBM	Complex Eigenvectors - solution set.
CPHIP	DBM	Complex eigenvectors - physical set.
CQDMEM	IB	Quadrilateral membrane element connection definition card.
CQDPLT	IB	Quadrilateral bending element connection definition card.
CQUAD1	IB	General Quadrilateral element connection definition card.
CQUAD2	IB	Homogeneous quadrilateral element connection definition card.
CRØD	IB	Rod element connection definition card.
CSHEAR	IB	Shear panel element connection definition card.
CSTM	DBT	Coordinate System Transformation Matrices.
CTØRDRG	IB	Toroidal ring element connection card.
CTRAPRG	IB	Trapezoidal ring element connection card.
CTRBSC	IB	Basic bending triangular element connection definition card.
CTRIA1	IB	General triangular element connection definition card.
CTRIA2	IB	Homogeneous triangular element connection definition card.
CTRIARG	IB	Triangular ring element connection card.
CTRMEM	IB	Triangular membrane element connection definition card.
CTRPLT	IB	Triangular bending element connection definition card.
CTUBE	IB	Tube element connection definition card.
CTWIST	IB	Twist panel element connection definition card.
CURVLINESYMBØL	IC	Request to connect points with lines and/or to use symbols for X-Y plots.
CVISC	IB	Viscous damper element connection definition card.

D	P	Parameter value used to control utility module MATGPR print of solution set matrices.
DAREA	IB	Dynamic load scale card.
Data Block	PH	Designates a set of data (matrix, table) occupying a file. A file is "allocated" to a data block and a data block is "assigned" to a file.
Data Pool File	PH	An executive file containing the ØSCAR and any data blocks pooled by the Executive Segment File Allocator (XSFA) module. The contents of this file are described within the data pool dictionary (DPL).
DD	IC	Requests Data Display plotter.
DDR1	FMS	Dynamic Data Recovery - phase 1.
DDR2	FMS	Dynamic Data Recovery - phase 2.
Deck	PH	1. NASTRAN Data Deck 2. Executive Control Deck 3. Case Control Deck 4. Bulk Data Deck 5. Restart Deck
DECØMP	FMM	To decompose a square matrix into upper and lower triangular factors.
Default	PH	Many NASTRAN data items have default values supplied by the system. For example, the default value for MAXLINES is 20000.
DEFØRM	IB	Enforced element deformation definition card.
DEFØRM	IC	Enforced element deformation set selection.
DEFØRM$	M	Indicates restart with change in enforced element deformation selection.
DEFØRMATIØN	IC	Indicates subcases to be used for deformed structure plots.
DELAY	IB	Dynamic load time delay card.
Delete	IB	Delete cards from Bulk Data Deck
DELTAPG	DBM	Incremental load vector in Piecewise Linear Analysis Rigid Format (D-6).
DELTAQG	DBM	Incremental vector of single point constraint forces in the Piecewise Linear Analysis Rigid Format (D-6).
DELTAUGV	DBM	Incremental displacement vector in the Piecewise Linear Analysis Rigid Format (D-6).
DENSITY	IC	Density of lines for SC 4020 plotter.
DENSITY	IC	Plot tape density must be specified to plotter operator on run submittal form and will vary from one installation to another (UM-4.1).
DET	IB	Eigenvalue analysis method option - determinant (see EIGR, EIGB, EIGC).

DIFF	P	Parameter used in the Piecewise Linear Analysis Rigid Format (D-6).
DIFFSTIF	P	Parameter used in the PRTPARM module in the Differential Stiffness Rigid Format (D-4).
DIRCEAD	P	Used in printing rigid format error messages for direct complex eigenvalue analysis (D-7)
DIRECT	P	Parameter used to indicate direct formulation of dynamics problems (D-7 thru D-9).
DIRFRRD	P	Used in printing rigid format error messages for direct frequency response.
DIRTRD	P	Used in printing rigid format error messages for direct transient response (D-9).
DISP	IA	Displacement approach to structural analysis.
DISP	IC	Abbreviated form of DISPLACEMENT.
DISPLACEMENT	IC	Request for output of displacement vector or eigenvector. (UM-2.3, 4.2)
DIV	P	Parameter constant used in utility module PARAM.
DLØAD	IB	Dynamics load assembly definition.
DLØAD	IC	Dynamic load set solution request.
DLØAD$	M	Indicates restart with change in dynamic load set request.
DLT	DBT	Dynamic Loads Table.
DM	DBM	[D] - Rigid body transformation matrix.
DMAP	IA	Approach option (Direct Matrix Abstraction Program).
DMAP Instruction	PH	A statement in the DMAP Language.
DMAP Language	PH	Data block-oriented language used by the NASTRAN Executive System to direct the sequence and flow of modules to be executed.
DMAP Loop	PH	A DMAP sequence to be repeated, initiated with a LABEL DMAP instruction and terminated by a REPT DMAP instruction.
DMAP Module	PH	A module called by means of a DMAP instruction.
DMAP Sequence	PH	A set of DMAP instructions.
DMI	IB	Direct Matrix Input (data block is defined and used by user).
DMIG	IB	Direct Matrix Input - used in dynamic rigid formats (D-7 thru D-12).
DPD	FMS	Dynamic Pool Distributor.
DPH	M	Data Pool Housekeeper - Executive routine.
DPHASE	IB	Dynamic load phase lead card.

DS0	P	Parameter used in functional module SDR2 in the Differential Stiffness Rigid Format (D-4).
DS1	P	Parameter used in functional module SDR2 in the Differential Stiffness Rigid Format (D-4).
DSCØ	IC	Abbreviated form of DSCØEFFICIENT.
DSCØ$	M	Indicates restart with change in differential stiffness load factors.
DSCØEFFICIENT	IC	Selects set of differential stiffness factors which have been input on DSFACT cards.
DSCØSET	P	Differential stiffness coefficient set number. Used in the Differential Stiffness Rigid Format (D-4).
DSFACT	IB	Differential stiffness factor set definition card.
DSLØØP	P	Controls DMAP looping in the Differential Stiffness Rigid Format (D-4).
DSMG1	FMS	Differential Stiffness Matrix Generator - phase 1.
DSMG2	FMS	Differential Stiffness Matrix Generator - phase 2.
DTI	IB	Direct Table Input - means by which user may directly input any table data block.
DUMMØD1	FMX	This module is reserved for user implementation.
DUMMØD2	FMX	This module is reserved for user implementation.
DUMMØD3	FMX	This module is reserved for user implementation.
DUMMØD4	FMX	This module is reserved for user implementation.
Dump	PH	Printed output of contents of all, or a portion, of main memory at some point in the problem solution.
DYNAMICS	DBT	Generated by the Input File Processor (IFP) for Real Eigenvalue, Buckling, or any of the Dynamics Rigid Formats (D-3, D-5 and D-7 thru D-12).

E	P	Parameter value used by MATGPR to print matrices associated with extra points.
EAI	IC	Requests EAI 3500 plotter.
ECHØ	IC	Output request statement for echo of bulk data.
ECPT	DBT	Element Connection and Properties Table.
ECPTNL	DBT	Nonlinear subset of the ECPT. This data block is used only in the Piecewise Linear Analysis Rigid Format (D-6).
ECPTNL1	DBT	Updated version of the ECPTNL data block. Used only in the Piecewise Linear Analysis Rigid Format (D-6).
ECPTNLPG	P	Error flag for the Piecewise Linear Analysis Rigid Format (D-6). If all elements in a piecewise linear analysis problem are linear, this error flag is set and a DMAP exit occurs.
ECT	DBT	Element Connection Table.
EDT	DBT	Enforced Deformation Table - generated by Input File Processor.
EED	DBT	Eigenvalue Extraction Data table (D-3, D-5, D-7, D-10, D-11, D-12).
EIGB	IB	Real eigenvalue extraction data for buckling analysis (D-5).
EIGC	IB	Complex eigenvalue extraction data card (D-7 and D-10).
EIGP	IB	Complex eigenvalue pole definition card (D-7 and D-10).
EIGR	IB	Real eigenvalue extraction data for normal mode analysis (D-3, D-10 thru D-12).
ELEMENTS	IC	Used in element set definition for structure plot.
ELFØRCE	IC	Output request card for element forces. (UM-2.3, 4.2)
ELSETS	DBT	Element plot set connection tables.
ELSTRESS	IC	Request for output of element stresses. (UM-2.3, 4.2)
END	IA	END is the last statement in all DMAP sequences.
ENDALTER	IA	Last card of alter packet.
ENDDATA	IB	End of Bulk Data Deck.
EØF	PH	End-of-File.
EPØINT	IB	Extra point definition card - used in dynamics problems only.
EPT	DBT	Element Property Table - output by Input File Processor.
EQDYN	DBT	Equivalence of internal and external indices - dynamics.
EQEXIN	DBT	Equivalence of internal and external indices.
EQUIV	EM	Equivalence data blocks.

Equivalence	PH	Data blocks are considered equivalenced when references to their equivalent names access the same physical data file.
ERRØR1	L	Label used when rigid format errors are detected.
ERRØR2	L	Label used when rigid format errors are detected.
ERRØR3	L	Label used when rigid format errors are detected.
ERRØR4	L	Label used when rigid format errors are detected.
ERRØR5	L	Label used when rigid format errors are detected.
ERRØR6	L	Label used when rigid format errors are detected.
EST	DBT	Element Summary Table.
ESTL	DBT	Element Summary Table for Linear elements. Used only in the Piecewise Linear Analysis Rigid Format (D-6).
ESTNL	DBT	Element Summary Table for Nonlinear elements. Used only in the Piecewise Linear Analysis Rigid Format (D-6).
ESTNL1	DBT	Updated version of the ESTNL data block. Used only in the Piecewise Linear Analysis Rigid Format (D-6).
EXCEPT	IC	Forms exceptions to string of values in set declarations.
EXCLUDE	IC	Used in set definition for structure plots.
Executive	PH	1. Executive Control Deck 2. NASTRAN Executive System
Executive Control Deck	PH	The first of the three data decks necessary to run a problem under the NASTRAN system. This deck begins with the ID card and ends with the CEND card. Among other things, cards in this deck select the solution approach and rigid format to be used, limit the execution time, and control checkpointing and restart.
Executive System	PH	The Executive System initiates a NASTRAN problem solution via the Preface, allocates files to data blocks during problem solution, controls the sequence of the modules to be executed, and provides for problem restart capability.
EXIT	EM	Program termination DMAP statement.
External Sort	PH	Order of grid, scalar and extra points determined by the user's numerical order of point identification.
Extra Point	PH	A "point" which is defined on an EPØINT bulk data card. An extra point has no geometrical coordinates, defines only one degree of freedom of the model and is used only in dynamics solutions.

F	P	Parameter value used by MATGPR to print F-set matrices.
FBS	FMM	Forward and Backward Substitution.
FE	P	Parameter used by MATGPR to print out FE-set matrices.
FIAT	M	File Allocation Table. Core resident executive table where data block names, status of the data blocks (assigned to a file, purged, equivalenced, etc.) and trailer for the data blocks are stored.
FILE	M	The FILE DMAP statement specifies data block characteristics such as TAPE, SAVE, and APPEND.
File	PH	Designates an auxiliary storage area or unit.
FIND	IC	Selects parameters for structure plot.
FINIS	L	Label used in all displacement rigid format DMAPs to terminate execution of DMAP.
Finite Element	PH	Idealized unit of a structural model that represents the distributed elastic properties of a structure.
FIST	M	File Status Table. Core resident executive table where internal file names and pointers to the FIAT, pertaining only to the module being executed, are stored.
FMØDE	P	Mode number of first mode selected by user in modal dynamics formulations.
FØRCE	IB	Static load definition (vector).
FØRCE	IC	Request for output of element forces.
FØRCE1	IB	Static load definition (magnitude and two grid points).
FØRCE2	IB	Static load definition (magnitude and four grid points).
FØRCEAX	IB	Static load definition for conical shell problem.
FREQ	IB	Frequency list definition.
FREQ$	M	Indicates restart with change in frequencies to be solved.
FREQ1	IB	Frequency list definition (linear increments).
FREQ2	IB	Frequency list definition (logarithmic increments).
FREQRESP	P	Parameter used in SDR2 to indicate a frequency response problem.
FREQUENCY	IC	Selects the set of frequencies to be solved in frequency response problems.
FRL	DBT	Frequency Response List.
FRQSET	P	Used in FRRD to indicate user selected frequency set.
FRRD	FMS	Frequency and Random Response - Displacement approach.
Functional Module	PH	An independent group of subroutines that perform a structural analysis function.

G	P	1. Parameter used by MATGPR to print G-set matrices. 2. Parameter used to input uniform structural damping coefficient (D-7 thru D-9).
GEI	DBT	General Element Input.
GENEL	IB	General element definition.
GEØM1	DBT	Geometric data input table - generated by the Input File Processor.
GEØM2	DBT	Connection input table - generated by the Input File Processor.
GEØM3	DBT	Static load and temperature input table - generated by the Input File Processor.
GEØM4	DBT	Displacement sets definition input table - generated by the Input File Processor.
GINØ	M	General input/output. GINØ is a collection of subroutines which is the input/output control system for NASTRAN.
GINØ Buffer	PH	Storage reserved in open core for each GINØ file opened. The size of the buffer is machine dependent.
GINØ File Number	PH	File number used internally in DMAP modules to access data blocks.
GIV	IB	Eigenvalue analysis method option - Givens (see EIGR).
GKAD	FMS	General [K] Assembler - Direct.
GKAM	FMS	General [K] Assembler - Modal.
GM	DBM	$[G_m]$ - multipoint constraint transformation matrix.
GMD	DBM	$[G_m^d]$ - mulitpoint constraint transformation matrix used in dynamic analysis.
GNFIAT	M	Generate FIAT. The preface routine which generates the initial FIAT.
GØ	DBM	$[G_o]$ - structural matrix partitioning transformation matrix.
GØD	DBM	$[G_o^d]$ - Structural matrix partitioning transformation matrix used in dynamic analysis.
GP1	FMS	Geometry Processor - part 1.
GP2	FMS	Geometry Processor - part 2.
GP3	FMS	Geometry Processor - part 3.
GP4	FMS	Geometry Processor - part 4.
GPCT	DBT	Grid Point Connection Table.
GPDT	DBT	Grid Point Definition Table.
GPI	M	General Problem Initialization (see XGPI).
GPL	DBT	Grid Point List.

GPLD	DBT	Grid Point List used in dynamic analysis.
GPSETS	DBT	Grid point plot sets.
GPSP	FMS	Grid Point Singularity Processor.
GPST	DBT	Grid Point Singularity Table.
GPTT	DBT	Grid Point Temperature Table.
GPWG	FMS	Grid Point Weight Generator.
GRAV	IB	Gravity vector definition card.
GRDPNT	P	Used in all displacement rigid formats to specify execution of the grid point weight generator (GPWG) by the user. A positive value references a grid point of the structural model. A value of zero indicates the origin of the basic coordinate system.
GRDSET	IB	Grid point default definition card.
GRID	IB	Grid point definition card.
Grid Point	PH	A point in Euclidean 3 dimensional space defined on a GRID bulk data card. A grid point defines 6 degrees of freedom, 3 translational and 3 rotational.
GRID PØINTS	IC	Used in set definition for structure plots.
HARMØNICS	IC	Controls number of harmonics output in axisymmetric shell problems.
Header Record	PH	Initial record of a data block. Typically a header record contains only 2 BCD words, the alphanumeric name of the data block.
HFREQ	P	High frequency limit for modal formulation of dynamics problems (D-10 thru D-12).

IC	IC	Transient analysis initial condition set selection.
ID	IA	The first card of any data deck is the identification (ID) card. The two data items on this card are BCD values.
IFP	EM	Input File Processor. The preface module which processes the sorted Bulk Data Deck and outputs various data blocks depending on the card types present in the Bulk Data Deck.
IFP1	EM	Input File Processor 1. The preface module which processes the Case Control Deck and writes the CASSECC, PCDB and XYCDB data blocks.
IFP3	EM	Input File Processor 3. The preface module which processes bulk data cards for a conical shell problem.
IMAG	IC	Output request for real and imaginary parts of some quantity such as displacement, load, single point force of constraint element force, or stress.
IMPL	P	Parameter constant used in executive module PARAM.
INCLUDE	IC	Used in set definition for structure plots.
INERTIA	P	Used in printing rigid format error messages for Static Analysis with Inertia Relief (D-2).
INPT	M	A reserved NASTRAN physical unit (Tape) which must be set up by the user when used.
INPUT	FMX	This module is reserved for user implementation.
Input Data Block	PH	A data block input to a module. An input data block must have been previously output from some module and may not be written on.
Input Data Cards	PH	The card input data to the NASTRAN system are in 3 sets, the Executive Control Deck, the Case Control Deck, and the Bulk Data Deck.
INPUTT1	FMX	Dummy user input module.
INPUTT2	FMX	Dummy user input module.
INPUTT3	FMX	Dummy user input module.
INPUTT4	FMX	Dummy user input module.
Internal Sort	PH	Same order as external sort except when SEQGP or SEQEP bulk data cards are used to change the sequence.
INV	IB	Inverse power eigenvalue analysis option - specified on EIGR, EIGB or EIGC cards.
IRES	P	Causes printout of residual vectors in statics rigid formats when set nonnegative via a PARAM bulk data card. (D-1, D-2, D-4, D-5, D-6).
JUMP	EM	Unconditional transfer DMAP statement.
JUMPPLØT	P	Parameter used by structure plotter modules PLTSET and PLØT.

K2DD	DBM	$[K^2_{dd}]$ - Partition of direct input stiffness matrix.
K2PP	DBM	$[K^2_{pp}]$ - Direct input stiffness matrix for all physical points.
K2PP	IC	Direct input stiffness matrix selection.
K2PP$	M	Indicates restart with change in direct input stiffness matrices.
K4AA	DBM	$[K^4_{aa}]$ - Partition of structural damping matrix.
K4FF	DBM	$[K^4_{ff}]$ - Partition of structural damping matrix.
K4GG	DBM	$[K^4_{gg}]$ - Structural damping matrix generated by Structural Matrix Assembler.
K4NN	DBM	$[K^4_{nn}]$ - Partition of structural damping matrix.
KAA	DBM	$[K_{aa}]$ - Partition of stiffness matrix.
KBFS	DBM	$[K^b_{fs}]$ - Partition of combination of elastic stifffness matrix and differential stiffness matrix.
KBLL	DBM	$[K^b_{\ell\ell}]$ - Combination of elastic stiffness and differential stiffness used in static analysis with differential stiffness.
KBSS	DBM	$[K^b_{ss}]$ - Partition of combination of stiffness matrix and differential stiffness matrix.
KDAA	DBM	$[K^d_{aa}]$ - Partition of differential stiffness matrix.
KDAAM	DBM	$-[K^d_{aa}]$ - Differential stiffness matrix used in formulation of buckling problems (D-5).
KDD	DBM	$[K_{dd}]$ - Stiffness matrix used in direct formulation of dynamics problems (D-7 thru D-9).
KDEK2	P	Parameter indicating equivalence of KDD and K2DD.
KDEKA	P	Parameter indicating equivalence of KDD and KAA.
KDFF	DBM	$[K^d_{ff}]$ - Partition of differential stiffness matrix.
KDFS	DBM	$[K^d_{fs}]$ - Partition of differential stiffness matrix.
KDGG	DBM	$[K^d_{gg}]$ - Differential stiffness matrix prepared by Differential Stiffness Matrix Generator
KDNN	DBM	$[K^d_{nn}]$ - Partition of differential stiffness matrix.
KDSS	DBM	$[K^d_{ss}]$ - Partition of differential stiffness matrix.
KFF	DBM	$[K_{ff}]$ - Partition of stiffness matrix.
KFS	DBM	$[K_{fs}]$ - Partition of stiffness matrix.
KGG	DBM	$[K_{gg}]$ - Stiffness matrix generated by Structural Matrix Assembler.
KGGL	DBM	$[K^\ell_{gg}]$ - Stiffness matrix for linear elements. Used only in the Piecewise Linear Analysis Rigid Format (D-6).

KGGLPG	P	Purge flag for KGGL matrix. If set to -1, it implies that there are no linear elements in the structural model. (D-6).
KGGNL	DBM	$[K_{gg}^{n\ell}]$ - Stiffness matrix for the nonlinear elements. Used in the Piecewise Linear Analysis Rigid Format only. (D-6).
KGGSUM	DBM	Sum of KGGNL and KGGL. Used in the Piecewise Linear Analysis Rigid Format only. (D-6).
KGGX	DBM	$[K_{gg}^{x}]$ - Stiffness matrix excluding general elements.
KGGXL	DBM	$[K_{gg}^{x\ell}]$ - Stiffness matrix for linear elements (excluding general elements). Used in the Piecewise Linear Rigid Format only. (D-6).
KHH	DBM	$[K_{hh}]$ - Stiffness matrix used in modal formulation of dynamics problems (D-10 thru D-12).
KLL	DBM	$[K_{\ell\ell}]$ - Stiffness matrix used in solution of problems in static analysis (D-1, D-2, D-4, D-5, D-6).
KLR	DBM	$[K_{\ell r}]$ - Partition of stiffness matrix.
KNN	DBM	$[K_{nn}]$ - Partition of stiffness matrix.
KØØB	DBM	$[\bar{K}_{oo}]$ - Partition of stiffness matrix.
KRR	DBM	$[K_{rr}]$ - Partition of stiffness matrix.
KSS	DBM	$[K_{ss}]$ - Partition of stiffness matrix.

L	P	Parameter value used by MATGPR to print L-set matrices.
LABEL	EM	DMAP location.
LABEL	IC	Defines third line of titles to be printed on each page of printer output. Also used on plots.
LABEL	IC	Requests identification of grid points and/or elements on structure plot.
LAMA	DBT	Real eigenvalues.
LBLi	L	A label used in displacement approach rigid formats where i represents one or more characters used to form unique labels.
LBLL	DBM	$[L^{b}_{\ell\ell}]$ - Lower triangular factor of $[K^{b}_{\ell\ell}]$.
LEFT TICS	IC	Request for tic marks to be plotted on left hand edge of frame for X-Y plots.
LFREQ	P	Low frequency limit for modal formulation of dynamics problems (D-10 thru D-12).
LGPWG	L	Label used in conjunction with the Grid Point Weight Generator.
LINE	IC	Number of data lines printed per page of printer output. It should be set to 50 for 11 x 17 inch paper, and to 35 for 8 1/2 x 17 inch paper.
LLL	DBM	$[L_{\ell\ell}]$ - Lower triangular factor of $[K_{\ell\ell}]$.
LMØDES	P	Number of lowest modes for modal formulation of dynamics problems (D-10 thru D-12).
LØAD	IB	Static load combination definition.
LØAD	IC	Static load set selection.
LØAD$	M	Indicates restart with change in static load set request.
LØGARITHMIC	IC	Requests logarithmic scales for X-Y plots.
LØGPAPER	IC	Requests logarithmic paper for X-Y plots.
LØØ	DBM	$[L_{oo}]$ - Lower triangular factor of $[K_{oo}]$.
LØØP1$	M	Indicates looping problem in modified restart. (PM-4.3.7.1)
LØØPBGN	L	Signifies the beginning of the Piecewise Linear Analysis Rigid Format DMAP Loop. (D-6).
LØØPEND	L	Signifies the end of the Piecewise Linear Analysis Rigid Format DMAP loop. (D-6).
LØØP$	M	Indicates looping problem in modified restart. (PM-4.3.7.1)
LØWER TICS	IC	Request for tic marks to be plotted on bottom edge of frame for X-Y plots.
LUSET	P	Order of USET.
LUSETD	P	Order of USETD.

M	P	Parameter value used by MATGPR to print M-set matrices.
M2DD	DBM	$[M^2_{dd}]$ - Partition of direct input mass matrix.
M2PP	DBM	$[M^2_{pp}]$ - Direct input mass matrix for all physical points.
M2PP	IC	Direct input mass matrix selection.
M2PP$	M	Indicates restart with change in direct input mass matrices.
MAA	DBM	$[M_{aa}]$ - Partition of mass matrix.
MASS	IB	Eigenvector normalization option - used on EIGR card.
MAT1	IB	Material definition card for isotropic material.
MAT2	IB	Material definition card for anisotropic material.
MAT3	IB	Material definition card for orthotropic material.
MATGPR	FMU	Utility module for printing matrices.
MATPØØL	DBT	Grid point oriented direct input matrix data pool, output by Input File Processor and used by functional module MTRXIN.
MATPRN	FMU	Utility module for printing matrices.
MATPRT	FMU	Utility module for printing matrices.
Matrix Control Block	PH	A seven word array, the first word is a GINØ file number, and words 2 through 7 comprise a matrix trailer.
Matrix Data Block	PH	A data block is classified as a matrix if and only if it is generated by one of the NASTRAN matrix packing routines, PACK or BLDPK.
Matrix Decomposition	PH	A factorization of a matrix K so that K = LU where L is a unit lower triangular matrix and U is an upper triangular matrix.
MATS1	IB	Specifies table references for stress-dependent material properties.
MATT1	IB	Specifies table references for temperature-dependent isotropic material properties.
MATT2	IB	Specifies table references for temperature-dependent anisotropic material properties.
MATT3	IB	Specifies table references for temperature-dependent orthotropic material properties.
MAX	IB	Eigenvector normalization option - used on EIGR, EIGB and EIGC cards.
MAXIMUM DEFØRMATIØN	IC	Indicates scale for deformed structure plots.
MAXLINES	IC	Maximum printer output line count - default value is 20000.
MCE1	FMS	Multipoint Constraint Eliminator - part 1.
MCE2	FMS	Multipoint Constraint Eliminator - part 2.

MDD	DBM	$[M_{dd}]$ - mass matrix used in direct formulation of dynamics problems (D-7 thru D-9).
MDEMA	P	Parameter indicating equivalence of MDD and MAA.
MDLCEAD	P	Used in printing rigid format error messages for modal complex eigenvalue analysis (D-10).
MDLFRRD	P	Used in printing rigid format error messages for modal frequency response (D-11).
MDLTRD	P	Used in printing rigid format error messages for modal transient response (D-12).
MERGE	FMM	Matrix merge functional module.
METHØD	IC	Selects method for real eigenvalue analysis.
METHØD$	M	Indicates restart with change in eigenvalue extraction procedures.
MFF	DBM	$[M_{ff}]$ - Partition of mass matrix.
MGG	DBM	$[M_{gg}]$ - Mass matrix generated by Structural Matrix Assembler
MHH	DBM	$[M_{hh}]$ - Mass matrix used in modal formulation of dynamics problems (D-10 thru D-12).
MI	DBM	$[m]$ - Modal mass matrix.
MLL	DBM	$[M_{\ell\ell}]$ - Partition of mass matrix.
MLR	DBM	$[M_{\ell r}]$ - Partition of mass matrix.
MNN	DBM	$[M_{nn}]$ - Partition of mass matrix.
MØAB	DBM	$[\bar{M}_{oa}]$ - Partition of mass matrix.
MØDACC	P	Requests mode acceleration data recovery.
MØDAL	IC	Requests structure plots of mode shapes.
MØDAL	P	Indicates modal as opposed to direct formulation of dynamics problems. (D-10 thru D-12).
MØDEL	IC	Indicates model number of structure plotter.
MØDES	IC	Duplicates output requests for eigenvalue problems.
MØDES	P	Used in printing rigid format error messages for normal modes analysis (D-3).
Modified Restart	PH	Restarting (see Restart) a NASTRAN problem and redirecting its solution by changing the rigid format and/or selected input data.
Module	PH	A logical group of subroutines which performs a defined function.
MØMAX	IB	Conical shell moment definition card.
MØMENT	IB	Static moment load definition (vector).

MØMENT1	IB	Static moment load definition (magnitude and two grid points).
MØMENT2	IB	Static moment load definition (magnitude and four grid points).
MØØB	DBM	$[\bar{M}_{oo}]$ - Partition of mass matrix.
MPC	IB	Multipoint constraint definition.
MPC	IC	Multipoint constraint set request.
MPC$	M	Indicates restart with change in multipoint constraints.
MPCADD	IB	Multipoint constraint set definition.
MPCAX	IB	Conical shell multipoint constraint definition.
MPCF1	P	No multipoint constraints.
MPCF2	P	No change in multipoint constraints for loop.
MPL	PH	Module properties list. The MPL defines each DMAP module's name, the number of input, output and scratch files required and the parameter list. It is used by the preface module XGPI to generate the ØSCAR.
MPT	DBT	Material Properties Table - output by Input File Processor.
MPY	M	Parameter constant used in executive module PARAM.
MPYAD	FMM	Performs multiply-add matrix operation.
MR	DBM	$[m_r]$ - Rigid body mass matrix.
MRR	DBM	$[M_{rr}]$- Partition of mass matrix.
MTRXIN	FMS	Selects direct input matrices for current loop in dynamics problems (D-7 thru D-12).
MX	IC	Indicates negative x-axis direction for structure plot.
MY	IC	Indicates negative y-axis direction for structure plot.
MZ	IC	Indicates negative z-axis direction for structure plot.

N	M	Used in parameter section of DMAP statement. Indicates that parameter may not be given an initial value with a PARAM bulk data card.
N	P	Parameter value used by MATGPR to print N-set matrices.
NASTPLT	IC	Requests NASTRAN general purpose plotter.
NASTRAN	M	Acronym for NAsa STRuctural ANalysis program.
NASTRAN Data Deck	PH	The composite deck consisting of the Executive Control Deck, the Case Control Deck, and the Bulk Data Deck. This deck, when preceeded by any necessary operating system control cards, constitutes the complete card input for a NASTRAN run (PM-5).
NE	P	Parameter value used by MATGPR to print out NE-set matrices.
NEIGV	P	Number of real eigenvalues found.
NEVER	P	Set to +1 by a DMAP PARAM statement in the Piecewise Linear Analysis Rigid Format (D-6).
New Problem Tape	PH	See Problem Tape.
NLFT	DBT	Nonlinear function table.
NLLØAD	IC	Requests nonlinear load output for transient problems.
NØ	IA	Option used on CHKPNT card, indicates that no checkpoint is desired.
NØA	P	Indicates no constraints applied to structural model.
NØB2PP	P	No direct input damping matrix.
NØBGG	P	No viscous damping matrix (D-7 thru D-9).
NØCSTM	P	No Coordinate System Transformation Matrices.
NØD	P	No output request that is limited to independent degrees of freedom.
NØDLT	P	No Dynamic Loads Table.
NØEED	P	No Eigenvalue Extraction Data
NØELMT	P	No elements are defined.
NØFRL	P	No Frequency Response List.
NØGENEL	P	No general elements.
NØGPDT	P	No Grid Point Definition Table.
NØGRAV	P	No gravity loads.
NØK2PP	P	No direct input stiffness matrices.
NØK4GG	P	No structural damping matrix.
NØL	P	No independent degrees of freedom.
NØLIN1	IB	Nonlinear transient dynamic load set definition card.

NØLIN2	IB	Nonlinear transient dynamic load set definition card.
NØLIN3	IB	Nonlinear transient dynamic load set definition card.
NØLIN4	IB	Nonlinear transient dynamic load set definition card.
NØLØØP$	M	Indicates restart of problem without DMAP loop. (PM-4.3.7.1)
NØM2PP	P	No direct input mass matrices.
NØMGG	P	If functional module SMA2 generates a zero mass matrix, NØMGG is set to -1. Otherwise, it is set to +1.
NØMØD	P	Mode acceleration data recovery not requested.
NØNCUP	P	Indicates diagonal MHH, BHH, and KHH allowing uncoupled solution in TRD and FRRD.
NØNE	IC	Override for output and bulk data deck echo requests.
NØNLFT	P	No nonlinear function table.
NØNLINEAR	IC	Selects nonlinear load for transient problems.
NØNLSTR	P	No stress output request for nonlinear elements (D-6).
NØP	M	Parameter constant used in executive module PARAM.
NØP	P	No output request involving dependent degrees of freedom or stresses.
NØPSDL	P	No Power Spectral Density List.
NØSET	P	No dependent coordinates.
NØSIMP	P	No structural elements are defined.
NØSØRT2	P	No request for output sorted by point number or element number.
NØSR	P	No single-point constraints or free body supports.
NØT	M	Parameter constant used in utility module PARAM.
NØTFL	P	No Transfer Function List.
NØTRL	P	No Transient Response List.
NØUE	P	No extra points introduced for dynamic analysis.
NPLALIM	P	Set by module PLA1 as the Piecewise Linear Analysis Rigid Format DMAP loop counter. (D-6)
NPTP	M	New Problem Tape - a reserved NASTRAN physical unit (TAPE) which must be set up by the user when used.
NSIL	P	Order of SIL table.
NSKIP	P	Locate current boundary conditions in Case Control.
NUMF	M	New User Master File - used only when operating NASTRAN as a user master file editor. (See UMFEDIT). A reserved NASTRAN physical unit (tape) which must be set up by the user when used.

NVECTS	P	Number of eigenvectors found.

Ø	P	Parameter value used by MATGPR to print Ø-set matrices.
ØBEF1	DBT	Element force output table (D-5).
ØBES1	DBT	Element stress output table (D-5).
ØBQG1	DBT	Forces of single point constraint output table (D-5).
ØCEIGS	DBT	Complex eigenvalue summary table (D-7, D-10).
ØCPHIP	DBT	Complex eigenvector output table (D-7, D-10).
ØEF1	DBT	Element force output table (D-1, D-2, D-4, D-5, D-6).
ØEF2	DBT	Element force output table - SØRT2 (D-9, D-12).
ØEFB1	DBT	Element force output table (D-4).
ØEFC1	DBT	Element force output table - complex (D-7, D-8, D-10, D-11).
ØEFC2	DBT	Element force output table - complex - SØRT2 (D-8, D-11).
ØEIGS	DBT	Real Eigenvalue summary output table (D-3, D-5).
ØES1	DBT	Element stress output table (D-1, D-2, D-4, D-5, D-6).
ØES2	DBT	Element stress output table - SØRT2 (D-9, D-12).
ØESB1	DBT	Element stress output table (D-4).
ØESC1	DBT	Element stress output table - complex (D-7, D-8, D-10, D-11).
ØESC2	DBT	Element stress output table - complex - SØRT2 (D-8, D-11).
ØFP	FMS	Output File Processor.
ØFREQUENCY	IC	Selects from the solution set of frequencies a subset for output requests.
ØGPST	DBT	Grid point singularity output table.
ØGPWG	DBT	Grid point weight generator output table.
Old Problem Tape	PH	See Problem Tape.
ØLØAD	IC	Request for output of external load vector.
ØMIT	IB	Omitted coordinate definition card.
ØMIT	P	Indicates no omitted coordinates.
ØMIT1	IB	Omitted coordinate definition card.
ØMITAX	IB	Omitted coordinate definition card for conical shell problems.
ØNLES	DBT	Output table for nonlinear element stresses (D-6).
Open Core	PH	A contiguous block of working storage defined by a labeled common block, whose length is a variable determined by the NASTRAN executive routine CØRSZ.
ØPG1	DBT	Static load output table (D-1, D-2, D-4, D-5, D-6).

ØPHID	DBT	Output table for complex eigenvectors - solution set (D-7).
ØPHIG	DBT	Eigenvector output table (D-3, D-5).
ØPHIH	DBT	Output table for complex eigenvectors - solution set (D-10).
ØPNL1	DBT	Output table for nonlinear loads - solution set, SØRT1 (D-9, D-12).
ØPNL2	DBT	Output table for nonlinear loads - solution set, SØRT2 (D-9, D-12).
ØPP1	DBT	Dynamic load output table (D-9, D-12).
ØPP2	DBT	Dynamic load output table - SØRT2 (D-9, D-12).
ØPPC1	DBT	Dynamic load output table - SØRT1, complex (D-8, D-11).
ØPPC2	DBT	Dynamic load output table - SØRT2, complex (D-8, D-11).
ØPTP	M	Old Problem Tape - a reserved NASTRAN physical unit (tape) which must be set up by the user when used.
ØQBG1	DBT	Forces of single-point constraint output table (D-4).
ØQG1	DBT	Single-point constraint force output table (D-1, D-2, D-4, D-5, D-6).
ØQP1	DBT	Single-point constraint force output table - SØRT1 (D-9, D-12).
ØQP2	DBT	Single-point constraint force output table - SØRT2 (D-9, D-12).
ØQPC1	DBT	Single-point constraint force output table - complex, SØRT1 (D-7, D-8, D-10, D-11).
ØQPC2	DBT	Single-point constraint force output table - complex, SØRT2 (D-7, D-8, D-10, D-11).
ØR	M	Parameter constant used in executive module PARAM.
ØRIGIN	IC	Locates origin for structure plot.
ØRTHØGRAPHIC	IC	Specifies orthographic projection for structure plot.
ØSCAR	PH	Operation sequence control array. Executive table residing on the Data Pool File which contains the sequence of operations to be executed for a problem solution. The ØSCAR is an expansion of a DMAP sequence, either input by the user or extracted from a rigid format, in internal format.
ØUBGV1	DBT	Displacement vector output table (D-4).
ØUDV1	DBT	Displacement vector output table - solution set, SØRT1 (D-9).
ØUDV2	DBT	Displacement vector output table - solution set, SØRT2 (D-9).
ØUDVC1	DBT	Displacement vector output table - solution set, SØRT1, complex (D-8, D-11).

ØUDVC2	DBT	Displacement vector output table - solution set, SØRT2, complex (D-8, D-11).
ØUGV1	DBT	Displacement output table (D-1, D-2, D-4, D-5, D-6).
ØUHV1	DBT	Displacement vector output table - solution set, SØRT1 (D-12).
ØUHV2	DBT	Displacement vector output table - solution set, SØRT2 (D-12).
ØUHVC1	DBT	Displacement vector output table - solution set, SØRT1, complex (D-11).
ØUHVC2	DBT	Displacement vector output table - solution set, SØRT2 complex (D-11).
ØUPV1	DBT	Displacement vector output table - SØRT1 (D-9, D-12).
ØUPV2	DBT	Displacement vector output table - SØRT2 (D-9, D-12).
ØUPVC1	DBT	Displacement vector output table - complex, SØRT1 (D-8, D-11).
ØUPVC2	DBT	Displacement vector output table - complex, SØRT2 (D-8, D-11).
ØUTPUT	FMX	This module is reserved for user implementation.
ØUTPUT	IC	Marks beginning of printer output request packet - optional.
Output Data Block	PH	A data block output from a module. A data block may be output from one and only one module. Having been output, it may be used as an input data block as many times as necessary.
ØUTPUT1	FMX	Dummy user output module.
ØUTPUT2	FMX	Dummy user output module.
ØUTPUT3	FMX	Dummy user output module.
ØUTPUT4	FMX	Dummy user output module.
ØUTPUT(PLØT)	IC	Marks beginning of output request packet for structure plots.
ØUTPUT(XYØUT)	IC	Marks beginning of output request packet for X-Y plots.
ØUTPUT(XYPLØT)	IC	Marks beginning of output request packet for X-Y plots.

P	P	Parameter value used in MATGPR to print P-set matrices.
Packed Format	PH	A matrix is said to be in packed format if only the nonzero elements of the matrix are written.
PAPER SIZE	IC	Selects paper size for structure plots using table plotters.
PARAM	FMU	Performs specified operations on DMAP parameters.
PARAM	IB	Parameter definition card.
Parameter	PH	A FØRTRAN variable communicated to a DMAP module by the NASTRAN Executive System through blank common. A parameter's position in the DMAP calling sequence to a module corresponds to the position of the parameter in blank common at module execution time.
PARTN	FMM	Matrix partitioning functional module.
PBAR	IB	Bar property definition card.
PBL	DBM	A scalar multiple of the PL load vector. Used only in the Differential Stiffness Rigid Format (D-4).
PBS	DBM	A scalar multiple of the PL load vector. Used only in the Differential Stiffness Rigid Format (D-4).
PCDB	DBT	Plot control data block (table for use with structure plotter functional module PLTSET).
PCØNEAX	IB	Conical shell element property definition card.
PDAMP	IB	Scalar damper property definition card.
PDF	DBM	Dynamic load matrix for frequency analysis.
PDT	DBM	Linear dynamic load matrix for transient analysis.
PELAS	IB	Scalar elastic property definition card.
PEN	IC	Selects pen size for structure plots using table plotters.
PENSIZE	IC	Selects pen size for X-Y plots using table plotters.
PERSPECTIVE	IC	Specifies perspective projection for structure plots.
PFILE	P	Parameter used by PLØT module.
PG	DBM	Incremental load vector used in Piecewise Linear Analysis (D-6).
PG	DBM	Statics load vector generated by SSG1.
PG1	DBM	Static load vector for Piecewise Linear Analysis (D-6).
PGG	DBM	Appended static load vector (D-1, D-2).
PGV1	DBM	Matrix of successive sums of incremental load vectors used only in Piecewise Linear Analysis Rigid Format (D-6).
PHASE	IC	Requests magnitude and phase form of complex quantities.
PHIA	DBM	$[\phi_a]$ - Real eigenvectors - solution set.

PHID	DBM	$[\phi_d]$ - Complex eigenvectors - solution set, direct formulation.
PHIDH	DBM	$[\phi_{dh}]$- Transformation matrix between modal and physical coordinates.
PHIG	DBM	$[\phi_g]$ - Real eigenvectors.
PHIH	DBM	$[\phi_h]$ - Complex eigenvectors - solution set, modal formulation.
Physical Points	PH	Grid points and extra scalar points introduced for dynamic analysis.
Pivot Point	PH	The first word of each record of the GPCT and ECPT data blocks is called the pivot point.
PL	DBM	$\{P_\ell\}$ - Partition of load vector.
PLA	P	Used in printing rigid format error messages for Piecewise Linear Analysis (D-6).
PLA1	FMS	Piecewise Linear Analysis - phase 1
PLA2	FMS	Piecewise Linear Analysis - phase 2.
PLA3	FMS	Piecewise Linear Analysis - phase 3.
PLA4	FMS	Piecewise Linear Analysis - phase 4.
PLACØUNT	P	Loop counter in Piecewise Linear Analsis (D-6).
PLALBL2A	L	Used in the Piecewise Linear Analysis Rigid Format only. (D-6)
PLALBL3	L	Used in the Piecewise Linear Analysis Rigid Format only. (D-6)
PLALBL4	L	Used in the Piecewise Linear Analysis Rigid Format only. (D-6)
PLCØEFFICIENT	IC	Selects the coefficient set for Piecewise Linear Analysis problems.
PLFACT	IB	Piecewise Linear Analysis factor definition card.
PLI	DBM	$\{P_\ell^i\}$ - Partition of inertia relief load vector.
PLØAD	IB	Pressure load definition (D-1, D-2, D-4, D-5, D-6).
PLØAD2	IB	Element Pressure loading for two-dimensional elements (D-1, D-2, D-4, D-5, D-6).
PLØT	FMS	Structure plot generator.
PLØT	IC	Execution card for structure plotter.
PLØT$	M	Indicates restart with a structure plot request.
Plot Tapes	PH	Magnetic tapes containing NASTRAN generated data to drive offline plotters. PLT1 is the name of the BCD plot tape, used by the EAI 3500, and PLT2 is the name of binary plot tape, used by the SC-4020.
PLØTEL	IB	Plot element definition card used to define convenient reference lines in structure plots.
PLØTTER	IC	Used to select one of several available plotters for structure plotter.

PLØTX1	DBT	Messages from plot module concerning action taken by the structure plotter in processing undeformed structure plots.
PLØTX2	DBT	Messages from plot module concerning action taken by the structure plotter in processing deformed structure plots.
PLSETNØ	P	Set number on a PLFACT bulk data card chosen by the user in his case control deck. Used only in Piecewise Linear Analysis (D-6).
PLT1	M	A reserved NASTRAN physical unit (tape) which must be set up by the user when used - see Plot Tapes.
PLT2	M	A reserved NASTRAN physical unit (tape) which must be set up by the user when used - see Plot Tapes.
PLTFLG	P	Parameter used by PLØT module.
PLTPAR	DBT	Plot control table.
PLTSET	FMS	Plot set definition processor.
PLTSETX	DBT	Error messages for plot sets.
PMASS	IB	Scalar mass property definition card.
PNLD	DBM	$\{P_d^n\}$ - Nonlinear loads in direct transient problem.
PNLH	DBM	$\{P_h^n\}$ - Nonlinear loads in modal transient problem.
PØ	DBM	$\{P_o\}$ - Partition of load vector.
PØI	DBM	$\{P_o^i\}$ - Partition of inertia relief load vector.
PØINT	IB	Eigenvalue analysis normalization option for eigenvectors - see EIGR, EIGC, EIGB cards.
PØINTAX	IB	Conical shell point used for data recovery.
PØØL	M	Pool tape used by file allocator.
PØUT$	M	Indicates restart with a printer output request.
PPF	DBM	Dynamic loads for frequency response.
PPHIG	DBM	Eigenvector components used to plot deformed shape. (D-3, D-5).
PPT	DBM	Linear dynamic loads for transient analysis.
PQDMEM	IB	Quadrilateral membrane element property definiton card.
PQDPLT	IB	Quadrilateral bending element property definition card.
PQUAD1	IB	General quadrilateral element property definition card..
PQUAD2	IB	Homogeneous quadrilateral element property definition card.
Preface	PH	Executive routines which are executed prior to the execution of the first module in a DMAP sequence. The Preface consists of the executive routines necessary to generate initial NASTRAN operational data and tables. The primary Preface routines are GNFIAT, XCSA, IFP1, XSØRT, IFP, IFP3, and XGPI.

PRESAX	IB	Defines static pressure loading for the conical shell element.
PRINT	IC	Selection of output media (PRINT or PUNCH).
Problem Tape	PH	A magnetic tape containing data necessary for NASTRAN problem restarts. A tape being generated is designated as the New Problem Tape (NPTP) and its content is largely controlled by the DMAP instruction CHKPNT. This same tape when used as input to a subsequent NASTRAN restart is designated as the Old Problem Tape (ØPTP).
PRØD	IB	Rod property definiton card.
PRØJECTIØN PLANE SEPARATIØN	IC	Separation of observer and projection plane for structure plots.
PRTMSG	FMS	Message generator.
PRTPARM	FMU	Prints DMAP diagnostic messages and parameter values.
PS	DBM	$\{P_s\}$ - Partition of static load vector.
PSDF	DBM	Power Spectral Density Function table.
PSDF	IC	Request for output of Power Spectral Density Function in Random Analysis (D-9, D-11).
PSDL	DBT	Power Spectral Density List.
PSF	DBM	Partition of load vector for transient analysis.
PSHEAR	IB	Shear panel property definition card.
PST	DBM	Partition of linear load vector for transient analysis.
PTØRDRG	IB	Toroidal ring property definition card.
PRTBSC	IB	Basic bending triangular element property definition card.
PTRIA1	IB	General triangular element property definition card.
PTRIA2	IB	Homogeneous triangular element property definition card.
PTRMEM	IB	Triangular membrane element property definition card.
PTRPLT	IB	Triangular bending element property definition card.
PTUBE	IB	Tube property definition card.
PTWIST	IB	Twist panel property definition card.
PUBGV1	DBT	Displacement vector components used to plot deformed shape (D-4, D-5).
PUGV	DBT	Displacement vector components used to plot deformed shape (D-1, D-2).
PUGV1	DBT	Displacement components used to plot deformed shape (D-6).
PUNCH	IC	Output media request (PRINT or PUNCH).
PURGE	EM	DMAP statement which causes conditional purging of data blocks.

Purge	PH	A data block is said to be purged when it is flagged in the FIAT so that it will not be allocated to a physical file and so that modules attempting to access it will be signaled.
PVISC	IB	Viscous element property definition card.
PVT	PH	Parameter value table. The PVT contains BCD names and values of all parameters input by means of PARAM bulk data cards. It is generated by the preface module IFP and is written on the Problem Tape.
QBG	DBM	Single point forces of constraint in the Differential Stiffness Rigid Format (D-4).
QDMEM	IC	Request structure plot for all QDMEM elements.
QDPLT	IC	Requests structure plot for all QDPLT elements.
QG	DBM	Constraint forces for all grid points.
QP	DBM	Constraint forces for all physical points.
QPC	DBM	Complex single point forces of constraint for all physical points.
QR	DBM	$\{q_r\}$ - Determinate support forces.
QS	DBM	$\{q_s\}$ - Single-point constraint forces.
QUAD1	IC	Requests structure plot for all QUAD1 elements.
QUAD2	IC	Requests structure plot for all QUAD2 elements.

R	P	Parameter value used by MATGPR to print R-set matrices.
R1	IC	Request for X-Y plot of the first rotational component (UM-4.2).
R1IP	IC	Request for X-Y plot of the first rotational component - imaginary and phase angle (UM-4.2).
R1RM	IC	Request for X-Y plot of the first rotational component - real and magnitude (UM-4.2).
R2	IC	Request for X-Y plot of the second rotational component (UM-4.2).
R2IP	IC	Request for X-Y plot of the second rotational component - imaginary and phase angle (UM-4.2).
R2RM	IC	Request for X-Y plot of the second rotational component - real and mangitude (UM-4.2).
R3	IC	Request for X-Y plot of the third rotational component (UM-4.2).
R3IP	IC	Request for X-Y plot of the third rotational component - imaginary and phase angle (UM-4.2).
R3RM	IC	Request for X-Y plot of the third rotational component - real and magnitude (UM-4.2).
RANDØM	IC	Selects the RANDPS and RANDT cards to be used in random analysis.
RANDØM	FMS	Random response solution generator.
RANDPS	IB	Power spectral density specification.
RANDT1	IB	Autocorrelation function time lag.
RANDT2	IB	Autocorrelation function time lag.
RBMG1	FMS	Rigid body matrix generator - part 1.
RBMG2	FMS	Rigid body matrix generator - part 2.
RBMG3	FMS	Rigid body matrix generator - part 3.
RBMG4	FMS	Rigid body matrix generator - part 4.
READ	FMS	Real Eigenvalue Analysis - Displacement.
REAL	IC	Requests real and imaginary form of complex quantities.
REGIØN	IC	Specifies portion of frame to be used for structure plot.
REIG	P	Parameter used in SDR2 to indicate Normal Mode Analysis (D-3).
REPCASE	IC	Allows another output request for the previous subcase (D-1, D-2).
REPEAT	P	Controls looping in Static Analysis (D-1, D-2).
REPEATD	P	Controls looping in Static Analysis with Differential Stiffness (D-4).

REPEATE	P	Controls looping in Complex Eigenvalue Analysis (D-7, D-10).
REPEATF	P	Controls looping in Frequency Response Analysis (D-8, D-11).
REPEATT	P	Controls looping in Transient Response Analysis (D-9, D-12).
REPT	EM	DMAP statement to conditionally repeat a loop.
RESPØNSE	IC	Request for X-Y plot of any response outputs from transient or frequency response analysis (D-8, D-9, D-11, D-12).
RESTART	IA	First control card of checkpoint dictionary. Contains identification of checkpoint tape.
Restart	PH	Initiating a NASTRAN problem solution at a place other than its logical beginning by utilizing an Old Problem Tape created during a previous run.
RFØRCE	IB	Rotational force definition card.
RFØRCE$	M	Indicates restart with change in rotational force.
RG	DBM	Multipoint constraint equations.
RIGHT TICS	IC	Request for tic marks to be plotted on right hand edge of frame for X-Y plots.
Rigid Format	PH	A fixed prestored DMAP sequence and its associated restart tables which perform a specific problem solution.
RINGAX	IB	Conical shell ring definition card.
RLØAD1	IB	Frequency response load set definition.
RLØAD2	IB	Frequency response load set definition.
RØD	IC	Requests structure plot for all RØD elements.
RUBLV	DBM	Residual vector - Differential Stiffness Rigid Format (D-4).
RULV	DBM	Residual vector for independent degrees of freedom.
RUØV	DBM	Residual vector for omitted degrees of freedom.
RXY	IC	Requests vector sum of X and Y deformation components for structure plot.
RXYZ	IC	Requests vector sum of X, Y and Z deformation components for structure plot.
RXZ	IC	Requests vector sum of X and Z deformation components for structure plot.
RYZ	IC	Requests vector sum of Y and Z deformation components for structure plot.

S	P	Parameter value used by MATGPR to print S-set matrices.
SACCE	IC	Abbreviated form of SACCELERATIØN.
SACCELERATIØN	IC	Output request for solution set acceleration vector. (UM-2.3, 4.2)
SAVE	EM	DMAP statement which causes current value of parameter to be saved.
SAVE	M	Save data block for possible looping in DMAP sequence (see FILE).
SC	IC	Selects SC 4020 plotter.
Scalar Point	PH	A point which is defined on an SPØINT, CELAS1, CELAS2, CELAS3, CELAS4, CMASS1, CMASS2, CMASS3, CMASS4, CDAMP1, CDAMP2, CDAMP3, or CDAMP4 bulk data card. A scalar point has no geometrical coordinates and defines only one degree of freedom of the model.
SCALE	IC	Selects scale for structure plot.
SCE1	FMS	Single-point Constraint Eliminator.
SDAMP	IC	Modal structural damping table selection.
SDAMP$	M	Indicates restart with change in modal damping.
SDAMPING	IC	Selects table which defines damping as a function of frequency in modal formulation problems.
SDISP	IC	Abbreviated form of SDISPLACEMENT.
SDISPLACEMENT	IC	Output request for solution set displacement vector. (UM-2.3, 4.2)
SDR1	FMS	Stress Data Recovery - part 1.
SDR2	FMS	Stress Data Recovery - part 2.
SDR3	FMS	Stress Data Recovery - part 3.
SECTAX	IB	Defines conical shell sector for data recovery.
SEEMAT	FMU	Prints pictorial representation of matrix showing location of nonzero elements.
SEM1	M	The NASTRAN Preface.
SEQEP	IB	Extra point resequencing.
SEQGP	IB	Grid or scalar point resequencing.
SET	IC	Definition of a set of elements, grid and/or scalar and/or extra points, frequencies, or times to be used in selecting output.
SETVAL	FMU	Parameter value initiator.
SHEAR	IC	Requests structure plot for all shear panel elements.
SIL	DBT	Scalar Index List for all grid points.

SILD	DBT	Scalar Index List for all grid points and extra scalar points introduced for dynamic analysis.
SINE	IC	Conical shell request for sine set boundary conditions.
SINGLE	P	No single-point constraints.
SKIP BETWEEN FRAMES	IC	Request to insert blank frames on SC 4020 plotter for X-Y plots.
SKPMGG	P	Parameter used in statics to control execution of functional module SMA2.
SLØAD	IB	Scalar point load definition.
SLT	DBT	Static Loads Table.
SMA1	FMS	Structural Matrix Assembler - phase 1 - generates stiffness matrix $[K_{gg}]$ and structural damping matrix $[K^4_{gg}]$.
SMA2	FMS	Structural Matrix Assembler - phase 2 - generates mass matrix $[M_{gg}]$ and viscous damping matrix $[B_{gg}]$.
SMA3	FMS	Structural Matrix Assembler - phase 3 - adds general element contributions to the stiffness matrix $[K_{gg}]$.
SMP1	FMS	Structural Matrix Partitioner - part 1.
SMP2	FMS	Structural Matrix Partitioner - part 2.
SØL	IA	Specifies which rigid format solution is to be used when APP is DISPLACEMENT.
Solution Points	PH	Points used in the formulation of the general K system.
SØLVE	FMM	Solves a set of linear algebraic equations.
SØRT1	IC	Output is sorted by frequency or time and then by external ID.
SØRT2	IC	Output is sorted by external ID and then by frequency or time.
SØRT3	M	Output is sorted by individual item or component and then by frequency or time.
SPC	IB	Single-point constraint and enforced deformation definition.
SPC	IC	Single-point constraint set selection.
SPC$	M	Indicates restart with change in single-point constraint set selection.
SPC1	IB	Single-point constraint definition.
SPCADD	IB	Single-point constraint set combination definition.
SPCAX	IB	Conical shell single-point constraint definition.
SPCF	IC	Abbreviated form of SPCFØRCE.
SPCFØRCE	IC	Single-point constraint force output request. (UM-2.3, 4.2)

Spill	PH	Secondary storage devices are used because there is insufficient main storage to perform a matrix calculation or a data processing operation.
SPØINT	IB	Scalar point definition card.
SSG1	FMS	Static Solution Generator - part 1.
SSG2	FMS	Static Solution Generator - part 2.
SSG3	FMS	Static Solution Generator - part 3.
SSG4	FMS	Static Solution Generator - part 4.
STATIC	IC	Requests deformed structure plot for problem in Static Analysis.
STATICS	P	Parameter used in SDR2 to indicate Static Analysis.
STEREØSCØPIC	IC	Requests stereoscopic projections for structure plot.
STRESS	IC	Element stress output request. (UM-2.3, 4.2)
Structural Element	PH	One of the finite elements used to represent a part of a structure.
SUBCASE	IC	Subcase definition.
SUBCØM	IC	This subcase is a linear combination of previous subcases.
SUBSEQ	IC	Specifies coefficients for SUBCØM subcases.
SUBTITLE	IC	Output labeling data for printer output.
SUPAX	IB	Ficticious support for conical shell problem.
SUPØRT	IB	Ficticious support definition card.
SVECTØR	IC	Request for output of eigenvectors in the solution set (D-7, D-10) (UM-2.3, 4.2).
SVELØ	IC	Abbreviated form of SVELØCITY.
SVELØCITY	IC	Requests velocity output for solution set. (UM-2.3, 4.2)
SYM	IC	Symmetry subcase delimiter card.
SYMBØLS	IC	Requests symbols at grid points on structure plot.
SYMCØM	IC	Assembly of symmetry subcase delimiter card.
SYMSEQ	IC	Assembly value of symmetry combination card.

T1	IC	Request for X-Y plot of the first translational component (UM-4.2).
T1IP	IC	Request for X-Y plot of the first translational component - imaginary and phase angle (UM-4.2).
T1RM	IC	Request for X-Y plot of the first translational component - real and magnitude (UM-4.2).
T2	IC	Request for X-Y plot of the second translational component (UM-4.2).
T2IP	IC	Request for X-Y plot of the second translational component - imaginary and phase angle (UM-4.2).
T2RM	IC	Request for X-Y plot of the second translational component - real and magnitude (UM-4.2).
T3	IC	Request for X-Y plot of the third translational component (UM-4.2).
T3IP	IC	Request for X-Y plot of the third translational component - imaginary and phase angle (UM-4.2).
T3RM	IC	Request for X-Y plot of the third translational component - real and magnitude (UM-4.2).
TA1	FMS	Table Assembler.
TABDMP1	IB	Tabular structural damping function for modal formulation (D-10, D-11, D-12).
Table Data Block	PH	A data block which is in tabular form rather than matrix form.
TABLED1	IB	Dynamic load tabular function (D-8, D-9, D-11, D-12).
TABLED2	IB	Dynamic load tabular function (D-8, D-9, D-11, D-12).
TABLED3	IB	Dynamic load tabular function (D-8, D-9, D-11, D-12).
TABLED4	IB	Dynamic load tabular function (D-8, D-9, D-11, D-12).
TABLEM1	IB	Material property tabular function.
TABLEM2	IB	Material property tabular function.
TABLEM3	IB	Material property tabular function.
TABLEM4	IB	Material property tabular function.
TABLES1	IB	Stress-dependent material tabular function for use in Piecewise Linear Analysis (D-6).
TABPT	FMU	Table printer.
TABRND1	IB	Tabular function for use in Random Analysis (D-8, D-11).
TABRND2	IB	Tabular function for use in Random Analysis (D-8, D-11).
TABRND3	IB	Tabular function for use in Random Analysis (D-8, D-11).
TABRND4	IB	Tabular function for use in Random Analysis (D-8, D-11).

TALL EDGE TICS	IC	Request for plotting all edge tic marks on upper half frame for X-Y plots.
TAPE	M	Write data block on physical tape (see FILE).
TCURVE	IC	Curve title for X-Y plot.
TEMP	IB	Temperature field definition card.
TEMPAX	IB	Temperature field definition for conical shell problem.
TEMPD	IB	Default temperature definition card.
TEMPERATURE	IC	Selects the temperature set to be used in either material property calculation or thermal loading.
TEMPLD$	M	Indicates restart with change in thermal set for static loading.
TEMPMT$	M	Indicates restart with change in thermal set for material properties.
TEMPMX$	M	Indicates restart with change in thermal field and thermal set for material properties.
TEMP(LØAD)	IC	Temperature set selection (applies to thermal load generation only).
TEMP(MAT)	IC	Temperature set selection (applies to material properties only).
TF	IB	Dynamic transfer function definition.
TF$	M	Indicates restart with change in transfer function set selection.
TFL	IC	Transfer function set selection.
TFPØØL	DBT	Transfer function pool.
THRU	IC	Forms strings of values within set declarations.
TIC	IB	Transient Initial Condition set definition card.
TIME	IA	User time estimate for problem. This card is required in Executive Control Deck. Integer time value is in minutes.
TITLE	IC	Output labeling data for printer output.
TLEFT TICS	IC	Request for tic marks to be plotted on left hand edge of top half frame for X-Y plot.
TLØAD1	IB	Transient load set definition card.
TLØAD2	IB	Transient load set definition card.
Trailer	PH	A six word control block associated with a data block.
TRANRESP	P	Parameter used in SDR2 to indicate Transient Response Analysis (D-9, D-12)
TRBSC	IC	Requests structure plot for all basic bending triangle elements.

TRD	FMS	Transient Response - Displacement.
TRIA1	IC	Requests structure plot for all TRIA1 elements.
TRIA2	IC	Requests structure plot for all TRIA2 elements.
TRIGHT TICS	IC	Request for tic marks to be plotted on right hand edge of top half frame for X-Y plots.
TRL	DBT	Transient Response List.
TRMEM	IC	Requests structure plot for all triangular membrane elements.
TRNSP	FMM	Transpose functional module.
TRPLT	IC	Request structure plot for all TRPLT elements.
TSTEP	IB	Transient time steps for integration and output.
TSTEP	IC	Transient time step set selection.
TSTEP$	M	Indicates restart with change in transient time step set selection.
TUBE	IC	Requests structure plot for all TUBE elements.
TWIST	IC	Requests structure plot for all TWIST elements.
TYPE	IC	Indicates paper type for structure plots.

UBGV	DBM	Displacement vector for all grid points (D-4).
UBLL	DBM	$[U^{b}_{\ell\ell}]$ - Upper triangular factor of $[K^{b}_{\ell\ell}]$.
UBLV	DBM	Displacement solution vector (D-4).
UBØØV	DBM	Scalar multiple of UØØV in Differential Stiffness Rigid Format (D-4).
UDV1T	DBM	Displacement, velocity and acceleration solution vectors in a transient analysis problem - SØRT1. (D-9)
UDV2T	DBM	Displacement, velocity and acceleration solution vectors in a transient analysis problem - SØRT2 (D-9).
UDVF	DBM	Displacement solution vector in a frequency response problem (D-8).
UDVT	DBM	Displacement, velocity and acceleration solution vectors in a transient analysis problem (D-9).
UEVF	DBM	Displacement vector for extra points in a frequency response problem (D-11).
UEVT	DBM	Displacement vector for extra points in a transient response problem (D-12).
UGV	DBM	Displacement vector for all grid points (D-1, D-2, D-4, D-5).
UGV1	DBM	Successive sums of incremental displacement vectors. Piecewise Linear Analysis Rigid Format only (D-6).
UHVF	DBM	Modal frequency response solution vectors (D-11).
UHVT	DBM	Modal transient response solution vectors (D-12).
ULL	DBM	$[U_{\ell\ell}]$ - Upper triangular factor of $[K_{\ell\ell}]$.
ULV	DBM	Displacement solution vector in static analyses (D-1, D-2, D-4, D-5).
UMF	IA	Requests User Master File as input source.
UMF	M	User Master File, a reserved NASTRAN physical unit (tape) which must be set up by the user when used.
UMFEDIT	IA	Requests User Master File operational mode of NASTRAN.
Unmodified Restart	PH	Restarting (see Restart) a problem without changing any data, other than output requests, of the previous run.
Unpool	PH	Remove data block from Pool Tape and place on a file for use by a functional module.
UNSØRT	IC	Requests unsorted echo of Bulk Data Deck (ECHØ=UNSØRT).
UØØ	DBM	$[U_{oo}]$ - Upper triangular factor of $[K_{oo}]$.
UØØV	DBM	Partition of displacement solution vector.
UPPER TICS	IC	Request for tic marks to be plotted on upper edge of frame for X-Y plot.

UPV	DBM	Transient solution vectors for all physical points.
UPVC	DBM	Frequency response solution vectors for all physical points.
USET	DBT	Displacement set definitions. (PM-1.7.3)
USETD	DBT	Displacement set definitions including extra scalar points introduced for dynamic analysis. (PM-1.7.3)
V	M	Used in parameter section of DMAP statement. Indicates that parameter is variable and may be changed by module. If changed value is to be used in subsequent DMAP instruction, it must be saved (see SAVE).
VANTAGE PØINT	IC	Location of observer for structure plot.
VDR	FMS	Vector Data Recovery.
VECTØR	IC	Request for output of eigenvectors from real or complex eigenvalue analysis (D-3, D-5, D-7, D-10).
VECTØR	IC	Requests deformations on structure plot with vectors.
VELØ	IC	Abbreviated form of VELØCITY.
VELØCITY	IC	Output request statement for velocity vector. (UM-2.3, 4.2)
VIEW	IC	Rotation of object for structure plot.
VISC	IC	Request structure plot for all viscous damper elements.
W3	P	Pivotal frequency for uniform structural damping in the direct formulation of transient response problems (D-9).
W4	P	Pivotal frequency for element structural damping in the direct formulation of transient response problems (D-9).
WTMASS	P	Weight to mass conversion factor used in SMA2 and GPWG. Default value is 1.0.

X	IC	Requests X vector for deformed structure plot.
XAXIS	IC	Request for drawing of X-axis for X-Y plot.
XBAXIS	IC	Request for drawing of X-axis on bottom half frame for X-Y plot.
XBGRID LINES	IC	Request for drawing grid lines for X-axis on bottom half frame for X-Y plot.
XCSA	EM	Executive Control Section Analysis. The preface module which processes the Executive Control Deck and prepares the control file on the New Problem Tape.
XDIVISIØNS	IC	Request for division marking on X-axis.
XGPI	EM	Executive General Problem Initialization. The preface module whose principal function is to generate the ØSCAR. If the problem is a restart, XGPI initializes data blocks and named common blocks for proper restart.
XGRID LINES	IC	Request for grid lines to be drawn on X-axis for X-Y plots.
XINTERCEPT	IC	Specifies intercept of Y-axis on X-axis.
XLØG	IC	Request for logarithmic scales in X-direction.
XMAX	IC	Do not plot points whose X value lies above this value.
XMIN	IC	Do not plot points whose X value lies below this value.
XPAPER	IC	Specifies length of paper in X-direction for table plotter.
XSFA	EM	Executive Segment File Allocator - the administrative manager of data blocks for NASTRAN.
XSØRT	EM	Executive sort routine - the preface module which reads and sorts the Bulk Data Deck and writes the sorted Bulk Data Deck on the New Problem Tape.
XTAXIS	IC	Request for drawing of X-axis on top half frame.
XTGRID LINES	IC	Request for drawing of grid lines on top half frame.
XTITLE	IC	X-axis title for X-Y plots.
XVALUE PRINT SKIP	IC	Request to suppress labeling tic marks over the specified interval.
XVPS	M	Variable Parameter Set Table. Executive table needed for restart. (PM-2.4)
XY	IC	Requests X and Y vectors for deformed structure plot.
XYCDB	DBT	SØRT3 type output requests (XYPLØTTER, XYPRINTER, Random Request).
XYØUT	IC	Request to generate X-Y plots.
XYØUT$	M	Indicates restart with an X-Y plot request.
XYPEAK	IC	Request to print the maximum and minimum values of the specified response.

XYPLØT	FMS	X-Y plot generator.
XYPLØT	IC	Request to generate X-Y plots.
XYPLTF	DBT	XYPLØT input data block. (D-8, D-11)
XYPLTFA	DBT	XYPLØT input data block. (D-8, D-11)
XYPLTR	DBT	XYPLØT input data block. (D-8, D-11)
XYPLTT	DBT	XYPLØT input data block. (D-9, D-12)
XYPLTTA	DBT	XYPLØT input data block. (D-9, D-12)
XYPRINT	IC	Request to tabulate XY pairs on the printer.
XYPRNPLT	FMU	Dummy output module.
XYPUNCH	IC	Request to punch XY pairs.
XYTRAN	FMS	XY output translator.
XYZ	IC	Requests X, Y and Z vectors for deformed structure plot.
XZ	IC	Requests X and Z vectors for deformed structure plot.

Y	IC	Requests Y vector for deformed structure plot.
Y	M	Used in parameter section of DMAP statement. Indicates that parameter may be given an initial value with a PARAM bulk data card.
YAXIS	IC	Request for drawing of Y-axis.
YBDIVISIØNS	IC	Request for division marking on Y-axis of lower half frame.
YBGRID LINES	IC	Request for grid lines to be drawn on Y-axis of lower half frame.
YBINTERCEPT	IC	Specifies intercept of X-axis on Y-axis on lower half frame.
YBLØG	IC	Request for logarithmic scales in Y-direction on lower half frame.
YBMAX	IC	Do not plot points whose Y value lies above this value for lower half frame.
YBMIN	IC	Do not plot points whose Y value lies below this value for lower half frame.
YBS	DBM	Scalar multiple of YS matrix. Used in Differential Stiffness Rigid Format only. (D-4).
YBTITLE	IC	Y-axis title on lower half frame.
YBVALUE PRINT SKIP	IC	Request to suppress labeling tic marks over the specified interval.
YDIVISIØNS	IC	Request for division marking on Y-axis.
YES	IA	Option used on CHKPNT card, indicates that checkpoint is desired.
YGRID LINES	IC	Request for grid lines to be drawn on Y-axis.
YINTERCEPT	IC	Specifies intercept of X-axis on Y-axis.
YLØG	IC	Request for logarithmic scales in Y-direction.
YMAX	IC	Do not plot points whose Y value lies above this value.
YMIN	IC	Do not plot points whose Y value lies below this value.
YPAPER	IC	Specifies length of paper in Y-direction for table plotter.
YS	DBM	$\{Y_s\}$ - Constrained displacement vector.
YTDIVISIØNS	IC	Request for division marking on Y-axis for upper half frame.
YTGRID LINES	IC	Request for grid lines to be drawn on Y-axis for upper half frame.
YTINTERCEPT	IC	Specifies intercept of X-axis on Y-axis for upper half frame.
YTITLE	IC	Y-axis title.
YTLØG	IC	Request for logarithmic scales in Y-direction for upper half frame.

YTMAX	IC	Do not plot points whose Y value lies above this value for upper half frame.
YTMIN	IC	Do not plot points whose Y value lies below this value for upper half frame.
YTITLE	IC	Y-axis title for upper half frame.
YTVALUE PRINT SKIP	IC	Request to suppress labeling tic marks over the specified interval for upper half frame.
YVALUE PRINT SKIP	IC	Request to suppress labeling tic marks over the specified interval.
YZ	IC	Requests Y and Z vectors for deformed structure plot.
Z	IC	Requests Z vector for deformed structure plot.