N 70 42103

CR 114229

[redacted]

RESEARCH REPORT

DEVELOPMENT OF AN EVALUATION TECHNIQUE
FOR INTERPLANETARY MISSION ASTRIONICS

Submitted to

NATIONAL AERONAUTICS AND SPACE ADMINISTRATION
Electronics Research Center
Cambridge, Massachusetts

February 28, 1970

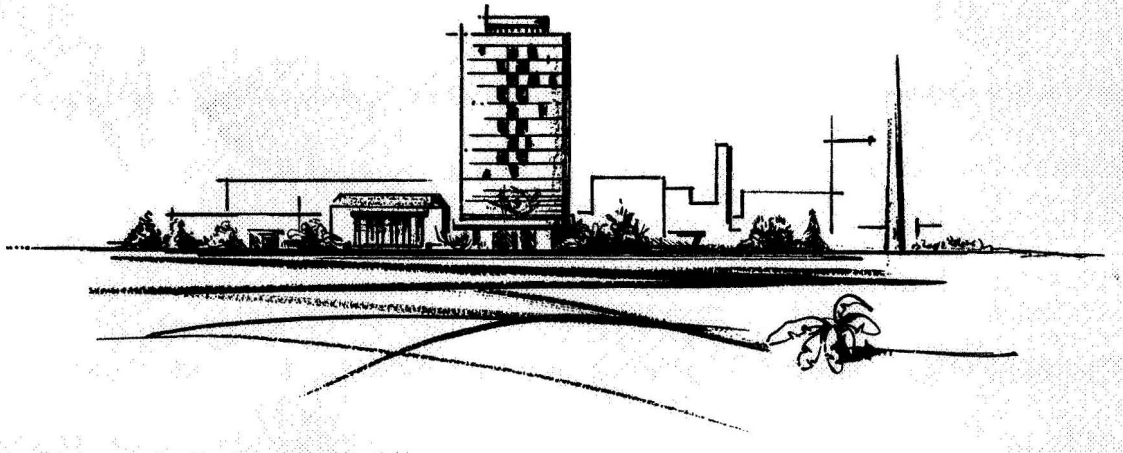

BATTELLE MEMORIAL INSTITUTE

COLUMBUS LABORATORIES

CASE FILE
COPY

THE COLUMBUS LABORATORIES of Battelle Memorial Institute comprise the original research center of an international organization devoted to research.

The Institute is frequently described as a "bridge" between science and industry – a role it has performed in more than 90 countries. As an independent research institute, it conducts research encompassing virtually all facets of science and its application. It also undertakes programs in fundamental research and education.

Battelle-Columbus – with its staff of 3,000 – serves industry and government through contract research. It pursues:

- research embracing the physical and life sciences, engineering, and selected social sciences
- design and development of materials, products, processes, and systems
- information analysis, socioeconomic and technical economic studies, and management planning research.

505 KING AVENUE • COLUMBUS, OHIO 43201

THIRD INTERIM SCIENTIFIC REPORT

on

DEVELOPMENT OF AN EVALUATION TECHNIQUE FOR INTERPLANETARY MISSION ASTRIONICS

Submitted to

NATIONAL AERONAUTICS AND SPACE ADMINISTRATION
Electronics Research Center
Cambridge, Massachusetts

February 28, 1970

Contract No. NAS 12-550

BATTELLE MEMORIAL INSTITUTE
Columbus Laboratories
505 King Avenue
Columbus, Ohio 43201

DEVELOPMENT OF AN EVALUATION TECHNIQUE FOR INTERPLANETARY MISSION ASTRIONICS

By Ellis F. Hitt, Fred G. Rea
Ronald W. Scott, and J. N. Blutreich

February, 1970

Distribution of this report is provided in the interest of information exchange and should not be construed as endorsement by NASA of the material presented. Responsibility for the contents resides with the organization that prepared it.

Prepared under Contract No. NAS 12-550 by
BATTELLE MEMORIAL INSTITUTE
Columbus Laboratories
505 King Avenue
Columbus, Ohio 43201

Electronics Research Center

NATIONAL AERONAUTICS AND SPACE ADMINISTRATION

FOREWORD

This interim scientific report presents the results of a twelve-month study conducted by Battelle Memorial Institute, Columbus Laboratories, for the NASA Electronics Research Center in partial fulfillment of the work requirements of Contract NAS 12-550.

The objective of this study was to extend the evaluation techniques developed for astrionics systems which employ aided inertial guidance systems operating on interplanetary flyby missions to include the astrionics required for orbiter, lander, and multiple planet swingby missions.

This volume presents a summary of the study results, detailed technical discussion, recommendations, and conclusions.

TABLE OF CONTENTS

	Page
INTRODUCTION	1
Added Study Elements	1
Guidelines	2
Interplanetary Missions	2
Mission Selected for Analysis	3
Astrionics Design Philosophy	5
SUMMARY	8
Penalty Functions	8
System Parameters	10
Computer Programs	11
Data Requirements	11
Output Options	11
Mission Characteristics	12
Mission Schedule	12
Summary of Effort on Added Study Elements	12
Planetary Approach Sensors	12
Alternate Attitude Control Schemes	13
Flight Control Requirements	14
Effects of Subsystem Switching	15
Communications Requirements	15
Multiple Midcourse Correction Strategies	16
TECHNICAL DISCUSSION	17
Evaluation Criteria for Interplanetary Multiple Planet Swingby, Orbiter, and Lander Mission Astrionics	17
Astrionics System Concept	17
Penalty Function Analysis	17
Astrionics Subsystem Analysis	29
Deep Space Instrumentation Facility	29
Planetary Approach Sensors	29
Radar Measurements	31
Electro-Optical Measurement	33
Alternate Attitude Control Mechanizations	43
Flight Control Requirements	65
Effects of Subsystem Switching	70
Communications Requirements	71
Computer Program Results	76
Multiple Midcourse Strategies	106
Review of Candidate Schemes	106
Minimization of Expected Target Miss	108
Minimization of the Astrionics Penalty Function by a Constrained Dynamic Programming Analysis of Multiple Midcourse Corrections	116
CONCLUSIONS	119
RECOMMENDATIONS	119
REFERENCES	121

TABLE OF CONTENTS (Continued)

Page

APPENDIX A

COMPUTER PROGRAM RESULTS FOR MARS ORBITER MISSION A-1

APPENDIX B

THE CUMULATIVE PROBABILITY FUNCTION FOR THE MAGNITUDE OF THE TOTAL ΔV REQUIREMENT FROM THE MEAN AND COVARIANCE OF RETRO BURN ΔV B-1

APPENDIX C

NEW TECHNOLOGY. C-1

LIST OF TABLES

TABLE I. THREE PENALTY FUNCTIONS FOR EVALUATION OF ASTRIONICS SYSTEMS. 9
TABLE II. COMPARISON OF ATTITUDE CONTROL SYSTEMS ON A JUPITER SWINGBY MISSION. 14
TABLE III. COMPARISON OF OPTIMIZED VERSUS SPECIFIED TRANSMITTER ON A JUPITER SWINGBY MISSION. 15
TABLE IV. ASTRIONICS SYSTEM PARAMETERS 19
TABLE V. MISSION AND SPACECRAFT PARAMETERS. 20
TABLE VI. PENALTY FUNCTION DEFINITION 20
TABLE VII. INTERMEDIATE QUANTITIES USED IN CALCULATING THE PENALTY FUNCTIONS. 21
TABLE VIII. FAILURE RATES FOR GYRO PARTS (From Reference 16) 57
TABLE IX. SUMMARY OF CMG-ATTITUDE-CONTROL SIZING RESULTS ON JUPITER FLYBY MISSION. 59
TABLE X. TOTAL OPERATION COUNT FOR EXPLICIT LINEAR TANGENT GUIDANCE EQUATIONS (Reference 21). 68
TABLE XI. COMMUNICATIONS GEOMETRY SUBROUTINE OUTPUT FOR THE JUPITER FLYBY TRAJECTORY 75
TABLE XII. SUMMARY OF RESULTS FOR JUPITER SWINGBY COMPARING ATTITUDE CONTROL MECHANIZATIONS, AND ONBOARD COMMUNICATIONS PARAMETER ESTIMATION. 77
TABLE XIII. MIDCOURSE CORRECTION DEFINITIONS 109
TABLE A-I. EFFECT OF RETRO BURN TIME ON THE PENALTY A-66

TABLE OF CONTENTS (Continued)

Page

LIST OF FIGURES

FIGURE 1. BLOCK DIAGRAM OF INTEGRATED ASTRIONICS 6
FIGURE 2. BLOCK DIAGRAM OF ONBOARD INTEGRATED ASTRIONICS SUBSYSTEMS 18
FIGURE 3. CUMULATIVE PROBABILITY DISTRIBUTION FUNCTION [Pr($|X| > \psi \sqrt{\text{TRACE}}$)] OF A VECTOR WITH NORMAL, ZERO MEAN, COMPONENTS 23
FIGURE 4. CALCULATION OF PENALTY, MODE 1 26
FIGURE 5. CALCULATION OF PENALTY, MODE 2 28
FIGURE 6. CALCULATION OF PENALTY, MODE 3 30
FIGURE 7. CELLED ARRAY OF ILLUMINATED PLANET 34
FIGURE 8. DIAGRAMS OF PLANET ANGULAR MEASUREMENT 36
FIGURE 9. ORBIT INSERTION (FROM REFERENCE 14) 40
FIGURE 10. LANDING GEOMETRY (FROM REFERENCE 14) 42
FIGURE 11. SINGLE-DEGREE-OF-FREEDOM CONTROL MOMENT GYRO 45
FIGURE 12. FOUR-GYRO SYSTEM ORIENTATION 49
FIGURE 13. FOUR-GYRO CONTROLLER POWER REQUIREMENT (From Reference 16) 53
FIGURE 14. FOUR-GYRO SYSTEM WEIGHT (From Reference 16) 54
FIGURE 15. REACTION WHEEL COORDINATE SYSTEMS 63
FIGURE 16. COMMUNICATIONS GEOMETRY 74
FIGURE 17. JUPITER FLYBY COMPUTER PROGRAM DATA 78
FIGURE 18. MISSION SCHEDULES FOR JUPITER FLYBY 85
FIGURE 19. JUPITER FLYBY PENALTY EVALUATION, STRAPDOWN STAR TRACKER
FIGURE 0.8 RAD/SEC GYRO PRECESSION VELOCITY, SCHEDULE 1 . . . 88
FIGURE 20. JUPITER FLYBY PENALTY EVALUATION, STRAPDOWN STAR TRACKER 0.6 RAD/SEC GYRO PRECESSION VELOCITY, SCHEDULE 1 . . . 89
FIGURE 21. JUPITER FLYBY PENALTY EVALUATION, GIMBALLED STAR TRACKER 0.6 RAD/SEC PRECESSION VELOCITY, SCHEDULE 1. 90
FIGURE 22. JUPITER FLYBY PENALTY EVALUATION, STRAPDOWN STAR TRACKER 0.35 RAD/SEC GYRO PRECESSION VELOCITY, SCHEDULE 1. . . 91
FIGURE 23. JUPITER FLYBY PENALTY EVALUATION, GIMBALLED STAR TRACKER 0.9 RAD/SEC GYRO PRECESSION VELOCITY, SCHEDULE 1 . . . 92
FIGURE 24. JUPITER FLYBY PENALTY EVALUATION, STRAPDOWN STAR TRACKER 0.8 RAD/SEC GYRO PRECESSION VELOCITY, SCHEDULE 2 . . . 93
FIGURE 25. JUPITER FLYBY PENALTY EVALUATION, STRAPDOWN STAR TRACKER 0.6 RAD/SEC GYRO PRECESSION VELOCITY, SCHEDULE 2 . . . 94
FIGURE 26. JUPITER FLYBY PENALTY EVALUATION, GIMBALLED STAR TRACKER 0.6 RAD/SEC GYRO PRECESSION VELOCITY, SCHEDULE 2 . . . 95
FIGURE 27. JUPITER FLYBY PENALTY EVALUATION, STRAPDOWN STAR TRACKER 0.35 RAD/SEC GYRO PRECESSION VELOCITY, SCHEDULE 2. . . 96
FIGURE 28. JUPITER FLYBY PENALTY EVALUATION, STRAPDOWN STAR TRACKER 0.8 RAD/SEC GYRO PRECESSION VELOCITY, SCHEDULE 2 . . . 97
FIGURE 29. JUPITER FLYBY PENALTY EVALUATION, GAS JETS (UNEQUAL THRUST), DESIGNED TRANSMITTER. 98

TABLE OF CONTENTS (Continued)

		Page
FIGURE 30.	JUPITER FLYBY PENALTY EVALUATION, GAS JETS (EQUAL THRUST), DESIGNED TRANSMITTER	99
FIGURE 31.	JUPITER FLYBY PENALTY EVALUATION, CONTROL MOMENT GYRO, DESIGNED TRANSMITTER	100
FIGURE 32.	JUPITER FLYBY PENALTY EVALUATION, INERTIA WHEELS, DESIGNED TRANSMITTER	101
FIGURE 32.	JUPITER FLYBY PENALTY EVALUATION, GAS JETS (UNEQUAL THRUSTS), SPECIFIED TRANSMITTER	102
FIGURE 34.	JUPITER FLYBY PENALTY EVALUATION, GAS JETS (EQUAL THRUSTS), SPECIFIED TRANSMITTER	103
FIGURE 35.	JUPITER FLYBY PENALTY EVALUATION, CONTROL MOMENT GYROS, SPECIFIED TRANSMITTER	104
FIGURE 36.	JUPITER FLYBY PENALTY EVALUATION, INERTIA WHEELS, SPECIFIED TRANSMITTER	105
FIGURE 37.	MINIMUM FUEL ΔV TO MINIMIZE VARIANCE OF TARGET DEVIATION	113
FIGURE 38.	FLOW CHART FOR CONSTRAINED DYNAMIC PROGRAMMING ALGORITHM.	118
FIGURE A- 1.	MARS MISSION TRAJECTORY DATA	A- 2
FIGURE A- 2.	MISSION AND SUBSYSTEM DATA, MARS MISSION	A- 5
FIGURE A- 3.	MARS MISSION, HARDWARE DATA	A- 8
FIGURE A- 4.	MARS MISSION, COMMUNICATION GEOMETRY	A-13
FIGURE A- 5.	MARS MISSION, MAIN SCHEDULE	A-15
FIGURE A- 6.	MARS MISSION, SUBSCHEDULES	A-16
FIGURE A- 7.	MARS MISSION, SCHEDULE OPTIMIZATION	A-22
FIGURE A- 8.	MARS MISSION, DETAILED SCHEDULE OUTPUT	A-24
FIGURE A- 9.	MARS MISSION, ERROR ANALYSIS OUTPUT	A-30
FIGURE A-10.	RMS ERRORS vs. BURN TIME	A-64
FIGURE A-11.	MARS MISSION, PENALTY EVALUATION	A-67

LIST OF MAJOR SYMBOLS AND DEFINITIONS

α	Exponent used in Weibull distribution
CMG	Control Moment Gyroscope
D_T	Degrees-of-freedom of the target miss covariance
D_V	Degrees-of-freedom of the midcourse ΔV covariance
DSIF	Deep Space Instrumentation Facility
ERP	Effective Radiated Power
Ig	Product of specific impulse of the propulsion system and gravity
ISU	Inertial Sensing Unit
IWAC	Inertia Wheel Attitude Control
K_{DC}	Propulsion system constant weight
K_{DV}	Propulsion system tankage factor (system weight/fuel weight)
MCTF	Mean cycles to failure
MTTF	Mean time to failure
M_V	Mean of the ΔV
P_{FA}	Probability of mission failure attributable to the astrionics system
P_{FR}	Probability of mission failure due to inadequate hardware reliability
P_{FT}	Probability of exceeding target miss criteria
P_{FV}	Probability of having insufficient ΔV fuel
P_{FTR}	Probability of failure due to inadequate reliability or target miss
R_T	Square root of the trace of the target miss covariance matrix, or the standard deviation of any single miss parameter of interest
R_V	Square root of the trace of the ΔV covariance matrix

LIST OF MAJOR SYMBOLS AND DEFINITIONS (Continued)

RTG	Radioisotope thermoelectric generator
W_{AC}	Weight of attitude control unit
W_{AS}	Weight of the entire astrionics system
W_{DV}	Weight of the entire propulsion system
W_F	Weight of ΔV fuel
W_{ICP}	Weight of onboard inertial sensing unit, computer, electrical energy source, electro-optical sensors, communications subsystem, radars, attitude control, and wiring
W_{NA}	Weight of spacecraft less astrionics
W_T	Total spacecraft weight
X_{MISS}	Allowed magnitude of any miss parameter, or vector of interest, at the target
ΔV	Velocity change capability
μ	Spacecraft mass ratio
ψ_T	X_{MISS}/R_T

DEVELOPMENT OF AN EVALUATION TECHNIQUE
FOR INTERPLANETARY MISSION ASTRIONICS

Interim Report for the Period of

February 1, 1969, to February 1, 1970

BATTELLE MEMORIAL INSTITUTE
Columbus Laboratories

INTRODUCTION

This report presents the results of the work on "Development of an Evaluation Technique for Strapdown Guidance Systems", performed in accordance with modification No. 2 dated February 1, 1969, to the statement of work of Contract No. NAS 12-550. The purpose of this modification was to extend the evaluation techniques developed for astrionics systems which employ aided inertial guidance systems operating on interplanetary flyby missions to include the astrionics required for orbiter, lander, and multiple planet swingby missions. This volume presents a summary of the study results, detailed technical discussion, recommendations, and conclusions. To further the reader's understanding of the organization of this report, the principal items of work for this reporting period are listed below.

Added Study Elements

The various tasks performed to extend the evaluation techniques developed for interplanetary flyby missions astrionics systems, to orbiter, lander, and multiple planet swingby mission astrionics were:

(1) The additional astrionics required for the approach phase of orbiter, lander, and multiple planet swingby missions were incorporated into the effectiveness evaluation by inclusion of their weight, electrical power, reliability, and accuracy.

(2) The capability to investigate the tradeoffs between attitude control mechanizations employing gas reaction jets, control moment gyroscopes (CMG's), and reaction wheels was provided. The impact of flight control requirements on astrionics effectiveness was included.

(3) Two specific multiple midcourse correction strategies approved by the NASA/ERC Technical Monitor were investigated to determine their influence on the penalty functions.

(4) The impact of the requirements for communications between the spacecraft and the Earth were investigated to determine the requirements placed on the other astrionics and the resultant influence on the penalty functions. Pointing accuracy, spacecraft stabilization techniques, information rates, and power requirements were considered in determination of the communication subsystem parameters. The case of the spacecraft being eclipsed by any celestial body was examined to determine the impact on the onboard astrionics.

(5) The effect of switching on and off the various astrionics subsystems during the mission was modeled to include the reliability degradation associated with the switching.

(6) The computer programs developed under this contract were modified and exercised at the written technical direction of the NASA/ERC Technical Monitor.

Guidelines

The additional astrionics required for the approach phase of orbiter, lander, and multiple planet swingby missions, in addition to the propulsion system requirements for these missions, required making modifications to the previously reported work (Reference 1). The factors which have to be considered in applying the evaluation method are primarily those associated with (1) the class of missions for which the evaluation technique has been specifically developed and (2) the astrionics design philosophy.

Interplanetary Missions

The evaluation technique, as presently structured, provides a measure of index of astrionics system performance for the class of interplanetary missions. These missions include flyby, orbiter, lander, and others such as multiple planet swingby.

Flyby. A single planet flyby mission requires that the spacecraft pass close to the target planet at some nominal periapse. No propulsion system is carried for orbit insertion about the target planet. The evaluation of astrionics for this mission requires specifying the acceptable periapse

uncertainty and probability of mission failure which can be attributed to astrionics system failure.

Orbiter. An orbiter mission requires that the spacecraft carry a propulsion system capable of inserting the spacecraft into a nominal orbit about the target body. The insertion burn usually occurs at nominal periapse. The evaluation of astrionics for this mission requires specifying acceptable uncertainties of the target body orbital elements and probability of mission failure which can be attributed to astrionics system failure.

Lander. A lander mission frequently has all the requirements of an orbiter mission as well as the required propulsion system and astrionics needed to accomplish a "soft" landing. The evaluation of astrionics for this mission requires specifying the nominal descent burn time, landing area, and acceptable probability of mission failure which can be attributed to astrionics systems.

Multiple Planet Swingby Missions. A multiple planet swingby mission requires specifying the velocity and position vectors at each planetary encounter. Deviations from these nominal conditions will, unless adequately corrected, result in excessive miss parameters at subsequent encounters. The astrionics evaluation for such missions requires specifying the acceptable position and velocity uncertainties at each encounter and the probability of mission failure which can be attributed to the astrionics systems.

Mission Selected for Analysis

In choosing the missions to be used for the present work, the Jupiter flyby mission described in Reference 1 was retained and a second mission was sought for orbiter-lander illustration. A Jupiter orbiter and/or lander was initially considered. Investigation of the feasibility of such a mission revealed that knowledge of the planet is limited. The facts that the planet is large and cold are undisputed. From this point, however, fact and assumption become increasingly inseparable.

It is generally assumed that the planet is composed of a solid core, permanently covered with a thick layer of ice, and surrounded by an atmosphere of hydrogen and ammonia. This atmosphere exhibits a density of about 0.3 $\frac{gm}{cm^3}$ near the surface. Therefore, it has been said that there exists no definite dividing line between surface and air, but that the surface changes gradually from solid to slush to gas. It is therefore not entirely clear what "lander" should mean, but it is defined here as signifying a device that will come to rest on surface material of sufficient density to support the spacecraft's weight.

In examining the requirements for landers, there arise two distinct cases: direct landers and indirect landers. Direct landers are launched from Earth, and land on the planet without first going into orbit around it. It is immediately apparent that in the case of Jupiter it is virtually impossible to achieve a soft landing by the direct method. The ΔV to be overcome is the $\sqrt{V_{escape}^2 + V_{approach}^2}$. This is roughly equal to the escape velocity at the surface of the planet for reasonable approach trajectories, or about 197,300 feet/second (Reference 2). There are, at this time, no rockets that can provide such a ΔV.

For an indirect lander, the spacecraft is first put into an orbit around the planet, and then a ΔV is applied to effect the landing. Taking as a typical case an orbiter at 2 planet radii (note that 1 radius is the nominal surface), the ΔV required to land depends on whether this is an all-propulsion system or an aerodynamic system.

At 2 radii, the escape velocity for Jupiter is about 139,700 feet/second, and the circular orbital velocity is $139{,}700/\sqrt{2} \cong 98{,}700$ feet/second.

The only method that may conceivably work is to employ purely aerodynamic braking in the early phase. At the velocity that the spacecraft will arrive, direct descent is out of the question. Rather, the spacecraft should be allowed to go into orbit, and then as it repeatedly passes through the outer atmosphere it will slow down enough to fire a retromotor for the landing. The spacecraft cannot be allowed to employ a purely gravitational descent because the high density of the lower atmosphere would cause its complete destruction. Consider a spacecraft which is to be initially placed in an orbit of 2 radii perijove and 20 radii apojove. For the present reference trajectory approach velocity of 58,000 feet/second, the ΔV required for insertion into this eccentric orbit is 18,150 feet/second (see Reference 3 for curves used in calculation), as compared to 52,400 feet/second necessary for insertion into a circular 2-radii orbit. (Note that the present reference trajectory has a much higher approach velocity than desirable for orbiters or landers). Obviously, it is more economical from fuel and scientific payload considerations to have a highly eccentric orbiter rather than a circular one. The retro required for landing from the eccentric orbit would, even with aerodynamic braking, exceed technological capabilities for the immediate and foreseeable future. It was therefore decided that alternate orbiter-lander missions be examined.

Approved NASA missions were examined and a Mars orbiter-lander was selected due to its high probability of being realized. For this reference mission, it was assumed that the lander was carried as part of the orbiter's payload. The reason for this approach is that this corresponds with the previously planned Voyager and presently planned Viking missions.

For the Voyager and Viking missions, the requirements was established that anything reaching the Mars surface should be sterile. In addition, the density of the planet's atmosphere is very low which limits the available aerodynamic braking. This necessitates the lander mass be kept as low as possible.

Therefore, the astrionics subsystems used during the interplanetary and insertion phases of the mission should not be included in the lander's mass. Only those subsystems necessary for a successful mission completion should be utilized. The lander astrionics are independent of the ones analyzed during the earlier phases of the mission. The results presented in this report consider only the astrionics used from Earth launch to Mars orbit insertion.

Astrionics Design Philosophy

Navigation and guidance of the launch vehicle which would be used for launching of interplanetary probe spacecraft were assumed to be under control of the astrionics subsystems contained above the final launch vehicle stage. It was assumed that the astrionics considered in the present work are an integral part of the spacecraft as shown in Figure 1. It would not be necessary for the astrionics to be an integral part of the spacecraft if only launch vehicle navigation and guidance were considered. In this case, certain subsystems such as the spacecraft attitude control would not be considered in the analyses. In addition, alternate electrical energy sources such as batteries would be used in the launch vehicle astrionics. Since the results presented in this report consider the astrionics to be part of the spacecraft, the spacecraft electrical energy source, propulsion system, and attitude control system are considered in the evaluation. In the case of flight control systems, it is quite possible that certain components of the system will be located on lower stages of the launch vehicle. It is also possible that power may be supplied to these components from a source other than the spacecraft's. In such case, only those components inside the spacecraft are considered for weight and power calculations. All components are considered in reliability calculations, taking into account their effective periods of operation.

For a flyby mission, such as the Jupiter flyby examined in this report, the onboard approach radars shown in Figure 1 may not be required. For an orbiter-lander mission, such as the Mars mission examined in this report, Figure 1 represents the astrionics of the orbiter spacecraft from launch through orbit insertion. The lander is assummed to carry its own astrionics subsystems that become active prior to separation from the orbiter. In the present evaluation scheme, the entire lander is considered part of the payload.

The attitude control unit provides the required torques for stabilizing and maneuvering the spacecraft. Various mechanizations are possible. The mechanizations that led to the results reported herein are:

(1) A set of six pairs of thruster nozzles driven with cold gas from a single tank;

(2) A set of four control-moment gyros; and

(3) A set of three orthogonal reaction wheels.

Although any of the three mechanizations may be employed, combinations of the three are not permissible under the present structure of the program.

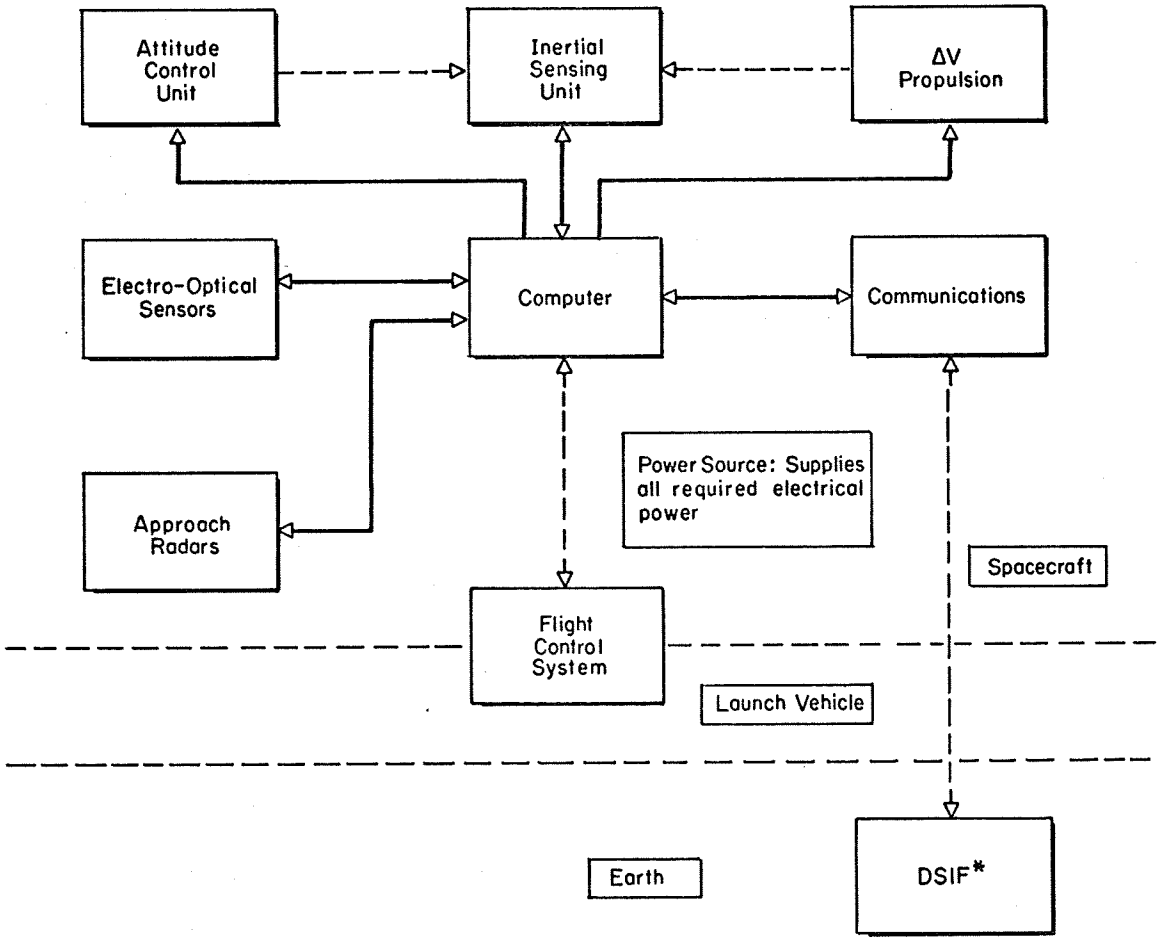

* Deep Space Instrumentation Facility

FIGURE 1. BLOCK DIAGRAM OF INTEGRATED ASTRIONICS

The inertial sensing units can be either strapdown or gimballed. The results presented in this report consider only strapdown inertial sensing units.

A centralized general purpose digital computer is assumed to provide all data management. For example, this includes:

(1) Navigation, guidance, and control computations;

(2) Processing of data input and output to the communications subsystem;

(3) Control of all subsystem functions such as sequencing; and

(4) Data storage and processing.

Components of the communications subsystem include both onboard equipment and Earth-based tracking radars. The onboard equipment is assumed to consist of the necessary antennas, transmitter, command decoder, and multiplexer.

Approach radars include both range and range-rate units. They are used in the orbiter-lander mission and are omitted in the flyby mission.

Electro-optical sensors include horizon sensors, sun sensors, planet sensors, and gimballed or strapdown star trackers. Excluding planet sensors, the remaining sensors have been evaluated for the Jupiter flyby mission (Reference 1). Sun sensors and strapdown star trackers were used in the determination of the results presented in a later section of this report.

The flight-control system includes, in addition to the computer, one or more sets of rate gyros, one or more rate-integrating gyros, a lateral accelerometer, an angle of attack sensor, passive filters, wiring, and electromechanical actuators. These sensors may be located on the launch vehicle as well as the spacecraft. Their location is determined by control system stability analysis. One or more of these components may be missing for a particular mission.

The electrical power source and distribution network include the source of the electrical energy such as a radioisotope thermoelectric generator (RTG) or batteries, as well as power supplies and wiring.

SUMMARY

The evaluation techniques developed for astrionics systems have been extended to include alternate attitude control configurations, flight control subsystems, communications requirements, astrionics switching considerations, and optimum midcourse correction strategies.

Mission requirements, mission event schedules, and spacecraft design characteristics are considered in the evaluation of the effectiveness of candidate astrionics systems, and in the determination of the effectivensss of specific navigation updating and midcourse correction schedules.

Effectiveness evaluation is based on a cost effectiveness approach with cost defined to be the total astrionics system weight and effectiveness defined to be the probability that the astrionic system operates correctly. Using this cost or weight effectiveness model, several performance indices have been developed. These may be broken into two categories. The first category requires a specified effectiveness or probability of success and uses weight as the performance index, while the second category has a specified weight allowance for the astrionics and uses the ineffectiveness or probability of failure as the performance index.

Penalty Functions

Three different penalty functions were developed during the first phase of this contract and are discussed in detail in the Technical Discussion section of this report. The three penalty functions (modes) are defined as follows:

Mode 1. The probability of mission failure due to lack of astrionics reliability and accuracy, P_{FA}, is a specified constant. Another specified constant is all nonastrionics weight, W_{NA}. The penalty function is the astrionics system weight, W_{AS}, and is obtained by complete analysis of the astrionics, mission schedule, and spacecraft data. The total astrionics weight is defined to be the sum of the weights of: (1) the astrionics hardware including the inertial sensing unit; (2) the electrical energy source and distribution network; (3) the attitude control unit, W_{AC}; and (4) the propulsion system, W_{DV}. An increase in the combined astrionics system weight necessary to assure a given influence, by the astrionics system, on probability of mission success is reflected in an increased launch weight, W_T.

Mode 2. The total launch weight, equal to the sum of the nonastrionics weight plus the combined astrionics system weight, is a specified constant. In addition, the nonastrionics weight is specified as is the combined astrionics system weight. Any decrease in astrionics system hardware or power source weight is offset with an increase in propulsion system weight or vice versa. The probability of mission failure due to lack of reliability or accuracy is the penalty function.

Mode 3. The third mode involves specified total launch weight and probability of mission failure due to lack of astrionics reliability and accuracy. The combined astrionics system weight is the penalty function. In this mode, the nonastrionics weight (useful payload) is the difference between the launch weight and combined astrionics system weight. Thus, for increasing W_{AS}, W_{NA} is reduced.

The three penalty functions are shown in Table I for comparison.

TABLE I. THREE PENALTY FUNCTIONS FOR EVALUATION OF ASTRIONICS SYSTEMS*

Mode	P_{FA}	W_{NA}	W_{AS}	W_T	Remarks
1	F	F	P	V	Fixed Nonastrionics Weight and Probability of Astrionics Failure
2	P	F	F	F	Fixed Total Weight and Astrionics Weight
3	F	V	P	F	Fixed Total Weight and Probability of Astrionics Failure

* V $\triangleq$ Variable with System, F $\triangleq$ Constant, P $\triangleq$ Penalty function.

For each of the modes, the minimum value of the penalty function defines the best system.

Evaluations discussed in this report were made using Mode 3. The probability that the astrionics system operates correctly, $1 - P_{FA}$, was specified as a mission constraint and the combined astrionics system weight, W_{AS}, is the penalty and is obtained by complete analysis of the astrionics, mission schedule, and spacecraft data.

Sensitivity of each penalty function with respect to specific system hardware parameters is expressed as the percent change in penalty per percent change in data. These sensitivities allow easy determination of the system parameters and components which affect the penalty function most directly (large sensitivity magnitude). The algebraic sign indicates which direction the penalty changes for an increase in the system parameter. Further explanation of the penalty functions is contained in the Technical Discussion section of this report.

System Parameters

The parameters used in the evaluation techniques are, in general: (1) weight; (2) power; (3) mean-time-to-failure (MTTF); (4) mean cycles to failure (MCTF); and (5) performance which depends upon the functions of the particular subsystems. Of these parameters, the estimation of performance (accuracy) of aided inertial guidance systems which utilize aid measurements and Kalman filtering in the updating of system errors is the most difficult to achieve.

Techniques to calculate the weight of the inertial sensing unit (ISU), propulsion subsystem, computer subsystem, and power subsystem were developed under Item 2 of the contract and are discussed in Reference 4. The total system weight is the summation of the weights of each of the subsystems. The weight of the attitude control system is estimated by the methods described in Reference 1 and in the Technical Discussion section of this report. The weight of the flight control system is estimated by summing the weights of the various components. The communication subsystem weight is estimated for the onboard transmitter and antenna. The weight of the electro-optical subsystem is the total weight of all electro-optical sensors used during the mission.

The power required by the astrionics system is estimated by summing the power required by each of the subsystems as a function of the system operating schedule for the mission of interest. The weight of the power sources is estimated from the resulting mission power load profile. The peak load determines the capacity of the RTG. The total weight of the power subsystem is the summation of the weights of the RTG, power conditioning and distribution equipment, and the wiring between subsystems.

The reliabilities of the ISU, flight control system, propulsion subsystem, computer subsystem, and power subsystem are estimated as discussed in Reference 4. The reliability of the attitude control subsystem is estimated by the methods described in the Technical Discussion section of this report and Reference 1. The Weibull distribution (Reference 4) with $\alpha = 1$ is used for the communications subsystem as well as the electro-optical sensors. The operating time for the various candidate aids depends upon the mission schedule. In addition, the effects of subsystem switching have also been included in the reliability calculation.

Computer Programs

The calculation of the three penalty functions and the necessary estimation of the system parameters have been coded into a deck of FORTRAN subroutines. The subroutines, with a short, simple, main program calculate the necessary system parameters and evaluate them according to the specified penalty function.

Data Requirements

Data needed to run the program are divided into four categories. The first three involve data describing the mission and spacecraft and include: (1) injection error sensitivities as computed by the Strapdown Error Analysis Program (SEAP) or Platform Error Analysis Program (PEAP); (2) state transition matrices generated by the n-body program; and (3) data describing mission values, ISU design values, and spacecraft subsystems. The fourth category is data describing candidate components (accelerometers, gyroscopes, electro-optical sensors, communication subsystem, and computers) and includes: component (1) weight, (2) dimensions, (3) excitation power, (4) reliability, and (5) error coefficients. Computer data required are similar to that for gyros and accelerometers except that the navigation errors are estimated based upon the specified number of bits used to store each element of the attitude matrix, attitude update integration frequency, integration scheme (rectangular, Runge-Kutta second order, or Runge-Kutta fourth order).

Output Options

The following types of output are available from the program:

(1) Level 1 Evaluation. A level 1 evaluation produces a 1-page report summarizing the astrionics subsystem parameters and the effectiveness evaluation calculations.

(2) Level 2 Evaluation. Level 2 evaluation includes a detailed printing of all mission operations and error analysis quantities as a function of time from the beginning of the mission to arrival at the target point.

(3) Sensitivity Analysis. Sensitivity is defined to be the percent change in effectiveness per percent change in any data value. Sensitivity reports may be generated for all mission, spacecraft, and astrionics data or selected subsets of data. These reports aid in identifying the subsystem parameters and mission values with the greatest impact on astrionics effectiveness.

(4) Optimum System Selection. The optimum suite of astrionics is found by successive substitution of candidate subsystems for evaluation. The substitution algorithm is similar to a steepest descent technique with the possibility of finding only local minima. Multiple starting points are used to minimize the probability that the system found is a local rather than a global optimum.

(5) Optimum Multiple Midcourse Corrections. Selection of an optimum sequence of updates and midcourse corrections is possible, as an option. A table of all sequences tried by the algorithm is printed.

The first four types of output were programmed during the first two years of this study and extensive examples of these are shown in References 1 and 4. The optimum midcourse correction algorithm is discussed at length in this report and a sample output is shown in Appendix A.

Mission Characteristics

Two mission are considered in this report. The first, a Jupiter flyby has been discussed in detail in Reference 1 and 4. The second mission is a Mars orbiter/lander mission which is discussed in Appendix A. This mission is based on Viking data when possible but is not a conclusive study of astrionics for the Viking mission. (Reference 5).

Mission Schedule

The computer program accepts a flexible mission schedule defining astrionics operations. To avoid lengthy repetition of similar sequences, subschedules have been introduced. A set of scheduled astrionics operations such as a midcourse correction sequence can be defined as a subschedule. The mission schedule then states the times at which the subschedule is to be executed.

Summary of Effort on Added Study Elements

Planetary Approach Sensors

Approach sensors carried onboard the spacecraft are used: (1) to provide information for state updating at various times as specified in the schedule for any particular mission; and (2) to aid in correct attitude orientation of the spacecraft prior to midcourse corrections.

In determining whether any particular sensor should be employed, the assumption was made that, except in cases when the spacecraft is eclipsed by another body, Earth-based updating information is available from the DSIF. With this assumption, only sensors capable of improving on the accuracy of the DSIF-updated navigation system need be considered. Onboard range and range-rate radar and electro-optical sensors were examined. Range and range-rate radars were modeled and incorporated in the computer program. Planet angle sensors were analyzed but not modeled. If the assumption is made that the DSIF provides range as well as range-rate data with the accuracies stated in the available literature (Reference 6), the planet angle sensors do not offer a significant improvement in updating information. Sun sensors and star trackers are carried onboard the spacecraft and measurements with these are possible during the approach phase. These measurements are used for updates as specified in the mission schedule.

A Mars orbiter mission was analyzed, as an example, from launch to retro-firing for orbit injection. Although sensors necessary for landers were considered, no modeling of landers was done.

Alternate Attitude Control Schemes

In addition to cold gas reaction jets, discussed in Reference 1, two alternate attitude control mechanizations have been analyzed and modeled. These are control moment gyros (CMG) and inertia wheel attitude control (IWAC). Unlike gas reaction jets, both these schemes are mass-conservative mechanizations, operating by shifting the orientation of the spacecraft's momentum vector.

The CMG system is not only mass conservative but, in most cases, momentum conservative. The gyros are kept rotating at constant speed and momentum is transferred between spacecraft axes by torquing the gyros. IWAC systems are not momentum conservative. They employ wheels with fixed orientations with respect to the vehicle axes, and the spacecraft total momentum vector is changed by slowing down or speeding up the wheels.

Sizing of the system is accomplished by calculating the torque necessary to perform the specified maneuvers and overcome external disturbances. Once the minimum adequate torque is established and the maximum precession velocity is postulated for the system, then the necessary momentum is known. The postulated precession velocity is not permitted to exceed the maximum angular velocity for which successful acquisition of the Sun and star by the onboard sensors is possible.

The various possible attitude control mechanizations are compared in Table II. Only one set of inertia wheels is used in the IWAC system. If separate fine and coarse control wheels were employed, it is reasonable to expect a small increase in weight and some decrease in the required power.

Both CMG and IWAC mechanizations result in a higher penalty than the gas-reaction jets, mainly due to the subsystem weight difference. In multiple-midcourse missions, the penalty may also be affected by degraded reliability.

TABLE II. COMPARISON OF ATTITUDE CONTROL SYSTEMS ON A JUPITER SWINGBY MISSION

Attitude Control Mechanization	Attitude Control Weight (lbs)	Attitude Control Power (watts)	Penalty* (lbs)
Gas Reaction Jets (Equal Thrusts)	21.218	10.00	384.047
Gas Reaction Jets (Unequal Thrusts)	21.215	10.00	384.326
Control Moment Gyros	29.019	9.407	391.567
Inertia Wheels	30.422	14.978	394.965

* All other subsystems contributing to the penalty are identical for each mechanization.

This effect did not become apparent in the Jupiter flyby mission on which the systems were evaluated. Detailed analysis and results appear in the Technical Discussion part of this report.

Flight Control Requirements

An investigation of the impact of flight control requirements on astrionics effectiveness was carried out. The analysis was hampered by the fact that the flight control components differ according to the launch vehicle as well as the mission characteristics. No model was therefore possible for a generalized approach towards synthesis of such systems.

If the flight control components and their locations are known, it is possible to calculate the effect that their power requirements, reliability, and in some cases, weight will have on the overall penalty.

In addition, evaluation of the requirements flight control imposes on the onboard computer is possible on the basis of computational speed and memory capacity. For a particular mission, these requirements should be input as data. The data bank is searched for a computer meeting the given requirements. More detailed evaluations were not implemented in this study, due to their dependency on individual mission and vehicle parameters.

Effects of Subsystem Switching

The effect of switching subsystems on and off on the astrionics reliability is considered. An exponential model is assumed for computing the probability of failure due to on and off switching with the mean number of cycles to failure (MCTF) of each subsystem specified as input data.

Communications Requirements

The impact of the spacecraft communications subsystem upon the penalty was considered by optimizing the communications subsystem weight. In this application, the transmitter must deliver a sufficient amount of power to the spacecraft antenna in order to satisfy a given requirement on the effective radiated power (ERP). The required ERP is calculated from trajectory and Earth based station data. A comparison of an optimized transmitter versus a specified 20 watt transmitter weighing 10 lbs. is shown in Table III.

TABLE III. COMPARISON OF OPTIMIZED VERSUS SPECIFIED TRANSMITTER ON A JUPITER SWINGBY MISSION

	Transmitter	
	Optimized	Specified
ERP (KW)	3.36	3.36
Antenna Gain (DB)	23.6	26.2
Antenna Weight (lb)	14.615	20.98
Antenna Pointing Tolerance (deg)	1.084	.802
Transmitter Output Power (watts)	36.536	20.0
Transmitter Weight (lbs)	3.727	10.0
Energy Source Weight* (lbs)	114.772	109.067
Penalty** (lbs)	377.114	384.047

* Includes electrical power requirements of other astrionics subsystems which are identical for both cases.

** Attitude control using equal thrust gas jets.

Multiple Midcourse Correction Strategies

A critical review of seven selected papers relating to the development of an optimum midcourse correction policy was made and one of these, a paper by C. G. Pfeiffer, was selected for implementation. This optimization procedure, an adaptation of Bellman's dynamic programming algorithm, was applied to the astrionics penalty function to determine an optimum midcourse correction strategy. The results of this application are discussed in Appendix A. A second midcourse correction policy was implemented. This policy was developed by assuming that velocity corrections would be made at given times to minimize the uncertainty in the resulting target miss. A matrix which relates the desired velocity correction vector to the vector of instantaneous computed deviations from the nominal trajectory is determined for two cases. In the first case, execution errors are neglected while, in the second case, an approximation of the errors generated by the midcourse correction is considered. Improvement using this technique was slight and it was removed from the program.

TECHNICAL DISCUSSION

Evaluation Criteria for Interplanetary Multiple Planet Swingby, Orbiter, and Lander Mission Astrionics

Evaluation criteria for interplanetary flyby mission astrionics were formulated and implemented through computer programs in previous phases of work on this contract. This Interim Scientific Report encompasses the third year effort and resultant modifications to the computer programs required to accomplish the objective of this phase. The extension of the effort to include evaluation of astrionics for multiple planet swingby, orbiter, and lander missions necessitated making modifications to the previous astrionics evaluation criteria and system concept.

Astrionics System Concept

It was assumed that the modular astrionics system design philosophy (References 1 and 4) is applicable to this study. This philosophy permitted addition of another module to the integrated astrionics configuration used during development of the evaluation techniques for interplanetary flyby mission astrionics (Reference 1). The module added is approach guidance radar. Note that the electro-optical aid subsystem now includes planetary approach sensors. In addition, as depicted in Figure 2, the propulsion subsystem was changed from a midcourse correction propulsion subsystem to a ΔV propulsion subsystem. This change was necessary since the same propulsion subsystem is used for midcourse correction ΔV, orbit insertion ΔV, and orbit trim ΔV in many spacecraft designs (Reference 5 and 7).

To evaluate the modified astrionics system, some modifications were made to the penalty function as originally presented in References 1 and 4. The modified penalty function is discussed in the following section.

Penalty Function Analysis

The effectiveness of an astrionics system on a specific spacecraft and mission is evaluated by one of three penalty functions. The astrionics system is described by the seven system parameters shown in Table IV. M_V, the mean ΔV, is the nominal retro burn for orbit insertion if accomplished with the same engine used for the midcourse corrections. Since the orbit insertion burn may include guidance to correct velocity deviations, it is necessary to include the propulsion subsystem in the astrionics analysis. If a separate engine is used for orbit insertion and corrective guidance does not occur, M_V is set to zero and the retro subsystem is not included in the astrionics analysis. The penalty functions are calculated from the above system parameters and the mission and spacecraft parameters shown in Table V.

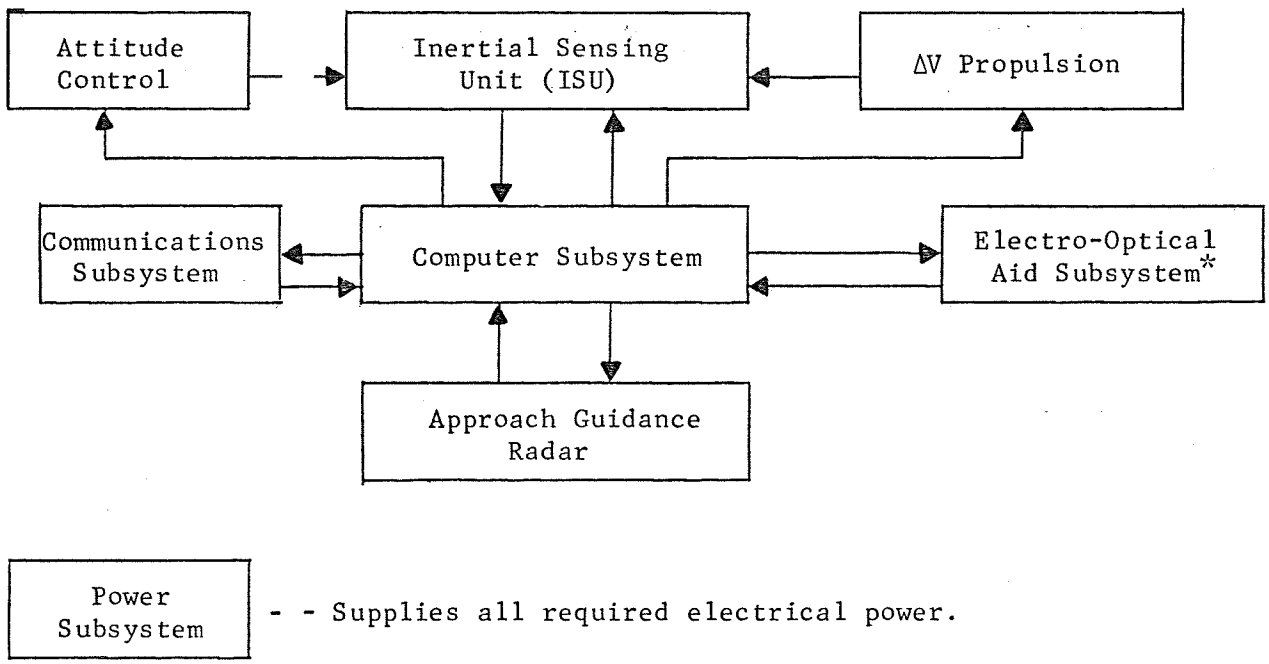

* Horizon Sensor --- Parking Orbit
Star Tracker/Sun Sensor --- Injection to Midcourse
Planetary Approach Sensor --- Encounter

FIGURE 2. BLOCK DIAGRAM OF ONBOARD INTEGRATED ASTRIONICS SUBSYSTEMS

TABLE IV. ASTRIONICS SYSTEM PARAMETERS

Symbol	Definition
P_{FR}	Probability of mission failure due to inadequate hardware reliability.
R_V	Square root of the trace of the ΔV covariance matrix.
D_V	Degrees-of-freedom of the midcourse ΔV covariance.
M_V	Mean of the ΔV.
R_T	Square root of the trace of the target miss covariance matrix, or the standard deviation of any single miss parameter of interest.
D_T	Degrees-of-freedom of the target miss covariance.
W_{ICP}	Weight of onboard inertial sensing unit, computer, electrical energy source, electro-optical sensors, communications subsystem, radars, attitude control, and wiring.

TABLE V. MISSION AND SPACECRAFT PARAMETERS

Symbol	Definition
P_{FA}	Probability of mission failure attributable to the astrionics system.
W_{NA}	Nonastrionics spacecraft weight.
W_T	Total spacecraft weight.
X_{MISS}	Allowed magnitude of any miss parameter, or vector of interest, at the target.
K_{DV}	Propulsion system tankage factor (system weight/ fuel weight).
K_{DC}	Propulsion system constant weight.
Ig	Specific impulse of the propulsion system times gravity.

The three penalty functions are defined in Table VI.

TABLE VI. PENALTY FUNCTION DEFINITION*

Penalty Mode	P_{FA}	W_{NA}	W_{AS}	W_T
1	F	F	P	V
2	P	F	F	F
3	F	V	P	F

* F $\triangleq$ Fixed, P $\triangleq$ Penalty, V $\triangleq$ Variable with System

Penalty function, Mode 1, assumes that a certain probability of mission failure attributable to astrionics (P_{FA}) is reasonable and that non-astrionics spacecraft weight (W_{NA}) is fixed. The astrionics system weight is calculated and used as the penalty function.

Penalty function, Mode 2, assumes nonastrionics, astrionics system, and total spacecraft weights are constants with the probability of mission failure attributable to astrionics (P_{FA}) variable and used as the penalty function.

Penalty function, Mode 3, assumes that a certain probability of mission failure attributable to astrionics (P_{FA}) is reasonable and that total spacecraft weight (W_T) is fixed. The astrionics system weight (W_{AS}) is variable and used as the penalty function.

Calculation of the penalty function under any of the three modes will involve calculating the intermediate quantities defined in Table VII.

TABLE VII. INTERMEDIATE QUANTITIES USED IN CALCULATING THE PENALTY FUNCTIONS

Symbol	Definition
P_{FV}	Probability of having insufficient ΔV fuel.
P_{FT}	Probability of exceeding target miss criteria.
P_{FTR}	Probability of failure due to inadequate reliability or target miss.
W_F	Weight of ΔV fuel.
W_{DV}	Total weight of propulsion system.
ΔV	Velocity change capability.
ψ_T	X_{MISS}/R_T

A detailed discussion of the steps used to calculate each penalty mode is given below.

Penalty Mode 1. Probability of missing the target (P_{FT}) is calculated from the system parameters describing accuracy at the target as follows:

$$P_{FT} = \text{Prob}\ \psi_T,\ D_T)$$

where

$$\psi_T = X_{MISS}/R_T$$

Note that the definition of X_{MISS} has been expanded to be completely general. X_{MISS} for an orbiter would be the acceptable deviation in one or more of the orbital elements. For a lander, X_{MISS} could include acceptable position or velocity vector deviations at touchdown. X_{MISS} on multiple planet swingby missions in the acceptable periapsis deviation at the final planet. Deviations from the nominal periapsis at intermediate planets will be accounted for by subsequent midcourse corrections.

The function Prob(ψ,D) is the probability distribution of the magnitude of a vector with normal, zero-mean components as discussed in Reference 8. A table of this distribution is shown in Figure 3.

The combined probability of missing the target or failing due to inadequate reliability is obtained from

$$P_{FV} = \frac{P_{FA} - P_{FTR}}{1 - P_{FTR}} \quad . \tag{1}$$

Note that if P_{FTR} exceeds P_{FA}, P_{FV} does not exist. In other words, if the probability of failure due to inadequate reliability or target miss is greater than P_{FA}, even a perfect system (zero probability of insufficient fuel) will exceed P_{FA}.

The ΔV capability needed to achieve the required P_{FA} is calculated from

$$\Delta V = \text{REQ}(P_{FV}, M_V, R_V, D_V)$$

where REQ(P,M,R,D) is a modified version of Prob(ψ,D) as discussed in Appendix B.

PROB.	D= 1.0	1.1	1.2	1.3	1.4	1.5	1.6	1.7	1.8	1.9	2.0	2.2	2.4	2.6	2.8	3.0
1.00E+00	0.0000X0	0.0000X0	0.0000X0	0.0000X0	0.0000X0	0.0000X0	0.0000X0	0.0000X0	0.0000X0	0.0000X0	0.0000X0	0.0000X0	0.0000X0	0.0000X0	0.0000X0	0.0000X
9.00E-01	.2072	.2182	.2297	.2358	.2464	.2577	.2696	.2822	.2955	.3097	.3237	.3522	.3770	.4004	.4218	.4398
8.00E-01	.3016	.3146	.3285	.3431	.3645	.3872	.4072	.4252	.4418	.4575	.4608	.4989	.5228	.5431	.5617	.5786
7.00E-01	.3866	.4220	.4506	.4748	.4967	.5182	.5371	.5539	.5695	.5840	.5972	.6209	.6411	.6591	.6746	.6887
6.00E-01	.5251	.5572	.5841	.6067	.6281	.6466	.6629	.6779	.6914	.7036	.7147	.7343	.7511	.7655	.7781	.7892
5.00E-01	.6753	.7028	.7255	.7459	.7631	.7783	.7918	.8036	.8143	.8239	.8326	.8476	.8602	.8708	.8800	.8880
4.00E-01	.8416	.8637	.8812	.8965	.9091	.9202	.9296	.9379	.9451	.9515	.9572	.9669	.9746	.9809	.9863	.9910
3.00E-01	1.0367	1.0500	1.0606	1.0690	1.0756	1.0814	1.0860	1.0897	1.0927	1.0952	1.0973	1.1004	1.1025	1.1039	1.1048	1.1053
2.00E-01	1.2819	1.2836	1.2841	1.2835	1.2822	1.2804	1.2784	1.2761	1.2737	1.2712	1.2686	1.2634	1.2583	1.2532	1.2483	1.2436
1.00E-01	1.6452	1.6284	1.6128	1.5982	1.5845	1.5716	1.5594	1.5480	1.5372	1.5270	1.5174	1.4997	1.4836	1.4689	1.4555	1.4433
9.00E-02	1.6955	1.6764	1.6586	1.6419	1.6263	1.6118	1.5982	1.5855	1.5736	1.5624	1.5518	1.5322	1.5146	1.4986	1.4841	1.4709
8.00E-02	1.7510	1.7288	1.7083	1.6894	1.6721	1.6559	1.6408	1.6267	1.6134	1.6010	1.5893	1.5678	1.5485	1.5312	1.5154	1.5009
7.00E-02	1.8120	1.7868	1.7637	1.7424	1.7228	1.7046	1.6878	1.6721	1.6574	1.6436	1.6307	1.6071	1.5860	1.5670	1.5497	1.5340
6.00E-02	1.8812	1.8522	1.8258	1.8017	1.7796	1.7593	1.7405	1.7230	1.7068	1.6916	1.6773	1.6513	1.6281	1.6073	1.5885	1.5712
5.00E-02	1.9630	1.9269	1.8970	1.8699	1.8450	1.8222	1.8011	1.7816	1.7635	1.7466	1.7308	1.7020	1.6764	1.6534	1.6326	1.6138
4.00E-02	2.0535	2.0157	1.9815	1.9506	1.9225	1.8967	1.8730	1.8511	1.8307	1.8118	1.7941	1.7620	1.7335	1.7081	1.6851	1.6643
3.00E-02	2.1704	2.1261	2.0865	2.0508	2.0185	1.9890	1.9619	1.9370	1.9139	1.8925	1.8726	1.8364	1.8044	1.7758	1.7501	1.7266
2.00E-02	2.3266	2.2740	2.2272	2.1852	2.1474	2.1129	2.0814	2.0525	2.0257	2.0009	1.9779	1.9362	1.8995	1.8668	1.8374	1.8108
1.00E-02	2.5760	2.5101	2.4518	2.3999	2.3531	2.3107	2.2721	2.2367	2.2041	2.1740	2.1460	2.0955	2.0511	2.0117	1.9764	1.9446
9.00E-03	2.6122	2.5444	2.4845	2.4311	2.3830	2.3395	2.2998	2.2635	2.2300	2.1991	2.1704	2.1186	2.0731	2.0327	1.9966	1.9640
8.00E-03	2.6521	2.5822	2.5205	2.4655	2.4160	2.3712	2.3304	2.2931	2.2587	2.2269	2.1973	2.1442	2.0975	2.0560	2.0189	1.9854
7.00E-03	2.6971	2.6247	2.5609	2.5040	2.4529	2.4067	2.3646	2.3261	2.2907	2.2579	2.2275	2.1728	2.1247	2.0821	2.0439	2.0095
6.00E-03	2.7482	2.6731	2.6069	2.5480	2.4951	2.4472	2.4037	2.3638	2.3272	2.2933	2.2619	2.2053	2.1557	2.1116	2.0723	2.0368
5.00E-03	2.8075	2.7293	2.6604	2.5991	2.5441	2.4943	2.4491	2.4077	2.3696	2.3344	2.3018	2.2431	2.1916	2.1460	2.1052	2.0685
4.00E-03	2.8784	2.7965	2.7244	2.6603	2.6027	2.5508	2.5035	2.4603	2.4205	2.3838	2.3498	2.2886	2.2349	2.1874	2.1449	2.1066
3.00E-03	2.9680	2.8812	2.8050	2.7372	2.6765	2.6217	2.5720	2.5264	2.4846	2.4460	2.4102	2.3459	2.2895	2.2395	2.1949	2.1547
2.00E-03	3.0905	2.9973	2.9155	2.8429	2.7778	2.7191	2.6658	2.6171	2.5724	2.5311	2.4929	2.4242	2.3641	2.3110	2.2635	2.2207
1.00E-03	3.2967	3.1071	3.0961	3.0154	2.9433	2.8783	2.8192	2.7654	2.7160	2.6704	2.6283	2.5525	2.4863	2.4277	2.3754	2.3284
9.00E-04	3.3202	3.2156	3.1227	3.0409	2.9677	2.9018	2.8419	2.7873	2.7372	2.6910	2.6482	2.5715	2.5043	2.4450	2.3920	2.3443
8.00E-04	3.3528	3.2460	3.1522	3.0691	2.9948	2.9278	2.8676	2.8116	2.7607	2.7138	2.6704	2.5925	2.5243	2.4641	2.4103	2.3620
7.00E-04	3.3897	3.2807	3.1854	3.1008	3.0252	2.9571	2.8953	2.8389	2.7871	2.7394	2.6953	2.6160	2.5468	2.4856	2.4310	2.3819
6.00E-04	3.4318	3.3206	3.2232	3.1370	3.0599	2.9905	2.9275	2.8700	2.8173	2.7687	2.7237	2.6430	2.5724	2.5101	2.4545	2.4045
5.00E-04	3.4809	3.3673	3.2677	3.1794	3.1006	3.0296	2.9652	2.9065	2.8526	2.8029	2.7570	2.6745	2.6025	2.5388	2.4820	2.4309
4.00E-04	3.5401	3.4235	3.3212	3.2306	3.1497	3.0768	3.0107	2.9505	2.8952	2.8442	2.7972	2.7126	2.6387	2.5734	2.5153	2.4629
3.00E-04	3.6154	3.4946	3.3890	3.2945	3.2120	3.1367	3.0685	3.0063	2.9493	2.8967	2.8481	2.7609	2.6846	2.6175	2.5575	2.5035
2.00E-04	3.7191	3.5931	3.4827	3.3850	3.2978	3.2192	3.1482	3.0833	3.0239	2.9691	2.9184	2.8276	2.7483	2.6782	2.6158	2.5597
1.00E-04	3.8907	3.7558	3.6376	3.5331	3.4399	3.3561	3.2801	3.2108	3.1473	3.0889	3.0348	2.9380	2.8535	2.7787	2.7122	2.6524
9.00E-05	3.9162	3.7800	3.6607	3.5551	3.4610	3.3765	3.2997	3.2298	3.1657	3.1067	3.0522	2.9544	2.8691	2.7936	2.7265	2.6662
8.00E-05	3.9445	3.8068	3.6863	3.5796	3.4845	3.3990	3.3215	3.2508	3.1861	3.1266	3.0714	2.9727	2.8865	2.8102	2.7425	2.6816
7.00E-05	3.9764	3.8370	3.7150	3.6072	3.5109	3.4245	3.3460	3.2745	3.2090	3.1489	3.0931	2.9932	2.9061	2.8290	2.7604	2.6989
6.00E-05	4.0130	3.8717	3.7480	3.6367	3.5412	3.4537	3.3742	3.3017	3.2353	3.1744	3.1179	3.0168	2.9285	2.8504	2.7810	2.7187
5.00E-05	4.0559	3.9123	3.7866	3.6757	3.5767	3.4878	3.4072	3.3336	3.2662	3.2044	3.1470	3.0444	2.9548	2.8756	2.8051	2.7419
4.00E-05	4.1077	3.9615	3.8334	3.7206	3.6196	3.5292	3.4471	3.3722	3.3037	3.2406	3.1822	3.0778	2.9867	2.9061	2.8343	2.7700
3.00E-05	4.1739	4.0240	3.8930	3.7778	3.6745	3.5818	3.4979	3.4213	3.3514	3.2867	3.2271	3.1203	3.0273	2.9449	2.8715	2.8058
2.00E-05	4.2685	4.1106	3.9756	3.8570	3.7505	3.6546	3.5680	3.4894	3.4176	3.3506	3.2893	3.1793	3.0832	2.9987	2.9231	2.8556
1.00E-05	4.4177X4	.2546X4	.1136X3	.9877	3.8763	3.7756	3.6848	3.6028	3.5276	3.4573	3.3925	3.2779	3.1766	3.0884	3.0091	2.9378
9.00E-06	4.4484X4	.2760X4	.1342X4	.0072	3.8950	3.7939	3.7024	3.6197	3.5440	3.4732	3.4079	3.2927	3.1906	3.1018	3.0220	2.9501
8.00E-06	4.4656X4	.2999X4	.1570X4	.0288X3	.9156	3.8140	3.7219	3.6385	3.5623	3.4909	3.4250	3.3091	3.2062	3.1165	3.0363	2.9638
7.00E-06	4.4940X4	.3268X4	.1828X4	.0533X3	.9393	3.8368	3.7446	3.6597	3.5829	3.5110	3.4443	3.3277	3.2237	3.1330	3.0525	2.9792
6.00E-06	4.5266X4	.3577X4	.2124X4	.0813X3	.9662X3	.8628	3.7692	3.6840	3.6067	3.5342	3.4665	3.3490	3.2439	3.1520	3.0711	2.9969
5.00E-06	4.5648X4	.3939X4	.2471X4	.1142X3	.9978X3	.8934X3	.7980	3.7125	3.6345	3.5614	3.4934	3.3741	3.2675	3.1743	3.0930	3.0184
4.00E-06	4.6112X4	.4376X4	.2892X4	.1541X4	.0362X3	.9305X3	.8349X3	.7471	3.6683	3.5945	3.5260	3.4036	3.2963	3.2014	3.1196	3.0446
3.00E-06	4.6703X4	.4937X4	.3429X4	.2049X4	.0851X3	.9779X3	.8809X3	.7913X3	.7114X3	.6367	3.5676	3.4406	3.3326	3.2359	3.1530	3.0779
2.00E-06	4.7524X4	.5715X4	.4174X4	.2756X4	.1530X4	.0436X3	.9447X3	.8527X3	.7713X3	.6954X3	.6254X3	.4925	3.3827	3.2840	3.2002	3.1243

X indicates extrapolation from Gamma Function Table

FIGURE 3. CUMULATIVE PROBABILITY DISTRIBUTION FUNCTION [$Pr(|X| > \psi \sqrt{TRACE})$] OF A VECTOR WITH NORMAL, ZERO MEAN, COMPONENTS

Magnitude/$\sqrt{\text{Trace}}$ = ψ

The familiar rocket equation,

$$\Delta V = Ig \log_e(\mu) \quad ,$$

is used to obtain the spacecraft mass ratio,

$$\mu = e^{\Delta V/Ig} \quad .$$

The spacecraft mass ratio is the initial spacecraft weight divided by the final spacecraft weight and is calculated as follows:

$$\mu = \frac{W_T}{W_T - W_F} \quad .$$

The weight of the required fuel is

$$W_F = W_T \frac{(\mu - 1)}{\mu} \quad .$$

The propulsion system weight is estimated using the equation

$$W_{DV} = W_F K_{DV} + K_{DC} \quad .$$

Defining

$$W_T = W_{ICP} + W_{NA} + W_{DV} \quad ,$$

substitution into the equation for W_F in terms of W_T and μ yields

$$W_F = \frac{(\mu - 1)(W_{ICP} + W_{NA} + K_{DC})}{\mu - (\mu - 1) K_{DV}} \quad .$$

The effective weight of the complete astrionics system is then

$$W_{AS} = W_{ICP} + W_{DV} \quad . \tag{2}$$

This is the desired penalty function. The above equations are shown in flow chart form in Figure 4.

Penalty Mode 2. The probability of failing due to inadequate reliability of miss at the target (P_{FTR}) is calculated as in Penalty Mode 1. The combined astrionics system probability of failure (P_{FA}), the penalty of Mode 2, is calculated by including the probability of insufficient midcourse correction fuel (P_{FV}).

The total spacecraft weight (W_T) and nonastrionics spacecraft weight (W_{NA}) define the total astrionics system weight to be

$$W_{AS} = W_T - W_{NA} \quad .$$

The propulsion system weight is assumed to be

$$W_{DV} = W_{AS} - W_{ICP} \quad .$$

Thus, the fuel weight is determined from the equation,

$$W_F = \frac{W_{DV} - K_{DC}}{K_{DV}}$$

and the spacecraft mass ratio is

$$\mu = \frac{W_T}{W_T - W_F} \quad .$$

The ΔV capability is found from the rocket equation,

$$\Delta V = Ig \log_e(\mu)$$

and the probability of insufficient fuel is

$$P_{FV} = PRM(\Delta V, M_V, R_V, D_V)$$

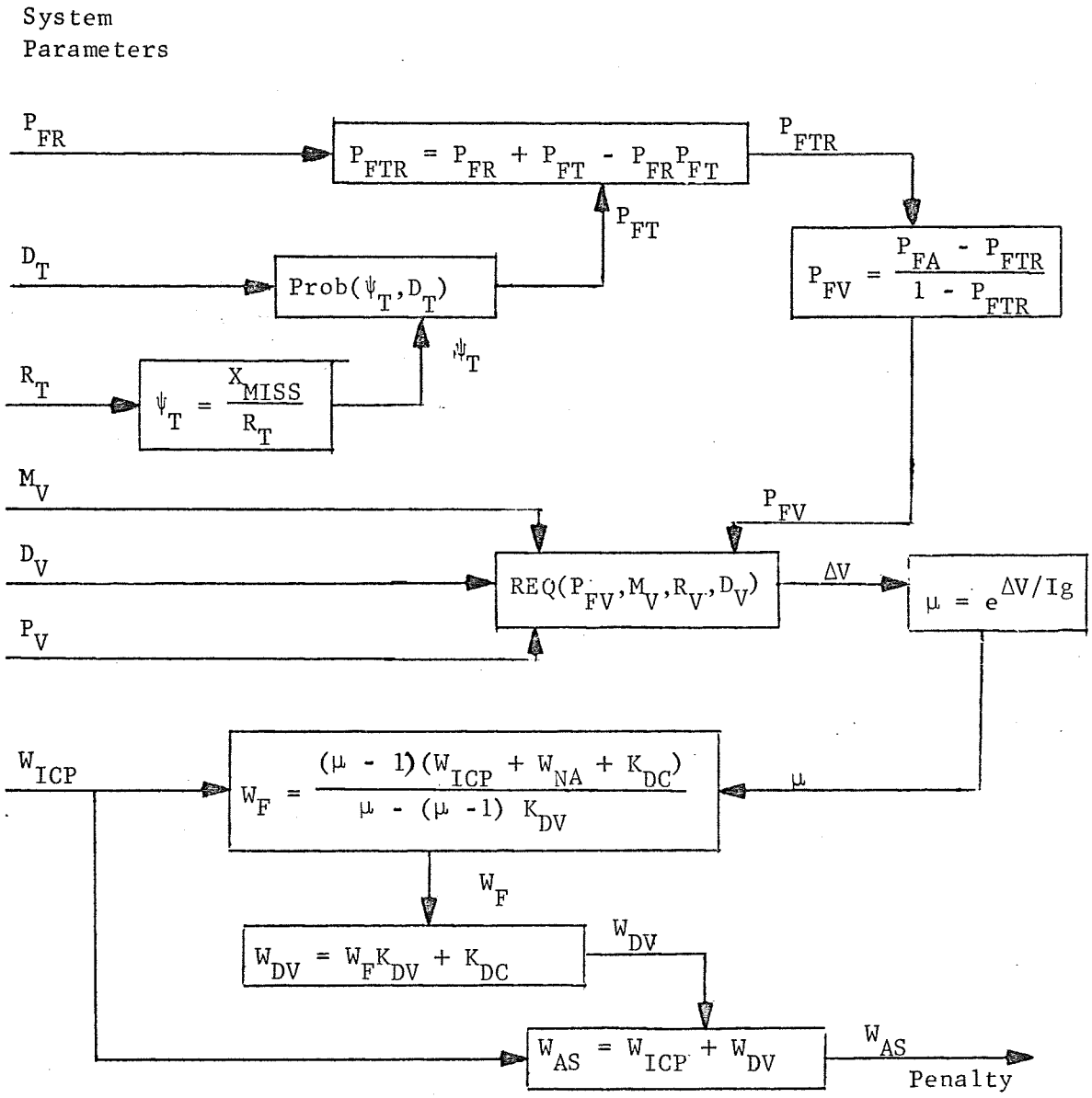

FIGURE 4. CALCULATION OF PENALTY, MODE 1

where PRM(V,M,R,D) is the inverse function of REQ(P,M,R,D)

The combined probability of mission failure attributable to the astrionics is

$$P_{FA} = P_{FTR} + P_{FV} - P_{FTR}P_{FV} \tag{3}$$

and is the desired penalty, Mode 2. The above equations are shown in flow chart form in Figure 5.

Penalty Mode 3. Penalty Mode 3 is similar to Penalty Mode 1 in that the penalty is the effective weight of the astrionics system (W_{AS}). However, the total spacecraft weight (W_T) is held constant under Mode 3 unlike Mode 1 where the nonastrionics weight was held constant.

The probability of failing due to reliability or miss at the target (P_{FTR}) is calculated as under Mode 1. The probability of having insufficient fuel is obtained from the equation

$$P_{FV} = \frac{P_{FA} - P_{FTR}}{1 - P_{FTR}} \quad .$$

The result is used to compute the required ΔV capability from the equation

$$\Delta V = REQ(P_{FV}, M_V, R_V, D_V)$$

With the ΔV requirement known, the mass ratio is

$$\mu = e^{\Delta V/Ig} \quad .$$

Since the total spacecraft weight is known, the required fuel weight may be obtained directly from

$$W_F = W_T \frac{(\mu - 1)}{\mu}$$

The total effective astrionics system weight is obtained by adding the propulsion system weight to the weight of the other astrionics subsystems as shown below,

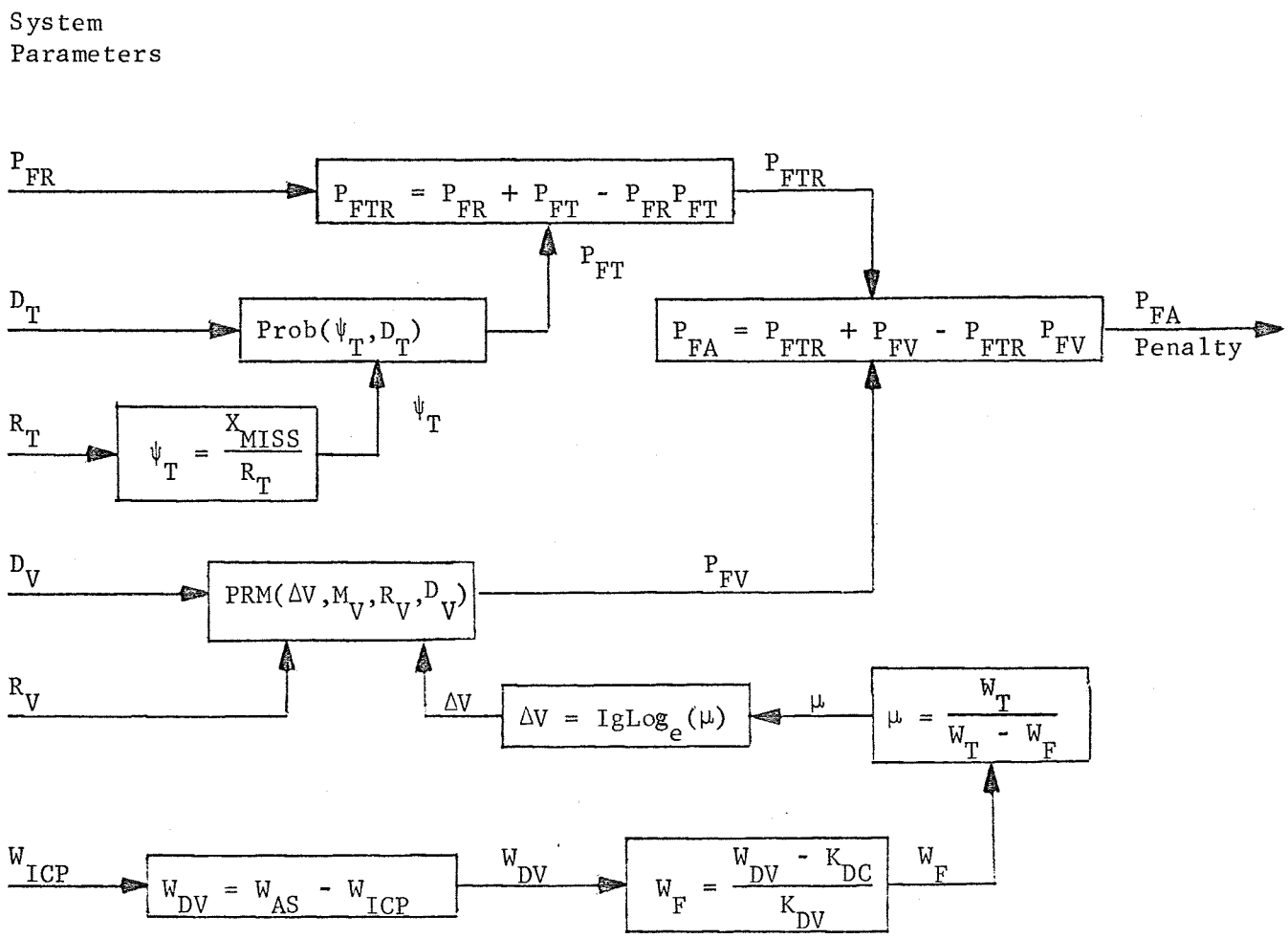

FIGURE 5. CALCULATION OF PENALTY, MODE 2

$$W_{AS} = W_{ICP} + W_{DV} \quad . \tag{4}$$

The equations for Penalty Mode 3 are shown in Figure 6.

Astrionics Subsystem Analysis

The following sections of this report describe the analyses of the added astrionics subsystems and the modifications to the error analysis and penalty evaluation techniques.

Deep Space Instrumentation Facility

The Deep Space Instrumentation Facility (DSIF) provides communications with and tracking of the spacecraft through most of the mission. Brief periods may exist when the DSIF can not view the spacecraft due to occultation by celestial bodies such as the target planet or the moon.

The communications function of the DSIF is considered under the communications requirements discussion later in this report. The tracking function is included in the error analysis as updating of the onboard navigation estimates of the states. Prior to the updating of the onboard system, extensive ground based calculations are made using the DSIF doppler radar measurements. The accuracy of the onboard update is a function of the trajectory, the tracking time, and the frequency and accuracy of the doppler measurements. The ground based calculations and basic doppler errors are not modeled in this study. It is assumed that the results of these measurements and calculations, when transmitted to the onboard navigation system constitute an update of the onboard system range and range rate errors. The accuracy of the range and range rate information, after tracking and statistical smoothing by the ground based calculations are referred to in this report as the DSIF accuracies. As mentioned above, these accuracies are a function of the trajectory and sampling frequencies, but are assumed to be constants, specified as data in this study. The one sigma values used, 50 ft and .004 ft/sec., are achievable with the DSIF under certain trajectory and tracking conditions [one doppler sample per minute for several days (Reference 6)]. Further study is required to ascertain the exact figures for any mission.

Planetary Approach Sensors

Capability for evaluating planetary approach sensors has been developed and added to the existing computer program.

The approach sensors are treated like any other astrionics subsystem for penalty evaluation purposes. Weight, power, MTBF, MCTF, and accuracies are

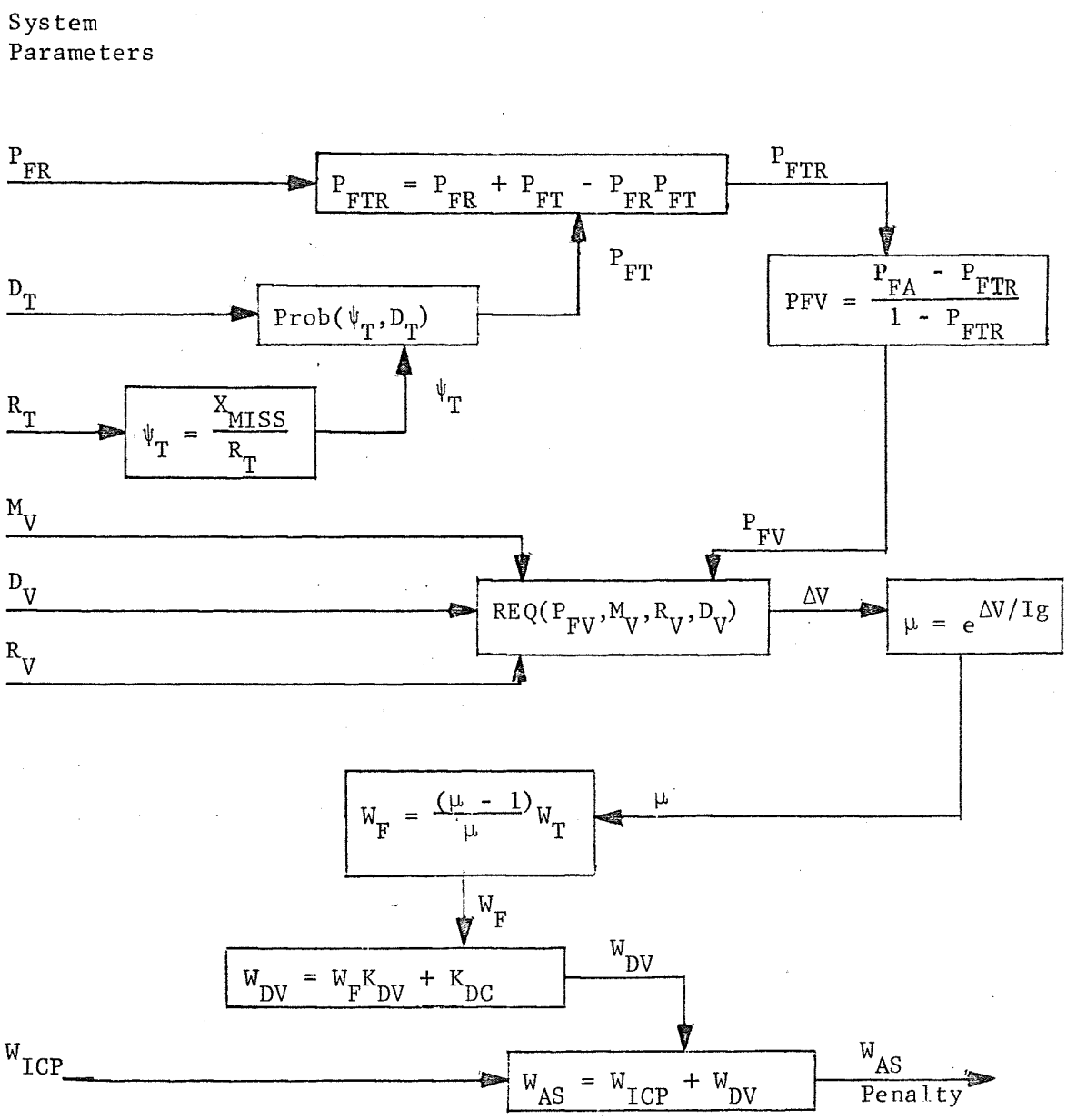

FIGURE 6. CALCULATION OF PENALTY, MODE 3

required as input data, and the effect of the system on the penalty is then calculated.

Measurements discussed include those made by electro-optical sensors and range and range-rate radars. Sensors actually modeled in the computer program include star and sun sensors and range and range-rate radars. Sensors for planet angle measurements were not modeled. The accuracy of DSIF earth-based tracking minimizes the effect of updates using these less accurate measurements.

A Mars orbiter mission was used to exercise the computer program. Results for this mission appear in Appendix A.

Radar Measurements

During the approach phase, it is assumed that onboard radars capable of measuring range and range rate are available for updating the navigation system errors. These updates are in addition to the DSIF and star-sun electro-optical sensors used through most of the mission. To include the effects of updates using these radars in the navigation error analysis, it is necessary to know the covariance or standard deviations of the errors in the measurements and the measurement matrix relating the navigation states to the measured quantities.

Radar Accuracy. The fundamental accuracy of range, and range rate (doppler) radars is discussed in many texts (e.g., References 9 and 10). Additional errors associated with the design and installation of radar subsystems contribute significantly to the total error in approach radar measurements. These are discussed in detail in Reference 11. In summary, the errors discussed in Reference 11 are broken into the following three categories:

(1) Bias errors, which are constant offsets and vary from point to point in the trajectory and thus are functions of the nominal state vector. These include:

   (a) Terrain bias errors,
   (b) Uncompensated dynamic-lag errors,
   (c) Doppler compensation errors, and
   (d) Pre-amp slope errors.

(2) Installation and environmental errors associated with the misalignments of the sensors on the spacecraft. These include:

   (a) Initial mounting errors, and
   (b) Vehicle distortion due to vibration and temperature changes.

(3) Fluctuating errors which vary randomly with statistics that are a function of the nominal trajectory state vector. These may be broken down to include:

(a) Spread spectrum error,
(b) Oscillator drift,
(c) Range beam modulation error, and
(d) Quantitization errors due to digital processing.

All the errors are treated as Gaussian uncorrelated sources and the total measurement errors may be found by taking the RSS of the 1σ values of each source. The computer program does not model the approach radars in detail. A single number, the total standard deviation of each measurement, is loaded as data. If additional data is available the program could easily be modified to make the standard deviation a function of range and range rate.

The Measurement Matrix. The measurement matrix necessary for error analysis is calculated from the partial derivatives of range and range rate with respect to the state vector of position, velocity, and attitude. The range may be expressed as:

$$R = \sqrt{\underline{r} \cdot \underline{r}}$$

and the partial derivatives are:

$$\frac{\partial R}{\partial r_i} = \frac{r_i}{R} \quad .$$

Range rate is given by

$$S = \frac{dR}{dt} = \frac{\underline{r} \cdot \underline{v}}{R}$$

with the partial derivatives

$$\frac{\partial S}{\partial r_i} = - \frac{\underline{r} \cdot \underline{v}}{R^2} \frac{\partial R}{\partial r_i} + \frac{v_i}{R} = - \frac{(\underline{r} \cdot \underline{v}) r_i}{R^3} + \frac{v_i}{R}$$

and

$$\frac{\partial S}{\partial v_i} = \frac{r_i}{R} \quad .$$

The complete 2 by 9 measurement matrix is then

$$H = \left[\begin{array}{c|c|c} \frac{r_i}{R} \; (i = 1, 2, 3) & 0 & 0 \\ \hline -\frac{(\underline{r} \cdot \underline{v})}{R^3} r_i + \frac{v_i}{R} (i = 1, 2, 3) & \frac{r_i}{R} (i = 1, 2, 3) & 0 \end{array}\right]$$

Electro-Optical Measurement

Electro-optical sensors are assumed to be carried onboard the spacecraft. These sensors are used for updating the state of the spacecraft and also for attitude orientation. A sun sensor and a Canopus sensor are both employed and their function and operation have already been discussed in Reference 1.

On-board electro-optical sensors may be used for the performance of a variety of measurements. Most of these involve measuring the angle between two bodies such as star-star, star-sun, planet-star, planet-sun, etc. A discussion of these possibilities and their associated measurement matrices can be found in Reference 12.

Choosing between the various possibilities depends on the ultimate purpose of the measurements. For the planetary approach phase, the function desired of the electro-optical sensors is to supplement the information derived from the ISU for state estimation. It has been pointed out (Reference 7) that planet angular diameter measurements and planet-star angle measurements using a star near the normal to the ecliptic are the best candidates for this purpose.

The planet angle measurement technique described below has not been implemented in the present computer program because the accuracies used for the DSIF are such that the effect of the planet angle measurement would not significantly improve the results. Should the need arise, however, it can be readily included in the program.

Planet Angle Measurement. Stadiometry is a well-known method of determining the distance from spacecraft to the sun or planets in our solar system, given their diameters. In this method the angle subtended is inversely proportional to the range of the measuring device. One convenient method of estimating this angle utilizes the measurement of the illuminated portion of the planet. Since the sun will not always be behind the spacecraft, the illuminated portion of the planet as observed from the spacecraft will vary from the full circle to the eclipse with the various crescent shapes in between. An angular sensor would, by necessity, have to be able to distinguish between the possibilities.

One measuring technique is provided by sectioning the illuminated image into an array of cells as illustrated in Figure 7. This could be accomplished by vidicon scanning or by a mosaic sensor. The mosaic sensor,

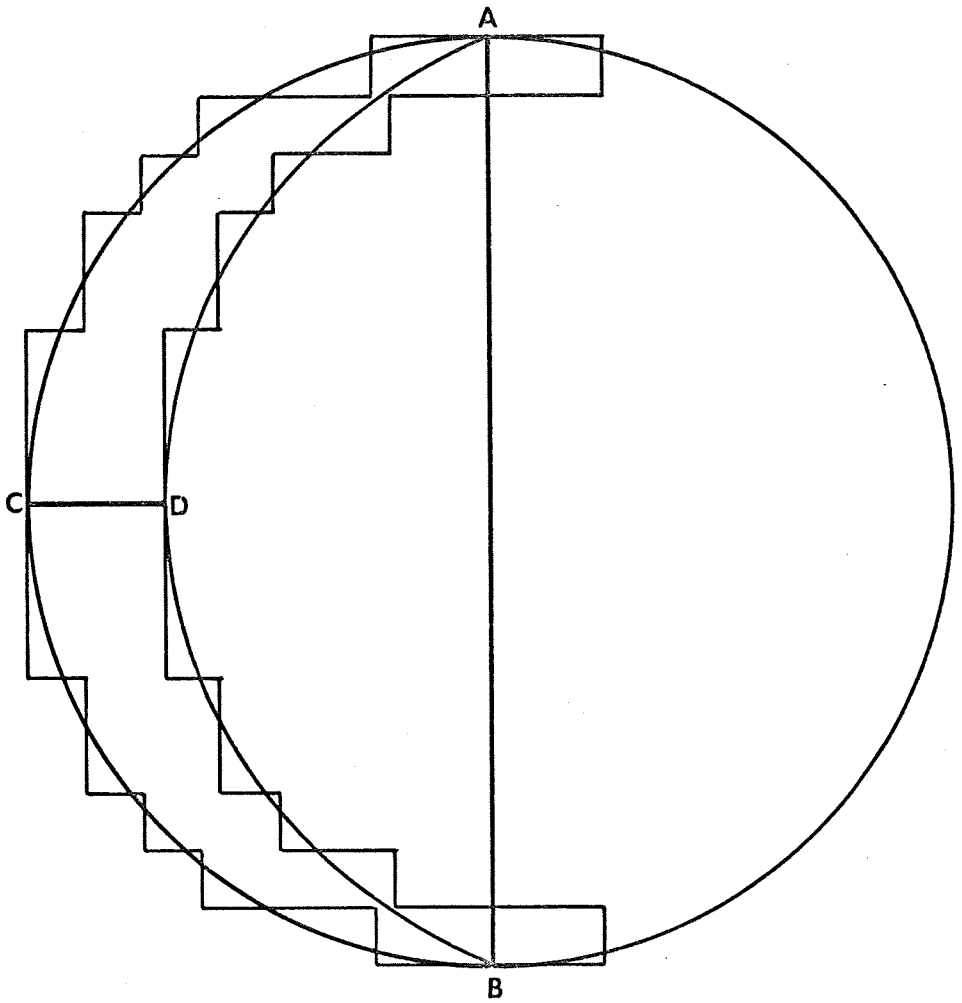

FIGURE 7. CELLED ARRAY OF ILLUMINATED PLANET

although not as fully developed as the vidicon, offers the possibilities of greater reliability, lower power requirements, less computation, and less memory storage to determine the subtended angles. Advances in mosaic sensor state-of-the-art offer considerable competition to the vidicon [i.e., photoconductor-diode arrays with as many as 360 x 360 elements have been produced by thin-film techniques (Reference 13)].

The celled array approach provides two significant measurements as illustrated in Figure 7. The distance between the cells which are the farthest apart, AB, can be used to determine the stadiametric angle. CD, the distance between cells farthest apart but perpendicular to AB, can be used to determine the crescent angle. From these measurements, the distance to the planet and the planet-sun angle can be determined as shown below.

Consider the two diagrams in Figure 8. In the top diagram the Sun is assumed perpendicular to the page. If the Sun's reflection from points A and B can be sensed, then

$$\sin \frac{\alpha_1}{2} = \frac{D_p}{2R_{sc}}$$

where D_p is the planet diameter and R_{sc} is the distance from the spacecraft to the planet center. From this

$$\alpha_1 = 2 \sin^{-1} \frac{D_p}{2R_{sc}} \quad .$$

The angle, β, is defined to be the angle measured from the spacecraft-planet vector to the spacecraft-Sun vector. β can be related to α_2 as follows:

$$\theta = \frac{\alpha_1}{2} - \alpha_2 \tag{5}$$

$$\frac{D_p}{2} \sin (\beta - 90^\circ) = - \frac{D_p}{2} \cos (\beta) = d \tag{6}$$

Therefore,

$$\frac{d}{R_p} = \tan \theta \tag{7}$$

$$R_p = R_{sc} - \frac{D_p}{2} \cos (\beta - 90^\circ) \tag{8}$$

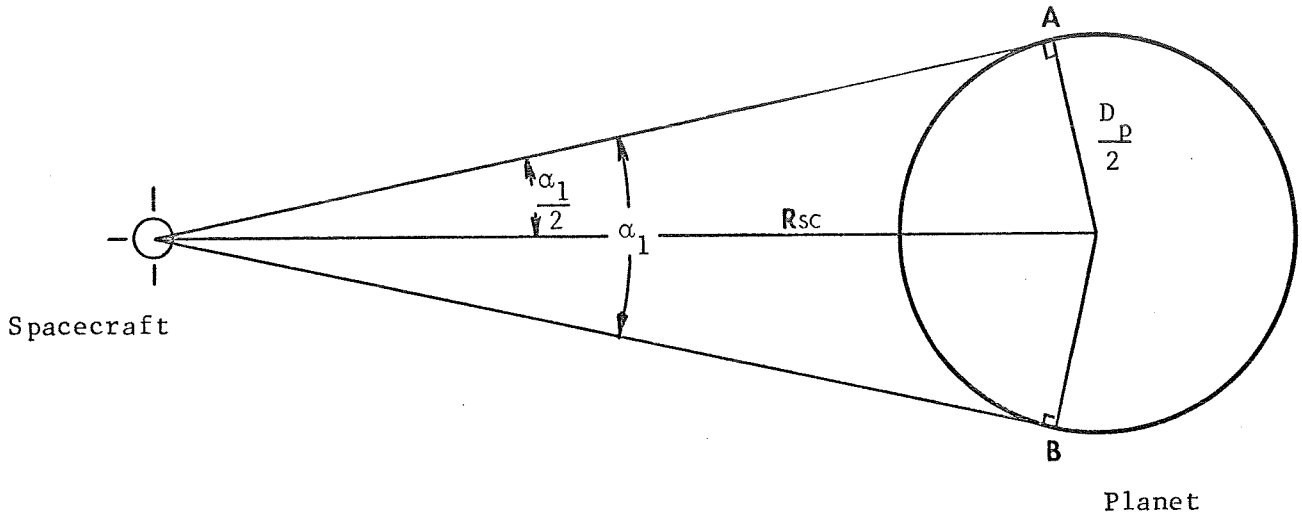

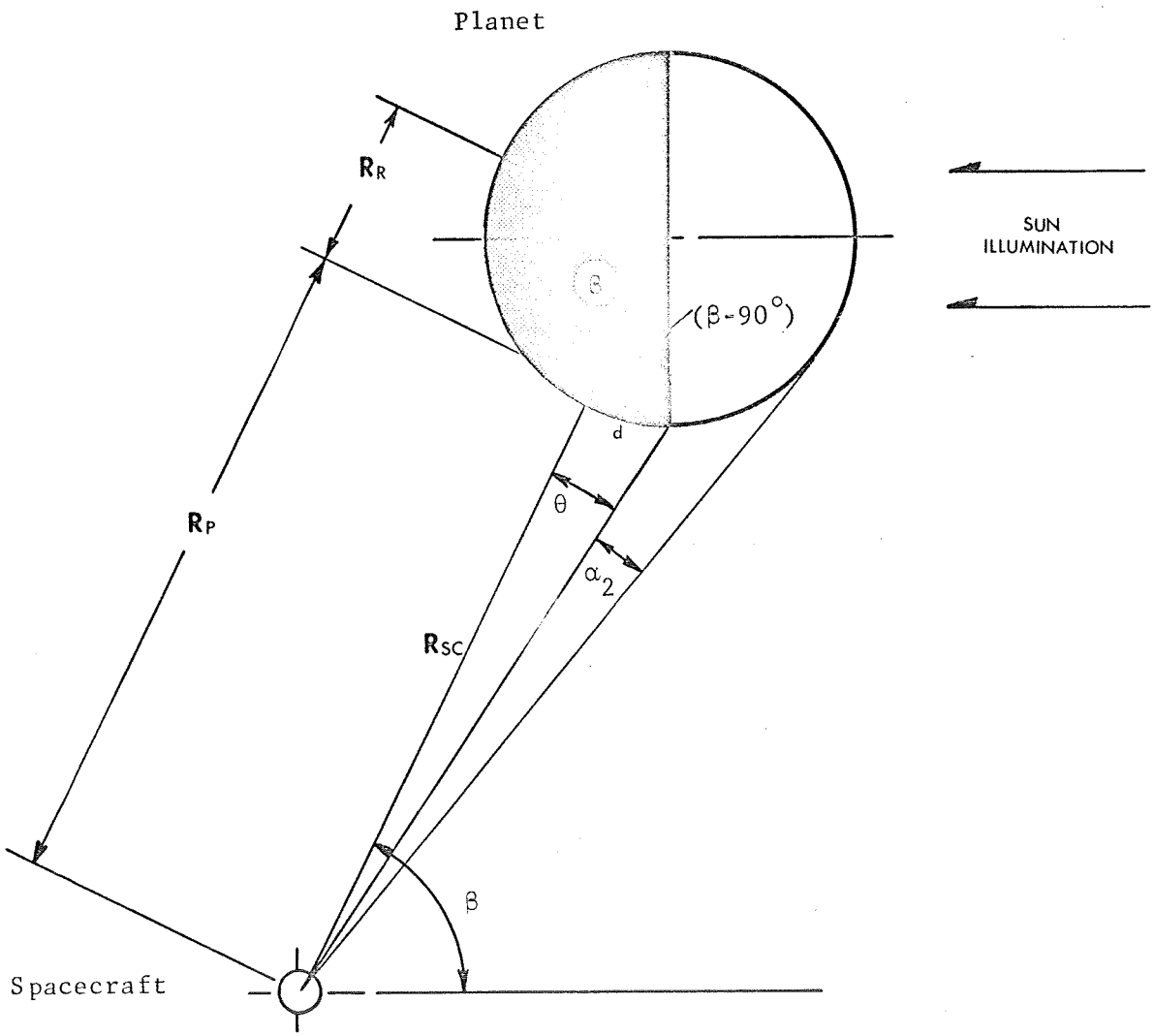

FIGURE 8. DIAGRAMS OF PLANET ANGULAR MEASUREMENT

$$R_p = R_{sc} - \frac{D_p}{2} \sin(\beta) \quad . \tag{9}$$

Using Equations (6) and (9) in Equation (7),

$$\theta = \tan^{-1} \left[\frac{-\cos(\beta)}{\frac{2R_{sc}}{D_p} - \sin(\beta)} \right] \quad . \tag{10}$$

In terms of α_2,

$$\alpha_2 = \tan^{-1} \left[\frac{-\cos(\beta)}{\frac{2R_{sc}}{D_p} - \sin(\beta)} \right] - \sin^{-1} \frac{D_p}{2R_{sc}} \quad .$$

The measurement matrix can now be obtained by taking the partial derivatives of the measured quantity α_2 with respect to the elements of the spacecraft-to-planet state vector R, i.e.,

$$\frac{\partial \alpha_2}{\partial \beta} \frac{\partial \beta}{\partial r_i} + \frac{\partial \alpha_2}{\partial R_{sc}} \frac{\partial R_{sc}}{\partial r_i}$$

where r_i, i = x, y, z, are components of the state vector R.

If the angular field of view (FOV) of the mosaic sensor is ψ degrees and there are N cells covering this field of view, then the angular resolution is $K = \frac{\psi}{N}$. K or ψ can be varied by changing the lens focal length. Hence, a system might be self-adjusting as the spacecraft approaches the planet.

Each cell of the mosaic is either on or off for any one frame as a function of the threshold and illumination. It is assumed that the threshold will be set so that the on state will occur when a section of image having a defined intensity is exposed to 1/2 the active cell area. This would provide an angular error of at least 1/2 K. If two cells are used in determining the subtended angles, the minimum error in measurement for a single frame would be $\frac{K}{\sqrt{2}}$. Repeated computation after the image is shifted slightly to provide uncorrelated frames would make it possible to average the cell resolution error. This would depend on the correlation between frames and the spacecraft travel during the averaging time.

Other errors in angle measurement attributed to the mosaic are random noise, crosstalk, and nonuniformity of cell sensitivity. Prolonged observation

helps considerably in reducing thermal noise and other random excitations. Errors caused by crosstalk and nonuniformity are strictly a function of the mosaic fabrication and structure. These errors are considered as bias errors and are not reduced by time or frame averaging.

Errors in angle measurement not related to the instrument are those caused by so called background clutter (i.e., stars, meteroids, cosmic dust, planet dark spots, etc.). It is believed that image enhancement techniques will help considerably in reducing these errors. The errors attributed to this factor may be lumped into one variance figure.

The total error in angular measurement can be determined by summing the squares of the contributing variances as follows:

$$\sigma_{TOT}^2 = (\sigma_{CEL}^2 + \sigma_{INST}^2 + \sigma_{CLUT}^2)$$

where $\sigma_{CEL} = \frac{K}{N\sqrt{2}}$ variance attributed to resolution
where N is the factor provided by frame averaging
σ_{INST} = variance attributed to crosstalk and nonuniformity
σ_{CLUT} = variance attributed to clutter.

The measurement matrix previously derived and the measurement errors defined above are all that is necessary for the implementation of the angular sensors in the Kalman-filtered update model.

Planetary Approach Phase Navigation. Analysis of orbiter-lander approach guidance systems is divided into two parts: the first part includes guidance from the point of entry into the planet's sphere of influence until orbit; the second part includes guidance from orbit to landing. Since a sizable package is left in orbit after the lander separates, navigation aids may be quite different in the two cases.

For approach, optical aids will usually be employed. It is assumed that the spacecraft employs a sun sensor and a star sensor, and, if desired, a sensor which can lock on the illuminated portion of the target planet. DSIF information is assumed available during this phase.

For the terminal phase, optical aids may or may not be employed. The lander may include a TV transmitter, with resultant monitoring from Earth. At planetary distances, however, the time lag excludes earth-based guidance. DSIF information may not be available due to the spacecraft's being shielded by the target planet, and due to the difficulty of locking onto the spacecraft when in close proximity to the surface.

The possible errors sources for each part and their impact on the mission success probability must now be identified.

For the approach phase, the end objective is to place a spacecraft into an orbit around the target planet. The desired periapsis and apoapsis for this orbit are fixed as r_p and r_a respectively. Figure 9 shows the approach path to achieve such an orbit.

Orbit insertion consists of altering the path at point S, so that the spacecraft enters on the path S-S' with firing of the retro engine occurring at point P for orbit injection. The line S-A, tangent to S-S' at S, is called the approach asymptote, and the line segment B, from the planet's center perpendicular to SA, is called the impact parameter.

Onboard measurements normal to the approach trajectory involve determining the angle between the vectors locating the planet center and the reference star with respect to the spacecraft. This is shown in Figure 9 as the angle $\theta + \emptyset$. The angle θ is known from trajectory calculations, so the impact parameter angle $\emptyset$ is readily calculated from this measurement. If a second star in another axis is viewed, then the rotation of the impact parameter about the planet center can also be determined.

Use of DSIF updating provides range and range-rate accuracies of sufficient magnitude (see Appendix A) that angular measurements of the planet with state-of-the-art electro-optical sensors does not improve the state estimate for the Mars mission on the trajectory used. Should significantly more accurate electro-optical sensors for planet approach measurements be available, they may be incorporated into the computer program without undue difficulty. In such a case, the improvement in accuracy should be weighed against the degradation in the penalty that would result from the weight, power, and reliability considerations of these sensors.

Additional errors will arise during retro-firing due to errors in the spacecraft's orientation when firing. These attitude errors will generate velocity and position errors. For a Martian orbiter, the retro ΔV is about 3000 to 4500 ft/sec depending on the trajectory selected. The velocity errors generated during approach are much smaller in magnitude and correction requires very little additional fuel.

The factors which may affect the penalty during approach navigation are:

(1) Electro-optical sensor and radar MTBF, weight, and switching reliability degradation.

(2) Electro-optical sensor and radar measurement uncertainties.

(3) Position and attitude errors at the craft's entry into the planet's sphere of influence. (For the approach phase, these are essentially biases).

(4) Retro-thrust magnitude and duration uncertainties.

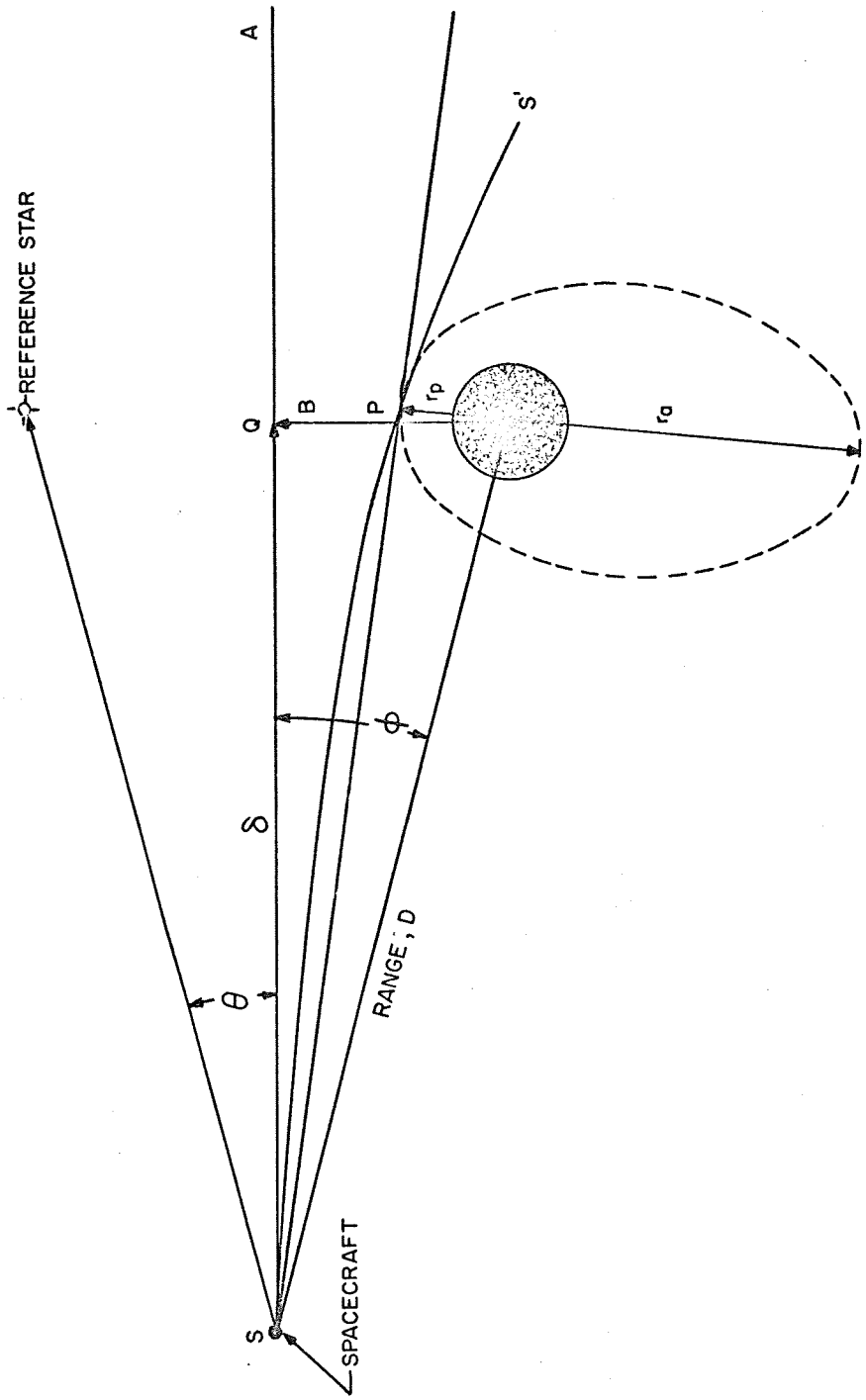

FIGURE 9. ORBIT INSERTION (FROM REFERENCE 14)

(5) Velocity and position errors generated during thrusting by improper initial alignment of spacecraft. Although these are essentially second-order effects, the error magnitudes may be the largest contributors to the penalty.

For the terminal phase, it is assumed that the spacecraft is already in orbit around the planet. Errors that may exist in the orbit can be propagated via the state-transition matrix. Altitude errors may be assumed to have been previously corrected by a Hohmann transfer, or they can be propagated.

From this parking orbit, the lander is launched and descends to the surface of the planet. The moment of release of the lander may be computed on-board, or may be commanded from Earth. Obviously, the landing site will be directly dependent on the time of release. The DSIF can measure certain orbital parameters very accurately, so the time of release can be calculated equally accurately.

The lander enters the planet's atmosphere at an entry angle β as shown in Figure 10. For a direct lander, this path entry angle is very critical. Too steep an angle will cause the lander to burn up and too shallow an angle may cause it to skip back out. For entry from orbit, however, much shallower angles are permissible without danger of skip-out. Following atmospheric entry, the lander is slowed by aerodynamic drag and possible parachutes. The retro engines are then fired to effect a soft landing. To avoid surface contamination by the exhaust, the engines are cut at some height over the surface. If the horizontal velocity is not greater than some critical value, the lander will then drop to the surface intact without toppling over. In practice, horizontal velocities of less than 2 ft/sec are achievable with state-of-the-art guidance systems. In addition, attitude and attitude rate must also be controlled as excessive tilt of the craft is unacceptable. Inclination of the landing surface should also be taken into account.

The spacecraft is assumed to contain a pulsed radar (doppler) altimeter, and a CW radar. Other configurations are possible, but will not be discussed herein. The radar altimeter provides information for release of the parachute prior to final descent, and acts as a backup to the range beam down to some low altitude limited by pulse width constraints (Reference 15). The CW radar posesses four CW velocity beams and one FM/CW range beam, separated from each velocity beam by a "squint" angle ψ.

The ISU output can be used for derivation of steering commands.

Factors to be considered in the terminal guidance portion of the mission must include:

(a) Inertial sensing unit errors

(b) Retro engine thrust and firing time uncertainties

(c) Altimeter (doppler shift) errors

(d) CW Radar errors (Frequency drift, noise, measurement uncertainties)

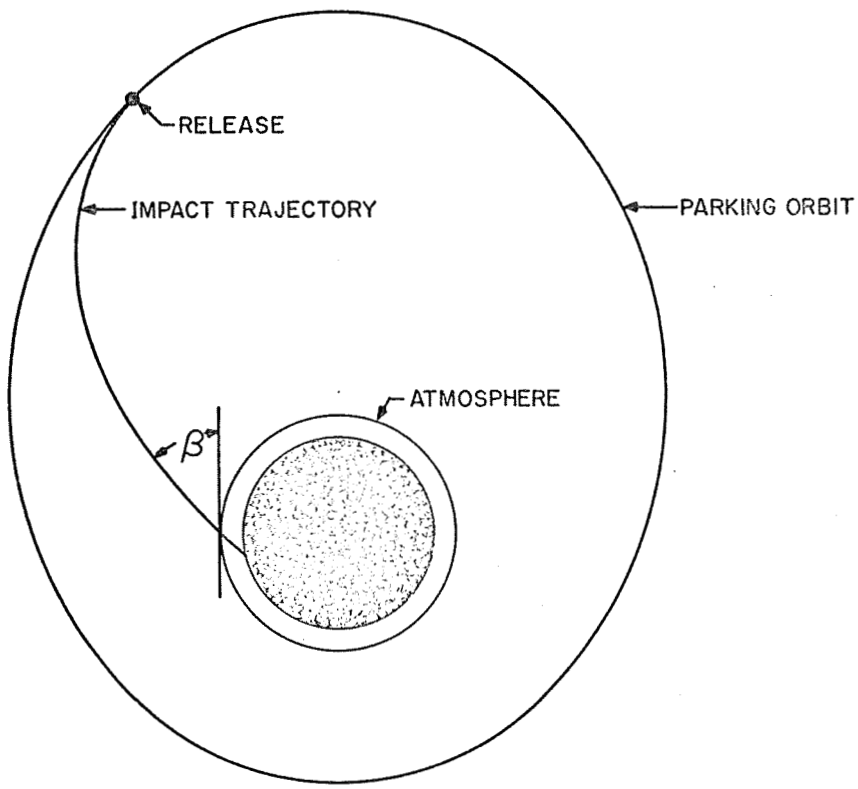

FIGURE 10. LANDING GEOMETRY (FROM REFERENCE 14)

(e) Optical aid errors

(f) Flight path entry angle error (This is not an independent error but will be a function of initial condition errors and retro engine errors)

(g) Failure probability due to various MTBF's.

Given more information on the terrain of the planet, the probability that the lander lands upright can also be calculated. This, for the present, is secondary.

The terminal phase is not included in the present form of the computer program due to lack of sufficient information on the lander vehicle.

Alternate Attitude Control Mechanizations

Cold gas reaction jet attitude control was studied in detail in Reference 1. In this section control moment gyros and inertia wheels are considered.

Control Moment Gyro Attitude Control. An investigation has been conducted on the use of control moment gyros in the attitude control system in place of the previously examined gas-reaction jets (Reference 1). Although it is entirely possible to use both control moment gyros (CMG) and gas-reaction jets in the same attitude control system, the following analysis concentrates on the use of CMG alone.

Unlike the gas-reaction jet, which is a mass-expulsion device, the CMG is a mass-conservative system, working on the momentum-exchange principle. While the total momentum of the system is constant, quantities of it can be absorbed by the CMG by changing the orientation of the spin vectors of the gyros. In this way, the total momentum vector of the vehicle can change direction, resulting in a change of attitude for the spacecraft.

In addition, external torques acting on the spacecraft can be compensated by an appropriate change in the gyro orientation. In this case, the total momentum vector may or may not remain constant in magnitude, depending on the nature of the external disturbance. For impulsive disturbances (e.g., meteorite impact) the total momentum will, except in the most severe cases, remain constant while for continuous disturbances (e.g., solar pressure), the total momentum will eventually change.

Design Considerations. The CMG is basically a power gyro, and its main output is torque. Its basic design goals should be symmetry, stability, avoidance of severe temperature gradients, and design at stress levels well below the elastic limit. This last requirement is particulary important, since the control torques can be applied to the spacecraft only through the gimbals and bearings, and yet the gimbal inertias should be low (Reference 16).

Since the prime output of a power gyro is torque, the extreme position accuracy which is obtainable in instrument gyros cannot be achieved. Electromagnetic and electrostatic suspensions which are utilized in instrument gyros cannot be utilized here since they preclude the transmission of sizable torques between the gyro and the vehicle. Thus, the CMG uses conventional gimbals and bearings, with all the losses and inaccuracies associated with such a setup. The spin bearings are the prime factor in power consumption and life of the CMG, while the gimbal bearings determine the angular rate limits and sensitivity thresholds.

The rate threshold of a CMG limits the accuracy of control to about ten seconds of arc (Reference 16). If greater accuracies are desired, floated gyros must be employed, with their associated disadvantages of lower torque gain, more required power, and smaller momentum to weight ratios. In this analysis, conventional bearings will be assumed.

Equipment Associated with CMG. For the CMG to operate effectively in an attitude control system, it is necessary to have, in addition to the gyro itself, a sensor, or pickoff, to provide a signal proportional to the gimbal angle. In usual CMG applications, this signal is fed to a torque computer and a reset computer. In addition, there exists a need for a set of torquers, which will provide a given torque to the CMG given some command signal. Accurate servo motors are usually utilized as torquers.

The torque computer mentioned above assumes the existence of a multiple gyro system. It is common practice to utilize at least three single degree-of-freedom gyros, with their output axes aligned as close as possible to the body axes of the vehicle. In control operations, each gyro will exert a portion of control effort in any given direction. The function of the torque computer is the solution of the geometric problem of how to move the momentum vectors in space to insure that the torque exerted on the vehicle is about the correct axis and of the correct direction and magnitude.

The reset computer, also mentioned above, is basically a threshold measuring device. The computer determines the amount of momentum being provided along the three axes, and when it reaches some pre-established value, the computer calls for a measured reset pulse. Current practice is to combine the torque and reset computers into a single package.

For reliability analysis of a CMG system, reliability values for the computer package may be as significant as those for the gyros themselves.

Analysis of a CMG System. A complete CMG attitude-control system may have several different configurations. The simplest would comprise one single-degree-of-freedom gyro per principal vehicle axis. Moving up in complexity, one finds twin single-degree-of-freedom gyros per axis, single two-degree-of-freedom, twin two-degree-of-freedom, and, finally, configurations involving four gyros, single or twin, of one or two degrees of freedom. Analyses for several of these cases exist in the literature (References 16, 17, and 18).

In this section, two cases will be examined; one single-degree-of-freedom (SDF) gyro will be analyzed as an illustration of the type of procedures necessary, and then the four SDF gyro configuration will be analyzed. The reasons for these choices will be presented with the analysis.

One Single Degree-of-Freedom Gyro. The configuration of interest is shown in Figure 11. Note that the final results will depend on the choice of coordinate systems. Assume both coordinate systems possess a common origin at the center of mass of the spacecraft. The body axes are x_b, y_b, z_b and, the gimbal-centered coordinate system x_g, y_g, z_g, has z_g always coincident with the spin axes. θ is the angle describing the gimbal rotation and is positive when rotated about x_g according to the right hand rule.

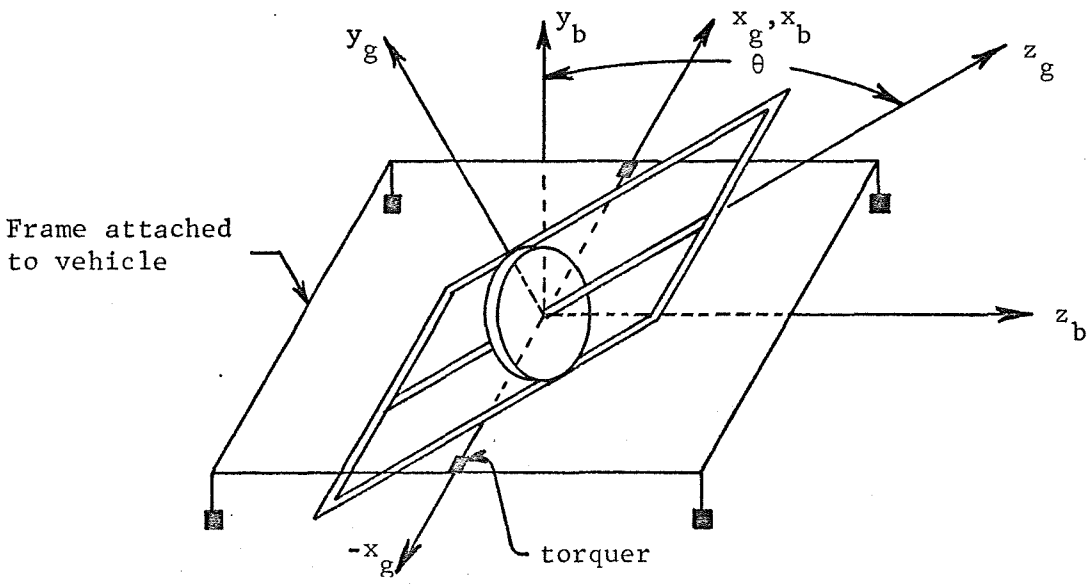

FIGURE 11. SINGLE-DEGREE-OF-FREEDOM CONTROL MOMENT GYRO

The components of the vectors are related by:

$$\begin{bmatrix} x_g \\ y_g \\ z_g \end{bmatrix} = C \begin{bmatrix} x_b \\ y_b \\ z_b \end{bmatrix}$$

where the transformation matrix C is

$$C = \begin{bmatrix} 1 & 0 & 0 \\ 0 & \sin\theta & -\cos\theta \\ 0 & \cos\theta & \sin\theta \end{bmatrix} .$$

The total angular momentum about the origin is

$$\underline{H}_T = \underline{H}_b + \underline{H}_g \tag{11}$$

and

$$H_b = I(\underline{\omega}_b + \underline{\omega}_r)$$

$$H_g = J(\underline{\omega}_G + \underline{\omega}_g + \underline{\omega}_b + \underline{\omega}_r)$$

where $\underline{\omega}_b$ = angular velocity of body frame with respect to (w.r.t.) reference frame

$\underline{\omega}_r$ = angular velocity of reference frame w.r.t inertial space

$\underline{\omega}_G$ = angular velocity of gyro frame w.r.t gimbal frame

$\underline{\omega}_g$ = angular velocity of gimbal frame w.r.t body frame

I = inertia dyadic of vehicle = $|I_x| + |I_y| + |I_z|$

J = inertia dyadic of rotor = $|A_x| + |A_y| + |G_z|$

where

$$A = A_x = A_y = \int_0^{m_0} m \left[y^2(m) + z^2(m) \right] dm = \int_0^{m_0} m \left[x^2(m) + z^2(m) \right] dm$$

$$G = G_z = \int_0^{m_0} m \left[x^2(m) + y^2(m) \right] dm$$

and m_o = mass of rotor

m = generic particle of mass

$x(m)$, $y(m)$, $z(m)$ = coordinates of generic particle.

Equation (11) can be rewritten as

$$\underline{H}_T = (I + J)(\underline{\omega}_b + \underline{\omega}_r) + J(\underline{\omega}_G + \underline{\omega}_g)$$

and since, in practice, $I \gg J$,

$$\underline{H}_T = I(\underline{\omega}_b + \underline{\omega}_r) + J(\underline{\omega}_G + \underline{\omega}_g) \quad . \tag{12}$$

The equation of motion is derived by setting the torque acting on the vehicle equal to the derivative of Equation (12):

$$\frac{d}{dt} \left[I(\underline{\omega}_b + \underline{\omega}_r) + J(\underline{\omega}_G + \underline{\omega}_g) \right] = \underline{T} \tag{13}$$

Equation (13) can be rewritten, after considerable manipulation, as

$$\left[I_x \dot{p} + (q - \omega_o)\, r(I_z - I_y)\right] \underline{x}_b + \left[I_y \dot{q} + pr(I_x - I_z)\right] \underline{y}_b +$$

$$\left[I_z \dot{r} + p(q - \omega_o)(I_y - I_x)\right] \underline{z}_b + \left[A\ddot{\theta} + G\Omega(q \sin\theta - r\cos\theta - \omega_o \sin\theta)\right] \underline{x}_b +$$

$$\left[G\dot{\Omega}\cos\theta - G\Omega(\dot{\theta} + p)\sin\theta + A\dot{\theta}\, r\right] \underline{y}_b +$$

$$\left[G\dot{\Omega}\sin\theta + G\Omega(\dot{\theta} + p)\cos\theta - A\dot{\theta}(q - \omega_o)\right] \underline{z}_b = \underline{T} \tag{14}$$

where x_b, y_b, and z_b are unit vectors and p, q, r are the components of the angular rate $\underline{\omega}_b$ and

ω_o = magnitude of the angular rate with respect to inertial space

$$(\underline{\omega}_r = -\omega_o \underline{y}_b) \quad .$$

Also

Ω is defined by $\underline{\omega}_G = \Omega \underline{z}_g$ and

$\dot{\theta}$ is defined by $\underline{\omega}_g = \dot{\theta}\underline{x}_g$, for the coordinate system as shown in Figure 11.

A detailed derivation of Equation (14) is given in Reference 17.

Four Single-Degree-of-Freedom Gyros. A power gyro can exert torque only about its sensitive axis. If, during the course of a maneuver, a situation arises where all the gyros of a multiple-gyro system precess sufficiently so that all their output axes end up in the same plane, the system can no longer provide any control torque about axes parallel to this plane. This situation is known as "bindup", and for a control system employing one single-degree-of-freedom gyro per principal axis it has been shown (Reference 16) that bindup will occur when the momentum level reaches 0.4 H along any control axis (where all gyros are assumed identical, each with a momentum H). For a three-gyro system, the capacity of the system is $\sqrt{6}$H (Reference 16), but the bindup considerations dictate that the actual limiting momentum is 0.4 H. This waste of momentum becomes necessary in order to maintain control about all axes.

By employing a control system with four gyros, bindup conditions at momentum levels below the system's capability are avoided. In addition, a higher momentum capability is achieved, as well as added reliability due to redundancy.

The additional weight and power that the fourth gyro demands is included in the evaluation.

The equations of motion for the four-gyro system are complex, and the complete derivation will not be presented here. An excellent derivation can be found in Appendix 1 of Reference 16. Only the pertinent assumptions and results are discussed.

Consider a four-CMG configuration as shown in Figure 12, with the following description:

(1) Gimbal axis "a" lies in the first quadrant of the y,z plane and is α^{o} from the y axis

(2) Gimbal axis "b" lies in the second quadrant of the y,z plane and is α^{o} from the -y axis

(3) Gimbal axis "c" lies in the fourth quadrant of the x,z plane and is α^{o} from the x axis.

(4) Gimbal axis "d" lies in the third quadrant of the x,z plane and is α^{o} from the -x axis.

For this configuration, equal gains about the cardinal occur when $\alpha = 54.7^{o}$.

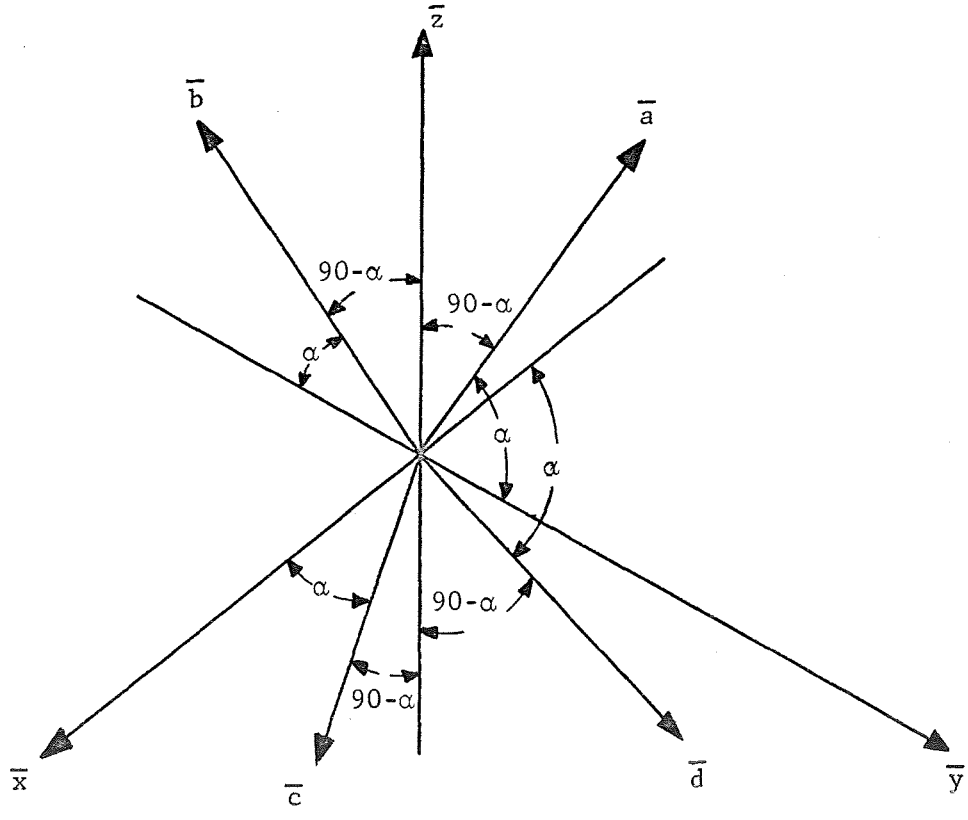

FIGURE 12. FOUR-GYRO SYSTEM ORIENTATION

Beginning with the gimbal torque equations with respect to the a, b, c, and d axes, and making the following simplifying assumptions

(1) Reaction torques are small compared to the control torques and may be neglected

(2) Gimbal inertia terms are considered as a part of the vehicle inertia

(3) Gimbal acceleration terms are neglected

(4) Vehicle accelerations are small relative to the gimbal motions,

the system equations can be written, after considerable manipulation, as

$$\begin{bmatrix} I_x S^2 \theta_x \\ I_y S^2 \theta_y \\ I_z S^2 \theta_z \end{bmatrix} + \frac{H}{I_G S + D} \begin{bmatrix} B_{11} & B_{12} & B_{13} \\ B_{21} & B_{22} & B_{23} \\ B_{31} & B_{32} & B_{33} \end{bmatrix} \begin{bmatrix} HS\theta_x + K\theta_x \\ HS\theta_y + K\theta_y \\ HS\theta_z + K\theta_z \end{bmatrix} = \begin{bmatrix} T_x \\ T_y \\ T_z \end{bmatrix}. \tag{15}$$

In the equation above,

θ_i = vehicle angle with respect to inertial space

S = Laplace operator

H = gyro momentum

I_G = gyro inertia about the gimbal axis (gimbal inertia)

D = gimbal damping

K = combined gain of sensor and torque-motor (lb-ft/rad)

T_i = torques on vehicle axes.

$$B_{11} = \sin^2 a + \sin^2 b + (\sin \alpha \cos c)^2 + (\sin \alpha \cos d)^2$$

$$B_{12} = -\sin \alpha \, (\sin a \cos a + \sin b \cos b + \sin c \cos c + \sin d \cos d)$$

$$B_{13} = -\cos\alpha\,(-\sin a \cos a + \sin b \cos b - \sin\alpha\,(\cos^2 c - \cos^2 d))$$

$$B_{21} = B_{12}$$

$$B_{22} = (\sin\alpha \cos a)^2 + (\sin\alpha \cos b)^2 + \sin^2 c + \sin^2 d$$

$$B_{23} = -\cos\alpha\,[\sin\alpha\,(\cos^2 a - \cos^2 b) + \sin c \cos c - \sin d \cos d]$$

$$B_{31} = B_{13}$$

$$B_{32} = B_{23}$$

$$B_{33} = (\cos\alpha)^2(\cos^2 a + \cos^2 b + \cos^2 c + \cos^2 d)\,.$$

where a, b, c, and d are the gimbal displacement angles from the zero momentum configuration. The above terms depend entirely on the gyro angles, and these angles determine the transfer function between input and output. The off-diagonal terms represent the cross-coupling characteristics of the system. Note that when gimbal angles all equal zero the system is decoupled, and all off-diagonal terms vanish.

Weight and Power. For the CMG, power requirements are two-fold: power is needed at the drive motor to overcome bearing and windage losses, and power is needed at the torquers to move the gimbals during maneuvers.

The power to overcome losses must be supplied by the drive motor. The same motor is used to spin the gyro up to its operational speed. To overcome the need for large drive motors, long spin-up time is necessary.

The power required per torquer is

$$P = T_M\,\dot{\theta}$$

where T_M = motor torque

$\dot{\theta}$ = angular rate desired.

This can be written:

$$P = T_M \dot{\theta} = (I\ddot{\theta} + \omega H \cos \theta) \dot{\theta} \tag{16}$$

where H = momentum about the spin axis

ω = spin velocity.

Equation (16) is derived by writing the equation of motion for a gimbal, assuming the output axis parallel to the vehicle x-axis:

$$T_M - D\dot{\theta} - \omega_x H \cos \theta - \omega_y H \sin \theta \cong I\ddot{\theta} \tag{17}$$

Assuming small damping and no angular velocity normal to the output axis, (17) reduces to

$$T_M = I\ddot{\theta} + \omega H \cos \theta$$

which appears in Equation (16) (Reference 18).

For the four-gyro configuration, in the uncoupled states and assuming identical gyros, the power limit is four times that of Equation (16). In actual practice, required power is less, since one gyro acts on more than one axis at a time.

Figure 13 shows a power versus momentum curve for a four-gyro controller. Only spin power is shown, so the plot should be interpreted as continuous power required.

Figure 14 shows a weight versus momentum curve for the four-gyro controller. To this should be added the weight of the computers and electronics associated with the system. Of course, graphs such as these are constructed on the basis of common-practice materials, bearings, etc. Specialized applications may require individual calculation.

Momentum Requirements. To determine the momentum requirements, consider H_1 to be the minimum angular momentum necessary for performing the prescribed maneuvers, and H_2 to be the minimum angular momentum necessary to overcome the worst case of meteorite impact, solar pressure, or midcourse engine misalignment.

Given a maneuver which requires traversing a given angle θ, in a specified time Δt, the torque necessary is

$$T = \frac{4\theta I}{\Delta t^2} \tag{18}$$

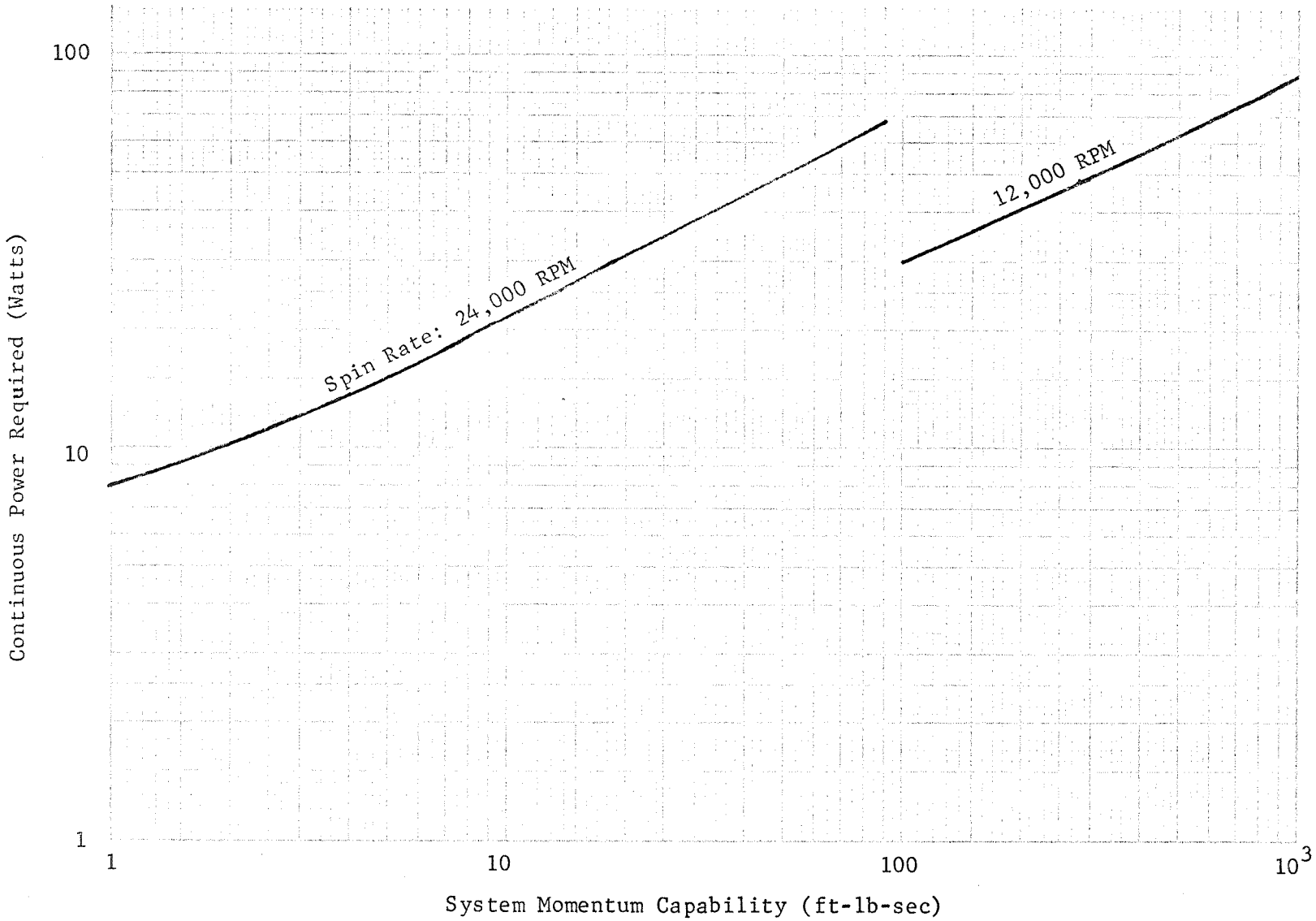

FIGURE 13. FOUR-GYRO CONTROLLER POWER REQUIREMENT
(From Reference 16)

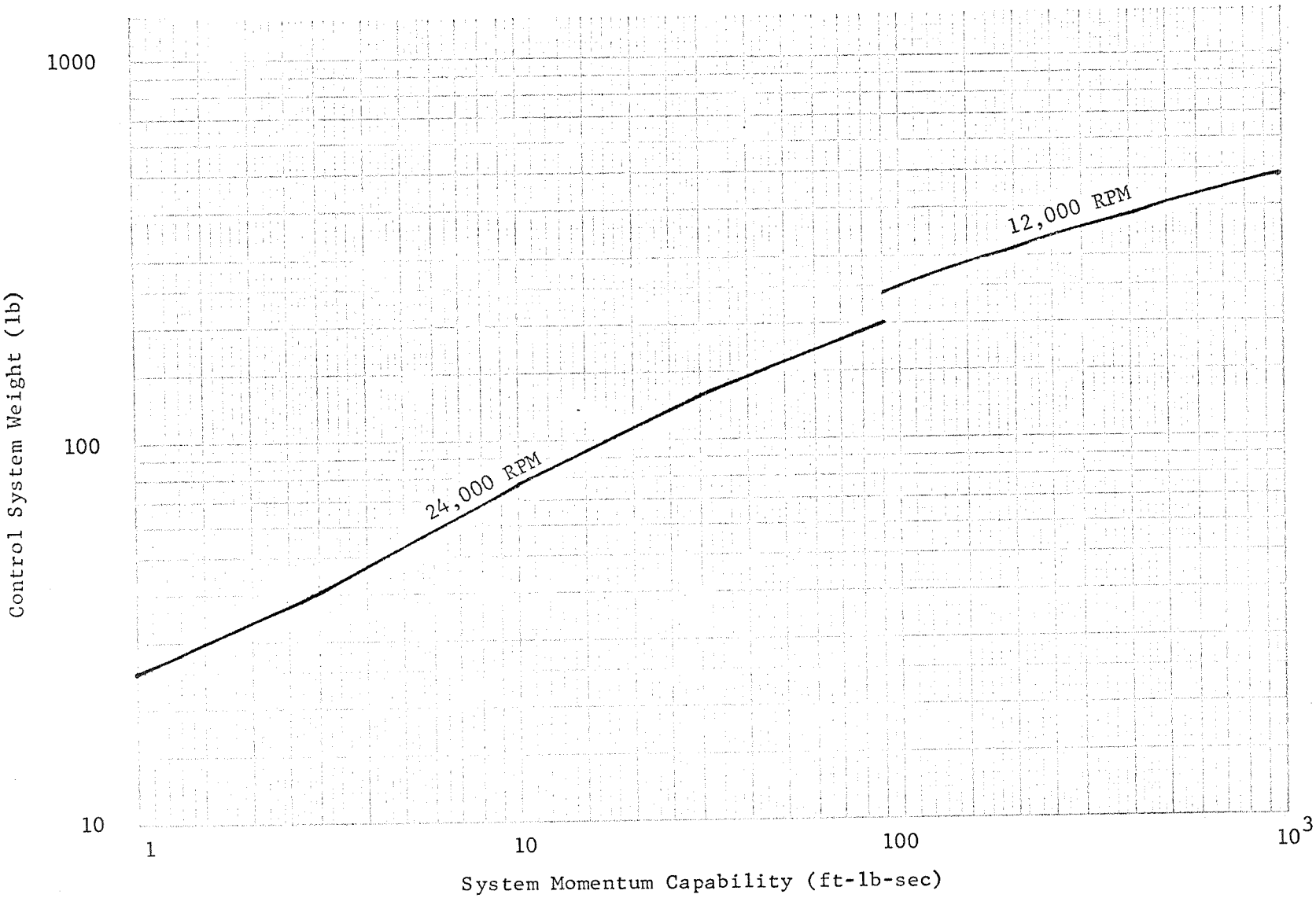

FIGURE 14. FOUR-GYRO SYSTEM WEIGHT
(From Reference 16)

where I = moment of inertia about the axis of rotation.

Now, consider that this torque will be supplied by a gyroscope, capable of a velocity of precession ω_p. For a successful operation

$$\omega_p \geq \frac{\theta}{\Delta t} \tag{19}$$

otherwise the maneuver cannot be performed. Assuming that relation (19) holds true, from simple gyro theory

$$T = H_1 \omega_p$$

or

$$H_1 = \frac{4\theta I}{\Delta t^2 \omega_p} \tag{20}$$

and this will be the minimum momentum required to perform the maneuver. This momentum is supplied by a four-gyro system, and to avoid the possibility of gyro bindup, the system must be designed so that for each individual gyro

$$H_{gyro} \geq \frac{1}{3} H_1 \quad .$$

Now, given the ω_p mentioned above, the other torquing requirements are examined.

From meteorite impact, solar pressure, and midcourse engine misalignment, the worst case is picked, and this torque is called T_{max}. From this

$$T_{max} = H_2 \omega_p$$

or

$$H_2 = \frac{T_{max}}{\omega_p} \quad . \tag{21}$$

The momentum required, H_3, for the particular mission, is then

$$H_3 = \text{Max}\ (H_1, H_2) \quad .$$

This is the maximum momentum per axis. Since, for a four-gyro system, the total momentum available per axis is three times the momentum of an individual gyro, the final sizing can now take place.

$$H_{final} = \frac{1}{3} H_3 \text{ per gyro} \quad .$$

Reliability Considerations. The electrical parts reliability, minus the computer, for a four-gyro attitude control system, was calculated in 1965 (Reference 16) as 9×10^{-6} failures/hour, per gyro. The governing figure in reliability analysis in a gyro package is the gyro hardware. Table VIII gives a detailed breakdown, circa 1965, and a figure of 59.26×10^{-6} failure/hour per gyro is arrived at.

Today, advances in electronic components and packaging may be assumed to cut the failure rate of the electronics to, roughly, 3×10^{-6} failures/hour. Likewise, gyro hardware failure rates can be assumed (References 16) to have decreased to about 40×10^{-6} failures/hour. This yields a reliability figure of 43×10^{-6} failures/hour per gyro channel, and this figure will be used in the calculations.

Since a four-gyro system is employed, it is also assumed that if three of the four gyros survive the mission, the system performance, though degraded, will still be considered satisfactory. Under this assumption, the probability that at least three of four channels will survive is given by:

$$PS = P(s,n) = \sum_{x=s}^{x=n} \frac{n!}{x!\,(n-x)!}\, p^x\, (1-p)^{n-x} \tag{22}$$

where s = number of survisors (=3)

n = total number of elements (=4)

p = probability of survival of a single element.

The probability of failure for this case is

$$PF = 1 - PS.$$

If an actual numerical calculation is attempted, it immediately becomes apparent that the attitude control system cannot be left on continuously for a long mission. In the case of a Jupiter flyby, leaving the system on for 400 days will result in a reliability of about 30%, clearly an unacceptable figure.

TABLE VIII. FAILURE RATES FOR GYRO PARTS
(From Reference 16)

	Part	Failure/Hour
1.	Rotor	5.00×10^{-6}
2.	End ball bearings (2)	7.00
3.	Stator (including windings)	5.00
4.	1 piece (spin) shaft	----
5.	Gimbal	----
6.	Balance weights (adjustable)	----
7.	Gimbal bearings (2) at 0.875	1.75
8.	Torquer coil assembly	0.30
9.	Torquer coil assembly frame	----
10.	Flex lead cap assembly	----
11.	Flex leads	4.00
12.	Limit switch assembly (mag. read)	2.00
13.	Magnet return path	----
14.	Outer casing	----
15.	Gimbal bearing support - sensor end	----
16.	Gimbal bearing support - torquer end	----
17.	Permanent magnet	----
18.	Reduction gear	2.0
19.	Slip ring bearing support	----
20.	Slip ring bearings (2)	3.0
21.	Gimbal lock solenoid	2.0
22.	Servo motor	5.20
23.	Electrical header	2.0
24.	End caps (2)	----
25.	Pickoff - sensor stator	1.0
26.	Pickoff - sensor rotor	1.0
27.	Assorted nuts	2.0
28.	Slip rings	10.0
29.	Slip ring brushes	6.0
	TOTAL	59.25×10^{-6}

Note: From G.E. Memo 62-45-501

The system must, therefore, be turned off when it is not needed. This will create tradeoff conditions due to reliability degradation by switching. This tradeoff is examined elsewhere in this report.

It must also be kept in mind that at least two hours of warmup time will be necessary after the system is turned on and before it is operated in order to bring the previously stationary gyros up to operating speed (in the case examined here, 24,000 RPM). This will have an effect on the total reliability figure, as well as the total energy required. Assuming that no more power is required to spin the gyro up than to keep it spinning, no power increase will be necessary.

Implementation. In implementing the above in the computer program, the system sizing is done in much the same way as for the gas reaction jets (Reference 1). There are two main torque requirements: first, torque required to perform the maneuvers called for in the schedule; and second, torque required to overcome disturbances due to solar pressure, meteorite impact, and midcourse engine misalignment. Each of the two requirements is sized independently and a value of angular momentum required is obtained for each. The greater value is then retained as the minimum momentum required for successful completion of the schedule.

Since the torque generated by the CMG system is directly proportional to the angular velocity of precession of the gyro, care must be exercised so that the angular velocity picked is not too great. If the spacecraft is allowed to rotate exceedingly fast, there exists the danger of the sensors being unable to acquire a star when such an acquisition is called for.

To combat the arbitrary selection of overly large values for the angular velocity of precession, a new subroutine has been written and has been incorporated into the system. This new subroutine, STDET, checks whether, for a particular angular velocity of the spacecraft, the probability of detecting a star is sufficiently high as to warrant the use of that particular value of angular velocity. The subroutine allows the use of either rectangular line-scanned detectors, or circular, circularly scanned detectors. The equations for the probability of detection while employing either of the two configurations have already been presented in Reference 1. The routine also requires as input a minimum probability of detection which would be acceptable to the user. In the examples cited in this report, this probability is set at 0.99. With the use of STDET, the attitude control subroutine is allowed to employ reasonably high velocities of precession for the CMG gyros without jeopardizing the process of star detection and acquisition.

Ten exercise runs were made using the new CMG attitude control subroutine on a Jupiter flyby mission and the results are summarized in Table IX. Detailed program output is shown in a later section of this report. It is evident that the dimensions and scanning frequency of the star tracker are of great importance in sizing the system. The values shown are arbitrary and there exists

TABLE IX. SUMMARY OF CMG-ATTITUDE-CONTROL SIZING RESULTS ON JUPITER FLYBY MISSION

Figure No.	Schedule	Star Tracker	Dimensions	Scan Frequency (cps)	Maximum Angular Velocity Allowed (rad/sec)	Actual Angular Velocity (rad/sec)	Penalty (Mode 3) (lbs)	Remarks
19	1	ITT-LUN. OB.	3" x 4"	10^4	0.8	0.8	347.844	Best
20	1	ITT-LUN. OB.	3" x 4"	10^4	0.6	0.6	350.978	
21	1	GIMB. ST.	2" x 5"	0.5×10^4	0.6	0.6	372.604	
22	1	ITT-LUN. OB.	2" x 4"	10^3	0.9	0.35	359.479	Star Detection Probability Constraint
23	1	GIMB. ST.	2" x 5"	0.5×10^4	0.9	0.9	368.426	
24	2	ITT-LUN. OB.	3" x 4"	10^4	0.8	0.8	347.835	Best
25	2	ITT-LUN. OB.	3" x 4"	10^4	0.6	0.6	350.970	
26	2	GIMB. ST.	2" x 5"	0.5×10^4	0.6	0.6	372.603	
27	2	ITT-LUN. OB.	2" x 4"	10^3	0.9	0.35	359.470	Star Detection Probability Constraint
28	2	GIMB. ST.	2" x 5"	0.5×10^4	0.9	0.9	368. 424	

a very definite need for accurate data. In the cases shown, it is evident that the CMG attitude control system will weigh slightly more than the gas reaction jet system (Reference 1); however, the difference is not so great as to be prohibitive. In the cases marked as "best" in Table IX, the total penalty is only about 4 pounds more than in the gas reaction jet case. When the dimensions and scanning frequency of the star tracker are such that the star detection probability constraint comes into play, the total penalty becomes approximately 16 pounds more than the previous value. Although sizable, such a difference still cannot be considered prohibitive.

Reaction Wheel Attitude Control. The reaction wheel system is a mass conservative system exerting control on the spacecraft by changing the spacecraft's momentum vector. Whereas a control moment gyro system changes the momentum vectors by tilting the spin axes of the gyros, a reaction wheel system has its rotating masses permanently aligned with respect to the spacecraft. Since the momentum vector cannot, in this way, be changed by moving the individual gyro momentum vectors, the change is effected by altering the magnitudes.

Thus, the control moment gyro system is basically momentum conservative, whereas the reaction wheel system is not. There are both advantages and disadvantages to this latter type of system when it is compared to the control moment gyro. Perhaps the main advantage is a lack of drift, an important source of error in a CMG system. In addition, there are fewer bearings, since there are no gimbals, which increases the reliability.

On the other hand, the reaction wheel requires a large motor in order for commanded momentum changes to occur within reasonable times. This places a more severe requirement on power and energy, even considering the possibility of employing regenerative braking which is a common practice in such a system.

Some reaction wheel attitude control systems employ two sets of reaction wheels, one for coarse and one for fine control. This may improve the power requirements, but it adversely affects the reliability. Only a single set of reaction wheels is considered in this analysis.

Single Reaction Wheel Analysis. The motor in a reaction wheel attitude control system exerts a control torque on the vehicle and an equal and opposite torque on the wheel. The torque axis is fixed with respect to the vehicle. Therefore, for complete attitude control, three such wheels with mutually perpendicular spin axes are needed. Normally, the spin axis of each wheel would be parallel to a principal axis of the vehicle to reduce the coupling, evident in Equation (23) (Euler's equation for the motion of a rigid body).

$$\underline{T} = \left[I_{xx}\,\mathring{\omega}_x + \left(I_{zz} - I_{yy}\right)\omega_y\,\omega_z\right]\underline{x}$$

$$+ \left[I_{yy}\,\mathring{\omega}_y + \left(I_{xx} - I_{zz}\right)\omega_x\,\omega_z\right]\underline{y}$$

$$+ \left[I_{zz}\,\mathring{\omega}_z + \left(I_{yy} - I_{xx}\right)\omega_x\,\omega_y\right]\underline{z} \tag{23}$$

where $\underline{T}$ = sum of control and disturbance torques

I_{ii} = mass moment of inertia of vehicle along principal axes

ω_i = vehicle angular velocity

$\underline{x}$, $\underline{y}$, $\underline{z}$ = unit vectors.

For a single reaction wheel, with spin axis parallel to the vehicle X axis, the equation becomes

$$T_{control} = T_D + I_{xx}\,\mathring{\omega}_x + \left(I_{zz} - I_{yy}\right)\omega_y\,\omega_z \tag{24}$$

where T_D is disturbance torque and the assumption is made that the moments of inertia of the vehicle approximate those of the system (Reference 18).

For attitude changes in interplanetary space, the control torque required for a reasonable response time is normally much greater than the disturbance torque, a possible exception being the disturbance torque resulting from misalignment of the main engine thrust vector. Under these conditions, Equation (24) becomes, for the case of commanded reorientation

$$T_{control} = I_{xx}\,\mathring{\omega}_x + \left(I_{zz} - I_{yy}\right)\omega_y\,\omega_z \quad . \tag{25}$$

Power required (less motor, bearing, and windage losses) is (Reference 18)

$$P = T_{control}\,\Omega = I_R\left(\mathring{\Omega} - \mathring{\omega}_x\right)\Omega \tag{26}$$

where Ω = angular velocity of the wheel relative to the vehicle

I_R = mass moment of inertia of wheel about its spin axis.

Optimization of any mass conservative attitude control system consists of arriving at the proper blend of the following objectives while meeting cost and reliability specifications:

(1) Maximum control torque

(2) Maximum angular impulse capacity

(3) Minimum power and energy

(4) Minimum weight

(5) Minimum space requirements.

With respect to a reaction wheel, the following points apply: (a) objective (4) and the need for large wheel moment of inertia dictate a wheel with its mass concentrated in the rim; and (b) objectives (3) and (4) are in direct conflict. For a given control torque decreasing I_R necessitates a higher wheel angular acceleration with resulting increase in power and energy (Reference 18).

Three Axis Reaction Wheel Control. In order to determine the effect on inertia wheel control of such phenomena as gyroscopic cross coupling and vehicle control to a rotating reference, the three axis equations of motion were derived. The exact derivation is given in Reference 16. The equations presented below are subject to the following constraints: first, the inertia wheel spin axes lie along the principal axes of the vehicle; second, the reference coordinates are either inertially fixed or represent vehicle orientation to the local vertical; third, vehicle attitude deviation from the reference axis is small; fourth, wheel inertia is much less than the principal inertias of the vehicle; fifth, the motion of the vehicle about its center of mass has negligible effect on the motion of the center of mass; and sixth, the products of the Euler angles and their rates are negligible.

Under these assumptions, consider the vehicle and reference coordinates to be those shown in Figure 15

where X, Y, Z = principal axes of vehicle (spin axes of wheels are along these axes)

U, V, W = reference axes

θ_x, θ_y, θ_z = angles defining the orientation of the vehicle with respect to reference axes.

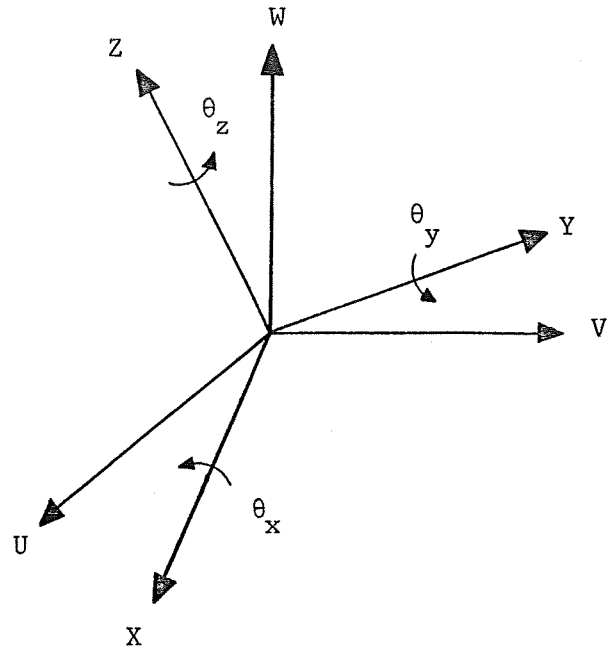

FIGURE 15. REACTION WHEEL COORDINATE SYSTEMS

The generalized equation of motion (rigid body) is

$$\underline{T} = \dot{\underline{H}}_s + \underline{\omega}_V \times \underline{H}_s \tag{27}$$

where $\underline{T}$ = external torque vector (vehicle coordinates)

$\underline{H}_s$ = system momentum vector (vehicle coordinates)

$\underline{\omega}_V$ = angular velocity of vehicle coordinate system with respect to inertial space.

This equation may be written in matrix form, under the additional assumption that the vehicle is being controlled to an inertial reference (i.e., the angular velocity of the reference frame with respect to inertial space is zero) as

$$\begin{bmatrix} I_{xx}S^2 & I_w\omega_z S & -I_w\omega_y S \\ -I_w\omega_x S & I_{yy}S^2 & I_w\omega_x S \\ I_w\omega_y S & -I_w\omega_x S & I_{zz}S^2 \end{bmatrix} \begin{bmatrix} \theta_x \\ \theta_y \\ \theta_z \end{bmatrix} + I_w S \begin{bmatrix} \omega_x \\ \omega_y \\ \omega_z \end{bmatrix} = \begin{bmatrix} T_{Dx} \\ T_{Dy} \\ T_{Dz} \end{bmatrix} \tag{28}$$

where I_w = Reaction wheel moment of inertia

I_{ii} = Principal moments of inertia of the vehicle, i = x,y,z

ω_i = Angular velocities of inertia wheels with respect to inertial plane

T_{D_i} = Components of the external disturbance torque vector

$S = \frac{d}{dt}$

Assuming that the initial wheel angular velocity is low and does not change appreciably during vehicle motions, then the cross product terms in the position coefficient matrix are near zero, and vehicle motion as described in the single axis case is valid for three axis control. If the above assumption does not hold, which is usually the case, wheel speed build up due to disturbing torques will create a cross coupling torque if there is a vehicle angular rate. The effect of cross coupling is that the vehicle rate in one axis will introduce torques about the other two axes, the result being that inertia wheels in all three axes will be more active than in the single axis case and will respond to inputs about any axis. Such cross coupling conditions are highly deterimental to the efficiency of the total system. Unlike the case of the control moment gyro attitude control system however, cross coupling effects in a reaction wheel system do not seem to affect the stability of that system (Reference 17). Implementation of the above theory into the existing computation scheme involved the following assumptions:

(1) The inertia wheels are located on the principal axes of the vehicle.

(2) Only one set of wheels is used (there is no separate fine and coarse control).

(3) The drive motors are A-C servomotors. These motors are much superior in their speed-torque characteristics to the D-C shunt motors at the momentum levels used in the Jupiter flyby mission ($H \leq 10$ lb-ft-sec).

Since momentum changes are effected by speeding up or slowing down the motors, rather than by reorienting the momentum vectors, it is often necessary to allow longer maneuver times, so that the size of the motors does not become excessive. Although it was not necessary to alter the schedule in the Jupiter flyby mission, it may be necessary to do so in other cases.

The weight of the IWAC was computed from the curves given in Reference 16. It is assumed that the nominal spin rate of the wheels is 6000 RPM, and that maximum torque is not required from the motors more than 5 percent of the time.

In computing the power required, an averaging technique was employed, where peak power was utilized 5 percent of the time, and, during the remaining

95 percent of the time, power to overcome friction losses was used. Under the additional stipulation that the motor stall torque required for maneuvering was 40 percent of the rated torque, and the stall torque required to overcome disturbances was 20 percent of the rated torque (since longer times are then available), the power requirements are (Reference 16):

$$P_{1\ (\text{watts/axis})} = (0.0118) \times (\text{Stall Torque}) \times (\text{Rated RPM}) \quad .$$

By employing regenerative braking, the power requirement for all three axes is reduced to

$$P_{TOT} = 1.18 \cdot P_1 \quad .$$

Finally, reliability must be examined. The number of failures per hour for a single-axis IWAC is 19.6×10^{-6} (MTBF = 51,000 hours), circa 1965 (Reference 16). Since there is no redundancy employed in the system, the probability of failure is simply

$$PF = 1.0 - \left(1.0 - \frac{\text{Total Hours}}{\text{MTBF}}\right)^3 \quad .$$

Implementation of the above calculations in the computer program has been accomplished. Several exercise runs have been made on a Jupiter flyby mission, and the results are presented following the Communications Requirements section later in this report.

Flight Control Requirements

In the discussion in this section, the flight control system is assumed to include a number of state sensors, a central computer, and the actuators necessary to carry out the computer's commands.

In investigating the impact of flight control requirements on astrionics effectiveness, it was found that a detailed analysis in general terms is almost impossible. There are simply too many components directly dependent on the specific vehicle's structural and dynamic characteristics.

In examining the impact of flight control requirements on astrionics effectiveness two approaches are available:

(a) The flight control components, their functions, and their location on the launch vehicle are assumed known and a method is sought to calculate their impact on mission effectiveness.

(b) The mission launch information and launch vehicle are assumed known and a method is sought to determine the

components necessary for flight control, their function, location on the launch vehicle, and impact on the mission effectiveness.

The first method must include calculation of the additional memory and speed requirements imposed on the on-board computer in order to monitor and direct the functions of the flight control components, and calculation of the effect that the power, weight, and reliability of the flight control system will have on the penalty.

The second method must include all calculations of the first method plus design calculations considering vehicle bending, variable mass and moments of inertia of the launch vehicle, propellant sloshing on vehicles using liquid propulsion, aerodynamic instability, and influence of wind. Variable vehicle loading due to varying payload shapes and weights must also be considered.

An analysis incorporating the second method would require an effort in excess of one man-year and as such was considered outside the scope of this contract. The analytical task is extremely complex and, in practice, is usually attempted only for a particular mission or launch vehicle with no general solutions being developed. The first method, although more limited in terms of scope of application can still be quite useful and is adaptable to computer solution. Implementation of the first method would be applicable principally in the examination of tradeoffs between several candidate flight control systems. Since this agrees with the purpose of the general effort under this contract, it was decided to implement this method and include it in the computer program.

The flight control system contains the following components:

(1) Computer - usually shared with a guidance system.

(2) Gyros - rate and position.

(3) Accelerometers - lateral.

(4) Angle of attack sensor.

(5) Passive filters

(6) Electromechanical or hydraulic actuators

(7) Wiring

One or more of these components may be missing or replaced by multi-function components for any given system.

For penalty function considerations, power will be required by the computer, gyros, accelerometer, angle of attack sensor, and actuators. Weight will be contributed by all except the actuators which are considered to be included in the total weight of the vehicle. If, however, any of the components are located outside the spacecraft, their weight should not enter into the penalty calculation. Reliability figures must be supplied for all except the passive

filters and wiring. These are considered redundant and have a probability of failure so much smaller than the remainder of the components that they can be ignored. Although, in practice, it may not be generally true, failure of any of the above components is assumed to render the entire system useless, so each component carries the same weight in reliability calculations.

In addition to the effects of weight, power, and reliability data necessary for each of the components, the penalty function may also be affected by utilizing a computer of inadequate size or speed. The necessary size (i.e., memory word capacity) and speed are functions of the trajectory flown, the launch vehicle characteristics, the mechanization of the equations to be solved by the computer, and the number of flight control components utilized. Since the same computer can be utilized for navigation and guidance as well as flight control, the requirements for both must be considered. In general, the operations to be performed by the on-board computer will include: (Reference 20)

(a) Prelaunch checkout and initialization

(b) Computation of direction cosines

(c) Coordinate transformation and navigation computations

(d) Euler angle and rate computations

(e) Processing of discretes from the ground tracking network

(f) Output telemetry discretes

(g) Solution of guidance steering laws

(h) Solution of thrust vector and reaction jet control laws.

Additional requirements, such as on-board experiment monitoring may be required for a particular mission. Each of the operations above would affect computer memory and timing requirements. These requirements will determine the memory capacity and operations-per-second capability that the on-board computer must possess.

Computer Sizing Considerations. For the purpose of analysis of the computer sizing implications, it is assumed that the principal guidance function computations which must be performed by the computer include:

(1) Navigation - defined as determination of the vehicle state in an appropriate coordinate system at any moment of time based upon sensor inputs and the appropriate navigation equations.

(2) Guidance - defined as the solution of a selected set of equations expressing the relation between the present state and the desired state to derive the error signal required for control (steering law).

(3) Control (steering) - computation of the steering signals which are used in control of the direction of the vehicle flight path through commanded changes in the vehicle's attitude so that the guidance function is satisfied. Control also involves stabilization and usually requires filtering and compensation of sensor inputs.

Additional computations, which are related to the guidance function but are not directly implied if only flight control is considered, were listed in the preceeding section. These requirements are not directly related to the flight control aspect of the problem but do affect the selection of the onboard computer.

The equations which the onboard computer must solve should be specified, or else the number of operations which the computer must perform each computational cycle should be specified, along with the number of words of memory required. The number of operations the computer must perform each computation cycle, as well as the number of words of memory required, is a function of the number of propulsion stages.

For example, if a specific set of guidance equations such as the explicit linear tangent guidance equations (Reference 21) were assumed, an estimate of the total number of operations which the computer must perform each computational cycle could be made. Table X summarizes the estimate for the explicit linear tangent guidance equations. Note that the number of operations is dependent upon the number of propulsion stages.

TABLE X. TOTAL OPERATION COUNT FOR EXPLICIT LINEAR TANGENT GUIDANCE EQUATIONS (Reference 21)

Operation	Symbol	Word Storage	Maximum Use*	Minimum Use
Sine, Cosine	Sin	5	4	3
Square root	$\sqrt{\ }$	16	39	11
Dot Product	D.P.	21	20	18
Cross Product	C.P.	8	8	7
Natural Logarithm	LOG	2	18	6
Arc Sine or Cosine	Sin^{-1}	1	1	0
Multiply or Divide	X	245	444	265
Plus or Minus	+	174	365	195
Branches		33	69	35

* Assuming three guided stages remaining. For more or less than three, add or substract the following for each stage: 90+, 9 and 6 Log.

For each candidate computer, it will be necessary to specify the computational frequency, the time associated with each of the arithmetical operations listed in Table X, and the number of words in memory.

It must be emphasized that the adequacy of the candidate computers will be dependent upon the validity of the information describing the equations and their solution requirements. For example, alternate sets of boost guidance equations such as those discussed in Reference 22 could be considered. Mechanization of each set of equations places different requirements on the onboard computer. Since the guidance equations are only part of the guidance loop, consideration should be given to the other computational requirements and their compatibility with the candidate guidance equations before selecting a specific set and a computer which can satisfy all computational requirements.

The present work assumes the Kalman filter used in the state estimation is implemented but does not consider where this implementation is performed, i.e., in a ground-based or onboard computer. A complete study of the implications of the navigation equations including a Kalman filter approximation is beyond the scope of the present contract.

Implementation. In implementing the model for flight control appearing earlier in this report a new subroutine has been generated.

Subroutine FLCODE determines the contribution of the flight control system to the penalty. A system vector of seven components must be provided. The components are the computer, three rate gyros, one position gyro, one lateral accelerometer, and one angle of attack sensor. One or more of the above components may be missing for any particular case.

In the case of extremely flexible launch vehicles, such as the Atlas/Centaur where more than one set of rate gyros is carried, the subroutine may be called repeatedly, after separation of each stage. It is thus possible to analyze a changing flight control system, as would be the case of the Atlas/Centaur.

The computer, specified as the first component of the flight control system vector, is checked against the prespecified core and speed requirements. Depending on the result a check-constant is set to zero, if everything is acceptable, to one if insufficient core is available, and to two if the speed is not adequate. The system optimization routine (SYSOPT) is utilized, if the check-constant is not zero, to select an acceptable computer.

Components 1 through 6 of the system vector are integers referring to the number in the appropriate data bank, which is already built into the existing program. Component 7 is an integer referring to the component number in a data bank built into subroutine FLCODE. Also built in as data are such constants as wiring and filter weight, and actuator power requirements and reliability.

Subroutine FLCODE calculation are not included in the results shown in this report. Inclusion of FLCODE can be easily accomplished when sufficient data is available.

Effects of Subsystem Switching

The switching on and off of astrionics subsystems can increase the number of failures over those expected from the total operating time. This effect might be represented by estimating the probability of successful operation after time t and n cycles for a single subsystem as

$$P_S = e^{-t/T} e^{-n/N} \tag{29}$$

where T is the mean time between failures and N is the mean number of cycles between failures. The probability of failure due to lack of reliability and switching is given by

$$P_F = 1 - P_S = 1 - e^{-(t/T + n/N)} \quad . \tag{30}$$

For multiple subsystems

$$P_F = 1 - \prod_{i=1}^{m} e^{-(t_i/T_i + n_i/N_i)} \tag{31}$$

where the index i indicates each subsystem.

In addition to the reliability effects, operational problems must be considered. For example, restarting the ISU necessitates restarting the gyroscopes, and realigning the gimbals in gimballed systems or resetting the direction cosines in strapdown systems. Restarting the computer requires reinitializing the memory or assuring that the memory is not destroyed when power is turned off and on.

As cited in Reference 23, a correlation is thought to exist between the number of times that systems are cycled on and off during individual test periods and the number of failures observed. The problem is that the data acquired are often not originated with this sort of experiment in mind, and the lack of any concrete result does not necessarily prove that the turn-on stress is negligible. The majority of tests are characterized by rather frequent on-off cycles and fairly short continuous periods of operation. The estimates of the operating failure rates provided by manufacturers reflects to some extent any on-off cycle stress factor which might exist (Reference 23).

The capability has been provided in the computer programs to evaluate the effects of switching subsystems on and off. This capability can be used to evaluate feasible switching mechanizations, but experimental verification should follow the evaluation with the objectives of: (1) validating the data used and (2) possible development of analytical techniques for estimating system or component failure as a function of the number of on-off switching cycles.

A new counter has been provided to keep track of the number of switchings for each subystem as the schedule is executed. The only other necessary information is the mean number of cycles to failure for each subsystem.

Very little information is available as to the mean number of cylces to failure. In exercising the program, the mean number of cycles to failure has been assumed to be 500 for all components. Better data is needed for this item.

The probability of failure due to switching has been programmed as a simple exponential. A Weibull distribution could be used to include the effect of increased probability of failure per cycle as the system accumulates more cycling history. Such a model would require an additional parameter, the Weibull constant for switching, as was discussed for time dependent failures in Reference 4. If a Weibull distribution is adopted, it must be kept in mind that the data needed refer to the status of the components at the start of the mission. That is, the subsystem have already been degraded by switching during testing, and, therefore, the accumulated number of previous on-off cycles should be specified as well as the mean cycles to failure and Weibull constant.

Example runs employing the subsystem switching effects on the system reliability are shown following the Communications Requirements section of this report.

Communications Requirements

According to Reference 24, the effective radiated power (ERP) required to maintain a given information rate H in bits/sec is given by

$$ERP = \left[\frac{4\pi R^2}{A}\right] [KT] \left[\frac{E}{N_o}\right] H$$

where R = the range

A = the effective area of the Earth based antenna

K = Boltzmann's constant

T = the system noise temperature

$\frac{E}{N_o}$ = the ratio of energy-per-bit to noise spectral density required to meet an acceptable error probability.

The ERP is the product of the power output of the transmitter P and the gain of the antenna G, i.e.,

$$ERP = PG \quad .$$

Thus, given either P or G, the unknown parameter is uniquely determined by the ERP required to transmit information at a given rate.

The communications subsystem weight is then estimated from P and G. The transmitter weight, W_p, required to achieve a given radiated power P is given, as shown in Reference 24, by

$$W_p = W_1 + \omega_p P$$

where W_1 is a fixed weight, and ω_p (pounds per watt) is the incremental weight of the transmitter associated with an increase in power output.

To reflect completely the increase in system weight due to transmitter output power, energy source weight change must be included. Thus an overall weight coefficient, ω_p', can be found from

$$\omega_p' = \omega_p + (K_p + K_e T_{op})/\eta$$

where K_p = the energy source weight per unit power

K_e = the energy source weight per unit energy

η = the transmitter efficiency, and

T_{op} = the transmitter operating time.

The weight of the onboard antenna is assumed (Reference 24) to be given by

$$W_a = W_2 G^{0.6}$$

where W_2 is a fixed constant. The total weight of the onboard communications subsystem is

$$W = W_p + W_a = W_1 + \omega_p' P + W_2 G^{0.6} \quad .$$

If neither P or G is fixed, then both the onboard antenna and the transmitter can be designed to satisfy a given constraint on the effective radiated power and yield a minimum total subsystem weight. In this case, for fixed ERP = PG, the optimum choice of P and G to minimize W is

$$P = \left(\frac{0.6\ W_2}{\omega'_p}\right)^{5/8} (ERP)^{3/8}$$

$$G = \left(\frac{\omega'_p}{0.6\ W_2}\right)^{5/8} (ERP)^{5/8} \quad .$$

The total weight of this optimum communications subsystem is given by

$$W_{min} = W_1 + 1.9 W_2^{5/8}\ \omega'^{\ 3/8}_p\ (ERP)^{3/8} \quad .$$

The accuracy required in the pointing of the spacecraft antenna is related to the antenna beamwidth. For a high-gain paraboloidal antenna, the beamwidth between half-power points is approximated by

$$\theta^2 = \cong 2.7 \times 10^4/G$$

where θ is the beamwidth in degrees and G is the antenna gain in absolute units. In most cases it is reasonable to require the pointing accuracy to be 1/10 of the onboard antenna beamwidth.

To establish the onboard antenna pointing direction, knowledge of the angle subtended by vectors from the spacecraft to the Sun and Earth is necessary (see Figure 16).

This information is easily obtained from a time history of the spacecraft and sun positions with respect to the Earth. Table XI lists this angle (EARTH-SUN ANG) at discrete points in the Jupiter flyby mission. Also included in Table XI is the range of the spacecraft as observed from the Earth and the angle subtended by vectors from the Earth to the spacecraft and Sun (SC-SUN ANG). The maximum range encountered during the mission is recorded and used to determine the antenna gain and transmitter power required to transmit information at a given rate.

Communications problems can be anticipated when the SC-SUN ANG passes through zero. This occurs approximately 315 days into the Jupiter flyby mission and does not interfer with critical operations in the schedules used. When crossing the orbit of Mars on the Jupiter mission, calculations show the spacecraft is about 2,000 Mars diameters out of the Mars orbital plane. Thus, the specific location of Mars in its orbit is of no concern, for this particular mission. It is quite possible, however, that different trajectories may result in other planets blocking communications between Earth and the spacecraft. Should this occur at critical times, such as during an Earth-based update, it may become necessary to choose a different trajectory to overcome this difficulty.

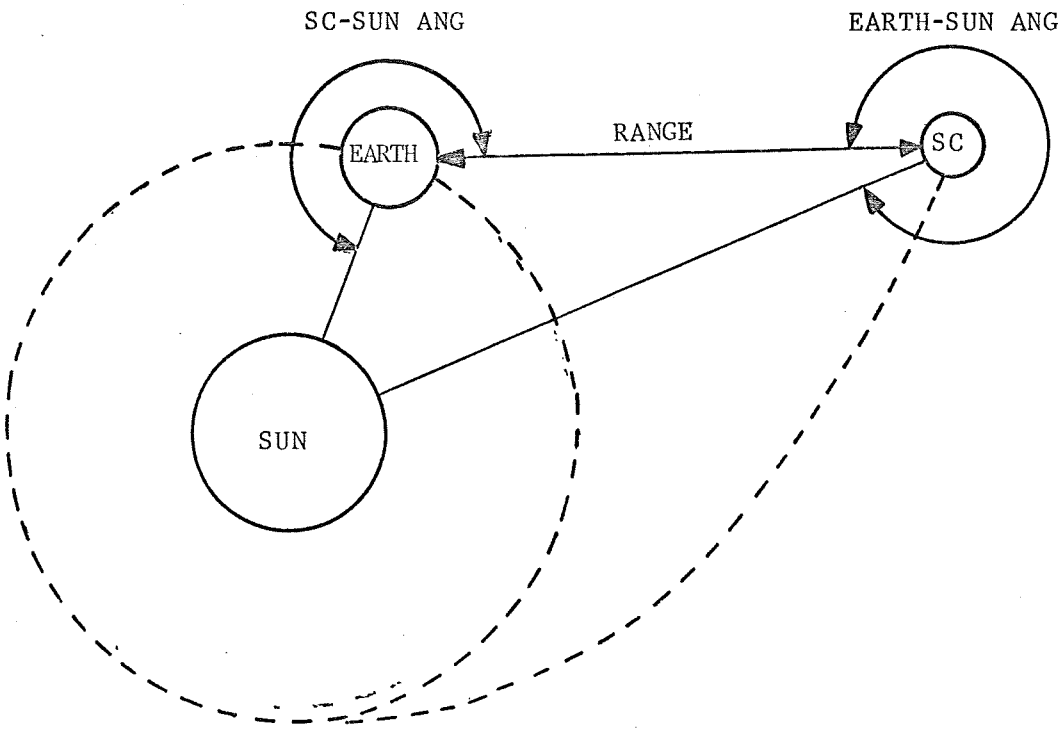

Nomenclature: SC $\triangleq$ Spacecraft

ANG $\triangleq$ Angle

FIGURE 16. COMMUNICATIONS GEOMETRY

ORIENTATION OF SPACECRAFT WRT SUN AND EARTH

DAYS	RANGE(AU)	SC-SUN ANG	EARTH-SUN ANG	LABEL
8.21	.05753	85.04	91.64	HELIOCENT.
16.42	.11321	93.48	80.09	HELIOCENT.
24.63	.16680	102.55	68.51	HELIOCENT.
32.83	.21888	112.04	57.35	HELIOCENT.
41.04	.27059	121.99	46.70	HELIOCENT.
49.25	.32260	132.17	36.76	HELIOCENT.
57.46	.37710	142.65	27.43	HELIOCENT.
65.67	.43868	153.35	18.66	HELIOCENT.
73.88	.50957	163.91	10.72	HELIOCENT.
82.08	.59189	173.99	3.80	HELIOCENT.
90.29	.68668	-175.73	-2.55	HELIOCENT.
98.50	.79304	-166.84	-7.40	HELIOCENT.
106.71	.91242	-158.31	-11.45	HELIOCENT.
114.92	1.04457	-150.28	-14.67	HELIOCENT.
123.13	1.18873	-142.71	-17.16	HELIOCENT.
131.33	1.34399	-135.54	-19.02	HELIOCENT.
139.54	1.50908	-128.68	-20.34	HELIOCENT.
147.75	1.68260	-122.09	-21.21	HELIOCENT.
155.96	1.86417	-115.72	-21.68	HELIOCENT.
164.17	2.05255	-109.53	-21.82	HELIOCENT.
172.38	2.24656	-103.47	-21.67	HELIOCENT.
180.58	2.44491	-97.51	-21.29	HELIOCENT.
188.79	2.64592	-91.63	-20.69	HELIOCENT.
197.00	2.84859	-85.80	-19.93	HELIOCENT.
205.21	3.05180	-80.01	-19.00	HELIOCENT.
213.42	3.25420	-74.24	-17.95	HELIOCENT.
221.63	3.45445	-68.47	-16.79	HELIOCENT.
229.83	3.65116	-62.70	-15.53	HELIOCENT.
238.04	3.84246	-56.91	-14.20	HELIOCENT.
246.25	4.02609	-51.09	-12.80	HELIOCENT.
254.46	4.20615	-45.24	-11.35	HELIOCENT.
262.67	4.37564	-39.36	-9.86	HELIOCENT.
270.88	4.53537	-33.43	-8.35	HELIOCENT.
279.09	4.68408	-27.45	-6.81	HELIOCENT.
287.29	4.82082	-21.43	-5.27	HELIOCENT.
295.50	4.94490	-15.35	-3.73	HELIOCENT.
303.71	5.05557	-9.22	-2.21	HELIOCENT.
311.92	5.15221	-3.05	-.72	HELIOCENT.
320.13	5.23438	3.26	.75	HELIOCENT.
328.34	5.30154	9.56	2.16	HELIOCENT.
336.54	5.35387	15.94	3.52	HELIOCENT.
344.75	5.39148	22.40	4.80	HELIOCENT.
352.96	5.41466	28.94	6.00	HELIOCENT.
361.17	5.42393	35.56	7.11	HELIOCENT.
369.38	5.41992	42.28	8.11	HELIOCENT.
377.59	5.40442	49.10	8.99	HELIOCENT.
385.79	5.37833	56.03	9.74	TARGET CT.
394.00	5.33938	63.09	10.33	TARGET CT.
402.21	5.29445	70.28	10.77	TARGET CT.
410.42	5.24944	77.65	11.03	TARGET CT.
418.63	5.22333	85.38	11.04	TARGET CT.

MAXIMUM RANGE = 2.062099425.12FT

TABLE XI. COMMUNICATIONS GEOMETRY SUBROUTINE OUTPUT FOR THE JUPITER FLYBY TRAJECTORY

Computer Program Results

The computer runs presented in this section are for a Jupiter flyby mission with the data as shown in Figure 17. These runs demonstrate the effects of (1) control moment gyro (CMG) attitude control, (2) inertia wheel attitude control (IWAC), (3) reliability effects of switching subsystems on and off, and (4) communications transmitter and antenna parameter estimation. The results of including these features are summarized in Tables IX (shown in the section on Alternate Attitude Control Schemes) and XII. The runs were made with the data shown in Figure 17 on the mission schedules shown in Figure 18. Penalty analysis reports for the runs used in compiling Tables IX and XII are shown in Figures 19 through 36. Figures 19 through 28 do not include the effects of subsystem switching and communications requirements.

It is apparent that the main drawback of the reaction-wheel control is not so much in the additional weight, which is only about 1.4 pounds more than the control moment gyro system, but in the additional power required, which exceeds that of the CMG by a factor of 1.6.

Whether this is a prohibitive drawback or not will depend on the rest of the mission requirements. This total power could probably be reduced employing separate coarse and fine IWAC systems. It is not apparent how this would affect the reliability of the system, and it has not been modeled.

The onboard transmitter and antenna weight and power estimation discussed in the previous section have been included in the program. The user may specify a transmitter by giving its weight, power input, MTTF, MCTF, and power output. An antenna is then designed to provide the necessary gain. If no transmitter is specified the transmitter and antenna are designed to minimize the net weight (physical weight and energy source weight) while meeting the required effective radiated power (ERP). With the gain of the antenna known, the pointing tolerance is calculated. This tolerance is used as a constraint on attitude control dead-band when the transmitter is operating.

The results shown in this report are for a designed transmitter and a hypothetical transmitter used to demonstrate the capability of specifying or designing the onboard transmitter.

TABLE XII. SUMMARY OF RESULTS FOR JUPITER SWINGBY COMPARING ATTITUDE CONTROL MECHANIZATIONS, AND ONBOARD COMMUNICATIONS PARAMETER ESTIMATION

	Designed Transmitter				Specified Transmitter			
	Transmitter Weight = 3.727 (lb) Transmitter Power = 36.536 (watts) Antenna Weight = 14.615 (lb)				Transmitter Weight = 10.0 (lb) Transmitter Power = 20.0 (watts) Antenna Weight = 20.98 (lb)			
		Attitude Control				Attitude Control		
Attitude Control Scheme	Fig. No.	Weight (lbs)	Power (watts)	Penalty (lbs)	Fig. No.	Weight (lbs)	Power (watts)	Penalty (lbs)
Gas Jets (Unequal Thrusts)	29	21.215	10.000	377.392	33	21.215	10.000	384.326
Gas Jets (Equal Thrusts)	30	21.218	10.000	377.114	34	21.218	10.000	384.047
Control Moment Gyros	31	29.019	9.407	384.633	35	29.019	9.407	391.567
Inertia Wheels	32	30.422	14.978	388.032	36	30.422	14.978	394.965

TRACKING NET DATA

STA.NO.		LAT.	LONG.	RADARS	
1	ASCENSION	-7.966	-14.400	USBS-30	TPQ-18
2	PRETORIA	-25.950	-28.670	MPS-25	
3	CARNARVON	-24.900	113.710	USBS-30	FPQ-6
4	ANTIGUA	17.150	-61.800	USBS-30	FPQ-6
5	GOLDSTONE	35.384	-116.850	DSIF	
6	MADRID	40.416	-3.667	DSIF	
7	CANBERRA	-35.316	149.132	DSIF	

RAD.NO.		MAX.RANGE	RANGE ERROR	ELEV. ERROR	AZIM. ERROR	RANGE DOT ERROR
1	USBS-30	3.500000E+09	6.700000E+01	1.780000E-03	1.780000E-03	1.240000E-01
2	TPQ-18	1.920000E+08	6.700000E+01	4.500000E-04	4.500000E-04	-0.
3	MPS-25	6.070000E+06	1.340000E+02	2.240000E-03	2.240000E-03	-0.
4	FPQ-6	1.920000E+08	4.500000E+01	3.350000E-04	3.350000E-04	-0.
5	DSIF	1.000000E+50	-0.	-0.	-0.	4.100000E-02

STAR DATA

NAME	LAT.	LONG.	VIS.MAG.	COLR.TEMP.	REL. ACC.
SIRIUS	-16D 40M 15S	100D 56M -0S	-1.60	14000	1.00000
CANOPUS	-52D 40M 40S	95D 48M -0S	-.90	9000	1.38002
VEGA	38D 45M 10S	273D 58M -0S	.10	15400	2.18636
CAPELLA	45D 59M 58S	78D 35M -0S	.20	6300	2.28932
POLLUX	28D 6M 19S	115D 50M -0S	1.20	4400	3.62696

SUMMARY OF LEWIS N-BODY TRAJECTORY (FT-SEC)

		POSITION			MAG.	VELOCITY			MAG.	ANG.
TIME= 0.										
NO. 1	0.	-1.2989E+07	7.2626E+06	3.3133E+06	2.1527E+07	-2.0565E+04	-4.4774E+04	-2.1728E+04	5.3849E+04	89.33
CROSS 0.7510231 5E+05		POSITION			MAG.	VELOCITY			MAG.	ANG.
NO. 40	7.5102E+04	-3.3122E+08	-2.7173E+09	-1.3102E+09	3.0348E+09	-3.9854E+03	-3.5862E+04	-1.7288E+04	4.0010E+04	.55
NO. 0	7.5102E+04	-4.6330E+11	1.2044E+11	5.2102E+10	4.8634E+11	-3.2532E+04	-1.2236E+05	-5.4803E+04	1.3797E+05	92.01
NO. 0	7.5102E+04	-4.6797E+11	1.2316E+11	5.3413E+10	4.8684E+11	-2.8547E+04	-8.6502E+04	-3.7515E+04	9.8513E+04	89.16
TIME= 0.7600000 15+05		POSITION			MAG.	VELOCITY			MAG.	ANG.
NO. 1	7.6000E+04	-4.6833E+11	1.2033E+11	5.2053E+10	4.8633E+11	-3.2515E+04	-1.2237E+05	-5.4804E+04	1.3796E+05	92.01
CROSS 0.3277535E+08		POSITION			MAG.	VELOCITY			MAG.	ANG.
NO. 40	3.2775E+07	1.0462E+12	-1.9429E+12	-0.6431E+11	2.3699E+12	4.9194E+04	-3.3066E+04	-1.4580E+04	6.1040E+04	27.50
NO. 0	3.2775E+07	-2.9401E+10	1.4404E+11	5.7369E+10	1.5781E+11	1.0867E+04	-5.2093E+04	-2.1805E+04	5.7508E+04	179.01
NO. 0	3.2775E+07	1.0750E+12	-2.0869E+12	-0.2168E+11	2.5222E+12	3.8326E+04	1.9027E+04	7.2254E+03	4.3395E+04	92.69
TIME= 0.3203230E+09		POSITION			MAG.	VELOCITY			MAG.	ANG.

FIGURE 17a. JUPITER FLYBY COMPUTER PROGRAM DATA

```
NO.  1  3.2832E+07  -2.8786E+10  1.4109E+11  5.6134E+10  1.5455E+11  1.0866E+04 -5.2098E+04 -2.1807E+04  5.7514E+04  178.99
SEGMENTS      0.          39      0.75102315E+05   39      0.32775357E+08    8      0.10000000E+21

MATCH WITH N-BODY AT    543 SECONDS.  0.33600000E+08 FT.

                                   SEAP            N-BODY            ERROR
          VELOCITY MATCH           49155             49359             -204
            ANGLE  MATCH           45.06             44.65              .40

TARGET CONDITIONS
     TIME   0.35460242E+08 SECONDS
   RADIUS 0.16798375E+10 FEET
 VELOCITY 0.92543781E+05 FT/SEC
    ANGLE          90.00 DEG.

                 RANGE ANG.        CUM. TOTAL          TIME        CUM. TOTAL
LAUNCH              20.000            20.000         565.000          565.000
  PARK              69.250            89.250        1016.296         1581.296
  BURN              54.198           143.448         941.500         2522.796
ESCAPE              48.940           192.388       74559.271        77082.067

LAUNCH
LAT.=    28.500  LONG.=   -80.500  AZ.=   100.000
```

FIGURE 17b. JUPITER FLYBY COMPUTER PROGRAM DATA (Continued)

DATA

SPACECRAFT/MISSION DATA (SECTION 1)

1	TOTAL WEIGHT	(LB)=	2000.00000	2	NONASTRIONICS WEIGHT	(LB)=	1500.00000
3	PROBABILITY OF ASTRIONICS FAIL=		.15000	4	TARGET MISS DISTANCE	(FT)=	78087800.00000
5	VIBRATION(MILLIRAD/SEC)**2/CPS=		.30457	6	VIBRATION UPPER FREQ.	(CPS)=	100.00000
7	STATIC WEIGHT	(LB)=	110.00000	8	ROLL MOM. OF INER.(SLUG-FT**2)=		1100.00000
9	YAW MOM. OF INERT.(SLUG-FT**2)=		625.00000	10	PIT MOM. OF INERT.(SLUG-FT**2)=		563.00000
11	ROLL MOMENT ARM	(FT)=	7.00000	12	YAW MOMENT ARM	(FT)=	7.00000
13	PITCH MOMENT ARM	(FT)=	7.00000	14	ROLL MAX. ARM	(FT)=	3.50000
15	YAW MAX. ARM	(FT)=	3.50000	16	PITCH MAX. ARM	(FT)=	3.50000

MIDCOURSE ENG./ENERGY SOURCE (SECTION 2)

1	SPECIFIC IMPULSE	(SEC.)=	233.00000	2	MIDCOURSE THRUST	(LB)=	50.00000
3	MIDCOURSE SYSTEM COEF.(LB/LB)=		1.09600	4	MIDCOURSE SYSTEM CON.	(LB)=	20.30000
5	ENERGY SOURCE CONSTANT	(LB)=	13.20000	6	ENERGY SOURCE COEF.	(LB/W)=	.34500
7	ENERGY SOURCE COEF.	(LB/W-HR)=	0.00000	8	MIDCOURSE ENGINE ARM	(FT)=	3.50000
9	MIDCOURSE ENG. OFFSET UNC.(FT)=		.02000	10	MIDCOURSE ENG. ANG. UNC.	(RAD)=	.00436

I. S. UNIT DESIGN DATA (SECTION 3)

1	BLOCK DENSITY	(LB/IN**3)=	.09700	2	BASE DENSITY	(LB/IN**3)=	.09700
3	COVER DENSITY	(LB/IN**3)=	.09700	4	INSULATION DENSITY	(LB/IN**3)=	.09100
5	ISU COMPONENT SEPARATION	(IN)=	.25000	6	BASE OFFSET	(IN)=	1.50000
7	COVER CLEARANCE	(IN)=	.25000	8	BASE THICKNESS	(IN)=	.50000
9	COVER THICKNESS	(IN)=	.10000	10	INSULATION THICKNESS	(IN)=	.05000
11	ELECTRONICS WEIGHT	(LB)=	10.00000	12	ELECTRONICS MTBF	(HR)=	10000.00000
13	ELECTRONICS POWER	(WATTS)=	30.00000	14	DESIGN NO. (0=OPTIMUM)	=	0.00000
15	1=HORIZ/TOTAL, 2=VERTICAL	=	1.00000	16	RISE TIME	(SEC.)=	.00001

THERMAL CONTROL DATA (SECTION 4)

1	OPERATING TEMPERATURE(DEG-F)=		160.00000	2	MAX.AMBIENT TEMPERATURE(DEG-F)=		140.00000
3	AVE.AMBIENT TEMPERATURE(DEG-F)=		60.00000	4	MIN.AMBIENT TEMPERATURE(DEG-F)=		30.00000
5	THERMAL CONDUCTANCE (W/DEG-F)=		0.00000	6	MIN. THERMAL CONDUCTANCE RATIO=		.50000

ATTITUDE CONTROL DATA (SECTION 5)

1	ROLL SOLAR PRESS. AREA(FT**2)=		113.00000	2	YAW SOLAR PRESS. AREA(FT**2)=		32.00000
3	PITCH SOLAR PRESS. AREA(FT**2)=		32.00000	4	ROLL CG-CP ARM	(FT)=	.25000
5	YAW CG-CP ARM	(FT)=	1.00000	6	PITCH CG-CP ARM	(FT)=	1.00000
7	SIZING OPTION (1 SETS=THRUSTS)=		0.00000	8	A/C SPECIFIC IMPULSE	(SEC.)=	56.00000
9	EMPTY DATA SPACE	=	0.00000	10	IMPULSE TIME	(SEC)=	.02000
11	RECHARGE TIME	(SEC)=	.04000	12	METEORITE IMPACT IMP.	(LB-SEC)=	.01400
13	AT.CONT.MFLTR. (FAIL/1000IMP.)=		.00010	14	A.C. ELECTRONICS MTBF	(HR)=	20000.00000
15	A.C. ELECTRONICS POWER (WATTS)=		10.00000	16	ATT. CONT. WEIGHT CONS.	(LB)=	21.00000
17	ATT. CONT. COEF.	(LB/LB)=	1.56300	18	ATTITUDE TOLERANCE	(DEG)=	1.00000
19	CMG MAX ANGULAR VELOCITY	=	.60000	20	CMG FAILURES PER HOUR	=	.00004

FIGURE 17c. JUPITER FLYBY COMPUTER PROGRAM DATA (Continued)

ACCELEROM.

		WEIGHT	POWER	MTTF	ALPHA	LENGTH	DIAMETER	WIDTH
1	ARMA D-4E	.35000	1.50000	100000.00000	1.00000	1.30000	2.70000	-0.00000

K0	K1	K2	K3	M0	N0	M1	N1	IP	IN
6.700E-05	1.000E-05	9.000E-07	1.000E-07	-0.	-0.	5.600E-06	5.600E-06	2.000E+01	2.000E+01
G	G/G	G/G**2	G/G**3	G/G	G/G	G/G**2	G/G**2	ARC SEC	ARC SEC

		WEIGHT	POWER	MTTF	ALPHA	LENGTH	DIAMETER	WIDTH
2	GG-177	.30000	1.00000	50000.00000	1.00000	1.80000	1.50000	-0.00000

K0	K1	K2	K3	M0	N0	M1	N1	IP	IN
4.200E-05	5.100E-05	9.400E-06	1.040E-06	-0.	-0.	5.000E-06	5.000E-06	2.000E+01	2.000E+01
G	G/G	G/G**2	G/G**3	G/G	G/G	G/G**2	G/G**2	ARC SEC	ARC SEC

		WEIGHT	POWER	MTTF	ALPHA	LENGTH	DIAMETER	WIDTH
3	2401-005	.20000	8.00000	180217.00000	1.00000	2.00000	1.00000	1.13000

K0	K1	K2	K3	M0	N0	M1	N1	IP	IN
2.000E-05	1.000E-05	1.000E-06	2.000E-07	1.000E-07	1.000E-05	-0.	-0.	5.000E+00	5.000E+00
G	G/G	G/G**2	G/G**3	G/G	G/G	G/G**2	G/G**2	ARC SEC	ARC SEC

		WEIGHT	POWER	MTTF	ALPHA	LENGTH	DIAMETER	WIDTH
4	BELL-7	.40000	3.50000	40000.00000	1.00000	1.15000	1.75000	-0.00000

K0	K1	K2	K3	M0	N0	M1	N1	IP	IN
4.000E-05	8.000E-05	2.000E-06	1.600E-07	1.000E-05	1.000E-05	2.000E-06	2.000E-06	1.500E+01	1.500E+01
G	G/G	G/G**2	G/G**3	G/G	G/G	G/G**2	G/G**2	ARC SEC	ARC SEC

GYROSCOPES

		WEIGHT	POWER	MTTF	ALPHA	LENGTH	DIAMETER	WIDTH
1	GG 334-A	1.65000	3.00000	25000.00000	1.00000	4.70000	2.50000	-0.00000

R	UT	US	S	IS	IO	T			
5.000E-02	9.000E-02	1.000E-01	4.000E-02	0.000E+00	7.000E+00	1.000E-04	-0.	-0.	-0.
DEG/HOUR	DEG/HR/G	DEG/HR/G	DEG/H/G**2	ARC-SEC	ARC-SEC	UNITY			

		WEIGHT	POWER	MTTF	ALPHA	LENGTH	DIAMETER	WIDTH
2	RI-1139	1.45000	3.32000	18000.00000	1.00000	2.60000	3.50000	-0.00000

R	UT	US	S	IS	IO	T			
1.500E-01	5.000E-02	7.000E-02	1.400E-02	1.500E+01	1.500E+01	8.500E-05	-0.	-0.	-0.
DEG/HOUR	DEG/HR/G	DEG/HR/G	DEG/H/G**2	ARC-SEC	ARC-SEC	UNITY			

FIGURE 17d. JUPITER FLYBY COMPUTER PROGRAM DATA (Continued)

3	IR-IRIG-M	WEIGHT	POWER	MTTF	ALPHA	LENGTH	DIAMETER	WIDTH			
		1.20000	3.30000	35000.00000	1.00000	3.86000	2.00000	-0.00000			
	R	UT	US	S	IS	IO	T				
	1.500E-02	3.000E-02	3.000E-02	3.000E-02	5.000E+00	1.000E+00	3.000E-05	-0.	-0.	-0.	
	DEG/HOUR	DEG/HR/G	DEG/HR/G	DEG/H/G**2	ARC-SEC	ARC-SEC	UNITY				
4	SYG-1440	WEIGHT	POWER	MTTF	ALPHA	LENGTH	DIAMETER	WIDTH			
		1.40000	4.00000	50000.00000	1.00000	3.86000	2.00000	-0.00000			
	R	UT	US	S	IS	IO	T				
	5.000E-02	1.000E-01	1.000E-01	2.000E-02	5.000E+00	5.000E+00	5.000E-05	-0.	-0.	-0.	
	DEG/HOUR	DEG/HR/G	DEG/HR/G	DEG/H/G**2	ARC-SEC	ARC-SEC	UNITY				
5	GG-49	WEIGHT	POWER	MTTF	ALPHA	LENGTH	DIAMETER	WIDTH			
		-0.00000	-0.00000	-0.00000	-0.00000	-0.00000	-0.00000	-0.00000			
	R	UT	US	S	IS	IO	T				
	9.400E-02	1.100E-01	1.900E-01	9.000E-03	1.100E+01	1.100E+01	-0.	-0.	-0.	-0.	
	DEG/HOUR	DEG/HR/G	DEG/HR/G	DEG/H/G**2	ARC-SEC	ARC-SEC	UNITY				
6	GG 334-AXI	WEIGHT	POWER	MTTF	ALPHA	LENGTH	DIAMETER	WIDTH			
		1.65000	3.00000	25000.00000	1.00000	4.70000	2.50000	-0.00000			
	R	UT	US	S	IS	IO	T				
	5.000E-02	6.000E-02	1.000E-01	4.000E-02	6.000E+00	7.000E+00	1.000E-04	-0.	-0.	-0.	
	DEG/HOUR	DEG/HR/G	DEG/HR/G	DEG/H/G**2	ARC-SEC	ARC-SEC	UNITY				
7	GG334-AX10	WEIGHT	POWER	MTTF	ALPHA	LENGTH	DIAMETER	WIDTH			
		1.65000	3.00000	25000.00000	1.00000	4.70000	2.50000	-0.00000			
	R	UT	US	S	IS	IO	T				
	5.000E-02	6.000E-02	1.000E-01	4.000E-02	6.000E+00	7.000E+00	1.000E-04	-0.	-0.	-0.	
	DEG/HOUR	DEG/HR/G	DEG/HR/G	DEG/H/G**2	ARC-SEC	ARC-SEC	UNITY				

COMPUTERS

1	SRT RUK-2	WEIGHT	POWER	MTTF	ALPHA	LENGTH	DIAMETER	WIDTH			
		30.00000	90.00000	6000.00000	1.00000	-0.00000	-0.00000	-0.00000			
	BITS	COMP.FREQ.	INT.SCHEME								
	3.200E+01	1.280E+02	2.000E+00	-0.	-0.	-0.	-0.	-0.	-0.	-0.	
2	SIGN III	WEIGHT	POWER	MTTF	ALPHA	LENGTH	DIAMETER	WIDTH			
		27.00000	115.00000	5582.00000	1.00000	-0.00000	-0.00000	-0.00000			
	BITS	COMP.FREQ.	INT.SCHEME								
	4.000E+01	5.000E+01	1.000E+00	-0.	-0.	-0.	-0.	-0.	-0.	-0.	

FIGURE 17e. JUPITER FLYBY COMPUTER PROGRAM DATA (Continued)

3	IR24	WEIGHT	POWER	MTTF	ALPHA	LENGTH	DIAMETER	WIDTH		
		34.14000	92.90000	2940.00000	1.00000	-0.00000	-0.00000	-0.00000		
	BITS	COMP.FREQ.	INT.SCHEME							
	2.400E+01	5.000E+01	1.000E+00	-0.	-0.	-0.	-0.	-0.	-0.	-0.
4	TELEDYNE	WEIGHT	POWER	MTTF	ALPHA	LENGTH	DIAMETER	WIDTH		
		30.00000	70.00000	5000.00000	1.00000	-0.00000	-0.00000	-0.00000		
	BITS	COMP.FREQ.	INT.SCHEME							
	-0.	-0.	-0.	-0.	-0.	-0.	-0.	-0.	-0.	-0.

PLATFORMS

1	H-429	WEIGHT	POWER	MTTF	ALPHA	LENGTH	DIAMETER	WIDTH		
		30.00000	100.00000	2000.00000	1.00000	-0.00000	-0.00000	-0.00000		
	1=SU.2=GIM									
	1.000E+00	-0.	-0.	-0.	-0.	-0.	-0.	-0.	-0.	-0.
2	CENT.IMG	WEIGHT	POWER	MTTF	ALPHA	LENGTH	DIAMETER	WIDTH		
		80.00000	225.00000	1350.00000	1.00000	-0.00000	-0.00000	-0.00000		
	1=SU.2=GIM									
	2.000E+00	-0.	-0.	-0.	-0.	-0.	-0.	-0.	-0.	-0.

STAR TRCKR

1	ITT-LUN.OB	WEIGHT	POWER	MTTF	ALPHA	LENGTH	DIAMETER	WIDTH		
		7.00000	8.00000	90000.00000	1.00000	-0.00000	-0.00000	-0.00000		
	ERROR(DEG)	FOV (DEG)	DIRCOS(1)	DIRCOS(2)	DIRCOS(3)	REF.STAR	WIDTH	LEN/ANGV.	SC. FREQ.	SCWD/RAD.
	1.400E-02	8.000E+00	1.000E+00	0.	0.	2.000E+00	3.000E+00	4.000E+00	1.000E+04	1.000E-02
2	G148.ST	WEIGHT	POWER	MTTF	ALPHA	LENGTH	DIAMETER	WIDTH		
		26.50000	14.00000	45000.00000	1.00000	-0.00000	-0.00000	-0.00000		
	ERROR(DEG)	FOV (DEG)	DIRCOS(1)	DIRCOS(2)	DIRCOS(3)	REF.STAR	WIDTH	LEN/ANGV.	SC. FREQ.	SCWD/RAD.
	7.000E-03	1.200E+02	1.000E+00	-0.	-0.	2.000E+00	2.000E+00	5.000E+00	5.000E+03	7.000E-03

SUN SENSOR

1	ADCL-1402	WEIGHT	POWER	MTTF	ALPHA	LENGTH	DIAMETER	WIDTH		
		2.00000	5.00000	100000.00000	1.00000	-0.00000	-0.00000	-0.00000		
	ERROR(DEG)	FOV (DEG)	DIRCOS(1)	DIRCOS(2)	DIRCOS(3)					

FIGURE 17£. JUPITER FLYBY COMPUTER PROGRAM DATA (Continued)

```
4.000E-02   6.400E+01   0.          1.000E+00   0.          -0.         -0.         -0.         -0.         -0.

2   ADCL-1402X   WEIGHT        POWER        MTTF          ALPHA        LENGTH       DIAMETER     WIDTH
                  2.00000       5.00000   100000.00000     1.00000     -0.00000     -0.00000     -0.00000

        ERROR(DEG)   FOV (DEG)   DIRCOS(1)   DIRCOS(2)   DIRCOS(3)
        8.618E-03   6.400E+01   0.          1.000E+00   0.          -0.         -0.         -0.         -0.         -0.

3   ADCL-1402Y   WEIGHT        POWER        MTTF          ALPHA        LENGTH       DIAMETER     WIDTH
                  2.00000       5.00000   100000.00000     1.00000     -0.00000     -0.00000     -0.00000

        ERROR(DEG)   FOV (DEG)   DIRCOS(1)   DIRCOS(2)   DIRCOS(3)
        4.000E+00   6.400E+01   0.          1.000E+00   0.          -0.         -0.         -0.         -0.         -0.

ISU/C.P.S.

1   H-429 SYS    WEIGHT        POWER        MTTF          ALPHA        LENGTH       DIAMETER     WIDTH
                 14.25000      85.00000   10000.00000     1.00000     -0.00000     -0.00000     -0.00000

        -0.         -0.         -0.         -0.         -0.         -0.         -0.         -0.         -0.         -0.

COM. SYST.

1   KCR-503      WEIGHT        POWER        MTTF          ALPHA        LENGTH       DIAMETER     WIDTH
                  3.10000       3.50000   100000.00000     1.00000      5.25000      3.37500      4.56300

        -0.         -0.         -0.         -0.         -0.         -0.         -0.         -0.         -0.         -0.

HORIZ.SEN.

1   A-060        WEIGHT        POWER        MTTF          ALPHA        LENGTH       DIAMETER     WIDTH
                 16.80000      12.00000   1700.00000     1.00000     -0.00000     -0.00000     -0.00000

        RMS ERROR   FOV (DEG)
        2.000E-01   4.500E+01   -0.         -0.         -0.         -0.         -0.         -0.         -0.         -0.
```

FIGURE 17g. JUPITER FLYBY COMPUTER PROGRAM DATA (Continued)

SCHEDULE NO. 1

-0	0D 0H 0M 0.00S	0.00	1	-0	-0	START THE LAUNCH	-0.
			6	7	1	TURN ON COM.RCVR.	-0.
-0	0D 0H25M 0.00S	1500.00	3	1	2	UPDATE WITH ASCENSION TPQ RADAR	-0.
-0	0D 0H42M 3.00S	2523.00	6	3	1	TURN ON ATTITUDE CONTROL	-0.
			8	0	-0	RAISE DEAD BAND	0.20000000E+02
			6	4	1	TURN ON STAR TRACKER	-0.
			6	5	1	TURN ON SUN SENSOR	-0.
			9	2	1	BEGIN MANEUVERING	-0.
2	0D 0H57M 3.00S	3423.00	9	-0	2	BEGIN SEARCH	-0.
2	0D 0H58M 3.00S	3483.00	9	-0	3	END SEARCH	-0.
			6	1	-0	TURN OFF COMPUTER	-0.
			6	2	-0	TURN OFF ISU	-0.
2	0D10H 0M 0.00S	36000.00	6	1	1	TURN ON COMPUTER	-0.
			6	2	1	TURN ON ISU	-0.
-0+	0D10H30M 0.00S	37800.00	8	-0	-0	DROP DEAD BAND	0.10000000E+00
			3	0	1	UPDATE WITH ANY USBS-30	-0.
-0+	0D10H31M 0.00S	37860.00	5	2	-0	MAKE MIDCOURSE CORRECTION	-0.
			8	0	-0	RAISE DEAD BAND	0.20000000E+02
			6	1	-0	TURN OFF COMPUTER	-0.
			6	2	-0	TURN OFF ISU	-0.
			6	3	0	TURN OFF ATT. CONT.	-0.
			6	4	0	TURN OFF STAR TRACKER	-0.
			6	5	0	TURN OFF SUN SENSOR	-0.
2	400D 0H 0M 0.00S	34560000.00	6	1	1	TURN ON COMPUTER	-0.
			6	2	1	TURN ON ISU	-0.
			6	5	1	TURN ON SUN SENSOR	-0.
			6	4	1	TURN ON STAR TRACKER	-0.
			6	3	1	TURN ON ATT CONT.	-0.
			9	2	1	BEGIN MANEUVERING	-0.
2+	400D 0H30M 0.00S	34561800.00	9	2	2	BEGIN SEARCH	-0.
2+	400D 0H31M 0.00S	34561860.00	9	2	3	END SEARCH	-0.
-0+	400D 1H 1M 0.00S	34563660.00	8	-0	-0	DROP DEAD BAND	0.10000000E+00
			3	0	5	UPDATE WITH ANY DSIF	-0.
-0+	400D 1H 2M 0.00S	34563720.00	5	2	-0	MAKE MIDCOURSE CORRECTION	-0.
			6	3	-0		-0.
			6	1	-0		-0.
			6	2	-0		-0.
			6	4	-0		-0.
			6	5	-0		-0.
			6	7	-0		-0.
-0	410D10H 4M 2.00S	35460242.00	99	2	-0	END OF THE SCHEDULE	-0.

OPT.=
0 FOR ALL SYSTEMS
1 FOR NON OPTICAL
2 FOR OPTICAL

FIGURE 18a. MISSION SCHEDULES FOR JUPITER FLYBY

SCHEDULE NO. 2

-0	0D 0H 0M 0.00S	0.00	1	-0	-0	START THE LAUNCH	-0.	
			6	7	1	TURN ON COM.RCVR.	-0.	
-0	0D 0H25M 0.00S	1500.00	3	1	2	UPDATE WITH ASCENSION TPQ RADAR	-0.	
-0	0D 0H42M 3.00S	2523.00	6	3	1	TURN ON ATTITUDE CONTROL	-0.	
			8	0	-0	RAISE DEAD BAND	0.20000000E+02	
			6	4	1	TURN ON STAR TRACKER	-0.	
			6	5	1	TURN ON SUN SENSOR	-0.	
			9	2	1	BEGIN MANEUVERING	-0.	
2	0D 0H57M 3.00S	3423.00	9	-0	2	BEGIN SEARCH	-0.	
2	0D 0H58M 3.00S	3483.00	9	-0	3	END SEARCH	-0.	
			6	1	-0	TURN OFF COMPUTER	-0.	
			6	2	-0	TURN OFF ISU	-0.	
2	0D10H 0M 0.00S	36000.00	6	1	1	TURN ON COMPUTER	-0.	
			6	2	1	TURN ON ISU	-0.	
-0+	0D10H30M 0.00S	37800.00	8	-0	-0	DROP DEAD BAND	0.10000000E+00	
			3	0	1	UPDATE WITH ANY USBS-30	-0.	
-0+	0D10H31M 0.00S	37860.00	5	2	-0	MAKE MIDCOURSE CORRECTION	-0.	
			8	0	-0	RAISE DEAD BAND	0.20000000E+02	
			6	1	-0	TURN OFF COMPUTER	-0.	
			6	2	-0	TURN OFF ISU	-0.	
			6	3	0	TURN OFF ATT. CONT.	-0.	
			6	4	0	TURN OFF STAR TRACKER	-0.	
			6	5	0	TURN OFF SUN SENSOR	-0.	
2	200D 0H 0M 0.00S	17280000.00	6	1	1	TURN ON COMPUTER	-0.	
			6	2	1	TURN ON ISU	-0.	
			6	5	1	TURN ON SUN SENSOR	-0.	
			6	4	1	TURN ON STAR TRACKER	-0.	
			6	3	1	TURN ON ATT CONT.	-0.	
			9	2	1	BEGIN MANEUVERING	-0.	
2+	200D 0H30M 0.00S	17281800.00	9	2	2	BEGIN SEARCH	-0.	
2+	200D 0H31M 0.00S	17281860.00	9	2	3	END SEARCH	-0.	
-0+	200D 1H 1M 0.00S	17283660.00	8	-0	-0	DROP DEAD BAND	0.10000000E+00	
			3	0	5	UPDATE WITH ANY DSIF	-0.	
-0+	200D 1H 2M 0.00S	17283720.00	5	2	-0	MAKE MIDCOURSE CORRECTION	-0.	
			8	0	-0	RAISE DEAD BAND	0.20000000E+02	
			6	1	-0	TURN OFF COMPUTER	-0.	
			6	2	-0	TURN OFF ISU	-0.	
			6	3	0	TURN OFF ATT. CONT.	-0.	
			6	4	0	TURN OFF STAR TRACKER	-0.	
			6	5	0	TURN OFF SUN SENSOR	-0.	
2	400D 0H 0M 0.00S	34560000.00	6	1	1	TURN ON COMPUTER	-0.	
			6	2	1	TURN ON ISU	-0.	
			6	5	1	TURN ON SUN SENSOR	-0.	
			6	4	1	TURN ON STAR TRACKER	-0.	
			6	3	1	TURN ON ATT CONT.	-0.	
			9	2	1	BEGIN MANEUVERING	-0.	
2+	400D 0H30M 0.00S	34561800.00	9	2	2	BEGIN SEARCH	-0.	
2+	400D 0H31M 0.00S	34561860.00	9	2	3	END SEARCH	-0.	
-0+	400D 1H 1M 0.00S	34563660.00	8	-0	-0	DROP DEAD BAND	0.10000000E+00	

FIGURE 18b. MISSION SCHEDULES EOR JUPITER FLYBY (Continued)

SCHEDULE NO. 2 (CONTINUED)

			3	0	5	UPDATE WITH ANY DSIF	-0.
-0*	4000 1H 24 0.00S	34563720.00	5	2	-0	MAKE MIDCOURSE CORRECTION	-0.
			6	3	-0		-0.
			6	1	-0		-0.
			6	2	-0		-0.
			6	4	-0		-0.
			6	5	-0		-0.
			6	7	-0		-0.
-0	410010H 44 2.00S	35460242.00	99	2	-0	END OF THE SCHEDULE	-0.

OPT.=
0 FOR ALL SYSTEMS
1 FOR NON OPTICAL
2 FOR OPTICAL

FIGURE 18c. MISSION SCHEDULES FOR JUPITER FLYBY (Continued)

PENALTY (MODE 3)

ERROR ANALYSIS (SCHEDULE NO. 1)

ISU COMPONENTS

ACCELEROM.= ARMA D-4E ARMA D-4E ARMA D-4E GYROSCOPES= GG 334-A GG 334-A GG 334-A

ISU DATA(HORIZONTAL DESIGN NUMBER 4 OPTIMUM) ON TIME (HR)= 2.517

OUTSIDE DIMENSIONS		WEIGHT		WEIGHT			
LENGTH=	9.350	BLOCK=	8.703	INSULATION=	1.345	EXCIT.ENERGY=	109.511
WIDTH=	10.450	BASE=	4.549	ELECTRONICS=	10.000	EXCIT.POWER =	43.500
HEIGHT=	5.450	COVER=	2.867	COMPONENTS=	6.000	TOTAL P.FAIL=	.00063
						TOTAL WEIGHT=	33.463

ISU THERMAL ANALYSIS

MAX.HEATER POWER= 97.875 MAX.THERMAL COND.= 2.1750 TOTAL ENERGY= 176.711
MIN.HEATER POWER= -.000 MIN.THERMAL COND.= 1.0875 TOTAL POWER = 141.375

SUBSYSTEM PARAMETERS

	COMPUTERS SKT RUK-2	STAR TRCKR ITT-LUN.08	SUN SENSOR ADCL-1402	ISU/C.P.S. NONE	COM. SYST. MCR-503	HORIZ.SEN. NONE		
TIME=	2.517	10.849	10.849	0.000	9601.033	0.000	0.000	
ENERGY=	226.575	86.793	54.246	0.000	33603.617	0.000	0.000	TOTAL ENERGY= 33971.231
POWER=	90.000	8.000	5.000	0.000	3.500	0.000	0.000	TOTAL POWER = 106.500
P.FAIL=	.00042	.00012	.00011	0.00000	.09155	0.00000	0.00000	TOTAL P.FAIL= .09213
WEIGHT=	36.000	7.000	2.000	0.000	3.100	0.000	0.000	TOTAL WEIGHT= 48.100

CMG ATTITUDE CONTROL ANALYSIS ON TIME (HR)= 10.849

SYSTEM SIZING

			REQUIREMENTS		
MANEUVER	MAX. VELOCITY =	.007	POWER	=	8.306 WATTS
	MAX. MAN. TORQ.=	.046	ENERGY	=	90.109 JOULES
	FINAL H =	.058			
METEORITE	TORQUE =	.000122	PROB. FAIL.=		.000003
SOLAR PRESSURE	TORQUE =	.000011			
MIDCOURSE MIS.	TORQUE =	.881			
	FINAL H =	1.102	SYS. WEIGHT=		26.264 LBS
TOTAL MOMENTUM CAPABILITY=		1.102			

ENERGY SOURCE DATA

TOTAL POWER= 256.181 TOTAL ENERGY= 34238.051 TOTAL WEIGHT= 101.582

WIRING TOTAL WEIGHT= 110.000

MIDCOURSE ENGINE

EXPECTED DELTA-V= 14.985 DOF=1.000 CAPABILITY= 27.870 TOTAL WEIGHT= 28.434

PENALTY SUMMATION

PROBABILITIES		WEIGHT	
INSUF.MIDCOURSE FUEL=	.06315	ASTRIONICS=	347.844
EXCESSIVE TGT. MISS =	0.00000	SPACECRAFT=	1652.156
UNRELIABILITY =	.09271	TOTAL=	2000.000
ASTRIONICS TOTAL =	.15000		

PENALTY(MODE 3)= 347.84395

EXECUTION TIMES, START= 39.74, END= 53.04, ELAPSED=13.292(SEC.)

FIGURE 19. JUPITER FLYBY PENALTY EVALUATION, STRAPDOWN STAR TRACKER, 0.8 RAD/SEC GYRO PRECESSION VELOCITY, SCHEDULE 1

```
                                   PENALTY (MODE 3)

ERROR ANALYSIS (SCHEDULE NO. 1)

ISU COMPONENTS

        ACCELEROM.=  ARMA D-4E   ARMA D-4E   ARMA D-4E      GYROSCOPES=  GG 334-A    GG 334-A    GG 334-A

ISU DATA(HORIZONTAL DESIGN NUMBER  4  OPTIMUM)                          ON TIME (HR)=     2.517

        OUTSIDE DIMENSIONS       WEIGHT                      WEIGHT                          EXCIT.ENERGY=   109.511
        LENGTH=     9.350       BLOCK=     8.703     INSULATION=     1.345                  EXCIT.POWER =    43.500
         WIDTH=    10.450        BASE=     4.549   ELECTRONICS=    10.000                  TOTAL P.FAIL=    .00063
        HEIGHT=     5.450       COVER=     2.867    COMPONENTS=     6.000                  TOTAL WEIGHT=    33.463

ISU THERMAL ANALYSIS
                         MAX.HEATER POWER=    97.875        MAX.THERMAL COND.=    2.1750      TOTAL ENERGY=   176.711
                         MIN.HEATER POWER=     -.000        MIN.THERMAL COND.=    1.0875      TOTAL POWER =   141.375

SUBSYSTEM PARAMETERS
            COMPUTERS   STAR TRCKR  SUN SENSOR  ISU/C.P.S.  COM. SYST.  HORIZ.SEN.
            SRT RUK-2   ITT-LUN.OB  ADCL-1402      NONE      MCR-503       NONE
     TIME=      2.517      10.849      10.849      0.000     9601.033      0.000       0.000
   ENERGY=    226.575      86.793      54.246      0.000    33603.617      0.000       0.000  TOTAL ENERGY= 33971.231
    POWER=     90.000       8.000       5.000      0.000        3.500      0.000       0.000  TOTAL POWER =   106.500
   P.FAIL=     .00042      .00012      .00011    0.00000       .09155    0.00000     0.00000  TOTAL P.FAIL=    .09213
   WEIGHT=     36.000       7.000       2.000      0.000        3.100      0.000       0.000  TOTAL WEIGHT=    48.100

CMG ATTITUDE CONTROL ANALYSIS                                           ON TIME (HR)=    10.849

 SYSTEM SIZING                                                                    REQUIREMENTS

  MANEUVER  MAX. VELOCITY  =      .007                                        POWER      =     9.407 WATTS
            MAX. MAN. TORQ.=      .046                                        ENERGY     =   102.064 JOULES
                  FINAL H =      .077
  METEORITE        TORQUE   =   .000122                                       PROB. FAIL.=   .000001
  SOLAR PRESSURE   TORQUE   =   .000011
  MIDCOURSE MIS.   TORQUE   =      .881
                   FINAL H =     1.469                                        SYS. WEIGHT=    29.019 LBS
  TOTAL MOMENTUM CAPABILITY=     1.469

ENERGY SOURCE DATA
                         TOTAL POWER=   257.282     TOTAL ENERGY= 34250.006                 TOTAL WEIGHT=   101.962

WIRING                                                                                     TOTAL WEIGHT=   110.000

MIDCOURSE ENGINE
        EXPECTED DELTA-V=    14.385 DOF=1.000 CAPABILITY=    27.870                       TOTAL WEIGHT=    28.434

PENALTY SUMMATION              PROBABILITIES                          WEIGHT
                     THUSF.MIDCOURSE FUEL=     .06315          ASTRIONICS=   350.979
                     EXCESSIVE TGT. MISS =   0.00000          SPACECRAFT=  1649.021
                     UNRELIABILITY       =     .09271               TOTAL=  2000.000
                     ASTRIONICS TOTAL    =     .15000
                                                                   PENALTY(MODE 3)=          350.97873

EXECUTION TIMES, START= 17.08, END= 30.48, ELAPSED=13.406(SEC.)
```

FIGURE 20. JUPITER FLYBY PENALTY EVALUATION, STRAPDOWN STAR TRACKER, 0.6 RAD/SEC GYRO PRECESSION VELOCITY, SCHEDULE 1

PENALTY (MODE 3)

ERROR ANALYSIS (SCHEDULE NO. 1)

ISU COMPONENTS

ACCELEROM.= ARMA D-4E ARMA D-4E ARMA D-4E GYROSCOPES= GG 334-A GG 334-A GG 334-A

ISU DATA(HORIZONTAL DESIGN NUMBER 4 OPTIMUM) ON TIME (HR)= 2.517

OUTSIDE DIMENSIONS		WEIGHT		WEIGHT			
LENGTH=	9.350	BLOCK=	8.703	INSULATION=	1.345	EXCIT.ENERGY=	109.511
WIDTH=	10.450	BASE=	4.549	ELECTRONICS=	10.000	EXCIT.POWER =	43.500
HEIGHT=	5.450	COVER=	2.867	COMPONENTS=	6.000	TOTAL P.FAIL=	.00063
						TOTAL WEIGHT=	33.463

ISU THERMAL ANALYSIS

MAX.HEATER POWER= 97.875 MAX.THERMAL COND.= 2.1750 TOTAL ENERGY= 176.711
MIN.HEATER POWER= -.000 MIN.THERMAL COND.= 1.0875 TOTAL POWER = 141.375

SUBSYSTEM PARAMETERS

	COMPUTERS SRT RUK-2	STAR TRCKR GIMB.ST	SUN SENSOR ADCL-1402	ISU/C.P.S. NONE	COM. SYST. MCR-503	HORIZ.SEN. NONE		
TIME=	2.517	10.849	10.849	0.000	9601.033	0.000	0.000	
ENERGY=	226.575	151.888	54.246	0.000	33603.617	0.000	0.000	TOTAL ENERGY= 34036.326
POWER=	90.000	14.000	5.000	0.000	3.500	0.000	0.000	TOTAL POWER = 112.500
P.FAIL=	.00042	.00024	.00011	0.00000	.09155	0.00000	0.00000	TOTAL P.FAIL= .09224
WEIGHT=	36.000	26.500	2.000	0.000	3.100	0.000	0.000	TOTAL WEIGHT= 67.600

CMG ATTITUDE CONTROL ANALYSIS ON TIME (HR)= 10.849

SYSTEM SIZING

MANEUVER MAX. VELOCITY = .007
MAX. MAN. TORQ.= .043
FINAL H = .072
SEEDORTIE TORQUE = .000122
SOLAR PRESSURE TORQUE = .000011
MIDCOURSE MIS. TORQUE = .881
FINAL H = 1.469
TOTAL MOMENTUM CAPABILITY= 1.469

REQUIREMENTS

POWER = 9.407 WATTS
ENERGY = 102.064 JOULES
PROB. FAIL.= .000001
SYS. WEIGHT= 29.019 LBS

ENERGY SOURCE DATA

TOTAL POWER= 263.282 TOTAL ENERGY= 34315.101 TOTAL WEIGHT= 104.032

WIRING TOTAL WEIGHT= 110.000

MIDCOURSE ENGINE

EXPECTED DELTA-V= 15.081 DOF=1.000 CAPABILITY= 28.061 TOTAL WEIGHT= 28.490

PENALTY SUMMATION

PROBABILITIES		WEIGHT	
INSUF.MIDCOURSE FUEL=	.06303	ASTRIONICS=	372.604
EXCESSIVE TGT. MISS =	0.00000	SPACECRAFT=	1627.396
UNRELIABILITY =	.09282	TOTAL=	2000.000
ASTRIONICS TOTAL =	.15000		

PENALTY(MODE 3)= 372.60444

EXECUTION TIMES, START= 49.10, END= 62.40, ELAPSED=13.300(SEC.)

FIGURE 21. JUPITER FLYBY PENALTY EVALUATION, GIMBALLED STAR TRACKER, 0.6 RAD/SEC PRECESSION VELOCITY SCHEDULE 1

PENALTY (MODE 3)

ERROR ANALYSIS (SCHEDULE NO. 1)

ISU COMPONENTS

ACCELEROM.= ARMA D-4E ARMA D-4E ARMA D-4E GYROSCOPES= GG 334-A GG 334-A GG 334-A

ISU DATA(HORIZONTAL DESIGN NUMBER 4 OPTIMUM) ON TIME (HR)= 2.517

OUTSIDE DIMENSIONS		WEIGHT		WEIGHT			
LENGTH=	9.350	BLOCK=	8.703	INSULATION=	1.345	EXCIT.ENERGY=	109.511
WIDTH=	10.450	BASE=	4.549	ELECTRONICS=	10.000	EXCIT.POWER =	43.500
HEIGHT=	5.450	COVER=	2.867	COMPONENTS=	6.000	TOTAL P.FAIL=	.00063
						TOTAL WEIGHT=	33.463

ISU THERMAL ANALYSIS

MAX.HEATER POWER= 97.875 MAX.THERMAL COND.= 2.1750 TOTAL ENERGY= 176.711
MIN.HEATER POWER= -.000 MIN.THERMAL COND.= 1.0875 TOTAL POWER = 141.375

SUBSYSTEM PARAMETERS

	COMPUTERS SRT RUK-2	STAR TRCKR ITT-LUN.OB	SUN SENSOR ADCL-1402	ISU/C.P.S. NONE	COM. SYST. MCR-503	HORIZ.SEN. NONE			
TIME=	2.517	10.849	10.849	0.000	9601.033	0.000	0.000		
ENERGY=	226.575	86.793	54.246	0.000	33603.617	0.000	0.000	TOTAL ENERGY=	33971.231
POWER=	90.000	8.000	5.000	0.000	3.500	0.000	0.000	TOTAL POWER =	106.500
P.FAIL=	.00042	.00012	.00011	0.00000	.09155	0.00000	0.00000	TOTAL P.FAIL=	.09213
WEIGHT=	36.000	7.000	2.000	0.000	3.100	0.000	0.000	TOTAL WEIGHT=	48.100

CMG ATTITUDE CONTROL ANALYSIS ON TIME (HR)= 10.849

SYSTEM SIZING

				REQUIREMENTS		
MANEUVER	MAX. VELOCITY	=	.007	POWER	=	11.792 WATTS
	MAX. MAN. TORQ.	=	.046	ENERGY	=	127.935 JOULES
	FINAL H	=	.132			
METEORITE	TORQUE	=	.000122	PROB. FAIL.=		.000001
SOLAR PRESSURE	TORQUE	=	.000011			
MIDCOURSE MIS.	TORQUE	=	.881			
	FINAL H	=	2.528	SYS. WEIGHT=		36.697 LBS
TOTAL MOMENTUM CAPABILITY=			2.528			

ENERGY SOURCE DATA

TOTAL POWER= 259.667 TOTAL ENERGY= 34275.877 TOTAL WEIGHT= 102.785

WIRING TOTAL WEIGHT= 110.000

MIDCOURSE ENGINE

EXPECTED DELTA-V= 14.985 DOF=1.000 CAPABILITY= 27.870 TOTAL WEIGHT= 28.434

PENALTY SUMMATION

PROBABILITIES		WEIGHT	
INSUF.MIDCOURSE FUEL=	.06315	ASTRIONICS=	359.480
EXCESSIVE TGT. MISS =	0.00000	SPACECRAFT=	1640.520
UNRELIABILITY =	.09271	TOTAL=	2000.000
ASTRIONICS TOTAL =	.15000		

PENALTY(MODE 3)= 359.47951

EXECUTION TIMES, START= 17.20, END= 30.49, ELAPSED=13.292(SEC.)

FIGURE 22. JUPITER FLYBY PENALTY EVALUATION, STRAPDOWN STAR TRACKER, 0.35 RAD/SEC GYRO PRECESSION VELOCITY, SCHEDULE 1

PENALTY (MODE 3)

ERROR ANALYSIS (SCHEDULE NO. 1)

ISU COMPONENTS

ACCELEROM.= ARMA D-4E ARMA D-4E ARMA D-4E GYROSCOPES= GG 334-A GG 334-A GG 334-A

ISU DATA(HORIZONTAL DESIGN NUMBER 4 OPTIMUM) ON TIME (HR)= 2.517

OUTSIDE DIMENSIONS		WEIGHT		WEIGHT			
LENGTH=	9.350	BLOCK=	8.703	INSULATION=	1.345	EXCIT.ENERGY=	109.511
WIDTH=	10.450	BASE=	4.549	ELECTRONICS=	10.000	EXCIT.POWER =	43.500
HEIGHT=	5.450	COVER=	2.867	COMPONENTS=	6.000	TOTAL P.FAIL=	.00063
						TOTAL WEIGHT=	33.463

ISU THERMAL ANALYSIS

MAX.HEATER POWER= 97.875 MAX.THERMAL COND.= 2.1750 TOTAL ENERGY= 176.711
MIN.HEATER POWER= -.000 MIN.THERMAL COND.= 1.0875 TOTAL POWER = 141.375

SUBSYSTEM PARAMETERS

	COMPUTERS SKI ROK-2	STAR TRCKR GIMB.ST	SUN SENSOR ADCL-1402	ISU/C.P.S. NONE	COM. SYST. MCR-503	HORIZ.SEN. NONE			
TIME=	2.517	10.849	10.849	0.000	9601.033	0.000	0.000		
ENERGY=	226.575	151.888	54.246	0.000	33603.617	0.000	0.000	TOTAL ENERGY=	34036.326
POWER=	90.000	14.000	5.000	0.000	3.500	0.000	0.000	TOTAL POWER =	112.500
P.FAIL=	.00042	.00024	.00011	0.00000	.09155	0.00000	0.00000	TOTAL P.FAIL=	.09224
WEIGHT=	36.000	26.500	2.000	0.000	3.100	0.000	0.000	TOTAL WEIGHT=	67.600

CMG ATTITUDE CONTROL ANALYSIS ON TIME (HR)= 10.849

SYSTEM SIZING

MANEUVER MAX. VELOCITY = .007
MAX. MAN. TORQ.= .043
FINAL H = .048
METEORITE TORQUE = .000122
SOLAR PRESSURE TORQUE = .000011
MIDCOURSE MIS. TORQUE = .881
FINAL H = .979
TOTAL MOMENTUM CAPABILITY= .979

REQUIREMENTS

POWER = 7.938 WATTS
ENERGY = 86.124 JOULES
PROB. FAIL.= .000001
SYS. WEIGHT= 25.346 LBS

ENERGY SOURCE DATA

TOTAL POWER= 261.813 TOTAL ENERGY= 34299.161 TOTAL WEIGHT= 103.526

WIRING TOTAL WEIGHT= 110.000

MIDCOURSE ENGINE
EXPECTED DELTA-V= 15.081 DOF=1.000 CAPABILITY= 28.061 TOTAL WEIGHT= 28.490

PENALTY SUMMATION

PROBABILITIES		WEIGHT	
INSUF.MIDCOURSE FUEL=	.06303	ASTRIONICS=	368.425
EXCESSIVE TGT. MISS =	0.00000	SPACECRAFT=	1631.575
UNRELIABILITY =	.09282	TOTAL=	2000.000
ASTRIONICS TOTAL =	.15000		

PENALTY(MODE 3)= 368.42466

EXECUTION TIMES, START= 49.13, END= 62.42, ELAPSED=13.292(SEC.)

FIGURE 23. JUPITER FLYBY PENALTY EVALUATION, GIMBALLED STAR TRACKER
0.9 RAD/SEC GYRO PRECESSION VELOCITY, SCHEDULE 1

PENALTY (MODE 3)

ERROR ANALYSIS (SCHEDULE NO. 2)

ISU COMPONENTS

ACCELEROM.= ARMA D-4E ARMA D-4E ARMA D-4E GYROSCOPES= GG 334-A GG 334-A GG 334-A

ISU DATA(HORIZONTAL DESIGN NUMBER 4 OPTIMUM) ON TIME (HR)= 3.551

OUTSIDE DIMENSIONS		WEIGHT		WEIGHT			
LENGTH=	9.350	BLOCK=	8.703	INSULATION=	1.345	EXCIT.ENERGY=	154.461
WIDTH=	10.450	BASE=	4.549	ELECTRONICS=	10.000	EXCIT.POWER =	43.500
HEIGHT=	5.450	COVER=	2.867	COMPONENTS=	6.000	TOTAL P.FAIL=	.00089
						TOTAL WEIGHT=	33.463

ISU THERMAL ANALYSIS

MAX.HEATER POWER=	97.875	MAX.THERMAL COND.=	2.1750	TOTAL ENERGY=	249.244
MIN.HEATER POWER=	-.000	MIN.THERMAL COND.=	1.0875	TOTAL POWER =	141.375

SUBSYSTEM PARAMETERS

	COMPUTERS SRT PUK-2	STAR TRCKR ITT-LUN.08	SUN SENSOR ADCL-1402	ISU/C.P.S. NONE	COM. SYST. MCR-503	HORIZ.SEN. NONE		
TIME=	3.551	11.882	11.882	0.000	9601.033	0.000	0.000	
ENERGY=	319.575	95.060	59.412	0.000	33603.617	0.000	0.000	TOTAL ENERGY= 34077.664
POWER=	90.000	8.000	5.000	0.000	3.500	0.000	0.000	TOTAL POWER = 106.500
P.FAIL=	.00059	.00013	.00012	0.00000	.09155	0.00000	0.00000	TOTAL P.FAIL= .09231
WEIGHT=	36.000	7.000	2.000	0.000	3.100	0.000	0.000	TOTAL WEIGHT= 48.100

CMG ATTITUDE CONTROL ANALYSIS ON TIME (HR)= 11.882

SYSTEM SIZING

			REQUIREMENTS		
MANEUVER	MAX. VELOCITY =	.007	POWER	=	8.306 WATTS
	MAX. MAN. TORQ.=	.046	ENERGY	=	98.692 JOULES
	FINAL H =	.058			
METEORITE	TORQUE =	.000122	PROB. FAIL.=		.000004
SOLAR PRESSURE	TORQUE =	.000011			
MIDCOURSE MIS.	TORQUE =	.881			
	FINAL H =	1.102	SYS. WEIGHT=		26.264 LBS
TOTAL MOMENTUM CAPABILITY=		1.102			

ENERGY SOURCE DATA

TOTAL POWER= 256.181 TOTAL ENERGY= 34425.600 TOTAL WEIGHT= 101.582

WIRING TOTAL WEIGHT= 110.000

MIDCOURSE ENGINE

EXPECTED DELTA-V= 14.945 DOF=1.000 CAPABILITY= 27.841 TOTAL WEIGHT= 28.426

PENALTY SUMMATION

PROBABILITIES		WEIGHT	
INSUF.MIDCOURSE FUEL=	.06272	ASTRIONICS=	347.835
EXCESSIVE TGT. MISS =	0.00000	SPACECRAFT=	1652.165
UNRELIABILITY =	.09312	TOTAL=	2000.000
ASTRIONICS TOTAL =	.15000		

PENALTY(MODE 3)= 347.83533

EXECUTION TIMES, START= 21.13, END= 39.74, ELAPSED=18.612(SEC.)

FIGURE 24. JUPITER FLYBY PENALTY EVALUATION, STRAPDOWN STAR TRACKER, 0.8 RAD/SEC GYRO PRECESSION VELOCITY, SCHEDULE 2

PENALTY (MODE 3)

ERROR ANALYSIS (SCHEDULE NO. 2)

ISU COMPONENTS

ACCELEROM.= ARMA D-4E ARMA D-4E ARMA D-4E GYROSCOPES= GG 334-A GG 334-A GG 334-A

ISU DATA(HORIZONTAL DESIGN NUMBER 4 OPTIMUM) ON TIME (HR)= 3.551

OUTSIDE DIMENSIONS		WEIGHT		WEIGHT			
LENGTH=	9.350	BLOCK=	8.703	INSULATION=	1.345	EXCIT.ENERGY=	154.461
WIDTH=	10.450	BASE=	4.549	ELECTRONICS=	10.000	EXCIT.POWER =	43.500
HEIGHT=	5.450	COVER=	2.867	COMPONENTS=	6.000	TOTAL P.FAIL=	.00089
						TOTAL WEIGHT=	33.463

ISU THERMAL ANALYSIS

MAX.HEATER POWER= 97.875 MAX.THERMAL COND.= 2.1750 TOTAL ENERGY= 249.244
MIN.HEATER POWER= -.000 MIN.THERMAL COND.= 1.0875 TOTAL POWER = 141.375

SUBSYSTEM PARAMETERS

	COMPUTERS SRT RUK-2	STAR TRCKR ITT-LUN.OB	SUN SENSOR ADCL-1402	ISU/C.P.S. NONE	COM. SYST. MCR-503	HORIZ.SEN. NONE		
TIME=	3.551	11.882	11.882	0.000	9601.033	0.000	0.000	
ENERGY=	319.575	95.060	59.412	0.000	33603.617	0.000	0.000	TOTAL ENERGY= 34077.664
POWER=	90.000	8.000	5.000	0.000	3.500	0.000	0.000	TOTAL POWER = 106.500
P.FAIL=	.00059	.00013	.00012	0.00000	.09155	0.00000	0.00000	TOTAL P.FAIL= .09231
WEIGHT=	36.000	7.000	2.000	0.000	3.100	0.000	0.000	TOTAL WEIGHT= 48.100

CMG ATTITUDE CONTROL ANALYSIS ON TIME (HR)= 11.882

SYSTEM SIZING

MANEUVER MAX. VELOCITY = .007
MAX. MAN. TORQ.= .046
FINAL H = .077
METEORITE TORQUE = .000122
SOLAR PRESSURE TORQUE = .000011
MIDCOURSE MIS. TORQUE = .881
FINAL H = 1.469
TOTAL MOMENTUM CAPABILITY= 1.469

REQUIREMENTS

POWER = 9.407 WATTS
ENERGY = 111.785 JOULES
PROB. FAIL.= .000002
SYS. WEIGHT= 29.019 LBS

ENERGY SOURCE DATA

TOTAL POWER= 257.282 TOTAL ENERGY= 34438.693 TOTAL WEIGHT= 101.962

WIRING TOTAL WEIGHT= 110.000

MIDCOURSE ENGINE

EXPECTED DELTA-V= 14.945 DOF=1.000 CAPABILITY= 27.840 TOTAL WEIGHT= 28.425

PENALTY SUMMATION

PROBABILITIES		WEIGHT	
INSUF.MIDCOURSE FUEL=	.06272	ASTRIONICS=	350.970
EXCESSIVE TGT. MISS =	0.00000	SPACECRAFT=	1649.030
UNRELIABILITY =	.09312	TOTAL=	2000.000
ASTRIONICS TOTAL =	.15000		

PENALTY(MODE 3)= 350.97009

EXECUTION TIMES, START= 30.49, END= 49.10, ELAPSED=18.610(SEC.)

FIGURE 25. JUPITER FLYBY PENALTY EVALUATION, STRAPDOWN STAR TRACKER, 0.6 RAD/SEC GYRO PRECESSION VELOCITY. SCHEDULE 2

PENALTY (MODE 3)

ERROR ANALYSIS (SCHEDULE NO. 2)

ISU COMPONENTS

ACCELEROM.= ARMA D-4E ARMA D-4E ARMA D-4E GYROSCOPES= GG 334-A GG 334-A GG 334-A

ISU DATA(HORIZONTAL DESIGN NUMBER 4 OPTIMUM) ON TIME (HR)= 3.551

OUTSIDE DIMENSIONS		WEIGHT		WEIGHT			
LENGTH=	9.350	BLOCK=	8.703	INSULATION=	1.345	EXCIT.ENERGY=	154.461
WIDTH=	10.450	BASE=	4.549	ELECTRONICS=	10.000	EXCIT.POWER =	43.500
HEIGHT=	5.450	COVER=	2.867	COMPONENTS=	6.000	TOTAL P.FAIL=	.00089
						TOTAL WEIGHT=	33.463

ISU THERMAL ANALYSIS

MAX.HEATER POWER= 97.875 MAX.THERMAL COND.= 2.1750 TOTAL ENERGY= 249.244
MIN.HEATER POWER= -.000 MIN.THERMAL COND.= 1.0875 TOTAL POWER = 141.375

SUBSYSTEM PARAMETERS

	COMPUTERS SRT RUK-2	STAR TRCKR GIMB.ST	SUN SENSOR ADCL-1402	ISU/C.P.S. NONE	COM. SYST. MCR-503	HORIZ.SEN. NONE			
TIME=	3.551	11.882	11.882	0.000	9601.033	0.000	0.000		
ENERGY=	319.575	166.355	59.412	0.000	33603.617	0.000	0.000	TOTAL ENERGY=	34148.959
POWER=	90.000	14.000	5.000	0.000	3.500	0.000	0.000	TOTAL POWER =	112.500
P.FAIL=	.00059	.00026	.00012	0.00000	.09155	0.00000	0.00000	TOTAL P.FAIL=	.09243
WEIGHT=	36.000	26.500	2.000	0.000	3.100	0.000	0.000	TOTAL WEIGHT=	67.600

CMG ATTITUDE CONTROL ANALYSIS ON TIME (HR)= 11.882

SYSTEM SIZING

			REQUIREMENTS		
MANEUVER	MAX. VELOCITY =	.007	POWER	=	9.407 WATTS
	MAX. MAN. TORQ.=	.043	ENERGY	=	111.785 JOULES
	FINAL H =	.072			
METEORITE	TORQUE =	.000122	PROB. FAIL.=		.000002
SOLAR PRESSURE	TORQUE =	.000011			
MIDCOURSE DIS.	TORQUE =	.881			
	FINAL H =	1.469	SYS. WEIGHT=		29.019 LBS
TOTAL MOMENTUM CAPABILITY=		1.469			

ENERGY SOURCE DATA

TOTAL POWER= 263.282 TOTAL ENERGY= 34509.988 TOTAL WEIGHT= 104.032

WIRING TOTAL WEIGHT= 110.000

MIDCOURSE ENGINE

EXPECTED DELTA-V= 15.056 DOF=1.000 CAPABILITY= 28.060 TOTAL WEIGHT= 28.489

PENALTY SUMMATION	PROBABILITIES		WEIGHT
INSUF.MIDCOURSE FUEL=	.06260	ASTRIONICS=	372.604
EXCESSIVE TGT. MISS =	0.00000	SPACECRAFT=	1627.396
UNRELIABILITY =	.09324	TOTAL=	2000.000
ASTRIONICS TOTAL =	.15000		

PENALTY(MODE 3)= 372.60395

EXECUTION TIMES, START= 62.40, END= 81.01, ELAPSED=18.610(SEC.)

FIGURE 26. JUPITER FLYBY PENALTY EVALUATION, GIMBALLED STAR TRACKER, 0.6 RAD/SEC GYRO PRECESSION VELOCITY, SCHEDULE 2

PENALTY (MODE 3)

ERROR ANALYSIS (SCHEDULE NO. 2)

ISU COMPONENTS

ACCELEROM.= ARMA D-4E ARMA D-4E ARMA D-4E GYROSCOPES= GG 334-A GG 334-A GG 334-A

ISU DATA(HORIZONTAL DESIGN NUMBER 4 OPTIMUM) ON TIME (HR)= 3.551

OUTSIDE DIMENSIONS		WEIGHT		WEIGHT			
LENGTH=	9.350	BLOCK=	8.703	INSULATION=	1.345	EXCIT.ENERGY=	154.461
WIDTH=	10.450	BASE=	4.549	ELECTRONICS=	10.000	EXCIT.POWER =	43.500
HEIGHT=	5.450	COVER=	2.867	COMPONENTS=	6.000	TOTAL P.FAIL=	.00089
						TOTAL WEIGHT=	33.463

ISU THERMAL ANALYSIS

MAX.HEATER POWER= 97.875 MAX.THERMAL COND.= 2.1750 TOTAL ENERGY= 249.244
MIN.HEATER POWER= -.000 MIN.THERMAL COND.= 1.0875 TOTAL POWER = 141.375

SUBSYSTEM PARAMETERS

	COMPUTERS SRT PUK-2	STAR TRCKR ITT-LUN.OB	SUN SENSOR ADCL-1402	TSU/C.P.S. NONE	COM. SYST. MCR-503	HORIZ.SEN. NONE			
TIME=	3.551	11.882	11.882	0.000	9601.033	0.000	0.000		
ENERGY=	319.575	95.060	59.412	0.000	33603.617	0.000	0.000	TOTAL ENERGY=	34077.664
POWER=	90.000	8.000	5.000	0.000	3.500	0.000	0.000	TOTAL POWER =	106.500
P.FAIL=	.00059	.00013	.00012	0.00000	.09155	0.00000	0.00000	TOTAL P.FAIL=	.09231
WEIGHT=	36.000	7.000	2.000	0.000	3.100	0.000	0.000	TOTAL WEIGHT=	48.100

CMG ATTITUDE CONTROL ANALYSIS ON TIME (HR)= 11.882

SYSTEM SIZING

MANEUVER MAX. VELOCITY = .007
MAX. MAN. TORQ.= .046
FINAL H = .132
METEORITE TORQUE = .000122
SOLAR PRESSURE TORQUE = .000011
MIDCOURSE MIS. TORQUE = .881
FINAL H = 2.528
TOTAL MOMENTUM CAPABILITY= 2.528

REQUIREMENTS

POWER = 11.792 WATTS
ENERGY = 140.121 JOULES
PROB. FAIL.= .000002
SYS. WEIGHT= 36.697 LBS

ENERGY SOURCE DATA

TOTAL POWER= 259.667 TOTAL ENERGY= 34467.029 TOTAL WEIGHT= 102.785

WIRING TOTAL WEIGHT= 110.000

MIDCOURSE ENGINE

EXPECTED DELTA-V= 14.945 DOF=1.000 CAPABILITY= 27.840 TOTAL WEIGHT= 28.425

PENALTY SUMMATION

PROBABILITIES		WEIGHT	
INSUF.MIDCOURSE FUEL=	.06272	ASTRIONICS=	359.471
EXCESSIVE TGT. MISS =	0.00000	SPACECRAFT=	1640.529
UNRELIABILITY =	.09312	TOTAL=	2000.000
ASTRIONICS TOTAL =	.15000		

PENALTY(MODE 3)= 359.47088

EXECUTION TIMES. START= 30.50, END= 49.10, ELAPSED=18.608(SEC.)

FIGURE 27. JUPITER FLYBY PENALTY EVALUATION, STRAPDOWN STAR TRACKER
0.35 RAD/SEC GYRO PRECESSION VELOCITY. SCHEDULE 2

```
                                   PENALTY (MODE 3)

ERROR ANALYSIS (SCHEDULE NO. 2)

ISU COMPONENTS

        ACCELEROM.=  ARMA D-4E   ARMA D-4E   ARMA D-4E      GYROSCOPES=  GG 334-A    GG 334-A    GG 334-A

ISU DATA(HORIZONTAL DESIGN NUMBER  4  OPTIMUM)                          ON TIME (HR)=     3.551

        OUTSIDE DIMENSIONS        WEIGHT                        WEIGHT                          EXCIT.ENERGY=   154.461
        LENGTH=      9.350        BLOCK=      8.703     INSULATION=      1.345                  EXCIT.POWER =    43.500
         WIDTH=     10.450         BASE=      4.549   ELECTRONICS=      10.000                  TOTAL P.FAIL=    .00089
        HEIGHT=      5.450        COVER=      2.867   COMPONENTS=        6.000                  TOTAL WEIGHT=    33.463

ISU THERMAL ANALYSIS
                          MAX.HEATER POWER=    97.875          MAX.THERMAL COND.=    2.1750      TOTAL ENERGY=   249.244
                          MIN.HEATER POWER=     -.000          MIN.THERMAL COND.=    1.0875      TOTAL POWER =   141.375

SUBSYSTEM PARAMETERS
            COMPUTERS   STAR TRCKR  SUN SENSOR  ISU/C.P.S.  COM. SYST.  HORIZ.SEN.
            SDS RUK-2   GIMB.ST     ADCL-1402      NONE     MCR-503        NONE
     TIME=      3.551      11.882      11.882      0.000    9601.033       0.000       0.000
   ENERGY=    319.575     166.355      59.412      0.000   33603.617       0.000       0.000  TOTAL ENERGY= 34148.959
    POWER=     90.000      14.000       5.000      0.000       3.500       0.000       0.000  TOTAL POWER =   112.500
   P.FAIL=    .00059      .00026      .00012    0.00000      .09155     0.00000     0.00000  TOTAL P.FAIL=    .09243
   WEIGHT=     36.000      26.500       2.000      0.000       3.100       0.000       0.000  TOTAL WEIGHT=    67.600

CMG ATTITUDE CONTROL ANALYSIS                                           ON TIME (HR)=    11.882

 SYSTEM SIZING                                                                    REQUIREMENTS

  MANEUVER  MAX. VELOCITY  =      .007                                            POWER      =     7.938 WATTS
            MAX. MAN. TORQ.=      .043                                            ENERGY     =    94.327 JOULES
                  FINAL H =      .048
  METEORITE        TORQUE  =   .000122                                            PROB. FAIL.=   .000002
  SOLAR PRESSURE   TORQUE  =   .000011
  MIDCOURSE MIS.   TORQUE  =     .881
                   FINAL H =     .979                                            SYS. WEIGHT=    25.346 LBS
  TOTAL MOMENTUM CAPABILITY=     .979

ENERGY SOURCE DATA
                          TOTAL POWER=   261.813     TOTAL ENERGY= 34492.531                TOTAL WEIGHT=   103.526

WIRING                                                                                    TOTAL WEIGHT=   110.000

MIDCOURSE ENGINE
        EXPECTED DELTA-V=    15.056 DOF=1.000 CAPABILITY=    28.060                       TOTAL WEIGHT=    28.489

PENALTY SUMMATION            PROBABILITIES                          WEIGHT
                     INSUF.MIDCOURSE FUEL=    .06260          ASTRIONICS=   368.424
                     EXCESSIVE TGT. MISS =  0.00000           SPACECRAFT=  1631.576
                     UNRELIABILITY       =    .09324               TOTAL=  2000.000
                     ASTRIONICS TOTAL    =    .15000
                                                                   PENALTY(MODE 3)=          368.42417

EXECUTION TIMES, START= 62.42, END= 80.94, ELAPSED=18.516(SEC.)
```

FIGURE 28. JUPITER FLYBY PENALTY EVALUATION, STRAPDOWN STAR TRACKER, 0.8 RAD/SEC GYRO PRECESSION VELOCITY, SCHEDULE 2

PENALTY (MODE 3) SCHEDULE 1

ISU COMPONENTS

ACCELEROM.= ARMA D-4E ARMA D-4E ARMA D-4E GYROSCOPES= GG 334-A GG 334-A GG 334-A

ISU DATA(HORIZONTAL DESIGN NUMBER 4 OPTIMUM) CYCLES= 3 ON TIME (HR)= 2.517

OUTSIDE DIMENSIONS		WEIGHT		WEIGHT			
LENGTH=	9.350	BLOCK=	8.703	INSULATION=	1.345	EXCIT.ENERGY=	109.511
WIDTH=	10.450	BASE=	4.549	ELECTRONICS=	10.000	EXCIT.POWER =	43.500
HEIGHT=	5.450	COVER=	2.867	COMPONENTS=	6.000	TOTAL P.FAIL=	.03597
						TOTAL WEIGHT=	33.463

ISU THERMAL ANALYSIS MAX.HEATER POWER= 97.875 MAX.THERMAL COND.= 2.1750 TOTAL ENERGY= 176.711
MIN.HEATER POWER= -.000 MIN.THERMAL COND.= 1.0875 TOTAL POWER = 141.375

ANTENNA DESIGN GAIN(DB)= 23.6 ERP(KW)= 3.36 POINTING TOL.(DEG.)= 1.084 TOTAL WEIGHT= 14.615

SUBSYSTEM PARAMETERS

	COMPUTERS SRT RUK-2	STAR TRCKR ITT-LUN.OB	SUN SENSOR ADCL-1402	ISU/C.P.S. NONE	COM. RCVR. MCR-503	HORIZ.SEN. NONE	XMITTER DESIGNED		
TIME=	2.517	10.849	10.849	0.000	9601.033	0.000	0.000		
CYCLES=	3	2	2	0	1	0	0		
ENERGY=	226.575	86.793	54.246	0.000	33603.617	0.000	0.000	TOTAL ENERGY=	33971.231
POWER=	90.000	8.000	5.000	0.000	3.500	0.000	36.536	TOTAL POWER =	143.036
P.FAIL=	.00640	.00411	.00410	0.00000	.09336	0.00000	0.00000	TOTAL P.FAIL=	.10654
WEIGHT=	36.000	7.000	2.000	0.000	3.100	0.000	3.727	TOTAL WEIGHT=	51.827

ATTITUDE CONTROL SYSTEM ANALYSIS CYCLES= 2 ON TIME (HR)= 10.849

THRUST SIZING (LB)

	ROLL	YAW	PITCH
SOLAR PRES=	.0000	.0000	.0000
MET.IMPACT=	.0000	.0000	.0001
MANEUVERS =	.0099	.0099	.0099
MIDCOURSE =	0.0000	.3778	.3778
MAX.THRUST=	.0099	.3778	.3778

FUEL CONSUMPTION (LB-SEC)

	ROLL	YAW	PITCH			
SEARCHING=	4.0585	2.3060	.0031			
DEAD BAND=	.0001	.4445	.2560			
MANEUVERS=	.2793	.1547	.1917	TOTAL ENERGY=	108.492	
TOTAL IMP=	4.3379	2.9052	.4508	TOTAL POWER =	10.000	
				TOTAL P.FAIL=	.00278	
				TOTAL WEIGHT=	21.215	

NO. OF FIRINGS= 22440 TOTAL IMPULSE= 7.6940 FUEL WEIGHT= .137393

ENERGY SOURCE DATA
TOTAL POWER= 294.411 TOTAL ENERGY= 34256.434 TOTAL WEIGHT= 114.772

WIRING TOTAL WEIGHT= 110.000

MIDCOURSE ENGINE
EXPECTED DELTA-V= 14.985 DOF=1.000 CAPABILITY= 38.404 TOTAL WEIGHT= 31.501

PENALTY SUMMATION

PROBABILITIES		WEIGHT	
INSUF.MIDCOURSE FUEL=	.01039	ASTRIONICS=	377.392
EXCESSIVE TGT. MISS =	0.00000	SPACECRAFT=	1622.608
UNRELIABILITY =	.14108	TOTAL=	2000.000
ASTRIONICS TOTAL =	.15000		

PENALTY(MODE 3)= 377.39202

EXECUTION TIMES, START= 19.39, END= 30.13, ELAPSED=10.738(SEC.)

FIGURE 29. JUPITER FLYBY PENALTY EVALUATION, GAS JETS (UNEQUAL THRUST), DESIGNED TRANSMITTER

```
PENALTY (MODE 3)                    SCHEDULE  I

ISU COMPONENTS

        ACCELEROM.=  ARMA D-4E   ARMA D-4E   ARMA D-4E      GYROSCOPES=  GG 334-A    GG 334-A    GG 334-A

ISU DATA(HORIZONTAL DESIGN NUMBER  4  OPTIMUM)          CYCLES=  3      ON TIME (HR)=    2.517

        OUTSIDE DIMENSIONS        WEIGHT                        WEIGHT                          EXCIT.ENERGY=   109.511
        LENGTH=     9.350        BLOCK=     8.703      INSULATION=     1.345                   EXCIT.POWER =    43.500
         WIDTH=    10.450         BASE=     4.549    ELECTRONICS=    10.000                   TOTAL P.FAIL=    .03597
        HEIGHT=     5.450        COVER=     2.867     COMPONENTS=     6.000                   TOTAL WEIGHT=    33.463

ISU THERMAL ANALYSIS      MAX.HEATER POWER=    97.875          MAX.THERMAL COND.=    2.1750      TOTAL ENERGY=   176.711
                          MIN.HEATER POWER=     -.000          MIN.THERMAL COND.=    1.0875      TOTAL POWER =   141.375

ANTENNA DESIGN      GAIN(DB)=  23.6    ERP(KW)=    3.36   POINTING TOL.(DEG.)=  1.084           TOTAL WEIGHT=    14.615

SUBSYSTEM PARAMETERS
            COMPUTERS   STAR TRCKR  SUN SENSOR  ISU/C.P.S.  COM. RCVR.  HORIZ.SEN.   XMITTER
            SRT RUK-2   ITT-LUN.OB  ADCL-1402      NONE      MCR-503       NONE      DESIGNED
     TIME=      2.517      10.849      10.849     0.000     9601.033     0.000       0.000
   CYCLES=          3           2           2         0            1         0           0
   ENERGY=    226.575      86.793      54.246     0.000    33603.617     0.000       0.000   TOTAL ENERGY= 33971.231
    POWER=     90.000       8.000       5.000     0.000        3.500     0.009      36.536   TOTAL POWER =   143.036
   P.FAIL=    .00640      .00411      .00410   0.00000      .09336   0.00000     0.00000   TOTAL P.FAIL=    .10654
   WEIGHT=    36.000       7.000       2.000     0.000        3.100     0.000       3.727   TOTAL WEIGHT=    51.827

ATTITUDE CONTROL SYSTEM ANALYSIS                  CYCLES=  2              ON TIME (HR)=    10.849

      THRUST SIZING (LB)                                        FUEL CONSUMPTION (LB-SEC)
                ROLL        YAW       PITCH                          ROLL        YAW       PITCH
 SOLAR PRES=    .0000      .0000      .0000
 MET.IMPACT=    .0000      .0000      .0001        SEARCHING=     4.0585     2.3060      .0031
 MANEUVERS =    .0099      .0099      .0099        DEAD BAND=      .1310      .4445      .2560
 MIDCOURSE =  0.0000      .3778      .3778        MANEUVERS=      .2614      .1547      .1917   TOTAL ENERGY=   108.492
 MAX.THRUST=    .3778      .3778      .3778        TOTAL IMP=     4.4509     2.9052      .4508   TOTAL POWER =    10.000
                                                                                                 TOTAL P.FAIL=    .00065
 NO. OF FIRINGS=      1033     TOTAL IMPULSE=    7.8069          FUEL WEIGHT=    .139410        TOTAL WEIGHT=    21.218

ENERGY SOURCE DATA
                        TOTAL POWER=   294.411     TOTAL ENERGY= 34256.434                       TOTAL WEIGHT=   114.772

WIRING.                                                                                          TOTAL WEIGHT=   110.000

MIDCOURSE ENGINE
        EXPECTED DELTA-V=    14.985 DOF=1.000 CAPABILITY=    37.436                              TOTAL WEIGHT=    31.219

PENALTY SUMMATION              PROBABILITIES                              WEIGHT
                   INSUF.MIDCOURSE FUEL=     .01251          ASTRIONICS=   377.114
                   EXCESSIVE TGT. MISS =   0.00000          SPACECRAFT=  1622.886
                   UNRELIABILITY       =    .13924              TOTAL=   2000.000
                   ASTRIONICS TOTAL    =    .15000
                                                                      PENALTY(MODE 3)=          377.11365

EXECUTION TIMES, START= 30.13, END= 30.32, ELAPSED=  .182(SEC.)
```

FIGURE 30. JUPITER FLYBY PENALTY EVALUATION, GAS JETS (EQUAL THRUST), DESIGNED TRANSMITTER

```
PENALTY (MODE 3)          SCHEDULE  1

ISU COMPONENTS

        ACCELEROM.=  ARMA D-4E   ARMA D-4E   ARMA D-4E     GYROSCOPES=  GG 334-A   GG 334-A   GG 334-A

ISU DATA(HORIZONTAL DESIGN NUMBER  4  OPTIMUM)          CYCLES=  3      ON TIME (HR)=     2.517

        OUTSIDE DIMENSIONS        WEIGHT                        WEIGHT                          EXCIT.ENERGY=   109.511
        LENGTH=     9.350        BLOCK=     8.703      INSULATION=     1.345                   EXCIT.POWER =    43.500
         WIDTH=    10.450         BASE=     4.549    ELECTRONICS=    10.000                   TOTAL P.FAIL=    .03597
        HEIGHT=     5.450        COVER=     2.867     COMPONENTS=     6.000                   TOTAL WEIGHT=    33.463

ISU THERMAL ANALYSIS      MAX.HEATER POWER=    97.875          MAX.THERMAL COND.=    2.1750     TOTAL ENERGY=   176.711
                          MIN.HEATER POWER=     -.000          MIN.THERMAL COND.=    1.0875     TOTAL POWER =   141.375

ANTENNA DESIGN     GAIN(DB)=  23.6    ERP(KW)=    3.36    POINTING TOL.(DEG.)=  1.084          TOTAL WEIGHT=    14.615

SUBSYSTEM PARAMETERS
            COMPUTERS   STAR TRCKR  SUN SENSOR  ISU/C.P.S.  COM. RCVR.  HORIZ.SEN.   XMITTER
            SRT RUK-2   ITT-LUN.08  ADCL-1402      NONE      MCR-503       NONE      DESIGNED
     TIME=      2.517      10.849      10.849      0.000     9601.033     0.000       0.000
   CYCLES=          3           2           2          0            1         0           0
   ENERGY=    226.575      86.793      54.246      0.000    33603.617     0.000       0.000   TOTAL ENERGY= 33971.231
    POWER=     90.000       8.000       5.000      0.000        3.500     0.000      36.536   TOTAL POWER =   143.036
   P.FAIL=    .00646       .00411      .00410    0.00000      .09336   0.00000     0.00000   TOTAL P.FAIL=    .10654
   WEIGHT=     36.000       7.000       2.000      0.000        3.100     0.000       3.727   TOTAL WEIGHT=    51.827

CMG ATTITUDE CONTROL ANALYSIS                CYCLES=  2                ON TIME (HR)=    10.849

 SYSTEM SIZING                                                                          REQUIREMENTS

  MANEUVER  MAX. VELOCITY  =      .007                                                  TOTAL POWER =     9.407
            MAX. MAN. TORQ.=      .046                                                  TOTAL ENERGY=   102.064
                  FINAL H =      .077
  METEORITE        TORQUE   =   .000122                                                 TOTAL P.FAIL=   .000001
  SOLAR PRESSURE   TORQUE   =   .000011
  MIDCOURSE MIS.   TORQUE   =      .881
                   FINAL H =     1.469                                                  TOTAL WEIGHT=    29.019
  TOTAL MOMENTUM CAPABILITY=     1.469

ENERGY SOURCE DATA
                      TOTAL POWER=   293.819    TOTAL ENERGY= 34250.006                  TOTAL WEIGHT=   114.568

WIRING                                                                                  TOTAL WEIGHT=   110.000

MIDCOURSE ENGINE
        EXPECTED DELTA-V=    14.985 DOF=1.000 CAPABILITY=    37.173                     TOTAL WEIGHT=    31.143

PENALTY SUMMATION              PROBABILITIES                          WEIGHT
                     INSUF.MIDCOURSE FUEL=     .01314          ASTRIONICS=   384.633
                     EXCESSIVE TGT. MISS =   0.00000          SPACECRAFT=  1615.367
                     UNRELIABILITY       =    .13868              TOTAL=  2000.000
                     ASTRIONICS TOTAL    =    .15000
                                                                        PENALTY(MODE 3)=        384.63348

EXECUTION TIMES- START= 30.32, END= 30.48, ELAPSED=  .160(SEC.)
```

FIGURE 31. JUPITER FLYBY PENALTY EVALUATION, CONTROL MOMENT GYRO, DESIGNED TRANSMITTER

```
PENALTY (MODE 3)                    SCHEDULE  1

ISU COMPONENTS

        ACCELEROM.=  ARMA D-4E   ARMA D-4E   ARMA D-4E      GYROSCOPES=  GG 334-A    GG 334-A    GG 334-A

ISU DATA(HORIZONTAL DESIGN NUMBER  4  OPTIMUM)          CYCLES=  3      ON TIME (HR)=    2.517

        OUTSIDE DIMENSIONS        WEIGHT                        WEIGHT                          EXCIT.ENERGY=   109.511
        LENGTH=     9.350         BLOCK=     8.703      INSULATION=     1.345                  EXCIT.POWER =    43.500
         WIDTH=    10.450          BASE=     4.549     ELECTRONICS=    10.000                  TOTAL P.FAIL=    .03597
        HEIGHT=     5.450         COVER=     2.867      COMPONENTS=     6.000                  TOTAL WEIGHT=    33.463

ISU THERMAL ANALYSIS      MAX.HEATER POWER=    97.875          MAX.THERMAL COND.=    2.1750     TOTAL ENERGY=   176.711
                          MIN.HEATER POWER=     -.000          MIN.THERMAL COND.=    1.0875     TOTAL POWER =   141.375

ANTENNA DESIGN     GAIN(DB)=  23.6    ERP(KW)=    3.36    POINTING TOL.(DEG.)=  1.084          TOTAL WEIGHT=    14.615

SUBSYSTEM PARAMETERS
            COMPUTERS   STAR TRCKR  SUN SENSOR  ISU/C.P.S.  COM. RCVR.  HORIZ.SEN.   XMITTER
            SRT RUK-2   ITT-LUN.OB  ADCL-1402      NONE      MCR-503       NONE      DESIGNED
     TIME=      2.517      10.849      10.849     0.000     9601.033      0.000       0.000
   CYCLES=          3           2           2         0            1          0           0
   ENERGY=    226.575      86.793      54.246     0.000    33603.617      0.000       0.000  TOTAL ENERGY= 33971.231
    POWER=     90.000       8.000       5.000     0.000        3.500      0.000      36.536  TOTAL POWER =   143.036
   P.FAIL=     .00640      .00411      .00410   0.00000      .09336    0.00000     0.00000  TOTAL P.FAIL=    .10654
   WEIGHT=     36.000       7.000       2.000     0.000        3.100      0.000       3.727  TOTAL WEIGHT=    51.827

INERTIA WHEEL ATTITUDE CONTROL ANALYSIS          CYCLES=  2          ON TIME (HR)=    10.849

 SYSTEM SIZING                                                                    REQUIREMENTS

  MANEUVER  MAX. VELOCITY  =      .007                                            TOTAL POWER =    14.978
            MAX. MAN. TORQ.=      .046                                            TOTAL ENERGY=   162.504
                  FINAL H =      .077
  METEORITE        TORQUE   =  .000122                                            TOTAL P.FAIL=   .000618
  SOLAR PRESSURE   TORQUE   =  .000011
  MIDCOURSE MIS.   TORQUE   =     .881
                   FINAL H =     1.469                                            TOTAL WEIGHT=    30.422
  TOTAL MOMENTUM CAPABILITY=     1.469

ENERGY SOURCE DATA
                       TOTAL POWER=   299.390    TOTAL ENERGY= 34310.446           TOTAL WEIGHT=   116.489

WIRING                                                                           TOTAL WEIGHT=   110.000

MIDCOURSE ENGINE
        EXPECTED DELTA-V=    14.985 DOF=1.000 CAPABILITY=    37.425               TOTAL WEIGHT=    31.216

PENALTY SUMMATION            PROBABILITIES                          WEIGHT
                   INSUF.MIDCOURSE FUEL=     .01253        ASTRIONICS=   388.032
                   EXCESSIVE TGT. MISS =   0.00000        SPACECRAFT=  1611.968
                   UNRELIABILITY       =    .13921             TOTAL=  2000.000
                   ASTRIONICS TOTAL    =    .15000
                                                                   PENALTY(MODE 3)=          388.03198

EXECUTION TIMES: START= 30.49, END= 30.65, ELAPSED=  .160(SEC.)
```

FIGURE 32. JUPITER FLYBY PENALTY EVALUATION, INERTIA WHEELS, DESIGNED TRANSMITTER

PENALTY (MODE 3) SCHEDULE 1

ISU COMPONENTS

ACCELEROM.= ARMA D-4E ARMA D-4E ARMA D-4E GYROSCOPES= GG 334-A GG 334-A GG 334-A

ISU DATA(HORIZONTAL DESIGN NUMBER 4 OPTIMUM) CYCLES= 3 ON TIME (HR)= 2.517

OUTSIDE DIMENSIONS		WEIGHT		WEIGHT			
LENGTH=	9.350	BLOCK=	8.703	INSULATION=	1.345	EXCIT.ENERGY=	109.511
WIDTH=	10.450	BASE=	4.549	ELECTRONICS=	10.000	EXCIT.POWER =	43.500
HEIGHT=	5.450	COVER=	2.867	COMPONENTS=	6.000	TOTAL P.FAIL=	.03597
						TOTAL WEIGHT=	33.463

ISU THERMAL ANALYSIS MAX.HEATER POWER= 97.875 MAX.THERMAL COND.= 2.1750 TOTAL ENERGY= 176.711
MIN.HEATER POWER= -.000 MIN.THERMAL COND.= 1.0875 TOTAL POWER = 141.375

ANTENNA DESIGN GAIN(DB)= 26.2 ERP(KW)= 3.36 POINTING TOL.(DEG.)= .802 TOTAL WEIGHT= 20.980

SUBSYSTEM PARAMETERS

	COMPUTERS SRT RUK-2	STAR TRCKR ITT-LUN.OB	SUN SENSOR ADCL-1402	ISU/C.P.S. NONE	COM. RCVR. MCR-503	HORIZ.SEN. NONE	XMITTER TEST XMITR		
TIME=	2.517	10.849	10.849	0.000	9601.033	0.000	0.000		
CYCLES=	3	2	2	0	1	0	0		
ENERGY=	226.575	86.793	54.246	0.000	33603.617	0.000	0.000	TOTAL ENERGY=	33971.231
POWER=	90.000	8.000	5.000	0.000	3.500	0.000	20.000	TOTAL POWER =	126.500
P.FAIL=	.00640	.00411	.00410	0.00000	.09336	0.00000	0.00000	TOTAL P.FAIL=	.10654
WEIGHT=	36.000	7.000	2.000	0.000	3.100	0.000	10.000	TOTAL WEIGHT=	58.100

ATTITUDE CONTROL SYSTEM ANALYSIS CYCLES= 2 ON TIME (HR)= 10.849

THRUST SIZING (LB)	ROLL	YAW	PITCH	FUEL CONSUMPTION (LB-SEC)	ROLL	YAW	PITCH		
SOLAR PRES=	.0000	.0000	.0000						
MET.IMPACT=	.0000	.0000	.0001	SEARCHING=	4.0585	2.3060	.0031		
MANEUVERS =	.0099	.0099	.0099	DEAD BAND=	.0001	.4445	.2560		
MIDCOURSE =	0.0000	.3778	.3778	MANEUVERS=	.2793	.1547	.1917	TOTAL ENERGY=	108.492
MAX.THRUST=	.0099	.3778	.3778	TOTAL IMP=	4.3379	2.9052	.4508	TOTAL POWER =	10.000
								TOTAL P.FAIL=	.00278
NO. OF FIRINGS=	22440	TOTAL IMPULSE=	7.6940	FUEL WEIGHT=	.137393			TOTAL WEIGHT=	21.215

ENERGY SOURCE DATA
TOTAL POWER= 277.875 TOTAL ENERGY= 34256.434 TOTAL WEIGHT= 109.067

WIRING TOTAL WEIGHT= 110.000

MIDCOURSE ENGINE
EXPECTED DELTA-V= 14.985 DOF=1.000 CAPABILITY= 38.404 TOTAL WEIGHT= 31.501

PENALTY SUMMATION

PROBABILITIES		WEIGHT	
INSUF.MIDCOURSE FUEL=	.01039	ASTRIONICS=	384.326
EXCESSIVE TGT. MISS =	0.00000	SPACECRAFT=	1615.674
UNRELIABILITY =	.14108	TOTAL=	2000.000
ASTRIONICS TOTAL =	.15000		

PENALTY(MODE 3)= 384.32558

EXECUTION TIMES, START= 30.65, END= 41.39, ELAPSED=10.740(SEC.)

FIGURE 33. JUPITER FLYBY PENALTY EVALUATION, GAS JETS (UNEQUAL THRUSTS), SPECIFIED TRANSMITTER

```
PENALTY (MODE 3)          SCHEDULE  1

ISU COMPONENTS

        ACCELEROM.=  ARMA D-4E   ARMA D-4E   ARMA D-4E      GYROSCOPES=  GG 334-A    GG 334-A    GG 334-A

ISU DATA(HORIZONTAL DESIGN NUMBER  4  OPTIMUM)          CYCLES=  3      ON TIME (HR)=     2.517

        OUTSIDE DIMENSIONS        WEIGHT                        WEIGHT                          EXCIT.ENERGY=   109.511
        LENGTH=      9.350        BLOCK=      8.703      INSULATION=      1.345               EXCIT.POWER =    43.500
         WIDTH=     10.450         BASE=      4.549    ELECTRONICS=     10.000               TOTAL P.FAIL=    .03597
        HEIGHT=      5.450        COVER=      2.867     COMPONENTS=      6.000               TOTAL WEIGHT=    33.463

ISU THERMAL ANALYSIS      MAX.HEATER POWER=    97.875          MAX.THERMAL COND.=    2.1750      TOTAL ENERGY=   176.711
                          MIN.HEATER POWER=     -.000          MIN.THERMAL COND.=    1.0875      TOTAL POWER =   141.375

ANTENNA DESIGN      GAIN(DB)=  26.2    ERP(KW)=    3.36    POINTING TOL.(DEG.)=    .802         TOTAL WEIGHT=    20.980

SUBSYSTEM PARAMETERS
            COMPUTERS   STAR TRCKR  SUN SENSOR  ISU/C.P.S.  COM. RCVR.  HORIZ.SEN.   XMITTER
            SRT RUK-2   ITT-LUN.08  ADCL-1402      NONE     MCR-503       NONE      TEST XMITR
     TIME=      2.517      10.849      10.849      0.000     9601.033     0.000       0.000
   CYCLES=          3           2           2          0           1         0           0
   ENERGY=    226.575      86.793      54.246      0.000    33603.617     0.000       0.000  TOTAL ENERGY= 33971.231
    POWER=     90.000       8.000       5.000      0.000        3.500     0.000      20.000  TOTAL POWER =   126.500
   P.FAIL=     .00640      .00411      .00410    0.00000      .09336   0.00000     0.00000  TOTAL P.FAIL=    .10654
   WEIGHT=     36.000       7.000       2.000      0.000        3.100     0.000      10.000  TOTAL WEIGHT=    58.100

ATTITUDE CONTROL SYSTEM ANALYSIS              CYCLES=  2              ON TIME (HR)=    10.849

     THRUST SIZING (LB)                                        FUEL CONSUMPTION (LB-SEC)
              ROLL        YAW       PITCH                          ROLL        YAW       PITCH
 SOLAR PRES=   .0000      .0000     .0000
 MET.IMPACT=   .0000      .0000     .0001          SEARCHING=    4.0585    2.3060      .0031
 MANEUVERS =   .0099      .0099     .0099          DEAD BAND=     .1310     .4445      .2560
 MIDCOURSE =  0.0000      .3778     .3778          MANEUVERS=     .2614     .1547      .1917   TOTAL ENERGY=   108.492
 MAX.THRUST=   .3778      .3778     .3778          TOTAL IMP=    4.4509    2.9052      .4508   TOTAL POWER =    10.000
                                                                                               TOTAL P.FAIL=    .00065
 NO. OF FIRINGS=      1033     TOTAL IMPULSE=    7.8069          FUEL WEIGHT=    .139410      TOTAL WEIGHT=    21.218

ENERGY SOURCE DATA
                        TOTAL POWER=   277.875     TOTAL ENERGY= 34256.434                     TOTAL WEIGHT=   109.067

WIRING.                                                                                        TOTAL WEIGHT=   110.000

MIDCOURSE ENGINE
        EXPECTED DELTA-V=    14.985 DOF=1.000 CAPABILITY=    37.436                            TOTAL WEIGHT=    31.219

PENALTY SUMMATION              PROBABILITIES                          WEIGHT
                     INSUF.MIDCOURSE FUEL=     .01251          ASTRIONICS=   384.047
                     EXCESSIVE TGT. MISS =   0.00000           SPACECRAFT=  1615.953
                     UNRELIABILITY       =     .13924               TOTAL=  2000.000
                     ASTRIONICS TOTAL    =     .15000
                                                                          PENALTY(MODE 3)=          384.04721

EXECUTION TIMES, START= 41.40, END= 41.58, ELAPSED=  .182(SEC.)
```

FIGURE 34. JUPITER FLYBY PENALTY EVALUATION, GAS JETS (EQUAL THRUSTS), SPECIFIED TRANSMITTER

```
PENALTY (MODE 3)          SCHEDULE  1

ISU COMPONENTS

        ACCELEROM.=  ARMA D-4E   ARMA D-4E   ARMA D-4E      GYROSCOPES=  GG 334-A    GG 334-A    GG 334-A

ISU DATA(HORIZONTAL DESIGN NUMBER  4  OPTIMUM)          CYCLES=  3      ON TIME (HR)=     2.517

        OUTSIDE DIMENSIONS        WEIGHT                        WEIGHT                          EXCIT.ENERGY=   109.511
        LENGTH=      9.350        BLOCK=      8.703      INSULATION=      1.345               EXCIT.POWER =    43.500
         WIDTH=     10.450         BASE=      4.549     ELECTRONICS=     10.000               TOTAL P.FAIL=    .03597
        HEIGHT=      5.450        COVER=      2.867      COMPONENTS=      6.000               TOTAL WEIGHT=    33.463

ISU THERMAL ANALYSIS      MAX.HEATER POWER=     97.875          MAX.THERMAL COND.=    2.1750      TOTAL ENERGY=   176.711
                          MIN.HEATER POWER=      -.000          MIN.THERMAL COND.=    1.0875      TOTAL POWER =   141.375

ANTENNA DESIGN      GAIN(DB)=  26.2    ERP(KW)=     3.36    POINTING TOL.(DEG.)=    .802        TOTAL WEIGHT=    20.980

SUBSYSTEM PARAMETERS
            COMPUTERS   STAR TRCKR  SUN SENSOR  ISU/C.P.S.  COM. RCVR.  HORIZ.SEN.   XMITTER
            SRI RUK-2   ITT-LUN.OB  ADCL-1402      NONE     MCR-503       NONE     TEST XMITR
     TIME=      2.517      10.849      10.849     0.000    9601.033      0.000       0.000
   CYCLES=          3           2           2         0           1          0           0
   ENERGY=    226.575      86.793      54.246     0.000   33603.617      0.000       0.000  TOTAL ENERGY= 33971.231
    POWER=     90.000       8.000       5.000     0.000       3.500      0.000      20.000  TOTAL POWER =   126.500
   P.FAIL=     .00640      .00411      .00410   0.00000      .09336   0.00000     0.00000  TOTAL P.FAIL=    .10654
   WEIGHT=     36.000       7.000       2.000     0.000       3.100      0.000      10.000  TOTAL WEIGHT=    58.100

CMG ATTITUDE CONTROL ANALYSIS                CYCLES=  2                ON TIME (HR)=    10.849

 SYSTEM SIZING                                                                          REQUIREMENTS

  MANEUVER  MAX. VELOCITY  =      .007                                                  TOTAL POWER =     9.407
            MAX. MAN. TORQ.=      .046                                                  TOTAL ENERGY=   102.064
                  FINAL H =      .077
  METEORITE        TORQUE   =  .000122                                                  TOTAL P.FAIL=   .000000
  SOLAR PRESSURE   TORQUE   =  .000011
  MIDCOURSE MIS.   TORQUE   =     .881
                   FINAL H =     1.469                                                  TOTAL WEIGHT=    29.019
  TOTAL MOMENTUM CAPABILITY=     1.469

ENERGY SOURCE DATA
                        TOTAL POWER=   277.282    TOTAL ENERGY= 34250.006                TOTAL WEIGHT=   108.862

WIRING                                                                                  TOTAL WEIGHT=   110.000

MIDCOURSE ENGINE
        EXPECTED DELTA-V=    14.985 DOF=1.000 CAPABILITY=    37.173                     TOTAL WEIGHT=    31.142

PENALTY SUMMATION            PROBABILITIES                          WEIGHT
                   INSUF.MIDCOURSE FUEL=     .01314          ASTRIONICS=   391.567
                   EXCESSIVE TGT. MISS =   0.00000          SPACECRAFT=  1608.433
                   UNRELIABILITY       =    .13868                TOTAL=  2000.000
                   ASTRIONICS TOTAL    =    .15000
                                                                      PENALTY(MODE 3)=        391.56692

EXECUTION TIMES: START= 41.59, END= 41.75, ELAPSED=  .162(SEC.)
```

FIGURE 35. JUPITER FLYBY PENALTY EVALUATION, CONTROL MOMENT GYROS, SPECIFIED TRANSMITTER

```
PENALTY (MODE 3)                    SCHEDULE  1

ISU COMPONENTS

        ACCELEROM.=  ARMA D-4E   ARMA D-4E   ARMA D-4E      GYROSCOPES=  GG 334-A    GG 334-A    GG 334-A

ISU DATA(HORIZONTAL DESIGN NUMBER  4  OPTIMUM)          CYCLES=  3      ON TIME (HR)=     2.517

        OUTSIDE DIMENSIONS        WEIGHT                      WEIGHT                          EXCIT.ENERGY=   109.511
        LENGTH=      9.350       BLOCK=      8.703     INSULATION=      1.345               EXCIT.POWER =    43.500
         WIDTH=     10.450        BASE=      4.549   ELECTRONICS=      10.000               TOTAL P.FAIL=    .03597
        HEIGHT=      5.450       COVER=      2.867    COMPONENTS=       6.000               TOTAL WEIGHT=    33.463

ISU THERMAL ANALYSIS      MAX.HEATER POWER=    97.875          MAX.THERMAL COND.=    2.1750      TOTAL ENERGY=   176.711
                          MIN.HEATER POWER=     -.000          MIN.THERMAL COND.=    1.0875      TOTAL POWER =   141.375

ANTENNA DESIGN      GAIN(DB)=  26.2    EPP(KW)=    3.36    POINTING TOL.(DEG.)=    .802        TOTAL WEIGHT=    20.980

SUBSYSTEM PARAMETERS
            COMPUTERS   STAR TRCKR  SUN SENSOR  ISU/C.P.S.  COM. RCVR.  HORIZ.SEN.   XMITTER
            SRT RUK-2   ITT-LUN.08  ADCL-1402      NONE     MCR-503       NONE      TEST XMITR
     TIME=      2.517      10.849      10.849      0.000    9601.033      0.000       0.000
   CYCLES=          3           2           2          0           1          0           0
   ENERGY=    226.575      86.793      54.246      0.000   33603.617      0.000       0.000  TOTAL ENERGY= 33971.231
    POWER=     90.000       8.000       5.000      0.000       3.500      0.000      20.000  TOTAL POWER =   126.500
   P.FAIL=     .00640      .00411      .00410    0.00000      .09336    0.00000     0.00000  TOTAL P.FAIL=    .10654
   WEIGHT=     36.000       7.000       2.000      0.000       3.100      0.000      10.000  TOTAL WEIGHT=    58.100

INERTIA WHEEL ATTITUDE CONTROL ANALYSIS          CYCLES=  2          ON TIME (HR)=    10.849

 SYSTEM SIZING                                                                    REQUIREMENTS

  MANEUVER  MAX. VELOCITY  =      .007                                            TOTAL POWER =    14.978
            MAX. MAN. TORQ.=      .046                                            TOTAL ENERGY=   162.504
                  FINAL H =      .077
  METEORITE        TORQUE   =   .000122                                           TOTAL P.FAIL=   .000618
  SOLAR PRESSURE   TORQUE   =   .000011
  MIDCOURSE MIS.   TORQUE   =      .881
                   FINAL H =     1.469                                            TOTAL WEIGHT=    30.422
  TOTAL MOMENTUM CAPABILITY=     1.469

ENERGY SOURCE DATA
                       TOTAL POWER=   282.853    TOTAL ENERGY= 34310.446                TOTAL WEIGHT=   110.784

WIRING                                                                            TOTAL WEIGHT=   110.000

MIDCOURSE ENGINE
        EXPECTED DELTA-V=    14.985 DOF=1.000 CAPABILITY=    37.425                TOTAL WEIGHT=    31.216

PENALTY SUMMATION              PROBABILITIES                          WEIGHT
                   INSUF.MIDCOURSE FUEL=     .01253        ASTRIONICS=   394.966
                   EXCESSIVE TGT. MISS =   0.00000        SPACECRAFT=  1605.034
                   UNRELIABILITY       =     .13921             TOTAL=  2000.000
                   ASTRIONICS TOTAL    =     .15000
                                                                   PENALTY(MODE 3)=          394.96554

EXECUTION TIMES: START= 41.75, END= 41.92, ELAPSED=  .153(SEC.)
```

FIGURE 36. JUPITER FLYBY PENALTY EVALUATION, INERTIA WHEELS, SPECIFIED TRANSMITTER

Multiple Midcourse Strategies

Review of Candidate Schemes

In accordance with the statement of work, six reports, References 25 through 30 were reviewed as sources of possible midcourse correction policies. An additional paper by C. G. Pfeiffer (Reference 31) was also considered. A description of each of these papers follows:

Breakwell, Rauch, and Tung. Breakwell, Rauch, and Tung (Reference 27) derive a correction scheme that minimizes expected fuel subject to a fixed mean-square value of the target miss. In the absence of engine mechanization errors, the optimal control policy is shown to be continuous. The times at which the midcourse propulsion system is turned on or off are determined by solving the continuous control problem using the maximum principle. If engine mechanization errors are not neglected, the optimal control policy is shown to consist of four or five impulsive corrections. The optimal spacing and magnitudes of these corrections are determined by a dynamic programming analysis.

In both of the above cases, the magnitude of the corrective thrust is proportional to the predicted deviation from the desired state at the final time. Periodic measurements of the spacecraft's state are made throughout the mission, and an update of the estimated miss is made at each observation time using the best predicted estimate and the new set of measurements just received. The observations are assumed to be made at regular intervals of time Δt, where Δt is a relatively short interval of time in comparison to the total mission time, T. Typically, for a 402-day mission to Mars, measurements are made as frequently as 1 per minute. The assumption enables the authors to utilize the continuous form of the Kalman estimation procedure.

This method of determining the optimal correction strategy is compatible with the first and third penalty modes in which a certain probability of mission failure attributable to astrionics is acceptable and the astrionics system weight is used as the penalty function. This procedure, however, is not completely adaptable, because a detailed computational procedure is established only for the special case where the rms value of one component of the state vector at the terminal time is specified.

Stern and Potter. Stern and Potter (Reference 28) present a procedure for determining a midcourse correction schedule which is optimal in the sense that total velocity correction is minimized. This is accomplished by selecting the time(s) of correction so as to maximize the miss correctible per unit of velocity correction. The principal objection to this method is that no consideration is given to the uncertainties of the navigational measurements. It is assumed that a sufficient number of measurements has been made prior to the correction so that the uncertainty in the predicted miss distance at the target is negligible.

Battin. Battin (Reference 29) suggests a procedure for determining appropriate times for making observations and/or velocity corrections. The procedure assumes that a set of points in time have been selected prior to the analysis. At each of these points, one of three alternative cources of action is followed:

(1) A single observation is made

(2) A velocity correction is implemented

(3) No action is taken.

A measurement is made if a significant reduction in the potential miss distance would result from the measurement and updating of information. A velocity correction is made whenever the ratio of the uncertainty in the estimate to the standard deviation of the required correction is less than a fixed constant. Then an engine restart and propellant expenditure is warranted.

In the final analysis, however, the criteria for selecting times of midcourse corrections are disregarded, and a correction schedule is specified. Hence, this procedure is essentially a policy for determining an appropriate measurement schedule consisting of the times at which observations are made and the choice of the best celestial measurement to be made at this time.

Denham and Speyer. In the paper by Denham and Speyer (Reference 30), the authors present a method of varying the times of midcourse velocity corrections to minimize a function involving the terminal dispersion and a statistical measure of the total velocity change used for control. The procedure assumes a nominal measurement and correction program has been specified and through successive trials and adjustments the correction program improves the given schedule. For example, the program suggested by Battin (Reference 29) is taken as the nominal, and a 10 percent improvement in the rms uncertainty of the terminal position is realized.

Although an analytical technique for optimizing both the continuous measurement and feedback gain programs is developed, only the means of determining the optimal measurement sequence is demonstrated by an example.

Pfeiffer. An additional paper by C. G. Pfeiffer (Reference 31), not included among the proposed references, was reviewed as a means of determining a midcourse correction schedule. The objective discussed in this paper was to develop a guidance policy that minimizes the expected value of the target error squared, subject to the constraint that the total propellant expended in performing the corrections is less than some prespecified amount. The analysis is based on the assumption that a measurement policy, independent of the guidance policy, has been prespecified. Also, a set of points along the trajectory at which the possibility of performing a correction is to be examined must be selected prior to the analysis. The index of performance to be minimized at any decision time involves the sum of two terms. The first term is the expected value of the target uncertainty immediately after the final correction which occurs

at some prespecified time t_f. The second term is the square of the uncorrectible error due to the depletion of the correction capability prior to the final correction time t_f.

The determination of an optimal guidance policy based on this performance index falls within the category of problems subject to analysis by Dynamic Programming. As in all applications of the Dynamic Programming algorithm, one is always mindful of the "Curse of Dimensionality". It is shown in this paper that a considerable simplification is realized if the following restrictions are imposed upon the guidance policy:

(1) At each decision time, t_i, either no correction or total correction is to be accomplished.

(2) At each decision time, t_i, at most two corrections will be accomplished: one at the final decision time, t_f, and another at some time $t_j < t_f$.

The solution obtained by application of this method will not necessarily yield an extreme value (max or mim) for the penalty considered. As indicated by Pfeiffer, the effect of imposing the two constraints is not entirely known, however, these assumptions result in a greatly simplified computational algorithm.

The validity of the constrained Dynamic Programming Algorithm outlined above is independent of the particular performance index chosen. Given an arbitrary performance measure, the same procedure can be used to obtain a correction schedule if the "two-correction" and "total-correction" constraints are imposed upon the guidance policy. Therefore, the penalty function used to evaluate the guidance system, i.e., astrionics system weight or probability of failure can be considered as a measure of performance for the midcourse correction policy. The algorithm can then be used to obtain the correction policy based on the revised penalty.

Minimization of Expected Target Miss

Midcourse correction ΔV may be determined from the computed deviations of position and velocity prior to the midcourse and the state transition matrix mapping errors at midcourse to errors at the target (Reference 4). The vectors and matrices of interest are defined in Table XIII.

Two types of target miss requirements have been studied. They are:

(1) Zero all position deviations at the target.

(2) Zero one position or velocity component deviation at the target.

When making a midcourse correction, three variables may be specified (three components of ΔV). Thus, up to three conditions may be satisfied at the target. Zeroing all position deviations specifies three conditions.

TABLE XIII. MIDCOURSE CORRECTION DEFINITIONS

Symbol	Definition
$[\Phi]$	The 6 by 6 state transition matrix from midcourse to target
$\underline{e}$, $\underline{d}$, $\underline{d}_c$	The 6 element error, deviation, and computed deviation vectors*
$\underline{x}_m$	The state of the vector $\underline{x}$ prior to midcourse correction
$\underline{x}_m+$	The state of the vector $\underline{x}$ after midcourse correction
$\underline{x}_t$	The state of the vector $\underline{x}$ at the target
$\underline{x}_{ap}$	The 3 element position error vector subset of any 6 element vector $\underline{x}_a$
$\underline{x}_{av}$	The 3 element velocity subset of $\underline{x}_a$
$\underline{\Delta V}$	The midcourse correction vector
$[P_d]$	The deviation covariance matrix $E[\underline{d}_m \underline{d}_m^T]$**
$[P_e]$	The error covariance matrix $E[\underline{e}_m \underline{e}_m^T]$
$[P_{dc}]$	The computed deviation covariance matrix $E[\underline{d}_{cm} \underline{d}_{cm}^T]$
$[P_{ed}]$	The error, deviation covariance matrix $E[\underline{e}_m \underline{d}_m^T]$

* See Reference 4 for definition of these vectors.

** E denotes expected value.

In another case, however, zeroing any one component at the target specifies only one condition. In other words, there are an infinite number of possible corrections which will zero one component of the deviation at the target. In this case, it is desirable to make the correction that uses the least fuel (minimum magnitude of ΔV).

In either case, midcourse correction is computed by

$$\underline{\Delta V} = [D]\ \underline{d}_{cm} = [D][\underline{e}_m + \underline{d}_m]$$

where D is a 3 x 6 correction matrix obtained from the state transition matrix from the point of the correction to the target. The subscript m denotes vectors prior to the midcourse. If all three computed position deviations are to be zeroed at the target, then

$$[D] = -[\Phi_{pv}]^{-1}[\Phi_p]$$

where the 3 by 6 matrix $[\Phi_p]$ and the 3 by 3 matrix $[\Phi_{pv}]$ are partitions of the state transition matrix $[\Phi]$ defined as follows

$$[\Phi] = \begin{bmatrix} \Phi_p \\ \Phi_v \end{bmatrix} = \left[\begin{array}{c|c} \Phi_{pp} & \Phi_{pv} \\ \Phi_{vp} & \Phi_{vv} \end{array}\right] .$$

If only one component of the computed position or velocity deviation is to be nulled at the target, for example, $(\underline{d}_{ct})_i$, then the minimum magnitude $\underline{\Delta V}$ is determined by the matrix

$$[D] = \left[- \frac{\underline{\varphi}_{iv}\underline{\varphi}_i^T}{(\underline{\varphi}_{iv}^T\underline{\varphi}_{iv})} \right]$$

where $\underline{\varphi}_i$ is the 6 element vector whose transpose is equivalent to the ith row of the state transition matrix Φ and $\underline{\varphi}_{iv}$ is the 3 element velocity subset of $\underline{\varphi}_i$.

In the preceding argument, the matrix [D] is chosen so as to null either one or all computed deviations in position at the target. Since the deviation is actually a random vector, it would be meaningful to base the selection of [D] on some statistical property of the target deviation.

Consider first the case where the trace of the covariance matrix of deviations in target position is to be minimized. The 3 element vector of deviations in position at the target can be written as

$$\underline{d}_{tp} = [\Phi_p]\underline{d}_m + [B][\underline{e}_m + \underline{d}_m]$$

where $[B]$ is the 3 by 6 matrix defined by

$$[B] = [\Phi_{pv}][D'] \quad .$$

$[D']$ is a statistically determined correction matrix, such that

$$\underline{\Delta V} = [D']\underline{d}_{cm} \quad .$$

Let $[\Phi_p]$ and $[B]$ be partitioned into sets of column vectors as follows:

$$[\Phi_p] = \begin{bmatrix} \underline{\varphi}_1^T \\ \underline{\varphi}_2^T \\ \underline{\varphi}_3^T \end{bmatrix} \quad , \qquad [B] = \begin{bmatrix} \underline{b}_1^T \\ \underline{b}_2^T \\ \underline{b}_3^T \end{bmatrix} \quad .$$

The 3 by 3 covariance matrix of position deviations at the target, i.e.,

$$[C] = E[\underline{d}_{tp}\ \underline{d}_{tp}^T]$$

may be expressed by

$$[C]_{ij} = \underline{\varphi}_i^T[P_d]\underline{\varphi}_j + \underline{b}_i^T[P_{dc}]\underline{b}_j + \underline{b}_i^T[P_d + P_{ed}]\underline{\varphi}_j$$

$$+ \underline{b}_j^T[P_d + P_{ed}]\underline{\varphi}_i \quad . \tag{32}$$

The trace of $[C]$, $tr[C]$, is

$$tr[C] = \sum_{i=1}^{3} \underline{\varphi}_i^T[P_d]\underline{\varphi}_i + \underline{b}_i^T[P_{dc}]\underline{b}_i + 2\underline{b}_i^T[P_d + P_{ed}]\underline{\varphi}_i \quad .$$

If $tr\,[C]$ is minimized with respect to $\underline{b}_i (i = 1, 2, 3)$, then the solution for the $\underline{b}_i$'s is

$$\underline{b}_i = -[P_{dc}]^{-1}\,[P_d + P_{ed}]\underline{\varphi}_i \qquad i = 1, 2, 3$$

or

$$[B] = [\Phi_p]\,[P_d + P_{ed}^T]\,[P_{dc}]^{-1}$$

and

$$[D'] = [\Phi_{pv}]^{-1} [\Phi_p] [P_d + P_{ed}{}^T] [P_{dc}]^{-1} \quad , \tag{33}$$

or

$$[D'] = [D] [P_d + P_{ed}{}^T] [P_{dc}]^{-1} \quad .$$

In the case where the variance of any one component of the target deviation is to be minimized, the desired midcourse correction matrix [D′] is partially defined by the 6-element vector:

$$\underline{b}_i = [D']^T \underline{\varphi}_{iv} = - [P_{dc}]^{-1} [P_d + P_{ed}] \underline{\varphi}_i \quad .$$

Thus,

$$\underline{\varphi}_{iv}{}^T [D'] \underline{d}_{cm} = - [P_{dc}]^{-1} [P_d + P_{ed}{}^T] \underline{\varphi}_i{}^T \underline{d}_{cm} \quad .$$

The above equation defines a family of vectors $\underline{\Delta V}$ lying in a plane as shown in Figure 37. The $\underline{\Delta V}$ with minimum magnitude is the $\underline{\Delta V}$ normal to this plane, or

$$\underline{\Delta V} = [D'] \underline{d}_{cm} = \frac{\underline{\varphi}_{iv} \underline{\varphi}_i{}^T [P_d + P_{ed}{}^T] [P_{dc}]^{-1}}{(\underline{\varphi}_{iv}{}^T \underline{\varphi}_{iv})} \underline{d}_{cm} \quad . \tag{34}$$

Thus

$$[D'] = [D][P_d + P_{ed}^T][P_{dc}]^{-1} \quad .$$

In both of the above cases, the correction matrix [D] which minimizes the uncertainty in the deviation at the target is determined by post-multiplying the deterministic correction matrix, [D], by

$$[P_d + P_{ed}{}^T][P_{dc}]^{-1} \quad .$$

The above equations apply only in the case where it is assumed that no errors are generated in making the midcourse. In order to include the effect of velocity errors generated in executing the midcourse maneuver, let it be assumed that the error is a linear function of the midcourse correction vector, $\underline{\Delta e}_v = [A] \underline{\Delta V}$.

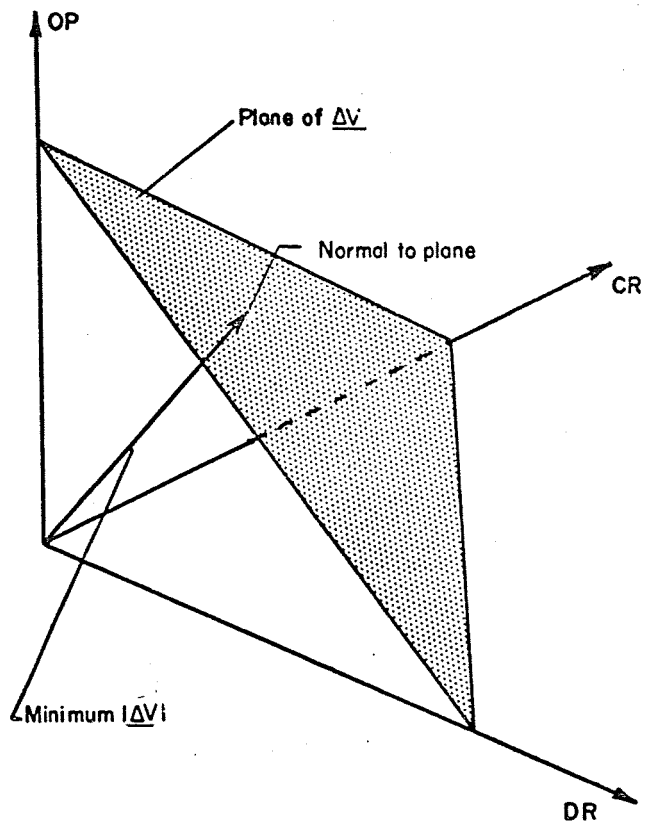

FIGURE 37. MINIMUM FUEL ΔV TO MINIMIZE VARIANCE OF TARGET DEVIATION

Thus

$$\underline{e}_m^{\,+} = \underline{e}_m + \begin{bmatrix} 0 \\ \underline{\Delta e}_v \end{bmatrix} \quad , \text{ and}$$

$$\underline{d}_m^{\,+} = \underline{d}_m + \begin{bmatrix} 0 \\ \underline{\Delta V} \end{bmatrix} - \begin{bmatrix} 0 \\ \underline{\Delta e}_v \end{bmatrix} \quad .$$

Also, assume that the generated error, $\underline{\Delta e}_v$, is uncorrelated with the deviation, d_m, or the error, e_m. Then the 3 by 3 covariance matrix of position deviations at the target can be written as:

$$[C_e] = [C] + [\varphi_{pv}][A][D_e][P_{dc}][D_e]^T[A]^T[\varphi_{pv}]^T \quad ,$$

where D_e is the unknown correction matrix to be determined when execution errors are not neglected and [C] is the 3 by 3 covariance matrix defined by Equation (32) with $[B] = [\varphi_{pv}][D_e]$.

Define a 3 by 3 matrix, M, as follows:

$$[M] = [\varphi_{pv}][A][\varphi_{pv}]^{-1} \quad . \tag{35}$$

Consequently, $[C_e]$ can be written as

$$[C_e] = [C] + [M][B][P_{dc}][B]^T[M]^T \quad .$$

The trace of $[C_e]$, $tr[C_e]$, is

$$tr\,[C_e] = \sum_{i=1}^{3} [C]_{ii} + \sum_{i=1}^{3} \sum_{j,k=1}^{3} m_{ij}\underline{b}_j^{\,T}\,[P_{dc}]\underline{b}_k m_{ik} \quad ,$$

where $m_{ij} = [M]_{ij}$. Interchanging the order of summation, $tr\,[C_e]$ can be written as

$$tr\,[C_e] = \sum_{i=1}^{3} [C]_{ii} + \sum_{j,k=1}^{3} \left(\sum_{i=1} m_{ij}m_{ik}\right) \underline{b}_j^{\,T}[P_{dc}]\underline{b}_k \quad .$$

Let

$$\sum_{i=1}^{3} m_{ij}m_{ik} = n_{jk} = [M^TM]_{jk} \quad .$$

Then

$$\mathrm{tr}\,[C_e] = \sum_{i=1}^{3} \underline{\varphi}_i^T[P_d]\underline{\varphi}_i + b_i^T[P_{dc}]\underline{b}_i + 2b_i^T[P_d + P_{ed}]\underline{\varphi}_i$$

$$+ \sum_{j,k=1}^{3} n_{jk}\underline{b}_j^T[P_{dc}]\underline{b}_k \quad .$$

If tr $[C_e]$ is to be a minimum with respect to $\underline{b}_i$ $(i=1,2,3)$, then each $\underline{b}_i$ must satisfy the following equation:

$$[0] = 2[P_{dc}]\underline{b}_i + 2[P_d + P_{ed}]\underline{\varphi}_i + 2\sum_{j=1}^{3} n_{ij}[P_{dc}]\underline{b}_j$$

or in matrix form

$$[0] = \begin{bmatrix} \underline{\varphi}_1^T \\ \underline{\varphi}_2^T \\ \underline{\varphi}_3^T \end{bmatrix} [P_d + P_{ed}]^T + [I + N] \begin{bmatrix} \underline{b}_1^T \\ \underline{b}_2^T \\ \underline{b}_3^T \end{bmatrix} [P_{dc}] \quad .$$

Thus

$$[B] = -[I + M^TM]^{-1}[\varphi_p][P_d + P_{ed}]^T[P_{dc}]^{-1} \quad .$$

After substitution of Equation (35) in the above equation, the following expression for $[D_e]$ is realized:

$$[D_e] = [I + C^{-1}A^TCA]^{-1}[D']$$

where

$$[C] = [\varphi_{pv}]^T[\varphi_{pv}]$$

and $[D']$ is the correction matrix defined by Equation (33) assuming no correction errors are generated in making the midcourse maneuver.

In the case where the variance of any one component of the target deviation is to be minimized, the desired midcourse correction matrix, $[D_e]$, can be determined in a similar manner. If $(\underline{d}_{ti})$ is to be minimized, then

$$[D_e] = (1 + \alpha_i)^{-1}[D']$$

where α_i is a scalar determined by

$$\alpha_i = \underline{\varphi}_{iv}^{T}[A]\underline{\varphi}_{iv}$$

and $[D']$ is the correction matrix defined by Equation (34) assuming no errors are generated during the midcourse correction.

Minimization of the Astrionics Penalty Function by a Constrained Dynamic Programming Analysis of Multiple Midcourse Corrections

As previously discussed, in the approach suggested by Pfeiffer (Reference 31) was intended to minimize a performance index involving the expected value of the target error squared, subject to the constraint that the total propellant expended in performing the corrections is less than some prespecified amount. The exact form of the penalty does not affect the method of determining the optimal correction policy. Thus the astrionics penalty function can be substituted for the performance index considered by Pfeiffer.

The procedure for determining a suitable correction policy uses the approach by Pfeiffer (Reference 31) discussed in the previous section. It is initiated by the selection of a measurement policy, independent of the guidance policy, and a set of points along the trajectory at which the possibility of performing a correction is to be examined. The determination of an optimal guidance policy based on the selected penalty falls within the category of problems subject to analysis by Dynamic Programming. However, as indicated earlier, a considerable simplification is realized if the following restrictions are imposed upon the guidance policy:

(1) At each decision time t_i, either no correction or a total correction is to be accomplished.

(2) At each decision time, t_i, it is assumed that at most two corrections will be accomplished: one at the final decision time, t_f, and another at some time $t_j < t_f$.

If these constraints are observed, then the control policy is implemented at time t_i in the following steps:

(1) Calculate the performance index corresponding to a total correction only at t_f, $P_1(i)$.

(2) Calculate the performance index corresponding to total correction only at t_i and t_f, $P_2(i)$.

(3) If $P_2(i) - P_1(i) \geq 0$, make no correction at t_i; go on to the next decision time t_{i+1}. If the inequality does not hold, go on to step 4.

(4) Calculate the performance index corresponding to total corrections only at t_{i+1} and t_f, $P_3(i)$

(5) Form the switching functions $S_i = P_2(i) - P_3(i)$. If S_i is positive, no action is taken. If it is negative or zero, a total correction is applied at t_i.

(6) When the next decision time is reached, the process is reinitiated, with a new estimate of the error based upon the action taken at t_i and the tracking data received during the interval.

A flow chart of this procedure is shown in Figure 38 and results of its application on a Mars mission are shown in Appendix A.

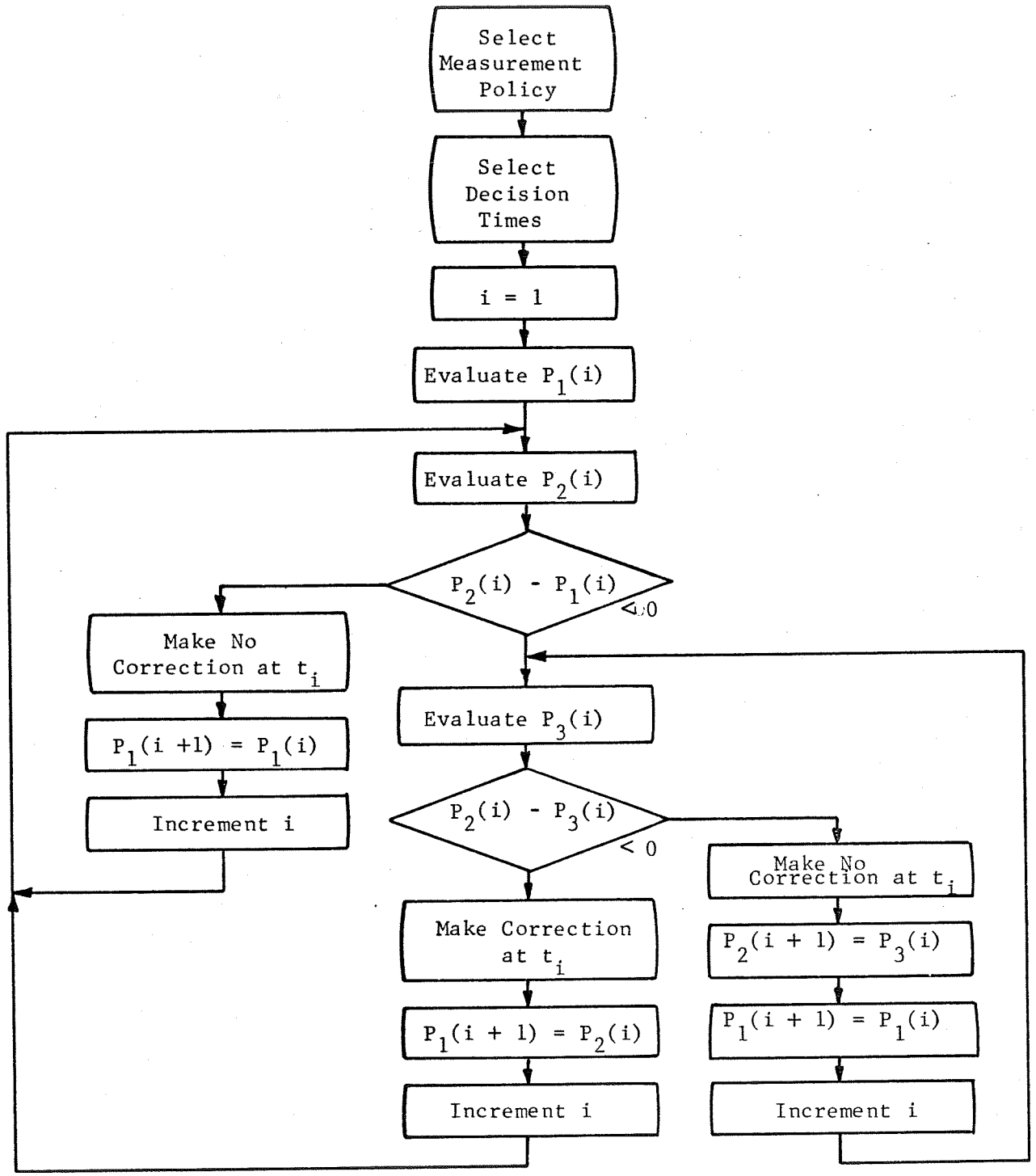

FIGURE 38. FLOW CHART FOR CONSTRAINED DYNAMIC PROGRAMMING ALGORITHM

CONCLUSIONS

The evaluation techniques developed for interplanetary flyby mission astrionics systems were extended to orbiter, lander, and multiple planet swingby mission astrionics. These techniques are useful for selection of astrionics subsystems, for evaluating astrionics mission operation schedules, as an aid in the preliminary design of conceptual subsystems, and in determining research needed to improve system performance.

Using the computer program which implements these techniques, it is possible to analyze tradeoffs and establish requirements for functions such as navigation, guidance, and communication for specified missions. Candidate astrionics subsystems can be analyzed and the specifications determined for subsystems which provide the required functions.

Data required for evaluation of astrionics for interplanetary missions are identified. Numerical values for these data are quite difficult to obtain. In many cases prototype hardware may not have been developed and if hardware exists, the needed data may not have been acquired. The significance of assumed data for conceptual systems can be assessed by determining the sensitivity of the penalty function to the data. Data having high sensitivity indicates need for research, development, and testing programs.

RECOMMENDATIONS

It is recommended that the computer program which implements the evaluation techniques be exercised for various interplanetary missions which appear likely to occur within the next decade. The objective would be to establish the astrionics specifications for the missions examined. By examining a large number of missions, possible limitations of the computer program should become apparent.

Early establishment of the astrionics specifications for these missions will identify critical data requirements. It is recommended that, testing programs be established to acquire and validate the data assumed in the analyses.

The assumption of Kalman filtering in the navigation error analysis for aided inertial systems did not consider the problems associated with the implementation of such a filter. It is recommended that a study of the tradeoffs involved in implementing a Kalman filter be made. This study should examine the feasibility of onboard implementation as opposed to implementing the filter at a site on Earth. Wherever the filter is implemented, the tradeoffs between performance of the filter and the required onboard computer capability must be determined.

Many future missions require the astrionics to operate over very long periods of time. Missions with long operating times include interplanetary missions, such as Grand Tour, and Earth orbital missions, such as a space station. Provision of the required astrionics functions on these long-life-time missions

necessitates having backup modes for each function. These modes are provided by astrionics subsystems operating in a specified manner. Failure of a subsystem required for a particular mode need not result in loss of the function if the astrionics system is designed with backup modes for critical functions. This concept of functions and modes was developed by Battelle for aerospace avionics systems under USAF contract (Reference 32).

An avionics function is defined as an operation or action performed during a mission in which employment of the aircraft's avionics is desirable. Two examples of avionics functions are navigation and communications. The term mode connotes a suite of avionics subsystems which allows a particular function to be performed. If all the subsystems are performing properly, then any given function will be conducted by utilizing the suite of avionics designated as the primary mode. Assume that one of the subsystems associated with a particular function begins to operate out of tolerance or fails . Quite often the function can still be conducted by a backup mode but with degraded performance. Usually the backup mode will employ the same suite of avionics as the primary mode, but with the unsatisfactory subsystem deleted or with another subsystem substituted for it. Of course, more than one backup mode may be possible, and the backup mode that is employed will depend on which is preferred as well as which subsystems are available. In a vehicle with sophisticated avionics, the selection of the backup mode may be made by an onboard computer or special-purpose logic circuitry rather than by the pilot. The computer program developed and described in Reference 32 uses Monte Carlo techniques to model the effectiveness of avionics systems with alternate modes for various functions. It is recommended that the concept of functions and modes be developed for astrionics systems and NASA missions. This will be necessary to properly analyze astrionics for long-lifetime missions and reusable vehicles.

REFERENCES

(1) Hitt, E. F., Rea, F. G., and Blutreich, J. N., "Development of an Evaluation Technique for Strapdown Guidance Systems", Second Interim Scientific Report, Contract No. NAS 12-550, Battelle Memorial Institute, Columbus Laboratories, February 28, 1969.

(2) Ehricke, Krafft A., Space Flight, Volume I: Environment and Celestial Mechanics, D. Van Nostrand Company, Inc., Princeton, New Jersey (1960).

(3) "Launch Vehicle Estimating Factors", National Aeronautics and Space Administration, Office of Space Science and Applications, Launch Vehicle and Propulsion Programs, January 1969.

(4) Hitt, E. F., and Rea, F. G., "Development of an Evaluation Technique for Strapdown Guidance Systems", Interim Scientific Report, Contract No. NAS 12-550, Battelle Memorial Institute, Columbus Laboratories, February 13, 1968.

(5) Viking Project Management, "1973 Viking Voyage to Mars", Astronautics and Aeronautics, November, 1969.

(6) Curkendall, D. W., and McReynolds, S. R., "A Simplified Approach for Determining the Information Content of Radio Tracking Data", Journal of Spacecraft and Rockets, Volume 6, May, 1969.

(7) "Voyager Design Studies", Volume IV, Part II, AVCO Corporation, Contract NASw-697, October 15, 1963.

(8) Rea, F. G., and Fischer, N. H., "An Improved Method of Estimating Midcourse Fuel Requirements (Approximating the Probability Distribution of the Magnitude of a Vector with Normal, Zero Mean, Components)", Paper presented to NASA/ERC Fourth Guidance Theory and Trajectory Analysis Seminar, Cambridge, Massachusetts, May 16-17, 1968.

(9) Skolnik, Merrill, I., Introduction to Radar Systems, McGraw-Hill, New York (1962), p 3.

(10) Barton, David K., Radar Systems Analysis, Prentice Hall, New Jersey (1964), p 60.

(11) Eichler, J., "A Performance Study of The Lunar Modules's Landing Radar System", Journal of Spacecraft and Rockets, Volume 5, No. 9, September 1968.

(12) Miller, B. J., and Abbott, A. S., "Observation Theory and Sensors", Volume II, Guidance, Flight Mechanics, and Trajectory Optimization, NASA CR-1001 March, 1968.

(13) Weimer, P. K., Pike, W. S., Sadasir, F. W., Shallcross, F. W., and Moray-Horvath, L., "Multielement Self-Scanned Mosaic Sensors", IEEE Spectrum, pp 52-65, 1969.

REFERENCES (Continued)

(14) Seaman, L. J. and Brown, H. E., "Planetary Approach Guidance for a Martian Mission", American Institute of Aeronautics and Astronautics, Paper No. AAS67-453 (GC-3).

(15) Cheng, Richard K., "Terminal Guidance for a Mars Softlander", Private Lecture Notes, presented July, 1969, at UCLA.

(16) Nichol, K. C., "Research and Investigation on Satellite Attitude Control", Part II, Technical Report No. AFFDL-TR-64-168, Wright-Patterson AFB, Ohio, June, 1965.

(17) Greensite, A. L., "Analysis and Design of Space Vehicle Flight Control Systems", Vol. XII, Attitude Control in Space, NASA CR-831, August, 1967.

(18) Gilbreath, D. S., "Mass Conservative Attitude Control Systems for Interplanetary Spacecraft", United States Naval Post Graduate School, September, 1967.

(19) "Ballistic Missiles", Vol. III, Revision I, Space Technology Laboratories, Los Angeles, California, 1958.

(20) "Radio/Optical/Strapdown Inertial Guidance Study for Advanced Kick Stage Applications", Final Report, Volume I-Summary, TRW Systems Group, Contract No. NAS 12-141, November 1968.

(21) Perkins, F. M., "Guidance Computer Sizing for Linear-Tangent Guidance Equations", Air Force Report No. SAMSO-TR-67-48, July, 1967.

(22) Townsend, G. C., et al, "Guidance, Flight Mechanics, and Trajectory Optimization, Volume VIII, Boost Guidance Equations", NASA CR-1007, Washington, D. C., April, 1968.

(23) Goldman, A. S., and Slattery, T. B., Maintainability: A Major Element of System Effectiveness, John Wiley & Sons, Inc., New York, 1964.

(24) "Deep Space Communication and Navigation Study", Bell Telephone Laboratories Final Report under Contract No. NAS 5-10293, May 1, 1968.

(25) Battin, Richard H., Astronautical Guidance, McGraw-Hill, Inc., New York, 1964.

(26) Guidance and Control of Aerospace Vehicles, Edited by Cornelius T. Leondes, McGraw-Hill Book Company, Inc., New York, 1963, Chapter II, Harold S. Braham, pp 16-51.

(27) Breakwell, John V., Rauch, Herbert E., and Tung, Frank F., "Theory of Minimum Effort Control", NASA CR-378, NASA Langley Research Center, January, 1966.

REFERENCES (Continued)

(28) Stern, Robert G., and Potter, James E., "Optimization of Midcourse Velocity Corrections", RE-17, Experimental Astronomy Laboratory, Massachusetts Institute of Technology, November, 1965.

(29) Battin, Richard H., "A Statistical Optimizing Navigation Procedure for Space Flight", ARS J., 32 1962, pp 1681-1692.

(30) Denham, Walter F., and Speyer, Jason L., "Optimal Measurement and Velocity Correction Programs for Midcourse Guidance", AIAA Journal, Vol. 2, No. 5, May, 1964, pp 896-907.

(31) Pfieffer, Carl G., "A Dynamic Programming Analysis of Multiple Guidance Corrections of a Trajectory", AIAA Journal, Vol. 3, No. 9, September, 1965, pp 1674-1681.

(32) Hitt, E. F., Levin, V., Brown, R. A., and Rea, F. G., "Simulation and Effectiveness Evaluation of Integrated Avionics for Military Aircraft", Technical Report AFAL-TR-70-2, Volume I, Battelle Memorial Institute, Columbus Laboratories, February 1970.

APPENDIX A

COMPUTER PROGRAM RESULTS FOR MARS ORBITER MISSION

APPENDIX A

COMPUTER PROGRAM RESULTS FOR MARS ORBITER MISSION

To exercise the computer program on an orbiter mission, a mission similar to the planned Viking mission was selected as a basis for evaluation. It must be emphasized, however, that the results presented in this appendix do not constitute an evaluation of the Viking spacecraft and mission. These results are shown only to demonstrate the capability of the computer program. Considerable additional data must be obtained before a conclusive evaluation of the astrionics for the Viking mission can be performed.

Input Data

The first portion of the computer output is a listing of the data needed to run the program.

Tracking Net Data

The tracking network data describing station locations, available radars, and the data associated with each radar are shown at the top of Figure A-1a. This data is unchanged from the values used for the Jupiter flyby analysis reported in References 1 and 4 as well as elsewhere in this report, with the exception of the Deep Space Instrumentation Facility (DSIF) radar data. It should be noted that a range error of 50 feet is indicated for the DSIF. Although the DSIF does not measure range directly, range can be calculated if the DSIF tracks the spacecraft for a reasonable period of time (several days). As can be seen later in this appendix, the DSIF as well as all other radars are modeled as discrete one time updates rather than tracking over a period of time. It is assumed, however, that the values used for the discrete update are the results the DSIF would obtain after a reasonable tracking time.

Star Data

Star data is shown in Figure A-1a and is unchanged from the values used for the Jupiter studies.

TRACKING NET DATA

STA.NO.		LAT.	LONG.	RADARS	
1	ASCENSION	-7.966	-14.400	USBS-30	TPQ-18
2	PRETORIA	-25.950	28.670	MPS-25	
3	CARNARVON	-24.900	113.710	USBS-30	FPQ-6
4	ANTIGUA	17.150	-61.800	USBS-30	FPQ-6
5	GOLDSTONE	35.384	-116.850	DSIF	
6	MADRID	40.416	-3.667	DSIF	
7	CANBERRA	-35.316	149.132	DSIF	

RAD.NO.		MAX.RANGE	RANGE ERROR	ELEV. ERROR	AZIM. ERROR	RANGE DOT ERROR
1	USBS-30	3.500000E+09	6.700000E+01	1.780000E-03	1.780000E-03	1.240000E-01
2	TPQ-18	1.920000E+08	6.700000E+01	4.500000E-04	4.500000E-04	-0.
3	MPS-25	6.076000E+06	1.340000E+02	2.240000E-03	2.240000E-03	-0.
4	FPQ-6	1.920000E+08	4.500000E+01	3.350000E-04	3.350000E-04	-0.
5	DSIF	1.000000E+50	5.000000E+01	-0.	-0.	4.100000E-02

STAR DATA

NAME	LAT.	LONG.	VIS.MAG.	COLR.TEMP.	REL. ACC.
SIRIUS	-16D 40M 15S	100D 56M -0S	-1.60	14000	1.00000
CANOPUS	-52D 40M 40S	95D 48M -0S	-.90	9000	1.38002
VEGA	38D 45M 10S	278D 58M -0S	.10	15400	2.18636
CAPELLA	45D 58M 5S	79D 35M -0S	.20	6300	2.28932
POLLUX	28D 6M 18S	115D 50M -0S	1.20	4400	3.62696

SUMMARY OF LEWIS N-BODY TRAJECTORY (FT-SEC)

		POSITION			MAG.	VELOCITY			MAG.	ANG.
TIME= 0.										
NO. 1	0.	-6.3363E+06	-1.7851E+07	-1.0795E+07	2.1802E+07	3.3445E+04	-1.8780E+04	2.2630E+03	3.8424E+04	83.22
CROSS	.20521716E+06		POSITION		MAG.		VELOCITY		MAG.	ANG.
NO. 31	2.0522E+05	2.7223E+09	5.8474E+08	1.2071E+09	3.0348E+09	1.2415E+04	2.9203E+03	5.6246E+03	1.3939E+04	1.08
NO. 0	2.0522E+05	4.0408E+11	-2.6813E+11	-1.1533E+11	4.9847E+11	6.8429E+04	7.5036E+04	3.6900E+04	1.0805E+05	86.51
NO. 0	2.0522E+05	4.0136E+11	-2.6971E+11	-1.1654E+11	4.9687E+11	5.6015E+04	7.2115E+04	3.1276E+04	9.6522E+04	90.65
TIME=	.20880000E+06		POSITION		MAG.		VELOCITY		MAG.	ANG.
NO. 1	2.0880E+05	4.0433E+11	-2.6786E+11	-1.1520E+11	4.9850E+11	6.8369E+04	7.5071E+04	3.6914E+04	1.0804E+05	86.51
CROSS	.16920722E+08		POSITION		MAG.		VELOCITY		MAG.	ANG.
NO. 22	1.6921E+07	-1.0155E+11	7.0083E+11	3.2523E+11	7.7926E+11	-6.9512E+04	1.8586E+03	-9.1427E+02	6.9543E+04	81.44
NO. 0	1.6921E+07	-1.3676E+09	-1.2939E+09	2.2726E+08	1.8963E+09	6.2015E+03	5.7890E+03	-1.1456E+03	8.5606E+03	179.11
NO. 0	1.6921E+07	-1.0018E+11	7.0212E+11	3.2500E+11	7.8015E+11	-7.5714E+04	-3.9303E+03	2.3136E+02	7.5816E+04	85.25
TIME=	.16921600E+08		POSITION		MAG.		VELOCITY		MAG.	ANG.

FIGURE A-1a. MARS MISSION TRAJECTORY DATA

Lewis N-Body Trajectory and State Transition Matrices

The Lewis n-body code and its modification to obtain state transition matrices was run to obtain a suitable trajectory for the Mars mission. A summary of this trajectory is printed at the bottom of Figure A-1a and at the top of Figure A-1b. The data points printed in this summary are only those times, positions, and velocities at the spheres of influence crossings. As discussed in earlier reports (References 1 and 4) the Lewis n-body code performs trajectory integration separately from the launch vehicle simulation. It is thus necessary to check the matching of the end point of the launch vehicle simulation with the beginning of the Lewis trajectory. The results of this match are shown in Figure A-1b. The point on the Lewis trajectory with a radial distance from the center of the earth equal to the end point of the launch vehicle trajectory occurs 33 seconds into the Lewis trajectory. At this point, the velocities differ by 365 feet per second and the angle between the radius and velocity vectors differ by 1.82 degrees. This discrepancy is not considered serious for this analysis.

Target Conditions. The target point is specified as a time in seconds on the trajectory. The target conditions shown in Figure A-1b give the values of the trajectory at this time. The radius is 1.57×10^8 feet and the velocity 1.62×10^5 feet per second. At this time the angle between the radius and velocity vectors is approximately 90 degrees indicating periapsis of the planetary swingby.

Near Earth Operations. In order to insure the proper outgoing asymptote for the earth escape portion of the mission, a launch azimuth and the angle the vehicle traverses in the parking orbit must be computed. The results of these computations are shown at the bottom of Figure A-1b. A parking orbit coast angle of 171.6 degrees and a launch azimuth of 69.5 degrees were found to be necessary to obtain the proper outgoing asymptote. The launch is assumed to take place at the Eastern Test Range. This azimuth and parking orbit angle do not permit tracking of the vehicle while in the parking orbit. Thus, unlike the Jupiter mission, no parking orbit updates from ground based radars are possible.

Mission and Subsystem Design Data

The mission and subsystem design data shown in Figures A-2a and A-2b have been modified from the values used for the Jupiter mission. The most significant changes are discussed in the following paragraphs.

Spacecraft/Mission Data. The spacecraft and mission data shown in Section I have the most significant changes from the Jupiter mission results. All the parameters describing the weight, sizes, and moments of inertia of the spacecraft were changed to values corresponding to the most current estimats for the Viking spacecraft. Note also that a nominal retro-delta velocity requirement has been added as Item 17 of Section I.

```
NO.  1  1.6922E+07   -1.3621E+09 -1.2888E+09  2.2625E+08  1.8888E+09  6.2018E+03  5.7892E+03 -1.1457E+03  8.5609E+03  179.10
 SEGMENTS        0.                30        .20521716E+06   21        .16920722E+08   29        .10000000E+21


        MATCH WITH N-BODY AT      33 SECONDS,    .22009083E+08 FT.

                                          SEAP                N-BODY                ERROR
                VELOCITY MATCH                37880                38245                 -365
                  ANGLE  MATCH                83.20                81.38                 1.82

        TARGET CONDITIONS
             TIME    .17138949E+08 SECONDS
           RADIUS    .15732959E+08 FEET
         VELOCITY    .16266841E+05 FT/SEC
            ANGLE            90.01 DEG.


                      RANGE ANG.          CUM. TOTAL              TIME          CUM. TOTAL
        LAUNCH            18.000              18.000           617.700             617.700
          PARK           171.600             189.600          2518.360            3136.060
          BURN            30.000             219.600           310.000            3446.060
        ESCAPE           124.726             344.326        205184.438          208630.498

LAUNCH
        LAT.=    28.500  LONG.=   -80.500  AZ.=    69.500
```

FIGURE A-1b. MARS MISSION TRAJECTORY DATA

DATA

SPACECRAFT/MISSION DATA (SECTION 1)

1	TOTAL WEIGHT (LB)=	7335.00000	2	NONASTRIONICS WEIGHT (LB)=	5953.00000
3	PROBABILITY OF ASTRIONICS FAIL=	.15000	4	TARGET MISS DISTANCE (FT)=	1000000.00000
5	VIBRATION(MILLIRAD/SEC)**2/CPS=	.30457	6	VIBRATION UPPER FREQ. (CPS)=	100.00000
7	WIRING WEIGHT (LB)=	110.00000	8	ROLL MOM. OF INER.(SLUG-FT**2)=	1654.00000
9	YAW MOM. OF INERT.(SLUG-FT**2)=	3758.00000	10	PIT MOM. OF INERT.(SLUG-FT**2)=	3864.00000
11	ROLL MOMENT ARM (FT)=	13.00000	12	YAW MOMENT ARM (FT)=	13.00000
13	PITCH MOMENT ARM (FT)=	13.00000	14	ROLL MAX. ARM (FT)=	6.50000
15	YAW MAX. ARM (FT)=	6.50000	16	PITCH MAX. ARM (FT)=	6.50000
17	NOMINAL RETRO DELTA-V (FT/SEC)=	3800.00000			

MIDCOURSE ENG./ENERGY SOURCE (SECTION 2)

1	SPECIFIC IMPULSE (SEC.)=	279.00000	2	MIDCOURSE THRUST (LB)=	300.00000
3	MIDCOURSE SYSTEM COEF.(LB/LB)=	1.09600	4	MIDCOURSE SYSTEM CON. (LB)=	20.30000
5	ENERGY SOURCE CONSTANT (LB)=	13.20000	6	ENERGY SOURCE COEF. (LB/W)=	.34500
7	ENERGY SOURCE COEF. (LB/W-HR)=	0.00000	8	MIDCOURSE ENGINE ARM (FT)=	3.50000
9	MIDCOURSE ENG. OFFSET UNC.(FT)=	.02000	10	MIDCOURSE ENG. ANG. UNC. (RAD)=	.00436

I. S. UNIT DESIGN DATA (SECTION 3)

1	BLOCK DENSITY (LB/IN**3)=	.09700	2	BASE DENSITY (LB/IN**3)=	.09700
3	COVER DENSITY (LB/IN**3)=	.09700	4	INSULATION DENSITY (LB/IN**3)=	.09100
5	ISU COMPONENT SEPARATION (IN)=	.25000	6	BASE OFFSET (IN)=	1.50000
7	COVER CLEARANCE (IN)=	.25000	8	BASE THICKNESS (IN)=	.50000
9	COVER THICKNESS (IN)=	.10000	10	INSULATION THICKNESS (IN)=	.05000
11	ELECTRONICS WEIGHT (LB)=	10.00000	12	ELECTRONICS MTBF (HR)=	10000.00000
13	ELECTRONICS POWER (WATTS)=	30.00000	14	DESIGN NO. (0=OPTIMUM) =	0.00000
15	1=HORIZONTAL, 2=VERTICAL =	1.00000	16	RISE TIME (SEC.)=	.00001

FIGURE A-2a. MISSION AND SUBSYSTEM DATA, MARS MISSION

DATA (CONTINUED)

THERMAL/ANTENNA DESIGN DATA (SECTION 4)

1	OPERATING TEMPERATURE(DEG-F)=	160.00000	2	MAX.AMBIENT TEMPERATURE(DEG-F)=	140.00000
3	AVE.AMBIENT TEMPERATURE(DEG-F)=	60.00000	4	MIN.AMBIENT TEMPERATURE(DEG-F)=	30.00000
5	THERMAL CONDUCTANCE (W/DEG-F)=	0.00000	6	MIN. THERMAL CONDUCTANCE RATIO=	.50000
7	INFORMATION RATE (BITS/SEC)=	67.00000	8	SYSTEM NOISE TEMP. (DEG-K)=	25.00000
9	ENG./BIT / NOISE (DB)=	10.00000	10	GROUND ANTENNA DIAMETER (FT)=	85.00000
11	XMITTER WEIGHT CONSTANT (LB)=	0.00000	12	XMITTER WEIGHT COEF. (LB/W)=	.25500
13	ANTENNA WEIGHT COEF. (LB)=	.56000	14	XMITTER EFFICENCY =	.40000

ATTITUDE CONTROL DATA (SECTION 5)

1	ROLL SOLAR PRESS. AREA(FT**2)=	113.00000	2	YAW SOLAR PRESS. AREA(FT**2)=	32.00000
3	PITCH SOLAR PRESS. AREA(FT**2)=	32.00000	4	ROLL CG-CP ARM (FT)=	.25000
5	YAW CG-CP ARM (FT)=	1.00000	6	PITCH CG-CP ARM (FT)=	1.00000
7	SIZING OPTION (1 SETS=THRUSTS)=	0.00000	8	A/C SPECIFIC IMPULSE (SEC.)=	56.00000
9	EMPTY DATA SPACE =	0.00000	10	IMPULSE TIME (SEC)=	.02000
11	RECHARGE TIME (SEC)=	.04000	12	METEORITE IMPACT IMP. (LB-SEC)=	.01400
13	AT.CONT.RELIB. (FAIL/1000IMP.)=	.00010	14	A.C. ELECTRONICS MTBF (HR)=	20000.00000
15	A.C. ELECTRONICS POWER (WATTS)=	10.00000	16	ATT. CONT. WEIGHT CONS. (LB)=	21.00000
17	ATT. CONT. COEF. (LB/LB)=	1.56300	18	ATTITUDE TOLERANCE (DEG)=	1.00000
19	CMG MAX ANGULAR VELOCITY =	.60000	20	CMG FAILURES PER HOUR =	.00004

FIGURE A-2b. MISSION AND SUBSYSTEM DATA, MARS MISSION

Midcourse Engine/Energy Source Data. The midcourse data shown in Section 2 have been changed to reflect the use of the propulsion system for the nominal retro fire as well as midcourse corrections. On the Viking spacecraft a single engine with 300 pounds thrust and 279 second specific impulse is used. These data are also shown in Section 2.

Inertial Sensor Unit Design Data. The inertial sensing unit design data shown in Section 3 are unchanged from that used for the Jupiter analysis.

Thermal and Antenna Design Data. The thermal subsystem and antenna design data shown in Section 4 are unchanged from the values used for the Jupiter analysis.

Attitude Control Data. The attitude control data shown in Section 5 have been changed to the values estimated for the Viking spacecraft.

Candidate Subsystem Data

The candidate subsystem data shown in Figures A-3a thru A-3e are unchanged from the data used for the Jupiter analysis with the exception of the addition of the approach radar subsystem to the candidate subsystem data bank.

Approach Radar Subsystem Data. The approach radar subsystem data is shown at the bottom of Figure A-3d and the top of Figure A-3e. Three hypothetical approach radar subsystems were used in this study. The first approach radar, APP. RADR. measures range, and range rate with the errors indicated. The second approach radar, APP. RADR., is identical to the first approach radar with the exception that range is not measured. The third approach radar approximates a perfect measurement of range and range rate, indicated by errors of 1.0×10^{-6} feet and 1.0×10^{-6} feet per second as shown. This near perfect approach radar was used in a preliminary analysis to establish the most optimistic measurement of these parameters possible and their impact on penalty. The first approach radar, which measures range with an error of 300 feet and range rate with an error of 40 feet per second, is used in the evaluation presented in this appendix.

The Communication Geometry

The geometry describing the visibility of the spacecraft from the earth is shown in Figure A-4. The number of days into the mission, the range in astronomical units, the angle between the spacecraft and the Sun as viewed from the earth, the angle between the Earth and the Sun as viewed from the spacecraft, and a label describing the portion of the mission for which the information is printed are in columns one through five, respectively. All rows in Figure A-4 are

CANDIDATE SUBSYSTEM DATA

ACCELEROM.

		WEIGHT	POWER	MTTF	MCTF	LENGTH	DIAMETER	WIDTH
1	ARMA D-4E	.35000	1.50000	100000.00000	500.00000	1.30000	2.70000	-0.00000
2	GG-177	.30000	1.00000	50000.00000	500.00000	1.80000	1.50000	-0.00000
3	2401-005	.20000	8.00000	188217.00000	500.00000	2.00000	1.00000	1.13000
4	BELL-7	.40000	3.50000	40000.00000	500.00000	1.15000	1.75000	-0.00000

	K0	K1	K2	K3	M0	N0	M1	N1	IP	IN
1	6.700E-06 G	1.000E-05 G/G	9.000E-07 G/G**2	1.000E-07 G/G**3	-0. G/G	-0. G/G	5.600E-06 G/G**2	5.600E-06 G/G**2	2.000E+01 ARC SEC	2.000E+01 ARC SEC
2	4.200E-05 G	5.100E-05 G/G	9.400E-06 G/G**2	1.040E-06 G/G**3	-0. G/G	-0. G/G	5.000E-06 G/G**2	5.000E-06 G/G**2	2.000E+01 ARC SEC	2.000E+01 ARC SEC
3	2.000E-05 G	1.000E-05 G/G	1.000E-06 G/G**2	2.000E-07 G/G**3	1.000E-07 G/G	1.000E-05 G/G	-0. G/G**2	-0. G/G**2	5.000E+00 ARC SEC	5.000E+00 ARC SEC
4	4.000E-06 G	8.000E-05 G/G	2.000E-06 G/G**2	1.600E-07 G/G**3	1.000E-05 G/G	1.000E-05 G/G	2.000E-06 G/G**2	2.000E-06 G/G**2	1.500E+01 ARC SEC	1.500E+01 ARC SEC

GYROSCOPES

		WEIGHT	POWER	MTTF	MCTF	LENGTH	DIAMETER	WIDTH
1	GG 334-A	1.65000	3.00000	25000.00000	500.00000	4.70000	2.50000	-0.00000
2	RI-1139	1.45000	3.32000	18000.00000	500.00000	2.60000	3.50000	-0.00000

	R	UI	US	S	IS	IO	T			
1	5.000E-02 DEG/HOUR	6.000E-02 DEG/HR/G	1.000E-01 DEG/HR/G	4.000E-02 DEG/H/G**2	6.000E+00 ARC-SEC	7.000E+00 ARC-SEC	1.000E-04 UNITY	-0.	-0.	-0.
2	1.500E-01 DEG/HOUR	5.000E-02 DEG/HR/G	7.000E-02 DEG/HR/G	1.400E-02 DEG/H/G**2	1.500E+01 ARC-SEC	1.500E+01 ARC-SEC	8.500E-05 UNITY	-0.	-0.	-0.

FIGURE A-3a. MARS MISSION, HARDWARE DATA

		WEIGHT	POWER	MTTF	MCTF	LENGTH	DIAMETER	WIDTH
3	18-IRIG-B	1.20000	3.30000	35000.00000	500.00000	3.86000	2.00000	-0.00000

R	UI	US	S	IS	IO	T			
1.500E-02	3.000E-02	3.000E-02	3.000E-02	5.000E+00	1.000E+00	3.000E-05	-0.	-0.	-0.
DEG/HOUR	DEG/HR/G	DEG/HR/G	DEG/H/G**2	ARC-SEC	ARC-SEC	UNITY			

		WEIGHT	POWER	MTTF	MCTF	LENGTH	DIAMETER	WIDTH
4	SYG-1440	1.40000	4.00000	50000.00000	500.00000	3.86000	2.00000	-0.00000

R	UI	US	S	IS	IO	T			
5.000E-02	1.000E-01	1.000E-01	2.000E-02	5.000E+00	5.000E+00	5.000E-05	-0.	-0.	-0.
DEG/HOUR	DEG/HR/G	DEG/HR/G	DEG/H/G**2	ARC-SEC	ARC-SEC	UNITY			

		WEIGHT	POWER	MTTF	MCTF	LENGTH	DIAMETER	WIDTH
5	GG-49	-0.00000	-0.00000	-0.00000	-0.00000	-0.00000	-0.00000	-0.00000

R	UI	US	S	IS	IO	T			
9.400E-02	1.100E-01	1.900E-01	9.000E-03	1.100E+01	1.100E+01	-0.	-0.	-0.	-0.
DEG/HOUR	DEG/HR/G	DEG/HR/G	DEG/H/G**2	ARC-SEC	ARC-SEC	UNITY			

		WEIGHT	POWER	MTTF	MCTF	LENGTH	DIAMETER	WIDTH
6	GG 334-AX1	1.65000	3.00000	25000.00000	500.00000	4.70000	2.50000	-0.00000

R	UI	US	S	IS	IO	T			
5.050E-02	6.000E-02	1.000E-01	4.000E-02	6.000E+00	7.000E+00	1.000E-04	-0.	-0.	-0.
DEG/HOUR	DEG/HR/G	DEG/HR/G	DEG/H/G**2	ARC-SEC	ARC-SEC	UNITY			

		WEIGHT	POWER	MTTF	MCTF	LENGTH	DIAMETER	WIDTH
7	GG334-AX10	1.65000	3.00000	25000.00000	500.00000	4.70000	2.50000	-0.00000

R	UI	US	S	IS	IO	T			
5.500E-02	6.000E-02	1.000E-01	4.000E-02	6.000E+00	7.000E+00	1.000E-04	-0.	-0.	-0.
DEG/HOUR	DEG/HR/G	DEG/HR/G	DEG/H/G**2	ARC-SEC	ARC-SEC	UNITY			

COMPUTERS

		WEIGHT	POWER	MTTF	MCTF	LENGTH	DIAMETER	WIDTH
1	SRT RUK-2	30.00000	90.00000	6000.00000	500.00000	-0.00000	-0.00000	-0.00000

BITS	COMP.FREQ.	INT.SCHEME							
3.200E+01	1.280E+02	2.000E+00	-0.	-0.	-0.	-0.	-0.	-0.	-0.

		WEIGHT	POWER	MTTF	MCTF	LENGTH	DIAMETER	WIDTH
2	SIGN III	27.00000	115.00000	5582.00000	500.00000	-0.00000	-0.00000	-0.00000

BITS	COMP.FREQ.	INT.SCHEME

FIGURE A-3b. MARS MISSION, HARDWARE DATA

4.000E+01	5.000E+01	1.000E+00	-0.	-0.	-0.	-0.	-0.	-0.	-0.

3	1824	WEIGHT	POWER	MTTF	MCTF	LENGTH	DIAMETER	WIDTH
		34.14000	92.90000	2949.00000	500.00000	-0.00000	-0.00000	-0.00000

BITS	COMP.FREQ.	INT.SCHEME							
2.400E+01	5.000E+01	1.000E+00	-0.	-0.	-0.	-0.	-0.	-0.	-0.

4	TELEDYNE	WEIGHT	POWER	MTTF	MCTF	LENGTH	DIAMETER	WIDTH
		30.00000	70.00000	5000.00000	500.00000	-0.00000	-0.00000	-0.00000

BITS	COMP.FREQ.	INT.SCHEME							
-0.	-0.	-0.	-0.	-0.	-0.	-0.	-0.	-0.	-0.

PLATFORMS

1	H-429	WEIGHT	POWER	MTTF	MCTF	LENGTH	DIAMETER	WIDTH
		30.00000	100.00000	2000.00000	500.00000	-0.00000	-0.00000	-0.00000

1=SD,2=GIM									
1.000E+00	-0.	-0.	-0.	-0.	-0.	-0.	-0.	-0.	-0.

2	CENT.IMG	WEIGHT	POWER	MTTF	MCTF	LENGTH	DIAMETER	WIDTH
		80.00000	225.00000	1350.00000	500.00000	-0.00000	-0.00000	-0.00000

1=SD,2=GIM									
2.000E+00	-0.	-0.	-0.	-0.	-0.	-0.	-0.	-0.	-0.

STAR TRCKR

1	ITT-LUN.OB	WEIGHT	POWER	MTTF	MCTF	LENGTH	DIAMETER	WIDTH
		7.00000	8.00000	90000.00000	500.00000	-0.00000	-0.00000	-0.00000

ERROR(DEG)	FOV (DEG)	DIRCOS(1)	DIRCOS(2)	DIRCOS(3)	REF.STAR	WIDTH	LEN/ANGV.	SC. FREQ.	SCWD/RAD.
1.400E-02	8.000E+00	1.000E+00	0.	0.	2.000E+00	3.000E+00	4.000E+00	1.000E+04	1.000E-02

2	GIMB.ST	WEIGHT	POWER	MTTF	MCTF	LENGTH	DIAMETER	WIDTH
		26.50000	14.00000	45000.00000	500.00000	-0.00000	-0.00000	-0.00000

ERROR(DEG)	FOV (DEG)	DIRCOS(1)	DIRCOS(2)	DIRCOS(3)	REF.STAR	WIDTH	LEN/ANGV.	SC. FREQ.	SCWD/RAD.
7.000E-03	1.200E+02	1.000E+00	-0.	-0.	2.000E+00	2.000E+00	5.000E+00	5.000E+03	7.000E-03

SUN SENSOR

1	ADCL-1402	WEIGHT	POWER	MTTF	MCTF	LENGTH	DIAMETER	WIDTH
		2.00000	5.00000	100000.00000	500.00000	-0.00000	-0.00000	-0.00000

FIGURE A-3c. MARS MISSION, HARDWARE DATA

	ERROR(DEG)	FOV (DEG)	DIRCOS(1)	DIRCOS(2)	DIRCOS(3)						
	4.000E-02	6.400E+01	0.	1.000E+00	0.	-0.	-0.	-0.	-0.	-0.	
2	ADCL-1402X	WEIGHT	POWER	MTTF	MCTF	LENGTH	DIAMETER	WIDTH			
		2.00000	5.00000	100000.00000	500.00000	-0.00000	-0.00000	-0.00000			
	ERROR(DEG)	FOV (DEG)	DIRCOS(1)	DIRCOS(2)	DIRCOS(3)						
	8.618E-03	6.400E+01	0.	1.000E+00	0.	-0.	-0.	-0.	-0.	-0.	
3	ADCL-1402Y	WEIGHT	POWER	MTTF	MCTF	LENGTH	DIAMETER	WIDTH			
		2.00000	5.00000	100000.00000	500.00000	-0.00000	-0.00000	-0.00000			
	ERROR(DEG)	FOV (DEG)	DIRCOS(1)	DIRCOS(2)	DIRCOS(3)						
	4.000E+00	6.400E+01	0.	1.000E+00	0.	-0.	-0.	-0.	-0.	-0.	
ISU/C.P.S.											
1	H-429 SYS	WEIGHT	POWER	MTTF	MCTF	LENGTH	DIAMETER	WIDTH			
		14.25000	85.00000	10000.00000	500.00000	-0.00000	-0.00000	-0.00000			
	-0.	-0.	-0.	-0.	-0.	-0.	-0.	-0.	-0.	-0.	
COM. RCVR.											
1	MCR-503	WEIGHT	POWER	MTTF	MCTF	LENGTH	DIAMETER	WIDTH			
		3.10000	3.50000	100000.00000	500.00000	5.25000	3.37500	4.56300			
	-0.	-0.	-0.	-0.	-0.	-0.	-0.	-0.	-0.	-0.	
2	MCR-503X	WEIGHT	POWER	MTTF	MCTF	LENGTH	DIAMETER	WIDTH			
		3.10000	3.50000	1000000.00000	500.00000	5.25000	3.37500	4.56300			
	-0.	-0.	-0.	-0.	-0.	-0.	-0.	-0.	-0.	-0.	
APP. RADAR											
1	APP.RAD.X	WEIGHT	POWER	MTTF	MCTF	LENGTH	DIAMETER	WIDTH			
		15.00000	10.00000	2000.00000	500.00000	-0.00000	-0.00000	-0.00000			
	RANGE ERR.	R.RTE.ERR.									
	3.000E+02	4.000E+01	-0.	-0.	-0.	-0.	-0.	-0.	-0.	-0.	

FIGURE A-3d. MARS MISSION, HARDWARE DATA

2	APP.RADR.	WEIGHT	POWER	MTTF	MCTF	LENGTH	DIAMETER	WIDTH															
		15.00000	10.00000	2000.00000	500.00000	-0.00000	-0.00000	-0.00000															
	RANGE ERR.	R.RTE.ERR.																					
	0.	4.000E+01	-0.	-0.	-0.	-0.	-0.	-0.	-0.	-0.													
3	PERFECT	WEIGHT	POWER	MTTF	MCTF	LENGTH	DIAMETER	WIDTH															
		15.00000	10.00000	2000.00000	500.00000	-0.00000	-0.00000	-0.00000															
	RANGE ERR.	R.RTE.ERR.																					
	1.000E-06	1.000E-06	-0.	-0.	-0.	-0.	-0.	-0.	-0.	-0.													
XMITTER																							
1	TEST XMITR	WEIGHT	POWER	MTTF	MCTF	LENGTH	DIAMETER	WIDTH															
		10.00000	20.00000	10000.00000	1000.00000	-0.00000	-0.00000	-0.00000															
	PWR.OUTPUT																						
	8.000E+00	-0.	-0.	-0.	-0.	-0.	-0.	-0.	-0.	-0.													

FIGURE A-3e. MARS MISSION, HARDWARE DATA

ORIENTATION OF SPACECRAFT WRT SUN AND EARTH

DAYS	RANGE(AU)	SC-SUN ANG	EARTH-SUN ANG	LABEL
3.97	.00910	114.46	65.08	HELIOCENT.
7.93	.01798	118.94	60.18	HELIOCENT.
11.90	.02885	129.43	49.33	HELIOCENT.
15.87	.03635	130.20	48.26	HELIOCENT.
19.84	.04688	136.26	41.96	HELIOCENT.
23.80	.05627	140.71	37.35	HELIOCENT.
27.77	.06552	144.70	33.26	HELIOCENT.
31.74	.07631	150.25	27.68	HELIOCENT.
35.71	.08645	153.57	24.40	HELIOCENT.
39.67	.09873	157.82	20.23	HELIOCENT.
43.64	.11069	161.49	16.70	HELIOCENT.
47.61	.12258	-164.34	-13.97	HELIOCENT.
51.58	.13899	-166.57	-11.80	HELIOCENT.
55.54	.15114	-166.92	-11.38	HELIOCENT.
59.51	.16777	-166.08	-11.93	HELIOCENT.
63.48	.19504	-164.06	-13.46	HELIOCENT.
67.44	.20241	-161.32	-15.55	HELIOCENT.
71.41	.22423	-158.49	-17.61	HELIOCENT.
75.38	.24317	-155.15	-20.04	HELIOCENT.
79.35	.26602	-152.02	-22.18	HELIOCENT.
83.31	.29009	-148.87	-24.24	HELIOCENT.
87.28	.31427	-145.68	-26.26	HELIOCENT.
91.25	.34243	-142.78	-27.91	HELIOCENT.
95.22	.36872	-139.67	-29.70	HELIOCENT.
99.18	.39816	-136.82	-31.16	HELIOCENT.
103.15	.42902	-134.04	-32.49	HELIOCENT.
107.12	.45985	-131.24	-33.77	HELIOCENT.
111.09	.49406	-128.68	-34.75	HELIOCENT.
115.05	.52999	-125.99	-35.81	HELIOCENT.
119.02	.56233	-123.48	-36.64	HELIOCENT.
122.99	.59906	-121.04	-37.35	HELIOCENT.
126.96	.63549	-118.57	-38.04	HELIOCENT.
130.92	.67472	-116.27	-38.51	HELIOCENT.
134.89	.71292	-113.89	-39.03	HELIOCENT.
138.86	.75288	-111.63	-39.39	HELIOCENT.
142.82	.79405	-109.42	-39.66	HELIOCENT.
146.79	.83459	-107.18	-39.93	HELIOCENT.
150.76	.87741	-105.07	-40.03	HELIOCENT.
154.73	.91923	-102.90	-40.17	HELIOCENT.
158.69	.96221	-100.80	-40.20	HELIOCENT.
162.66	1.00618	-98.75	-40.16	HELIOCENT.
166.63	1.04913	-96.69	-40.13	HELIOCENT.
170.60	1.09309	-94.70	-39.98	HELIOCENT.
174.56	1.13674	-92.60	-39.93	HELIOCENT.
178.53	1.17746	-90.53	-39.83	HELIOCENT.
182.50	1.22062	-88.56	-39.63	HELIOCENT.
186.47	1.26522	-86.66	-39.34	HELIOCENT.
190.43	1.31128	-84.84	-38.96	HELIOCENT.
194.40	1.35881	-83.07	-38.51	HELIOCENT.
198.37	1.40434	-81.24	-38.10	TARGET CT.
202.33	1.45435	-79.46	-37.55	TARGET CT.

MAXIMUM RANGE = 7.13802448E+11FT

FIGURE A-4. MARS MISSION, COMMUNICATION GEOMETRY

for the heliocentric portion of the mission with the exception of the last two points. These are within the sphere of influence of Mars. At the bottom of this table the maximum range needed for communication subsystem design calculations is printed. The maximum range for this mission is 7.138×10^{11} feet. Unlike the Jupiter mission, the maximum range occurs at planet encounter.

Schedules and Subschedules

The schedule and subschedules used for the Mars mission analysis are discussed in the following sections.

Schedule No. 1. Schedule No. 1 is shown in Figure A-5. This is the only schedule used in studying the Mars mission. This schedule consists of: launch operations, turning on the communications receiver, turning off the inertial sensing unit and computer and raising the attitude control dead band to 20 degrees at booster cutoff. Twenty decision points are then shown in the schedule, starting with one immediately after booster cutoff. The second decision point occurs 10 days into the mission with additional decision points every 10 days through 190 days. Decisions points, indicated by the operation code 90, permit the insertion of various subschedules into the main schedule as indicated by the user or by the schedule optimization routines at program execution time. Following the variable 20 decision points, two fixed decision points are included. These indicate that Subschedule No. 4 is to be used. These two points are at 196 days and 198 days into the mission. Subschedule 4, described in a later paragraph, is an update and correction subschedule which utilizes planetary approach radar.

Subschedule No. 1. Subschedule No. 1 is shown in Figure A-6a. This subschedule is the basic update and correction subschedule for the heliocentric portion of the mission. The subschedule begins with the turning on of the computer, ISU, Sun sensor, star tracker, attitude control, and transmitter. Three minutes later, the spacecraft is allowed to begin maneuvering to acquire the Sun and Canopus, the specified star. One minute is allowed for maneuvering to the nominal orientation of the spacecraft which would provide the required lines of sight to these celestial bodies. One minute is then allowed for searching about the nominal orientation for final acquisition. Thirty-two minutes into the subschedule, the dead band is dropped to 0.1 degree. This narrow dead band is required to insure precise pointing of the spacecraft for the midcourse correction burn. Thirty-three minutes into the schedule, an update takes place with any DSIF radar which can view the spacecraft at that time. Thirty-four minutes into the subschedule, the midcourse correction is made. It should be noted that the midcourse correction is made to zero the computed deviations of position at the time indicated on the right-hand side of Subschedule No. 1. This time, 1.6934×10^7 seconds into the mission, is the time at which the spacecraft will cross into the Mars sphere of influence. A later midcourse correction will take place at that time to zero the velocity deviations as the spacecraft comes back onto the nominal trajectory at the Mars sphere of influence. After the midcourse correction, the dead band is raised to 20 degrees and the subsystems required for making the correction are turned off to terminate the subschedule.

SCHEDULE NO. 1

			1	-0	-0	START THE LAUNCH	-0.	
			6	7	1	TURN ON COM.RCVR.	-0.	
-0	0D 0H57M27.00S	3447.00	6	2	0	TURN OFF ISU	-0.	
			6	1	0	TURN OFF COMPUTER	-0.	
			8	-0	-0	RAISE DEAD BAND		.20000000E+02
			90	-0	-0	DECISION POINT	-0.	
-0	10D 0H 0M 0.00S	864000.00	90	-0	-0	DECISION POINT	-0.	
-0+	20D 0H 0M 0.00S	1728000.00	90	-0	-0	DECISION POINT	-0.	
-0+	30D 0H 0M 0.00S	2592000.00	90	-0	-0	DECISION POINT	-0.	
-0+	40D 0H 0M 0.00S	3456000.00	90	-0	-0	DECISION POINT	-0.	
-0+	50D 0H 0M 0.00S	4320000.00	90	-0	-0	DECISION POINT	-0.	
-0+	60D 0H 0M 0.00S	5184000.00	90	-0	-0	DECISION POINT	-0.	
-0+	70D 0H 0M 0.00S	6048000.00	90	-0	-0	DECISION POINT	-0.	
-0+	80D 0H 0M 0.00S	6912000.00	90	-0	-0	DECISION POINT	-0.	
-0+	90D 0H 0M 0.00S	7776000.00	90	-0	-0	DECISION POINT	-0.	
-0+	100D 0H 0M 0.00S	8640000.00	90	-0	-0	DECISION POINT	-0.	
-0+	110D 0H 0M 0.00S	9504000.00	90	-0	-0	DECISION POINT	-0.	
-0+	120D 0H 0M 0.00S	10368000.00	90	-0	-0	DECISION POINT	-0.	
-0+	130D 0H 0M 0.00S	11232000.00	90	-0	-0	DECISION POINT	-0.	
-0+	140D 0H 0M 0.00S	12096000.00	90	-0	-0	DECISION POINT	-0.	
-0+	150D 0H 0M 0.00S	12960000.00	90	-0	-0	DECISION POINT	-0.	
-0+	160D 0H 0M 0.00S	13824000.00	90	-0	-0	DECISION POINT	-0.	
-0+	170D 0H 0M 0.00S	14688000.00	90	-0	-0	DECISION POINT	-0.	
-0+	180D 0H 0M 0.00S	15552000.00	90	-0	-0	DECISION POINT	-0.	
-0+	190D 0H 0M 0.00S	16416000.00	90	-0	-0	DECISION POINT	-0.	
-0	196D 0H 0M 0.00S	16934400.00	90	4	-0	APPROACH CORRECTION	-0.	
-0+	198D 0H 0M 0.00S	17107200.00	90	4	-0	FINAL UPDATE/CORRECTION	-0.	
-0	198D 8H49M 9.00S	17138949.00	99	2	1	END OF THE SCHEDULE	-0.	

OPT.=
- 0 FOR ALL SYSTEMS
- 1 FOR NON OPTICAL
- 2 FOR OPTICAL

FIGURE A-5. MARS MISSION, MAIN SCHEDULE

SUBSCHEDULE NO. 1

				6	1	1	TURN ON COMPUTER	-0.
				6	2	1	TURN ON ISU	-0.
				6	5	1	TURN ON SUN SENSOR	-0.
				6	4	1	TURN ON STAR TRACKER	-0.
				6	3	1	TURN ON ATT CONT.	-0.
				6	9	1	TURN ON TRANSMITTER	-0.
-0	0D 0H30M 0.00S		1800.00	9	2	1	BEGIN MANEUVERING	-0.
-0	0D 0H31M 0.00S		1860.00	9	2	2	BEGIN SEARCH	-0.
-0	0D 0H32M 0.00S		1920.00	9	2	3	END SEARCH	-0.
				8	-0.	-0	DROP DEAD BAND	.10000000E+00
-0	0D 0H33M 0.00S		1980.00	3	0	5	UPDATE WITH ANY DSIF	-0.
-0+	0D 0H34M 0.00S		2040.00	5	0	-0	MAKE MIDCOURSE TO ZERO AT T=	.16934400E+08
-0+	0D 0H35M 0.00S		2100.00	8	-0	-0	RAISE DEAD BAND	.20000000E+02
				6	9	0	TURN OFF TRANSMITTER	-0.
				6	3	-0		-0.
				6	1	-0		-0.
				6	2	-0		-0.
				6	4	-0		-0.
				6	5	-0		-0.
				99	-0	-0	END OF SUBSCHEDULE	-0.

OPT.=
0 FOR ALL SYSTEMS
1 FOR NON OPTICAL
2 FOR OPTICAL

FIGURE A-6a. MARS MISSION, SUBSCHEDULES

Subschedule No. 2. Subschedule No. 2 is shown in Figure A-6b and is a simple update subschedule with only one instruction, update with any DSIF radar which can view the spacecraft at that time.

Subschedule No. 3. Subschedule No. 3 is a planetary approach update with no midcourse correction. The subschedule begins by turning on the approach radar and transmitter. Two minutes later the update is performed. The approach radar and the transmitter are subsequently turned off. The transmitter is used during this subschedule because it is assumed that the data obtained from the planetary approach radar must be telemetered to the earth for processing. This subschedule is shown in Figure A-6c.

Subschedule No. 4. Subschedule No. 4 is shown in Figure A-6d. This subschedule is a planetary approach update and midcourse correction schedule. The subschedule begins by turning on the computer, the ISU Sun sensor, star tracker, attitude control system, and approach radar. The star and Sun acquisition maneuvering and search are performed followed by dropping the dead band and updates, first with the DSIF, then the approach radar, prior to making the midcourse correction. The dead band is then raised back to 20 degrees and the subsystems are turned off to complete the subschedule.

Subschedule No. 5. Subschedule No. 5 is shown in Figure A-6e. This subschedule is identical to Subschedule No. 1 with the exception that the midcourse correction is made to zero the computed deviations of position at the target time (nominal periapsis of planetary swingby).

Subschedules No. 3 and 5 were not used in the example of the Mars astrionics analysis presented in this appendix.

Midcourse Correction Optimization

The search for an optimum correction schedule on the Mars trajectory, is shown in Figures A-7a and A-7b. The times of the decision points as specified in Schedule 1 are shown at the top of Figure A-7a. Subschedule No. 2 is used for updates and Subschedule No. 1 for corrections. Schedule No. 1 includes two midcourse corrections after the 20 decision points. Thus, the final correction which is always required in Pfeiffer's technique does not appear in this printout since it does not occur at one of the decision points. The penalty for the optimum schedule is 3498.52 pounds with corrections at the first, seventh, and eleventh decision points. The algorithm encounters this combination of corrections on the first line of Figure A-7b. The remainder of Figure A-7b shows that additional midcourse corrections beyond the eleventh decision point do not decrease the penalty any further. A complete optimum schedule is shown in Figure A-8.

```
                    SUBSCHEDULE NO. 2
-0      0D 0H33M 0.00S          1980.00   3    0    5    UPDATE WITH ANY DSIF          -0.
                                         99   -0   -0    END OF SUBSCHEDULE            -0.

        OPT.=
             0 FOR ALL SYSTEMS
             1 FOR NON OPTICAL
             2 FOR OPTICAL
```

FIGURE A-6b. MARS MISSION, SUBSCHEDULES

SUBSCHEDULE NO. 3

			6	8	1	TURN ON APPROACH RADAR	-0.
			6	9	1	TURN ON TRANSMITTER	-0.
-0.	0D 0H 2M 0.00S	120.00	10	-0	-0	UPDATE	-0.
-0.	0D 0H 2M30.00S	150.00	6	8	0	TURN OFF APPROACH RADAR	-0.
			6	9	0	TURN OFF TRANSMITTER	-0.
			99	-0	-0	END OF SUB SCHEDULE	-0.

OPT.=

0 FOR ALL SYSTEMS
1 FOR NON OPTICAL
2 FOR OPTICAL

FIGURE A-6c. MARS MISSION, SUBSCHEDULES

SUBSCHEDULE NO. 4

			6	1	1	TURN ON COMPUTER	-0.	
			6	2	1	TURN ON ISU	-0.	
			6	5	1	TURN ON SUN SENSOR	-0.	
			6	4	1	TURN ON STAR TRACKER	-0.	
			6	3	1	TURN ON ATT CONT.	-0.	
			6	8	1	TURN ON APPROACH RADAR	-0.	
-0	0D 0H30M 0.00S	1800.00	9	2	1	BEGIN MANEUVERING	-0.	
-0	0D 0H31M 0.00S	1860.00	9	2	2	BEGIN SEARCH	-0.	
-0	0D 0H32M 0.00S	1920.00	9	2	3	END SEARCH	-0.	
			8	-0.	-0	DROP DEAD BAND		.10000000E-01
-0	0D 0H33M 0.00S	1980.00	3	0	5	UPDATE WITH ANY DSIF	-0.	
			10	-0	-0	APPRCH RADAR UPDATE	-0.	
-0.	0D 0H34M 0.00S	2040.00	5	0	-0	MAKE MIDCOURSE CORRECTION	-0.	
-0.	0D 0H35M 0.00S	2100.00	8	-0	-0	RAISE DEAD BAND		.20000000E+02
			6	8	0	TURN OFF APPROACH RADAR	-0.	
			6	3	-0		-0.	
			6	1	-0		-0.	
			6	2	-0		-0.	
			6	4	-0		-0.	
			6	5	-0		-0.	
			99	-0	-0	END OF SUBSCHEDULE	-0.	

OPT.=
- 0 FOR ALL SYSTEMS
- 1 FOR NON OPTICAL
- 2 FOR OPTICAL

FIGURE A-6d. MARS MISSION, SUBSCHEDULES

SUBSCHEDULE NO. 5

				6	1	1	TURN ON COMPUTER	-0.
				6	2	1	TURN ON ISU	-0.
				6	5	1	TURN ON SUN SENSOR	-0.
				6	4	1	TURN ON STAR TRACKER	-0.
				6	3	1	TURN ON ATT CONT.	-0.
				6	8	1	TURN ON APPROACH RADAR	-0.
-0	0D 0H30M 0.00S		1800.00	9	2	1	BEGIN MANEUVERING	-0.
-0	0D 0H31M 0.00S		1860.00	9	2	2	BEGIN SEARCH	-0.
-0	0D 0H32M 0.00S		1920.00	9	2	3	END SEARCH	-0.
				8	-0	-0	DROP DEAD BAND	.10000000E-01
-0	0D 0H33M 0.00S		1980.00	3	0	5	UPDATE WITH ANY DSIF	-0.
				10	-0	-0	APPRCH RADAR UPDATE	-0.
-0+	0D 0H34M 0.00S		2040.00	5	2	-0	MAKE MIDCOURSE CORRECTION	-0.
-0+	0D 0H35M 0.00S		2100.00	8	-0	-0	RAISE DEAD BAND	.20000000E+02
				6	8	0	TURN OFF APPROACH RADAR	-0.
				6	3	-0		-0.
				6	1	-0		-0.
				6	2	-0		-0.
				6	4	-0		-0.
				6	5	-0		-0.
				99	-0	-0	END OF SUBSCHEDULE	-0.

OPT.=
0 FOR ALL SYSTEMS
1 FOR NON OPTICAL
2 FOR OPTICAL

FIGURE A-6e. MARS MISSION, SUBSCHEDULES

SCHEDULE OPTIMIZATION OF PENALTY (MODE 3)

20 DECISION POINTS FROM SCHEDULE 1 USING PFEIFFERS TECHNIQUE

DECISION TIMES

0D	0H57M27.00S	(3447.0 SEC.)
10D	0H 0M 0.00S	(864000.0 SEC.)
20D	0H 0M 0.00S	(1728000.0 SEC.)
30D	0H 0M 0.00S	(2592000.0 SEC.)
40D	0H 0M 0.00S	(3456000.0 SEC.)
50D	0H 0M 0.00S	(4320000.0 SEC.)
60D	0H 0M 0.00S	(5184000.0 SEC.)
70D	0H 0M 0.00S	(6048000.0 SEC.)
80D	0H 0M 0.00S	(6912000.0 SEC.)
90D	0H 0M 0.00S	(7776000.0 SEC.)
100D	0H 0M 0.00S	(8640000.0 SEC.)
110D	0H 0M 0.00S	(9504000.0 SEC.)
120D	0H 0M 0.00S	(10368000.0 SEC.)
130D	0H 0M 0.00S	(11232000.0 SEC.)
140D	0H 0M 0.00S	(12096000.0 SEC.)
150D	0H 0M 0.00S	(12960000.0 SEC.)
160D	0H 0M 0.00S	(13824000.0 SEC.)
170D	0H 0M 0.00S	(14688000.0 SEC.)
180D	0H 0M 0.00S	(15552000.0 SEC.)
190D	0H 0M 0.00S	(16416000.0 SEC.)

U = SUBSCHEDULE NO. 2
C = SUBSCHEDULE NO. 1

PENALTY		SEQUENCE 1 2 3 4 5 6 7 8 9 10 11 12 13 14 15 16 17 18 19 20	
PEN1=	8436.86800	U U U U U U U U U U U U U U U U U U U U	Ex. TIME= 0.00
PEN2=	8433.35019	C U U U U U U U U U U U U U U U U U U U	
PEN3=	8434.68692	U C U U U U U U U U U U U U U U U U U U	
PEN2=	8435.48512	C C U U U U U U U U U U U U U U U U U U	Ex. TIME= 49.15
PEN2=	6628.61941	C U C U U U U U U U U U U U U U U U U U	Ex. TIME= 67.70
PEN3=	4394.87040	C U U C U U U U U U U U U U U U U U U U	
PEN3=	4072.12550	C U U U C U U U U U U U U U U U U U U U	Ex. TIME= 104.91
PEN3=	4027.62450	C U U U U C U U U U U U U U U U U U U U	Ex. TIME= 123.55
PEN3=	3969.88234	C U U U U U C U U U U U U U U U U U U U	Ex. TIME= 142.21
PEN3=	4011.74145	C U U U U U U C U U U U U U U U U U U U	Ex. TIME= 160.87
PEN2=	3606.65500	C U U U U U C C U U U U U U U U U U U U	Ex. TIME= 179.53
PEN3=	3606.95706	C U U U U U C U C U U U U U U U U U U U	
PEN3=	3499.93171	C U U U U U C U U C U U U U U U U U U U	Ex. TIME= 219.42
			Ex. TIME= 239.37

FIGURE A-7a. MARS MISSION, SCHEDULE OPTIMIZATION

PEN3=	3498.51670	C	U	U	U	U	U	C	U	U	U	C	U	U	U	U	U	U	U	U	U	
PEN3=	3499.04656	C	U	U	U	U	U	C	U	U	U	U	C	U	U	U	U	U	U	U	U	Ex. TIME= 259.33
PEN2=	3542.88260	C	U	U	U	U	U	C	U	U	U	C	C	U	U	U	U	U	U	U	U	Ex. TIME= 279.27
PEN2=	3542.56426	C	U	U	U	U	U	C	U	U	U	C	U	C	U	U	U	U	U	U	U	Ex. TIME= 300.48
PEN2=	3542.32113	C	U	U	U	U	U	C	U	U	U	C	U	U	C	U	U	U	U	U	U	Ex. TIME= 321.72
PEN2=	3542.29979	C	U	U	U	U	U	C	U	U	U	C	U	U	U	C	U	U	U	U	U	Ex. TIME= 342.98
PEN2=	3542.26352	C	U	U	U	U	U	C	U	U	U	C	U	U	U	U	C	U	U	U	U	Ex. TIME= 364.24
PEN2=	3542.24588	C	U	U	U	U	U	C	U	U	U	C	U	U	U	U	U	C	U	U	U	Ex. TIME= 385.52
PEN2=	3542.23139	C	U	U	U	U	U	C	U	U	U	C	U	U	U	U	U	U	C	U	U	Ex. TIME= 406.77
PEN2=	3541.97854	C	U	U	U	U	U	C	U	U	U	C	U	U	U	U	U	U	U	C	U	Ex. TIME= 428.03
PEN2=	3541.98032	C	U	U	U	U	U	C	U	U	U	C	U	U	U	U	U	U	U	U	C	Ex. TIME= 449.29

FIGURE A-1b. MARS MISSION, SCHEDULE OPTIMIZATION

DUMP OF A COMPLETE SCHEDULE

	-1.0	0D 0H 0M-1.00S	1	-0	-0	-0.	PRINT ONLY
0.0							
	-1.0	0D 0H 0M-1.00S	6	7	1	-0.	SUBSYSTEM ON/OFF
3448.0							
	3447.0	0D 0H57M27.00S	6	2	0	-0.	SUBSYSTEM ON/OFF
0.0							
	3447.0	0D 0H57M27.00S	6	1	0	-0.	SUBSYSTEM ON/OFF
0.0							
	3447.0	0D 0H57M27.00S	8	-0	-0	2.0000E+01	CHANGE DEADBAND
0.0							
	3447.0	0D 0H57M27.00S	6	1	1	2.1000E+03	SUBSYSTEM ON/OFF
0.0							
	3447.0	0D 0H57M27.00S	6	2	1	-0.	SUBSYSTEM ON/OFF
0.0							
	3447.0	0D 0H57M27.00S	6	5	1	-0.	SUBSYSTEM ON/OFF
0.0							
	3447.0	0D 0H57M27.00S	6	4	1	-0.	SUBSYSTEM ON/OFF
0.0							
	3447.0	0D 0H57M27.00S	6	3	1	-0.	SUBSYSTEM ON/OFF
0.0							
	3447.0	0D 0H57M27.00S	6	9	1	-0.	SUBSYSTEM ON/OFF
1800.0							
	5247.0	0D 1H27M27.00S	9	2	1	-0.	STAR MANV/SEARCH
60.0							
	5307.0	0D 1H28M27.00S	9	2	2	-0.	STAR MANV/SEARCH
60.0							
	5367.0	0D 1H29M27.00S	9	2	3	-0.	STAR MANV/SEARCH
0.0							
	5367.0	0D 1H29M27.00S	8	-0	-0	1.0000E-01	CHANGE DEADBAND
60.0							
	5427.0	0D 1H30M27.00S	3	0	5	-0.	RADAR UPDATE
60.0							
	5487.0	0D 1H31M27.00S	5	0	-0	1.6934E+07	MIDCOURSE CORRECTION
60.0							
	5547.0	0D 1H32M27.00S	8	-0	-0	2.0000E+01	CHANGE DEADBAND
0.0							
	5547.0	0D 1H32M27.00S	6	9	0	-0.	SUBSYSTEM ON/OFF
0.0							
	5547.0	0D 1H32M27.00S	6	3	-0	-0.	SUBSYSTEM ON/OFF
0.0							
	5547.0	0D 1H32M27.00S	6	1	-0	-0.	SUBSYSTEM ON/OFF
0.0							
	5547.0	0D 1H32M27.00S	6	2	-0	-0.	SUBSYSTEM ON/OFF
0.0							
	5547.0	0D 1H32M27.00S	6	4	-0	-0.	SUBSYSTEM ON/OFF
0.0							
	5547.0	0D 1H32M27.00S	6	5	-0	-0.	SUBSYSTEM ON/OFF
860433.0							
	865980.0	10D 0H33M 0.00S	3	0	5	-0.	RADAR UPDATE
864000.0							

FIGURE A-8a. MARS MISSION, DETAILED SCHEDULE OUTPUT

SCHEDULE DUMP CONTINUED

	1729980.0	20D 0H33M 0.00S	3	0	5	-0.		RADAR UPDATE
864000.0								
	2593980.0	30D 0H33M 0.00S	3	0	5	-0.		RADAR UPDATE
864000.0								
	3457980.0	40D 0H33M 0.00S	3	0	5	-0.		RADAR UPDATE
864000.0								
	4321980.0	50D 0H33M 0.00S	3	0	5	-0.		RADAR UPDATE
862020.0								
	5184000.0	60D 0H 0M 0.00S	6	1	1	2.1000E+03		SUBSYSTEM ON/OFF
0.0								
	5184000.0	60D 0H 0M 0.00S	6	2	1	-0.		SUBSYSTEM ON/OFF
0.0								
	5184000.0	60D 0H 0M 0.00S	6	5	1	-0.		SUBSYSTEM ON/OFF
0.0								
	5184000.0	60D 0H 0M 0.00S	6	4	1	-0.		SUBSYSTEM ON/OFF
0.0								
	5184000.0	60D 0H 0M 0.00S	6	3	1	-0.		SUBSYSTEM ON/OFF
0.0								
	5184000.0	60D 0H 0M 0.00S	6	9	1	-0.		SUBSYSTEM ON/OFF
0.0								
	5185800.0	60D 0H30M 0.00S	9	2	1	-0.		STAR MANV/SEARCH
1800.0								
	5185860.0	60D 0H31M 0.00S	9	2	2	-0.		STAR MANV/SEARCH
60.0								
	5185920.0	60D 0H32M 0.00S	9	2	3	-0.		STAR MANV/SEARCH
60.0								
	5185920.0	60D 0H32M 0.00S	8	-0	-0	1.0000E-01		CHANGE DEADBAND
0.0								
	5185980.0	60D 0H33M 0.00S	3	0	5	-0.		RADAR UPDATE
60.0								
	5186040.0	60D 0H34M 0.00S	5	0	-0	1.6934E+07		MIDCOURSE CORRECTION
60.0								
	5186100.0	60D 0H35M 0.00S	8	-0	-0	2.0000E+01		CHANGE DEADBAND
60.0								
	5186100.0	60D 0H35M 0.00S	6	9	0	-0.		SUBSYSTEM ON/OFF
0.0								
	5186100.0	60D 0H35M 0.00S	6	3	-0	-0.		SUBSYSTEM ON/OFF
0.0								
	5186100.0	60D 0H35M 0.00S	6	1	-0	-0.		SUBSYSTEM ON/OFF
0.0								
	5186100.0	60D 0H35M 0.00S	6	2	-0	-0.		SUBSYSTEM ON/OFF
0.0								
	5186100.0	60D 0H35M 0.00S	6	4	-0	-0.		SUBSYSTEM ON/OFF
0.0								
	5186100.0	60D 0H35M 0.00S	6	5	-0	-0.		SUBSYSTEM ON/OFF
0.0								
863080.0								
	6049980.0	70D 0H33M 0.00S	3	0	5	-0.		RADAR UPDATE
864000.0								
	6913980.0	80D 0H33M 0.00S	3	0	5	-0.		RADAR UPDATE
864000.0								

FIGURE A-8b. MARS MISSION, DETAILED SCHEDULE OUTPUT

SCHEDULE DUMP CONTINUED

	7777980.0	90D 0H33M 0.00S	3	0	5	-0.	RADAR UPDATE
862020.0							
	8640000.0	100D 0H 0M 0.00S	6	1	1	2.1000E+03	SUBSYSTEM ON/OFF
0.0							
	8640000.0	100D 0H 0M 0.00S	6	2	1	-0.	SUBSYSTEM ON/OFF
0.0							
	8640000.0	100D 0H 0M 0.00S	6	5	1	-0.	SUBSYSTEM ON/OFF
0.0							
	8640000.0	100D 0H 0M 0.00S	6	4	1	-0.	SUBSYSTEM ON/OFF
0.0							
	8640000.0	100D 0H 0M 0.00S	6	3	1	-0.	SUBSYSTEM ON/OFF
0.0							
	8640000.0	100D 0H 0M 0.00S	6	9	1	-0.	SUBSYSTEM ON/OFF
1800.0							
	8641800.0	100D 0H30M 0.00S	9	2	1	-0.	STAR MANV/SEARCH
60.0							
	8641860.0	100D 0H31M 0.00S	9	2	2	-0.	STAR MANV/SEARCH
60.0							
	8641920.0	100D 0H32M 0.00S	9	2	3	-0.	STAR MANV/SEARCH
0.0							
	8641920.0	100D 0H32M 0.00S	8	-0	-0	1.0000E-01	CHANGE DEADBAND
60.0							
	8641980.0	100D 0H33M 0.00S	3	0	5	-0.	RADAR UPDATE
60.0							
	8642040.0	100D 0H34M 0.00S	5	0	-0	1.6934E+07	MIDCOURSE CORRECTION
60.0							
	8642100.0	100D 0H35M 0.00S	8	-0	-0	2.0000E+01	CHANGE DEADBAND
0.0							
	8642100.0	100D 0H35M 0.00S	6	9	0	-0.	SUBSYSTEM ON/OFF
0.0							
	8642100.0	100D 0H35M 0.00S	6	3	-0	-0.	SUBSYSTEM ON/OFF
0.0							
	8642100.0	100D 0H35M 0.00S	6	1	-0	-0.	SUBSYSTEM ON/OFF
0.0							
	8642100.0	100D 0H35M 0.00S	6	2	-0	-0.	SUBSYSTEM ON/OFF
0.0							
	8642100.0	100D 0H35M 0.00S	6	4	-0	-0.	SUBSYSTEM ON/OFF
0.0							
	8642100.0	100D 0H35M 0.00S	6	5	-0	-0.	SUBSYSTEM ON/OFF
863880.0							
	9505980.0	110D 0H33M 0.00S	3	0	5	-0.	RADAR UPDATE
864000.0							
	10369980.0	120D 0H33M 0.00S	3	0	5	-0.	RADAR UPDATE
864000.0							
	11233980.0	130D 0H33M 0.00S	3	0	5	-0.	RADAR UPDATE
864000.0							
	12097980.0	140D 0H33M 0.00S	3	0	5	-0.	RADAR UPDATE
864000.0							
	12961980.0	150D 0H33M 0.00S	3	0	5	-0.	RADAR UPDATE
864000.0							

FIGURE A-8c. MARS MISSION, DETAILED SCHEDULE OUTPUT

SCHEDULE DUMP CONTINUED

	13825980.0	160D 0H33M 0.00S	3	0	5	-0.	RADAR UPDATE
864000.0							
	14689980.0	170D 0H33M 0.00S	3	0	5	-0.	RADAR UPDATE
864000.0							
	15553980.0	180D 0H33M 0.00S	3	0	5	-0.	RADAR UPDATE
864000.0							
	16417980.0	190D 0H33M 0.00S	3	0	5	-0.	RADAR UPDATE
516420.0							
	16934400.0	196D 0H 0M 0.00S	6	1	1	-0.	SUBSYSTEM ON/OFF
0.0							
	16934400.0	196D 0H 0M 0.00S	6	2	1	-0.	SUBSYSTEM ON/OFF
0.0							
	16934400.0	196D 0H 0M 0.00S	6	5	1	-0.	SUBSYSTEM ON/OFF
0.0							
	16934400.0	196D 0H 0M 0.00S	6	4	1	-0.	SUBSYSTEM ON/OFF
0.0							
	16934400.0	196D 0H 0M 0.00S	6	3	1	-0.	SUBSYSTEM ON/OFF
0.0							
	16934400.0	196D 0H 0M 0.00S	6	8	1	-0.	SUBSYSTEM ON/OFF
1800.0							
	16936200.0	196D 0H30M 0.00S	9	2	1	-0.	STAR MANV/SEARCH
60.0							
	16936260.0	196D 0H31M 0.00S	9	2	2	-0.	STAR MANV/SEARCH
60.0							
	16936320.0	196D 0H32M 0.00S	9	2	3	-0.	STAR MANV/SEARCH
0.0							
	16936320.0	196D 0H32M 0.00S	8	-0	-0	1.0000E-02	CHANGE DEADBAND
60.0							
	16936380.0	196D 0H33M 0.00S	3	0	5	-0.	RADAR UPDATE
0.0							
	16936380.0	196D 0H33M 0.00S	10	-0	-0	-0.	HOR.SENSOR UPDATE
60.0							
	16936440.0	196D 0H34M 0.00S	5	0	-0	-0.	MIDCOURSE CORRECTION
60.0							
	16936500.0	196D 0H35M 0.00S	8	-0	-0	2.0000E+01	CHANGE DEADBAND
0.0							
	16936500.0	196D 0H35M 0.00S	6	8	0	-0.	SUBSYSTEM ON/OFF
0.0							
	16936500.0	196D 0H35M 0.00S	6	3	-0	-0.	SUBSYSTEM ON/OFF
0.0							
	16936500.0	196D 0H35M 0.00S	6	1	-0	-0.	SUBSYSTEM ON/OFF
0.0							
	16936500.0	196D 0H35M 0.00S	6	2	-0	-0.	SUBSYSTEM ON/OFF
0.0							
	16936500.0	196D 0H35M 0.00S	6	4	-0	-0.	SUBSYSTEM ON/OFF
0.0							
	16936500.0	196D 0H35M 0.00S	6	5	-0	-0.	SUBSYSTEM ON/OFF
170700.0							
	17107200.0	198D 0H 0M 0.00S	6	1	1	-0.	SUBSYSTEM ON/OFF
0.0							

FIGURE A-8d. MARS MISSION, DETAILED SCHEDULE OUTPUT

SCHEDULE DUMP CONTINUED

	17107200.0	1980 0H 0M 0.00S	6	2	1	-0.		SUBSYSTEM ON/OFF
0.0								
	17107200.0	1980 0H 0M 0.00S	6	5	1	-0.		SUBSYSTEM ON/OFF
0.0								
	17107200.0	1980 0H 0M 0.00S	6	4	1	-0.		SUBSYSTEM ON/OFF
0.0								
	17107200.0	1980 0H 0M 0.00S	6	3	1	-0.		SUBSYSTEM ON/OFF
0.0								
	17107200.0	1980 0H 0M 0.00S	6	8	1	-0.		SUBSYSTEM ON/OFF
1800.0								
	17109000.0	1980 0H30M 0.00S	9	2	1	-0.		STAR MANV/SEARCH
60.0								
	17109060.0	1980 0H31M 0.00S	9	2	2	-0.		STAR MANV/SEARCH
60.0								
	17109120.0	1980 0H32M 0.00S	9	2	3	-0.		STAR MANV/SEARCH
0.0								
	17109120.0	1980 0H32M 0.00S	8	-0	-0	1.0000E-02		CHANGE DEADBAND
60.0								
	17109180.0	1980 0H33M 0.00S	3	0	5	-0.		RADAR UPDATE
0.0								
	17109180.0	1980 0H33M 0.00S	10	-0	-0	-0.		HOR.SENSOR UPDATE
60.0								
	17109240.0	1980 0H34M 0.00S	5	0	-0	-0.		MIDCOURSE CORRECTION
60.0								
	17109300.0	1980 0H35M 0.00S	8	-0	-0	2.0000E+01		CHANGE DEADBAND
0.0								
	17109300.0	1980 0H35M 0.00S	6	8	0	-0.		SUBSYSTEM ON/OFF
0.0								
	17109300.0	1980 0H35M 0.00S	6	3	-0	-0.		SUBSYSTEM ON/OFF
0.0								
	17109300.0	1980 0H35M 0.00S	6	1	-0	-0.		SUBSYSTEM ON/OFF
0.0								
	17109300.0	1980 0H35M 0.00S	6	2	-0	-0.		SUBSYSTEM ON/OFF
0.0								
	17109300.0	1980 0H35M 0.00S	6	4	-0	-0.		SUBSYSTEM ON/OFF
0.0								
	17109300.0	1980 0H35M 0.00S	6	5	-0	-0.		SUBSYSTEM ON/OFF
29649.0								
	17138949.0	1980 8H49M 9.00S	99	2	1	-0.		

FIGURE A-8e. MARS MISSION, DETAILED SCHEDULE OUTPUT

Detailed Results of the Mars Mission Using the Optimal Midcourse Correction Strategy

The remainder of this appendix presents the error analysis and penalty evaluation results for the reference astrionics system on the optimal midcourse correction schedule. The reference system consists of three Arma D4-E accelerometers, three GG334A gyroscopes, a designed inertial sensing unit, the SRT Ruk-2 computer, the ITT Lunar Orbiter star tracker, the Adcole 1402 Sun sensor, the MCR503X receiver, a hypothetical approach radar named APP. RAD. X and a designed transmitter.

Error Analysis

Detailed printing of the error analysis results as the schedule is evaluated are shown in Figures A-9a throught A-9g. The analysis begins at the top of Figure A-9a with the launch vehicle on the pad at time equal to zero. It should be noted that there are no initial errors in position, velocity, or attitude in this analysis. After the initial conditions, the next block of printing occurs 57 minutes, 27 seconds, into the mission. Between time equals zero and this point, the launch vehicle burns for 617.7 seconds, the errors for that burn are added, the last launch vehicle stage and spacecraft remains in the parking orbit for 41 minutes, 58 seconds, and a second burn of 310 seconds is initiated. The errors for the final burn are added and approximately one second of coasting occurs before the print point. The print point is approximately at final launch vehicle cutoff. Since the launch vehicle burns are assumed to be under perfect closed loop control, the computed deviations are zero. The deviations and errors are equal and are as shown. The strapdown error analysis program, SEAP, was not rerun for the Mars booster trajectory. Thus these injection errors are only approximate as the sensitivities used are those for the Jupiter mission.

The first decision point occurs immediately after booster cutoff and the schedule optimizing technique indicates a midcourse correction should be performed at the first decision point. The ISU and the computer are shown turned off but are turned back on immediately to initiate the midcourse correction subschedule. In actual flight operations, the ISU and computer would not be turned off and then turned back on again. The operations for a midcourse correction as indicated in Subschedule No. 1 are performed as shown. A midcourse correction with an expected value of 136 feet per second is indicated at the top of Figure A-9b. The subschedule concludes with the turning off of the various subsystems necessary to perform the midcourse correction. The analysis then continues with updates performed as indicated in Subschedule No. 2 for those decision points where the optimizing routine indicated only updates should be performed. The midcourse correction sequence is then repeated at the seventh and the eleventh decision points as specified by the midcourse optimization technique.

The final corrections within the Mars sphere of influence are made beginning at 196 days into the mission as shown in Figure A-9x. These corrections

```
        PENALTY (MODE 3)          SCHEDULE  1

   COM. RCVR. TURNED ON
                        P-DR       P-CR       P-OP       V-DR       V-CR       V-OP       A-DR       A-CR       A-OP
             COMP. DEV.  0.         0.         0.         0.         0.         0.         0.         0.         0.
             DEVIATIONS  0.         0.         0.         0.         0.         0.         0.         0.         0.
              ERRORS     0.         0.         0.         0.         0.         0.         0.         0.         0.

   TARGET CT. * * * * * * * * * * * * * * * * * * * * * * * * * * * * * * * * * * * * * * * * * * * * * * * * * * *

BURN FOR    617.700 SEC.
ADD BURN ERRORS
PARK  FOR     2518.36 SEC.  (  0D 0H41M58.36S)
BURN FOR    310.000 SEC.
ADD BURN ERRORS
COAST FOR          .94 SEC.  (  0D 0H 0M  .94S)      NO PRPGTE.

   ESCAPE     * * * * * * * * * * * * * * * * * * * * * * * * * * * * * * * * * * * * * * * * * * * * * * * * * * *

  AT   0D 0H57M27.00S
   T=       3447  ALT=  1.0406486E+06  VEL=  3.6942076E+04  ANG=     80.987  LAT=  -34.1414  LONG=  133.7760
                        P-DR       P-CR       P-OP       V-DR       V-CR       V-OP       A-DR       A-CR       A-OP
             COMP. DEV.  0.         0.         0.         0.         0.         0.         2.284E-07  2.284E-07  2.284E-07
             DEVIATIONS  1.964E+04  1.176E+04  8.021E+03  6.892E+00  3.461E+01  1.616E+01  7.109E-04  7.095E-04  1.005E-03
              ERRORS     1.964E+04  1.176E+04  8.021E+03  6.892E+00  3.461E+01  1.616E+01  7.112E-04  7.097E-04  1.006E-03

              ATTITUDE        ROLL      YAW     PITCH          DR       CR       OP          ROLL     YAW     PITCH
                        XI    .8797   -.3750    .2923    XI    .8797   -.3750    .2923   DR  1.0000   0.0000   0.0000
                        YI   -.4701   -.7780    .4168    YI   -.4701   -.7780    .4168   CR  0.0000   1.0000   0.0000
                        ZI    .0711   -.5040   -.8607    ZI    .0711   -.5040   -.8607   OP  0.0000   0.0000   1.0000

     SUBSYSTEM  COMPUTER   I. S. U.   ATT. CONT. STAR TRCKR SUN SENSOR ISU/C.P.S. COM. RCVR. APP. RADAR  XMITTER
       STATUS       1          1          0          0          0          1          1          0          0          0
   I. S. U.   TURNED OFF
   COMPUTER   TURNED OFF
                        P-DR       P-CR       P-OP       V-DR       V-CR       V-OP       A-DR       A-CR       A-OP
             COMP. DEV.  0.         0.         0.         0.         0.         0.         7.854E-01  7.854E-01  7.854E-01
             DEVIATIONS  1.964E+04  1.176E+04  8.021E+03  6.892E+00  3.461E+01  1.616E+01  7.854E-01  7.854E-01  7.854E-01
              ERRORS     1.964E+04  1.176E+04  8.021E+03  6.892E+00  3.461E+01  1.416E+01  7.854E-01  7.854E-01  7.854E-01
   DEADBAND ON AXIS  1 CHANGED TO   20.00000 DEG.
   DEADBAND ON AXIS  2 CHANGED TO   20.00000 DEG.
   DEADBAND ON AXIS  3 CHANGED TO   20.00000 DEG.
   COMPUTER   TURNED ON
   I. S. U.   TURNED ON
   SUN SENSOR TURNED ON
   STAR TRCKR TURNED ON
   ATT. CONT. TURNED ON
    XMITTER   TURNED ON
                        P-DR       P-CR       P-OP       V-DR       V-CR       V-OP       A-DR       A-CR       A-OP
             COMP. DEV.  0.         0.         0.         0.         0.         0.         1.425E-01  1.425E-01  1.425E-01
             DEVIATIONS  1.964E+04  1.176E+04  8.021E+03  6.892E+00  3.461E+01  1.616E+01  7.854E-01  7.854E-01  7.854E-01
              ERRORS     1.964E+04  1.176E+04  8.021E+03  6.892E+00  3.461E+01  1.616E+01  7.854E-01  7.854E-01  7.854E-01

   ESCAPE     * * * * * * * * * * * * * * * * * * * * * * * * * * * * * * * * * * * * * * * * * * * * * * * * * * *

COAST FOR     1800.00 SEC.  (  0D 0H30M 0.00S)
```

FIGURE A-9a. MARS MISSION, ERROR ANALYSIS OUTPUT

```
ESCAPE        * * * * * * * * * * * * * * * * * * * * * * * * * * * * * * * * * * * * * * * * * * * * * * * * * * * * * * * *

AT    0D 1H27M27.00S
  T=       5247  ALT=  1.8920650E+07   VEL=  3.2263012E+04   ANG=        3.769  LAT=      .8092   LONG= -153.1083
                            P-DR         P-CR          P-OP         V-DR         V-CR         V-OP         A-DR         A-CR         A-OP
         COMP. DEV.   0.           0.           0.           0.           0.           0.           1.717E-02    1.717E-02    1.717E-02
         DEVIATIONS   7.845E+04    1.209E+05    2.582E+04    1.509E+01    4.084E+01    1.318E+01    7.854E-01    7.854E-01    7.854E-01
          ERRORS      7.845E+04    1.209E+05    2.582E+04    1.509E+01    4.084E+01    1.318E+01    7.854E-01    7.854E-01    7.854E-01

           ATTITUDE         ROLL       YAW       PITCH            DR        CR        OP             ROLL      YAW       PITCH
                      XI    .8797    -.3750      .2923     XI    .9236    -.2482     .2923     DR    .9902    -.1400    -.0000
                      YI   -.4701    -.7780      .4168     YI   -.3566    -.8361     .4168     CR    .1400     .9902     .0000
                      ZI    .0711    -.5040     -.8607     ZI    .1409    -.4891    -.8607     OP    .0000    -.0000    1.0000

     SUBSYSTEM  COMPUTER   I. S. U.   ATT. CONT. STAR TRCKR SUN SENSOR ISU/C.P.S. COM. RCVR. APP. RADAR  XMITTER
       STATUS       1          1          1          1          1          1          1          0          1          0

         BEGIN MANEUVERING TO LOCATE SUN-CANOPUS


ESCAPE        * * * * * * * * * * * * * * * * * * * * * * * * * * * * * * * * * * * * * * * * * * * * * * * * * * * * * * * *
COAST FOR       60.00 SEC.  (  0D 0H 1M 0.00S)      NO PRPGTE.

           ANGLE BETWEEN CELESTIAL BODIES=   78.74, BETWEEN OPTICAL AIDS=   90.00

           DEAD BANDS    SET     MAX.
                 ROLL    2.41   64.00
                  YAW    2.41    8.00
                PITCH    2.41   24.74
         MANEUVERS
                PITCH-170.754DEG.    YAW -58.349DEG.   ROLL -82.733DEG. IN         60SEC.
ESCAPE        * * * * * * * * * * * * * * * * * * * * * * * * * * * * * * * * * * * * * * * * * * * * * * * * * * * * * * * *

AT    0D 1H28M27.00S
  T=       5307  ALT=  2.0121664E+07   VEL=  3.2113354E+04   ANG=        3.323  LAT=     1.4071   LONG= -152.4907
                            P-DR         P-CR          P-OP         V-DR         V-CR         V-OP         A-DR         A-CR         A-OP
         COMP. DEV.   0.           0.           0.           0.           0.           0.           1.717E-02    1.717E-02    1.717E-02
         DEVIATIONS   7.845E+04    1.209E+05    2.582E+04    1.509E+01    4.084E+01    1.318E+01    7.854E-01    7.854E-01    7.854E-01
          ERRORS      7.845E+04    1.209E+05    2.582E+04    1.509E+01    4.084E+01    1.318E+01    7.854E-01    7.854E-01    7.854E-01

           ATTITUDE         ROLL       YAW       PITCH            DR        CR        OP             ROLL      YAW       PITCH
                      XI   -.1752    -.7698      .6138     XI    .9236    -.2482     .2923     DR   -.5010    -.7687     .3976
                      YI    .6639     .3680      .6510     YI   -.3566    -.8361     .4168     CR   -.1560    -.3718    -.9151
                      ZI   -.7270     .5215      .4465     ZI    .1409    -.4891    -.8607     OP    .8513    -.5205     .0664

     SUBSYSTEM  COMPUTER   I. S. U.   ATT. CONT. STAR TRCKR SUN SENSOR ISU/C.P.S. COM. RCVR. APP. RADAR  XMITTER
       STATUS       1          1          1          1          1          1          1          0          1          0

         END MANEUVERING,BEGIN SEARCH FOR SUN-CANOPUS


ESCAPE        * * * * * * * * * * * * * * * * * * * * * * * * * * * * * * * * * * * * * * * * * * * * * * * * * * * * * * * *
```

FIGURE A-9b. MARS MISSION, ERROR ANALYSIS OUTPUT

```
COAST FOR        60.00 SEC.  (  0D 0H 1M 0.00S)      NO PRPGTE.

                 ANGLE BETWEEN CELESTIAL BODIES=   78.74, BETWEEN OPTICAL AIDS=   90.00

                 DEAD BANDS   SET    MAX.
                       ROLL   2.41  64.00
                        YAW   2.41   8.00
                      PITCH   2.41  24.74
            MANEUVERS
                      PITCH    .000DEG.   YAW    .000DEG.  ROLL   -.001DEG. IN        60SEC.

            SEARCH FOR SUN        IN    30.3 SECONDS WITH   1.00000 PASSES
                                ANGULAR RATES (RAD/SEC)=ROLL    0.00000     ,YAW    0.00000     ,PITCH  -.02593

            SEARCH FOR CANOPUS    IN    29.7 SECONDS WITH   1.00000 PASSES
                                ANGULAR RATES (RAD/SEC)=ROLL     .00000     ,YAW     .02593     ,PITCH  0.00000

    ESCAPE     * * * * * * * * * * * * * * * * * * * * * * * * * * * * * * * * * * * * * * * * * * * * * * * * * * * * * * * * * * * * * * *

  AT   0D 1H29M27.00S
    T=       5367  ALT=  2.1335757E+07  VEL=  3.1963826E+04  ANG=     3.154  LAT=     1.9706  LONG= -151.9224
                          P-DR        P-CR        P-OP        V-DR        V-CR        V-OP        A-DR        A-CR        A-OP
            COMP. DEV.  4.048E+01  5.040E+01  1.281E+01  7.965E-03  1.988E-02  6.831E-03  1.717E-02  1.717E-02  1.717E-02
            DEVIATIONS  7.845E+04  1.209E+05  2.582E+04  1.509E+01  4.084E+01  1.318E+01  1.717E-02  1.717E-02  1.718E-02
             ERRORS     7.845E+04  1.209E+05  2.582E+04  1.509E+01  4.084E+01  1.318E+01  2.422E-04  2.376E-04  7.124E-04

              ATTITUDE        ROLL     YAW    PITCH          DR      CR      OP          ROLL     YAW    PITCH
CANOPUS    ACQUIRED        XI  -.1752  -.7698   .6138   XI   .9236  -.2482   .2923   DR  -.5010  -.7687   .3976
                           YI   .6639   .3680   .6511   YI  -.3566  -.8361   .4168   CR  -.1560  -.3717  -.9151
                           ZI  -.7270   .5215   .4465   ZI   .1409  -.4891  -.8607   OP   .8513  -.5205   .0664

      SUBSYSTEM  COMPUTER   I. S. U.   ATT. CONT. STAR TRCKR SUN SENSOR ISU/C.P.S. COM. RCVR. APP. RADAR  XMITTER
        STATUS      1          1          1          1          1          1          1          0          1          0

            END SEARCH FOR SUN-CANOPUS

    DEADBAND ON AXIS  1 CHANGED TO      .10000 DEG.
    DEADBAND ON AXIS  2 CHANGED TO      .10000 DEG.
    DEADBAND ON AXIS  3 CHANGED TO      .10000 DEG.

    ESCAPE     * * * * * * * * * * * * * * * * * * * * * * * * * * * * * * * * * * * * * * * * * * * * * * * * * * * * * * * * * * * * * * *

COAST FOR        60.00 SEC.  (  0D 0H 1M 0.00S)      NO PRPGTE.

                 ANGLE BETWEEN CELESTIAL BODIES=   78.74, BETWEEN OPTICAL AIDS=   90.00

                 DEAD BANDS   SET    MAX.
                       ROLL    .10  64.00
                        YAW    .10   8.00
                      PITCH    .10  24.74
            MANEUVERS
                      PITCH    .000DEG.   YAW    .000DEG.  ROLL   -.001DEG. IN        60SEC.

    ESCAPE     * * * * * * * * * * * * * * * * * * * * * * * * * * * * * * * * * * * * * * * * * * * * * * * * * * * * * * * * * * * * * * *
```

FIGURE A-9c. MARS MISSION, ERROR ANALYSIS OUTPUT

```
 AT    0D 1H30M27.00S
   T=       5427  ALT=  2.2561835E+07  VEL=  3.1814428E+04  ANG=        3.253  LAT=     2.5021  LONG= -151.3994
                         P-DR        P-CR        P-OP        V-DR        V-CR        V-OP        A-DR        A-CR        A-OP
         COMP. DEV.   4.048E+01   5.940E+01   1.281E+01   7.945E-03   1.988E-02   6.831E-03   7.125E-04   7.125E-04   7.125E-04
         DEVIATIONS   7.845E+04   1.209E+05   2.582E+04   1.509E+01   4.084E+01   1.318E+01   7.530E-04   7.515E-04   1.008E-03
          ERRORS      7.845E+04   1.209E+05   2.582E+04   1.509E+01   4.084E+01   1.318E+01   2.436E-04   2.390E-04   7.128E-04

           ATTITUDE            ROLL      YAW     PITCH           DR        CR        OP             ROLL       YAW     PITCH
CANOPUS     ACQUIRED       XI  -.1752   -.7698   .6138     XI   .9236   -.2482    .2923     DR   -.5010    -.7687    .3976
                           YI   .6638    .3680   .6511     YI  -.3566   -.8361    .4169     CR   -.1560    -.3717   -.9151
                           ZI  -.7270    .5215   .4465     ZI   .1409   -.4891   -.8607     OP    .8513    -.5205    .0664

     SUBSYSTEM  COMPUTER   I. S. U.   ATT. CONT. STAR TRCKR SUN SENSOR ISU/C.P.S. COM. RCVR. APP. RADAR  XMITTER
      STATUS       1          1          1          1          1          1          1          0          1          0

           STATION        RANGE         RANGE DOT          AZM         ELE.      SUN ANG.
          GOLDSTONE  3.2575255E+07  2.8080596E+04  -127.888      16.689     172.463
           MEASUREMENT ERRORS        RANGE          ELEVATION          AZIMUTH          RANGE DOT
              INERTIAL SYSTEM     1.111927E+04   4.422932E-03     7.249608E-04      9.778823E+00
                     OSIF         5.000000E+01   -0.                 -0.              4.100000E-02
  AFTER KALMAN UPDATE
                         P-DR        P-CR        P-OP        V-DR        V-CR        V-OP        A-DR        A-CR        A-OP
         COMP. DEV.   7.635E+04   1.180E+05   1.619E+04   1.436E+01   3.995E+01   3.647E+00   7.125E-04   7.125E-04   7.125E-04
         DEVIATIONS   7.845E+04   1.209E+05   2.582E+04   1.509E+01   4.084E+01   1.318E+01   7.530E-04   7.511E-04   1.008E-03
          ERRORS      1.801E+04   2.643E+04   2.011E+04   4.615E+00   8.443E+00   1.266E+01   2.434E-04   2.376E-04   7.128E-04

  ESCAPE       * * * * * * * * * * * * * * * * * * * * * * * * * * * * * * * * * * * * * * * * * * * * * * * * * * * * * *

COAST FOR        60.00 SEC.  (  0D 0H 1M 0.00S)      NO PRPGTE.

            ANGLE BETWEEN CELESTIAL BODIES=   78.74, BETWEEN OPTICAL AIDS=   90.00

            DEAD BANDS    SET     MAX.
                 ROLL     .10    64.00
                  YAW     .10     8.00
                PITCH     .10    24.74
         MANEUVERS
                PITCH     .000DEG.   YAW    .000DEG.  ROLL    -.001DEG. IN        60SEC.

  ESCAPE       * * * * * * * * * * * * * * * * * * * * * * * * * * * * * * * * * * * * * * * * * * * * * * * * * * * * * *

 AT    0D 1H31M27.00S
   T=       5487  ALT=  2.3798909E+07  VEL=  3.1665163E+04  ANG=        3.559  LAT=     3.0039  LONG= -150.9185
                         P-DR        P-CR        P-OP        V-DR        V-CR        V-OP        A-DR        A-CR        A-OP
         COMP. DEV.   7.635E+04   1.180E+05   1.619E+04   1.436E+01   3.995E+01   3.647E+00   7.125E-04   7.125E-04   7.125E-04
         DEVIATIONS   7.845E+04   1.209E+05   2.582E+04   1.509E+01   4.084E+01   1.318E+01   7.536E-04   7.514E-04   1.008E-03
          ERRORS      1.801E+04   2.643E+04   2.011E+04   4.615E+00   8.443E+00   1.266E+01   2.455E-04   2.385E-04   7.135E-04

           ATTITUDE            ROLL      YAW     PITCH           DR        CR        OP             ROLL       YAW     PITCH
CANOPUS     ACQUIRED       XI  -.1752   -.7698   .6138     XI   .9236   -.2482    .2923     DR   -.5010    -.7687    .3976
                           YI   .6638    .3680   .6511     YI  -.3566   -.8361    .4168     CR   -.1560    -.3717   -.9151
                           ZI  -.7270    .5215   .4465     ZI   .1409   -.4891   -.8607     OP    .8513    -.5205    .0664

     SUBSYSTEM  COMPUTER   I. S. U.   ATT. CONT. STAR TRCKR SUN SENSOR ISU/C.P.S. COM. RCVR. APP. RADAR  XMITTER
      STATUS       1          1          1          1          1          1          1          0          1          0
```

FIGURE A-9d. MARS MISSION, ERROR ANALYSIS OUTPUT

```
AFTER MIDCOURSE CORRECTION (IMC=  0), RMV=  1.3617E+02 (FT/SEC), DOF=1.002

TO ZERO COMPUTED DEVIATIONS AT  16934400 SECONDS

                        P-DR       P-CR       P-OP       V-DR       V-CR       V-OP       A-DR       A-CR       A-OP
          COMP. DEV.  7.635E+04  1.180E+05  1.619E+04  2.821E+01  8.278E+01  4.202E+01  7.125E-04  7.125E-04  7.125E-04
          DEVIATIONS  7.845E+04  1.209E+05  2.582E+04  2.858E+01  8.321E+01  4.389E+01  7.536E-04  7.514E-04  1.008E-03
           ERRORS     1.801E+04  2.643E+04  2.011E+04  4.615E+00  8.438E+00  1.266E+01  2.455E-04  2.385E-04  7.135E-04

ESCAPE     * * * * * * * * * * * * * * * * * * * * * * * * * * * * * * * * * * * * * * * * * * * * * * * * * * * * * * * *

COAST FOR       60.00 SEC.  (  0D 0H 1M 0.00S)

ESCAPE     * * * * * * * * * * * * * * * * * * * * * * * * * * * * * * * * * * * * * * * * * * * * * * * * * * * * * * * *

AT   0D 1H32M27.00S
T=       5547  ALT=  2.5046093E+07  VEL=  3.1516034E+04  ANG=     3.993  LAT=    3.4781  LONG= -150.4765
                        P-DR       P-CR       P-OP       V-DR       V-CR       V-OP       A-DR       A-CR       A-OP
          COMP. DEV.  7.331E+04  1.173E+05  1.613E+04  2.664E+01  7.805E+01  3.965E+01  7.125E-04  7.125E-04  7.125E-04
          DEVIATIONS  7.639E+04  1.212E+05  2.743E+04  2.715E+01  7.853E+01  4.147E+01  7.545E-04  7.520E-04  1.009E-03
           ERRORS     2.149E+04  3.056E+04  2.219E+04  5.226E+00  8.655E+00  1.217E+01  2.482E-04  2.404E-04  7.146E-04

            ATTITUDE        ROLL      YAW     PITCH          DR       CR       OP          ROLL      YAW     PITCH
                        XI  -.1752   -.7698   .6138   XI   .9281   -.2308   .2923   DR  -.4980   -.7616   .4147
                        YI   .6638    .3680   .6511   YI  -.3408   -.8427   .4168   CR  -.1653   -.3861  -.9075
                        ZI  -.7270    .5215   .4465   ZI   .1501   -.4864  -.8607   OP   .8513   -.5205   .0664

  SUBSYSTEM  COMPUTER   I. S. U.   ATT. CONT. STAR TRCKR SUN SENSOR ISU/C.P.S. COM. RCVR. APP. RADAR  XMITTER
    STATUS       1          1          1          1          1          1          1          0          1          0
DEADBAND ON AXIS  1 CHANGED TO   20.00000 DEG.
DEADBAND ON AXIS  2 CHANGED TO   20.00000 DEG.
DEADBAND ON AXIS  3 CHANGED TO   20.00000 DEG.
 XMITTER   TURNED OFF
ATT. CONT. TURNED OFF
COMPUTER   TURNED OFF
I. S. U.   TURNED OFF
STAR TRCKR TURNED OFF
SUN SENSOR TURNED OFF
                        P-DR       P-CR       P-OP       V-DR       V-CR       V-OP       A-DR       A-CR       A-OP
          COMP. DEV.  7.331E+04  1.173E+05  1.613E+04  2.664E+01  7.805E+01  3.965E+01  7.854E-01  7.854E-01  7.854E-01
          DEVIATIONS  7.639E+04  1.212E+05  2.743E+04  2.715E+01  7.853E+01  4.147E+01  7.854E-01  7.854E-01  7.854E-01
           ERRORS     2.149E+04  3.056E+04  2.219E+04  5.226E+00  8.655E+00  1.217E+01  7.854E-01  7.854E-01  7.854E-01

ESCAPE     * * * * * * * * * * * * * * * * * * * * * * * * * * * * * * * * * * * * * * * * * * * * * * * * * * * * * * * *

COAST FOR   860433.00 SEC.  (  9D23H 0M33.00S)

HELIOCENT. * * * * * * * * * * * * * * * * * * * * * * * * * * * * * * * * * * * * * * * * * * * * * * * * * * * * * * * *

AT  10D 0H33M 0.00S
T=     865980  ALT=  1.1557399E+10  VEL=  7.6207922E+05  ANG=    88.980  LAT=   25.3093  LONG=  -99.6008
                        P-DR       P-CR       P-OP       V-DR       V-CR       V-OP       A-DR       A-CR       A-OP
          COMP. DEV.  6.378E+04  1.402E+05  6.429E+03  5.133E-02  2.768E-02  2.089E-02  7.854E-01  7.854E-01  7.854E-01
          DEVIATIONS  1.808E+07  7.059E+06  2.411E+06  2.170E+01  9.012E+00  2.849E+00  7.854E-01  7.854E-01  7.854E-01
           ERRORS     1.808E+07  7.057E+06  2.411E+06  2.170E+01  9.012E+00  2.849E+00  7.854E-01  7.854E-01  7.854E-01
```

FIGURE A-9e. MARS MISSION, ERROR ANALYSIS OUTPUT

```
ATTITUDE        ROLL      YAW     PITCH          DR       CR       OP          ROLL     YAW     PITCH
            XI  -.1752   -.7698   .6138   XI   .5407    .8409    .0228   DR   .1402   .0539   .9887
            YI   .6638    .3680   .6511   YI   .7566   -.4980    .4238   CR  -.3239  -.9411   .0972
            ZI  -.7270    .5215   .4465   ZI   .2677   -.2119   -.9055   OP   .9357  -.3338  -.1145

SUBSYSTEM  COMPUTER   I. S. U.   ATT. CONT. STAR TRCKR SUN SENSOR ISU/C.P.S. COM. RCVR. APP. RADAR  XMITTER
  STATUS     -0         -0         -0         -0         -0          0          1          0         0          0

      STATION        RANGE        RANGE DOT        AZM       ELE.      SUN ANG.
     GOLDSTONE   1.1558416E+10  1.3227597E+04   119.455    72.038    124.903
       MEASUREMENT ERRORS      RANGE          ELEVATION        AZIMUTH        RANGE DOT
          INERTIAL SYSTEM   1.744744E+07   3.215410E-04   7.552918E-04   5.023960E+02
               DSIF         5.000000E+01   -0.            -0.            4.100000E-02
AFTER KALMAN UPDATE
                    P-DR       P-CR       P-OP       V-DR       V-CR       V-OP       A-DR       A-CR       A-OP
      COMP. DEV.  1.808E+07  7.764E+06  1.918E+06  2.170E+01  8.903E+00  2.330E+00  7.854E-01  7.854E-01  7.854E-01
      DEVIATIONS  1.808E+07  7.859E+06  2.411E+06  2.170E+01  9.012E+00  2.849E+00  7.854E-01  7.854E-01  7.854E-01
       ERRORS     9.036E+04  1.214E+06  1.462E+06  8.923E-02  1.392E+00  1.640E+00  7.854E-01  7.854E-01  7.854E-01

HELIOCENT. * * * * * * * * * * * * * * * * * * * * * * * * * * * * * * * * * * * * * * * * * * * * * * * * * * * * * *

COAST FOR   864000.00 SEC.  ( 10D 0H 0M 0.00S)

HELIOCENT. * * * * * * * * * * * * * * * * * * * * * * * * * * * * * * * * * * * * * * * * * * * * * * * * * * * * * *

AT  20D 0H33M 0.00S
T=   1729980  ALT=  2.3268221E+10  VEL=  1.5547183E+06  ANG=    89.492  LAT=   23.4478  LONG= -101.9129
                    P-DR       P-CR       P-OP       V-DR       V-CR       V-OP       A-DR       A-CR       A-OP
      COMP. DEV.  3.754E+07  1.564E+07  3.822E+06  2.350E+01  9.352E+00  2.044E+00  7.854E-01  7.854E-01  7.854E-01
      DEVIATIONS  3.754E+07  1.582E+07  4.771E+06  2.350E+01  9.451E+00  2.585E+00  7.854E-01  7.854E-01  7.854E-01
       ERRORS     1.948E+05  2.406E+06  2.856E+06  1.603E-01  1.364E+00  1.582E+00  7.854E-01  7.854E-01  7.854E-01

ATTITUDE        ROLL      YAW     PITCH          DR       CR       OP          ROLL     YAW     PITCH
            XI  -.1752   -.7698   .6138   XI   .4116    .9111    .0227   DR   .1863   .1913   .9637
            YI   .6638    .3680   .6511   YI   .8215   -.3816    .4236   CR  -.2998  -.9230   .2412
            ZI  -.7270    .5215   .4465   ZI   .3946   -.1557   -.9056   OP   .9356  -.3338  -.1146

SUBSYSTEM  COMPUTER   I. S. U.   ATT. CONT. STAR TRCKR SUN SENSOR ISU/C.P.S. COM. RCVR. APP. RADAR  XMITTER
  STATUS     -0         -0         -0         -0         -0          0          1          0         0          0

      STATION        RANGE        RANGE DOT        AZM       ELE.      SUN ANG.
     GOLDSTONE   2.3269202E+10  1.3492608E+04   128.614    72.368    136.616
       MEASUREMENT ERRORS      RANGE          ELEVATION        AZIMUTH        RANGE DOT
          INERTIAL SYSTEM   1.824746E+04   1.230323E-04   1.033789E-04   1.715798E+01
               DSIF         5.000000E+01   -0.            -0.            4.100000E-02
AFTER KALMAN UPDATE
                    P-DR       P-CR       P-OP       V-DR       V-CR       V-OP       A-DR       A-CR       A-OP
      COMP. DEV.  3.754E+07  1.582E+07  4.771E+06  2.350E+01  9.451E+00  2.585E+00  7.854E-01  7.854E-01  7.854E-01
      DEVIATIONS  3.754E+07  1.582E+07  4.771E+06  2.350E+01  9.451E+00  2.585E+00  7.854E-01  7.854E-01  7.854E-01
       ERRORS     1.034E+03  1.172E+04  1.249E+04  8.629E-04  6.622E-03  7.040E-03  7.854E-01  7.854E-01  7.854E-01

HELIOCENT. * * * * * * * * * * * * * * * * * * * * * * * * * * * * * * * * * * * * * * * * * * * * * * * * * * * * * *

COAST FOR   864000.00 SEC.  ( 10D 0H 0M 0.00S)
```

FIGURE A-9f. MARS MISSION, ERROR ANALYSIS OUTPUT

```
HELIOCENT. * * * * * * * * * * * * * * * * * * * * * * * * * * * * * * * * * * * * * * * * * * * * * * * *

AT  30D 0H33M 0.00S
 T=    2593980  ALT=  3.5538209E+10  VEL=  2.4064628E+06  ANG=     89.648  LAT=   21.5480  LONG= -103.8238
                          P-DR       P-CR       P-OP       V-DR       V-CR       V-OP       A-DR       A-CR       A-OP
         COMP. DEV.   5.902E+07  2.413E+07  6.863E+06  2.641E+01  9.691E+00  2.282E+00  7.854E-01  7.854E-01  7.854E-01
         DEVIATIONS   5.902E+07  2.413E+07  6.863E+06  2.641E+01  9.691E+00  2.282E+00  7.854E-01  7.854E-01  7.854E-01
          ERRORS      1.953E+03  1.731E+04  1.840E+04  1.252E-03  6.293E-03  6.624E-03  7.854E-01  7.854E-01  7.854E-01

          ATTITUDE         ROLL     YAW     PITCH          DR      CR      OP          ROLL     YAW     PITCH
                       XI  -.1752  -.7698   .6138     XI   .2776   .9604   .0227   DR   .2272   .3208   .9195
                       YI   .6638   .3680   .6511     YI   .8675  -.2608   .4236   CR  -.2702  -.8864   .3760
                       ZI  -.7270   .5215   .4465     ZI   .4127  -.0979  -.9056   OP   .9356  -.3339  -.1147

    SUBSYSTEM  COMPUTER   I. S. U.   ATT. CONT. STAR TRCKR SUN SENSOR ISU/C.P.S. COM. RCVR. APP. RADAR  XMITTER
      STATUS     -0          -0         -0         -0         -0          0         1         0          0         0

          STATION        RANGE          RANGE DOT        AZM        ELE.      SUN ANG.
         GOLDSTONE   3.5539224E+10  1.4503782E+04   137.060     72.067    147.794
           MEASUREMENT ERRORS        RANGE           ELEVATION        AZIMUTH          RANGE DOT
              INERTIAL SYSTEM    2.9204825E+02   6.1787398E-07   3.557440E-07    2.104768E-01
                   DSIF          5.000000E+01   -0.              -0.              4.100000E-02
  AFTER KALMAN UPDATE
                          P-DR       P-CR       P-OP       V-DR       V-CR       V-OP       A-DR       A-CR       A-OP
         COMP. DEV.   5.902E+07  2.413E+07  6.863E+06  2.641E+01  9.691E+00  2.282E+00  7.854E-01  7.854E-01  7.854E-01
         DEVIATIONS   5.902E+07  2.413E+07  6.863E+06  2.641E+01  9.691E+00  2.282E+00  7.854E-01  7.854E-01  7.854E-01
          ERRORS      5.492E+02  4.380E+03  4.071E+03  3.511E-04  1.587E-03  1.520E-03  7.854E-01  7.854E-01  7.854E-01

  HELIOCENT. * * * * * * * * * * * * * * * * * * * * * * * * * * * * * * * * * * * * * * * * * * * * * * *

COAST FOR   864000.00 SEC.  ( 10D 0H 0M 0.00S)

  HELIOCENT. * * * * * * * * * * * * * * * * * * * * * * * * * * * * * * * * * * * * * * * * * * * * * * *

AT  40D 0H33M 0.00S
 T=    3457980  ALT=  4.9069268E+10  VEL=  3.3687410E+06  ANG=     89.715  LAT=   19.3976  LONG= -105.5065
                          P-DR       P-CR       P-OP       V-DR       V-CR       V-OP       A-DR       A-CR       A-OP
         COMP. DEV.   8.346E+07  3.235E+07  8.729E+06  3.029E+01  9.200E+00  2.086E+00  7.854E-01  7.854E-01  7.854E-01
         DEVIATIONS   8.346E+07  3.235E+07  8.729E+06  3.029E+01  9.200E+00  2.086E+00  7.854E-01  7.854E-01  7.854E-01
          ERRORS      8.606E+02  5.696E+03  5.328E+03  4.070E-04  1.457E-03  1.394E-03  7.854E-01  7.854E-01  7.854E-01

          ATTITUDE         ROLL     YAW     PITCH          DR      CR      OP          ROLL     YAW     PITCH
                       XI  -.1752  -.7698   .6138     XI   .1426   .9895   .0227   DR   .2622   .4399   .8589
                       YI   .6638   .3680   .6511     YI   .8952  -.1387   .4236   CR  -.2363  -.8337   .4991
                       ZI  -.7270   .5215   .4465     ZI   .4223  -.0401  -.9056   OP   .9356  -.3339  -.1147

    SUBSYSTEM  COMPUTER   I. S. U.   ATT. CONT. STAR TRCKR SUN SENSOR ISU/C.P.S. COM. RCVR. APP. RADAR  XMITTER
      STATUS     -0          -0         -0         -0         -0          0         1         0          0         0

          STATION        RANGE          RANGE DOT        AZM        ELE.      SUN ANG.
         GOLDSTONE   4.9070391E+10  1.6511424E+04   144.978     71.131    158.219
           MEASUREMENT ERRORS        RANGE           ELEVATION        AZIMUTH          RANGE DOT
              INERTIAL SYSTEM    8.059859E+01    1.504883E-07    5.418850E-08    1.066749E-01
                   DSIF          5.000000E+01   -0.              -0.              4.100000E-02
  AFTER KALMAN UPDATE
                          P-DR       P-CR       P-OP       V-DR       V-CR       V-OP       A-DR       A-CR       A-OP
```

FIGURE A-9g. MARS MISSION, ERROR ANALYSIS OUTPUT

```
          COMP. DEV.  8.346E+07  3.235E+07  8.729E+06  3.029E+01  9.200E+00  2.686E+00  7.854E-01  7.854E-01  7.854E-01
          DEVIATIONS  8.346E+07  3.235E+07  8.729E+06  3.029E+01  9.200E+00  2.686E+00  7.854E-01  7.854E-01  7.854E-01
           ERRORS     4.978E+02  3.201E+03  2.474E+03  2.284E-04  8.229E-04  6.502E-04  7.854E-01  7.854E-01  7.854E-01

   HELIOCENT. * * * * * * * * * * * * * * * * * * * * * * * * * * * * * * * * * * * * * * * * * * * * * * * * * * * * * * * *

COAST FOR   864000.00 SEC.  ( 10D 0H 0M 0.00S)

   HELIOCENT. * * * * * * * * * * * * * * * * * * * * * * * * * * * * * * * * * * * * * * * * * * * * * * * * * * * * * * * *

 AT  50D 0H33M 0.00S
   T=   4321980  ALT=  6.4777452E+10  VEL=  4.5035107E+06  ANG=    89.748  LAT=    17.1660  LONG= -106.7230
                        P-DR       P-CR       P-OP       V-DR       V-CR       V-OP       A-DR       A-CR       A-OP
          COMP. DEV.  1.115E+08  3.972E+07  1.052E+07  3.473E+01  7.670E+00  2.117E+00  7.854E-01  7.854E-01  7.854E-01
          DEVIATIONS  1.115E+08  3.972E+07  1.052E+07  3.472E+01  7.670E+00  2.117E+00  7.854E-01  7.854E-01  7.854E-01
           ERRORS     6.947E+02  3.873E+03  3.004E+03  2.204E-04  7.359E-04  5.830E-04  7.854E-01  7.854E-01  7.854E-01

            ATTITUDE        ROLL      YAW     PITCH          DR       CR       OP           ROLL      YAW     PITCH
                        XI  -.1752   -.7698    .6138   XI   .0098    .9997    .0227   DR    .2914    .5468    .7849
                        YI   .6638    .3680    .6611   YI   .9057   -.0185    .4236   CR   -.1994   -.7678    .6089
                        ZI  -.7270    .5215    .4465   ZI   .4239    .0164   -.9056   OP    .9356   -.3339   -.1147

     SUBSYSTEM  COMPUTER   I. S. U.   ATT. CONT. STAR TRCKR SUN SENSOR ISU/C.P.S. COM. RCVR. APP. RADAR  XMITTER
       STATUS     -0         -0         -0         -0         -0          0          1          0          0          0

            STATION        RANGE          RANGE DOT          AZM       ELE.      SUN ANG.
          GOLDSTONE   6.4778754E+10  1.9587200E+04   151.075    69.669    165.823
            MEASUREMENT ERRORS      RANGE          ELEVATION          AZIMUTH          RANGE DOT
               INERTIAL SYSTEM   1.145141E+02   7.511479E-08   1.396049E-08   1.002674E-01
                   DSIF          5.000000E+01  -0.             -0.             4.100000E-02
   AFTER KALMAN UPDATE
                        P-DR       P-CR       P-OP       V-DR       V-CR       V-OP       A-DR       A-CR       A-OP
          COMP. DEV.  1.115E+08  3.972E+07  1.052E+07  3.473E+01  7.670E+00  2.117E+00  7.854E-01  7.854E-01  7.854E-01
          DEVIATIONS  1.115E+08  3.972E+07  1.052E+07  3.473E+01  7.670E+00  2.117E+00  7.854E-01  7.854E-01  7.854E-01
           ERRORS     3.083E+02  1.888E+03  1.140E+03  9.528E-05  3.698E-04  2.126E-04  7.854E-01  7.854E-01  7.854E-01

   HELIOCENT. * * * * * * * * * * * * * * * * * * * * * * * * * * * * * * * * * * * * * * * * * * * * * * * * * * * * * * * *

COAST FOR   862020.00 SEC.  (  9D23H27M 0.00S)

   HELIOCENT. * * * * * * * * * * * * * * * * * * * * * * * * * * * * * * * * * * * * * * * * * * * * * * * * * * * * * * * *

 AT  60D 0H 0M 0.00S
   T=   5184000  ALT=  8.3486142E+10  VEL=  5.8618356E+06  ANG=    89.768  LAT=    15.1528  LONG=  -98.9646
                        P-DR       P-CR       P-OP       V-DR       V-CR       V-OP       A-DR       A-CR       A-OP
          COMP. DEV.  1.434E+08  4.526E+07  1.245E+07  3.928E+01  5.005E+00  2.423E+00  7.854E-01  7.854E-01  7.854E-01
          DEVIATIONS  1.434E+08  4.526E+07  1.245E+07  3.928E+01  5.005E+00  2.423E+00  7.854E-01  7.854E-01  7.854E-01
           ERRORS     3.796E+02  2.187E+03  1.305E+03  7.083E-05  3.294E-04  1.887E-04  7.854E-01  7.854E-01  7.854E-01

            ATTITUDE        ROLL      YAW     PITCH          DR       CR       OP           ROLL      YAW     PITCH
                        XI  -.1752   -.7698    .6138   XI  -.1181    .9927    .0227   DR    .3145    .6405    .7006
                        YI   .6638    .3680    .6611   YI   .9005    .0975    .4236   CR   -.1605   -.6916    .7043
                        ZI  -.7270    .5215    .4465   ZI   .4183    .0705   -.9056   OP    .9356   -.3339   -.1147

     SUBSYSTEM  COMPUTER   I. S. U.   ATT. CONT. STAR TRCKR SUN SENSOR ISU/C.P.S. COM. RCVR. APP. RADAR  XMITTER
       STATUS     -0         -0         -0         -0         -0          0          1          0          0          0
```

FIGURE A-9b. MARS MISSION, ERROR ANALYSIS OUTPUT

```
COMPUTER    TURNED ON
I. S. U.    TURNED ON
SUN SENSOR  TURNED ON
STAR TRCKR  TURNED ON
ATT. CONT.  TURNED ON
 XMITTER    TURNED ON
                        P-DR        P-CR        P-OP        V-DR        V-CR        V-OP        A-DR        A-CR        A-OP
          COMP. DEV.  1.434E+08  4.526E+07  1.245E+07  3.928E+01  5.005E+00  2.623E+00  1.425E-01  1.425E-01  1.425E-01
          DEVIATIONS  1.434E+08  4.526E+07  1.245E+07  3.928E+01  5.005E+00  2.623E+00  7.854E-01  7.854E-01  7.854E-01
           ERRORS     3.796E+02  2.187E+03  1.305E+03  7.083E-05  3.294E-04  1.887E-04  7.854E-01  7.854E-01  7.854E-01

HELIOCENT. * * * * * * * * * * * * * * * * * * * * * * * * * * * * * * * * * * * * * * * * * * * * * * * * * * * * * * * * * * *

COAST FOR     1800.00 SEC.  (  0D 0H30M 0.00S)     NO PRPGTE.

HELIOCENT. * * * * * * * * * * * * * * * * * * * * * * * * * * * * * * * * * * * * * * * * * * * * * * * * * * * * * * * * * * *

AT  60D 0H30M 0.00S
T=   5185800  ALT=  8.3536374E+10  VEL=  5.8654789E+06  ANG=    89.768  LAT=    15.1484  LONG= -106.4638
                        P-DR        P-CR        P-OP        V-DR        V-CR        V-OP        A-DR        A-CR        A-OP
          COMP. DEV.  1.434E+08  4.526E+07  1.245E+07  3.928E+01  5.005E+00  2.623E+00  1.717E-02  1.717E-02  1.717E-02
          DEVIATIONS  1.434E+08  4.526E+07  1.245E+07  3.928E+01  5.005E+00  2.623E+00  7.854E-01  7.854E-01  7.854E-01
           ERRORS     3.796E+02  2.187E+03  1.305E+03  7.083E-05  3.294E-04  1.887E-04  7.854E-01  7.854E-01  7.854E-01

            ATTITUDE        ROLL     YAW    PITCH          DR      CR      OP          ROLL     YAW    PITCH
                        XI  -.1752  -.7698   .6138   XI  -.1181   .9927   .0227   DR   .3145   .6405   .7006
                        YI   .6638   .3680   .6511   YI   .9006   .0975   .4236   CR  -.1605  -.6916   .7043
                        ZI  -.7270   .5215   .4465   ZI   .4183   .0705  -.9056   OP   .9356  -.3339  -.1147

   SUBSYSTEM  COMPUTER   I. S. U.   ATT. CONT. STAR TRCKR SUN SENSOR ISU/C.P.S. COM. RCVR. APP. RADAR  XMITTER
     STATUS      1          1          1          1          1          1          1          0          1          0

          BEGIN MANEUVERING TO LOCATE SUN-CANOPUS

HELIOCENT. * * * * * * * * * * * * * * * * * * * * * * * * * * * * * * * * * * * * * * * * * * * * * * * * * * * * * * * * * * *

COAST FOR       60.00 SEC.  (  0D 0H 1M 0.00S)     NO PRPGTE.

              ANGLE BETWEEN CELESTIAL BODIES=   89.39, BETWEEN OPTICAL AIDS=   90.00

              DEAD BANDS   SET    MAX.
                    ROLL   2.41  64.00
                     YAW   2.41   8.00
                   PITCH   2.41  35.39
          MANEUVERS
                   PITCH   -.771DEG.   YAW  11.427DEG.  ROLL -56.037DEG. IN        60SEC.

HELIOCENT. * * * * * * * * * * * * * * * * * * * * * * * * * * * * * * * * * * * * * * * * * * * * * * * * * * * * * * * * * * *

AT  60D 0H31M 0.00S
T=   5185860  ALT=  8.3538049E+10  VEL=  5.8656004E+06  ANG=    89.768  LAT=    15.1483  LONG= -106.7138
                        P-DR        P-CR        P-OP        V-DR        V-CR        V-OP        A-DR        A-CR        A-OP
          COMP. DEV.  1.434E+08  4.526E+07  1.245E+07  3.928E+01  5.005E+00  2.623E+00  1.717E-02  1.717E-02  1.717E-02
          DEVIATIONS  1.434E+08  4.526E+07  1.245E+07  3.928E+01  5.005E+00  2.623E+00  7.854E-01  7.854E-01  7.854E-01
           ERRORS     3.796E+02  2.187E+03  1.305E+03  7.083E-05  3.294E-04  1.887E-04  7.854E-01  7.854E-01  7.854E-01
```

FIGURE A-9i. MARS MISSION, ERROR ANALYSIS OUTPUT

```
          ATTITUDE       ROLL     YAW    PITCH        DR       CR       OP          ROLL     YAW     PITCH
                    XI  -.2832  -.9032  -.3225   XI  -.1181   .9927    .0227   DR   .1609  -.2597    .9522
                    YI   .5168  -.4270   .7420   YI   .9006   .0975    .4236   CR  -.2877  -.9352   -.2064
                    ZI  -.8079   .0435   .5877   ZI   .4183   .0705   -.9056   OP   .9441  -.2407   -.2252

     SUBSYSTEM  COMPUTER   I. S. U.   ATT. CONT. STAR TRCKR SUN SENSOR ISU/C.P.S. COM. RCVR. APP. RADAR  XMITTER
      STATUS       1          1          1          1          1          1          1          0          1          0

          END MANEUVERING,BEGIN SEARCH FOR SUN-CANOPUS

     HELIOCENT. * * * * * * * * * * * * * * * * * * * * * * * * * * * * * * * * * * * * * * * * * * * * * * *
COAST FOR        60.00 SEC.  ( 0D 0H 1M 0.00S)      NO PRPGTE.

            ANGLE BETWEEN CELESTIAL BODIES=   89.39, BETWEEN OPTICAL AIDS=   90.00

            DEAD BANDS    SET     MAX.
                ROLL      2.41   64.00
                 YAW      2.41    8.00
               PITCH      2.41   35.39
          MANEUVERS
               PITCH      .000DEG.    YAW     .000DEG.  ROLL    -.001DEG. IN        60SEC.

          SEARCH FOR SUN        IN     30.0 SECONDS WITH   1.00000 PASSES
                             ANGULAR RATES (RAD/SEC)=ROLL      .02618      ,YAW    0.00000     ,PITCH  0.00000

          SEARCH FOR CANOPUS    IN     30.0 SECONDS WITH   1.00000 PASSES
                             ANGULAR RATES (RAD/SEC)=ROLL      .00000      ,YAW     .02618     ,PITCH  0.00000

     HELIOCENT. * * * * * * * * * * * * * * * * * * * * * * * * * * * * * * * * * * * * * * * * * * * * * * *
  AT  60D 0H32M 0.00S
     T=  5185920  ALT=  8.3539725E+10  VEL=  5.8657220E+06  ANG=    89.768  LAT=    15.1481  LONG= -106.9637
                        P-DR       P-CR       P-OP       V-DR       V-CR       V-OP       A-DR       A-CR       A-OP
          COMP. DEV.  1.434E+08  4.526E+07  1.245E+07  3.928E+01  5.005E+00  2.623E+00  1.717E-02  1.717E-02  1.717E-02
          DEVIATIONS  1.434E+08  4.526E+07  1.245E+07  3.928E+01  5.005E+00  2.623E+00  1.717E-02  1.717E-02  1.718E-02
           ERRORS     3.796E+02  2.187E+03  1.305E+03  7.083E-05  3.294E-04  1.887E-04  2.742E-04  2.453E-04  6.823E-04
          ATTITUDE       ROLL     YAW    PITCH        DR       CR       OP          ROLL     YAW     PITCH
CANOPUS     ACQUIRED XI  -.2832  -.9032  -.3225   XI  -.1181   .9927    .0227   DR   .1609  -.2597    .9522
                    YI   .5168  -.4270   .7420   YI   .9006   .0975    .4236   CR  -.2877  -.9352   -.2064
                    ZI  -.8079   .0435   .5877   ZI   .4183   .0705   -.9056   OP   .9441  -.2407   -.2252

     SUBSYSTEM  COMPUTER   I. S. U.   ATT. CONT. STAR TRCKR SUN SENSOR ISU/C.P.S. COM. RCVR. APP. RADAR  XMITTER
      STATUS       1          1          1          1          1          1          1          0          1          0

          END SEARCH FOR SUN-CANOPUS

     DEADBAND ON AXIS  1 CHANGED TO      .10000 DEG.
     DEADBAND ON AXIS  2 CHANGED TO      .10000 DEG.
     DEADBAND ON AXIS  3 CHANGED TO      .10000 DEG.
```

FIGURE A-9j. MARS MISSION, ERROR ANALYSIS OUTPUT

```
HELIOCENT. * * * * * * * * * * * * * * * * * * * * * * * * * * * * * * * * * * * * * * * * * * * * * * *
COAST FOR        60.00 SEC.  (  0D 0H 1M 0.00S)        NO PRPGTE.

                 ANGLE BETWEEN CELESTIAL BODIES=   89.39, BETWEEN OPTICAL AIDS=   90.00

                 DEAD BANDS    SET    MAX.
                       ROLL    .10   64.00
                        YAW    .10    8.00
                      PITCH    .10   35.39
            MANEUVERS
                      PITCH    .000DEG.   YAW    .000DEG.  ROLL    -.001DEG. IN         60SEC.

HELIOCENT. * * * * * * * * * * * * * * * * * * * * * * * * * * * * * * * * * * * * * * * * * * * * * * *

 AT  60D 0H33M 0.00S
  T=    5185980  ALT=  8.3541401E+10   VEL=  5.8658435E+06   ANG=    89.768  LAT=    15.1480  LONG= -107.2137
                     P-DR        P-CR        P-OP        V-DR        V-CR        V-OP        A-DR        A-CR        A-OP
      COMP. DEV.  1.434E+08  4.526E+07  1.245E+07  3.928E+01  5.005E+00  2.623E+00  7.125E-04  7.125E-04  7.125E-04
      DEVIATIONS  1.434E+08  4.526E+07  1.245E+07  3.928E+01  5.005E+00  2.623E+00  7.639E-04  7.540E-04  9.869E-04
       ERRORS     3.796E+02  2.187E+03  1.305E+03  7.082E-05  3.294E-04  1.887E-04  2.754E-04  2.466E-04  6.828E-04

              ATTITUDE           ROLL      YAW     PITCH          DR        CR       OP            ROLL      YAW     PITCH
CANOPUS    ACQUIRED          XI  -.2832   -.9032   -.3225    XI  -.1181    .9927    .0227    DR    .1609   -.2597    .9522
                             YI   .5168   -.4270    .7420    YI   .9006    .0975    .4236    CR   -.2877   -.9352   -.2064
                             ZI  -.8079    .0434    .5877    ZI   .4183    .0705   -.9056    OP    .9441   -.2407   -.2252

    SUBSYSTEM  COMPUTER    I. S. U.   ATT. CONT. STAR TRCKR SUN SENSOR ISU/C.P.S. COM. RCVR. APP. RADAR  XMITTER
     STATUS        1          1          1          1          1          1          1          0          1          0

           STATION        RANGE          RANGE DOT         AZM        ELE.     SUN ANG.
          GOLDSTONE   8.3542923E+10  2.3570856E+04   154.450    67.993   165.904
            MEASUREMENT ERRORS        RANGE          ELEVATION        AZIMUTH        RANGE DOT
               INERTIAL SYSTEM     1.091234E+02   3.011498E-08    6.423449E-09    8.622030E-02
                    DSIF           5.000000E+01   -0.              -0.             4.100000E-02
  AFTER KALMAN UPDATE
                     P-DR        P-CR        P-OP        V-DR        V-CR        V-OP        A-DR        A-CR        A-OP
      COMP. DEV.  1.434E+08  4.526E+07  1.245E+07  3.920E+01  5.005E+00  2.623E+00  7.125E-04  7.125E-04  7.125E-04
      DEVIATIONS  1.434E+08  4.526E+07  1.245E+07  3.920E+01  5.005E+00  2.623E+00  7.639E-04  7.540E-04  9.869E-04
       ERRORS     1.614E+02  1.076E+03  5.104E+02  2.930E-05  1.742E-04  8.529E-05  2.754E-04  2.466E-04  6.828E-04

HELIOCENT. * * * * * * * * * * * * * * * * * * * * * * * * * * * * * * * * * * * * * * * * * * * * * * *
COAST FOR        60.00 SEC.  (  0D 0H 1M 0.00S)        NO PRPGTE.

                 ANGLE BETWEEN CELESTIAL BODIES=   89.39, BETWEEN OPTICAL AIDS=   90.00

                 DEAD BANDS    SET    MAX.
                       ROLL    .10   64.00
                        YAW    .10    8.00
                      PITCH    .10   35.39
            MANEUVERS
                      PITCH   ..000DEG.   YAW    .000DEG.  ROLL    -.001DEG. IN         60SEC.

HELIOCENT. * * * * * * * * * * * * * * * * * * * * * * * * * * * * * * * * * * * * * * * * * * * * * * *
```

FIGURE A-9k. MARS MISSION, ERROR ANALYSIS OUTPUT

```
AT  60D 0H34M 0.00S
   T=   5186040  ALT=  8.3543076E+10  VEL=  5.8659650E+06  ANG=    89.768  LAT=   15.1478  LONG= -107.4637
                        P-DR        P-CR        P-OP        V-DR        V-CR        V-OP        A-DR        A-CR        A-OP
            COMP. DEV.  1.434E+08   4.529E+07   1.245E+07   3.928E+01   5.005E+00   2.423E+00   7.125E-04   7.125E-04   7.125E-04
            DEVIATIONS  1.434E+08   4.529E+07   1.245E+07   3.928E+01   5.005E+00   2.423E+00   7.646E-04   7.547E-04   9.874E-04
             ERRORS     1.614E+02   1.076E+03   5.104E+02   2.930E-05   1.742E-04   8.529E-05   2.773E-04   2.488E-04   6.836E-04

              ATTITUDE        ROLL      YAW     PITCH          DR       CR       OP          ROLL     YAW     PITCH
CANOPUS    ACQUIRED        XI  -.2832  -.9032  -.3226   XI  -.1181   .9927   .0227   DR   .1609  -.2597   .9522
                           YI   .5168  -.4270   .7420   YI   .9006   .0975   .4236   CR  -.2877  -.9352  -.2065
                           ZI  -.8079   .0434   .5877   ZI   .4183   .0705  -.9056   OP   .9441  -.2407  -.2252

     SUBSYSTEM  COMPUTER   I. S. U.   ATT. CONT. STAR TRCKR SUN SENSOR ISU/C.P.S. COM. RCVR. APP. RADAR  XMITTER
       STATUS      1          1          1          1          1          1          1          0          1          0

   AFTER MIDCOURSE CORRECTION (IMC=  0), RMV=  1.3317E+01 (FT/SEC), DOF=1.026

   TO ZERO COMPUTED DEVIATIONS AT  16934400 SECONDS

                        P-DR        P-CR        P-OP        V-DR        V-CR        V-OP        A-DR        A-CR        A-OP
            COMP. DEV.  1.434E+08   4.529E+07   1.245E+07   4.226E+01   6.888E+00   7.661E+00   7.125E-04   7.125E-04   7.125E-04
            DEVIATIONS  1.434E+08   4.529E+07   1.245E+07   4.226E+01   6.888E+00   7.661E+00   7.646E-04   7.547E-04   9.874E-04
             ERRORS     1.614E+02   1.076E+03   5.104E+02   1.237E-02   5.312E-03   9.275E-03   2.773E-04   2.488E-04   6.836E-04

   HELIOCENT. * * * * * * * * * * * * * * * * * * * * * * * * * * * * * * * * * * * * * * * * * * * * * * * * * * * * * * * * * * * *

COAST FOR      60.00 SEC.  (  0D 0H 1M 0.00S)      NO PROPGTE.

   HELIOCENT. * * * * * * * * * * * * * * * * * * * * * * * * * * * * * * * * * * * * * * * * * * * * * * * * * * * * * * * * * * * *

AT  60D 0H35M 0.00S
   T=   5186100  ALT=  8.3544752E+10  VEL=  5.8660866E+06  ANG=    89.768  LAT=   15.1477  LONG= -107.7136
                        P-DR        P-CR        P-OP        V-DR        V-CR        V-OP        A-DR        A-CR        A-OP
            COMP. DEV.  1.434E+08   4.529E+07   1.245E+07   4.226E+01   6.888E+00   7.661E+00   7.125E-04   7.125E-04   7.125E-04
            DEVIATIONS  1.434E+08   4.529E+07   1.245E+07   4.226E+01   6.888E+00   7.661E+00   7.656E-04   7.557E-04   9.882E-04
             ERRORS     1.614E+02   1.076E+03   5.104E+02   1.237E-02   5.312E-03   9.275E-03   2.800E-04   2.518E-04   6.847E-04

              ATTITUDE        ROLL      YAW     PITCH          DR       CR       OP          ROLL     YAW     PITCH
                          XI  -.2832  -.9032  -.3226   XI  -.1181   .9927   .0227   DR   .1609  -.2597   .9522
                          YI   .5168  -.4270   .7420   YI   .9006   .0975   .4236   CR  -.2877  -.9352  -.2065
                          ZI  -.8079   .0434   .5877   ZI   .4183   .0705  -.9056   OP   .9441  -.2407  -.2252

     SUBSYSTEM  COMPUTER   I. S. U.   ATT. CONT. STAR TRCKR SUN SENSOR ISU/C.P.S. COM. RCVR. APP. RADAR  XMITTER
       STATUS      1          1          1          1          1          1          1          0          1          0
   DEADBAND ON AXIS  1 CHANGED TO   20.00000 DEG.
   DEADBAND ON AXIS  2 CHANGED TO   20.00000 DEG.
   DEADBAND ON AXIS  3 CHANGED TO   20.00000 DEG.
    XMITTER    TURNED OFF
   ATT. CONT.  TURNED OFF
   COMPUTER    TURNED OFF
   I. S. U.    TURNED OFF
   STAR TRCKR  TURNED OFF
   SUN SENSOR  TURNED OFF
                        P-DR        P-CR        P-OP        V-DR        V-CR        V-OP        A-DR        A-CR        A-OP
            COMP. DEV.  1.434E+08   4.529E+07   1.245E+07   4.226E+01   6.888E+00   7.661E+00   7.854E-01   7.854E-01   7.854E-01
            DEVIATIONS  1.434E+08   4.529E+07   1.245E+07   4.226E+01   6.888E+00   7.661E+00   7.854E-01   7.854E-01   7.854E-01
```

FIGURE A-91. MARS MISSION, ERROR ANALYSIS OUTPUT

```
          ERRORS     1.614E+02  1.076E+03  5.104E+02  1.237E-02  5.312E-03  9.275E-03  7.854E-01  7.854E-01  7.854E-01

     HELIOCENT. * * * * * * * * * * * * * * * * * * * * * * * * * * * * * * * * * * * * * * * * * * * * * * * *

COAST FOR   863880.00 SEC.  ( 9D23H58M 0.00S)

     HELIOCENT. * * * * * * * * * * * * * * * * * * * * * * * * * * * * * * * * * * * * * * * * * * * * * * * *

  AT  70D 0H33M 0.00S
    T=   6049980  ALT=  1.0603424E+11   VEL=  7.4950784E+06   ANG=    89.783  LAT=   13.5876  LONG= -106.8491
                         P-DR       P-CR       P-OP       V-DR       V-CR       V-OP       A-DR       A-CR       A-OP
         COMP. DEV.  1.838E+08  3.764E+07  1.782E+07  4.789E+01  1.220E+01  9.482E+00  7.854E-01  7.854E-01  7.854E-01
         DEVIATIONS  1.838E+08  3.764E+07  1.782E+07  4.789E+01  1.220E+01  9.482E+00  7.854E-01  7.854E-01  7.854E-01
          ERRORS     8.080E+03  4.122E+03  7.903E+03  1.448E-02  4.775E-03  9.001E-03  7.854E-01  7.854E-01  7.854E-01

          ATTITUDE        ROLL     YAW     PITCH          DR      CR      OP          ROLL     YAW     PITCH
                     XI  -.2832  -.9032  -.3226    XI  -.2401   .9705   .0227   DR   .1953  -.1419   .9704
                     YI   .5168  -.4270   .7420    YI   .8816   .2083   .4236   CR  -.2655  -.9602  -.0870
                     ZI  -.8079   .0434   .5877    ZI   .4063   .1217  -.9056   OP   .9441  -.2407  -.2252

      SUBSYSTEM  COMPUTER    I. S. U.   ATT. CONT. STAR TRCKR SUN SENSOR ISU/C.P.S. COM. RCVR. APP. RADAR  XMITTER
       STATUS     -0          -0         -0          -0          -0          0          1          0          0          0

          STATION        RANGE          RANGE DOT          AZM        ELE.      SUN ANG.
         GOLDSTONE   1.0603598E+11  2.8165291E+04   155.046     66.410    159.483
           MEASUREMENT ERRORS       RANGE           ELEVATION         AZIMUTH          RANGE DOT
              INERTIAL SYSTEM    8.086810E+03    4.891074E-08    6.838069E-08     3.897716E-01
                      DSIF       5.000000E+01   -0.               -0.               4.100000E-02
     AFTER KALMAN UPDATE
                         P-DR       P-CR       P-OP       V-DR       V-CR       V-OP       A-DR       A-CR       A-OP
         COMP. DEV.  1.838E+08  3.762E+07  1.782E+07  4.789E+01  1.220E+01  9.481E+00  7.854E-01  7.854E-01  7.854E-01
         DEVIATIONS  1.838E+08  3.764E+07  1.782E+07  4.789E+01  1.220E+01  9.482E+00  7.854E-01  7.854E-01  7.854E-01
          ERRORS     3.735E+02  3.275E+03  2.186E+03  1.705E-03  3.157E-03  2.791E-03  7.854E-01  7.854E-01  7.854E-01

     HELIOCENT. * * * * * * * * * * * * * * * * * * * * * * * * * * * * * * * * * * * * * * * * * * * * * * * *

COAST FOR   864000.00 SEC.  ( 10D 0H 0M 0.00S)

     HELIOCENT. * * * * * * * * * * * * * * * * * * * * * * * * * * * * * * * * * * * * * * * * * * * * * * * *

  AT  80D 0H33M 0.00S
    T=   6913980  ALT=  1.3266059E+11   VEL=  9.4120675E+06   ANG=    89.797  LAT=   12.6072  LONG= -105.6352
                         P-DR       P-CR       P-OP       V-DR       V-CR       V-OP       A-DR       A-CR       A-OP
         COMP. DEV.  2.234E+08  2.520E+07  2.599E+07  5.304E+01  1.929E+01  1.205E+01  7.854E-01  7.854E-01  7.854E-01
         DEVIATIONS  2.234E+08  2.520E+07  2.599E+07  5.304E+01  1.929E+01  1.206E+01  7.854E-01  7.854E-01  7.854E-01
          ERRORS     5.104E+03  5.815E+03  4.485E+03  1.810E-03  2.552E-03  2.496E-03  7.854E-01  7.854E-01  7.854E-01

          ATTITUDE        ROLL     YAW     PITCH          DR      CR      OP          ROLL     YAW     PITCH
                     XI  -.2832  -.9032  -.3226    XI  -.3541   .9349   .0227   DR   .2256  -.0265   .9739
                     YI   .5168  -.4270   .7420    YI   .8505   .3118   .4236   CR  -.2404  -.9702   .0293
                     ZI  -.8079   .0434   .5877    ZI   .3889   .1693  -.9056   OP   .9441  -.2407  -.2252

      SUBSYSTEM  COMPUTER    I. S. U.   ATT. CONT. STAR TRCKR SUN SENSOR ISU/C.P.S. COM. RCVR. APP. RADAR  XMITTER
       STATUS     -0          -0         -0          -0          -0          0          1          0          0          0

          STATION        RANGE          RANGE DOT          AZM        ELE.      SUN ANG.
```

FIGURE A-9m. MARS MISSION, ERROR ANALYSIS OUTPUT

```
GOLDSTONE   1.3266254E+11  3.3052327E+04   153.238    65.067   151.512
  MEASUREMENT ERRORS      RANGE          ELEVATION        AZIMUTH        RANGE DOT
     INERTIAL SYSTEM   4.281949E+03   5.735790E-08   1.458913E-08   3.074993E-01
          DSIF         5.000000E+01   -0.            -0.            4.100000E-02
AFTER KALMAN UPDATE
                  P-DR        P-CR        P-OP        V-DR        V-CR        V-OP        A-DR        A-CR        A-OP
COMP. DEV.   2.234E+08   2.520E+07   2.599E+07   5.304E+01   1.929E+01   1.206E+01   7.854E-01   7.854E-01   7.854E-01
DEVIATIONS   2.234E+08   2.520E+07   2.599E+07   5.304E+01   1.929E+01   1.206E+01   7.854E-01   7.854E-01   7.854E-01
 ERRORS      1.613E+02   1.103E+03   2.186E+03   8.378E-05   1.964E-04   1.424E-03   7.854E-01   7.854E-01   7.854E-01

HELIOCENT. * * * * * * * * * * * * * * * * * * * * * * * * * * * * * * * * * * * * * * * * * * * * * * * * * * * * * * * * * * * * * * * *

COAST FOR   864000.00 SEC.  ( 10D 0H 0M 0.00S)

HELIOCENT. * * * * * * * * * * * * * * * * * * * * * * * * * * * * * * * * * * * * * * * * * * * * * * * * * * * * * * * * * * * * * * * *

AT  90D 0H33M 0.00S
T=   7777980  ALT=  1.6356664E+11  VEL=  1.1619444E+07  ANG=    89.811  LAT=   12.2202  LONG= -103.6603
                  P-DR        P-CR        P-OP        V-DR        V-CR        V-OP        A-DR        A-CR        A-OP
COMP. DEV.   2.723E+08   1.140E+07   3.707E+07   5.727E+01   2.799E+01   1.536E+01   7.854E-01   7.854E-01   7.854E-01
DEVIATIONS   2.723E+08   1.140E+07   3.707E+07   5.727E+01   2.799E+01   1.536E+01   7.854E-01   7.854E-01   7.854E-01
 ERRORS      3.194E+02   1.150E+03   3.389E+03   1.073E-04   2.263E-04   1.398E-03   7.854E-01   7.854E-01   7.854E-01

 ATTITUDE        ROLL      YAW     PITCH          DR       CR       OP          ROLL     YAW     PITCH
                XI  -.2832  -.9032  -.3226   XI  -.4595   .8879   .0227   DR   .2518   .0855   .9640
                YI   .5168  -.4270   .7420   YI   .8009   .4078   .4236   CR  -.2128  -.9668   .1414
                ZI  -.8079   .0434   .5877   ZI   .3668   .2130  -.9056   OP   .9441  -.2407  -.2252

  SUBSYSTEM  COMPUTER   I. S. U.   ATT. CONT. STAR TRCKR SUN SENSOR ISU/C.P.S. COM. RCVR. APP. RADAR  XMITTER
   STATUS      -0         -0         -0         -0         -0          0          1          0         0          0

 STATION        RANGE        RANGE DOT        AZM       ELE.      SUN ANG.
GOLDSTONE   1.6356877E+11  3.7961728E+04   149.490    63.941   143.651
  MEASUREMENT ERRORS      RANGE          ELEVATION        AZIMUTH        RANGE DOT
     INERTIAL SYSTEM   1.648351E+02   2.125619E-08   5.433642E-09   7.476365E-02
          DSIF         5.000000E+01   -0.            -0.            4.100000E-02
AFTER KALMAN UPDATE
                  P-DR        P-CR        P-OP        V-DR        V-CR        V-OP        A-DR        A-CR        A-OP
COMP. DEV.   2.723E+08   1.140E+07   3.707E+07   5.727E+01   2.799E+01   1.536E+01   7.854E-01   7.854E-01   7.854E-01
DEVIATIONS   2.723E+08   1.140E+07   3.707E+07   5.727E+01   2.799E+01   1.536E+01   7.854E-01   7.854E-01   7.854E-01
 ERRORS      1.200E+02   5.441E+02   1.609E+03   3.647E-05   1.355E-04   6.501E-04   7.854E-01   7.854E-01   7.854E-01

HELIOCENT. * * * * * * * * * * * * * * * * * * * * * * * * * * * * * * * * * * * * * * * * * * * * * * * * * * * * * * * * * * * * * * * *

COAST FOR   862020.00 SEC.  ( 9D23H27M 0.00S)

HELIOCENT. * * * * * * * * * * * * * * * * * * * * * * * * * * * * * * * * * * * * * * * * * * * * * * * * * * * * * * * * * * * * * * * *

AT 100D 0H 0M 0.00S
T=   8640000  ALT=  1.9859611E+11  VEL=  1.4097170E+07  ANG=    89.825  LAT=   12.3708  LONG=  -92.7982
                  P-DR        P-CR        P-OP        V-DR        V-CR        V-OP        A-DR        A-CR        A-OP
COMP. DEV.   3.241E+08   2.832E+07   5.145E+07   5.998E+01   3.824E+01   1.912E+01   7.854E-01   7.854E-01   7.854E-01
DEVIATIONS   3.241E+08   2.832E+07   5.145E+07   5.998E+01   3.824E+01   1.912E+01   7.854E-01   7.854E-01   7.854E-01
 ERRORS      1.710E+02   5.742E+02   2.162E+03   5.719E-05   1.643E-04   6.346E-04   7.854E-01   7.854E-01   7.854E-01

 ATTITUDE        ROLL      YAW     PITCH          DR       CR       OP          ROLL     YAW     PITCH
```

FIGURE A-9n. MARS MISSION, ERROR ANALYSIS OUTPUT

```
                              XI   -.2832   -.9032   -.3226   XI   -.5556    .8312    .0227   DR    .2739    .1927    .9422
                              YI    .5168   -.4279    .7420   YI    .7584    .4954    .4236   CR   -.1834   -.9513    .2479
                              ZI   -.8079    .0434    .5877   ZI    .3408    .2525   -.9056   OP    .9441   -.2407   -.2252

   SUBSYSTEM  COMPUTER    I. S. U.    ATT. CONT. STAR TRCKR SUN SENSOR ISU/C.P.S. COM. RCVR. APP. RADAR  XMITTER
     STATUS     -0           -0          -0         -0         -0          0          1         0          0          0
 COMPUTER    TURNED ON
 I. S. U.    TURNED ON
 SUN SENSOR  TURNED ON
 STAR TRCKR  TURNED ON
 ATT. CONT.  TURNED ON
  XMITTER    TURNED ON
                          P-DR        P-CR        P-OP        V-DR        V-CR        V-OP        A-DR        A-CR        A-OP
           COMP. DEV.  3.241E+08   2.832E+07   5.145E+07   5.998E+01   3.824E+01   1.912E+01   1.425E-01   1.425E-01   1.425E-01
           DEVIATIONS  3.241E+08   2.832E+07   5.145E+07   5.998E+01   3.824E+01   1.912E+01   7.854E-01   7.854E-01   7.854E-01
            ERRORS     1.710E+02   5.742E+02   2.162E+03   5.719E-05   1.643E-04   6.346E-04   7.854E-01   7.854E-01   7.854E-01

 HELIOCENT. * * * * * * * * * * * * * * * * * * * * * * * * * * * * * * * * * * * * * * * * * * * * * * * * * * * * *

COAST FOR     1800.00 SEC.  (  0D 0H30M 0.00S)      NO PRPGTE.

 HELIOCENT. * * * * * * * * * * * * * * * * * * * * * * * * * * * * * * * * * * * * * * * * * * * * * * * * * * * * *

 AT 100D 0H30M 0.00S
 T=   8641800  ALT=  1.9867048E+11  VEL=  1.4102964E+07  ANG=    89.825  LAT=    12.3720  LONG= -100.2913
                          P-DR        P-CR        P-OP        V-DR        V-CR        V-OP        A-DR        A-CR        A-OP
           COMP. DEV.  3.241E+08   2.832E+07   5.145E+07   5.998E+01   3.824E+01   1.912E+01   1.717E-02   1.717E-02   1.717E-02
           DEVIATIONS  3.241E+08   2.832E+07   5.145E+07   5.998E+01   3.824E+01   1.912E+01   7.854E-01   7.854E-01   7.854E-01
            ERRORS     1.710E+02   5.742E+02   2.162E+03   5.719E-05   1.643E-04   6.346E-04   7.854E-01   7.854E-01   7.854E-01

            ATTITUDE          ROLL      YAW     PITCH          DR       CR       OP          ROLL      YAW     PITCH
                              XI   -.2832   -.9032   -.3226   XI   -.5556    .8312    .0227   DR    .2739    .1927    .9422
                              YI    .5168   -.4279    .7420   YI    .7584    .4954    .4236   CR   -.1834   -.9513    .2479
                              ZI   -.8079    .0434    .5877   ZI    .3408    .2525   -.9056   OP    .9441   -.2407   -.2252

   SUBSYSTEM  COMPUTER    I. S. U.    ATT. CONT. STAR TRCKR SUN SENSOR ISU/C.P.S. COM. RCVR. APP. RADAR  XMITTER
     STATUS      1            1           1          1          1          1          1         0          1          0

           BEGIN MANEUVERING TO LOCATE SUN-CANOPUS


 HELIOCENT. * * * * * * * * * * * * * * * * * * * * * * * * * * * * * * * * * * * * * * * * * * * * * * * * * * * * *

COAST FOR       60.00 SEC.  (  0D 0H 1M 0.00S)      NO PRPGTE.

             ANGLE BETWEEN CELESTIAL BODIES=   95.70, BETWEEN OPTICAL AIDS=   90.00

             DEAD BANDS   SET    MAX.
                  ROLL    2.41   64.00
                   YAW    2.41    8.00
                 PITCH    2.41   30.30
          MANEUVERS
                 PITCH -23.555DEG.   YAW  -5.238DEG.  ROLL -27.715DEG. IN       60SEC.

 HELIOCENT. * * * * * * * * * * * * * * * * * * * * * * * * * * * * * * * * * * * * * * * * * * * * * * * * * * * * *
```

FIGURE A-9o. MARS MISSION, ERROR ANALYSIS OUTPUT

```
AT 100D 0H31M 0.00S
  T=   8641860  ALT=  1.9868143E+11  VEL=  1.4103158E+07  ANG=    89.825  LAT=   12.3720  LONG= -100.5411
                        P-DR       P-CR       P-OP       V-DR       V-CR       V-OP       A-DR       A-CR       A-OP
        COMP. DEV.   3.241E+08  2.832E+07  5.145E+07  5.998E+01  3.824E+01  1.912E+01  1.717E-02  1.717E-02  1.717E-02
        DEVIATIONS   3.241E+08  2.832E+07  5.145E+07  5.998E+01  3.824E+01  1.912E+01  7.854E-01  7.854E-01  7.854E-01
         ERRORS      1.710E+02  5.742E+02  2.162E+03  5.719E-05  1.643E-04  6.346E-04  7.854E-01  7.854E-01  7.854E-01

         ATTITUDE          ROLL     YAW     PITCH          DR       CR       OP          ROLL     YAW     PITCH
                      XI   .0715  -.6794  -.7302    XI  -.5556   .8312    .0227   DR   .2594  -.1757   .9497
                      YI   .7094  -.4000   .5161    YI   .7584   .4954    .4236   CR   .2338  -.9427  -.2382
                      ZI  -.7012  -.5549   .4477    ZI   .3408   .2525  -.9056   OP   .9371   .2838  -.2034

    SUBSYSTEM  COMPUTER   I. S. U.   ATT. CONT. STAR TRCKR SUN SENSOR ISU/C.P.S. COM. RCVR. APP. RADAR  XMITTER
     STATUS       1          1          1          1          1          1          1          0          1          0

        END MANEUVERING.BEGIN SEARCH FOR SUN-CANOPUS

   HELIOCENT. * * * * * * * * * * * * * * * * * * * * * * * * * * * * * * * * * * * * * * * * * * * * * * * * * * * * *

COAST FOR       60.00 SEC.  (  0D 0H 1M 0.00S)      NO PRPGTE.

          ANGLE BETWEEN CELESTIAL BODIES=   95.70, BETWEEN OPTICAL AIDS=   90.00

          DEAD BANDS    SET    MAX.
                ROLL    2.41   64.00
                 YAW    2.41    8.00
               PITCH    2.41   30.30
        MANEUVERS
               PITCH     .000DEG.   YAW   -.000DEG.  ROLL    -.000DEG. IN        60SEC.

        SEARCH FOR SUN          IN     30.1 SECONDS WITH   1.00000 PASSES
                              ANGULAR RATES (RAD/SEC)=ROLL      .02612      .YAW     0.00000      .PITCH  0.00000

        SEARCH FOR CANOPUS      IN     29.9 SECONDS WITH   1.00000 PASSES
                              ANGULAR RATES (RAD/SEC)=ROLL      .00000      .YAW      .02612      .PITCH  0.00000

   HELIOCENT. * * * * * * * * * * * * * * * * * * * * * * * * * * * * * * * * * * * * * * * * * * * * * * * * * * * * *

 AT 100D 0H32M 0.00S
   T=   8641920  ALT=  1.9868419E+11  VEL=  1.4103351E+07  ANG=    89.825  LAT=   12.3720  LONG= -100.7909
                        P-DR       P-CR       P-OP       V-DR       V-CR       V-OP       A-DR       A-CR       A-OP
        COMP. DEV.   3.241E+08  2.832E+07  5.145E+07  5.998E+01  3.824E+01  1.912E+01  1.717E-02  1.717E-02  1.717E-02
        DEVIATIONS   3.241E+08  2.832E+07  5.145E+07  5.998E+01  3.824E+01  1.912E+01  1.717E-02  1.717E-02  1.718E-02
         ERRORS      1.710E+02  5.742E+02  2.162E+03  5.719E-05  1.643E-04  6.346E-04  2.576E-04  2.653E-04  6.853E-04

         ATTITUDE          ROLL     YAW     PITCH          DR       CR       OP          ROLL     YAW     PITCH
CANOPUS   ACQUIRED    XI   .0715  -.6794  -.7302    XI  -.5556   .8312    .0227   DR   .2594  -.1757   .9497
                      YI   .7094  -.4000   .5161    YI   .7584   .4954    .4236   CR   .2338  -.9427  -.2382
                      ZI  -.7012  -.5549   .4477    ZI   .3408   .2525  -.9056   OP   .9371   .2838  -.2034

    SUBSYSTEM  COMPUTER   I. S. U.   ATT. CONT. STAR TRCKR SUN SENSOR ISU/C.P.S. COM. RCVR. APP. RADAR  XMITTER
     STATUS       1          1          1          1          1          1          1          0          1          0
```

FIGURE A-9p. MARS MISSION, ERROR ANALYSIS OUTPUT

```
            END SEARCH FOR SUN-CANOPUS

     DEADBAND ON AXIS  1 CHANGED TO      .10000 DEG.
     DEADBAND ON AXIS  2 CHANGED TO      .10000 DEG.
     DEADBAND ON AXIS  3 CHANGED TO      .10000 DEG.

     HELIOCENT. * * * * * * * * * * * * * * * * * * * * * * * * * * * * * * * * * * * * * * * * * * * * * * * * * * *

COAST FOR       60.00 SEC.  (  0D 0H 1M 0.00S)      NO PRPGTE.

                ANGLE BETWEEN CELESTIAL BODIES=   95.70, BETWEEN OPTICAL AIDS=   90.00

                DEAD BANDS    SET     MAX.
                     ROLL     .10   64.00
                      YAW     .10    8.00
                    PITCH     .10   30.30
            MANEUVERS
                    PITCH    .000DEG.   YAW   -.000DEG.  ROLL   -.000DEG. IN        60SEC.

     HELIOCENT. * * * * * * * * * * * * * * * * * * * * * * * * * * * * * * * * * * * * * * * * * * * * * * * * * * *

 AT 100D 0H33M 0.00S
   T=   8641980  ALT=  1.9868694E+11  VEL=  1.4103544E+07  ANG=    89.825  LAT=   12.3721  LONG= -101.0406
                          P-DR       P-CR       P-OP       V-DR       V-CR       V-OP       A-DR       A-CR       A-OP
            COMP. DEV.  3.241E+08  2.832E+07  5.145E+07  5.998E+01  3.824E+01  1.912E+01  7.125E-04  7.125E-04  7.125E-04
            DEVIATIONS  3.241E+08  2.832E+07  5.145E+07  5.998E+01  3.824E+01  1.912E+01  7.581E-04  7.607E-04  9.889E-04
             ERRORS     1.710E+02  5.742E+02  2.162E+03  5.719E-05  1.643E-04  6.346E-04  2.588E-04  2.665E-04  6.858E-04

              ATTITUDE          ROLL     YAW     PITCH          DR       CR       OP          ROLL     YAW     PITCH
CANOPUS    ACQUIRED        XI   .0715  -.5794  -.7302     XI  -.5556   .8312    .0227    DR   .2594  -.1757   .9497
                           YI   .7094  -.4800   .5161     YI   .7584   .4954    .4236    CR   .2338  -.9427  -.2382
                           ZI  -.7012  -.5549   .4477     ZI   .3408   .2525   -.9056    OP   .9371   .2838  -.2034

       SUBSYSTEM  COMPUTER    I. S. U.   ATT. CONT. STAR TRCKR SUN SENSOR ISU/C.P.S. COM. RCVR. APP. RADAR  XMITTER
         STATUS       1          1          1         1         1          1          1          0          1          0

            STATION        RANGE          RANGE DOT          AZM        ELE.      SUN ANG.
            GOLDSTONE   1.9868923E+11  4.2087921E+04    144.241     62.908    136.253
              MEASUREMENT ERRORS        RANGE         ELEVATION          AZIMUTH          RANGE DOT
                 INERTIAL SYSTEM     1.157263E+02   1.091633E-08    2.832549E-09     5.813816E-02
                      DSIF           5.000000E+01  -0.                -0.            4.100000E-02
     AFTER KALMAN UPDATE
                          P-DR       P-CR       P-OP       V-DR       V-CR       V-OP       A-DR       A-CR       A-OP
            COMP. DEV.  3.241E+08  2.832E+07  5.145E+07  5.998E+01  3.824E+01  1.912E+01  7.125E-04  7.125E-04  7.125E-04
            DEVIATIONS  3.241E+08  2.832E+07  5.145E+07  5.998E+01  3.824E+01  1.912E+01  7.581E-04  7.607E-04  9.889E-04
             ERRORS     9.412E+01  3.355E+02  1.320E+03  2.909E-05  1.002E-04  3.981E-04  2.588E-04  2.665E-04  6.858E-04

     HELIOCENT. * * * * * * * * * * * * * * * * * * * * * * * * * * * * * * * * * * * * * * * * * * * * * * * * * * *

COAST FOR       60.00 SEC.  (  0D 0H 1M 0.00S)      NO PRPGTE.

                ANGLE BETWEEN CELESTIAL BODIES=   95.70, BETWEEN OPTICAL AIDS=   90.00

                DEAD BANDS    SET     MAX.
                     ROLL     .10   64.00
                      YAW     .10    8.00
```

FIGURE A-9q. MARS MISSION, ERROR ANALYSIS OUTPUT

```
                    PITCH     .10  30.30
          MANEUVERS
                    PITCH     .000DEG.    YAW    -.000DEG.  ROLL    -.000DEG. IN        60SEC.

     HELIOCENT. * * * * * * * * * * * * * * * * * * * * * * * * * * * * * * * * * * * * * * * * * * * * * * *

   AT 100D 0H34M 0.00S
     T=   8642040  ALT=  1.9868969E+11   VEL=  1.4103737E+07  ANG=      89.825  LAT=    12.3721  LONG= -101.2904
                          P-DR        P-CR        P-OP        V-DR        V-CR        V-OP        A-DR        A-CR        A-OP
          COMP. DEV.   3.241E+08   2.832E+07   5.145E+07   5.998E+01   3.824E+01   1.912E+01   7.125E-04   7.125E-04   7.125E-04
          DEVIATIONS   3.241E+08   2.832E+07   5.145E+07   5.998E+01   3.824E+01   1.912E+01   7.588E-04   7.614E-04   9.895E-04
           ERRORS      9.412E+01   3.356E+02   1.320E+03   2.909E-05   1.002E-04   3.881E-04   2.609E-04   2.685E-04   6.865E-04

           ATTITUDE          ROLL      YAW     PITCH           DR        CR        OP            ROLL      YAW     PITCH
   CANOPUS    ACQUIRED    XI   .0715   -.6794   -.7302   XI  -.5556    .8312    .0227   DR    .2594   -.1757    .9497
                          YI   .7094   -.4800    .5161   YI   .7584    .4954    .4236   CR    .2338   -.9426   -.2382
                          ZI  -.7012   -.5549    .4477   ZI   .3408    .2525   -.9056   OP    .9371    .2838   -.2034

       SUBSYSTEM  COMPUTER   I. S. U.   ATT. CONT. STAR TRCKR SUN SENSOR ISU/C.P.S. COM. RCVR. APP. RADAR  XMITTER
         STATUS      1          1          1          1          1          1          1          0          1          0

     AFTER MIDCOURSE CORRECTION (IMC=  0), RMV=  1.4348E-02 (FT/SEC), DOF=1.767

     TO ZERO COMPUTED DEVIATIONS AT  16934400 SECONDS

                          P-DR        P-CR        P-OP        V-DR        V-CR        V-OP        A-DR        A-CR        A-OP
          COMP. DEV.   3.241E+08   2.832E+07   5.145E+07   5.998E+01   3.824E+01   1.912E+01   7.125E-04   7.125E-04   7.125E-04
          DEVIATIONS   3.241E+08   2.832E+07   5.145E+07   5.998E+01   3.824E+01   1.912E+01   7.588E-04   7.614E-04   9.895E-04
           ERRORS      9.412E+01   3.356E+02   1.320E+03   3.174E-05   1.005E-04   3.880E-04   2.609E-04   2.685E-04   6.865E-04

     HELIOCENT. * * * * * * * * * * * * * * * * * * * * * * * * * * * * * * * * * * * * * * * * * * * * * * *

   COAST FOR       60.00 SEC.  (  0D 0H 1M 0.00S)     NO PRPGTE.

     HELIOCENT. * * * * * * * * * * * * * * * * * * * * * * * * * * * * * * * * * * * * * * * * * * * * * * *

   AT 100D 0H35M 0.00S
     T=   8642100  ALT=  1.9869245E+11   VEL=  1.4103930E+07  ANG=      89.825  LAT=    12.3722  LONG= -101.5402
                          P-DR        P-CR        P-OP        V-DR        V-CR        V-OP        A-DR        A-CR        A-OP
          COMP. DEV.   3.241E+08   2.832E+07   5.145E+07   5.998E+01   3.824E+01   1.912E+01   7.125E-04   7.125E-04   7.125E-04
          DEVIATIONS   3.241E+08   2.832E+07   5.145E+07   5.998E+01   3.824E+01   1.912E+01   7.598E-04   7.624E-04   9.902E-04
           ERRORS      9.412E+01   3.356E+02   1.320E+03   3.174E-05   1.005E-04   3.880E-04   2.637E-04   2.713E-04   6.876E-04

           ATTITUDE          ROLL      YAW     PITCH           DR        CR        OP            ROLL      YAW     PITCH
                          XI   .0715   -.6794   -.7302   XI  -.5556    .8312    .0227   DR    .2594   -.1757    .9497
                          YI   .7094   -.4800    .5161   YI   .7584    .4954    .4236   CR    .2338   -.9426   -.2382
                          ZI  -.7012   -.5549    .4477   ZI   .3408    .2525   -.9056   OP    .9371    .2838   -.2034

       SUBSYSTEM  COMPUTER   I. S. U.   ATT. CONT. STAR TRCKR SUN SENSOR ISU/C.P.S. COM. RCVR. APP. RADAR  XMITTER
         STATUS      1          1          1          1          1          1          1          0          1          0
     DEADBAND ON AXIS  1 CHANGED TO    20.00000 DEG.
     DEADBAND ON AXIS  2 CHANGED TO    20.00000 DEG.
     DEADBAND ON AXIS  3 CHANGED TO    20.00000 DEG.
       XMITTER    TURNED OFF
     ATT. CONT.  TURNED OFF
     COMPUTER    TURNED OFF
```

FIGURE A-9r. MARS MISSION, ERROR ANALYSIS OUTPUT

```
I. S. U.   TURNED OFF
STAR TRCKR TURNED OFF
SUN SENSOR TURNED OFF
                    P-DR        P-CR        P-OP        V-DR        V-CR        V-OP        A-DR        A-CR        A-OP
COMP. DEV.   3.241E+08  2.832E+07  5.145E+07  5.998E+01  3.824E+01  1.912E+01  7.854E-01  7.854E-01  7.854E-01
DEVIATIONS   3.241E+08  2.832E+07  5.145E+07  5.998E+01  3.824E+01  1.912E+01  7.854E-01  7.854E-01  7.854E-01
ERRORS       9.412E+01  3.356E+02  1.320E+03  3.174E-05  1.005E-04  3.880E-04  7.854E-01  7.854E-01  7.854E-01

HELIOCENT. * * * * * * * * * * * * * * * * * * * * * * * * * * * * * * * * * * * * * * * * * * * * * * * * * * * * * * * *

COAST FOR   863880.00 SEC.  ( 9D23H58M 0.00S)

HELIOCENT. * * * * * * * * * * * * * * * * * * * * * * * * * * * * * * * * * * * * * * * * * * * * * * * * * * * * * * * *

AT 110D 0H33M 0.00S
T=   9505980  ALT=  2.3780844E+11  VEL=  1.6837919E+07  ANG=    89.838  LAT=   12.9775  LONG=  -97.8913
                    P-DR        P-CR        P-OP        V-DR        V-CR        V-OP        A-DR        A-CR        A-OP
COMP. DEV.   3.769E+08  6.468E+07  6.975E+07  6.062E+01  4.947E+01  2.360E+01  7.854E-01  7.854E-01  7.854E-01
DEVIATIONS   3.769E+08  6.468E+07  6.975E+07  6.062E+01  4.947E+01  2.360E+01  7.854E-01  7.854E-01  7.854E-01
ERRORS       8.946E+01  3.410E+02  1.639E+03  3.741E-05  1.248E-04  3.756E-04  7.854E-01  7.854E-01  7.854E-01

ATTITUDE        ROLL      YAW     PITCH          DR        CR        OP          ROLL      YAW     PITCH
              XI   .0715  -.6794  -.7302   XI  -.6427   .7658   .0227   DR   .2324  -.0721   .9700
              YI   .7094  -.4800   .5161   YI   .7000   .5750   .4236   CR   .2606  -.9562  -.1335
              ZI  -.7012  -.5549   .4477   ZI   .3113   .2881  -.9056   OP   .9371   .2838  -.2034

SUBSYSTEM  COMPUTER   I. S. U.   ATT. CONT. STAR TRCKR SUN SENSOR ISU/C.P.S. COM. RCVR. APP. RADAR  XMITTER
  STATUS     -0          -0          -0          -0          -0          0          1          0          0          0

STATION        RANGE        RANGE DOT        AZM      ELE.     SUN ANG.
GOLDSTONE   2.3781092E+11  4.7082053E+04   137.915    61.810   129.347
MEASUREMENT ERRORS      RANGE        ELEVATION        AZIMUTH        RANGE DOT
INERTIAL SYSTEM   1.065850E+02   6.709793E-09   2.108715E-09   4.368537E-02
DSIF              5.000000E+01  -0.             -0.             4.100000E-02
AFTER KALMAN UPDATE
                    P-DR        P-CR        P-OP        V-DR        V-CR        V-OP        A-DR        A-CR        A-OP
COMP. DEV.   3.769E+08  6.468E+07  6.975E+07  6.062E+01  4.947E+01  2.360E+01  7.854E-01  7.854E-01  7.854E-01
DEVIATIONS   3.769E+08  6.468E+07  6.975E+07  6.062E+01  4.947E+01  2.360E+01  7.854E-01  7.854E-01  7.854E-01
ERRORS       7.379E+01  2.215E+02  1.250E+03  3.143E-05  1.024E-04  2.953E-04  7.854E-01  7.854E-01  7.854E-01

HELIOCENT. * * * * * * * * * * * * * * * * * * * * * * * * * * * * * * * * * * * * * * * * * * * * * * * * * * * * * * * *

COAST FOR   864000.00 SEC.  ( 10D 0H 0M 0.00S)

HELIOCENT. * * * * * * * * * * * * * * * * * * * * * * * * * * * * * * * * * * * * * * * * * * * * * * * * * * * * * * * *

AT 120D 0H33M 0.00S
T=  10369980  ALT=  2.8059857E+11  VEL=  1.9785063E+07  ANG=    89.851  LAT=   13.9451  LONG=  -94.3070
                    P-DR        P-CR        P-OP        V-DR        V-CR        V-OP        A-DR        A-CR        A-OP
COMP. DEV.   4.278E+08  1.119E+08  9.203E+07  5.943E+01  6.106E+01  2.825E+01  7.854E-01  7.854E-01  7.854E-01
DEVIATIONS   4.278E+08  1.119E+08  9.203E+07  5.943E+01  6.106E+01  2.825E+01  7.854E-01  7.854E-01  7.854E-01
ERRORS       7.699E+01  2.395E+02  1.487E+03  4.490E-05  1.362E-04  2.900E-04  7.854E-01  7.854E-01  7.854E-01

ATTITUDE        ROLL      YAW     PITCH          DR        CR        OP          ROLL      YAW     PITCH
              XI   .0715  -.6794  -.7302   XI  -.7202   .6934   .0227   DR   .2035   .0295   .9786
              YI   .7094  -.4800   .5161   YI   .6352   .6458   .4236   CR   .2837  -.9584  -.0301
```

FIGURE A-9s. MARS MISSION, ERROR ANALYSIS OUTPUT

```
                    ZI  -.7012  -.5549   .4477   ZI   .2791   .3195  -.9056   OP   .9371   .2838  -.2034

  SUBSYSTEM  COMPUTER   I. S. U.   ATT. CONT. STAR TRCKR SUN SENSOR ISU/C.P.S. COM. RCVR. APP. RADAR  XMITTER
    STATUS     -0          -0         -0         -0         -0          0          1          0         0         0

        STATION        RANGE        RANGE DOT        AZM      ELE.     SUN ANG.
       GOLDSTONE   2.8060128E+11  5.1037946E+04   130.923    60.497   122.879
         MEASUREMENT ERRORS      RANGE        ELEVATION        AZIMUTH        RANGE DOT
            INERTIAL SYSTEM   8.898715E+01  4.905964E-09   2.170693E-09   3.444212E-02
                 DSIF         5.000000E+01  -0.            -0.             4.100000E-02
  AFTER KALMAN UPDATE
                        P-DR       P-CR       P-OP       V-DR       V-CR       V-OP       A-DR       A-CR       A-OP
       COMP. DEV.   4.278E+08  1.119E+08  9.203E+07  5.943E+01  6.106E+01  2.825E+01  7.854E-01  7.854E-01  7.854E-01
       DEVIATIONS   4.278E+08  1.119E+08  9.203E+07  5.943E+01  6.106E+01  2.825E+01  7.854E-01  7.854E-01  7.854E-01
        ERRORS      6.429E+01  1.740E+02  1.047E+03  4.031E-05  1.013E-04  2.124E-04  7.854E-01  7.854E-01  7.854E-01

  HELIOCENT. * * * * * * * * * * * * * * * * * * * * * * * * * * * * * * * * * * * * * * * * * * * * * * * * * * * * * *

COAST FOR   864000.00 SEC.  ( 10D 0H 0M 0.00S)

  HELIOCENT. * * * * * * * * * * * * * * * * * * * * * * * * * * * * * * * * * * * * * * * * * * * * * * * * * * * * * *

 AT 130D 0H33M 0.00S
  T=  11233980  ALT=  3.2665018E+11  VEL=  2.2900461E+07  ANG=    89.862  LAT=    15.1868  LONG=  -90.3611
                        P-DR       P-CR       P-OP       V-DR       V-CR       V-OP       A-DR       A-CR       A-OP
       COMP. DEV.   4.777E+08  1.702E+08  1.190E+08  5.596E+01  7.310E+01  3.315E+01  7.854E-01  7.854E-01  7.854E-01
       DEVIATIONS   4.777E+08  1.702E+08  1.190E+08  5.596E+01  7.310E+01  3.315E+01  7.854E-01  7.854E-01  7.854E-01
        ERRORS      8.320E+01  2.085E+02  1.220E+03  6.981E-05  1.286E-04  2.081E-04  7.854E-01  7.854E-01  7.854E-01

         ATTITUDE        ROLL      YAW     PITCH          DR       CR       OP          ROLL      YAW     PITCH
                     XI   .0715  -.6794  -.7302   XI  -.7881   .6152   .0227   DR   .1730   .1286   .9765
                     YI   .7094  -.4800   .5161   YI   .5650   .7081   .4236   CR   .3033  -.9502   .0714
                     ZI  -.7012  -.5549   .4477   ZI   .2445   .3466  -.9056   OP   .9371   .2838  -.2034

  SUBSYSTEM  COMPUTER   I. S. U.   ATT. CONT. STAR TRCKR SUN SENSOR ISU/C.P.S. COM. RCVR. APP. RADAR  XMITTER
    STATUS     -0          -0         -0         -0         -0          0          1          0         0         0

        STATION        RANGE        RANGE DOT        AZM      ELE.     SUN ANG.
       GOLDSTONE   3.2665319E+11  5.4479938E+04   123.655    58.859   116.781
         MEASUREMENT ERRORS      RANGE        ELEVATION        AZIMUTH        RANGE DOT
            INERTIAL SYSTEM   9.673441E+01  3.362588E-09   1.739778E-09   3.036059E-02
                 DSIF         5.000000E+01  -0.            -0.             4.100000E-02
  AFTER KALMAN UPDATE
                        P-DR       P-CR       P-OP       V-DR       V-CR       V-OP       A-DR       A-CR       A-OP
       COMP. DEV.   4.777E+08  1.702E+08  1.190E+08  5.596E+01  7.310E+01  3.315E+01  7.854E-01  7.854E-01  7.854E-01
       DEVIATIONS   4.777E+08  1.702E+08  1.190E+08  5.596E+01  7.310E+01  3.315E+01  7.854E-01  7.854E-01  7.854E-01
        ERRORS      6.779E+01  1.518E+02  8.117E+02  4.648E-05  1.000E-04  1.465E-04  7.854E-01  7.854E-01  7.854E-01

  HELIOCENT. * * * * * * * * * * * * * * * * * * * * * * * * * * * * * * * * * * * * * * * * * * * * * * * * * * * * * *

COAST FOR   864000.00 SEC.  ( 10D 0H 0M 0.00S)

  HELIOCENT. * * * * * * * * * * * * * * * * * * * * * * * * * * * * * * * * * * * * * * * * * * * * * * * * * * * * * *

 AT 140D 0H33M 0.00S
  T=  12097380  ALT=  3.7549096E+11  VEL=  2.6135191E+07  ANG=    89.873  LAT=    16.6235  LONG=  -86.1070
```

FIGURE A-9t. MARS MISSION, ERROR ANALYSIS OUTPUT

```
                    P-DR        P-CR        P-OP        V-DR        V-CR        V-OP        A-DR        A-CR        A-OP
COMP. DEV.   5.261E+08  2.383E+08  1.495E+08  5.028E+01  8.557E+01  3.813E+01  7.854E-01  7.854E-01  7.854E-01
DEVIATIONS   5.261E+08  2.383E+08  1.495E+08  5.028E+01  8.557E+01  3.813E+01  7.854E-01  7.854E-01  7.854E-01
ERRORS       1.252E+02  1.987E+02  9.244E+02  9.732E-05  1.163E-04  1.469E-04  7.854E-01  7.854E-01  7.854E-01

ATTITUDE        ROLL     YAW     PITCH          DR      CR      OP          ROLL     YAW     PITCH
            XI   .0715  -.6794  -.7302   XI  -.8464   .5321   .0227   DR   .1414   .2243   .9642
            YI   .7094  -.4800   .5161   YI   .4902   .7618   .4236   CR   .3193  -.9323   .1701
            ZI  -.7012  -.5549   .4477   ZI   .2081   .3696  -.9056   OP   .9371   .2838  -.2034

SUBSYSTEM  COMPUTER   I. S. U.   ATT. CONT. STAR TRCKR SUN SENSOR ISU/C.P.S. COM. RCVR. APP. RADAR  XMITTER
  STATUS     -0         -0         -0         -0         -0         0          1          0          0          0

STATION        RANGE        RANGE DOT        AZM      ELE.     SUN ANG.
GOLDSTONE   3.7550026E+11  5.7355006E+04   116.446    56.832   110.990
MEASUREMENT ERRORS      RANGE        ELEVATION        AZIMUTH        RANGE DOT
INERTIAL SYSTEM   1.053403E+02  2.199510E-09  1.238743E-09  2.772365E-02
DSIF              5.000000E+01  -0.           -0.           4.100000E-02
AFTER KALMAN UPDATE
                    P-DR        P-CR        P-OP        V-DR        V-CR        V-OP        A-DR        A-CR        A-OP
COMP. DEV.   5.251E+08  2.383E+08  1.495E+08  5.028E+01  8.557E+01  3.813E+01  7.854E-01  7.854E-01  7.854E-01
DEVIATIONS   5.251E+08  2.383E+08  1.495E+08  5.028E+01  8.557E+01  3.813E+01  7.854E-01  7.854E-01  7.854E-01
ERRORS       9.753E+01  1.674E+02  6.555E+02  8.291E-05  1.088E-04  1.082E-04  7.854E-01  7.854E-01  7.854E-01

HELIOCENT. * * * * * * * * * * * * * * * * * * * * * * * * * * * * * * * * * * * * * * * * * * * * * * * * * * * * * * * * * * * * * * * *

COAST FOR   864000.00 SEC.  ( 10D 0H 0M 0.00S)

HELIOCENT. * * * * * * * * * * * * * * * * * * * * * * * * * * * * * * * * * * * * * * * * * * * * * * * * * * * * * * * * * * * * * * * *

AT 15D 0H33M 0.00S
T=  12961980  ALT=  4.2663300E+11  VEL=  2.9439392E+07  ANG=    89.883  LAT=    18.1652  LONG=  -81.5812
                    P-DR        P-CR        P-OP        V-DR        V-CR        V-OP        A-DR        A-CR        A-OP
COMP. DEV.   5.633E+08  3.167E+08  1.839E+08  4.252E+01  9.739E+01  4.295E+01  7.854E-01  7.854E-01  7.854E-01
DEVIATIONS   5.633E+08  3.167E+08  1.839E+08  4.252E+01  9.739E+01  4.295E+01  7.854E-01  7.854E-01  7.854E-01
ERRORS       1.832E+02  2.424E+02  7.320E+02  1.139E-04  1.203E-04  1.053E-04  7.854E-01  7.854E-01  7.854E-01

ATTITUDE        ROLL     YAW     PITCH          DR      CR      OP          ROLL     YAW     PITCH
            XI   .0715  -.6794  -.7302   XI  -.8953   .4450   .0227   DR   .1088   .3162   .9424
            YI   .7094  -.4800   .5161   YI   .4118   .8069   .4236   CR   .3318  -.9053   .2654
            ZI  -.7012  -.5549   .4477   ZI   .1702   .3885  -.9056   OP   .9371   .2838  -.2034

SUBSYSTEM  COMPUTER   I. S. U.   ATT. CONT. STAR TRCKR SUN SENSOR ISU/C.P.S. COM. RCVR. APP. RADAR  XMITTER
  STATUS     -0         -0         -0         -0         -0         0          1          0          0          0

STATION        RANGE        RANGE DOT        AZM      ELE.     SUN ANG.
GOLDSTONE   4.2663691E+11  5.9628225E+04   109.542    54.400   105.453
MEASUREMENT ERRORS      RANGE        ELEVATION        AZIMUTH        RANGE DOT
INERTIAL SYSTEM   7.500001E+01  1.468714E-09  1.123980E-09  2.562660E-02
DSIF              5.000000E+01  -0.           -0.           4.100000E-02
AFTER KALMAN UPDATE
                    P-DR        P-CR        P-OP        V-DR        V-CR        V-OP        A-DR        A-CR        A-OP
COMP. DEV.   5.633E+08  3.167E+08  1.839E+08  4.252E+01  9.739E+01  4.295E+01  7.854E-01  7.854E-01  7.854E-01
DEVIATIONS   5.633E+08  3.167E+08  1.839E+08  4.252E+01  9.739E+01  4.295E+01  7.854E-01  7.854E-01  7.854E-01
ERRORS       1.562E+02  2.245E+02  6.709E+02  9.938E-05  1.179E-04  1.011E-04  7.854E-01  7.854E-01  7.854E-01
```

FIGURE A-9u. MARS MISSION, ERROR ANALYSIS OUTPUT

```
HELIOCENT. * * * * * * * * * * * * * * * * * * * * * * * * * * * * * * * * * * * * * * * * * * * * * * * * * * * * * * *

COAST FOR   864000.00 SEC.  ( 10D 0H 0M 0.00S)

   HELIOCENT. * * * * * * * * * * * * * * * * * * * * * * * * * * * * * * * * * * * * * * * * * * * * * * * * * * * * *

 AT 140D 0H33M 0.00S
   T=  13825980  ALT=  4.7952839E+11  VEL=  3.2765586E+07  ANG=     89.892  LAT=    19.8097  LONG=  -76.8084
                        P-DR       P-CR       P-OP       V-DR       V-CR       V-OP       A-DR       A-CR       A-OP
          COMP. DEV.  5.954E+08  4.066E+08  2.249E+08  3.224E+01  1.079E+02  4.811E+01  7.854E-01  7.854E-01  7.854E-01
          DEVIATIONS  5.954E+08  4.066E+08  2.249E+08  3.224E+01  1.079E+02  4.811E+01  7.854E-01  7.854E-01  7.854E-01
           ERRORS     2.482E+02  3.201E+02  7.401E+02  1.360E-04  1.250E-04  1.014E-04  7.854E-01  7.854E-01  7.854E-01

            ATTITUDE        ROLL     YAW     PITCH        DR      CR      OP          ROLL     YAW     PITCH
                        XI   .0715  -.6794  -.7302   XI  -.9347   .3548   .0227   DR   .0757   .4036   .9118
                        YI   .7094  -.4800   .5161   YI   .3305   .8434   .4236   CR   .3409  -.8698   .3567
                        ZI  -.7012  -.5549   .4477   ZI   .1311   .4034  -.9056   OP   .9371   .2838  -.2034

      SUBSYSTEM  COMPUTER   I. S. U.   ATT. CONT. STAR TRCKR SUN SENSOR ISU/C.P.S. COM. RCVR. APP. RADAR  XMITTER
        STATUS     -0          -0         -0         -0          -0          0          1          0          0          0

           STATION         RANGE         RANGE DOT         AZM        ELE.      SUN ANG.
          GOLDSTONE   4.7953292E+11   6.1279121E+04   103.093     51.578     100.120
            MEASUREMENT ERRORS        RANGE          ELEVATION          AZIMUTH         RANGE DOT
               INERTIAL SYSTEM      6.526309E+01    1.172889E-09     1.304391E-09     2.639520E-02
                      DSIF          5.000000E+01    -0.                -0.             4.100000E-02
   AFTER KALMAN UPDATE
                        P-DR       P-CR       P-OP       V-DR       V-CR       V-OP       A-DR       A-CR       A-OP
          COMP. DEV.  5.954E+08  4.066E+08  2.249E+08  3.224E+01  1.079E+02  4.811E+01  7.854E-01  7.854E-01  7.854E-01
          DEVIATIONS  5.954E+08  4.066E+08  2.249E+08  3.224E+01  1.079E+02  4.811E+01  7.854E-01  7.854E-01  7.854E-01
           ERRORS     2.201E+02  2.890E+02  6.941E+02  1.240E-04  1.181E-04  9.591E-05  7.854E-01  7.854E-01  7.854E-01

   HELIOCENT. * * * * * * * * * * * * * * * * * * * * * * * * * * * * * * * * * * * * * * * * * * * * * * * * * * * * *

COAST FOR   864000.00 SEC.  ( 10D 0H 0M 0.00S)

   HELIOCENT. * * * * * * * * * * * * * * * * * * * * * * * * * * * * * * * * * * * * * * * * * * * * * * * * * * * * *

 AT 170D 0H33M 0.00S
   T=  14689980  ALT=  5.3363737E+11  VEL=  3.6071473E+07  ANG=     89.900  LAT=    21.4418  LONG=  -71.8044
                        P-DR       P-CR       P-OP       V-DR       V-CR       V-OP       A-DR       A-CR       A-OP
          COMP. DEV.  6.198E+08  5.025E+08  2.681E+08  1.912E+01  1.150E+02  5.462E+01  7.854E-01  7.854E-01  7.854E-01
          DEVIATIONS  6.198E+08  5.025E+08  2.681E+08  1.912E+01  1.150E+02  5.462E+01  7.854E-01  7.854E-01  7.854E-01
           ERRORS     3.546E+02  3.838E+02  7.712E+02  1.681E-04  1.099E-04  1.018E-04  7.854E-01  7.854E-01  7.854E-01

            ATTITUDE        ROLL     YAW     PITCH        DR      CR      OP          ROLL     YAW     PITCH
                        XI   .0715  -.6794  -.7302   XI  -.9647   .2624   .0227   DR   .0423   .4862   .8728
                        YI   .7094  -.4800   .5161   YI   .2470   .8715   .4236   CR   .3466  -.8265   .4436
                        ZI  -.7012  -.5549   .4477   ZI   .0913   .4142  -.9056   OP   .9371   .2838  -.2034

      SUBSYSTEM  COMPUTER   I. S. U.   ATT. CONT. STAR TRCKR SUN SENSOR ISU/C.P.S. COM. RCVR. APP. RADAR  XMITTER
        STATUS     -0          -0         -0         -0          -0          0          1          0          0          0

           STATION         RANGE         RANGE DOT         AZM        ELE.      SUN ANG.
          GOLDSTONE   5.3364264E+11   6.2409616E+04    97.163     48.403      94.980
            MEASUREMENT ERRORS        RANGE          ELEVATION          AZIMUTH         RANGE DOT
```

FIGURE A-9v. MARS MISSION, ERROR ANALYSIS OUTPUT

```
                INERTIAL SYSTEM   7.079903E+01   9.287283E-10   1.472058E-09   2.844509E-02
                      DSIF        5.000000E+01  -0.             -0.             4.100000E-02
   AFTER KALMAN UPDATE
                          P-DR        P-CR        P-OP        V-DR        V-CR        V-OP        A-DR        A-CR        A-OP
            COMP. DEV.  6.198E+08   5.025E+08   2.681E+08   1.912E+01   1.150E+02   5.462E+01   7.854E-01   7.854E-01   7.854E-01
            DEVIATIONS  6.198E+08   5.025E+08   2.681E+08   1.912E+01   1.150E+02   5.462E+01   7.854E-01   7.854E-01   7.854E-01
             ERRORS     2.954E+02   3.364E+02   7.696E+02   1.439E-04   1.023E-04   9.963E-05   7.854E-01   7.854E-01   7.854E-01

   HELIOCENT. * * * * * * * * * * * * * * * * * * * * * * * * * * * * * * * * * * * * * * * * * * * * * * * * * * * * * * * * * * *

COAST FOR   864000.00 SEC.  ( 10D 0H 0M 0.00S)

   HELIOCENT. * * * * * * * * * * * * * * * * * * * * * * * * * * * * * * * * * * * * * * * * * * * * * * * * * * * * * * * * * * *

  AT 180D 0H33M 0.00S
   T=  15553980  ALT=  5.8576907E+11  VEL=  3.9169204E+07  ANG=    89.907  LAT=    22.9513  LONG=  -66.8078
                          P-DR        P-CR        P-OP        V-DR        V-CR        V-OP        A-DR        A-CR        A-OP
            COMP. DEV.  4.050E+08   3.368E+08   1.774E+08   9.783E+00   4.708E+01   6.069E+01   7.854E-01   7.854E-01   7.854E-01
            DEVIATIONS  4.050E+08   3.368E+08   1.774E+08   9.783E+00   4.708E+01   6.069E+01   7.854E-01   7.854E-01   7.854E-01
             ERRORS     1.799E+03   8.665E+02   1.317E+03   2.025E-04   2.415E-04   1.953E-04   7.854E-01   7.854E-01   7.854E-01

              ATTITUDE        ROLL      YAW     PITCH          DR       CR       OP          ROLL      YAW     PITCH
                          XI   .0715   -.6794   -.7302   XI   -.9850   .1711   .0229   DR   .0098   .5614   .8275
                          YI   .7094   -.4800   .5161    YI   .1645   .8908   .4236   CR   .3490  -.7774   .5232
                          ZI  -.7012   -.5549   .4477    ZI   .0521   .4210  -.9056   OP   .9371   .2837  -.2036

     SUBSYSTEM  COMPUTER   I. S. U.   ATT. CONT. STAR TRCKR SUN SENSOR ISU/C.P.S. COM. RCVR. APP. RADAR  XMITTER
       STATUS     -0         -0         -0         -0         -0          0          1          0          0          0

            STATION        RANGE        RANGE DOT        AZM      ELE.     SUN ANG.
            GOLDSTONE   5.8577518E+11  6.2774187E+04   91.990    45.067    89.783
              MEASUREMENT ERRORS      RANGE          ELEVATION        AZIMUTH        RANGE DOT
                INERTIAL SYSTEM   1.888839E+03   2.313736E-09   9.629840E-10   6.626939E-02
                      DSIF        5.000000E+01  -0.             -0.             4.100000E-02
   AFTER KALMAN UPDATE
                          P-DR        P-CR        P-OP        V-DR        V-CR        V-OP        A-DR        A-CR        A-OP
            COMP. DEV.  4.050E+08   3.368E+08   1.774E+08   9.783E+00   4.708E+01   6.069E+01   7.854E-01   7.854E-01   7.854E-01
            DEVIATIONS  4.050E+08   3.368E+08   1.774E+08   9.783E+00   4.708E+01   6.069E+01   7.854E-01   7.854E-01   7.854E-01
             ERRORS     1.199E+02   1.173E+02   5.559E+02   1.785E-04   7.061E-05   1.500E-04   7.854E-01   7.854E-01   7.854E-01

   HELIOCENT. * * * * * * * * * * * * * * * * * * * * * * * * * * * * * * * * * * * * * * * * * * * * * * * * * * * * * * * * * * *

COAST FOR   864000.00 SEC.  ( 10D 0H 0M 0.00S)

   HELIOCENT. * * * * * * * * * * * * * * * * * * * * * * * * * * * * * * * * * * * * * * * * * * * * * * * * * * * * * * * * * * *

  AT 180D 0H33M 0.00S
   T=  16417980  ALT=  6.4119655E+11  VEL=  4.2370763E+07  ANG=    89.914  LAT=    24.4879  LONG=  -61.2921
                          P-DR        P-CR        P-OP        V-DR        V-CR        V-OP        A-DR        A-CR        A-OP
            COMP. DEV.  1.452E+08   1.214E+08   6.133E+07   4.104E+01   3.507E+01   6.666E+01   7.854E-01   7.854E-01   7.854E-01
            DEVIATIONS  1.452E+08   1.214E+08   6.133E+07   4.104E+01   3.507E+01   6.666E+01   7.854E-01   7.854E-01   7.854E-01
             ERRORS     4.871E+02   5.035E+02   5.463E+02   2.215E-04   2.497E-04   2.303E-04   7.854E-01   7.854E-01   7.854E-01

              ATTITUDE        ROLL      YAW     PITCH          DR       CR       OP          ROLL      YAW     PITCH
                          XI   .0715   -.6794   -.7302   XI   -.9969   .0758   .0231   DR  -.0235   .6334   .7735
                          YI   .7094   -.4800   .5161    YI   .0784   .9025   .4236   CR   .3483  -.7200   .6002
```

FIGURE A-9. MARS MISSION, ERROR ANALYSIS OUTPUT

```
                    ZI  -.7012  -.5549   .4477   ZI   .0113   .4240  -.9056   OP   .9371   .2835  -.2037

  SUBSYSTEM  COMPUTER   I. S. U.   ATT. CONT. STAR TRCKR SUN SENSOR ISU/C.P.S. COM. RCVR. APP. RADAR  XMITTER
    STATUS     -0          -0         -0         -0         -0          0          1          0          0          0

        STATION        RANGE        RANGE DOT        AZM       ELE.      SUN ANG.
       GOLDSTONE   6.4120367E+11  6.2566673E+04    86.957    41.272     85.025
         MEASUREMENT ERRORS      RANGE          ELEVATION        AZIMUTH        RANGE DOT
            INERTIAL SYSTEM   1.279885E+02   1.180989E-09   6.964174E-10   4.906602E-02
                 DSIF         5.000000E+01   -0.            -0.            4.100000E-02
  AFTER KALMAN UPDATE
                        P-DR       P-CR       P-OP       V-DR       V-CR       V-OP       A-DR       A-CR       A-OP
          COMP. DEV.  1.452E+08  1.214E+08  6.133E+07  4.104E+01  3.507E+01  6.466E+01  7.854E-01  7.854E-01  7.854E-01
          DEVIATIONS  1.452E+08  1.214E+08  6.133E+07  4.104E+01  3.507E+01  6.466E+01  7.854E-01  7.854E-01  7.854E-01
           ERRORS     3.265E+02  3.085E+02  4.680E+02  1.414E-04  1.552E-04  1.428E-04  7.854E-01  7.854E-01  7.854E-01

  HELIOCENT. * * * * * * * * * * * * * * * * * * * * * * * * * * * * * * * * * * * * * * * * * * * * * * * * * * * * * *

COAST FOR   516420.00 SEC.  (  5D23H27M 0.00S)

  TARGET CT. * * * * * * * * * * * * * * * * * * * * * * * * * * * * * * * * * * * * * * * * * * * * * * * * * * * * * *

 AT 1960 0H 0M 0.00S
  T=  16934400  ALT=  6.7629291E+11  VEL=  4.4366198E+07  ANG=    89.919  LAT=    25.3802  LONG=  -49.5267
                        P-DR       P-CR       P-OP       V-DR       V-CR       V-OP       A-DR       A-CR       A-OP
          COMP. DEV.  1.163E+04  5.083E+03  6.628E+03  8.913E+01  1.259E+02  1.048E+02  7.854E-01  7.854E-01  7.854E-01
          DEVIATIONS  1.164E+04  5.104E+03  6.645E+03  8.913E+01  1.259E+02  1.048E+02  7.854E-01  7.854E-01  7.854E-01
           ERRORS     4.534E+02  4.685E+02  4.765E+02  2.309E-04  3.355E-04  2.813E-04  7.854E-01  7.854E-01  7.854E-01

           ATTITUDE       ROLL      YAW     PITCH          DR       CR       OP          ROLL      YAW     PITCH
                       XI   .0715  -.6794  -.7302   XI   .7244   .2044  -.6584   DR   .6253  -.7425  -.2400
                       YI   .7094  -.4800   .5161   YI   .6762  -.3961   .6212   CR   .3613   .5481  -.7544
                       ZI  -.7012  -.5549   .4477   ZI  -.1338  -.8952  -.4251   OP   .6917   .3851   .6110

  SUBSYSTEM  COMPUTER   I. S. U.   ATT. CONT. STAR TRCKR SUN SENSOR ISU/C.P.S. COM. RCVR. APP. RADAR  XMITTER
    STATUS     -0          -0         -0         -0         -0          0          1          0          0          0
  COMPUTER   TURNED ON
  I. S. U.   TURNED ON
  SUN SENSOR TURNED ON
  STAR TRCKR TURNED ON
  ATT. CONT. TURNED ON
  APP. RADAR TURNED ON
                        P-DR       P-CR       P-OP       V-DR       V-CR       V-OP       A-DR       A-CR       A-OP
          COMP. DEV.  1.163E+04  5.083E+03  6.628E+03  8.913E+01  1.259E+02  1.048E+02  1.425E-01  1.425E-01  1.425E-01
          DEVIATIONS  1.164E+04  5.104E+03  6.645E+03  8.913E+01  1.259E+02  1.048E+02  7.854E-01  7.854E-01  7.854E-01
           ERRORS     4.534E+02  4.685E+02  4.765E+02  2.309E-04  3.355E-04  2.813E-04  7.854E-01  7.854E-01  7.854E-01

  TARGET CT. * * * * * * * * * * * * * * * * * * * * * * * * * * * * * * * * * * * * * * * * * * * * * * * * * * * * * *

COAST FOR     1800.00 SEC.  (  0D 0H30M 0.00S)     NO PRPGTE.

  TARGET CT. * * * * * * * * * * * * * * * * * * * * * * * * * * * * * * * * * * * * * * * * * * * * * * * * * * * * * *

 AT 1960 0H30M 0.00S
  T=  16936200  ALT=  6.7640646E+11  VEL=  4.4372603E+07  ANG=    89.919  LAT=    25.3930  LONG=  -57.0149
                        P-DR       P-CR       P-OP       V-DR       V-CR       V-OP       A-DR       A-CR       A-OP
```

FIGURE A-9x. MARS MISSION, ERROR ANALYSIS OUTPUT

include the use of the approach radar in the measurement sequence and zero the computed deviations at periapsis of the swingby trajectory. The first approach radar measurement occurs in Figure A-9aa. At this time the inertial system errors, after updating with the DSIF, show a predicted range error of 310 feet and range rate error of approximately .0001 feet per second. The onboard approach radar errors are 300 feet and 40 feet per second respectively. Thus the measurement of range to an accuracy of 300 feet, comparable to the inertial system accuracy, should produce some improvement in overall system estimate errors. However, it is doubtful that any benefit is obtained by the measurement of range rate with an uncertainty of 40 feet per second. The midcourse correction is the first approach correction subschedule operation which occurs at the top of Figure A-9bb, with an expected value of 186 feet per second. This correction has a large expected value because it must remove the velocity deviations imparted by earlier midcourse corrections to bring the spacecraft back to the nominal trajectory at the Mars sphere of influence. A second approach update is performed approximately 198 days into the mission to remove errors generated in performing the large first approach update correction sequence. This midcourse correction, printed in the center of Figure A-9ff has an expected value of 12 feet per second.

The nominal trajectory periapsis is indicated in Figure A-9gg. This is the point in the mission for orbiter and landers where a retroburn would be performed to obtain an elliptical orbit about Mars. The cross range position error at the nominal periapsis is 1.6×10^5 feet. This is the error in the periapsis magnitude. The down range and out of plane components represent errors in the periapsis position vector. They are approximately 3×10^6 feet. At this time the nominal retro ΔV is added. This burn may be altered in direction and magnitude to remove errors in velocity at the nominal periapsis point. An impulsive burn is used in this analysis. However, for the Mars capture phase of the Viking mission, a forty-five minute retro burn has been proposed. To study the effect of varying burn time, a short error analysis program was written and the results are presented in Figure A-10. The errors shown are those that would exist 45 minutes after retro ignition for a burn time varying from 3 to 45 minutes, with a ΔV of 3800 ft/sec. The error sources considered are:

(1) Initial Conditions

- (a) Position
- (b) Velocity
- (c) Attitude

(2) Accelerometers

- (a) Bias, K_o
- (b) Scale factor, K_1
- (c) Nonlinearity, K_2
- (d) Cross axis sensitivity, M_o

(3) Gyroscopes

- (a) Fixed drift, D_{FR}
- (b) G sensitive terms, D_{UI}, D_{US}

```
COMP. DEV.   1.163E+04  5.083E+03  6.628E+03  8.913E+01  1.259E+02  1.048E+02  1.425E-01  1.425E-01  1.425E-01
DEVIATIONS   1.164E+04  5.104E+03  6.645E+03  8.913E+01  1.259E+02  1.048E+02  7.854E-01  7.854E-01  7.854E-01
 ERRORS      4.534E+02  4.685E+02  4.765E+02  2.309E-04  3.355E-04  2.813E-04  7.854E-01  7.854E-01  7.854E-01

 ATTITUDE        ROLL      YAW     PITCH          DR      CR      OP          ROLL     YAW    PITCH
              XI  .0715  -.6794  -.7302   XI   .7264   .2044  -.6584   DR   .6253  -.7425  -.2400
              YI  .7094  -.4800   .5161   YI   .6762  -.3961   .6212   CR   .3613   .5481  -.7544
              ZI -.7012  -.5549   .4477   ZI  -.1338  -.8952  -.4251   OP   .6917   .3851   .6110

SUBSYSTEM  COMPUTER   I. S. U.   ATT. CONT. STAR TRCKR SUN SENSOR ISU/C.P.S. COM. RCVR. APP. RADAR  XMITTER
  STATUS      1          1          1          1          1          1          1          1          0          0

      BEGIN MANEUVERING TO LOCATE SUN-CANOPUS

TARGET CT. * * * * * * * * * * * * * * * * * * * * * * * * * * * * * * * * * * * * * * * * * * * * * * * * * * *

COAST FOR      60.00 SEC.  ( 0D 0H 1M 0.00S)     NO PRPGTE.

          ANGLE BETWEEN CELESTIAL BODIES=  102.63, BETWEEN OPTICAL AIDS=   90.00

          DEAD BANDS   SET    MAX.
               ROLL  20.00  64.00
                YAW   8.00   8.00
              PITCH  20.00  23.37
      MANEUVERS
              PITCH   6.186DEG.   YAW  -5.875DEG.  ROLL -49.680DEG. IN        60SEC.

TARGET CT. * * * * * * * * * * * * * * * * * * * * * * * * * * * * * * * * * * * * * * * * * * * * * * * * * * *

AT 196D 0H31M 0.00S
T=  16936260  ALT=  6.7641025E+11  VEL=  4.4372817E+07  ANG=    89.919  LAT=   25.3831  LONG=  -57.2645
                P-DR       P-CR       P-OP       V-DR       V-CR       V-OP       A-DR       A-CR       A-OP
COMP. DEV.   1.163E+04  5.083E+03  6.628E+03  8.913E+01  1.259E+02  1.048E+02  1.371E-01  7.406E-02  1.399E-01
DEVIATIONS   1.164E+04  5.104E+03  6.645E+03  8.913E+01  1.259E+02  1.048E+02  7.854E-01  7.854E-01  7.854E-01
 ERRORS      4.534E+02  4.685E+02  4.765E+02  2.309E-04  3.355E-04  2.813E-04  7.854E-01  7.854E-01  7.854E-01

 ATTITUDE        ROLL      YAW     PITCH          DR      CR      OP          ROLL     YAW    PITCH
              XI -.0769   .1116  -.9908   XI   .7244   .2044  -.6584   DR   .5143  -.2970  -.8046
              YI  .7029  -.6986  -.1333   YI   .6762  -.3961   .6212   CR   .3388   .9322  -.1275
              ZI -.7071  -.7067  -.0247   ZI  -.1338  -.8952  -.4251   OP   .7879  -.2070   .5800

SUBSYSTEM  COMPUTER   I. S. U.   ATT. CONT. STAR TRCKR SUN SENSOR ISU/C.P.S. COM. RCVR. APP. RADAR  XMITTER
  STATUS      1          1          1          1          1          1          1          1          0          0

      END MANEUVERING,BEGIN SEARCH FOR SUN-CANOPUS

TARGET CT. * * * * * * * * * * * * * * * * * * * * * * * * * * * * * * * * * * * * * * * * * * * * * * * * * * *

COAST FOR      60.00 SEC.  ( 0D 0H 1M 0.00S)     NO PRPGTE.

          ANGLE BETWEEN CELESTIAL BODIES=  102.63, BETWEEN OPTICAL AIDS=   90.00

          DEAD BANDS   SET    MAX.
               ROLL  20.00  64.00
```

FIGURE A-9y. MARS MISSION, ERROR ANALYSIS OUTPUT

```
                YAW   8.00   8.00
              PITCH  20.00  23.37
MANEUVERS
              PITCH    .000DEG.   YAW   -.000DEG.  ROLL   -.000DEG. IN        60SEC.

SEARCH FOR SUN        IN    30.4 SECONDS WITH   1.00000 PASSES
                     ANGULAR RATES (RAD/SEC)=ROLL      .02586     ,YAW    0.00000     ,PITCH  0.00000

SEARCH FOR CANOPUS    IN    29.6 SECONDS WITH   1.00000 PASSES
                     ANGULAR RATES (RAD/SEC)=ROLL      .00000     ,YAW     .02586     ,PITCH  0.00000

TARGET CT. * * * * * * * * * * * * * * * * * * * * * * * * * * * * * * * * * * * * * * * * * * * * * * * * * * * * * * * * * * *

AT 196D 0H32M 0.00S
T=  16936320  ALT=  6.7641403E+11  VEL=  4.4373030E+07  ANG=    89.919  LAT=   25.3832  LONG=  -57.5141
                    P-DR       P-CR       P-OP       V-DR       V-CR       V-OP       A-DR       A-CR       A-OP
COMP. DEV.     1.163E+04  5.083E+03  6.628E+03  8.913E+01  1.259E+02  1.048E+02  1.371E-01  7.406E-02  1.399E-01
DEVIATIONS     1.164E+04  5.104E+03  6.645E+03  8.913E+01  1.259E+02  1.048E+02  1.371E-01  7.406E-02  1.399E-01
 ERRORS        4.534E+02  4.685E+02  4.765E+02  2.309E-04  3.355E-04  2.813E-04  2.917E-04  5.979E-04  4.311E-04

          ATTITUDE        ROLL     YAW    PITCH        DR      CR      OP          ROLL    YAW    PITCH
CANOPUS   ACQUIRED    XI  -.0769   .1116  -.9908   XI  .7244  .2044  -.6584   DR  .5143  -.2970  -.8046
                      YI   .7029  -.6986  -.1333   YI  .6762  -.3961   .6212   CR  .3388   .9322  -.1275
                      ZI  -.7071  -.7067  -.0247   ZI -.1338  -.8952  -.4251   OP  .7879  -.2070   .5800

  SUBSYSTEM  COMPUTER   I. S. U.   ATT. CONT. STAR TRCKR SUN SENSOR ISU/C.P.S. COM. RCVR. APP. RADAR  XMITTER
    STATUS      1          1          1          1          1          1          1          1          0          0

        END SEARCH FOR SUN-CANOPUS

DEADBAND ON AXIS  1 CHANGED TO     .01000 DEG.
DEADBAND ON AXIS  2 CHANGED TO     .01000 DEG.
DEADBAND ON AXIS  3 CHANGED TO     .01000 DEG.

TARGET CT. * * * * * * * * * * * * * * * * * * * * * * * * * * * * * * * * * * * * * * * * * * * * * * * * * * * * * * * * * * *

COAST FOR      60.00 SEC.  (  0D 0H 1M 0.00S)     NO PRPGTE.

          ANGLE BETWEEN CELESTIAL BODIES=  102.63, BETWEEN OPTICAL AIDS=   90.00

          DEAD BANDS   SET    MAX.
               ROLL    .01   64.00
                YAW    .01    8.00
              PITCH    .01   23.37
MANEUVERS
              PITCH    .000DEG.   YAW   -.000DEG.  ROLL   -.000DEG. IN        60SEC.

TARGET CT. * * * * * * * * * * * * * * * * * * * * * * * * * * * * * * * * * * * * * * * * * * * * * * * * * * * * * * * * * * *

AT 196D 0H33M 0.00S
T=  16936380  ALT=  6.7641782E+11  VEL=  4.4373244E+07  ANG=    89.919  LAT=   25.3833  LONG=  -57.7637
                    P-DR       P-CR       P-OP       V-DR       V-CR       V-OP       A-DR       A-CR       A-OP
COMP. DEV.     1.163E+04  5.083E+03  6.628E+03  8.913E+01  1.259E+02  1.048E+02  7.125E-05  7.125E-05  7.125E-05
DEVIATIONS     1.164E+04  5.104E+03  6.645E+03  8.913E+01  1.259E+02  1.048E+02  3.013E-04  6.026E-04  4.377E-04
```

FIGURE A-9z. MARS MISSION, ERROR ANALYSIS OUTPUT

```
            ERRORS     4.534E+02  4.685E+02  4.765E+02  2.309E-04  3.355E-04  2.813E-04  2.928E-04  5.984E-04  4.319E-04

             ATTITUDE        ROLL     YAW    PITCH          DR      CR      OP          ROLL     YAW    PITCH
CANOPUS    ACQUIRED        XI  -.0769   .1116  -.9908   XI   .7244   .2044  -.6584   DR   .5143  -.2970  -.8046
                           YI   .7029  -.6986  -.1333   YI   .6762  -.3961   .6212   CR   .3388   .9322  -.1275
                           ZI  -.7071  -.7067  -.0248   ZI  -.1338  -.8952  -.4251   OP   .7879  -.2070   .5800

     SUBSYSTEM  COMPUTER   I. S. U.   ATT. CONT. STAR TRCKR SUN SENSOR ISU/C.P.S. COM. RCVR. APP. RADAR  XMITTER
       STATUS      1          1          1          1          1          1          1          1          0          0

            STATION        RANGE        RANGE DOT        AZM      ELE.     SUN ANG.
           GOLDSTONE   6.7642562E+11  6.2126616E+04    84.054    38.801    82.347
             MEASUREMENT ERRORS      RANGE        ELEVATION        AZIMUTH        RANGE DOT
                INERTIAL SYSTEM   8.522361E+01   9.272023E-10   7.413525E-10   4.291890E-02
                      DSIF        5.000000E+01   -0.            -0.            4.100000E-02
    AFTER KALMAN UPDATE
                          P-DR       P-CR       P-OP       V-DR       V-CR       V-OP       A-DR       A-CR       A-OP
           COMP. DEV.  1.163E+04  5.096E+03  6.629E+03  8.913E+01  1.259E+02  1.048E+02  7.125E-05  7.125E-05  7.125E-05
           DEVIATIONS  1.164E+04  5.104E+03  6.645E+03  8.913E+01  1.259E+02  1.048E+02  3.013E-04  6.026E-04  4.377E-04
            ERRORS     3.050E+02  2.840E+02  4.569E+02  1.592E-04  2.116E-04  2.056E-04  2.928E-04  5.984E-04  4.319E-04
             APPROACH RADAR UPDATE
              INERTIAL SYSTEM ERRORS (RANGE,RANGE RATE)=   3.104371E+02   1.441203E-04
              APPROACH RADAR  ERRORS (RANGE,RANGE RATE)=   3.000000E+02   4.000000E+01
    AFTER KALMAN UPDATE
                          P-DR       P-CR       P-OP       V-DR       V-CR       V-OP       A-DR       A-CR       A-OP
           COMP. DEV.  1.164E+04  5.100E+03  6.630E+03  8.913E+01  1.259E+02  1.048E+02  7.125E-05  7.125E-05  7.125E-05
           DEVIATIONS  1.164E+04  5.104E+03  6.645E+03  8.913E+01  1.259E+02  1.048E+02  3.013E-04  6.026E-04  4.377E-04
            ERRORS     2.126E+02  2.010E+02  4.565E+02  1.458E-04  1.768E-04  1.929E-04  2.928E-04  5.984E-04  4.319E-04

    TARGET CT. * * * * * * * * * * * * * * * * * * * * * * * * * * * * * * * * * * * * * * * * * * * * * * * * * * * * * * * * * * * *

COAST FOR       60.00 SEC.  (  0D 0H 1M 0.00S)     NO PRPGTE.

                ANGLE BETWEEN CELESTIAL BODIES=  102.63. BETWEEN OPTICAL AIDS=   90.00

                DEAD BANDS   SET     MAX.
                      ROLL    .01   64.00
                       YAW    .01    8.00
                     PITCH    .01   23.37
           MANEUVERS
                     PITCH    .000DEG.   YAW   -.000DEG.  ROLL   -.000DEG. IN        60SEC.

    TARGET CT. * * * * * * * * * * * * * * * * * * * * * * * * * * * * * * * * * * * * * * * * * * * * * * * * * * * * * * * * * * * *

  AT 196D 0H34M 0.00S
    T=  16936440  ALT=  6.7642160E+11  VEL=  4.4373457E+07  ANG=    89.919  LAT=   25.3834  LONG=  -58.0133
                          P-DR       P-CR       P-OP       V-DR       V-CR       V-OP       A-DR       A-CR       A-OP
           COMP. DEV.  1.164E+04  5.100E+03  6.630E+03  8.913E+01  1.259E+02  1.048E+02  7.125E-05  7.125E-05  7.125E-05
           DEVIATIONS  1.164E+04  5.104E+03  6.645E+03  8.913E+01  1.259E+02  1.048E+02  3.031E-04  6.035E-04  4.389E-04
            ERRORS     2.126E+02  2.010E+02  4.565E+02  1.458E-04  1.768E-04  1.929E-04  2.946E-04  5.993E-04  4.331E-04

             ATTITUDE        ROLL     YAW    PITCH          DR      CR      OP          ROLL     YAW    PITCH
CANOPUS    ACQUIRED        XI  -.0769   .1116  -.9908   XI   .7244   .2044  -.6584   DR   .5143  -.2970  -.8046
                           YI   .7029  -.6986  -.1333   YI   .6762  -.3961   .6212   CR   .3388   .9322  -.1275
                           ZI  -.7071  -.7067  -.0248   ZI  -.1338  -.8952  -.4251   OP   .7879  -.2070   .5800
```

FIGURE A-9aa. MARS MISSION, ERROR ANALYSIS OUTPUT

```
  SUBSYSTEM  COMPUTER   I. S. U.   ATT. CONT. STAR TRCKR SUN SENSOR ISU/C.P.S. COM. RCVR. APP. RADAR  XMITTER
    STATUS      1          1          1          1          1          1          1          1          0          0

 AFTER MIDCOURSE CORRECTION (IMC=  6), RMV=  1.8651E+02 (FT/SEC), DOF=1.000

                        P-DR       P-CR       P-OP       V-DR       V-CR       V-OP       A-DR       A-CR       A-OP
          COMP. DEV.  1.164E+04  5.100E+03  6.630E+03  6.613E-04  1.810E-03  1.711E-04  7.125E-05  7.125E-05  7.125E-05
          DEVIATIONS  1.164E+04  5.104E+03  6.645E+03  4.578E-02  4.204E-02  5.055E-02  3.031E-04  6.035E-04  4.389E-04
           ERRORS     2.126E+02  2.010E+02  4.565E+02  4.577E-02  4.199E-02  5.054E-02  2.946E-04  5.993E-04  4.331E-04

 TARGET CT. * * * * * * * * * * * * * * * * * * * * * * * * * * * * * * * * * * * * * * * * * * * * * * * * * * * * * * *

COAST FOR       60.00 SEC.  (  0D 0H 1M 0.00S)      NO PRPGTE.

 TARGET CT. * * * * * * * * * * * * * * * * * * * * * * * * * * * * * * * * * * * * * * * * * * * * * * * * * * * * * * *

 AT 196D 0H35M 0.00S
 T=  16936500  ALT=  6.7642539E+11  VEL=  4.4373671E+07  ANG=    89.919  LAT=   25.3835  LONG=  -58.2629
                        P-DR       P-CR       P-OP       V-DR       V-CR       V-OP       A-DR       A-CR       A-OP
          COMP. DEV.  1.164E+04  5.100E+03  6.630E+03  6.613E-04  1.810E-03  1.711E-04  7.125E-05  7.125E-05  7.125E-05
          DEVIATIONS  1.164E+04  5.104E+03  6.645E+03  4.578E-02  4.204E-02  5.055E-02  3.055E-04  6.047E-04  4.406E-04
           ERRORS     2.126E+02  2.010E+02  4.565E+02  4.577E-02  4.199E-02  5.054E-02  2.971E-04  6.005E-04  4.348E-04

            ATTITUDE        ROLL      YAW     PITCH          DR       CR       OP          ROLL      YAW     PITCH
                        XI  -.0769    .1116   -.9908    XI   .7244    .2044   -.6584   DR   .5143   -.2970   -.8046
                        YI   .7029   -.6986   -.1333    YI   .6762   -.3961    .6212   CR   .3388    .9322   -.1275
                        ZI  -.7071   -.7061   -.0248    ZI  -.1338   -.8952   -.4251   OP   .7879   -.2070    .5800

  SUBSYSTEM  COMPUTER   I. S. U.   ATT. CONT. STAR TRCKR SUN SENSOR ISU/C.P.S. COM. RCVR. APP. RADAR  XMITTER
    STATUS      1          1          1          1          1          1          1          1          0          0
 DEADBAND ON AXIS  1 CHANGED TO   20.00000 DEG.
 DEADBAND ON AXIS  2 CHANGED TO   20.00000 DEG.
 DEADBAND ON AXIS  3 CHANGED TO   20.00000 DEG.
 APP. RADAR TURNED OFF
 ATT. CONT. TURNED OFF
 COMPUTER   TURNED OFF
 I. S. U.   TURNED OFF
 STAR TRCKR TURNED OFF
 SUN SENSOR TURNED OFF
                        P-DR       P-CR       P-OP       V-DR       V-CR       V-OP       A-DR       A-CR       A-OP
          COMP. DEV.  1.164E+04  5.100E+03  6.630E+03  6.613E-04  1.810E-03  1.711E-04  7.854E-01  7.854E-01  7.854E-01
          DEVIATIONS  1.164E+04  5.104E+03  6.645E+03  4.578E-02  4.204E-02  5.055E-02  7.854E-01  7.854E-01  7.854E-01
           ERRORS     2.126E+02  2.010E+02  4.565E+02  4.577E-02  4.199E-02  5.054E-02  7.854E-01  7.854E-01  7.854E-01

 TARGET CT. * * * * * * * * * * * * * * * * * * * * * * * * * * * * * * * * * * * * * * * * * * * * * * * * * * * * * * *

COAST FOR   170700.00 SEC.  ( 1D23H25M 0.00S)

 TARGET CT. * * * * * * * * * * * * * * * * * * * * * * * * * * * * * * * * * * * * * * * * * * * * * * * * * * * * * * *

 AT 198D 0H 0M 0.00S
 T=  17107200  ALT=  6.8719560E+11  VEL=  4.4980565E+07  ANG=    89.919  LAT=   25.6480  LONG=  -48.3920
                        P-DR       P-CR       P-OP       V-DR       V-CR       V-OP       A-DR       A-CR       A-OP
          COMP. DEV.  1.190E+04  5.604E+03  6.405E+03  5.878E-03  8.138E-03  9.827E-03  7.854E-01  7.854E-01  7.854E-01
          DEVIATIONS  1.359E+05  1.204E+05  9.760E+04  7.686E+00  7.668E+00  5.557E+00  7.854E-01  7.854E-01  7.854E-01
           ERRORS     1.348E+05  1.202E+05  9.750E+04  7.686E+00  7.669E+00  5.557E+00  7.854E-01  7.854E-01  7.854E-01
```

FIGURE A-9bb. MARS MISSION, ERROR ANALYSIS OUTPUT

```
          ATTITUDE        ROLL     YAW     PITCH          DR      CR      OP          ROLL     YAW     PITCH
                     XI  -.0769   .1116  -.9908   XI   .7240   .2101  -.6571   DR   .5133  -.2995  -.8043
                     YI   .7029  -.6986  -.1333   YI   .6772  -.3979   .6189   CR   .3356   .9326  -.1330
                     ZI  -.7071  -.7067  -.0248   ZI  -.1314  -.8931  -.4303   OP   .7899  -.2016   .5792

  SUBSYSTEM  COMPUTER   I. S. U.   ATT. CONT. STAR TRCKR SUN SENSOR ISU/C.P.S. COM. RCVR. APP. RADAR  XMITTER
    STATUS      -0         -0         -0         -0         -0          0          1          0          0          0
COMPUTER    TURNED ON
I. S. U.    TURNED ON
SUN SENSOR  TURNED ON
STAR TRCKR  TURNED ON
ATT. CONT.  TURNED ON
APP. RADAR  TURNED ON

                       P-DR       P-CR       P-OP       V-DR       V-CR       V-OP       A-DR       A-CR       A-OP
          COMP. DEV.  1.190E+04  5.604E+03  6.405E+03  5.878E-03  8.138E-03  9.827E-03  1.425E-01  1.425E-01  1.425E-01
          DEVIATIONS  1.353E+05  1.204E+05  9.760E+04  7.686E+00  7.668E+00  5.557E+00  7.854E-01  7.854E-01  7.854E-01
           ERRORS     1.348E+05  1.203E+05  9.750E+04  7.686E+00  7.669E+00  5.557E+00  7.854E-01  7.854E-01  7.854E-01

TARGET CT. * * * * * * * * * * * * * * * * * * * * * * * * * * * * * * * * * * * * * * * * * * * * * * * * * * * * * * * * * * * *

COAST FOR     1800.00 SEC.  (  0D 0H30M 0.00S)     NO PRPGTE.

TARGET CT. * * * * * * * * * * * * * * * * * * * * * * * * * * * * * * * * * * * * * * * * * * * * * * * * * * * * * * * * * * * *

 AT 198D 0H30M 0.00S
 T=  17109000  ALT=  6.8730954E+11  VEL=  4.4986992E+07  ANG=    89.919  LAT=    25.6507  LONG=  -55.8801
                       P-DR       P-CR       P-OP       V-DR       V-CR       V-OP       A-DR       A-CR       A-OP
          COMP. DEV.  1.190E+04  5.604E+03  6.405E+03  5.878E-03  8.138E-03  9.827E-03  1.425E-01  1.425E-01  1.425E-01
          DEVIATIONS  1.353E+05  1.204E+05  9.760E+04  7.686E+00  7.668E+00  5.557E+00  7.854E-01  7.854E-01  7.854E-01
           ERRORS     1.348E+05  1.203E+05  9.750E+04  7.686E+00  7.669E+00  5.557E+00  7.854E-01  7.854E-01  7.854E-01

          ATTITUDE        ROLL     YAW     PITCH          DR      CR      OP          ROLL     YAW     PITCH
                     XI  -.0769   .1116  -.9908   XI   .7240   .2101  -.6571   DR   .5133  -.2995  -.8043
                     YI   .7029  -.6986  -.1333   YI   .6772  -.3979   .6189   CR   .3356   .9326  -.1330
                     ZI  -.7071  -.7067  -.0248   ZI  -.1314  -.8931  -.4303   OP   .7899  -.2016   .5792

  SUBSYSTEM  COMPUTER   I. S. U.   ATT. CONT. STAR TRCKR SUN SENSOR ISU/C.P.S. COM. RCVR. APP. RADAR  XMITTER
    STATUS      1          1          1          1          1          1          1          1          0          0

          BEGIN MANEUVERING TO LOCATE SUN-CANOPUS

TARGET CT. * * * * * * * * * * * * * * * * * * * * * * * * * * * * * * * * * * * * * * * * * * * * * * * * * * * * * * * * * * * *

COAST FOR       60.00 SEC.  (  0D 0H 1M 0.00S)     NO PRPGTE.

          ANGLE BETWEEN CELESTIAL BODIES=  102.68, BETWEEN OPTICAL AIDS=   90.00

          DEAD BANDS   SET    MAX.
                ROLL  20.00  64.00
                 YAW   8.00   8.00
               PITCH  20.00  23.22
          MANEUVERS
               PITCH    .025DEG.   YAW   -.119DEG.  ROLL   -.882DEG. IN        60SEC.
```

FIGURE A-9cc. MARS MISSION, ERROR ANALYSIS OUTPUT

```
TARGET CT. * * * * * * * * * * * * * * * * * * * * * * * * * * * * * * * * * * * * * * * * * * * * * * * * * * * * * * * * * * * * *

 AT 198D 0H31M 0.00S
   T=  17109060  ALT=  6.8731335E+11   VEL=  4.4987207E+07   ANG=     89.919  LAT=    25.6508  LONG=  -56.1297
                          P-DR        P-CR        P-OP        V-DR        V-CR        V-OP        A-DR        A-CR        A-OP
          COMP. DEV.   1.190E+04   5.604E+03   6.405E+03   5.878E-03   8.138E-03   9.827E-03   1.375E-01   7.359E-02   1.398E-01
          DEVIATIONS   1.352E+05   1.204E+05   9.760E+04   7.686E+00   7.668E+00   5.557E+00   7.854E-01   7.854E-01   7.854E-01
           ERRORS      1.348E+05   1.203E+05   9.750E+04   7.686E+00   7.669E+00   5.557E+00   7.854E-01   7.854E-01   7.854E-01

           ATTITUDE         ROLL       YAW     PITCH           DR        CR        OP           ROLL      YAW     PITCH
                       XI   -.0789     .1269   -.9888     XI    .7240     .2101   -.6571    DR    .5115   -.2872   -.8099
                       YI    .7024    -.6968   -.1455     YI    .6772    -.3979    .6189    CR    .3357    .9344   -.1194
                       ZI   -.7074    -.7059   -.0342     ZI   -.1314    -.8931   -.4303    OP    .7910   -.2109    .5743

      SUBSYSTEM   COMPUTER    I. S. U.    ATT. CONT. STAR TRCKR SUN SENSOR ISU/C.P.S. COM. RCVR. APP. RADAR   XMITTER
        STATUS       1           1           1          1          1          1          1          1          0          0

          END MANEUVERING,BEGIN SEARCH FOR SUN-CANOPUS

TARGET CT. * * * * * * * * * * * * * * * * * * * * * * * * * * * * * * * * * * * * * * * * * * * * * * * * * * * * * * * * * * * * *

COAST FOR       60.00 SEC.  (  0D 0H 1M 0.00S)      NO PRPGTE.

            ANGLE BETWEEN CELESTIAL BODIES=  102.68, BETWEEN OPTICAL AIDS=   90.00

            DEAD BANDS   SET     MAX.
                  ROLL  20.00   64.00
                   YAW   8.00    8.00
                 PITCH  20.00   23.32
          MANEUVERS
                 PITCH     .000DEG.    YAW    -.000DEG.   ROLL    -.000DEG. IN           60SEC.

          SEARCH FOR SUN          IN      30.4 SECONDS WITH    1.00000 PASSES
                            ANGULAR RATES (RAD/SEC)=ROLL      .02586      ,YAW     0.00000      ,PITCH  0.00000

          SEARCH FOR CANOPUS      IN      29.6 SECONDS WITH    1.00000 PASSES
                            ANGULAR RATES (RAD/SEC)=ROLL      .00000      ,YAW      .02586      ,PITCH  0.00000

TARGET CT. * * * * * * * * * * * * * * * * * * * * * * * * * * * * * * * * * * * * * * * * * * * * * * * * * * * * * * * * * * * * *

 AT 198D 0H32M 0.00S
   T=  17109120  ALT=  6.8731715E+11   VEL=  4.4987422E+07   ANG=     89.919  LAT=    25.6509  LONG=  -56.3793
                          P-DR        P-CR        P-OP        V-DR        V-CR        V-OP        A-DR        A-CR        A-OP
          COMP. DEV.   1.190E+04   5.604E+03   6.405E+03   5.870E-03   8.138E-03   9.827E-03   1.375E-01   7.359E-02   1.398E-01
          DEVIATIONS   1.352E+05   1.204E+05   9.760E+04   7.686E+00   7.668E+00   5.557E+00   1.375E-01   7.359E-02   1.398E-01
           ERRORS      1.348E+05   1.203E+05   9.750E+04   7.686E+00   7.669E+00   5.557E+00   2.926E-04   5.977E-04   4.310E-04

           ATTITUDE         ROLL       YAW     PITCH           DR        CR        OP           ROLL      YAW     PITCH
CANOPUS     ACQUIRED   XI   -.0789     .1269   -.9888     XI    .7240     .2101   -.6571    DR    .5115   -.2872   -.8099
                       YI    .7024    -.6968   -.1455     YI    .6772    -.3979    .6189    CR    .3357    .9344   -.1194
                       ZI   -.7074    -.7059   -.0342     ZI   -.1314    -.8931   -.4303    OP    .7910   -.2109    .5743

      SUBSYSTEM   COMPUTER    I. S. U.    ATT. CONT. STAR TRCKR SUN SENSOR ISU/C.P.S. COM. RCVR. APP. RADAR   XMITTER
```

FIGURE A-9dd. MARS MISSION, ERROR ANALYSIS OUTPUT

```
STATUS      1          1          1          1          1          1          1          1          0          0

        END SEARCH FOR SUN-CANOPUS

DEADBAND ON AXIS  1 CHANGED TO      .01000 DEG.
DEADBAND ON AXIS  2 CHANGED TO      .01000 DEG.
DEADBAND ON AXIS  3 CHANGED TO      .01000 DEG.

TARGET CT. * * * * * * * * * * * * * * * * * * * * * * * * * * * * * * * * * * * * * * * * * * * * * * * * * * * * * *

COAST FOR       60.00 SEC.  (  0D 0H 1M 0.00S)     NO PRPGTE.

                ANGLE BETWEEN CELESTIAL BODIES=  102.68, BETWEEN OPTICAL AIDS=   90.00

                DEAD BANDS   SET    MAX.
                     ROLL    .01   64.00
                      YAW    .01    8.00
                    PITCH    .01   23.32
            MANEUVERS
                    PITCH    .000DEG.   YAW   -.000DEG.  ROLL   -.000DEG. IN        60SEC.

TARGET CT. * * * * * * * * * * * * * * * * * * * * * * * * * * * * * * * * * * * * * * * * * * * * * * * * * * * * * *

AT 1980 0H33M 0.00S
T=  17109180  ALT=  6.8732096E+11  VEL=  4.4987637E+07  ANG=    89.919  LAT=    25.6510  LONG=  -56.6289
                      P-DR       P-CR       P-OP       V-DR       V-CR       V-OP       A-DR       A-CR       A-OP
          COMP. DEV.  1.190E+04  5.403E+03  6.405E+03  5.878E-03  8.138E-03  9.827E-03  7.125E-05  7.125E-05  7.125E-05
          DEVIATIONS  1.352E+05  1.204E+05  9.760E+04  7.686E+00  7.668E+00  5.557E+00  3.022E-04  6.025E-04  4.376E-04
           ERRORS     1.348E+05  1.203E+05  9.750E+04  7.686E+00  7.669E+00  5.557E+00  2.937E-04  5.982E-04  4.317E-04

            ATTITUDE        ROLL     YAW    PITCH          DR      CR      OP          ROLL     YAW    PITCH
CANOPUS    ACQUIRED      XI  -.0789   .1269  -.9888   XI   .7240   .2101  -.6571   DR   .5115  -.2872  -.8099
                         YI   .7024  -.9968  -.1455   YI   .6772  -.3979   .6189   CR   .3357   .9344  -.1194
                         ZI  -.7074  -.0059  -.0342   ZI  -.1314  -.8931  -.4303   OP   .7910  -.2109   .5743

     SUBSYSTEM  COMPUTER   I. S. U.   ATT. CONT. STAR TRCKR SUN SENSOR ISU/C.P.S. COM. RCVR. APP. RADAR  XMITTER
       STATUS      1          1          1          1          1          1          1          1          0          0

          STATION        RANGE        RANGE DOT        AZM       ELE.      SUN ANG.
          GOLDSTONE   6.8732099E+11  6.2374201E+04    83.172    38.000     81.409
            MEASUREMENT ERRORS      RANGE        ELEVATION        AZIMUTH        RANGE DOT
              INERTIAL SYSTEM   1.507297E+05   1.489292E-07   1.374944E-07   1.105845E+01
                   DSIF         5.000000E+01   -0.            -0.            4.100000E-02
AFTER KALMAN UPDATE
                      P-DR       P-CR       P-OP       V-DR       V-CR       V-OP       A-DR       A-CR       A-OP
          COMP. DEV.  1.352E+05  1.204E+05  9.546E+04  7.680E+00  7.668E+00  5.423E+00  7.125E-05  7.125E-05  7.125E-05
          DEVIATIONS  1.352E+05  1.204E+05  9.760E+04  7.686E+00  7.668E+00  5.557E+00  3.022E-04  6.025E-04  4.376E-04
           ERRORS     2.497E+03  2.153E+03  2.010E+04  3.174E-01  1.150E-01  1.215E+00  2.937E-04  5.982E-04  4.317E-04
            APPROACH RADAR UPDATE
             INERTIAL SYSTEM ERRORS (RANGE,RANGE RATE)=   2.693598E+03   3.324881E-01
             APPROACH RADAR  ERRORS (RANGE,RANGE RATE)=   3.000000E+02   4.000000E+01
AFTER KALMAN UPDATE
                      P-DR       P-CR       P-OP       V-DR       V-CR       V-OP       A-DR       A-CR       A-OP
          COMP. DEV.  1.352E+05  1.204E+05  9.749E+04  7.686E+00  7.668E+00  5.550E+00  7.125E-05  7.125E-05  7.125E-05
          DEVIATIONS  1.352E+05  1.204E+05  9.760E+04  7.686E+00  7.668E+00  5.557E+00  3.022E-04  6.025E-04  4.376E-04
           ERRORS     2.785E+02  2.459E+02  4.761E+03  5.662E-02  1.794E-02  2.962E-01  2.937E-04  5.982E-04  4.317E-04
```

FIGURE A-9ee. MARS MISSION, ERROR ANALYSIS OUTPUT

```
      TARGET CT. * * * * * * * * * * * * * * * * * * * * * * * * * * * * * * * * * * * * * * * * * * * * * * * *

  COAST FOR        60.00 SEC.  ( 0D 0H 1M 0.00S)     NO PRPGTE.

              ANGLE BETWEEN CELESTIAL BODIES=  102.68, BETWEEN OPTICAL AIDS=   90.00

              DEAD BANDS   SET    MAX.
                    ROLL    .01   64.00
                     YAW    .01    8.00
                   PITCH    .01   23.32
           MANEUVERS
                   PITCH    .000DEG.   YAW   -.000DEG.  ROLL   -.000DEG. IN        60SEC.

      TARGET CT. * * * * * * * * * * * * * * * * * * * * * * * * * * * * * * * * * * * * * * * * * * * * * * * *

   AT 1980 0H34M 0.00S
      T=  17109240  ALT=  6.8732477E+11  VEL=  4.4987852E+07  ANG=    89.919  LAT=   25.6511  LONG=  -56.8785
                          P-DR        P-CR        P-OP        V-DR        V-CR        V-OP        A-DR        A-CR        A-OP
           COMP. DEV.  1.353E+05   1.204E+05   9.740E+04   7.686E+00   7.668E+00   5.550E+00   7.125E-05   7.125E-05   7.125E-05
           DEVIATIONS  1.353E+05   1.204E+05   9.760E+04   7.686E+00   7.668E+00   5.557E+00   3.040E-04   6.033E-04   4.388E-04
            ERRORS     2.765E+02   2.459E+02   4.761E+03   5.462E-02   1.794E-02   2.962E-01   2.955E-04   5.991E-04   4.330E-04

             ATTITUDE        ROLL      YAW     PITCH           DR        CR        OP             ROLL      YAW     PITCH
  CANOPUS     ACQUIRED    XI  -.0789    .1269   -.9888    XI    .7240     .2101    -.6571    DR    .5115   -.2872   -.8099
                          YI   .7024   -.6968   -.1455    YI    .6772    -.3979     .6189    CR    .3357    .9344   -.1193
                          ZI  -.7074   -.7059   -.0342    ZI   -.1314    -.8931    -.4303    OP    .7910   -.2109    .5743

       SUBSYSTEM  COMPUTER   I. S. U.   ATT. CONT. STAR TRCKR SUN SENSOR ISU/C.P.S. COM. RCVR. APP. RADAR  XMITTER
        STATUS       1          1           1          1          1          1          1          1          0          0

      AFTER MIDCOURSE CORRECTION (IMC=  0), RMV=  1.2089E+01 (FT/SEC), DOF=1.541

                          P-DR        P-CR        P-OP        V-DR        V-CR        V-OP        A-DR        A-CR        A-OP
           COMP. DEV.  1.353E+05   1.204E+05   9.748E+04   1.901E-01   1.575E-01   7.029E-02   7.125E-05   7.125E-05   7.125E-05
           DEVIATIONS  1.353E+05   1.204E+05   9.760E+04   1.986E-01   1.591E-01   3.041E-01   3.040E-04   6.033E-04   4.388E-04
            ERRORS     2.765E+02   2.459E+02   4.761E+03   5.450E-02   1.826E-02   2.960E-01   2.955E-04   5.991E-04   4.330E-04

      TARGET CT. * * * * * * * * * * * * * * * * * * * * * * * * * * * * * * * * * * * * * * * * * * * * * * * *

  COAST FOR        60.00 SEC.  ( 0D 0H 1M 0.00S)     NO PRPGTE.

      TARGET CT. * * * * * * * * * * * * * * * * * * * * * * * * * * * * * * * * * * * * * * * * * * * * * * * *

   AT 1980 0H35M 0.00S
      T=  17109300  ALT=  6.8732857E+11  VEL=  4.4988067E+07  ANG=    89.919  LAT=   25.6512  LONG=  -57.1281
                          P-DR        P-CR        P-OP        V-DR        V-CR        V-OP        A-DR        A-CR        A-OP
           COMP. DEV.  1.353E+05   1.204E+05   9.748E+04   1.901E-01   1.575E-01   7.029E-02   7.125E-05   7.125E-05   7.125E-05
           DEVIATIONS  1.353E+05   1.204E+05   9.760E+04   1.986E-01   1.591E-01   3.041E-01   3.064E-04   6.046E-04   4.405E-04
            ERRORS     2.765E+02   2.459E+02   4.761E+03   5.450E-02   1.826E-02   2.960E-01   2.980E-04   6.004E-04   4.347E-04

             ATTITUDE        ROLL      YAW     PITCH           DR        CR        OP             ROLL      YAW     PITCH
                          XI  -.0789    .1269   -.9888    XI    .7240     .2101    -.6571    DR    .5115   -.2872   -.8099
                          YI   .7024   -.6968   -.1455    YI    .6772    -.3979     .6189    CR    .3357    .9344   -.1193
                          ZI  -.7074   -.7059   -.0342    ZI   -.1314    -.8931    -.4303    OP    .7910   -.2109    .5743
```

FIGURE A-9ff. MARS MISSION, ERROR ANALYSIS OUTPUT

```
  SUBSYSTEM  COMPUTER   I. S. U.   ATT. CONT. STAR TRCKR SUN SENSOR ISU/C.P.S. COM. RCVR. APP. RADAR  XMITTER
    STATUS      1          1          1          1          1          1          1          1          0          0
DEADBAND ON AXIS  1 CHANGED TO   20.00000 DEG.
DEADBAND ON AXIS  2 CHANGED TO   20.00000 DEG.
DEADBAND ON AXIS  3 CHANGED TO   20.00000 DEG.
APP. RADAR TURNED OFF
ATT. CONT. TURNED OFF
COMPUTER   TURNED OFF
I. S. U.   TURNED OFF
STAR TRCKR TURNED OFF
SUN SENSOR TURNED OFF
                     P-DR       P-CR       P-OP       V-DR       V-CR       V-OP       A-DR       A-CR       A-OP
          COMP. DEV. 1.353E+05  1.204E+05  9.748E+04  1.901E-01  1.575E-01  7.029E-02  7.854E-01  7.854E-01  7.854E-01
          DEVIATIONS 1.353E+05  1.204E+05  9.760E+04  1.906E-01  1.591E-01  3.641E-01  7.854E-01  7.854E-01  7.854E-01
           ERRORS    2.765E+02  2.459E+02  4.761E+03  5.450E-02  1.826E-02  2.960E-01  7.854E-01  7.854E-01  7.854E-01

TARGET CT. * * * * * * * * * * * * * * * * * * * * * * * * * * * * * * * * * * * * * * * * * * * * * * * * * * * * * * *

COAST FOR    29649.00 SEC.  (  00 8H14M 9.00S)

TARGET CT. * * * * * * * * * * * * * * * * * * * * * * * * * * * * * * * * * * * * * * * * * * * * * * * * * * * * * * *

AT 1980 8H49M 9.00S
T=  17138949  ALT=  6.8924025E+11  VEL=  4.5094146E+07  ANG=    89.909  LAT=    25.6958  LONG=  179.5295
                     P-DR       P-CR       P-OP       V-DR       V-CR       V-OP       A-DR       A-CR       A-OP
          COMP. DEV. -6.124E-01 -6.811E-02 -2.500E-01  2.408E+02  8.457E+01  2.458E+02  7.854E-01  7.854E-01  7.854E-01
          DEVIATIONS 4.703E+06  1.610E+05  3.439E+06  2.054E+03  3.551E+03  3.124E+03  7.854E-01  7.854E-01  7.854E-01
           ERRORS    4.703E+06  1.610E+05  3.439E+06  2.041E+03  3.550E+03  3.113E+03  7.854E-01  7.854E-01  7.854E-01

            ATTITUDE        ROLL      YAW     PITCH          DR       CR       OP          ROLL      YAW     PITCH
                        XI  -.0789    .1269   -.9888   XI    .4743    .5860   -.6570   DR   .2281   -.7694   -.5966
                        YI   .7024   -.6968   -.1455   YI    .7831    .0601    .6189   CR   .5677    .6030   -.5605
                        ZI  -.7074   -.7059   -.0342   ZI    .4022   -.8081   -.4304   OP   .7910   -.2108    .5743

  SUBSYSTEM  COMPUTER   I. S. U.   ATT. CONT. STAR TRCKR SUN SENSOR ISU/C.P.S. COM. RCVR. APP. RADAR  XMITTER
    STATUS     -0         -0         -0         -0         -0          0          1          0          0          0

RETRO CORRECTION, RMR=  2.4085E+02(FT/SEC),DOF=1.000


                TARGET MISS, RMS=  1.60093728E+05, DOF=1.000

          COMPUTER                 13947.00 SEC.
          I. S. U.                 13947.00 SEC.
          ATT. CONT.               10500.00 SEC.
          STAR TRCKR               10500.00 SEC.
          SUN SENSOR               10500.00 SEC.
          ISU/C.P.S.               13947.00 SEC.
          COM. RCVR.            17138949.00 SEC.
          APP. RADAR             4200.00 SEC.
           XMITTER               6300.00 SEC.
```

FIGURE A-9gg. MARS MISSION, ERROR ANALYSIS OUTPUT

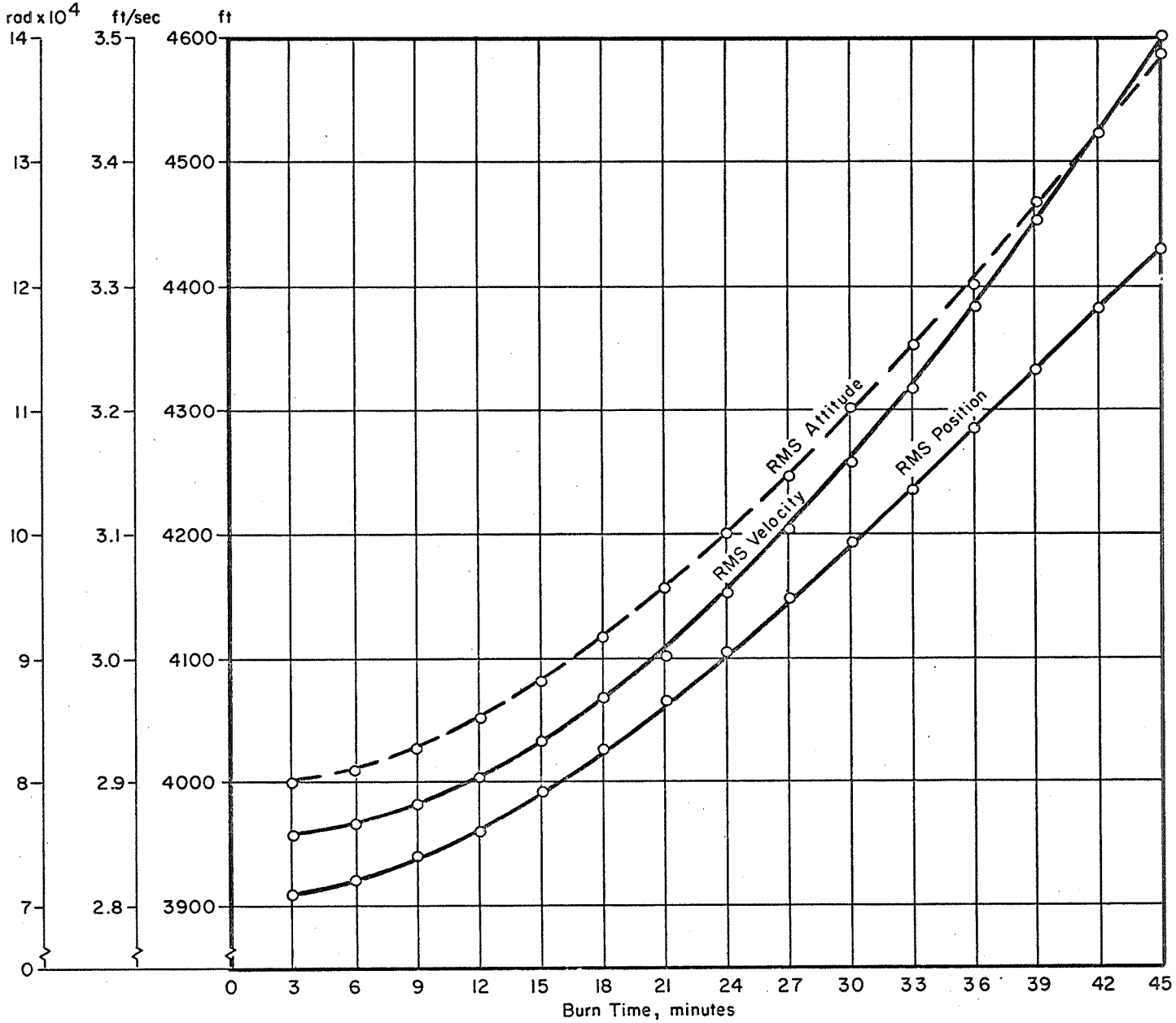

FIGURE A-10. RMS ERRORS vs. BURN TIME

Initial conditions are the position, velocity, and attitude errors at periapsis from the computer runs shown in Figure A-9gg. The attitude errors are reduced to those that would exist if a star tracker and Sun sensor update were performed prior to ignition. The calculations are direct integrations of the acceleration uncertainties,

$$\underline{\Delta a} = \underline{\Delta \Phi} \times \underline{a} + \underline{\Delta a}_a$$

$$\underline{\Delta \dot{\Phi}} = \underline{\Delta \omega}_g$$

where

$\underline{\Delta a}$ = sensed acceleration error

$\underline{a}$ = nominal acceleration

$\underline{\Delta a}_a$ = accelerometer errors

$\underline{\Delta \Phi}$ = attitude error

$\underline{\Delta \omega}_g$ = gyro errors.

Neglecting gravity feedback (Schuler effect),

$$\underline{\Delta a} = \underline{\Delta \dot{v}} = \underline{\Delta \ddot{r}}$$

Increasing the burn time from 3 to 45 minutes increases position error 13 percent and velocity error 25 percent. This relatively small increase is due to the large initial condition values. Burn times of less than 3 minutes were not considered. As the burn time is shortened to approach an impulsive delta-V, the nonlinearity term will cause infinite errors. The 3 minute burn requires a 21.1 ft/sec^2 acceleration or 4800 lbs thrust for a 7553 lb spacecraft. This is felt to be a reasonable upper limit on acceleration.

More significant effects on the penalty will be due to the reliability requirements for long burn times. The effect on the penalty calculations of including the reliability effects for a 3 and 45 minute burn are shown in Table A-I.

The results assume the propulsion system constant (nozle weight, etc.) and coefficient (tankage factor, etc.) would be the same for the two extreme cases.

In summary, the choice of a retro burn thrust level and resulting burn time could affect position and velocity errors by 10 to 30 percent and the penalty by 20 to 40 lbs. Modifications to the penalty calculations could be made to reflect carrying several (3 to 5) identical nozzles with a common tankage system. This would provide accurate midcourse correction control by using only one engine, yet enable shorter retro burn times to lower the astrionics reliability effects. As in the case with all results shown in this report, these values demonstrate the use of the penalty evaluation technique and are not to be interpreted as conclusive

TABLE A-I. EFFECT OF RETRO BURN TIME ON THE PENALTY

Parameter	Retro Burn Duration		
	Not Considered In Penalty	3 Minute	45 Minute
P_{FA} (Specified)	.150	.150	.150
P_{FR}	.111	.119	.125
P_{FV}	.043	.035	.029
ψ_V	1.71	1.81	1.88
ΔV capability (ft/sec)	4373	4405	4428
W_{DV} (lbs)	3120	3140	3160
Penalty (lbs)	3499	3519	3539

for the Viking or any other mission. Changes in the direction of the retro ΔV do not affect the penalty. Changes in the magnitude do. Changes in the magnitude of the retro ΔV necessitate burning more fuel and thus require either carrying more fuel for a given probability of having sufficient ΔV capability or, as an alternative accepting a greater probability of failure if the amount of fuel carried is held fixed. Since the onboard system uses computed deviations as a basis for making corrections, the downrange component of computed deviations represents the standard deviation of the uncertainty of the retro ΔV. Thus, the retro burn standard deviation, indicated as RMR, is 240 feet per second. For the analysis shown, the target miss requirement was assumed to be the magnitude of the periapsis vector 1.6×10^5 feet. This value is used as the target miss parameter.

Penalty Evaluation

The evaluation of the astrionics effectiveness using penalty Mode 3 is shown in Figure A-11. The first line of the penalty evaluation shows the three accelerometers (Arma D4E) and three gyroscopes (GG334-A) selected. The next block of information is the results of the ISU design calculations based on the specified hardware components. The ISU design routine selected horizontal design No. 4 as the optimum. The various designs available for selection are discussed

ISU COMPONENTS

ACCELEROM.= ARMA D-4E ARMA D-4E ARMA D-4E GYROSCOPES= GG 334-A GG 334-A GG 334-A

ISU DATA(HORIZONTAL DESIGN NUMBER 4 OPTIMUM) CYCLES= 6 ON TIME (HR)= 3.874

OUTSIDE DIMENSIONS		WEIGHT		WEIGHT			
LENGTH=	9.350	BLOCK=	8.703	INSULATION=	1.345	EXCIT.ENERGY=	168.526
WIDTH=	10.450	BASE=	4.549	ELECTRONICS=	10.000	EXCIT.POWER =	43.500
HEIGHT=	5.450	COVER=	2.867	COMPONENTS=	6.000	TOTAL P.FAIL=	.07037
						TOTAL WEIGHT=	33.463

ISU THERMAL ANALYSIS MAX.HEATER POWER= 97.875 MAX.THERMAL COND.= 2.1750 TOTAL ENERGY= 271.940
MIN.HEATER POWER= -.000 MIN.THERMAL COND.= 1.0875 TOTAL POWER = 141.375

ANTENNA DESIGN GAIN(DB)= 16.7 ERP(KW)= .26 POINTING TOL.(DEG.)= 2.409 TOTAL WEIGHT= 5.608

SUBSYSTEM PARAMETERS

	COMPUTERS SRT RUK-2	STAR TRCKR ITT-LUN.OB	SUN SENSOR AOCL-1402	ISU/C.P.S. NONE	COM. RCVR. MCR-503X	APP. RADAR APP.RAD.X	XMITTER DESIGNED		
TIME=	3.874	2.917	2.917	0.000	4760.819	1.167	1.750		
CYCLES=	6	5	5	0	1	2	3		
ENERGY=	348.675	23.333	14.583	0.000	16662.867	11.667	24.534	TOTAL ENERGY=	17085.659
POWER=	90.000	8.000	5.000	0.000	3.500	10.000	14.019	TOTAL POWER =	130.519
P.FAIL=	.01257	.00998	.00998	0.00000	.00674	.00457	0.00000	TOTAL P.FAIL=	.04310
WEIGHT=	36.000	7.000	2.000	0.000	3.100	15.000	1.430	TOTAL WEIGHT=	64.530

ATTITUDE CONTROL SYSTEM ANALYSIS CYCLES= 5 ON TIME (HR)= 2.917

THRUST SIZING (LB)

	ROLL	YAW	PITCH
SOLAR PRES=	.0000	.0000	.0000
MET.IMPACT=	.0000	.0000	.0000
MANEUVERS =	6.0953	6.0953	6.0953
MIDCOURSE =	0.0000	1.2205	1.2205
MAX.THRUST=	6.0953	6.0953	6.0953

FUEL CONSUMPTION (LB-SEC)

	ROLL	YAW	PITCH		
SEARCHING=	13.2344	37.5446	7.7066		
DEAD BAND=	588.7063	259.2120	251.9980		
MANEUVERS=	8.6691	8.5985	13.4314	TOTAL ENERGY=	29.167
TOTAL IMP=	610.6098	305.3751	273.1360	TOTAL POWER =	10.000
				TOTAL P.FAIL=	.00112
				TOTAL WEIGHT=	54.189

NO. OF FIRINGS= 9754 TOTAL IMPULSE= 1189.1208 FUEL WEIGHT= 21.234301

ENERGY SOURCE DATA
TOTAL POWER= 281.894 TOTAL ENERGY= 17386.766 TOTAL WEIGHT= 110.454

WIRING TOTAL WEIGHT= 110.000

DELTA-VELOCITY ENGINE
STD-DEV. DELTA-V= 334.157 DOF=1.001 CAPABILITY= 4372.689 TOTAL WEIGHT= 3120.273

PENALTY SUMMATION

PROBABILITIES		WEIGHT	
INSUF.DELTA-VEL.FUEL=	.04341	ASTRIONICS=	3498.517
TARGET MISS(.1610)=	.00000	SPACECRAFT=	3836.483
UNRELIABILITY =	.11143	TOTAL=	7335.000
ASTRIONICS TOTAL =	.15000		

PENALTY(MODE 3)= 3498.51670

EXECUTION TIMES, START=510.37, END=563.26, ELAPSED=52.885(SEC.)

FIGURE A-11. MARS MISSION, PENALTY EVALUATION

in detail in Reference 4. The ISU was cycled on and off six times and had a total operating time of 3.874 hours. The designed ISU is 9.35 inches long, 10.45 inches wide, and 5.45 inches high. A breakdown of the weights for the block, base, cover, insulation, electronics and the sensor components is shown. On the extreme right of this block of information are the subsystem parameters necessary for penalty calculation. These are the total excitation energy, 168.5 watt hours, the excitation power, 43.5 watts, the total probability of failure for the ISU, .07037, and the total ISU weight of 33.463 pounds.

The ISU is assumed to be mounted on a variable thermal conductance which requires a maximum heater power of 97.875 watts and a minimum heater power of zero watts. To maintain these conditions, a maximum thermal conductance of 2.175 and a minimum thermal conductance of 1.0875 is required. The heater power and energy necessary to maintain the ISU at the desired temperature are added to the excitation energy and power to determine the total energy and power required for the ISU. These are 271.94 watt hours and 141.375 watts respectively. The transmitter and antenna system is designed as discussed earlier in this report. Since a transmitter was not specified, a tradeoff optimization between antenna size and transmitter size is performed and the resulting antenna is shown to be optimum with a gain of 16.7 db, to give an effective radiated power of .26 kilowatts. This allows a pointing tolerance of 2.409 degrees. This antenna is estimated to weigh 5.608 pounds.

The next block of information shows the operating time in hours, the number of on-off cycles, the excitation energy in watt hours, the power in watts, the probability of failure, and the weight in pounds for the computer, star tracker, Sun sensor, communication receiver, approach radar, and transmitter. It should be noted that no ISU/CPS power supply is carried. It is assumed that the ISU and computer contain their own power supplies. As mentioned above, the transmitter is designed rather than specified and the resultant design uses 24.53 watt hours at 14 watts with essentially no probability of failure and a weight of 1.43 pounds. The total energy, power, probability of failure, and weight for these subsystems are shown at the right hand side of the report.

The attitude control system analysis indicates the system is cycled on and off five times with a total operating time of 2.9 hours. The thrust sizing requirements are shown at the left side of the report. The thrusts required on all three axes for sizing conditions of solar pressure, micro-metrorite impact, trajectory maneuvers, and steering during midcourse corrections are shown. The maximum thrust required on each axis is used as the design criteria. The maximum thrust is 6.095 pounds and is determined by the maneuvering requirements for all three axes. Fuel consumption due to searching, dead band operation, and maneuvering is calculated with the thrusts set at the values specified above. The total impulse in pound-seconds required for thrusting about each axis is shown at the bottom of this block of information. It should be noted that dead band operation is dominant in use of fuel about all three axes. On the following line, the total number of thruster firings required and the total impulse requirement in pound-seconds are shown. From this information, the total fuel weight, 21.23 pounds, is calculated as well as the energy, power, probability of failure, and total attitude control system weight.

The energy source subsystem is sized using the total power and the total energy requirements for all of the above subsystems. Since it is assumed that radioisotope thermo-electric generators (RTG's) are used for production of power, the power rather than the energy becomes the important sizing parameter. For the total power requirement of 281.894 watts it is estimated that RTG's totaling 110.454 pounds will be required. The weight analysis is then concluded with the addition of 110 pounds for intersubsystem wiring.

Under Penalty Mode 3, the ΔV engine is sized, based on the probability of failure due to insufficient fuel which can be tolerated within the limit of specified overall astrionics total probability of failure. This calculation is shown under the heading Penalty Summation. The total astrionics probability of failure is specified as .15. With failure due to lack of reliability equal to .1143 and probability of target miss essentially zero, the ΔV propulsion subsystem must have a probability of insufficient fuel of .0434 or less. The ΔV calculations from the error analysis indicate a standard deviation in ΔV of 334.157 feet per second with one degree of freedom. This standard deviation in conjunction with the mean specified in the data bank, 3800 feet per second, necessitates carrying a capability of 4372.689 feet per second to meet the requirement of a probability of failure of .04341 or less. Thus, it is estimated that the total ΔV propulsion subsystem will weigh 3120.273 pounds. Adding the ΔV propulsion subsystem to the weights discussed above yields the total penalty (Mode 3) of 3498.5167 pounds. As a matter of information, when this weight is subtracted from the total spacecraft weight of 7335 pounds, a spacecraft structure and payload weight of 3836.483 remains.

When comparing the results discussed above to those obtained from the Jupiter flyby mission, it must be remembered that the retro ΔV fuel requirements are included along with midcourse correction ΔV fuel requirements when sizing the engine. If separate engines are carried for midcourse correction and retro ΔV, the penalty analysis would be somewhat different. In the latter case, the retro ΔV, the dominant use of fuel, would not be reflected in the penalty analysis and a much smaller propulsion system would result. In the Jupiter mission, there was no retro ΔV so that the engine is sized only to perform the midcourse corrections.

APPENDIX B

THE CUMULATIVE PROBABILITY FUNCTION FOR THE MAGNITUDE OF THE TOTAL ΔV REQUIREMENT FROM THE MEAN AND COVARIANCE OF RETRO BURN ΔV

APPENDIX B

THE CUMULATIVE PROBABILITY FUNCTION FOR THE MAGNITUDE OF THE TOTAL ΔV REQUIREMENT FROM THE MEAN AND COVARIANCE OF RETRO BURN ΔV

The magnitude of the retro burn ΔV is found by

$$\Delta V = \sqrt{(M_v + v_x)^2 + v_y^2 + v_z^2} \tag{B-1}$$

where v_x, v_y, and v_z are the zero mean random components of covariance C_v, and M_v is the mean or nominal ΔV and is assumed to be in the x direction. The two extreme cases ($M_v \approx 0$, and $M_v \approx \infty$) are easily solved. If M_v is nearly zero ($M_v \ll \sigma v_x$), the problem reduces to finding the distribution of the magnitude of a vector with zero mean, as discussed in Reference 1, 4, and 8. If M_v is very large, that is $M_v \gg \sigma_{v_x}$, σ_{v_y}, or σ_{v_z}, the approximation

$$\Delta V \approx M_v + v_x \tag{B-2}$$

is valid and ΔV is a normally distributed variable with mean M_v and standard deviation, σv_x. The general problem where M_v is neither very large nor very small cannot be solved in closed form, but is easily handled using Monte Carlo techniques. For typical interplanetary mission results, however, the assumption of large M_v is reasonable. The runs of Appendix A indicate standard deviations an order of magnitude less than the mean, 3800 ft/sec. The discussion below is based on large M_v.

PRM (ΔV, M_v, R_v, D_v) is the probability that the magnitude of a vector with mean M_v, square root of the trace of the covariance R_v, and degree of freedom, D_v, exceeds ΔV. Since only one component of the vector is significant, this is equal to

$$\text{PRM} = P_r\left(\frac{\Delta V - M_v}{R_v}\right) \tag{B-3}$$

where P_r is the cumulative normal distribution of a zero mean, unity variance random variable.

REQ (P, M_v, R_v, D_v) is the inverse function used when the probability, P, is known and the required ΔV is to be found.

$$REQ = M_v + R_v P_r^{-1}(P) \tag{B-4}$$

where $P_r^{-1}(P)$ is the inverse function of $P_r(X)$, the normal, zero mean, unity variance cumulative distribution.

It should be noted that the argument D is unused since, under the assumption of large M_v, the magnitude is approximately distributed with one degree of freedom. Further study could result in an appropriate analytical or Monte Carlo solution to the general case and then D_v would be needed.

APPENDIX C

NEW TECHNOLOGY

APPENDIX C

NEW TECHNOLOGY

During the period covered, no new concepts were conceived or first reduced to practice.